2003 JEEP LIBERTY/CHEROKEE (KJ)

PARTS CATALOG

ILLUSTRATION AND TEXT
(CHASSIS - BODY - TRIM)

June 2003

SUPERSEDES
February 2003
ENGLISH

Mopar PARTS

Jeep

CHRYSLER • PLYMOUTH • DODGE • JEEP

THE MOPAR DIFFERENCE

INDEX TO INFORMATION PAGES

The use of this Parts Catalog and the arrangement of information herein is explained in the General Information Section as indexed below.

Abbreviations INF-15
Alphabetic Index INF-12
Body Code Plate Interpretation INF-14
Catalog Groups - Titles & Contents INF-2
How to Use This Catalog and Locate Parts INF-10
Illustration Index INF-12
Illustration Numbering Index INF-11
Index INF-1
Logical Illustration Index INF-4
Logical Illustrations INF-11
Numerical Index INF-12
Page Numbering INF-11
Part Packages INF-12
Standard Parts INF-12
Symbols Used in this Catalog INF-11
VIN Plate Decoding Information INF-13

CATALOG GROUPS - TITLES & CONTENT

Group	Content
001	Component Parts for Mopar Accessories
002	Front Suspension & Drive
003	Rear Axle
004	Parking Brake
005	Service Brakes
006	Clutch
007	Cooling
008	Electrical
009	Engine Mounting
011	Exhaust
013	Frames and Bumpers
014	Fuel
016	Propeller Shafts and U-Joints
017	Rear Suspension
019	Steering
022	Wheels, Covers and Jacks
024	Air Conditioning & Heater
025	Emission Systems
08A	Instrument Panel and Radios and Consoles
2.4L	Engine 2.4L Four Cylinder
2.5LD	Engine 2.5L Four Cylinder (Turbo Diesel)
2.8L	Engine 2.8L Four Cylinder (Turbo Diesel)
231	Transfer Case Model 231
23D	Wiper/Lock Cylinder and Keys
242	Transfer Case Model 242
3.7L	Engine 3.7L Six Cylinder
3550	Manual Transmission 5 Speed
42RLE	Automatic Transaxle 4 Speed
45RFE	Automatic Transmission Multi-Speed
DKJ	Doors and Related Parts
EKJ	Exterior Ornamentation
IKJ	Interior Trim
LBLS	Labels All Vehicle Locations
NV1500	Manual Transmission 5 Speed
SKJ	Body Sheet Metal Except Doors

LOGICAL ILLUSTRATION INDEX

Group	Logical Illustration	Logical Illustration Name
001	100	Audio & Electronics
001	200	Carriers & Cargo Hauling
001	300	Driving Convenience
001	400	Exterior Appearance
001	500	Exterior Protection
001	600	Fog Lights & Electrical
001	800	Interior Storage
001	900	Security
002	100	Front Suspension
002	200	Front Axle Drive Shafts
002	300	Front Axle Housing
002	400	Front Axle Assembly
002	600	Front Axle Differential
002	800	Front Axle Skid Plate
003	100	Rear Axle
003	200	Differential and Housing
003	300	Rear Axle Vent
004	100	Parking Brake Lever and Cables
005	100	Front Brakes
005	200	Rear Brakes
005	300	Power Brake Booster
005	400	Brake Master Cylinder
005	500	Brake Lines and Hoses
005	600	Brake Pedals
006	100	Clutch
006	200	Clutch Housing
006	300	Clutch Controls
006	400	Clutch Pedals
007	100	Radiator and Related Parts
007	200	Water Pump and Related Parts
007	300	Tank, Coolant Engine
007	400	Pulleys and Related Parts
007	500	Drive Belts
007	600	Lines, Transmission Oil Cooler
007	700	Grilles
008	100	Starters
008	1000	Battery Tray and Cables
008	1100	Lamps - Front, Rear and Courtesy
008	1200	Wiring-Engine & Related Parts
008	1300	Wiring-Headlamp to Dash
008	1400	Wiring-Instrument Panel
008	1500	Wiring-Body & Accessories
008	1600	Wiring Repair
008	1900	Spark Plugs-Cables-Coils
008	200	Alternators
008	400	Modules
008	500	Relays
008	600	Sensors
008	700	Single Board Engine Controllers
008	800	Switches
008	900	Horns
009	100	Engine Mounting
011	100	Exhaust System
011	200	Heat Shields
013	100	Frames
013	200	Front Bumper and Fascia
013	300	Rear Bumper and Fascia
013	600	Trailer Tow
014	100	Tank, Fuel
014	1000	Speed Control
014	1100	Accelerator Pedal
014	200	Fuel Tank Filler Tube
014	300	Fuel Lines
014	400	Fuel Rail
014	500	Fuel Pump and Sending Unit
014	600	Throttle Body
014	700	Throttle Controls
014	800	Air Cleaner
016	100	Propeller Shaft

017	100	Rear Suspension
017	200	Rear Stabilizer
019	100	Steering Wheel
019	200	Steering Column
019	300	Steering Gear
019	500	Power Steering Pump
019	700	Power Steering Hoses
022	100	Wheels and Hardware
022	200	Wheel Covers and Center Caps
022	300	Jack Stowage
022	400	Spare Tire Stowage
024	100	Air Conditioner and Heater Units
024	200	Air Conditioner and Heater Plumbing
024	300	Air Conditioner and Heater Controls
024	400	Air Conditioning Compressor
024	500	Air Conditioning Compressor Mounting
024	600	Air Ducts and Outlets
025	100	Emission Labels
025	200	EGR System
025	300	Vacuum Canister
025	400	Emission Harness
08A	100	Instrument Panel
08A	200	Instrument Panel Cluster
08A	300	Radio, Antenna, and Speakers
08A	400	Consoles
2.4L	200	Cylinder Head
2.4L	300	Cylinder Block
2.4L	400	Crankshaft, Piston, and Drive Plate
2.4L	500	Camshafts and Valves
2.4L	600	Timing Belt and Cover
2.4L	700	Engine Oiling
2.4L	800	Manifolds
2.4L	900	Crankcase Ventilation
2.5LD	200	Cylinder Head
2.5LD	300	Cylinder Block
2.5LD	400	Crankshaft, Piston and Drive Plate
2.5LD	500	Camshafts & Valves
2.5LD	600	Timing Belt and Cover
2.5LD	700	Engine Oiling
2.5LD	800	Manifolds
2.5LD	900	Crankcase Ventilation
2.8L	200	Cylinder Head
2.8L	300	Cylinder Block
2.8L	400	Crankshaft, Piston and Drive Plate
2.8L	500	Camshafts & Valves
2.8L	600	Timing Belt and Cover
2.8L	700	Engine Oiling
2.8L	800	Manifolds
2.8L	900	Crankcase Ventilation
231	100	Transfer Case Assembly
231	1200	Gearshift Controls
231	200	Case and Related Parts
231	400	Gear Train
231	900	Fork and Rails
23D	100	Lock Cylinders and Keys
23D	200	Windshield Wiper and Washer Systems
23D	300	Rear Wiper and Washer System
242	100	Transfer Case Assembly
242	1200	Gearshift Controls
242	200	Case and Related Parts
242	400	Gear Train
242	900	Fork and Rails
3.7L	200	Cylinder Head
3.7L	300	Cylinder Block
3.7L	400	Crankshaft, Piston and Torque Converter
3.7L	500	Camshafts & Valves
3.7L	600	Timing Belt and Cover
3.7L	700	Engine Oiling
3.7L	800	Manifolds
3.7L	900	Crankcase Ventilation
3550	100	Transmission Assembly
3550	1200	Gearshift Controls

3550	200	Case and Extension
3550	400	Gear Train
3550	900	Fork and Rails
42RLE	100	Transaxle Assembly
42RLE	1200	Gearshift Controls
42RLE	200	Case and Extension
42RLE	300	Oil Pump
42RLE	400	Gear Train
42RLE	700	Valve Body
45RFE	100	Transmission Assembly
45RFE	1200	Gearshift Controls
45RFE	1300	Seal and Shim Packages
45RFE	200	Case and Extension
45RFE	300	Oil Pump
45RFE	400	Gear Train
45RFE	700	Valve Body
DKJ	100	Front Door
DKJ	200	Rear Door
DKJ	500	Exterior Mirror
DKJ	600	Weatherstrips and Seals
EKJ	100	Nameplates
EKJ	200	Moldings and Ornamentation
EKJ	300	Decals and Tapestripes
IKJ	100	Headliner and Visor
IKJ	1000	Lift Gate Trim
IKJ	200	Moldings, Scuff Plates
IKJ	300	Carpet and Tonneau Cover
IKJ	400	Door Trim Panels
IKJ	500	Front Seats and Attaching Parts
IKJ	600	Rear Seats and Attaching Parts
IKJ	700	Seat Belts-Front and Rear
IKJ	800	Adjusters, Covers, Shields, and Risers
LBLS	100	Interior
LBLS	200	Under Hood
LBLS	300	Doors
LBLS	400	Exterior
LBLS	500	Rear Cargo & Storage
NV1500	100	Transmission Assembly
NV1500	1200	Gearshift Controls
NV1500	200	Case and Extension
NV1500	400	Gear Train
NV1500	900	Fork and Rails
SKJ	1100	Roof Panels
SKJ	1200	Sunroof
SKJ	1300	Liftgate Panel
SKJ	1600	Luggage Rack
SKJ	200	Floor Pans
SKJ	300	Plugs
SKJ	400	Front Fenders
SKJ	500	Hood & Hood Release
SKJ	600	Cowl and Dash Panel
SKJ	700	Glass and Rear View Mirror
SKJ	800	Aperture Panel
SKJ	900	Quarter Panel and Pillar

HOW TO USE THIS CATALOG AND LOCATE PARTS

This Catalog is divided into Part Groups in which illustrations for parts of a similar function and/or location are published. The Group contents listing on the next page shows the type of parts contained in each group. Tabs are provided or available to separate each group.
Several methods may be used to locate a specific part:

Option 1: From the Group Contents listing. Select the group which would most logically contain the part to be found. Open the catalog to the beginning of that group. The first page of the group will contain the part. Turn to the selected illustration and locate the part by reviewing the illustration item numbers and associated text information following the illustration.

Option 2: If the "noun" name of the part you seek is known, an alphabetical index of Nouns and illustration titles is provided to assist in finding the part. Several keys may be found in this index.

RESERVOIR, Power Steering Oil Pump	Group 19	Group Reference
ALTERNATOR All Engines	8-210	Illustration Reference
BELT, Front Seat	Imdl/710/3	Illustration/Item Reference

Group by Model
Illustration Number
Item

Option 3: If the part number is known but the applications need to be determined, refer to the numerical index. This index shows the group, illustration number and each part listed in the catalog. Multiple references mean the part is listed more than once.

Option 4: Other options such as group identifiers exist in these catalogs. For Example, Group 23 Body has been broken in sections, i.e. 23A Sheet Metal now is S(model code). Example: SGS for model GS. Group 23C Doors now is D(model code) ex. DGS. Group 23 Exterior Ornamentation now is E(model code). This same logic applies to the Interior Trim Section (ex. IGS).

The Group 9 Engine sections in prior parts catalogs had been numbered 9A, 9B, 9C, etc. There was no real meaning to this numbering scheme. In this new MACS produced catalog the group numbering scheme is as follows: 2.5LD means 2.5 Liter Diesel Engine; 2.0L means 2.0 Liter Four Cylinder Gas Engine; 3.3L6T means 3.3 Liter Six Cylinder Transverse Mounted Engine; and 3.8L means 3.8 Liter Six Cylinder Engine. Also note that Engine Mounting parts are located in Group 9.

PAGE NUMBERING

Two-part page numbers are used throughout this catalog. The first part of the page designation indicates one major group or section. The second part indicates the actual page number in the group. For example:

2-1 indicates Group 2, Front Suspension, Page 1
3-4 indicates Group 3, Axle Rear, Page 4

In the maintenance of the Loose Leaf Parts Catalog Revision Service, it may become necessary to add information beyond the capacity of the page. In this event, an "A" page will be used. For example, if it becomes necessary, because of change, to add several part numbers to page 2-1 and space does not permit the addition, you will be given Page 2-1A. Page 2-1A should be filed immediately following Page 2-1.

Figure and Item Numbers are also commonly used to identify locations in the Catalog, ie., 14-910/8 refers to Group 14, illustration 910, Item Number 8. Illustration Numbers are always ascending sequential within the Groups.

SYMBOLS USED IN THIS CATALOG

The Following symbols are commonly used with Part Number and Quantity information in this Catalog:

AR - Indicates the quantity required may vary or is to be determined by the user.

PAR - Indicates "Paint As Required"

BLANK - Indicates "All Condition

- = "Not Illustrated"

LOGICAL ILLUSTRATIONS

Refer to Illustration in front of each group. This will give assistance to as how each group is broken down and what Specific Illustration should be referenced.

ILLUSTRATION NUMBERING INDEX

Illustration numbers in this Catalog are Group standards. This indicates group and consistent content.
EXAMPLE: 8-100 is a Logical Illustration for Starters. 8-101 to 8-199 are Specific Illustrations used for Starters for all Catalogs. 8-200 will contain Alternators for all Catalogs and so on.
Always refer to group index in front of each group.

ILLUSTRATION INDEX

This index is a compilation of catalog parts description data with reference to illustrations, figures and key numbers as shown:

Fender ie; Model.....Group: S(Model) .....Illustration 410
(Fender is located in Sheet Metal Section (S) in Illustration 410)

The first page of each group contains a listing of all illustrations and group breakdown within that group. Also refer to illustrations alphabetically listed in information section.

ALPHABETIC INDEX

This index is a compilation of catalog parts description data with a reference to the location of the item by Group, Figure, and Key Number as shown in the following example:

Housing, w/Pump.....Group 7 Illustration 210 Item 10
(Housing, w/Pump.....7-210/10)

The index will be expanded progressively as data is added to computer files. To locate a part by name refer to the Alphabetical Index. This index indicates the group and illustration and item number where the part is located. Alphabetical Index can be found in INF section of this Catalog.

NUMERICAL INDEX

A listing of Part Numbers contained in the catalog. The numbers are in numerical sequence with reference to the group and Illustration and item number where the part is located.

PARTS PACKAGES

Service Parts Packages, containing all parts needed for specific service operation, are listed in their respective groups with related parts. The listing will show adapability and model application.

STANDARD PARTS

Important attaching standard parts such as bolts, nuts, etc, are generally listed in the text of the respective major parts groups.

VIN PLATE DECODING INFORMATION

1	2	3	4	5	6	7	8	9	10	11	12 thru 17
Country	Make	Vehicle Type	Other	Line	Series	Body Style	Engine	Check Digit	Model Year	Assy. Plant	Sequence No.

The following table interprets the VIN Plate positions shown above.

Position	Interpretation	Codes = Description
1	Country of Origin	1 = Built in U.S. by DaimlerChrysler Corporation.
2	Make	J = Jeep
3	Vehicle type	4 = Multipurpose Passenger Vehicle Less Side Air Bags
4	GVWR & Pass. Safety	E=1361-1814 kg (3001-4000 lbs) F=1815-2267 kg (5001-6000 lbs G 2268-2721 kg (5001-6000 lbs) H=2722-3175 kg (6001-7000 lbs) J=3176-3628 kg (8001-9000 lbs) K = 3629-4082 kg (8001-9000 lbs) L=4083-4535 kg (9001-10000 lbs) M=4536-6350 kg (10001-14000 lbs
5	Vehicle Line	K = Liberty 4x2 Left Hand Drive L = Liberty/Cherokee 4x4 Left Hand Drive M = Liberty/Cherokee 4x4 Right Hand Drive
6	Series	3 = M Series - Liberty Renegade 4 = H Series - Liberty/Cherokee Sport 5 = P Series - Liberty/Cherokee Limited
7	Body Style	8 = KJ - 74
8	Engine	1 = 2.4L I4 Cyl Gasoline DOHC (ED1) 7 = 2.5L I4 Cyl 16V Turbo Diesel (ENJ) 5 = 2.8L I4 Cyl 16V Turbo Diesel (ENR) K = 3.7L V6 Cyl Gasoline (EKG)
9	Check Digit	
10	Model Year	3 = 2003
11	Assembly Plant	L = Toledo North Assembly
12 thru 17	Vehicle Build Sequence	Model Year Assembly Sequence

BODY CODE PLATE INTERPRETATION

The Body Code Plate is located on the Left Front Side Shield or Wheel Housing or the Upper Radiator Support. The Plate contains 7 rows of data. The bottom 3 rows are reserved for the specific information as depicted below. Starting at the fourth row (following the reserved portion), other Sales Codes used to build a specific vehicle are listed in the ascending order by ALPHA sequence.

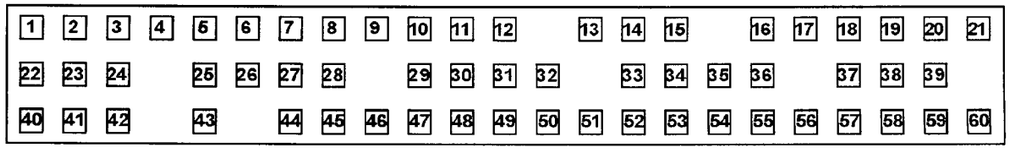

1-12	VEHICLE ORDER NUMBER
13-15	VINYL ROOF CODE/DOOR COMBO CODES
16-18	VEHICLE SHELL CAR LINE
19	PRICE CLASS
20-21	BODY TYPE
22-24	PAINT PROCEDURE
25-28	PRIMARY PAINT
29-32	SECONDARY PAINT
33-36	INTERIOR TRIM CODE
37-39	ENGINE CODES
40-42	TRANSMISSION CODES
43	MARKET CODES
44-46	VEHICLE IDENTIFICATION NUMBER (VIN) For definition of the Elements and the individual position see Vin Plate Defined.

ABBREVIATIONS

A/C	Air Conditioner
ABS	Anti-Lock Brakes System
AR	As Required
ATC	Automatic Temperature Control
AWD	All Wheel Drive
BUX	Built Up Export
CV	Constant Velocity
DOHC	Dual (or Double) OverHead Cam
EFI	Electronic Fuel Injection
EGR	Exhaust Gas Recirculation
ECU	Electronic Control Unit
FWD	Front Wheel Drive
HEX	HEXagon
HCU	Hydraulic Control Unit
I/D	Inside Diameter
L	Liter
LED	Light Emitting Diode
MAP	Manifold Absolute Pressure
MPH	Miles Per Hour
O/D	Outside Diameter
P/S	Power Steering
PSI	Pounds per Square Inch
PSF	Pounds per Square Foot
PRNODL	Park, Reverse, Neutral, Overdrive, Drive, Low
PRNDL	Park, Reverse, Neutral, Drive, Low
PTO	Power Take Off
RFI	Radio Frequency Interference
RPM	Revolutions Per Minute
RTV	Room Temperature Vulcanizer (sealant)
T/BODY	Throttle BODY
U/BODY	Under BODY
SOHC	Single OverHead Cam
PAR	Paint As Required

Group – 001

Component Parts for Mopar Accessories

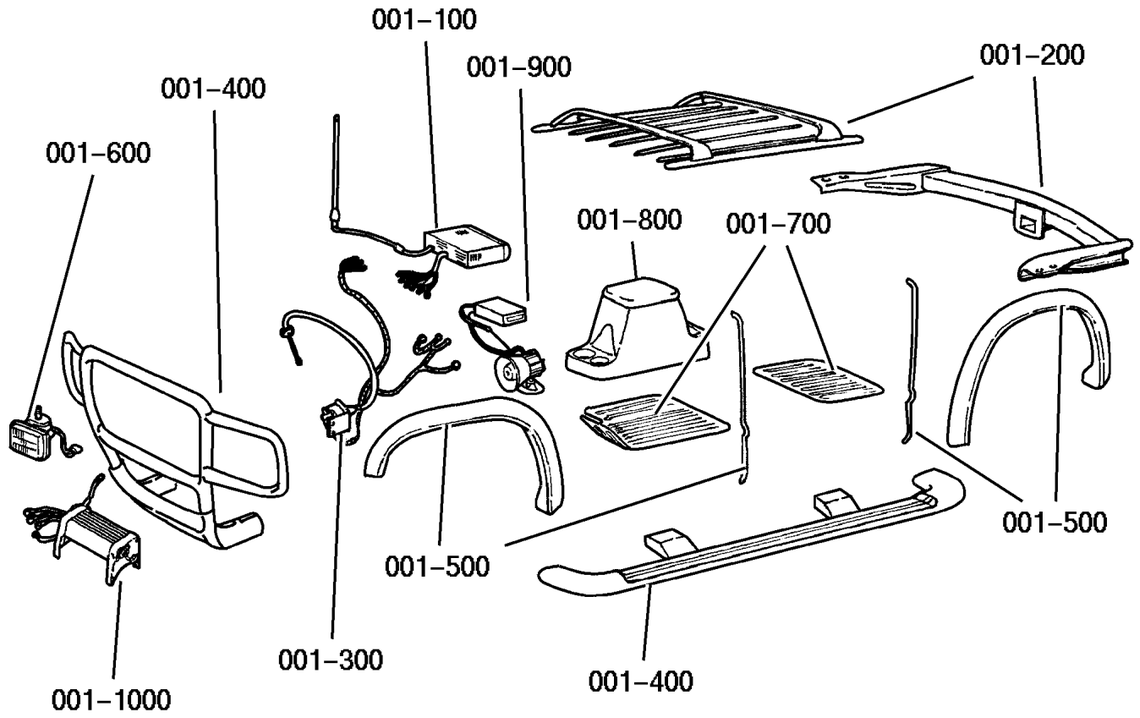

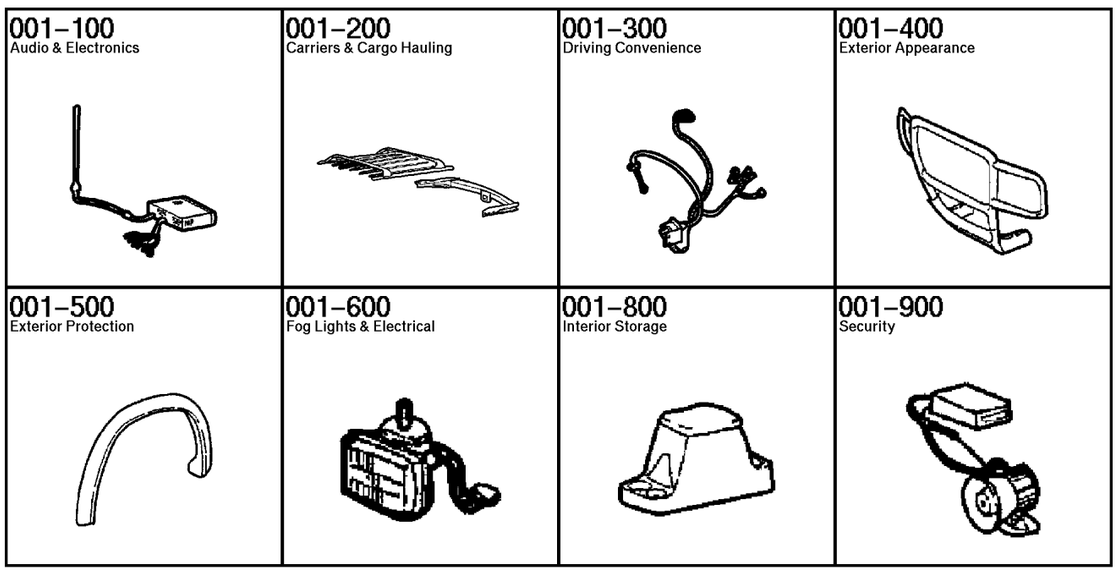

GROUP 1 - Component Parts for Mopar Accessories

Illustration Title	Group-Fig. No.
Audio & Electronics	
Player Kit - CD Changer 6 Disc	Fig. 001-111
Carriers & Cargo Hauling	
Bike Carrier - Roof Fork Mount Type	Fig. 001-212
Bike Carrier - Roof Upright Mount Style	Fig. 001-214
Bike Carrier - Spare Tire Mount	Fig. 001-215
Carrier Kit - Canoe	Fig. 001-216
Carrier Kit - Water Sports	Fig. 001-218
Ski Carrier - Roof Mount	Fig. 001-223
Ski Carrier - Spare Tire Mount	Fig. 001-225
Rack Kit - Rail Mount	Fig. 001-230
Luggage Carrier - Roof Hard Shell	Fig. 001-235
Luggage Carrier - Roof Vinyl	Fig. 001-237
Wiring Kit - Trailer Tow 4-Way	Fig. 001-240
Wiring Kit - Trailer Tow 7-Way	Fig. 001-242
Fan Kit - Engine Heavy Duty Cooling	Fig. 001-250
Driving Convenience	
Speed Control Package	Fig. 001-310
Exterior Appearance	
Running Board Kit	Fig. 001-430
Wheel Kit Cast Aluminum	Fig. 001-460
Exterior Protection	
Skid Plate - Transfer Case	Fig. 001-522
Skid Plate - Fuel Tank	Fig. 001-524
Fog Lights & Electrical	
Light Kit - Fog	Fig. 001-610
Heater Kit	Fig. 001-620
Interior Storage	
Guard Kit - Dog	Fig. 001-810
Security	
Alarm - EVS II Base System Used without Keyless Entry	Fig. 001-910
Alarm - EVS II Plus System Used with Keyless Entry	Fig. 001-914

Player Kit - CD Changer 6 Disc
Figure 001-111

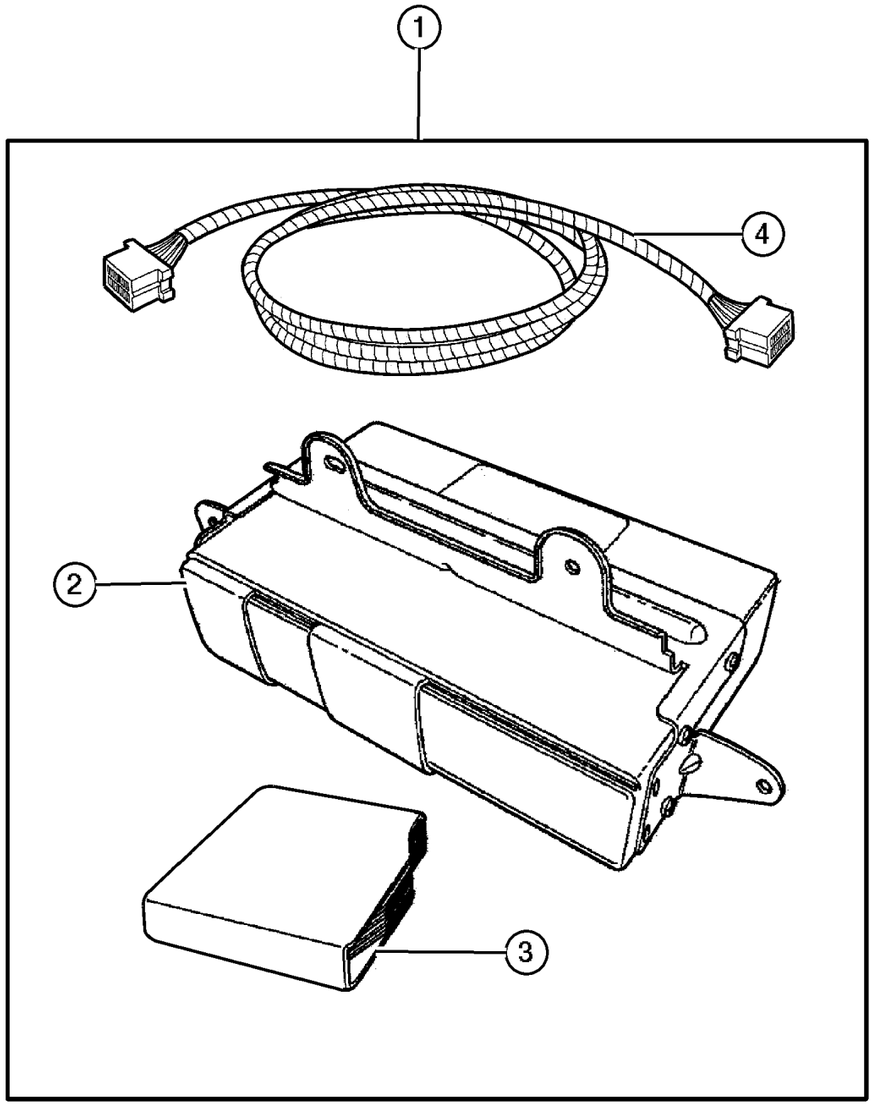

ITEM	PART NUMBER	QTY	LINE	SERIES	BODY	ENGINE	TRANS	TRIM	DESCRIPTION
NOTE: For Warrenty Order Item #2 use a Z prefix through [GPOP] exchange order entry section #11 or comand line entry (CMP) [SGAA]									
1	8220 7276	1							PLAYER KIT, CD Changer - 6 Disc
2	Z6038 616AA	1							CHANGER, CD
3	4797 433	1							MAGAZINE, CD Changer
4	5073 243AA	1							CABLE, Din

JEEP LIBERTY (KJ)

SERIES	LINE	BODY	ENGINE	TRANSMISSION
P = Limited	J = LHD (4WD)	74 = 4 Dr. (104.3 WB)	ED1, ED0 = 2.4L Power Tech	DDK = 5 Speed HDManual
H = Sport	U = RHD (4WD)		EKG, EK0 = 3.7L Power Tech	DDD = 5 Speed HD Manual
M = Renegade	T = LHD (2WD)		ENJ = 2.5L 4Cyl Turbo Diesel	DG4,DGQ = Multi-Speed Auto
			ENR = 2.8L 4Cyl Turbo Diesel	DG6 = 4 Speed Auto Transm
			EN0 = 4Cyl Turbo Diesel	DG0 = All Automatic Transm
				DBB = All Manual Transm

Bike Carrier - Roof Fork Mount Type
Figure 001-212

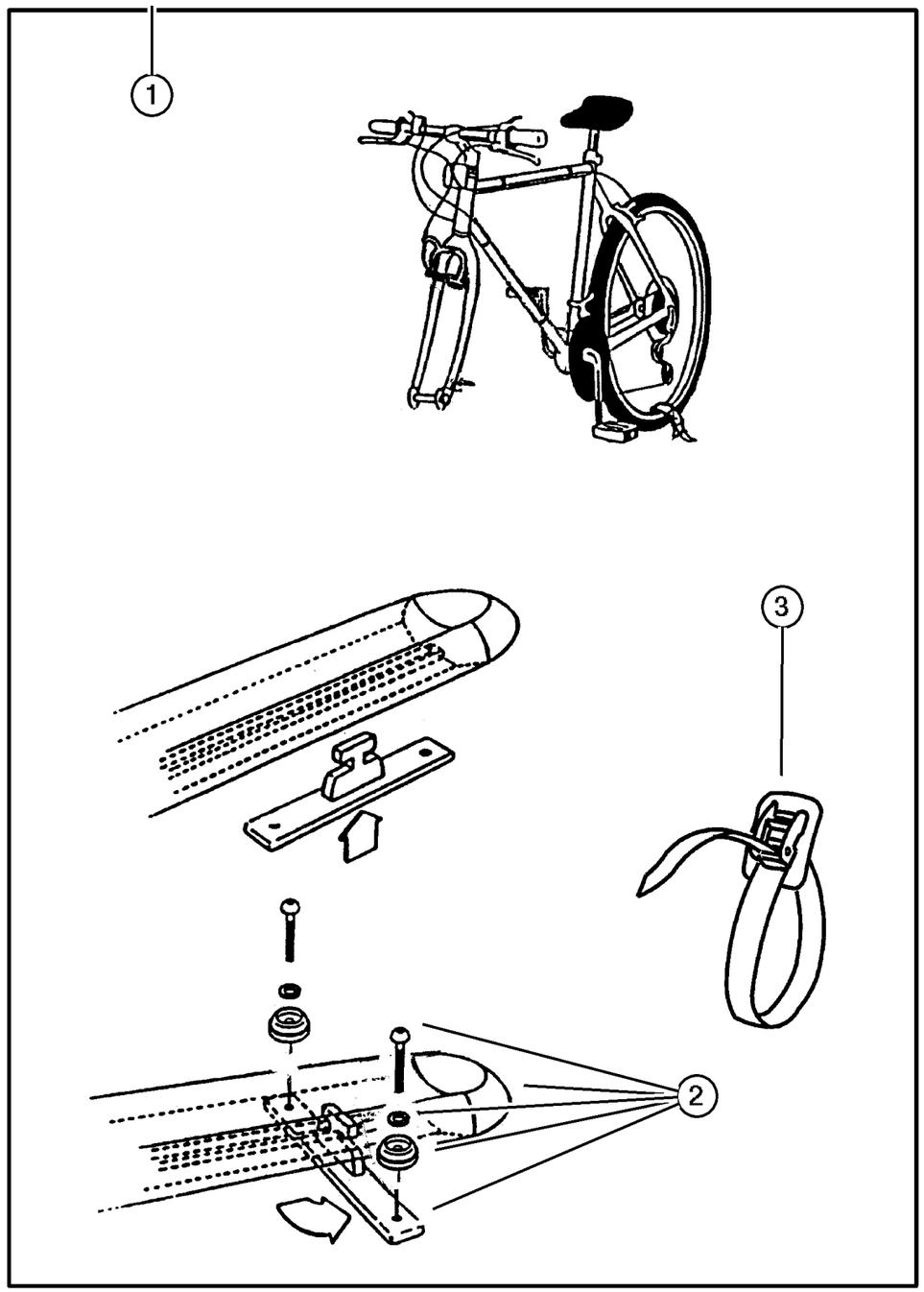

ITEM	PART NUMBER	QTY	LINE	SERIES	BODY	ENGINE	TRANS	TRIM	DESCRIPTION
NOTE: Hardware Kit also contained in Carrier Kit.									
1	8230 0585	1							CARRIER KIT, Bike, Fork - Mount
2	5093 779AA	1							HARDWARE KIT, Accessory, Contains: 2-T-Slot Anchors, 1-Rear T-Slot Bar, 4-Button Head Screws, 2-Lock Washers and 4-Dome Washers
3	5016 513AA	1							STRAP, Cargo Tie Down, Consists of: 2- Straps
-4	5066 632AA	1							TOOL, Screw Driver

JEEP LIBERTY (KJ)

SERIES	LINE	BODY	ENGINE	TRANSMISSION
P = Limited	J = LHD (4WD)	74 = 4 Dr. (104.3 WB)	ED1, ED0 = 2.4L Power Tech	DDK = 5 Speed HDManual
H = Sport	U = RHD (4WD)		EKG, EK0 = 3.7L Power Tech	DDD = 5 Speed HD Manual
M = Renegade	T = LHD (2WD)		ENJ = 2.5L 4Cyl Turbo Diesel	DG4,DGQ = Multi-Speed Auto
			ENR = 2.8L 4Cyl Turbo Diesel	DG6 = 4 Speed Auto Transm
			EN0 = 4Cyl Turbo Diesel	DG0 = All Automatic Transm
				DBB = All Manual Transm

Bike Carrier - Roof Upright Mount Style
Figure 001-214

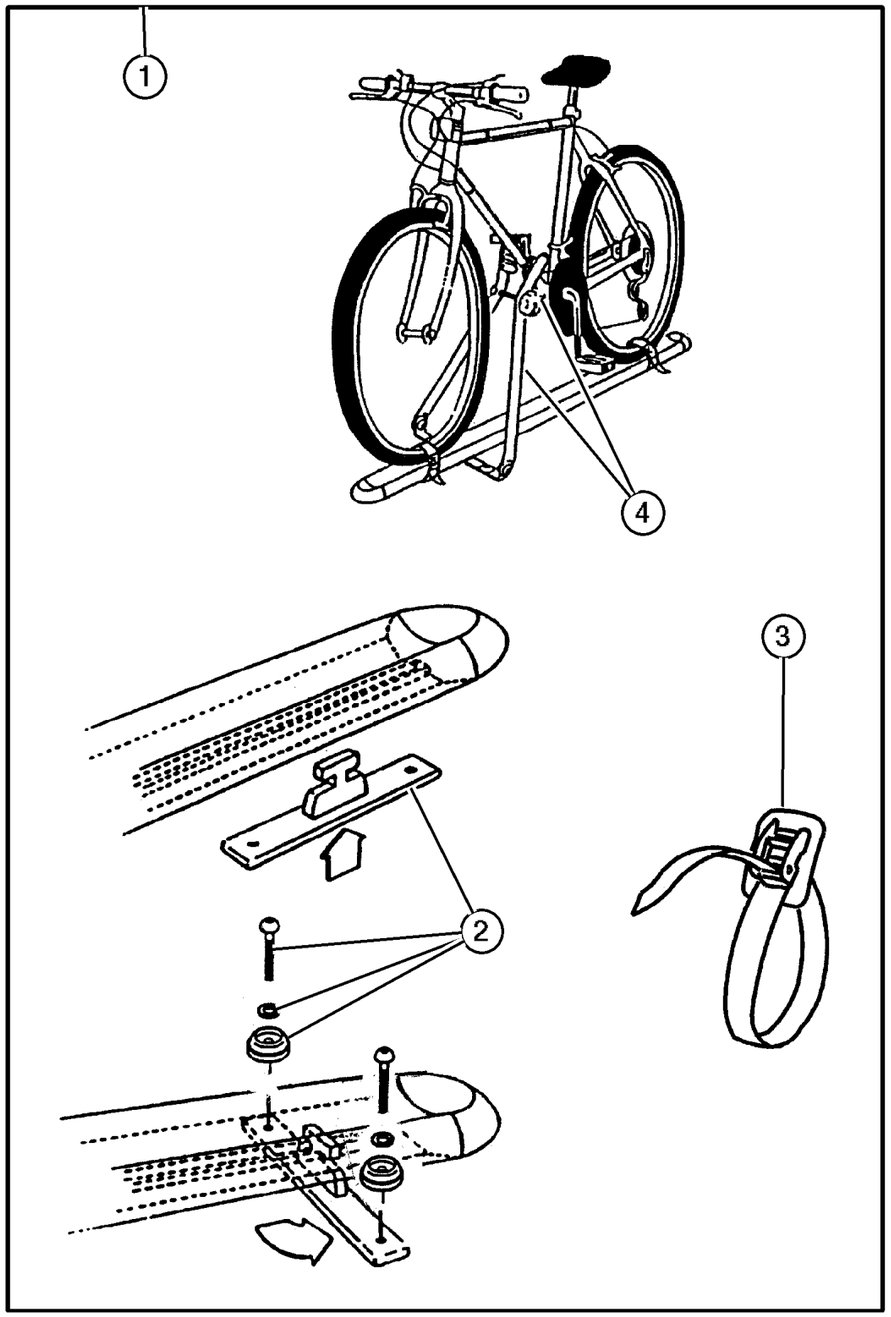

ITEM	PART NUMBER	QTY	LINE	SERIES	BODY	ENGINE	TRANS	TRIM	DESCRIPTION
NOTE: Kit has Uprignt Clamp for Bike.									
1	8220 3471	1	J, T		74				CARRIER KIT, Bike, Upright - Mount
2	5093 779AA	1	J, T		74				HARDWARE KIT, Accessory, Contains: 2-T-Slot Anchors, 1-Rear T-Slot Bar, 4-Button Head Screws, 2-Lock Washers and 4-Dome Washers
3	5016 513AA	1	J, T		74				STRAP, Cargo Tie Down
4	5018 194AA	1	J, T		74				HARDWARE KIT, Bike Carrier

JEEP LIBERTY (KJ)

SERIES	LINE	BODY	ENGINE	TRANSMISSION
P = Limited	J = LHD (4WD)	74 = 4 Dr. (104.3 WB)	ED1, ED0 = 2.4L Power Tech	DDK = 5 Speed HDManual
H = Sport	U = RHD (4WD)		EKG, EK0 = 3.7L Power Tech	DDD = 5 Speed HD Manual
M = Renegade	T = LHD (2WD)		ENJ = 2.5L 4Cyl Turbo Diesel	DG4,DGQ = Multi-Speed Auto
			ENR = 2.8L 4Cyl Turbo Diesel	DG6 = 4 Speed Auto Transm
			EN0 = 4Cyl Turbo Diesel	DG0 = All Automatic Transm
				DBB = All Manual Transm

Bike Carrier - Spare Tire Mount
Figure 001-215

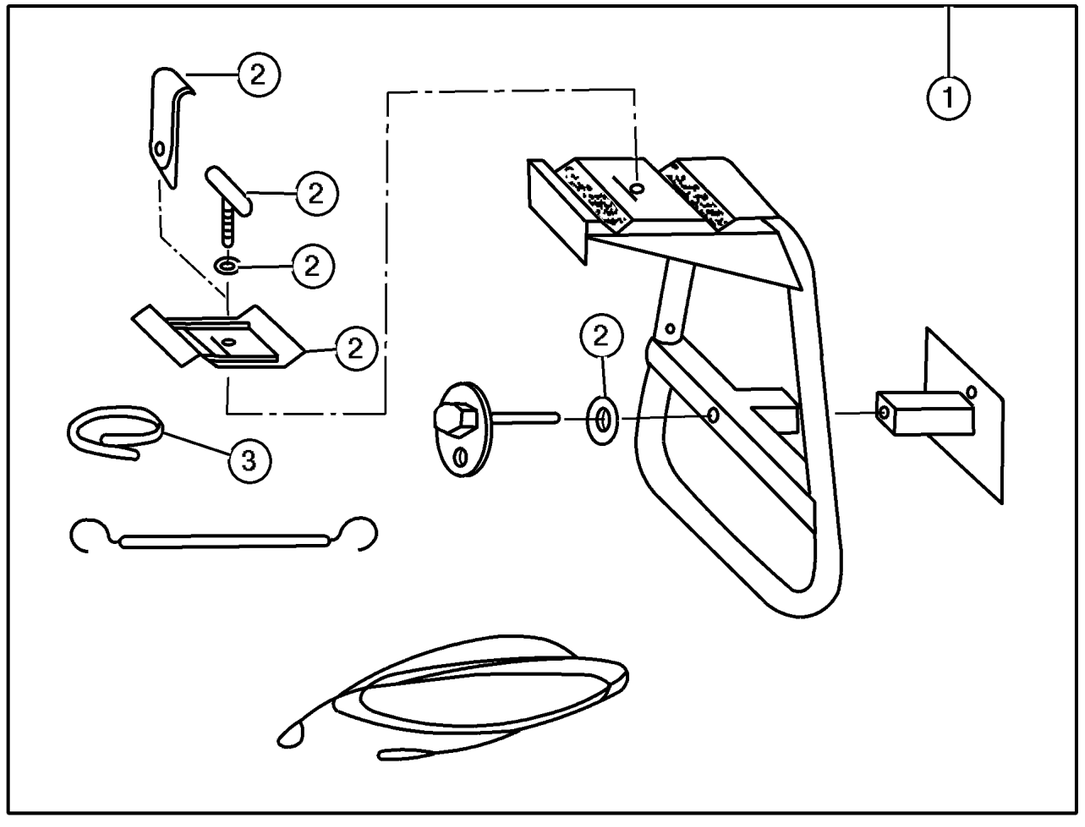

ITEM	PART NUMBER	QTY	LINE	SERIES	BODY	ENGINE	TRANS	TRIM	DESCRIPTION
NOTE: Mounts to Spare Tire - Holds two Bikes with Crossbars									
1	8220 7520	1							CARRIER KIT, Bike
2	5018 825AA	1							HARDWARE KIT, Bike Carrier, Contains: T-Handle, Lock Strap, Top Clamp Assembly, Nylon Washers
3	4762 880	1							STRAP KIT, Velcro

JEEP LIBERTY (KJ)

SERIES	LINE	BODY	ENGINE	TRANSMISSION
P = Limited	J = LHD (4WD)	74 = 4 Dr. (104.3 WB)	ED1, ED0 = 2.4L Power Tech	DDK = 5 Speed HDManual
H = Sport	U = RHD (4WD)		EKG, EK0 = 3.7L Power Tech	DDD = 5 Speed HD Manual
M = Renegade	T = LHD (2WD)		ENJ = 2.5L 4Cyl Turbo Diesel	DG4,DGQ = Multi-Speed Auto
			ENR = 2.8L 4Cyl Turbo Diesel	DG6 = 4 Speed Auto Transm
			EN0 = 4Cyl Turbo Diesel	DG0 = All Automatic Transm
				DBB = All Manual Transm

Carrier Kit - Canoe
Figure 001-216

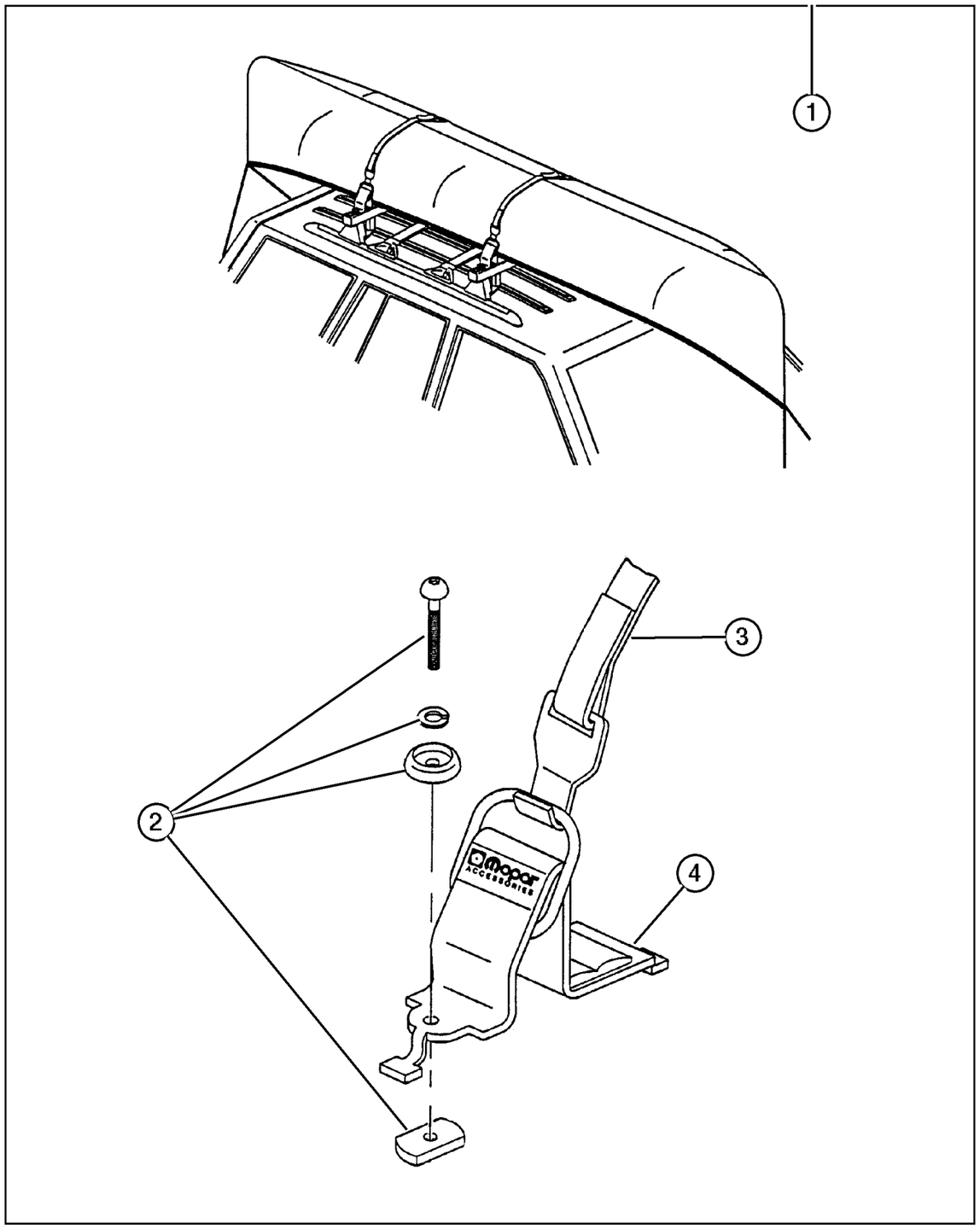

ITEM	PART NUMBER	QTY	LINE	SERIES	BODY	ENGINE	TRANS	TRIM	DESCRIPTION
NOTE:									
Use only with Sport Utility Bar									
Hardware Kit also contained in Carrier Kit									
1	8220 4700	1							CARRIER KIT, Canoe
2	5016 389AA	1							HARDWARE KIT, Accessory, Contains 4 25MM Button Head Screws, 4 30MM Button Head Screws, 4 Dome Washers, 4 Lock Washers, 4 Rubber Washers, 4 T-Nuts
3	5016 511AA	1							STRAP, Cargo Tie Down
4									BRACKET, Cargo Tie Down, Serviced in Kit, (NOT SERVICED)
									(Not Serviced)

JEEP LIBERTY (KJ)

SERIES	LINE	BODY	ENGINE	TRANSMISSION
P = Limited	J = LHD (4WD)	74 = 4 Dr. (104.3 WB)	ED1, ED0 = 2.4L Power Tech	DDK = 5 Speed HDManual
H = Sport	U = RHD (4WD)		EKG, EK0 = 3.7L Power Tech	DDD = 5 Speed HD Manual
M = Renegade	T = LHD (2WD)		ENJ = 2.5L 4Cyl Turbo Diesel	DG4,DGQ = Multi-Speed Auto
			ENR = 2.8L 4Cyl Turbo Diesel	DG6 = 4 Speed Auto Transm
			EN0 = 4Cyl Turbo Diesel	DG0 = All Automatic Transm
				DBB = All Manual Transm

AR = Use as required - = Non illustrated part # = New this model year **June 3, 2003**

« RETURN TO GROUP INDEX

Carrier Kit - Water Sports
Figure 001-218

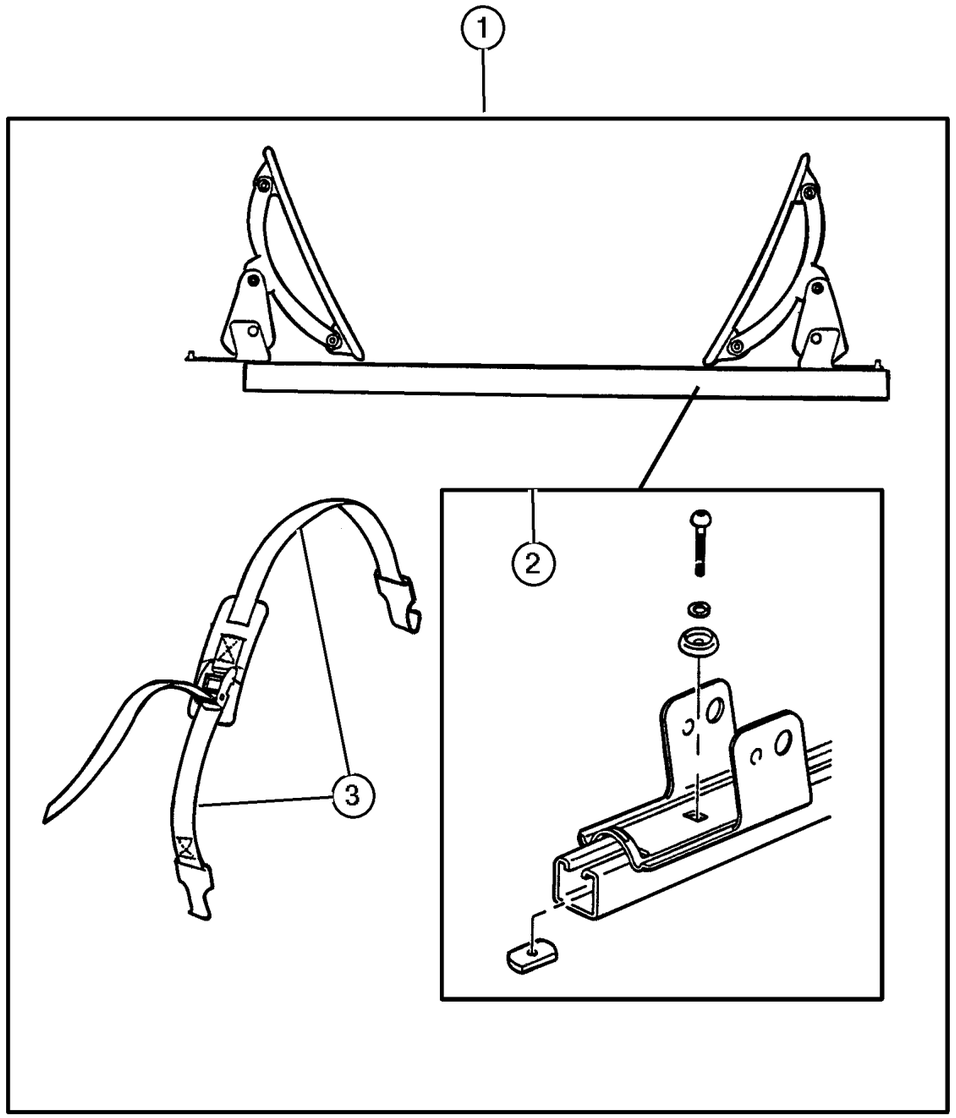

ITEM	PART NUMBER	QTY	LINE	SERIES	BODY	ENGINE	TRANS	TRIM	DESCRIPTION
1	8220 5416	1							CARRIER KIT, Water Sports
2	5016 389AA	1							HARDWARE KIT, Accessory, Contains 4 25MM Button Head Screws, 4 30MM Button Head Screws, 4 Dome Washers, 4 Lock Washers, 4 Rubber Washers, 4 T-Nuts
3	5016 511AA	1							STRAP, Cargo Tie Down

JEEP LIBERTY (KJ)

SERIES	LINE	BODY	ENGINE	TRANSMISSION
P = Limited	J = LHD (4WD)	74 = 4 Dr. (104.3 WB)	ED1, ED0 = 2.4L Power Tech	DDK = 5 Speed HDManual
H = Sport	U = RHD (4WD)		EKG, EK0 = 3.7L Power Tech	DDD = 5 Speed HD Manual
M = Renegade	T = LHD (2WD)		ENJ = 2.5L 4Cyl Turbo Diesel	DG4,DGQ = Multi-Speed Auto
			ENR = 2.8L 4Cyl Turbo Diesel	DG6 = 4 Speed Auto Transm
			EN0 = 4Cyl Turbo Diesel	DG0 = All Automatic Transm
				DBB = All Manual Transm

Ski Carrier - Roof Mount
Figure 001-223

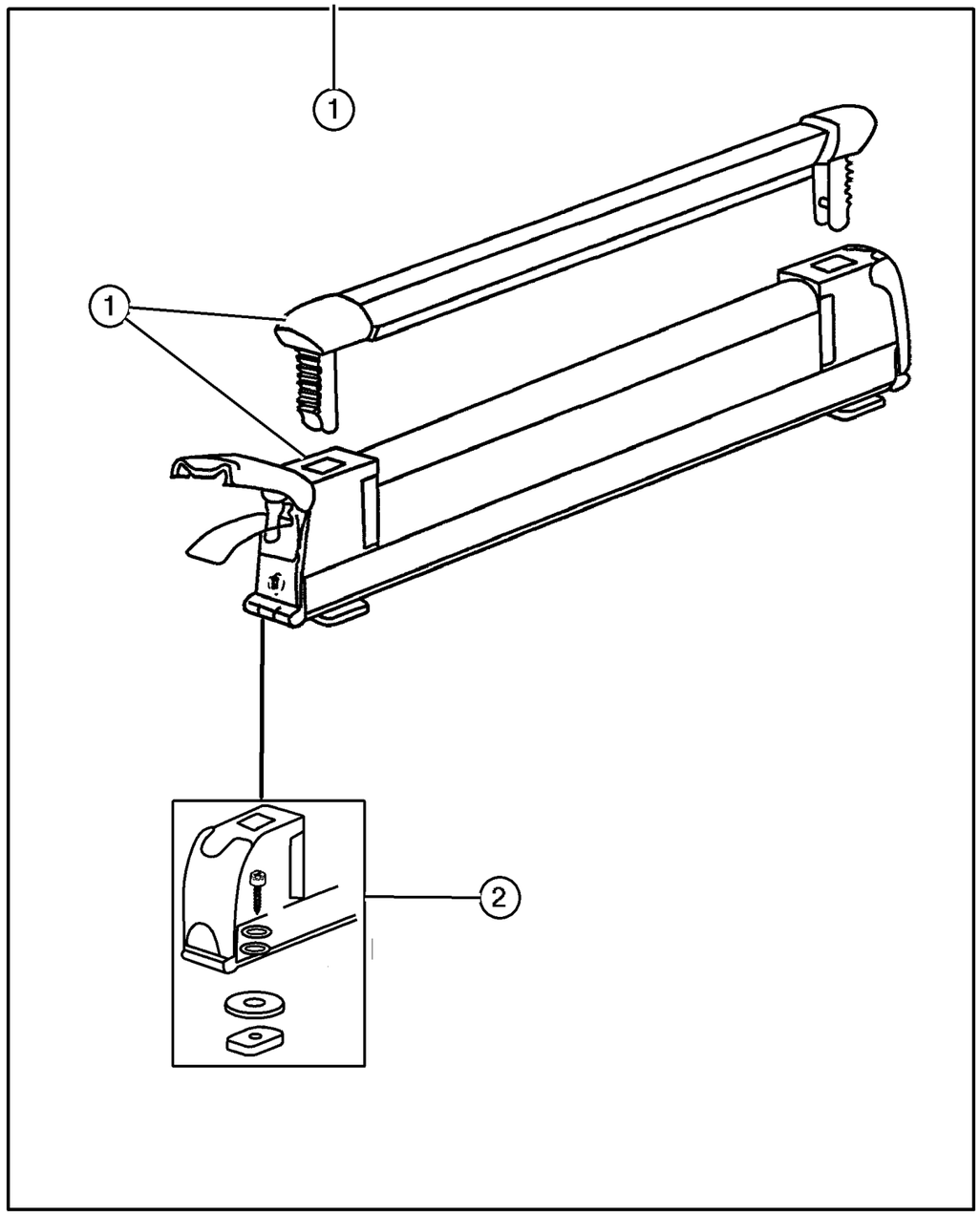

ITEM	PART NUMBER	QTY	LINE	SERIES	BODY	ENGINE	TRANS	TRIM	DESCRIPTION
1									CARRIER KIT, Ski
	8220 7312	1							3 Pair
	8220 7308	1							6 Pair
2	5086 158AA	1							HARDWARE KIT, Accessory, Contains: 4 - 25MM Screws, 4 - 20M Screws, 4 - 16MM Screws, 4 - Lock Washers, 4 - Flat Washers, 4 - T Plates, 4 - Rubber Washers
-3	5066 632AA	1							TOOL, Screw Driver

JEEP LIBERTY (KJ)

SERIES	LINE	BODY	ENGINE	TRANSMISSION
P = Limited	J = LHD (4WD)	74 = 4 Dr. (104.3 WB)	ED1, ED0 = 2.4L Power Tech	DDK = 5 Speed HDManual
H = Sport	U = RHD (4WD)		EKG, EK0 = 3.7L Power Tech	DDD = 5 Speed HD Manual
M = Renegade	T = LHD (2WD)		ENJ = 2.5L 4Cyl Turbo Diesel	DG4,DGQ = Multi-Speed Auto
			ENR = 2.8L 4Cyl Turbo Diesel	DG6 = 4 Speed Auto Transm
			EN0 = 4Cyl Turbo Diesel	DG0 = All Automatic Transm
				DBB = All Manual Transm

AR = Use as required - = Non illustrated part # = New this model year **June 3, 2003**

« RETURN TO GROUP INDEX

Ski Carrier - Spare Tire Mount
Figure 001-225

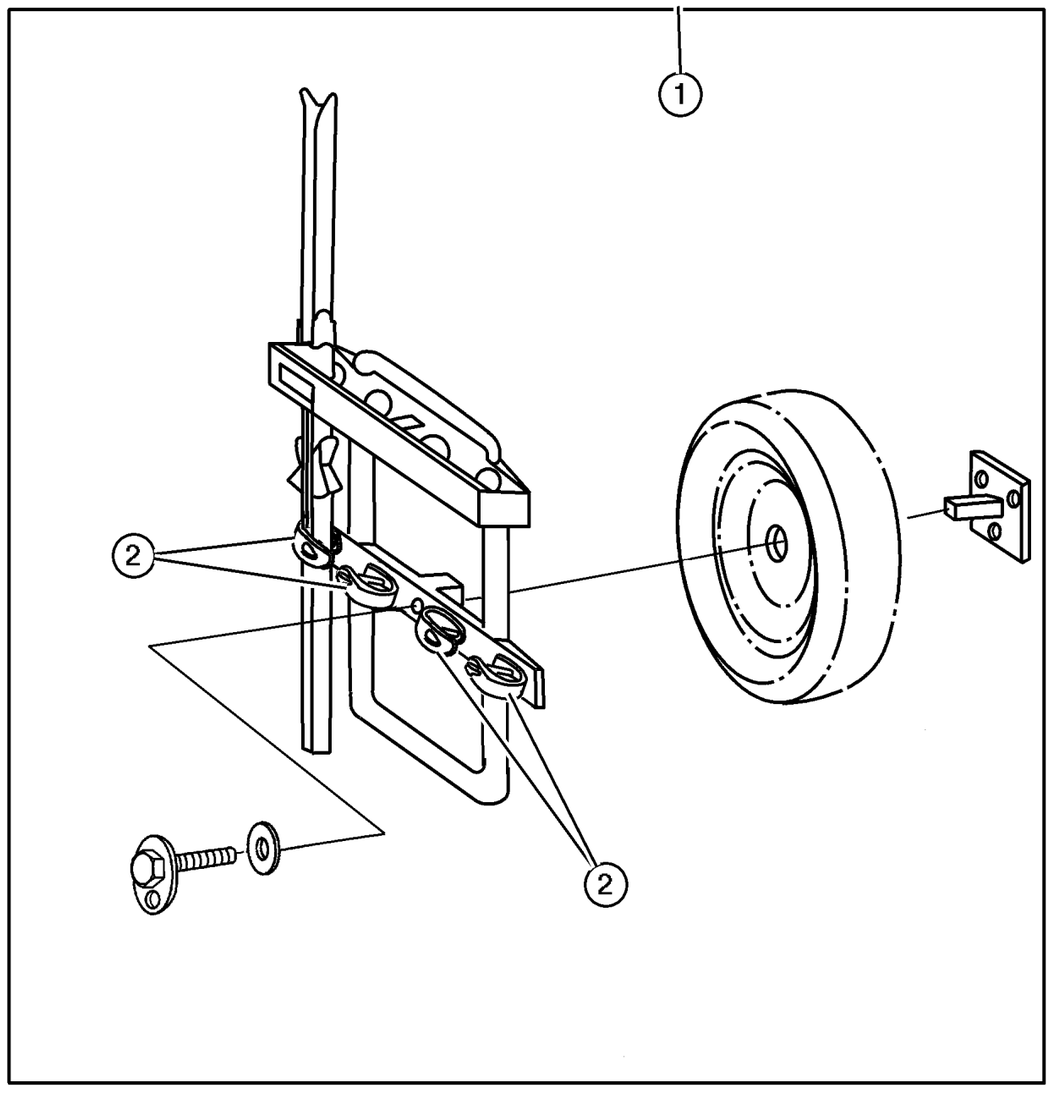

ITEM	PART NUMBER	QTY	LINE	SERIES	BODY	ENGINE	TRANS	TRIM	DESCRIPTION
NOTE: Requires full size, outside mounted spare tire.									
1	8220 7643	1			74				CARRIER KIT, Ski
2	5016 775AA	1			74				STRAP KIT, Bike Carrier Latch

JEEP LIBERTY (KJ)

SERIES	LINE	BODY	ENGINE	TRANSMISSION
P = Limited	J = LHD (4WD)	74 = 4 Dr. (104.3 WB)	ED1, ED0 = 2.4L Power Tech	DDK = 5 Speed HDManual
H = Sport	U = RHD (4WD)		EKG, EK0 = 3.7L Power Tech	DDD = 5 Speed HD Manual
M = Renegade	T = LHD (2WD)		ENJ = 2.5L 4Cyl Turbo Diesel	DG4,DGQ = Multi-Speed Auto
			ENR = 2.8L 4Cyl Turbo Diesel	DG6 = 4 Speed Auto Transm
			EN0 = 4Cyl Turbo Diesel	DG0 = All Automatic Transm
				DBB = All Manual Transm

Rack Kit - Rail Mount
Figure 001-230

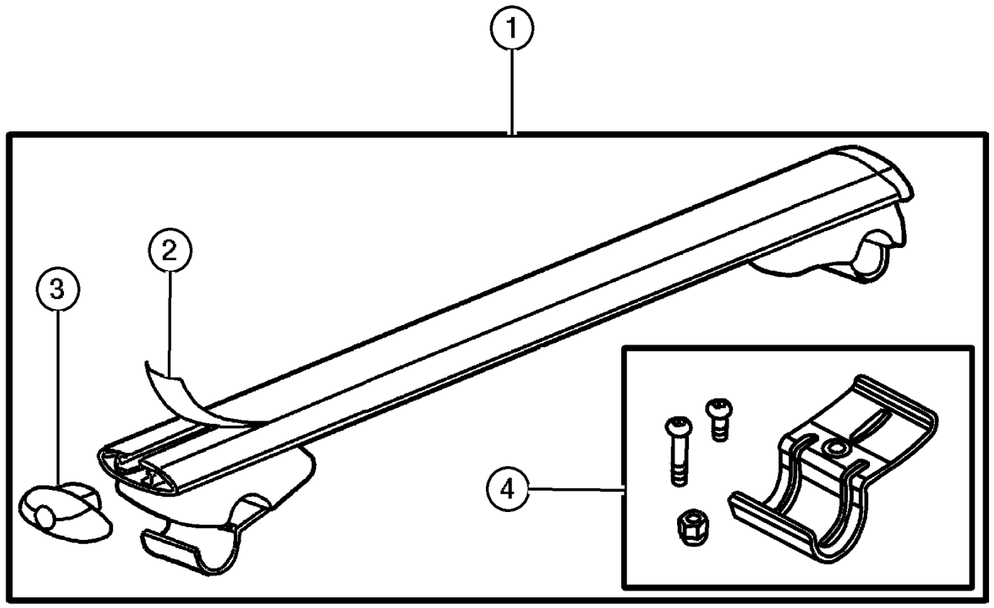

ITEM	PART NUMBER	QTY	LINE	SERIES	BODY	ENGINE	TRANS	TRIM	DESCRIPTION
Note: Utility type rack, used with other roof top accessories.									
1	8220 5174	1	J, T		74				RACK KIT, Sport - Rail Mount
2	5086 161AA	1	J, T		74				RUB STRIP, Lugg Rack Cross
3	5086 162AA	1	J, T		74				END CAP, Luggage Rack
4	5086 293AA	1	J, T		74				HARDWARE KIT
-5	5066 632AA	1	J, T		74				TOOL, Screw Driver

JEEP LIBERTY (KJ)

SERIES	LINE	BODY	ENGINE	TRANSMISSION
P = Limited	J = LHD (4WD)	74 = 4 Dr. (104.3 WB)	ED1, ED0 = 2.4L Power Tech	DDK = 5 Speed HDManual
H = Sport	U = RHD (4WD)		EKG, EK0 = 3.7L Power Tech	DDD = 5 Speed HD Manual
M = Renegade	T = LHD (2WD)		ENJ = 2.5L 4Cyl Turbo Diesel	DG4,DGQ = Multi-Speed Auto
			ENR = 2.8L 4Cyl Turbo Diesel	DG6 = 4 Speed Auto Transm
			EN0 = 4Cyl Turbo Diesel	DG0 = All Automatic Transm
				DBB = All Manual Transm

Luggage Carrier - Roof Hard Shell
Figure 001-235

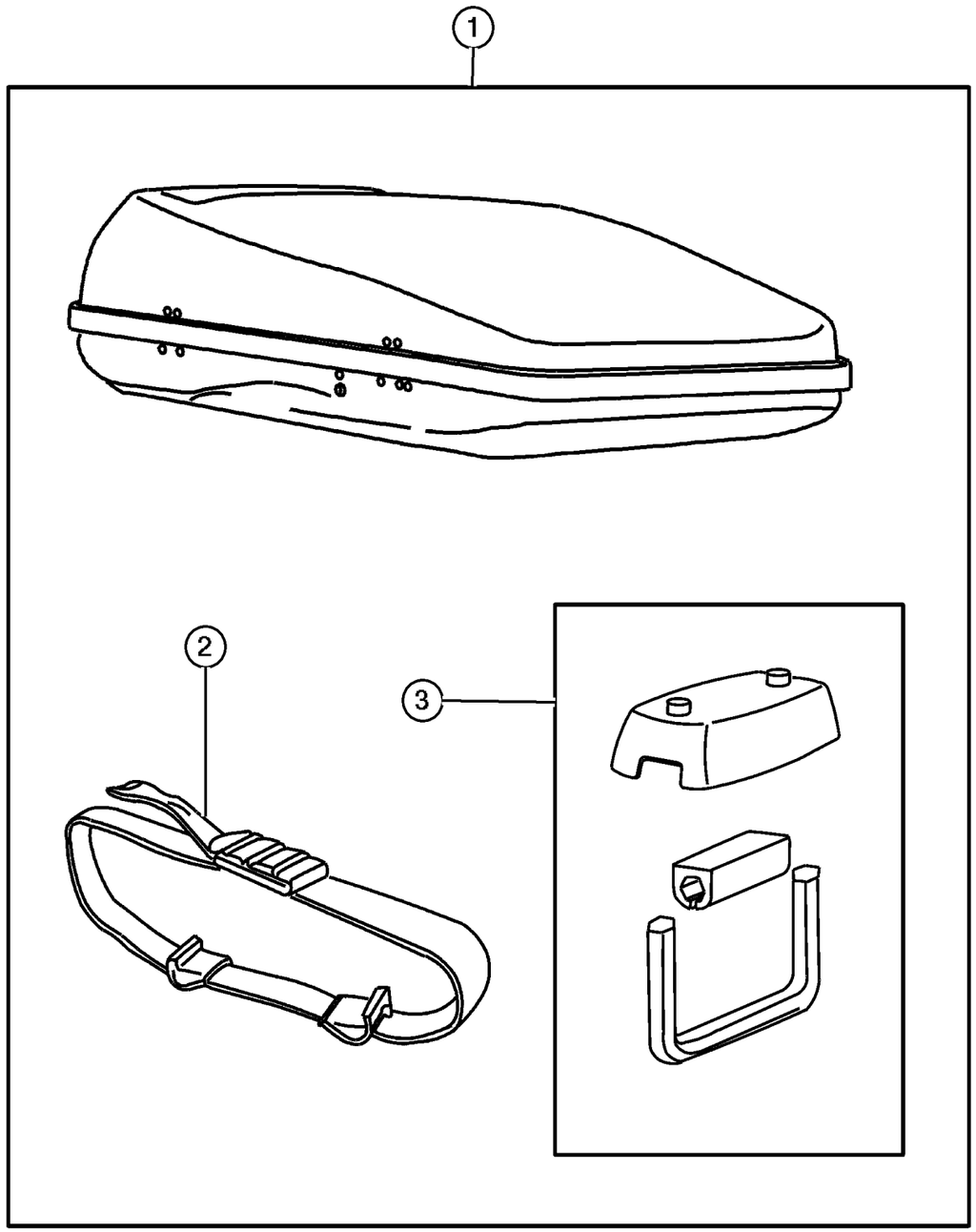

ITEM	PART NUMBER	QTY	LINE	SERIES	BODY	ENGINE	TRANS	TRIM	DESCRIPTION
1									CARRIER KIT, Luggage
	8220 7353	1							440 Liter Capacity
	8220 7341	1							480 Liter Capacity
2	5086 160AA	1							STRAP, Cargo Tie Down
3	5086 159AA	1							HARDWARE KIT

JEEP LIBERTY (KJ)

SERIES	LINE	BODY	ENGINE	TRANSMISSION
P = Limited	J = LHD (4WD)	74 = 4 Dr. (104.3 WB)	ED1, ED0 = 2.4L Power Tech	DDK = 5 Speed HDManual
H = Sport	U = RHD (4WD)		EKG, EK0 = 3.7L Power Tech	DDD = 5 Speed HD Manual
M = Renegade	T = LHD (2WD)		ENJ = 2.5L 4Cyl Turbo Diesel	DG4,DGQ = Multi-Speed Auto
			ENR = 2.8L 4Cyl Turbo Diesel	DG6 = 4 Speed Auto Transm
			EN0 = 4Cyl Turbo Diesel	DG0 = All Automatic Transm
				DBB = All Manual Transm

AR = Use as required - = Non illustrated part # = New this model year **June 3, 2003**

« RETURN TO GROUP INDEX

Luggage Carrier - Roof Vinyl
Figure 001-237

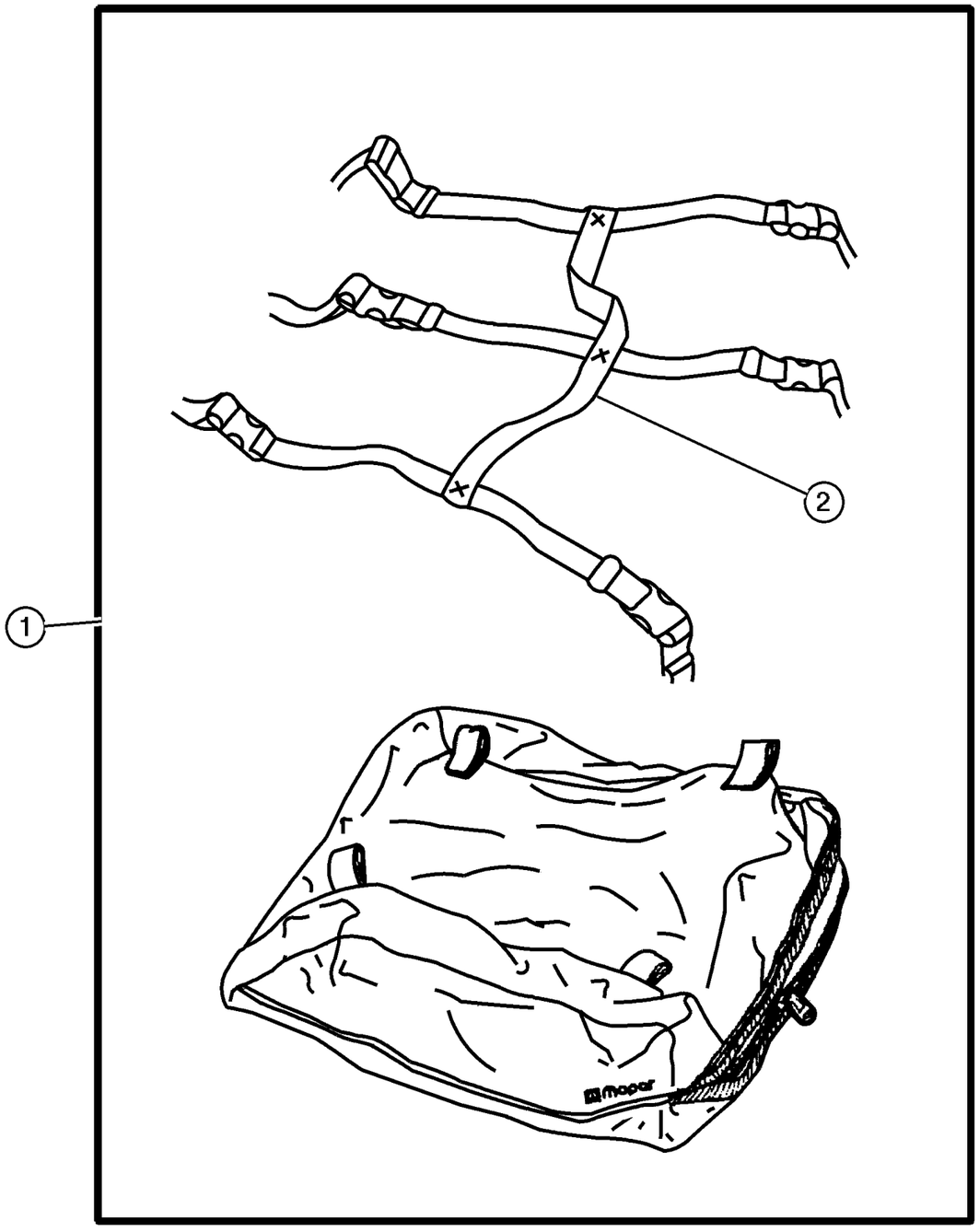

ITEM	PART NUMBER	QTY	LINE	SERIES	BODY	ENGINE	TRANS	TRIM	DESCRIPTION
NOTE: Requires Roof Rack.									
1	8220 7198	1							CARRIER KIT, Luggage
2	5066 332AA	1							STRAP KIT, Luggage Carrier

JEEP LIBERTY (KJ)

SERIES	LINE	BODY	ENGINE	TRANSMISSION
P = Limited	J = LHD (4WD)	74 = 4 Dr. (104.3 WB)	ED1, ED0 = 2.4L Power Tech	DDK = 5 Speed HDManual
H = Sport	U = RHD (4WD)		EKG, EK0 = 3.7L Power Tech	DDD = 5 Speed HD Manual
M = Renegade	T = LHD (2WD)		ENJ = 2.5L 4Cyl Turbo Diesel	DG4,DGQ = Multi-Speed Auto
			ENR = 2.8L 4Cyl Turbo Diesel	DG6 = 4 Speed Auto Transm
			EN0 = 4Cyl Turbo Diesel	DG0 = All Automatic Transm
				DBB = All Manual Transm

Wiring Kit - Trailer Tow 4-Way
Figure 001-240

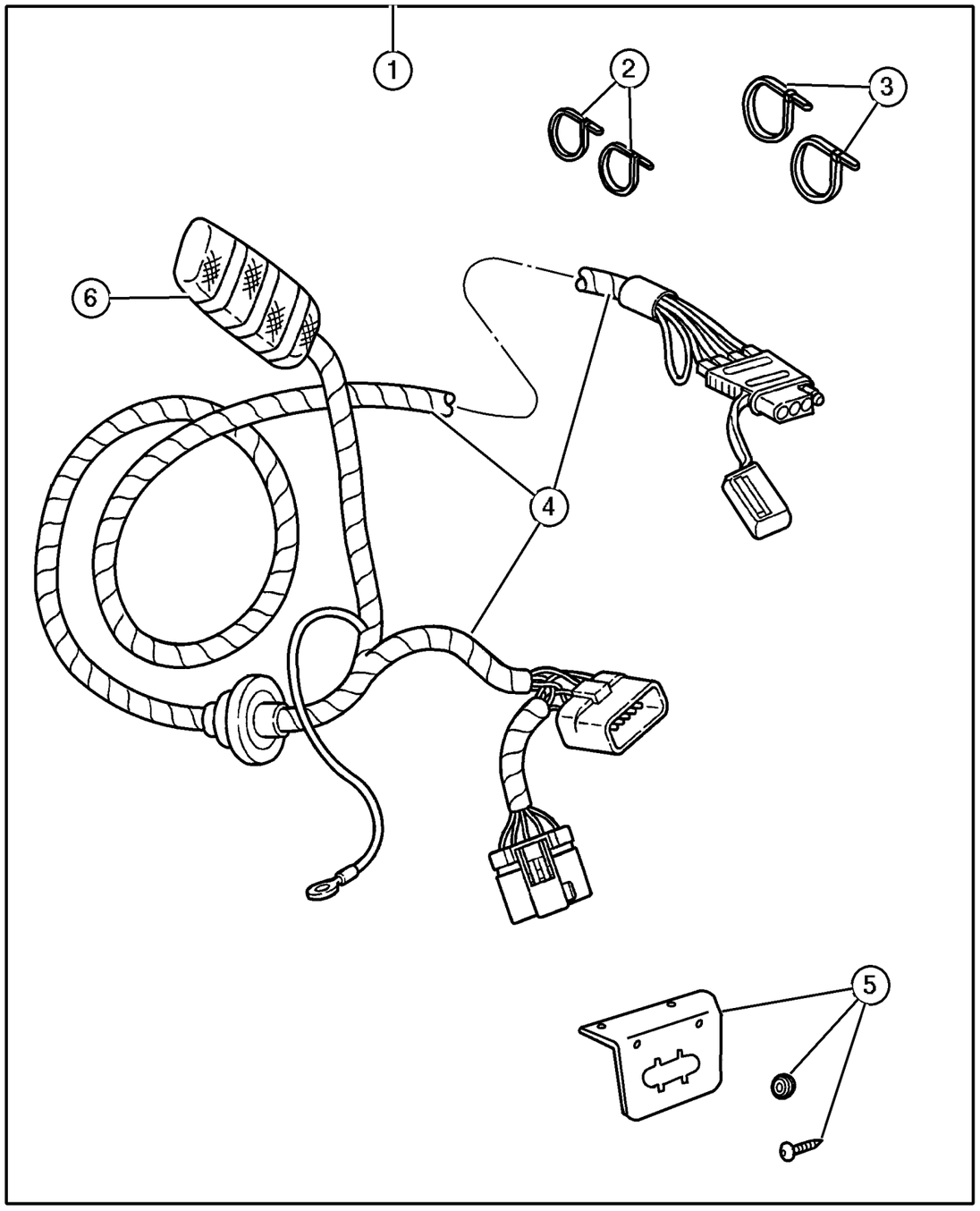

ITEM	PART NUMBER	QTY	LINE	SERIES	BODY	ENGINE	TRANS	TRIM	DESCRIPTION
1	8220 7290	1							WIRING PACKAGE, Trailer Tow
2	4641 780	1							STRAP, Tie, 7.75 Inch
3	6016 155	1							STRAP, Tie, 14.5 Inch
4									WIRING, Trailer Tow - 4 Way, Serviced in Package, (NOT SERVICED) (Not Serviced)
5	8220 4602	1							BRACKET KIT, Trailer Tow
6	4671 168	1							RELAY, Mini

JEEP LIBERTY (KJ)

SERIES	LINE	BODY	ENGINE	TRANSMISSION
P = Limited	J = LHD (4WD)	74 = 4 Dr. (104.3 WB)	ED1, ED0 = 2.4L Power Tech	DDK = 5 Speed HDManual
H = Sport	U = RHD (4WD)		EKG, EK0 = 3.7L Power Tech	DDD = 5 Speed HD Manual
M = Renegade	T = LHD (2WD)		ENJ = 2.5L 4Cyl Turbo Diesel	DG4,DGQ = Multi-Speed Auto
			ENR = 2.8L 4Cyl Turbo Diesel	DG6 = 4 Speed Auto Transm
			EN0 = 4Cyl Turbo Diesel	DG0 = All Automatic Transm
				DBB = All Manual Transm

AR = Use as required - = Non illustrated part # = New this model year **June 3, 2003**

« RETURN TO GROUP INDEX

Wiring Kit - Trailer Tow 7-Way
Figure 001-242

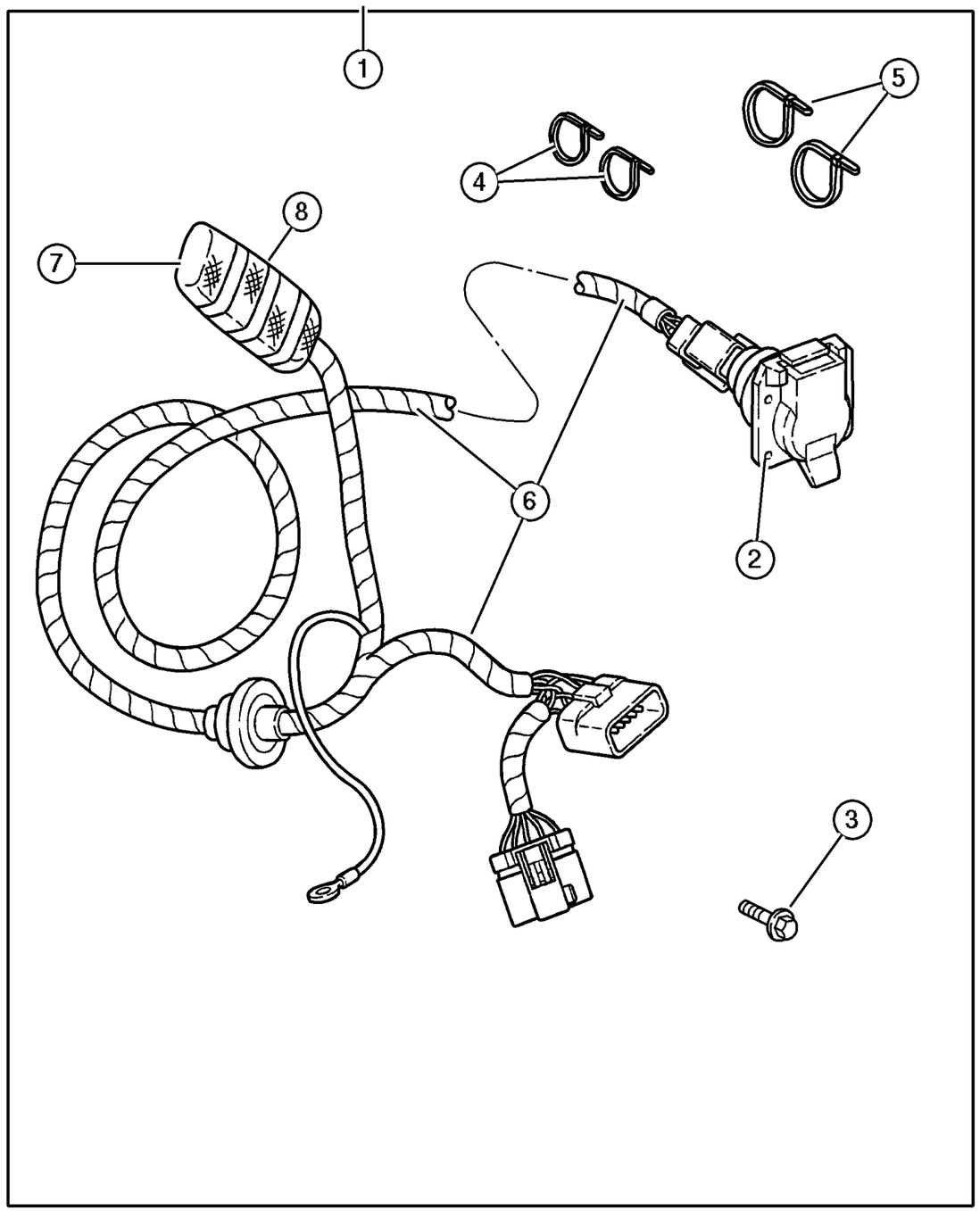

ITEM	PART NUMBER	QTY	LINE	SERIES	BODY	ENGINE	TRANS	TRIM	DESCRIPTION
1	8220 7248	1							WIRING PACKAGE, Trailer Tow
2	56038 366AB	1							CONNECTOR, 7 Way
3	0154 633	1							SCREW, .164-18x.625
4	4641 780	1							STRAP, Tie, 7.75 Inch
5	6016 155	1							STRAP, Tie, 14.5 Inch
6									WIRING, Trailer Tow, (NOT SERVICED) (Not Serviced)
7	5600 7290	1							BREAKER, Circuit
8	4671 168	1							RELAY, Mini

JEEP LIBERTY (KJ)

SERIES	LINE	BODY	ENGINE	TRANSMISSION
P = Limited	J = LHD (4WD)	74 = 4 Dr. (104.3 WB)	ED1, ED0 = 2.4L Power Tech	DDK = 5 Speed HDManual
H = Sport	U = RHD (4WD)		EKG, EK0 = 3.7L Power Tech	DDD = 5 Speed HD Manual
M = Renegade	T = LHD (2WD)		ENJ = 2.5L 4Cyl Turbo Diesel	DG4,DGQ = Multi-Speed Auto
			ENR = 2.8L 4Cyl Turbo Diesel	DG6 = 4 Speed Auto Transm
			EN0 = 4Cyl Turbo Diesel	DG0 = All Automatic Transm
				DBB = All Manual Transm

Fan Kit - Engine Heavy Duty Cooling
Figure 001-250

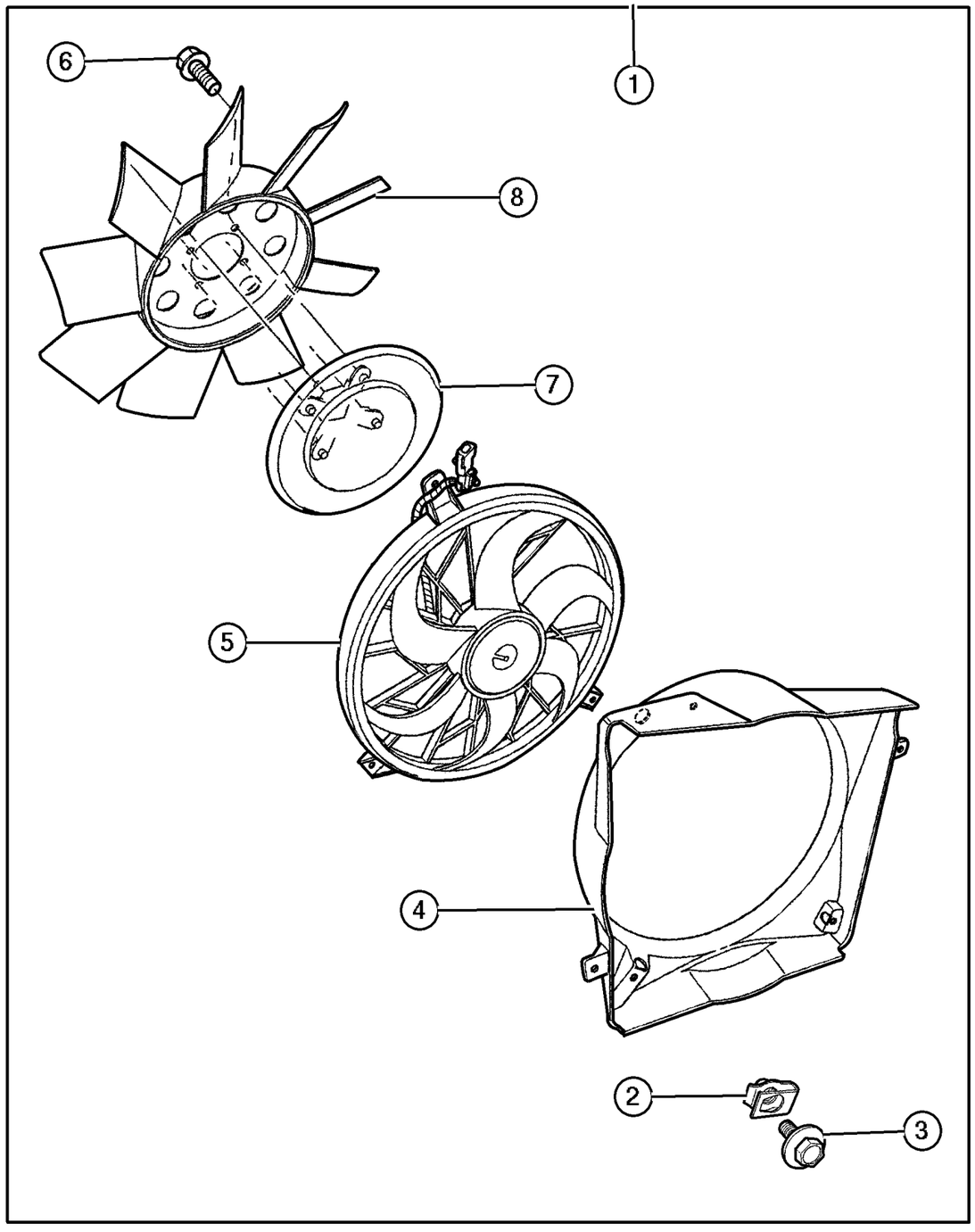

ITEM	PART NUMBER	QTY	LINE	SERIES	BODY	ENGINE	TRANS	TRIM	DESCRIPTION
1	8220 6937	1			74				FAN KIT, Cooling Heavy Duty
2	6505 172AA	3							U-NUT, M6x1.00
3	6102 117AA	3							SCREW AND WASHER, Hex Head, M6x1x20
4	52080 127AA	1							SHROUD, Fan
5	52079 528AB	1							FAN, Cooling, Electric Motor
6	6034 860	4							BOLT AND WASHER, Implement Attaching
7	52079 718AC	1							DRIVE, Fan
8	52079 654AC	1							FAN, Cooling

JEEP LIBERTY (KJ)

SERIES	LINE	BODY	ENGINE	TRANSMISSION
P = Limited	J = LHD (4WD)	74 = 4 Dr. (104.3 WB)	ED1, ED0 = 2.4L Power Tech	DDK = 5 Speed HDManual
H = Sport	U = RHD (4WD)		EKG, EK0 = 3.7L Power Tech	DDD = 5 Speed HD Manual
M = Renegade	T = LHD (2WD)		ENJ = 2.5L 4Cyl Turbo Diesel	DG4,DGQ = Multi-Speed Auto
			ENR = 2.8L 4Cyl Turbo Diesel	DG6 = 4 Speed Auto Transm
			EN0 = 4Cyl Turbo Diesel	DG0 = All Automatic Transm
				DBB = All Manual Transm

Speed Control Package
Figure 001-310

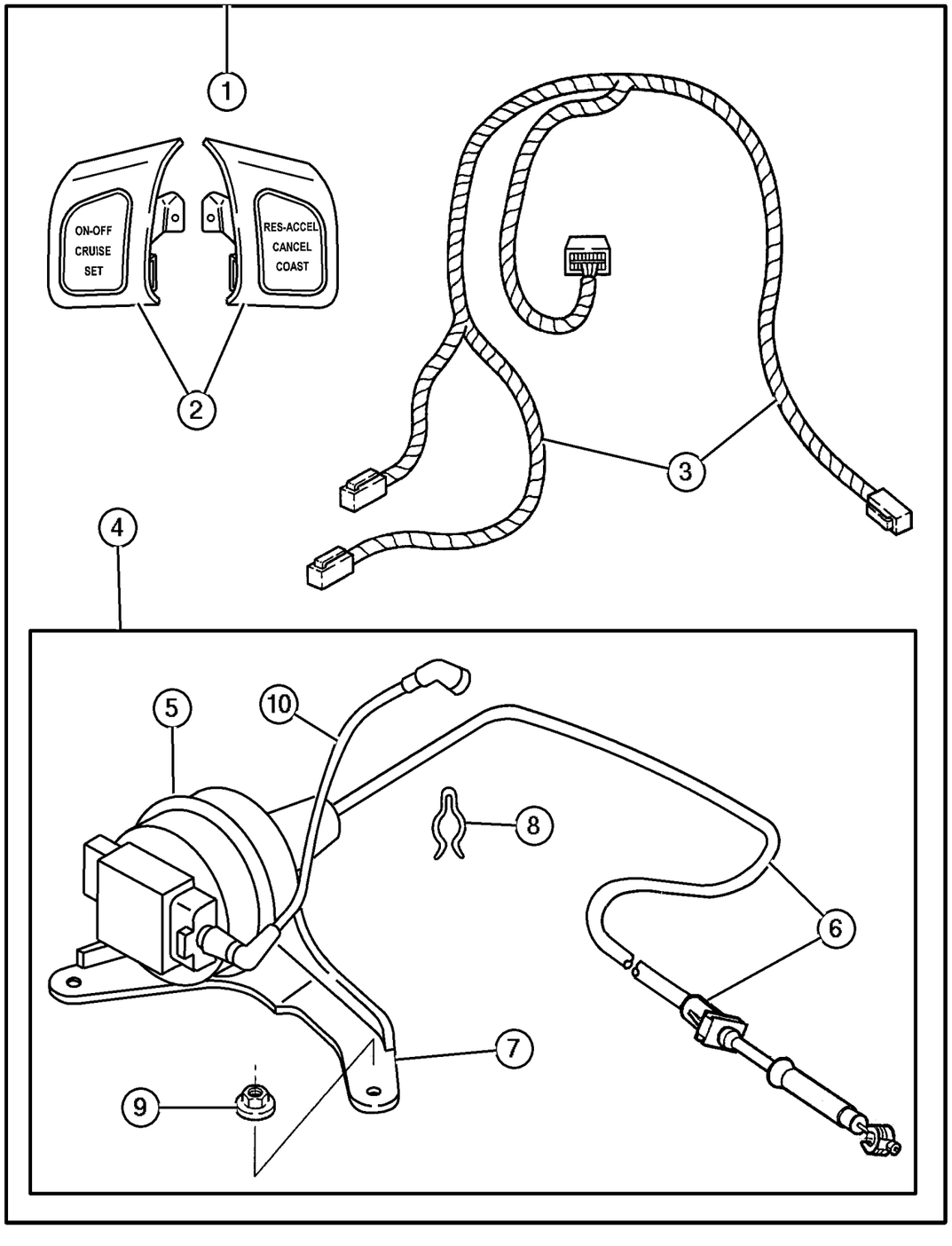

ITEM	PART NUMBER	QTY	LINE	SERIES	BODY	ENGINE	TRANS	TRIM	DESCRIPTION
Note: Servo Package contains Servo , Bracket, Clip, Nut , Vacuum Harness and Cable									
1									CONTROL PACKAGE, Speed Control
	8220 7075	1							2.4L Engine
	8220 7313	1							3.7L Engine
2									SWITCH, Speed Control
	56010 088AC	1							Right
	56010 089AC	1							Left
3	56010 170AC	1							WIRING, Steering Wheel
4									SERVO PACKAGE, Speed Control, Components Serviced Separately, (NOT SERVICED) (Not Serviced)
5	4669 979	1							SERVO, Speed Control
6									CABLE, Speed Control
	53013 346AB	1							2.4L Engine
	53013 367AC	1							3.7L Engine
7	53013 348AA	1							BRACKET, Speed Control Servo
8	6025 867	1							CLIP, Cable to Servo Attach
9	6502 493	2							NUT, Hex Flange Serration, M6x1
10	53013 347AB	1							HARNESS, Speed Control Vacuum

JEEP LIBERTY (KJ)

SERIES	LINE	BODY	ENGINE	TRANSMISSION
P = Limited	J = LHD (4WD)	74 = 4 Dr. (104.3 WB)	ED1, ED0 = 2.4L Power Tech	DDK = 5 Speed HDManual
H = Sport	U = RHD (4WD)		EKG, EK0 = 3.7L Power Tech	DDD = 5 Speed HD Manual
M = Renegade	T = LHD (2WD)		ENJ = 2.5L 4Cyl Turbo Diesel	DG4,DGQ = Multi-Speed Auto
			ENR = 2.8L 4Cyl Turbo Diesel	DG6 = 4 Speed Auto Transm
			EN0 = 4Cyl Turbo Diesel	DG0 = All Automatic Transm
				DBB = All Manual Transm

AR = Use as required - = Non illustrated part # = New this model year

June 3, 2003

« RETURN TO GROUP INDEX

Running Board Kit
Figure 001-430

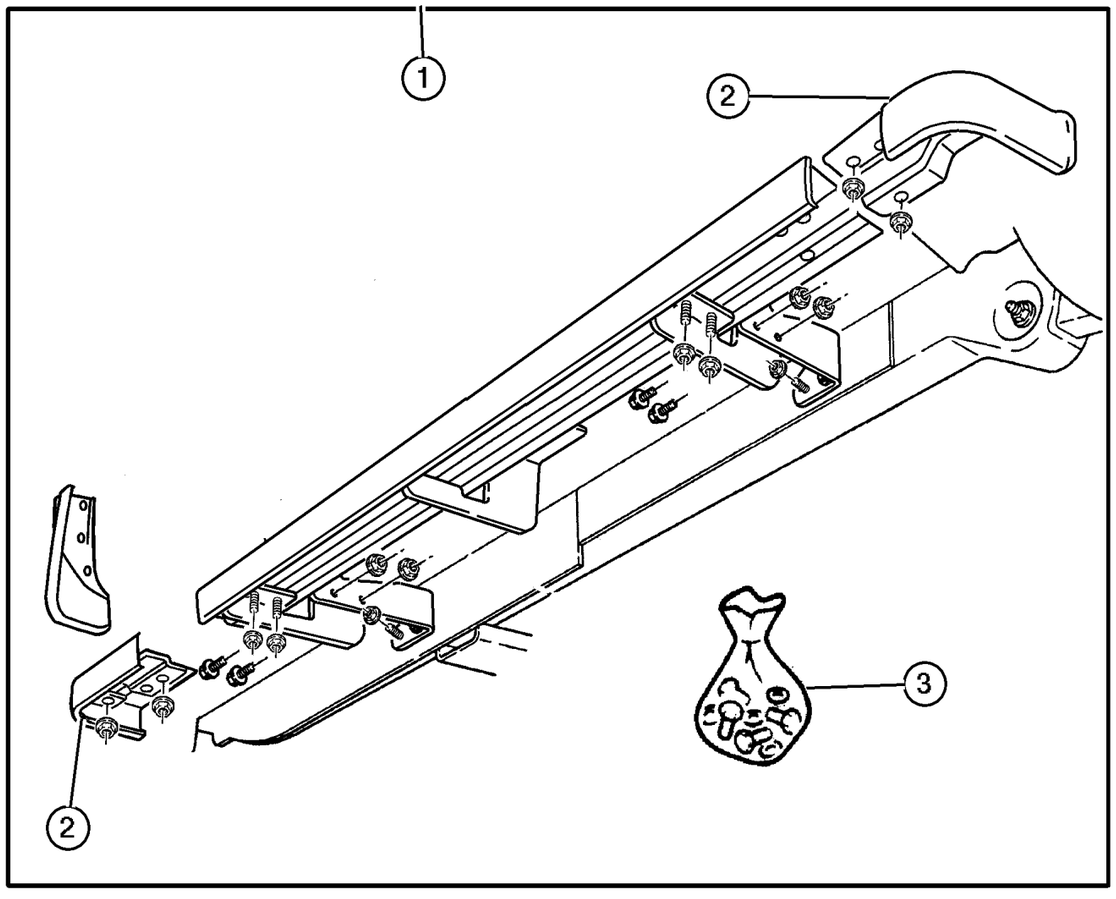

ITEM	PART NUMBER	QTY	LINE	SERIES	BODY	ENGINE	TRANS	TRIM	DESCRIPTION
NOTE: Kit contains all attaching parts including front splash guards									
1									RUNNING BOARD KIT, Full
	8220 7680	1							Black [DX8]
	8220 7681	1			74				Flame Red [PR4]
	8220 7682	1							Stone White [SW1]
	8220 7683	1							Patriot Blue [WB7]
	8220 7685	1							Bright Silver [WS2]
	8220 7687	1			74				Shale Green [XGR]
	8220 7688	1							Dark Garnet Red [XRV]
	8220 7690	1							Gray
2									END CAP, Running Board, Unpainted
	5086 043AA	1							Front Left
	5086 044AA	1							Rear Left
	5086 045AA	1							Front Right
	5086 046AA	1							Rear Right
3	5083 937AA	1			74				SCREW PACKAGE, Screw

JEEP LIBERTY (KJ)

SERIES	LINE	BODY	ENGINE	TRANSMISSION
P = Limited	J = LHD (4WD)	74 = 4 Dr. (104.3 WB)	ED1, ED0 = 2.4L Power Tech	DDK = 5 Speed HDManual
H = Sport	U = RHD (4WD)		EKG, EK0 = 3.7L Power Tech	DDD = 5 Speed HD Manual
M = Renegade	T = LHD (2WD)		ENJ = 2.5L 4Cyl Turbo Diesel	DG4,DGQ = Multi-Speed Auto
			ENR = 2.8L 4Cyl Turbo Diesel	DG6 = 4 Speed Auto Transm
			EN0 = 4Cyl Turbo Diesel	DG0 = All Automatic Transm
				DBB = All Manual Transm

Wheel Kit Cast Aluminum
Figure 001-460

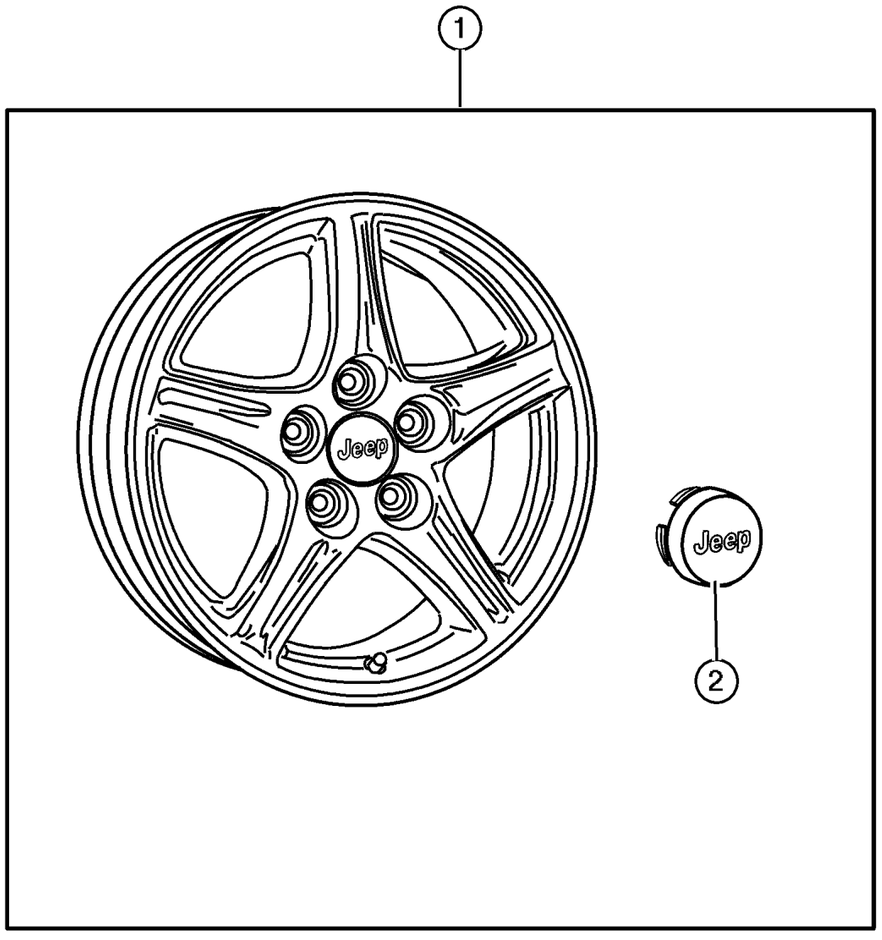

ITEM	PART NUMBER	QTY	LINE	SERIES	BODY	ENGINE	TRANS	TRIM	DESCRIPTION
1									WHEEL KIT, Cast Aluminum
	8220 5580	1							Polished
	8220 5899	1			74				Chromed
2	5083 064AA	1			74				CAP, Wheel Center

JEEP LIBERTY (KJ)

SERIES	LINE	BODY	ENGINE	TRANSMISSION
P = Limited	J = LHD (4WD)	74 = 4 Dr. (104.3 WB)	ED1, ED0 = 2.4L Power Tech	DDK = 5 Speed HDManual
H = Sport	U = RHD (4WD)		EKG, EK0 = 3.7L Power Tech	DDD = 5 Speed HD Manual
M = Renegade	T = LHD (2WD)		ENJ = 2.5L 4Cyl Turbo Diesel	DG4,DGQ = Multi-Speed Auto
			ENR = 2.8L 4Cyl Turbo Diesel	DG6 = 4 Speed Auto Transm
			EN0 = 4Cyl Turbo Diesel	DG0 = All Automatic Transm
				DBB = All Manual Transm

Skid Plate - Transfer Case
Figure 001-522

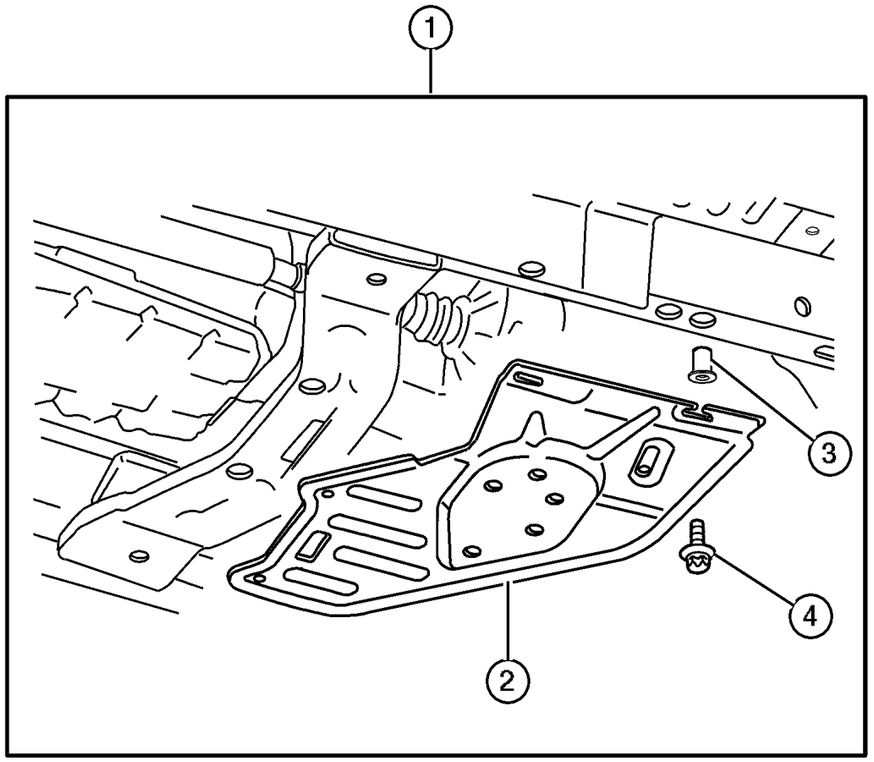

ITEM	PART NUMBER	QTY	LINE	SERIES	BODY	ENGINE	TRANS	TRIM	DESCRIPTION
1	8220 6123	1							PLATE PACKAGE, Skid - Transfer Case
2	52059 223AA	1	J, U						PLATE, Transfer Case Skid
3	6505 294AA	1							RIVET
4	6503 571	1							SCREW AND WASHER, M10x1. 50x35
-5	5013 886AA	1							TOOL, Rivnut

JEEP LIBERTY (KJ)

SERIES	LINE	BODY	ENGINE	TRANSMISSION
P = Limited	J = LHD (4WD)	74 = 4 Dr. (104.3 WB)	ED1, ED0 = 2.4L Power Tech	DDK = 5 Speed HDManual
H = Sport	U = RHD (4WD)		EKG, EK0 = 3.7L Power Tech	DDD = 5 Speed HD Manual
M = Renegade	T = LHD (2WD)		ENJ = 2.5L 4Cyl Turbo Diesel	DG4,DGQ = Multi-Speed Auto
			ENR = 2.8L 4Cyl Turbo Diesel	DG6 = 4 Speed Auto Transm
			EN0 = 4Cyl Turbo Diesel	DG0 = All Automatic Transm
				DBB = All Manual Transm

AR = Use as required - = Non illustrated part # = New this model year **June 3, 2003**

« RETURN TO GROUP INDEX

Skid Plate - Fuel Tank
Figure 001-524

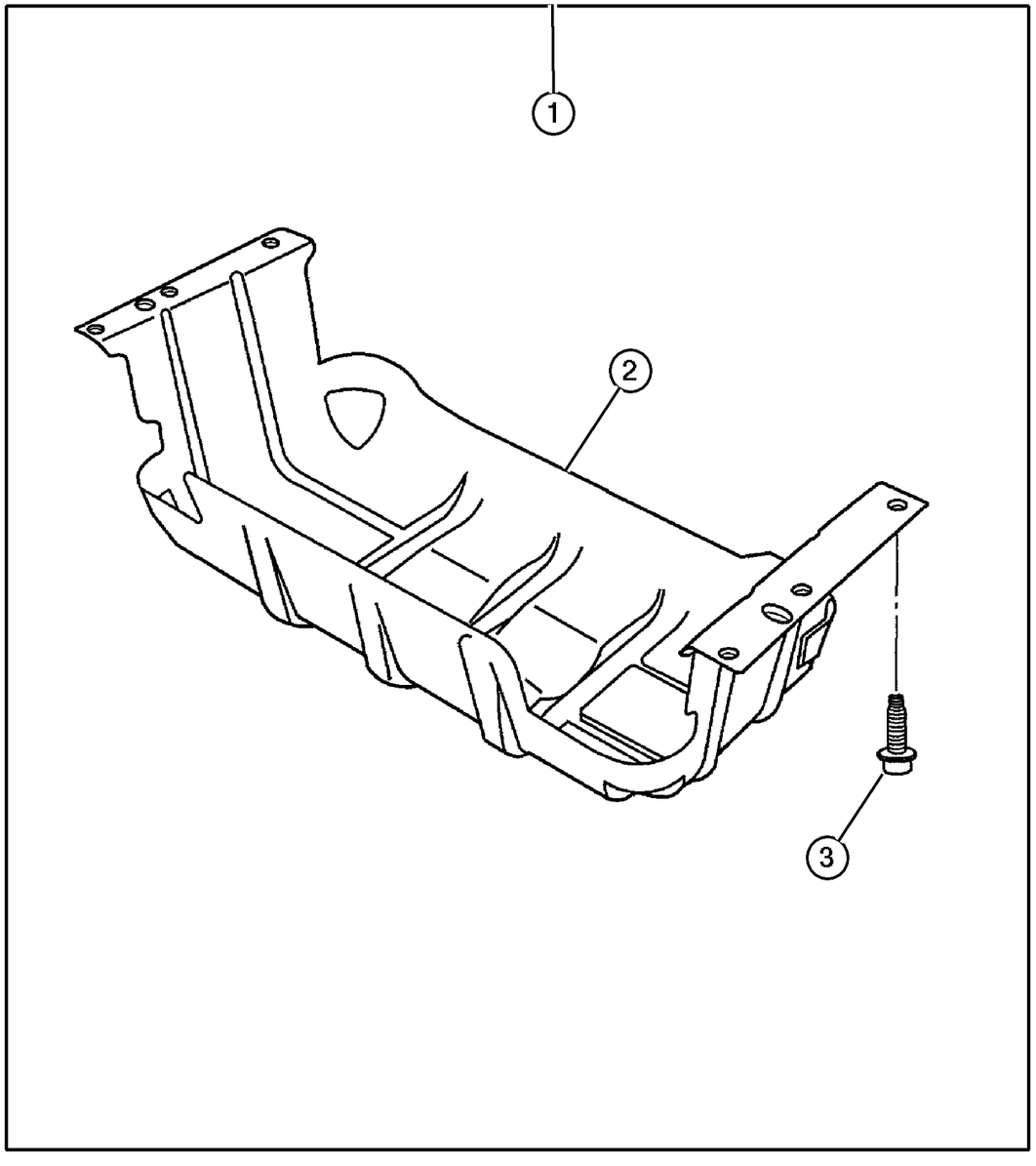

ITEM	PART NUMBER	QTY	LINE	SERIES	BODY	ENGINE	TRANS	TRIM	DESCRIPTION
1	8220 6122	1			74				SKID PLATE PACKAGE, Fuel Tank
2	52100 332AF	1							PLATE, Skid
3	6502 557	6							BOLT, Hex Flange Head, M12x1. 75x40

JEEP LIBERTY (KJ)

SERIES	LINE	BODY	ENGINE	TRANSMISSION
P = Limited	J = LHD (4WD)	74 = 4 Dr. (104.3 WB)	ED1, ED0 = 2.4L Power Tech	DDK = 5 Speed HDManual
H = Sport	U = RHD (4WD)		EKG, EK0 = 3.7L Power Tech	DDD = 5 Speed HD Manual
M = Renegade	T = LHD (2WD)		ENJ = 2.5L 4Cyl Turbo Diesel	DG4,DGQ = Multi-Speed Auto
			ENR = 2.8L 4Cyl Turbo Diesel	DG6 = 4 Speed Auto Transm
			EN0 = 4Cyl Turbo Diesel	DG0 = All Automatic Transm
				DBB = All Manual Transm

AR = Use as required - = Non illustrated part # = New this model year **June 3, 2003**

« RETURN TO GROUP INDEX

Light Kit - Fog
Figure 001-610

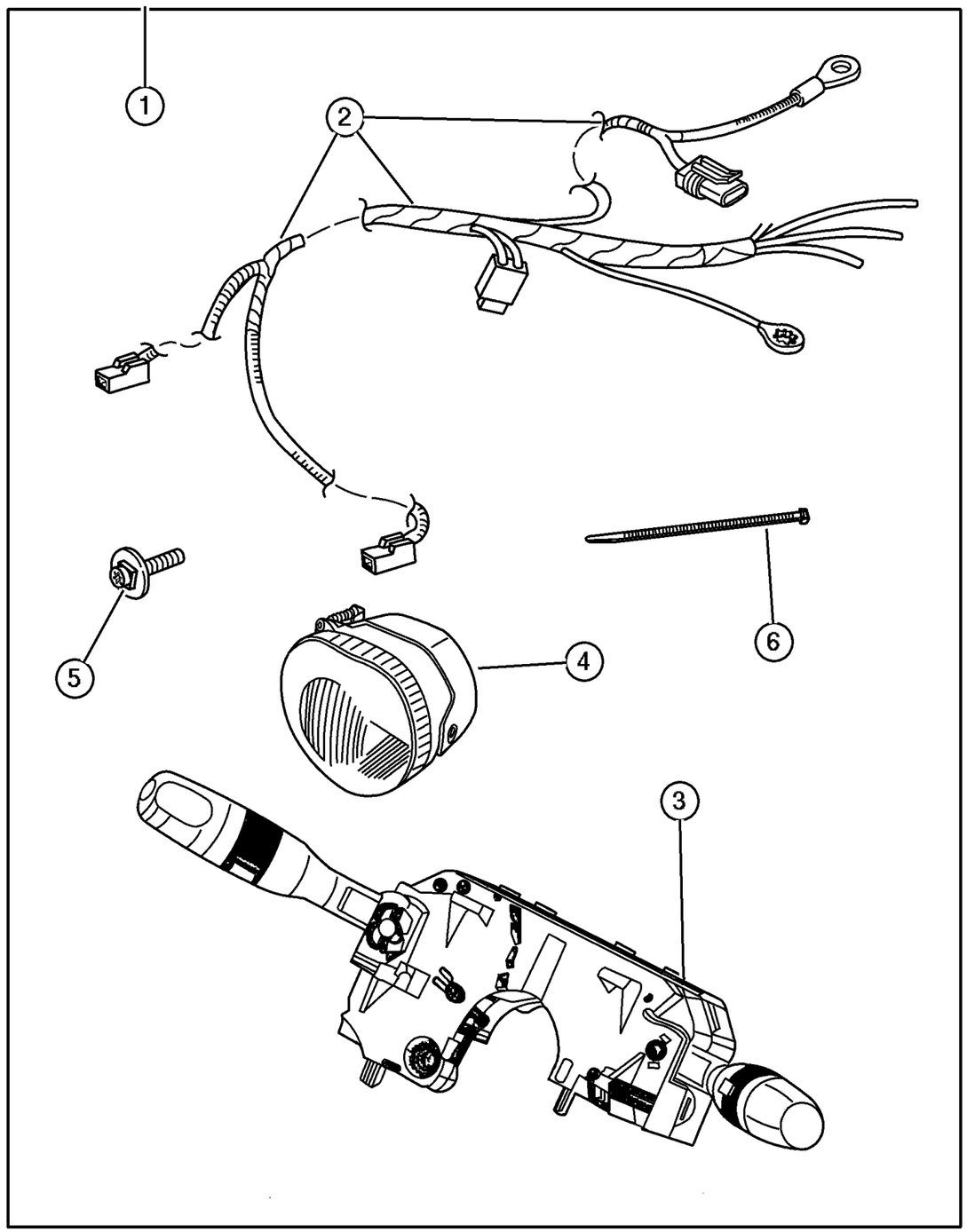

ITEM	PART NUMBER	QTY	LINE	SERIES	BODY	ENGINE	TRANS	TRIM	DESCRIPTION
1	8220 7998	1							LIGHT PACKAGE, Fog
2									WIRING, Fog Lamp, Serviced in Package, (NOT SERVICED) (Not Serviced)
3	56010 126AE	1							SWITCH, Multifunction
4									LAMP, Fog, Serviced in Package, (NOT SERVICED) (Not Serviced)
5	6506 579AA	6							SCREW, Fog Lamp
6	4641 780	1							STRAP, Tie, 7.75 Inch

JEEP LIBERTY (KJ)

SERIES	LINE	BODY	ENGINE	TRANSMISSION
P = Limited	J = LHD (4WD)	74 = 4 Dr. (104.3 WB)	ED1, ED0 = 2.4L Power Tech	DDK = 5 Speed HDManual
H = Sport	U = RHD (4WD)		EKG, EK0 = 3.7L Power Tech	DDD = 5 Speed HD Manual
M = Renegade	T = LHD (2WD)		ENJ = 2.5L 4Cyl Turbo Diesel	DG4,DGQ = Multi-Speed Auto
			ENR = 2.8L 4Cyl Turbo Diesel	DG6 = 4 Speed Auto Transm
			EN0 = 4Cyl Turbo Diesel	DG0 = All Automatic Transm
				DBB = All Manual Transm

Heater Kit
Figure 001-620

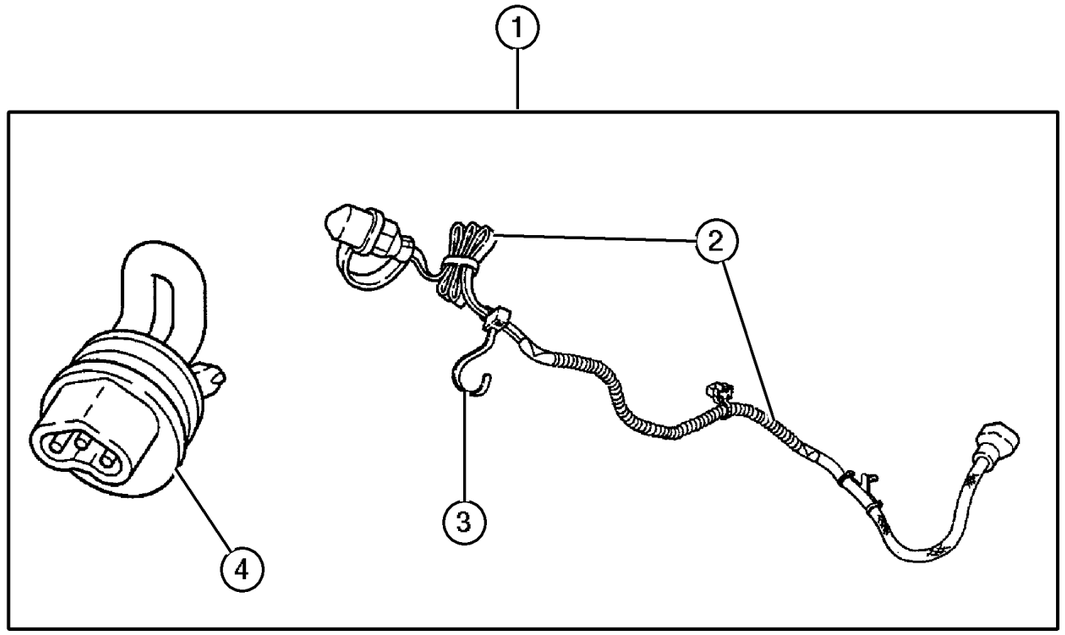

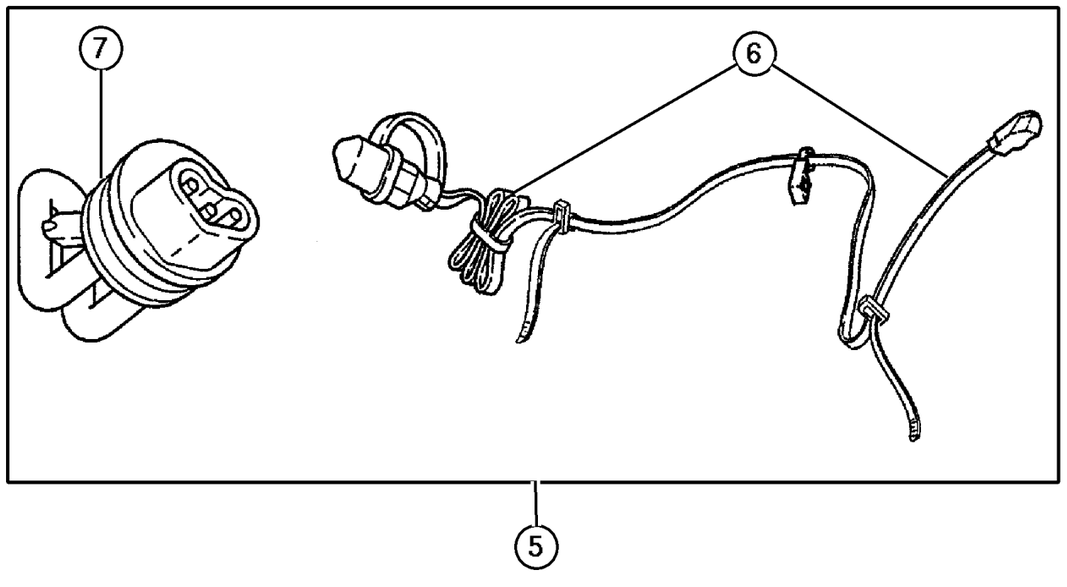

ITEM	PART NUMBER	QTY	LINE	SERIES	BODY	ENGINE	TRANS	TRIM	DESCRIPTION
1	8220 7243	1							HEATER KIT, Engine Block, 2.4L Engine
2	56044 160AA	1							CORD, Engine Block Heater
3	5073 039AA	1							STRAP, Tie, 7.75 Inch
4	4557 686AB	1							HEATER, Engine Block
5	8220 7244	1							HEATER KIT, Engine Block, 3.7L Engine
6	56041 974AA	1							CORD, Engine Block Heater
7									HEATER, Engine Block, Serviced in Assembly, (NOT SERVICED) (Not Serviced)

JEEP LIBERTY (KJ)

SERIES	LINE	BODY	ENGINE	TRANSMISSION
P = Limited	J = LHD (4WD)	74 = 4 Dr. (104.3 WB)	ED1, ED0 = 2.4L Power Tech	DDK = 5 Speed HDManual
H = Sport	U = RHD (4WD)		EKG, EK0 = 3.7L Power Tech	DDD = 5 Speed HD Manual
M = Renegade	T = LHD (2WD)		ENJ = 2.5L 4Cyl Turbo Diesel	DG4,DGQ = Multi-Speed Auto
			ENR = 2.8L 4Cyl Turbo Diesel	DG6 = 4 Speed Auto Transm
			EN0 = 4Cyl Turbo Diesel	DG0 = All Automatic Transm
				DBB = All Manual Transm

AR = Use as required - = Non illustrated part # = New this model year

June 3, 2003

« RETURN TO GROUP INDEX

Guard Kit - Dog
Figure 001-810

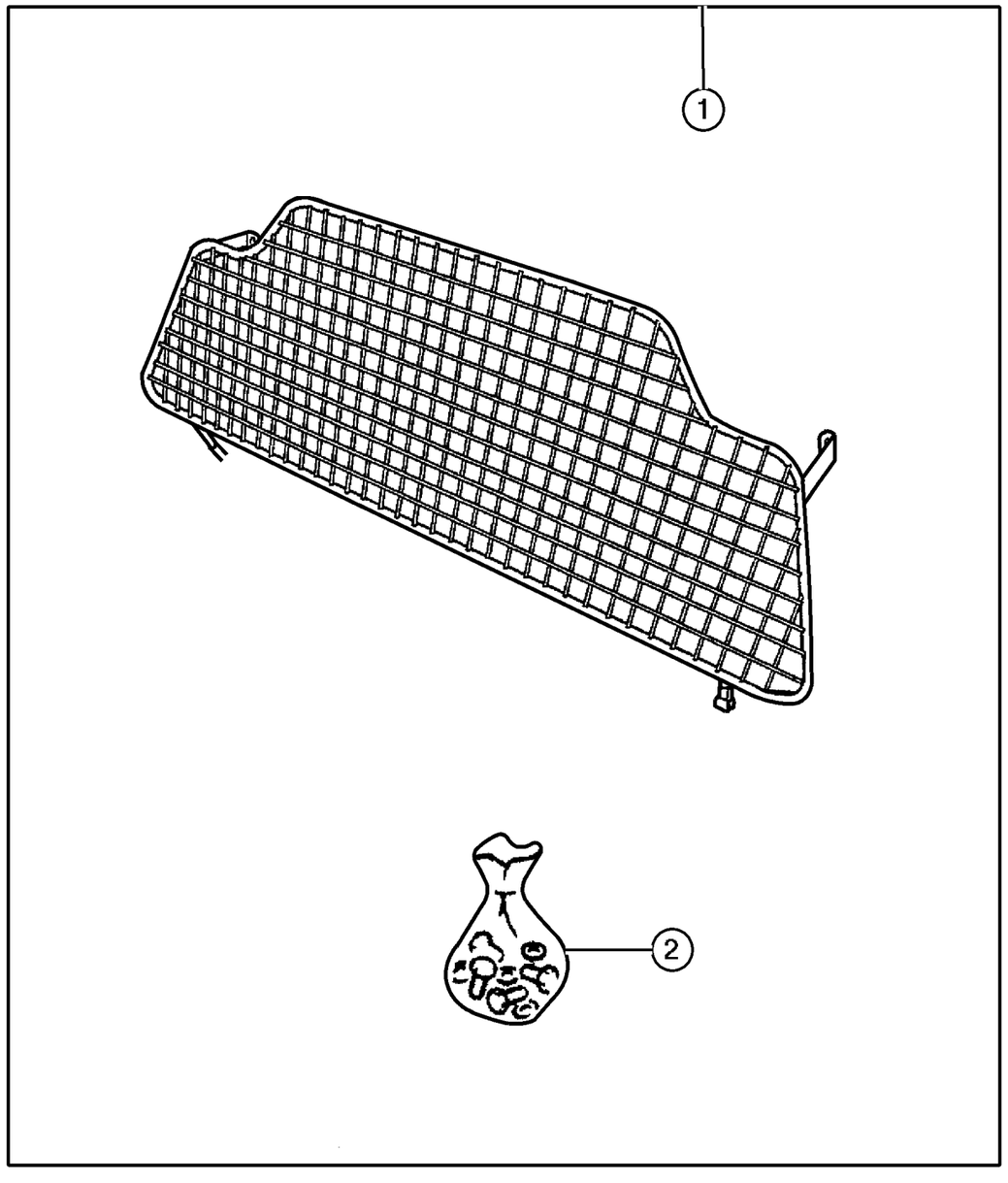

ITEM	PART NUMBER	QTY	LINE	SERIES	BODY	ENGINE	TRANS	TRIM	DESCRIPTION
1	8220 6855	1			74				GUARD KIT, Dog Guard
2	5086 022AA	1			74				HARDWARE KIT, Load Partition

JEEP LIBERTY (KJ)

SERIES	LINE	BODY	ENGINE	TRANSMISSION
P = Limited	J = LHD (4WD)	74 = 4 Dr. (104.3 WB)	ED1, ED0 = 2.4L Power Tech	DDK = 5 Speed HDManual
H = Sport	U = RHD (4WD)		EKG, EK0 = 3.7L Power Tech	DDD = 5 Speed HD Manual
M = Renegade	T = LHD (2WD)		ENJ = 2.5L 4Cyl Turbo Diesel	DG4,DGQ = Multi-Speed Auto
			ENR = 2.8L 4Cyl Turbo Diesel	DG6 = 4 Speed Auto Transm
			EN0 = 4Cyl Turbo Diesel	DG0 = All Automatic Transm
				DBB = All Manual Transm

AR = Use as required - = Non illustrated part # = New this model year **June 3, 2003**

« RETURN TO GROUP INDEX

Alarm - EVS II Base System Used without Keyless Entry
Figure 001-910

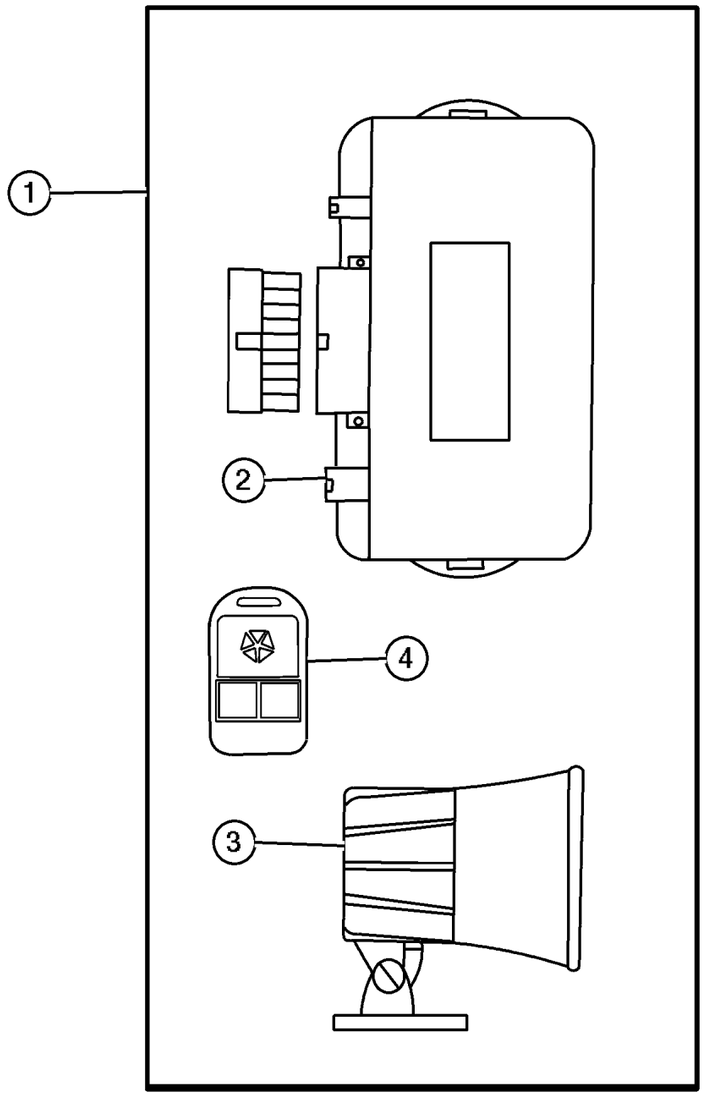

ITEM	PART NUMBER	QTY	LINE	SERIES	BODY	ENGINE	TRANS	TRIM	DESCRIPTION
1	8220 3763	1			74				MODULE KIT, Alarm without Keyless
2	5012 164AA	1			74				MODULE, Security Alarm
3	8220 3198	1			74				SIREN, Alarm
4	4886 374AA	1			74				TRANSMITTER, Alarm or Keyless
-5	4636 141	1			74				BATTERY, Transmitter
-6	4886 259AA	1			74				INDICATOR, Valet Status
-7	4886 258AA	1			74				SWITCH, Programing Bypass

JEEP LIBERTY (KJ)

SERIES	LINE	BODY	ENGINE	TRANSMISSION
P = Limited	J = LHD (4WD)	74 = 4 Dr. (104.3 WB)	ED1, ED0 = 2.4L Power Tech	DDK = 5 Speed HDManual
H = Sport	U = RHD (4WD)		EKG, EK0 = 3.7L Power Tech	DDD = 5 Speed HD Manual
M = Renegade	T = LHD (2WD)		ENJ = 2.5L 4Cyl Turbo Diesel	DG4,DGQ = Multi-Speed Auto
			ENR = 2.8L 4Cyl Turbo Diesel	DG6 = 4 Speed Auto Transm
			EN0 = 4Cyl Turbo Diesel	DG0 = All Automatic Transm
				DBB = All Manual Transm

AR = Use as required - = Non illustrated part # = New this model year **June 3, 2003**

« RETURN TO GROUP INDEX

Alarm - EVS II Plus System Used with Keyless Entry
Figure 001-914

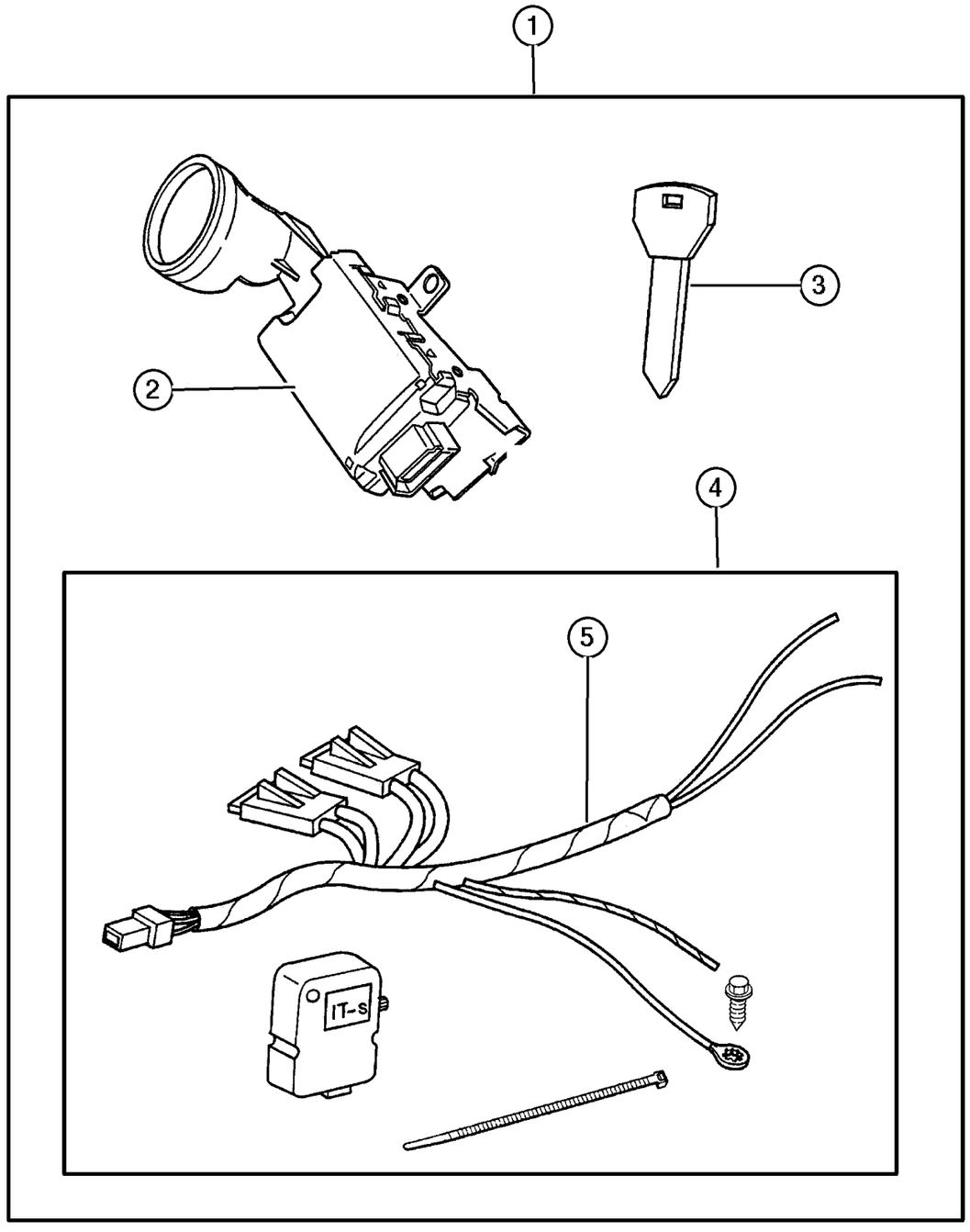

ITEM	PART NUMBER	QTY	LINE	SERIES	BODY	ENGINE	TRANS	TRIM	DESCRIPTION
NOTE: Upgrade for Power Convenience Group									
1	8220 7139	1							ALARM PACKAGE, Security With Sentry Key
2	56010 209AC	1							MODULE, Immobilizer
3	5018 699AA	1	J, T						KEY, Master
4	8220 7070	1							SENSOR KIT, Shock
5									WIRING KIT, Alarm Security Plus, Shock Sensor, (NOT SERVICED) (Not Serviced)

JEEP LIBERTY (KJ)

SERIES	LINE	BODY	ENGINE	TRANSMISSION
P = Limited	J = LHD (4WD)	74 = 4 Dr. (104.3 WB)	ED1, ED0 = 2.4L Power Tech	DDK = 5 Speed HDManual
H = Sport	U = RHD (4WD)		EKG, EK0 = 3.7L Power Tech	DDD = 5 Speed HD Manual
M = Renegade	T = LHD (2WD)		ENJ = 2.5L 4Cyl Turbo Diesel	DG4,DGQ = Multi-Speed Auto
			ENR = 2.8L 4Cyl Turbo Diesel	DG6 = 4 Speed Auto Transm
			EN0 = 4Cyl Turbo Diesel	DG0 = All Automatic Transm
				DBB = All Manual Transm

Group – 002

Front Suspension & Drive

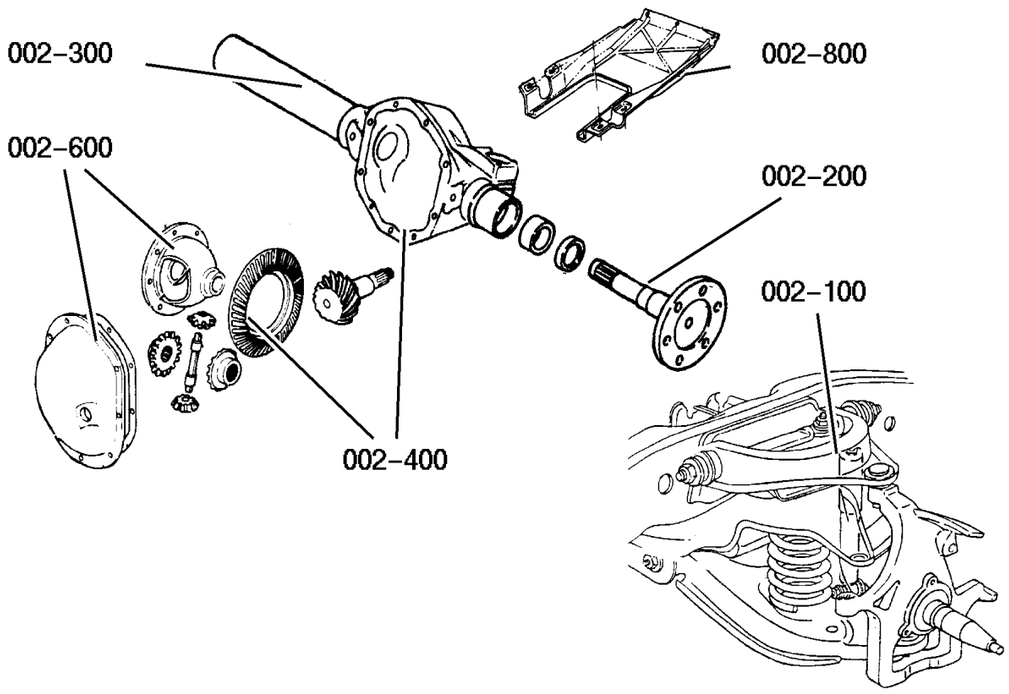

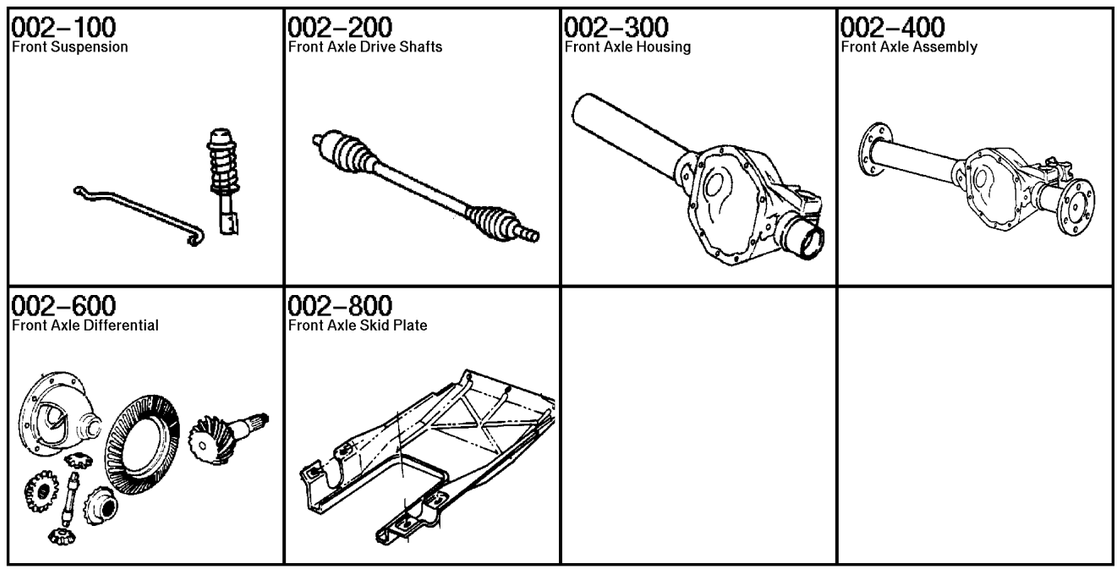

GROUP 2 - Front Suspension & Drive

Illustration Title	Group-Fig. No.
Front Suspension	
Suspension,Front and Strut	Fig. 002-110
Bar,Front Sway	Fig. 002-120
Front Axle Drive Shafts	
Axle Shafts,Front	Fig. 002-210
Front Axle Housing	
Housing,Axle,Front	Fig. 002-310
Front Axle Assembly	
Axle Assembly,Front	Fig. 002-410
Front Axle Differential	
Differential,Front Axle	Fig. 002-610
Front Axle Skid Plate	
Skid Plate,Front Axle	Fig. 002-810

Suspension,Front and Strut
Figure 002-110

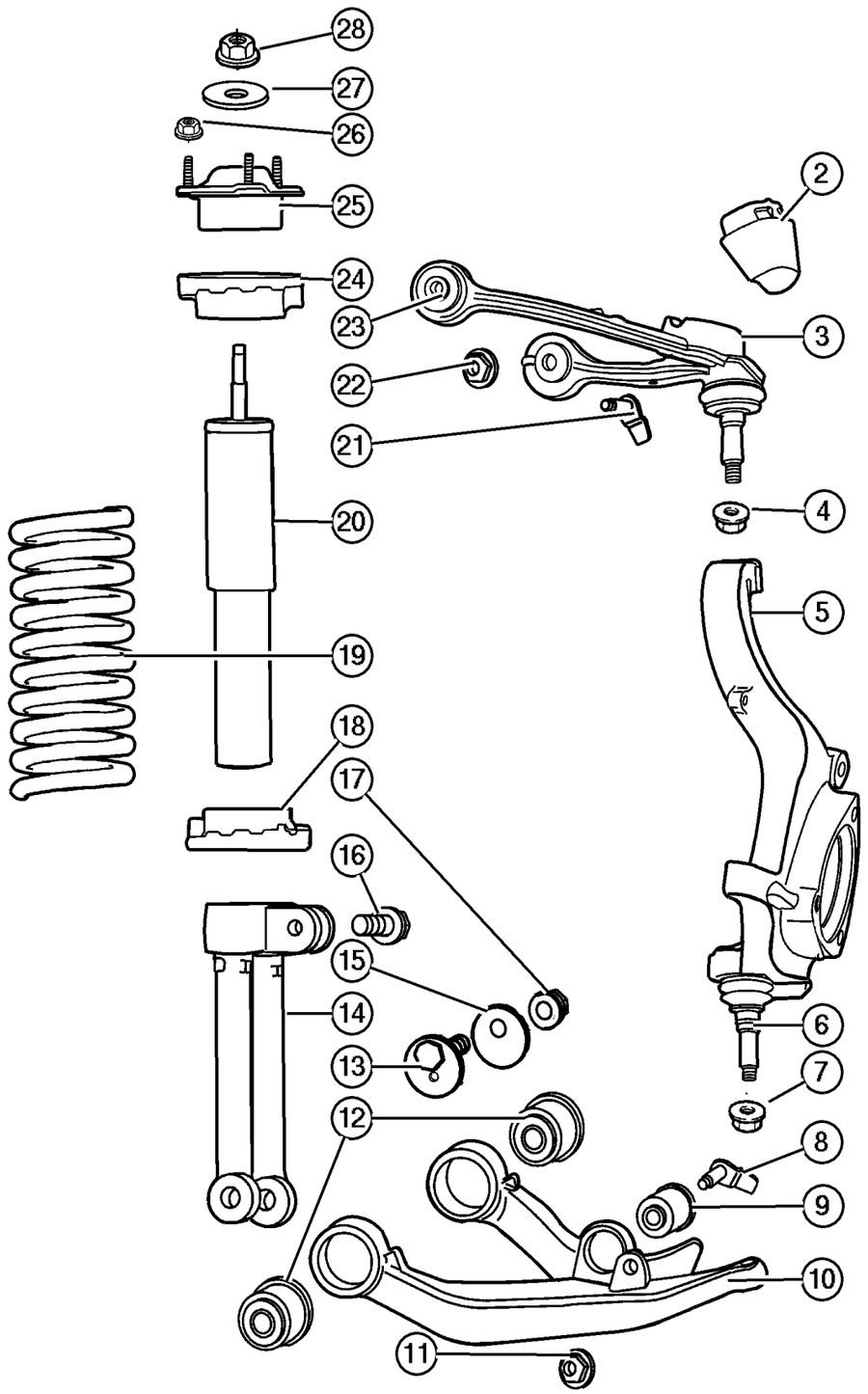

ITEM	PART NUMBER	QTY	LINE	SERIES	BODY	ENGINE	TRANS	TRIM	DESCRIPTION
Note:Sales Codes;									
[ZCC] Through [ZRK] = Spring Sales Codes will Be Found On Vehicle Identification Number [VIN] Sales Code Lisiing									
-1	55360 201AC	1							CUP, Jounce Bumper
2	52088 684AC	2							BUMPER, Jounce, Right or Left
3	52088 632AB	2							ARM, Control, With Bushings, Right or Left
4	6505 623AA	2							NUT AND WASHER, Mounting
5									KNUCKLE, Front
	52088 652AD	1							Without Lower Balljoint, Right
	52088 653AD	1							Without Lower Balljoint, Left
6	5069 161AB	1							BALL JOINT PACKAGE, Lower Control Arm, Right or Left
7	6505 623AA	2							NUT AND WASHER, Ball Joint to LCA, Mounting
8	6507 275AA	2							BOLT AND RETAINER, Hex Head, Clevis to LCA, Mounting
9									BUSHING, Pivot
	52088 746AA	1	J						Clevis
		1	T						Clevis
		1	U						Clevis
10									ARM, Lower Control, Front
	52088 636AD	1	J						With 3 Bushings, Right
	52088 637AD	1	J						With 3 Bushings, Left
	52088 636AD	1	T						With 3 Bushings, Right
	52088 637AD	1	T						With 3 Bushings, Left
	52088 636AD	1	U						With 3 Bushings, Right
	52088 637AD	1	U						With 3 Bushings, Left
11	6102 251AA	2							NUT, M14X2, Clevis to LCA, Mounting
12									BUSHING, Pivot
	52088 649AC	2	J						LCA
		2	T						LCA
		2	U						LCA
13									SCREW AND WASHER, Hex Head
	#6507 912AA	4	J						Cam Bolt
		4	T						Cam Bolt
		4	U						Cam Bolt
14	52088 748AC	1							CLEVIS, Front
15									WASHER, Control Arm
	6507 080AA	4	J						Cam, Lower
		4	T						Cam, Lower

JEEP LIBERTY (KJ)

SERIES	LINE	BODY	ENGINE	TRANSMISSION
P = Limited	J = LHD (4WD)	74 = 4 Dr. (104.3 WB)	ED1, ED0 = 2.4L Power Tech	DDK = 5 Speed HDManual
H = Sport	U = RHD (4WD)		EKG, EK0 = 3.7L Power Tech	DDD = 5 Speed HD Manual
M = Renegade	T = LHD (2WD)		ENJ = 2.5L 4Cyl Turbo Diesel	DG4,DGQ = Multi-Speed Auto
			ENR = 2.8L 4Cyl Turbo Diesel	DG6 = 4 Speed Auto Transm
			EN0 = 4Cyl Turbo Diesel	DG0 = All Automatic Transm
				DBB = All Manual Transm

AR = Use as required - = Non illustrated part # = New this model year **June 3, 2003**

« RETURN TO GROUP INDEX »

Suspension,Front and Strut
Figure 002-110

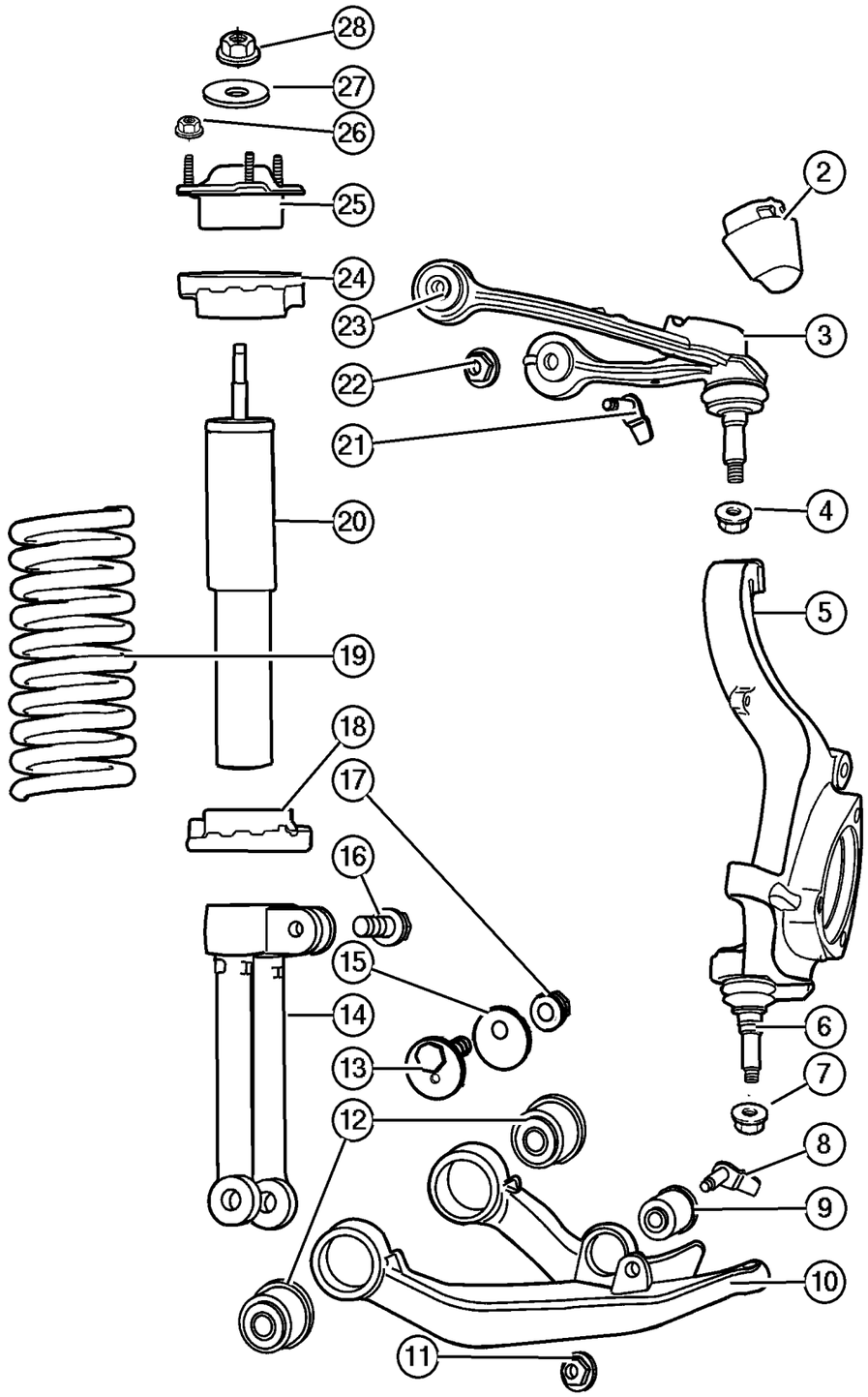

ITEM	PART NUMBER	QTY	LINE	SERIES	BODY	ENGINE	TRANS	TRIM	DESCRIPTION
		4	U						Cam, Lower
16	6507 325AA	1							SCREW, Hex Flange Head, Clevis Pinch
17									NUT, Hex Flange Lock
	6102 252AA	4	J						LCA to Cradle, Mounting
		4	T						LCA to Cradle, Mounting
		4	U						LCA to Cradle, Mounting
18	52088 686AA	2							ISOLATOR, Spring
19									SPRING, Front Coil
	52088 625AC	1							[ZCC,ZRC]
	52088 626AC	1							[ZCD,ZRD]
	52088 627AC	1							[ZCE,ZRE]
	52088 628AC	1							[ZCF,ZRF]
	52088 629AC	1							[ZCG,ZRG]
	52088 630AC	1							[ZCH,ZRH]
	52089 071AC	1							[ZCJ,ZRJ]
	52089 072AC	1							[ZCK,ZRK]
20	52088 650AE	1							SHOCK ABSORBER, Suspension, Front
21	6506 714AA	4							BOLT AND RETAINER, Hex Head, UCA, Mounting
22	6502 697	4							NUT, Hex Flange Lock, M12x1.75, UCA, Mounting
23	52088 634AB	4							BUSHING, Control Arm, Upper
24	52088 686AA	2							ISOLATOR, Spring, Upper
25									MOUNT, Shock Upper
	52128 532AA	1							Right
	52128 533AA	1							Left
26	6502 697	8							NUT, Hex Flange Lock, M12x1.75, Shock, Mounting
27	52089 069AA	1							RETAINER, Shock Absorber, Shock, Mounting
28	6506 443AA	1							NUT, Nylock Hex, M10x1.5, Shock, Mounting
-29	#52128 983AA	2							SHIELD, Heat, Lower Ball Joint, Right or Left

JEEP LIBERTY (KJ)

SERIES	LINE	BODY	ENGINE	TRANSMISSION
P = Limited	J = LHD (4WD)	74 = 4 Dr. (104.3 WB)	ED1, ED0 = 2.4L Power Tech	DDK = 5 Speed HDManual
H = Sport	U = RHD (4WD)		EKG, EK0 = 3.7L Power Tech	DDD = 5 Speed HD Manual
M = Renegade	T = LHD (2WD)		ENJ = 2.5L 4Cyl Turbo Diesel	DG4,DGQ = Multi-Speed Auto
			ENR = 2.8L 4Cyl Turbo Diesel	DG6 = 4 Speed Auto Transm
			EN0 = 4Cyl Turbo Diesel	DG0 = All Automatic Transm
				DBB = All Manual Transm

AR = Use as required - = Non illustrated part # = New this model year

June 3, 2003

« RETURN TO GROUP INDEX

Bar,Front Sway
Figure 002-120

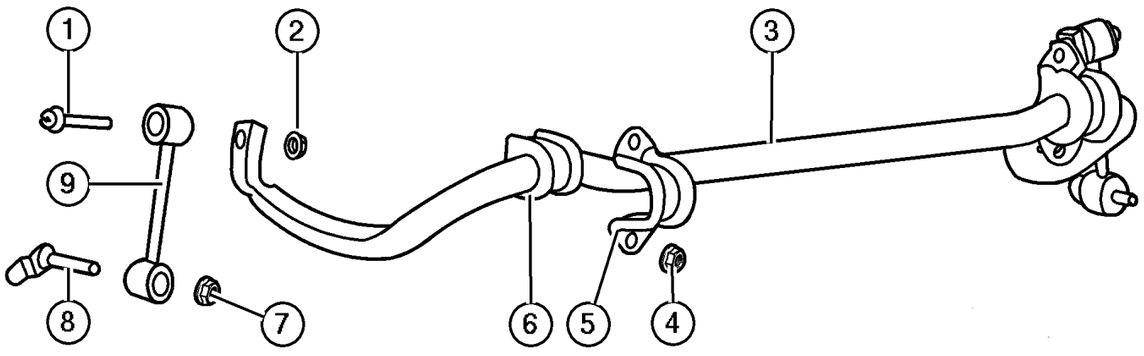

ITEM	PART NUMBER	QTY	LINE	SERIES	BODY	ENGINE	TRANS	TRIM	DESCRIPTION
1	6503 712	2							SCREW, Sway Bar Link to Sway Bar, Mounting
2	6502 697	2							NUT, Hex Flange Lock, M12x1.75, Sway Bar Link to Sway Bar, Mounting
3	52088 660AA	1							BAR, Front Sway
4	6502 697	4							NUT, Hex Flange Lock, M12x1.75, Sway Bar Clamp to Sill, Mounting
5	52088 631AA	2							RETAINER, Sway Bar
6	52088 778AA	2							CUSHION, Sway Eliminator
7	6502 697	2							NUT, Hex Flange Lock, M12x1.75, Sway Bar Link to Lower Control Arm, Mounting
8	6506 984AA	2							BOLT AND RETAINER, Hex Head, Sway Bar Link to Lower Control Arm, Mounting
9	52088 662AB	2							LINK, Sway Eliminator
-10									WASHER, Flat, ID=13.07 x OD=40.00 x THK=3.50 Sway Bar Link to Lower Control Arm, (NOT SERVICED) (Not Serviced)
-11									WASHER, Flat, ID=13.07 x OD=40.00 x THK=3.50 Sway Bar Link to Sway Bar, (NOT SERVICED) (Not Serviced)

JEEP LIBERTY (KJ)

SERIES	LINE	BODY	ENGINE	TRANSMISSION
P = Limited	J = LHD (4WD)	74 = 4 Dr. (104.3 WB)	ED1, ED0 = 2.4L Power Tech	DDK = 5 Speed HDManual
H = Sport	U = RHD (4WD)		EKG, EK0 = 3.7L Power Tech	DDD = 5 Speed HD Manual
M = Renegade	T = LHD (2WD)		ENJ = 2.5L 4Cyl Turbo Diesel	DG4,DGQ = Multi-Speed Auto
			ENR = 2.8L 4Cyl Turbo Diesel	DG6 = 4 Speed Auto Transm
			EN0 = 4Cyl Turbo Diesel	DG0 = All Automatic Transm
				DBB = All Manual Transm

AR = Use as required - = Non illustrated part # = New this model year

June 3, 2003

« RETURN TO GROUP INDEX

Axle Shafts,Front
Figure 002-210

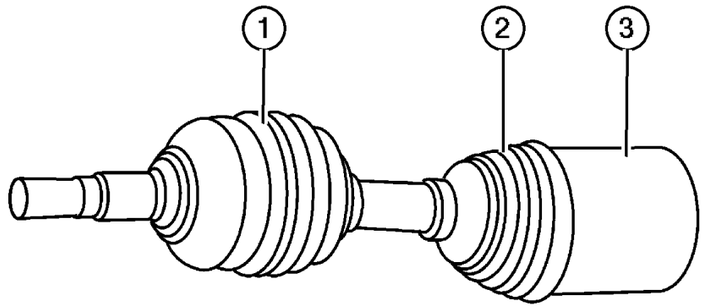

ITEM	PART NUMBER	QTY	LINE	SERIES	BODY	ENGINE	TRANS	TRIM	DESCRIPTION
Note:Sales Codes;									
[ED0]=Engines - All 2.2, 2.5, 2.4L 4 Cylinder Gas									
[EK0]=Engines - All 3.7L 6 Cylinder Gas									
[EN0]=Engines - All 4/5 Cylinder Turbo Diesel									
1									BOOT KIT, Half Shaft, Outer
	5066 025AA	1	J						
		1	U						
2									BOOT KIT, Half Shaft, Inner
	5066 024AA	1	J						
		1	U						
3									SHAFT, Axle Half
	5066 020AA	1	J						[EK0], Right
	5066 021AA	1	J						[EK0], Left
	5066 020AA	1	U						[EK0], Right
	5066 021AA	1	U						[EK0], Left
	5066 022AA	1	J						[ED0,EN0], Right
	5066 023AA	1	J						[ED0,EN0], Left
	5066 022AA	1	U						[ED0,EN0], Right
	5066 023AA	1	U						[ED0,EN0], Left
-4									BRACKET, Mounting
	52059 464AB	1	J						[EK0], Right
	52059 472AB	1	U						[ED0,EN0], Right
	52059 473AC	1	U						[ED0,EN0], Left
	52059 475AB	1	U						Axle Support-[ED0,EN0], Rear Left
	52059 465AC	1	J						[EK0], Left
	52059 467AB	1	J						Axle Support-[EK0], Rear Left
	52059 464AB	1	U						[EK0], Right
	52059 465AC	1	U						[EK0], Left
	52059 467AB	1	U						Axle Support-[EK0], Rear Left
	52059 472AB	1	J						[ED0,EN0], Right
	52059 473AC	1	J						[ED0,EN0], Left
	52059 475AB	1	J						Axle Support-[ED0,EN0], Rear Left
-5									BOLT
	6506 067AA	4	J						Axle Assembly to Cradle
		4	U						Axle Assembly to Cradle

JEEP LIBERTY (KJ)

SERIES	LINE	BODY	ENGINE	TRANSMISSION
P = Limited	J = LHD (4WD)	74 = 4 Dr. (104.3 WB)	ED1, ED0 = 2.4L Power Tech	DDK = 5 Speed HDManual
H = Sport	U = RHD (4WD)		EKG, EK0 = 3.7L Power Tech	DDD = 5 Speed HD Manual
M = Renegade	T = LHD (2WD)		ENJ = 2.5L 4Cyl Turbo Diesel	DG4,DGQ = Multi-Speed Auto
			ENR = 2.8L 4Cyl Turbo Diesel	DG6 = 4 Speed Auto Transm
			EN0 = 4Cyl Turbo Diesel	DG0 = All Automatic Transm
				DBB = All Manual Transm

Housing,Axle,Front
Figure 002-310

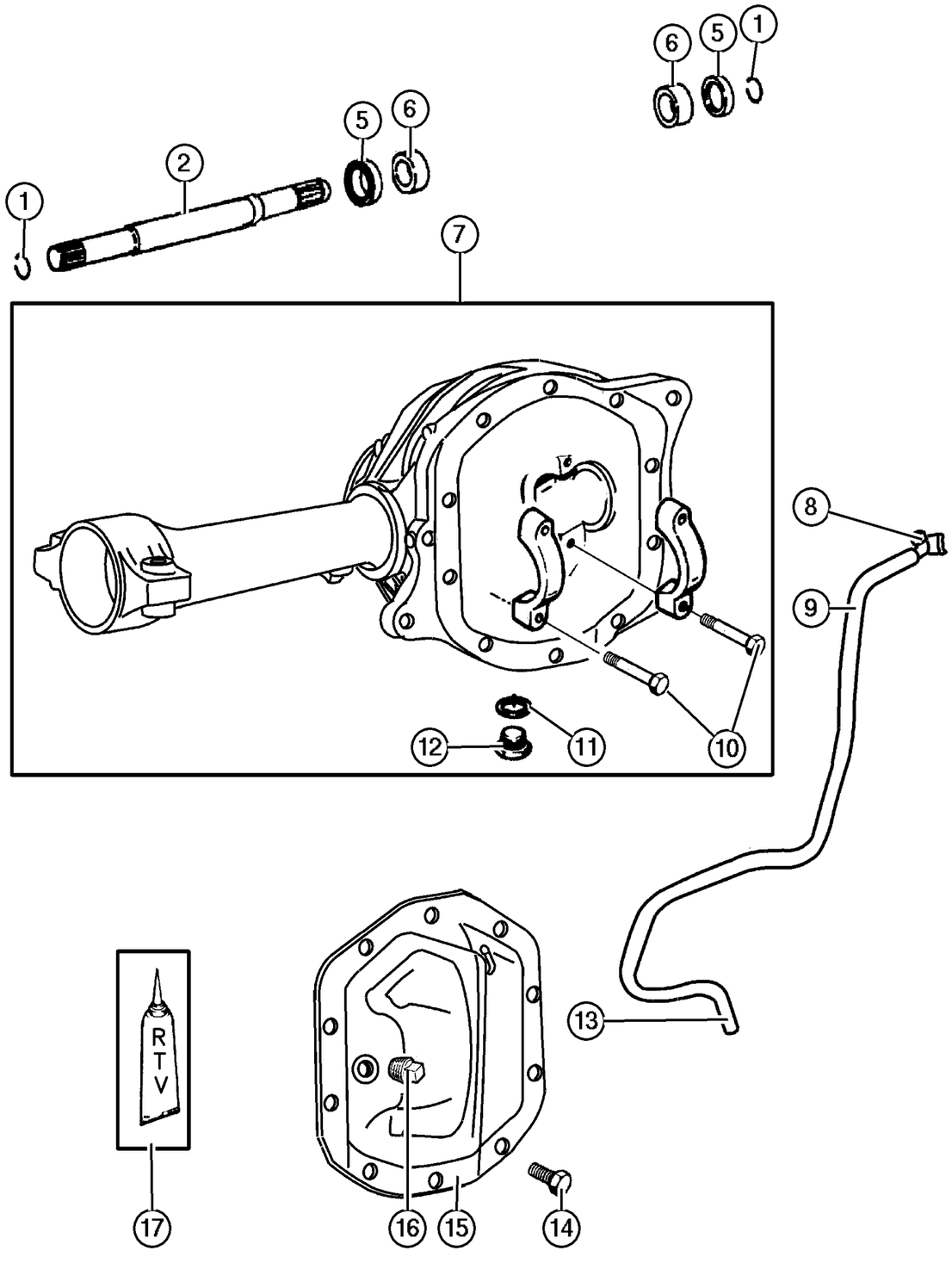

ITEM	PART NUMBER	QTY	LINE	SERIES	BODY	ENGINE	TRANS	TRIM	DESCRIPTION
Note:Sales Codes;									
[ED0]=Engines - All 2.2, 2.5, 2.4L 4 Cylinder Gas									
[EK0]=Engines - All 3.7L 6 Cylinder Gas									
[EN0]=Engines - All 4/5 Cylinder Turbo Diesel									
1									SNAP RING, Axle Shaft
	5066 064AA	1	J						Inboard
		1	U						Inboard
2									SHAFT, Axle
	5066 057AB	1	J						
		1	U						
-3									RING, Axle Shaft
	5069 009AA	1	J						Outboard
		1	U						Outboard
-4									O RING
	5066 067AA	1	J						Axle Shaft
		1	U						Axle Shaft
5									SEAL, Axle Drive Shaft
	5066 066AA	2	J						
		2	U						
6									BEARING, Axle Shaft
	5066 056AA	2	J						
		2	U						
7									HOUSING, Front Axle
	5066 049AB	1	J						
		1	U						
8									VENT, Axle
	52104 552AB	1	J						
		1	U						
9									HOSE, Fuel And Vapor, 25 Foot Roll 5/16"
	HFV00 516AB	1	J						
		1	U						
10									BOLT, Differential
	6035 985AA	4	J						
		4	U						
11									O RING
	5066 055AA	1	J						
		1	U						
12									PLUG, Drain
	5066 054AA	1	J						
		1	U						
13									CLIP

JEEP LIBERTY (KJ)

SERIES	LINE	BODY	ENGINE	TRANSMISSION
P = Limited	J = LHD (4WD)	74 = 4 Dr. (104.3 WB)	ED1, ED0 = 2.4L Power Tech	DDK = 5 Speed HDManual
H = Sport	U = RHD (4WD)		EKG, EK0 = 3.7L Power Tech	DDD = 5 Speed HD Manual
M = Renegade	T = LHD (2WD)		ENJ = 2.5L 4Cyl Turbo Diesel	DG4,DGQ = Multi-Speed Auto
			ENR = 2.8L 4Cyl Turbo Diesel	DG6 = 4 Speed Auto Transm
			EN0 = 4Cyl Turbo Diesel	DG0 = All Automatic Transm
				DBB = All Manual Transm

Housing,Axle,Front
Figure 002-310

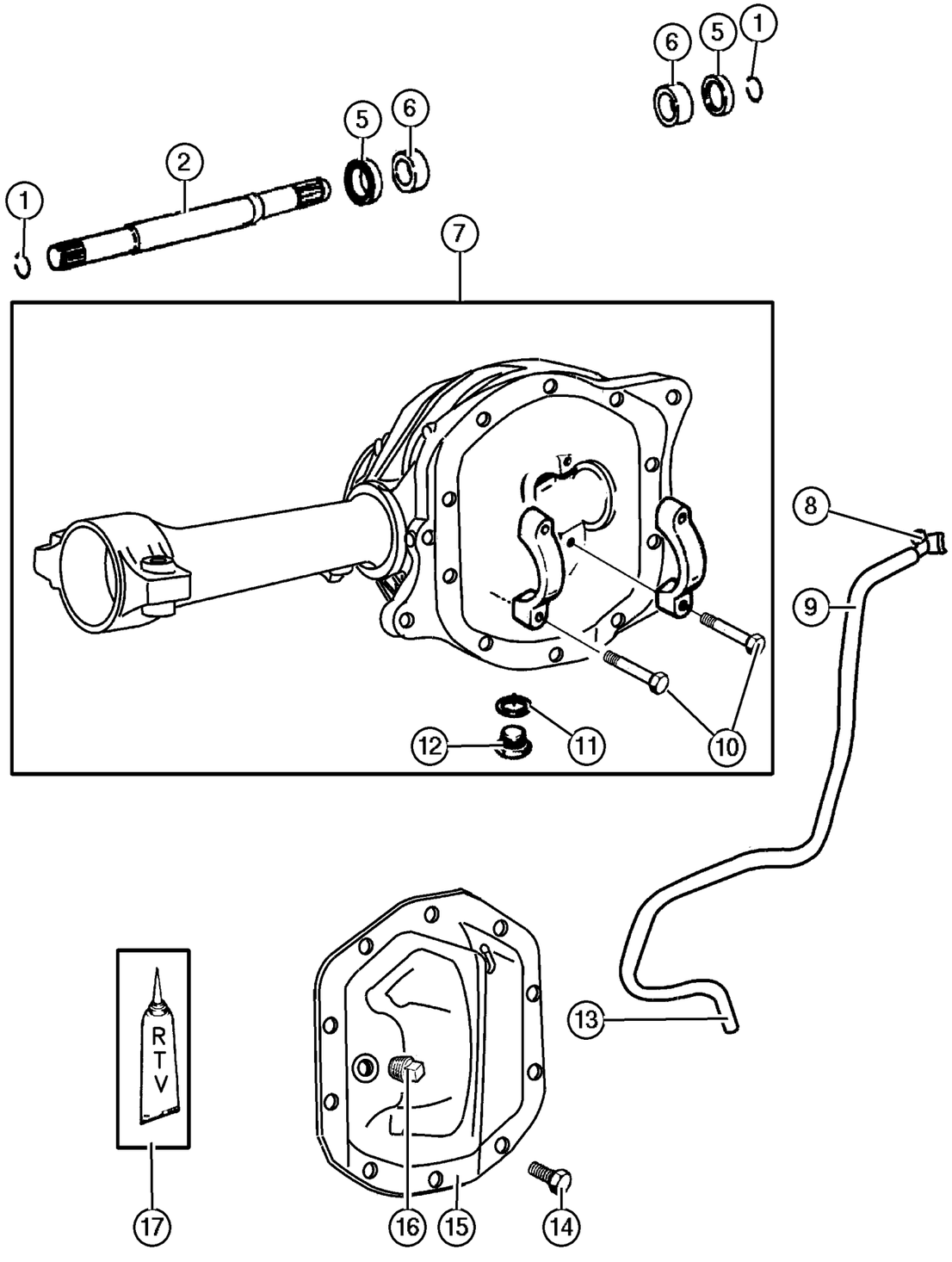

ITEM	PART NUMBER	QTY	LINE	SERIES	BODY	ENGINE	TRANS	TRIM	DESCRIPTION
	6503 573	1	J						
		1	U						
14									BOLT KIT
	5069 008AA	1	J						
		1	U						
15									COVER, Differential
	5066 538AA	1	J						
		1	U						
16									PLUG, Differential Cover
	J400 4751	1	J						
		1	U						
17									SEALANT, RTV
	5010 884AA	1	J						
		1	U						

JEEP LIBERTY (KJ)

SERIES	LINE	BODY	ENGINE	TRANSMISSION
P = Limited	J = LHD (4WD)	74 = 4 Dr. (104.3 WB)	ED1, ED0 = 2.4L Power Tech	DDK = 5 Speed HDManual
H = Sport	U = RHD (4WD)		EKG, EK0 = 3.7L Power Tech	DDD = 5 Speed HD Manual
M = Renegade	T = LHD (2WD)		ENJ = 2.5L 4Cyl Turbo Diesel	DG4,DGQ = Multi-Speed Auto
			ENR = 2.8L 4Cyl Turbo Diesel	DG6 = 4 Speed Auto Transm
			EN0 = 4Cyl Turbo Diesel	DG0 = All Automatic Transm
				DBB = All Manual Transm

AR = Use as required - = Non illustrated part # = New this model year

June 3, 2003

« RETURN TO GROUP INDEX

Axle Assembly,Front
Figure 002-410

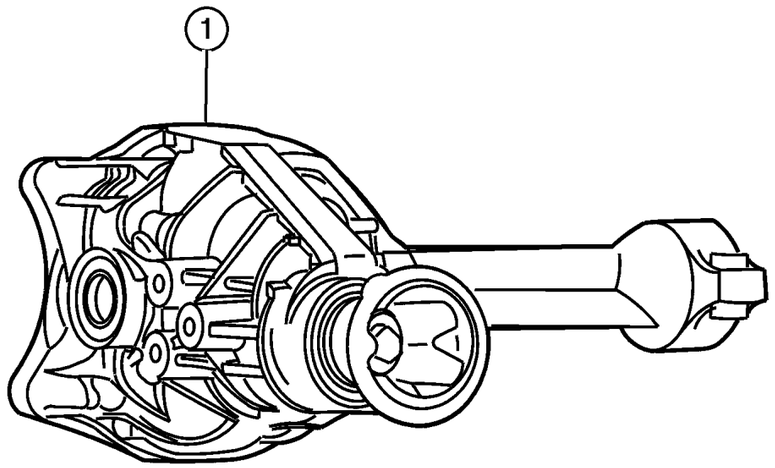

ITEM	PART NUMBER	QTY	LINE	SERIES	BODY	ENGINE	TRANS	TRIM	DESCRIPTION
Note:Sales Codes;									
[DME] = Axle Ratio - 3.73									
[DMF] = Axle Ratio - 4.10									
1									AXLE, Service Front
	5066 068AC	1	J						[DME,EK0]
	5066 084AC	1	J						[DMF,ED0]
	#5103 064AA	1	J						[DMF,EN0]
	5066 068AC	1	U						[DME,EK0]
	5066 084AC	1	U						[DMF,ED0]
	#5103 064AA	1	U						[DMF,EN0]

JEEP LIBERTY (KJ)

SERIES	LINE	BODY	ENGINE	TRANSMISSION
P = Limited	J = LHD (4WD)	74 = 4 Dr. (104.3 WB)	ED1, ED0 = 2.4L Power Tech	DDK = 5 Speed HDManual
H = Sport	U = RHD (4WD)		EKG, EK0 = 3.7L Power Tech	DDD = 5 Speed HD Manual
M = Renegade	T = LHD (2WD)		ENJ = 2.5L 4Cyl Turbo Diesel	DG4,DGQ = Multi-Speed Auto
			ENR = 2.8L 4Cyl Turbo Diesel	DG6 = 4 Speed Auto Transm
			EN0 = 4Cyl Turbo Diesel	DG0 = All Automatic Transm
				DBB = All Manual Transm

AR = Use as required - = Non illustrated part # = New this model year **June 3, 2003**

« RETURN TO GROUP INDEX

Differential,Front Axle
Figure 002-610

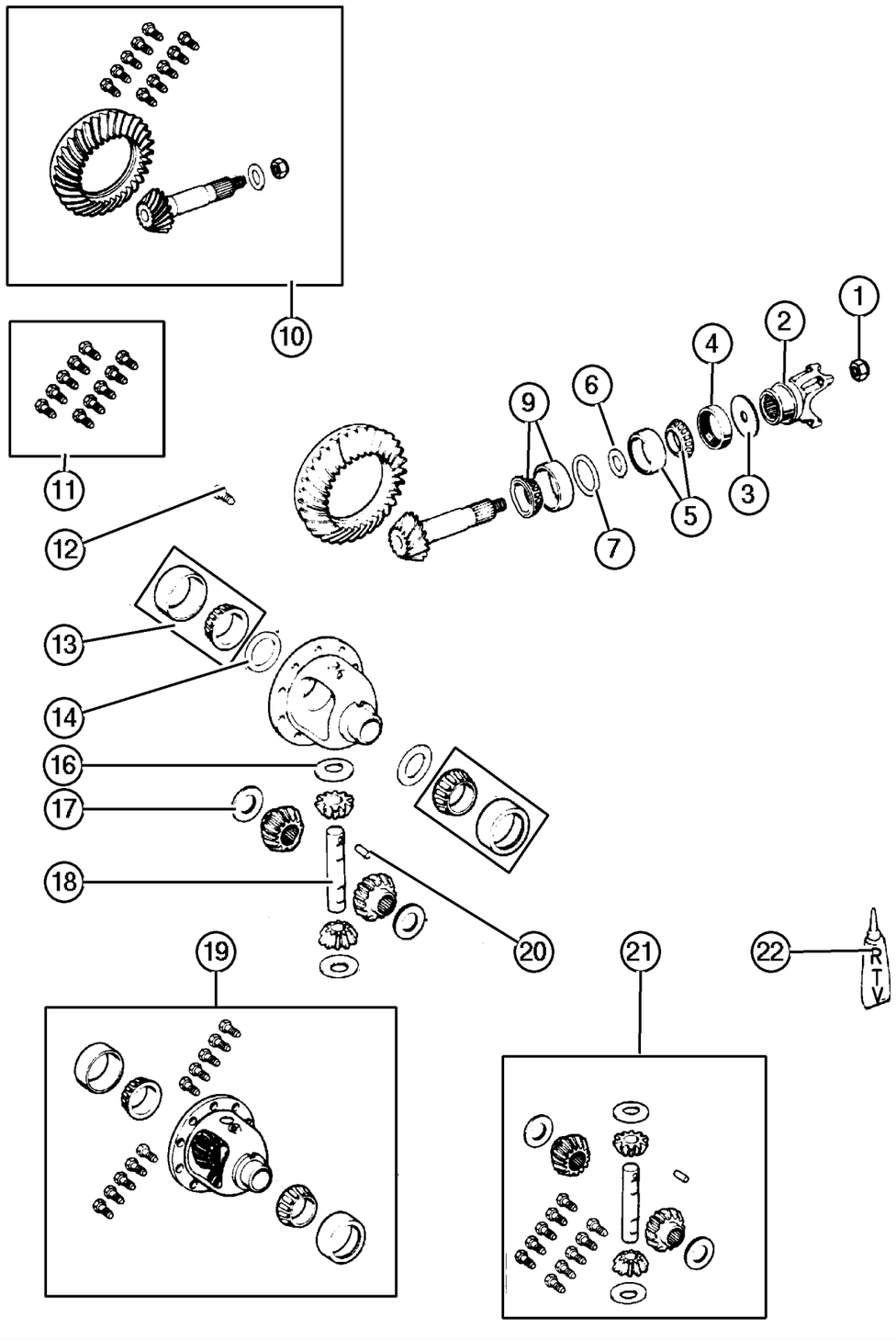

ITEM	PART NUMBER	QTY	LINE	SERIES	BODY	ENGINE	TRANS	TRIM	DESCRIPTION
Note:Sales Codes;									
[DME] = Axle Ratio - 3.73									
[DMF] = Axle Ratio - 4.10									
1									NUT, Pinion Yoke
	4720 895	1	J						
		1	U						
2									YOKE, Axle
	5066 050AB	1	J						
		1	U						
	#5103 049AA	1	J						[EN0]
		1	U						[EN0]
3									SLINGER, Drive Pinion
	5066 052AA	1	J						
		1	U						
4									SEAL, Drive Pinion
	5066 053AA	1	J						
		1	U						
5									BEARING, Drive Pinion
	J812 6499	1	J						Bearing and Cup, Front
		1	U						Bearing and Cup, Front
6									SPACER
	5066 047AA	1	J						Crush
		1	U						Crush
7									SHIM, Drive Pinion Bearing
	5066 584AA	1	J						[.034"]
	5066 588AA	1	U						[.038"]
	5066 589AA	1	J						[.039"]
		1	U						[.039"]
	5066 590AA	1	J						[.040"]
		1	U						[.040"]
	5066 591AA	1	J						[.041"]
		1	U						[.041"]
	5066 592AA	1	J						[.042"]
		1	U						[.042"]
	5066 593AA	1	J						[.043"]
	5066 584AA	1	U						[.034"]
	5066 593AA	1	U						[.043"]
	5066 594AA	1	J						[.044"]
		1	U						[.044"]
	5066 572AA	1	J						[.045"]
		1	U						[.045"]

JEEP LIBERTY (KJ)

SERIES	LINE	BODY	ENGINE	TRANSMISSION
P = Limited	J = LHD (4WD)	74 = 4 Dr. (104.3 WB)	ED1, ED0 = 2.4L Power Tech	DDK = 5 Speed HDManual
H = Sport	U = RHD (4WD)		EKG, EK0 = 3.7L Power Tech	DDD = 5 Speed HD Manual
M = Renegade	T = LHD (2WD)		ENJ = 2.5L 4Cyl Turbo Diesel	DG4,DGQ = Multi-Speed Auto
			ENR = 2.8L 4Cyl Turbo Diesel	DG6 = 4 Speed Auto Transm
			EN0 = 4Cyl Turbo Diesel	DG0 = All Automatic Transm
				DBB = All Manual Transm

Differential,Front Axle
Figure 002-610

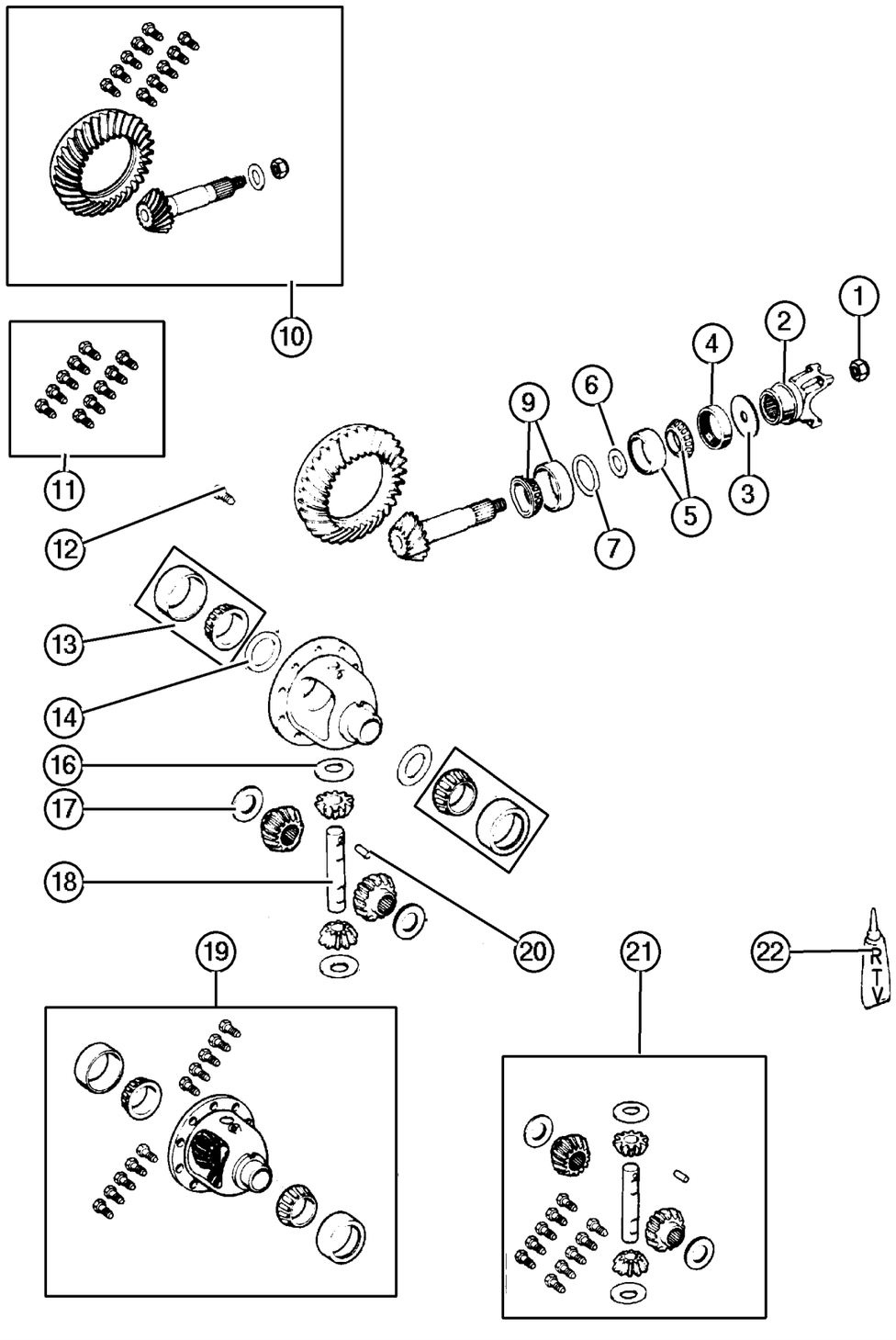

ITEM	PART NUMBER	QTY	LINE	SERIES	BODY	ENGINE	TRANS	TRIM	DESCRIPTION
	5066 573AA	1	J						[.046"]
		1	U						[.046"]
	5066 574AA	1	J						[.047"]
		1	U						[.047"]
	5066 575AA	1	J						[.048"]
	5066 585AA	1	J						[.035"]
	5066 575AA	1	U						[.048"]
	5066 576AA	1	J						[.049"]
		1	U						[.049"]
	5066 577AA	1	J						[.050"]
		1	U						[.050"]
	5066 578AA	1	J						[.051"]
		1	U						[.051"]
	5066 579AA	1	J						[.052"]
		1	U						[.052"]
	5066 580AA	1	J						[.053"]
	5066 585AA	1	U						[.035"]
	5066 580AA	1	U						[.053"]
	5066 595AA	1	J						[.054"]
		1	U						[.054"]
	5066 581AA	1	J						[.055"]
		1	U						[.055"]
	5066 582AA	1	J						[.056"]
		1	U						[.056"]
	5066 583AA	1	J						[.057"]
		1	U						[.057"]
	5066 596AA	1	J						[.058"]
	5066 586AA	1	J						[.036"]
	5066 596AA	1	U						[.058"]
	5066 586AA	1	U						[.036"]
	5066 587AA	1	J						[.037"]
		1	U						[.037"]
	5066 588AA	1	J						[.038"]
-8									SHIM KIT, Pinion Shaft
	5066 533AA	1	J						Consists of 25 Shims
		1	U						Consists of 25 Shims
9									BEARING, Drive Pinion
	4746 979	1	J						Bearing and Cup, Rear
		1	U						Bearing and Cup, Rear
10									GEAR KIT, Ring And Pinion
	5066 051AA	1	J						[DME]

JEEP LIBERTY (KJ)

SERIES	LINE	BODY	ENGINE	TRANSMISSION
P = Limited	J = LHD (4WD)	74 = 4 Dr. (104.3 WB)	ED1, ED0 = 2.4L Power Tech	DDK = 5 Speed HDManual
H = Sport	U = RHD (4WD)		EKG, EK0 = 3.7L Power Tech	DDD = 5 Speed HD Manual
M = Renegade	T = LHD (2WD)		ENJ = 2.5L 4Cyl Turbo Diesel	DG4,DGQ = Multi-Speed Auto
			ENR = 2.8L 4Cyl Turbo Diesel	DG6 = 4 Speed Auto Transm
			EN0 = 4Cyl Turbo Diesel	DG0 = All Automatic Transm
				DBB = All Manual Transm

AR = Use as required - = Non illustrated part # = New this model year

June 3, 2003

« RETURN TO GROUP INDEX

Differential,Front Axle
Figure 002-610

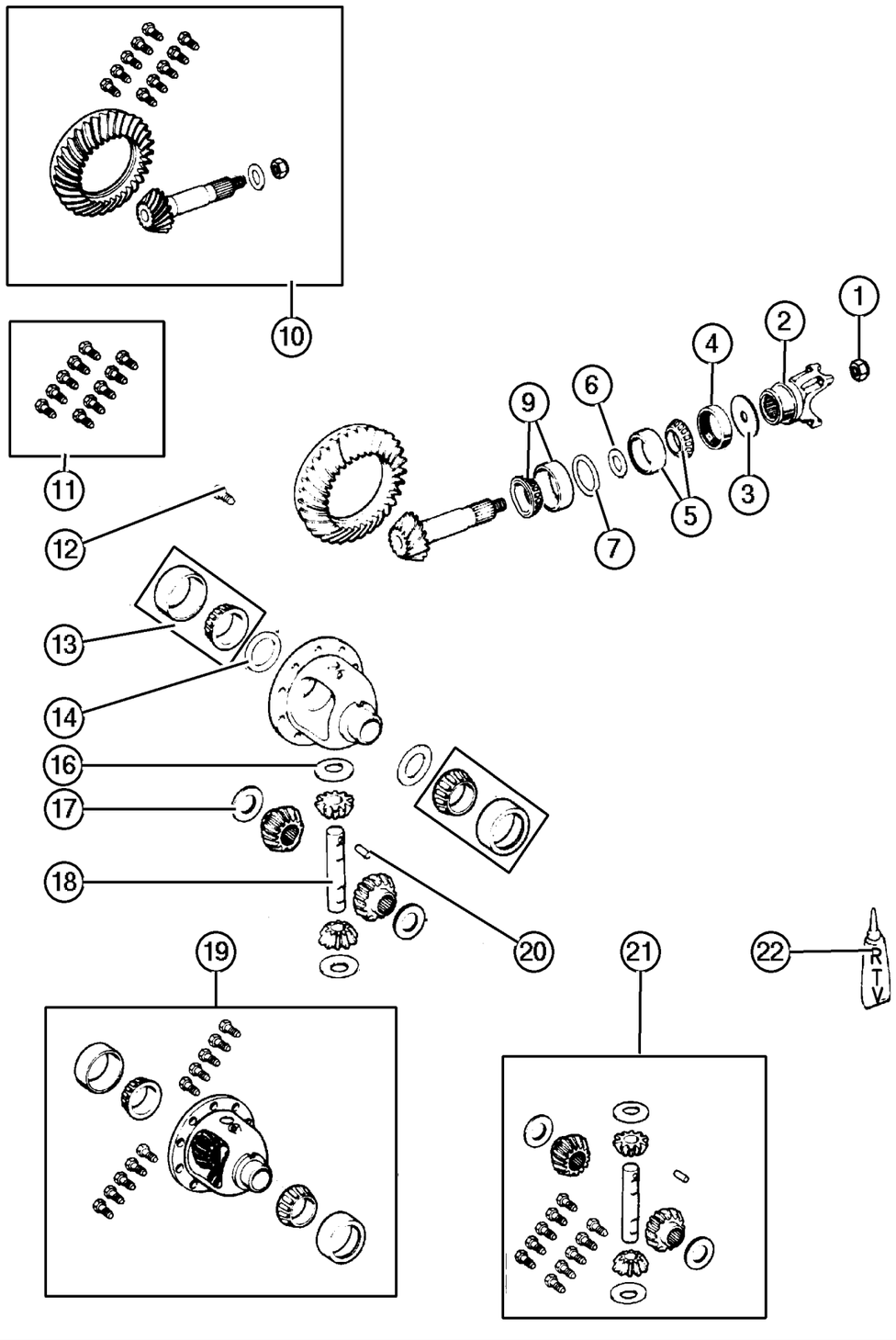

ITEM	PART NUMBER	QTY	LINE	SERIES	BODY	ENGINE	TRANS	TRIM	DESCRIPTION
	5066 085AA	1	J						[DMF]
	5066 051AA	1	U						[DME]
	5066 085AA	1	U						[DMF]
11									BOLT KIT
	5069 008AA	1	J						Contains 10-5252503 Screws
		1	U						Contains 10-5252503 Screws
12									SCREW, Drive Gear
	5252 503	10	J						
		10	U						
13									BEARING, Differential
	J812 6500	1	J						
		1	U						
14									SHIM, Differential Bearing
	5017 218AA	1	J						[.109"]
	5017 222AA	1	U						[.113"]
	5017 223AA	1	J						[.114"]
		1	U						[.114"]
	5017 224AA	1	J						[.115"]
		1	U						[.115"]
	5017 225AA	1	J						[.116"]
		1	U						[.116"]
	5017 226AA	1	J						[.117"]
		1	U						[.117"]
	5017 227AA	1	J						[.118"]
	5017 218AA	1	U						[.109"]
	5017 227AA	1	U						[.118"]
	5017 228AA	1	J						[.119"]
		1	U						[.119"]
	5017 229AA	1	J						[.120"]
		1	U						[.120"]
	5017 230AA	1	J						[.121"]
		1	U						[.121"]
	5017 231AA	1	J						[.122"]
		1	U						[.122"]
	5017 232AA	1	J						[.123"]
	5017 219AA	1	J						[.110"]
	5017 232AA	1	U						[.123"]
	5017 233AA	1	J						[.124"]
		1	U						[.124"]
	5017 234AA	1	J						[.125"]
		1	U						[.125"]

JEEP LIBERTY (KJ)

SERIES	LINE	BODY	ENGINE	TRANSMISSION
P = Limited	J = LHD (4WD)	74 = 4 Dr. (104.3 WB)	ED1, ED0 = 2.4L Power Tech	DDK = 5 Speed HDManual
H = Sport	U = RHD (4WD)		EKG, EK0 = 3.7L Power Tech	DDD = 5 Speed HD Manual
M = Renegade	T = LHD (2WD)		ENJ = 2.5L 4Cyl Turbo Diesel	DG4,DGQ = Multi-Speed Auto
			ENR = 2.8L 4Cyl Turbo Diesel	DG6 = 4 Speed Auto Transm
			EN0 = 4Cyl Turbo Diesel	DG0 = All Automatic Transm
				DBB = All Manual Transm

AR = Use as required - = Non illustrated part # = New this model year

June 3, 2003

« RETURN TO GROUP INDEX

« »

Differential,Front Axle
Figure 002-610

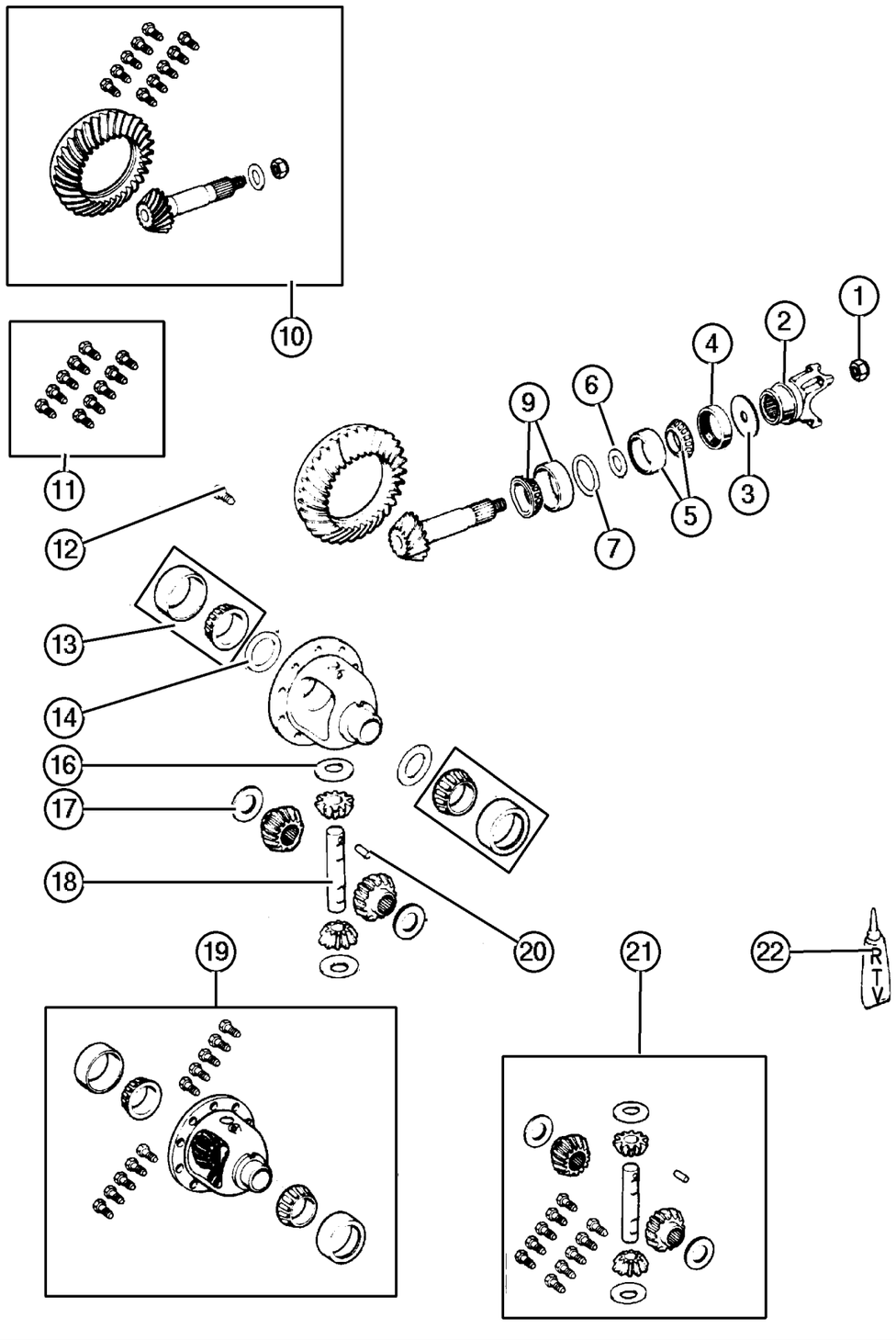

ITEM	PART NUMBER	QTY	LINE	SERIES	BODY	ENGINE	TRANS	TRIM	DESCRIPTION
	5017 235AA	1	J						[.126"]
		1	U						[.126"]
	5017 236AA	1	J						[.127"]
		1	U						[.127"]
	5017 237AA	1	J						[.128"]
	5017 219AA	1	U						[.110"]
	5017 237AA	1	U						[.128"]
	5017 238AA	1	J						[.129"]
		1	U						[.129"]
	5017 239AA	1	J						[.130"]
		1	U						[.130"]
	5017 240AA	1	J						[.131"]
		1	U						[.131"]
	5017 241AA	1	J						[.132"]
		1	U						[.132"]
	5017 242AA	1	J						[.133"]
	5017 220AA	1	J						[.111"]
	5017 242AA	1	U						[.133"]
	5017 243AA	1	J						[.134"]
		1	U						[.134"]
	5017 244AA	1	J						[.135"]
		1	U						[.135"]
	5017 245AA	1	J						[.136"]
		1	U						[.136"]
	5017 246AA	1	J						[.137"]
		1	U						[.137"]
	5017 247AA	1	J						[.138"]
	5017 220AA	1	U						[.111"]
	5017 247AA	1	U						[.138"]
	5017 248AA	1	J						[.139"]
		1	U						[.139"]
	5017 249AA	1	J						[.140"]
		1	U						[.140"]
	5017 250AA	1	J						[.141"]
		1	U						[.141"]
	5017 251AA	1	J						[.142"]
		1	U						[.142"]
	5017 252AA	1	J						[.143"]
	5017 221AA	1	J						[.112"]
	5017 252AA	1	U						[.143"]
	5017 253AA	1	J						[.144"]

JEEP LIBERTY (KJ)

SERIES	LINE	BODY	ENGINE	TRANSMISSION
P = Limited	J = LHD (4WD)	74 = 4 Dr. (104.3 WB)	ED1, ED0 = 2.4L Power Tech	DDK = 5 Speed HDManual
H = Sport	U = RHD (4WD)		EKG, EK0 = 3.7L Power Tech	DDD = 5 Speed HD Manual
M = Renegade	T = LHD (2WD)		ENJ = 2.5L 4Cyl Turbo Diesel	DG4,DGQ = Multi-Speed Auto
			ENR = 2.8L 4Cyl Turbo Diesel	DG6 = 4 Speed Auto Transm
			EN0 = 4Cyl Turbo Diesel	DG0 = All Automatic Transm
				DBB = All Manual Transm

AR = Use as required - = Non illustrated part # = New this model year

June 3, 2003

« RETURN TO GROUP INDEX

Differential,Front Axle
Figure 002-610

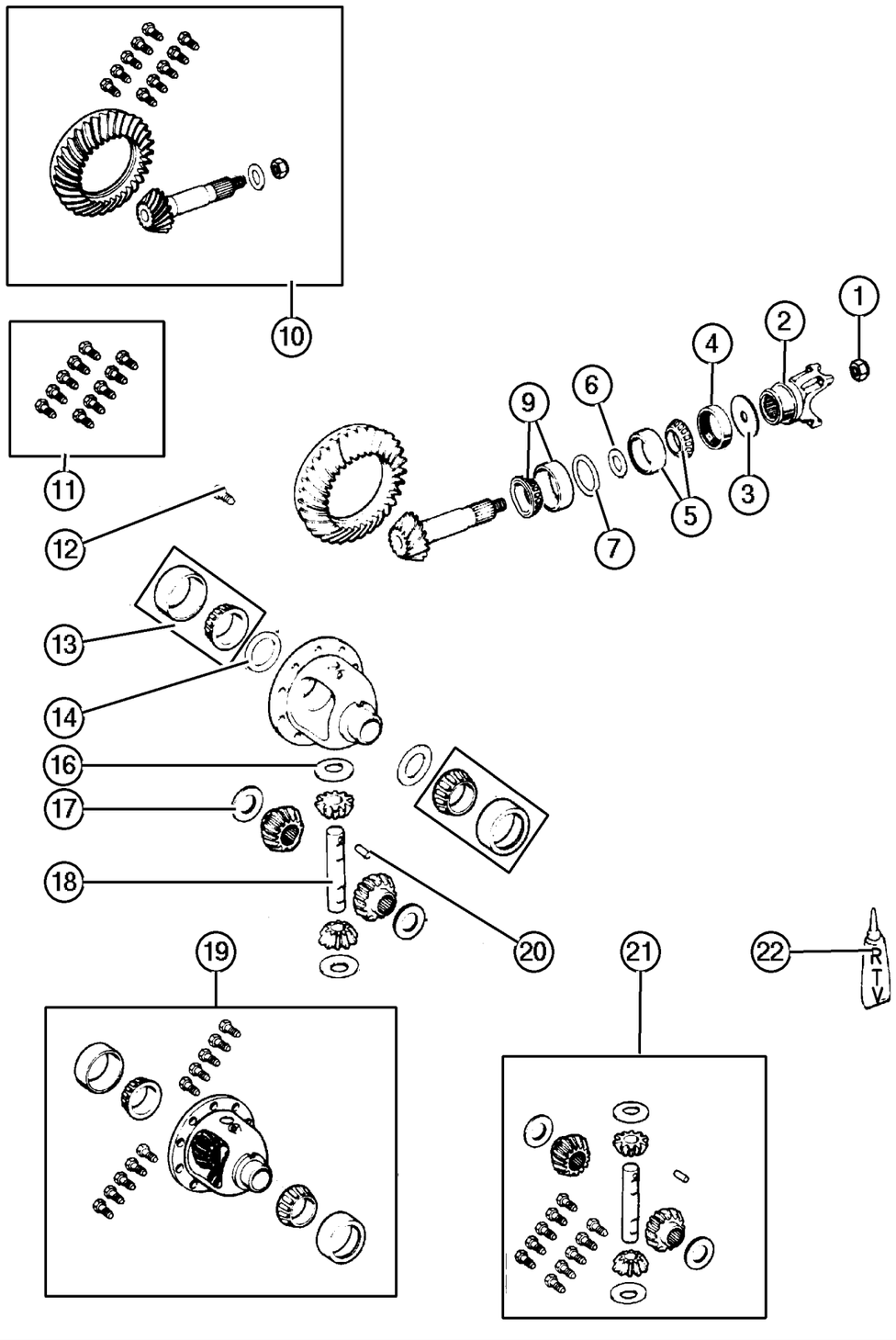

ITEM	PART NUMBER	QTY	LINE	SERIES	BODY	ENGINE	TRANS	TRIM	DESCRIPTION
		1	U						[.144"]
	5017 254AA	1	J						[.145"]
		1	U						[.145"]
	5017 255AA	1	J						[.146"]
		1	U						[.146"]
	5017 256AA	1	J						[.147"]
		1	U						[.147"]
	5017 257AA	1	J						[.148"]
	5017 221AA	1	U						[.112"]
	5017 257AA	1	U						[.148"]
	5017 222AA	1	J						[.113"]
-15									SHIM KIT, Differential
	5066 539AA	1	J						Contains 40 Shims
		1	U						Contains 40 Shims
16									WASHER, Pinion Gear
	J812 0831	2	J						Thrust
		2	U						Thrust
17									WASHER, Side Gear
	J812 0832	2	J						Thrust
		2	U						Thrust
18									SHAFT, Differential
	5003 840AA	1	J						
		1	U						
19									CASE, Differential
	5066 529AA	1	J						With Internal Parts
		1	U						With Internal Parts
20									PIN, Differential Shaft
	1791 563	1	J						
		1	U						
21									GEAR KIT, Center Differential
	5066 530AA	1	J						
		1	U						
22									SEALANT, RTV
	5010 884AA	1	J						
		1	U						

JEEP LIBERTY (KJ)

SERIES	LINE	BODY	ENGINE	TRANSMISSION
P = Limited	J = LHD (4WD)	74 = 4 Dr. (104.3 WB)	ED1, ED0 = 2.4L Power Tech	DDK = 5 Speed HDManual
H = Sport	U = RHD (4WD)		EKG, EK0 = 3.7L Power Tech	DDD = 5 Speed HD Manual
M = Renegade	T = LHD (2WD)		ENJ = 2.5L 4Cyl Turbo Diesel	DG4,DGQ = Multi-Speed Auto
			ENR = 2.8L 4Cyl Turbo Diesel	DG6 = 4 Speed Auto Transm
			EN0 = 4Cyl Turbo Diesel	DG0 = All Automatic Transm
				DBB = All Manual Transm

AR = Use as required - = Non illustrated part # = New this model year

June 3, 2003

« RETURN TO GROUP INDEX

Skid Plate,Front Axle
Figure 002-810

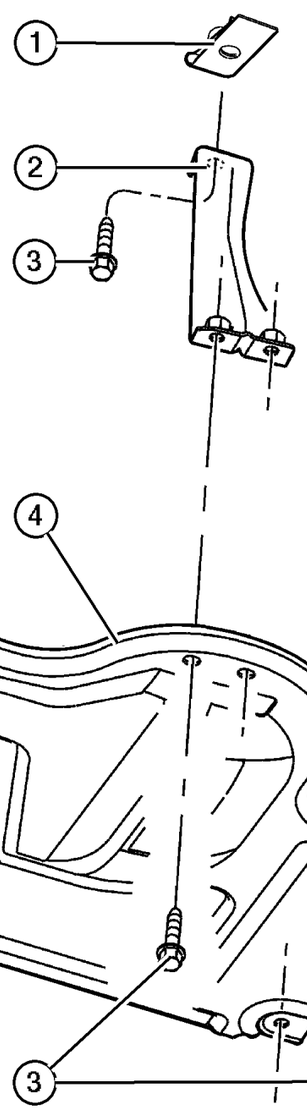

ITEM	PART NUMBER	QTY	LINE	SERIES	BODY	ENGINE	TRANS	TRIM	DESCRIPTION
Note:Sales Codes									
[ED0]=Engines - All 2.2, 2.5, 2.4L 4 Cylinder Gas									
[EK0]=Engines - All 3.7L 6 Cylinder Gas									
[EN0]=Engines - All 4/5 Cylinder Turbo Diesel									
1									NUT, U Type, M10 x 1.50, (NOT SERVICED) (Not Serviced)
2									BRACKET, Skid Plate
	52128 545AA	1	J, U						Right
	52128 544AA	1	J, U						Left
3									SCREW AND WASHER, Hex Head, M10-1.50x30, (NOT SERVICED) (Not Serviced)
4									SKID PLATE, Front
	52128 540AC	1	J, U						[ED0,EN0]
	52128 539AC	1	J, U						[EK0]

JEEP LIBERTY (KJ)

SERIES	LINE	BODY	ENGINE	TRANSMISSION
P = Limited	J = LHD (4WD)	74 = 4 Dr. (104.3 WB)	ED1, ED0 = 2.4L Power Tech	DDK = 5 Speed HDManual
H = Sport	U = RHD (4WD)		EKG, EK0 = 3.7L Power Tech	DDD = 5 Speed HD Manual
M = Renegade	T = LHD (2WD)		ENJ = 2.5L 4Cyl Turbo Diesel	DG4,DGQ = Multi-Speed Auto
			ENR = 2.8L 4Cyl Turbo Diesel	DG6 = 4 Speed Auto Transm
			EN0 = 4Cyl Turbo Diesel	DG0 = All Automatic Transm
				DBB = All Manual Transm

Group – 003

Rear Axle

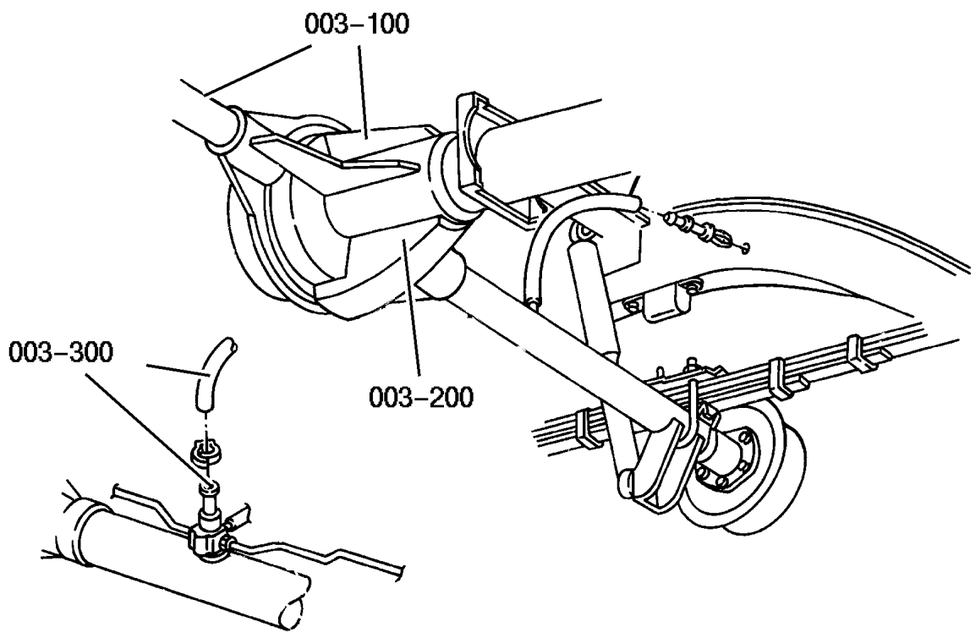

Illustration Title — Group-Fig. No.

Rear Axle

Axle Assembly,Rear,Corporate 8.25 [DRA] . . . . . Fig. 003-110

Differential and Housing

Axle,Rear,with Differential and Housing,Corporate 8.25 [DRA] . . . . . Fig. 003-210

Rear Axle Vent

Vent,Rear Axle . . . . . Fig. 003-310

003–100 Rear Axle	003–200 Differential and Housing	003–300 Rear Axle Vent	
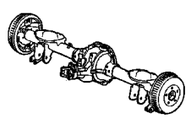	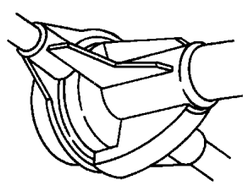	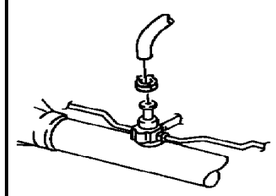	

Axle Assembly,Rear,Corporate 8.25 [DRA]
Figure 003-110

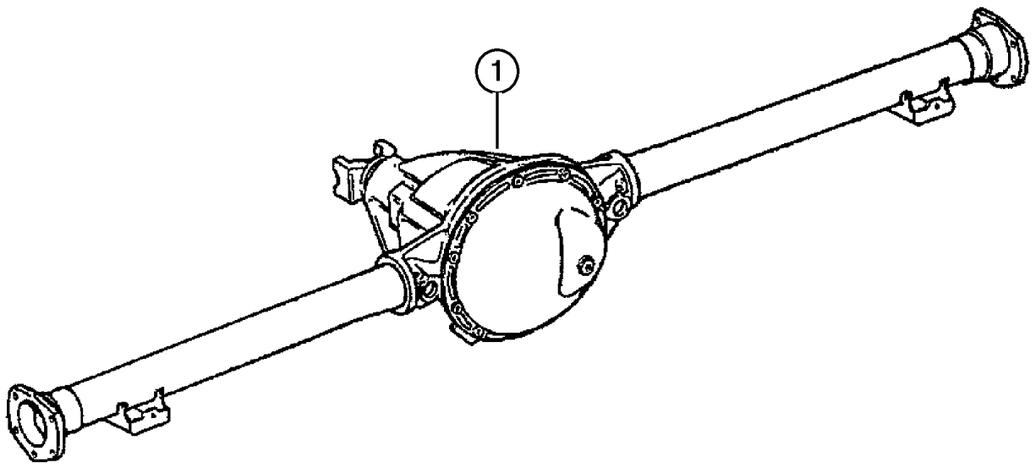

ITEM	PART NUMBER	QTY	LINE	SERIES	BODY	ENGINE	TRANS	TRIM	DESCRIPTION
Note: Sales Codes									
[BRE]=Brakes - 4-Wheel Disc									
[BRY]=Brakes - Anti-Lock 4-Wheel Disc									
[DME]=Axle Ratio - 3.73									
[DMF]=Axle Ratio - 4.10									
[DRA]=Axle - Rear, Corporate 8.25									
[DSA]=Axle-Trac-Lok Differential									
1									AXLE, Service Rear
	#5086 372AC	1							[DME,BRE,BRY] With Tag 52114030AA or AB-With U-joint Type Yoke
	#5102 977AA	1							[DMF,DSA] With Tag 52114169AA-With U-joint Type Yoke
	#5104 895AA	1							[DMF,BRE,BRY] With Tag 52114170AB-With CV Type Flange
	#5104 896AA	1							[DMF,DSA,BRE,BRY] With Tag 5211469AB-With CV Type Flange
	#5102 971AA	1							[DME,BRE,BRY] With Tag 52114030AC or AD-With CV Type Flange
	#5086 371AC	1							[DME,DSA,BRE,BRY] With Tag 52114028AA or AB-With U-joint Type Yoke
	#5102 970AA	1							[DME,DSA,BRE,BRY] With Tag 52114028AC or AD-With CV Type Flange
	#5096 082AB	1							[DMF,BRE,BRY] With Tag 52114034AA or AB-With U-joint Type Yoke
	#5102 974AA	1							[DMF,BRE,BRY] With Tag 52114034AC or AD-With CV Type Flange
	#5086 375AC	1							[DMF,DSA,BRE,BRY] With Tag 52114032AA or AB-With U-joint Type Yoke
	#5102 973AA	1							[DMF,DSA,BRE,BRY] With Tag 52114032AC or AD-With CV Type Flange
	#5102 978AA	1							[DMF] With Tag 52114170AA-With U-joint Type Yoke

JEEP LIBERTY (KJ)

SERIES	LINE	BODY	ENGINE	TRANSMISSION
P = Limited	J = LHD (4WD)	74 = 4 Dr. (104.3 WB)	ED1, ED0 = 2.4L Power Tech	DDK = 5 Speed HDManual
H = Sport	U = RHD (4WD)		EKG, EK0 = 3.7L Power Tech	DDD = 5 Speed HD Manual
M = Renegade	T = LHD (2WD)		ENJ = 2.5L 4Cyl Turbo Diesel	DG4,DGQ = Multi-Speed Auto
			ENR = 2.8L 4Cyl Turbo Diesel	DG6 = 4 Speed Auto Transm
			EN0 = 4Cyl Turbo Diesel	DG0 = All Automatic Transm
				DBB = All Manual Transm

Axle,Rear,with Differential and Housing,Corporate 8.25 [DRA]
Figure 003-210

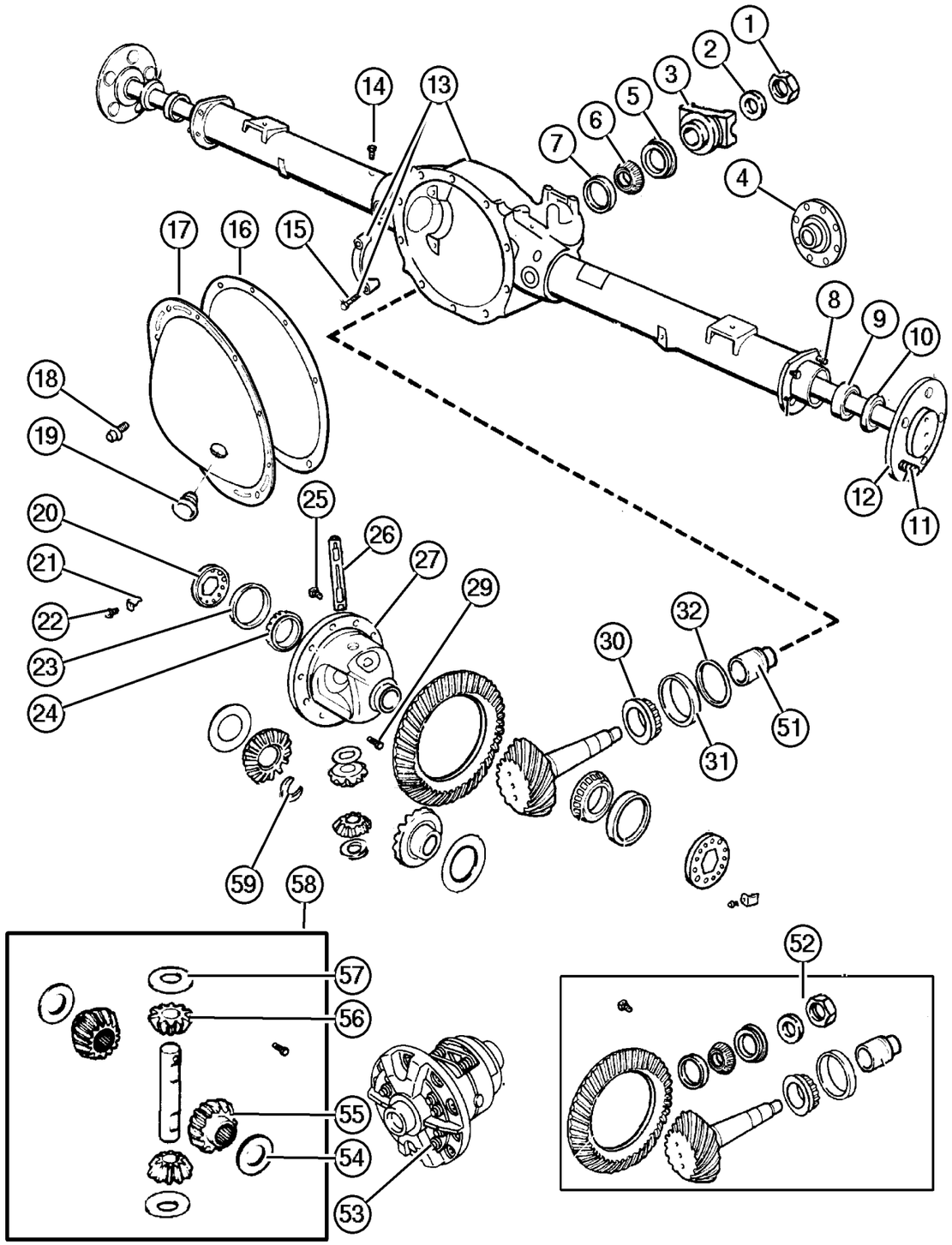

ITEM	PART NUMBER	QTY	LINE	SERIES	BODY	ENGINE	TRANS	TRIM	DESCRIPTION
Note: Sales Codes;									
[DME] = Axle Ratio - 3.73									
[DMF]= Axle Ratio - 4.10									
[DRA] =Axle - Rear, Corporate 8.25									
[DSA]=Axle-Trac-Lok Differential									
1	6028 041	1							NUT, Pinion Yoke
2	2070 117	1							WASHER, Pinion Yoke
3	52070 345AA	1							YOKE, Axle
4	5210 5065	1							FLANGE, Driveshaft Yoke
5	52070 339AA	1							SEAL, Drive Pinion
6	2070 316	1							BEARING, Drive Pinion, Front
7	2070 317	1							CUP, Drive Pinion Bearing, Front
8	6036 533AA	8							STUD, Axle Housing to Backing Plate, Mounting
9	3507 898AB	2							BEARING, Wheel
10	52070 427AB	2							SEAL, Axle Drive Shaft
11	6036 123AA	10							STUD, Wheel
12	52070 350AA	2							SHAFT, Axle
13	#5086 370AB	1							HOUSING, Axle
14	4137 696AB	1							BOLT, Axle Vent
15	3432 695	4							SCREW, Hex Head, .50-13x2.38, Carrier Cap, Mounting
16									SEALANT, RTV
	5010 884AA	1	J						
		1	U						
		1	T						
17	3723 681AC	1							COVER, Differential
18	6033 043	10							SCREW AND WASHER, Hex Flange Head, .312-18x.562
19	52070 428AA	1							PLUG, Differential Cover
20	3507 876	2							ADJUSTER, Differential Bearing
21	3723 859	2							LOCK, Differential Bearing
22	6023 092	2							SCREW AND WASHER, Hex Head, .25-20x.50, Differential Bearing Lock, Mounting
23	3723 569	2							CUP, Differential Side Bearing
24	1790 541	2							BEARING, Differential
25	4443 158	10							SCREW PACKAGE, Axle Drive Gear, Ring Gear, Mounting
26	5206 9657	1							SHAFT, Differential Pinion, Also Serviced In Differential Gear Package

JEEP LIBERTY (KJ)

SERIES	LINE	BODY	ENGINE	TRANSMISSION
P = Limited	J = LHD (4WD)	74 = 4 Dr. (104.3 WB)	ED1, ED0 = 2.4L Power Tech	DDK = 5 Speed HDManual
H = Sport	U = RHD (4WD)		EKG, EK0 = 3.7L Power Tech	DDD = 5 Speed HD Manual
M = Renegade	T = LHD (2WD)		ENJ = 2.5L 4Cyl Turbo Diesel	DG4,DGQ = Multi-Speed Auto
			ENR = 2.8L 4Cyl Turbo Diesel	DG6 = 4 Speed Auto Transm
			EN0 = 4Cyl Turbo Diesel	DG0 = All Automatic Transm
				DBB = All Manual Transm

Axle,Rear,with Differential and Housing,Corporate 8.25 [DRA]
Figure 003-210

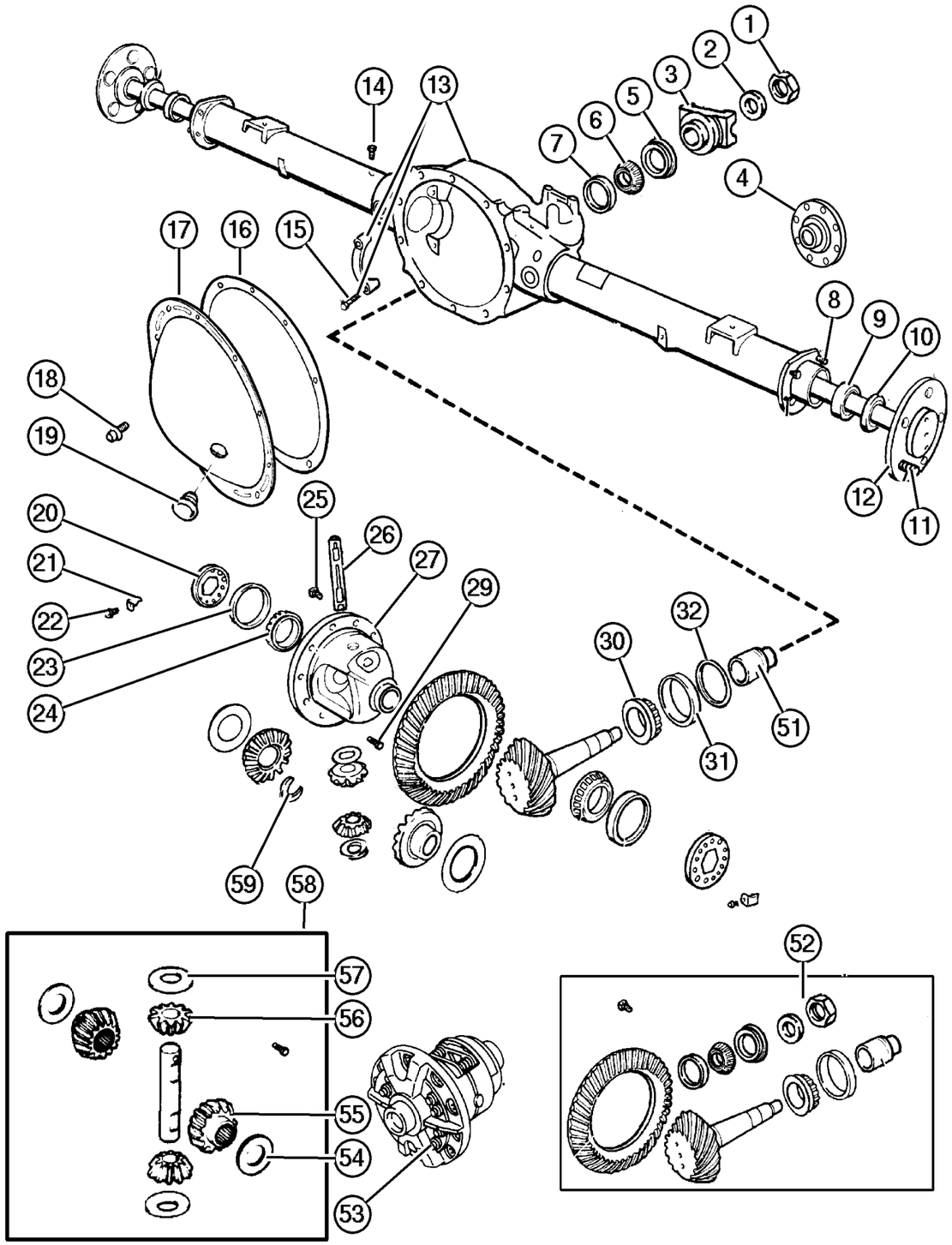

ITEM	PART NUMBER	QTY	LINE	SERIES	BODY	ENGINE	TRANS	TRIM	DESCRIPTION
27									CASE, Differential
	5206 9427	1							Without [DSA],With Internal Parts
	5206 9428	1							Without [DSA],Without Internal Parts
-28	4384 226	1							TONE RING, Sensor
29	3507 724	1							SCREW, Hex Head, .312-18x1.80, Also Serviced in Differential Gear Package
30	2800 484	1							BEARING, Drive Pinion, Rear
31	2800 485	1							CUP, Drive Pinion Bearing, Rear
32	3723 520	AR							SHIM, Drive Pinion Bearing, .020
-33	3723 521	AR							SHIM, Drive Pinion Bearing, .021
-34	3723 522	AR							SHIM, Drive Pinion Bearing, .022
-35	3723 523	AR							SHIM, Drive Pinion Bearing, .023
-36	3723 524	AR							SHIM, Drive Pinion Bearing, .024
-37	3723 525	AR							SHIM, Drive Pinion Bearing, .025
-38	3723 526	AR							SHIM, Drive Pinion Bearing, .026
-39	3723 527	AR							SHIM, Drive Pinion Bearing, .027
-40	3723 528	AR							SHIM, Drive Pinion Bearing, .028
-41	3723 529	AR							SHIM, Drive Pinion Bearing, .029
-42	3723 530	AR							SHIM, Drive Pinion Bearing, .030
-43	3723 531	AR							SHIM, Drive Pinion Bearing, .031
-44	3723 532	AR							SHIM, Drive Pinion Bearing, .032
-45	3723 533	AR							SHIM, Drive Pinion Bearing, .033
-46	3723 534	AR							SHIM, Drive Pinion Bearing, .034
-47	3723 535	AR							SHIM, Drive Pinion Bearing, .035
-48	3723 536	AR							SHIM, Drive Pinion Bearing, .036
-49	3723 537	AR							SHIM, Drive Pinion Bearing, .037
-50	3723 538	AR							SHIM, Drive Pinion Bearing, .038
51	3507 575	1							SPACER, Drive Pinion Bearing, Crush
52									GEAR KIT, Ring And Pinion
	5018 719AA	1							[DME]
	4720 973AB	1							[DMF]
53	52098 778AC	1							CASE, Differential, With [DSA],With Internal Parts
54	4883 085	1							WASHER PACKAGE, Side Gear Thrust, Also Serviced In Differential Gear Package, Without [DSA]
55	5206 9429	2							GEAR, Differential, Also Serviced In Differential Gear Package, Without [DSA]

JEEP LIBERTY (KJ)

SERIES	LINE	BODY	ENGINE	TRANSMISSION
P = Limited	J = LHD (4WD)	74 = 4 Dr. (104.3 WB)	ED1, ED0 = 2.4L Power Tech	DDK = 5 Speed HDManual
H = Sport	U = RHD (4WD)		EKG, EK0 = 3.7L Power Tech	DDD = 5 Speed HD Manual
M = Renegade	T = LHD (2WD)		ENJ = 2.5L 4Cyl Turbo Diesel	DG4,DGQ = Multi-Speed Auto
			ENR = 2.8L 4Cyl Turbo Diesel	DG6 = 4 Speed Auto Transm
			EN0 = 4Cyl Turbo Diesel	DG0 = All Automatic Transm
				DBB = All Manual Transm

Axle,Rear,with Differential and Housing,Corporate 8.25 [DRA]
Figure 003-210

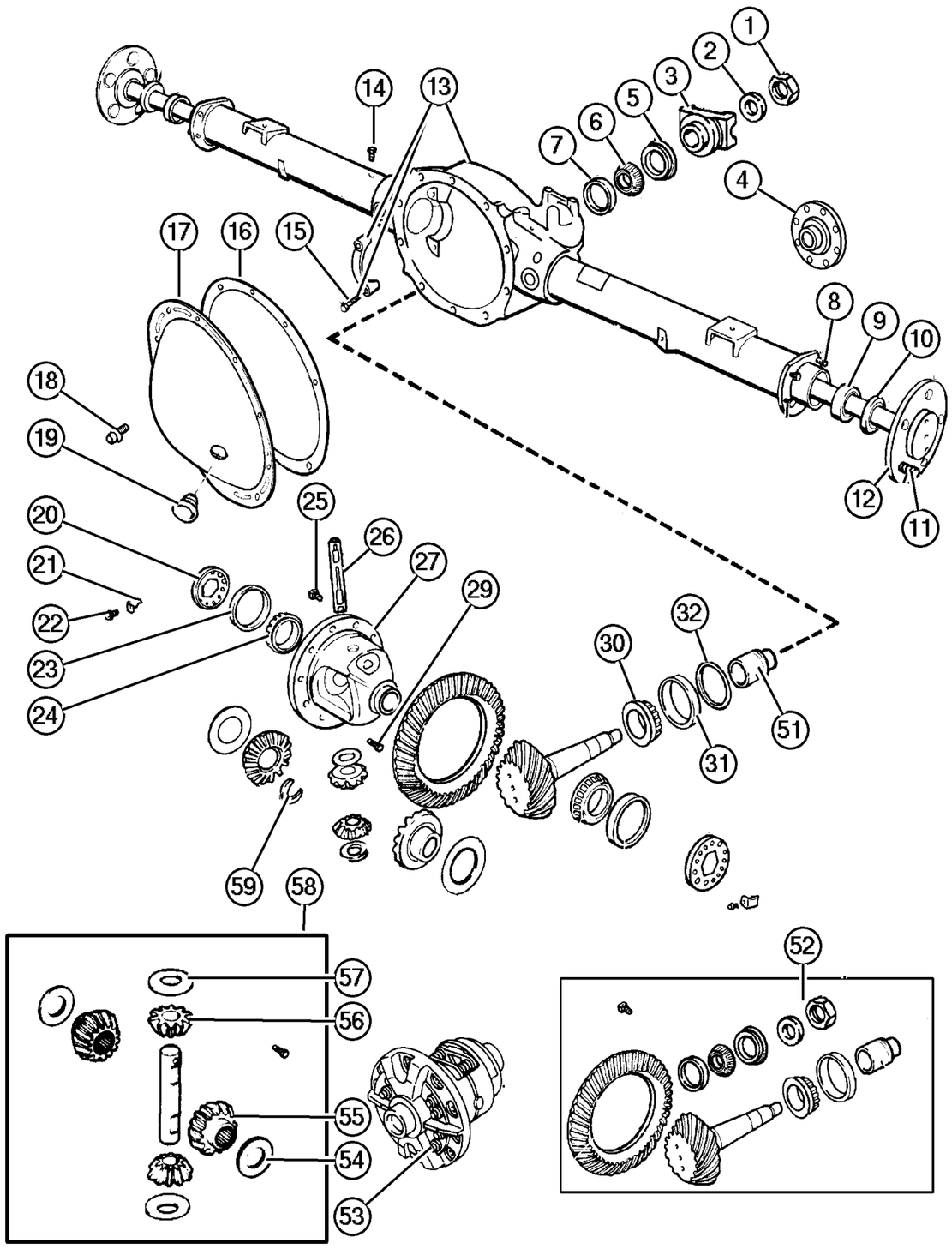

ITEM	PART NUMBER	QTY	LINE	SERIES	BODY	ENGINE	TRANS	TRIM	DESCRIPTION
56	5206 9655	2							PINION, Differential, Also Serviced In Differential Gear Package, Without [DSA]
57	2852 912	2							WASHER, Pinion Gear, Also Serviced In Differential Gear Package, Without [DSA], Thrust
58	4883 087	1							GEAR PACKAGE, Differential, Without [DSA]
59	5206 9426	2							RETAINER, Axle Shaft

JEEP LIBERTY (KJ)

SERIES	LINE	BODY	ENGINE	TRANSMISSION
P = Limited	J = LHD (4WD)	74 = 4 Dr. (104.3 WB)	ED1, ED0 = 2.4L Power Tech	DDK = 5 Speed HDManual
H = Sport	U = RHD (4WD)		EKG, EK0 = 3.7L Power Tech	DDD = 5 Speed HD Manual
M = Renegade	T = LHD (2WD)		ENJ = 2.5L 4Cyl Turbo Diesel	DG4,DGQ = Multi-Speed Auto
			ENR = 2.8L 4Cyl Turbo Diesel	DG6 = 4 Speed Auto Transm
			EN0 = 4Cyl Turbo Diesel	DG0 = All Automatic Transm
				DBB = All Manual Transm

Vent,Rear Axle
Figure 003-310

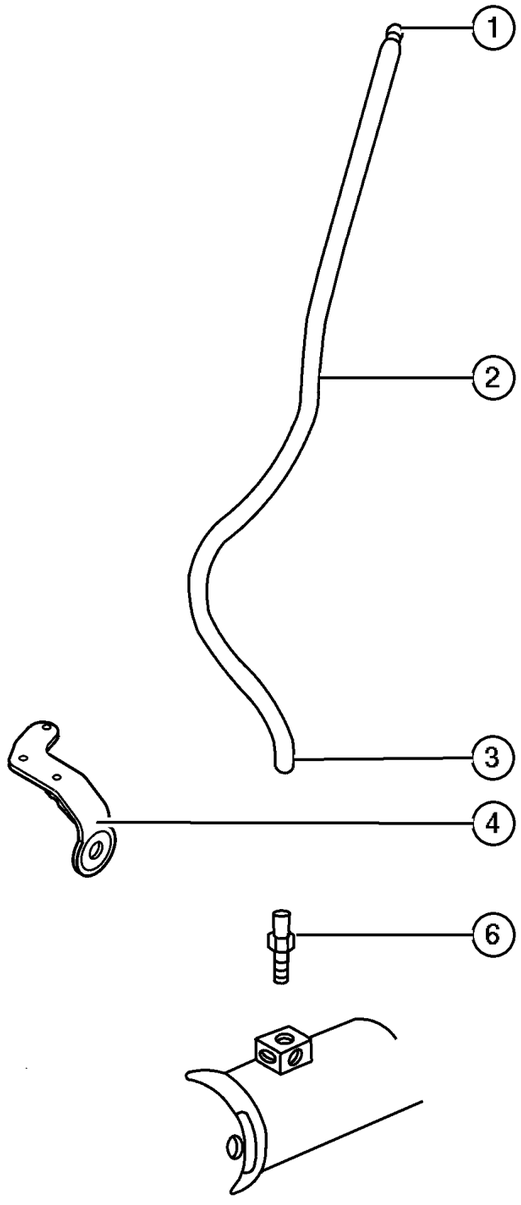

ITEM	PART NUMBER	QTY	LINE	SERIES	BODY	ENGINE	TRANS	TRIM	DESCRIPTION
Note:Sales Codes;									
[DBB]=Transmissions - All Manual									
[DG0]=Transmissions - All Automatic									
[DG4]=Transmission - Multi-Speed Automatic,45RF									
[DG6]=Transmission - 4 Speed Automatic,42RL									
[DRA]=Axle - Rear,Corporate 8.25									
1	J535 2955	1							VENT, Axle
2	HFV0 0516	1							HOSE, Fuel And Vapor, 25 Foot Roll 5/16"
3	6032 633	1							CLIP, Vent Tube, Axle Vent Hose, Mounting
4									DAMPER, Axle Vent Hose
	52111 360AB	1							[DRA,DBB,DG0,DG4]
	#52111 360AD	1							[DRA,DG6]
-5	6507 369AA	3							BOLT, Axle Vent Hose Damper, Mounting
6	4137 696AB	1							BOLT, Axle Vent
-7	#52128 868AA	2							CLIP, Anti Rattle

JEEP LIBERTY (KJ)

SERIES	LINE	BODY	ENGINE	TRANSMISSION
P = Limited	J = LHD (4WD)	74 = 4 Dr. (104.3 WB)	ED1, ED0 = 2.4L Power Tech	DDK = 5 Speed HDManual
H = Sport	U = RHD (4WD)		EKG, EK0 = 3.7L Power Tech	DDD = 5 Speed HD Manual
M = Renegade	T = LHD (2WD)		ENJ = 2.5L 4Cyl Turbo Diesel	DG4,DGQ = Multi-Speed Auto
			ENR = 2.8L 4Cyl Turbo Diesel	DG6 = 4 Speed Auto Transm
			EN0 = 4Cyl Turbo Diesel	DG0 = All Automatic Transm
				DBB = All Manual Transm

AR = Use as required - = Non illustrated part # = New this model year

June 3, 2003

« RETURN TO GROUP INDEX

Group – 004
Parking Brake

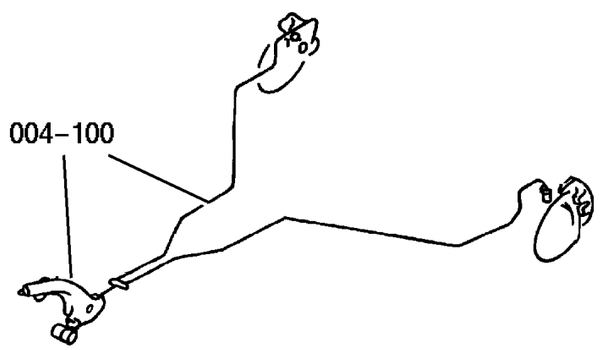

004–100
Parking Brake Lever and Cables

GROUP 4 - Parking Brake

Illustration Title	Group-Fig. No.
Parking Brake Lever and Cables	
Parking Brake Lever and Cables	Fig. 004-110
Parking Brake Assembly,Rear,Disc	Fig. 004-120

Parking Brake Lever and Cables
Figure 004-110

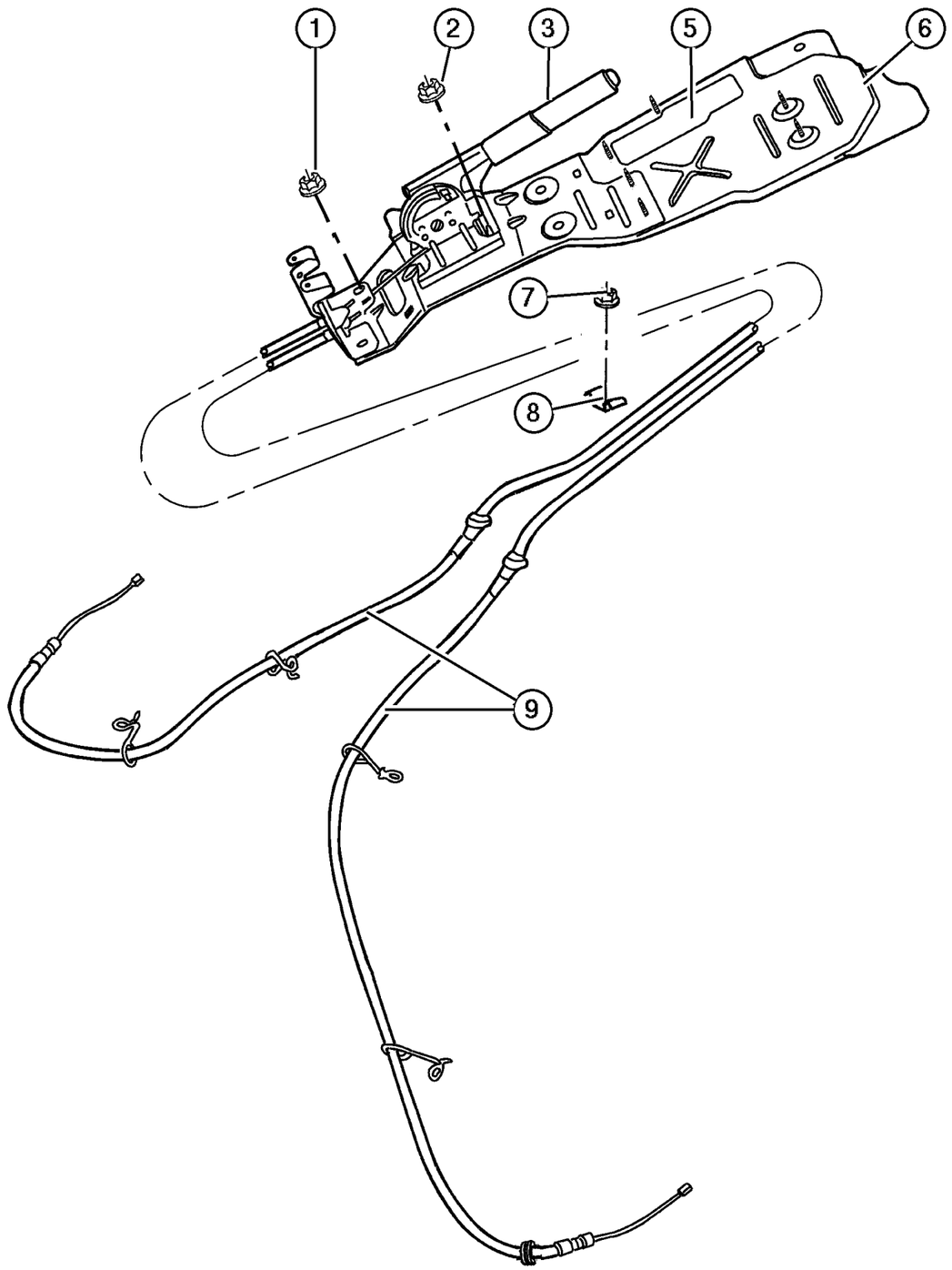

ITEM	PART NUMBER	QTY	LINE	SERIES	BODY	ENGINE	TRANS	TRIM	DESCRIPTION
Note:Sales Codes;									
[DD0]=Transmissions - All 5-Speed Manual									
[DG0]=Transmissions - All Automatic									
1	6501 483	4							NUT, Hex Flange, M8x1.25
2	6100 517	4							NUT, Hex Flange Lock
3	#52128 715AB	1							LEVER, Park Brake
-4	5212 7960	1							SWITCH, Parking Brake, Parking Brake Indicator Light
5									SEAL, Parking Brake Housing
	52128 504AA	1							[DD0]
	52128 503AA	1							[DG0]
6									BRACKET, Parking Brake
	52128 390AF	1							[DD0] with Seal
	52128 391AF	1							[DG0] with Seal
7	6502 843	2							NUT AND WASHER, Hex Nut-Coned Washer, M6 x 1.00, Park Brake Cable Saddle, Mounting
8	52128 399AA	1							CLIP, Park Brake Cable Saddle, Mounting
9									CABLE, Parking Brake
	#52128 510AC	1							Right
	#52128 511AC	1							Left
-10	5602 1252	1							CLIP, Parking Brake Cable
-11	6101 809	AR							NUT AND WASHER, Hex, M8x1.25, Park Brake Cable to Spring Seat, Mounting
-12									CLIP, Cable Routing
	#52128 612AB	1							Right
	#52128 613AB	1							Left

JEEP LIBERTY (KJ)

SERIES	LINE	BODY	ENGINE	TRANSMISSION
P = Limited	J = LHD (4WD)	74 = 4 Dr. (104.3 WB)	ED1, ED0 = 2.4L Power Tech	DDK = 5 Speed HDManual
H = Sport	U = RHD (4WD)		EKG, EK0 = 3.7L Power Tech	DDD = 5 Speed HD Manual
M = Renegade	T = LHD (2WD)		ENJ = 2.5L 4Cyl Turbo Diesel	DG4,DGQ = Multi-Speed Auto
			ENR = 2.8L 4Cyl Turbo Diesel	DG6 = 4 Speed Auto Transm
			EN0 = 4Cyl Turbo Diesel	DG0 = All Automatic Transm
				DBB = All Manual Transm

AR = Use as required - = Non illustrated part # = New this model year **June 3, 2003**

« RETURN TO GROUP INDEX

Parking Brake Assembly,Rear,Disc
Figure 004-120

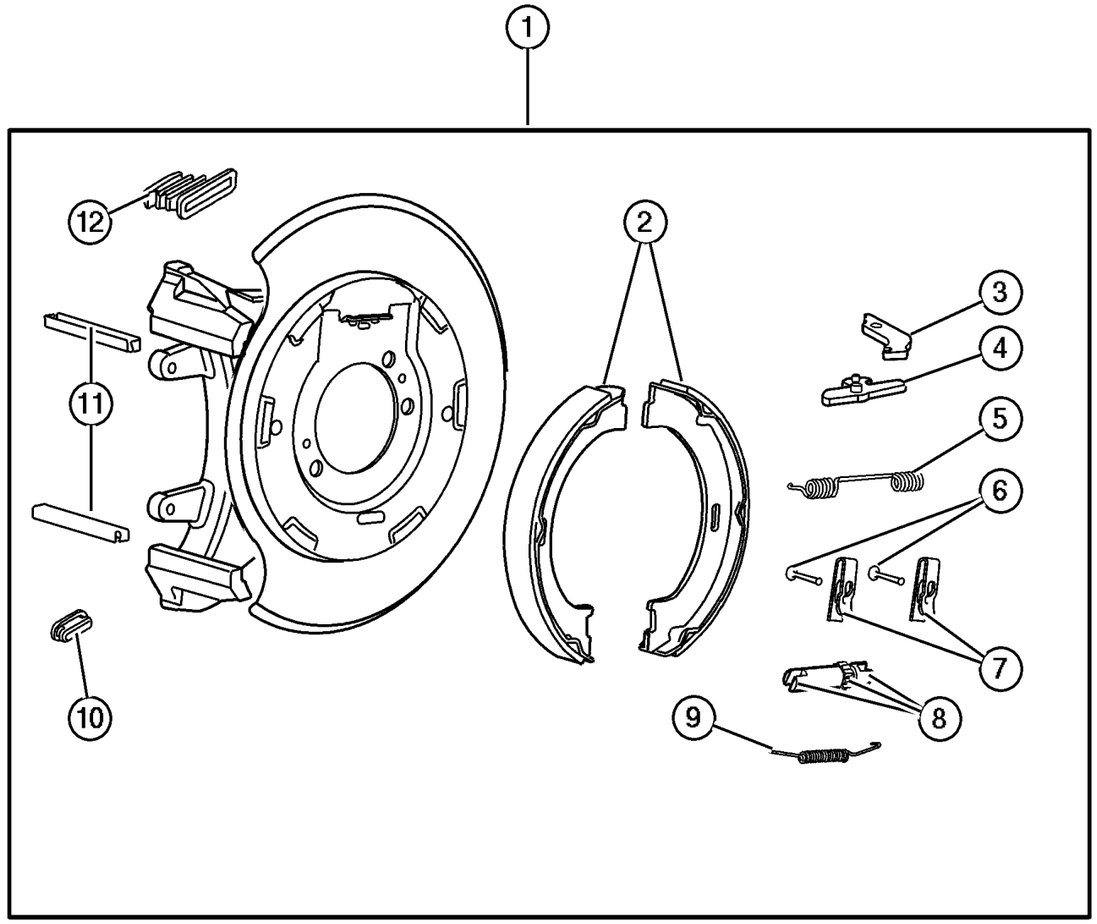

ITEM	PART NUMBER	QTY	LINE	SERIES	BODY	ENGINE	TRANS	TRIM	DESCRIPTION
1									ADAPTER, Parking Brake
	#52128 414AA	1							Right
	#52128 415AA	1							Left
2	#5093 390AA	1							SHOE AND LINING KIT, Parking Brake
3	#5093 392AA	1							LEVER, Park Brake Adjusting
4									LEVER, Park Brake
	#5093 334AA	1							Right
	#5093 338AA	1							Left
5	#5093 393AA	1							SPRING, Park Brake Shoe Return
6	4762 126	2							PIN, Brake Shoe Hold Down
7	4762 125	2							CLIP, Parking Brake Hold Down
8	#5093 391AA	1							ADJUSTER, Parking Brake
9	4762 116	1							SPRING, Park Brake Shoe Return
10	4762 121	1							PLUG, Brake Adjusting Hole
11	#5093 394AA	2							SLIPPER, Caliper
12	#5093 395AA	1							BOOT, Parking Brake Lever

JEEP LIBERTY (KJ)

SERIES	LINE	BODY	ENGINE	TRANSMISSION
P = Limited	J = LHD (4WD)	74 = 4 Dr. (104.3 WB)	ED1, ED0 = 2.4L Power Tech	DDK = 5 Speed HDManual
H = Sport	U = RHD (4WD)		EKG, EK0 = 3.7L Power Tech	DDD = 5 Speed HD Manual
M = Renegade	T = LHD (2WD)		ENJ = 2.5L 4Cyl Turbo Diesel	DG4,DGQ = Multi-Speed Auto
			ENR = 2.8L 4Cyl Turbo Diesel	DG6 = 4 Speed Auto Transm
			EN0 = 4Cyl Turbo Diesel	DG0 = All Automatic Transm
				DBB = All Manual Transm

AR = Use as required - = Non illustrated part # = New this model year **June 3, 2003**

« RETURN TO GROUP INDEX

Group – 005
Service Brakes

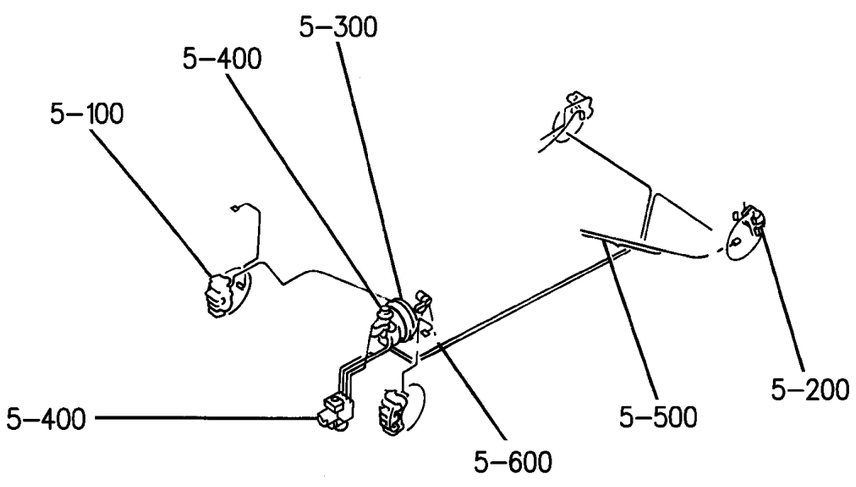

005–100 Front Brakes 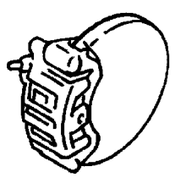	005–200 Rear Brakes 	005–300 Power Brake Booster 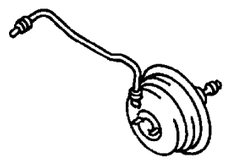	005–400 Brake Master Cylinder 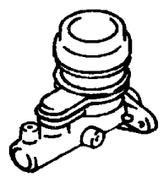
005–500 Brake Lines and Hoses 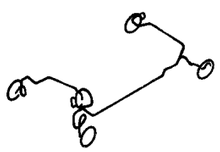	005–600 Brake Pedals 		

GROUP 5 - Service Brakes

Illustration Title	Group-Fig. No.
Front Brakes	
Brakes,Front	Fig. 005-110
Rear Brakes	
Brakes,Rear,Disc	Fig. 005-210
Power Brake Booster	
Booster,Power Brake	Fig. 005-310
Brake Master Cylinder	
Master Cylinder,Brake	Fig. 005-410
Brake Lines and Hoses	
Brake Lines,Front,LHD	Fig. 005-510
Brake Lines,Front,RHD	Fig. 005-520
Brake Lines,Rear	Fig. 005-530
Brake Pedals	
Pedals,Brake and Clutch	Fig. 005-610

Brakes,Front
Figure 005-110

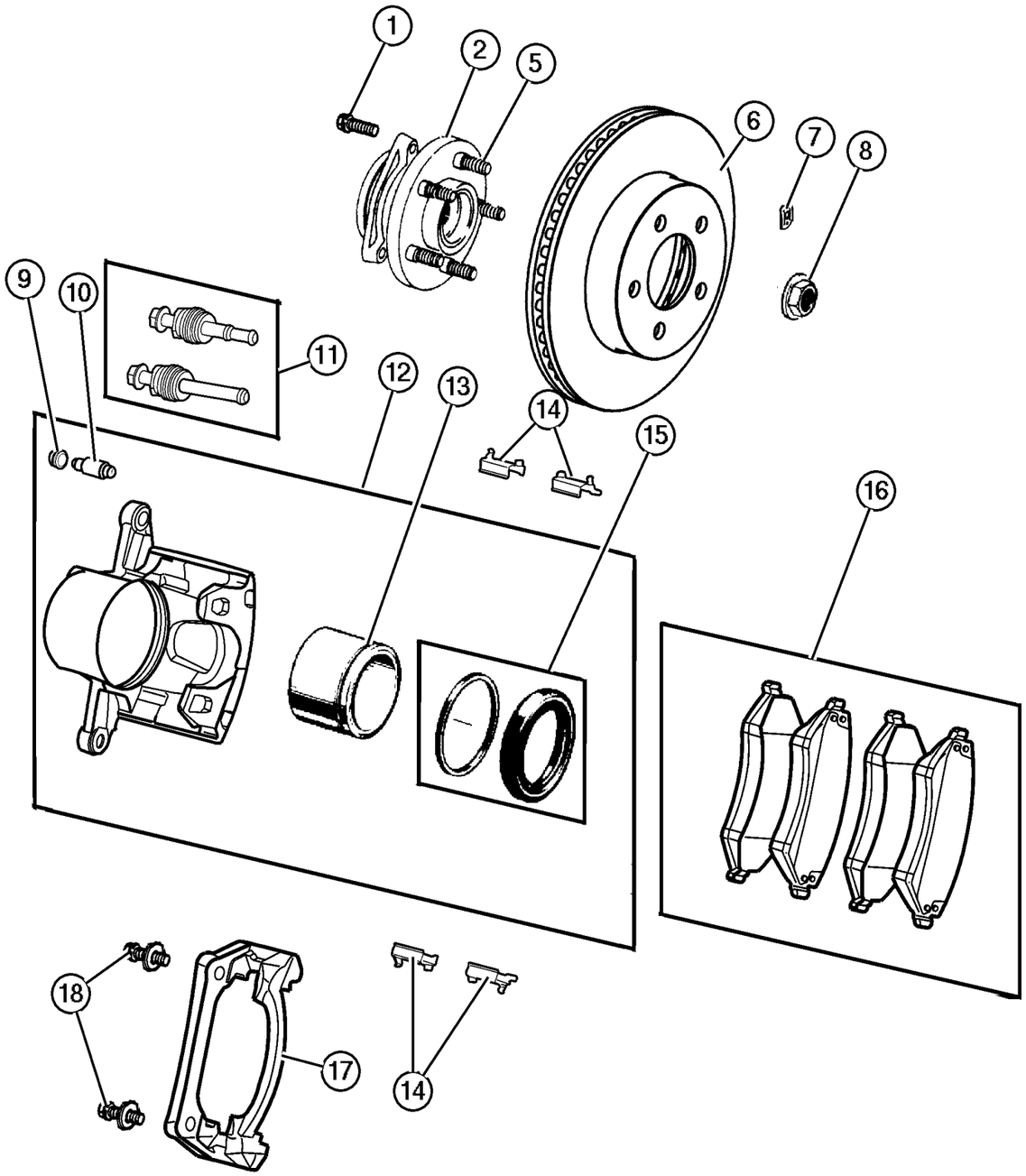

ITEM	PART NUMBER	QTY	LINE	SERIES	BODY	ENGINE	TRANS	TRIM	DESCRIPTION
Note:Sales Codes;									
[BGB]=Brakes - Power Front Disc/Rear Drum									
[BRE]=Brakes - 4 Wheel Disc									
[BRY]=Brakes - Anti-Lock 4 Wheel Disc									
1	6503 088	3							BOLT, Knuckle to Bearing Attaching, M12 x 1.75 x 43.00
2									HUB AND BEARING, Brake
	52128 352AB	1							[BRE], Right or Left
	52128 692AA	1							[BRY], Right
	52128 693AA	1							[BRY], Left
-3									SENSOR, Anti-Lock Brakes
	52128 694AA	1							[BRY], Right
	52128 695AA	1							[BRY], Left
-4	52128 584AA	1							CLIP, Wiring, [BRY] Sensor Wire to Knuckle
5	6036 388AA	5							BOLT, Hub and Rotor
6	52128 247AA	1							ROTOR, Brake
7	6026 430	1							NUT, Push
8									NUT, Hex
	6506 454AA	2	J, U						Halfshaft Retention
	6506 633AA	2	T						
9	4238 717	1							CAP, Bleeder
10	3780 788	1							BLEEDER SCREW, Brake
11	5019 987AA	1							PIN KIT, Disc Brake
12									CALIPER, Disc Brake
	5066 422AA	1							Right
	5066 423AA	1							Left
13	5066 425AA	1							PISTON, Brake
14	5019 985AB	1							CLIP, Brake Caliper
15	5066 426AA	1							BOOT AND SEAL, Disc Brake
16									PAD KIT, Front Disc Brake
	5066 427AA	1							[BRE,BRY] U.S.
	#5096 349AA	1							[BRE,BRY] Export
17	5066 428AA	1							ADAPTER, Disc Brake Caliper, Mounting
18	6102 149AA	2							BOLT, Caliper, Mounting

JEEP LIBERTY (KJ)

SERIES	LINE	BODY	ENGINE	TRANSMISSION
P = Limited	J = LHD (4WD)	74 = 4 Dr. (104.3 WB)	ED1, ED0 = 2.4L Power Tech	DDK = 5 Speed HDManual
H = Sport	U = RHD (4WD)		EKG, EK0 = 3.7L Power Tech	DDD = 5 Speed HD Manual
M = Renegade	T = LHD (2WD)		ENJ = 2.5L 4Cyl Turbo Diesel	DG4,DGQ = Multi-Speed Auto
			ENR = 2.8L 4Cyl Turbo Diesel	DG6 = 4 Speed Auto Transm
			EN0 = 4Cyl Turbo Diesel	DG0 = All Automatic Transm
				DBB = All Manual Transm

AR = Use as required - = Non illustrated part # = New this model year **June 3, 2003**

« RETURN TO GROUP INDEX

Brakes,Rear,Disc
Figure 005-210

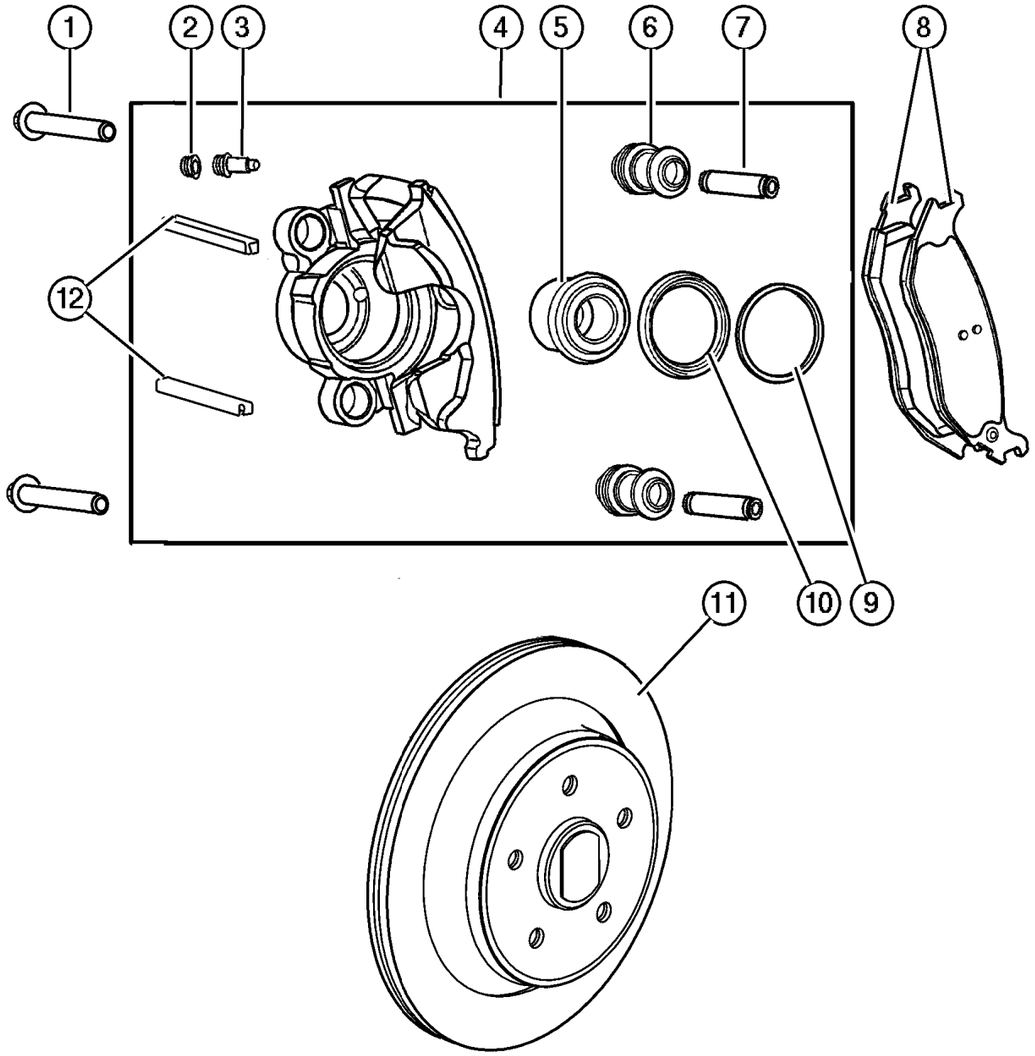

ITEM	PART NUMBER	QTY	LINE	SERIES	BODY	ENGINE	TRANS	TRIM	DESCRIPTION
1	#6507 603AA	4							PIN, Caliper
2	#5093 278AA	1							CAP, Bleeder
3	J092 0463	1							BLEEDER SCREW, Brake
4									CALIPER, Disc Brake
	#5093 274AA	1							Right
	#5093 279AA	1							Left
5	#5093 275AA	1							PISTON, Brake
6	4762 106	2							BUSHING, Caliper
7	4762 105	2							SLEEVE, Brake Caliper
8	#5083 882AC	1							PAD KIT, Disc Brake
9	#5093 276AA	1							SEAL, Caliper Piston
10	#5093 277AA	1							BOOT, Brake Piston
11	#52128 411AA	2							ROTOR, Brake
12	#5093 394AA	2							SLIPPER, Caliper
-13	6036 159AA	8							NUT, Hex, .375-24, Rear Wheel Brake Assembly, Mounting

JEEP LIBERTY (KJ)

SERIES	LINE	BODY	ENGINE	TRANSMISSION
P = Limited	J = LHD (4WD)	74 = 4 Dr. (104.3 WB)	ED1, ED0 = 2.4L Power Tech	DDK = 5 Speed HDManual
H = Sport	U = RHD (4WD)		EKG, EK0 = 3.7L Power Tech	DDD = 5 Speed HD Manual
M = Renegade	T = LHD (2WD)		ENJ = 2.5L 4Cyl Turbo Diesel	DG4,DGQ = Multi-Speed Auto
			ENR = 2.8L 4Cyl Turbo Diesel	DG6 = 4 Speed Auto Transm
			EN0 = 4Cyl Turbo Diesel	DG0 = All Automatic Transm
				DBB = All Manual Transm

AR = Use as required - = Non illustrated part # = New this model year **June 3, 2003**

« RETURN TO GROUP INDEX

Booster,Power Brake
Figure 005-310

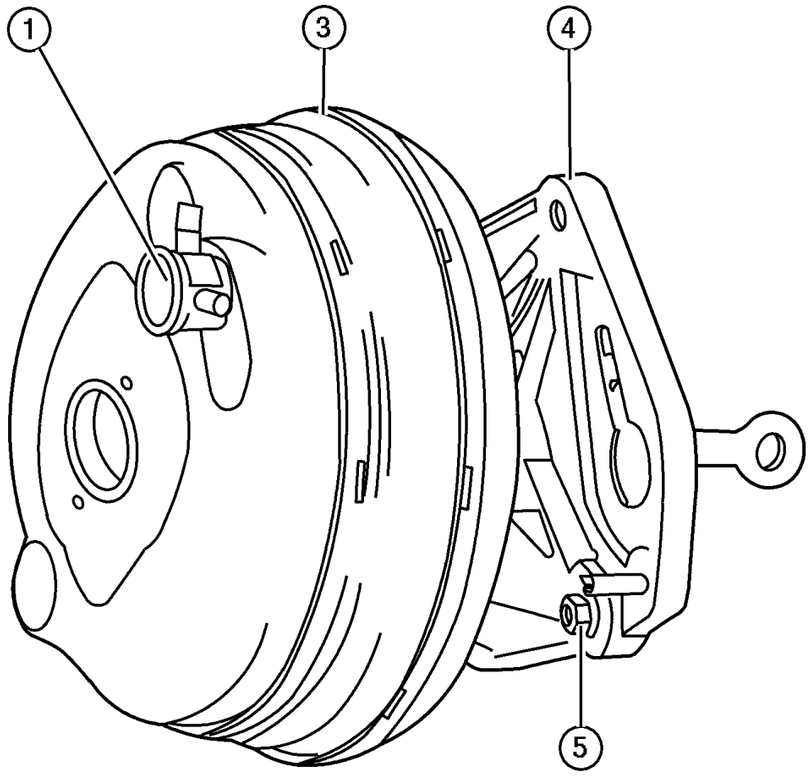

ITEM	PART NUMBER	QTY	LINE	SERIES	BODY	ENGINE	TRANS	TRIM	DESCRIPTION
Note: Sales Codes;									
[ED0]=Engines - All 2.2, 2.5, 2.4L 4 Cylinder Gas									
[EK0]=Engines - All 3.7L 6 Cylinder Gas									
[EN0]=Engines - All 4/5 Cylinder Turbo Diesel									
[NHM]=Speed Control									
1									VALVE, Vacuum Check
	5072 522AA	1	J, T						
		1	U						
-2									CAP, Vacuum Port
	5103 338AA	1	J, T						Without [NHM]
		1	U						Without [NHM]
3									BOOSTER, Power Brake
	5072 521AA	1	J, T						
		1	U						
4									BRACKET, Brake Booster
	52128 353AB	1	J, T						[DBB]
	52128 730AA	1	J, T						[DG0]
	52128 356AB	1	U						[DBB]
	52128 731AA	1	U						[DG0]
5									NUT, Hex Flange With Serration
	6506 386AA	2							Brake Booster to Actuator Mounting Bracket
		1	U						Actuator Mounting Bracket to Dash Panel
-6									HOSE, Vacuum Supply
	52128 370AA	1	J, T						[EN0]-Engine To Booster
	52128 318AC	1	J, T						[EK0]-Engine To Booster
	52128 317AA	1	J, T						[ED0]-Engine To Booster
	52128 316AC	1	U						[EN0]-Engine To Booster
	52128 314AD	1	U						[EK0]-Engine To Booster
	52128 313AB	1	U						[ED0]-Engine To Booster

JEEP LIBERTY (KJ)

SERIES	LINE	BODY	ENGINE	TRANSMISSION
P = Limited	J = LHD (4WD)	74 = 4 Dr. (104.3 WB)	ED1, ED0 = 2.4L Power Tech	DDK = 5 Speed HDManual
H = Sport	U = RHD (4WD)		EKG, EK0 = 3.7L Power Tech	DDD = 5 Speed HD Manual
M = Renegade	T = LHD (2WD)		ENJ = 2.5L 4Cyl Turbo Diesel	DG4,DGQ = Multi-Speed Auto
			ENR = 2.8L 4Cyl Turbo Diesel	DG6 = 4 Speed Auto Transm
			EN0 = 4Cyl Turbo Diesel	DG0 = All Automatic Transm
				DBB = All Manual Transm

Master Cylinder,Brake
Figure 005-410

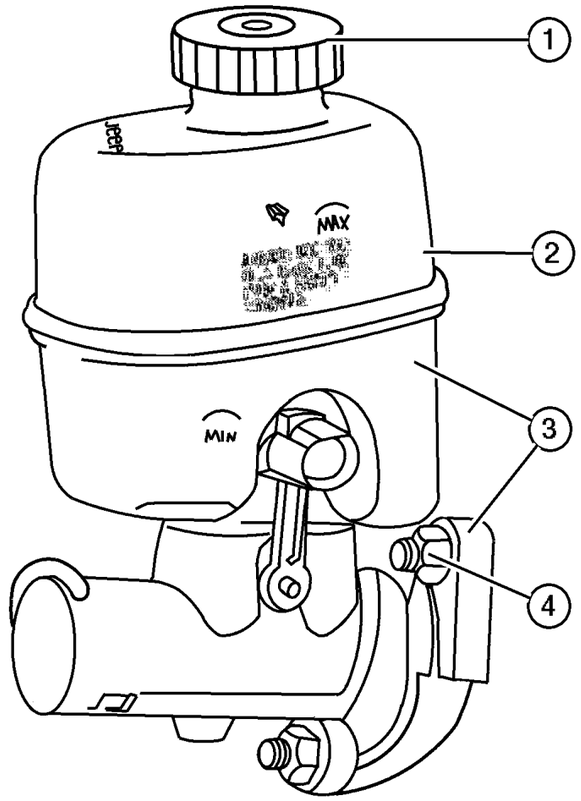

ITEM	PART NUMBER	QTY	LINE	SERIES	BODY	ENGINE	TRANS	TRIM	DESCRIPTION
1									CAP, Master Cylinder Reservoir
	5072 525AA	1	J, T						
		1	U						
2									RESERVOIR, Brake Master Cylinder, Order Item 3, (NOT SERVICED)
									(Not Serviced)
3									MASTER CYLINDER, Brake
	5072 526AB	1	J, T						With Reservoir
	5072 524AB	1	U						With Reservoir
4									NUT
	5072 523AA	2	J, T						Master Cylinder to Booster, Mounting
		2	U						Master Cylinder to Booster, Mounting

JEEP LIBERTY (KJ)

SERIES	LINE	BODY	ENGINE	TRANSMISSION
P = Limited	J = LHD (4WD)	74 = 4 Dr. (104.3 WB)	ED1, ED0 = 2.4L Power Tech	DDK = 5 Speed HDManual
H = Sport	U = RHD (4WD)		EKG, EK0 = 3.7L Power Tech	DDD = 5 Speed HD Manual
M = Renegade	T = LHD (2WD)		ENJ = 2.5L 4Cyl Turbo Diesel	DG4,DGQ = Multi-Speed Auto
			ENR = 2.8L 4Cyl Turbo Diesel	DG6 = 4 Speed Auto Transm
			EN0 = 4Cyl Turbo Diesel	DG0 = All Automatic Transm
				DBB = All Manual Transm

Brake Lines,Front,LHD
Figure 005-510

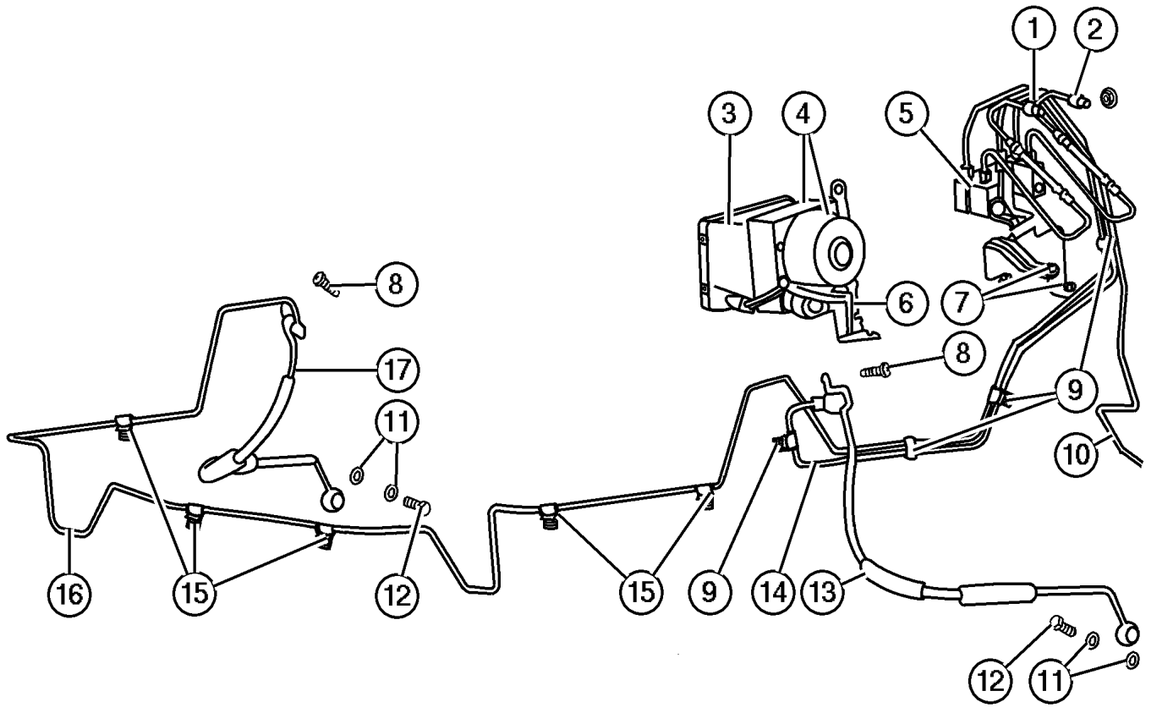

ITEM	PART NUMBER	QTY	LINE	SERIES	BODY	ENGINE	TRANS	TRIM	DESCRIPTION
1	52128 293AC	1	J, T						TUBE, Brake, Master Cylinder to Union Block/HCU, Secondary
2	52128 292AC	1	J, T						TUBE, Brake, Master Cylinder to Union Block/HCU, Primary
3	#5083 084AA	1							MODULE, Anti-lock Brakes, [BRY]
4	#5083 083AA	1							CONTROL UNIT, Anti-Lock Brake, [BRY]
5	#52128 676AA	1							BLOCK, Brake Line Union, [BRE]
6	5066 569AA	1							BRACKET, Hydraulic Control Unit, [BRY], Mounting
7	6100 048	2							NUT, Hex, M6x1.00
8									SCREW, Pan Head, M6x1x16, (NOT SERVICED) (Not Serviced)
9	5200 8940	3							CLIP, Brake Line, 2 Way, Mounting
10	52128 305AB	1							TUBE, Brake, Union Block/HCU to Rear Brake Hose
11	J323 7672	4							GASKET, Brake Hose To Caliper, Mounting
12	6035 832	2							BOLT, Banjo, to Caliper, Mounting
13	52128 311AA	1							HOSE, Brake, Left
14	52128 304AB	1							TUBE, Brake, Union Block/HCU to Left Brake Hose
15	52128 409AA	5							CLIP, Brake Line, 1 Way, Mounting
16	52128 286AB	1							TUBE, Brake, Union Block/HCU to Right Brake Hose
17	52128 312AA	1							HOSE, Brake, Right
-18	#6505 446AA	2							SCREW, Brake Hose to Wheel House, Mounting
-19	#52128 408AA	1							CLIP, Brake Line, 3 Way-Attaches Brake Tubes to Rail, Mounting

JEEP LIBERTY (KJ)

SERIES	LINE	BODY	ENGINE	TRANSMISSION
P = Limited	J = LHD (4WD)	74 = 4 Dr. (104.3 WB)	ED1, ED0 = 2.4L Power Tech	DDK = 5 Speed HDManual
H = Sport	U = RHD (4WD)		EKG, EK0 = 3.7L Power Tech	DDD = 5 Speed HD Manual
M = Renegade	T = LHD (2WD)		ENJ = 2.5L 4Cyl Turbo Diesel	DG4,DGQ = Multi-Speed Auto
			ENR = 2.8L 4Cyl Turbo Diesel	DG6 = 4 Speed Auto Transm
			EN0 = 4Cyl Turbo Diesel	DG0 = All Automatic Transm
				DBB = All Manual Transm

AR = Use as required - = Non illustrated part # = New this model year **June 3, 2003**

« RETURN TO GROUP INDEX

Brake Lines,Front,RHD
Figure 005-520

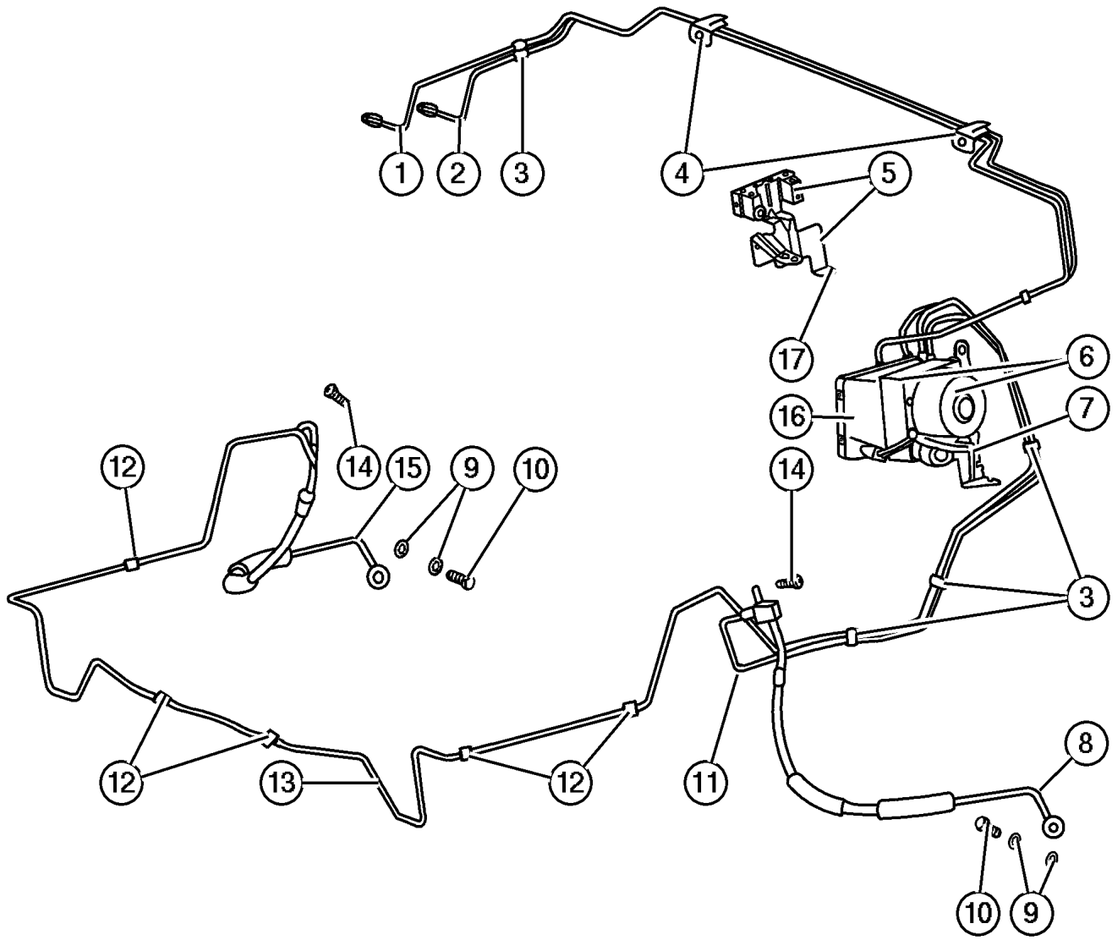

ITEM	PART NUMBER	QTY	LINE	SERIES	BODY	ENGINE	TRANS	TRIM	DESCRIPTION
1	52128 300AB	1	U						TUBE, Brake, Master Cylinder to Union Block/HCU, Secondary
2	52128 297AC	1	U						TUBE, Brake, Master Cylinder to Union Block/HCU, Primary
3	5200 8940	3							CLIP, Brake Line, 2 Way
4	52128 405AB	2	U						CLIP, Brake Line, 4 Way
5	#52128 676AA	1							BLOCK, Brake Line Union, [BRE]
6	#5083 083AA	1							CONTROL UNIT, Anti-Lock Brake, [BRY]
7	5066 569AA	1							BRACKET, Hydraulic Control Unit, [BRY], Mounting
8	52128 311AA	1							HOSE, Brake, Left
9	6035 886	4							GASKET, Brake Hose To Caliper, Mounting
10	6035 832	2							BOLT, Banjo, To Caliper, Mounting
11	52128 304AB	1							TUBE, Brake, Union Block/HCU to Brake Hose, Left
12	5200 8940	3							CLIP, Brake Line, 2 Way, Mounting
13	52128 286AB	1							TUBE, Brake, Union Block/HCU to Brake Hose, Right
14									SCREW, Pan Head, M6x1x16, (NOT SERVICED) (Not Serviced)
15	52128 312AA	1							HOSE, Brake, Right
16	#5083 084AA	1							MODULE, Anti-lock Brakes, [BRY]
17	6100 048	2							NUT, Hex, M6x1.00
-18	52128 305AB	1							TUBE, Brake, Union Block/HCU to Brake Hose, Rear

JEEP LIBERTY (KJ)

SERIES	LINE	BODY	ENGINE	TRANSMISSION
P = Limited	J = LHD (4WD)	74 = 4 Dr. (104.3 WB)	ED1, ED0 = 2.4L Power Tech	DDK = 5 Speed HDManual
H = Sport	U = RHD (4WD)		EKG, EK0 = 3.7L Power Tech	DDD = 5 Speed HD Manual
M = Renegade	T = LHD (2WD)		ENJ = 2.5L 4Cyl Turbo Diesel	DG4,DGQ = Multi-Speed Auto
			ENR = 2.8L 4Cyl Turbo Diesel	DG6 = 4 Speed Auto Transm
			EN0 = 4Cyl Turbo Diesel	DG0 = All Automatic Transm
				DBB = All Manual Transm

AR = Use as required - = Non illustrated part # = New this model year **June 3, 2003**

« RETURN TO GROUP INDEX

Brake Lines,Rear
Figure 005-530

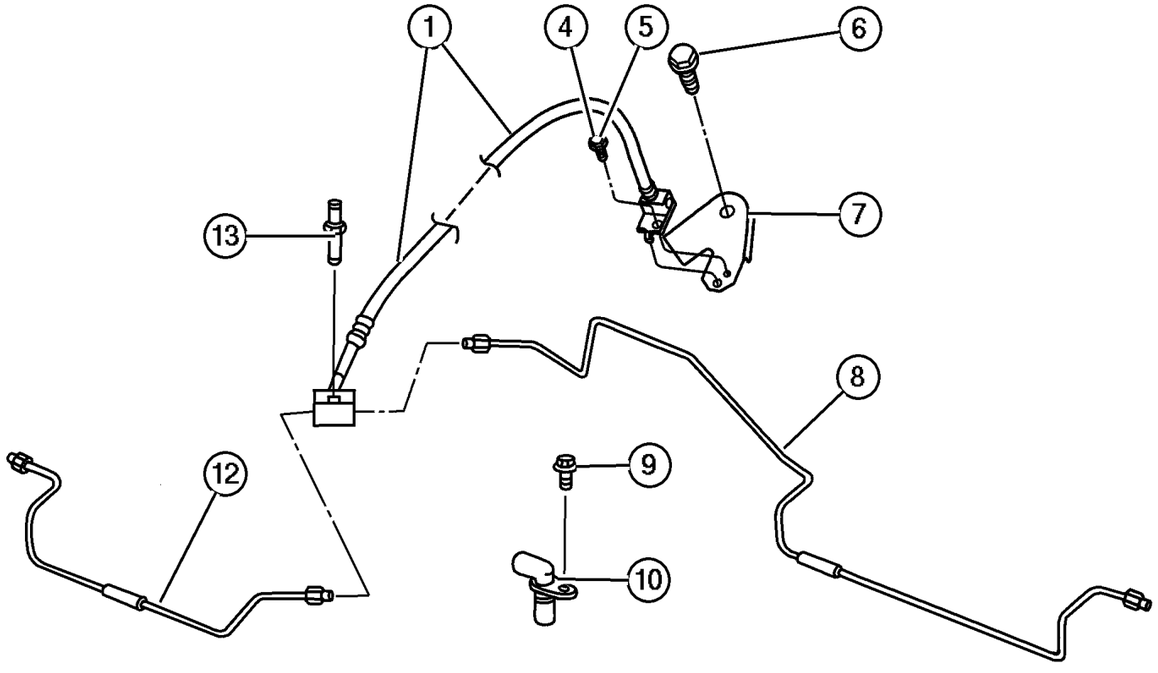

ITEM	PART NUMBER	QTY	LINE	SERIES	BODY	ENGINE	TRANS	TRIM	DESCRIPTION
Note: Sales Codes;									
[EN0]=Engines - All 4/5 Cylinder Turbo Diesel									
1	52128 310AA	1							HOSE, Brake, With Union and Tee
-2	6035 832	2							BOLT, Banjo
-3	J323 7672	4							GASKET, Brake Hose To Caliper
4	6503 900	1							SCREW AND WASHER, Hex Head, M12x1.75x40, [EN0] Brake Hose Bracker to Left Rail, Mounting
5	#6503 343	1							SCREW, Brake Hose Bracker to Left Rail
6									SCREW, Hex Flange Head, M6x1.00x15.00, Hose to Frame Mounting, (NOT SERVICED) (Not Serviced)
7	52128 480AA	1							BRACKET, Brake Hose, [EN0]
8	#52128 514AB	1							HOSE, Brake, Right
9	6501 979	1							SCREW AND WASHER, Hex Head, M6x1x17, Wheel Speed Sensor, Mounting
10	56041 393AA	1							SENSOR, Wheel Speed
-11	5086 373AA	1							O RING, Sensor, Mounting
12	#52128 515AA	1							HOSE, Brake, Left
13	4137 696AB	1							BOLT, Axle Vent

JEEP LIBERTY (KJ)

SERIES	LINE	BODY	ENGINE	TRANSMISSION
P = Limited	J = LHD (4WD)	74 = 4 Dr. (104.3 WB)	ED1, ED0 = 2.4L Power Tech	DDK = 5 Speed HDManual
H = Sport	U = RHD (4WD)		EKG, EK0 = 3.7L Power Tech	DDD = 5 Speed HD Manual
M = Renegade	T = LHD (2WD)		ENJ = 2.5L 4Cyl Turbo Diesel	DG4,DGQ = Multi-Speed Auto
			ENR = 2.8L 4Cyl Turbo Diesel	DG6 = 4 Speed Auto Transm
			EN0 = 4Cyl Turbo Diesel	DG0 = All Automatic Transm
				DBB = All Manual Transm

AR = Use as required - = Non illustrated part # = New this model year

June 3, 2003

« RETURN TO GROUP INDEX

Pedals,Brake and Clutch
Figure 005-610

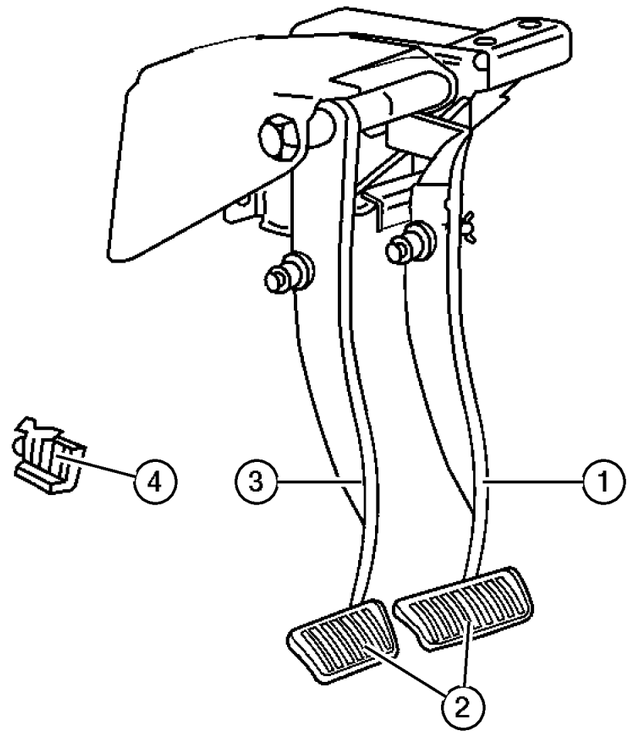

ITEM	PART NUMBER	QTY	LINE	SERIES	BODY	ENGINE	TRANS	TRIM	DESCRIPTION
Note:Sales Codes;									
DBB=Transmissions - All Manual									
DG0=Transmissions - All Automatic									
1									PEDAL, Brake
	#52128 347AD	1	J, T						[DBB]
	#52128 346AD	1	J, T						[DG0]
	#52128 348AC	1	U						[DBB]
	#52128 345AC	1	U						[DG0]
2									PAD, Pedal
	5200 9562	1	J, T						[DBB]
	4779 027	1	J, T						[DG0]
	5200 9562	1	U						[DBB]
	4779 027	1	U						[DG0]
3									PEDAL, Clutch
	#52128 396AC	1	J, T						[DBB]
	52128 397AC	1	U						[DBB]
4	6035 334	1							CLIP, Brake Push Rod
-5									TAPE, Anti-Squeak
	5019 054AA	1	J, T						
		1	U						

JEEP LIBERTY (KJ)

SERIES	LINE	BODY	ENGINE	TRANSMISSION
P = Limited	J = LHD (4WD)	74 = 4 Dr. (104.3 WB)	ED1, ED0 = 2.4L Power Tech	DDK = 5 Speed HDManual
H = Sport	U = RHD (4WD)		EKG, EK0 = 3.7L Power Tech	DDD = 5 Speed HD Manual
M = Renegade	T = LHD (2WD)		ENJ = 2.5L 4Cyl Turbo Diesel	DG4,DGQ = Multi-Speed Auto
			ENR = 2.8L 4Cyl Turbo Diesel	DG6 = 4 Speed Auto Transm
			EN0 = 4Cyl Turbo Diesel	DG0 = All Automatic Transm
				DBB = All Manual Transm

Group – 006
Clutch

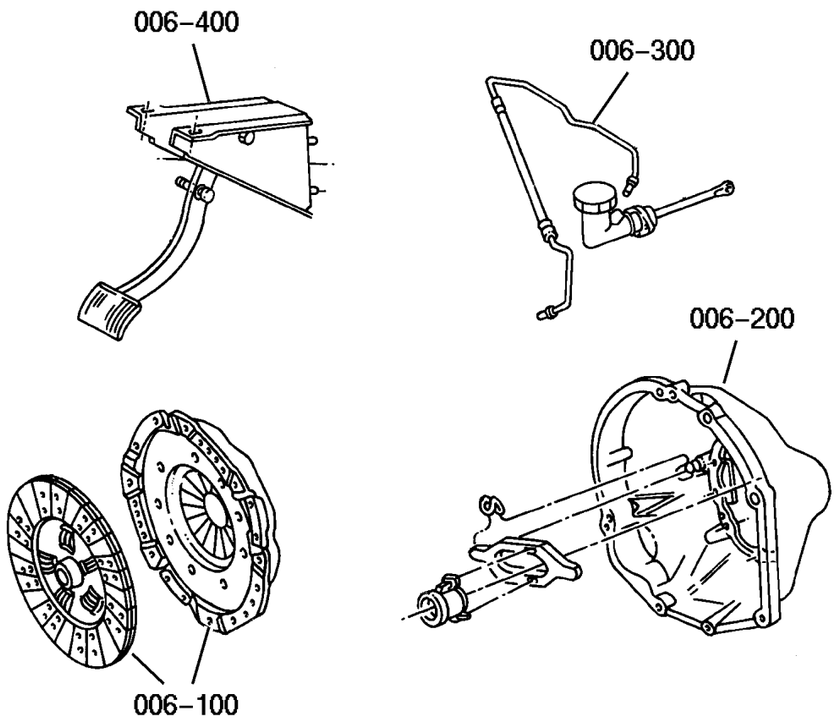

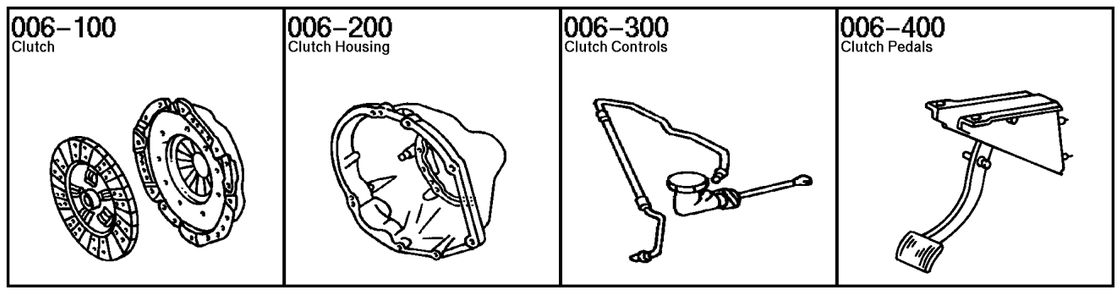

GROUP 6 - Clutch

Illustration Title	Group-Fig. No.
Clutch	
Clutch	Fig. 006-110
Clutch Housing	
Clutch Housing	Fig. 006-210
Clutch Controls	
Clutch Control	Fig. 006-320
Clutch Pedals	
Pedal Clutch	Fig. 006-420

Clutch
Figure 006-110

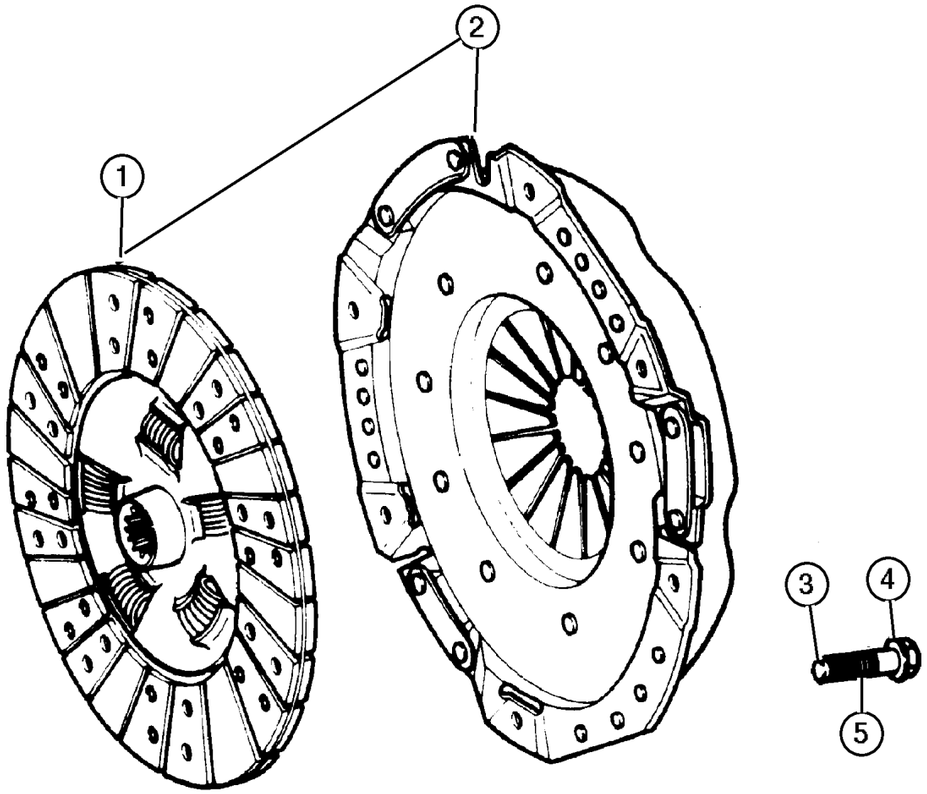

ITEM	PART NUMBER	QTY	LINE	SERIES	BODY	ENGINE	TRANS	TRIM	DESCRIPTION
NOTE; Sales Codes									
[DBB]= All Manual Transmissions									
[ED0] = All 2.2,2.5,2.4L 4 Cylinder Gas Engines									
[EKG]= Magnum 3.7L V6									
[EN0]= All 2.5L 4 Cylinder Turbo Diesel Engines									
1									DISC, Clutch
	52104 581AB	1				ED0	DBB		
	52104 303AA	1				EN0	DBB		
	52104 315AB	1				EKG	DBB		
2									CLUTCH PACKAGE
	5066 191AA	1				EN0	DBB		
	5072 990AB	1				ED0	DBB		
	5066 375AB	1				EKG	DBB		
3	6501 474	6				ED0	DBB		BOLT, Hex Head, M8x1.25x16
4	6035 626	6				EKG	DBB		BOLT, Hex Head, .375-16x.84
5	5072 664AA	8				EN0	DBB		BOLT

JEEP LIBERTY (KJ)

SERIES	LINE	BODY	ENGINE	TRANSMISSION
P = Limited	J = LHD (4WD)	74 = 4 Dr. (104.3 WB)	ED1, ED0 = 2.4L Power Tech	DDK = 5 Speed HDManual
H = Sport	U = RHD (4WD)		EKG, EK0 = 3.7L Power Tech	DDD = 5 Speed HD Manual
M = Renegade	T = LHD (2WD)		ENJ = 2.5L 4Cyl Turbo Diesel	DG4,DGQ = Multi-Speed Auto
			ENR = 2.8L 4Cyl Turbo Diesel	DG6 = 4 Speed Auto Transm
			EN0 = 4Cyl Turbo Diesel	DG0 = All Automatic Transm
				DBB = All Manual Transm

AR = Use as required - = Non illustrated part # = New this model year **June 3, 2003**

« RETURN TO GROUP INDEX

Clutch Housing
Figure 006-210

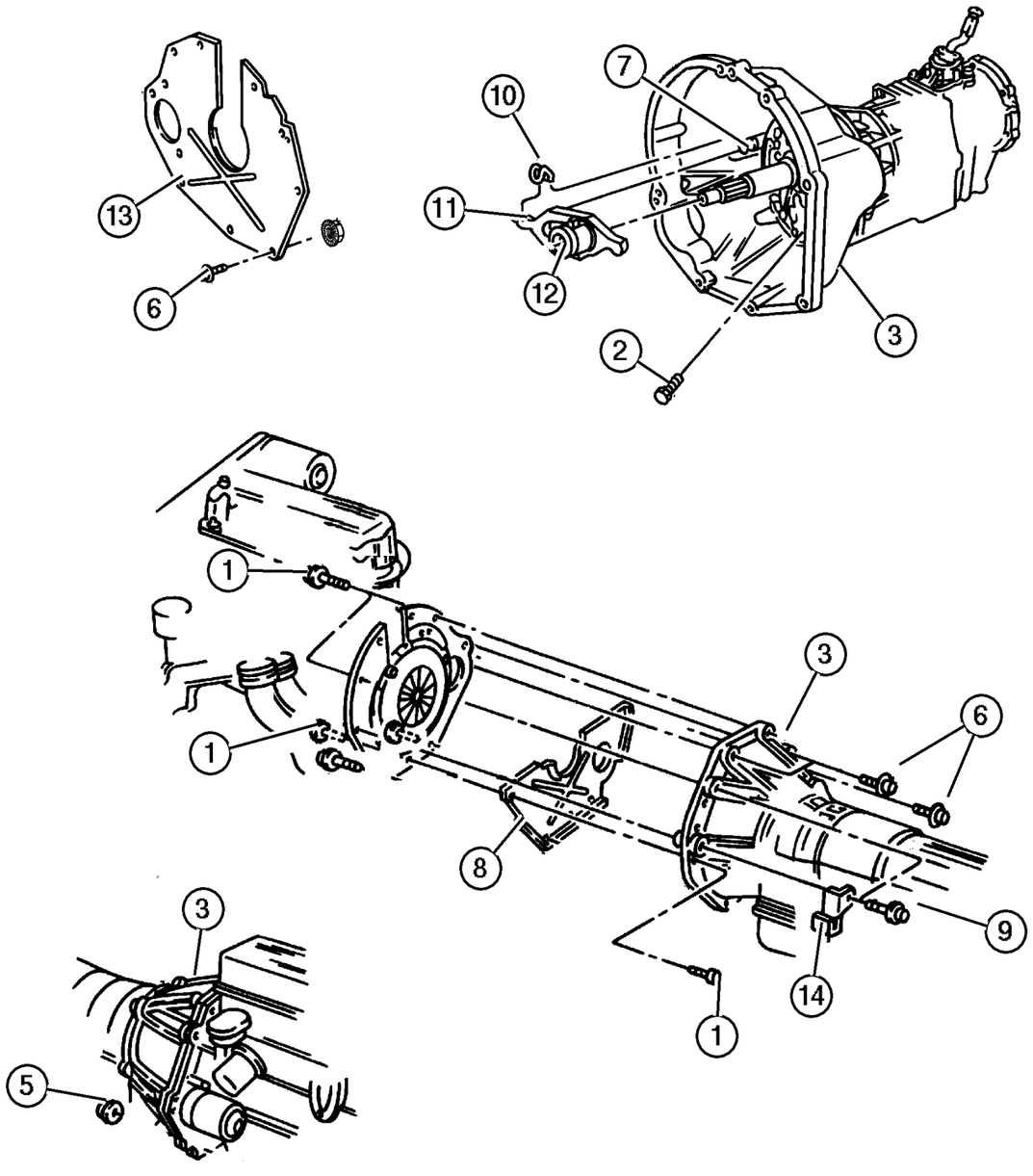

ITEM	PART NUMBER	QTY	LINE	SERIES	BODY	ENGINE	TRANS	TRIM	DESCRIPTION
NOTE; Sales Codes									
[DBB] = All Manual Transmissions									
[ED0]= All 2.2,2.5,2.4L 4 Cylinder Gas Engines									
[EKG] = Magnum 3.7L V6									
[EK0]= All 3.7L 6 Cylinder Gas Egines									
[EN0]= All 2.5L 4 Cylinder Turbo Diesel Engines									
1									SCREW, Hex Head, .375-16x1.5
	6022 266	4				EK0	DBB		
		5				EN0	DBB		
2	6503 299	9					DBB		BOLT, Hex Head
3									HOUSING, Clutch
	52104 292AA	1				ED0	DBB		
	52104 294AB	1				EKG, EN0	DBB		
-4	0154 877AA	1				EN0	DBB		SCREW AND WASHER, Hex Head
5	6036 385AA	2				EK0	DBB		SCREW AND WASHER, Hex Head, .437-14x2.00
6	6501 742	4				ED0	DBB		SCREW, Hex Head, M12x1.75x50
7									PIVOT, Clutch Release
	5208 7542	1				ED0	DBB		
		1				EKG, EN0	DBB		
8									COVER, Engine
	53021 282AA	1				EK0			
	52104 339AC	1				ED0	DBB		
9									SCREW, Hex Head, .375-16x1.5
	6022 266	4				EK0	DBB		
		5				EN0	DBB		
10	4338 855	1					DBB		SPRING, Clutch Release
11	5210 7555	1					DBB		FORK, Clutch Release
12	5300 8342	1					DBB		BEARING, Clutch Release
13									SPACER
	52104 336AA	1				EKG	DBB		
	52104 293AB	1				ED0	DBB		
14	52104 364AA	1					DBB		BRACKET, Clutch Tube

JEEP LIBERTY (KJ)

SERIES	LINE	BODY	ENGINE	TRANSMISSION
P = Limited	J = LHD (4WD)	74 = 4 Dr. (104.3 WB)	ED1, ED0 = 2.4L Power Tech	DDK = 5 Speed HDManual
H = Sport	U = RHD (4WD)		EKG, EK0 = 3.7L Power Tech	DDD = 5 Speed HD Manual
M = Renegade	T = LHD (2WD)		ENJ = 2.5L 4Cyl Turbo Diesel	DG4,DGQ = Multi-Speed Auto
			ENR = 2.8L 4Cyl Turbo Diesel	DG6 = 4 Speed Auto Transm
			EN0 = 4Cyl Turbo Diesel	DG0 = All Automatic Transm
				DBB = All Manual Transm

Clutch Control
Figure 006-320

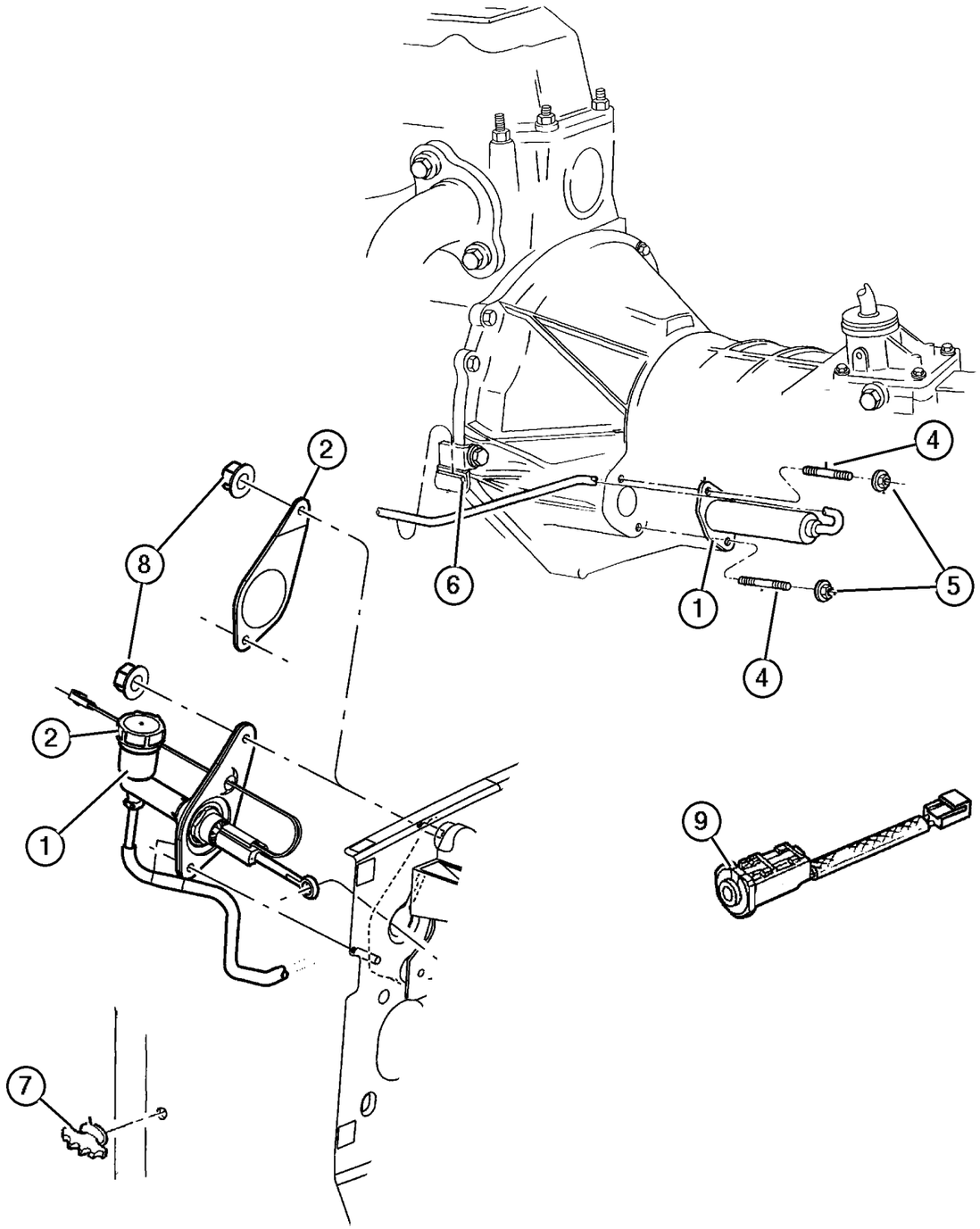

ITEM	PART NUMBER	QTY	LINE	SERIES	BODY	ENGINE	TRANS	TRIM	DESCRIPTION
NOTE; Sales Codes									
[DBB] = All Manual Transmissions									
[DG0] = All Automatic Transmissions									
[ED0] = All 2.2,2.5,2.4,L 4 Cylinder Gas Engines									
[EKG] = Magnum 3.7L V6 Engine									
[EN0] = All 4/5 Turbo Diesel Engines									
1									HYDRAULIC CONTROL, Clutch Actuator
	52104 298AB	1	U			ED0, EKG	DBB		
	52104 299AD	1	U			EN0	DBB		
	52109 746AA	1	J, T			ED0, EK0	DBB		
		1	J, T			EN0	DBB		
	#52109 746AB	1	J, T			ED0, EK0	DBB		Use 1/09/03 and after
		1	J, T			EN0	DBB		Use 1/09/03 and after
2									CAP, Clutch Reservoir
	4883 544AA	1	U			ED0, EKG	DBB		
		1	U			EN0	DBB		
		1	J, T			ED0, EK0	DBB		
		1	J, T			EN0	DBB		
-3									DIAPHRAGM, Clutch Reservoir
	5015 607AA	1	U			ED0, EKG	DBB		
		1	U			EN0	DBB		
		1	J, T			ED0, EK0	DBB		
		1	J, T			EN0	DBB		
4	6036 379AA	2					DBB		STUD, .312-18x2.00
5	0152 472	2	J, U				DBB		NUT, Hex Flange Lock, .312-18
6	52104 364AA	1					DBB		BRACKET, Clutch Tube
7									CLIP, Five Way, (NOT REQUIRED)
8	6500 363	2				ED0			NUT, Hex Flange Lock, M8x1.25
9									SWITCH, Clutch Starter Interlock
	56010 330AA	1	U			ED0, EKG	DBB		
		1	J, T			ED0, EK0	DBB		

JEEP LIBERTY (KJ)

SERIES	LINE	BODY	ENGINE	TRANSMISSION
P = Limited	J = LHD (4WD)	74 = 4 Dr. (104.3 WB)	ED1, ED0 = 2.4L Power Tech	DDK = 5 Speed HDManual
H = Sport	U = RHD (4WD)		EKG, EK0 = 3.7L Power Tech	DDD = 5 Speed HD Manual
M = Renegade	T = LHD (2WD)		ENJ = 2.5L 4Cyl Turbo Diesel	DG4,DGQ = Multi-Speed Auto
			ENR = 2.8L 4Cyl Turbo Diesel	DG6 = 4 Speed Auto Transm
			EN0 = 4Cyl Turbo Diesel	DG0 = All Automatic Transm
				DBB = All Manual Transm

AR = Use as required - = Non illustrated part # = New this model year

June 3, 2003

« RETURN TO GROUP INDEX »

Clutch Control
Figure 006-320

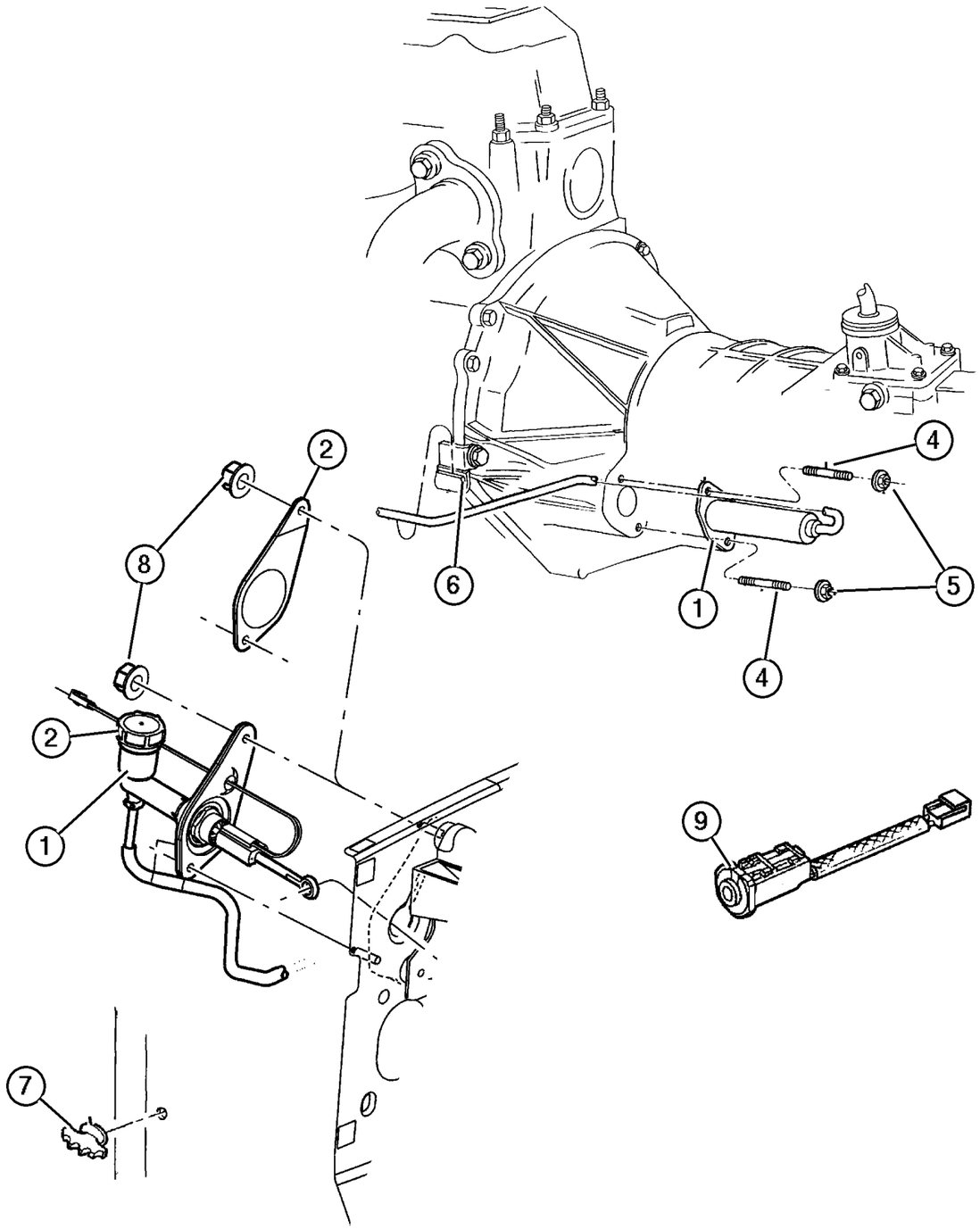

ITEM	PART NUMBER	QTY	LINE	SERIES	BODY	ENGINE	TRANS	TRIM	DESCRIPTION
		1	J, T			EN0	DBB		
		1	U			EN0	DBB		

JEEP LIBERTY (KJ)

SERIES	LINE	BODY	ENGINE	TRANSMISSION
P = Limited	J = LHD (4WD)	74 = 4 Dr. (104.3 WB)	ED1, ED0 = 2.4L Power Tech	DDK = 5 Speed HDManual
H = Sport	U = RHD (4WD)		EKG, EK0 = 3.7L Power Tech	DDD = 5 Speed HD Manual
M = Renegade	T = LHD (2WD)		ENJ = 2.5L 4Cyl Turbo Diesel	DG4,DGQ = Multi-Speed Auto
			ENR = 2.8L 4Cyl Turbo Diesel	DG6 = 4 Speed Auto Transm
			EN0 = 4Cyl Turbo Diesel	DG0 = All Automatic Transm
				DBB = All Manual Transm

Pedal Clutch
Figure 006-420

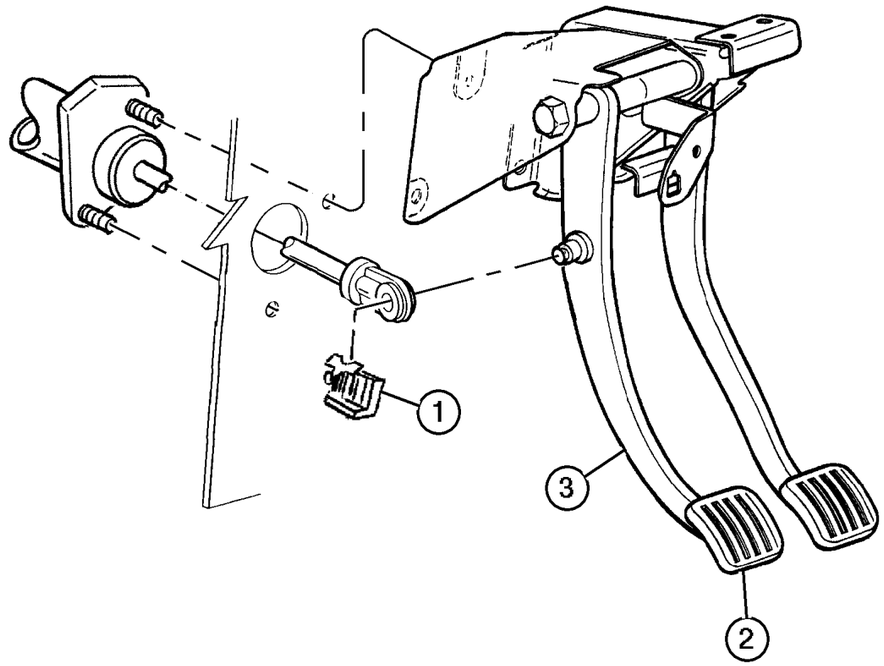

ITEM	PART NUMBER	QTY	LINE	SERIES	BODY	ENGINE	TRANS	TRIM	DESCRIPTION
Notes; Sales Codes									
[DBB] = All Manual Transmissions									
1									BUSHING, Hydraulic Clutch Actuator
	4643 448	1	U			ED0, EKG	DBB		
		1	U			EN0	DBB		
		1	J, T			ED0, EK0	DBB		
		1	J, T			EN0	DBB		
2									PAD, Pedal
	5200 9562	1	J, T				DBB		
		1	U				DBB		
3									PEDAL, Clutch
	#52128 396AC	1	J, T				DBB		
	52128 397AC	1	U				DBB		

JEEP LIBERTY (KJ)

SERIES	LINE	BODY	ENGINE	TRANSMISSION
P = Limited	J = LHD (4WD)	74 = 4 Dr. (104.3 WB)	ED1, ED0 = 2.4L Power Tech	DDK = 5 Speed HDManual
H = Sport	U = RHD (4WD)		EKG, EK0 = 3.7L Power Tech	DDD = 5 Speed HD Manual
M = Renegade	T = LHD (2WD)		ENJ = 2.5L 4Cyl Turbo Diesel	DG4,DGQ = Multi-Speed Auto
			ENR = 2.8L 4Cyl Turbo Diesel	DG6 = 4 Speed Auto Transm
			EN0 = 4Cyl Turbo Diesel	DG0 = All Automatic Transm
				DBB = All Manual Transm

Group – 007

Cooling

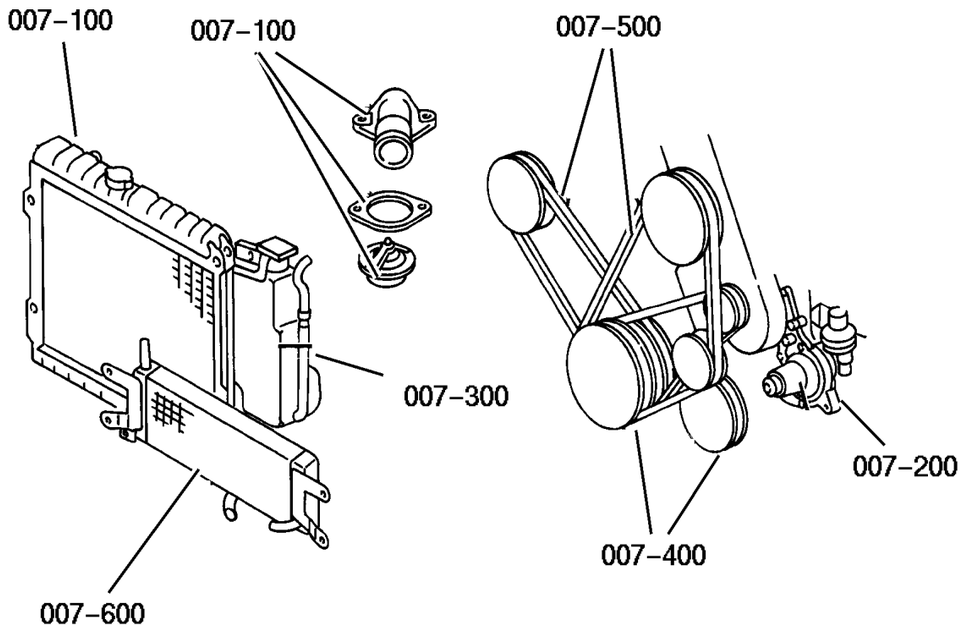

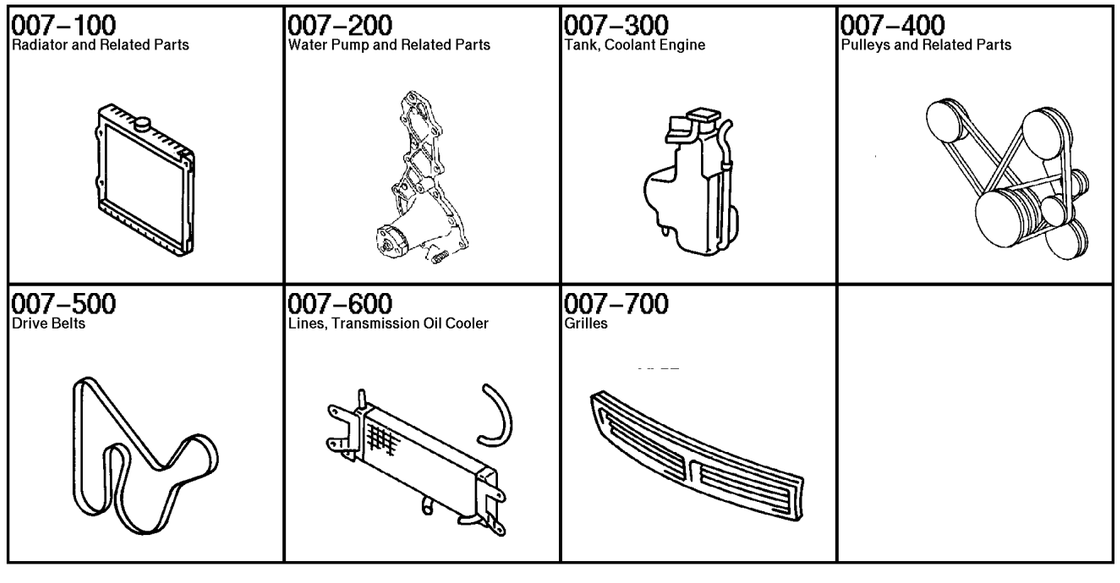

GROUP 7 - Cooling

Illustration Title	Group-Fig. No.
Radiator and Related Parts	
Radiator and Related Parts, 2.4L Engine	Fig. 007-110
Radiator and Related Parts, 3.7L Engine	Fig. 007-120
Radiator and Related Parts, 2.5,2.8L Diesel Engine	Fig. 007-130
Water Pump and Related Parts	
Water Pump and Related Parts, 2.4L Engine	Fig. 007-210
Water Pump and Related Parts, 3.7L Engine	Fig. 007-220
Water Pump and Related Parts, 2.5,2.8L Diesel Engine	Fig. 007-230
Tank, Coolant Engine	
Coolant Tank, 2.4L Engine	Fig. 007-305
Coolant Tank, 3.7L Engine	Fig. 007-310
Coolant Degasser Tank, 2.5,2.8L Diesel Engine	Fig. 007-320
Pulleys and Related Parts	
Drive Pulleys, 2.4L Engine	Fig. 007-410
Drive Pulleys, 3.7L Engine	Fig. 007-420
Drive Pulleys, 2.5,2.8L Diesel Engine	Fig. 007-430
Drive Belts	
Drive Belts, 2.4L Engine	Fig. 007-510
Drive Belts, 3.7L Engine	Fig. 007-520
Drive Belts, 2.5,2.8L Diesel Engine	Fig. 007-530
Lines, Transmission Oil Cooler	
Oil Cooler Lines	Fig. 007-610
Grilles	
Grille and Related Parts	Fig. 007-710

Radiator and Related Parts, 2.4L Engine
Figure 007-110

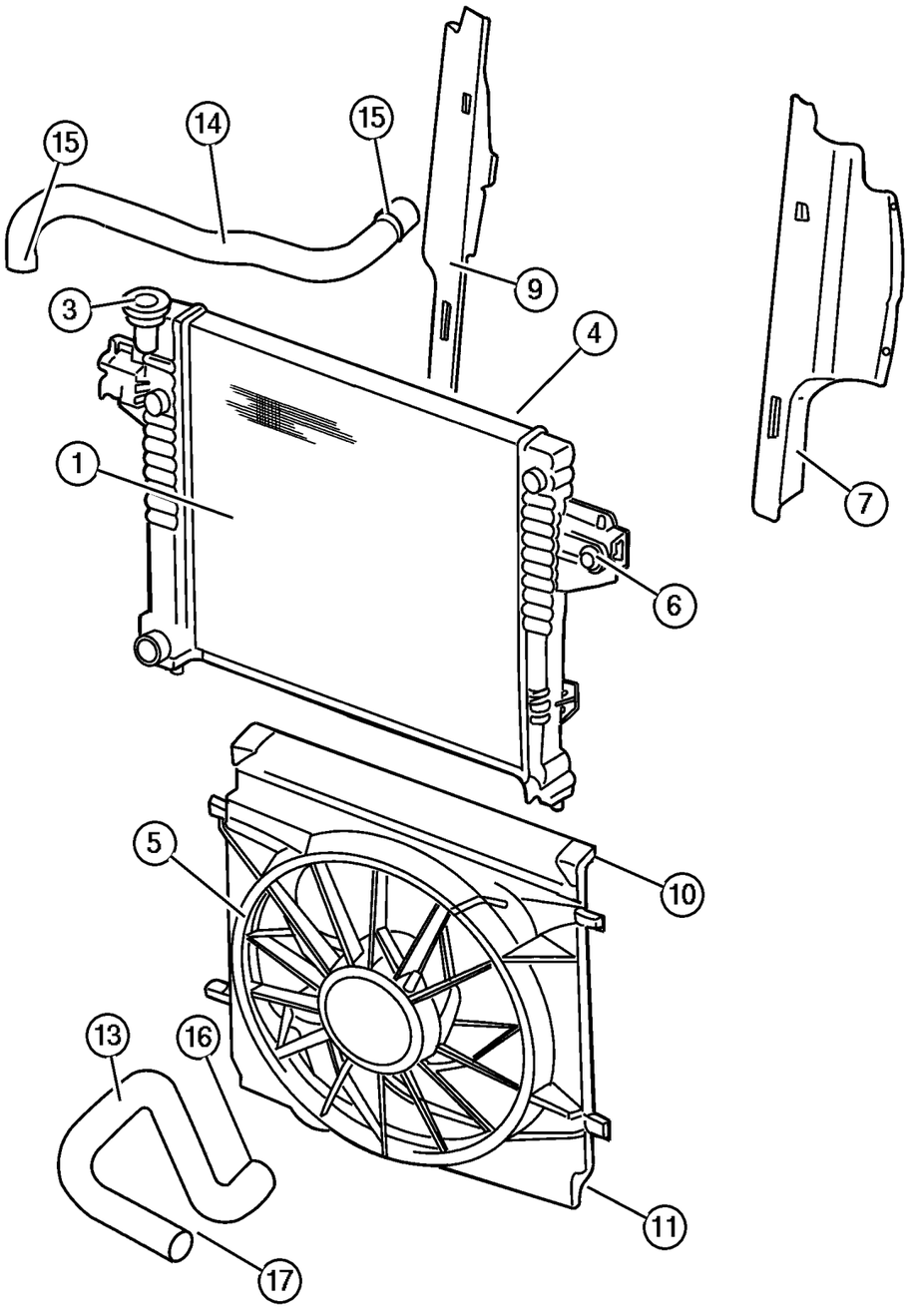

ITEM	PART NUMBER	QTY	LINE	SERIES	BODY	ENGINE	TRANS	TRIM	DESCRIPTION
Note; Sales Codes									
[ED0]= All 2.2L, 2.5L, 2.4L, 4 Cylinder Gas Engines									
[DBB]= Manual Trans.									
1									RADIATOR, Engine Cooling
	52079 731AC	1				ED0	DBB		Without Air Conditioing
	52080 123AC	1				ED0	DBB		With Air Conditioing
-2	55176 756AD	1							SUPPORT, Radiator
3	52079 799AA	1				ED0	DBB		CAP, Radiator
4									ISOLATOR, Radiator
	52079 651AA	2				ED0	DBB		Upper
	52079 666AA	2				ED0	DBB		Lower
5	55037 659AA	1				ED0	DBB		FAN MODULE, Radiator Cooling
6									BOLT AND CONED WASHER, Hex Head, M6x14x12.5, (NOT SERVICED) (Not Serviced)
7	52079 766AB	1				ED0	DBB		SEAL, Radiator Side Air
-8	6036 155AA	3				ED0	DBB		PIN, Push
9	52079 767AC	1				ED0	DBB		SEAL, Radiator Side Air
10	52079 760AA	1				ED0	DBB		SEAL, Radiator, Upper
11	52079 768AA	1				ED0	DBB		SEAL, Radiator Lower
-12	J400 4262	4				ED0	DBB		PIN, Push, .15x.41
13	52079 713AB	1				ED0			HOSE, Radiator Outlet
14	52079 706AA	1				ED0			HOSE, Radiator Inlet
15	6033 135	1				ED0			CLAMP
16	3200 2983	1				ED0			CLAMP, Hose, 32mm Black
17	5200 5580	1				ED0			CLAMP, Hose to Radiator
-18	53010 552AA	1				ED0			THERMOSTAT
-19	6503 334	1				ED0			BOLT, Hex Flange Head, M8x1.25x28, Thermostat Housing attaching
-20	53010 554AA	1				ED0			GASKET, Thermostat
-21	53010 553AA	1				ED0			HOUSING, Thermostat
-22	4644 269	1				ED0	DBB		DRAINCOCK, Radiator
-23	4781 489AA	1				ED0			CONNECTOR, Water Outlet

JEEP LIBERTY (KJ)

SERIES	LINE	BODY	ENGINE	TRANSMISSION
P = Limited	J = LHD (4WD)	74 = 4 Dr. (104.3 WB)	ED1, ED0 = 2.4L Power Tech	DDK = 5 Speed HDManual
H = Sport	U = RHD (4WD)		EKG, EK0 = 3.7L Power Tech	DDD = 5 Speed HD Manual
M = Renegade	T = LHD (2WD)		ENJ = 2.5L 4Cyl Turbo Diesel	DG4,DGQ = Multi-Speed Auto
			ENR = 2.8L 4Cyl Turbo Diesel	DG6 = 4 Speed Auto Transm
			EN0 = 4Cyl Turbo Diesel	DG0 = All Automatic Transm
				DBB = All Manual Transm

AR = Use as required - = Non illustrated part # = New this model year **June 3, 2003**

« RETURN TO GROUP INDEX

Radiator and Related Parts, 3.7L Engine
Figure 007-120

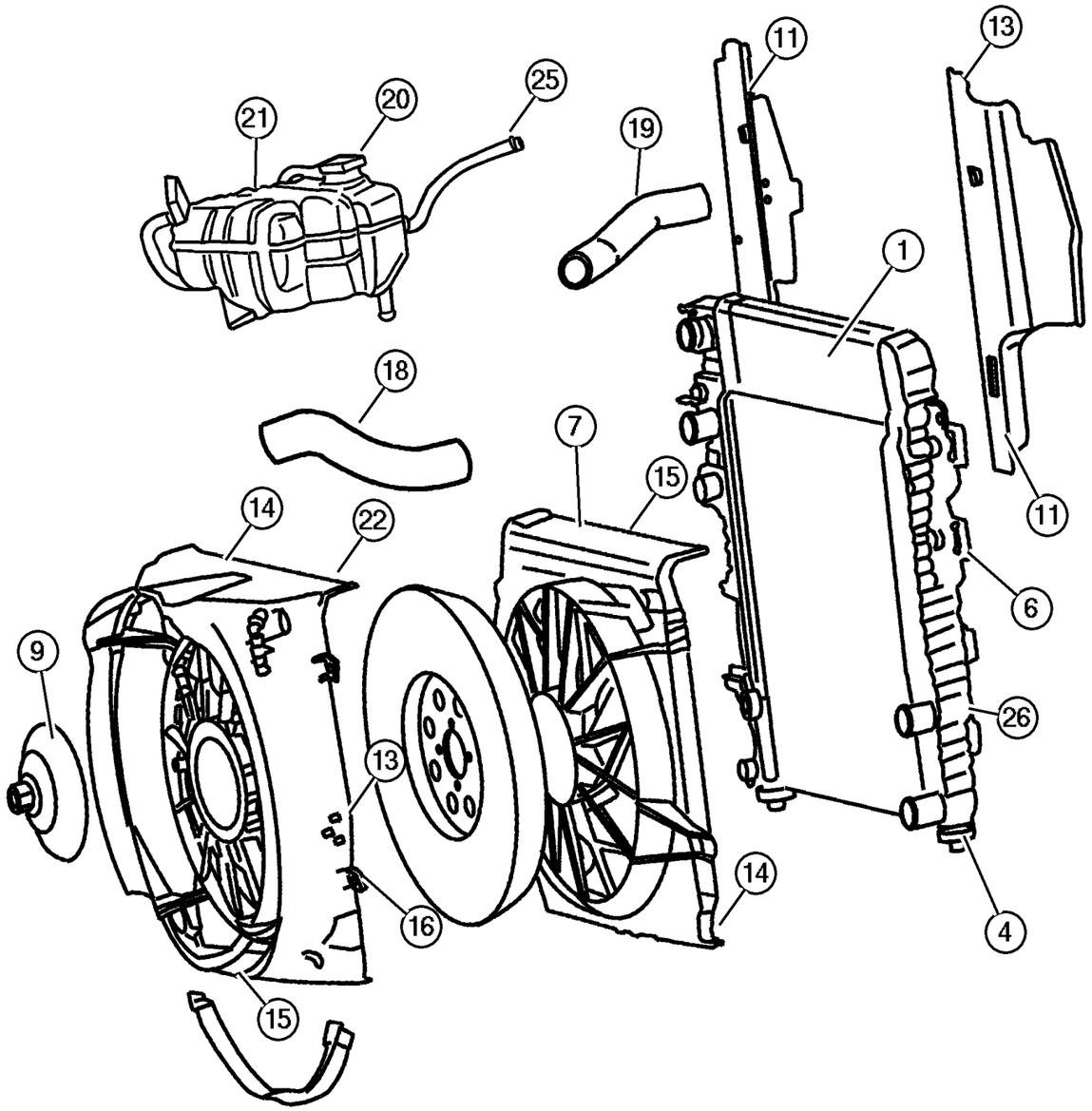

ITEM	PART NUMBER	QTY	LINE	SERIES	BODY	ENGINE	TRANS	TRIM	DESCRIPTION
Note; Sales Codes									
[EK0]= All 3.7L, 6 Cylinder Gas Engines									
[DBB]= Manual Trans									
[DG0]= Auto Trans									
1									RADIATOR, Engine Cooling
	52079 728AB	1				EK0	DG4		[HC0]
	#52079 729AC	1				EK0	DG6		[HC0]
	#52080 120AC	1				EK0	DG6		[HAA]
	52080 118AB	1				EK0	DG4		[HAA]
	#52079 729AC	1				EK0	DBB		[HC0], Without [NMC]
	#52080 120AC	1				EK0	DBB		[HAA], With [NMC]
-2	55176 756AD	1							SUPPORT, Radiator, Lower
-3	55176 763AC	1							CROSSMEMBER, Radiator, Upper
4									ISOLATOR, Radiator
	52079 651AA	2				EK0	DG0		
		2				EK0	DBB		
-5	52079 790AB	2				EK0	DG0		TUBE, Oil Cooler
6									CONDENSER, Air Conditioning
	55037 465AA	1				EK0	DG0		
	#55037 465AB	1				EN0	DBB		
7									FAN MODULE, Radiator Cooling
	52079 786AB	1				EK0	DG0		
		1				EK0	DBB		
-8									FAN, Cooling, Electric
	52079 528AB	1				EK0	DG0		With Max Cooling [NMC]
		1				EK0	DBB		With Max Cooling [NMC]
9	52079 718AC	1				EK0			DRIVE, Fan, Viscous
-10	52079 654AC	1				EK0			FAN, Cooling, Mechanical
11									SEAL, Radiator Side Air
	52079 766AB	1				EK0	DG0		With [NMC]
	52079 766AE	1				EK0	DG4		Witout [NMC]
	52079 766AB	1				EK0	DBB		
-12									PIN, Push
	6036 155AA	3				EK0	DG0		
		3				EK0	DBB		
13									SEAL, Radiator Side Air
	52079 767AC	1				EK0	DG0		
		1				EK0	DBB		
14									SEAL, Radiator
	52079 760AA	1				EK0	DG0		
		1				EK0	DBB		
15									SEAL, Radiator Lower

JEEP LIBERTY (KJ)

SERIES	LINE	BODY	ENGINE	TRANSMISSION
P = Limited	J = LHD (4WD)	74 = 4 Dr. (104.3 WB)	ED1, ED0 = 2.4L Power Tech	DDK = 5 Speed HDManual
H = Sport	U = RHD (4WD)		EKG, EK0 = 3.7L Power Tech	DDD = 5 Speed HD Manual
M = Renegade	T = LHD (2WD)		ENJ = 2.5L 4Cyl Turbo Diesel	DG4,DGQ = Multi-Speed Auto
			ENR = 2.8L 4Cyl Turbo Diesel	DG6 = 4 Speed Auto Transm
			EN0 = 4Cyl Turbo Diesel	DG0 = All Automatic Transm
				DBB = All Manual Transm

Radiator and Related Parts, 3.7L Engine
Figure 007-120

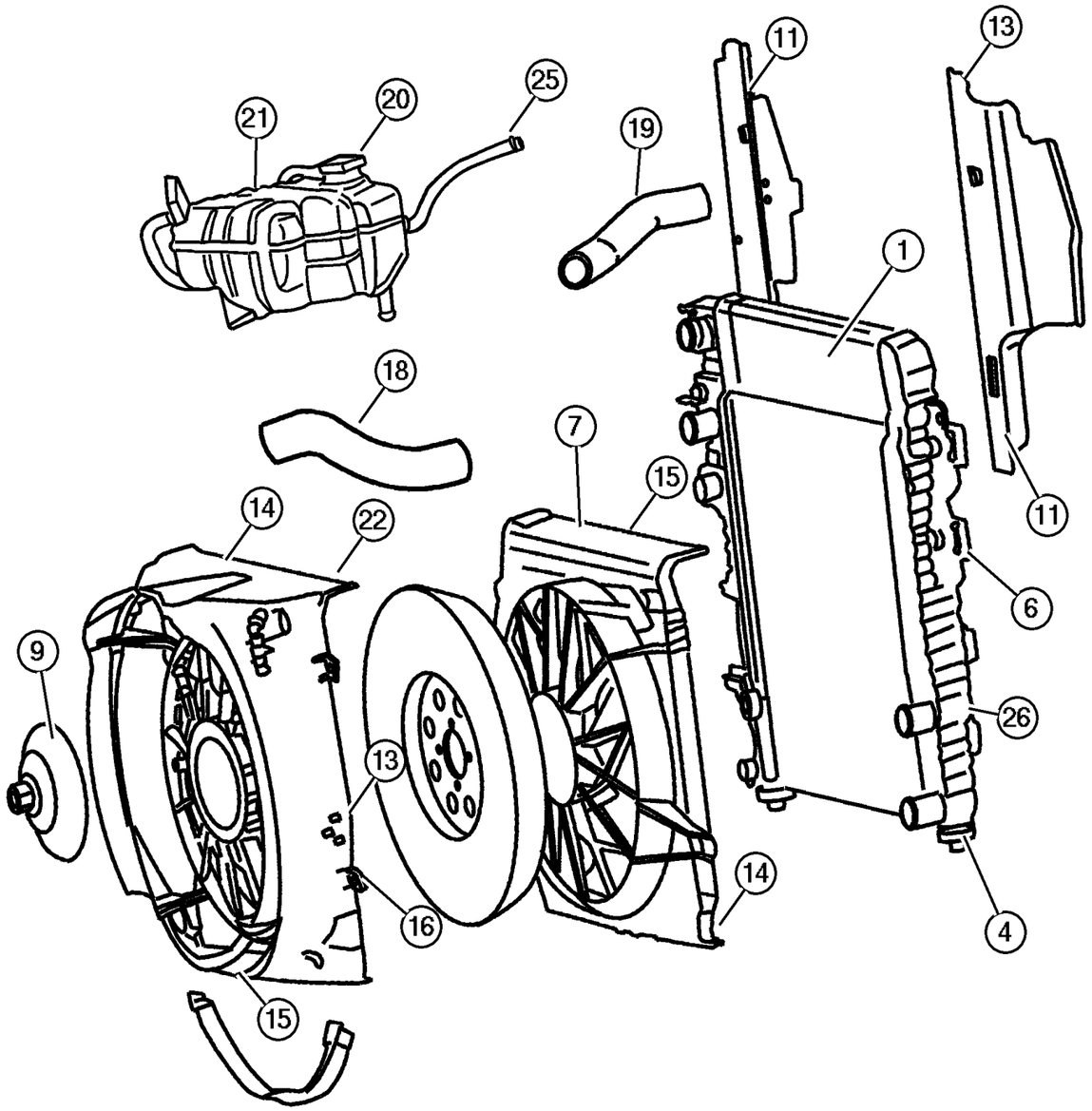

ITEM	PART NUMBER	QTY	LINE	SERIES	BODY	ENGINE	TRANS	TRIM	DESCRIPTION
	52079 768AA	1				EK0	DG0		
		1				EK0	DBB		
16	52080 119AB	1				EK0	DG0		CLIP, Cooler Line
-17									PIN, Push, .15x.41
	J400 4262	4				EK0	DG0		
		4				EK0	DBB		
18	52079 703AA	1				EK0			HOSE, Radiator Inlet
19	52079 712AB	1				EK0			HOSE, Radiator Outlet
20	4596 198	1				EK0			CAP, Radiator
21	52079 848AA	1				EK0			BOTTLE, Coolant Recovery
22									SHROUD, Fan
	52080 127AA	1				EK0	DG0		
		1				EK0	DBB		
-23									DRAINCOCK, Radiator
	4644 269	1				EK0	DG0		
		1				EK0	DBB		
-24	53020 887AB	1				EK0			HOUSING, Thermostat
25	55037 642AB	1				EK0			CLIP, Hose
26	#52079 697AB	1				EK0	DG6		COOLER, Auxiliary Trans. Oil

JEEP LIBERTY (KJ)

SERIES	LINE	BODY	ENGINE	TRANSMISSION
P = Limited	J = LHD (4WD)	74 = 4 Dr. (104.3 WB)	ED1, ED0 = 2.4L Power Tech	DDK = 5 Speed HDManual
H = Sport	U = RHD (4WD)		EKG, EK0 = 3.7L Power Tech	DDD = 5 Speed HD Manual
M = Renegade	T = LHD (2WD)		ENJ = 2.5L 4Cyl Turbo Diesel	DG4,DGQ = Multi-Speed Auto
			ENR = 2.8L 4Cyl Turbo Diesel	DG6 = 4 Speed Auto Transm
			EN0 = 4Cyl Turbo Diesel	DG0 = All Automatic Transm
				DBB = All Manual Transm

AR = Use as required - = Non illustrated part # = New this model year

June 3, 2003

« RETURN TO GROUP INDEX

Radiator and Related Parts, 2.5,2.8L Diesel Engine
Figure 007-130

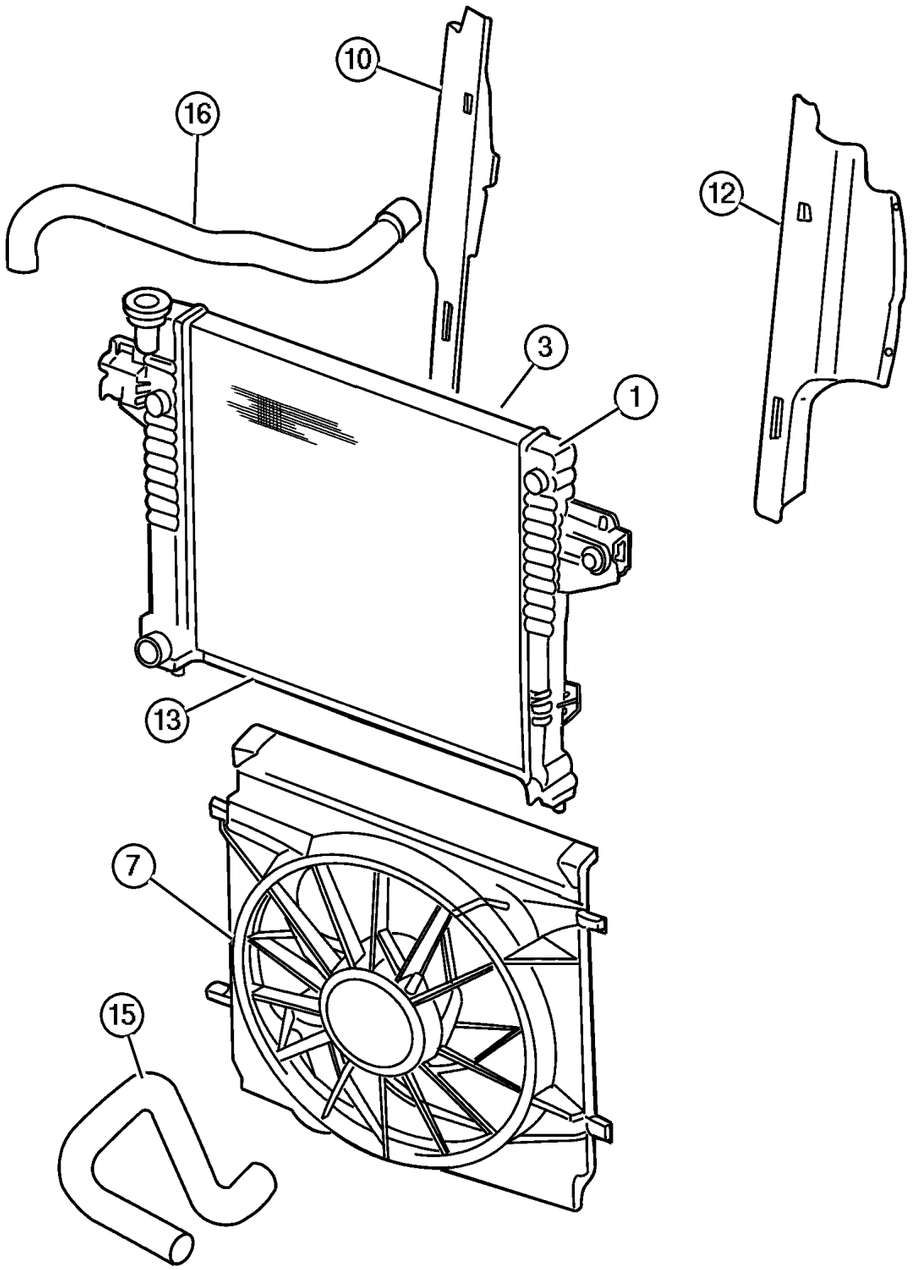

ITEM	PART NUMBER	QTY	LINE	SERIES	BODY	ENGINE	TRANS	TRIM	DESCRIPTION
Note; Sales Codes									
[EN0]= All 2..5L 4 Cylinder Diesel Engine									
[DBB]= Manual Trans									
1									RADIATOR, Engine Cooling
	52079 747AB	1				EN0	DBB		
		1				EN0	DG0		
-2	55176 756AD	1							SUPPORT, Radiator
3									CONDENSER, Air Conditioning
	#55037 465AB	1				EN0	DBB		
		1				EN0	DG0		
-4									COOLER, Charge Air
	#52079 700AB	1				EN0	DBB		
		1				EN0	DG0		
-5	#6034 399	1				EN0			CLAMP, Charge Cooler Inlet
-6	#55037 700AA	1				EN0	DG0		COOLER, Auxiliary Trans. Oil
7									SHROUD, Fan
	52079 674AB	1				EN0	DG0		
		1				EN0	DBB		
-8	52079 879AB	1				EN0			SHROUD, Fan, Door
-9	6100 264	2				EN0	DG0		BOLT AND CONED WASHER, Hex Head, M6x14x12.5
10									SEAL, Radiator Side Air
	52079 766AB	1				EN0	DG0		
		1				EN0	DBB		
-11	6036 155AA	3				EN0	DBB		PIN, Push
12									SEAL, Radiator Side Air
	#52079 767AD	1				EN0	DBB		
		1				EN0	DG0		
13									SEAL, Radiator
	52079 760AA	1				EN0	DG0		
		1				EN0	DBB		
-14									PIN, Push, .15x.41
	J400 4262	4				EN0	DG0		
		4				EN0	DBB		
15	52079 716AB	1				EN0			HOSE, Radiator Outlet
16	52079 708AA	1	J, U			EN0			HOSE, Radiator Inlet
-17									DRAINCOCK, Radiator
	4644 269	1				EN0	DBB		
		1				EN0	DG0		
-18	52079 727AA	1				EN0			FAN, Cooling
-19	#55037 688AA	1				EN0			DRIVE, Fan, Viscous

JEEP LIBERTY (KJ)

SERIES	LINE	BODY	ENGINE	TRANSMISSION
P = Limited	J = LHD (4WD)	74 = 4 Dr. (104.3 WB)	ED1, ED0 = 2.4L Power Tech	DDK = 5 Speed HDManual
H = Sport	U = RHD (4WD)		EKG, EK0 = 3.7L Power Tech	DDD = 5 Speed HD Manual
M = Renegade	T = LHD (2WD)		ENJ = 2.5L 4Cyl Turbo Diesel	DG4,DGQ = Multi-Speed Auto
			ENR = 2.8L 4Cyl Turbo Diesel	DG6 = 4 Speed Auto Transm
			EN0 = 4Cyl Turbo Diesel	DG0 = All Automatic Transm
				DBB = All Manual Transm

AR = Use as required - = Non illustrated part # = New this model year

June 3, 2003

« RETURN TO GROUP INDEX

Water Pump and Related Parts, 2.4L Engine
Figure 007-210

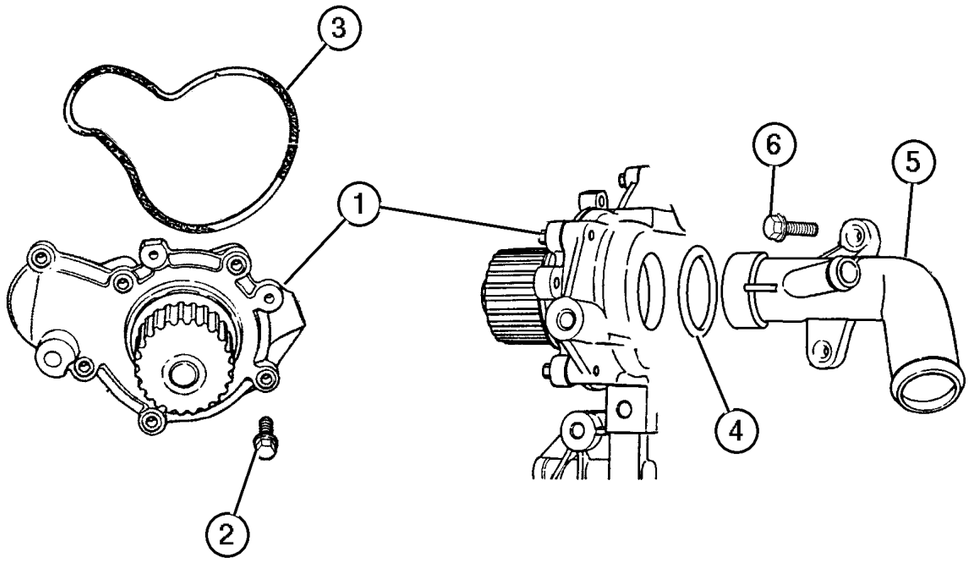

ITEM	PART NUMBER	QTY	LINE	SERIES	BODY	ENGINE	TRANS	TRIM	DESCRIPTION
Note; Sales Codes									
[ED0]= All 2.2L, 2.5L, 2.4L, 4 C									
[EK0]= All 3.7L, 6 Cylinder Gas Engines									
1	4694 307AC	1				ED0			PUMP, Water
2	6503 255	4				ED0			BOLT, Hex Head, M6x1.0x22
3	4621 564	1				ED0			SEAL, Water Pump Body
4	6503 180	1				ED0			O RING, Water Inlet Tube
5	53010 517AC	1				ED0			TUBE, Water Pump Inlet
6	6506 770AA	5				ED0			SCREW

JEEP LIBERTY (KJ)

SERIES	LINE	BODY	ENGINE	TRANSMISSION
P = Limited	J = LHD (4WD)	74 = 4 Dr. (104.3 WB)	ED1, ED0 = 2.4L Power Tech	DDK = 5 Speed HDManual
H = Sport	U = RHD (4WD)		EKG, EK0 = 3.7L Power Tech	DDD = 5 Speed HD Manual
M = Renegade	T = LHD (2WD)		ENJ = 2.5L 4Cyl Turbo Diesel	DG4,DGQ = Multi-Speed Auto
			ENR = 2.8L 4Cyl Turbo Diesel	DG6 = 4 Speed Auto Transm
			EN0 = 4Cyl Turbo Diesel	DG0 = All Automatic Transm
				DBB = All Manual Transm

Water Pump and Related Parts, 3.7L Engine
Figure 007-220

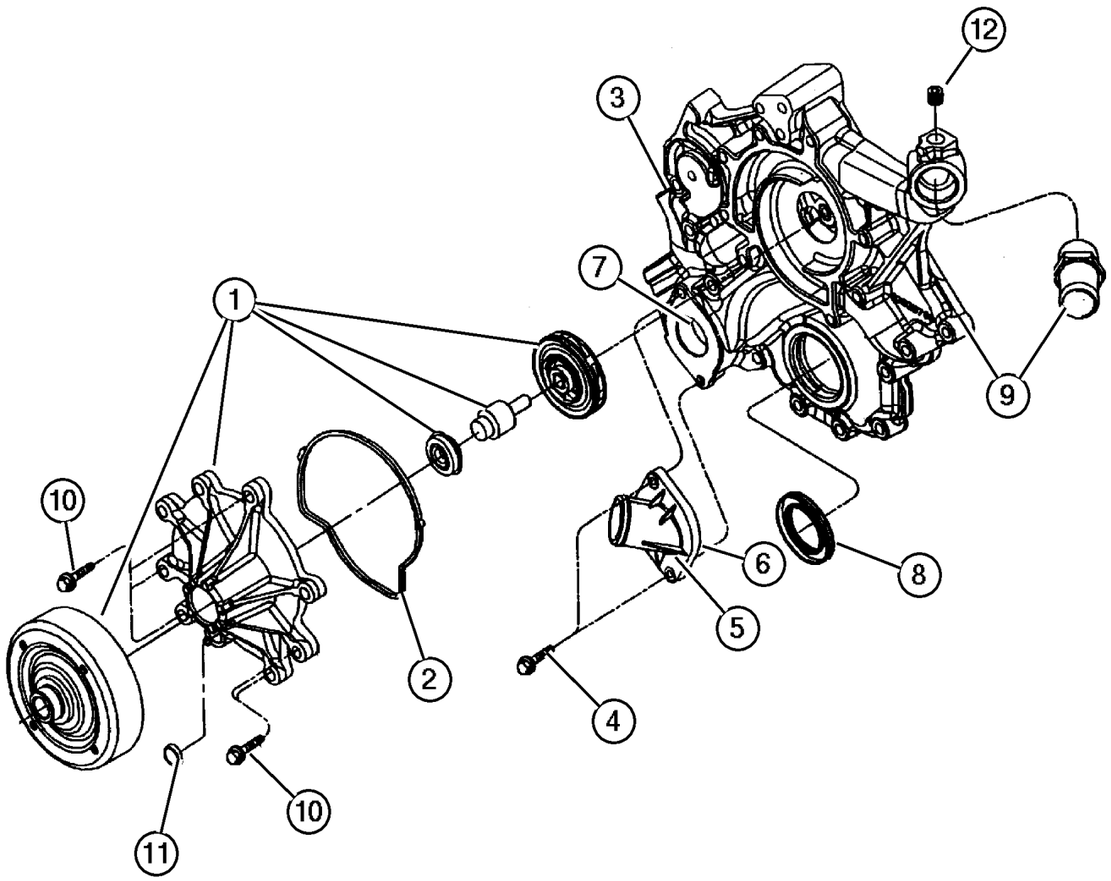

ITEM	PART NUMBER	QTY	LINE	SERIES	BODY	ENGINE	TRANS	TRIM	DESCRIPTION
Note; Sales Codes									
[ED0]= All 2.2L, 2.5L, 2.4L, 4 C									
[EK0]= All 3.7L, 6 Cylinder Gas Engines									
1	53021 187AA	1				EK0			PUMP, Water
2	5302 0865	1				EK0			GASKET, Water Pump
3	6035 854	2				EK0			FITTING, Y-Style
4	6505 502AA	2				EK0			SCREW
5	53020 887AB	1				EK0			HOUSING, Thermostat
6									GASKET, Thermostat, Use RTV Sealer, (NOT SERVICED) (Not Serviced)
7	52079 476AB	1				EK0			THERMOSTAT
8	53021 313AA	1				EK0			SEAL, Crankshaft Oil, Front
9	53021 238AB	1				EK0			COVER, Timing Belt
10	6102 380AA	5				EK0			SCREW, Hex Flange Head
11									PLUG, (NOT SERVICED) (Not Serviced)
12									PLUG, (NOT SERVICED) (Not Serviced)
-13	53013 505AA	1				EK0			CAP, Water Pump Pulley

JEEP LIBERTY (KJ)

SERIES	LINE	BODY	ENGINE	TRANSMISSION
P = Limited	J = LHD (4WD)	74 = 4 Dr. (104.3 WB)	ED1, ED0 = 2.4L Power Tech	DDK = 5 Speed HDManual
H = Sport	U = RHD (4WD)		EKG, EK0 = 3.7L Power Tech	DDD = 5 Speed HD Manual
M = Renegade	T = LHD (2WD)		ENJ = 2.5L 4Cyl Turbo Diesel	DG4,DGQ = Multi-Speed Auto
			ENR = 2.8L 4Cyl Turbo Diesel	DG6 = 4 Speed Auto Transm
			EN0 = 4Cyl Turbo Diesel	DG0 = All Automatic Transm
				DBB = All Manual Transm

AR = Use as required - = Non illustrated part # = New this model year **June 3, 2003**

« RETURN TO GROUP INDEX

Water Pump and Related Parts, 2.5,2.8L Diesel Engine
Figure 007-230

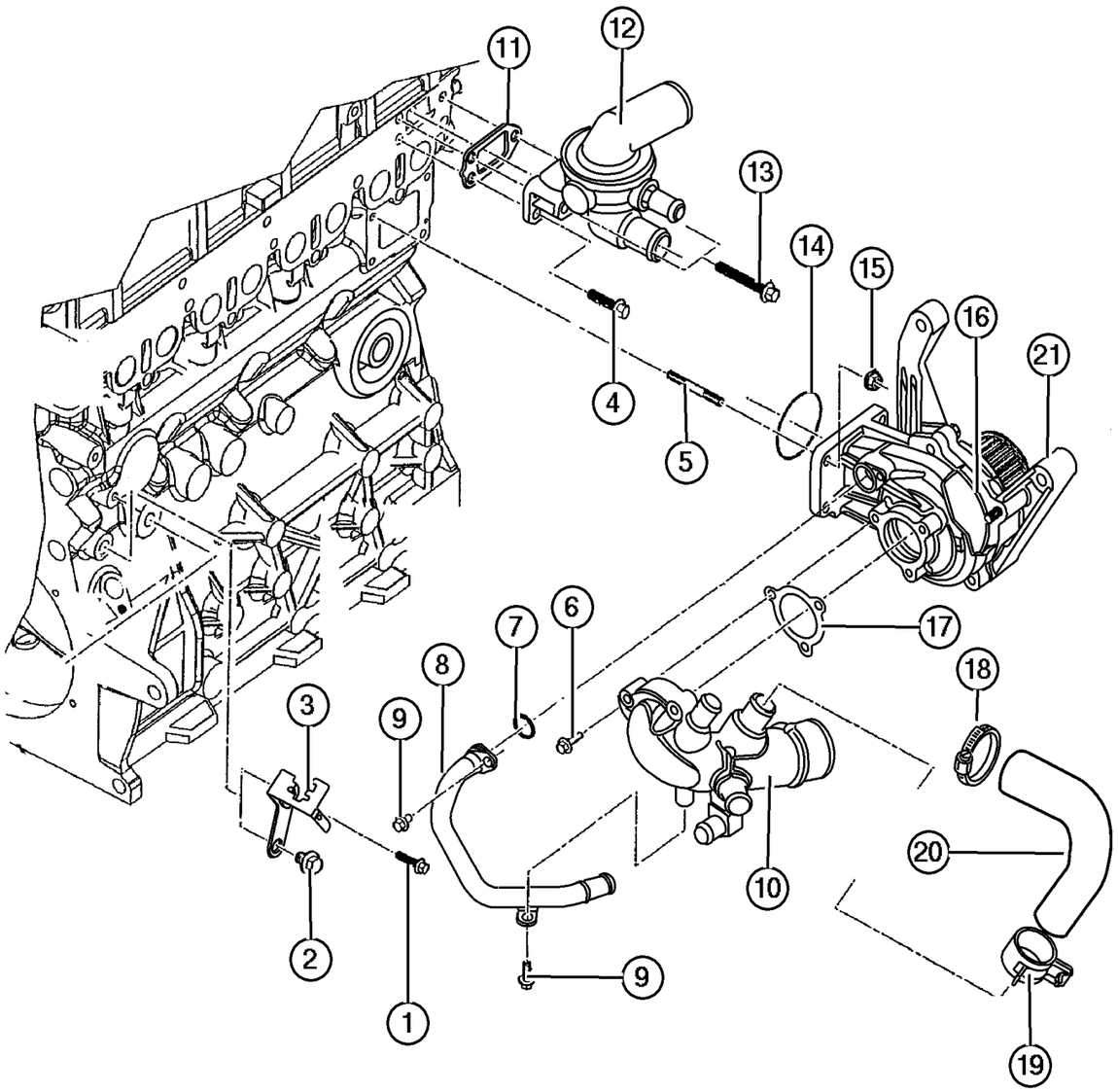

ITEM	PART NUMBER	QTY	LINE	SERIES	BODY	ENGINE	TRANS	TRIM	DESCRIPTION
Note; Sales Codes									
[EN0]= All 4 Cylinder Diesel Engine									
[DBB]= Manual Trans									
1	5003 554AA	1				EN0	DG0		SCREW
2									SCREW
	5003 724AA	1				EN0	DBB		
		1				EN0	DG0		
3									BRACKET, 05072692ac, (NOT REQUIRED)
4									BOLT, 8Mx20
	4864 537	1				EN0	DBB		
		1				EN0	DG0		
5									STUD, Water Pump To Block
	4720 550	4				EN0	DBB		
		4				EN0	DG0		
6									SCREW
	4864 551	3				EN0	DBB		
		3				EN0	DG0		
7									O RING
	5072 698AA	1				EN0	DBB		
		1				EN0	DG0		
8									PIPE, Water Pump Drain
	5072 703AB	1				EN0	DBB		
		1				EN0	DG0		
9									BOLT, M6x10
	5003 551AA	1				EN0	DBB		
		1				EN0	DG0		
10									ADAPTER, Water Pump
	5072 704AA	1				EN0	DBB		
		1				EN0	DG0		
11									GASKET, Thermostat
	5066 806AA	1				EN0	DBB		
		1				EN0	DG0		
12									THERMOSTAT
	5072 705AB	1				EN0	DBB		
		1				EN0	DG0		
13									BOLT
	5015 113AA	1				EN0	DBB		
		1				EN0	DG0		
14									O RING, Water Pump
	5069 141AA	1				EN0	DBB		

JEEP LIBERTY (KJ)

SERIES	LINE	BODY	ENGINE	TRANSMISSION
P = Limited	J = LHD (4WD)	74 = 4 Dr. (104.3 WB)	ED1, ED0 = 2.4L Power Tech	DDK = 5 Speed HDManual
H = Sport	U = RHD (4WD)		EKG, EK0 = 3.7L Power Tech	DDD = 5 Speed HD Manual
M = Renegade	T = LHD (2WD)		ENJ = 2.5L 4Cyl Turbo Diesel	DG4,DGQ = Multi-Speed Auto
			ENR = 2.8L 4Cyl Turbo Diesel	DG6 = 4 Speed Auto Transm
			EN0 = 4Cyl Turbo Diesel	DG0 = All Automatic Transm
				DBB = All Manual Transm

AR = Use as required - = Non illustrated part # = New this model year

June 3, 2003

« RETURN TO GROUP INDEX »

Water Pump and Related Parts, 2.5,2.8L Diesel Engine
Figure 007-230

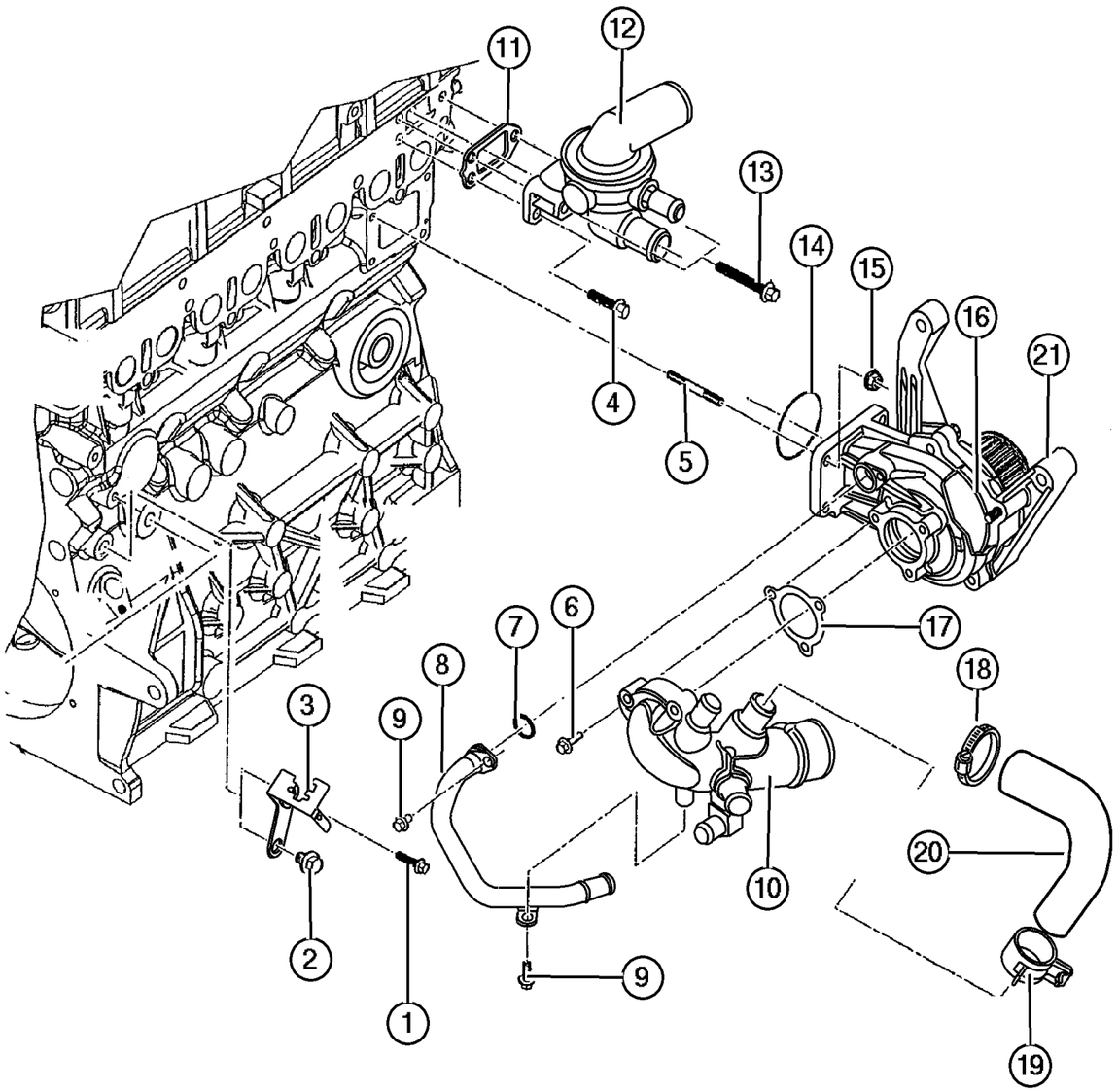

ITEM	PART NUMBER	QTY	LINE	SERIES	BODY	ENGINE	TRANS	TRIM	DESCRIPTION
		1				EN0	DG0		
15									NUT
	4778 961	4				EN0	DBB		
		4				EN0	DG0		
16									O RING
	5072 707AA	1				EN0	DBB		
		1				EN0	DG0		
17									GASKET, Water Pump
	4864 575	1				EN0	DBB		
		1				EN0	DG0		
18									CLAMP, Hose
	4720 453	1				EN0	DBB		
		1				EN0	DG0		
19									CLAMP, Heater Hose
	4886 050AA	1				EN0	DBB		
		1				EN0	DG0		
20									HOSE, Water Pump Bypass
	#5093 912AA	1				EN0	DBB		
		1				EN0	DG0		
21									PUMP, Water
	#5093 911AA	1				EN0	DBB		
		1				EN0	DG0		

JEEP LIBERTY (KJ)

SERIES	LINE	BODY	ENGINE	TRANSMISSION
P = Limited	J = LHD (4WD)	74 = 4 Dr. (104.3 WB)	ED1, ED0 = 2.4L Power Tech	DDK = 5 Speed HDManual
H = Sport	U = RHD (4WD)		EKG, EK0 = 3.7L Power Tech	DDD = 5 Speed HD Manual
M = Renegade	T = LHD (2WD)		ENJ = 2.5L 4Cyl Turbo Diesel	DG4,DGQ = Multi-Speed Auto
			ENR = 2.8L 4Cyl Turbo Diesel	DG6 = 4 Speed Auto Transm
			EN0 = 4Cyl Turbo Diesel	DG0 = All Automatic Transm
				DBB = All Manual Transm

AR = Use as required - = Non illustrated part # = New this model year

June 3, 2003

« RETURN TO GROUP INDEX

Coolant Tank, 2.4L Engine
Figure 007-305

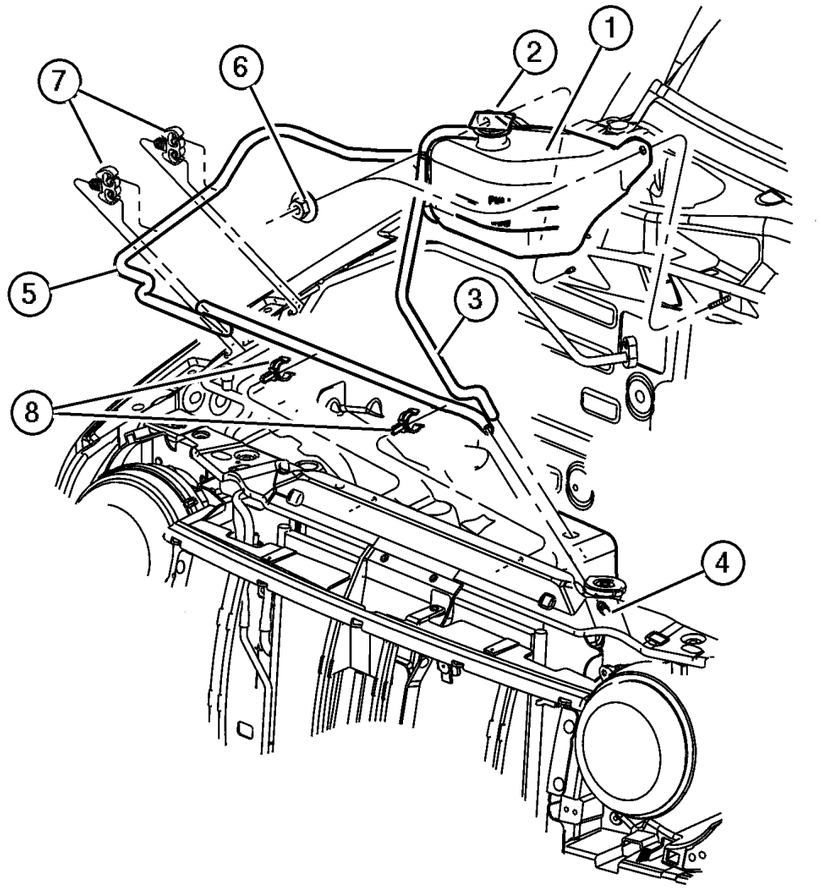

ITEM	PART NUMBER	QTY	LINE	SERIES	BODY	ENGINE	TRANS	TRIM	DESCRIPTION
Note; Sales Codes									
[ED0]= All 2.2L, 2.5L, 2.4L, 4 C									
[EK0]= All 3.7L, 6 Cylinder Gas Engines									
[EN0]= All 2..5L 4 Cylinder Diesel Engine									
1	52079 702AD	1				ED0			BOTTLE, Coolant Recovery
2	5207 9331	1				ED0			CAP, Coolant Reserve Tank
3	4026 148	1				ED0			HOSE, Coolant Reserve Tank
4	J318 0725	1				ED0			CLAMP, Hose
5	4026 148	1				ED0			HOSE, Coolant Reserve Tank
6	6506 603AA	2				ED0, EK0, EN0			NUT, M6x1.00
7									CLIP, (NOT SERVICED) (Not Serviced)
8	52080 133AB	2				ED0			CLIP, Hose

JEEP LIBERTY (KJ)

SERIES	LINE	BODY	ENGINE	TRANSMISSION
P = Limited	J = LHD (4WD)	74 = 4 Dr. (104.3 WB)	ED1, ED0 = 2.4L Power Tech	DDK = 5 Speed HDManual
H = Sport	U = RHD (4WD)		EKG, EK0 = 3.7L Power Tech	DDD = 5 Speed HD Manual
M = Renegade	T = LHD (2WD)		ENJ = 2.5L 4Cyl Turbo Diesel	DG4,DGQ = Multi-Speed Auto
			ENR = 2.8L 4Cyl Turbo Diesel	DG6 = 4 Speed Auto Transm
			EN0 = 4Cyl Turbo Diesel	DG0 = All Automatic Transm
				DBB = All Manual Transm

Coolant Tank, 3.7L Engine
Figure 007-310

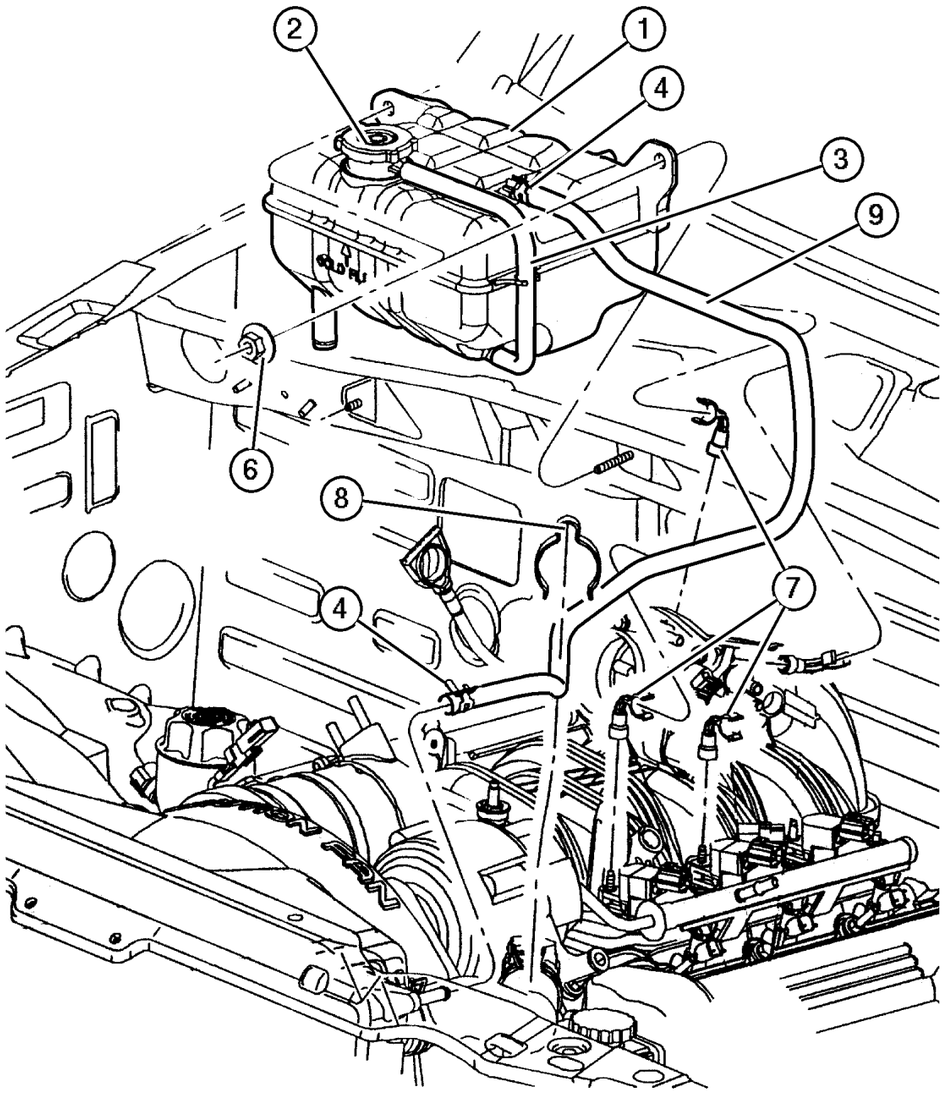

ITEM	PART NUMBER	QTY	LINE	SERIES	BODY	ENGINE	TRANS	TRIM	DESCRIPTION
Note; Sales Codes									
[EK0]= All 3.7L, 6 Cylinder Gas Engines									
1	52079 848AA	1				EK0			BOTTLE, Coolant Recovery
2	4596 198	1				EK0			CAP, Radiator
3	4026 148	1				EK0			HOSE, Coolant Reserve Tank
4	52079 632AA	2				EK0			CLAMP, Oil Cooler Tube
-5	5202 8399	1				EK0			LABEL, Coolant Warning
6	6506 603AA	2				ED0, EK0, EN0			NUT, M6x1.00
7	52128 508AC	3				EK0			CLIP, Hose
8									CLIP, Hose, 52007404, (NOT SERVICED) (Not Serviced)
9	5086 496AA	1				EK0			HOSE, Overflow, Roll Stock

JEEP LIBERTY (KJ)

SERIES	LINE	BODY	ENGINE	TRANSMISSION
P = Limited	J = LHD (4WD)	74 = 4 Dr. (104.3 WB)	ED1, ED0 = 2.4L Power Tech	DDK = 5 Speed HDManual
H = Sport	U = RHD (4WD)		EKG, EK0 = 3.7L Power Tech	DDD = 5 Speed HD Manual
M = Renegade	T = LHD (2WD)		ENJ = 2.5L 4Cyl Turbo Diesel	DG4,DGQ = Multi-Speed Auto
			ENR = 2.8L 4Cyl Turbo Diesel	DG6 = 4 Speed Auto Transm
			EN0 = 4Cyl Turbo Diesel	DG0 = All Automatic Transm
				DBB = All Manual Transm

Coolant Degasser Tank, 2.5,2.8L Diesel Engine
Figure 007-320

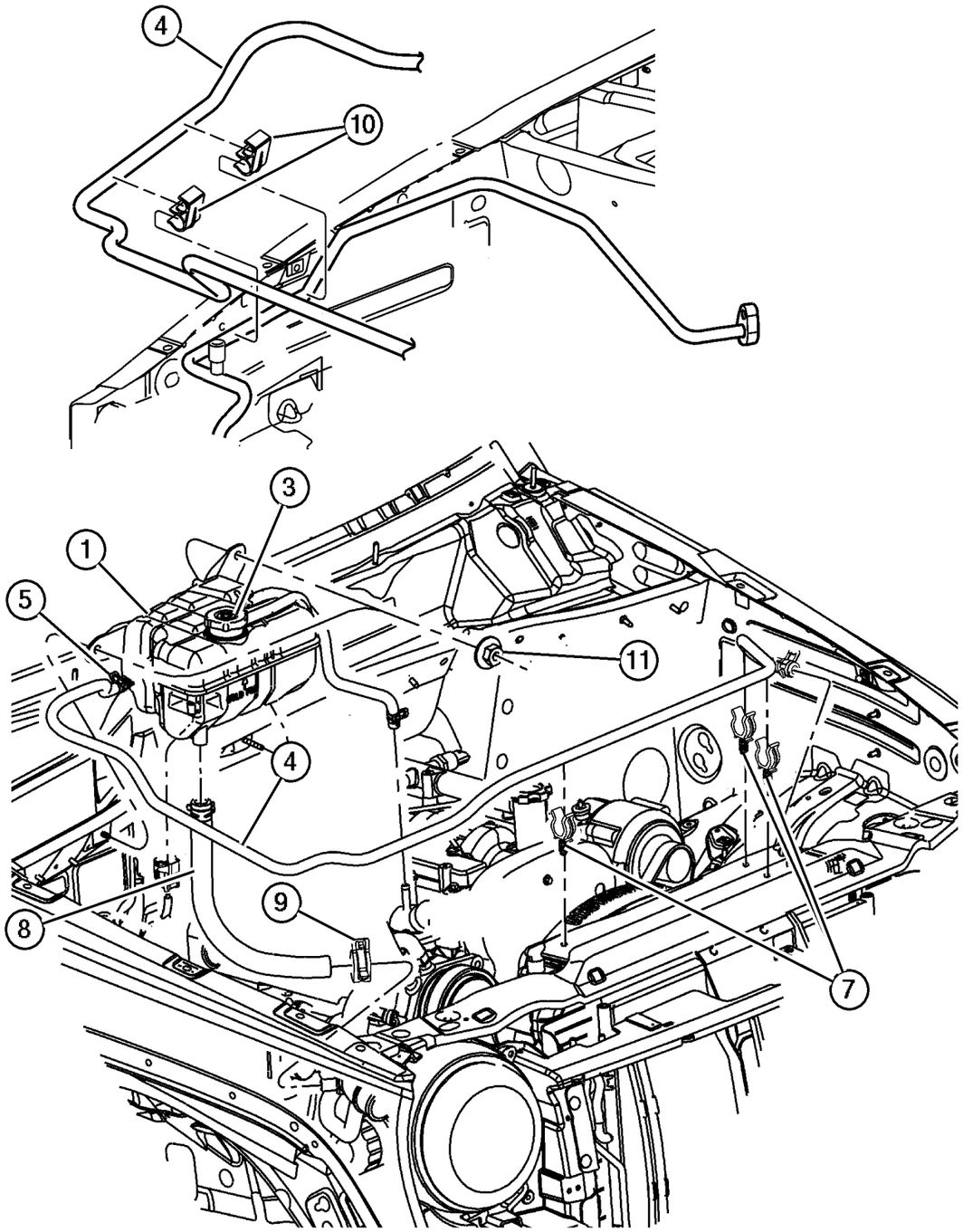

ITEM	PART NUMBER	QTY	LINE	SERIES	BODY	ENGINE	TRANS	TRIM	DESCRIPTION
1	52079 849AA	1				EN0			TANK, Coolant Reserve
-2	4682 425	1				EN0			SENSOR, Coolant Level
3	4596 198	1				EN0			CAP, Radiator
4	4026 148	1				EN0			HOSE, Coolant Reserve Tank
5									CLAMP, Oil Cooler Tube
	52079 632AA	1				EN0	DG0		
		4				EN0			
-6	5202 8399	1				EN0			LABEL, Coolant Warning
7	52080 133AB	2				EN0			CLIP, Hose
8	52079 856AB	1				EN0			HOSE, Coolant Recovery Bottle
9	6502 018	2				EN0			CLAMP, Hose, M28.9 x 1.60
10									CLIP, (NOT SERVICED) (Not Serviced)
11									NUT, M6X1.00, (NOT SERVICED) (Not Serviced)

JEEP LIBERTY (KJ)

SERIES	LINE	BODY	ENGINE	TRANSMISSION
P = Limited	J = LHD (4WD)	74 = 4 Dr. (104.3 WB)	ED1, ED0 = 2.4L Power Tech	DDK = 5 Speed HDManual
H = Sport	U = RHD (4WD)		EKG, EK0 = 3.7L Power Tech	DDD = 5 Speed HD Manual
M = Renegade	T = LHD (2WD)		ENJ = 2.5L 4Cyl Turbo Diesel	DG4,DGQ = Multi-Speed Auto
			ENR = 2.8L 4Cyl Turbo Diesel	DG6 = 4 Speed Auto Transm
			EN0 = 4Cyl Turbo Diesel	DG0 = All Automatic Transm
				DBB = All Manual Transm

AR = Use as required - = Non illustrated part # = New this model year

June 3, 2003

« RETURN TO GROUP INDEX

Drive Pulleys, 2.4L Engine
Figure 007-410

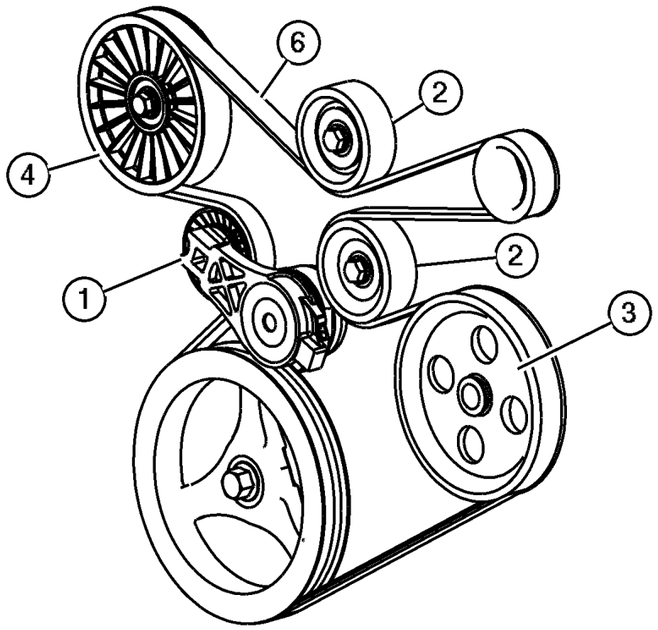

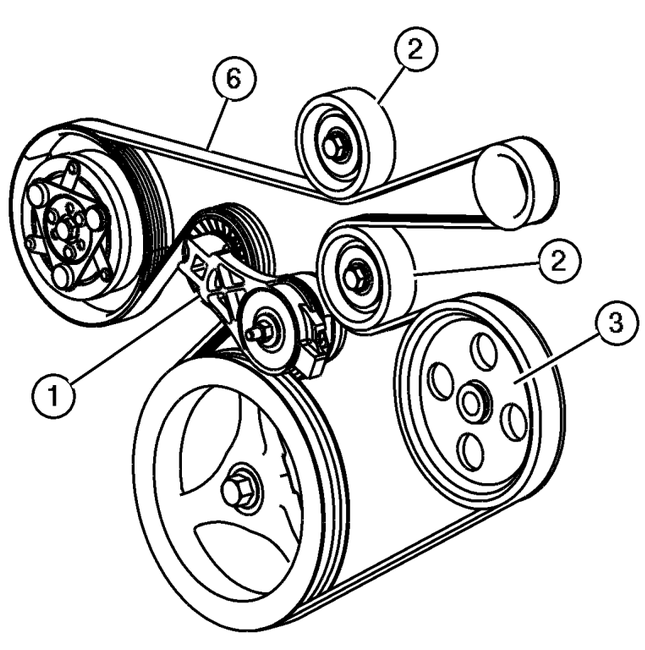

ITEM	PART NUMBER	QTY	LINE	SERIES	BODY	ENGINE	TRANS	TRIM	DESCRIPTION
Note; Sales Codes									
[ED0]= All 2.2L, 2.5L, 2.4L, 4 C									
1	4861 277AB	1				ED0			TENSIONER, Belt
2	53013 324AA	2				ED0			PULLEY, Idler
3	53031 722AA	1				ED0			PULLEY, Power Steering Pump
4	53013 366AA	1				ED0			PULLEY, Idler, without Air Conditioning
-5	3420 2781	1				ED0			SCREW, Idler Pulley
6									BELT, Accessory Drive
	5281 351AC	1				ED0			without Air Conditioning
	53013 352AC	1				ED0			with Air Conditioning

JEEP LIBERTY (KJ)

SERIES	LINE	BODY	ENGINE	TRANSMISSION
P = Limited	J = LHD (4WD)	74 = 4 Dr. (104.3 WB)	ED1, ED0 = 2.4L Power Tech	DDK = 5 Speed HDManual
H = Sport	U = RHD (4WD)		EKG, EK0 = 3.7L Power Tech	DDD = 5 Speed HD Manual
M = Renegade	T = LHD (2WD)		ENJ = 2.5L 4Cyl Turbo Diesel	DG4,DGQ = Multi-Speed Auto
			ENR = 2.8L 4Cyl Turbo Diesel	DG6 = 4 Speed Auto Transm
			EN0 = 4Cyl Turbo Diesel	DG0 = All Automatic Transm
				DBB = All Manual Transm

AR = Use as required - = Non illustrated part # = New this model year **June 3, 2003**

« RETURN TO GROUP INDEX

Drive Pulleys, 3.7L Engine
Figure 007-420

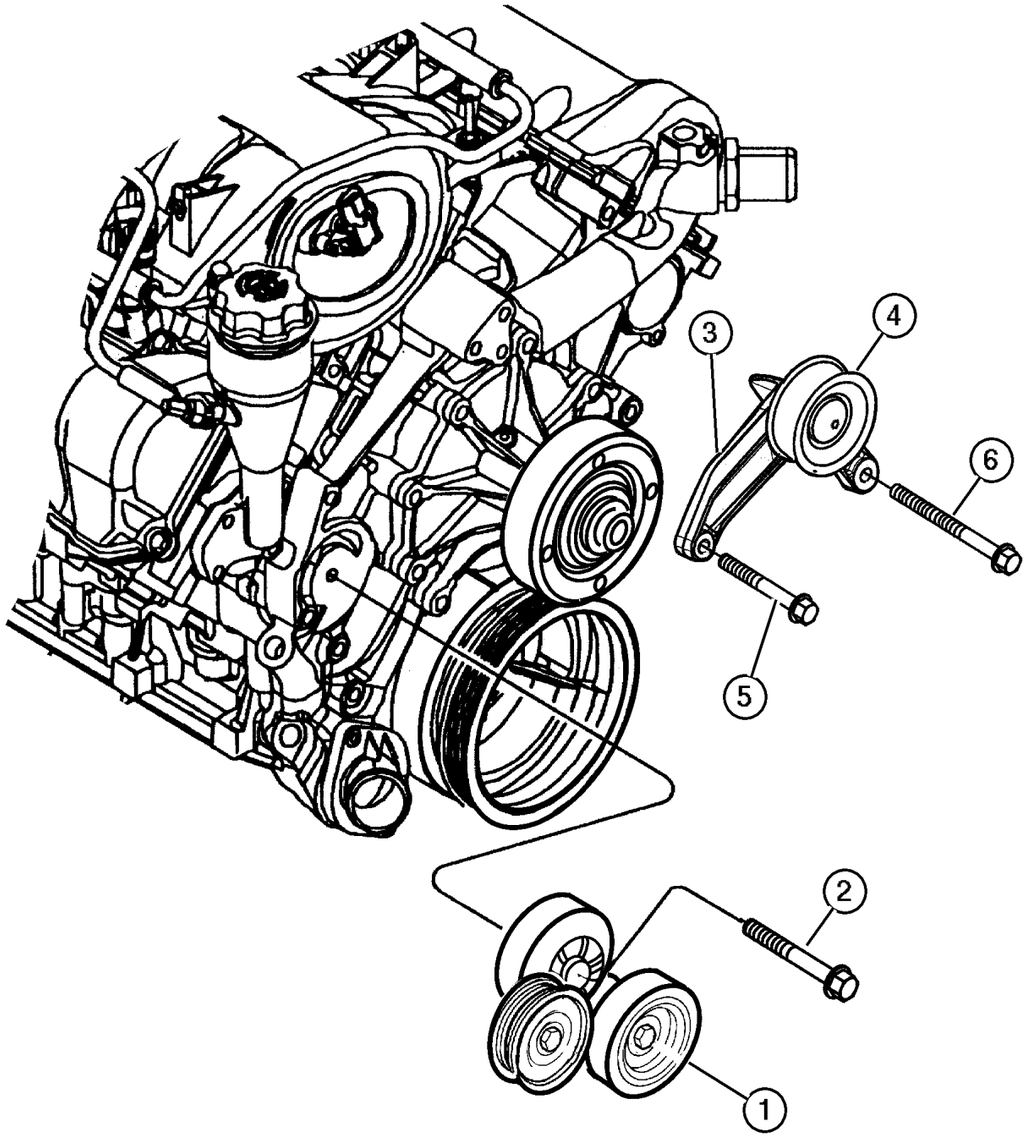

ITEM	PART NUMBER	QTY	LINE	SERIES	BODY	ENGINE	TRANS	TRIM	DESCRIPTION
Note; Sales Codes									
[ED0]= All 2.2L, 2.5L, 2.4L, 4 C									
[EK0]= All 3.7L, 6 Cylinder Gas Engines									
1	53030 958AB	1				EK0			TENSIONER, Alternator Belt
2	6504 930AA	1				EK0			SCREW AND WASHER, Hex Head, M10x1.5x70
3	5303 0959	1				EK0			BRACKET, Idler Pulley
4	5303 1045	1				EK0			PULLEY, Idler
5	6505 487AA	1				EK0			SCREW AND WASHER, M10x1. 5x45
6	6504 344	1				EK0			SCREW AND WASHER, Hex Head

JEEP LIBERTY (KJ)

SERIES	LINE	BODY	ENGINE	TRANSMISSION
P = Limited	J = LHD (4WD)	74 = 4 Dr. (104.3 WB)	ED1, ED0 = 2.4L Power Tech	DDK = 5 Speed HDManual
H = Sport	U = RHD (4WD)		EKG, EK0 = 3.7L Power Tech	DDD = 5 Speed HD Manual
M = Renegade	T = LHD (2WD)		ENJ = 2.5L 4Cyl Turbo Diesel	DG4,DGQ = Multi-Speed Auto
			ENR = 2.8L 4Cyl Turbo Diesel	DG6 = 4 Speed Auto Transm
			EN0 = 4Cyl Turbo Diesel	DG0 = All Automatic Transm
				DBB = All Manual Transm

Drive Pulleys, 2.5,2.8L Diesel Engine
Figure 007-430

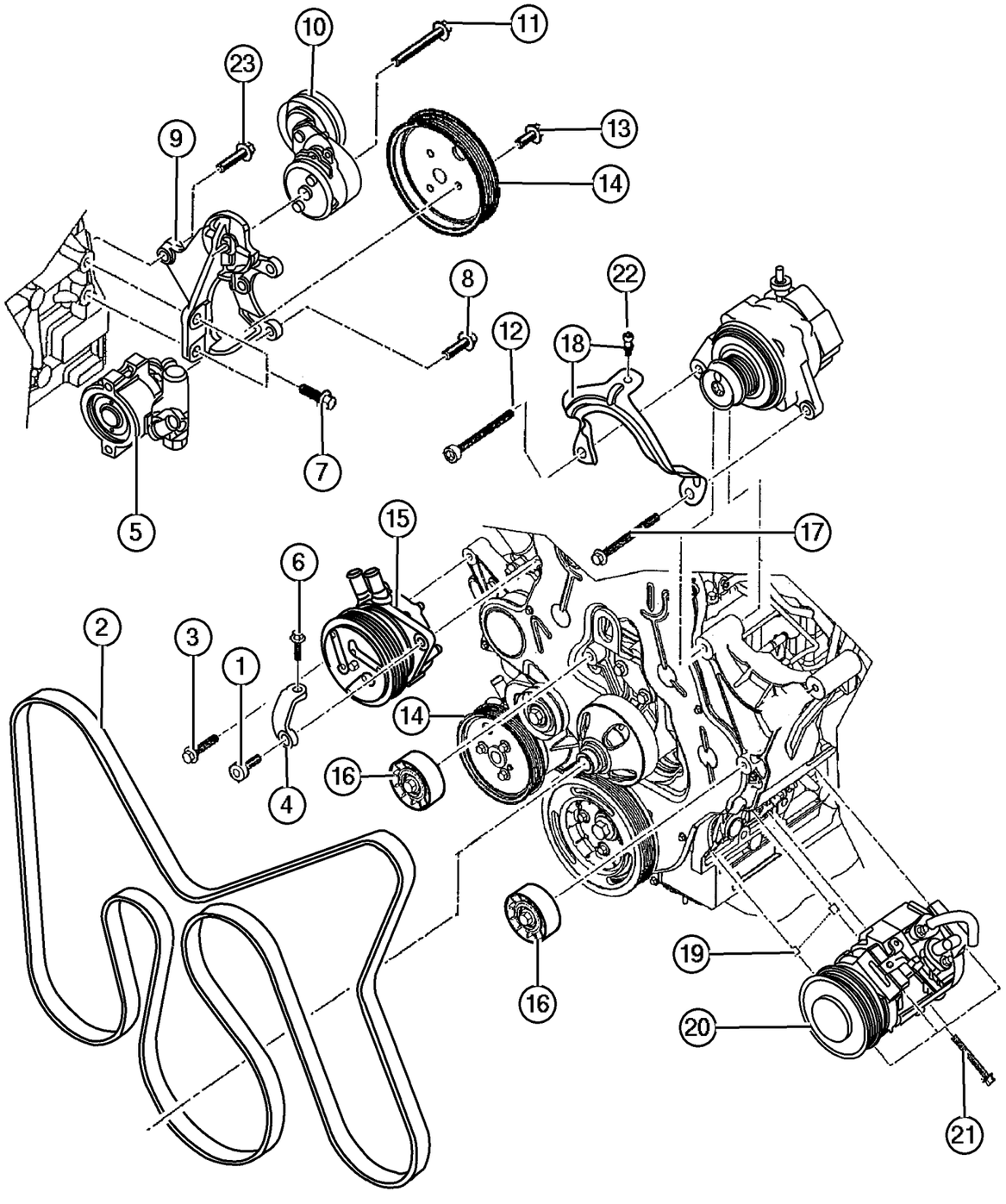

ITEM	PART NUMBER	QTY	LINE	SERIES	BODY	ENGINE	TRANS	TRIM	DESCRIPTION
Ote; Sales Codes									
[EN0]= All 4 Cylinder Diesel Engine									
1									SCREW
	#5093 933AA	1				EN0	DBB		
		1				EN0	DG0		
2									BELT, Accessory Drive
	5072 437AB	1				EN0	DBB		
		1				EN0	DG0		
3									BOLT, M10x45
	5003 533AA	1				EN0	DG0		
		1				EN0	DBB		
4									BRACKET
	5072 436AA	1				EN0	DBB		
		1				EN0	DG0		
5									PUMP, Power Steering
	#5093 934AA	1				EN0	DBB		
		1				EN0	DG0		
6									SCREW
	5003 557AA	1				EN0	DBB		
		1				EN0	DG0		
7									BOLT, Adaptor Plate
	5003 532AA	2				EN0	DBB		
		2				EN0	DG0		
8									BOLT, 8Mx20
	4864 537	3				EN0	DBB		
		3				EN0	DG0		
9									BRACKET, Tensioner
	#5093 935AA	1				EN0	DBB		
		1				EN0	DG0		
10									TENSIONER, Belt
	5072 440AA	1				EN0	DBB		
		1				EN0	DG0		
11									SCREW
	5015 612AA	1				EN0	DBB		
		1				EN0	DG0		
12									SCREW
	#5093 936AA	1				EN0	DBB		
		1				EN0	DG0		
13									SCREW
	5003 554AA	3				EN0	DBB		
		3				EN0	DG0		
14									PULLEY, Power Steering Pump

JEEP LIBERTY (KJ)

SERIES	LINE	BODY	ENGINE	TRANSMISSION
P = Limited	J = LHD (4WD)	74 = 4 Dr. (104.3 WB)	ED1, ED0 = 2.4L Power Tech	DDK = 5 Speed HDManual
H = Sport	U = RHD (4WD)		EKG, EK0 = 3.7L Power Tech	DDD = 5 Speed HD Manual
M = Renegade	T = LHD (2WD)		ENJ = 2.5L 4Cyl Turbo Diesel	DG4,DGQ = Multi-Speed Auto
			ENR = 2.8L 4Cyl Turbo Diesel	DG6 = 4 Speed Auto Transm
			EN0 = 4Cyl Turbo Diesel	DG0 = All Automatic Transm
				DBB = All Manual Transm

AR = Use as required - = Non illustrated part # = New this model year **June 3, 2003**

« RETURN TO GROUP INDEX »

Drive Pulleys, 2.5,2.8L Diesel Engine
Figure 007-430

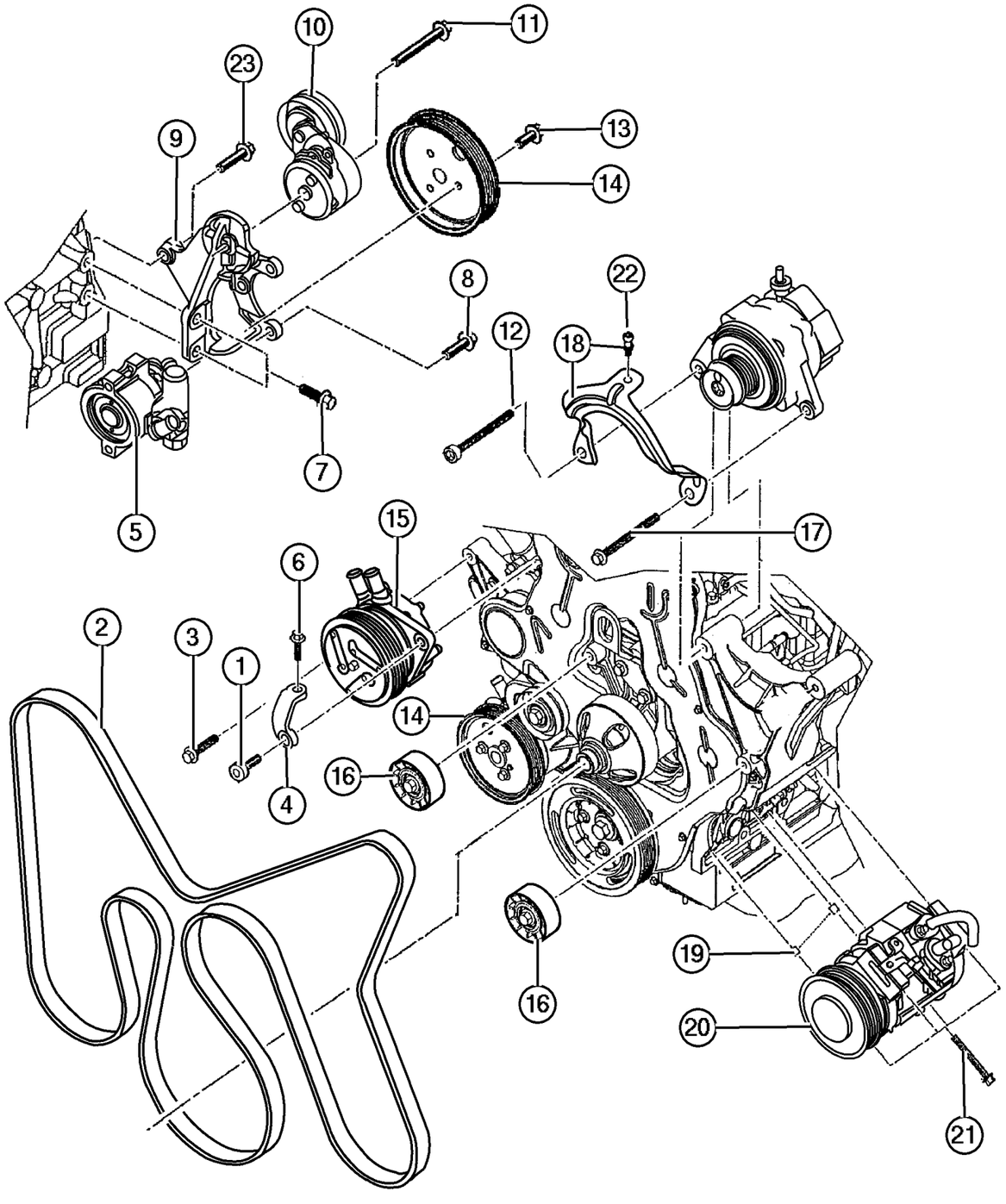

ITEM	PART NUMBER	QTY	LINE	SERIES	BODY	ENGINE	TRANS	TRIM	DESCRIPTION
	5072 441AA	1				EN0	DBB		
		1				EN0	DG0		
15									HEATER
	#5093 937AA	1				EN0	DBB		
		1				EN0	DG0		
16									PULLEY, Idler
	5066 938AA	2				EN0	DBB		
		2				EN0	DG0		
17									SCREW
	#5093 938AA	1				EN0	DBB		
		1				EN0	DG0		
18									BRACKET, Alternator
	#5093 939AA	1				EN0	DBB		
		1				EN0	DG0		
19									PIN
	5066 930AA	2				EN0	DBB		
		2				EN0	DG0		
20									COMPRESSOR, Air Conditioning
	#5093 940AA	1				EN0	DBB		
		1				EN0	DG0		
21									BOLT
	5015 043AA	4				EN0	DBB		
		4				EN0	DG0		
22									SCREW
	#5093 941AA	1				EN0	DBB		
		1				EN0	DG0		
23									BOLT, Hex Flange Head, M10x35
	4897 253AA	1				EN0	DBB		
		1				EN0	DG0		

JEEP LIBERTY (KJ)

SERIES	LINE	BODY	ENGINE	TRANSMISSION
P = Limited	J = LHD (4WD)	74 = 4 Dr. (104.3 WB)	ED1, ED0 = 2.4L Power Tech	DDK = 5 Speed HDManual
H = Sport	U = RHD (4WD)		EKG, EK0 = 3.7L Power Tech	DDD = 5 Speed HD Manual
M = Renegade	T = LHD (2WD)		ENJ = 2.5L 4Cyl Turbo Diesel	DG4,DGQ = Multi-Speed Auto
			ENR = 2.8L 4Cyl Turbo Diesel	DG6 = 4 Speed Auto Transm
			EN0 = 4Cyl Turbo Diesel	DG0 = All Automatic Transm
				DBB = All Manual Transm

AR = Use as required - = Non illustrated part # = New this model year

June 3, 2003

« RETURN TO GROUP INDEX

«

Drive Belts, 2.4L Engine
Figure 007-510

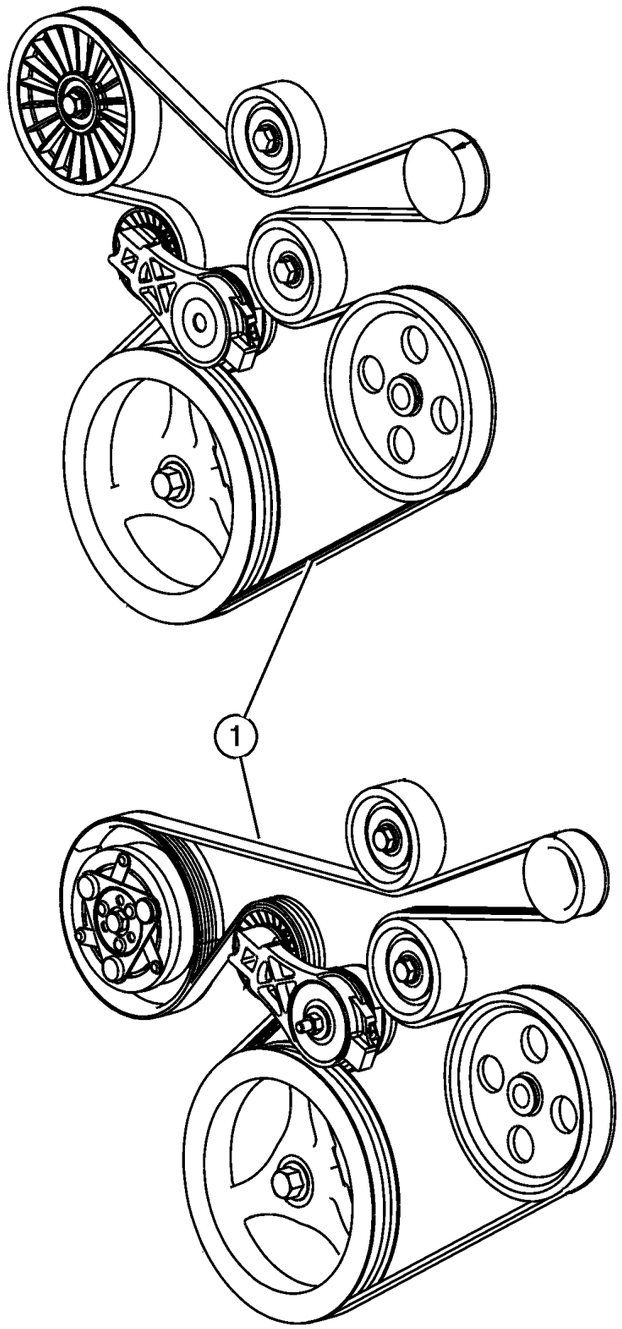

ITEM	PART NUMBER	QTY	LINE	SERIES	BODY	ENGINE	TRANS	TRIM	DESCRIPTION
Note; Sales Codes									
[ED0]= All 2.2L, 2.5L, 2.4L, 4 Cylinder									
1									BELT, Accessory Drive
	5281 351AC	1				ED0			with Air Conditioning
	53013 352AC	1				ED0			without Air Conditioning

JEEP LIBERTY (KJ)

SERIES	LINE	BODY	ENGINE	TRANSMISSION
P = Limited	J = LHD (4WD)	74 = 4 Dr. (104.3 WB)	ED1, ED0 = 2.4L Power Tech	DDK = 5 Speed HDManual
H = Sport	U = RHD (4WD)		EKG, EK0 = 3.7L Power Tech	DDD = 5 Speed HD Manual
M = Renegade	T = LHD (2WD)		ENJ = 2.5L 4Cyl Turbo Diesel	DG4,DGQ = Multi-Speed Auto
			ENR = 2.8L 4Cyl Turbo Diesel	DG6 = 4 Speed Auto Transm
			EN0 = 4Cyl Turbo Diesel	DG0 = All Automatic Transm
				DBB = All Manual Transm

Drive Belts, 3.7L Engine
Figure 007-520

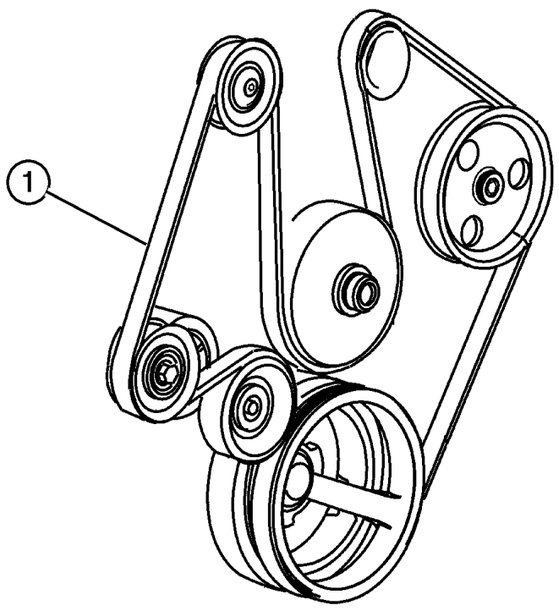

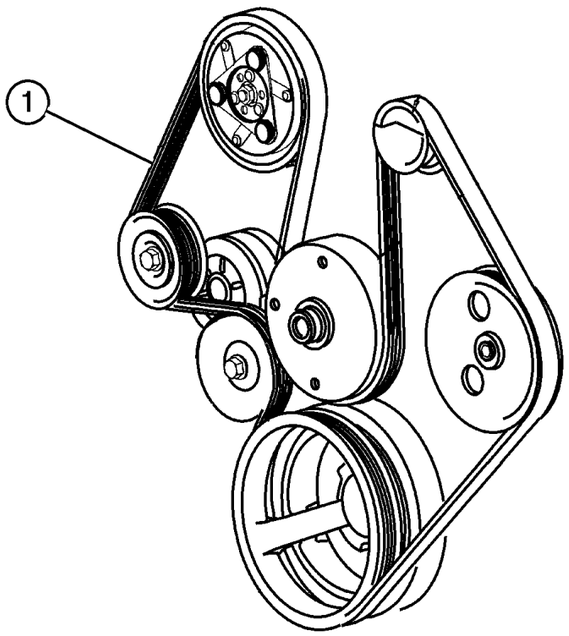

ITEM	PART NUMBER	QTY	LINE	SERIES	BODY	ENGINE	TRANS	TRIM	DESCRIPTION
Note; Sales Codes									
[EK0]= All 3.7L, 6 Cylinder Gas Engines									
1	53032 037AI	1				EK0			BELT, Accessory Drive, with or without Air Conditioning

JEEP LIBERTY (KJ)

SERIES	LINE	BODY	ENGINE	TRANSMISSION
P = Limited	J = LHD (4WD)	74 = 4 Dr. (104.3 WB)	ED1, ED0 = 2.4L Power Tech	DDK = 5 Speed HDManual
H = Sport	U = RHD (4WD)		EKG, EK0 = 3.7L Power Tech	DDD = 5 Speed HD Manual
M = Renegade	T = LHD (2WD)		ENJ = 2.5L 4Cyl Turbo Diesel	DG4,DGQ = Multi-Speed Auto
			ENR = 2.8L 4Cyl Turbo Diesel	DG6 = 4 Speed Auto Transm
			EN0 = 4Cyl Turbo Diesel	DG0 = All Automatic Transm
				DBB = All Manual Transm

Drive Belts, 2.5,2.8L Diesel Engine
Figure 007-530

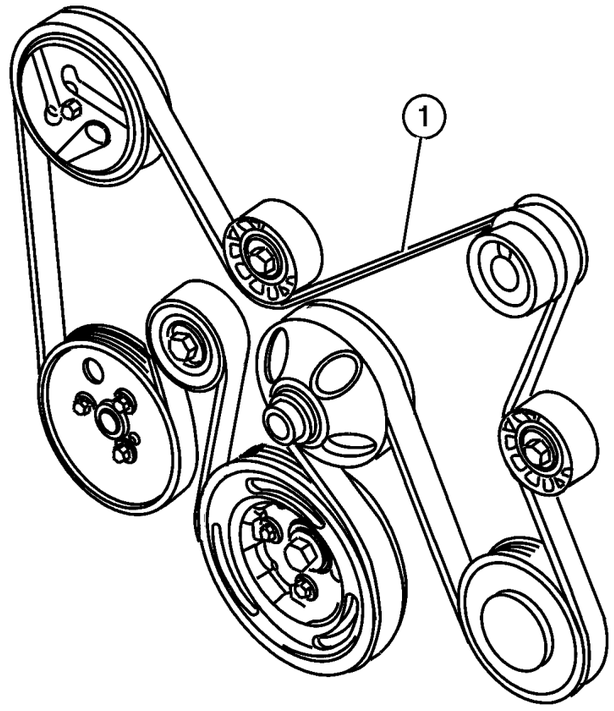

ITEM	PART NUMBER	QTY	LINE	SERIES	BODY	ENGINE	TRANS	TRIM	DESCRIPTION
Note; Sales Codes									
[EN0]= All 2..5L 4 Cylinder Diesel Engine									
1									BELT, Accessory Drive
	5072 437AB	1				EN0	DBB		
		1				EN0	DG0		

JEEP LIBERTY (KJ)

SERIES	LINE	BODY	ENGINE	TRANSMISSION
P = Limited	J = LHD (4WD)	74 = 4 Dr. (104.3 WB)	ED1, ED0 = 2.4L Power Tech	DDK = 5 Speed HDManual
H = Sport	U = RHD (4WD)		EKG, EK0 = 3.7L Power Tech	DDD = 5 Speed HD Manual
M = Renegade	T = LHD (2WD)		ENJ = 2.5L 4Cyl Turbo Diesel	DG4,DGQ = Multi-Speed Auto
			ENR = 2.8L 4Cyl Turbo Diesel	DG6 = 4 Speed Auto Transm
			EN0 = 4Cyl Turbo Diesel	DG0 = All Automatic Transm
				DBB = All Manual Transm

Oil Cooler Lines
Figure 007-610

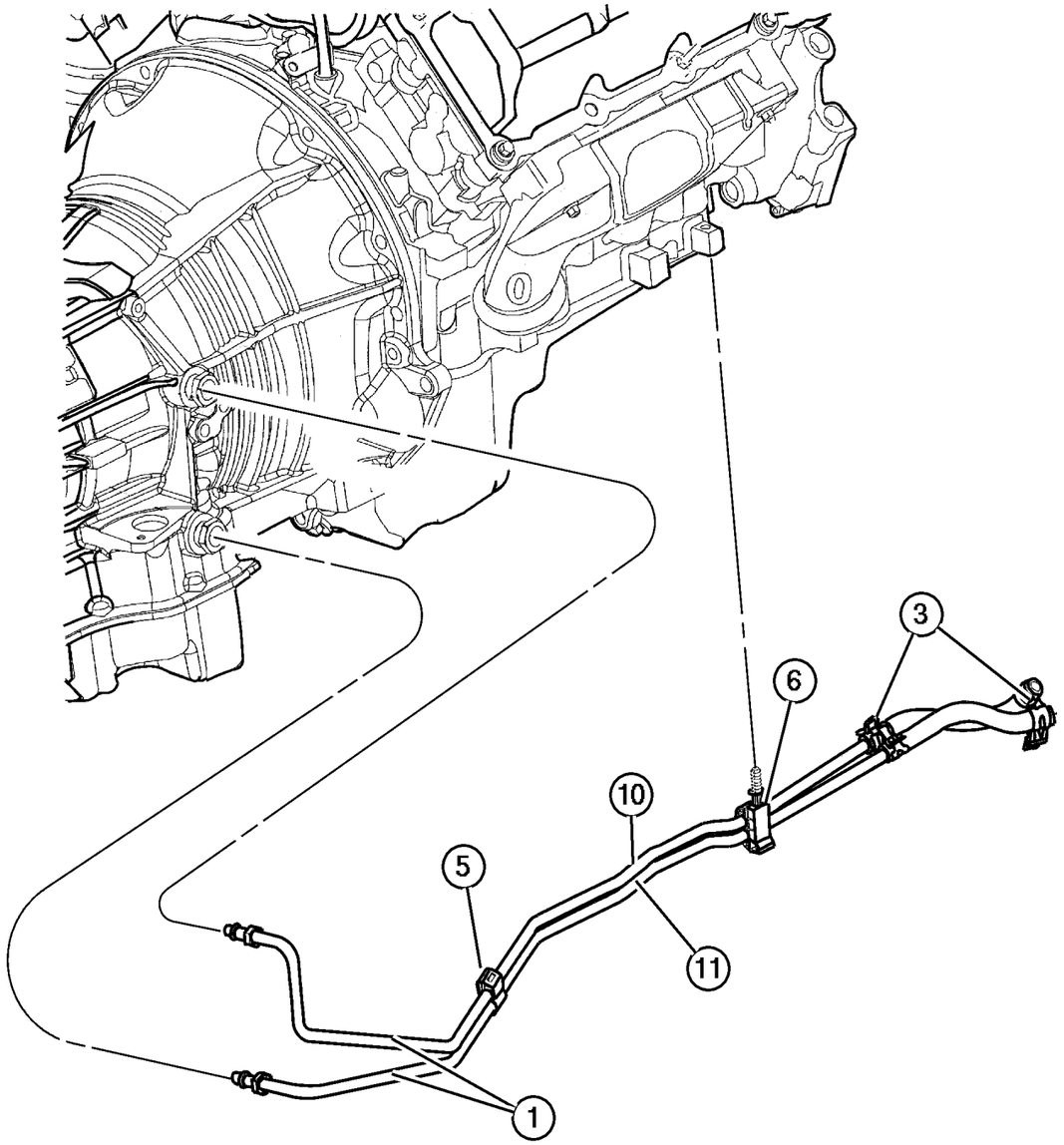

ITEM	PART NUMBER	QTY	LINE	SERIES	BODY	ENGINE	TRANS	TRIM	DESCRIPTION
Note; Sales Codes									
[EK0]= All 3.7L, 6 Cylinder Gas Engines									
[EN0]= All 2..5L 4 Cylinder Diesel Engine									
1	52079 653AC	1				EK0	DG4		TUBE & HOSE, Supply & Return
-2	5083 120AA	1				EK0	DG4		HOSE, Transmission Oil Cooler
3	52079 632AA	1				EK0	DG4		CLAMP, Oil Cooler Tube
-4	6502 081	1	J, U						CLAMP, Oil Cooler Line
5	4815 987AB	1				EK0	DG4		CLIP, Oil Cooler Tube
6	52079 878AB	1				EK0	DG4		CLIP, Oil Cooler Tube
-7									HOSE, Oil Cooler
	#52079 836AD	1				EK0	DG4		Pressure
	#52079 838AC	1				EK0	DG4		Return
	#52079 844AB	1				EN0	DG0		Pressure
	#52079 846AB	1				EN0	DG0		Return
-8									NUT, Flared Tube
	6033 878	1				EK0	DG4		Transmission Cooler Lines to Train
		1				EN0	DG0		Transmission Cooler Lines to Train
-9	#52079 877AA	1				EN0	DG0		CLIP, Oil Cooler Tube, To Oil Pan
10	#5103 255AA	1					DG6		TUBE AND HOSE, Supply
11	#5103 256AA	1					DG6		TUBE AND HOSE, Return
-12									CONNECTOR, Oil Cooler Hose
	4531 202	1	J, U				DG6		
		1	T				DG6		

JEEP LIBERTY (KJ)

SERIES	LINE	BODY	ENGINE	TRANSMISSION
P = Limited	J = LHD (4WD)	74 = 4 Dr. (104.3 WB)	ED1, ED0 = 2.4L Power Tech	DDK = 5 Speed HDManual
H = Sport	U = RHD (4WD)		EKG, EK0 = 3.7L Power Tech	DDD = 5 Speed HD Manual
M = Renegade	T = LHD (2WD)		ENJ = 2.5L 4Cyl Turbo Diesel	DG4,DGQ = Multi-Speed Auto
			ENR = 2.8L 4Cyl Turbo Diesel	DG6 = 4 Speed Auto Transm
			EN0 = 4Cyl Turbo Diesel	DG0 = All Automatic Transm
				DBB = All Manual Transm

AR = Use as required - = Non illustrated part # = New this model year **June 3, 2003**

« RETURN TO GROUP INDEX

Grille and Related Parts
Figure 007-710

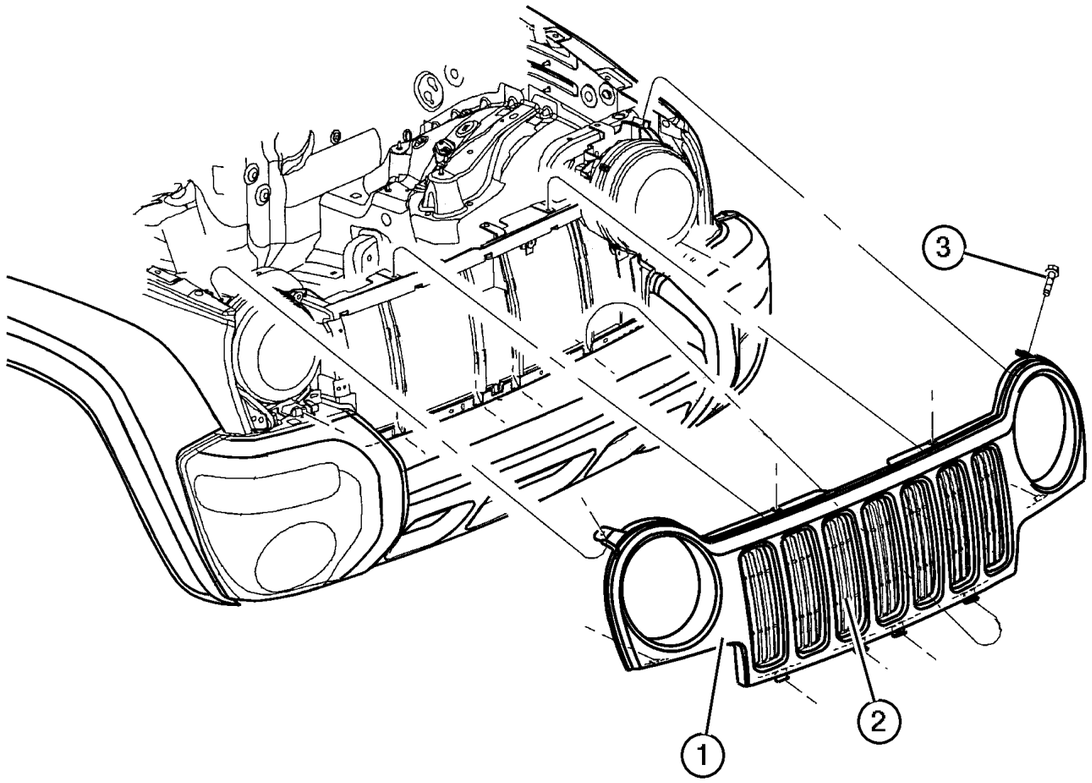

ITEM	PART NUMBER	QTY	LINE	SERIES	BODY	ENGINE	TRANS	TRIM	DESCRIPTION
1	55156 608AA	1							GRILLE, Radiator
2	55156 609AB	1							GRILLE, Texture
3	6036 366AA	4							SCREW, Tapping, .164-18x.75

JEEP LIBERTY (KJ)

SERIES	LINE	BODY	ENGINE	TRANSMISSION
P = Limited	J = LHD (4WD)	74 = 4 Dr. (104.3 WB)	ED1, ED0 = 2.4L Power Tech	DDK = 5 Speed HDManual
H = Sport	U = RHD (4WD)		EKG, EK0 = 3.7L Power Tech	DDD = 5 Speed HD Manual
M = Renegade	T = LHD (2WD)		ENJ = 2.5L 4Cyl Turbo Diesel	DG4,DGQ = Multi-Speed Auto
			ENR = 2.8L 4Cyl Turbo Diesel	DG6 = 4 Speed Auto Transm
			EN0 = 4Cyl Turbo Diesel	DG0 = All Automatic Transm
				DBB = All Manual Transm

Group – 008

Electrical

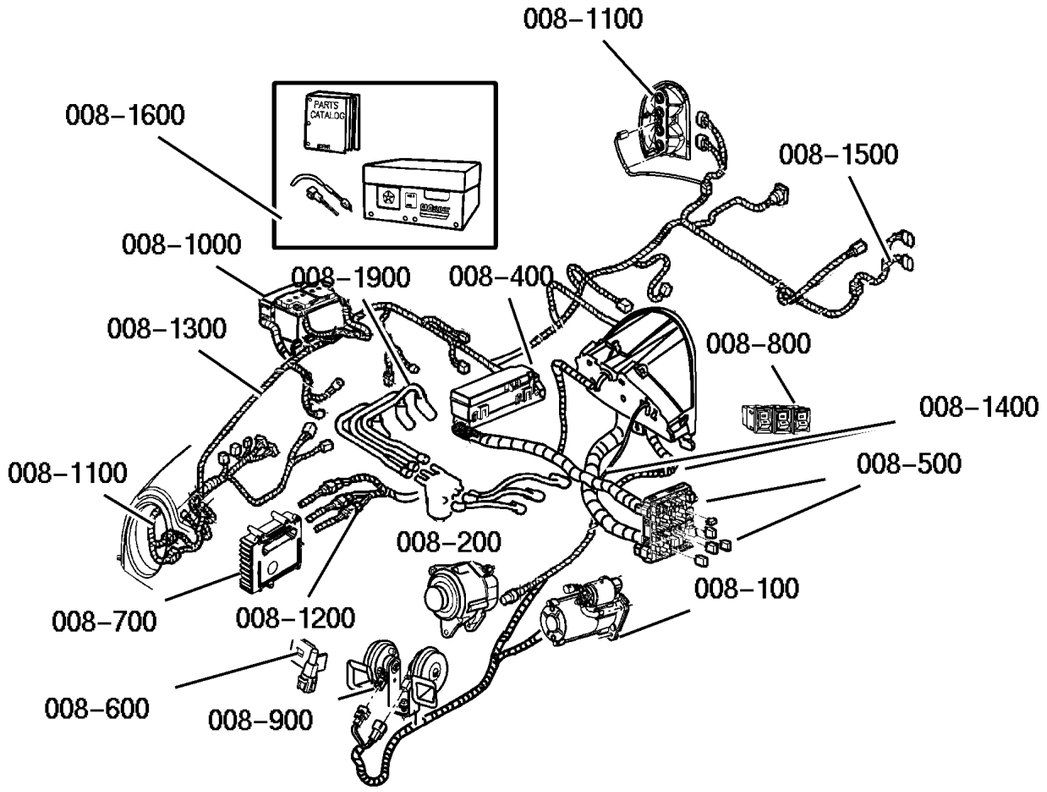

008–100 Starters	008–200 Alternators	008–400 Modules	008–500 Relays
008–600 Sensors	008–700 Single Board Engine Controllers	008–800 Switches	008–900 Horns

Group – 008

Electrical

008–1000 Battery Tray and Cables	008–1100 Lamps – Front, Rear and Courtesy	008–1200 Wiring–Engine & Related Parts	008–1300 Wiring–Headlamp to Dash
008–1400 Wiring–Instrument Panel WIRING INSTR. PANEL	008–1500 Wiring–Body & Accessories	008–1600 Wiring Repair WIRING REPAIR PKG.	008–1900 Spark Plugs–Cables–Coils

Illustration Title — Group-Fig. No.

Starters
- Starter and Mounting (2.4L Engine) . . . Fig. 008-105
- Starter and Mounting (3.7L Engine) . . . Fig. 008-110
- Starter and Mounting (2.5L Diesel Engine) . . . Fig. 008-115

Alternators
- Alternator (2.4L Engine) . . . Fig. 008-205
- Alternator (3.7L Engine) . . . Fig. 008-210
- Alternator (2.5L Diesel Engine) . . . Fig. 008-215

Modules
- Modules . . . Fig. 008-410

Relays
- Junction Block, Relays, Circuit Breaker . . . Fig. 008-510

Sensors
- Sensor, Engine (2.4L Engine) . . . Fig. 008-605
- Sensors, Engine (3.7L Engine) . . . Fig. 008-610
- Sensors, Engine (2.5L Diesel) . . . Fig. 008-615
- Sensor (Drive Train) . . . Fig. 008-620
- Sensor (Body) . . . Fig. 008-630

Single Board Engine Controllers
- JTEC Modules & Solenoids . . . Fig. 008-710

Switches
- Switches (Instrument Panel and Console) . . . Fig. 008-810
- Switches (Drive Train) . . . Fig. 008-820
- Switches (Body) . . . Fig. 008-830

Horns
- Horns . . . Fig. 008-910

Battery Tray and Cables
- Battery Tray & Cables . . . Fig. 008-1010

Lamps - Front, Rear and Courtesy
- Lamp, Front . . . Fig. 008-1110
- Lamps Roof (Renegade) . . . Fig. 008-1115
- Lamp, Rear . . . Fig. 008-1120
- Lamp, Courtesy . . . Fig. 008-1130
- Bulbs & Sockets . . . Fig. 008-1140

Wiring-Engine & Related Parts
- Wiring, Engine & Related Parts . . . Fig. 008-1210

GROUP 8 - Electrical

Illustration Title — Group-Fig. No.

Wiring-Headlamp to Dash
- Wiring, Headlamp / Dash . . . Fig. 008-1310

Wiring-Instrument Panel
- Wiring Instrument Panel . . . Fig. 008-1410

Wiring-Body & Accessories
- Wiring, Body & Accessories . . . Fig. 008-1510

Wiring Repair
- Wiring, Repair Package . . . Fig. 008-1610

Spark Plugs-Cables-Coils
- Spark Plug - Coil . . . Fig. 008-1910

Starter and Mounting (2.4L Engine)
Figure 008-105

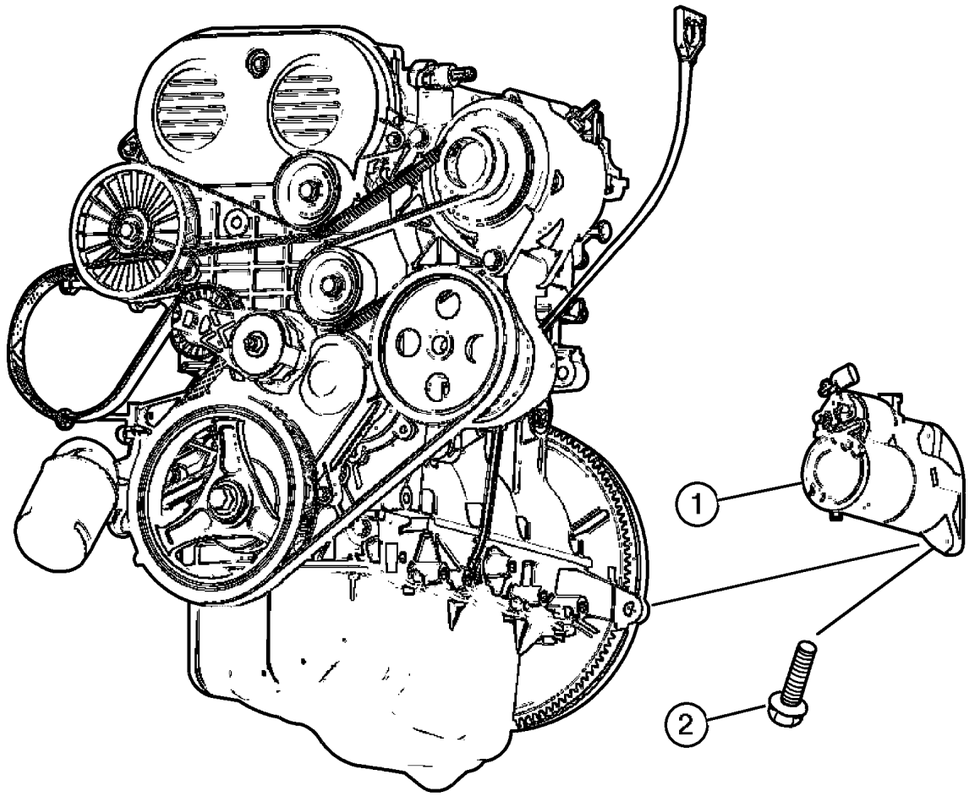

ITEM	PART NUMBER	QTY	LINE	SERIES	BODY	ENGINE	TRANS	TRIM	DESCRIPTION
Notes:									
[ED0] = 2.4L 4 Cylinder Engine									
1	#56041 436AB	1				ED0			STARTER
2	6102 120AA	1				ED0			SCREW, Alternator

JEEP LIBERTY (KJ)

SERIES	LINE	BODY	ENGINE	TRANSMISSION
P = Limited	J = LHD (4WD)	74 = 4 Dr. (104.3 WB)	ED1, ED0 = 2.4L Power Tech	DDK = 5 Speed HDManual
H = Sport	U = RHD (4WD)		EKG, EK0 = 3.7L Power Tech	DDD = 5 Speed HD Manual
M = Renegade	T = LHD (2WD)		ENJ = 2.5L 4Cyl Turbo Diesel	DG4,DGQ = Multi-Speed Auto
			ENR = 2.8L 4Cyl Turbo Diesel	DG6 = 4 Speed Auto Transm
			EN0 = 4Cyl Turbo Diesel	DG0 = All Automatic Transm
				DBB = All Manual Transm

Starter and Mounting (3.7L Engine)
Figure 008-110

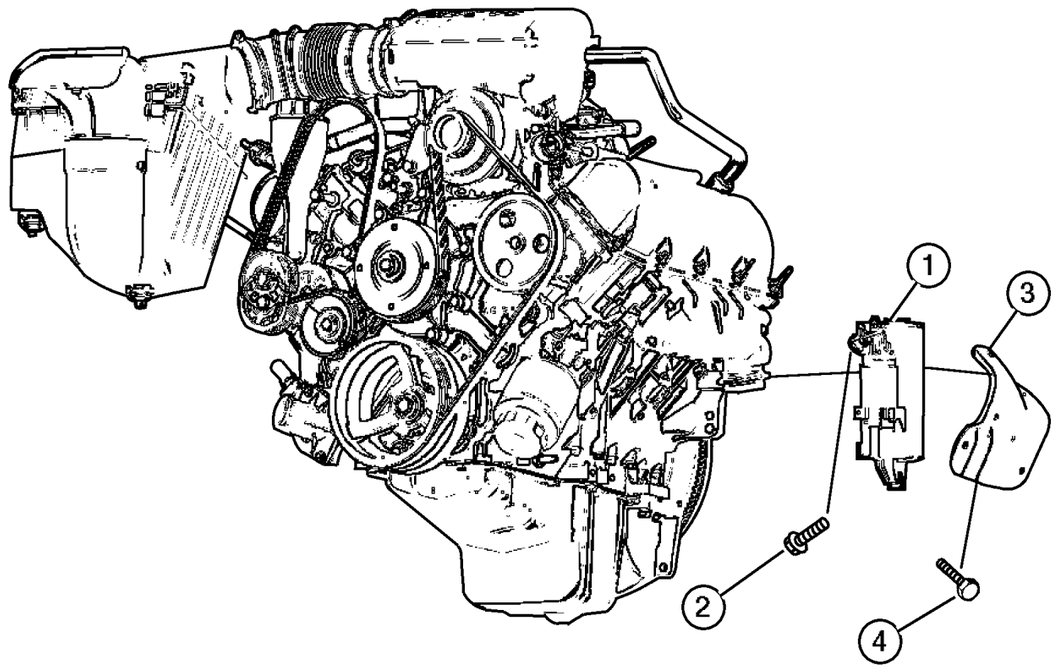

ITEM	PART NUMBER	QTY	LINE	SERIES	BODY	ENGINE	TRANS	TRIM	DESCRIPTION
Notes:									
[ED0]=2.4L 4 Cylinder Engine									
[EK0]=3.7L V6 Engine									
1	#56041 641AD	1				EK0			STARTER
2	6102 120AA	2				ED0, EK0			SCREW, Alternator
3	56044 116AB	1				EK0			SHIELD, Starter
4									SCREW, Hex Flange Head, M12X1.75X110.00, M6x1x12, (NOT SERVICED) (Not Serviced)

JEEP LIBERTY (KJ)

SERIES	LINE	BODY	ENGINE	TRANSMISSION
P = Limited	J = LHD (4WD)	74 = 4 Dr. (104.3 WB)	ED1, ED0 = 2.4L Power Tech	DDK = 5 Speed HDManual
H = Sport	U = RHD (4WD)		EKG, EK0 = 3.7L Power Tech	DDD = 5 Speed HD Manual
M = Renegade	T = LHD (2WD)		ENJ = 2.5L 4Cyl Turbo Diesel	DG4,DGQ = Multi-Speed Auto
			ENR = 2.8L 4Cyl Turbo Diesel	DG6 = 4 Speed Auto Transm
			EN0 = 4Cyl Turbo Diesel	DG0 = All Automatic Transm
				DBB = All Manual Transm

Starter and Mounting (2.5L Diesel Engine)
Figure 008-115

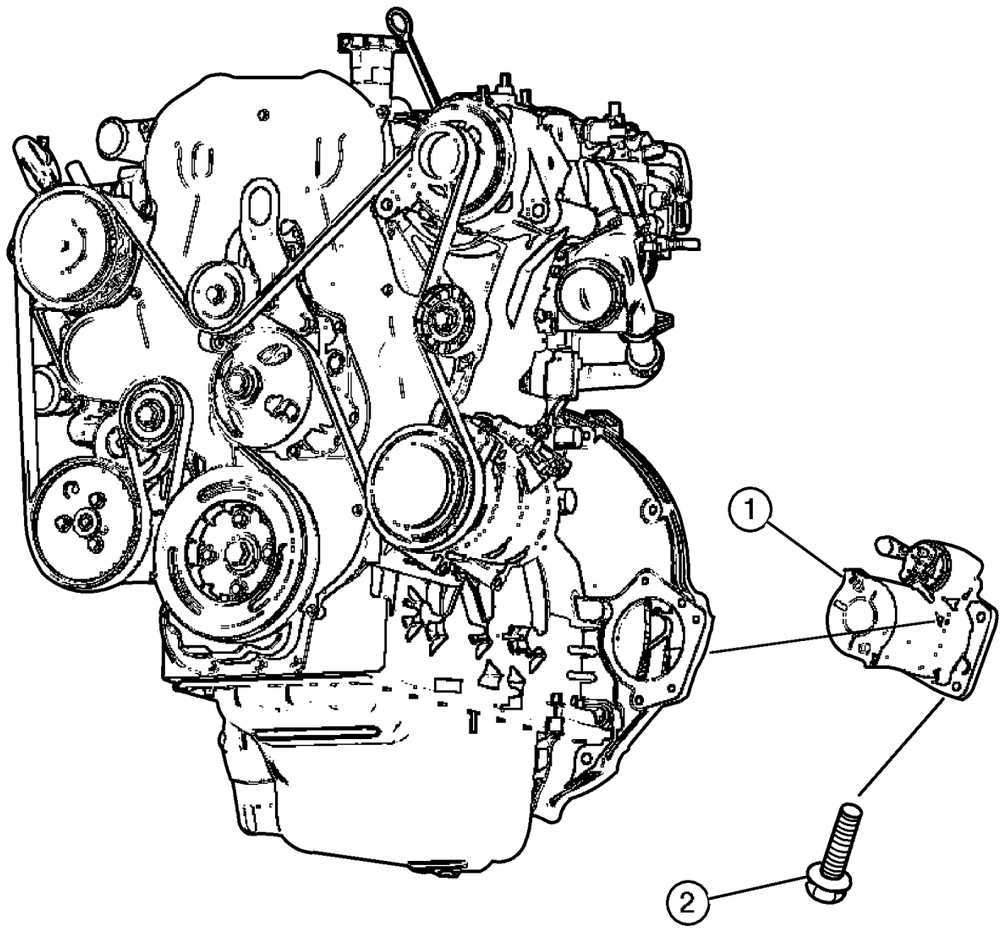

ITEM	PART NUMBER	QTY	LINE	SERIES	BODY	ENGINE	TRANS	TRIM	DESCRIPTION
Notes:									
[EN0] = 2.5L Diesel Engine									
1	#56041 579AB	1				EN0			STARTER
2	6504 171	3				EN0			SCREW, Hex Flange Head, M8x1.25x32
-3									WASHER, Starter
	4723 279	1				EN0	DBB		
		1				EN0	DG0		

JEEP LIBERTY (KJ)

SERIES	LINE	BODY	ENGINE	TRANSMISSION
P = Limited	J = LHD (4WD)	74 = 4 Dr. (104.3 WB)	ED1, ED0 = 2.4L Power Tech	DDK = 5 Speed HDManual
H = Sport	U = RHD (4WD)		EKG, EK0 = 3.7L Power Tech	DDD = 5 Speed HD Manual
M = Renegade	T = LHD (2WD)		ENJ = 2.5L 4Cyl Turbo Diesel	DG4,DGQ = Multi-Speed Auto
			ENR = 2.8L 4Cyl Turbo Diesel	DG6 = 4 Speed Auto Transm
			EN0 = 4Cyl Turbo Diesel	DG0 = All Automatic Transm
				DBB = All Manual Transm

AR = Use as required - = Non illustrated part # = New this model year **June 3, 2003**

« RETURN TO GROUP INDEX

Alternator (2.4L Engine)
Figure 008-205

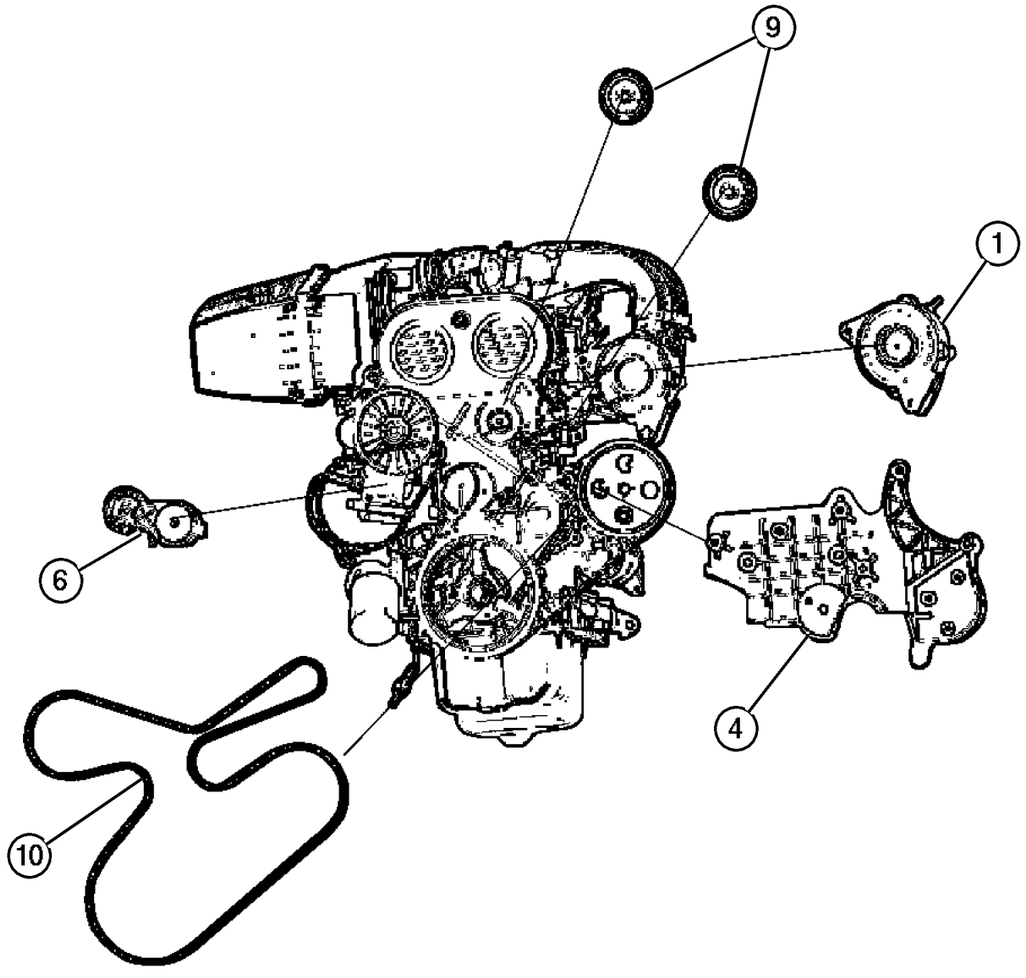

ITEM	PART NUMBER	QTY	LINE	SERIES	BODY	ENGINE	TRANS	TRIM	DESCRIPTION
Notes:									
[ED0] = 2.4L 4 Cylinder Engine									
1	56044 532AB	1				ED0			ALTERNATOR, 136 Amp
-2	6102 120AA	1				ED0			SCREW, Alternator, Alternator mounting
-3	6506 737AA	2				ED0			SCREW, Alternator Bracket, Bracket to Block
4	4861 371AA	1				ED0			BRACKET, Alternator
-5	6506 990AA	3				ED0			SCREW, Hex Head, M10x1.5x40, Alternator bracket to block
6	4861 277AB	1				ED0			TENSIONER, Belt
-7	6506 991AA	1				ED0			STUD, Alternator, Tensioner mounting
-8	6102 167AA	1				ED0			NUT AND WASHER
9	53013 324AA	2				ED0			PULLEY, Idler
10									BELT, Accessory Drive
	5281 351AC	1				ED0			without Air Conditioning
	53013 352AC	1				ED0			with Air Conditioning
-11	53013 579AA	1				ED0			PULLEY, Alternator, Over Running Clutch
-12									CAP, Alternator Pulley
	53013 581AA	1				ED0			[BA9]
		1				ED0			[BAZ]
-13	3420 2781	1				ED0			SCREW, Idler Pulley

JEEP LIBERTY (KJ)

SERIES	LINE	BODY	ENGINE	TRANSMISSION
P = Limited	J = LHD (4WD)	74 = 4 Dr. (104.3 WB)	ED1, ED0 = 2.4L Power Tech	DDK = 5 Speed HDManual
H = Sport	U = RHD (4WD)		EKG, EK0 = 3.7L Power Tech	DDD = 5 Speed HD Manual
M = Renegade	T = LHD (2WD)		ENJ = 2.5L 4Cyl Turbo Diesel	DG4,DGQ = Multi-Speed Auto
			ENR = 2.8L 4Cyl Turbo Diesel	DG6 = 4 Speed Auto Transm
			EN0 = 4Cyl Turbo Diesel	DG0 = All Automatic Transm
				DBB = All Manual Transm

AR = Use as required - = Non illustrated part # = New this model year **June 3, 2003**

« RETURN TO GROUP INDEX

Alternator (3.7L Engine)
Figure 008-210

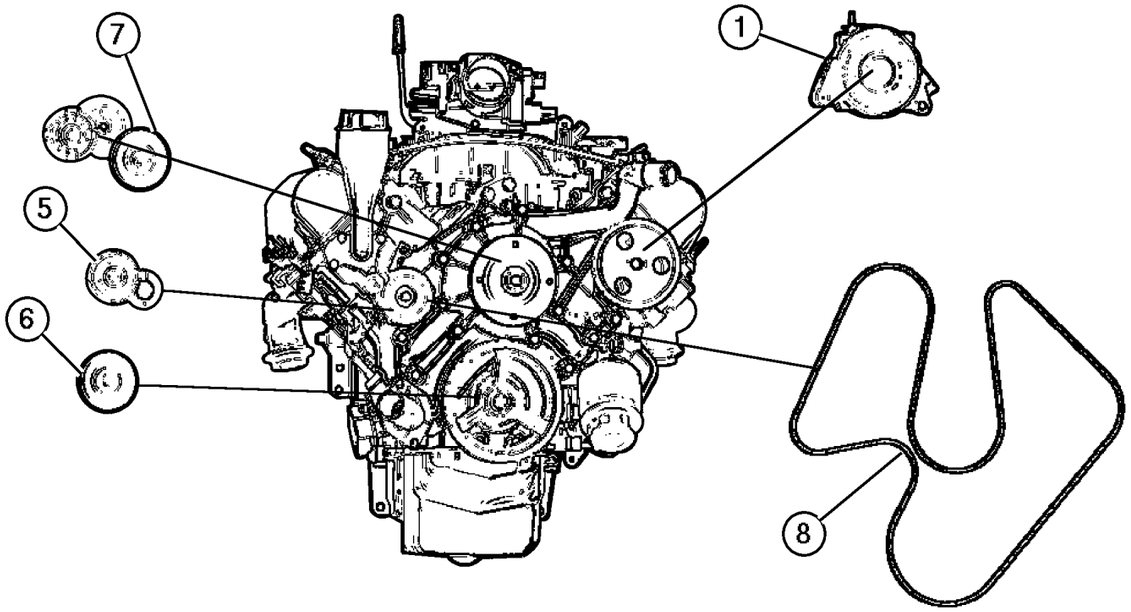

ITEM	PART NUMBER	QTY	LINE	SERIES	BODY	ENGINE	TRANS	TRIM	DESCRIPTION
Notes:									
[ED0]=2.4L 4 Cylinder Engine									
[EK0] = 3.7L V6 Engine									
1									ALTERNATOR
	56029 914AA	1		M		EK0			160 Amp
	#56041 693AC	1		H, P		EK0			136 Amp
-2	6102 120AA	2				ED0, EK0			SCREW, Alternator
-3	6504 344	1				EK0			SCREW AND WASHER, Hex Head, Alternator to Front Cover Attaching
-4	6505 482AA	1				EK0			SCREW AND WASHER, Hex Head, M8x1.25x50, Alternator to Cylinder Head
5	5303 0959	1				EK0			BRACKET, Idler Pulley
6	5303 1045	1				EK0			PULLEY, Idler
7	53030 958AB	1				EK0			TENSIONER, Alternator Belt
8	53032 037AI	1				EK0			BELT, Accessory Drive
-9	6505 488AA	1				EK0			SCREW AND WASHER, Hex, Alternator to Front Cover attaching

JEEP LIBERTY (KJ)

SERIES	LINE	BODY	ENGINE	TRANSMISSION
P = Limited	J = LHD (4WD)	74 = 4 Dr. (104.3 WB)	ED1, ED0 = 2.4L Power Tech	DDK = 5 Speed HDManual
H = Sport	U = RHD (4WD)		EKG, EK0 = 3.7L Power Tech	DDD = 5 Speed HD Manual
M = Renegade	T = LHD (2WD)		ENJ = 2.5L 4Cyl Turbo Diesel	DG4,DGQ = Multi-Speed Auto
			ENR = 2.8L 4Cyl Turbo Diesel	DG6 = 4 Speed Auto Transm
			EN0 = 4Cyl Turbo Diesel	DG0 = All Automatic Transm
				DBB = All Manual Transm

AR = Use as required - = Non illustrated part # = New this model year **June 3, 2003**

« RETURN TO GROUP INDEX

Alternator (2.5L Diesel Engine)
Figure 008-215

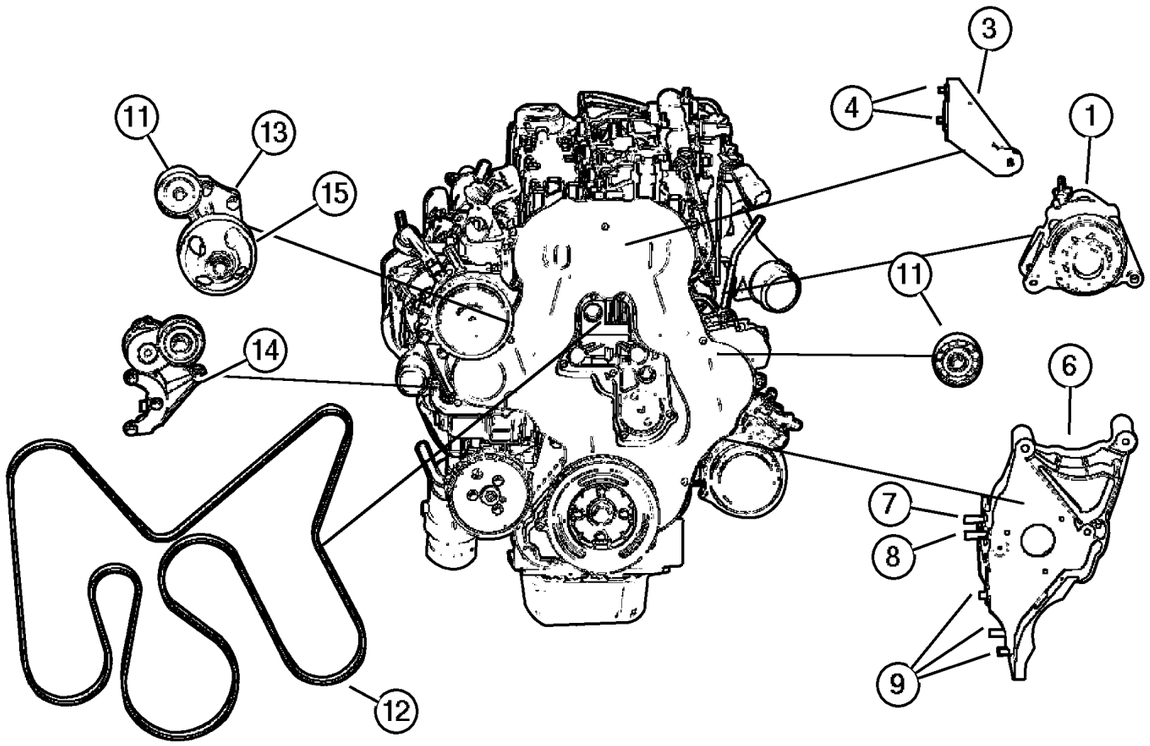

ITEM	PART NUMBER	QTY	LINE	SERIES	BODY	ENGINE	TRANS	TRIM	DESCRIPTION
Notes:									
[ENJ]=2.5 L 4 Cylinder Diesel Turbo Engine									
[EN0]=All 4/5 Cylinder Turbo Diesel Engines									
[DBB]=Manual Transmission									
1									ALTERNATOR
	#56041 578AE	1				EN0	DG0		
		1				EN0	DBB		
-2									BOLT, Hex Flange Head
	5015 067AA	1				EN0	DBB		
		1				EN0	DG0		
3	53013 495AA	1				ENJ			BRACKET, Alternator
4	6501 474	3				EN0			BOLT, Hex Head, M8x1.25x16
-5									NUT, Hex Flange Lock, M10x1.5
	6502 696	3	J			EN0			
		3	U			EN0			
6									BRACKET
	5072 753AA	1				EN0	DBB		
		1				EN0	DG0		
7									SCREW
	5003 724AA	1				EN0	DBB		
		1				EN0	DG0		
8									BOLT, Adaptor Plate
	5003 532AA	1				EN0	DBB		
		4				EN0	DG0		
9									SCREW
	5066 939AA	3				EN0	DBB		
		3				EN0	DG0		
-10									PIN
	5066 862AA	2				EN0	DBB		Alignment Pin for Mounting Bracket
		2				EN0	DG0		Alignment Pin for Mounting Bracket
11									PULLEY, Idler
	5066 938AA	2				EN0	DBB		
		2				EN0	DG0		
12									BELT, Accessory Drive
	5072 437AB	1				EN0	DBB		
		1				EN0	DG0		
13									BRACKET, Tensioner
	#5093 935AA	1				EN0	DBB		
		1				EN0	DG0		
14									TENSIONER, Belt
	5072 440AB	1				EN0	DBB		

JEEP LIBERTY (KJ)

SERIES	LINE	BODY	ENGINE	TRANSMISSION
P = Limited	J = LHD (4WD)	74 = 4 Dr. (104.3 WB)	ED1, ED0 = 2.4L Power Tech	DDK = 5 Speed HDManual
H = Sport	U = RHD (4WD)		EKG, EK0 = 3.7L Power Tech	DDD = 5 Speed HD Manual
M = Renegade	T = LHD (2WD)		ENJ = 2.5L 4Cyl Turbo Diesel	DG4,DGQ = Multi-Speed Auto
			ENR = 2.8L 4Cyl Turbo Diesel	DG6 = 4 Speed Auto Transm
			EN0 = 4Cyl Turbo Diesel	DG0 = All Automatic Transm
				DBB = All Manual Transm

AR = Use as required - = Non illustrated part # = New this model year **June 3, 2003**

« RETURN TO GROUP INDEX »

Alternator (2.5L Diesel Engine)
Figure 008-215

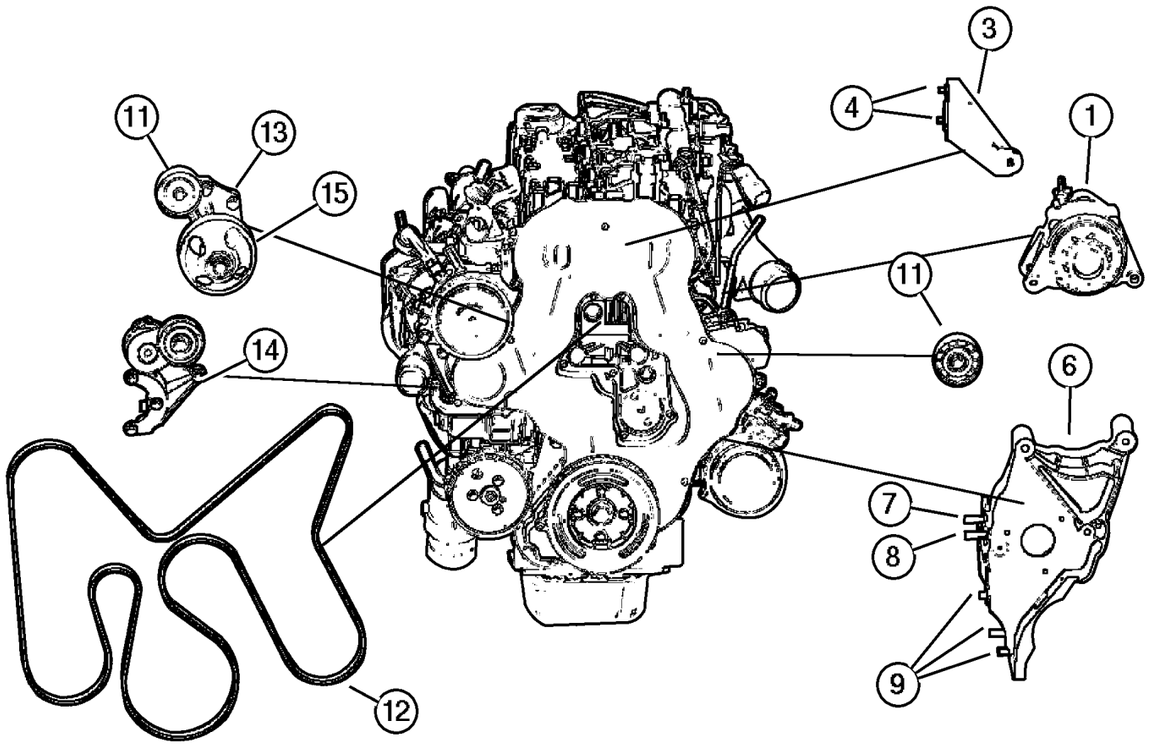

ITEM	PART NUMBER	QTY	LINE	SERIES	BODY	ENGINE	TRANS	TRIM	DESCRIPTION
		1				EN0	DG0		
15									PUMP, Power Steering, see group 19, (NOT SERVICED) (Not Serviced)
-16									PULLEY, Alternator
	#53013 554AC	1				EN0	DG0		Decoupler
		1				EN0	DBB		Decoupler
-17									BOLT, Alternator Bracket
	4897 488AA	1				EN0	DBB		
		1				EN0	DG0		
-18									CAP, Alternator Pulley
	53013 559AA	1				EN0	DBB		
		1				EN0	DG0		

JEEP LIBERTY (KJ)

SERIES	LINE	BODY	ENGINE	TRANSMISSION
P = Limited	J = LHD (4WD)	74 = 4 Dr. (104.3 WB)	ED1, ED0 = 2.4L Power Tech	DDK = 5 Speed HDManual
H = Sport	U = RHD (4WD)		EKG, EK0 = 3.7L Power Tech	DDD = 5 Speed HD Manual
M = Renegade	T = LHD (2WD)		ENJ = 2.5L 4Cyl Turbo Diesel	DG4,DGQ = Multi-Speed Auto
			ENR = 2.8L 4Cyl Turbo Diesel	DG6 = 4 Speed Auto Transm
			EN0 = 4Cyl Turbo Diesel	DG0 = All Automatic Transm
				DBB = All Manual Transm

AR = Use as required - = Non illustrated part # = New this model year

June 3, 2003

« RETURN TO GROUP INDEX

Modules
Figure 008-410

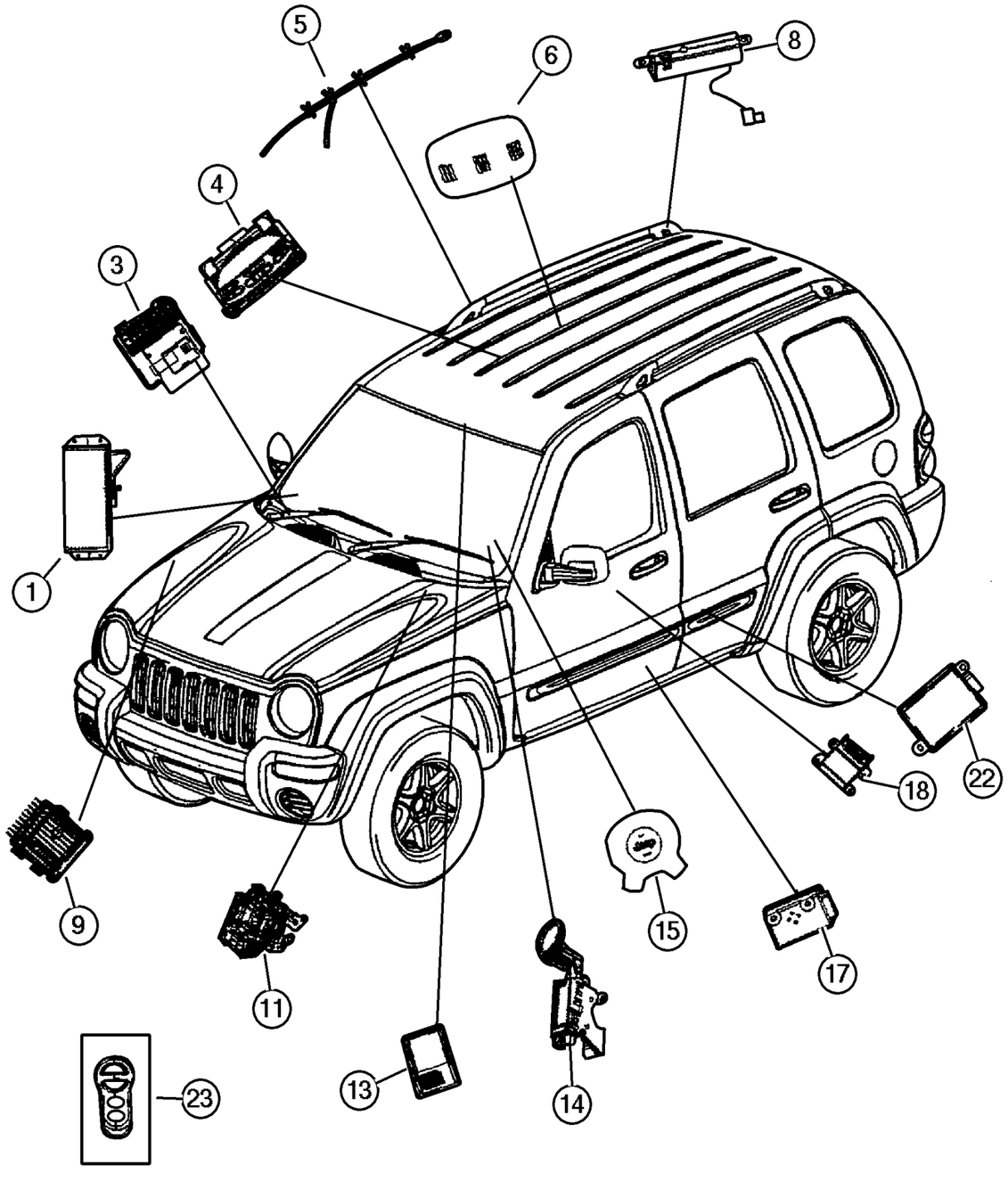

ITEM	PART NUMBER	QTY	LINE	SERIES	BODY	ENGINE	TRANS	TRIM	DESCRIPTION
Notes:									
[DG0]=All Automatic Transmissions									
[DG4] =Multi-Speed Automatic Transmission									
1	55315 020AI	1							AIR BAG, Passenger
-2									SCREW, Hex Flange Head, M6x1x25
	6506 220AA	1					DG0		Airbag Attachment
		1					DG4		Airbag Attachment
3									MODULE, Body Controller
	#5093 037AA	1	J, T						Without Keyless Entry & without Foglamp
	#5093 038AA	1	J, T						With Keyless Entry & with or without Foglamp
		1	J, U						Export
4									MODULE, Overhead Console
	#56010 349AB	1	J, T						Export
	#56010 351AB	1							
5									AIR BAG, Side Curtain
	#55315 018AH	1							Right
	#55315 019AH	1							Left
6	5GV82 TL2AF	1							MODULE, Intrusion, Export
-7	56010 331AB	1							RETAINER, Electronic Module, Export
8									ANTENNA
	56038 527AD	1							Export
	56038 526AE	1							
9									MODULE, Transmission Control
	#56044 573AA	1				EKG	DG4		
	#56044 585AB	1				EN0	DGQ		
	#56044 592AA	1					DG6		[DMF]
	#56044 192AE	1					DG6		[DME]
-10									BRACKET, Transmission Control Unit
	56041 377AB	1	J, T				DG0		
	56041 809AA	1	U				DG0		
11	#5083 084AA	1							MODULE, Anti-lock Brakes
-12	#5083 083AA	1							CONTROL UNIT, Anti-Lock Brake
13									RECEIVER, Keyless Entry
	56010 424AA	1							315 MHZ BCM Interconnect (Export)
	#56010 394AA	1							315 MHZ BCM Interconnect

JEEP LIBERTY (KJ)

SERIES	LINE	BODY	ENGINE	TRANSMISSION
P = Limited	J = LHD (4WD)	74 = 4 Dr. (104.3 WB)	ED1, ED0 = 2.4L Power Tech	DDK = 5 Speed HDManual
H = Sport	U = RHD (4WD)		EKG, EK0 = 3.7L Power Tech	DDD = 5 Speed HD Manual
M = Renegade	T = LHD (2WD)		ENJ = 2.5L 4Cyl Turbo Diesel	DG4,DGQ = Multi-Speed Auto
			ENR = 2.8L 4Cyl Turbo Diesel	DG6 = 4 Speed Auto Transm
			EN0 = 4Cyl Turbo Diesel	DG0 = All Automatic Transm
				DBB = All Manual Transm

AR = Use as required - = Non illustrated part # = New this model year **June 3, 2003**

« RETURN TO GROUP INDEX »

Modules
Figure 008-410

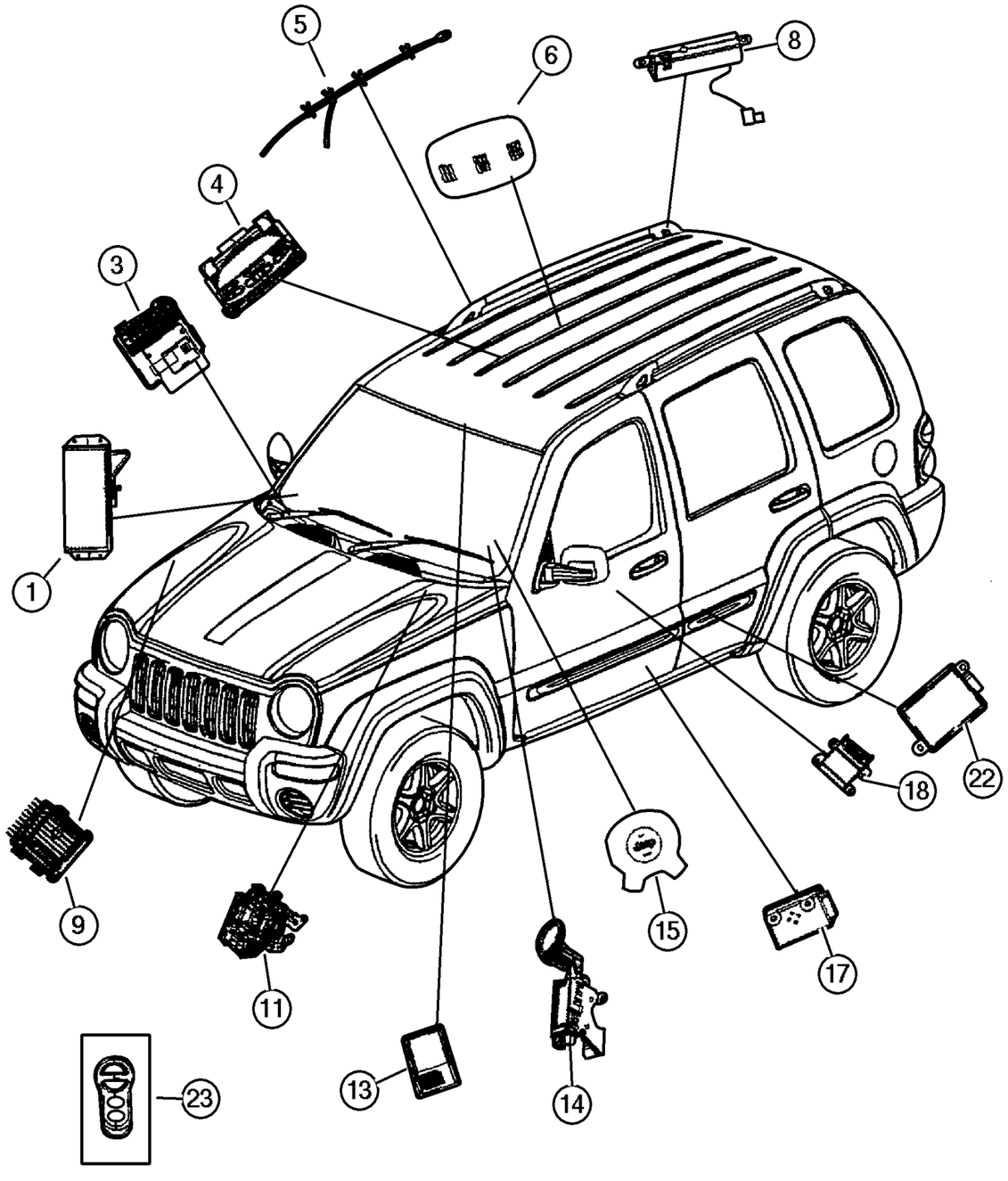

ITEM	PART NUMBER	QTY	LINE	SERIES	BODY	ENGINE	TRANS	TRIM	DESCRIPTION
	#56010 395AA	1							433.92 MHZ BCM Interconnect (Export)
14	56010 209AC	1							MODULE, Immobilizer
15									AIR BAG, Driver
	5GG30 DX9AE	1		H, M					12/17/01 & After
	5HK02 1X9AE	1		P					12/17/01 & After
-16									SCREW, Hex Flange Head, M6x1x25
	6506 220AA	1					DG0		Airbag Attachment
		1					DG4		Airbag Attachment
17									MODULE, Heated Seat Control
	56010 113AA	1	J, U						Export
		1	J, T						
18	#56010 501AH	1							MODULE, Occupant Restraint
-19	55360 352AB	1							BRACKET, Air Bag Control Module
-20									SCREW, Hex Flange Head, M6x1x25
	6506 220AA	1					DG0		Airbag Attaching
		1					DG4		Airbag Attaching
-21	56010 416AA	1							COVER, Module
22									MODULE, Air Bag Control
	56009 898AC	1							Side Air Bag Control, Right
	56009 899AC	1							Side Air Bag Control, Left
23									TRANSMITTER, Keyless Entry
	4602 260AA	2							
	4602 261AB	2							433.92 MHZ BCM, Export
	56010 562AB	2							315 MHZ BCM, Export
-24									LABEL, Air Bag Warning
	4595 746AA	1							Airbag Warning / Child Seat Use, Located on End Cap (Export), Right
	4649 282AA	4							Airbag Warning Seat Side (English)
	4787 437AA	2							Airbag Warning, Sunvisor (English / French (Canada)
	4649 281AA	4							Airbag Warning Seat Side (English / French (Canada)
-25									MODULE, Overhead Console
	#56010 349AB	1	J, T						
	#56010 351AB	1							Export

JEEP LIBERTY (KJ)

SERIES	LINE	BODY	ENGINE	TRANSMISSION
P = Limited	J = LHD (4WD)	74 = 4 Dr. (104.3 WB)	ED1, ED0 = 2.4L Power Tech	DDK = 5 Speed HDManual
H = Sport	U = RHD (4WD)		EKG, EK0 = 3.7L Power Tech	DDD = 5 Speed HD Manual
M = Renegade	T = LHD (2WD)		ENJ = 2.5L 4Cyl Turbo Diesel	DG4,DGQ = Multi-Speed Auto
			ENR = 2.8L 4Cyl Turbo Diesel	DG6 = 4 Speed Auto Transm
			EN0 = 4Cyl Turbo Diesel	DG0 = All Automatic Transm
				DBB = All Manual Transm

AR = Use as required - = Non illustrated part # = New this model year

June 3, 2003

« RETURN TO GROUP INDEX

«

Junction Block, Relays, Circuit Breaker
Figure 008-510

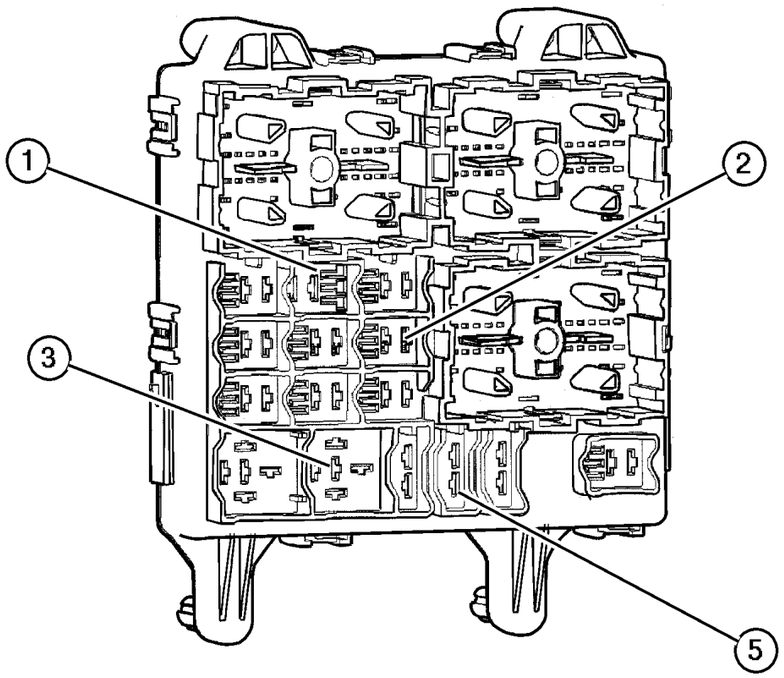

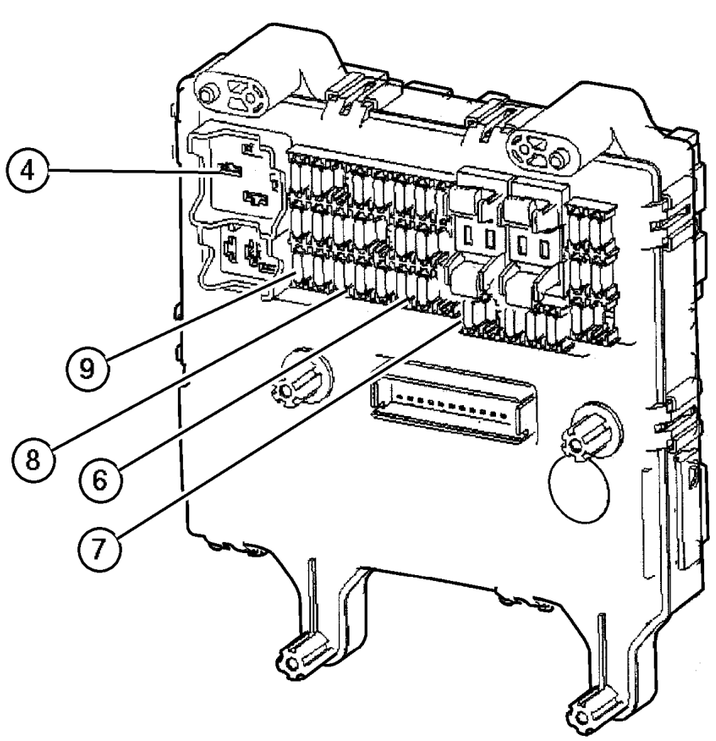

ITEM	PART NUMBER	QTY	LINE	SERIES	BODY	ENGINE	TRANS	TRIM	DESCRIPTION
1									JUNCTION BLOCK, Relay
	56009 987AF	1	J, T						With Keyless Entry
		1	J, U						With Keyless Entry
	56010 295AF	1							Without Keyless Entry
2	4671 168	1							RELAY, Mini, High Beam, Door Locks, Foglamp
3	4848 879AB	1							RELAY, Electrical, Rear Defogger
4									RELAY
	56041 891AD	1				ED0, EK0			Radiator Fan
	56042 216AB	1							Daytime Running Lamp
5									BREAKER, Circuit
	5600 7290	1							18 AMP
	5602 1543	1							25 AMP
6	00AT M10	1	J, T						FUSE, Mini, 10 AMP, Red
7	00AT M15	1	J, T						FUSE, Mini, 15 AMP, Light Blue
8	00AT M20	1	J, T						FUSE, Mini, 20 AMP, Yellow
9									FUSE, Mini, 30 AMP, Green
	00AT M30	AR	J, T			EN0	DG0		
		AR	J, T			EN0	DBB		
		AR	J, T			ED0, EK0	DBB		
-10									PULLER, Fuse
	5072 937AA	1	U						
		1	J, T						
-11									BRACKET, Junction Block
	56010 333AD	1	J, T						
	56010 334AD	1	U						

JEEP LIBERTY (KJ)

SERIES	LINE	BODY	ENGINE	TRANSMISSION
P = Limited	J = LHD (4WD)	74 = 4 Dr. (104.3 WB)	ED1, ED0 = 2.4L Power Tech	DDK = 5 Speed HDManual
H = Sport	U = RHD (4WD)		EKG, EK0 = 3.7L Power Tech	DDD = 5 Speed HD Manual
M = Renegade	T = LHD (2WD)		ENJ = 2.5L 4Cyl Turbo Diesel	DG4,DGQ = Multi-Speed Auto
			ENR = 2.8L 4Cyl Turbo Diesel	DG6 = 4 Speed Auto Transm
			EN0 = 4Cyl Turbo Diesel	DG0 = All Automatic Transm
				DBB = All Manual Transm

AR = Use as required - = Non illustrated part # = New this model year **June 3, 2003**

« RETURN TO GROUP INDEX

Sensor, Engine (2.4L Engine)
Figure 008-605

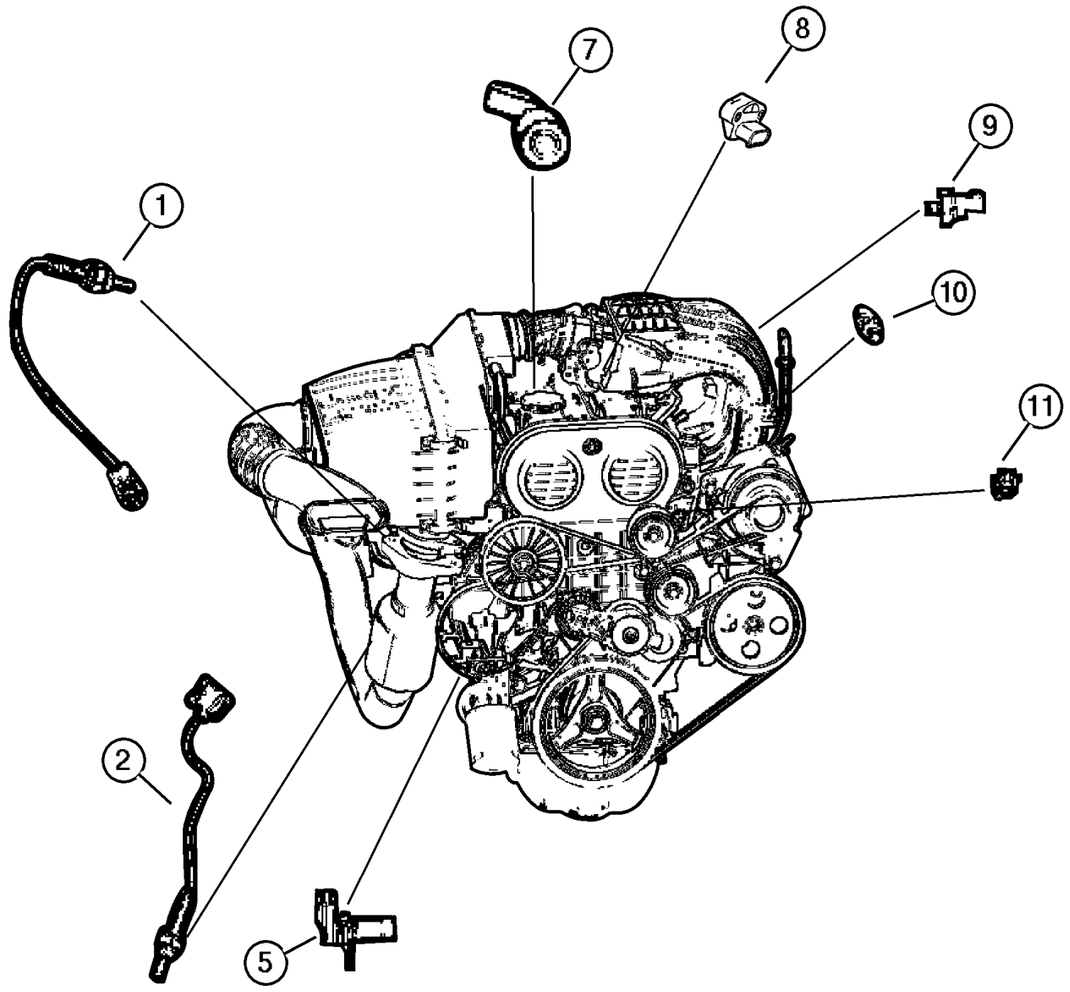

ITEM	PART NUMBER	QTY	LINE	SERIES	BODY	ENGINE	TRANS	TRIM	DESCRIPTION
Notes:									
[ED0]=2.4L 4 Cylinder Engine									
1	56031 110AA	1				ED0			SENSOR, Oxygen, Before Catalyst
2	56029 112AA	1				ED0			SENSOR, Oxygen, After Catalyst
-3	6503 486	1				ED0			SCREW, Tapping, Oxygen Sensor Wiring Bracket attaching
-4	56044 085AA	2				ED0			PLUG, Oxygen Sensor, Leaded Fuel Only
5	56041 552AD	1				ED0			SENSOR, Crankshaft Position
-6	6506 492AA	1				ED0			SCREW, Crank Sensor Mounting
7	5072 759AA	1				ED0			SENSOR, Camshaft
8	56028 364AA	1				ED0			SENSOR, Air Temperature
9									SENSOR, Knock, (NOT REQUIRED)
10	5602 7873	1				ED0			SENSOR, Coolant Temperature
11	5019 411AB	1				EK0			SENSOR, Throttle Position
-12									O RING
	5013 320AA	1	T			ED0	DDK		Speed Sensor
		1	J, U			ED0	DDK		Speed Sensor

JEEP LIBERTY (KJ)

SERIES	LINE	BODY	ENGINE	TRANSMISSION
P = Limited	J = LHD (4WD)	74 = 4 Dr. (104.3 WB)	ED1, ED0 = 2.4L Power Tech	DDK = 5 Speed HDManual
H = Sport	U = RHD (4WD)		EKG, EK0 = 3.7L Power Tech	DDD = 5 Speed HD Manual
M = Renegade	T = LHD (2WD)		ENJ = 2.5L 4Cyl Turbo Diesel	DG4,DGQ = Multi-Speed Auto
			ENR = 2.8L 4Cyl Turbo Diesel	DG6 = 4 Speed Auto Transm
			EN0 = 4Cyl Turbo Diesel	DG0 = All Automatic Transm
				DBB = All Manual Transm

Sensors, Engine (3.7L Engine)
Figure 008-610

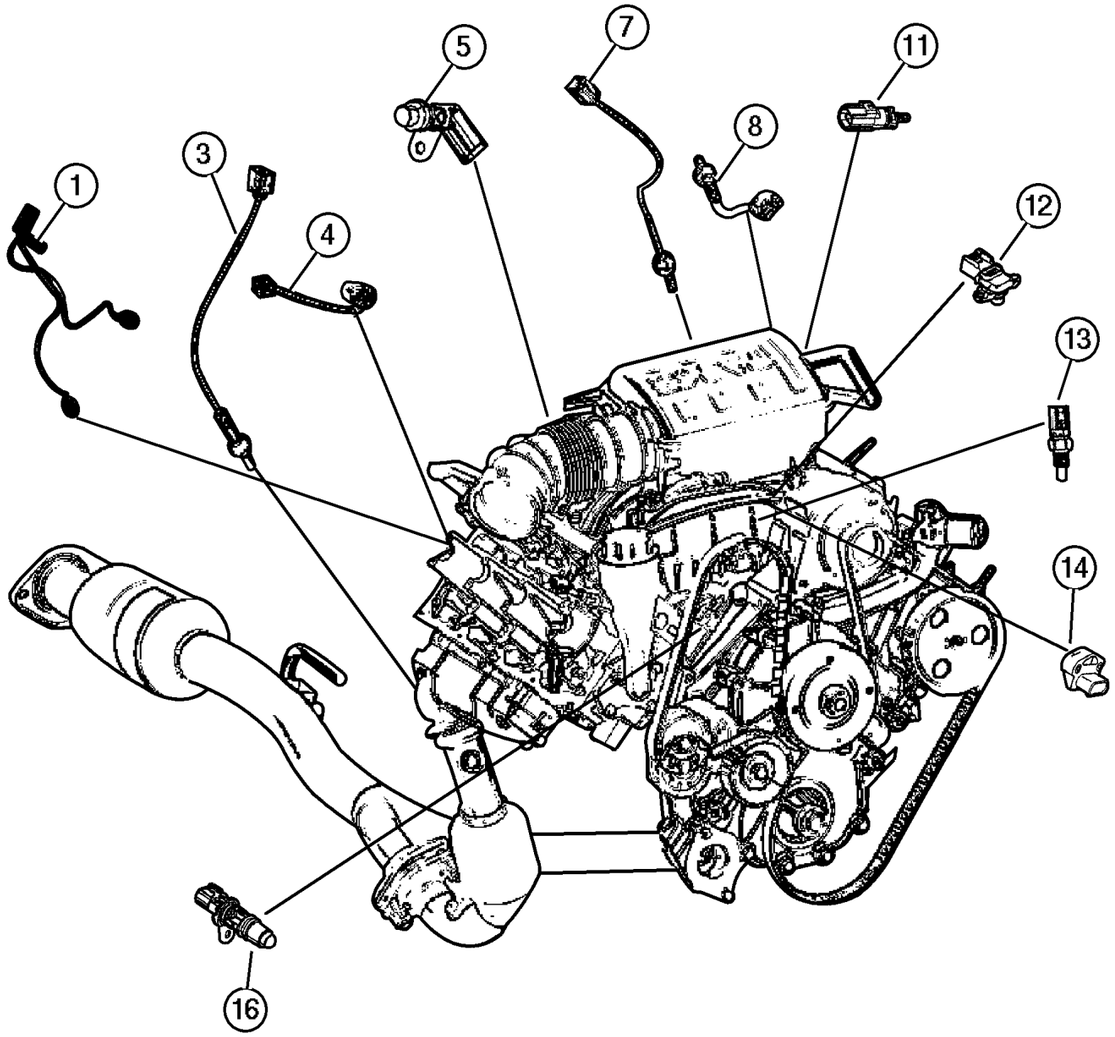

ITEM	PART NUMBER	QTY	LINE	SERIES	BODY	ENGINE	TRANS	TRIM	DESCRIPTION
Notes:									
[EK0]=3.7L V6 Engine									
1	56041 679AC	1				EK0			SENSOR, Knock
-2	56041 849AA	1				EK0			BRACKET, Knock Sensor
3	56041 951AA	1				EK0			SENSOR, Oxygen, Before Catalyst, Right
4	56041 953AA	1				EK0			SENSOR, Oxygen, After Catalyst, Right
5	#56041 479AD	1				EK0			SENSOR, Crankshaft Position
-6	6504 035	1	J, T			EN0			STUD, M8x1.25x41.00
7	56041 950AA	1				EK0			SENSOR, Oxygen, Before Catalyst, Left
8	56041 952AA	1				EK0			SENSOR, Oxygen, After Catalyst, Left
-9	56041 823AB	2				EK0			BRACKET, Oxygen Sensor
-10	5019 284AA	1				EK0			PLUG, Oxygen Sensor
	56044 085AA	4				EK0			Leaded Fuel Only
11	56028 364AA	1				EK0			SENSOR, Air Temperature
12	56041 018AB	1				EK0			SENSOR, Map
13	5602 7873	1				EK0			SENSOR, Coolant Temperature
14	5019 411AB	1				EK0			SENSOR, Throttle Position
-15	4778 462	2				EK0			SCREW, Throttle Position Sensor
16	56041 584AC	1				EK0			SENSOR, Camshaft

JEEP LIBERTY (KJ)

SERIES	LINE	BODY	ENGINE	TRANSMISSION
P = Limited	J = LHD (4WD)	74 = 4 Dr. (104.3 WB)	ED1, ED0 = 2.4L Power Tech	DDK = 5 Speed HDManual
H = Sport	U = RHD (4WD)		EKG, EK0 = 3.7L Power Tech	DDD = 5 Speed HD Manual
M = Renegade	T = LHD (2WD)		ENJ = 2.5L 4Cyl Turbo Diesel	DG4,DGQ = Multi-Speed Auto
			ENR = 2.8L 4Cyl Turbo Diesel	DG6 = 4 Speed Auto Transm
			EN0 = 4Cyl Turbo Diesel	DG0 = All Automatic Transm
				DBB = All Manual Transm

AR = Use as required - = Non illustrated part # = New this model year **June 3, 2003**

« RETURN TO GROUP INDEX

Sensors, Engine (2.5L Diesel)
Figure 008-615

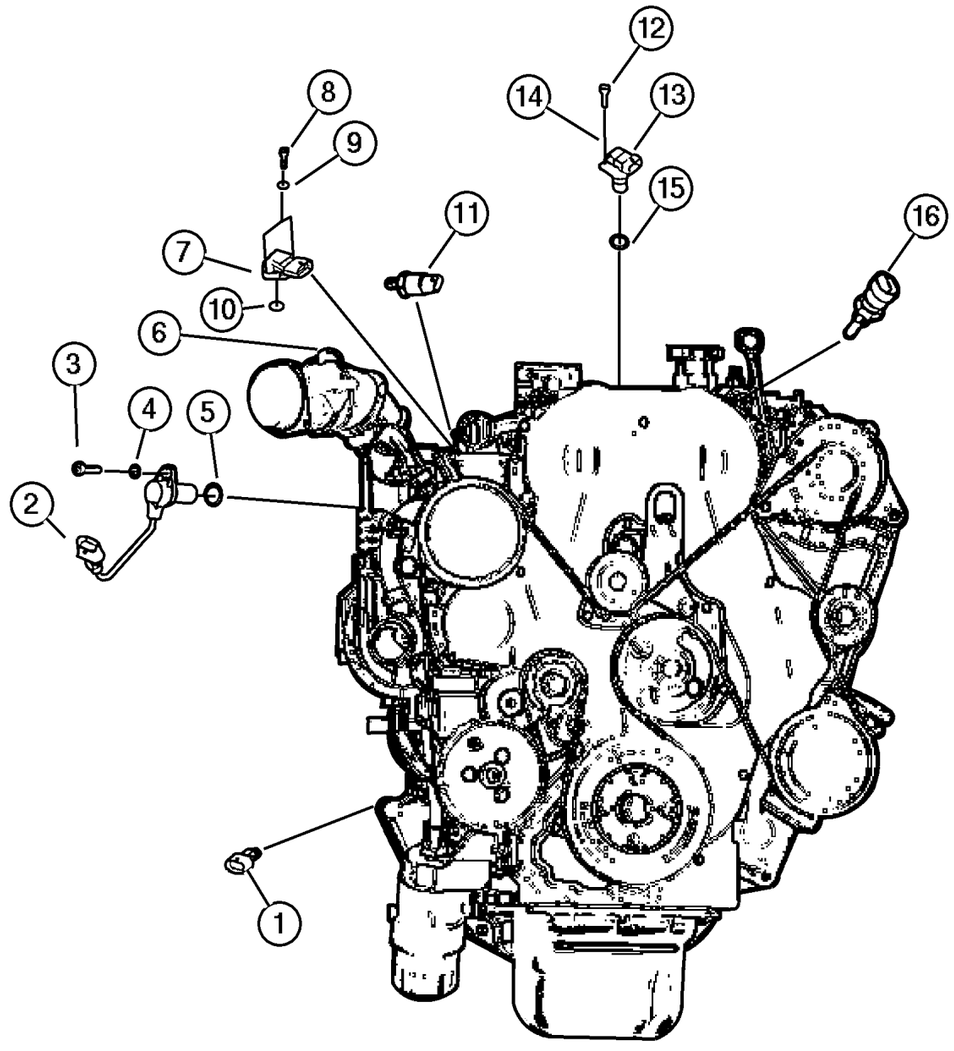

ITEM	PART NUMBER	QTY	LINE	SERIES	BODY	ENGINE	TRANS	TRIM	DESCRIPTION
Notes:									
[EN0]=All 4/5 Cylinder Turbo Diesel Engines									
[DBB]=All Manual Transmissions									
1									SENDING UNIT, Oil Pressure
	56028 807AB	1				EN0	DBB		
		1				EN0	DG0		
2									SENSOR, Crankshaft
	5066 882AA	1				EN0	DBB		
		1				EN0	DG0		
3									BOLT, M6x10
	5003 551AA	2				EN0	DBB		
		1				EN0	DG0		
4									WASHER, Implement Attaching
	4723 204	5				EN0	DBB		
		5				EN0	DG0		
5									O RING
	5066 860AA	1				EN0	DBB		
		1				EN0	DG0		
6									SENSOR PACKAGE, Air Flow Meter, (NOT REQUIRED)
7									SENSOR, Air Temperature
	#5093 898AA	1				EN0	DBB		
		1				EN0	DG0		
8									SCREW
	5010 858AA	1				EN0	DBB		
		1				EN0	DG0		
9									WASHER, Implement Attaching
	4723 204	5				EN0	DBB		
		5				EN0	DG0		
10									O RING
	5066 860AA	1				EN0	DBB		
		1				EN0	DG0		
11									SENSOR, Fuel Pressure
	5072 726AA	1				EN0	DBB		
		1				EN0	DG0		
12									SCREW
	5010 858AA	1				EN0	DBB		
		1				EN0	DG0		
13									SENSOR, Camshaft
	#5066 856AB	1				EN0	DBB		
		1				EN0	DG0		
14									WASHER, Implement Attaching

JEEP LIBERTY (KJ)

SERIES	LINE	BODY	ENGINE	TRANSMISSION
P = Limited	J = LHD (4WD)	74 = 4 Dr. (104.3 WB)	ED1, ED0 = 2.4L Power Tech	DDK = 5 Speed HDManual
H = Sport	U = RHD (4WD)		EKG, EK0 = 3.7L Power Tech	DDD = 5 Speed HD Manual
M = Renegade	T = LHD (2WD)		ENJ = 2.5L 4Cyl Turbo Diesel	DG4,DGQ = Multi-Speed Auto
			ENR = 2.8L 4Cyl Turbo Diesel	DG6 = 4 Speed Auto Transm
			EN0 = 4Cyl Turbo Diesel	DG0 = All Automatic Transm
				DBB = All Manual Transm

AR = Use as required - = Non illustrated part # = New this model year **June 3, 2003**

« RETURN TO GROUP INDEX »

Sensors, Engine (2.5L Diesel)
Figure 008-615

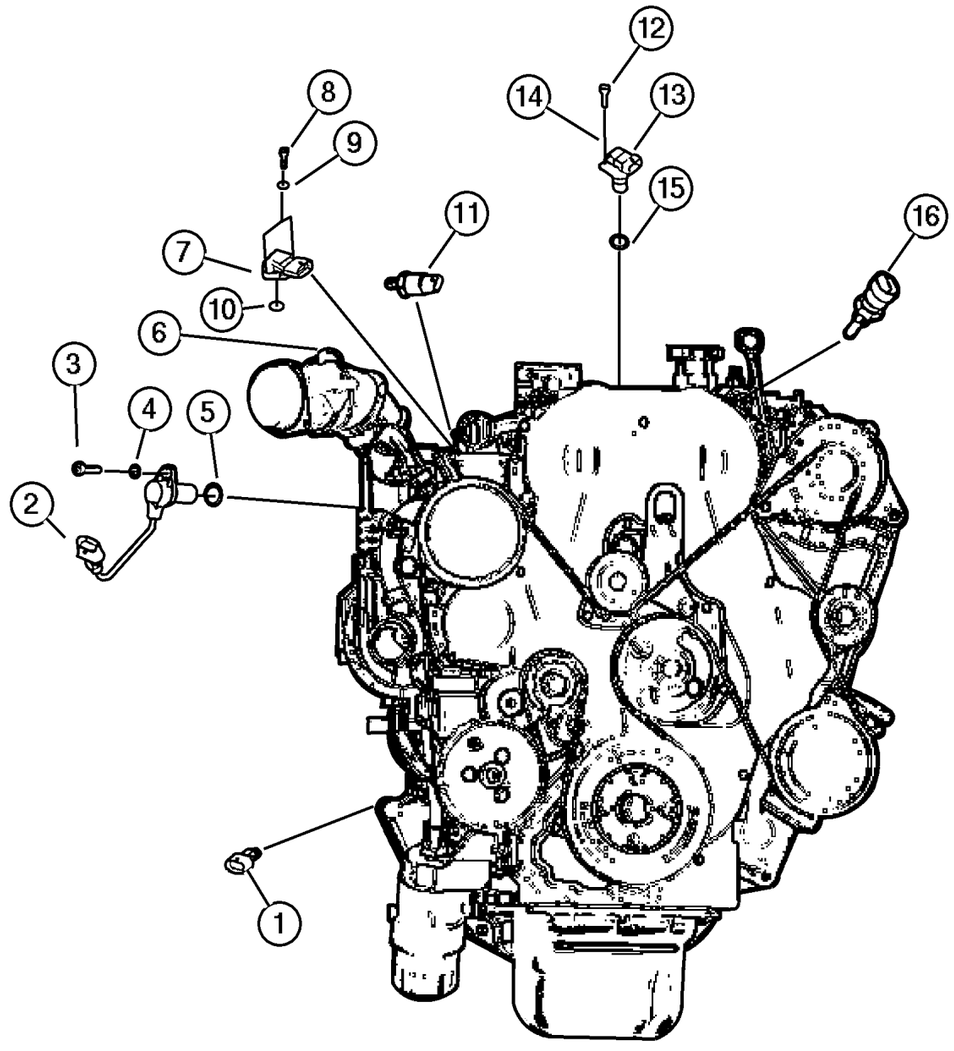

ITEM	PART NUMBER	QTY	LINE	SERIES	BODY	ENGINE	TRANS	TRIM	DESCRIPTION
	4723 204	5				EN0	DBB		
		5				EN0	DG0		
15									O RING
	5066 860AA	1				EN0	DBB		
		1				EN0	DG0		
16									SENSOR, Temperature Sending Unit
	5066 779AA	1				EN0	DBB		
		1				EN0	DG0		
-17									SENDING UNIT, Oil Pressure
	56028 807AB	1				EN0	DBB		
		1				EN0	DG0		
-18	4799 062	2	J, U			EN0	DGQ		O RING, Speed Sensor
-19									BRACKET
	#5093 910AA	1				EN0	DBB		Crank Sensor Wiring
		1				EN0	DG0		Crank Sensor Wiring

JEEP LIBERTY (KJ)

SERIES	LINE	BODY	ENGINE	TRANSMISSION
P = Limited	J = LHD (4WD)	74 = 4 Dr. (104.3 WB)	ED1, ED0 = 2.4L Power Tech	DDK = 5 Speed HDManual
H = Sport	U = RHD (4WD)		EKG, EK0 = 3.7L Power Tech	DDD = 5 Speed HD Manual
M = Renegade	T = LHD (2WD)		ENJ = 2.5L 4Cyl Turbo Diesel	DG4,DGQ = Multi-Speed Auto
			ENR = 2.8L 4Cyl Turbo Diesel	DG6 = 4 Speed Auto Transm
			EN0 = 4Cyl Turbo Diesel	DG0 = All Automatic Transm
				DBB = All Manual Transm

AR = Use as required - = Non illustrated part # = New this model year

June 3, 2003

« RETURN TO GROUP INDEX

Sensor (Drive Train)
Figure 008-620

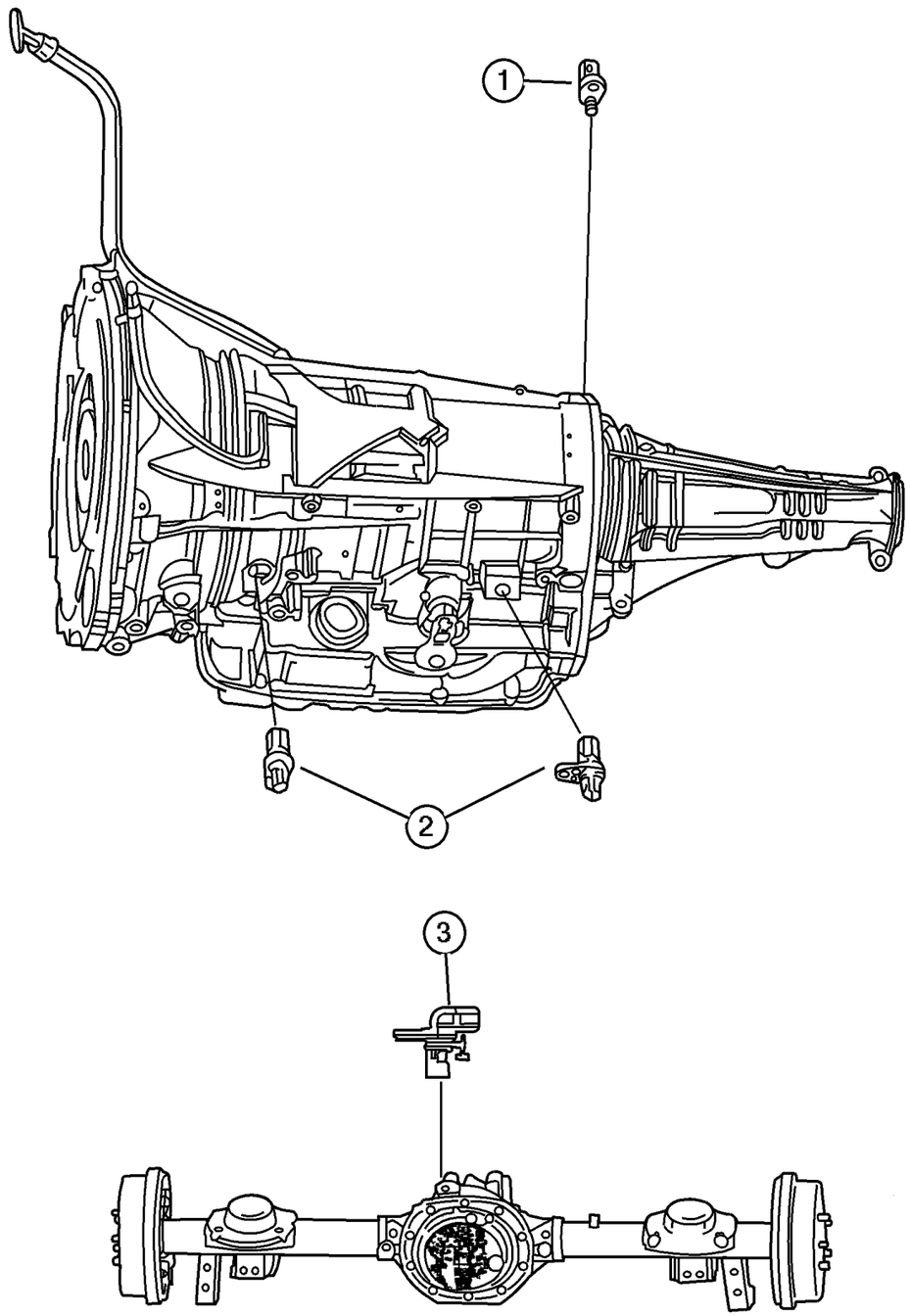

ITEM	PART NUMBER	QTY	LINE	SERIES	BODY	ENGINE	TRANS	TRIM	DESCRIPTION
Notes:									
[DGQ] = 5 Speed Automatic Transmission									
[DG4]= Multi-Speed Automatic Transmission									
[DG6] = 4 Speed Automatic Transmission									
[ED0] = 2.4L Engine									
[EK0] = 3.7L Engine									
[EN0] = 2.5L Turbo Diesel Engine									
1									TRANSDUCER, Pressure Sensor
	4799 758AC	1	J, U			EN0	DGQ		
		1	T				DG4		
		1	J, U				DG4		
2									SENSOR, Transmission Output Speed
	4799 061	2	J, U			EN0	DGQ		Input / Output Speed Sensor
		2	T				DG4		Input / Output Speed Sensor
		2	J, U				DG4		Input / Output Speed Sensor
	#52854 001AA	1	T				DG6		Output Speed Sensor
		1	J, U				DG6		Output Speed Sensor
3	56041 393AA	1							SENSOR, Wheel Speed
-4	5086 373AA	1							O RING, Sensor, Wheel Speed Sensor
-5	5083 138AA	1	J, U			ED0, EK0			SWITCH, Transfer Case, 5 Position

JEEP LIBERTY (KJ)

SERIES	LINE	BODY	ENGINE	TRANSMISSION
P = Limited	J = LHD (4WD)	74 = 4 Dr. (104.3 WB)	ED1, ED0 = 2.4L Power Tech	DDK = 5 Speed HDManual
H = Sport	U = RHD (4WD)		EKG, EK0 = 3.7L Power Tech	DDD = 5 Speed HD Manual
M = Renegade	T = LHD (2WD)		ENJ = 2.5L 4Cyl Turbo Diesel	DG4,DGQ = Multi-Speed Auto
			ENR = 2.8L 4Cyl Turbo Diesel	DG6 = 4 Speed Auto Transm
			EN0 = 4Cyl Turbo Diesel	DG0 = All Automatic Transm
				DBB = All Manual Transm

AR = Use as required - = Non illustrated part # = New this model year **June 3, 2003**

« RETURN TO GROUP INDEX

Sensor (Body)
Figure 008-630

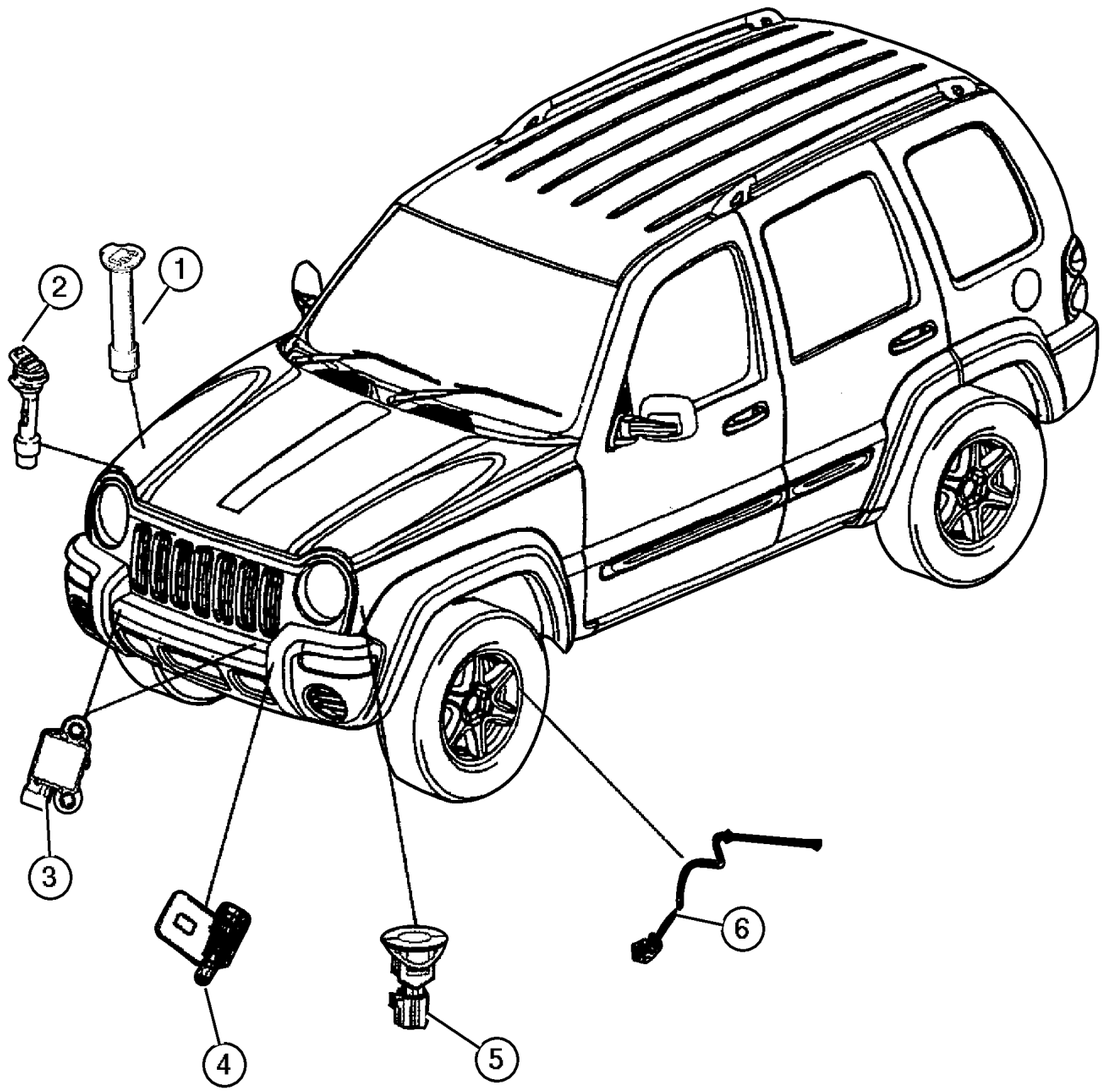

ITEM	PART NUMBER	QTY	LINE	SERIES	BODY	ENGINE	TRANS	TRIM	DESCRIPTION
Notes:									
[ED0] = 2.4L 4 Cylinder Engine									
[EK0] = 3.7L V6 Engine									
[EN0] = 2.5L 4 Cylinder Turbo Diesel									
1	4882 797	1							SENSOR, Washer Fluid Level
2	4682 425	1				EN0			SENSOR, Coolant Level
3									SENSOR, Air Bag
	56010 319AB	2				EK0			Right
		1				ED0, EN0			Right
	56010 412AC	1				ED0, EN0			Left
4	5604 2395	1							SENSOR, Ambient Temperature
5	5604 1053	1							SENSOR, Battery Temperature
6									SENSOR, Anti-Lock Brakes
	52128 695AA	1							Left
	56041 450AC	1							Right

JEEP LIBERTY (KJ)

SERIES	LINE	BODY	ENGINE	TRANSMISSION
P = Limited	J = LHD (4WD)	74 = 4 Dr. (104.3 WB)	ED1, ED0 = 2.4L Power Tech	DDK = 5 Speed HDManual
H = Sport	U = RHD (4WD)		EKG, EK0 = 3.7L Power Tech	DDD = 5 Speed HD Manual
M = Renegade	T = LHD (2WD)		ENJ = 2.5L 4Cyl Turbo Diesel	DG4,DGQ = Multi-Speed Auto
			ENR = 2.8L 4Cyl Turbo Diesel	DG6 = 4 Speed Auto Transm
			EN0 = 4Cyl Turbo Diesel	DG0 = All Automatic Transm
				DBB = All Manual Transm

JTEC Modules & Solenoids
Figure 008-710

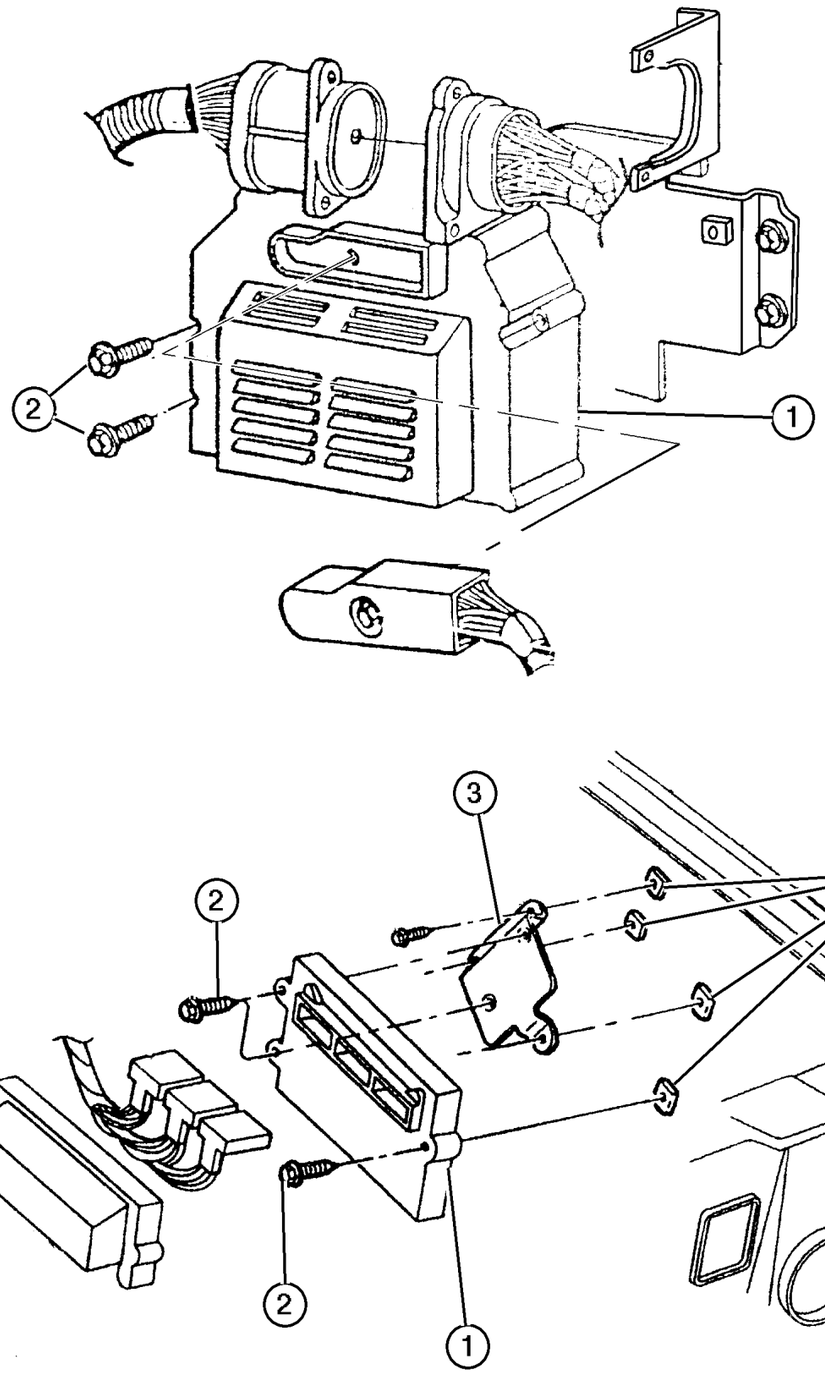

ITEM	PART NUMBER	QTY	LINE	SERIES	BODY	ENGINE	TRANS	TRIM	DESCRIPTION
Notes:									
[ED0] = 2.4L 4 Cylinder Engine									
[EK0] = 3.7L V6 Engine									
[EN0] = All 2.5L Cylinder Turbo Diesel Engine									
[DBB] = All Manual Transmissions									
[DG4] = Multi-Speed Automatic Transmissions									
[DG6] = 4 Speed Automatic Transmissions									
[NA1] = Export Emissions									
[NAS] = US 50 States									
[NB2] = Euro Stage II Emissions									
[NB3] = Euro Stage III Emissions									
[NBJ] =Japan Emissions									
[NVB] =Low Emission Vehicle									
1									MODULE, Powertrain Control
	#56044 615AC	1				ED0	DBB		[NAS] + [NBV]
	#56044 624AE	1				EK0	DG4		[NA1] + [NB3]
	#56044 625AC	1				EK0	DG4		[NA1] + [NB2]
	#56044 626AE	1				EK0	DG4		[NA1] + [NBJ]
	#56044 621AF	1				EK0	DBB		[NA1] = [NB3]
	#56044 220AD	1				EN0	DBB		
	#56044 198AE	1				EK0	DG6		[NA1] + [NBJ]
	#56044 623AE	1				EK0	DG4		[NAS]
	#56041 610AD	1				EN0	DG0		
	#56044 195AC	1				EK0	DG6		[NAS] + [NBV]
	#56044 196AB	1				EK0	DG6		[NA1] + [NB3]
	#56044 197AA	1				EK0	DG6		[NA1] + [NB2]
	#56044 616AF	1				ED0	DBB		[NA1] = [NB3]
	#56044 617AC	1				ED0	DBB		[NA1] + [NB2]
	#56044 619AE	1				EK0	DBB		[NAS] + [NBV]
	#56044 623AE	1				EK0	DG4		[NAS] + [NBV]
2	6035 884	3				ED0, EK0			SCREW
3									BRACKET, Control Unit
	56041 382AA	1				ED0, EK0			
	56041 384AC	1				EN0			
4									NUT, Hex Flange Lock, M5, M5x0.80, (NOT SERVICED) (Not Serviced)

JEEP LIBERTY (KJ)

SERIES	LINE	BODY	ENGINE	TRANSMISSION
P = Limited	J = LHD (4WD)	74 = 4 Dr. (104.3 WB)	ED1, ED0 = 2.4L Power Tech	DDK = 5 Speed HDManual
H = Sport	U = RHD (4WD)		EKG, EK0 = 3.7L Power Tech	DDD = 5 Speed HD Manual
M = Renegade	T = LHD (2WD)		ENJ = 2.5L 4Cyl Turbo Diesel	DG4,DGQ = Multi-Speed Auto
			ENR = 2.8L 4Cyl Turbo Diesel	DG6 = 4 Speed Auto Transm
			EN0 = 4Cyl Turbo Diesel	DG0 = All Automatic Transm
				DBB = All Manual Transm

AR = Use as required - = Non illustrated part # = New this model year **June 3, 2003**

« RETURN TO GROUP INDEX

Switches (Instrument Panel and Console)
Figure 008-810

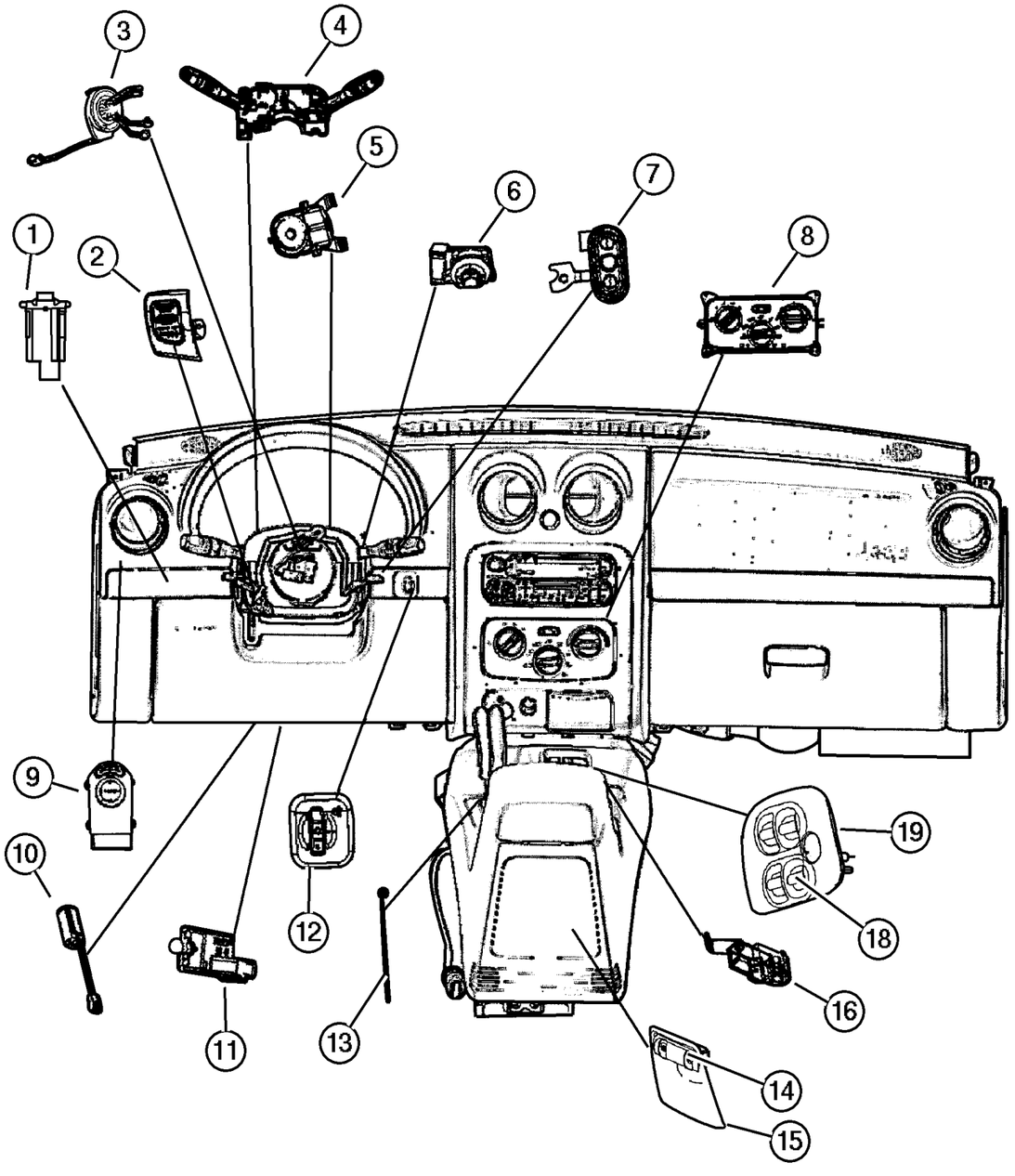

ITEM	PART NUMBER	QTY	LINE	SERIES	BODY	ENGINE	TRANS	TRIM	DESCRIPTION
Notes:									
[ED0] = 2.4L 4 Cylinder Engine									
[EKG] = 3.7L V6 ‘Magnum‘ Engine									
[DBB]=All Manual Transmissions									
[DG0]=All Automatic Transmissions									
1	56010 417AA	1							SWITCH, Off Road Lamp
2									SWITCH, Speed Control
	56010 088AC	1		H, M					Right
	56010 089AC	1		H, M					Left
	56010 358AB	1		P					Right
	56010 359AB	1		P					Left
3									CLOCKSPRING
	56010 146AF	1							Without Audio Control Stering Wheel
	56010 187AG	1							With Audio Control Stering Wheel
4									SWITCH, Multifunction
	56010 125AE	1							Without Foglamp
	56010 126AE	1							With Foglamp
	56010 132AE	1							Without Foglamp (Export)
	56010 133AE	1							With Foglamp (Export)
5	56010 158AC	1							SWITCH, Hazard Warning, and Flasher
6									SWITCH, Ignition
	4793 576AB	1					DG0		
		1					DBB		
7									SWITCH, Remote Radio
	56042 312AB	1		H, M					Right
	56042 313AB	1		H, M					Left
		1		P					Left
	56042 312AB	1		P					Right
8	55037 533AC	1							CONTROL, A/C And Heater
9									SWITCH, Mirror
	56010 093AA	1	J, T						
	56010 094AA	1	U						Export
10									SWITCH, Clutch Starter Interlock
	56010 330AA	1	U			ED0, EKG	DBB		
		1	J, T			ED0, EK0	DBB		
		1	J, T			EN0	DBB		
		1	U			EN0	DBB		
11	5083 344AA	1							SWITCH PACKAGE, Stop Lamp

JEEP LIBERTY (KJ)

SERIES	LINE	BODY	ENGINE	TRANSMISSION
P = Limited	J = LHD (4WD)	74 = 4 Dr. (104.3 WB)	ED1, ED0 = 2.4L Power Tech	DDK = 5 Speed HDManual
H = Sport	U = RHD (4WD)		EKG, EK0 = 3.7L Power Tech	DDD = 5 Speed HD Manual
M = Renegade	T = LHD (2WD)		ENJ = 2.5L 4Cyl Turbo Diesel	DG4,DGQ = Multi-Speed Auto
			ENR = 2.8L 4Cyl Turbo Diesel	DG6 = 4 Speed Auto Transm
			EN0 = 4Cyl Turbo Diesel	DG0 = All Automatic Transm
				DBB = All Manual Transm

AR = Use as required - = Non illustrated part # = New this model year **June 3, 2003**

« RETURN TO GROUP INDEX »

Switches (Instrument Panel and Console)
Figure 008-810

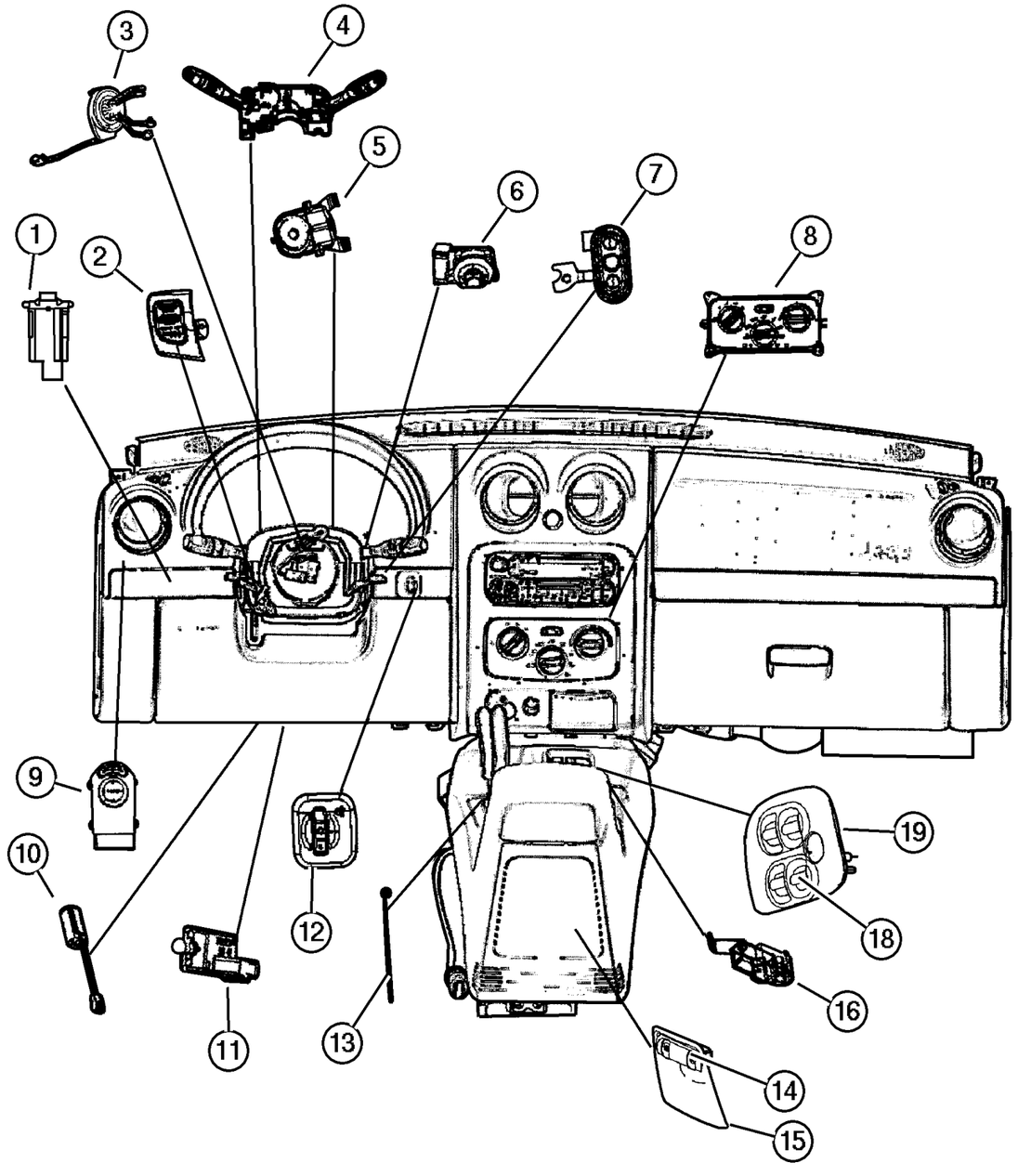

ITEM	PART NUMBER	QTY	LINE	SERIES	BODY	ENGINE	TRANS	TRIM	DESCRIPTION
12	56010 204AE	1							SWITCH, Headlamp Leveling
13									SWITCH, Overdrive Lockout, Serviced in Shifter Assembly, (NOT SERVICED) (Not Serviced)
14	56010 091AB	1							SWITCH, Power Window, Rear Door
15									BEZEL, Power Window Switch
	WA64 WL8AB	1							[L2]
		1							[L5]
	WA64 XDVAB	1							[D2]
		1							[DV]
16									SWITCH, Parking Brake
	5212 7960	1					DD0		
		1					DG0		
-17	4793 138	1					DD0		INSULATOR, 6 Way Male, Parking Brake
18									SWITCH, Power Window
	56010 091AB	1							Rear Windows
	#56010 090AE	1							Master Switch
19									BEZEL, Power Window Switch
	WA63 WL8AB	1							[L2]
		1							[L5]
	WA63 XDVAB	1							[D2]
		1							[DV]
-20									SWITCH, Sunroof
	5GM78 TL2AA	1	J, T						
		1							Export

JEEP LIBERTY (KJ)

SERIES	LINE	BODY	ENGINE	TRANSMISSION
P = Limited	J = LHD (4WD)	74 = 4 Dr. (104.3 WB)	ED1, ED0 = 2.4L Power Tech	DDK = 5 Speed HDManual
H = Sport	U = RHD (4WD)		EKG, EK0 = 3.7L Power Tech	DDD = 5 Speed HD Manual
M = Renegade	T = LHD (2WD)		ENJ = 2.5L 4Cyl Turbo Diesel	DG4,DGQ = Multi-Speed Auto
			ENR = 2.8L 4Cyl Turbo Diesel	DG6 = 4 Speed Auto Transm
			EN0 = 4Cyl Turbo Diesel	DG0 = All Automatic Transm
				DBB = All Manual Transm

AR = Use as required - = Non illustrated part # = New this model year

June 3, 2003

« RETURN TO GROUP INDEX

Switches (Drive Train)
Figure 008-820

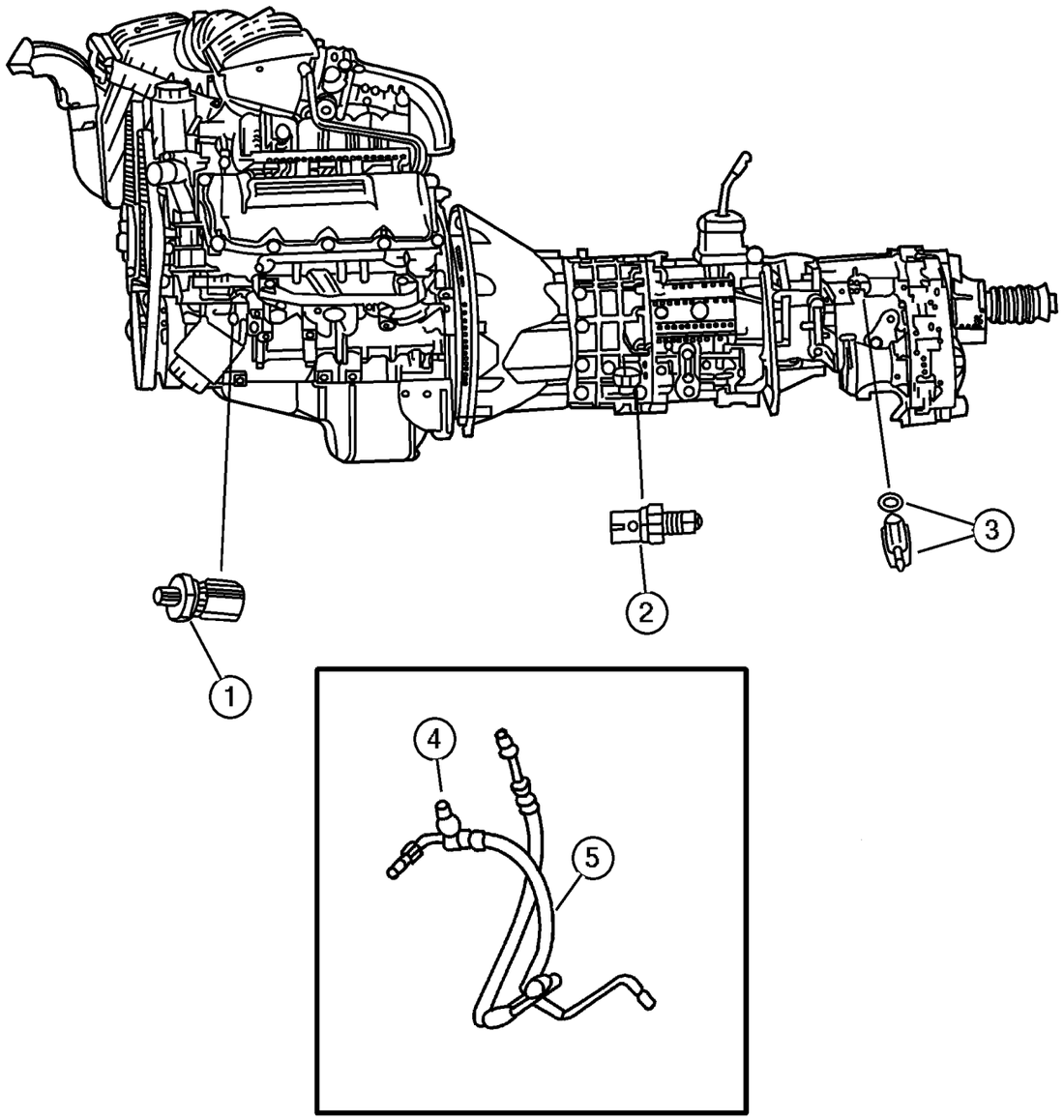

ITEM	PART NUMBER	QTY	LINE	SERIES	BODY	ENGINE	TRANS	TRIM	DESCRIPTION
Notes:									
[ED0] = 2.4L 4 Cylinder Engine									
[EK0] = 3.7L V6 Cylinder Engine									
[EKG] = 3.7L V6 ‘Magnum‘ Engine									
[EN0] = 2.5L Diesel									
[DBB] = All Manual Transmissions									
[DDD] = 5 Speed Manual									
[DDk] = 5 Speed Manual									
1									SENDING UNIT, Oil Pressure
	56028 807AB	1				EN0	DBB		
		1				EN0	DG0		
2									SWITCH, Back Up Lamp
	5013 336AA	1	J, U			ED0	DDK		
		1	T			ED0	DDK		
	5600 7163	1	J, U			EKG	DDD		
		1	T			EKG	DDD		
		1	J, U			EN0	DDD		
3	5083 138AA	1	J, U			ED0, EK0			SWITCH, Transfer Case, 5 Position
4									SWITCH, Power Steering
	#56044 169AA	1	U			EK0			
		1	U			ED0			
		1	J, T			ED0			
		1	J, T			EK0			
5									HOSE, Power Steering, see group 19, (NOT SERVICED) (Not Serviced)
-6									SWITCH, Oil Pressure
	4608 303AB	1				ED0			
	4868 672AA	1				EK0			

JEEP LIBERTY (KJ)

SERIES	LINE	BODY	ENGINE	TRANSMISSION
P = Limited	J = LHD (4WD)	74 = 4 Dr. (104.3 WB)	ED1, ED0 = 2.4L Power Tech	DDK = 5 Speed HDManual
H = Sport	U = RHD (4WD)		EKG, EK0 = 3.7L Power Tech	DDD = 5 Speed HD Manual
M = Renegade	T = LHD (2WD)		ENJ = 2.5L 4Cyl Turbo Diesel	DG4,DGQ = Multi-Speed Auto
			ENR = 2.8L 4Cyl Turbo Diesel	DG6 = 4 Speed Auto Transm
			EN0 = 4Cyl Turbo Diesel	DG0 = All Automatic Transm
				DBB = All Manual Transm

AR = Use as required - = Non illustrated part # = New this model year **June 3, 2003**

« RETURN TO GROUP INDEX

Switches (Body)
Figure 008-830

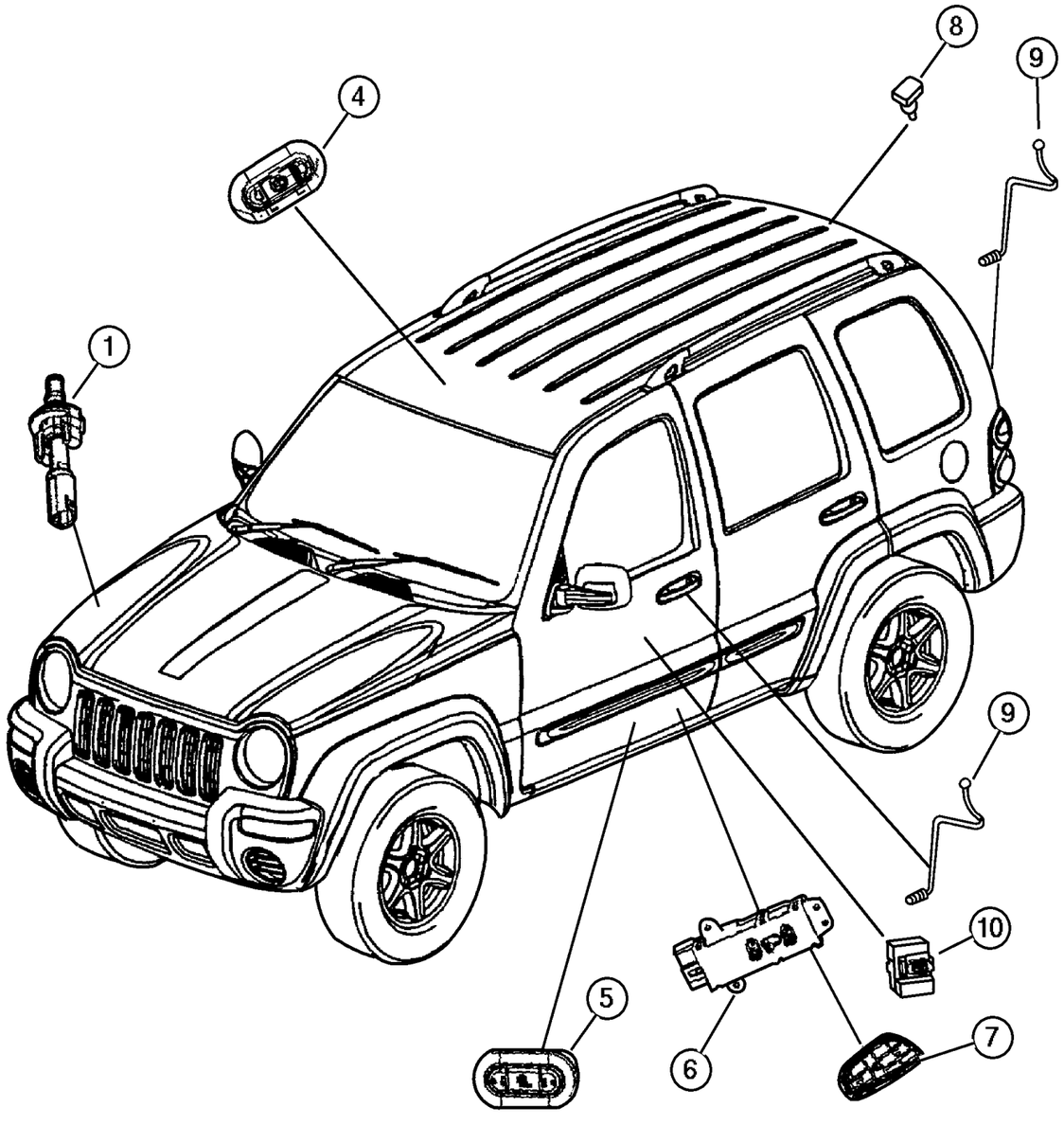

ITEM	PART NUMBER	QTY	LINE	SERIES	BODY	ENGINE	TRANS	TRIM	DESCRIPTION
1	4707 875AB	1							SWITCH, Underhood
-2	56010 290AB	1							BRACKET, Hood Ajar Disarm Switch
-3	56010 147AE	1							PLATE, Striker, Underhood Switch
4									SWITCH, Sunroof
	5GM78 TL2AA	1	J, T						
		1							Export
5									SWITCH, Heated Seat
	5GW44 DX9AB	2	J, U						[DV] Export
		2	J, U						[L2] Export
		2	J, T						[D2]
		2	J, T						[L2]
6	55352 782AA	1							SWITCH, Seat
7									KNOB, Power Seat Switch
	4607 042AB	1							Right
	4607 043AB	1							Left
8									SWITCH, Reading Lamp
	4685 445	1	J, T						Rear Cargo Lamp
		1							Rear Cargo Lamp (Export)
9									SWITCH, Security Alarm
	5072 956AA	1	J, T						Swing Gate without Security Alarm & without Keyless Entry
		1							Swing Gate (Export)
		1	J, T						Right Door without Security Alarm & without Keyless Entry
	5072 957AA	1	J, T						Left Door with Security Alarm
	55136 557AA	1	J, T						Right & Left Door with Security Alarm & Keyless Entry
	5072 956AA	1	J, T						Right Door with Keyless Entry & without Security Alarm
10	56010 092AA	2							SWITCH, Door Lock
-11									KNOB, Power Seat Switch
	4607 042	1							Right
	4607 043	1							Left
-12	4886 258AA	1			74				SWITCH, Programing Bypass

JEEP LIBERTY (KJ)

SERIES	LINE	BODY	ENGINE	TRANSMISSION
P = Limited	J = LHD (4WD)	74 = 4 Dr. (104.3 WB)	ED1, ED0 = 2.4L Power Tech	DDK = 5 Speed HDManual
H = Sport	U = RHD (4WD)		EKG, EK0 = 3.7L Power Tech	DDD = 5 Speed HD Manual
M = Renegade	T = LHD (2WD)		ENJ = 2.5L 4Cyl Turbo Diesel	DG4,DGQ = Multi-Speed Auto
			ENR = 2.8L 4Cyl Turbo Diesel	DG6 = 4 Speed Auto Transm
			EN0 = 4Cyl Turbo Diesel	DG0 = All Automatic Transm
				DBB = All Manual Transm

AR = Use as required - = Non illustrated part # = New this model year **June 3, 2003**

« RETURN TO GROUP INDEX

Horns
Figure 008-910

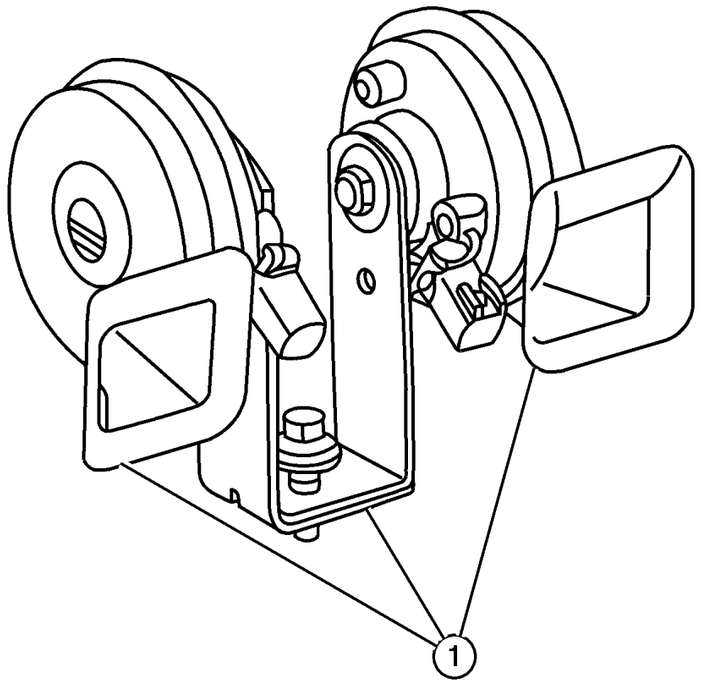

ITEM	PART NUMBER	QTY	LINE	SERIES	BODY	ENGINE	TRANS	TRIM	DESCRIPTION
1	56010 313AB	1							HORN AND BRACKET, Dual

JEEP LIBERTY (KJ)

SERIES	LINE	BODY	ENGINE	TRANSMISSION
P = Limited	J = LHD (4WD)	74 = 4 Dr. (104.3 WB)	ED1, ED0 = 2.4L Power Tech	DDK = 5 Speed HDManual
H = Sport	U = RHD (4WD)		EKG, EK0 = 3.7L Power Tech	DDD = 5 Speed HD Manual
M = Renegade	T = LHD (2WD)		ENJ = 2.5L 4Cyl Turbo Diesel	DG4,DGQ = Multi-Speed Auto
			ENR = 2.8L 4Cyl Turbo Diesel	DG6 = 4 Speed Auto Transm
			EN0 = 4Cyl Turbo Diesel	DG0 = All Automatic Transm
				DBB = All Manual Transm

Battery Tray & Cables
Figure 008-1010

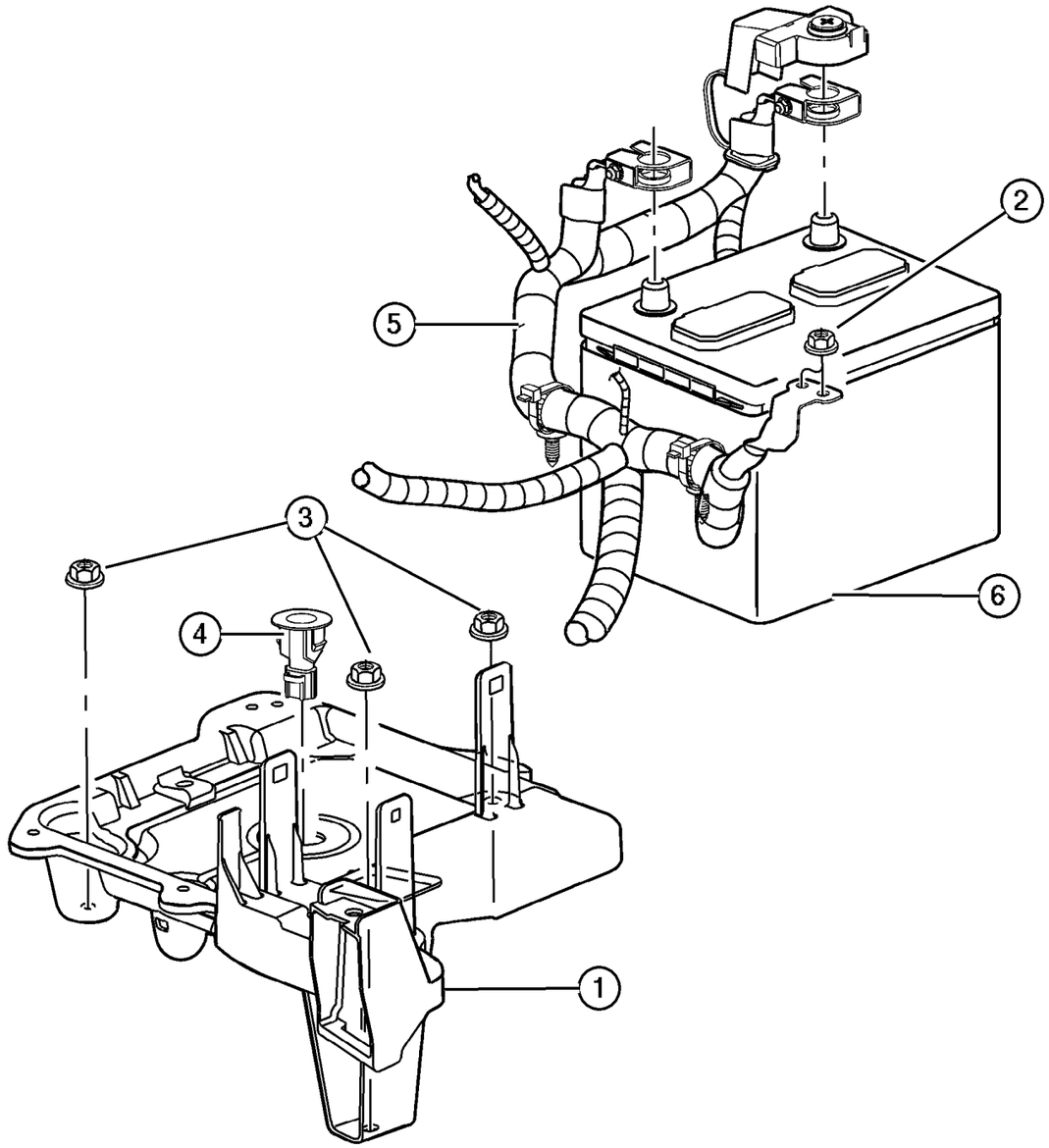

ITEM	PART NUMBER	QTY	LINE	SERIES	BODY	ENGINE	TRANS	TRIM	DESCRIPTION
Notes:									
[ED0] = 2.4L 4 Cylinder Engine									
[EK0] = 3.7L V6 Cylinder Engine									
[EN0] =All 4/5 Cylinder Turbo Diesel Engine									
1									SUPPORT, Battery
	55360 086AC	1				EN0			Up to 7/08/02
	#55360 639AA	1				ED0, EK0			
	#55360 654AA	1				EN0			7/08/02 & After
2	6101 808	2							NUT, Hex, M6x1
3	6504 030	2	J, T						NUT AND WASHER, Hex, M6x1
4	5604 1053	1							SENSOR, Battery Temperature
5									WIRING, Alternator and Battery
	#56044 213AB	1				ED0			
	#56044 501AB	1		H, P		EK0			
	#56044 502AB	1		M		EK0			
	#56050 402AA	1				ENR			
	#56050 402AB	1				EN0			
6	4364 944	1				ED0, EK0			BATTERY
-7									LABEL, Battery
	4793 062	1				ED0, EK0			Europe
	5604 1046	1	J, T						Canada
-8	55136 959AB	1							BRACKET, Battery Hold Down
-9	5072 382AA	6				EK0			O RING, Ignition Coil

JEEP LIBERTY (KJ)

SERIES	LINE	BODY	ENGINE	TRANSMISSION
P = Limited	J = LHD (4WD)	74 = 4 Dr. (104.3 WB)	ED1, ED0 = 2.4L Power Tech	DDK = 5 Speed HDManual
H = Sport	U = RHD (4WD)		EKG, EK0 = 3.7L Power Tech	DDD = 5 Speed HD Manual
M = Renegade	T = LHD (2WD)		ENJ = 2.5L 4Cyl Turbo Diesel	DG4,DGQ = Multi-Speed Auto
			ENR = 2.8L 4Cyl Turbo Diesel	DG6 = 4 Speed Auto Transm
			EN0 = 4Cyl Turbo Diesel	DG0 = All Automatic Transm
				DBB = All Manual Transm

Lamp, Front
Figure 008-1110

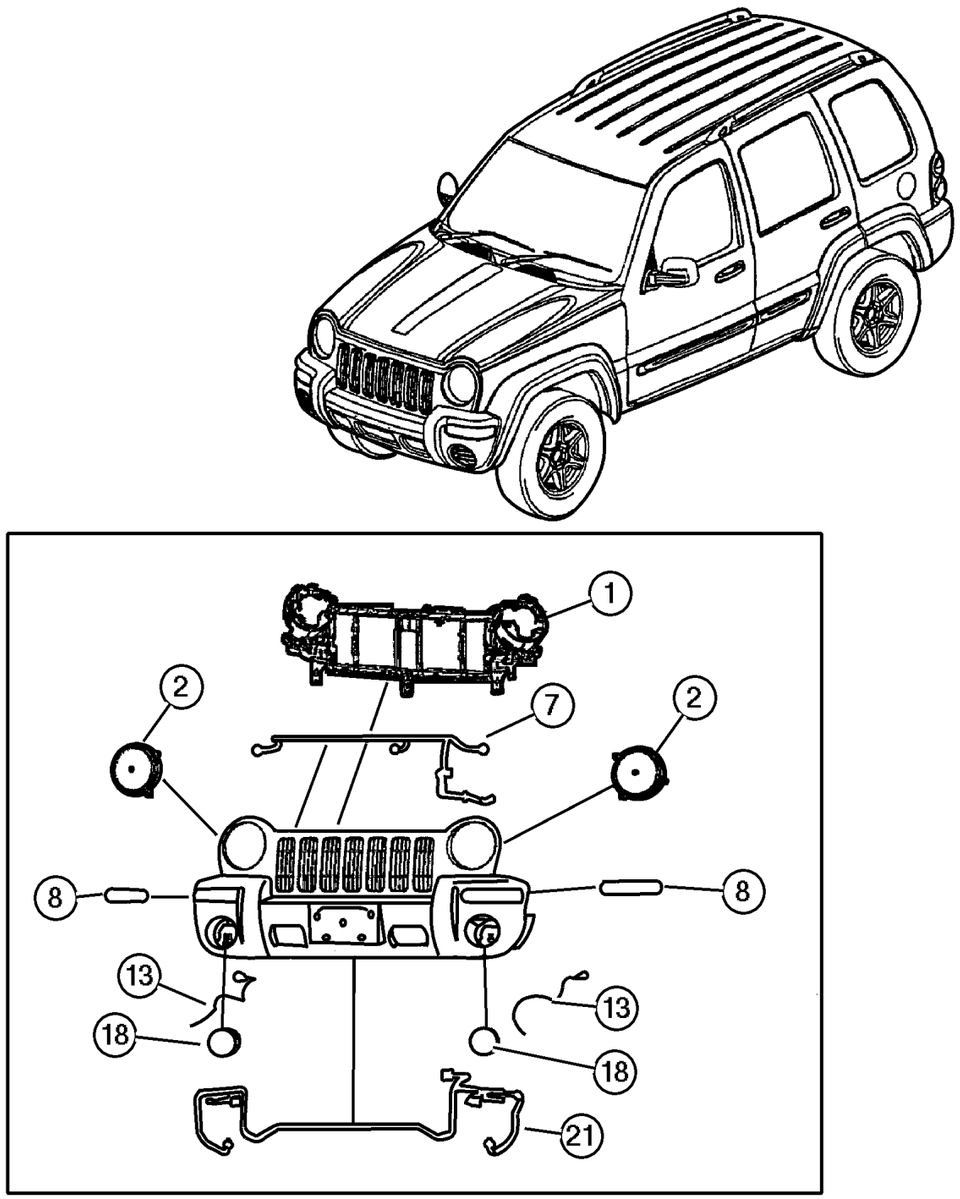

ITEM	PART NUMBER	QTY	LINE	SERIES	BODY	ENGINE	TRANS	TRIM	DESCRIPTION
Notes:									
[ED0] = 2.4L 4 Cylinder Engine									
[EK0] = 3.7L V6 Cylinder Engine									
[EN0] =All 4/5 Cylinder Turbo Diesel Engine									
1									REINFORCEMENT, Grille Opening
	55155 800AF	1	J, T			ED0, EK0			
		1	J, T			EN0			
2									HEADLAMP
	55155 808AA	1							Up to 10/06/02, Right
	#55155 815AD	1	U			EN0			Export, Left
	#55155 816AD	1	J, T			ED0, EK0			Export with Headlamp Leveling, Right
		1	J, T			EN0			Export with Headlamp Leveling, Right
	#55155 817AD	1	J, T			ED0, EK0			Export with Headlamp Leveling, Left
		1	J, T			EN0			Export with Headlamp Leveling, Left
	#55155 818AD	1	U			ED0, EK0			Export with Headlamp Leveling, Right
		1	U			EN0			Export with Headlamp Leveling, Right
	#55155 819AD	1	U			ED0, EK0			Export with Headlamp Leveling, Left
		1	U			EN0			Export with Headlamp Leveling, Left
	#55155 808AB	1							10/06/02 & After, Right
	55155 809AA	1							Up to 10/06/02, Left
	#55155 809AB	1							10/06/02 & After, Left
	#55155 812AD	1	J, T			ED0, EK0			Export, Right
		1	J, T			EN0			Export, Right
	#55155 813AD	1	J, T			ED0, EK0			Export, Left
		1	J, T			EN0			Export, Left
	#55155 814AD	1	U			ED0, EK0			Export, Right
		1	U			EN0			Export, Right
	#55155 815AD	1	U			ED0, EK0			Export, Left

JEEP LIBERTY (KJ)

SERIES	LINE	BODY	ENGINE	TRANSMISSION
P = Limited	J = LHD (4WD)	74 = 4 Dr. (104.3 WB)	ED1, ED0 = 2.4L Power Tech	DDK = 5 Speed HDManual
H = Sport	U = RHD (4WD)		EKG, EK0 = 3.7L Power Tech	DDD = 5 Speed HD Manual
M = Renegade	T = LHD (2WD)		ENJ = 2.5L 4Cyl Turbo Diesel	DG4,DGQ = Multi-Speed Auto
			ENR = 2.8L 4Cyl Turbo Diesel	DG6 = 4 Speed Auto Transm
			EN0 = 4Cyl Turbo Diesel	DG0 = All Automatic Transm
				DBB = All Manual Transm

Lamp, Front
Figure 008-1110

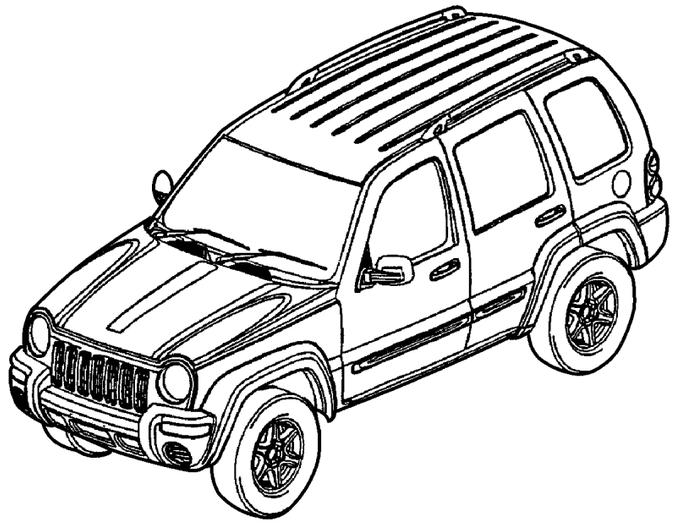

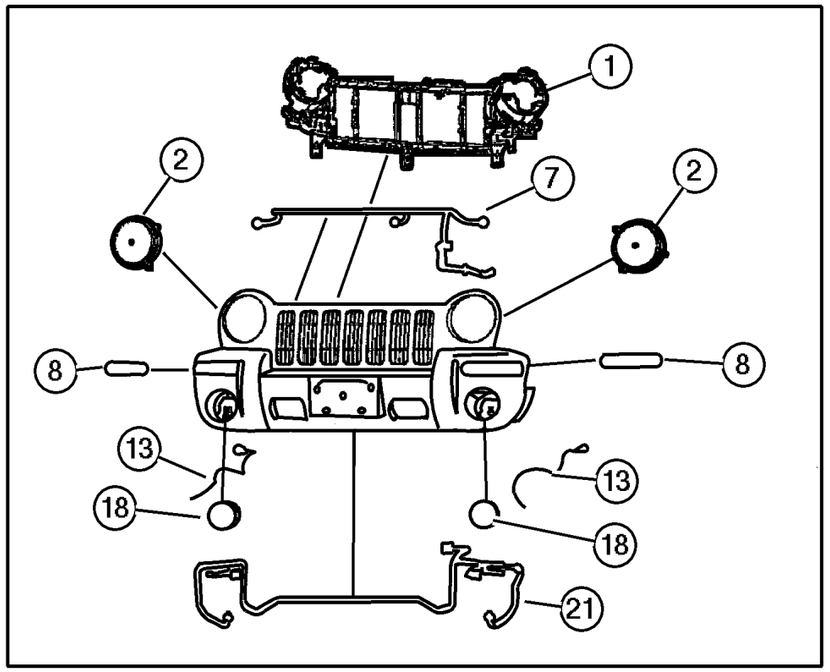

ITEM	PART NUMBER	QTY	LINE	SERIES	BODY	ENGINE	TRANS	TRIM	DESCRIPTION
-3	6505 903AA	4							SCREW AND WASHER, Self Tapping, M6x1x22, Headlamp Mounting
-4	L0009 007QL	1							BULB, Headlamp, Right & Left
-5	5126 316AA	1							RETAINER, Headlamp Bulb
-6									WELT, Headlamp To Grille
	55156 610AA	1							Right
	55156 611AA	1							Left
7									WIRING, Headlamp
	55155 946AA	1							
	55155 947AA	1	J, T			ED0, EK0			Export
		1	J, T			EN0			Export
		1	U			ED0, EK0			Export
		1	U			EN0			Export
	55155 948AA	1	U			ED0, EK0			Export with Headlamp Leveling
		1	U			EN0			Export with Headlamp Leveling
		1	J, T			ED0, EK0			Export with Headlamp Leveling
		1	J, T			EN0			Export with Headlamp Leveling
8									LAMP, Front Combination
	55155 910AC	1							Right
	55155 911AC	1							Left
	55155 934AC	1							Export, Right
	55155 935AC	1							Export, Left
-9	L000 3157	1							BULB, 3157
-10	4857 327AB	1							SOCKET
-11	L000 0168	1							BULB, 168
-12	4857 327AB	1							SOCKET
13	5288 895AC	1							LAMP, Side Repeater
-14	0153 625	2							BULB, W10/5
-15	4676 801	1							GASKET, Side Marker Lamp
-16	5288 931AA	1							SOCKET, Side Repeater Lamp
-17	55156 010AA	1							WIRING, Side Repeater Lamp
18									LAMP, Fog
	5083 895AC	1							Left
	5083 896AC	1							Right
-19	0154 901AA	1							BULB, Fog Lamp, 50 Watt
-20	6506 579AA	6							SCREW, Fog Lamp, Foglamp Mounting

JEEP LIBERTY (KJ)

SERIES	LINE	BODY	ENGINE	TRANSMISSION
P = Limited	J = LHD (4WD)	74 = 4 Dr. (104.3 WB)	ED1, ED0 = 2.4L Power Tech	DDK = 5 Speed HDManual
H = Sport	U = RHD (4WD)		EKG, EK0 = 3.7L Power Tech	DDD = 5 Speed HD Manual
M = Renegade	T = LHD (2WD)		ENJ = 2.5L 4Cyl Turbo Diesel	DG4,DGQ = Multi-Speed Auto
			ENR = 2.8L 4Cyl Turbo Diesel	DG6 = 4 Speed Auto Transm
			EN0 = 4Cyl Turbo Diesel	DG0 = All Automatic Transm
				DBB = All Manual Transm

Lamp, Front
Figure 008-1110

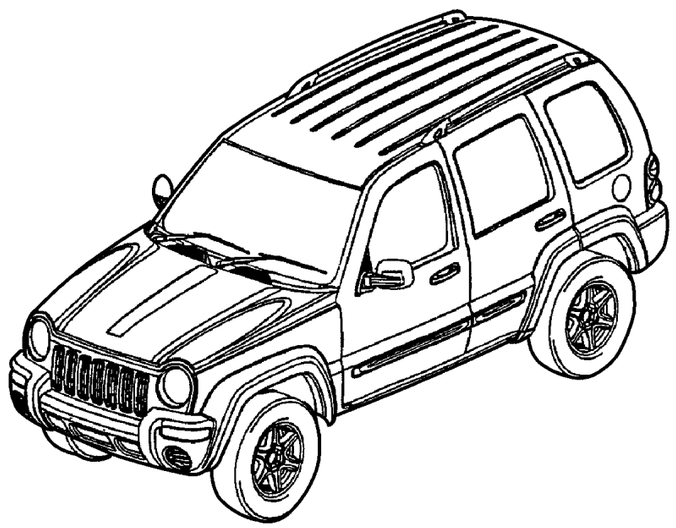

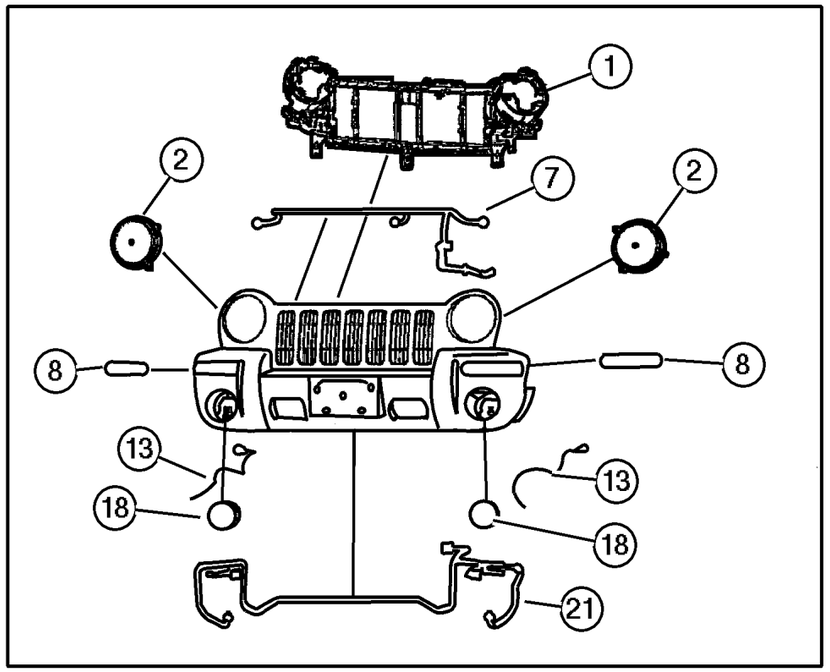

ITEM	PART NUMBER	QTY	LINE	SERIES	BODY	ENGINE	TRANS	TRIM	DESCRIPTION
21	55155 949AA	1							WIRING, Front End Lighting
-22	52112 063AC	4							LAMP, Off Road
-23	5HZ01 RXFAC	1							COVER, Light Bar Support, Black
-24	52112 062AA	1							WIRING, Off Road Light
-25	#5HZ07 RXFAF	1							COVER, Lamp

JEEP LIBERTY (KJ)

SERIES	LINE	BODY	ENGINE	TRANSMISSION
P = Limited	J = LHD (4WD)	74 = 4 Dr. (104.3 WB)	ED1, ED0 = 2.4L Power Tech	DDK = 5 Speed HDManual
H = Sport	U = RHD (4WD)		EKG, EK0 = 3.7L Power Tech	DDD = 5 Speed HD Manual
M = Renegade	T = LHD (2WD)		ENJ = 2.5L 4Cyl Turbo Diesel	DG4,DGQ = Multi-Speed Auto
			ENR = 2.8L 4Cyl Turbo Diesel	DG6 = 4 Speed Auto Transm
			EN0 = 4Cyl Turbo Diesel	DG0 = All Automatic Transm
				DBB = All Manual Transm

AR = Use as required - = Non illustrated part # = New this model year

June 3, 2003

« RETURN TO GROUP INDEX

Lamps Roof (Renegade)
Figure 008-1115

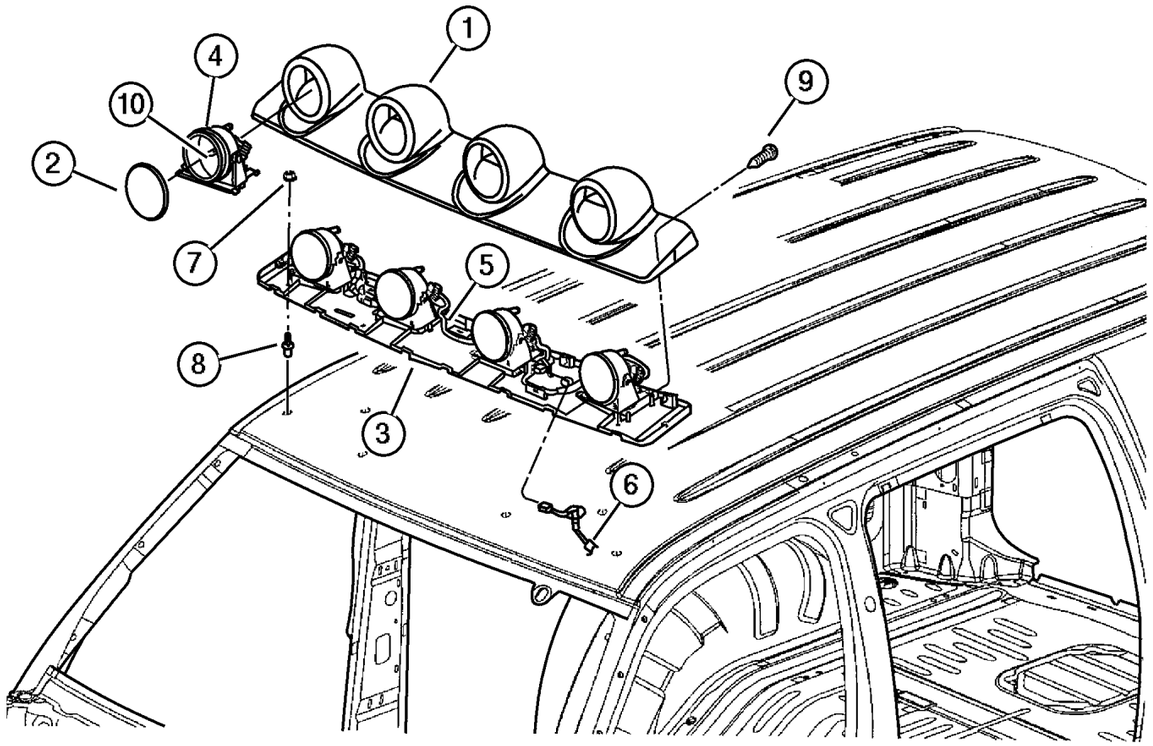

ITEM	PART NUMBER	QTY	LINE	SERIES	BODY	ENGINE	TRANS	TRIM	DESCRIPTION
1									COVER, Light Bar Support
	5HZ01 RXFAC	1							
	#5HZ08 RXFAC	1							Export
2									COVER, Lamp
	#5HZ07 RXFAF	1							Export,Right or Left
		4							
3	5083 967AA	1							BAR, Light Support
4									LAMP, Off Road
	52112 063AC	4							
		2							Export
5	52112 062AA	1							WIRING, Off Road Light
6	56010 419AB	1		M					WIRING, Roof Lamps
7	6507 782AA	6							RIVET STUD
8	6505 953AA	4							NUT AND WASHER, M6x1
9	6507 783AA	4							SCREW, Shoulder
10	L0009 007QL	1							BULB, Headlamp, Off Road Lamp

JEEP LIBERTY (KJ)

SERIES	LINE	BODY	ENGINE	TRANSMISSION
P = Limited	J = LHD (4WD)	74 = 4 Dr. (104.3 WB)	ED1, ED0 = 2.4L Power Tech	DDK = 5 Speed HDManual
H = Sport	U = RHD (4WD)		EKG, EK0 = 3.7L Power Tech	DDD = 5 Speed HD Manual
M = Renegade	T = LHD (2WD)		ENJ = 2.5L 4Cyl Turbo Diesel	DG4,DGQ = Multi-Speed Auto
			ENR = 2.8L 4Cyl Turbo Diesel	DG6 = 4 Speed Auto Transm
			EN0 = 4Cyl Turbo Diesel	DG0 = All Automatic Transm
				DBB = All Manual Transm

AR = Use as required - = Non illustrated part # = New this model year **June 3, 2003**

« RETURN TO GROUP INDEX

Lamp, Rear
Figure 008-1120

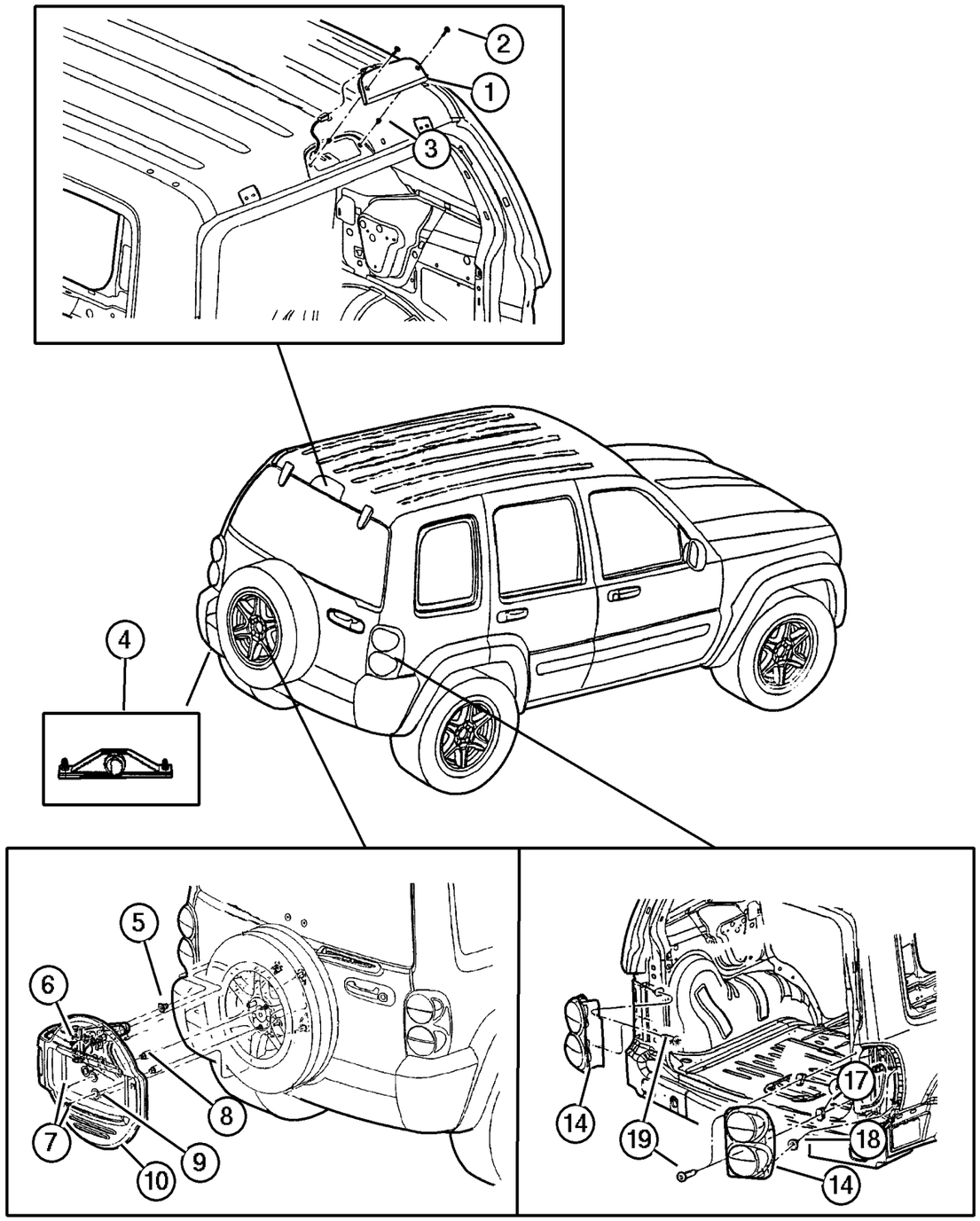

ITEM	PART NUMBER	QTY	LINE	SERIES	BODY	ENGINE	TRANS	TRIM	DESCRIPTION
1	55155 832AB	1							LAMP, High Mounted Stop
2	6036 163AA	2							SCREW, .19-16x1.00
3	6507 330AA	2							NUT, Plastic Snap-in
4	4574 904	1							LAMP, License Plate
5									NUT/RIVET, M6x1.0, (NOT SERVICED) (Not Serviced)
6	6506 429AA	2	J, U						SCREW, M8x1.25x21
7	6506 429AA	2	J, U						SCREW, M8x1.25x21
8	6036 303AA	2	J, U						NUT, .50-20
9	6506 924AA	4							NUT, Wheel
10	5HF06 1S5AI	1	J, U	H, P					BRACKET, License Plate, Export
-11									LAMP, License
	55156 006AA	2	J, U	H, P					
		2	J, U	M					
-12	56010 329AB	1							WIRING, License Lamp
-13	0153 625	2							BULB, W10/5
14									LAMP, Tail Stop Turn
	55155 828AG	1							Right
	55155 829AG	1							Left
	#55155 830AH	1							Export, Right
	#55155 831AH	1							Export, Left
-15									BULB, 3157
	L000 3157	3							
		4							Export
-16									SOCKET, Board
	4676 589	3							Tail Lamp Socket
		4							Tail Lamp Socket (Export)
17	6036 508AA	4							NUT, Plastic Snap-in
18	6507 347AA	4							CLIP
19	6036 366AA	4							SCREW, Tapping, .164-18x.75
-20									WIRING, Rear Lamp
	#56010 085AH	1	J, U						Up to 01/27/03 (Export)
	#56010 085AI	1	J, U						01/27/03 & After (Export)
	#56010 086AG	1	J, T						Up to 01/27/03
	#56010 086AH	1	J, T						01/27/03 & After

JEEP LIBERTY (KJ)

SERIES	LINE	BODY	ENGINE	TRANSMISSION
P = Limited	J = LHD (4WD)	74 = 4 Dr. (104.3 WB)	ED1, ED0 = 2.4L Power Tech	DDK = 5 Speed HDManual
H = Sport	U = RHD (4WD)		EKG, EK0 = 3.7L Power Tech	DDD = 5 Speed HD Manual
M = Renegade	T = LHD (2WD)		ENJ = 2.5L 4Cyl Turbo Diesel	DG4,DGQ = Multi-Speed Auto
			ENR = 2.8L 4Cyl Turbo Diesel	DG6 = 4 Speed Auto Transm
			EN0 = 4Cyl Turbo Diesel	DG0 = All Automatic Transm
				DBB = All Manual Transm

AR = Use as required - = Non illustrated part # = New this model year **June 3, 2003**

« RETURN TO GROUP INDEX

Lamp, Courtesy
Figure 008-1130

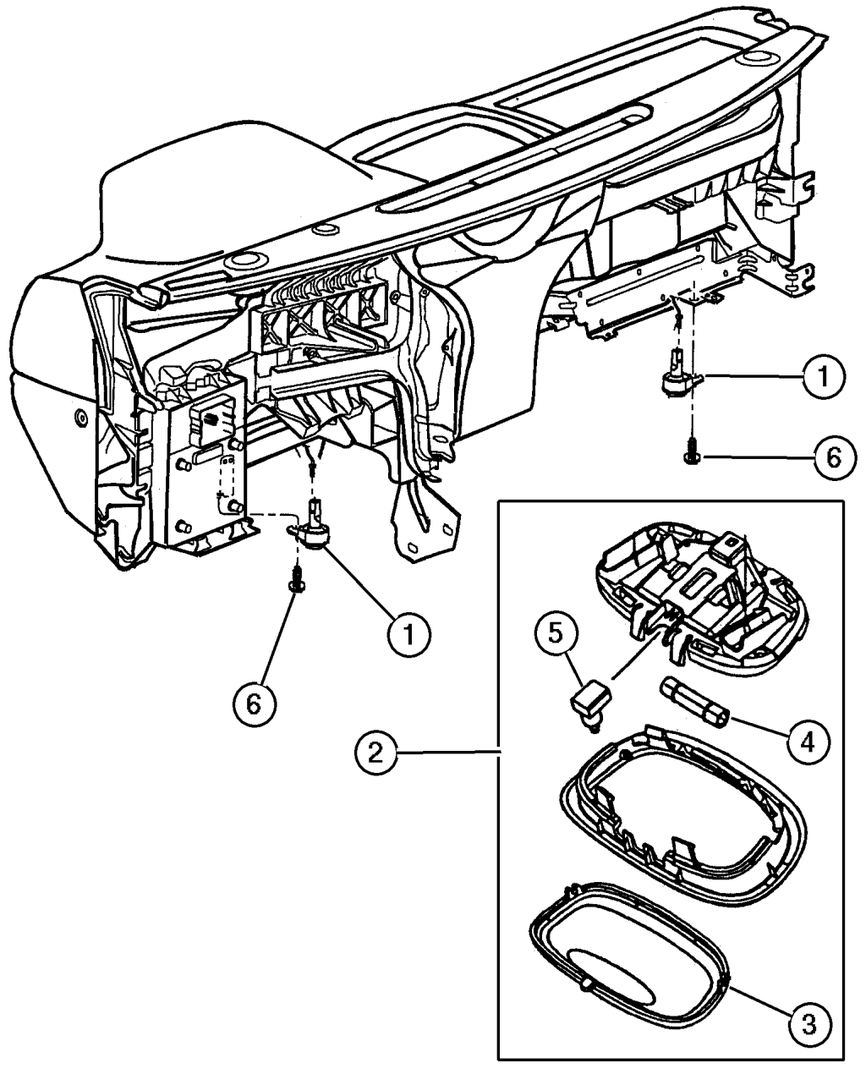

ITEM	PART NUMBER	QTY	LINE	SERIES	BODY	ENGINE	TRANS	TRIM	DESCRIPTION
1	56042 559AA	2		M, P					LAMP, Courtesy
2									LAMP, Cargo
	5FT1 0TL2	1	J, T						Beige
		1							Beige (Export)
3									LENS, Cargo Lamp
	55196 755AA	1	J, T						
		1							Export
4									BULB, 212-2
	L002 1202	1	J, T						
		1							Export
5									SWITCH, Reading Lamp
	4685 445	1	J, T						Cargo Lamp
		1							Cargo Lamp (Export)
6									SCREW, Tap./Hex. Flg. HD M4.2x1.70x15.00, (NOT SERVICED) (Not Serviced)
-7	4437 661	3	J, T						LAMP, Message Center
-8	JV76 TL2	1	J, T						LAMP, Dome, Beige
-9	4762 566	1	J, T						LENS, Dome Lamp
-10									LAMP, Dome And Reading
	#5JG63 1L2AA	1							Without Sunroof
	#5JG65 1L2AA	1							With Sunroof
-11	#5093 415AA	1							LENS, Reading Lamp, Without Sunroof
-12	L000 0578	2							BULB, 578
-13	#5093 522AA	1							LENS, Dome Lamp, With Sunroof
-14									COVER, Lamp
	5HZ07 RXFAB	4							Light Bar Roof Mounted (Up to 10/30/02)
	#5HZ07 RXFAF	4							Light Bar Roof Mounted (10/30/02 & After)

JEEP LIBERTY (KJ)

SERIES	LINE	BODY	ENGINE	TRANSMISSION
P = Limited	J = LHD (4WD)	74 = 4 Dr. (104.3 WB)	ED1, ED0 = 2.4L Power Tech	DDK = 5 Speed HDManual
H = Sport	U = RHD (4WD)		EKG, EK0 = 3.7L Power Tech	DDD = 5 Speed HD Manual
M = Renegade	T = LHD (2WD)		ENJ = 2.5L 4Cyl Turbo Diesel	DG4,DGQ = Multi-Speed Auto
			ENR = 2.8L 4Cyl Turbo Diesel	DG6 = 4 Speed Auto Transm
			EN0 = 4Cyl Turbo Diesel	DG0 = All Automatic Transm
				DBB = All Manual Transm

Bulbs & Sockets
Figure 008-1140

ITEM	PART NUMBER	QTY	LINE	SERIES	BODY	ENGINE	TRANS	TRIM	DESCRIPTION
Notes:									
[ED0] = 2.4L 4 Cylinder Engine									
[EK0] = 3.7L V6 Cylinder Engine									
1	L000 3157	1							BULB, 3157
-2	L000 921E	1							BULB, 921
-3	L000 9006	1							BULB, Headlamp
-4	L000 0906	1		M, P					BULB, 906
-5	L000 0192	2	J, T						BULB, 192
-6	L000 0578	2							BULB, 578
-7	L000 0579	1	J, T						BULB, 579
-8	L002 1402	1	J, T						BULB, 21402
-9									BULB, H4 Clear
	J324 2537	1	J, T			ED0, EK0			
		1	U			ED0, EK0			
-10	5288 612	1							SOCKET, Side Marker
-11	55156 027AA	1							SOCKET, High Mounted Stop Lamp
-12	4450 824	1							SOCKET AND WIRING, Side Marker Lamp, Rear Side Marker (Repair)
-13	4687 922	1							INSULATOR, 2 Way Male, Rear Side Marker (Repair)
-14	MS82 0083	1	J, T				DG0		BULB, 14V 1.4W, Shift Bezel
-15	L000 0037	1	J, T						BULB, 37, Sun Visor
-16	L000 3893	2							BULB, T8/4, Side Repeater Lamp
-17	55156 754AA	1							SOCKET, Side Marker

JEEP LIBERTY (KJ)

SERIES	LINE	BODY	ENGINE	TRANSMISSION
P = Limited	J = LHD (4WD)	74 = 4 Dr. (104.3 WB)	ED1, ED0 = 2.4L Power Tech	DDK = 5 Speed HDManual
H = Sport	U = RHD (4WD)		EKG, EK0 = 3.7L Power Tech	DDD = 5 Speed HD Manual
M = Renegade	T = LHD (2WD)		ENJ = 2.5L 4Cyl Turbo Diesel	DG4,DGQ = Multi-Speed Auto
			ENR = 2.8L 4Cyl Turbo Diesel	DG6 = 4 Speed Auto Transm
			EN0 = 4Cyl Turbo Diesel	DG0 = All Automatic Transm
				DBB = All Manual Transm

Wiring, Engine & Related Parts
Figure 008-1210

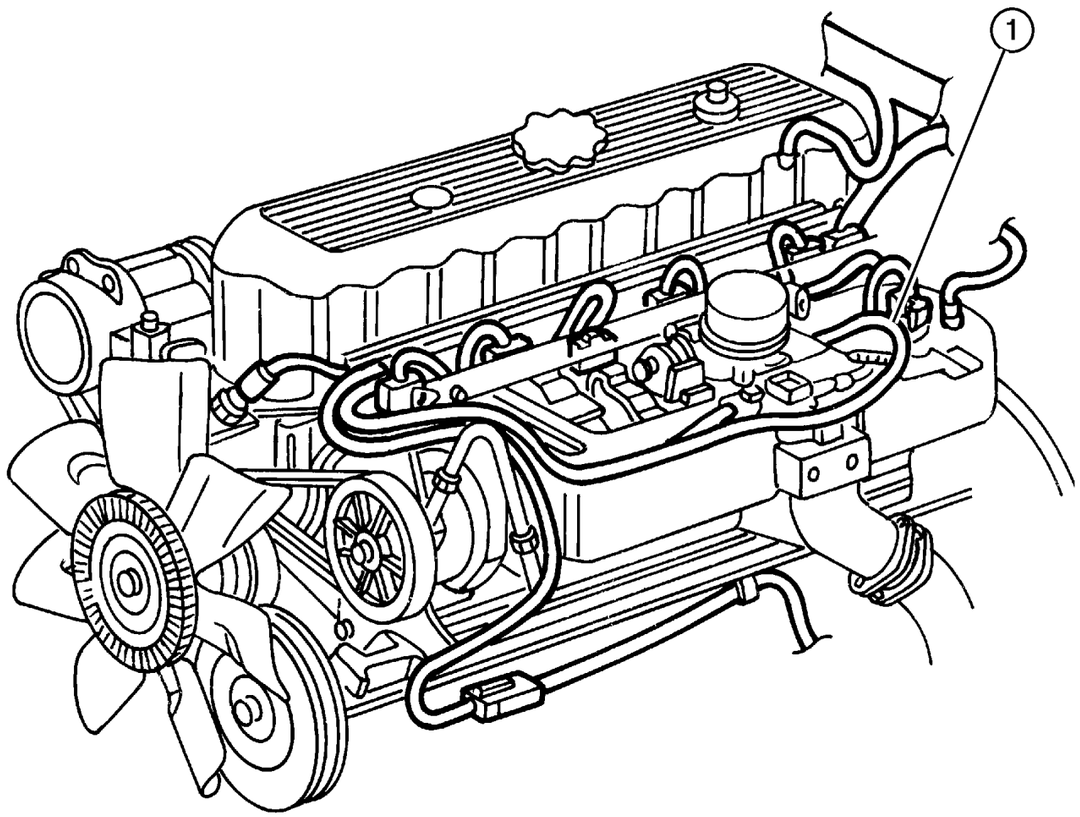

ITEM	PART NUMBER	QTY	LINE	SERIES	BODY	ENGINE	TRANS	TRIM	DESCRIPTION
Notes:									
[ED0] = 2.4L 4 Cylinder Engine									
[EK0] = 3.7L V6 Cylinder Engine									
[EN0] =All 4/5 Cylinder Turbo Diesel Engines									
[DBB]=All Manual Transmissions									
[DDD]= 5 Speed Heavy Duty Manual Transmission									
[DDK]= 5 Speed Heavy Duty Manual Transmission									
[DG4]=Automatic Transmission Multi-Speed									
1									WIRING, Engine
	#56044 401AA	1				ED0			
	#56044 205AC	1	T			EK0	DG6		
	#56044 413AC	1	U			EK0	DG4		
	#56044 503AA	1	U			EN0	DDD		
	#56044 512AA	1	J, T			EN0	DDD		
	#56044 522AD	1	J, T			ED0	DDK		Up to 8/05/02
	#56044 522AE	1	J, T			ED0	DDK		8/05/02 & After
	#56044 523AD	1	U			ED0	DDK		
	#56044 412AC	1	J			EK0	DG4		
	#56044 414AC	1	J			EK0	DDD		
	#56044 415AC	1	T			EK0	DG4		
	#56044 416AC	1	T			EK0	DDD		
	#56041 554AE	1	U			EN0	DG0		
	#56044 108AE	1	J, T			EN0	DG0		
	#56044 203AD	1	U			EK0	DG6		
	#56044 202AC	1	J			EK0	DG6		
-2									CLIP, Wiring
	#5114 014AA	1	U			EN0	DG0		Engine Wiring to Coolant Bottle
		1	J, T			EN0	DG0		Engine Wiring to Coolant Bottle
-3									BRACKET, Wiring
	56044 125AC	1				EN0			Battery Harness
	56044 156AA	1				ED0			Battery Harness
	56010 275AB	1	U						Headlamp & Dash to Injector Inline
	56010 291AB	1	J, T						Headlamp & Dash to Injector Inline
-4									CLIP, Housing
	56041 379AA	2				EK0	DBB		
		1				EK0	DG4		
		2				EN0			
-5									WIRING, Glow Plug
	5072 674AA	1				EN0	DBB		
		1				EN0	DG0		
-6									WIRING, Alternator and Battery

JEEP LIBERTY (KJ)

SERIES	LINE	BODY	ENGINE	TRANSMISSION
P = Limited	J = LHD (4WD)	74 = 4 Dr. (104.3 WB)	ED1, ED0 = 2.4L Power Tech	DDK = 5 Speed HDManual
H = Sport	U = RHD (4WD)		EKG, EK0 = 3.7L Power Tech	DDD = 5 Speed HD Manual
M = Renegade	T = LHD (2WD)		ENJ = 2.5L 4Cyl Turbo Diesel	DG4,DGQ = Multi-Speed Auto
			ENR = 2.8L 4Cyl Turbo Diesel	DG6 = 4 Speed Auto Transm
			EN0 = 4Cyl Turbo Diesel	DG0 = All Automatic Transm
				DBB = All Manual Transm

Wiring, Engine & Related Parts
Figure 008-1210

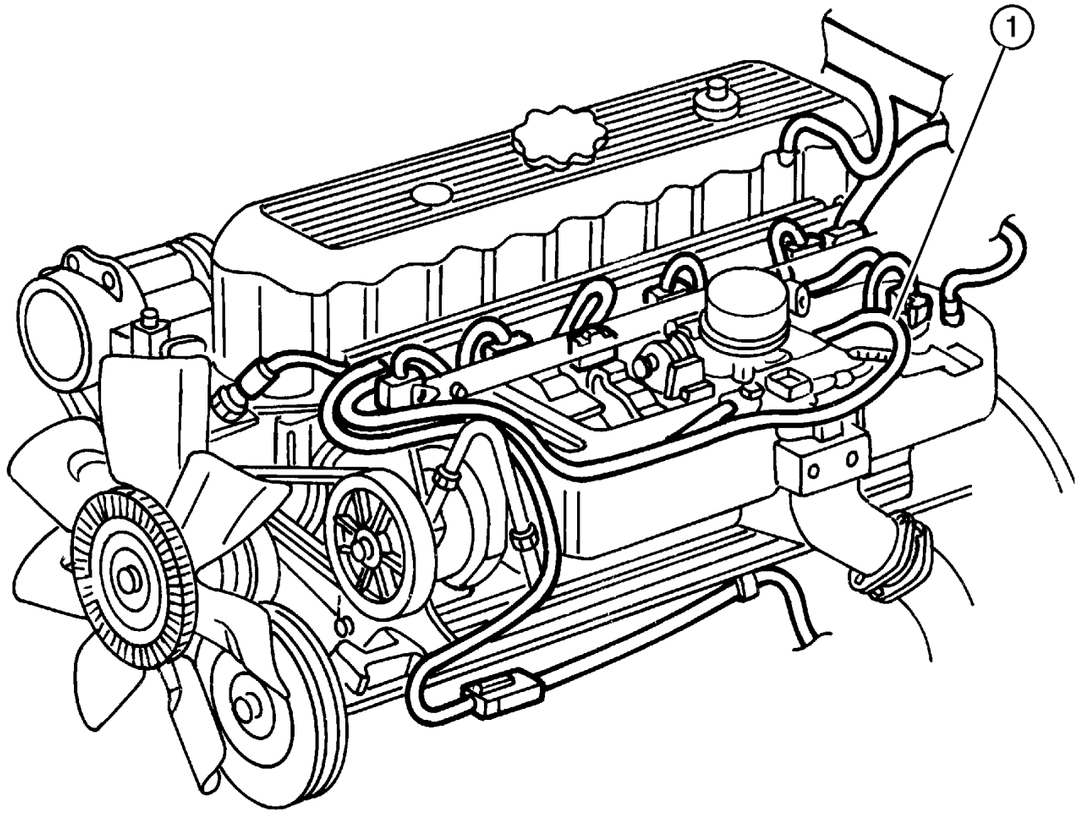

ITEM	PART NUMBER	QTY	LINE	SERIES	BODY	ENGINE	TRANS	TRIM	DESCRIPTION
	#56044 213AB	1				ED0			
	#56044 501AB	1		H, P		EK0			Limited / Sport
	#56044 502AB	1		M		EK0			Renegade
	#56050 402AA	1				ENR			
	#56050 402AB	1				EN0			
-7	56041 824AE	1				EK0			BRACKET, Wiring Harness, Harness to Engine Mount
-8									STRAP, Ground
	56038 529AB	1				ED0			Engine/Body/Hood
	56038 554AB	1				EK0			Engine/Body/Hood
	56038 750AA	1							Hood to Fender
-9									CORD, Engine Block Heater
	56041 974AA	1				EK0			
	56044 160AA	1				ED0			
-10									HEATER, Engine
	55037 539AA	1				EN0	DBB		
		1				EN0	DG0		

JEEP LIBERTY (KJ)

SERIES	LINE	BODY	ENGINE	TRANSMISSION
P = Limited	J = LHD (4WD)	74 = 4 Dr. (104.3 WB)	ED1, ED0 = 2.4L Power Tech	DDK = 5 Speed HDManual
H = Sport	U = RHD (4WD)		EKG, EK0 = 3.7L Power Tech	DDD = 5 Speed HD Manual
M = Renegade	T = LHD (2WD)		ENJ = 2.5L 4Cyl Turbo Diesel	DG4,DGQ = Multi-Speed Auto
			ENR = 2.8L 4Cyl Turbo Diesel	DG6 = 4 Speed Auto Transm
			EN0 = 4Cyl Turbo Diesel	DG0 = All Automatic Transm
				DBB = All Manual Transm

AR = Use as required - = Non illustrated part # = New this model year

June 3, 2003

« RETURN TO GROUP INDEX

Wiring, Headlamp / Dash
Figure 008-1310

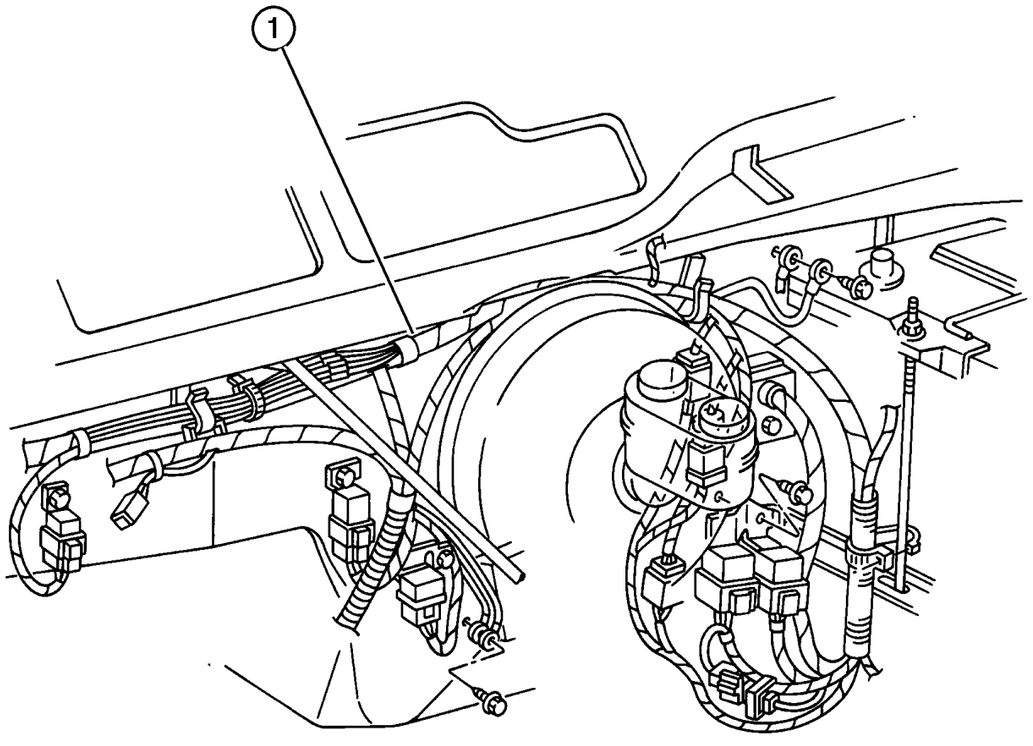

ITEM	PART NUMBER	QTY	LINE	SERIES	BODY	ENGINE	TRANS	TRIM	DESCRIPTION
Notes:									
[BRE] = 4 Wheel Disc									
[BRY] = Anti-Lock 4 Wheel Disc									
[ED0] = 2.4L 4 Cylinder Engine									
[EK0] = 3.7L V6 Cylinder Engine									
[EN0] =All 4/5 Cylinder Turbo Diesel Engine									
[DBB]=All Manual Transmissions									
[DG0]=All Automatic Transmissions									
1									WIRING, Headlamp to Dash
	56009 950AP	1	J, T			ED0, EK0	DG0		[BRY]
	#56009 976AS	1	U			ED0, EK0	DBB		[BRY]
	#56009 977AR	1	U			ED0, EK0	DBB		[BRE]
	#56009 978AS	1	U			ED0, EK0	DG0		[BRY]
	#56009 979AR	1	U			ED0, EK0	DG0		[BRE]
	#56009 982AS	1	U			EN0	DBB		[BRE]
	#56009 983AS	1	U			EN0	DBB		[BRY]
	#56009 984AS	1	J, T			EN0	DBB		[BRY]
	#56009 985AS	1	J, T			EN0	DBB		[BRE]
	56009 951AI	1	J, T			ED0, EK0	DG0		[BRE]
	56009 952AO	1	J, T			ED0, EK0	DG0		[BRE] Export
	56009 953AP	1	J, T			ED0, EK0	DBB		[BRY]
	56009 954AO	1	J, T			ED0, EK0	DBB		[BRE]
	56009 970AJ	1	J, T			EN0	DG0		[BRY]
	#56009 971AK	1	J, T			EN0	DG0		[BRE]
	#56009 972AK	1	U			EN0	DG0		[BRY]
	#56009 975AK	1	U			EN0	DG0		[BRE]
-2	5602 1543	1							BREAKER, Circuit
-3									FUSE, Mini, 10 AMP, Red
	6101 486	1	U						
		1	J, T						
-4									FUSE, Mini, 15 AMP, Light Blue
	6101 487	1	U						

JEEP LIBERTY (KJ)

SERIES	LINE	BODY	ENGINE	TRANSMISSION
P = Limited	J = LHD (4WD)	74 = 4 Dr. (104.3 WB)	ED1, ED0 = 2.4L Power Tech	DDK = 5 Speed HDManual
H = Sport	U = RHD (4WD)		EKG, EK0 = 3.7L Power Tech	DDD = 5 Speed HD Manual
M = Renegade	T = LHD (2WD)		ENJ = 2.5L 4Cyl Turbo Diesel	DG4,DGQ = Multi-Speed Auto
			ENR = 2.8L 4Cyl Turbo Diesel	DG6 = 4 Speed Auto Transm
			EN0 = 4Cyl Turbo Diesel	DG0 = All Automatic Transm
				DBB = All Manual Transm

AR = Use as required - = Non illustrated part # = New this model year **June 3, 2003**

« RETURN TO GROUP INDEX »

Wiring, Headlamp / Dash
Figure 008-1310

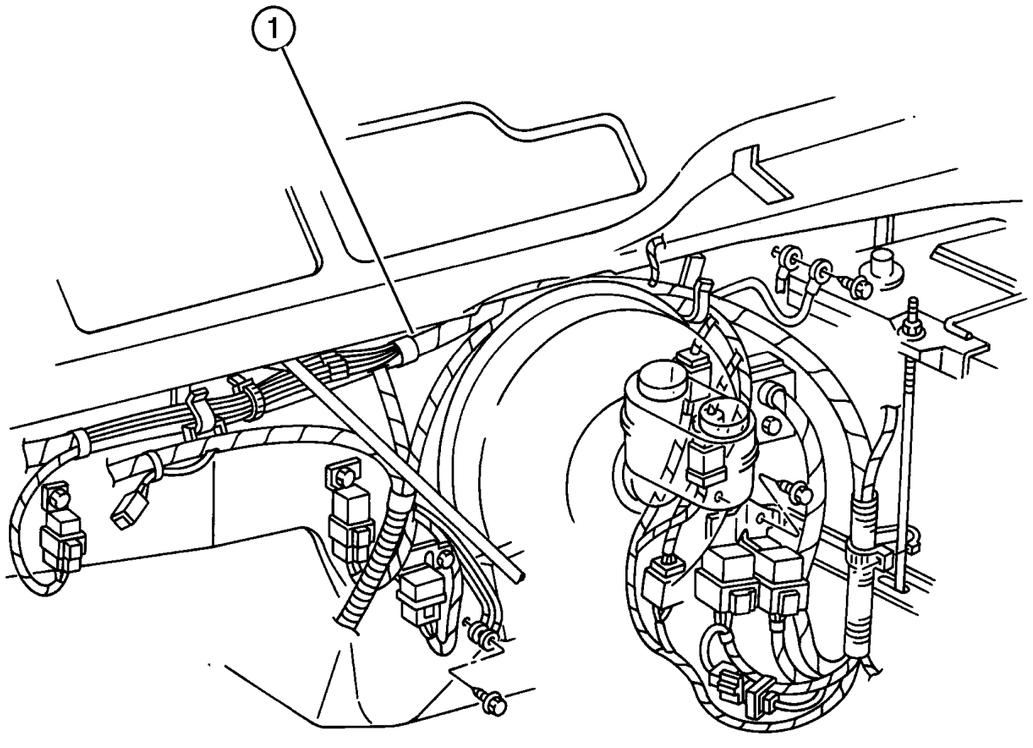

ITEM	PART NUMBER	QTY	LINE	SERIES	BODY	ENGINE	TRANS	TRIM	DESCRIPTION
		1	J, T						
-5									FUSE, Mini, 20 AMP, Yellow
	6101 488	1	U						
		1	J, T						
-6									FUSE, Mini, 30 AMP, Green
	00AT M30	AR	J, T			EN0	DG0		
		AR	J, T			EN0	DBB		
		AR	J, T			ED0, EK0	DBB		
-7									PULLER, Fuse
	5072 937AA	1	U						
		1	J, T						
-8									BRACKET, Wiring
	56010 275AB	1	U						Headlamp & Dash to Injector Inlines
	56010 291AB	1	J, T						Headlamp & Dash to Injector Inlines
-9	56009 948AA	1							COLLAR, Insulator, Headlamp & Dash to I/Panel
-10									COVER, Power Distribution Center
	5093 866AA	1	J, T			ED0, EK0	DG0		Export
		1	J, T			ED0, EK0	DG0		
		1	U			ED0, EK0	DG0		
	5093 867AA	1	J, T			EN0	DG0		Built 4/15/02 & After
		1	U			EN0	DG0		Built 4/15/02 & After
	5083 193AA	1	U			EN0	DBB		Built Before 4/15/02
	5093 866AA	1	J, T			ED0, EK0	DBB		
		1	U			ED0, EK0	DBB		
	5083 193AA	1	J, T			EN0	DBB		Built Before 4/15/02
-11									FUSE CARTRIDGE, 50 Amp
	6102 078AA	AR	J, T			EN0	DG0		
		AR	J, T			EN0	DBB		
		AR	J, T			ED0, EK0	DBB		
-12	6102 075AA	AR	J, T			EN0	DG0		FUSE CARTRIDGE, 20 Amp
-13	6102 076AA	AR	J, T			EN0	DG0		FUSE CARTRIDGE, 30 Amp

JEEP LIBERTY (KJ)

SERIES	LINE	BODY	ENGINE	TRANSMISSION
P = Limited	J = LHD (4WD)	74 = 4 Dr. (104.3 WB)	ED1, ED0 = 2.4L Power Tech	DDK = 5 Speed HDManual
H = Sport	U = RHD (4WD)		EKG, EK0 = 3.7L Power Tech	DDD = 5 Speed HD Manual
M = Renegade	T = LHD (2WD)		ENJ = 2.5L 4Cyl Turbo Diesel	DG4,DGQ = Multi-Speed Auto
			ENR = 2.8L 4Cyl Turbo Diesel	DG6 = 4 Speed Auto Transm
			EN0 = 4Cyl Turbo Diesel	DG0 = All Automatic Transm
				DBB = All Manual Transm

AR = Use as required - = Non illustrated part # = New this model year

June 3, 2003

« RETURN TO GROUP INDEX

« »

Wiring, Headlamp / Dash
Figure 008-1310

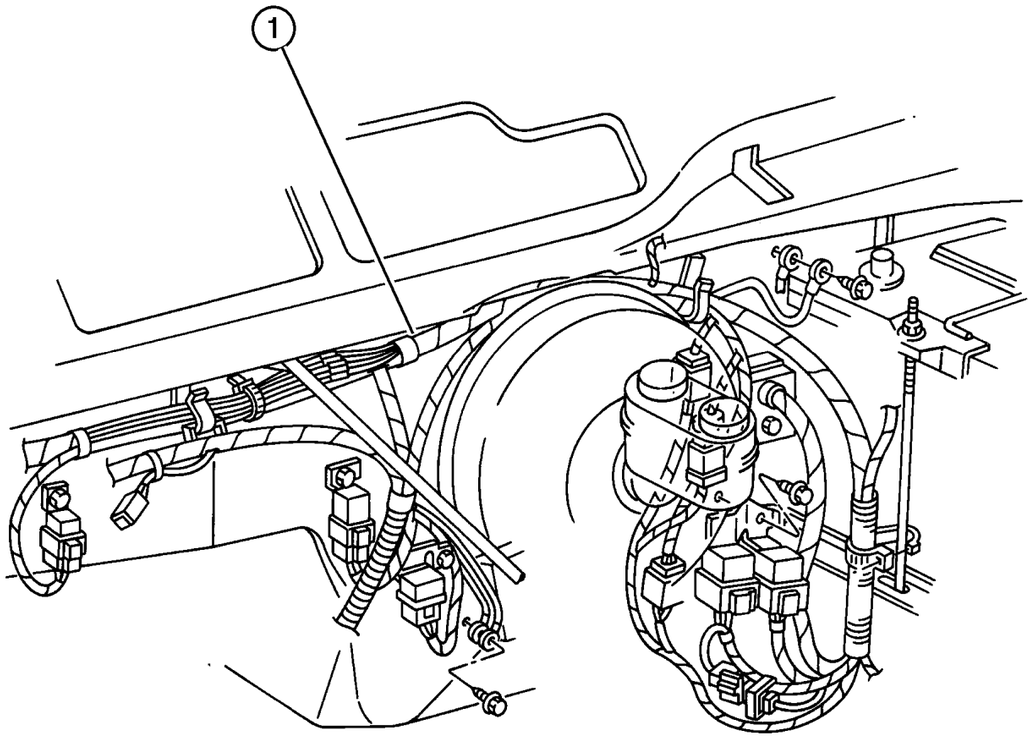

ITEM	PART NUMBER	QTY	LINE	SERIES	BODY	ENGINE	TRANS	TRIM	DESCRIPTION
-14	6102 077AA	AR	J, T			EN0	DG0		FUSE CARTRIDGE, 40 Amp
-15	6101 757	2					DG6		FUSIBLE LINK

JEEP LIBERTY (KJ)

SERIES	LINE	BODY	ENGINE	TRANSMISSION
P = Limited	J = LHD (4WD)	74 = 4 Dr. (104.3 WB)	ED1, ED0 = 2.4L Power Tech	DDK = 5 Speed HDManual
H = Sport	U = RHD (4WD)		EKG, EK0 = 3.7L Power Tech	DDD = 5 Speed HD Manual
M = Renegade	T = LHD (2WD)		ENJ = 2.5L 4Cyl Turbo Diesel	DG4,DGQ = Multi-Speed Auto
			ENR = 2.8L 4Cyl Turbo Diesel	DG6 = 4 Speed Auto Transm
			EN0 = 4Cyl Turbo Diesel	DG0 = All Automatic Transm
				DBB = All Manual Transm

AR = Use as required - = Non illustrated part # = New this model year

June 3, 2003

« RETURN TO GROUP INDEX

Wiring Instrument Panel
Figure 008-1410

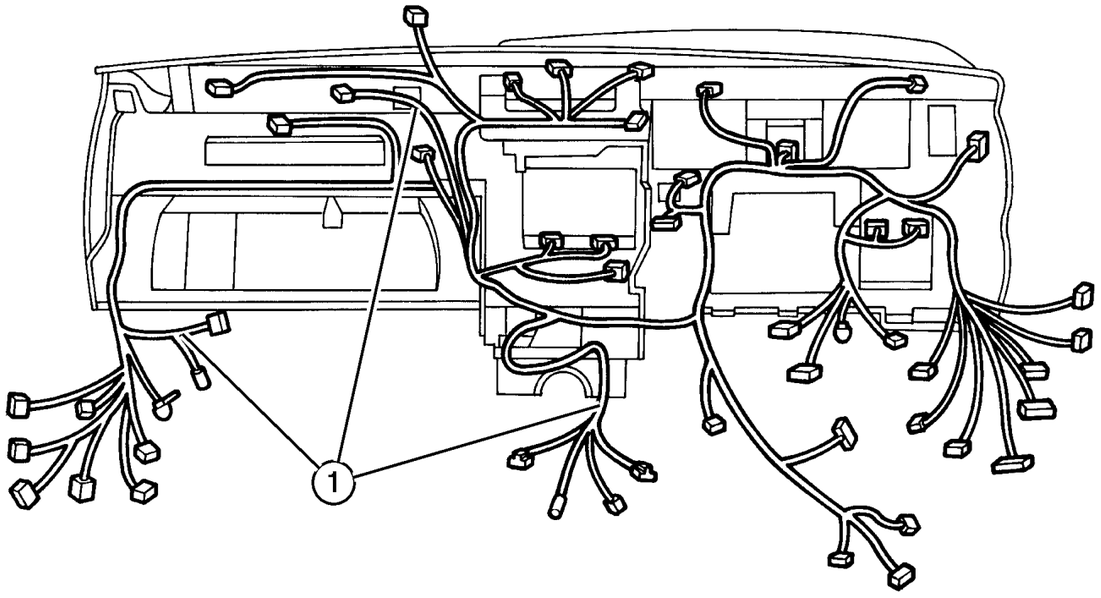

ITEM	PART NUMBER	QTY	LINE	SERIES	BODY	ENGINE	TRANS	TRIM	DESCRIPTION
Notes:									
[AJP] = Power Convenience Group									
[LNS] =Light Bar Roof Mount									
1									WIRING, Instrument Panel
	#56010 362AG	1	J, T						With [AJP]
	#56010 363AG	1	J						
	#56010 364AG	1	J, T						Without [AJP]
	#56010 392AG	1	U						
	#56010 565AF	1							With [LNS]
-2									JUNCTION BLOCK, Relay
	56010 295AF	1							Without Keyless Entry
	56009 987AF	1	J, T						With Keyless Entry
		1	J, U						With Keyless Entry
-3									BRACKET, Junction Block
	56009 986AB	1							Lower Mounting
	56010 333AD	1	J, T						Upper Mounting
	56010 334AD	1	U						Upper Mounting
-4									FUSE, Mini, 10 AMP, Red
	6101 486	1	U						
	00AT M10	1	J, T						
-5									FUSE, Mini, 15 AMP, Light Blue
	6101 487	1	U						
	00AT M15	1	J, T						
-6									FUSE, Mini, 20 AMP, Yellow
	6101 488	1	U						
	00AT M20	1	J, T						
-7									FUSE, Mini, 30 AMP, Green
	00AT M30	AR	J, T			EN0	DG0		
		AR	J, T			EN0	DBB		
		AR	J, T			ED0, EK0	DBB		
-8									FUSE CARTRIDGE, 50 Amp
	6102 078AA	AR	J, T			EN0	DG0		
		AR	J, T			EN0	DBB		
		AR	J, T			ED0, EK0	DBB		
-9									PULLER, Fuse
	5072 937AA	1	U						
		1	J, T						
-10	5602 1543	1							BREAKER, Circuit
-11	5271 296AA	1							WIRING, Instrument Panel Jumper

JEEP LIBERTY (KJ)

SERIES	LINE	BODY	ENGINE	TRANSMISSION
P = Limited	J = LHD (4WD)	74 = 4 Dr. (104.3 WB)	ED1, ED0 = 2.4L Power Tech	DDK = 5 Speed HDManual
H = Sport	U = RHD (4WD)		EKG, EK0 = 3.7L Power Tech	DDD = 5 Speed HD Manual
M = Renegade	T = LHD (2WD)		ENJ = 2.5L 4Cyl Turbo Diesel	DG4,DGQ = Multi-Speed Auto
			ENR = 2.8L 4Cyl Turbo Diesel	DG6 = 4 Speed Auto Transm
			EN0 = 4Cyl Turbo Diesel	DG0 = All Automatic Transm
				DBB = All Manual Transm

AR = Use as required - = Non illustrated part # = New this model year **June 3, 2003**

« RETURN TO GROUP INDEX

Wiring, Body & Accessories
Figure 008-1510

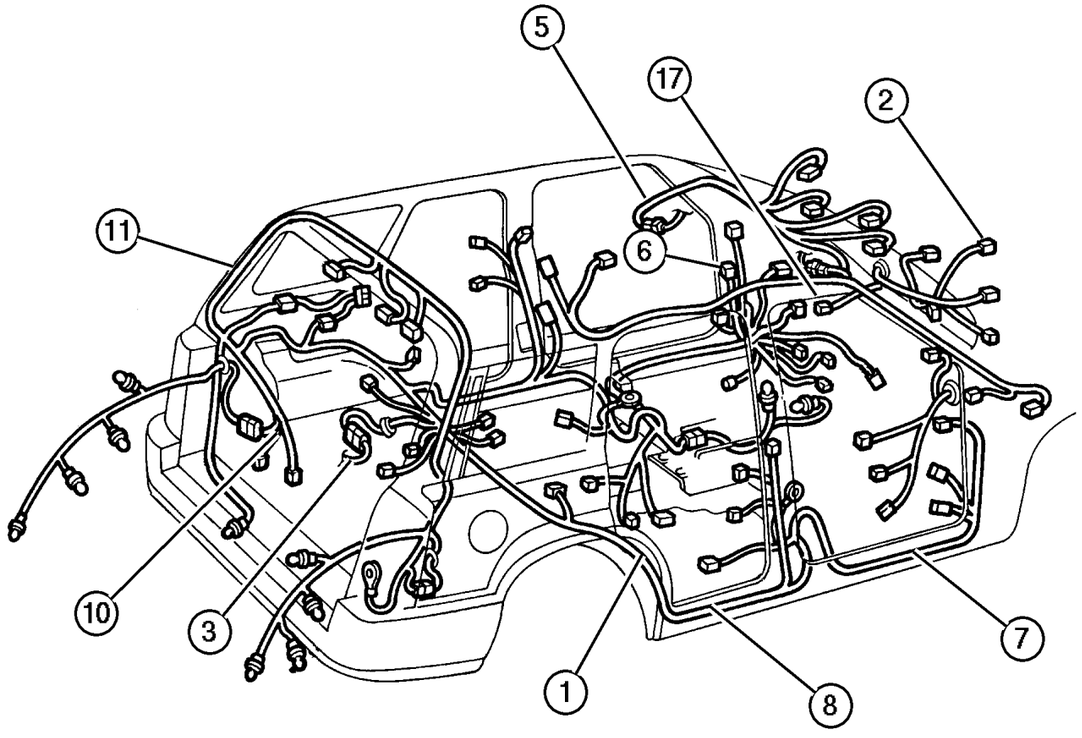

ITEM	PART NUMBER	QTY	LINE	SERIES	BODY	ENGINE	TRANS	TRIM	DESCRIPTION
1									WIRING, Body
	#56010 500AF	1	J, T						With Speed Sensitive Power Locks (Up to 10/17/02)
	#56010 505AG	1	J, T						With Supplemental Side Airbag & without Power Front Driver & Passenger Window (10/17/02 & After)
	#56010 506AF	1	U						With Supplemental Side Airbag (Up to 10/17/02)
	#56010 506AG	1	U						With Supplemental Side Airbag (10/17/02 & After)
	#56010 508AF	1	J, T						With Supplemental Side Airbag & Power Front Driver & Passenger Window (Up to 10/17/02)
	#56010 508AG	1	J, T						With Supplemental Side Airbag & Power Front Driver & Passenger Window (10/17/02 & After)
	#56010 509AF	1	J, T						Without Speed Sensitive Power Locks & without Supplemental Side Airbag (Up to 10/17/02)
	#56010 509AG	1	J, T						Without Speed Sensitive Power Locks & without Supplemental Side Airbag (10/17/02 & After)
	#56010 613AF	1	J, T						With 8 Way Driver / Passenger Seats (Up to 10/17/02)
		1	J, T						Without Supplemental Side Airbag (Up to 10/17/02)
	#56010 613AG	1	J, T						With 8 Way Driver / Passenger Seats (10/17/02 & After)
	#56010 500AG	1	J, T						With Speed Sensitive Power Locks (10/17/02 & After)
	#56010 613AG	1	J, T						Without Supplemental Side Airbag (10/17/02 & After)
	#56010 657AE	1	U						Without Supplemental Side Airbag (10/17/02 & After)
	#56010 657AD	1	U						Without Supplemental Side Airbag (Up to 10/17/02)
	#56010 503AF	1	J, T						Power Front Driver & Passenger Window (Up to 10/17/02)
	#56010 503AG	1	J, T						Power Front Driver & Passenger Window (10/17/02 & After)

JEEP LIBERTY (KJ)

SERIES	LINE	BODY	ENGINE	TRANSMISSION
P = Limited	J = LHD (4WD)	74 = 4 Dr. (104.3 WB)	ED1, ED0 = 2.4L Power Tech	DDK = 5 Speed HDManual
H = Sport	U = RHD (4WD)		EKG, EK0 = 3.7L Power Tech	DDD = 5 Speed HD Manual
M = Renegade	T = LHD (2WD)		ENJ = 2.5L 4Cyl Turbo Diesel	DG4,DGQ = Multi-Speed Auto
			ENR = 2.8L 4Cyl Turbo Diesel	DG6 = 4 Speed Auto Transm
			EN0 = 4Cyl Turbo Diesel	DG0 = All Automatic Transm
				DBB = All Manual Transm

AR = Use as required - = Non illustrated part # = New this model year **June 3, 2003**

« RETURN TO GROUP INDEX »

Wiring, Body & Accessories
Figure 008-1510

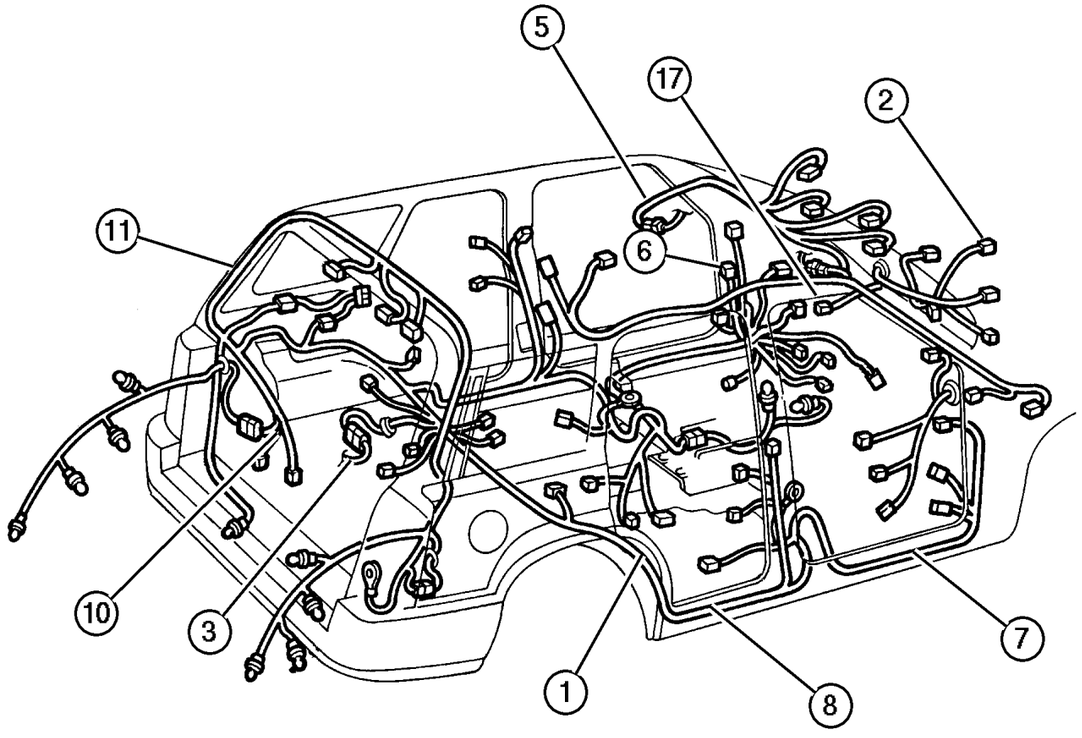

ITEM	PART NUMBER	QTY	LINE	SERIES	BODY	ENGINE	TRANS	TRIM	DESCRIPTION
	#56010 504AF	1	J, T						With Supplemental Side Airbag & 8 Way Driver / Passenger Seats (Up to 10/17/02)
		1	J, T						With Supplemental Side Airbag (Up to 10/17/02)
	#56010 504AG	1	J, T						With Supplemental Side Airbag & 8 Way Driver / Passenger Seats (10/17/02 & After)
		1	J, T						With Supplemental Side Airbag (10/17/02 & After)
	#56010 505AF	1	J, T						With Supplemental Side Airbag & without Power Front Driver & Passenger Window (Up to 10/17/02)
2									WIRING, Front End Lighting
	55155 949AA	1							Without Fog Lamps
	55155 952AC	1							Export with Fog Lamps
	55155 950AC	1							With Fog Lamps
	55155 951AB	1							Export without Fog Lamps
3									WIRING, Rear Body
	#56010 522AC	1	J, T						With [GWA]
	#56010 525AC	1	J, T						Without [AHT]
	#56010 526AC	1	J, T						With [AHT]
	#56010 521AF	1	U						
-4									COVER, Body Wiring
	56010 044AB	1	J, T						Covered Wiring that Lays in Throughs Stamped in the Floor Pan (Middle)
	56010 045AB	1							Covered Wiring that Lays in Throughs Stamped in the Floor Pan (Rear)
5	#5101 961AA	1							WIRING, Sunroof
6									WIRING, Steering Wheel
	56010 170AC	1		P					with Leather Wrap Steering Wheel, Speed Control & without Audio Controls
	56010 171AC	1		P					with Leather Wrap Steering Wheel, Speed Control & Audio Controls
	56010 185AB	1							With Luxury Steering Wheel
7									WIRING, Front Door

JEEP LIBERTY (KJ)

SERIES	LINE	BODY	ENGINE	TRANSMISSION
P = Limited	J = LHD (4WD)	74 = 4 Dr. (104.3 WB)	ED1, ED0 = 2.4L Power Tech	DDK = 5 Speed HDManual
H = Sport	U = RHD (4WD)		EKG, EK0 = 3.7L Power Tech	DDD = 5 Speed HD Manual
M = Renegade	T = LHD (2WD)		ENJ = 2.5L 4Cyl Turbo Diesel	DG4,DGQ = Multi-Speed Auto
			ENR = 2.8L 4Cyl Turbo Diesel	DG6 = 4 Speed Auto Transm
			EN0 = 4Cyl Turbo Diesel	DG0 = All Automatic Transm
				DBB = All Manual Transm

AR = Use as required - = Non illustrated part # = New this model year

June 3, 2003

« RETURN TO GROUP INDEX

Wiring, Body & Accessories
Figure 008-1510

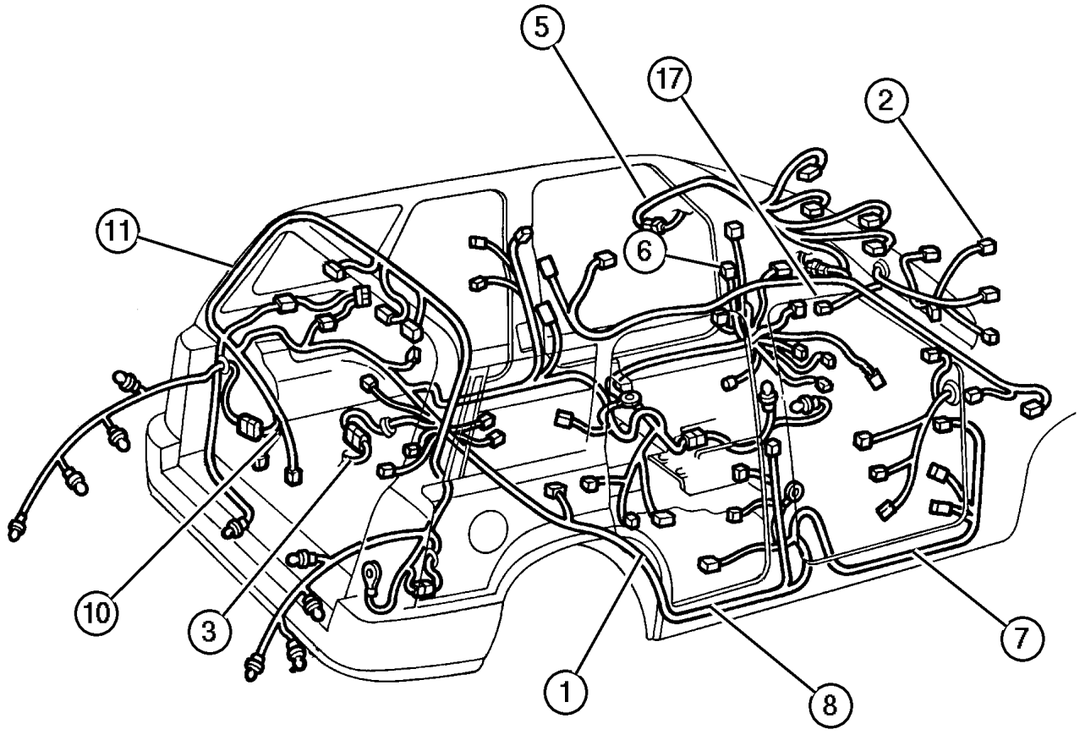

ITEM	PART NUMBER	QTY	LINE	SERIES	BODY	ENGINE	TRANS	TRIM	DESCRIPTION
	#56010 634AA	1							Without Power Driver & Front Passenger Windows, Power Locks, Speed Senitive Power Locks, Power Mirors & without Infinity 6 Speaker System,
	#56050 701AA	1	J, T						Passenger Side With Power Locks, with or without Speed Senitive Power Locks, Power Mirrors, without Infinity 6 Speaker System & With or without, Security Alarm, Power Driver & Front Passenger
	#56050 703AA	1	J, T						With Power Driver & Front Passenger Windows & Without Infinity 6 Speaker System & without Security Alarm
	#56050 705AA	1	J, T						With Infinity 6 Speaker System & without Security Alarm
	#56010 561AD	1	J, T						Without Power Driver & Front Passenger Windows, Power Mirrors, Speed Senitive Power Locks, & without Infinity 6 Speaker System, Drivers Side
		1	U						Without Power Driver & Front Passenger Windows, Power Mirrors, Speed Senitive Power Locks, & without Infinity 6 Speaker System, Drivers Side
	#56010 560AD	1	U						With Infinity 6 Speaker System, Passenger Side
	#56010 570AE	1	U						With Power Driver & Front Passenger Windows, with or without Power Locks, Speed Senitive Power Locks, Power Locks & without Infinity 6 Speaker System, Passenger Side
	#56010 555AD	1	J, T						Security Alarm, Power Locks, with or without Speed Senitive Power Locks, Power Mirrors, without Infinity 6 Speaker System & With or without Power Driver & Front Passenger Window, Driver Side

JEEP LIBERTY (KJ)

SERIES	LINE	BODY	ENGINE	TRANSMISSION
P = Limited	J = LHD (4WD)	74 = 4 Dr. (104.3 WB)	ED1, ED0 = 2.4L Power Tech	DDK = 5 Speed HDManual
H = Sport	U = RHD (4WD)		EKG, EK0 = 3.7L Power Tech	DDD = 5 Speed HD Manual
M = Renegade	T = LHD (2WD)		ENJ = 2.5L 4Cyl Turbo Diesel	DG4,DGQ = Multi-Speed Auto
			ENR = 2.8L 4Cyl Turbo Diesel	DG6 = 4 Speed Auto Transm
			EN0 = 4Cyl Turbo Diesel	DG0 = All Automatic Transm
				DBB = All Manual Transm

AR = Use as required - = Non illustrated part # = New this model year **June 3, 2003**

« RETURN TO GROUP INDEX

« »

Wiring, Body & Accessories
Figure 008-1510

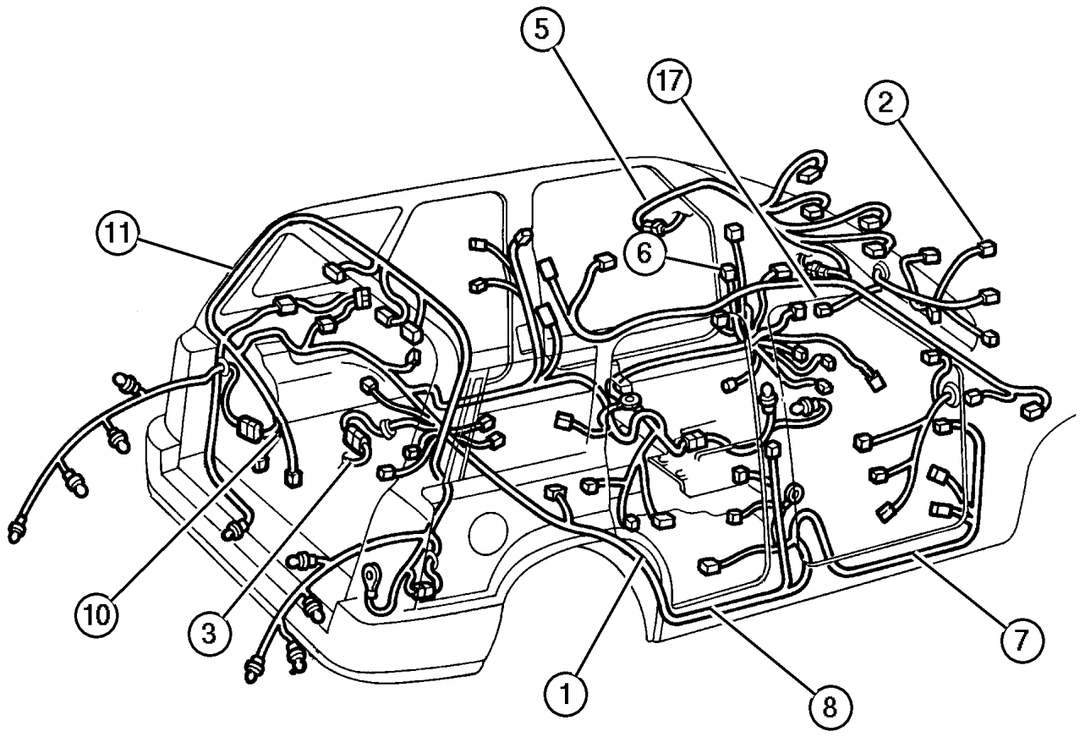

ITEM	PART NUMBER	QTY	LINE	SERIES	BODY	ENGINE	TRANS	TRIM	DESCRIPTION
	#56010 556AC	1	J, T						With Infinity 6 Speaker System, Passenger Side
	#56010 557AD	1	J, T						With Security Alarm, Power Driver & Front Passenger Windows & Without Infinity 6 Speaker System, Driver Side
	#56010 558AD	1	J, T						With Power Driver & Front Passenger Windows & Without Infinity 6 Speaker System, Passenger Side
	#56010 559AC	1	U						With Infinity 6 Speaker System, Driver Side
	#56010 564AD	1	J, T						With Power Locks, with or without Speed Senitive Power Locks, Power Mirrors, without Infinity 6 Speaker System & With or without Power Driver & Front Passenger Window, Passenger Side
	#56010 569AD	1	U						With Power Driver & Front Passenger Windows, with or without Power Locks, Speed Senitive Power Locks, Power Locks & without Infinity 6 Speaker System, Driver Side
	#56010 571AC	1	J, T						With Infinity 6 Speaker System, Driver Side
8									WIRING, Rear Door
	#56010 615AC	2							With Power Driver & Front Passenger Windows, Rear Door
	#56010 616AB	2							Without Power Driver & Front Passenger Windows, Rear Door
	#56010 614AC	2							Without, Power Sensitive Power Locks, Power Driver & Front Passenger Windows & without Power Locks, Rear Door
-9									GROMMET, Door Wiring
	56010 326AC	2							Front Door
	56010 327AB	2							Rear Door
	56010 328AA	1							Tailgate
10									WIRING, Tailgate

JEEP LIBERTY (KJ)

SERIES	LINE	BODY	ENGINE	TRANSMISSION
P = Limited	J = LHD (4WD)	74 = 4 Dr. (104.3 WB)	ED1, ED0 = 2.4L Power Tech	DDK = 5 Speed HDManual
H = Sport	U = RHD (4WD)		EKG, EK0 = 3.7L Power Tech	DDD = 5 Speed HD Manual
M = Renegade	T = LHD (2WD)		ENJ = 2.5L 4Cyl Turbo Diesel	DG4,DGQ = Multi-Speed Auto
			ENR = 2.8L 4Cyl Turbo Diesel	DG6 = 4 Speed Auto Transm
			EN0 = 4Cyl Turbo Diesel	DG0 = All Automatic Transm
				DBB = All Manual Transm

AR = Use as required - = Non illustrated part # = New this model year **June 3, 2003**

« RETURN TO GROUP INDEX

Wiring, Body & Accessories
Figure 008-1510

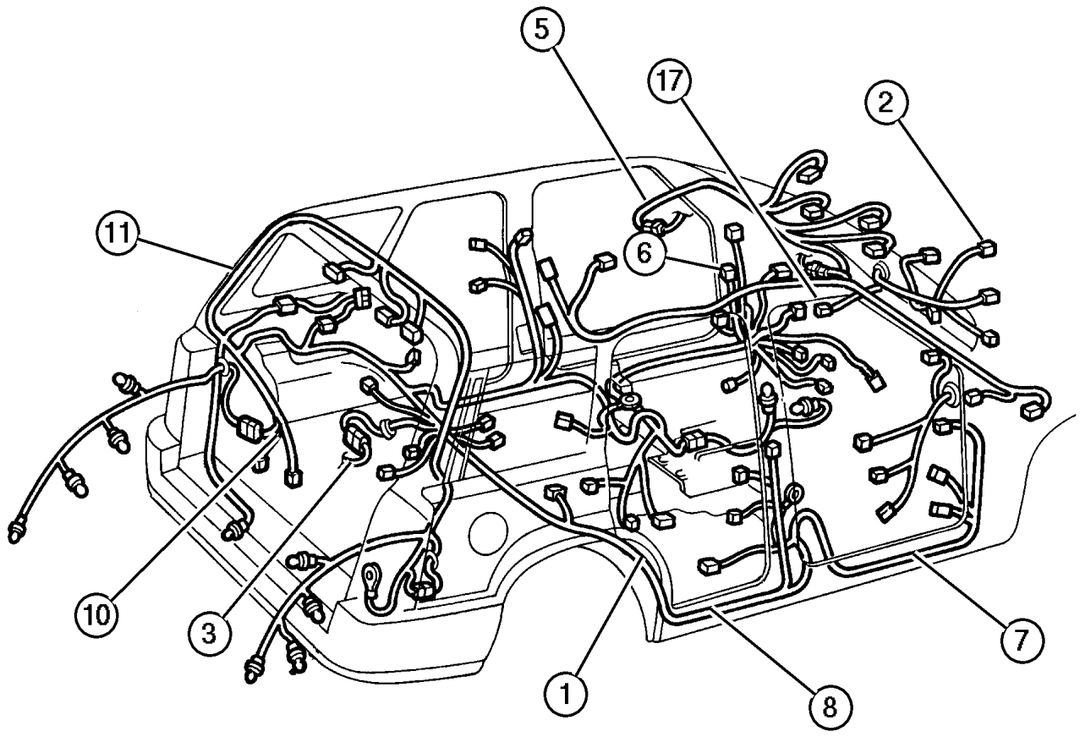

ITEM	PART NUMBER	QTY	LINE	SERIES	BODY	ENGINE	TRANS	TRIM	DESCRIPTION
	#56050 309AC	1							Without Keyless Entry (Up to 10/31/02)
	#56050 310AC	1							With Keyless Entry (Up to 10/31/02)
	#56050 311AC	1							Export (10/31/02 & After)
	#56050 311AA	1							Export (Up to 10/31/02)
	#56050 310AC	1							With Keyless (10/31/02 & After)
	#56050 311AB	1							Without Keyless Entry (10/31/02 & After)
11									WIRING, Rear Lamp
	56010 085AF	1	J, U						
	56010 086AE	1	J, T						
-12	56038 366AB	1							CONNECTOR, 7 Way
-13	5102 404AA	1							WIRING KIT, 7 Way, Female
-14	5102 405AA	4							WIRING KIT, 10 Way, Female
-15	5601 9823	1							ADAPTER, Trailer Tow
-16	8220 3600	1							COVER KIT, Trailer Tow, with 2.00 Receiver & Jeep Logo
17									WIRING, Overhead Console
	4760 644	1							Export
		1	J, T						
-18									COVER, Wiring Protector
	56010 046AC	1							Loacated on Front Floor Foot Area, Passenger Side
	56010 047AC	1							Loacated on Front Floor Foot Area, Driver Side
	5604 2070	1							Export
-19	56010 354AA	6							CLIP, Floor Pan Cover Button, Cover Wiring Protector Attaching Clips
-20	56010 419AB	1		M					WIRING, Roof Lamps
-21									WIRING, Off Road Light
	52112 062AA	1							
	#52112 092AE	1							Export
-22									WIRING, Jumper
	5271 292AA	1	J, T						Power Window Kit (Mexico)
	5271 264AA	1	J, T						Sunroof
-23	56010 329AB	1							WIRING, License Lamp
-24	5271 296AA	1							WIRING, Instrument Panel Jumper
-25	5271 293AA	1	J, T						WIRING, Door Jumper
-26									WIRING, Fuel Module

JEEP LIBERTY (KJ)

SERIES	LINE	BODY	ENGINE	TRANSMISSION
P = Limited	J = LHD (4WD)	74 = 4 Dr. (104.3 WB)	ED1, ED0 = 2.4L Power Tech	DDK = 5 Speed HDManual
H = Sport	U = RHD (4WD)		EKG, EK0 = 3.7L Power Tech	DDD = 5 Speed HD Manual
M = Renegade	T = LHD (2WD)		ENJ = 2.5L 4Cyl Turbo Diesel	DG4,DGQ = Multi-Speed Auto
			ENR = 2.8L 4Cyl Turbo Diesel	DG6 = 4 Speed Auto Transm
			EN0 = 4Cyl Turbo Diesel	DG0 = All Automatic Transm
				DBB = All Manual Transm

AR = Use as required - = Non illustrated part # = New this model year

June 3, 2003

« RETURN TO GROUP INDEX

Wiring, Body & Accessories
Figure 008-1510

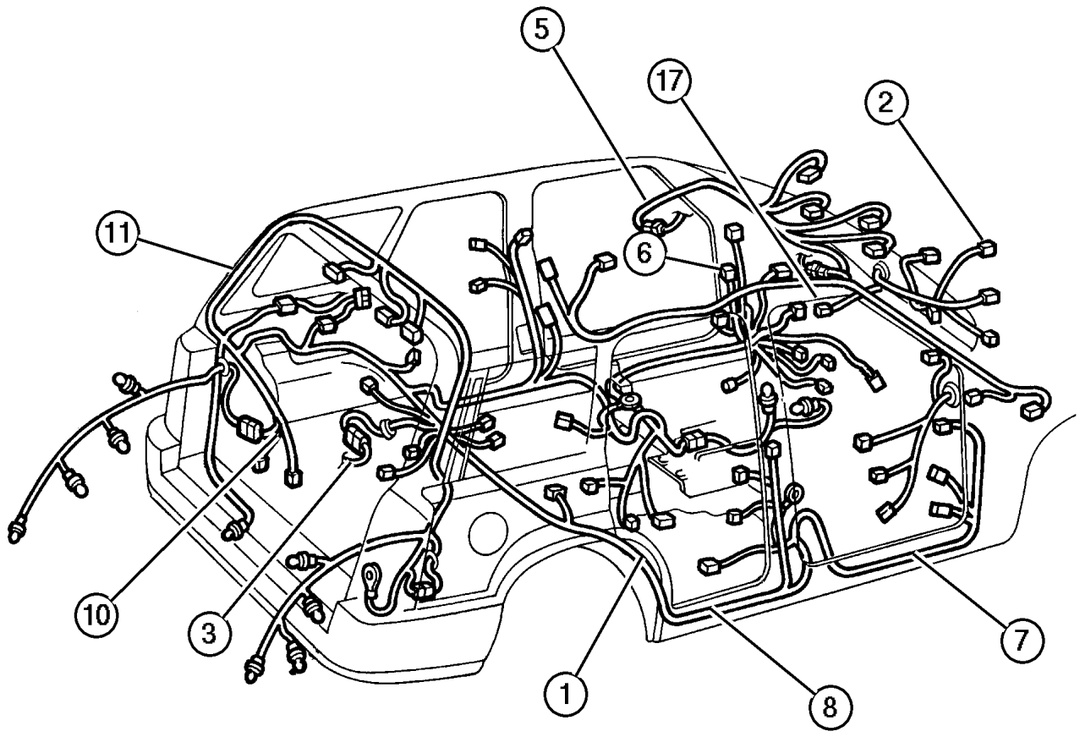

ITEM	PART NUMBER	QTY	LINE	SERIES	BODY	ENGINE	TRANS	TRIM	DESCRIPTION
	#56010 096AE	1				ED0, EK0			
	#56010 097AE	1				EN0			

JEEP LIBERTY (KJ)

SERIES	LINE	BODY	ENGINE	TRANSMISSION
P = Limited	J = LHD (4WD)	74 = 4 Dr. (104.3 WB)	ED1, ED0 = 2.4L Power Tech	DDK = 5 Speed HDManual
H = Sport	U = RHD (4WD)		EKG, EK0 = 3.7L Power Tech	DDD = 5 Speed HD Manual
M = Renegade	T = LHD (2WD)		ENJ = 2.5L 4Cyl Turbo Diesel	DG4,DGQ = Multi-Speed Auto
			ENR = 2.8L 4Cyl Turbo Diesel	DG6 = 4 Speed Auto Transm
			EN0 = 4Cyl Turbo Diesel	DG0 = All Automatic Transm
				DBB = All Manual Transm

Wiring, Repair Package
Figure 008-1610

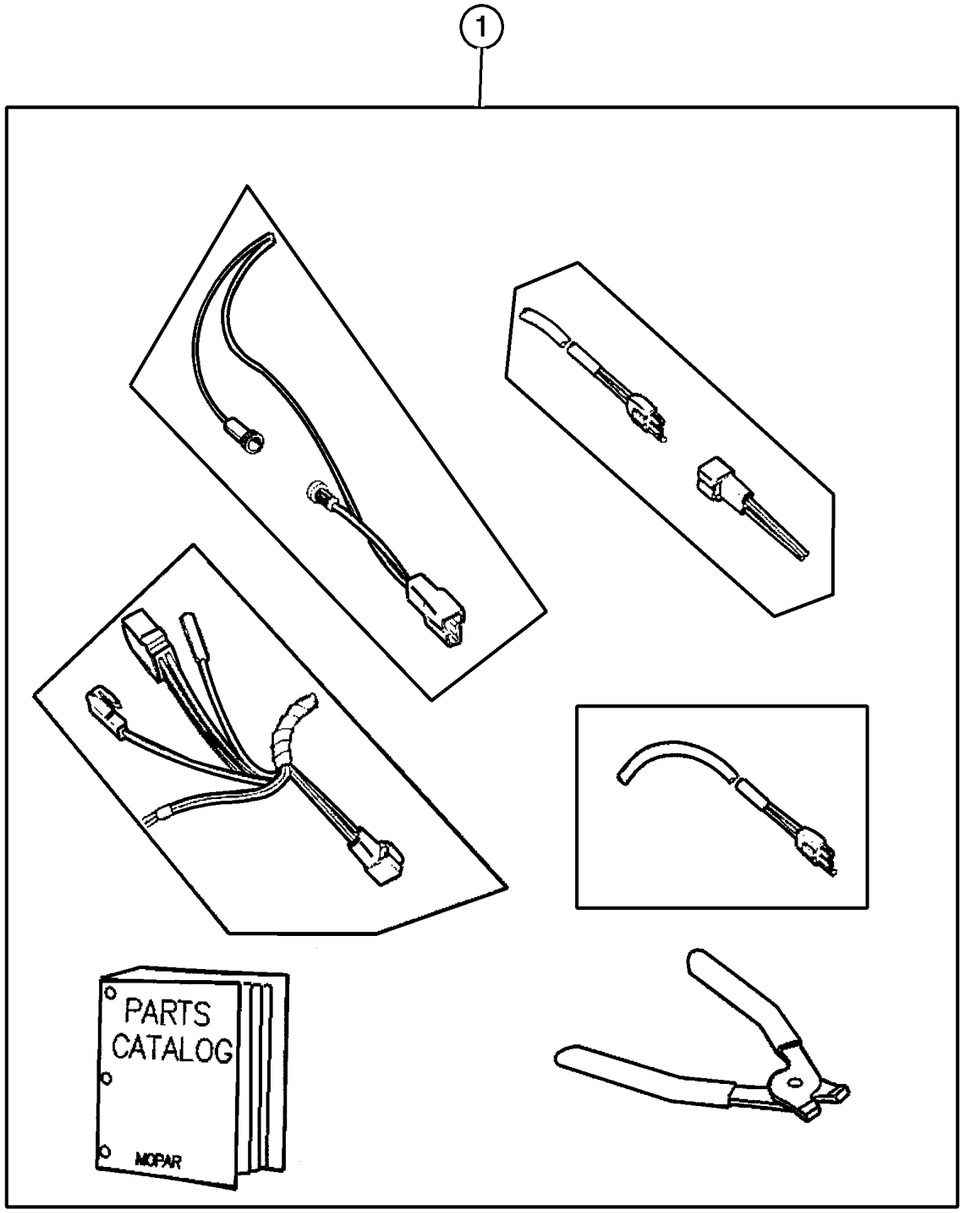

ITEM	PART NUMBER	QTY	LINE	SERIES	BODY	ENGINE	TRANS	TRIM	DESCRIPTION
1	5013 930AD	1							WIRING PACKAGE, Underhood Connector Repair, Underhood Wiring
-2	5083 235AA	1							WIRING PACKAGE, Underhood Connector Repair, Upgrade Kit
-3	5019 912AA	1							TOOL, Crimping
-4	5014 757AD	1							MANUAL, Connector Repair
-5									WIRING KIT, Electric Repair
	5073 029AA	1							With Tool
	5080 522AA	1							Without Tool
-6	5602 1384	2							CLIP, Wiring
-7	5300 8550	1	T				DG4		CLIP, Trans Wiring
-8	5083 221AA	1							WIRING KIT, 22 Way, Female, Radio Repair

JEEP LIBERTY (KJ)

SERIES	LINE	BODY	ENGINE	TRANSMISSION
P = Limited	J = LHD (4WD)	74 = 4 Dr. (104.3 WB)	ED1, ED0 = 2.4L Power Tech	DDK = 5 Speed HDManual
H = Sport	U = RHD (4WD)		EKG, EK0 = 3.7L Power Tech	DDD = 5 Speed HD Manual
M = Renegade	T = LHD (2WD)		ENJ = 2.5L 4Cyl Turbo Diesel	DG4,DGQ = Multi-Speed Auto
			ENR = 2.8L 4Cyl Turbo Diesel	DG6 = 4 Speed Auto Transm
			EN0 = 4Cyl Turbo Diesel	DG0 = All Automatic Transm
				DBB = All Manual Transm

Spark Plug - Coil
Figure 008-1910

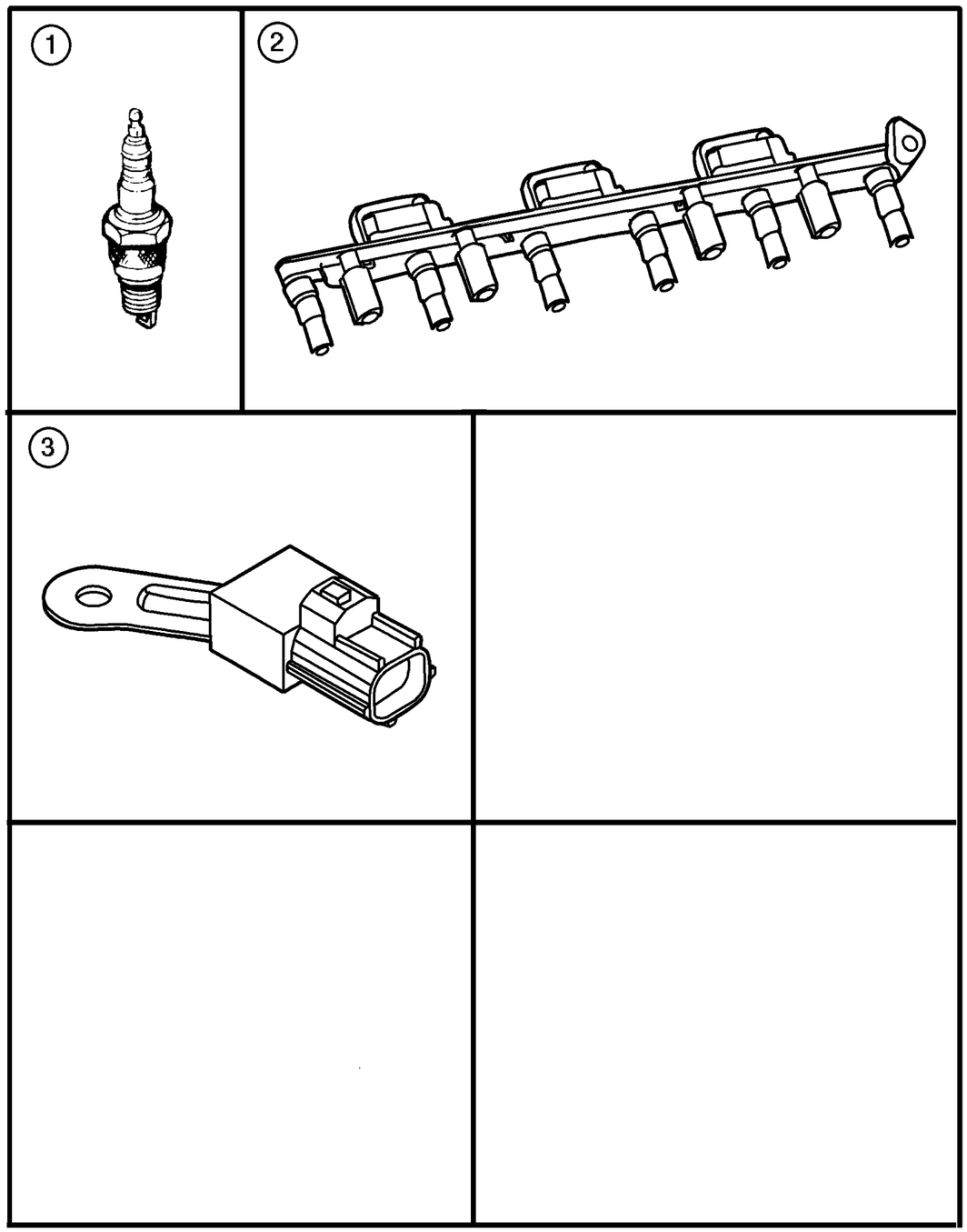

ITEM	PART NUMBER	QTY	LINE	SERIES	BODY	ENGINE	TRANS	TRIM	DESCRIPTION
Notes:									
[ED0]=2.4L 4 Cylinder Engine									
[EK0]=3.7L V6 Cylinder Engine									
1									SPARK PLUG
	SPRE1 4MCC5	4				ED0			
	SPZF R6F11G	6				EK0			
2									COIL, Ignition
	56028 138AD	6				EK0			
	5269 670	1				ED0			
3	56041 915AB	1				ED0, EK0			CAPACITOR, Ignition
-4									CABLE, Ignition
	56041 818AC	2				ED0			#2 & 3
	56044 075AC	2				ED0			#1 & 4
-5	6502 921	4				ED0			SCREW, Ignition Coil Mounting
-6	6101 802	6				EK0			NUT, Ignition Coil Mounting
-7	4693 243AA	4				ED0			ISOLATOR, Ignition Coil
-8	#5102 091AA	1				ED0			CABLE PACKAGE, Ignition

JEEP LIBERTY (KJ)

SERIES	LINE	BODY	ENGINE	TRANSMISSION
P = Limited	J = LHD (4WD)	74 = 4 Dr. (104.3 WB)	ED1, ED0 = 2.4L Power Tech	DDK = 5 Speed HDManual
H = Sport	U = RHD (4WD)		EKG, EK0 = 3.7L Power Tech	DDD = 5 Speed HD Manual
M = Renegade	T = LHD (2WD)		ENJ = 2.5L 4Cyl Turbo Diesel	DG4,DGQ = Multi-Speed Auto
			ENR = 2.8L 4Cyl Turbo Diesel	DG6 = 4 Speed Auto Transm
			EN0 = 4Cyl Turbo Diesel	DG0 = All Automatic Transm
				DBB = All Manual Transm

Group – 08A

Instrument Panel and Radios and Consoles

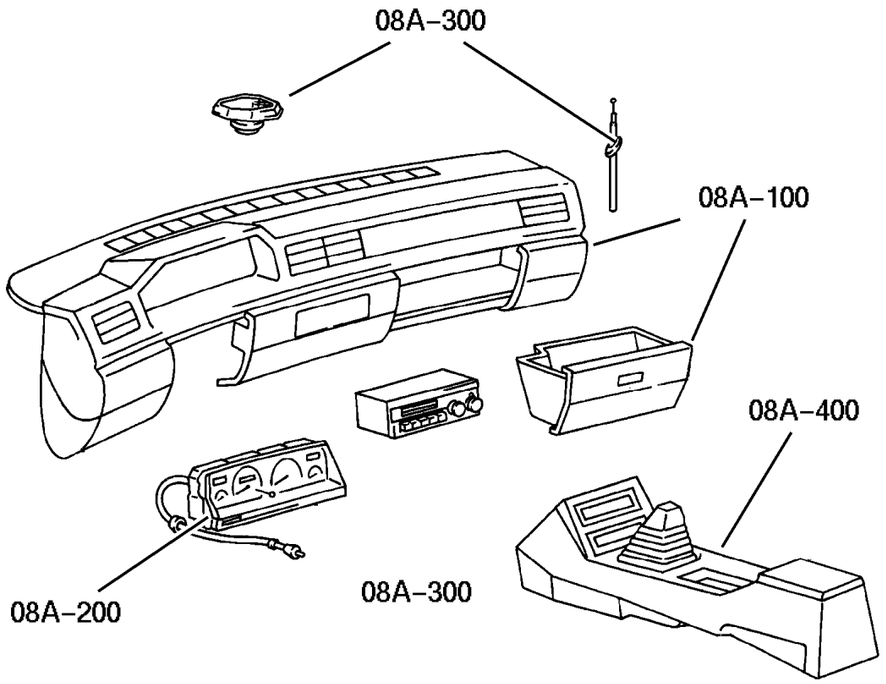

08A–100 Instrument Panel	08A–200 Instrument Panel Cluster	08A–300 Radio, Antenna, and Speakers	08A–400 Consoles
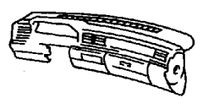	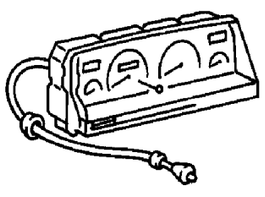	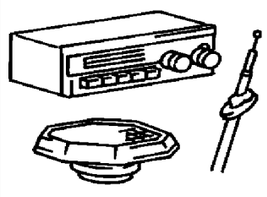	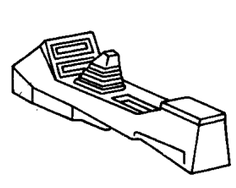

GROUP 8A - Instrument Panel and Radios and Consoles

Illustration Title	Group-Fig. No.
Instrument Panel	
Instrument Panel	Fig. 08A-110
Instrument Panel Cluster	
Instrument Panel Cluster	Fig. 08A-210
Radio, Antenna, and Speakers	
Radios	Fig. 08A-310
Speakers	Fig. 08A-320
Antenna	Fig. 08A-330
Consoles	
Console, Overhead	Fig. 08A-410
Console, Floor	Fig. 08A-420

Instrument Panel
Figure 08A-110

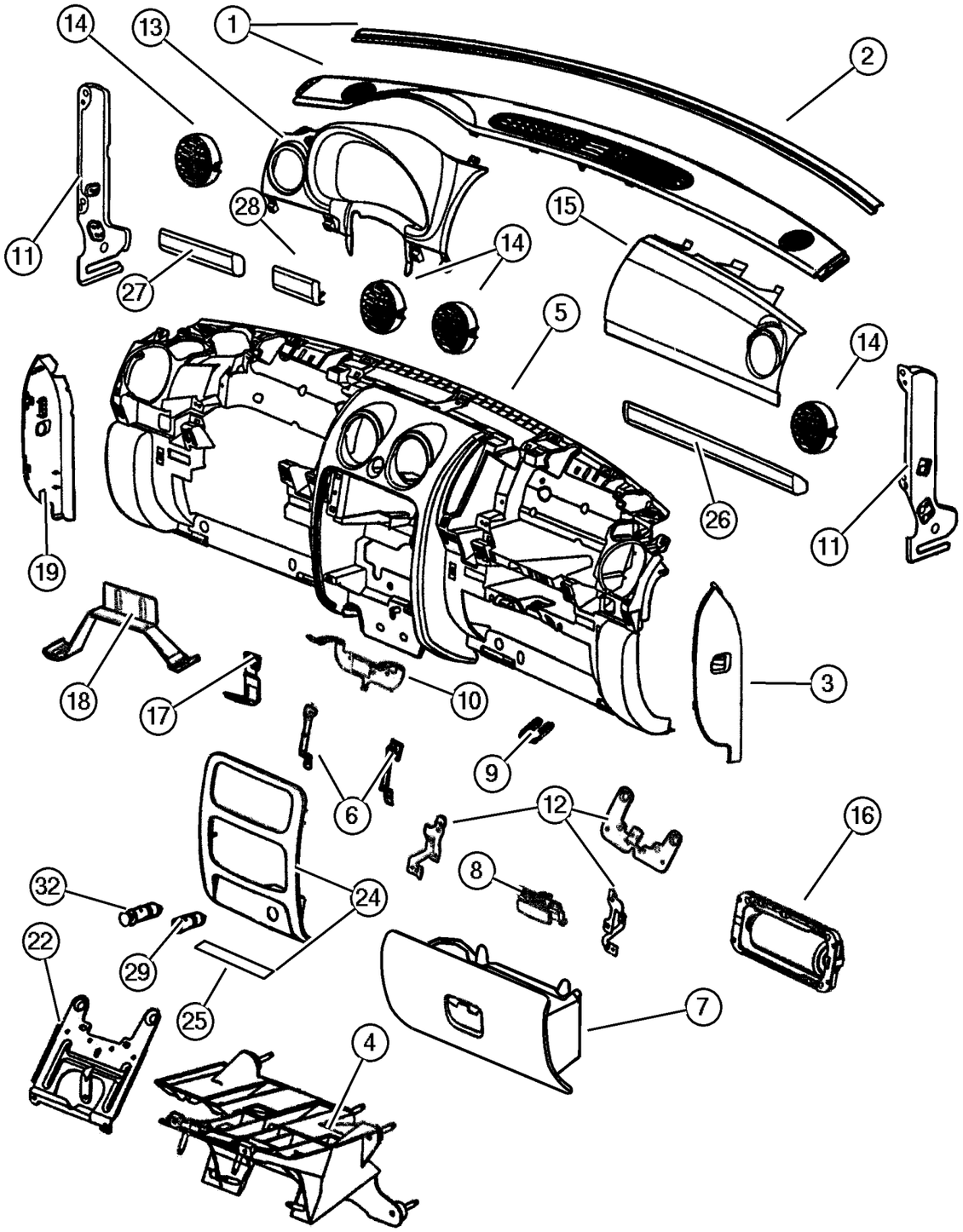

ITEM	PART NUMBER	QTY	LINE	SERIES	BODY	ENGINE	TRANS	TRIM	DESCRIPTION
1									COVER, Instrument Panel
	5GD54 WL8AD	1	J, T						[L2] (Seal Serviced with Cover Only)
		1	J, T						[L5] (Seal Serviced with Cover Only)
	5GD54 XDVAD	1	J, T						[D2] (Seal Serviced with Cover Only)
		1	J, T						[DV] (Seal Serviced with Cover Only)
	5GJ79 WL8AD	1	U						[L2] (Seal Serviced with Cover Only)
		1	U						[L5] (Seal Serviced with Cover Only)
	5GJ79 XDVAD	1	U						[DV] (Seal Serviced with Cover Only)
2									SEAL, Instrument Panel, (NOT SERVICED) (Not Serviced)
3									COVER, Instrument Panel Opening
	5GN55 WL8AD	1	J, T						[L2]
		1	J, T						[L5]
	5GN55 XDVAD	1	J, T						[D2]
		1	J, T						[DV]
	5GN56 WL8AD	1	U						[L2]
		1	U						[L5]
	5GN56 XDVAD	1	U						[DV]
4									BRACKET, Steering Column
	55314 987AA	1	J, T						Lower
	55314 988AA	1	U						Lower
5									PANEL, Instrument
	#5JM34 WL8AB	1	J, T						[L2] Up to 10/01/02 (Includes Radio Bracket, Glovebox with Latch)
	#5JM34 XDVAC	1	J, T						[D2] 10/01/02 & After (Includes Radio Bracket, Glovebox with Latch)
		1	J, T						[DV] 10/01/02 & After (Includes Radio Bracket, Glovebox with Latch)
	#XT97 WL8AD	1	U						[L2] Up to 10/01/02 (Includes Radio Bracket, Glovebox with Latch)
		1	U						[L5] Up to 10/01/02 (Includes Radio Bracket, Glovebox with Latch)

JEEP LIBERTY (KJ)

SERIES	LINE	BODY	ENGINE	TRANSMISSION
P = Limited	J = LHD (4WD)	74 = 4 Dr. (104.3 WB)	ED1, ED0 = 2.4L Power Tech	DDK = 5 Speed HDManual
H = Sport	U = RHD (4WD)		EKG, EK0 = 3.7L Power Tech	DDD = 5 Speed HD Manual
M = Renegade	T = LHD (2WD)		ENJ = 2.5L 4Cyl Turbo Diesel	DG4,DGQ = Multi-Speed Auto
			ENR = 2.8L 4Cyl Turbo Diesel	DG6 = 4 Speed Auto Transm
			EN0 = 4Cyl Turbo Diesel	DG0 = All Automatic Transm
				DBB = All Manual Transm

AR = Use as required - = Non illustrated part # = New this model year **June 3, 2003**

« RETURN TO GROUP INDEX »

Instrument Panel
Figure 08A-110

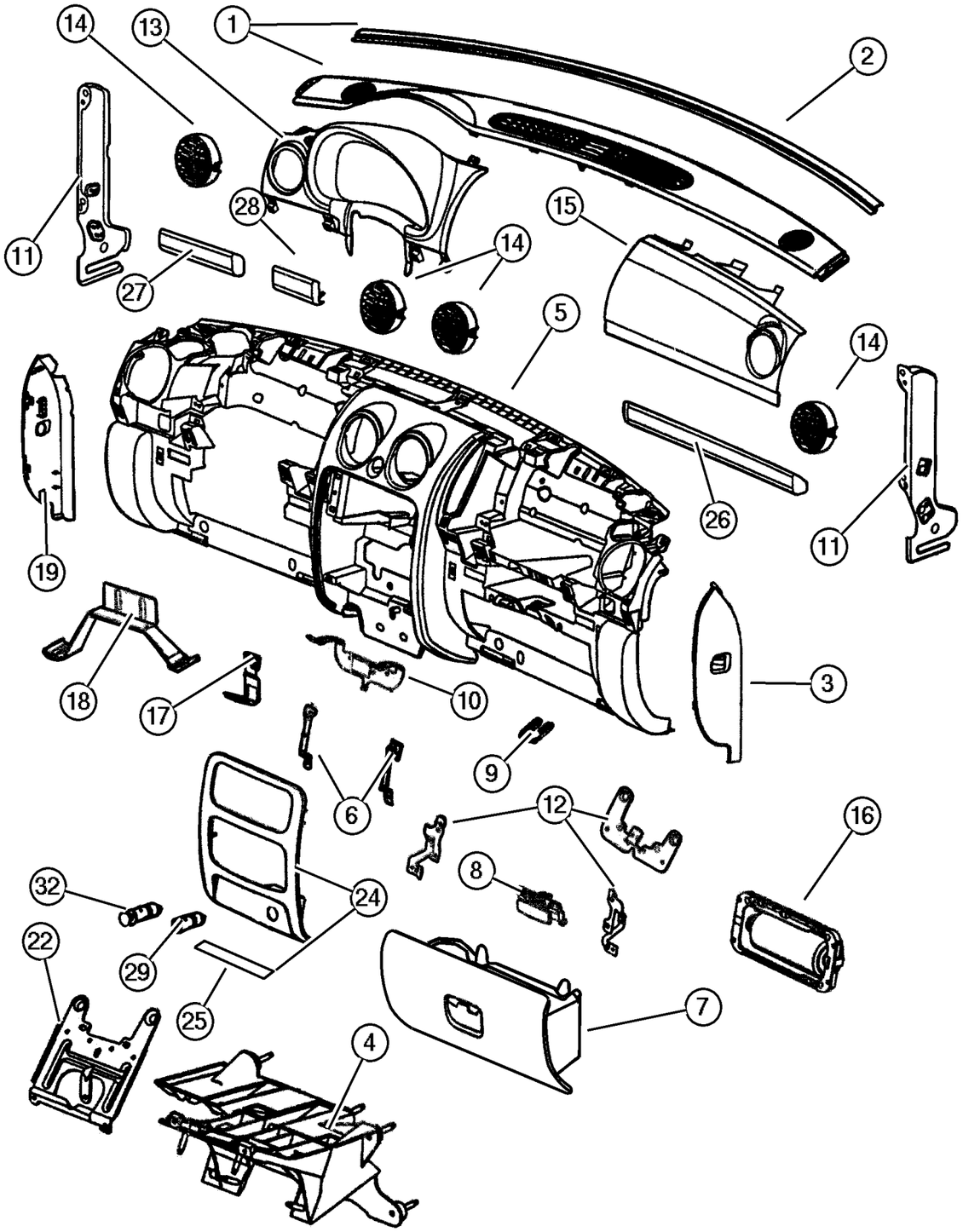

ITEM	PART NUMBER	QTY	LINE	SERIES	BODY	ENGINE	TRANS	TRIM	DESCRIPTION
	#XT97 XDVAD	1	U						[DV] Up to 10/01/02 (Includes Radio Bracket, Glovebox with Latch)
	#5JM34 WL8AB	1	J, T						[L5] Up to 10/01/02 (Includes Radio Bracket, Glovebox with Latch)
	#5JM34 XDVAB	1	J, T						[D2] Up to 10/01/02 (Includes Radio Bracket, Glovebox with Latch)
		1	J, T						[DV] Up to 10/01/02 (Includes Radio Bracket, Glovebox with Latch)
	#XT97 WL8AC	1	U						[L2] 10/01/02 & After (Includes Radio Bracket, Glovebox with Latch)
		1	U						[L5] 10/01/02 & After (Includes Radio Bracket, Glovebox with Latch)
	#5JM34 WL8AC	1	J, T						[L2] 10/01/02 & After (Includes Radio Bracket, Glovebox with Latch)
	#XT97 XDVAC	1	U						[DV] 10/01/02 & After (Includes Radio Bracket, Glovebox with Latch)
	#5JM34 WL8AC	1	J, T						[L5] 10/01/02 & After (Includes Radio Bracket, Glovebox with Latch)
6	5072 596AA	1	U						BRACKET, Radio Bracket Kit (Left & Right Bracket Included)
		1	J, T						Bracket Kit (Left & Right Bracket Included)
7	WC86 WL8AA	1	J, T						GLOVE BOX, Instrument Panel [L2] Up to 02/28/03 (Glovebox Latch Included)
	#ZE32 WL8AA	1	J, T						[L2] 02/28/03 & After (Glovebox Latch Included)
		1	J, T						[L5] 02/28/03 & After (Glovebox Latch Included)
	#ZE32 XDVAA	1	U						[DV] 01/21/03 & After (Glovebox Latch Included)
		1	J, T						[D2] 02/28/03 & After (Glovebox Latch Included)

JEEP LIBERTY (KJ)

SERIES	LINE	BODY	ENGINE	TRANSMISSION
P = Limited	J = LHD (4WD)	74 = 4 Dr. (104.3 WB)	ED1, ED0 = 2.4L Power Tech	DDK = 5 Speed HDManual
H = Sport	U = RHD (4WD)		EKG, EK0 = 3.7L Power Tech	DDD = 5 Speed HD Manual
M = Renegade	T = LHD (2WD)		ENJ = 2.5L 4Cyl Turbo Diesel	DG4,DGQ = Multi-Speed Auto
			ENR = 2.8L 4Cyl Turbo Diesel	DG6 = 4 Speed Auto Transm
			EN0 = 4Cyl Turbo Diesel	DG0 = All Automatic Transm
				DBB = All Manual Transm

AR = Use as required - = Non illustrated part # = New this model year **June 3, 2003**

« RETURN TO GROUP INDEX

Instrument Panel
Figure 08A-110

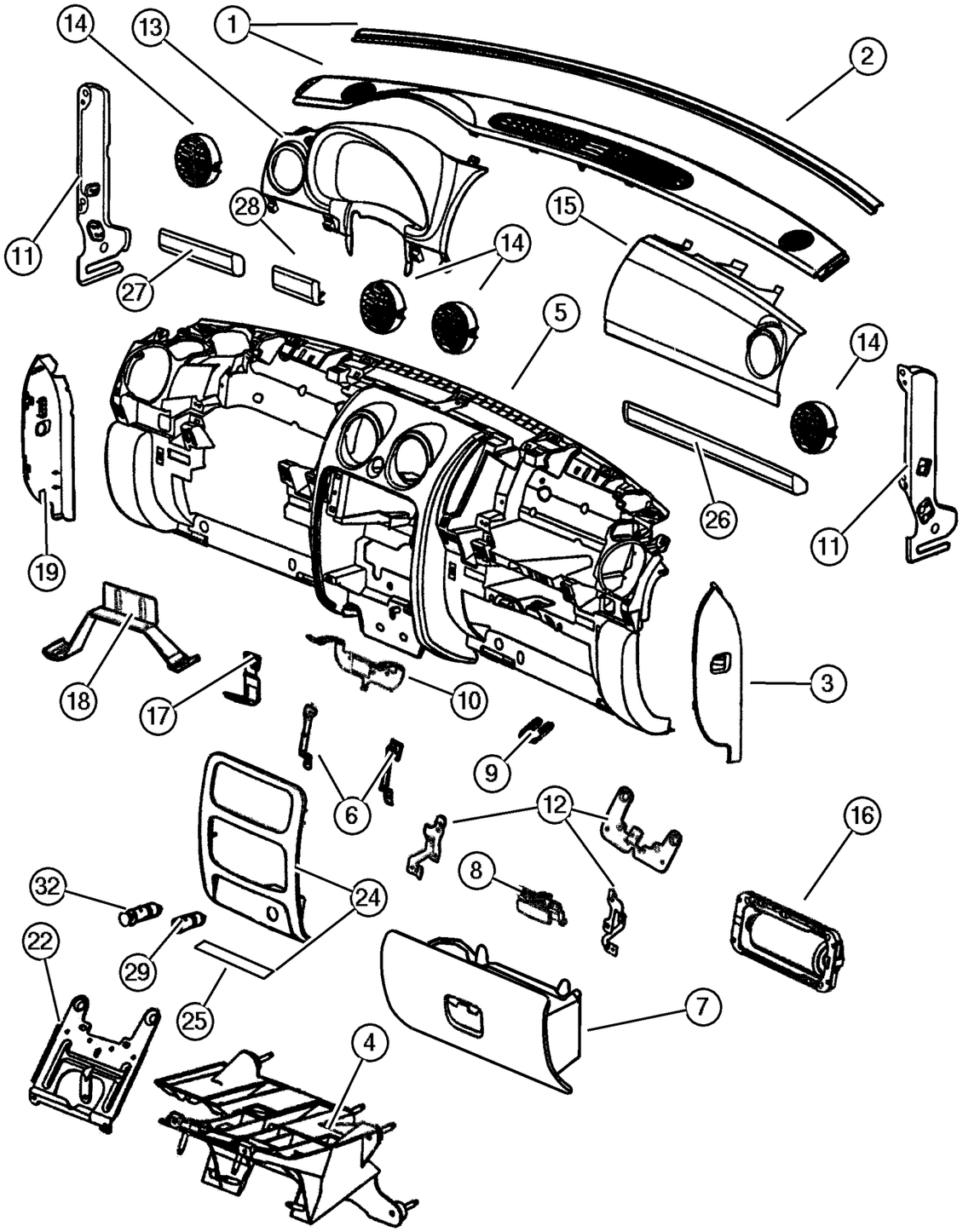

ITEM	PART NUMBER	QTY	LINE	SERIES	BODY	ENGINE	TRANS	TRIM	DESCRIPTION
		1	J, T						[DV] 02/28/03 & After (Glovebox
									Latch Included)
	WC86 WL8AA	1	J, T						[L5] Up to 02/28/03 (Glovebox
									Latch Included)
		1	U						[L2] Up to 01/21/03 (Glovebox
									Latch Included)
		1	U						[L5] Up to 01/21/03 (Glovebox
									Latch Included)
	WC86 XDVAA	1	J, T						[D2] Up to 02/28/03 (Glovebox
									Latch Included)
		1	J, T						[DV] Up to 02/28/03 (Glovebox
									Latch Included)
		1	U						[DV] Up to 01/21/03 (Glovebox
									Latch Included)
	#ZE32 WL8AA	1	U						[L2] 01/21/03 & After (Glovebox
									Latch Included)
		1	U						[L5] 01/21/03 & After (Glovebox
									Latch Included)
8									LATCH, Glovebox Door
	WQ54 WL8AA	1	J, T						[L2]
		1	J, T						[L5]
		1	U						[L2]
		1	U						[L5]
	WQ54 XDVAA	1	J, T						[DV]
		1	J, T						[D2]
		1	U						[DV]
9									STRIKER, Glove Box Door Latch
	5072 605AA	1	U						
		1	J, T						
10									BRACKET, Audio Equipment
	5072 606AA	1	U						
		1	J, T						
11									BRACKET, Instrument Panel
	5072 615AA	1	J, T						Left Side
		1	U						Left Side
	5073 376AA	1	U						Hush Panel
	5073 529AA	1	U						Bracket Guide Alignment, Left
		1	J, T						Bracket Guide Alignment, Left
	5073 530AA	1	U						Bracket Guide Alignment, Right
		1	J, T						Bracket Guide Alignment, Right
	5072 614AA	1	U						I/Panel End

JEEP LIBERTY (KJ)

SERIES	LINE	BODY	ENGINE	TRANSMISSION
P = Limited	J = LHD (4WD)	74 = 4 Dr. (104.3 WB)	ED1, ED0 = 2.4L Power Tech	DDK = 5 Speed HDManual
H = Sport	U = RHD (4WD)		EKG, EK0 = 3.7L Power Tech	DDD = 5 Speed HD Manual
M = Renegade	T = LHD (2WD)		ENJ = 2.5L 4Cyl Turbo Diesel	DG4,DGQ = Multi-Speed Auto
			ENR = 2.8L 4Cyl Turbo Diesel	DG6 = 4 Speed Auto Transm
			EN0 = 4Cyl Turbo Diesel	DG0 = All Automatic Transm
				DBB = All Manual Transm

AR = Use as required - = Non illustrated part # = New this model year **June 3, 2003**

« RETURN TO GROUP INDEX

Instrument Panel
Figure 08A-110

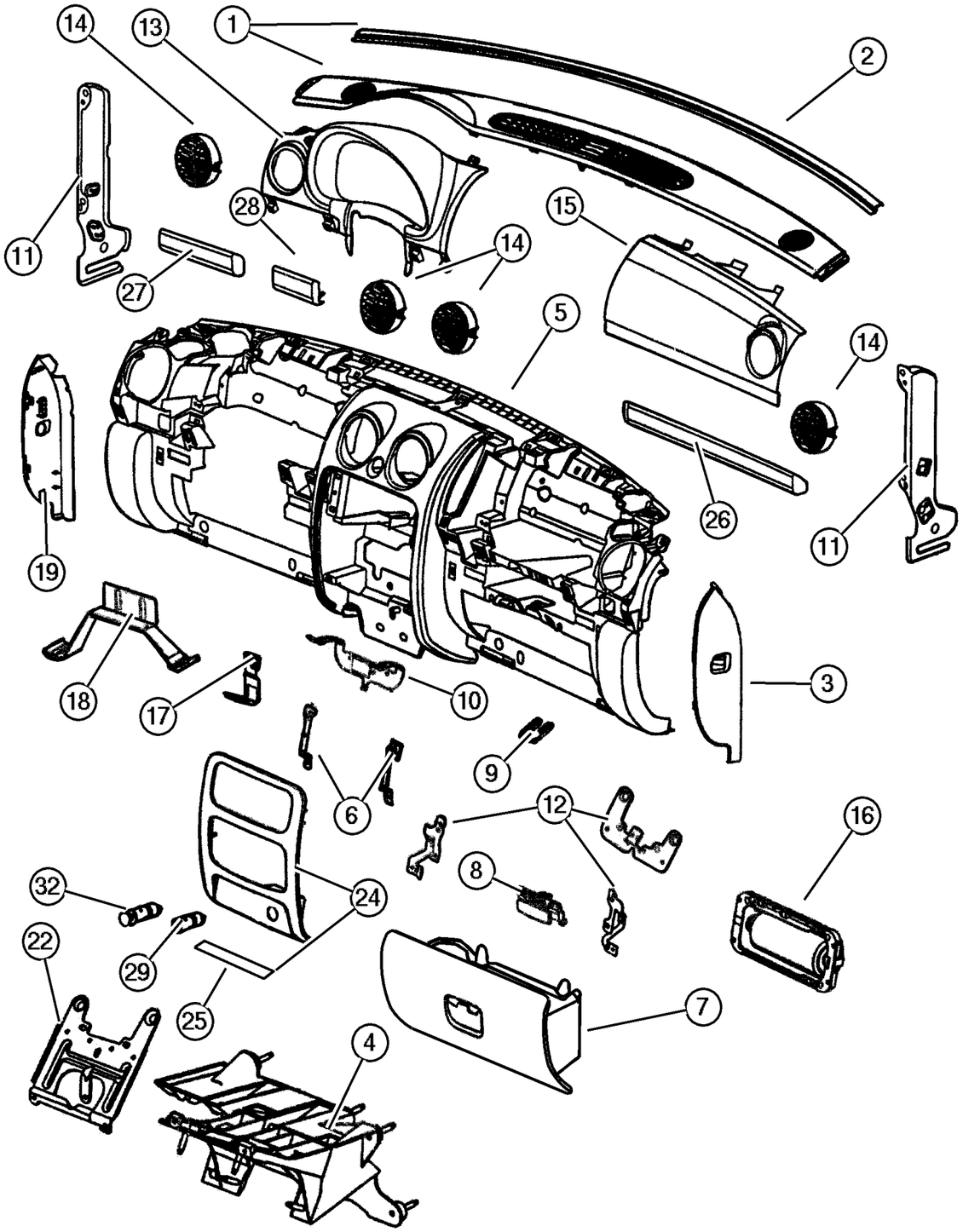

ITEM	PART NUMBER	QTY	LINE	SERIES	BODY	ENGINE	TRANS	TRIM	DESCRIPTION
	5073 523AA	1	J, T						I/Panel Right End
12									BRACKET, Air Bag
	5072 616AA	1	J, T						
	56052 058AB	1	U						Center
	56052 057AB	1	J, T						Center
	56052 059AB	1	J, T						Left
	56052 060AB	1	U						Right
	56052 061AB	1	J, T						Right
	56052 062AB	1	U						Left
13									BEZEL, Cluster
	WC87 WL8AA	1	J, T						[L2]
		1	J, T						[L5]
	WC87 XDVAA	1	J, T						[D2]
		1	J, T						[DV]
	WD13 WL8AA	1	U						[L2]
		1	U						[L5]
	WD13 XDVAA	1	U						[DV]
14									OUTLET, Air Conditioning & Heater
	WC88 DX9AA	4	J, T						[D2]
		4	J, T						[DV]
		4	J, T						[L2]
		4	J, T						[L5]
15									DOOR, Passenger Air Bag
	WC89 WL8AA	1	J, T						[L2]
		1	J, T						[L5]
	WC89 XDVAA	1	J, T						[D2]
		1	J, T						[DV]
	#WD14 WL8AB	1	U						[L2]
	#WD14 XDVAB	1	U						[DV]
16	55315 020AI	1							AIR BAG, Passenger
17	55037 453AA	1							BRACKET, Instrument Panel, Hush Panel Bracket
18	55037 453AA	1							BRACKET, Instrument Panel, Instrument Panel to Floor
19									COVER, Fuse Access
	5GK18 WL8AD	1	U						[L2] Serviced with Fuse Puller
		1	U						[L5] Serviced with Fuse Puller
	5GK18 XDVAD	1	U						[DV] Serviced with Fuse Puller
	5GK19 WL8AD	1	J, T						[L2] Serviced with Fuse Puller
		1	J, T						[L5] Serviced with Fuse Puller
	5GK19 XDVAD	1	J, T						[D2] Serviced with Fuse Puller

JEEP LIBERTY (KJ)

SERIES	LINE	BODY	ENGINE	TRANSMISSION
P = Limited	J = LHD (4WD)	74 = 4 Dr. (104.3 WB)	ED1, ED0 = 2.4L Power Tech	DDK = 5 Speed HDManual
H = Sport	U = RHD (4WD)		EKG, EK0 = 3.7L Power Tech	DDD = 5 Speed HD Manual
M = Renegade	T = LHD (2WD)		ENJ = 2.5L 4Cyl Turbo Diesel	DG4,DGQ = Multi-Speed Auto
			ENR = 2.8L 4Cyl Turbo Diesel	DG6 = 4 Speed Auto Transm
			EN0 = 4Cyl Turbo Diesel	DG0 = All Automatic Transm
				DBB = All Manual Transm

AR = Use as required - = Non illustrated part # = New this model year

June 3, 2003

« RETURN TO GROUP INDEX

Instrument Panel
Figure 08A-110

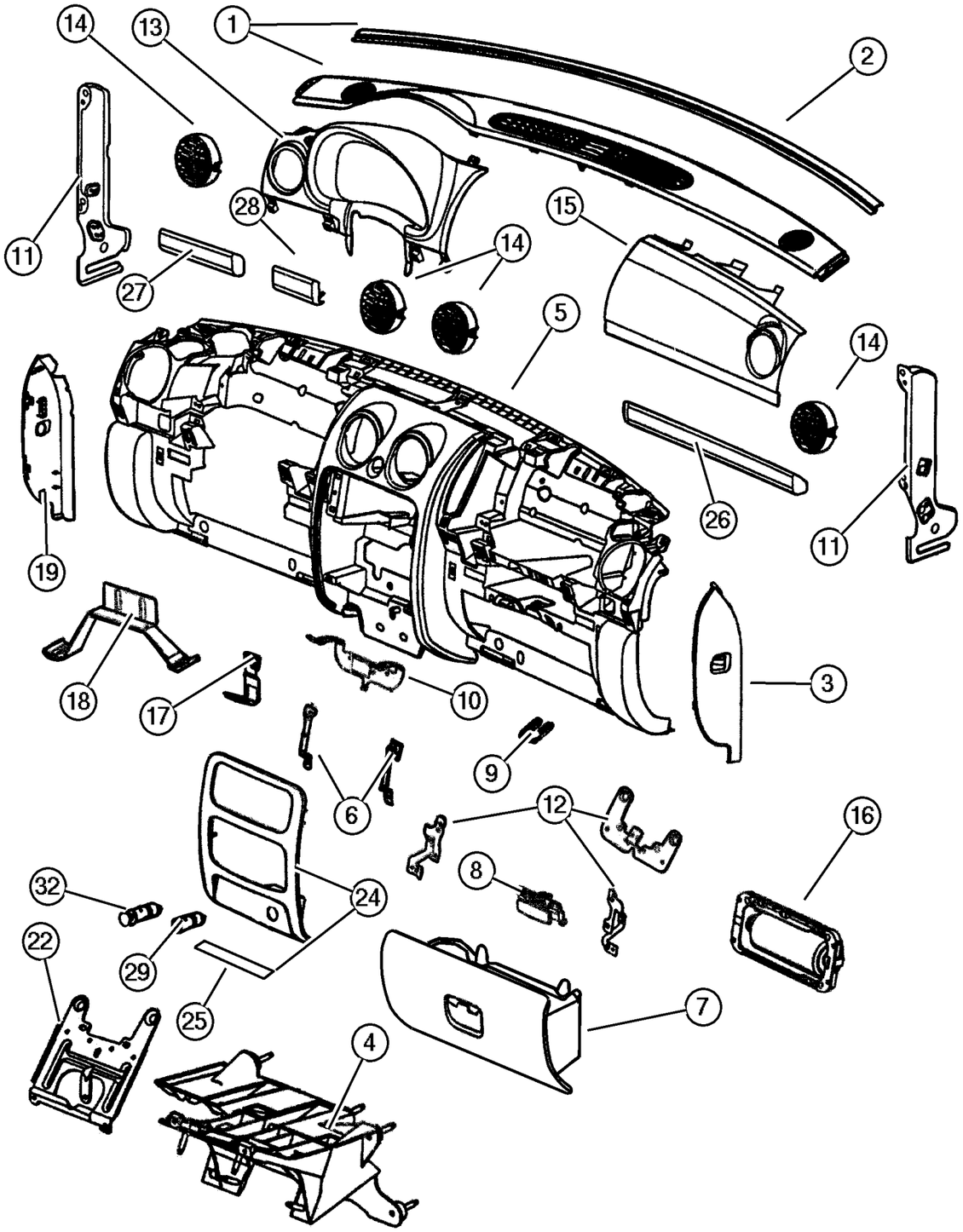

ITEM	PART NUMBER	QTY	LINE	SERIES	BODY	ENGINE	TRANS	TRIM	DESCRIPTION
		1	J, T						[DV] Serviced with Fuse Puller
-20									PULLER, Fuse
	5072 937AA	1	U						
		1	J, T						
-21									PANEL, Knee Blocker
	5JF63 WL8AA	1							[L2]
		1							[L5]
	5JF63 XDVAA	1							[D2]
		1							[DV]
22									BRACKET, Steering Column
	55314 992AA	1	J, T						Upper
	55315 011AA	1	U						Upper
-23									FASTENER, Panel
	5083 125AA	2	U						Lower Male on Instrument Panel
		2	J, T						Lower Male on Instrument Panel
	5083 126AA	2	U						Upper Male on Instrument Panel
		2	J, T						Upper Male on Instrument Panel
24									BEZEL, Instrument Panel, Center
	#56052 271AA	1	J, T	P					Chrome/Metalic with Black Cubby Bin & Mat
		1	U	P					Chrome/Metalic with Black Cubby Bin & Mat
	#5JM35 DX9AA	1	J, T						Black with Black Cubby Bin & Mat
		1	U						Black with Black Cubby Bin & Mat
25									PAD, Instrument Panel
	#5093 855AA	1	J, T	P					Cubby Bin Black Rubber Mat
		1	U	H					Cubby Bin Black Rubber Mat
26									BEZEL, Instrument Panel
	WB01 1DVAA	1	U	P					[DV] Passenger Side, Above Glove Box (Limited)
	WB00 1DVAA	1	U	H					[DV] Passenger Side, Above Glove Box (Limited)
	WB00 1L8AA	1	U	H					[L5] Passenger Side, Above Glove Box (Limited)
	WB00 DX9AA	1	U	H					Passenger Side, Above Glove Box (Limited) Black
	WU95 1X9AA	1	J, T						Passenger Side, Above Glove Box, with or without Headlamp Leveling (Renegade) Aluminum Wrapped

JEEP LIBERTY (KJ)

SERIES	LINE	BODY	ENGINE	TRANSMISSION
P = Limited	J = LHD (4WD)	74 = 4 Dr. (104.3 WB)	ED1, ED0 = 2.4L Power Tech	DDK = 5 Speed HDManual
H = Sport	U = RHD (4WD)		EKG, EK0 = 3.7L Power Tech	DDD = 5 Speed HD Manual
M = Renegade	T = LHD (2WD)		ENJ = 2.5L 4Cyl Turbo Diesel	DG4,DGQ = Multi-Speed Auto
			ENR = 2.8L 4Cyl Turbo Diesel	DG6 = 4 Speed Auto Transm
			EN0 = 4Cyl Turbo Diesel	DG0 = All Automatic Transm
				DBB = All Manual Transm

AR = Use as required - = Non illustrated part # = New this model year **June 3, 2003**

« RETURN TO GROUP INDEX

Instrument Panel
Figure 08A-110

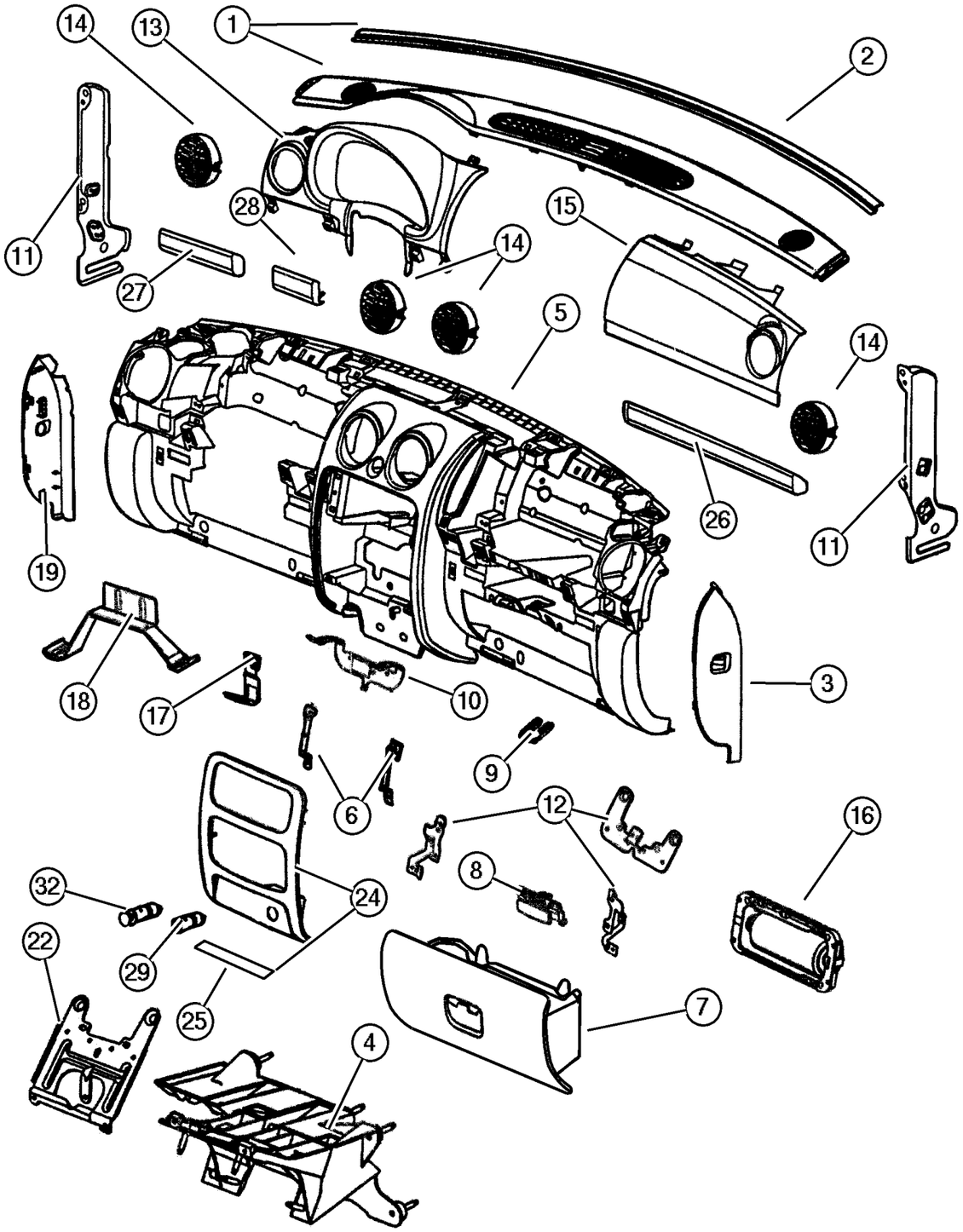

ITEM	PART NUMBER	QTY	LINE	SERIES	BODY	ENGINE	TRANS	TRIM	DESCRIPTION
	#XH01 1X9AA	1	U						Passenger Side, Above Glove Box, with Headlamp Leveling (Renegade) Aluminum Wrapped
	WB01 1L8AA	1	U	P					[L2] Passenger Side, Above Glove Box (Limited)
		1	U	P					[L5] Passenger Side, Above Glove Box (Limited)
	WB01 DX9AA	1	U	H					Passenger Side, Above Glove Box (Sport)
	5JA40 1DVAA	1	J, T	P					[D2] Passenger Side, Above Glove Box (Limited)
		1	J, T	P					[DV] Passenger Side, Above Glove Box (Limited)
	5JA40 1L8AA	1	J, T	P					[L2] Passenger Side, Above Glove Box (Limited)
		1	J, T	P					[L5] Passenger Side, Above Glove Box (Limited)
	5JA40 DX9AA	1	J, T	H					Passenger Side, Above Glove Box (Sport)
27									BEZEL, Instrument Panel
	WA98 1DVAA	1	U	P					[DV] Outboard Side of Steering Wheel (Limited)
	#XH02 1X9AA	1	U						Outboard Side of Steering Wheel, with Headlamp Leveling (Renegade) Aluminum Wrapped
	#XW30 1DVAA	1	J, T						[D2] Outboard Side of Steering Wheel, without Headlamp Leveling (Renegade)
	#XW30 1L8AA	1	J, T						[L2] Outboard Side of Steering Wheel, without Headlamp Leveling (Renegade)
	WU99 1X9AA	1	J, T						Outboard Side of Steering Wheel, with or without Headlamp Leveling (Renegade) Aluminum Wrapped
	WA98 1L8AA	1	U	P					[L2] Outboard Side of Steering Wheel (Limited)
		1	U	P					[L5] Outboard Side of Steering Wheel (Limited)
	WA98 DX9AA	1	U	H					Outboard Side of Steering Wheel (Sport)

JEEP LIBERTY (KJ)

SERIES	LINE	BODY	ENGINE	TRANSMISSION
P = Limited	J = LHD (4WD)	74 = 4 Dr. (104.3 WB)	ED1, ED0 = 2.4L Power Tech	DDK = 5 Speed HDManual
H = Sport	U = RHD (4WD)		EKG, EK0 = 3.7L Power Tech	DDD = 5 Speed HD Manual
M = Renegade	T = LHD (2WD)		ENJ = 2.5L 4Cyl Turbo Diesel	DG4,DGQ = Multi-Speed Auto
			ENR = 2.8L 4Cyl Turbo Diesel	DG6 = 4 Speed Auto Transm
			EN0 = 4Cyl Turbo Diesel	DG0 = All Automatic Transm
				DBB = All Manual Transm

Instrument Panel
Figure 08A-110

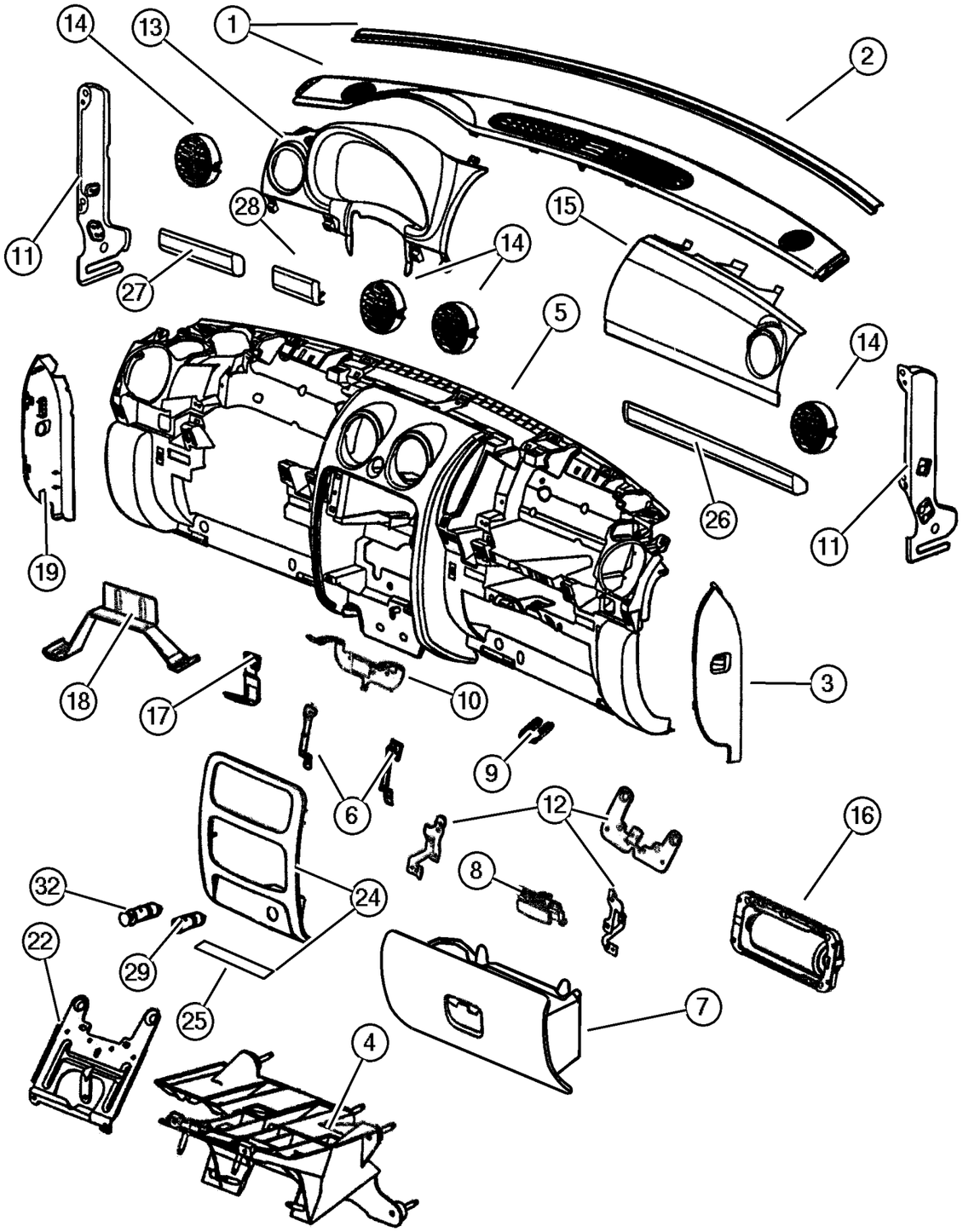

ITEM	PART NUMBER	QTY	LINE	SERIES	BODY	ENGINE	TRANS	TRIM	DESCRIPTION
	5JA38 1DVAA	1	J, T	P					[D2] Outboard Side of Steering Wheel (Limited)
		1	J, T	P					[DV] Outboard Side of Steering Wheel (Limited)
	5JA38 1L8AA	1	J, T	P					[L2] Outboard Side of Steering Wheel (Limited)
		1	J, T	P					[L5] Outboard Side of Steering Wheel (Limited)
	5JA38 DX9AA	1	J, T	H					Outboard Side of Steering Wheel (Sport)
28									BEZEL, Instrument Panel
	WA99 1DVAA	1	U	P					[DV] Inboard Side of Steering Wheel (Limited)
	WB05 1L8AA	1	J, T	P					[L2] Inboard Side of Steering Wheel (Limited)
		1	J, T	P					[L5] Inboard Side of Steering Wheel (Limited)
	WB05 DX9AA	1	J, T	H					Inboard Side of Steering Wheel (Sport)
	#XG96 1X9AA	1	J, T						Inboard Side of Steering Wheel, with Cutout for Headlamp Leveling Switch (Renegade) Aluminum Wrapped
	#XH03 1X9AA	1	U						Inboard Side of Steering Wheel, without Headlamp Leveling (Renegade) Aluminum Wrapped
	#XH04 1X9AA	1	U						Inboard Side of Steering Wheel, with Headlamp Leveling (Renegade) Aluminum Wrapped
	WV00 1X9AA	1	J, T						Inboard Side of Steering Wheel, without Headlamp Leveling (Renegade) Aluminum Wrapped
	5JA42 DX9AA	1	J, T	H					Black (Inboard Side of Steering Wheel, without Headlamp Leveling)
	5JA42 1DVAA	1	J, T	P					[DV] Inboard Side of Steering Wheel, without Headlamp Leveling
		1	J, T	H					[DV] Inboard Side of Steering Wheel, without Headlamp Leveling

JEEP LIBERTY (KJ)

SERIES	LINE	BODY	ENGINE	TRANSMISSION
P = Limited	J = LHD (4WD)	74 = 4 Dr. (104.3 WB)	ED1, ED0 = 2.4L Power Tech	DDK = 5 Speed HDManual
H = Sport	U = RHD (4WD)		EKG, EK0 = 3.7L Power Tech	DDD = 5 Speed HD Manual
M = Renegade	T = LHD (2WD)		ENJ = 2.5L 4Cyl Turbo Diesel	DG4,DGQ = Multi-Speed Auto
			ENR = 2.8L 4Cyl Turbo Diesel	DG6 = 4 Speed Auto Transm
			EN0 = 4Cyl Turbo Diesel	DG0 = All Automatic Transm
				DBB = All Manual Transm

AR = Use as required - = Non illustrated part # = New this model year **June 3, 2003**

« RETURN TO GROUP INDEX

Instrument Panel
Figure 08A-110

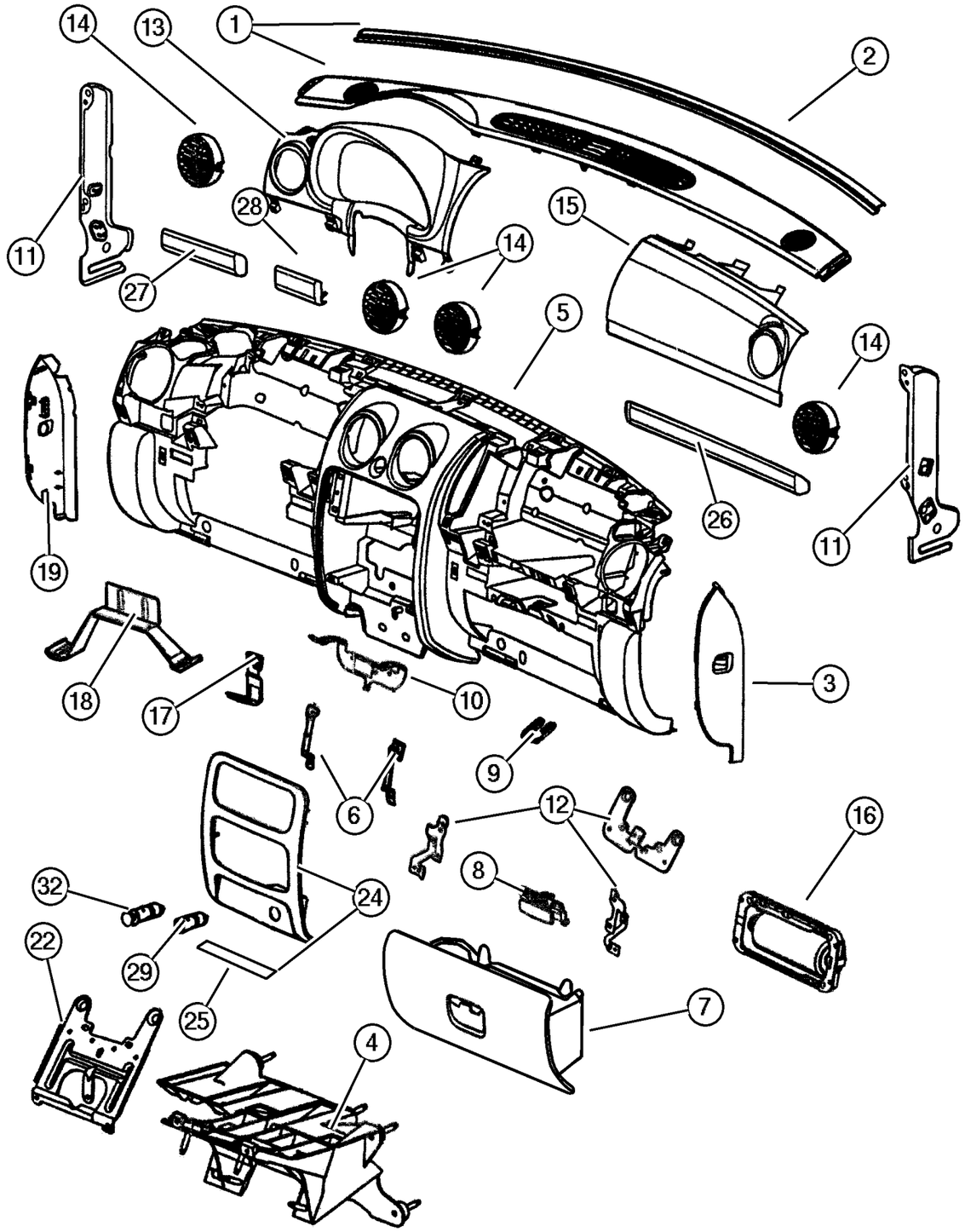

ITEM	PART NUMBER	QTY	LINE	SERIES	BODY	ENGINE	TRANS	TRIM	DESCRIPTION
	WA99 1L8AA	1	U	P					[L2] Inboard Side of Steering Wheel (Limited)
	5JA42 1DVAA	1	J, T						[DL] Inboard Side of Steering Wheel, without Headlamp Leveling & with Roof Mounted Light Bar
	5JA42 1L8AA	1	J, T	P					[L5] Inboard Side of Steering Wheel, without Headlamp Leveling
	WA99 1L8AA	1	U	P					[L5] Inboard Side of Steering Wheel (Limited)
	WA99 DX9AA	1	U	H					Inboard Side of Steering Wheel (Sport)
	WB01 1DVAA	1	U	P					[DV] Inboard Side of Steering Wheel, with Cutout for Headlamp Leveling Switch (Limited)
	WB01 1L8AA	1	U	P					[L2] Inboard Side of Steering Wheel, with Cutout for headlamp leveling Switch (Limited)
		1	U	P					[L5] Inboard Side of Steering Wheel, with Cutout for Headlamp Leveling Switch (Limited)
	WB01 DX9AA	1	U	H					Black with cutout for headlamp Leveling Switch (Sport)
	WB05 1DVAA	1	J, T	P					[DV] Inboard Side of Steering Wheel (Limited)
29	4793 554AB	1							POWER OUTLET
-30	#56010 621AA	1							MOUNT, Power Outlet
-31	4685 590	1							BASE, Cigar Lighter
32	4685 536	1							KNOB AND ELEMENT, Cigar Lighter
-33	4793 555	1							RING, Cigar Lighter Mounting
-34									LABEL, Air Bag Warning
	4595 746AA	1							Passenger Side Instrument Panel End Cap (Europe)
	4649 282AA	4							Seat Side (U.S.A. / Mexico / Europe
	4649 281AA	4							Seat Side [English/French] Canada
-35	#55037 718AA	1				ENR			INSULATION, Dash Panel
-36									PANEL, CLOSEOUT
	55352 786AC	1	J, T						Right
	55352 787AC	1	J, T						Left

JEEP LIBERTY (KJ)

SERIES	LINE	BODY	ENGINE	TRANSMISSION
P = Limited	J = LHD (4WD)	74 = 4 Dr. (104.3 WB)	ED1, ED0 = 2.4L Power Tech	DDK = 5 Speed HDManual
H = Sport	U = RHD (4WD)		EKG, EK0 = 3.7L Power Tech	DDD = 5 Speed HD Manual
M = Renegade	T = LHD (2WD)		ENJ = 2.5L 4Cyl Turbo Diesel	DG4,DGQ = Multi-Speed Auto
			ENR = 2.8L 4Cyl Turbo Diesel	DG6 = 4 Speed Auto Transm
			EN0 = 4Cyl Turbo Diesel	DG0 = All Automatic Transm
				DBB = All Manual Transm

AR = Use as required - = Non illustrated part # = New this model year **June 3, 2003**

« RETURN TO GROUP INDEX

Instrument Panel
Figure 08A-110

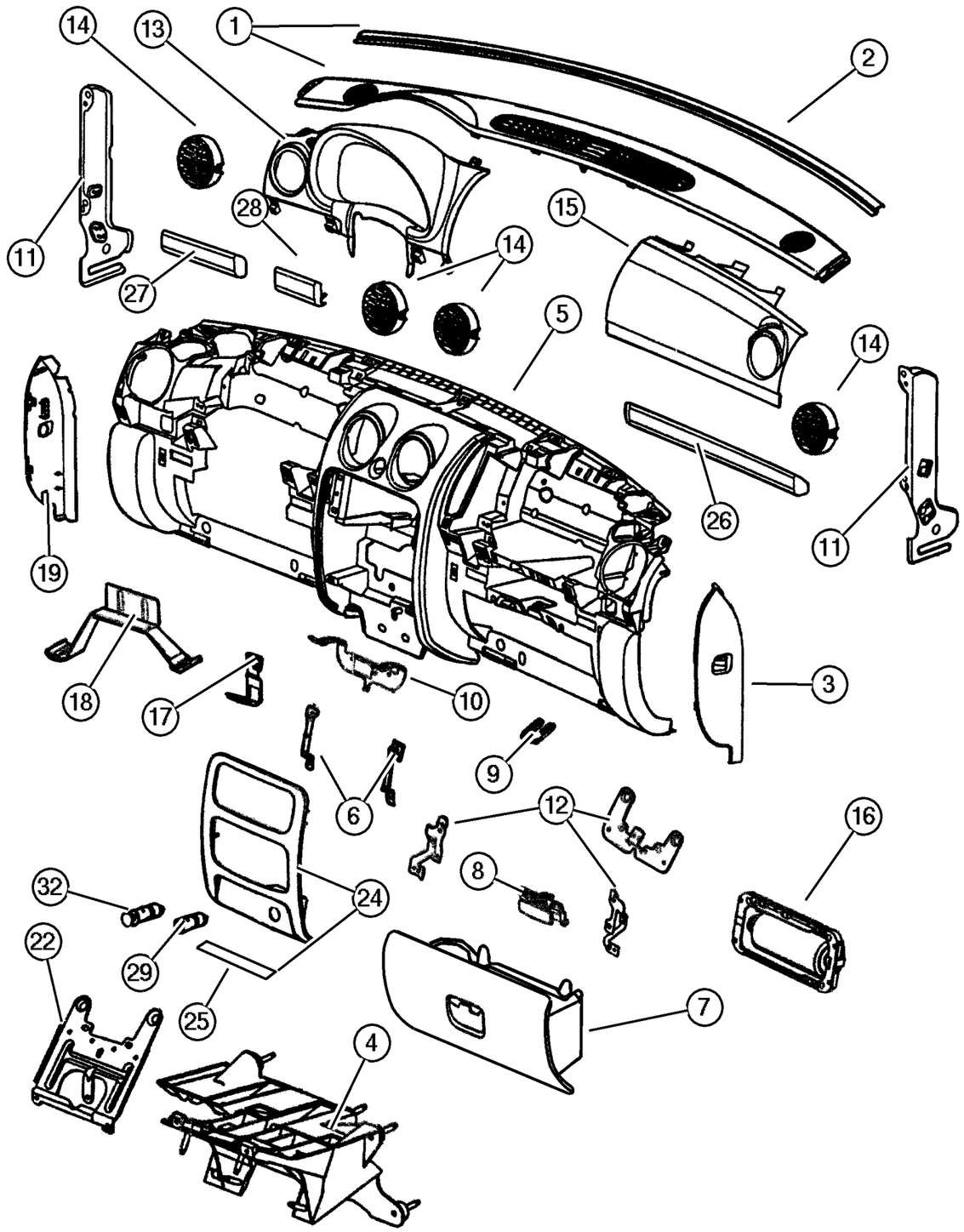

ITEM	PART NUMBER	QTY	LINE	SERIES	BODY	ENGINE	TRANS	TRIM	DESCRIPTION
	55352 788AD	1	U						Right
	55352 789AC	1	U						Left
-37	6101 945	4							SCREW, Closeout Panel Attaching
-38	4595 823AB	1							SMOKERS KIT, Ash Receiver With Lighter

JEEP LIBERTY (KJ)

SERIES	LINE	BODY	ENGINE	TRANSMISSION
P = Limited	J = LHD (4WD)	74 = 4 Dr. (104.3 WB)	ED1, ED0 = 2.4L Power Tech	DDK = 5 Speed HDManual
H = Sport	U = RHD (4WD)		EKG, EK0 = 3.7L Power Tech	DDD = 5 Speed HD Manual
M = Renegade	T = LHD (2WD)		ENJ = 2.5L 4Cyl Turbo Diesel	DG4,DGQ = Multi-Speed Auto
			ENR = 2.8L 4Cyl Turbo Diesel	DG6 = 4 Speed Auto Transm
			EN0 = 4Cyl Turbo Diesel	DG0 = All Automatic Transm
				DBB = All Manual Transm

AR = Use as required - = Non illustrated part # = New this model year

June 3, 2003

« RETURN TO GROUP INDEX

Instrument Panel Cluster
Figure 08A-210

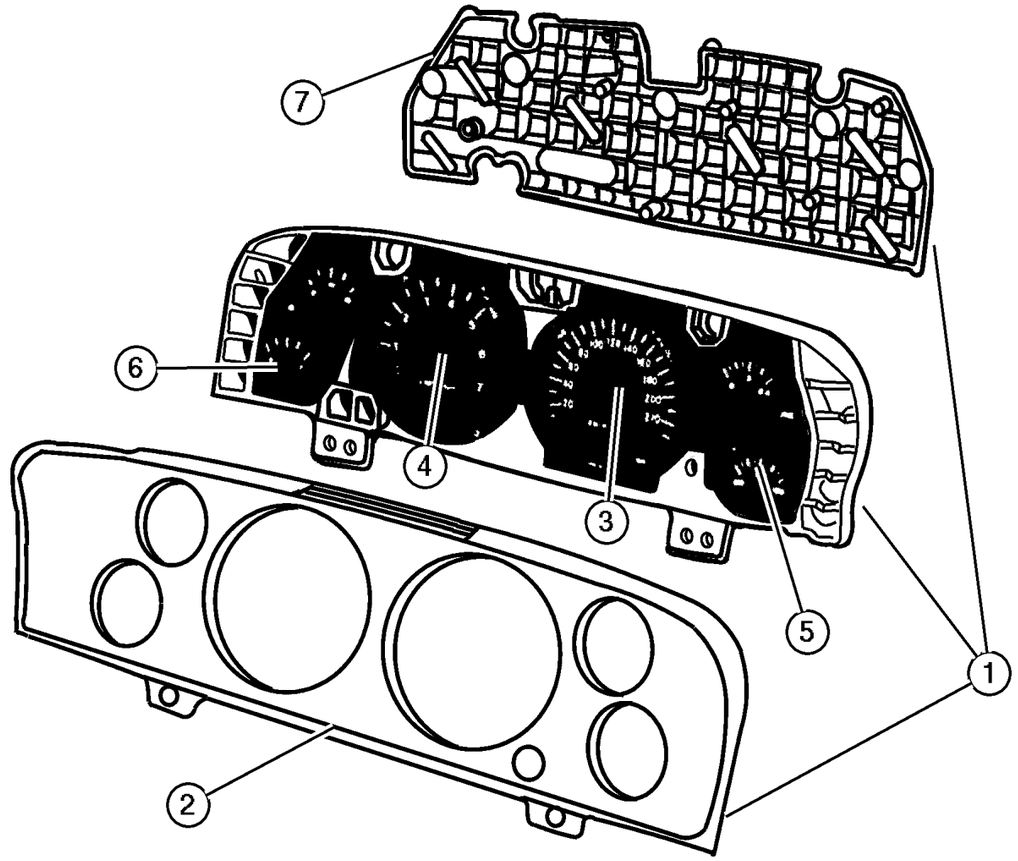

ITEM	PART NUMBER	QTY	LINE	SERIES	BODY	ENGINE	TRANS	TRIM	DESCRIPTION
Notes:									
[ED0]= 2.4L 4 Cylinder Engine									
[EK0]= 3.7L V6 Cylinder Engine									
[EN0]= All 4 / 5 Cylinder Turbo Diesel Engines									
[JCB]= 120 MPH with Primary									
[JDJ]= 240 KPH with Primary									
[JDR]= 240 KPH without Primary									
1									CLUSTER, Complete Cluster Assembly w/Lens, Circuit Board, Odometer Knob, Bulbs & Gauges
	#56010 515AB	1		P		EN0			[JDR] With [EN0]
	#56010 512AB	1				ED0, EK0			[JDJ] + [JA2] With [ED0] & [EK0]
	#56010 513AB	1				ED0, EK0			[JDR] + [JA2] With [ED0] & [EK0]
	#56010 514AB	1				EN0			[JCB] + [JA2] With [EN0]
	#56010 515AB	1				EN0			[JDR] + [JA2] With [EN0]
	#56010 516AB	1				EN0			[JDJ] + [JA2] With [EN0]
	#56010 518AB	1				ED0, EK0			[JCB] + [JA2] + [ABU] With [ED0] & [EK0]
	#56010 491AB	1				ED0, EK0			[JCB] + [JAY] - [ABU] With [ED0] & [EK0]
	#56010 492AB	1				ED0, EK0			[JDJ] + [JAY] With [ED0] & [EK0]
	#56010 493AB	1				ED0, EK0			[JDR] = [JAY] With [ED0] & [EK0]
	#56010 494AB	1				EN0			[JCB] + [JAY] With [EN0]
	#56010 495AB	1				EN0			[JDR] + [JAY] With [EN0]
	#56010 496AB	1				EN0			[JDJ] + [JAY] With [EN0]
	#56010 497AB	1				ED0, EK0			[JCB] + [JAY] + [ABU] With [ED0] & [EK0]
	#56010 511AB	1				ED0, EK0			[JCB] + [JA2] - [ABU] With [ED0] & [EK0]
2									MASK AND LENS, Instrument Cluster
	4828 962AB	1		H, M		ED0, EK0			Sport & Renegade
	4832 731AB	1		P		ED0, EK0			Limited
3									GAUGE, Speedometer, Serviced with Cluster Assembly , (NOT SERVICED) (Not Serviced)

JEEP LIBERTY (KJ)

SERIES	LINE	BODY	ENGINE	TRANSMISSION
P = Limited	J = LHD (4WD)	74 = 4 Dr. (104.3 WB)	ED1, ED0 = 2.4L Power Tech	DDK = 5 Speed HDManual
H = Sport	U = RHD (4WD)		EKG, EK0 = 3.7L Power Tech	DDD = 5 Speed HD Manual
M = Renegade	T = LHD (2WD)		ENJ = 2.5L 4Cyl Turbo Diesel	DG4,DGQ = Multi-Speed Auto
			ENR = 2.8L 4Cyl Turbo Diesel	DG6 = 4 Speed Auto Transm
			EN0 = 4Cyl Turbo Diesel	DG0 = All Automatic Transm
				DBB = All Manual Transm

AR = Use as required - = Non illustrated part # = New this model year **June 3, 2003**

« RETURN TO GROUP INDEX »

Instrument Panel Cluster
Figure 08A-210

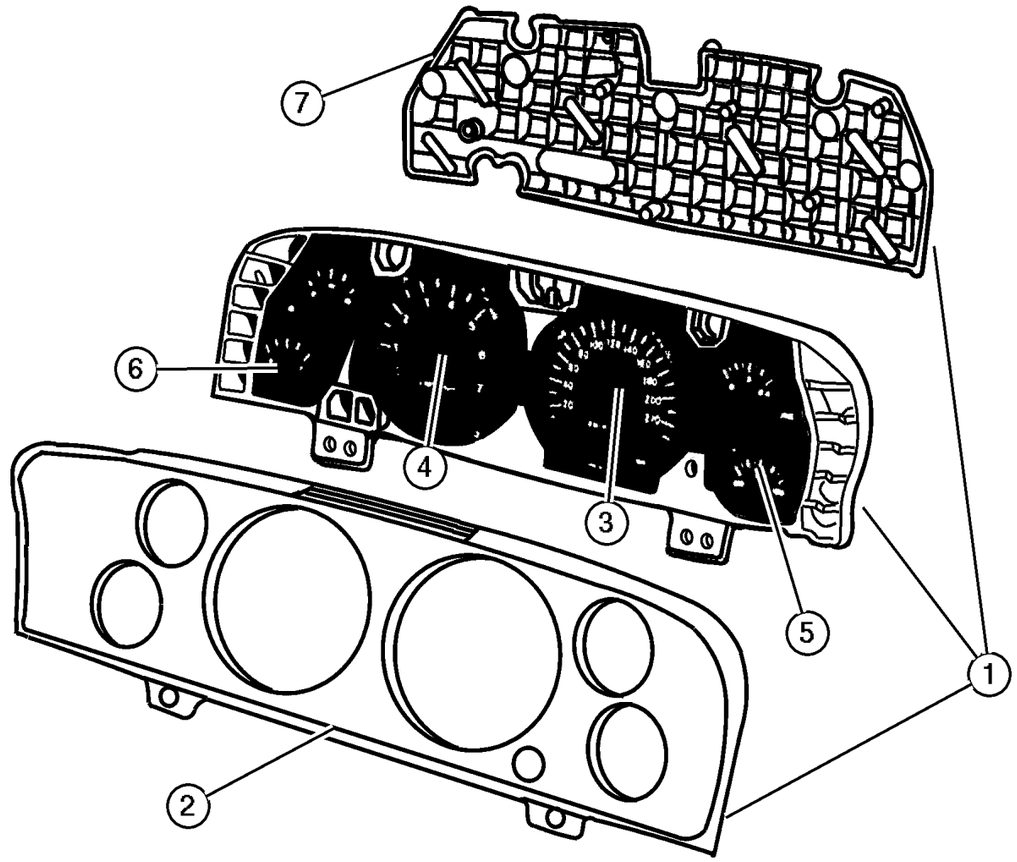

ITEM	PART NUMBER	QTY	LINE	SERIES	BODY	ENGINE	TRANS	TRIM	DESCRIPTION
4									GAUGE, Tachometer, Serviced with Cluster Assembly , (NOT SERVICED) (Not Serviced)
5									GAUGE, Temperature And Oil, Serviced with Cluster Assembly , (NOT SERVICED) (Not Serviced)
6									GAUGE, Fuel And Volt, Serviced with Cluster Assembly , (NOT SERVICED) (Not Serviced)
7									BOARD, Circuit, Serviced with Cluster Assembly , (NOT SERVICED) (Not Serviced)
-8	4827 989AA	9		H, M		ED0, EK0			BULB AND SOCKET
-9									KNOB, Odometer Reset, Serviced with Cluster Assembly, (NOT SERVICED) (Not Serviced)
-10									SCREW, Tapping, M4.2X1.70X15.00, (NOT SERVICED) (Not Serviced)

JEEP LIBERTY (KJ)

SERIES	LINE	BODY	ENGINE	TRANSMISSION
P = Limited	J = LHD (4WD)	74 = 4 Dr. (104.3 WB)	ED1, ED0 = 2.4L Power Tech	DDK = 5 Speed HDManual
H = Sport	U = RHD (4WD)		EKG, EK0 = 3.7L Power Tech	DDD = 5 Speed HD Manual
M = Renegade	T = LHD (2WD)		ENJ = 2.5L 4Cyl Turbo Diesel	DG4,DGQ = Multi-Speed Auto
			ENR = 2.8L 4Cyl Turbo Diesel	DG6 = 4 Speed Auto Transm
			EN0 = 4Cyl Turbo Diesel	DG0 = All Automatic Transm
				DBB = All Manual Transm

AR = Use as required - = Non illustrated part # = New this model year **June 3, 2003**

« RETURN TO GROUP INDEX

Radios
Figure 08A-310

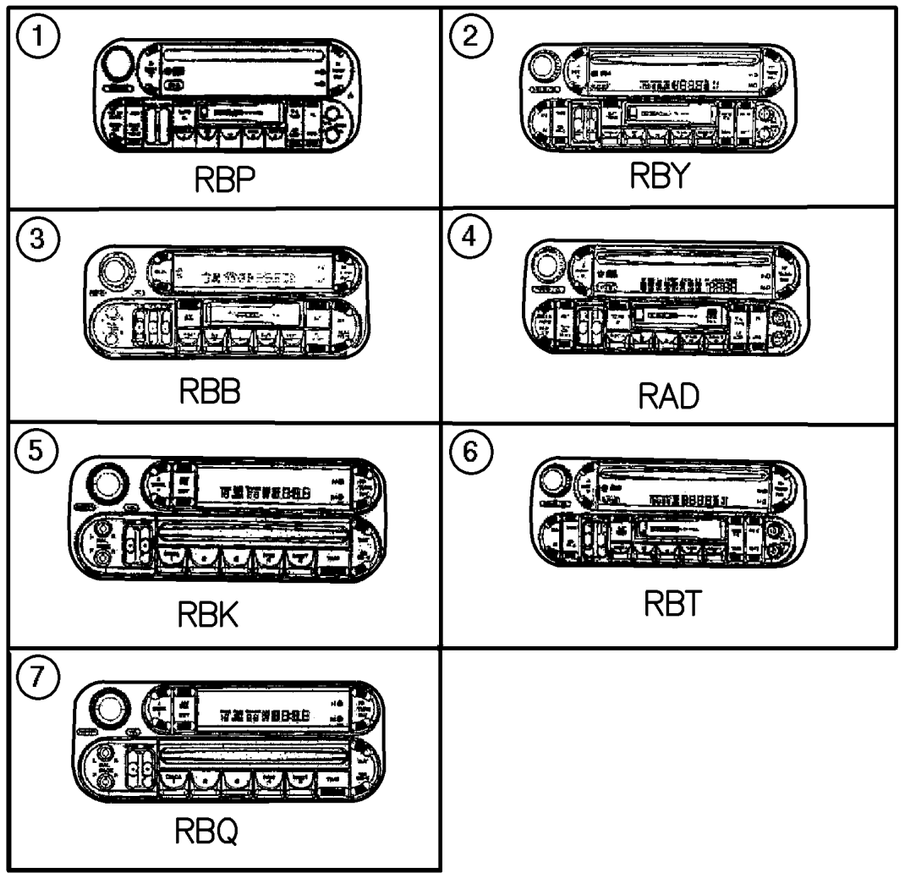

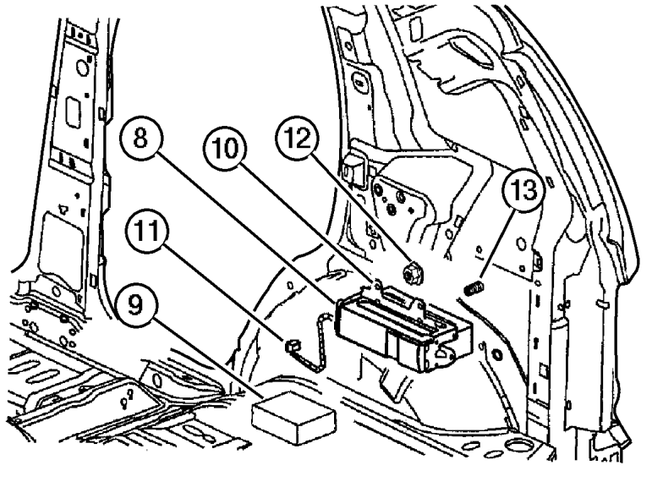

ITEM	PART NUMBER	QTY	LINE	SERIES	BODY	ENGINE	TRANS	TRIM	DESCRIPTION
[RAD]=AM/FM w/Cassette & CD Changer Control (Europe)									
[RBB]=AM/FM w/Cassette & CD Changer									
[RBK]=AM/FM w/CD Changer Control									
[RBP]=AM/FM w/Cassette & CD Changer Control									
[RPQ]=AM/FM w/CD 6-Disc Changer									
[RBT]=AM/FM/MW/RDS Cassette & CD Changer Control (Japan)									
[RBY]=AM/FM w/Cassette & CD Changer Control									
1	#5064 125AC	1							RADIO, AM/FM/Cassette With CD, [RBP]
2	#5064 383AB	1							RADIO, AM/FM/Cassette With CD, [RBY]
3	#5064 335AA	1							RADIO, AM/FM/Cassette With CD Control, [RBB]
4	#5064 385AB	1							RADIO, AM/FM/Cassette With CD, [RAD]
5	#5064 354AA	1							RADIO, AM/FM with CD and Equalizer, [RBK]
6	56038 584AH	1							RADIO, AM/FM/Cassette With CD, [RBT]
7	56038 622AD	1							RADIO, AM/FM with CD and Equalizer, [RBQ]
8	8220 3465	1							PLAYER KIT, CD Changer - 6 Disc, [REM] 6-Disc
9	4797 433	1							MAGAZINE, CD Changer, [REM]
10	56038 605AA	1							BRACKET, CD Changer, [REM]
11									CABLE, CD Changer
	#56038 596AF	1	J, T						[REM]
	#56038 598AF	1	U						[REM]
12	6100 047	4							NUT AND WASHER, Hex Nut-Coned Washer, M6 x 1.00, [REM]
13	6503 846	4							STUD, Single Ended, Knurled, Pilot Point, M6x1.00x20.00, [REM]
-14									CHOKE, Speaker
	56038 654AA	1	J, T						[RCJ]
	56038 655AA	1	U						[RCJ]

JEEP LIBERTY (KJ)

SERIES	LINE	BODY	ENGINE	TRANSMISSION
P = Limited	J = LHD (4WD)	74 = 4 Dr. (104.3 WB)	ED1, ED0 = 2.4L Power Tech	DDK = 5 Speed HDManual
H = Sport	U = RHD (4WD)		EKG, EK0 = 3.7L Power Tech	DDD = 5 Speed HD Manual
M = Renegade	T = LHD (2WD)		ENJ = 2.5L 4Cyl Turbo Diesel	DG4,DGQ = Multi-Speed Auto
			ENR = 2.8L 4Cyl Turbo Diesel	DG6 = 4 Speed Auto Transm
			EN0 = 4Cyl Turbo Diesel	DG0 = All Automatic Transm
				DBB = All Manual Transm

AR = Use as required - = Non illustrated part # = New this model year **June 3, 2003**

« RETURN TO GROUP INDEX

Speakers
Figure 08A-320

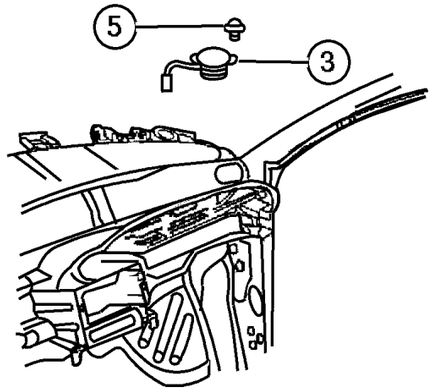

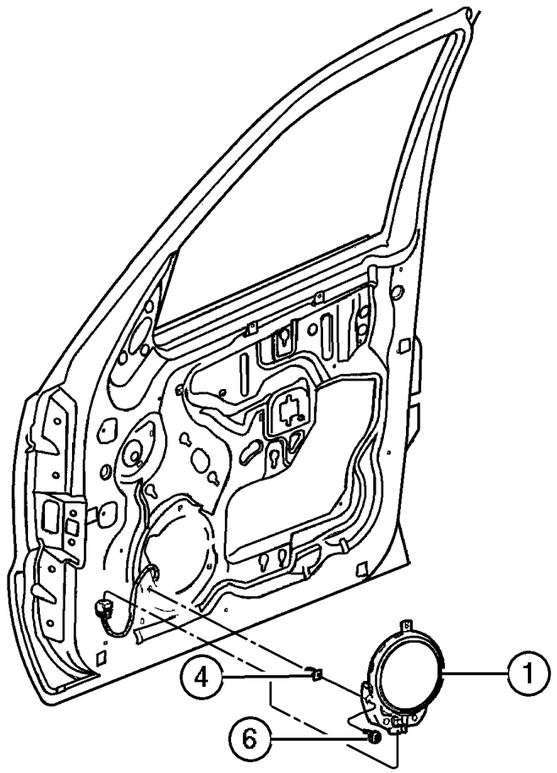

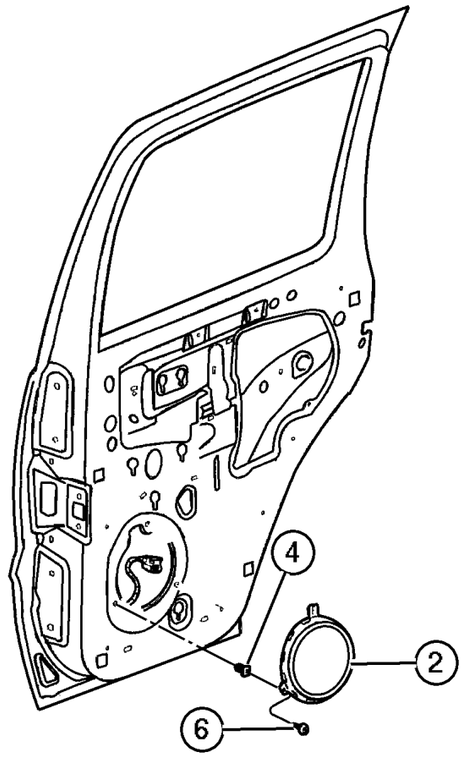

ITEM	PART NUMBER	QTY	LINE	SERIES	BODY	ENGINE	TRANS	TRIM	DESCRIPTION
Notes:									
[RCG]=Standard Sound System									
[RCJ]=Premium Sound System									
1									SPEAKER, 6.5"
	#56038 593AG	2							[RCJ] Premium (Amplifier Serviced with Speaker Assembly Only), Front Door
	#56043 268AA	2							[RCG] Standard
2									SPEAKER, 6.5"
	#56038 800AB	2							RCJ] Premium, Rear Door
	#56043 268AA	2							[RCG] Standard
3									SPEAKER, Tweeter
	#56038 815AB	2							[RCJ] Premium, Instrument Panel
	#56038 612AB	2							[RCG] Standard
4	6507 009AA	6							NUT, Plastic Snap-in, Door Speaker Mounting
5									SCREW, M4.2X1.70X15.00 (Door Speaker Mounting), (NOT SERVICED) (Not Serviced)
6									SCREW, 0.164-18X.750 (I/Panel Speaker Mounting), (NOT SERVICED) (Not Serviced)

JEEP LIBERTY (KJ)

SERIES	LINE	BODY	ENGINE	TRANSMISSION
P = Limited	J = LHD (4WD)	74 = 4 Dr. (104.3 WB)	ED1, ED0 = 2.4L Power Tech	DDK = 5 Speed HDManual
H = Sport	U = RHD (4WD)		EKG, EK0 = 3.7L Power Tech	DDD = 5 Speed HD Manual
M = Renegade	T = LHD (2WD)		ENJ = 2.5L 4Cyl Turbo Diesel	DG4,DGQ = Multi-Speed Auto
			ENR = 2.8L 4Cyl Turbo Diesel	DG6 = 4 Speed Auto Transm
			EN0 = 4Cyl Turbo Diesel	DG0 = All Automatic Transm
				DBB = All Manual Transm

Antenna
Figure 08A-330

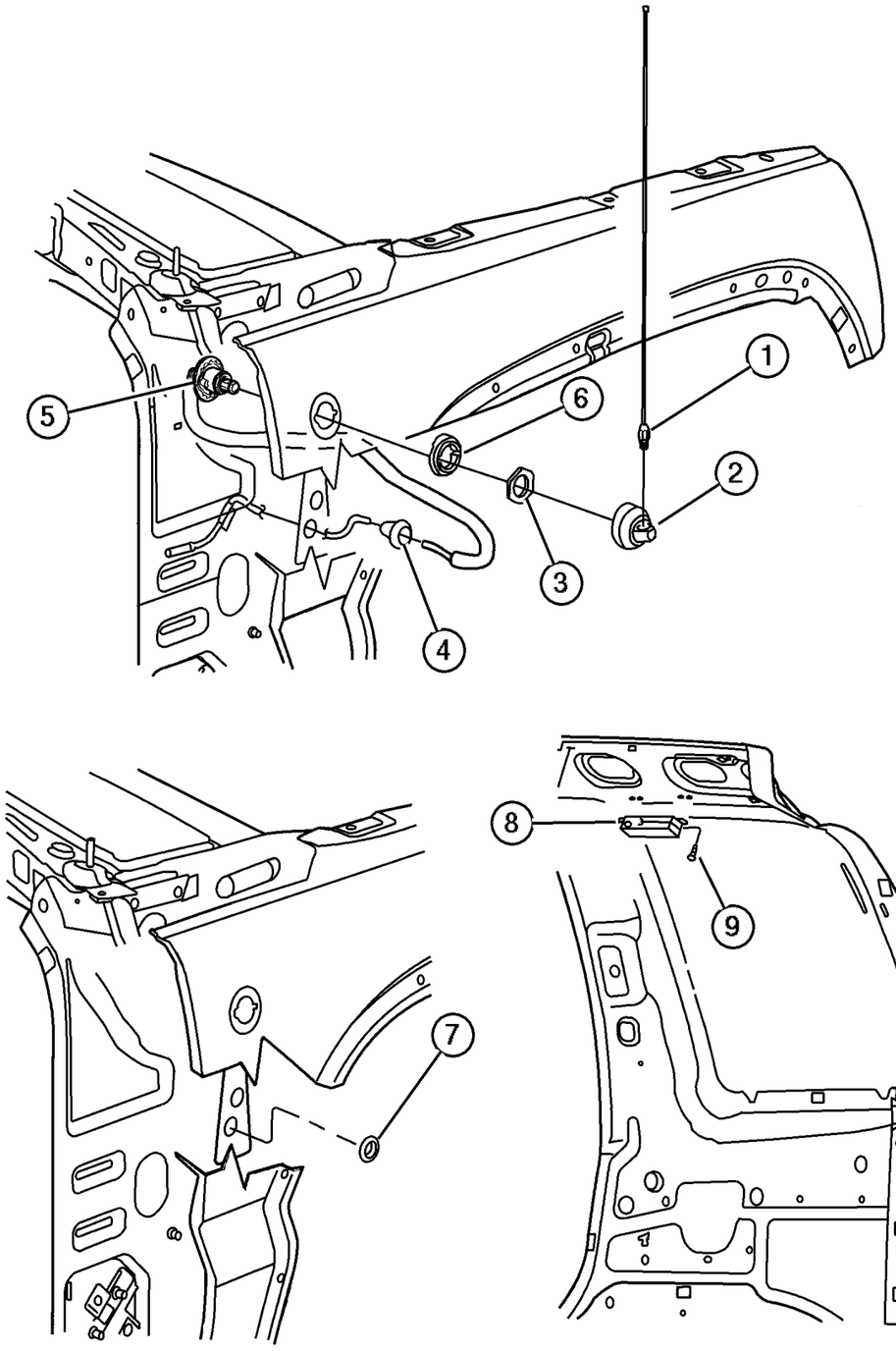

ITEM	PART NUMBER	QTY	LINE	SERIES	BODY	ENGINE	TRANS	TRIM	DESCRIPTION
1	56038 545AE	1							MAST, Antenna, Spiral Ground with 5/16‘ Thread (Bright)
2	56038 523AA	1							COVER, Antenna Opening
3	56038 581AA	1							NUT
4									GROMMET, Serviced with Cable Base Assembly with Lead , (NOT SERVICED) (Not Serviced)
5	56038 526AE	1							ANTENNA, Cable Base Assembly with Lead
6	56038 580AB	1							ADAPTER, Antenna, Bezel
7	4780 615AB	2							PLUG, Body, .75 Diameter
8	56038 527AD	1							ANTENNA, Antenna Module Radio
9									SCREW, (NOT SERVICED) (Not Serviced)
-10									CABLE, Antenna
	56038 559AF	1							Radio to Cowl
	56038 575AG	1							Antenna Module to Cowl
	56038 576AG	1							Radio to Cowl (RHD)

JEEP LIBERTY (KJ)

SERIES	LINE	BODY	ENGINE	TRANSMISSION
P = Limited	J = LHD (4WD)	74 = 4 Dr. (104.3 WB)	ED1, ED0 = 2.4L Power Tech	DDK = 5 Speed HDManual
H = Sport	U = RHD (4WD)		EKG, EK0 = 3.7L Power Tech	DDD = 5 Speed HD Manual
M = Renegade	T = LHD (2WD)		ENJ = 2.5L 4Cyl Turbo Diesel	DG4,DGQ = Multi-Speed Auto
			ENR = 2.8L 4Cyl Turbo Diesel	DG6 = 4 Speed Auto Transm
			EN0 = 4Cyl Turbo Diesel	DG0 = All Automatic Transm
				DBB = All Manual Transm

AR = Use as required - = Non illustrated part # = New this model year **June 3, 2003**

« RETURN TO GROUP INDEX

Console, Overhead
Figure 08A-410

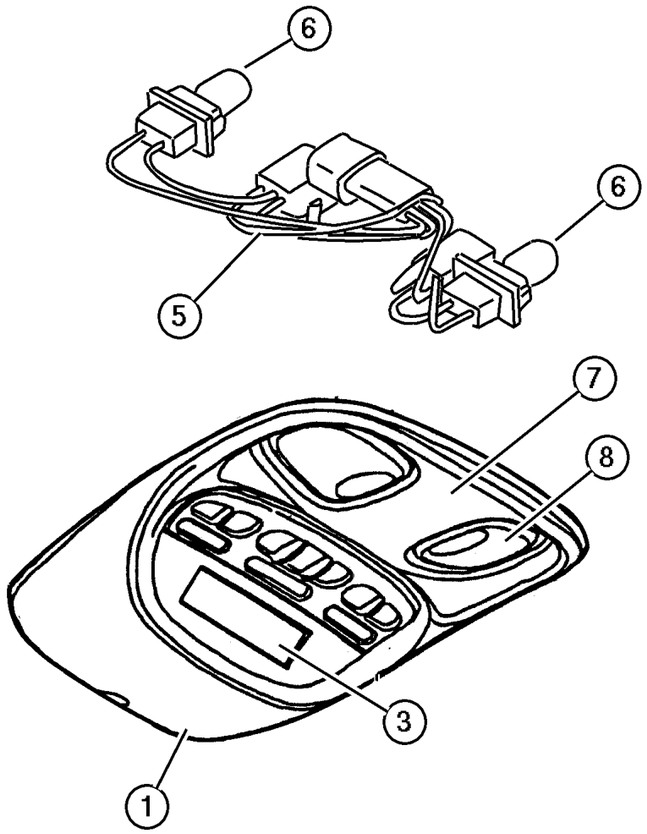

ITEM	PART NUMBER	QTY	LINE	SERIES	BODY	ENGINE	TRANS	TRIM	DESCRIPTION
1									CONSOLE, Overhead Mini, Less Electronics
	WA95 1L2AA	1	J, T						With Sunroof
	5014 271AA	1							Without Sunroof
-2	5072 348AA	1							RETAINER, Overhead Console
3									MODULE, Overhead Console
	#56010 349AB	1	J, T						
	#56010 351AB	1							Export
-4	5GV82 TL2AF	1							MODULE, Intrusion, Export
5	4760 644	1							WIRING, Overhead Console
6	L000 0192	2							BULB, 192
7									LAMP, Reading
	PB83 TL2AB	1							Without Sunroof
	WA90 1L2AA	1							With Sunroof
8	55196 755AA	1							LENS, Cargo Lamp
-9	L002 1202	1							BULB, 212-2
-10	4685 445	1							SWITCH, Reading Lamp
-11	5GM78 TL2AA	1							SWITCH, Sunroof
-12	56010 331AB	1							RETAINER, Electronic Module
-13	4437 661	3							LAMP, Message Center
-14	JV76 TL2	1	J, T						LAMP, Dome, Beige

JEEP LIBERTY (KJ)

SERIES	LINE	BODY	ENGINE	TRANSMISSION
P = Limited	J = LHD (4WD)	74 = 4 Dr. (104.3 WB)	ED1, ED0 = 2.4L Power Tech	DDK = 5 Speed HDManual
H = Sport	U = RHD (4WD)		EKG, EK0 = 3.7L Power Tech	DDD = 5 Speed HD Manual
M = Renegade	T = LHD (2WD)		ENJ = 2.5L 4Cyl Turbo Diesel	DG4,DGQ = Multi-Speed Auto
			ENR = 2.8L 4Cyl Turbo Diesel	DG6 = 4 Speed Auto Transm
			EN0 = 4Cyl Turbo Diesel	DG0 = All Automatic Transm
				DBB = All Manual Transm

AR = Use as required - = Non illustrated part # = New this model year **June 3, 2003**

« RETURN TO GROUP INDEX

Console, Floor
Figure 08A-420

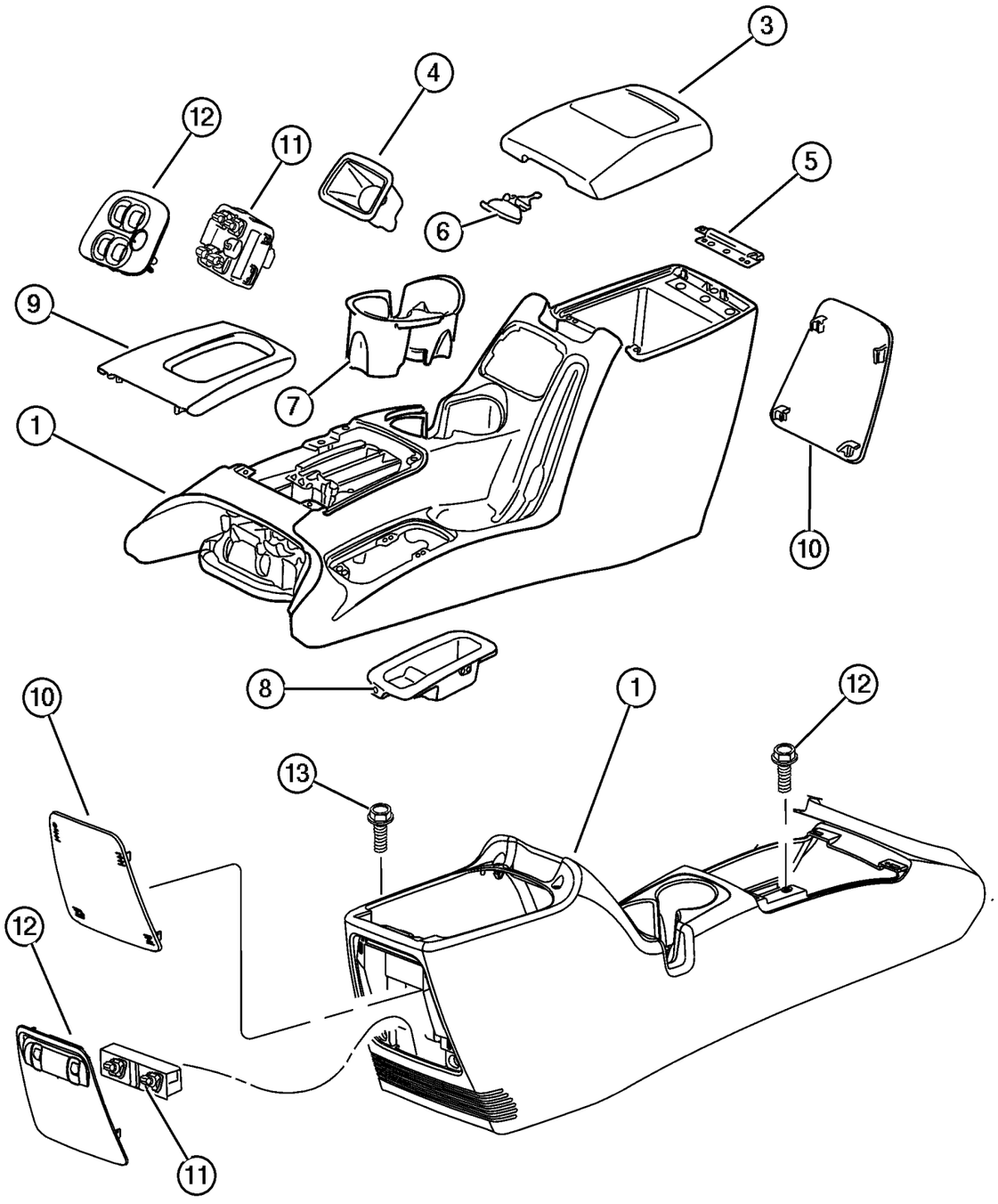

ITEM	PART NUMBER	QTY	LINE	SERIES	BODY	ENGINE	TRANS	TRIM	DESCRIPTION
Notes:									
[DBB]=All Manual Transmissions									
[DG0]=All Automatic Transmissions									
1									CONSOLE, Base
	WD58 1DVAB	1					DG0		[DV] Slate Serviced with Two Clips & Heat Staked Rubber Brake Handle Shield
		1					DG0		[L2] Slate Serviced with Two Clips & Heat Staked Rubber Brake Handle Shield
		1					DG0		[L5] Slate Serviced with Two Clips & Heat Staked Rubber Brake Handle Shield
	WD85 1DVAB	1					DBB		[D2] Slate Serviced with Two Clips & Heat Staked Rubber Brake Handle Shield
	WD58 1L8AB	1					DG0		[L5] Taupe Serviced with Two Clips & Heat Staked Rubber Brake Handle Shield
		1					DG0		[L2] Taupe Serviced with Two Clips & Heat Staked Rubber Brake Handle Shield
	WD85 1L8AB	1					DBB		[L2] Taupe Serviced with Two Clips & Heat Staked Rubber Brake Handle Shield
-2	5072 907AB	1					DG0		BRACKET, Floor Console
3									LID, Floor Console Bin
	WD59 1DVAB	1					DBB		[D2] Serviced with Hinge & Latch
		1					DBB		[DV] Serviced with Hinge & Latch
	WD59 1L8AB	1					DBB		[L2] Serviced with Hinge & Latch
		1					DBB		[L5] Serviced with Hinge & Latch
4									BIN, Floor Console
	5GP34 WL8AC	1							[L5] Without Power Window Switch, Front
	5GP34 XDVAC	1							[DV] Without Power Window Switch, Front
	5072 904AB	1					DG0		Serviced with Two Bumper & Five Screws
5	5072 906AA	1					DBB		HINGE, Floor Console Lid
6	5072 905AA	1					DBB		LATCH, Console Lock
7	5072 903AA	1					DBB		CUPHOLDER, Floor Console

JEEP LIBERTY (KJ)

SERIES	LINE	BODY	ENGINE	TRANSMISSION
P = Limited	J = LHD (4WD)	74 = 4 Dr. (104.3 WB)	ED1, ED0 = 2.4L Power Tech	DDK = 5 Speed HDManual
H = Sport	U = RHD (4WD)		EKG, EK0 = 3.7L Power Tech	DDD = 5 Speed HD Manual
M = Renegade	T = LHD (2WD)		ENJ = 2.5L 4Cyl Turbo Diesel	DG4,DGQ = Multi-Speed Auto
			ENR = 2.8L 4Cyl Turbo Diesel	DG6 = 4 Speed Auto Transm
			EN0 = 4Cyl Turbo Diesel	DG0 = All Automatic Transm
				DBB = All Manual Transm

Console, Floor
Figure 08A-420

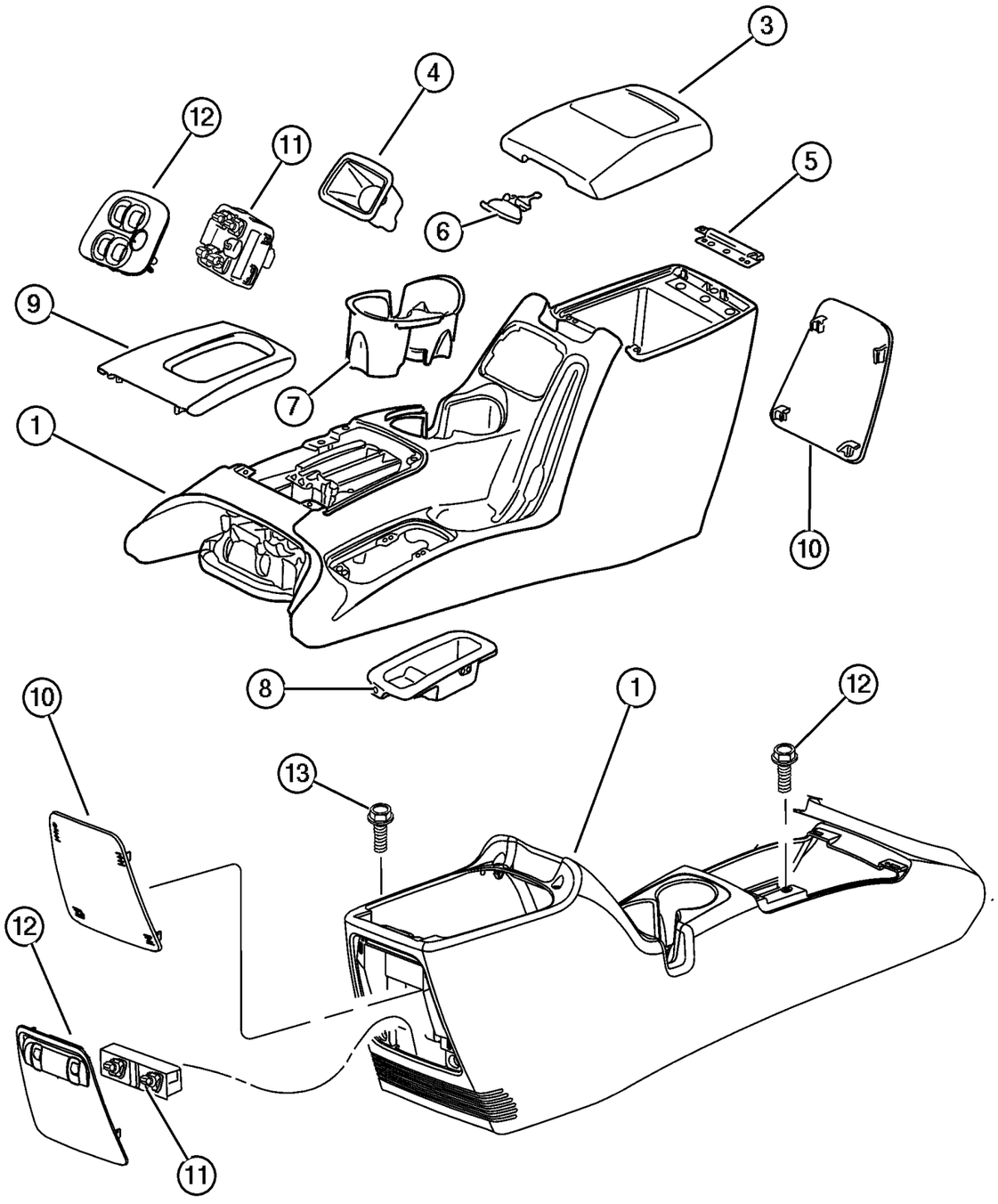

ITEM	PART NUMBER	QTY	LINE	SERIES	BODY	ENGINE	TRANS	TRIM	DESCRIPTION
8	5GG16 DX9AC	1	T						COVER, Floor Console, Two Wheel Drive Vehicle Only
9									BEZEL, Gear Selector
	5HK42 SZ5AC	1		P			DG0		Limited (Clips Serviced in Assembly Only)
	5GP21 DX9AD	1		H, M			DG0		Sport & Renegade (Clips Serviced in Assembly)
10									COVER, Switch Opening
	5GP35 WL8AC	1							[L5] Without Power Window Switch
	5GP35 XDVAC	1							[DV] Without Power Window Switch
11									SWITCH, Power Window
	56010 090AD	1							4 Gang, Front
	56010 091AB	1							2 Gang, Rear
12									BEZEL, Power Window Switch
	WA63 WL8AB	1							[L2], Front
		1							[L5], Front
	WA63 XDVAB	1							[D2], Front
		1							[DV], Front
	WA64 WL8AB	1							[L2], Rear
		1							[L5], Rear
	WA64 XDVAB	1							[D2], Rear
		1							[DV], Rear
13									SCREW, Hex Flange Head, M4.2x1.70x16.00, (NOT SERVICED) (Not Serviced)
-14	4595 823AB	1							SMOKERS KIT, Ash Receiver With Lighter

JEEP LIBERTY (KJ)

SERIES	LINE	BODY	ENGINE	TRANSMISSION
P = Limited	J = LHD (4WD)	74 = 4 Dr. (104.3 WB)	ED1, ED0 = 2.4L Power Tech	DDK = 5 Speed HDManual
H = Sport	U = RHD (4WD)		EKG, EK0 = 3.7L Power Tech	DDD = 5 Speed HD Manual
M = Renegade	T = LHD (2WD)		ENJ = 2.5L 4Cyl Turbo Diesel	DG4,DGQ = Multi-Speed Auto
			ENR = 2.8L 4Cyl Turbo Diesel	DG6 = 4 Speed Auto Transm
			EN0 = 4Cyl Turbo Diesel	DG0 = All Automatic Transm
				DBB = All Manual Transm

Group – 009
Engine Mounting

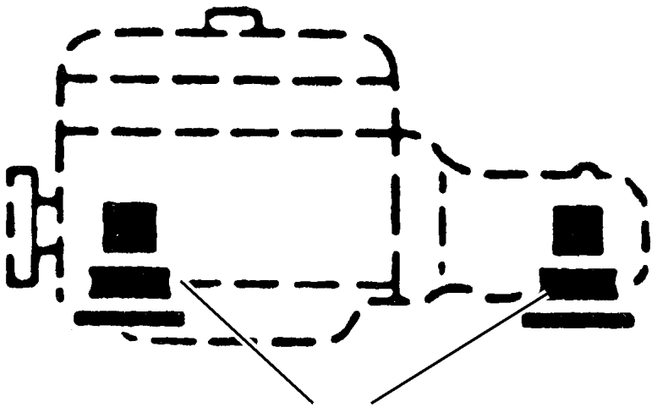

009–100

009–100 Engine Mounting 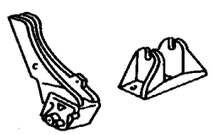			

GROUP 9 - Engine Mounting

Illustration Title	Group-Fig. No.
Engine Mounting	
Engine Mounting, Front With 2.5/2.8 Turbo Diesel [EN0]	Fig. 009-110
Engine Mounting, Rear With 2.5L /2.8Turbo Diesel [EN0]	Fig. 009-115
Engine Mounting, Front, 2.4L [ED1]	Fig. 009-120
Mounting Engine, Rear, 2.4L [ED1]	Fig. 009-125
Mounting Engine, Front, 3.7L [EKG]	Fig. 009-130
Mounting Engine, Rear, 3.7L [EKG]	Fig. 009-135

Engine Mounting, Front With 2.5/2.8 Turbo Diesel [EN0]
Figure 009-110

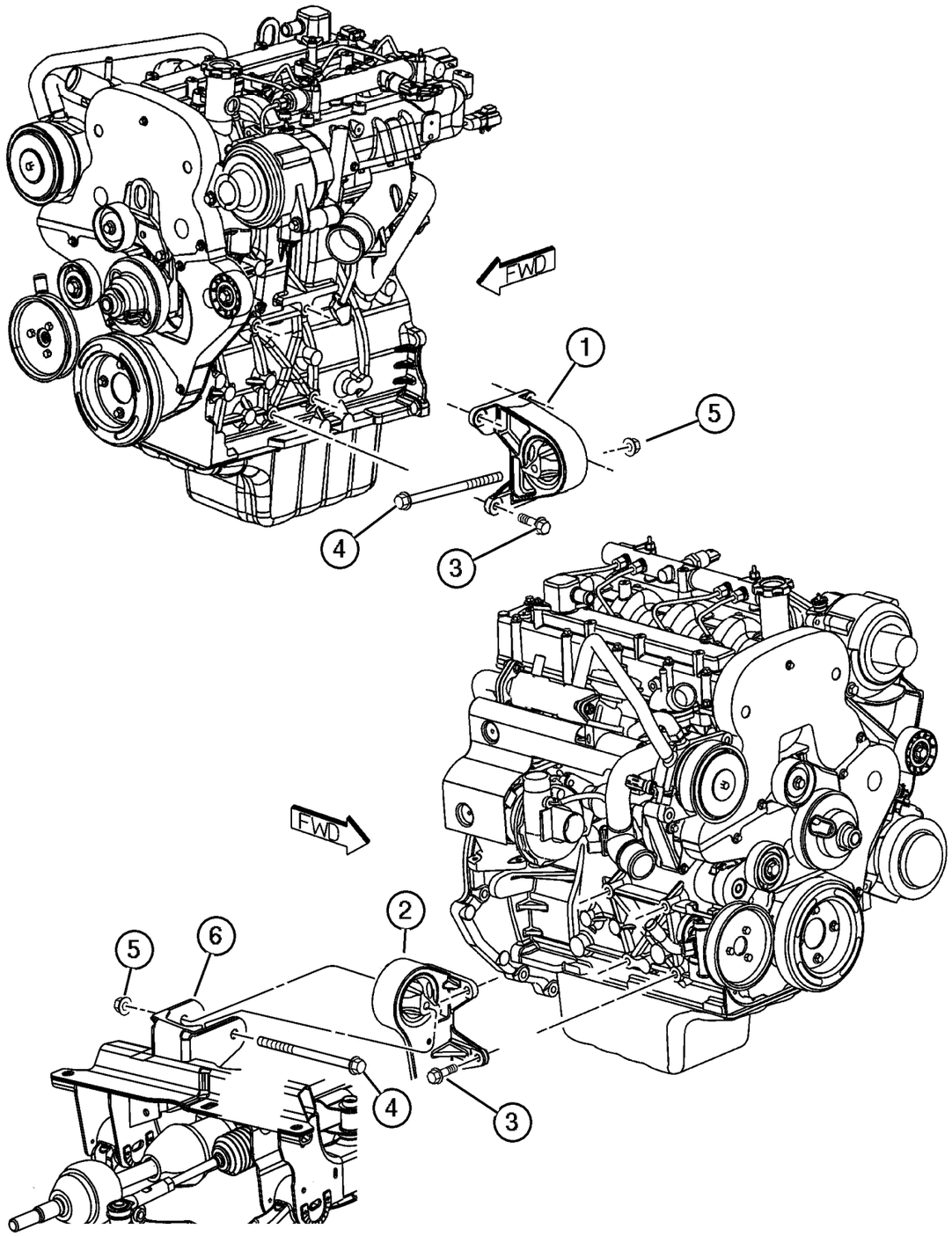

ITEM	PART NUMBER	QTY	LINE	SERIES	BODY	ENGINE	TRANS	TRIM	DESCRIPTION
Note; Sales Code									
[EK0]= All 3.7L 6 Cylinder Engines									
[EN0]= All 4/5 Cylinder Turbo Diesels									
1									INSULATOR, Engine Mount
	52059 201AD	1				EN0			
	#52059 201AE	1				EN0			Use 1-06-03 and after
2									INSULATOR, Engine Mount Right
	52059 200AB	1				EN0			
	#52059 200AD	1				EN0			Use 1-06-03 and after, Right
3	6503 699	8				EK0, EN0			SCREW AND WASHER, Hex Head, M10x1.5x28
4	3420 2606	1							BOLT, Hex Head
5	6502 697	2							NUT, Hex Flange Lock, M12x1.75
6									BRACKET, Serviced With Cradle Assembly, (NOT SERVICED) (Not Serviced)

JEEP LIBERTY (KJ)

SERIES	LINE	BODY	ENGINE	TRANSMISSION
P = Limited	J = LHD (4WD)	74 = 4 Dr. (104.3 WB)	ED1, ED0 = 2.4L Power Tech	DDK = 5 Speed HDManual
H = Sport	U = RHD (4WD)		EKG, EK0 = 3.7L Power Tech	DDD = 5 Speed HD Manual
M = Renegade	T = LHD (2WD)		ENJ = 2.5L 4Cyl Turbo Diesel	DG4,DGQ = Multi-Speed Auto
			ENR = 2.8L 4Cyl Turbo Diesel	DG6 = 4 Speed Auto Transm
			EN0 = 4Cyl Turbo Diesel	DG0 = All Automatic Transm
				DBB = All Manual Transm

AR = Use as required - = Non illustrated part # = New this model year **June 3, 2003**

« RETURN TO GROUP INDEX

Engine Mounting, Rear With 2.5L /2.8Turbo Diesel [EN0]
Figure 009-115

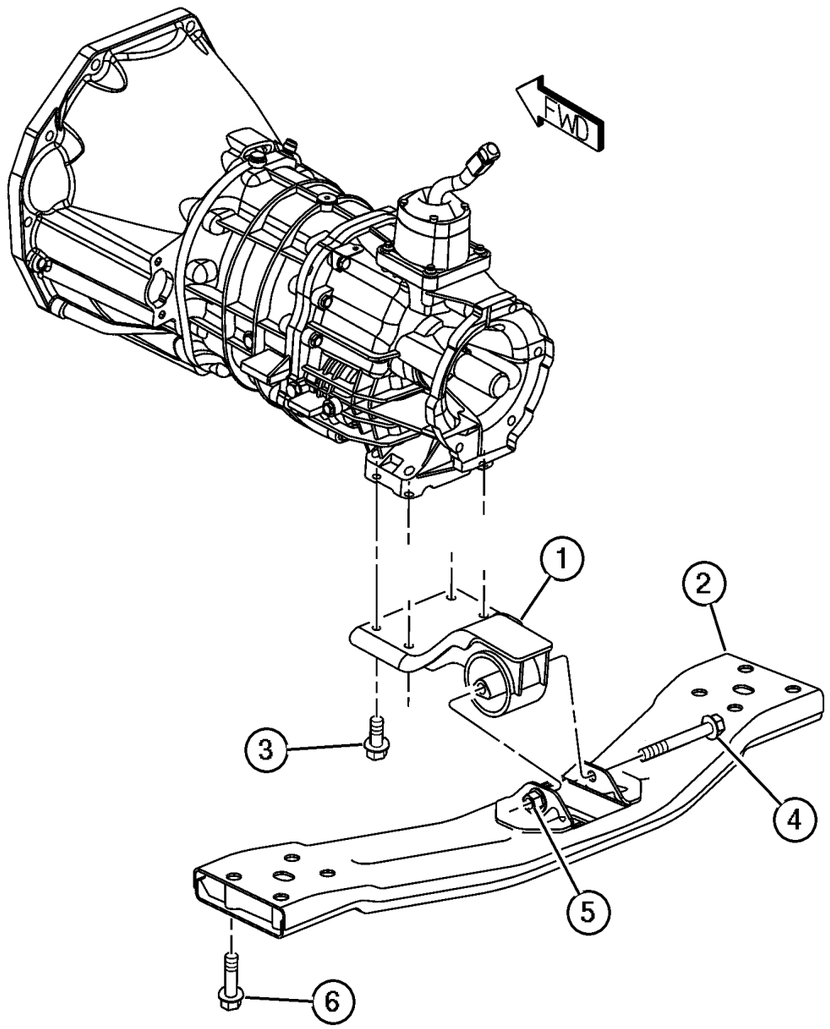

ITEM	PART NUMBER	QTY	LINE	SERIES	BODY	ENGINE	TRANS	TRIM	DESCRIPTION
Note; Sales Codes									
[DBB]= All Manual Transmissions									
[DDK]=5 Speed Manual Transmissions									
[ENJ]=2.4L 4 Cylinder 16 Valve Turbo Diesel									
[EN0]=All 4/5 Cylinder Turbo Diesels									
1	52058 539AB	1	J, U			EN0	DBB		BRACKET AND INSULATOR, Transmission Support
2	52059 323AC	1				ENJ			CROSSMEMBER, Transmission
3	6033 358	4					DBB		SCREW AND WASHER, Hex Head Locking, .437-14x1.25
4	3420 2606	1							BOLT, Hex Head
5									NUT, Serviced With Transmission Crossmember, (NOT SERVICED) (Not Serviced)
6	6506 000AA	4							SCREW AND WASHER, Inner
-7	#52059 313AA	1				EN0	DGQ		BRACKET, Support Rear, Rear Transmission Support

JEEP LIBERTY (KJ)

SERIES	LINE	BODY	ENGINE	TRANSMISSION
P = Limited	J = LHD (4WD)	74 = 4 Dr. (104.3 WB)	ED1, ED0 = 2.4L Power Tech	DDK = 5 Speed HDManual
H = Sport	U = RHD (4WD)		EKG, EK0 = 3.7L Power Tech	DDD = 5 Speed HD Manual
M = Renegade	T = LHD (2WD)		ENJ = 2.5L 4Cyl Turbo Diesel	DG4,DGQ = Multi-Speed Auto
			ENR = 2.8L 4Cyl Turbo Diesel	DG6 = 4 Speed Auto Transm
			EN0 = 4Cyl Turbo Diesel	DG0 = All Automatic Transm
				DBB = All Manual Transm

AR = Use as required - = Non illustrated part # = New this model year **June 3, 2003**

« RETURN TO GROUP INDEX

Engine Mounting, Front, 2.4L [ED1]
Figure 009-120

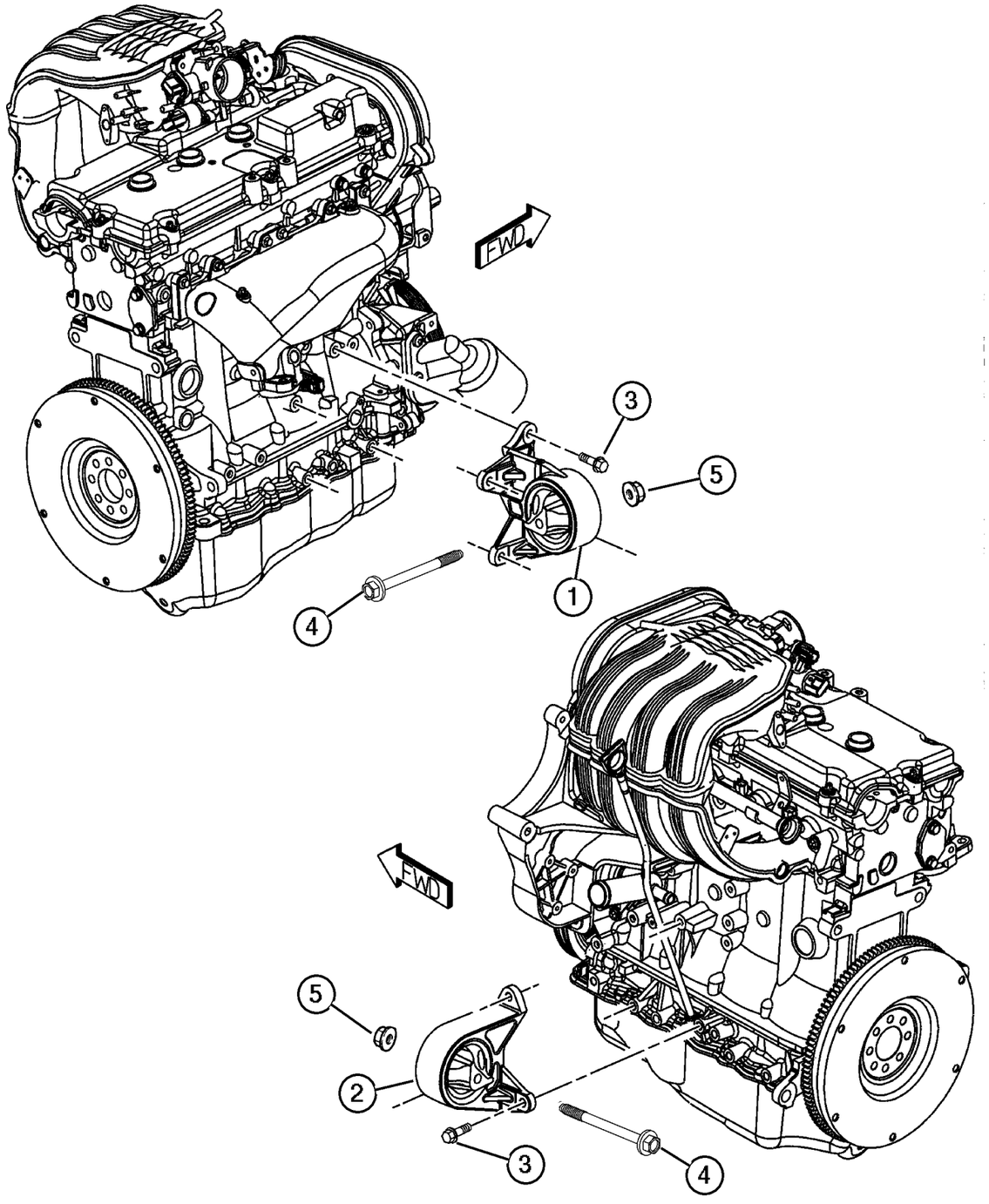

ITEM	PART NUMBER	QTY	LINE	SERIES	BODY	ENGINE	TRANS	TRIM	DESCRIPTION
Note; Sales Codes									
[ED0]= All 2.2L,2.5L,2.4L,4 Cylinder Gas Engines									
1	52059 252AB	1				ED0			INSULATOR, Engine Mount, Right
2	52059 253AB	1				ED0			INSULATOR, Engine Mount, Left
3									SCREW AND WASHER, Hex Head, M10x1.5x28
	6503 699	4				ED0			Right
		3				ED0			Left
4	6507 388AA	2							BOLT, Hex Head
5	6502 697	2							NUT, Hex Flange Lock, M12x1.75

JEEP LIBERTY (KJ)

SERIES	LINE	BODY	ENGINE	TRANSMISSION
P = Limited	J = LHD (4WD)	74 = 4 Dr. (104.3 WB)	ED1, ED0 = 2.4L Power Tech	DDK = 5 Speed HDManual
H = Sport	U = RHD (4WD)		EKG, EK0 = 3.7L Power Tech	DDD = 5 Speed HD Manual
M = Renegade	T = LHD (2WD)		ENJ = 2.5L 4Cyl Turbo Diesel	DG4,DGQ = Multi-Speed Auto
			ENR = 2.8L 4Cyl Turbo Diesel	DG6 = 4 Speed Auto Transm
			EN0 = 4Cyl Turbo Diesel	DG0 = All Automatic Transm
				DBB = All Manual Transm

Mounting Engine, Rear, 2.4L [ED1]
Figure 009-125

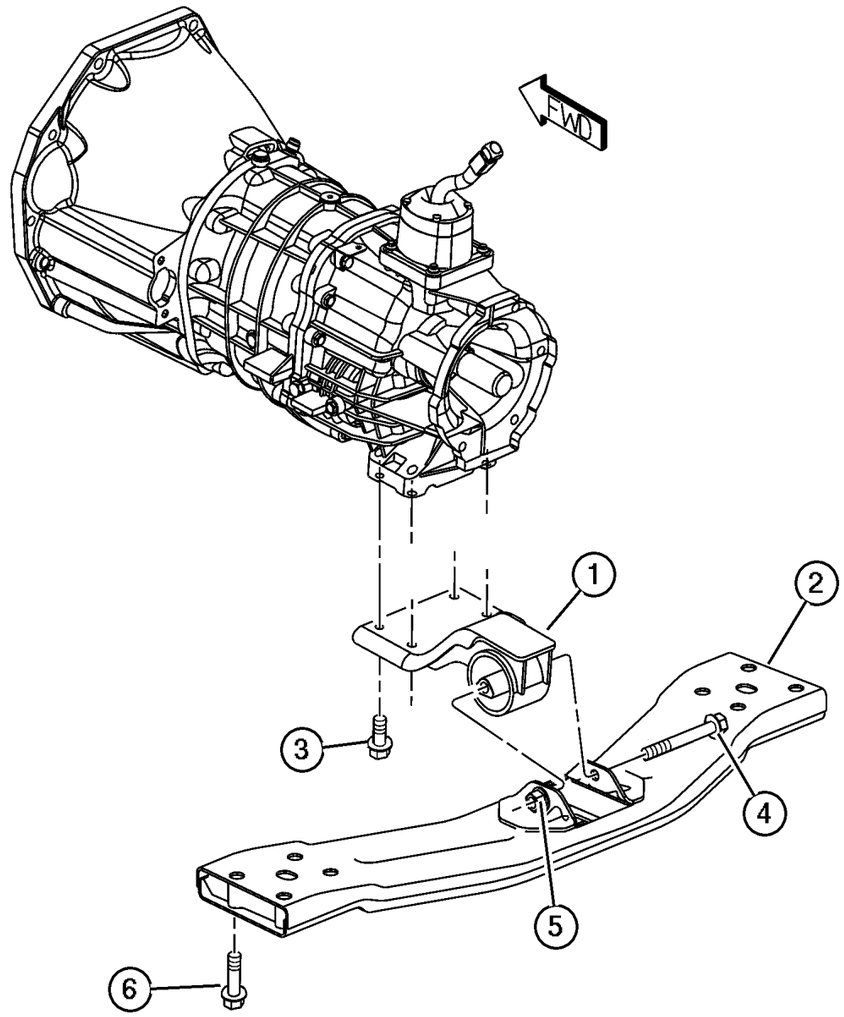

ITEM	PART NUMBER	QTY	LINE	SERIES	BODY	ENGINE	TRANS	TRIM	DESCRIPTION
Note; Sales Codes									
[DBB]= All Manual Transmissions									
[DDK]= 5 Speed Heavy Duty Manual Transmissions									
[ED1]= 2.4L Power Tech DOHC Inline 4									
[ED0]= All 2.2L, 2.5L, 2.4L, 4 Cylinder Gas Engines									
[EKG]= 3.7L Power Tech V-6 Engine									
1	52059 299AB	1				ED0	DDK		BRACKET AND INSULATOR, Transmission Support
2	52058 643AG	1				ED0, EKG			CROSSMEMBER, Transmission
3	6033 358	4					DBB		SCREW AND WASHER, Hex Head Locking, .437-14x1.25
4	3420 2606	1							BOLT, Hex Head
5									NUT, Serviced With Crossmember, (NOT SERVICED) (Not Serviced)
6	6505 826AA	4							SCREW AND WASHER

JEEP LIBERTY (KJ)

SERIES	LINE	BODY	ENGINE	TRANSMISSION
P = Limited	J = LHD (4WD)	74 = 4 Dr. (104.3 WB)	ED1, ED0 = 2.4L Power Tech	DDK = 5 Speed HDManual
H = Sport	U = RHD (4WD)		EKG, EK0 = 3.7L Power Tech	DDD = 5 Speed HD Manual
M = Renegade	T = LHD (2WD)		ENJ = 2.5L 4Cyl Turbo Diesel	DG4,DGQ = Multi-Speed Auto
			ENR = 2.8L 4Cyl Turbo Diesel	DG6 = 4 Speed Auto Transm
			EN0 = 4Cyl Turbo Diesel	DG0 = All Automatic Transm
				DBB = All Manual Transm

Mounting Engine, Front, 3.7L [EKG]
Figure 009-130

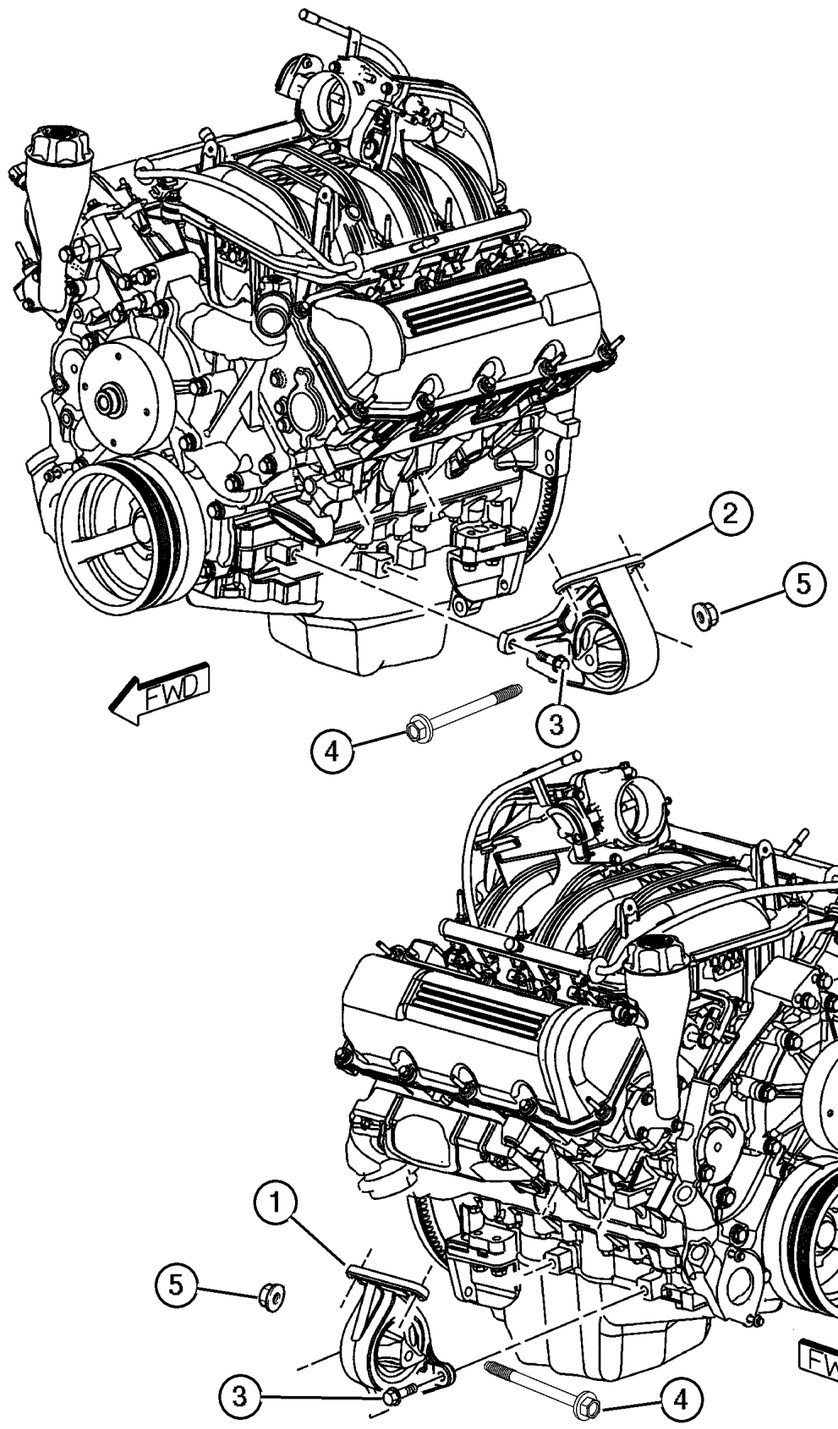

ITEM	PART NUMBER	QTY	LINE	SERIES	BODY	ENGINE	TRANS	TRIM	DESCRIPTION
Note; Sales Codes									
[EK0]= All 3.7L 6 Cylinder Gas Engines									
[EN0]= All 4/5 CylinderTurbo Diesels									
1	52059 226AA	1				EK0			INSULATOR, Engine Mount, Right
2	52059 227AA	1				EK0			INSULATOR, Engine Mount, Left
3	6503 699	8				EK0, EN0			SCREW AND WASHER, Hex Head, M10x1.5x28
4	3420 2606	1							BOLT, Hex Head
5	6502 697	2							NUT, Hex Flange Lock, M12x1.75

JEEP LIBERTY (KJ)

SERIES	LINE	BODY	ENGINE	TRANSMISSION
P = Limited	J = LHD (4WD)	74 = 4 Dr. (104.3 WB)	ED1, ED0 = 2.4L Power Tech	DDK = 5 Speed HDManual
H = Sport	U = RHD (4WD)		EKG, EK0 = 3.7L Power Tech	DDD = 5 Speed HD Manual
M = Renegade	T = LHD (2WD)		ENJ = 2.5L 4Cyl Turbo Diesel	DG4,DGQ = Multi-Speed Auto
			ENR = 2.8L 4Cyl Turbo Diesel	DG6 = 4 Speed Auto Transm
			EN0 = 4Cyl Turbo Diesel	DG0 = All Automatic Transm
				DBB = All Manual Transm

AR = Use as required - = Non illustrated part # = New this model year **June 3, 2003**

« RETURN TO GROUP INDEX

Mounting Engine, Rear, 3.7L [EKG]
Figure 009-135

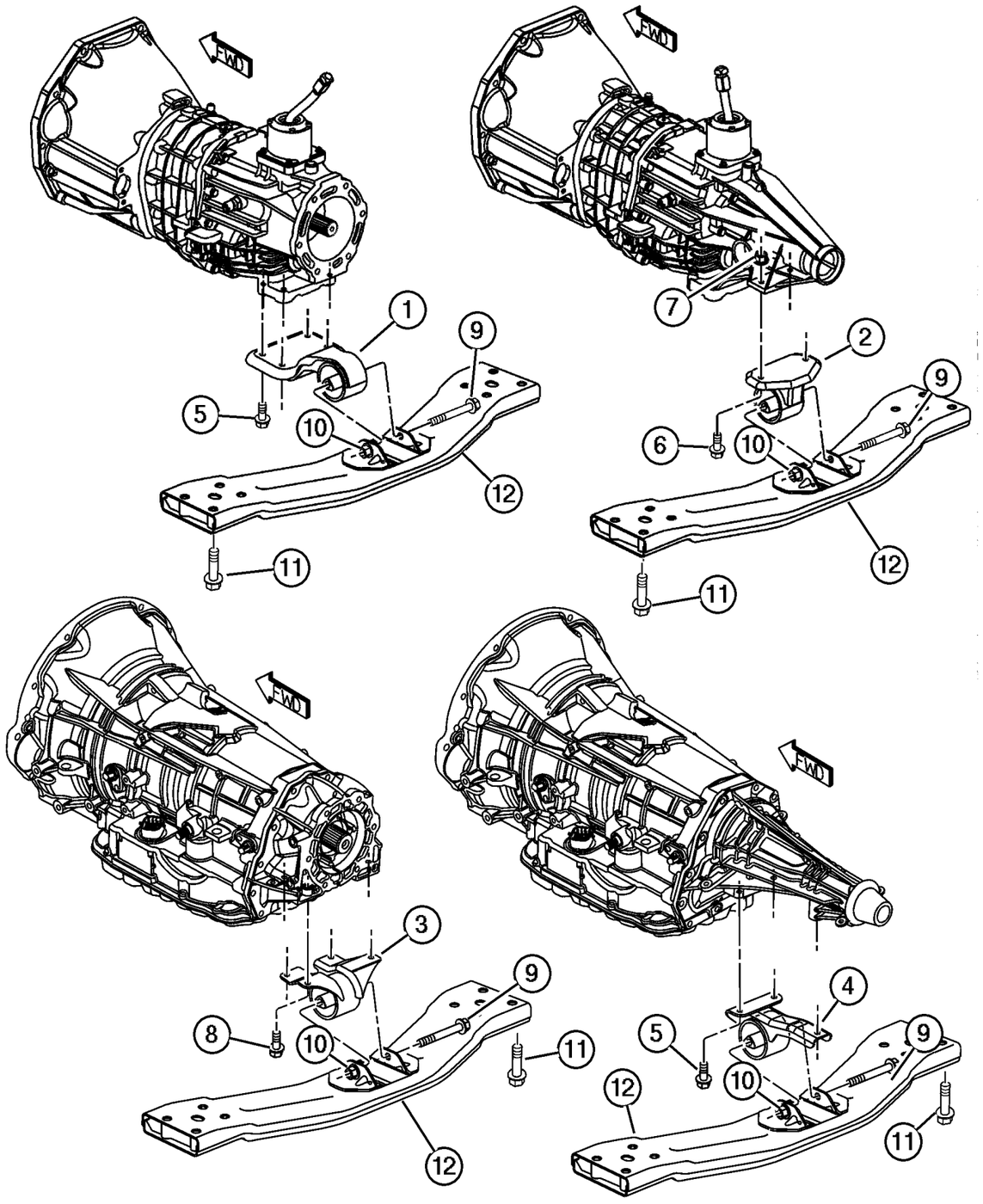

ITEM	PART NUMBER	QTY	LINE	SERIES	BODY	ENGINE	TRANS	TRIM	DESCRIPTION
Note; Sales Codes									
[DBB]= All Manual Transmissions									
[DDK]=5 Speed Heavy Duty Manual Transmission									
[DG4]= Multi Speed Automatic Transmission 45RFE									
[ED1]= 2.4L Power Tech Double Over Head Inline 4 Cylinder									
[EKG]= 3.7L Power Tech V-6									
[EK0]= All 3.7L 6 Cylinder Gas Engines									
1	52059 324AA	1	J, U			EK0	DBB		BRACKET AND INSULATOR, Transmission Support
2	52059 309AA	1	T			EK0	DBB		BRACKET AND INSULATOR, Transmission Support
3	52002 334AB	1	J, U			EK0	DG4		BRACKET AND INSULATOR, Transmission Support
4	52059 306AA	1	T			EK0	DG4		BRACKET AND INSULATOR, Transmission Support
5									SCREW AND WASHER, Hex Head Locking, .437-14x1.25
	6033 358	4					DBB		
		3	T			EK0	DG4, DG6		
6	6502 936	2	T			EK0	DBB, DG6		SCREW AND WASHER, Hex Head Pilot Point, M12x1.75x45
7	6502 697	4							NUT, Hex Flange Lock, M12x1.75
8	6503 699	4				ED0			SCREW AND WASHER, Hex Head, M10x1.5x28
9	3420 2606	1							BOLT, Hex Head
10									NUT, Serviced In Transmission Crossmember, (NOT SERVICED) (Not Serviced)
11	6506 000AA	4							SCREW AND WASHER
12	52058 643AG	1				ED0, EKG			CROSSMEMBER, Transmission
-13									BRACKET AND INSULATOR, Transmission Support
	#52128 651AA	1	T			EK0	DG6		Transmission Support Rear
	#52128 654AA	1	J, U			EK0	DG6		Transmission Support Rear

JEEP LIBERTY (KJ)

SERIES	LINE	BODY	ENGINE	TRANSMISSION
P = Limited	J = LHD (4WD)	74 = 4 Dr. (104.3 WB)	ED1, ED0 = 2.4L Power Tech	DDK = 5 Speed HDManual
H = Sport	U = RHD (4WD)		EKG, EK0 = 3.7L Power Tech	DDD = 5 Speed HD Manual
M = Renegade	T = LHD (2WD)		ENJ = 2.5L 4Cyl Turbo Diesel	DG4,DGQ = Multi-Speed Auto
			ENR = 2.8L 4Cyl Turbo Diesel	DG6 = 4 Speed Auto Transm
			EN0 = 4Cyl Turbo Diesel	DG0 = All Automatic Transm
				DBB = All Manual Transm

Group – 2.4L

Engine 2.4L Four Cylinder

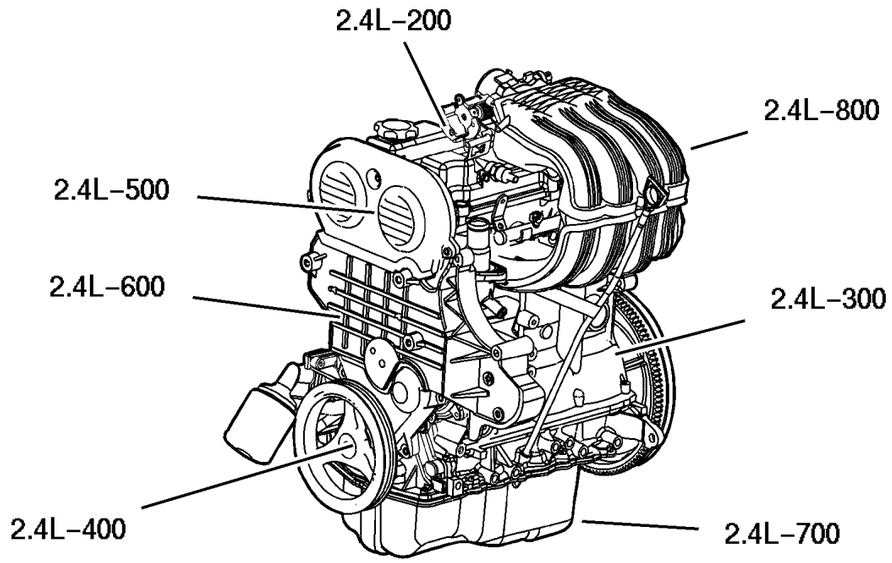

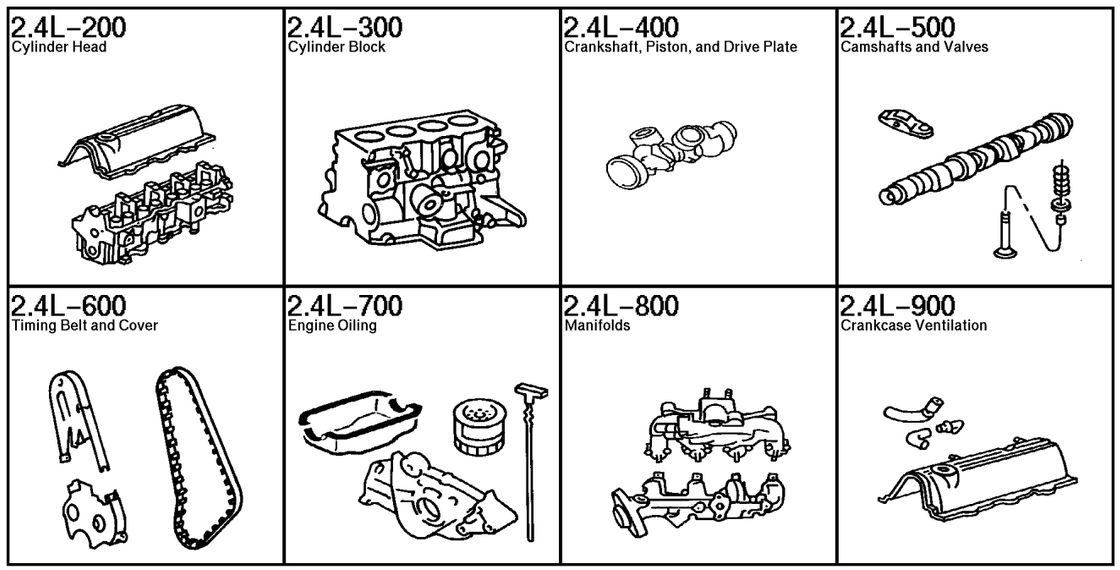

GROUP 2.4L - Engine 2.4L Four Cylinder

Illustration Title	Group-Fig. No.
Cylinder Head	
Cylinder Head, 2.4L [ED1]	Fig. 2.4L-210
Cylinder Block	
Cylinder Block, 2.4L [ED1]	Fig. 2.4L-310
Crankshaft, Piston, and Drive Plate	
Crankshaft, Pistons and Flywheel, 2.4L [ED1]	Fig. 2.4L-410
Camshafts and Valves	
Camshaft and Valves 2.4L [ED1]	Fig. 2.4L-510
Timing Belt and Cover	
Timing Belt and Cover, 2.4L [ED1]	Fig. 2.4L-610
Balance Shafts, 2.4L [ED1]	Fig. 2.4L-620
Engine Oiling	
Engine Oiling, 2.4L [ED1]	Fig. 2.4L-710
Manifolds	
Intake and Exhaust Manifolds, 2.4L [ED1]	Fig. 2.4L-810
Crankcase Ventilation	
Crankcase Ventilation, 2.4L [ED1]	Fig. 2.4L-910

Cylinder Head, 2.4L [ED1]
Figure 2.4L-210

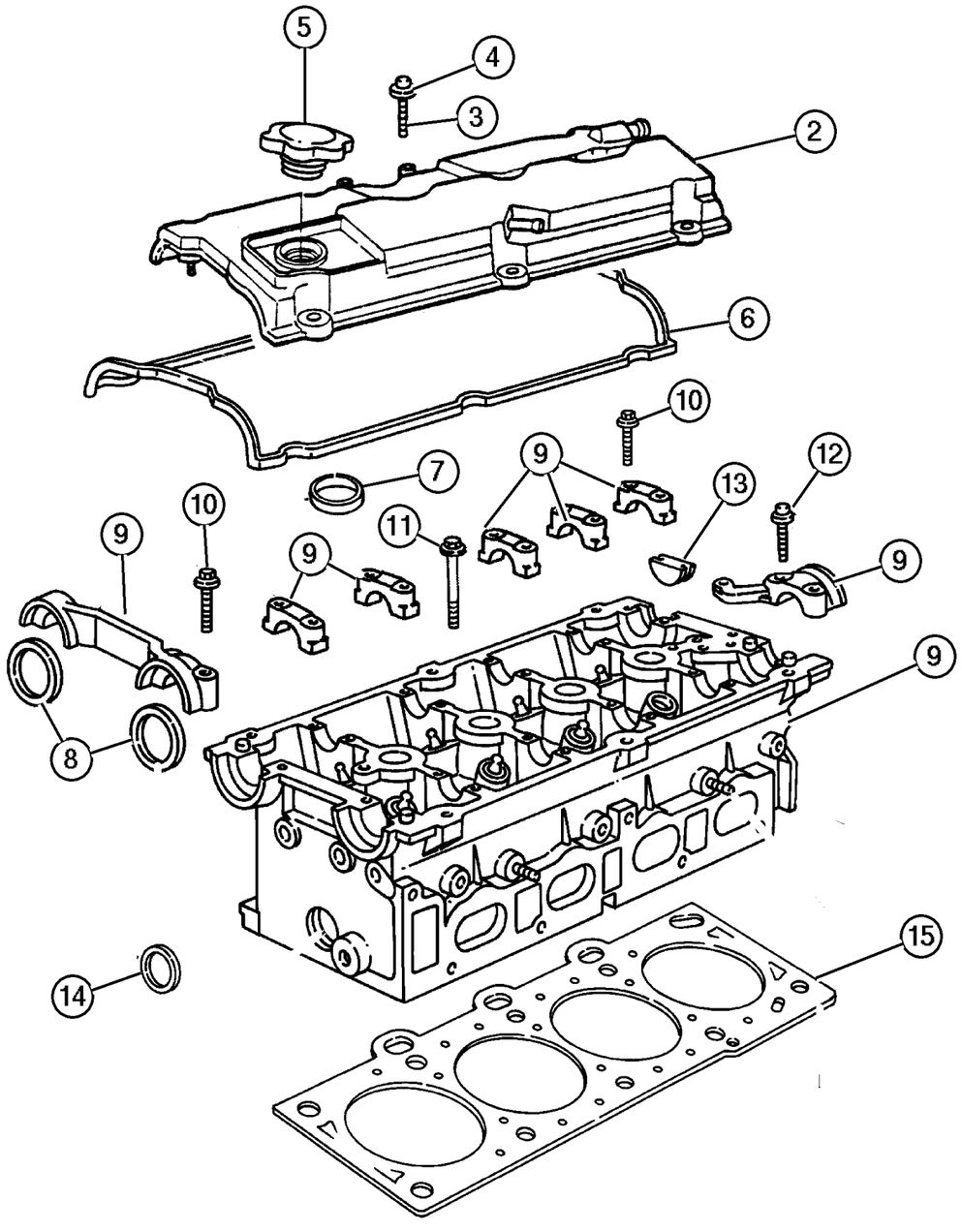

ITEM	PART NUMBER	QTY	LINE	SERIES	BODY	ENGINE	TRANS	TRIM	DESCRIPTION
Note; Sales Codes									
[ED0]= All 2.2L,2.5L,2.4L, 4 Cylinder Gas Engines									
-1	5072 474AC	1				ED0			GASKET PACKAGE, Engine Upper
2	53010 493AC	1				ED0			COVER, Cylinder Head
3									SCREW, (NOT SERVICED) (Not Serviced)
4									ISOLATOR, Cylinder Head Cover, Grommet And Bolt
	4777 997AA	3				ED0			
	4884 292AA	2				ED0			
5	4648 831AA	1				ED0			CAP, Oil Filler
6	4777 478	1				ED0			GASKET, Valve Cover
7	4777 477	4				ED0			GASKET, Spark Plug Well
8	4777 086	2				ED0			SEAL, Camshaft, Front
9	#4667 088AD	1				ED0			HEAD, Cylinder
10	6100 918	18				ED0			BOLT, Hex Flange Head, M6x1.00x35
11	6504 033	10				ED0			BOLT, Cylinder Head
12	6101 527	6				ED0			SCREW, Hex Flange Head, M8x1.25x40
13	4667 731	1				ED0			PLUG, Camshaft
14	4556 020	2				ED0			PLUG, Core, 1.25 Diameter
15	4884 407AA	1				ED0			GASKET, Cylinder Head
-16	6036 346AA	1				ED0			PLUG, Pipe, [.500-14x.630]

JEEP LIBERTY (KJ)

SERIES	LINE	BODY	ENGINE	TRANSMISSION
P = Limited	J = LHD (4WD)	74 = 4 Dr. (104.3 WB)	ED1, ED0 = 2.4L Power Tech	DDK = 5 Speed HDManual
H = Sport	U = RHD (4WD)		EKG, EK0 = 3.7L Power Tech	DDD = 5 Speed HD Manual
M = Renegade	T = LHD (2WD)		ENJ = 2.5L 4Cyl Turbo Diesel	DG4,DGQ = Multi-Speed Auto
			ENR = 2.8L 4Cyl Turbo Diesel	DG6 = 4 Speed Auto Transm
			EN0 = 4Cyl Turbo Diesel	DG0 = All Automatic Transm
				DBB = All Manual Transm

AR = Use as required - = Non illustrated part # = New this model year

June 3, 2003

« RETURN TO GROUP INDEX

Cylinder Block, 2.4L [ED1]
Figure 2.4L-310

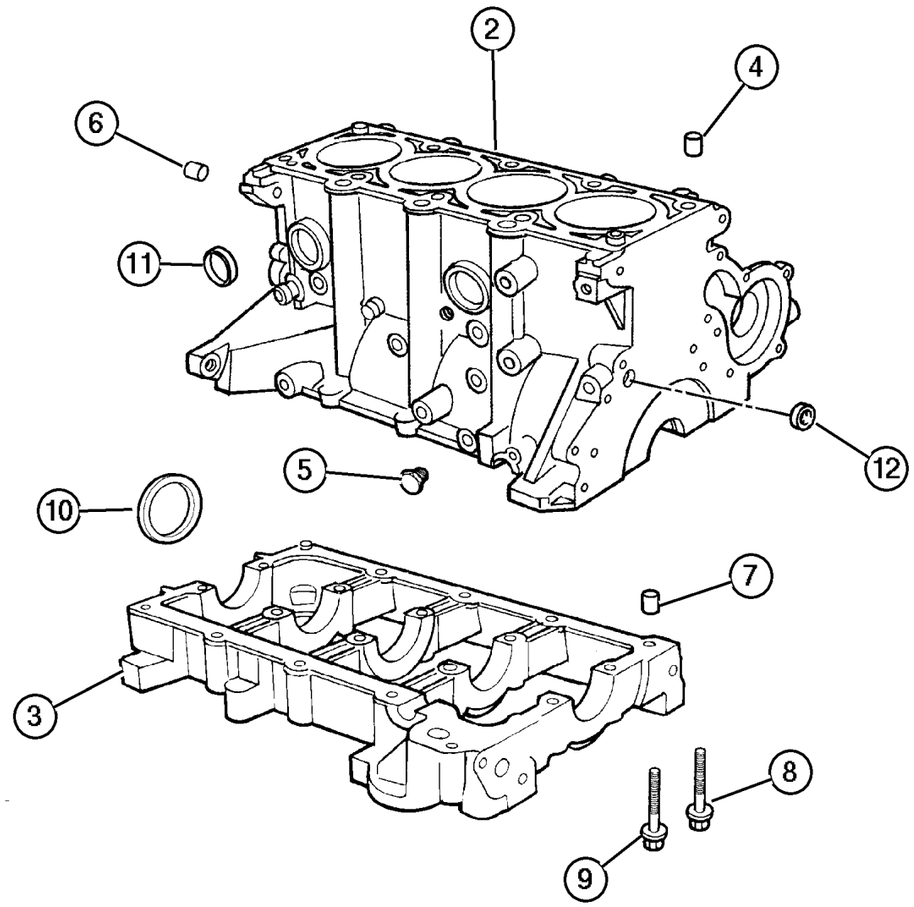

ITEM	PART NUMBER	QTY	LINE	SERIES	BODY	ENGINE	TRANS	TRIM	DESCRIPTION
Note; Sales Codes									
[ED1]= 2.4L Power Tech DOHC, Inline 4									
[ED0]= ALL 2.2L,2.5L,2.4L, 4 Cylinder Gas Engines									
-1	5072 475AA	1				ED0			GASKET PACKAGE, Engine Lower
2	#5019 344AC	1				ED0			BLOCK, Short
3									BEDPLATE, Serviced With Short Block Only, (NOT SERVICED) (Not Serviced)
4	4448 856	2				ED0			DOWEL, Block To Cylinder Head
5	6036 020AA	6				ED0			PLUG, Pipe
6	5240 849	2				ED0			DOWEL, Block To Clutch Housing
7	4694 106	2				ED0			DOWEL, Engine Block To Bedplate
8	6503 387	10				ED0			BOLT, Main Bearing Cap
9	6504 257	9				ED0			BOLT, Hex Head, M8x1.25x70
10	4621 939AB	1				ED0			SEAL, Rear Main Crankshaft
11	6034 804	4				ED0			PLUG, Core, 1.39 Diameter, Cylinder Block
12	4556 018AB	1				ED0			PLUG, Cylinder Block Oil Hole
-13	53013 486AA	2				ED0			BRACKET, Engine Lift
-14	52104 353AC	1				ED0	DBB		BRACKET, Bedplate to Dust Cover
-15	6034 331	1				ED0			PLUG, Hex Socket, 3/8-18NPTx.475, Water Drain
-16	6507 155AA	1				ED0			STUD, Double Ended, Cylinder Block

JEEP LIBERTY (KJ)

SERIES	LINE	BODY	ENGINE	TRANSMISSION
P = Limited	J = LHD (4WD)	74 = 4 Dr. (104.3 WB)	ED1, ED0 = 2.4L Power Tech	DDK = 5 Speed HDManual
H = Sport	U = RHD (4WD)		EKG, EK0 = 3.7L Power Tech	DDD = 5 Speed HD Manual
M = Renegade	T = LHD (2WD)		ENJ = 2.5L 4Cyl Turbo Diesel	DG4,DGQ = Multi-Speed Auto
			ENR = 2.8L 4Cyl Turbo Diesel	DG6 = 4 Speed Auto Transm
			EN0 = 4Cyl Turbo Diesel	DG0 = All Automatic Transm
				DBB = All Manual Transm

Crankshaft, Pistons and Flywheel, 2.4L [ED1]
Figure 2.4L-410

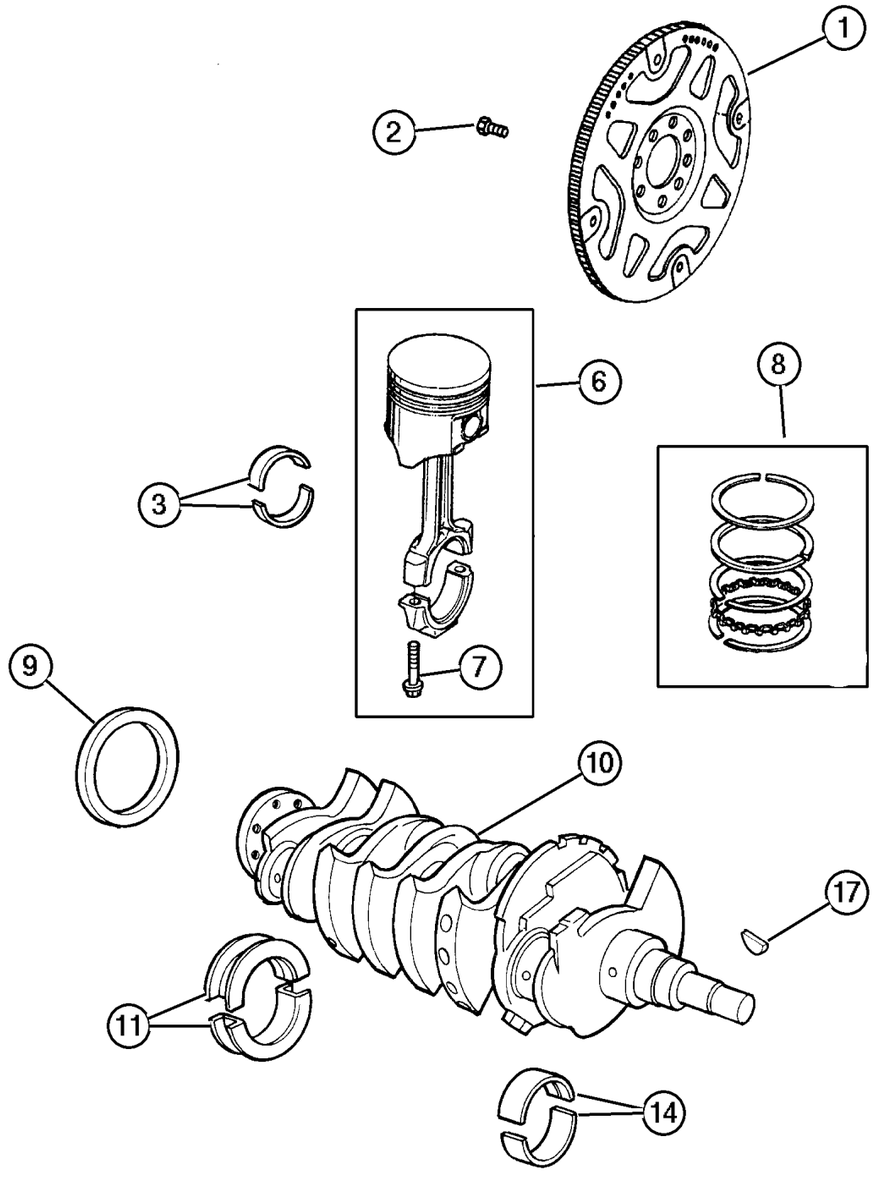

ITEM	PART NUMBER	QTY	LINE	SERIES	BODY	ENGINE	TRANS	TRIM	DESCRIPTION
Note; Sales Codes									
[DBB] = All Manual Transmissions									
[ED0]= All 2.2L,2.5L, 2.4L, 4 Cylinder Gas Engines									
1	52104 578AA	1				ED0	DBB		FLYWHEEL
2	6507 240AA	8				ED0	DBB		SCREW
3	5012 588AA	4				ED0			BEARING KIT, Connecting Rod, Standard
-4	5012 589AA	AR				ED0			BEARING KIT, Connecting Rod, .025 mm U/S
-5	5012 590AA	4				ED0			BEARING KIT, Connecting Rod, .25 mm U/S
6	5066 565AA	4				ED0			PISTON PIN AND ROD
7	6503 116	8				ED0			BOLT, Connecting Rod
8	5073 524AA	1				ED0			PISTON RING SET, COMPLETE ENGINE, STD.
9	4621 939AB	1				ED0			SEAL, Rear Main Crankshaft
10	4621 917	1				ED0			CRANKSHAFT
11	5012 585AB	1				ED0			BEARING KIT, Crankshaft Thrust, Std
-12	5012 586AB	2				ED0			BEARING KIT, Crankshaft Thrust, .025mm Undersize
-13	5012 587AB	2				ED0			BEARING KIT, Crankshaft Thrust, .25mm Undersize
14	5012 582AA	4				ED0			BEARING KIT, Crankshaft, Standard
-15	5012 583AA	4				ED0			BEARING KIT, Crankshaft, .025mm Undersize
-16	5012 584AA	4				ED0			BEARING KIT, Crankshaft, .25mm Undersize
17	6035 473	1				ED0			KEY, Crankshaft Sprocket
-18	52104 337AA	1				ED0	DBB		BEARING, Pilot

JEEP LIBERTY (KJ)

SERIES	LINE	BODY	ENGINE	TRANSMISSION
P = Limited	J = LHD (4WD)	74 = 4 Dr. (104.3 WB)	ED1, ED0 = 2.4L Power Tech	DDK = 5 Speed HDManual
H = Sport	U = RHD (4WD)		EKG, EK0 = 3.7L Power Tech	DDD = 5 Speed HD Manual
M = Renegade	T = LHD (2WD)		ENJ = 2.5L 4Cyl Turbo Diesel	DG4,DGQ = Multi-Speed Auto
			ENR = 2.8L 4Cyl Turbo Diesel	DG6 = 4 Speed Auto Transm
			EN0 = 4Cyl Turbo Diesel	DG0 = All Automatic Transm
				DBB = All Manual Transm

AR = Use as required - = Non illustrated part # = New this model year

June 3, 2003

« RETURN TO GROUP INDEX

Camshaft and Valves 2.4L [ED1]
Figure 2.4L-510

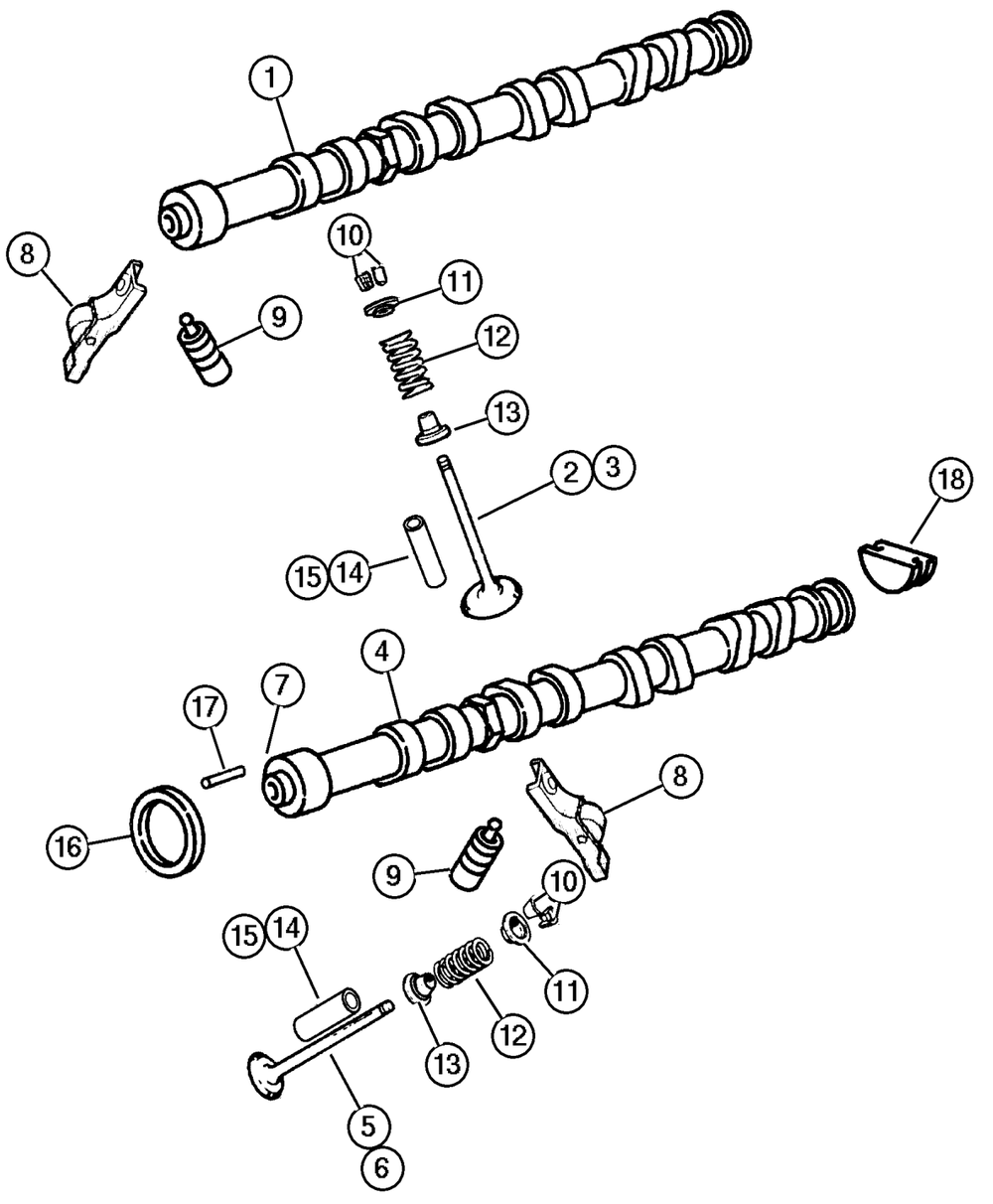

ITEM	PART NUMBER	QTY	LINE	SERIES	BODY	ENGINE	TRANS	TRIM	DESCRIPTION
Note; Sales Codes									
[ED0]= All 2.2L, 2.5L, 2.4L, 4 Cylinder Gas Engines									
1	#4781 681AA	1				ED0			CAMSHAFT, Intake
2	4667 969AB	8				ED0			VALVE, Intake, Standard
3	4667 970AB	8				ED0			VALVE, Intake, .015" O/S
4	4781 679AA	1				ED0			CAMSHAFT, Exhaust
5	4777 898AA	8				ED0			VALVE, Exhaust, Standard
6	4777 899AA	8				ED0			VALVE, Exhaust, .015" O/S
7	53010 549AA	1				ED0			RING, Tone
8	4884 042AA	16				ED0			ROCKER ARM, Valve Roller
9	4777 976AA	16				ED0			ADJUSTER, Valve Lash
10									LOCK, Valve Spring Retainer
	4777 050AC	32				ED0			
	5066 778AA	32				EN0	DBB		
		32				EN0	DG0		
11	4648 682AB	16				ED0			RETAINER, Valve Spring
12	4621 530	16				ED0			SPRING, Valve
13	4648 619	16				ED0			SEAL, Valve Guide
14									GUIDE, Intake/Exhaust Valve, Standard Size, (NOT SERVICED) (Not Serviced)
15	4667 411	16				ED0			GUIDE, Intake/Exhaust Valve, 7mm Oversize
16	4777 086	2				ED0			SEAL, Camshaft
17	6100 997	1				ED0			PIN, Dowel, Exhaust Cam
18									PLUG, Camshaft
	4667 731	1				ED0			Cylinder Head
	53010 521AA	1				ED0			

JEEP LIBERTY (KJ)

SERIES	LINE	BODY	ENGINE	TRANSMISSION
P = Limited	J = LHD (4WD)	74 = 4 Dr. (104.3 WB)	ED1, ED0 = 2.4L Power Tech	DDK = 5 Speed HDManual
H = Sport	U = RHD (4WD)		EKG, EK0 = 3.7L Power Tech	DDD = 5 Speed HD Manual
M = Renegade	T = LHD (2WD)		ENJ = 2.5L 4Cyl Turbo Diesel	DG4,DGQ = Multi-Speed Auto
			ENR = 2.8L 4Cyl Turbo Diesel	DG6 = 4 Speed Auto Transm
			EN0 = 4Cyl Turbo Diesel	DG0 = All Automatic Transm
				DBB = All Manual Transm

AR = Use as required - = Non illustrated part # = New this model year **June 3, 2003**

« RETURN TO GROUP INDEX

Timing Belt and Cover, 2.4L [ED1]
Figure 2.4L-610

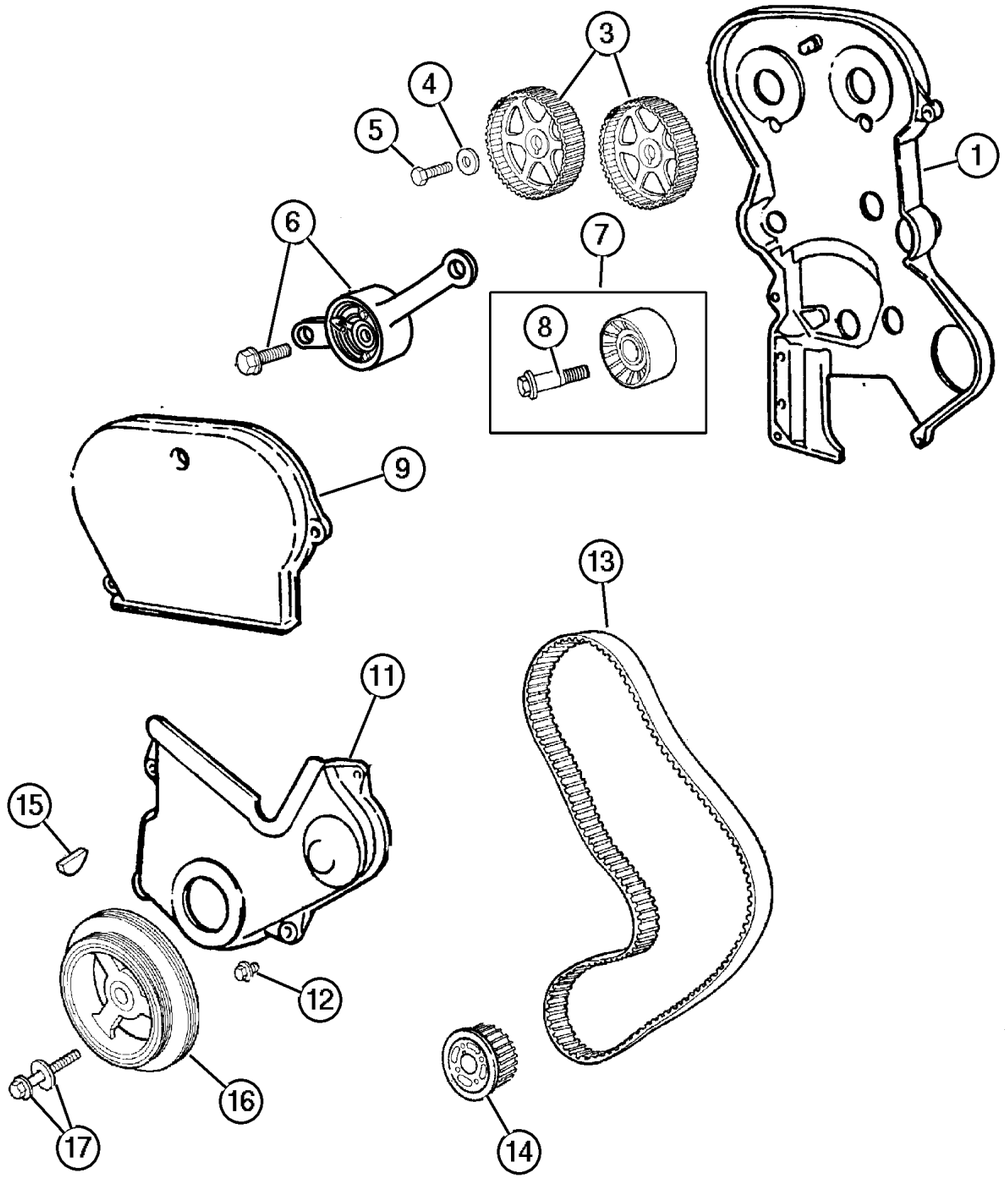

ITEM	PART NUMBER	QTY	LINE	SERIES	BODY	ENGINE	TRANS	TRIM	DESCRIPTION
Note; Sales Codes									
[ED0]= All 2.2L, 2.5L, 2.4L, 4 Cylinder Gas Engines									
1	#53010 482AC	1				ED0			COVER, Timing Belt, Inner
-2	6502 926	3				ED0			BOLT, Hex Flange Head, M6x1.0x20, Inner Cover Attach
3	4667 609	2				ED0			GEAR, Camshaft
4	6503 438	2				ED0			WASHER, Flared, 13x35.00x4.70
5	6501 405	2				ED0			BOLT, Hex Head, M12x1.50x52
6	#4781 570AB	1				ED0			TENSIONER, Belt
7	4781 569AA	1				ED0			PULLEY, Idler
8	6507 550AA	1				ED0			BOLT, Idler Pulley attaching
9	#53010 483AB	1				ED0			COVER, Timing Belt, Outer
-10	6101 221	3				ED0			SCREW, Upper Cover Attach
11	#53010 484AB	1				ED0			COVER, Timing Belt, Outer, Lower
12	6101 331	1				ED0			BOLT, M6x1.00x20
13	4621 844	1				ED0			BELT, Timing
14	4648 939AA	1				ED0			GEAR, Crankshaft
15	6035 473	1				ED0			KEY, Crankshaft Sprocket
16	53010 477AA	1				ED0			DAMPER, Crankshaft
17	6503 553	1				ED0			BOLT, Hex Flange Head, M12x1.75x87.50

JEEP LIBERTY (KJ)

SERIES	LINE	BODY	ENGINE	TRANSMISSION
P = Limited	J = LHD (4WD)	74 = 4 Dr. (104.3 WB)	ED1, ED0 = 2.4L Power Tech	DDK = 5 Speed HDManual
H = Sport	U = RHD (4WD)		EKG, EK0 = 3.7L Power Tech	DDD = 5 Speed HD Manual
M = Renegade	T = LHD (2WD)		ENJ = 2.5L 4Cyl Turbo Diesel	DG4,DGQ = Multi-Speed Auto
			ENR = 2.8L 4Cyl Turbo Diesel	DG6 = 4 Speed Auto Transm
			EN0 = 4Cyl Turbo Diesel	DG0 = All Automatic Transm
				DBB = All Manual Transm

AR = Use as required - = Non illustrated part # = New this model year

June 3, 2003

« RETURN TO GROUP INDEX

Balance Shafts, 2.4L [ED1]
Figure 2.4L-620

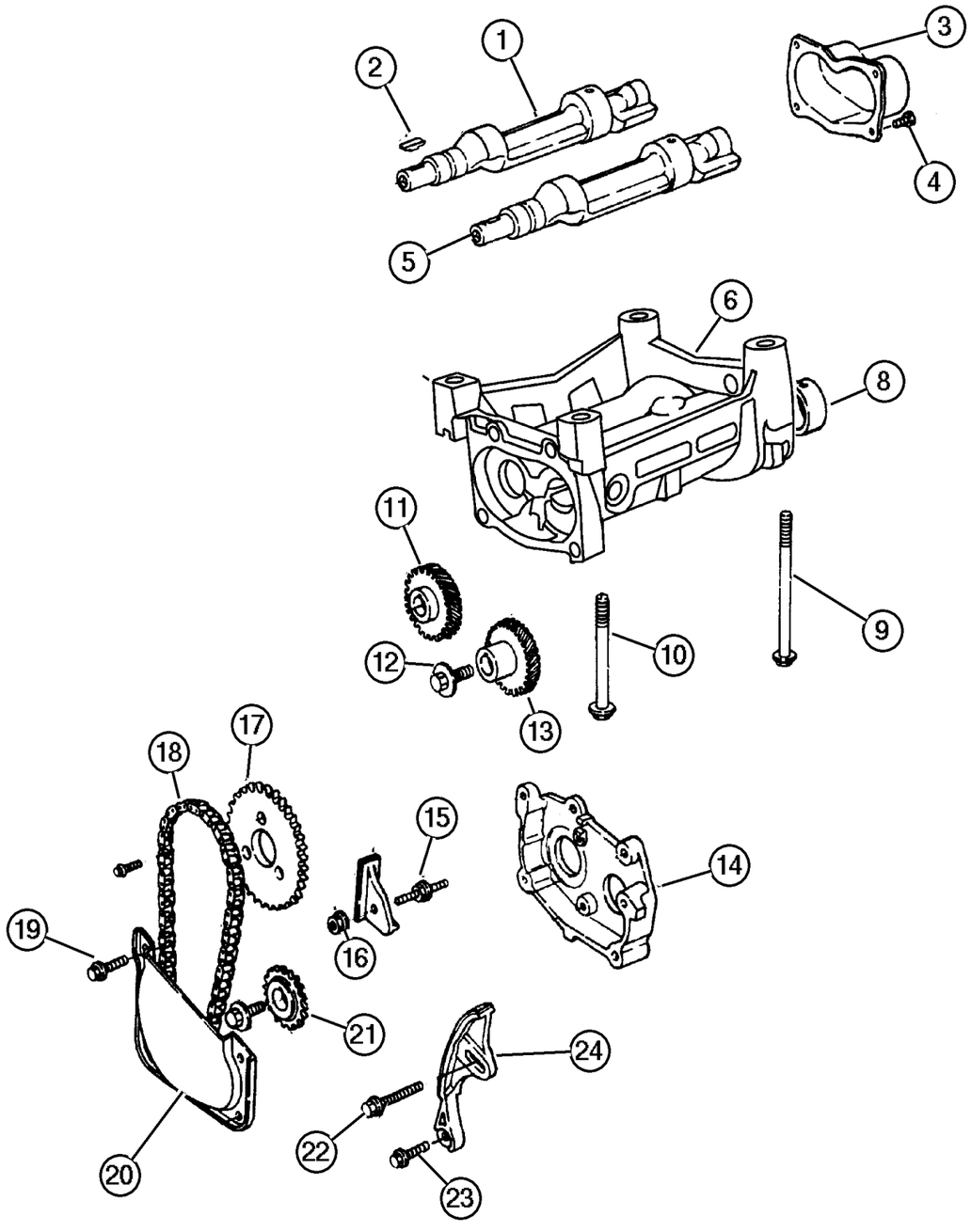

ITEM	PART NUMBER	QTY	LINE	SERIES	BODY	ENGINE	TRANS	TRIM	DESCRIPTION
Note; Sales Codes									
[ED0]= All 2.2L, 2.5L, 2.4L, 4 Cylinder Gas Engines									
1	4621 517	1				ED0			SHAFT, Balance, Driver
2	6500 150	2				ED0			KEY, Crankshaft Sprocket
3	4323 043	1				ED0			COVER, Balance Shaft Carrier
4	6501 714	4				ED0			SCREW AND WASHER, Hex Head, M6x1x18
5	4621 518	1				ED0			SHAFT, Balance, Driven
6	4621 519AC	1				ED0			CARRIER, Balance Shaft
-7	5203 466	2				ED0			PIN, Dowel, Carrier Attaching
8									BEARING, Balance Shaft, Seviced With Carrier, Item 6, (NOT SERVICED) (Not Serviced)
9	6504 878AA	2				ED0			BOLT
10	6503 389	2				ED0			BOLT, Hex Flange Head, M10x1.50x108
11	4621 952	1				ED0			GEAR, Balance Shaft Driver
12	6501 404	2				ED0			SCREW AND WASHER, Hex Head, M8x1.25x25
13	4621 951	1				ED0			GEAR, Balance Shaft Driven
14	4323 039	1				ED0			COVER, Balance Shaft Gear
15	6505 188AA	1				ED0			STUD, M6x1.00x40.00
16	6100 047	1				ED0			NUT AND WASHER, Hex Nut-Coned Washer, M6 x 1.00
17	4621 541	1				ED0			GEAR, Crankshaft
18	4621 996	1				ED0			CHAIN, Balance Shaft
19	6100 271	2				ED0			BOLT AND CONED WASHER, Hex Head, M6x45x12.5
20	4323 041AD	1				ED0			TROUGH, Carrier Cover
21	4483 485	1				ED0			GEAR, Balance Shaft
22	6100 279	1				ED0			SCREW AND WASHER, Hex Head, M6x1x35
23	6501 714	1				ED0			SCREW AND WASHER, Hex Head, M6x1x18
24	#4884 473AA	1				ED0			TENSIONER, Chain

JEEP LIBERTY (KJ)

SERIES	LINE	BODY	ENGINE	TRANSMISSION
P = Limited	J = LHD (4WD)	74 = 4 Dr. (104.3 WB)	ED1, ED0 = 2.4L Power Tech	DDK = 5 Speed HDManual
H = Sport	U = RHD (4WD)		EKG, EK0 = 3.7L Power Tech	DDD = 5 Speed HD Manual
M = Renegade	T = LHD (2WD)		ENJ = 2.5L 4Cyl Turbo Diesel	DG4,DGQ = Multi-Speed Auto
			ENR = 2.8L 4Cyl Turbo Diesel	DG6 = 4 Speed Auto Transm
			EN0 = 4Cyl Turbo Diesel	DG0 = All Automatic Transm
				DBB = All Manual Transm

AR = Use as required - = Non illustrated part # = New this model year **June 3, 2003**

« RETURN TO GROUP INDEX

Engine Oiling, 2.4L [ED1]
Figure 2.4L-710

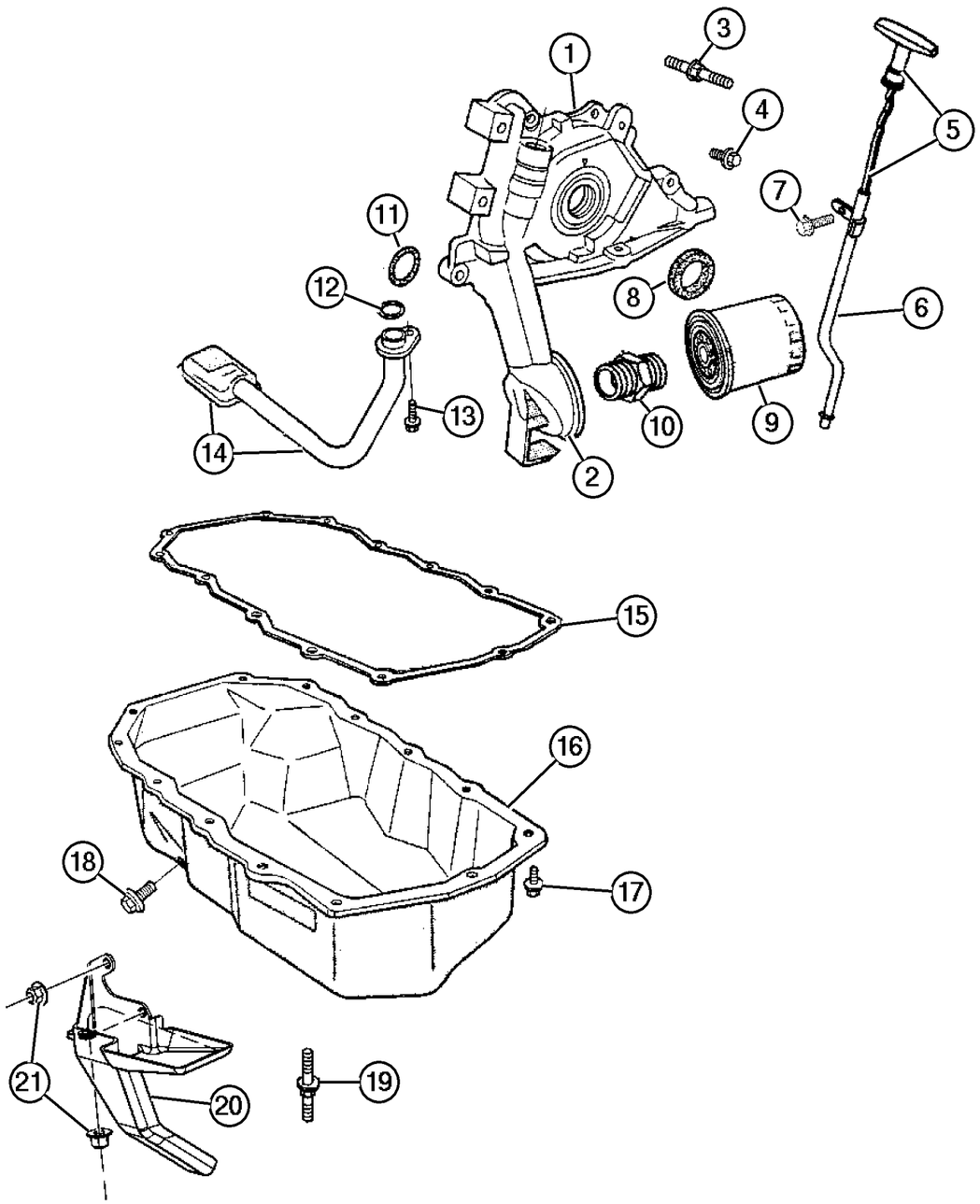

ITEM	PART NUMBER	QTY	LINE	SERIES	BODY	ENGINE	TRANS	TRIM	DESCRIPTION
Note; Sales Codes									
[ED0]= All 2.2L, 2.5L, 2.4L, 4 Cylinder Gas Engines									
1	53010 487AA	1				ED0			PUMP, Engine Oil
2	53010 534AA	1				ED0			ADAPTER, Oil Filter
3	6507 335AA	3				ED0			STUD, Double Ended, Oil Pump to Adapter
4	6100 296	3				ED0			BOLT, Hex Head
5	53010 494AC	1				ED0			INDICATOR, Engine Oil Level
6	53010 476AB	1				ED0			TUBE, Oil Filler
7	6505 788AA	1				ED0			STUD
8	4667 198	1				ED0			SEAL, Front Main Crankshaft
9	4105 409	1				ED0			FILTER, Engine Oil
10	4694 119	1				ED0			CONNECTOR, Oil Filter Adapter
11	4483 444AB	3				ED0			O RING, Front Cover Oil Inlet
12	6032 920	1				ED0			SEAL, Oil Pick Up Tube
13	6500 070	1				ED0			SCREW AND WASHER, Hex Head, M8x1.25x25
14	53010 488AA	1				ED0			TUBE, Oil Pickup
15	4621 579	1				ED0			GASKET, Oil Pan
16	53010 491AA	1				ED0			PAN, Engine Oil
17	6503 969	11				ED0			BOLT, Hex Flange Head, M6x1.00x17
18	6035 417	1				ED0			PLUG, Oil Drain
19	6502 647	2				ED0			STUD, M6x1.00x44, Oil Pan mounting
20	53013 550AA	1	J, T			ED0			GUARD, Splash
21	6505 316AA	3	J, T			ED0			NUT

JEEP LIBERTY (KJ)

SERIES	LINE	BODY	ENGINE	TRANSMISSION
P = Limited	J = LHD (4WD)	74 = 4 Dr. (104.3 WB)	ED1, ED0 = 2.4L Power Tech	DDK = 5 Speed HDManual
H = Sport	U = RHD (4WD)		EKG, EK0 = 3.7L Power Tech	DDD = 5 Speed HD Manual
M = Renegade	T = LHD (2WD)		ENJ = 2.5L 4Cyl Turbo Diesel	DG4,DGQ = Multi-Speed Auto
			ENR = 2.8L 4Cyl Turbo Diesel	DG6 = 4 Speed Auto Transm
			EN0 = 4Cyl Turbo Diesel	DG0 = All Automatic Transm
				DBB = All Manual Transm

Intake and Exhaust Manifolds, 2.4L [ED1]
Figure 2.4L-810

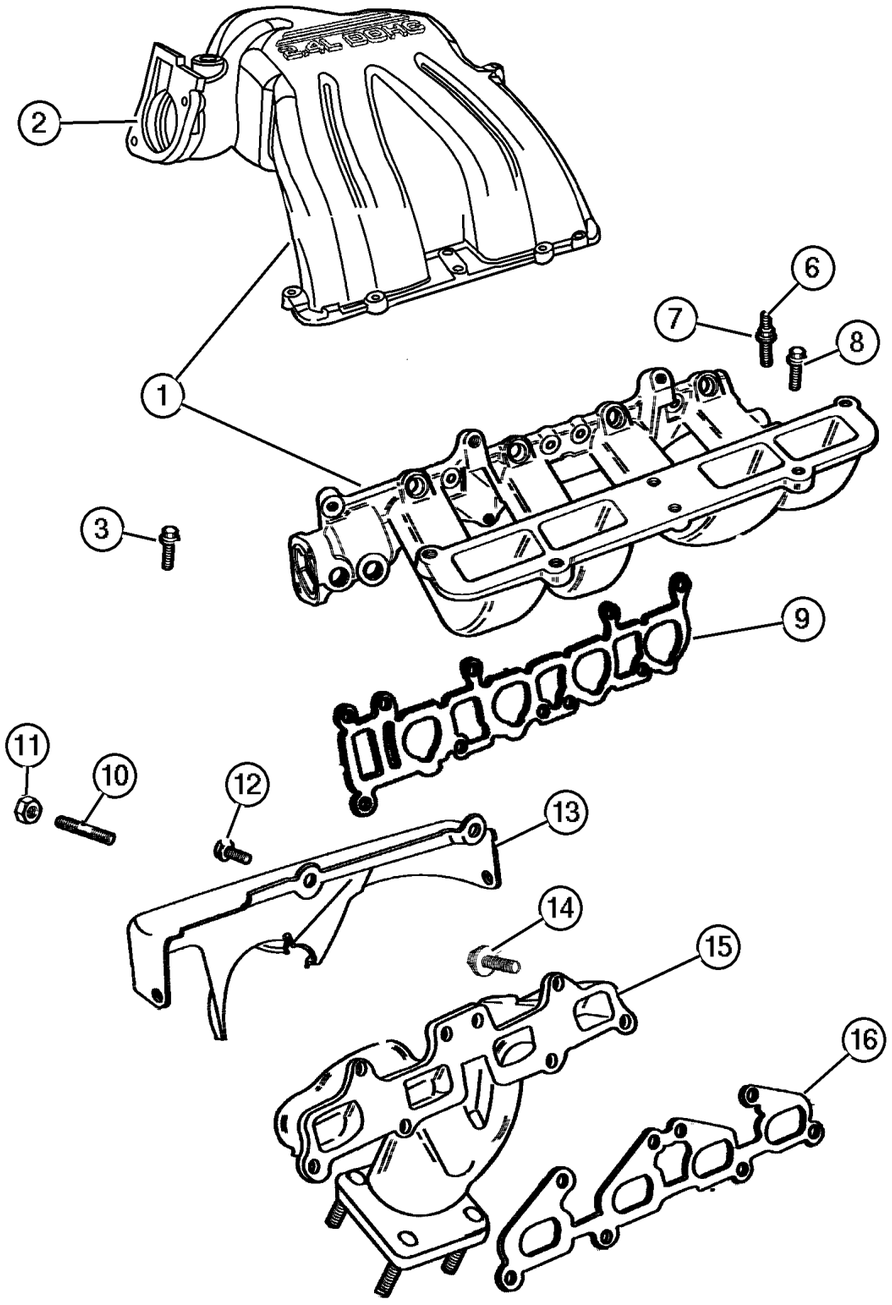

ITEM	PART NUMBER	QTY	LINE	SERIES	BODY	ENGINE	TRANS	TRIM	DESCRIPTION
Note; Sales Codes									
[ED0]= All 2.2L, 2.5L, 2.4L, 4 Cylinder Gas Engines									
1	#53013 249AD	1				ED0			MANIFOLD, Intake
2	53013 533AA	1				ED0			GASKET, Throttle Body To Intake
3	6101 451	3				ED0			SCREW AND WASHER, Hex Head, M6x1x25
-4	6102 192AA	1				ED0			SCREW, Intake Manifold
-5	6101 506	2				ED0			BOLT AND CONED WASHER, M8x1.25x18
6	6506 770AA	5				ED0			SCREW
7									NUT, Lock, (NOT REQUIRED)
8	6506 770AA	5				ED0			SCREW
9	53013 534AA	4				ED0			GASKET, Intake Manifold
10	6504 170	2				ED0			STUD, M8x1.25x44.80
11	6500 363	2				ED0			NUT, Hex Flange Lock, M8x1.25
12	6506 663AA	3				ED0			SCREW, Hex Flange Head, M8x1.25x11, Heat Shield Mounting
13	53013 264AA	1				ED0			SHIELD, Exhaust Manifold
14	6503 131	8				ED0			BOLT, Hex Flange Head, M8x1.25x30
15	53013 263AB	1				ED0			MANIFOLD, Exhaust
16	4781 255AA	1				ED0			GASKET, Exhaust Manifold

JEEP LIBERTY (KJ)

SERIES	LINE	BODY	ENGINE	TRANSMISSION
P = Limited	J = LHD (4WD)	74 = 4 Dr. (104.3 WB)	ED1, ED0 = 2.4L Power Tech	DDK = 5 Speed HDManual
H = Sport	U = RHD (4WD)		EKG, EK0 = 3.7L Power Tech	DDD = 5 Speed HD Manual
M = Renegade	T = LHD (2WD)		ENJ = 2.5L 4Cyl Turbo Diesel	DG4,DGQ = Multi-Speed Auto
			ENR = 2.8L 4Cyl Turbo Diesel	DG6 = 4 Speed Auto Transm
			EN0 = 4Cyl Turbo Diesel	DG0 = All Automatic Transm
				DBB = All Manual Transm

AR = Use as required - = Non illustrated part # = New this model year **June 3, 2003**

« RETURN TO GROUP INDEX

Crankcase Ventilation, 2.4L [ED1]
Figure 2.4L-910

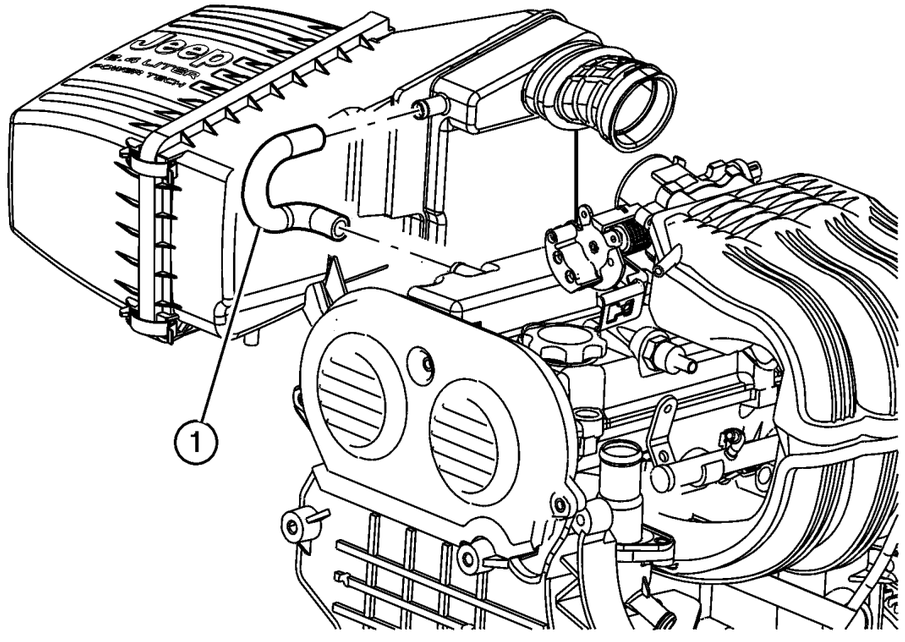

ITEM	PART NUMBER	QTY	LINE	SERIES	BODY	ENGINE	TRANS	TRIM	DESCRIPTION
Note; Sales Codes									
[ED0]= All 2.2L, 2.5L, 2.4L, 4 Cylinder Gas Engines									
1	53013 093AA	1				ED0			TUBE, Crankcase Vent To Air Cleaner
-2									VALVE, PCV
	4884 249AA	1				ED0			
	4777 240AD	1				ED0			Threaded Style
-3	53013 231AA	1				ED0			HARNESS, CCV to Intake Manifold

JEEP LIBERTY (KJ)

SERIES	LINE	BODY	ENGINE	TRANSMISSION
P = Limited	J = LHD (4WD)	74 = 4 Dr. (104.3 WB)	ED1, ED0 = 2.4L Power Tech	DDK = 5 Speed HDManual
H = Sport	U = RHD (4WD)		EKG, EK0 = 3.7L Power Tech	DDD = 5 Speed HD Manual
M = Renegade	T = LHD (2WD)		ENJ = 2.5L 4Cyl Turbo Diesel	DG4,DGQ = Multi-Speed Auto
			ENR = 2.8L 4Cyl Turbo Diesel	DG6 = 4 Speed Auto Transm
			EN0 = 4Cyl Turbo Diesel	DG0 = All Automatic Transm
				DBB = All Manual Transm

Group – 3.7L

Engine 3.7L Six Cylinder

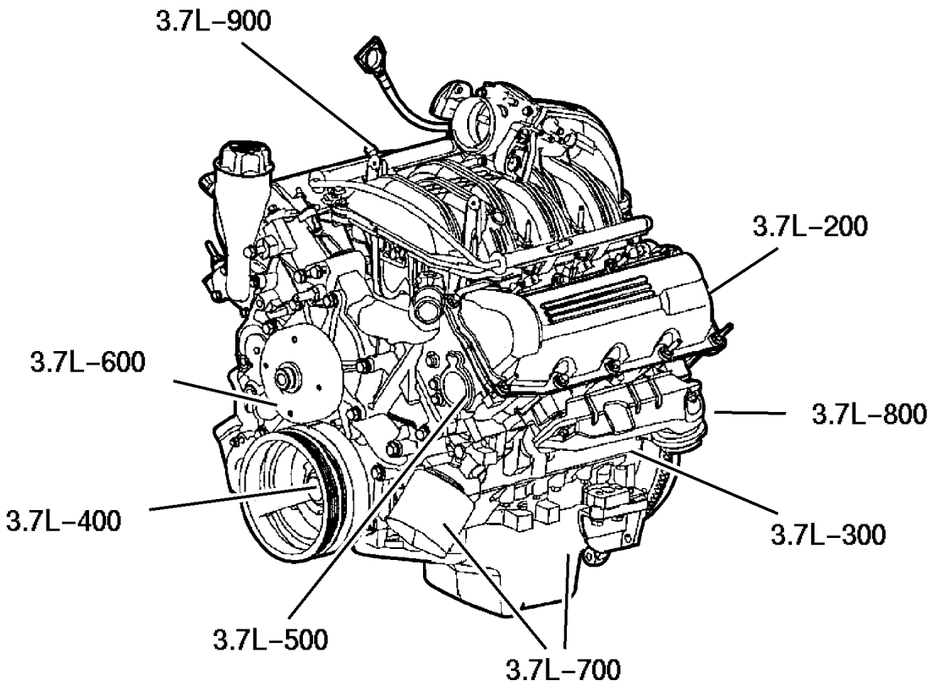

3.7L–200 Cylinder Head	3.7L–300 Cylinder Block	3.7L–400 Crankshaft, Piston and Torque Converter	3.7L–500 Camshafts & Valves
3.7L–600 Timing Belt and Cover	3.7L–700 Engine Oiling	3.7L–800 Manifolds	3.7L–900 Crankcase Ventilation

GROUP 3.7L - Engine 3.7L Six Cylinder

Illustration Title	Group-Fig. No.
Cylinder Head	
Cylinder Head 3.7L [EKG]	Fig. 3.7L-210
Cylinder Block	
Cylinder Block, 3.7L [EKG]	Fig. 3.7L-310
Crankshaft, Piston and Torque Converter	
Pistons and Bearings 3.7L [EKG]	Fig. 3.7L-410
Crankshaft, Torque Converter And Flywheel, 3.7L [EKG]	Fig. 3.7L-420
Camshafts & Valves	
Camshaft And Valve, 3.7L [EKG]	Fig. 3.7L-510
Timing Belt and Cover	
Timing Cover and Related Parts, 3.7L [EKG]	Fig. 3.7L-610
Timing Chain and Guides, 3.7L [EKG]	Fig. 3.7L-620
Engine Oiling	
Engine Oiling, 3.7L [EKG]	Fig. 3.7L-710
Manifolds	
Manifolds, Intake and Exhaust, 3.7L [EKG]	Fig. 3.7L-810
Crankcase Ventilation	
Crankcase Ventilation, 3.7L [EKG]	Fig. 3.7L-910

Cylinder Head 3.7L [EKG]
Figure 3.7L-210

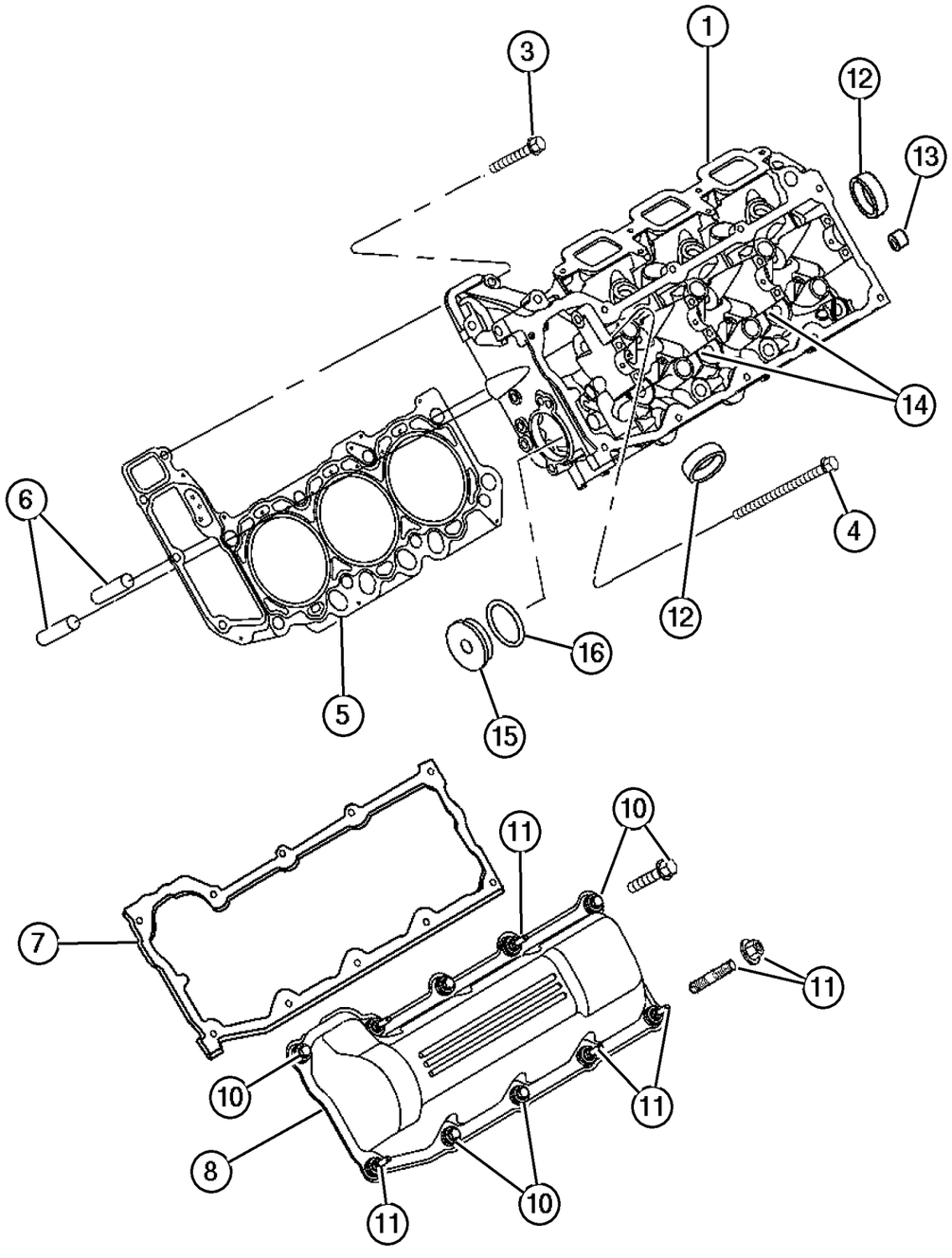

ITEM	PART NUMBER	QTY	LINE	SERIES	BODY	ENGINE	TRANS	TRIM	DESCRIPTION
NOTES:									
Sales Codes									
[EK0] = All 3.7L 6 Cylinder Gas Engines									
1	5302 0987	1				EK0			HEAD, Cylinder, Left
-2	5302 0988	1				EK0			HEAD, Cylinder, Right
3	6506 785AA	8				EK0			SCREW AND WASHER, Hex Head
4	6505 528AA	16				EK0			SCREW AND WASHER, Hex Head
5	5302 0989	2				EK0			GASKET, Cylinder Head, Left and Right
6	5240 849	4				EK0			DOWEL, Block To Clutch Housing
7									GASKET, Valve Cover
	5302 0991	1				EK0			Left
	5302 0992	1				EK0			Right
8	5302 0995	1				EK0			COVER, Cylinder Head, Left
-9	5302 0996	1				EK0			COVER, Cylinder Head, Right
10									SCREW
	53021 309AA	5				EK0			Left
		4				EK0			Right
11									STUD, Serviced With Valve Cover, (NOT SERVICED) (Not Serviced)
12	4556 020	2				EK0			PLUG, Core, 1.25 Diameter, Water Jacket Core
13	6036 307AA	1				EK0			PLUG, Oil Gallery .25-18x.413, Rear of Head
14	6036 308AA	2				EK0			PLUG, [.375-18x.475], Water Jacket Vent
15	5302 1031	1				EK0			PLUG, Access Hole
16	5302 1032	1				EK0			O RING

JEEP LIBERTY (KJ)

SERIES	LINE	BODY	ENGINE	TRANSMISSION
P = Limited	J = LHD (4WD)	74 = 4 Dr. (104.3 WB)	ED1, ED0 = 2.4L Power Tech	DDK = 5 Speed HDManual
H = Sport	U = RHD (4WD)		EKG, EK0 = 3.7L Power Tech	DDD = 5 Speed HD Manual
M = Renegade	T = LHD (2WD)		ENJ = 2.5L 4Cyl Turbo Diesel	DG4,DGQ = Multi-Speed Auto
			ENR = 2.8L 4Cyl Turbo Diesel	DG6 = 4 Speed Auto Transm
			EN0 = 4Cyl Turbo Diesel	DG0 = All Automatic Transm
				DBB = All Manual Transm

Cylinder Block, 3.7L [EKG]
Figure 3.7L-310

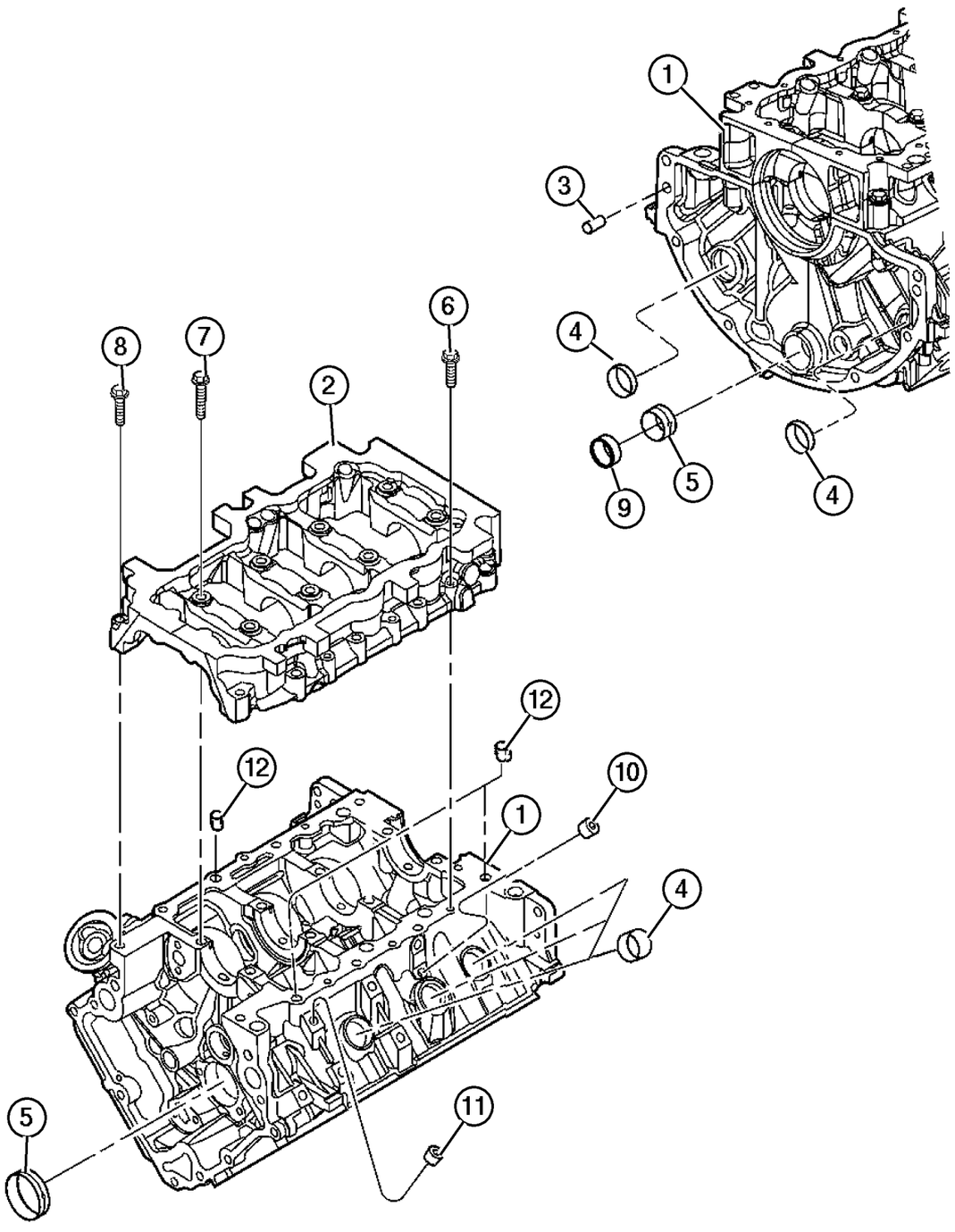

ITEM	PART NUMBER	QTY	LINE	SERIES	BODY	ENGINE	TRANS	TRIM	DESCRIPTION
Note; Sales Codes									
[EKG]= 3.7L Power Tech V-6 Engine									
[EK0]= All 3.7L 6 Cylinder Gas Engines									
1	5069 216AC	1				EK0			BLOCK, Short
2									BEDPLATE, Serviced With Short Block, (NOT SERVICED) (Not Serviced)
3	1122 532	2				EK0			DOWEL, Block To Clutch Housing
4	6034 804	8				EK0			PLUG, Core, 1.39 Diameter
5									BUSHING, Balance Shaft, Serviced In Short Block Only, (NOT SERVICED) (Not Serviced)
6	6102 156AA	5				EK0			SCREW, Hex Flange Head, M8x1. 25x44
7	6505 394AA	6				EK0			SCREW AND WASHER
8	6504 410	7				EK0			SCREW, Hex Head
9	4663 942	1				EK0			PLUG, Core, 1.50 Diameter
10	6036 307AA	3				EK0			PLUG, Cylinder Block Coolant Drain, [.250-18x.413]
11	6036 114AA	4				EK0			PLUG, Pipe, Cylinder Block Oil Hole, [.500-14x.560]
12	53010 533AA	5				EK0			DOWEL

JEEP LIBERTY (KJ)

SERIES	LINE	BODY	ENGINE	TRANSMISSION
P = Limited	J = LHD (4WD)	74 = 4 Dr. (104.3 WB)	ED1, ED0 = 2.4L Power Tech	DDK = 5 Speed HDManual
H = Sport	U = RHD (4WD)		EKG, EK0 = 3.7L Power Tech	DDD = 5 Speed HD Manual
M = Renegade	T = LHD (2WD)		ENJ = 2.5L 4Cyl Turbo Diesel	DG4,DGQ = Multi-Speed Auto
			ENR = 2.8L 4Cyl Turbo Diesel	DG6 = 4 Speed Auto Transm
			EN0 = 4Cyl Turbo Diesel	DG0 = All Automatic Transm
				DBB = All Manual Transm

Pistons and Bearings 3.7L [EKG]
Figure 3.7L-410

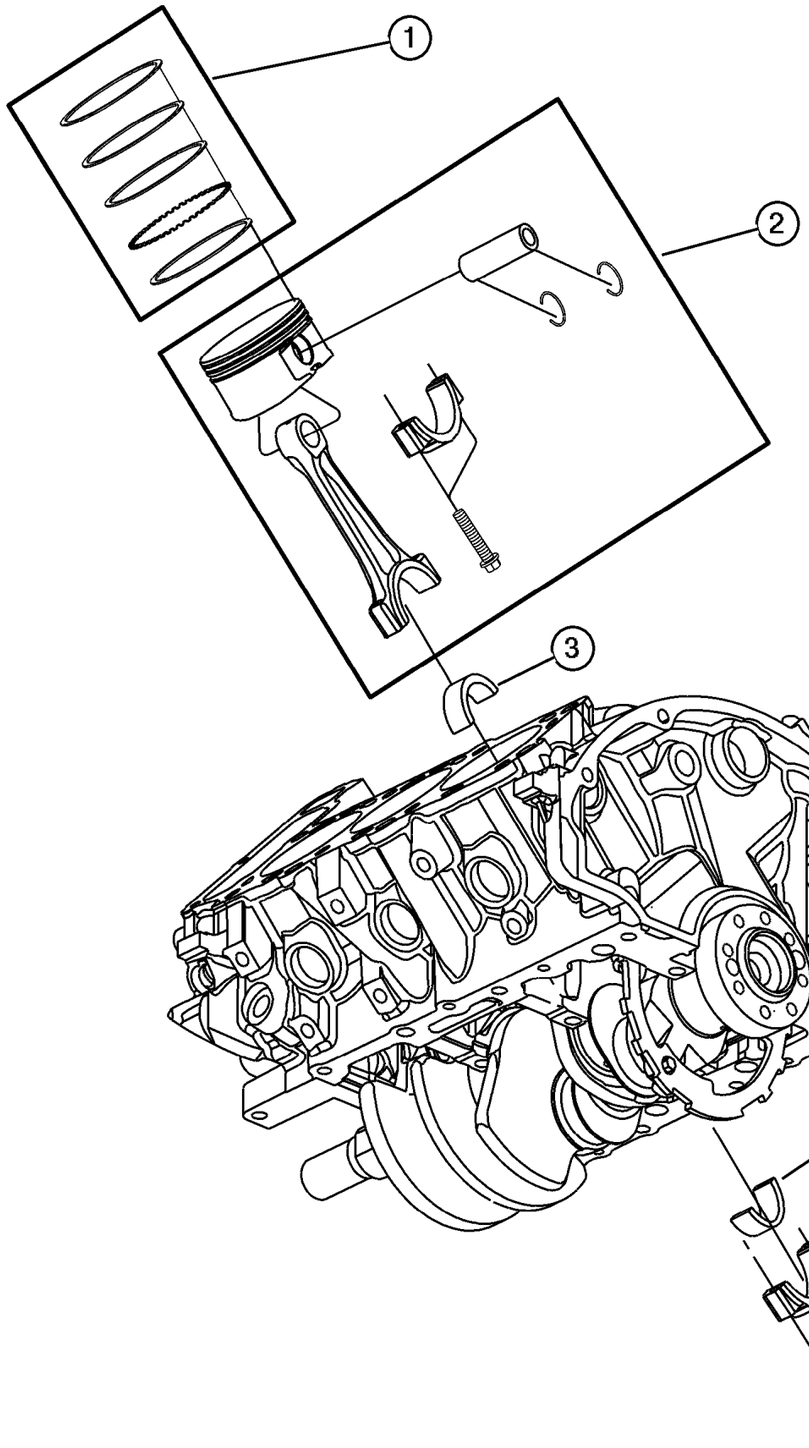

ITEM	PART NUMBER	QTY	LINE	SERIES	BODY	ENGINE	TRANS	TRIM	DESCRIPTION
Note; Sales Codes									
[EK0]= All 3.7L 6 Cylinder Gas Engines									
1	5012 364AC	6				EK0			RING PACKAGE, Piston, Standard Size
2	5019 316AA	6				EK0			PISTON PIN AND ROD, STD
3	5019 447AA	6				EK0			BEARING PACKAGE, Connecting Rod, Standard
4									CAP, Serviced With Item 1, (NOT SERVICED) (Not Serviced)
5	6504 720	12				EK0			BOLT, Connecting Rod, Also Serviced With Item 1
-6	5083 878AA	1				EK0			BEARING PACKAGE, Balance Shaft

JEEP LIBERTY (KJ)

SERIES	LINE	BODY	ENGINE	TRANSMISSION
P = Limited	J = LHD (4WD)	74 = 4 Dr. (104.3 WB)	ED1, ED0 = 2.4L Power Tech	DDK = 5 Speed HDManual
H = Sport	U = RHD (4WD)		EKG, EK0 = 3.7L Power Tech	DDD = 5 Speed HD Manual
M = Renegade	T = LHD (2WD)		ENJ = 2.5L 4Cyl Turbo Diesel	DG4,DGQ = Multi-Speed Auto
			ENR = 2.8L 4Cyl Turbo Diesel	DG6 = 4 Speed Auto Transm
			EN0 = 4Cyl Turbo Diesel	DG0 = All Automatic Transm
				DBB = All Manual Transm

Crankshaft, Torque Converter And Flywheel, 3.7L [EKG]
Figure 3.7L-420

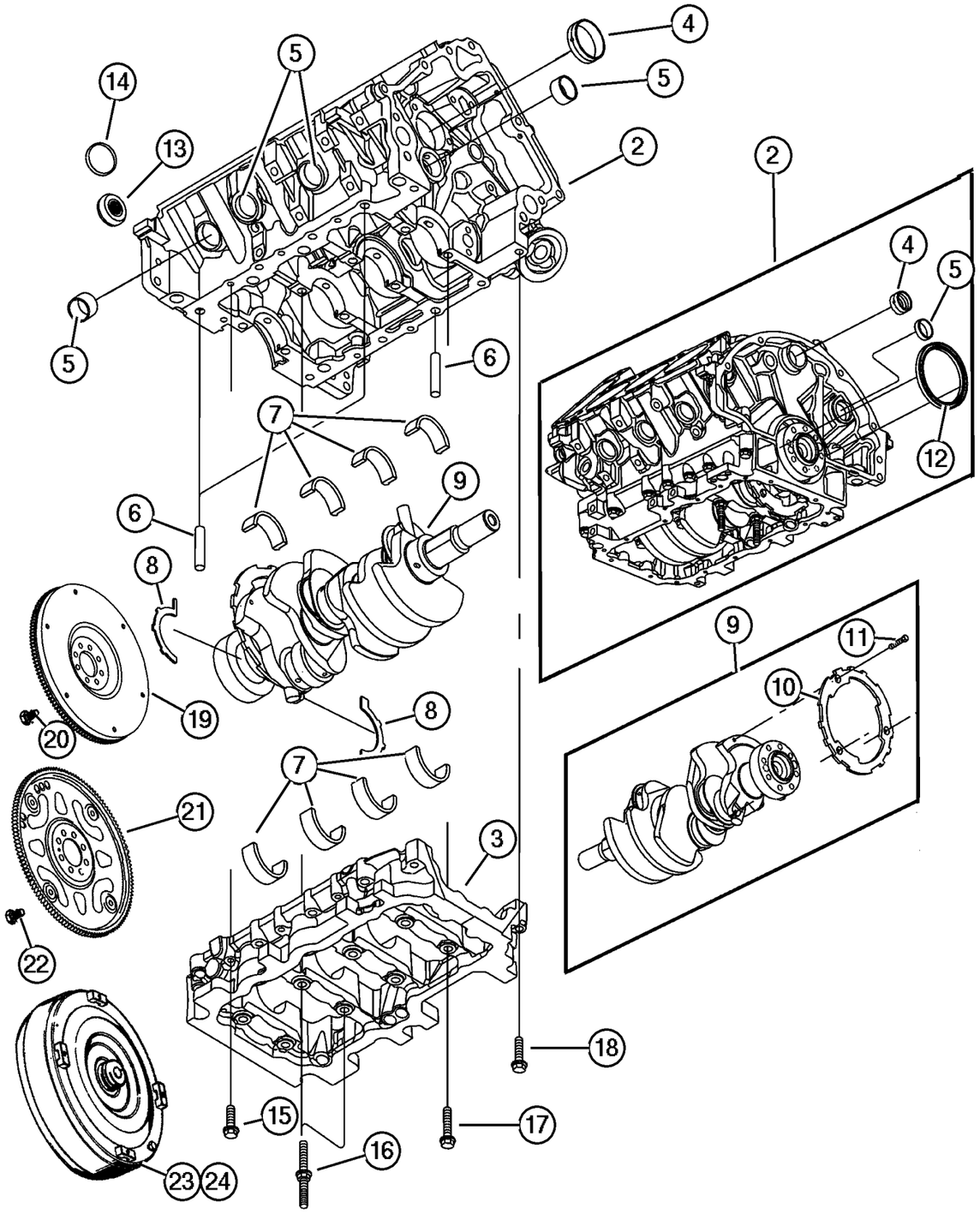

ITEM	PART NUMBER	QTY	LINE	SERIES	BODY	ENGINE	TRANS	TRIM	DESCRIPTION
Note; For Crankshaft Indentification,Stamping Location and Bearing Information									
Please Refer To Service Manual									
Note; Sales Codes									
[DBB] = All Manual Transmissions									
[DG4] = Multi-Speed Automatic Transmission [45RFE]									
[DG6] = 4 Speed Automatic Transmission [42RLE]									
[DG0] = All Automatic Transmissions									
[EK0] = All 3.7L 6 Cylinder Gas Engines									
-1	53020 689AB	1				EK0			DAMPER, Crankshaft
2	5069 216AC	1				EK0			BLOCK, Short
3									BEDPLATE, Serviced In Short Block, (NOT SERVICED) (Not Serviced)
4									BUSHING, Balance Shaft, Serviced In Short Block, (NOT SERVICED) (Not Serviced)
5	6036 119AA	1				EK0			WASHER, Core Plug
6	53010 533AA	5				EK0			DOWEL
7									BEARING PACKAGE, Crankshaft, A Grade
	5066 733AA	AR				EK0			[R] Crankshaft, Mains 1 and 4
	5066 734AA	AR				EK0			[R] Crankshaft, Mains 2 and 3
	5066 735AA	AR				EK0			[S] Crankshaft, Mains 1 and 4
	5066 736AA	AR				EK0			[S] Crankshaft, Mains 2 and 3
	5066 737AA	AR				EK0			[T] Crankshaft, Mains 1 and 4
	5066 738AA	AR				EK0			[T] Crankshaft, Mains 2 and 3
	5066 739AA	AR				EK0			[U] Crankshaft, Mains 1 and 4
	5066 740AA	AR				EK0			[U] Crankshaft, Mains 2 and 3
8	5012 356AB	1				EK0			WASHER PACKAGE, Washer
9	5302 0959	1				EK0			CRANKSHAFT
10									RING, Tone, Serviced With Crankshaft , (NOT SERVICED) (Not Serviced)
11	6504 480	3				EK0			SCREW, M6x1x25
12	5302 0788	1				EK0			SEAL, Crankshaft Bearing Oil
13	53009 180AB	1				EK0	DBB		BEARING, Pilot
14	4663 942	1				EK0			PLUG, Core, 1.50 Diameter
15	6102 156AA	5				EK0			SCREW, Hex Flange Head, M8x1.25x44
16	6506 187AA	2				EK0			STUD
17	6505 394AA	6				EK0			SCREW AND WASHER
18	6504 410	7				EK0			SCREW, Hex Head

JEEP LIBERTY (KJ)

SERIES	LINE	BODY	ENGINE	TRANSMISSION
P = Limited	J = LHD (4WD)	74 = 4 Dr. (104.3 WB)	ED1, ED0 = 2.4L Power Tech	DDK = 5 Speed HDManual
H = Sport	U = RHD (4WD)		EKG, EK0 = 3.7L Power Tech	DDD = 5 Speed HD Manual
M = Renegade	T = LHD (2WD)		ENJ = 2.5L 4Cyl Turbo Diesel	DG4,DGQ = Multi-Speed Auto
			ENR = 2.8L 4Cyl Turbo Diesel	DG6 = 4 Speed Auto Transm
			EN0 = 4Cyl Turbo Diesel	DG0 = All Automatic Transm
				DBB = All Manual Transm

AR = Use as required - = Non illustrated part # = New this model year **June 3, 2003**

« RETURN TO GROUP INDEX »

Crankshaft, Torque Converter And Flywheel, 3.7L [EKG]
Figure 3.7L-420

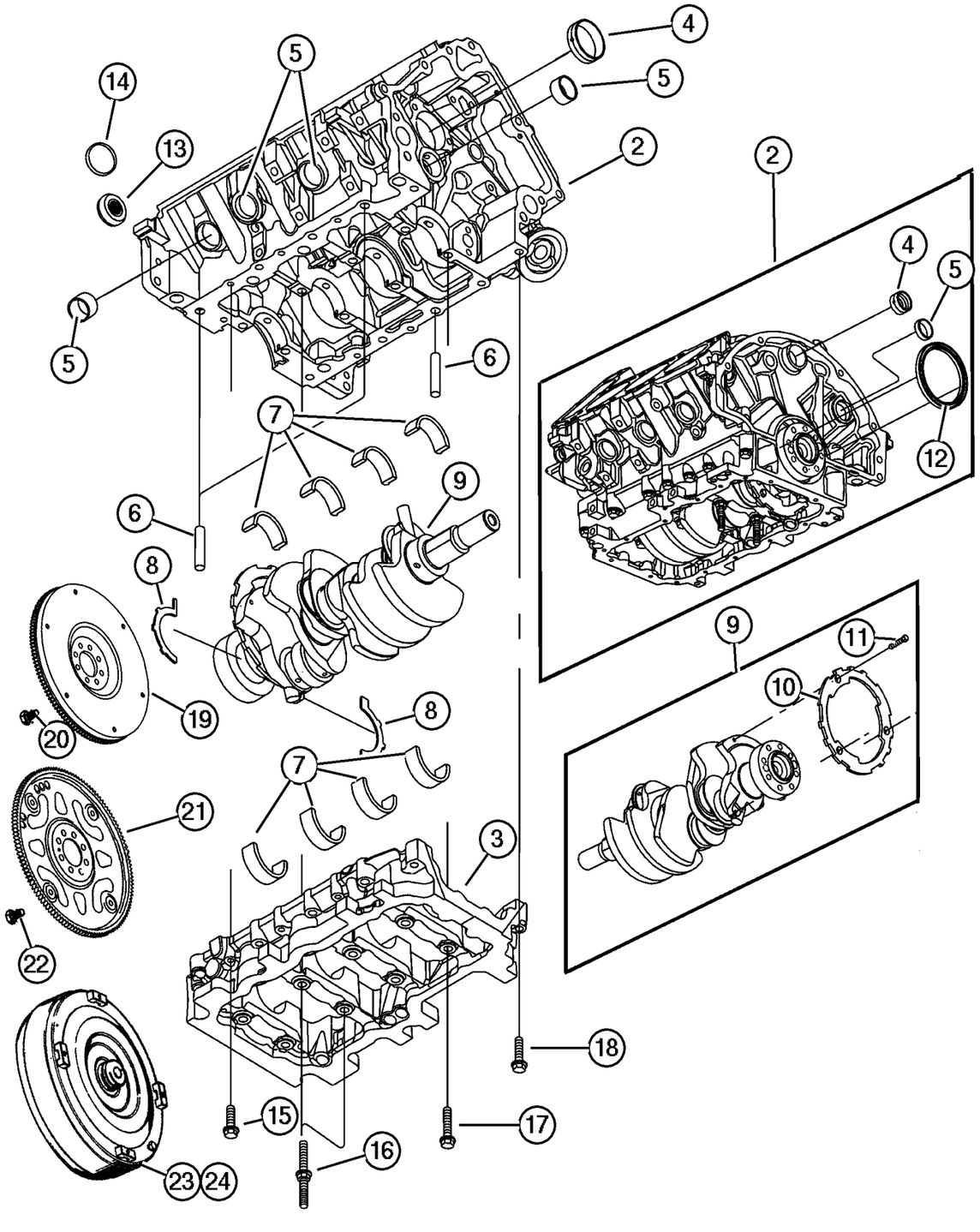

ITEM	PART NUMBER	QTY	LINE	SERIES	BODY	ENGINE	TRANS	TRIM	DESCRIPTION
19	53021 280AA	1				EK0	DBB		FLYWHEEL
20	6504 398	8				EK0	DBB		SCREW
21									PLATE, Torque Converter Drive
	#4736 253AA	1				EK0	DG6		
	5210 4048	1				EK0	DG4		
22	6503 465	8				EK0	DG0		BOLT, Drive Plate and Flywheel
23									CONVERTER PACKAGE, Torque, [42RLE]
	#5093 944AA	1	T				DG6		
		1	J, U				DG6		
24									TORQUE CONVERTER, [45RFE]
	4752 496AA	1	T				DG4		
		1	J, U				DG4		
-25	1949 765	4					DG4		SCREW, Hex Head Header Point, .312-24x.44
-26	6504 415	1				EK0			SCREW AND WASHER
-27	#4736 204AB	1				EK0	DG6		SLEEVE, Crankshaft Pilot

JEEP LIBERTY (KJ)

SERIES	LINE	BODY	ENGINE	TRANSMISSION
P = Limited	J = LHD (4WD)	74 = 4 Dr. (104.3 WB)	ED1, ED0 = 2.4L Power Tech	DDK = 5 Speed HDManual
H = Sport	U = RHD (4WD)		EKG, EK0 = 3.7L Power Tech	DDD = 5 Speed HD Manual
M = Renegade	T = LHD (2WD)		ENJ = 2.5L 4Cyl Turbo Diesel	DG4,DGQ = Multi-Speed Auto
			ENR = 2.8L 4Cyl Turbo Diesel	DG6 = 4 Speed Auto Transm
			EN0 = 4Cyl Turbo Diesel	DG0 = All Automatic Transm
				DBB = All Manual Transm

AR = Use as required - = Non illustrated part # = New this model year

June 3, 2003

« RETURN TO GROUP INDEX

Camshaft And Valve, 3.7L [EKG]
Figure 3.7L-510

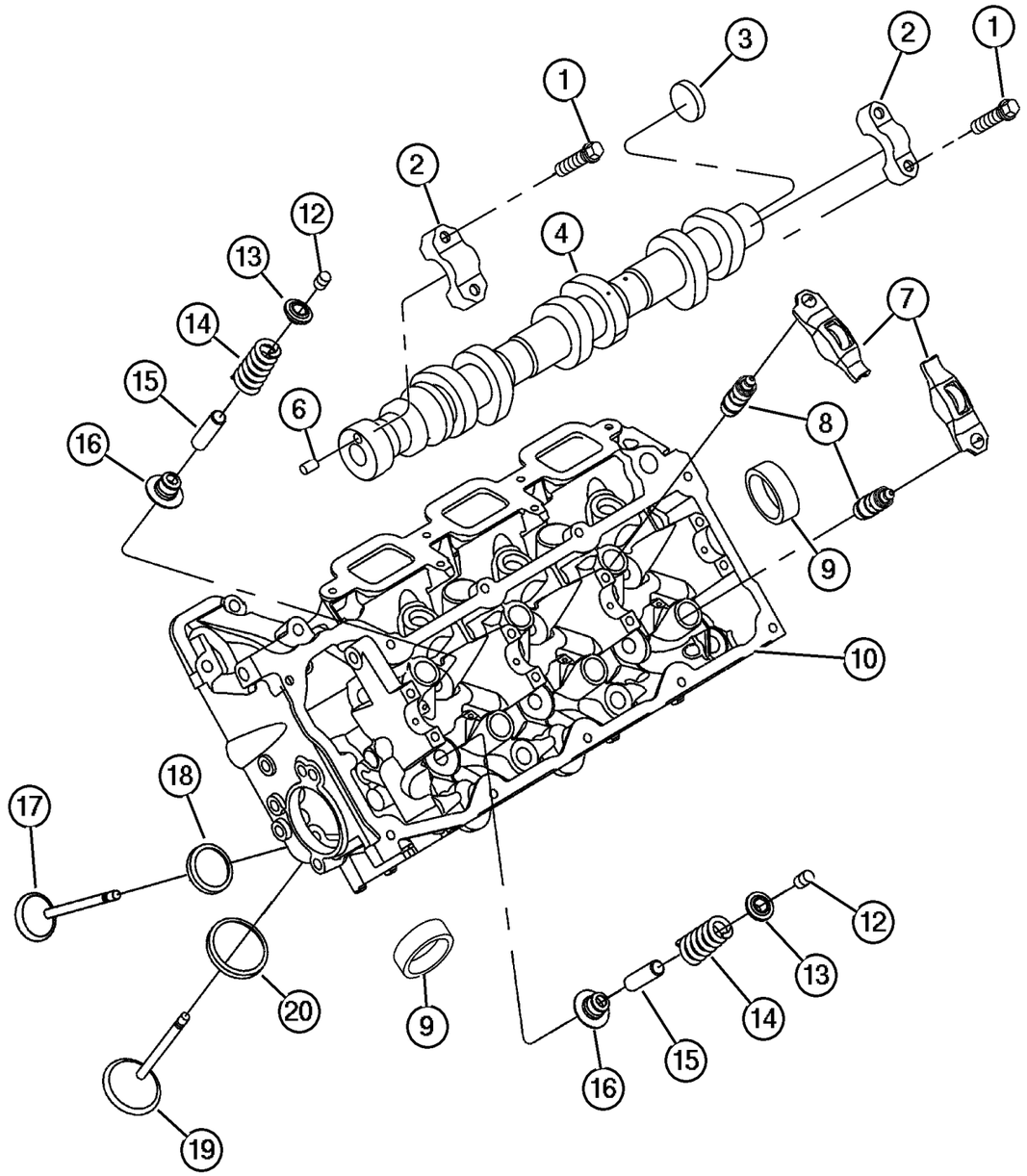

ITEM	PART NUMBER	QTY	LINE	SERIES	BODY	ENGINE	TRANS	TRIM	DESCRIPTION
Note; Sales Codes									
[EK0]= All 3.7L 6 Cylinder Gas Engines									
1	6505 034AA	8				EK0			SCREW, M6x1x40
2									CAP, Serviced With Head Only, (NOT SERVICED) (Not Serviced)
3	6036 473AA	1				EK0			WASHER
4	53021 203AB	1				EK0			CAMSHAFT, Engine, Left
-5	53021 204AB	1				EK0			CAMSHAFT, Engine, Right
6	6100 902	1				EK0			DOWEL, M6x14
7	#53021 913AA	12				EK0			ROCKER ARM, Valve
8	5302 1077	12				EK0			ADJUSTER, Valve Lash
9	4556 020	2				EK0			PLUG, Core, 1.25 Diameter
10	5302 0987	1				EK0			HEAD, Cylinder, Left
-11	5302 0988	1				EK0			HEAD, Cylinder, Right
12	4536 513AB	24				EK0			LOCK, Valve Spring Retainer
13	4781 090AA	12				EK0			RETAINER, Valve Spring
14									SPRING, Valve
	53021 775AA	6				EK0			Intake
	53021 790AA	6				EK0			Up To [12/16/02], Exhaust
	#53021 873AA	6				EK0			After [12/16/02]
15									INSERT, Valve Guide, Serviced With Head Only, (NOT SERVICED) (Not Serviced)
16	53020 752AD	12				EK0			SEAL, Valve Guide
17									VALVE, Exhaust, Standard
	53021 571AA	6				EK0			Up to [12/16/02]
	#53021 916AA	6				EK0			After [12/17/02]
18									SEAT, Exhaust Valve, Serviced With Head Only, (NOT SERVICED) (Not Serviced)
19	53020 747AB	6				EK0			VALVE, Intake, Standard
20									SEAT, Intake Valve, Serviced With Head Only, (NOT SERVICED) (Not Serviced)

JEEP LIBERTY (KJ)

SERIES	LINE	BODY	ENGINE	TRANSMISSION
P = Limited	J = LHD (4WD)	74 = 4 Dr. (104.3 WB)	ED1, ED0 = 2.4L Power Tech	DDK = 5 Speed HDManual
H = Sport	U = RHD (4WD)		EKG, EK0 = 3.7L Power Tech	DDD = 5 Speed HD Manual
M = Renegade	T = LHD (2WD)		ENJ = 2.5L 4Cyl Turbo Diesel	DG4,DGQ = Multi-Speed Auto
			ENR = 2.8L 4Cyl Turbo Diesel	DG6 = 4 Speed Auto Transm
			EN0 = 4Cyl Turbo Diesel	DG0 = All Automatic Transm
				DBB = All Manual Transm

AR = Use as required - = Non illustrated part # = New this model year **June 3, 2003**

« RETURN TO GROUP INDEX

Timing Cover and Related Parts, 3.7L [EKG]
Figure 3.7L-610

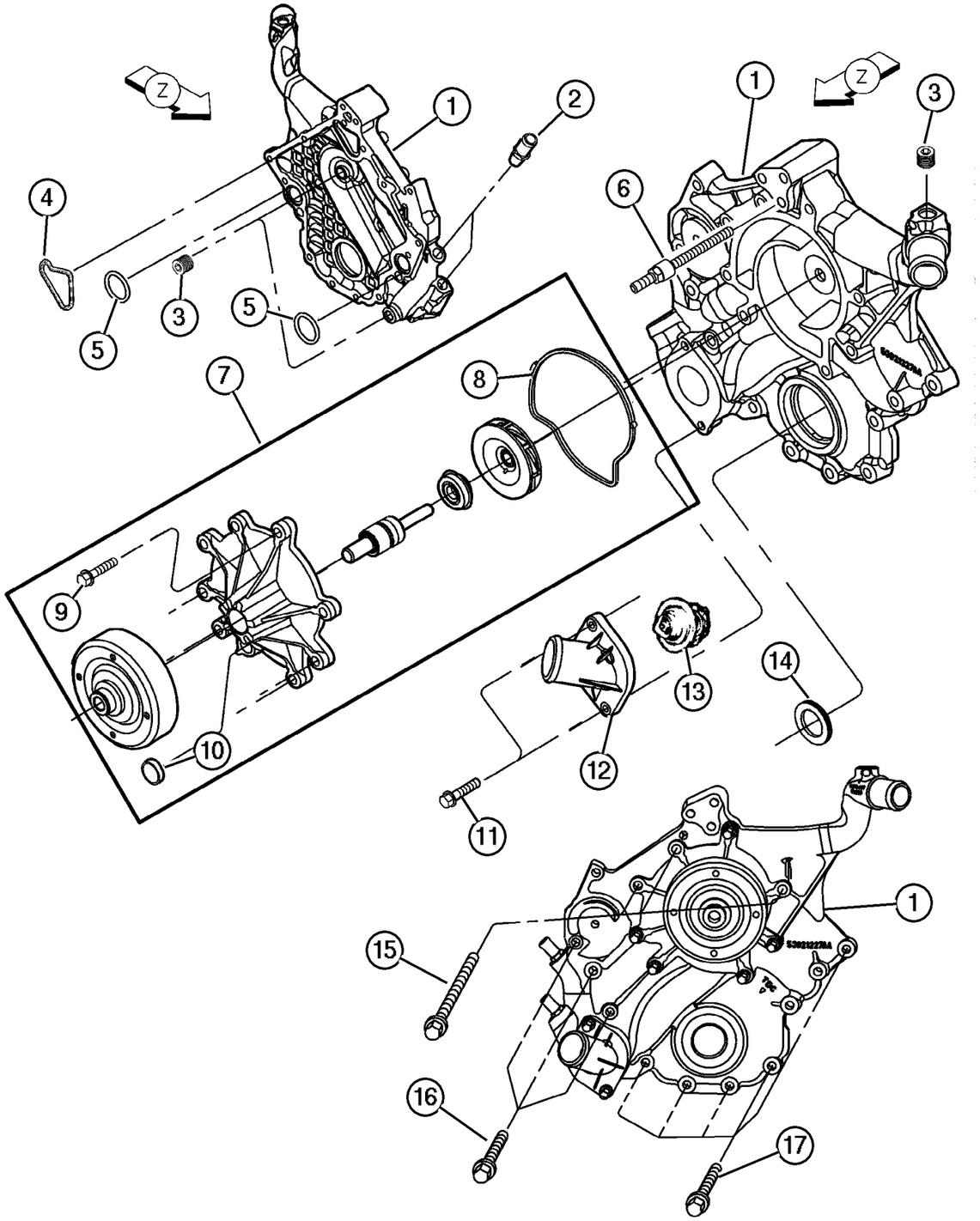

ITEM	PART NUMBER	QTY	LINE	SERIES	BODY	ENGINE	TRANS	TRIM	DESCRIPTION
Note; Sales Codes									
[EK0]= All 3.7L 6 Cylinder Gas Engines									
1	53021 238AB	1				EK0			COVER, Timing Belt
2	6035 854	2				EK0			FITTING, Y-Style, Also Serviced With Item 1
3	6036 308AA	3				EK0			PLUG, Also Serviced With Item 1
4	53021 226AA	1				EK0			GASKET, Chain Case Cover, Also Serviced With Item
5	53021 239AA	2				EK0			O RING, Also Serviced With Item 1
6	6505 293AA	1				EK0			STUD
7	53021 187AA	1				EK0			PUMP, Water
8	5302 0865	1				EK0			GASKET, Water Pump
9	6101 985	4				EK0	DBB		SCREW AND WASHER, M10x1. 50x45.00
10									PLUG, Water Pump Reservoir, Serviced With Water Pump Only, (NOT SERVICED) (Not Serviced)
11	6505 502AA	2				EK0			SCREW
12	53020 887AB	1				EK0			HOUSING, Thermostat
13	52079 476AB	1				EK0			THERMOSTAT
14	53021 313AA	1				EK0			SEAL, Crankshaft Oil, Front
15	6507 776AA	3				EK0			SCREW, Hex Flange Head
16	6101 998	5				EK0			SCREW AND WASHER, Hex
17	6101 985	5				EK0			SCREW AND WASHER, M10x1. 50x45.00

JEEP LIBERTY (KJ)

SERIES	LINE	BODY	ENGINE	TRANSMISSION
P = Limited	J = LHD (4WD)	74 = 4 Dr. (104.3 WB)	ED1, ED0 = 2.4L Power Tech	DDK = 5 Speed HDManual
H = Sport	U = RHD (4WD)		EKG, EK0 = 3.7L Power Tech	DDD = 5 Speed HD Manual
M = Renegade	T = LHD (2WD)		ENJ = 2.5L 4Cyl Turbo Diesel	DG4,DGQ = Multi-Speed Auto
			ENR = 2.8L 4Cyl Turbo Diesel	DG6 = 4 Speed Auto Transm
			EN0 = 4Cyl Turbo Diesel	DG0 = All Automatic Transm
				DBB = All Manual Transm

AR = Use as required - = Non illustrated part # = New this model year **June 3, 2003**

« RETURN TO GROUP INDEX

Timing Chain and Guides, 3.7L [EKG]
Figure 3.7L-620

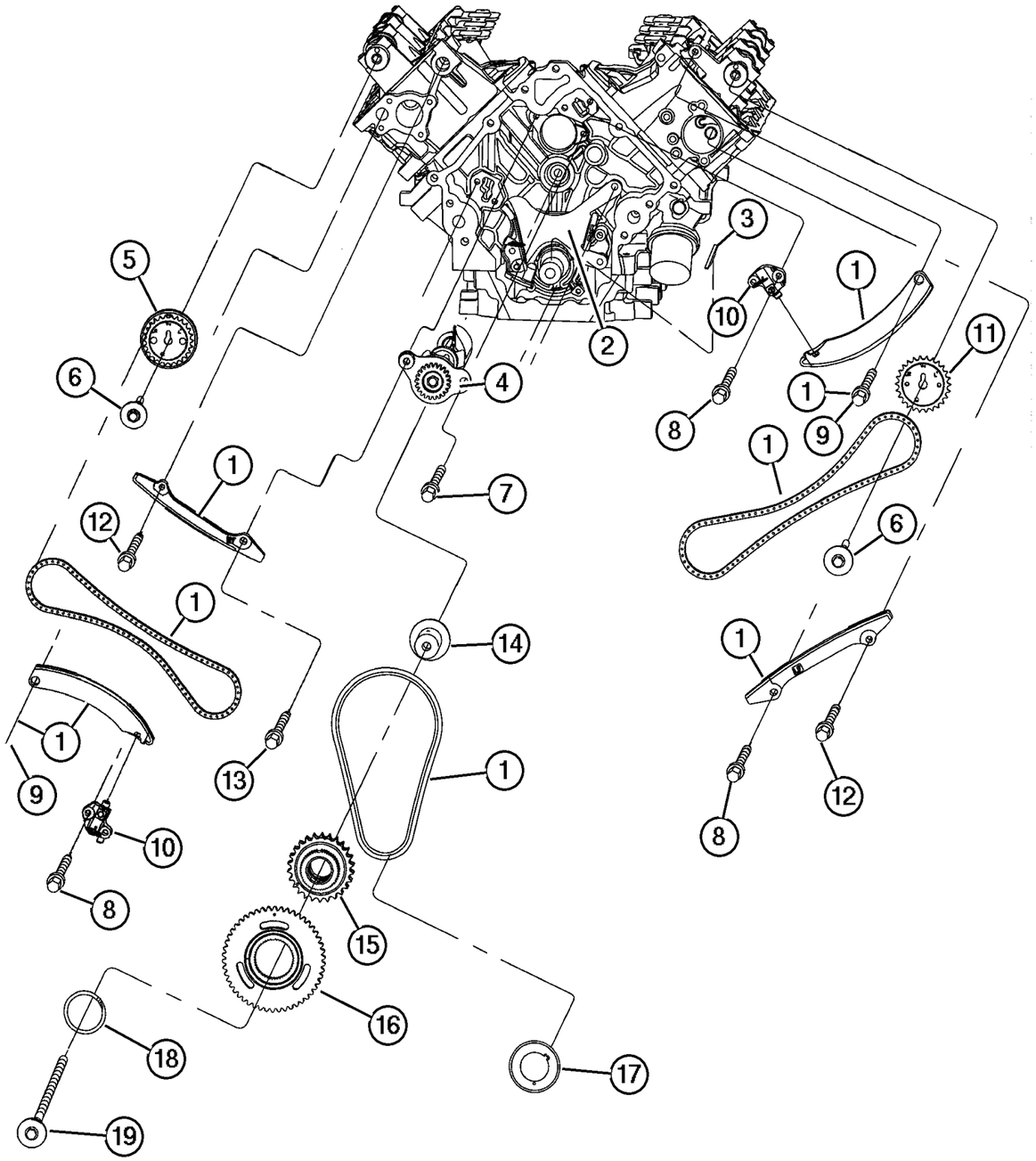

ITEM	PART NUMBER	QTY	LINE	SERIES	BODY	ENGINE	TRANS	TRIM	DESCRIPTION
Note; Sales Codes									
[EK0]= All 3.7L, 6 Cylinder Gas									
1	5019 423AC	1				EK0			TIMING DRIVE PACKAGE, Engine
2	5302 0681	1				EK0			TENSIONER, Chain, Primary
3	6504 471	1				EK0			KEY, Woodruff
4	5302 0818	1				EK0			SHAFT, Balance
5	53021 291AF	1				EK0			SPROCKET, Camshaft, Right
6	6504 429	2				EK0			SCREW AND WASHER, Hex
7	6101 452	1				EK0			SCREW AND WASHER, Hex Head, M8x1.25x20
8	6503 257	5				EK0			BOLT, Hex Head, M8x1.25x37.50
9	6506 028AA	2				EK0			SCREW
10									TENSIONER, Chain
	53021 249AA	1				EK0			Secondary,Right
	53021 250AA	1				EK0			Secondary,Left
11	53021 290AA	1				EK0			SPROCKET, Camshaft, Left
12	6102 111AA	2				EK0			SCREW AND WASHER
13	6102 190AA	1				EK0			SCREW
14	5302 0835	1				EK0			SHAFT, Idler
15	53021 298AB	1				EK0			SHAFT, Balance, Driver
16	53021 170AA	1				EK0			SPROCKET, Idler
17	5302 0679	1				EK0			SPROCKET, Crankshaft
18	53021 171AA	1				EK0			RETAINING RING, Idler
19	6504 370	1				EK0			SCREW AND WASHER, Hex

JEEP LIBERTY (KJ)

SERIES	LINE	BODY	ENGINE	TRANSMISSION
P = Limited	J = LHD (4WD)	74 = 4 Dr. (104.3 WB)	ED1, ED0 = 2.4L Power Tech	DDK = 5 Speed HDManual
H = Sport	U = RHD (4WD)		EKG, EK0 = 3.7L Power Tech	DDD = 5 Speed HD Manual
M = Renegade	T = LHD (2WD)		ENJ = 2.5L 4Cyl Turbo Diesel	DG4,DGQ = Multi-Speed Auto
			ENR = 2.8L 4Cyl Turbo Diesel	DG6 = 4 Speed Auto Transm
			EN0 = 4Cyl Turbo Diesel	DG0 = All Automatic Transm
				DBB = All Manual Transm

Engine Oiling, 3.7L [EKG]
Figure 3.7L-710

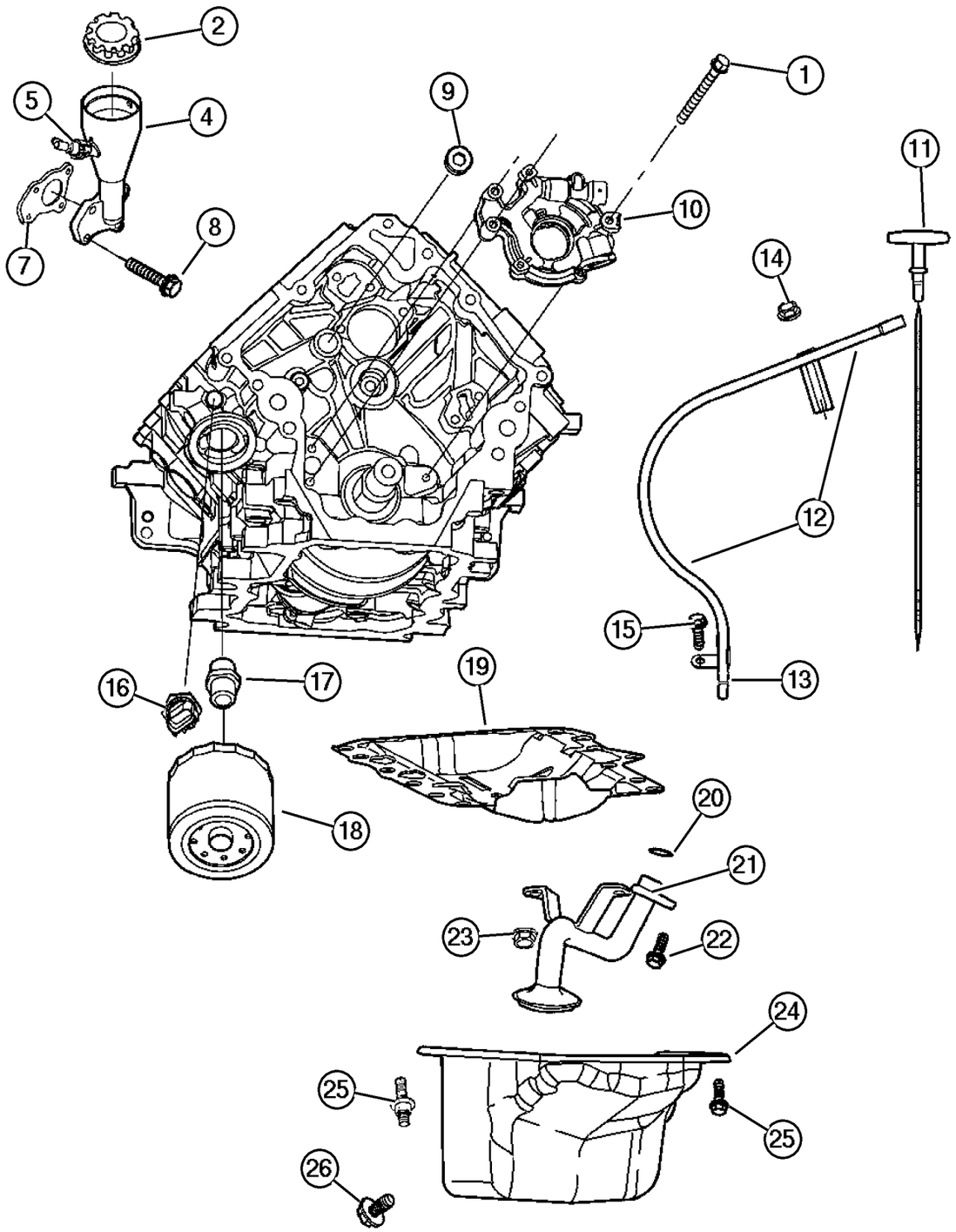

ITEM	PART NUMBER	QTY	LINE	SERIES	BODY	ENGINE	TRANS	TRIM	DESCRIPTION
Note; Sales Code									
[EK0]= All 3.7L 6 Cylinder Gas Engines									
1	6100 932	1				EK0			BOLT, Hex
2	53032 389AC	1				EK0			CAP, Oil Filler
-3	53032 126AA	1				EK0			BAFFLE, Oil Fill, None
4	5302 0890	1				EK0			HOUSING, Oil Fill
5	53032 800AA	1				EK0			VALVE, Crankcase Vent
-6	53031 711AA	1				EK0			O RING
7	53020 889AB	1				EK0			GASKET, Oil Fill Housing
8	6505 504AA	3				EK0			SCREW
9	6036 114AA	4				EK0			PLUG, Pipe
10	5302 0827	1				EK0			PUMP, Engine Oil
11	53021 026AE	1				EK0			INDICATOR, Engine Oil Level
12	53021 274AE	1				EK0			TUBE, Oil Gauge
13	53021 144AA	1				EK0			O RING, Engine Oil Indicator
14	6102 050AA	1				EK0			SCREW, Hex Flange Head, M6.3 x 1.81 x 15.00
15	6504 810AA	1				EK0			SCREW AND WASHER, Hex
16	4868 672AA	1				EK0			SWITCH, Oil Pressure
17	5300 7563	1				EK0			CONNECTOR, Oil Filter
18	4781 452AA	1				EK0			FILTER, Engine Oil
19	5302 1001	1				EK0			GASKET, Oil Pan
20	5302 0861	1				EK0			SEAL, Oil Pick Up Tube
21	5302 0997	1				EK0			TUBE, Oil Pickup
22	6102 046AA	1				EK0			SCREW AND WASHER
23	6502 756	2				EK0			NUT, Hex Lock, M8x1.25
24	53021 000AC	1				EK0			PAN, Engine Oil
25	6504 810AA	17				EK0			SCREW AND WASHER, Hex
26	6504 894AA	1				EK0			PLUG, Oil Drain

JEEP LIBERTY (KJ)

SERIES	LINE	BODY	ENGINE	TRANSMISSION
P = Limited	J = LHD (4WD)	74 = 4 Dr. (104.3 WB)	ED1, ED0 = 2.4L Power Tech	DDK = 5 Speed HDManual
H = Sport	U = RHD (4WD)		EKG, EK0 = 3.7L Power Tech	DDD = 5 Speed HD Manual
M = Renegade	T = LHD (2WD)		ENJ = 2.5L 4Cyl Turbo Diesel	DG4,DGQ = Multi-Speed Auto
			ENR = 2.8L 4Cyl Turbo Diesel	DG6 = 4 Speed Auto Transm
			EN0 = 4Cyl Turbo Diesel	DG0 = All Automatic Transm
				DBB = All Manual Transm

Manifolds, Intake and Exhaust, 3.7L [EKG]
Figure 3.7L-810

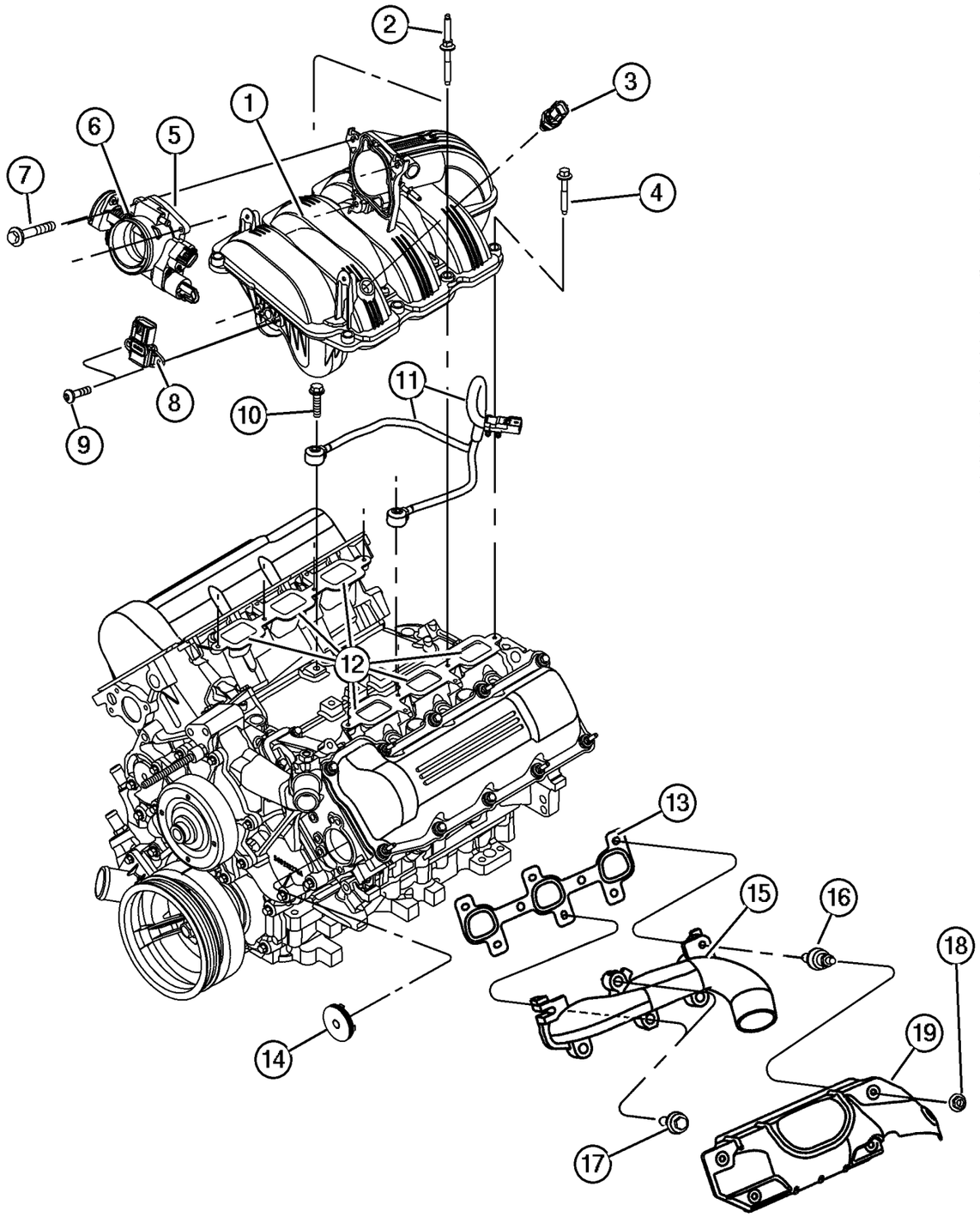

ITEM	PART NUMBER	QTY	LINE	SERIES	BODY	ENGINE	TRANS	TRIM	DESCRIPTION
Note; Sales Codes									
[EK0]= All 3.7L 6 Cylinder Gas Engines									
1	53031 080AE	1				EK0			MANIFOLD, Intake
2	6505 500AA	7				EK0			STUD
3	5602 7873	1				EK0			SENSOR, Coolant Temperature
4	6505 499AA	1				EK0			SCREW
5	53013 292AB	1				EK0			GASKET, Throttle Body To Intake
6	53031 143AC	1				EK0			THROTTLE BODY
7									SCREW, Hex Head, M6 x 1.00 x 40.
									00, (NOT SERVICED) (Not Serviced)
8	56041 018AB	1				EK0			SENSOR, Map
9	6102 192AA	2				EK0			SCREW, Intake Manifold, MAP
									Sensor Mounting
10	6502 555	1				EK0			BOLT, M8x1.25x30
11	56041 679AC	1				EK0			SENSOR, Knock
12	53010 310AB	6				EK0			SEAL, Intake Manifold
13									GASKET, Exhaust Manifold
	5303 1090	1				EK0			Right
	5303 1091	1				EK0			Left
14	5302 1031	1				EK0			PLUG, Access Hole
15									MANIFOLD, Exhaust
	53031 086AB	1				EK0			Right
	53031 085AB	1				EK0			Left
16	6504 331	8				EK0			STUD
17	6504 340	4				EK0			SCREW AND WASHER, Hex
18	6505 316AA	8				EK0			NUT
19									SHIELD, Exhaust Manifold
	5303 1092	1				EK0			Right
	5303 1093	1				EK0			Left

JEEP LIBERTY (KJ)

SERIES	LINE	BODY	ENGINE	TRANSMISSION
P = Limited	J = LHD (4WD)	74 = 4 Dr. (104.3 WB)	ED1, ED0 = 2.4L Power Tech	DDK = 5 Speed HDManual
H = Sport	U = RHD (4WD)		EKG, EK0 = 3.7L Power Tech	DDD = 5 Speed HD Manual
M = Renegade	T = LHD (2WD)		ENJ = 2.5L 4Cyl Turbo Diesel	DG4,DGQ = Multi-Speed Auto
			ENR = 2.8L 4Cyl Turbo Diesel	DG6 = 4 Speed Auto Transm
			EN0 = 4Cyl Turbo Diesel	DG0 = All Automatic Transm
				DBB = All Manual Transm

AR = Use as required - = Non illustrated part # = New this model year **June 3, 2003**

« RETURN TO GROUP INDEX

Crankcase Ventilation, 3.7L [EKG]
Figure 3.7L-910

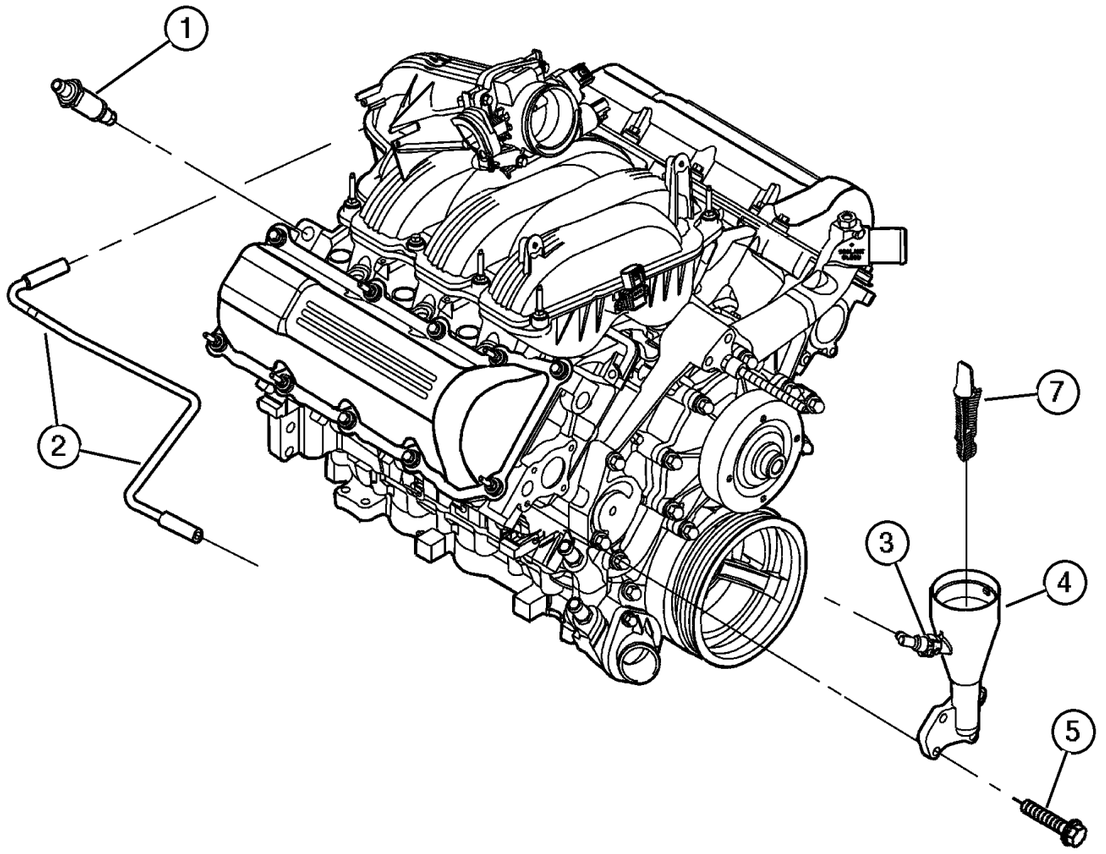

ITEM	PART NUMBER	QTY	LINE	SERIES	BODY	ENGINE	TRANS	TRIM	DESCRIPTION
Note; Sales Code									
[EK0]= All 3.7L 6 Cylinder Gas Engines									
1	53030 850AB	2				EK0			BREATHER, Crankcase
2	53031 133AE	1				EK0			TUBE, Crankcase Vent To Air Cleaner
3	53032 800AA	1				EK0			VALVE, Crankcase Vent
4	5302 0890	1				EK0			HOUSING, Oil Fill
5	6505 504AA	3				EK0			SCREW
-6	6505 566AA	1				EK0			STUD
7	53032 126AA	1				EK0			BAFFLE, Oil Fill, None
-8									HOSE, Breather
	53013 457AB	1				EK0			Head to Resonator, Left
	53013 458AB	1				EK0			Head to Resonator, Right

JEEP LIBERTY (KJ)

SERIES	LINE	BODY	ENGINE	TRANSMISSION
P = Limited	J = LHD (4WD)	74 = 4 Dr. (104.3 WB)	ED1, ED0 = 2.4L Power Tech	DDK = 5 Speed HDManual
H = Sport	U = RHD (4WD)		EKG, EK0 = 3.7L Power Tech	DDD = 5 Speed HD Manual
M = Renegade	T = LHD (2WD)		ENJ = 2.5L 4Cyl Turbo Diesel	DG4,DGQ = Multi-Speed Auto
			ENR = 2.8L 4Cyl Turbo Diesel	DG6 = 4 Speed Auto Transm
			EN0 = 4Cyl Turbo Diesel	DG0 = All Automatic Transm
				DBB = All Manual Transm

Group – 2.8L

Engine 2.8L Four Cylinder (Turbo Diesel)

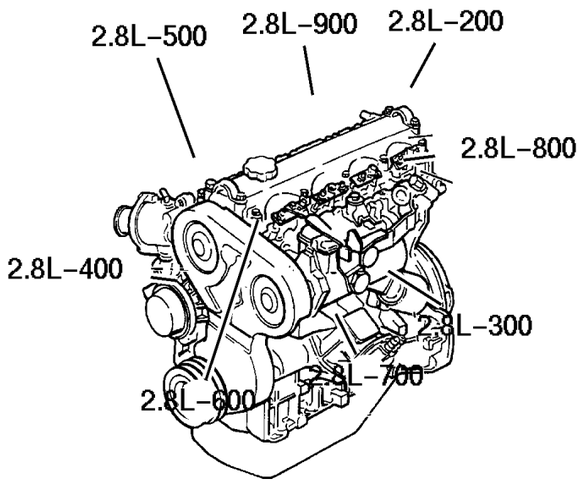

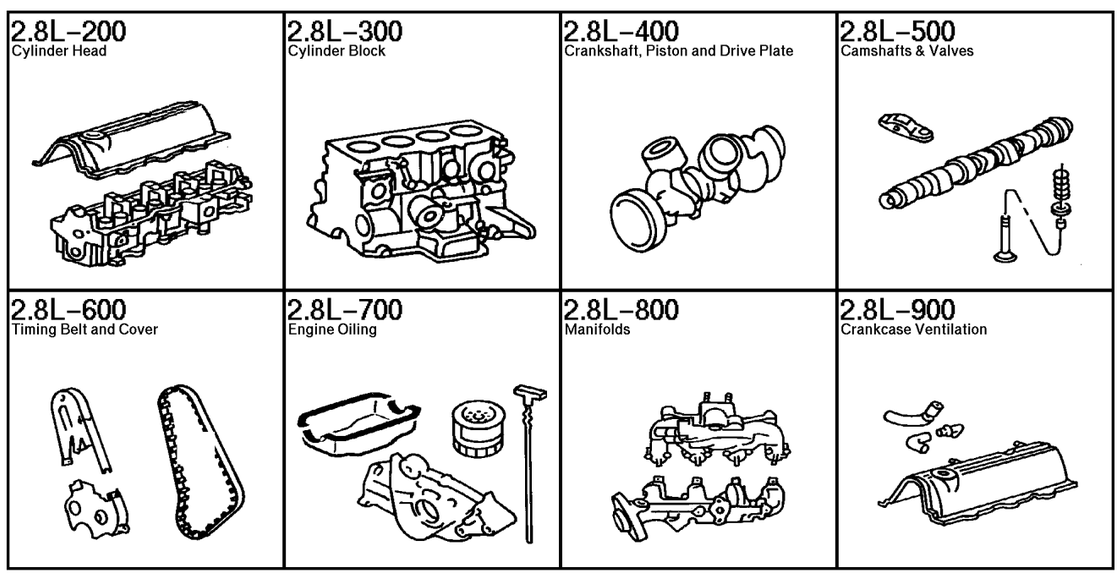

GROUP 2.8L - Engine 2.8L Four Cylinder (Turbo Diesel)

Illustration Title	Group-Fig. No.
Cylinder Head	
Cylinder Head 2.8 DieseL [ENR]	Fig. 2.8L-210
Cylinder Block	
Cylinder Block 2.8 Diesel [ENR]	Fig. 2.8L-310
Crankshaft, Piston and Drive Plate	
Crankshaft,Pistons and Related, 2.8L Diesel [ENR]	Fig. 2.8L-410
Camshafts & Valves	
Camshaft and Valves 2.8 Diesel [ENR]	Fig. 2.8L-510
Timing Belt and Cover	
Timing Cover And Related 2.8 Diesel [ENR]	Fig. 2.8L-610
Engine Oiling	
Engine Oiling 2.8 Diesel [ENR]	Fig. 2.8L-710
Oil Line 2.8 Diesel [ENR]	Fig. 2.8L-720
Filter Adapter 2.8L Diesel [ENR]	Fig. 2.8L-730
Manifolds	
Manifolds, 2.8L Diesel [ENR]	Fig. 2.8L-810
Crankcase Ventilation	
Crankcase Ventilation 2.8 Diesel [ENR]	Fig. 2.8L-910

Cylinder Head 2.8 DieseL [ENR]
Figure 2.8L-210

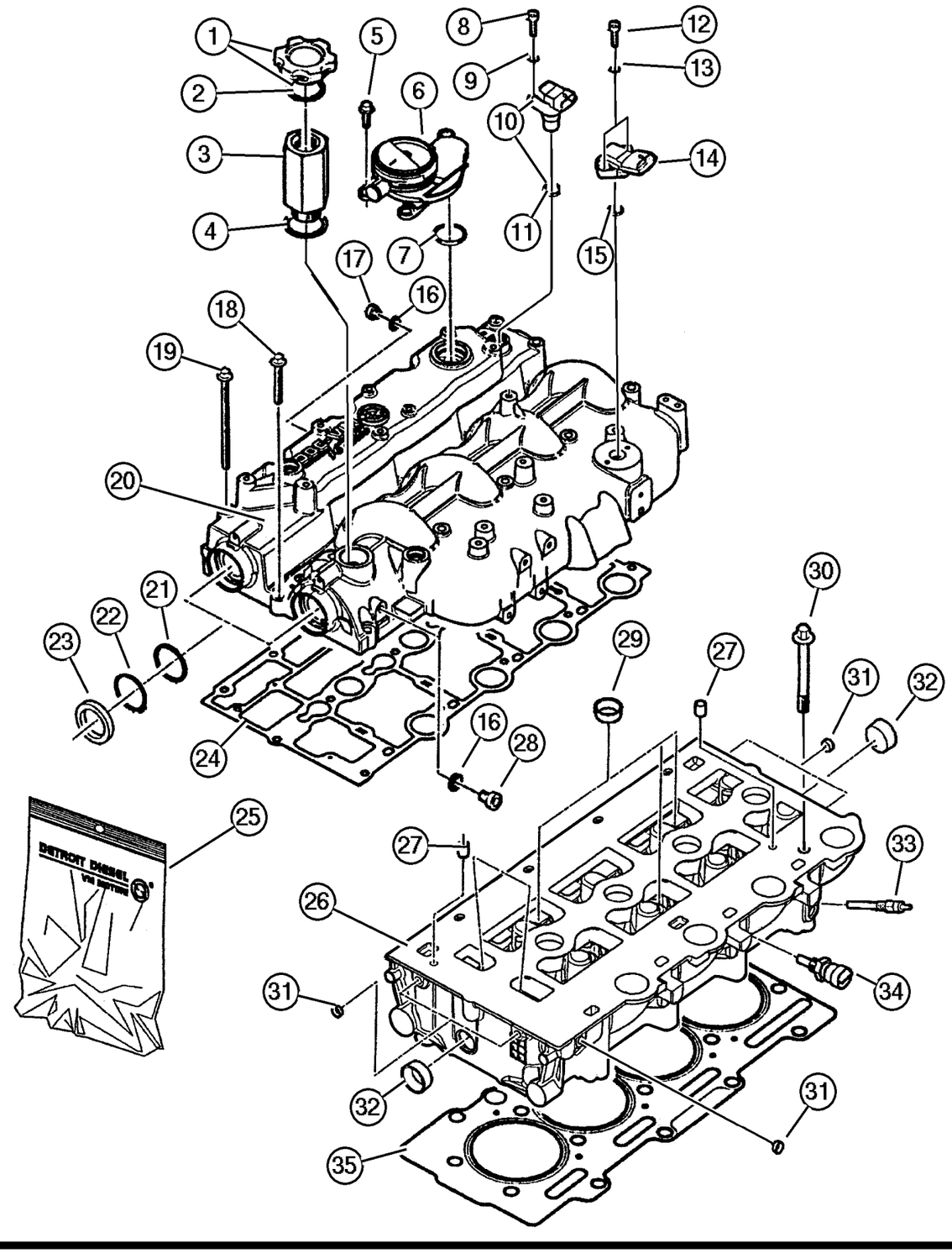

ITEM	PART NUMBER	QTY	LINE	SERIES	BODY	ENGINE	TRANS	TRIM	DESCRIPTION
Note; Sales Codes									
[DBB]= All Manual Transmissions									
[EN0]= All 4/5 Cylinder Turbo Diesels									
1	4863 741	1				EN0	DG0		CAP, Oil Filler
2	4720 300	1				EN0	DG0		GASKET, Oil Filler Cap
3	5072 678AA	1				EN0	DG0		SPACER, Oil Filler
4	5066 853AA	1				EN0	DG0		GASKET, Oil Filler Connector
5	5003 553AA	3				EN0	DG0		SCREW
6	5066 845AA	1				EN0	DG0		VALVE, Pressure Control
7	5069 132AA	1				EN0	DG0		O RING, Pressure Relief Valve
8	5003 551AA	1				EN0	DG0		BOLT, M6x10
9	4723 204	1				EN0	DG0		WASHER, Implement Attaching
10	5066 856AA	1				EN0	DG0		SENSOR, Camshaft
11	5066 860AA	1				EN0	DG0		O RING
12	5010 858AA	1				EN0	DG0		SCREW
13	4723 168	1				EN0	DG0		WASHER, Fuel Solenoid Wire
14	#5093 898AA	1				EN0	DG0		SENSOR, Air Temperature
15									O RING, (NOT REQUIRED)
16	4720 713	1				EN0	DG0		WASHER, Implement Attaching
17	5066 787AA	2				EN0	DG0		PLUG, Cylinder Block
18	5066 960AA	6				EN0	DG0		SCREW
19	5066 959AA	10				EN0	DG0		SCREW
20	#5093 897AA	1				EN0	DG0		COVER, Cylinder Head
21	5066 844AA	2				EN0	DG0		SPACER
22	5066 841AA	2				EN0	DG0		SNAP RING
23	5066 958AA	2				EN0	DG0		SEAL
24	5066 786AA	1				EN0	DG0		GASKET, Valve Cover
25	#5103 146AA	1				EN0	DG0		GASKET KIT, Cylinder Head Overhall
26	#5093 894AA	1				EN0	DG0		HEAD, Cylinder
27	4720 165	2				EN0	DG0		DOWEL, Rocker
28	5066 787AA	2				EN0	DG0		PLUG, Cylinder Block
29	4723 228	3				EN0	DG0		PLUG, Cylinder Block Oil Hole
30	5066 957AB	18				EN0	DG0		BOLT, Cylinder Head
31	5066 837AA	5				EN0	DG0		PLUG, Cylinder Block
32	5066 836AA	2				EN0	DG0		PLUG, Cylinder Block
33	5066 840AA	1				EN0	DG0		GLOW PLUG
34	5066 779AA	1				EN0	DG0		SENSOR, Temperature Sending Unit
35									GASKET, Cylinder Head
	5072 675AA	1				EN0	DG0		1.32MM Thickness
	5072 676AA	1				EN0	DG0		1.42MM Thickness

JEEP LIBERTY (KJ)

SERIES	LINE	BODY	ENGINE	TRANSMISSION
P = Limited	J = LHD (4WD)	74 = 4 Dr. (104.3 WB)	ED1, ED0 = 2.4L Power Tech	DDK = 5 Speed HDManual
H = Sport	U = RHD (4WD)		EKG, EK0 = 3.7L Power Tech	DDD = 5 Speed HD Manual
M = Renegade	T = LHD (2WD)		ENJ = 2.5L 4Cyl Turbo Diesel	DG4,DGQ = Multi-Speed Auto
			ENR = 2.8L 4Cyl Turbo Diesel	DG6 = 4 Speed Auto Transm
			EN0 = 4Cyl Turbo Diesel	DG0 = All Automatic Transm
				DBB = All Manual Transm

AR = Use as required - = Non illustrated part # = New this model year **June 3, 2003**

« RETURN TO GROUP INDEX »

Cylinder Head 2.8 DieseL [ENR]
Figure 2.8L-210

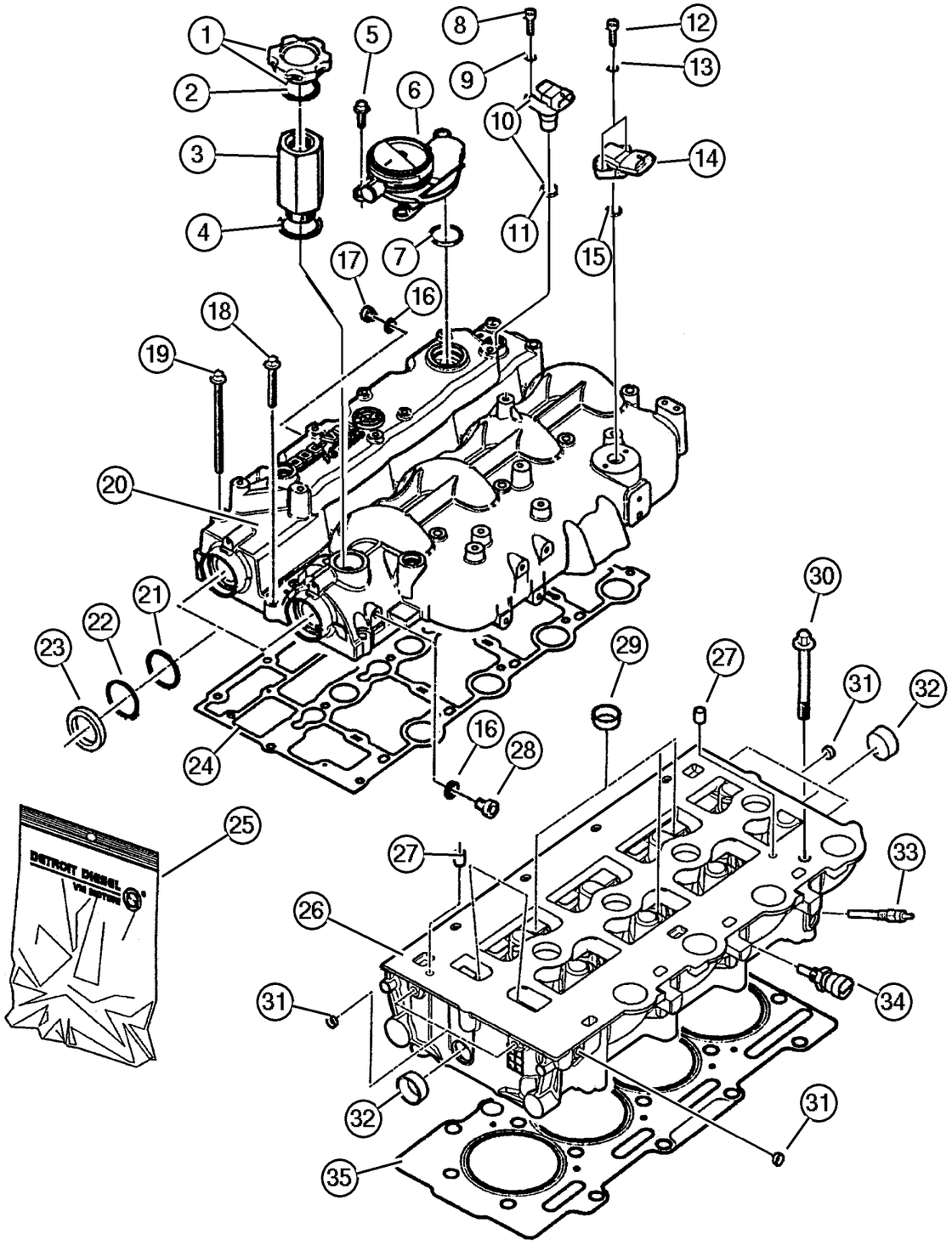

ITEM	PART NUMBER	QTY	LINE	SERIES	BODY	ENGINE	TRANS	TRIM	DESCRIPTION
	5072 677AA	1				EN0	DG0		1.52MM Thickness
-36	#53014 000AE	1				ENR			COVER, Engine

JEEP LIBERTY (KJ)

SERIES	LINE	BODY	ENGINE	TRANSMISSION
P = Limited	J = LHD (4WD)	74 = 4 Dr. (104.3 WB)	ED1, ED0 = 2.4L Power Tech	DDK = 5 Speed HDManual
H = Sport	U = RHD (4WD)		EKG, EK0 = 3.7L Power Tech	DDD = 5 Speed HD Manual
M = Renegade	T = LHD (2WD)		ENJ = 2.5L 4Cyl Turbo Diesel	DG4,DGQ = Multi-Speed Auto
			ENR = 2.8L 4Cyl Turbo Diesel	DG6 = 4 Speed Auto Transm
			EN0 = 4Cyl Turbo Diesel	DG0 = All Automatic Transm
				DBB = All Manual Transm

AR = Use as required - = Non illustrated part # = New this model year

June 3, 2003

« RETURN TO GROUP INDEX

Cylinder Block 2.8 Diesel [ENR]
Figure 2.8L-310

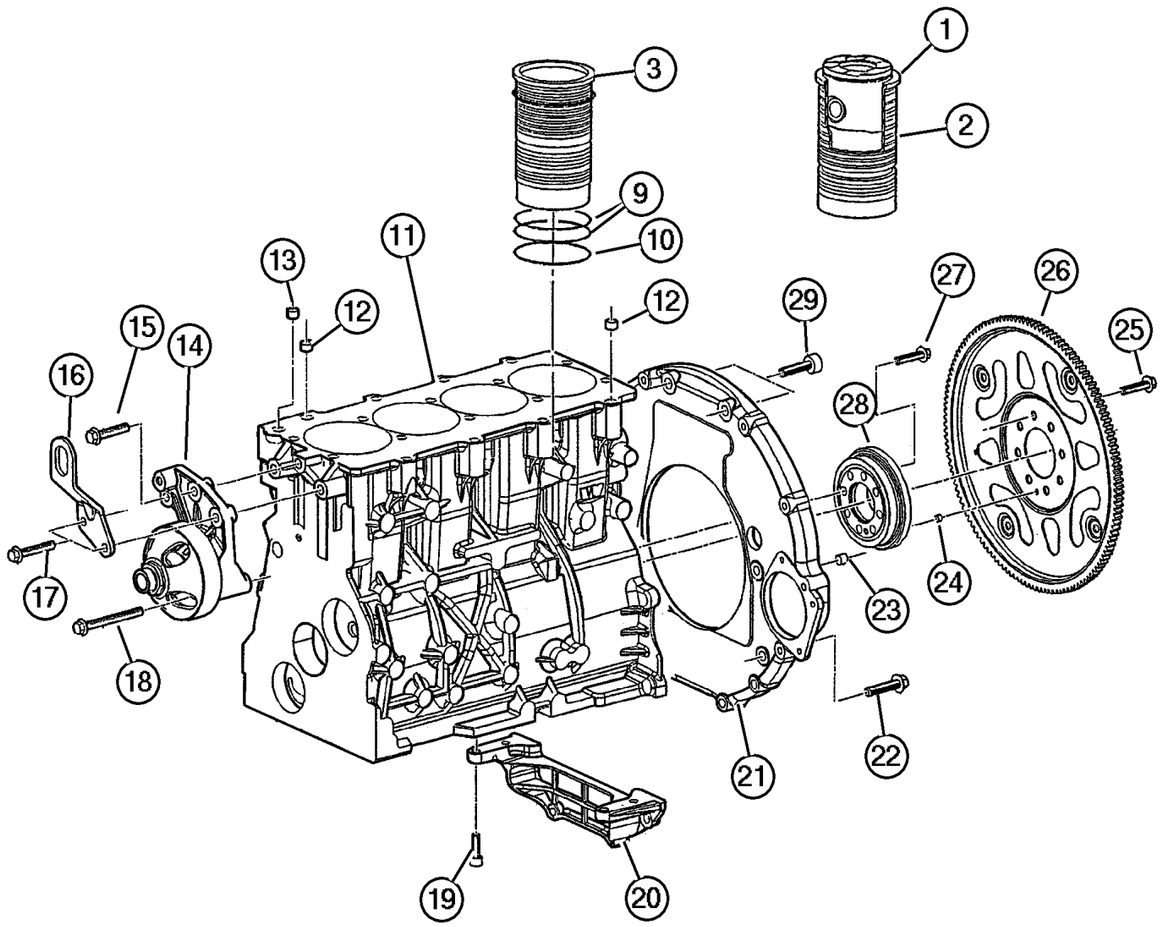

ITEM	PART NUMBER	QTY	LINE	SERIES	BODY	ENGINE	TRANS	TRIM	DESCRIPTION
Note; Sales Codes									
[DBB]= All Manual Transmissions									
[EN0]= All 4/5 Cylinder Turbo Diesels									
1	#5103 159AA	4				EN0	DG0		LINER AND PISTON, Cylinder
2	#5103 155AA	4				EN0	DG0		LINER, Cylinder
3	4720 620	4				EN0	DG0		SHIM, Cylinder Liner, 0.15mm
-4	#5103 154AA	4				EN0	DG0		SHIM KIT, Cylinder Liner
-5	4720 624	4				EN0	DG0		SHIM, Cylinder Liner, 0.17mm
-6	4720 621	4				EN0	DG0		SHIM, Cylinder Liner, 0.20mm
-7	4720 623	4				EN0	DG0		SHIM, Cylinder Liner, 0.23mm
-8	4720 622	4				EN0	DG0		SHIM, Cylinder Liner, 0.25mm
9	#5093 955AA	8				EN0	DG0		O RING, Cylinder Liner
10	4720 626	4				EN0	DG0		O RING, Cylinder Liner
11	#5096 180AA	1				EN0	DG0		ENGINE, 3/4 Tested, Diesel
12	4720 237	2				EN0	DG0		DOWEL, Transmission Adapter
13	4720 165	1				EN0	DG0		DOWEL, Rocker
14	5072 447AA	1				EN0	DG0		BRACKET, Fan
15	5066 939AA	1				EN0	DG0		SCREW
16	5072 754AA	1				EN0	DG0		BRACKET, Engine Lift
17	5003 533AA	2				EN0	DG0		BOLT, M10x45
18	5015 067AA	1				EN0	DG0		BOLT, Hex Flange Head
19	4720 684	4				EN0	DG0		BOLT
20	5072 753AA	1				EN0	DG0		BRACKET
21	#5093 957AA	1				EN0	DG0		HOUSING, Flywheel
22	5003 532AA	4				EN0	DG0		BOLT, Adaptor Plate
23	5015 045AA	2				EN0	DG0		DOWEL, Transmission Adapter
24	#5093 959AA	1				EN0	DG0		DOWEL, Transmission
25	5014 969AA	8				EN0	DG0		BOLT, Flexplate
26	#5093 958AA	1				EN0	DG0		PLATE, Torque Converter Drive
27	5066 753AA	8				EN0	DG0		BOLT, Flywheel
28	#5093 956AA	1				EN0	DG0		HUB
29	4864 757	2				EN0	DG0		BOLT
-30	5066 812AB	4				EN0	DG0		JET, Valve Body, Engine Block
-31	#5093 958AA	1				EN0	DG0		PLATE, Torque Converter Drive
-32	4736 582	1	J, U			EN0	DGQ		TORQUE CONVERTER
-33									PLUG
	#5093 909AA	1				EN0	DBB		
		1				EN0	DG0		

JEEP LIBERTY (KJ)

SERIES	LINE	BODY	ENGINE	TRANSMISSION
P = Limited	J = LHD (4WD)	74 = 4 Dr. (104.3 WB)	ED1, ED0 = 2.4L Power Tech	DDK = 5 Speed HDManual
H = Sport	U = RHD (4WD)		EKG, EK0 = 3.7L Power Tech	DDD = 5 Speed HD Manual
M = Renegade	T = LHD (2WD)		ENJ = 2.5L 4Cyl Turbo Diesel	DG4,DGQ = Multi-Speed Auto
			ENR = 2.8L 4Cyl Turbo Diesel	DG6 = 4 Speed Auto Transm
			EN0 = 4Cyl Turbo Diesel	DG0 = All Automatic Transm
				DBB = All Manual Transm

AR = Use as required - = Non illustrated part # = New this model year **June 3, 2003**

« RETURN TO GROUP INDEX

Crankshaft,Pistons and Related, 2.8L Diesel [ENR]
Figure 2.8L-410

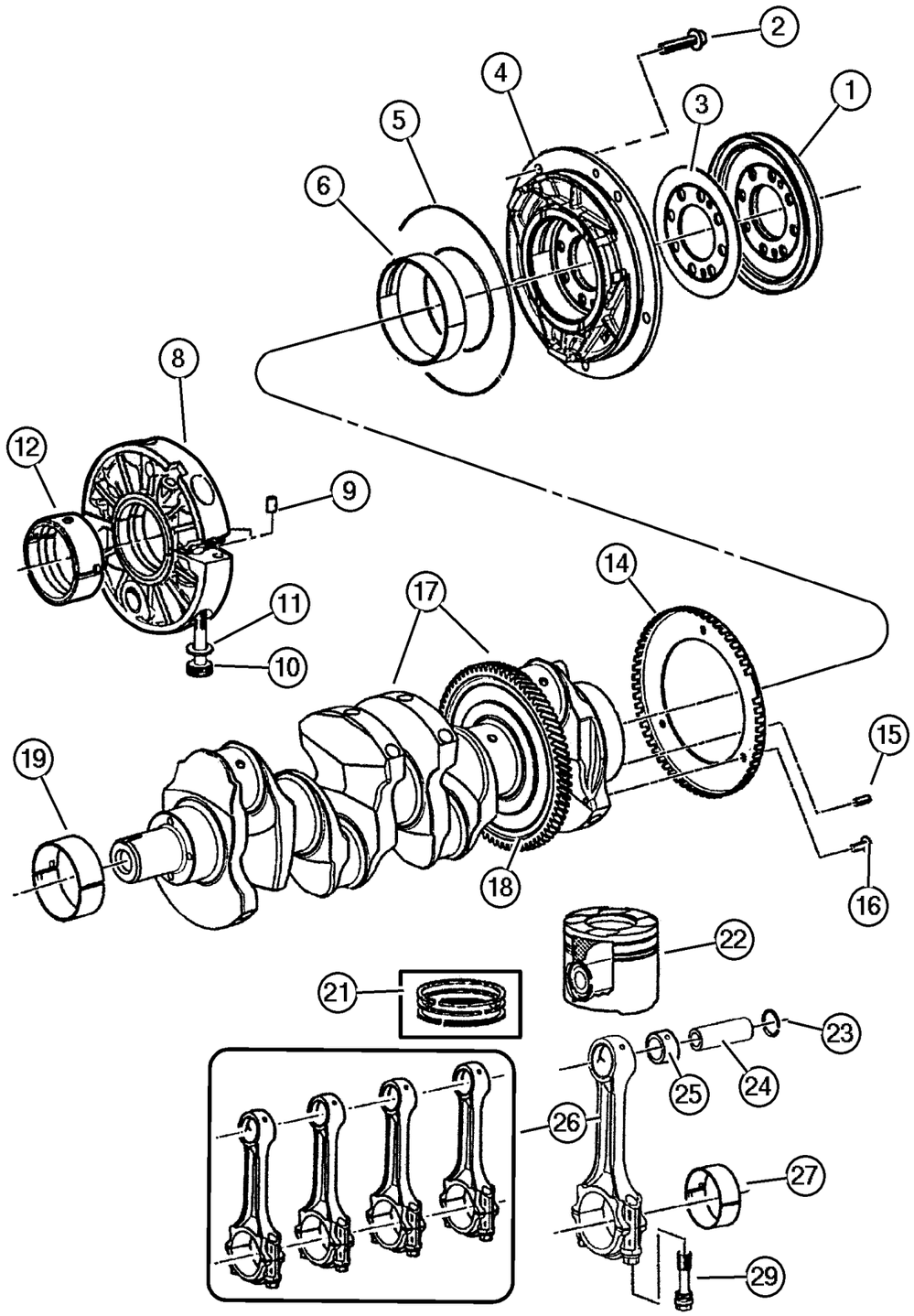

ITEM	PART NUMBER	QTY	LINE	SERIES	BODY	ENGINE	TRANS	TRIM	DESCRIPTION
Note; Sales Codes									
[DBB]= All Manual Transmissions									
[EN0]= All 4/5 Cylinder Turbo Diesels									
1	5066 756AA	1				EN0	DG0		SEAL, Crankshaft Oil, Rear
2	4864 537	5				EN0	DG0		BOLT, 8Mx20
3	#5093 882AA	1				EN0	DG0		WASHER, Thrust
4	#5101 924AA	1				EN0	DG0		HOUSING, Rear Bearing
5	4720 277	1				EN0	DG0		O RING, Crankshaft Rear Support
6	5066 761AA	1				EN0	DG0		BEARING, Crankshaft
-7	5066 762AA	1				EN0	DG0		BEARING, Crankshaft
8	5066 757AA	3				EN0	DG0		HOUSING, Crankshaft Bearing
9	4720 241	6				EN0	DG0		DOWEL, Center Bearing Housing
10	4720 242	6				EN0	DG0		SCREW
11	4720 243	6				EN0	DG0		WASHER, Lock, M10
12	5069 079AA	3				EN0	DG0		BEARING, Crankshaft, STD.
-13	5069 080AA	3				EN0	DG0		BEARING, Crankshaft, .250mm U/S
14	5066 833AB	1				EN0	DG0		SENSOR, Crankshaft
15	#5093 885AA	1				EN0	DG0		PIN, Spring
16	5069 137AA	3				EN0	DG0		SCREW
17	#5093 881AB	1				EN0	DG0		CRANKSHAFT
18	5066 977AA	1				EN0	DG0		GEAR, Ring
19	5069 077AA	1				EN0	DG0		BEARING, Crankshaft, STD.
-20	5069 078AA	1				EN0	DG0		BEARING, Crankshaft, .250mm U/S
21	#5103 144AA	4				EN0	DG0		RING KIT, Piston, Standard
22	#5103 145AA	4				EN0	DG0		PISTON
23	#5093 886AA	8				EN0	DG0		RING, Piston Pin
24									PIN, Piston, Serviced With Item 22, (NOT SERVICED) (Not Serviced)
25	#5093 887AA	4				EN0	DG0		BUSHING, Connecting Rod
26	#5093 883AA	1				EN0	DG0		ROD, Connecting
27	4720 877	4				EN0	DG0		BEARING, Connecting Rod, STD.
-28	4720 883	4				EN0	DG0		BEARING, Connecting Rod, .25 mm U/S
29	#5093 889AA	8				EN0	DG0		BOLT, Connecting Rod
-30	5072 673AA	1				EN0	DG0		PUMP, Vacuum

JEEP LIBERTY (KJ)

SERIES	LINE	BODY	ENGINE	TRANSMISSION
P = Limited	J = LHD (4WD)	74 = 4 Dr. (104.3 WB)	ED1, ED0 = 2.4L Power Tech	DDK = 5 Speed HDManual
H = Sport	U = RHD (4WD)		EKG, EK0 = 3.7L Power Tech	DDD = 5 Speed HD Manual
M = Renegade	T = LHD (2WD)		ENJ = 2.5L 4Cyl Turbo Diesel	DG4,DGQ = Multi-Speed Auto
			ENR = 2.8L 4Cyl Turbo Diesel	DG6 = 4 Speed Auto Transm
			EN0 = 4Cyl Turbo Diesel	DG0 = All Automatic Transm
				DBB = All Manual Transm

AR = Use as required - = Non illustrated part # = New this model year **June 3, 2003**

« RETURN TO GROUP INDEX

Camshaft and Valves 2.8 Diesel [ENR]
Figure 2.8L-510

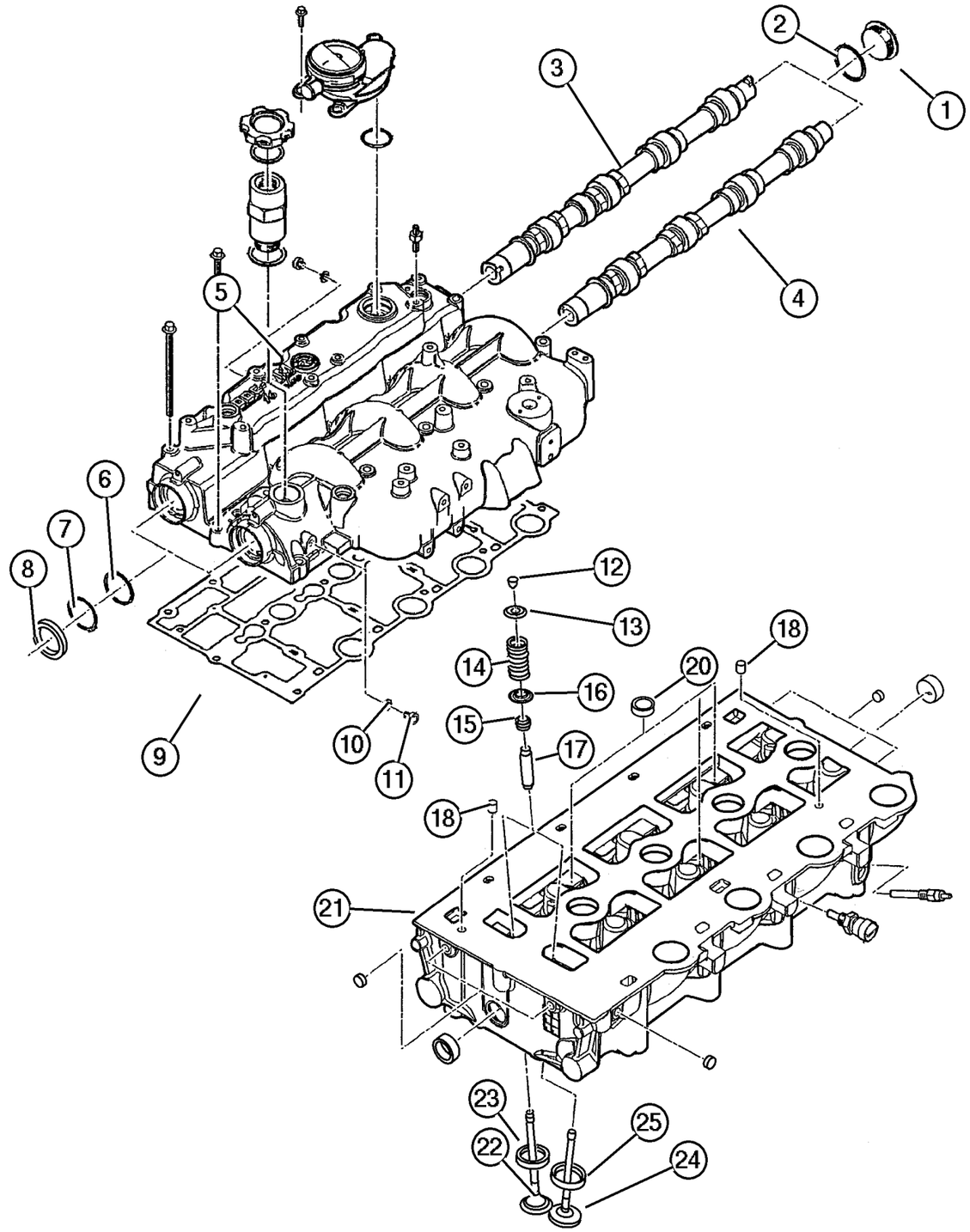

ITEM	PART NUMBER	QTY	LINE	SERIES	BODY	ENGINE	TRANS	TRIM	DESCRIPTION
Note; Sales Codes									
[DBB]= All Manual Transmissions									
[EN0]= All 4/5 Cylinder Turbo Diesels									
1	5066 855AA	2				EN0	DG0		PLUG, Camshaft
2	5066 811AA	2				EN0	DG0		WASHER, Plain, 16.2x19.9x1.5
3	5066 847AB	1				EN0	DG0		CAMSHAFT, Intake
4	5066 850AB	1				EN0	DG0		CAMSHAFT, Exhaust
5	#5093 897AA	1				EN0	DG0		COVER, Cylinder Head
6	5066 844AA	2				EN0	DG0		SPACER
7	5066 841AA	2				EN0	DG0		SNAP RING
8	5066 958AA	2				EN0	DG0		SEAL
9	5066 786AA	1				EN0	DG0		GASKET, Valve Cover
10	4720 713	2				EN0	DG0		WASHER, Implement Attaching
11	5066 787AA	2				EN0	DG0		PLUG, Cylinder Block
12	5066 778AA	32				EN0	DG0		LOCK, Valve Spring Retainer
13	#5093 892AA	16				EN0	DG0		RETAINER, Valve Spring
14	5066 776AA	16				EN0	DG0		SPRING, Valve
15	#5093 891AA	16				EN0	DG0		SEAL, Valve Guide
16	5066 775AA	16				EN0	DG0		SEAL, Valve Guide
17	5066 773AA	16				EN0	DG0		GUIDE, Intake/Exhaust Valve, Standard Size
18	4720 165	2				EN0	DG0		DOWEL, Rocker
-19	5066 780AA	16				EN0	DG0		ROCKER ARM, Inlet and Exhaust Valve
20	4723 228	3				EN0	DG0		PLUG, Cylinder Block Oil Hole
21	#5093 894AA	1				EN0	DG0		HEAD, Cylinder
22	5066 769AA	8				EN0	DG0		VALVE, Exhaust, Standard
23	5066 771AA	8				EN0	DG0		SEAT, Exhaust Valve, 0.30mm Oversize
24	5066 770AA	8				EN0	DG0		VALVE, Intake, Standard
25	5066 772AA	8				EN0	DG0		SEAT, Intake Valve

JEEP LIBERTY (KJ)

SERIES	LINE	BODY	ENGINE	TRANSMISSION
P = Limited	J = LHD (4WD)	74 = 4 Dr. (104.3 WB)	ED1, ED0 = 2.4L Power Tech	DDK = 5 Speed HDManual
H = Sport	U = RHD (4WD)		EKG, EK0 = 3.7L Power Tech	DDD = 5 Speed HD Manual
M = Renegade	T = LHD (2WD)		ENJ = 2.5L 4Cyl Turbo Diesel	DG4,DGQ = Multi-Speed Auto
			ENR = 2.8L 4Cyl Turbo Diesel	DG6 = 4 Speed Auto Transm
			EN0 = 4Cyl Turbo Diesel	DG0 = All Automatic Transm
				DBB = All Manual Transm

AR = Use as required - = Non illustrated part # = New this model year **June 3, 2003**

« RETURN TO GROUP INDEX

Timing Cover And Related 2.8 Diesel [ENR]
Figure 2.8L-610

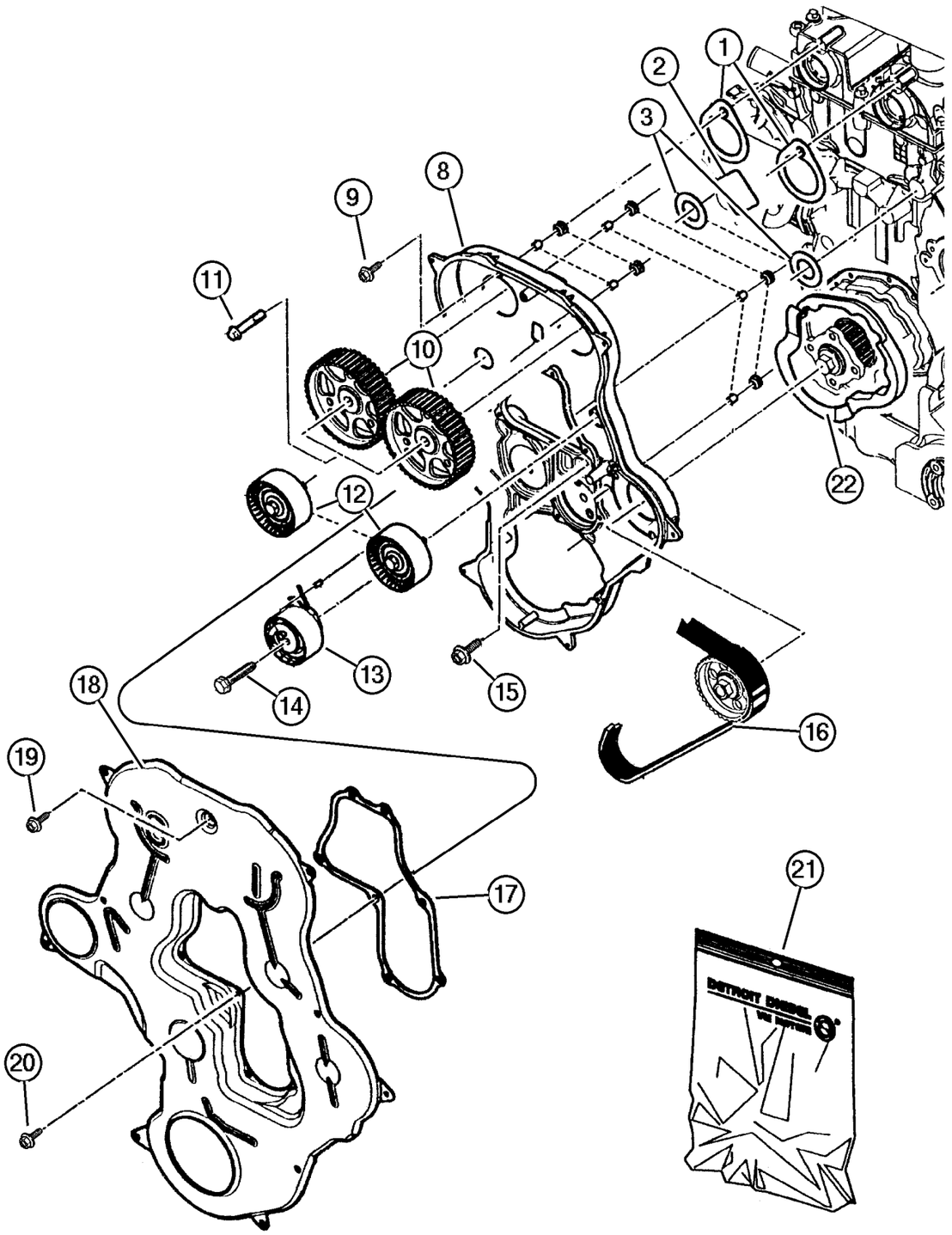

ITEM	PART NUMBER	QTY	LINE	SERIES	BODY	ENGINE	TRANS	TRIM	DESCRIPTION
Note; Sales Codes									
[DBB]= All Manual Transmissions									
[EN0]= All 4/5 Cylinder Turbo Diesels									
1	5066 946AA	1				EN0	DG0		GASKET
2	5066 946AA	1				EN0	DG0		GASKET
3	5066 946AA	1				EN0	DG0		GASKET
-4									DAMPER, Vibration, [Service in Item #21], (NOT SERVICED) (Not Serviced)
-5									BUSHING, Balance Shaft, [Service in Item #21], (NOT SERVICED) (Not Serviced)
-6									DAMPER, Vibration, [Service in Item#21], (NOT SERVICED) (Not Serviced)
-7									BUSHING, Balance Shaft, [Service in Item #21], (NOT SERVICED) (Not Serviced)
8	5073 446AB	1				EN0	DG0		COVER, Timing Case
9	5069 114AA	5				EN0	DG0		SCREW
10	5066 926AA	2				EN0	DG0		GEAR, Balance Shaft
11	4897 825AA	2				EN0	DG0		SCREW
12	#5093 931AA	2				EN0	DG0		PULLEY, Idler
13	5066 826AA	1				EN0	DG0		TENSIONER, Belt
14	5015 031AA	1				EN0	DG0		SCREW
15	5003 532AA	3				EN0	DG0		BOLT, Adaptor Plate
16	5066 928AA	1				EN0	DG0		BELT, Timing
17	5066 921AA	1				EN0	DG0		GASKET, Timing Cover
18	5066 919AB	1				EN0	DG0		COVER, Timing Case
19	4864 745	1				EN0	DG0		BOLT
20	5069 112AA	17				EN0	DG0		SCREW
21	5019 861AA	1				EN0	DG0		GASKET KIT, Timing Cover
22	4863 779	1				EN0	DG0		GASKET, Vacuum Pump, .

JEEP LIBERTY (KJ)

SERIES	LINE	BODY	ENGINE	TRANSMISSION
P = Limited	J = LHD (4WD)	74 = 4 Dr. (104.3 WB)	ED1, ED0 = 2.4L Power Tech	DDK = 5 Speed HDManual
H = Sport	U = RHD (4WD)		EKG, EK0 = 3.7L Power Tech	DDD = 5 Speed HD Manual
M = Renegade	T = LHD (2WD)		ENJ = 2.5L 4Cyl Turbo Diesel	DG4,DGQ = Multi-Speed Auto
			ENR = 2.8L 4Cyl Turbo Diesel	DG6 = 4 Speed Auto Transm
			EN0 = 4Cyl Turbo Diesel	DG0 = All Automatic Transm
				DBB = All Manual Transm

Engine Oiling 2.8 Diesel [ENR]
Figure 2.8L-710

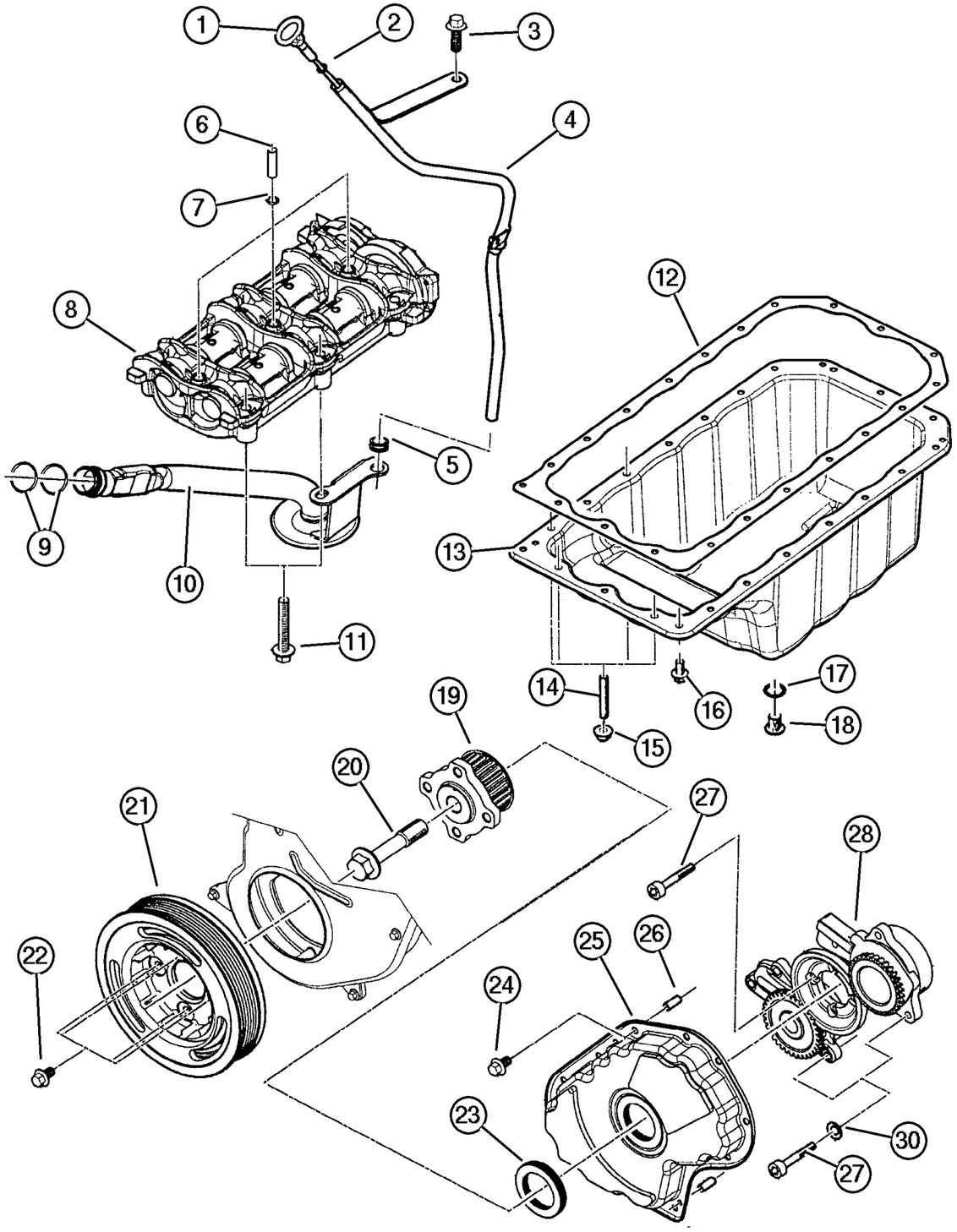

ITEM	PART NUMBER	QTY	LINE	SERIES	BODY	ENGINE	TRANS	TRIM	DESCRIPTION
Note; Sales Codes									
[DBB]= All Manual Transmissions									
[EN0]= All 4/5 Cylinder Turbo Diesels									
1	5072 682AB	1				EN0	DG0		INDICATOR, Engine Oil Level
2	4720 373	1				EN0	DG0		O RING, Engine Oil Indicator
3	5003 554AA	1				EN0	DG0		SCREW
4	5072 681AC	1				EN0	DG0		TUBE, Oil Gauge
5	4720 362	1				EN0	DG0		GASKET, Engine Oil Indicator Pipe
6	#5093 899AA	1				EN0	DG0		PIN
7	5066 899AA	3				EN0	DG0		O RING
8	5066 890AA	1				EN0	DG0		SHAFT, Balance
9	5066 789AB	2				EN0	DG0		O RING, Oil Suction Tube
10	5072 680AB	1				EN0	DG0		PICKUP, Engine Oil
11	5066 962AA	6				EN0	DG0		SCREW
12	5066 901AA	1				EN0	DG0		GASKET, Oil Pan
13	5072 683AA	1				EN0	DG0		PAN, Engine Oil
14	4864 745	1				EN0	DG0		BOLT
15	4778 936	1				EN0	DG0		NUT, Suction Pipe Attaching
16	4864 748	12				EN0	DG0		BOLT
17	4720 353	1				EN0	DG0		WASHER, Plain
18	4720 352	1				EN0	DG0		PLUG, Oil Drain
19	5066 978AA	1				EN0	DG0		PULLEY, Crankshaft
20	5066 832AA	1				EN0	DG0		SCREW
21	5072 669AA	1				EN0	DG0		PULLEY, Crankshaft
22	5069 138AA	4				EN0	DG0		SCREW, Damper Mounting
23	5072 670AA	1				EN0	DG0		SEAL, Front Main Crankshaft
24	4864 748	12				EN0	DG0		BOLT
25	5066 955AA	1				EN0	DG0		COVER, Timing Belt
26	5066 834AA	2				EN0	DG0		PIN
27	4720 658	10				EN0	DG0		SCREW, Intake Manifold Elbow
28	#5093 890AA	1				EN0	DG0		PUMP, Engine Oil
-29	5072 672AA	1				EN0	DG0		GEAR, Ring
30	4723 204	5				EN0	DG0		WASHER, Implement Attaching

JEEP LIBERTY (KJ)

SERIES	LINE	BODY	ENGINE	TRANSMISSION
P = Limited	J = LHD (4WD)	74 = 4 Dr. (104.3 WB)	ED1, ED0 = 2.4L Power Tech	DDK = 5 Speed HDManual
H = Sport	U = RHD (4WD)		EKG, EK0 = 3.7L Power Tech	DDD = 5 Speed HD Manual
M = Renegade	T = LHD (2WD)		ENJ = 2.5L 4Cyl Turbo Diesel	DG4,DGQ = Multi-Speed Auto
			ENR = 2.8L 4Cyl Turbo Diesel	DG6 = 4 Speed Auto Transm
			EN0 = 4Cyl Turbo Diesel	DG0 = All Automatic Transm
				DBB = All Manual Transm

AR = Use as required - = Non illustrated part # = New this model year

June 3, 2003

« RETURN TO GROUP INDEX

Oil Line 2.8 Diesel [ENR]
Figure 2.8L-720

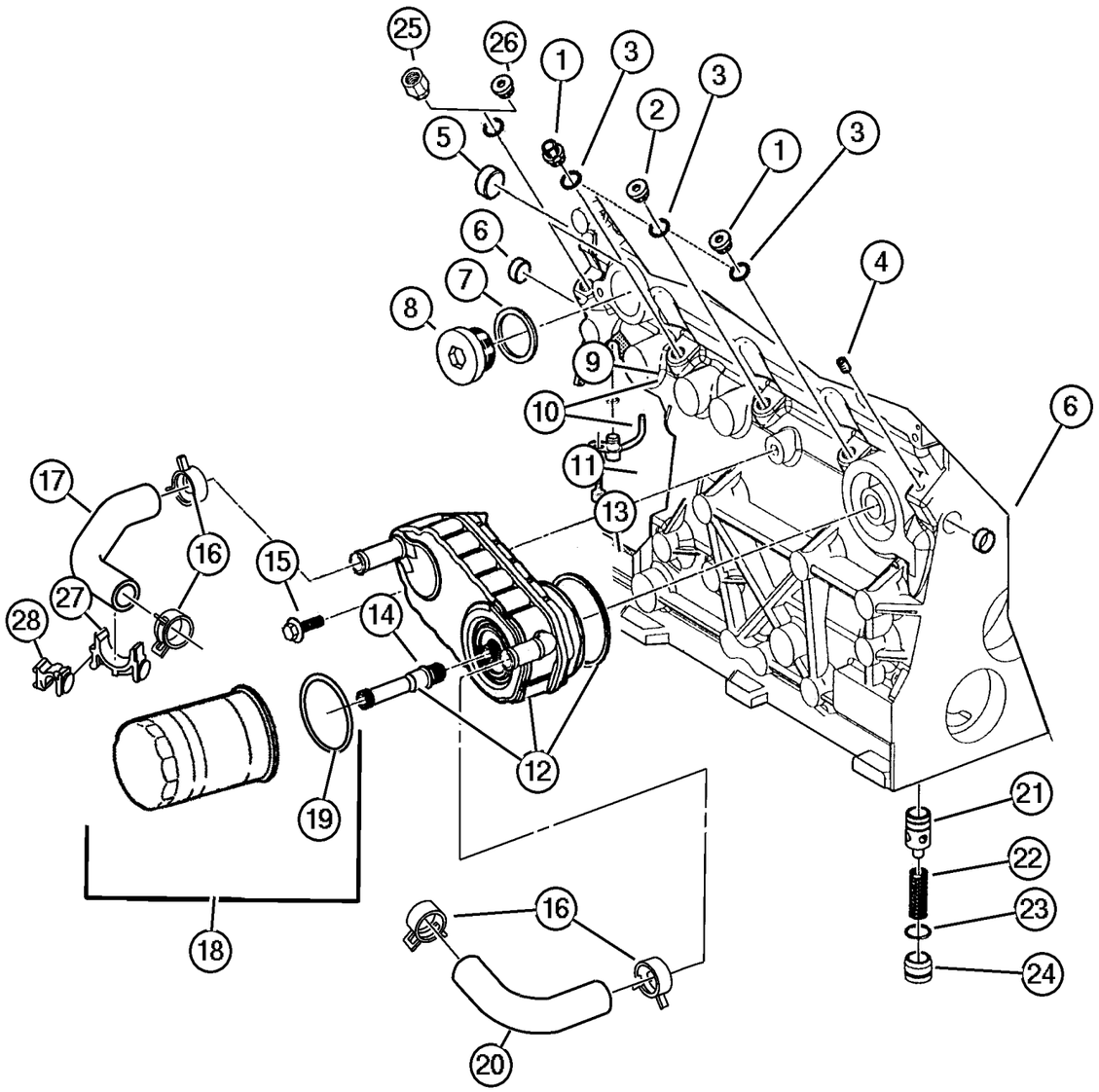

ITEM	PART NUMBER	QTY	LINE	SERIES	BODY	ENGINE	TRANS	TRIM	DESCRIPTION
NOTE:									
Sales Codes:									
[DBB]=All Manual Transmissions									
[DG0]=All Automatic Transmissions									
[EN0]=All 4 Cylinder Turbo Diesel Engines									
1	5066 889AA	2				EN0	DG0		BOLT, Oil Feed To Turbo Adapter
2	5066 814AA	1				EN0	DG0		BOLT, Turbo Oil Feed Adapter
3	4720 704	4				EN0	DG0		WASHER, Oil Pressure Transduser
4	4883 424AA	1				EN0	DG0		PLUG, Cylinder Block
5	4778 887	1				EN0	DG0		PLUG, Cylinder Block Oil Hole
6	4723 211	2				EN0	DG0		PLUG, Cylinder Block Oil Hole
7	5066 811AA	2				EN0	DG0		WASHER, Plain, 16.2x19.9x1.5
8	5066 855AA	2				EN0	DG0		PLUG, Camshaft
9	4864 689	4				EN0	DG0		O RING
10	5066 812AB	4				EN0	DG0		JET, Valve Body
11	4882 620	4				EN0	DG0		SCREW
12	#5093 913AA	1				EN0	DG0		COOLER, Engine Oil
13	4723 217	1				EN0	DG0		O RING, Oil Cooler
14	5015 178AA	1				EN0	DG0		FITTING, Engine Oil Cooler
15	5003 724AA	1				EN0	DG0		SCREW
16	4883 924AA	4				EN0	DG0		CLAMP, Heater Hose
17	5072 710AA	1				EN0	DG0		HOSE, Engine Oil Cooler
18	5003 558AA	1				EN0	DG0		FILTER, Engine Oil
19	5066 946AA	1				EN0	DG0		GASKET
20	5072 709AA	1				EN0	DG0		HOSE, Engine Oil Cooler
21	5066 816AA	1				EN0	DG0		VALVE, Oil Pressure Relief
22	#5093 915AA	1				EN0	DG0		SPRING, Oil Pressure Relief Valve
23	5066 887AA	1				EN0	DG0		O RING
24	5066 886AA	1				EN0	DG0		PLUG
25	#5093 916AA	1				EN0	DG0		ADAPTER
26	5066 889AA	2				EN0	DG0		BOLT, Oil Feed To Turbo Adapter
27	#5093 906AA	1				EN0	DG0		CLAMP
28	#5093 914AA	1				EN0	DG0		CLAMP

JEEP LIBERTY (KJ)

SERIES	LINE	BODY	ENGINE	TRANSMISSION
P = Limited	J = LHD (4WD)	74 = 4 Dr. (104.3 WB)	ED1, ED0 = 2.4L Power Tech	DDK = 5 Speed HDManual
H = Sport	U = RHD (4WD)		EKG, EK0 = 3.7L Power Tech	DDD = 5 Speed HD Manual
M = Renegade	T = LHD (2WD)		ENJ = 2.5L 4Cyl Turbo Diesel	DG4,DGQ = Multi-Speed Auto
			ENR = 2.8L 4Cyl Turbo Diesel	DG6 = 4 Speed Auto Transm
			EN0 = 4Cyl Turbo Diesel	DG0 = All Automatic Transm
				DBB = All Manual Transm

Filter Adapter 2.8L Diesel [ENR]
Figure 2.8L-730

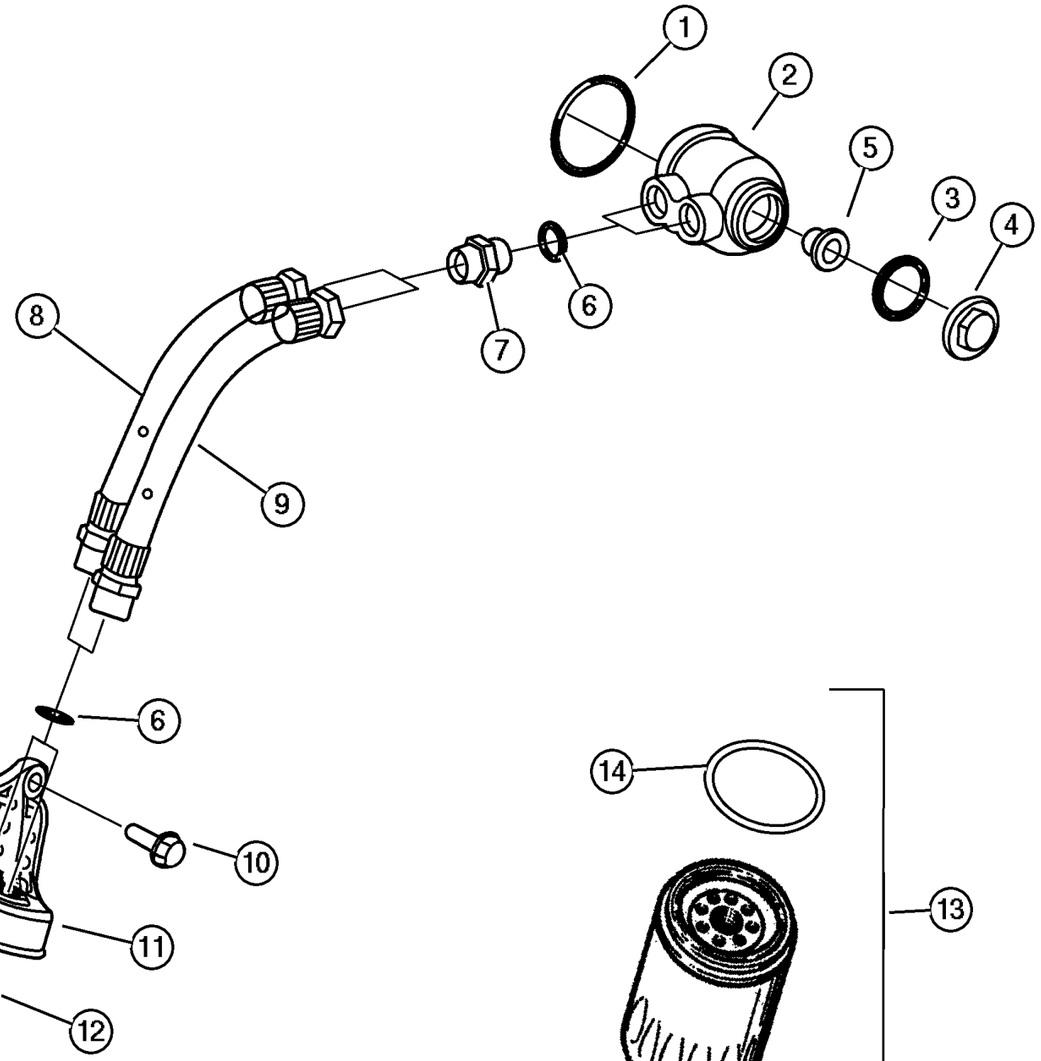

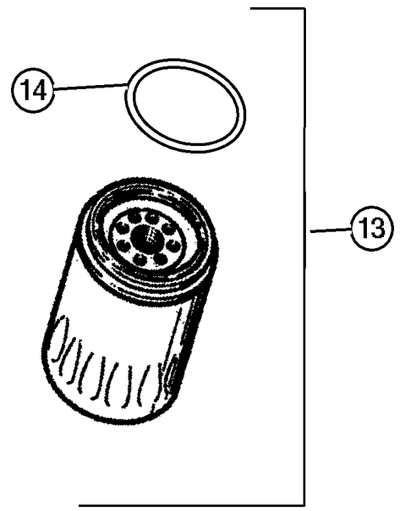

ITEM	PART NUMBER	QTY	LINE	SERIES	BODY	ENGINE	TRANS	TRIM	DESCRIPTION
NOTE:									
Sales Codes:									
[DBB]=All Manual Transmissions									
[DG0]=All Automatic Transmissions									
[EN0]=All 4 Cylinder Turbo Diesel Engines									
1	4720 375	1				EN0	DG0		O RING, Oil Filter Base
2	5072 716AA	1				EN0	DG0		ADAPTER, Oil Filter
3	4886 305AA	1				EN0	DG0		O RING, Oil Filter Adapter
4	5072 718AB	1				EN0	DG0		NUT
5	4723 334	1				EN0	DG0		GASKET, Valve
6	5066 946AA	1				EN0	DG0		GASKET
7	#5093 920AA	2				EN0	DG0		UNION
8	#5093 921AA	1				EN0	DG0		PIPE
9	#5093 919AA	1				EN0	DG0		PIPE
10	5003 532AA	1				EN0	DG0		BOLT, Adaptor Plate
11	5072 711AB	1				EN0	DG0		BRACKET, Oil Filter Housing
12	4897 252AA	1				EN0	DG0		UNION, Oil Filter Base
13	5003 558AA	1				EN0	DG0		FILTER, Engine Oil
14	5066 946AA	1				EN0	DG0		GASKET

JEEP LIBERTY (KJ)

SERIES	LINE	BODY	ENGINE	TRANSMISSION
P = Limited	J = LHD (4WD)	74 = 4 Dr. (104.3 WB)	ED1, ED0 = 2.4L Power Tech	DDK = 5 Speed HDManual
H = Sport	U = RHD (4WD)		EKG, EK0 = 3.7L Power Tech	DDD = 5 Speed HD Manual
M = Renegade	T = LHD (2WD)		ENJ = 2.5L 4Cyl Turbo Diesel	DG4,DGQ = Multi-Speed Auto
			ENR = 2.8L 4Cyl Turbo Diesel	DG6 = 4 Speed Auto Transm
			EN0 = 4Cyl Turbo Diesel	DG0 = All Automatic Transm
				DBB = All Manual Transm

AR = Use as required - = Non illustrated part # = New this model year

June 3, 2003

« RETURN TO GROUP INDEX

Manifolds, 2.8L Diesel [ENR]
Figure 2.8L-810

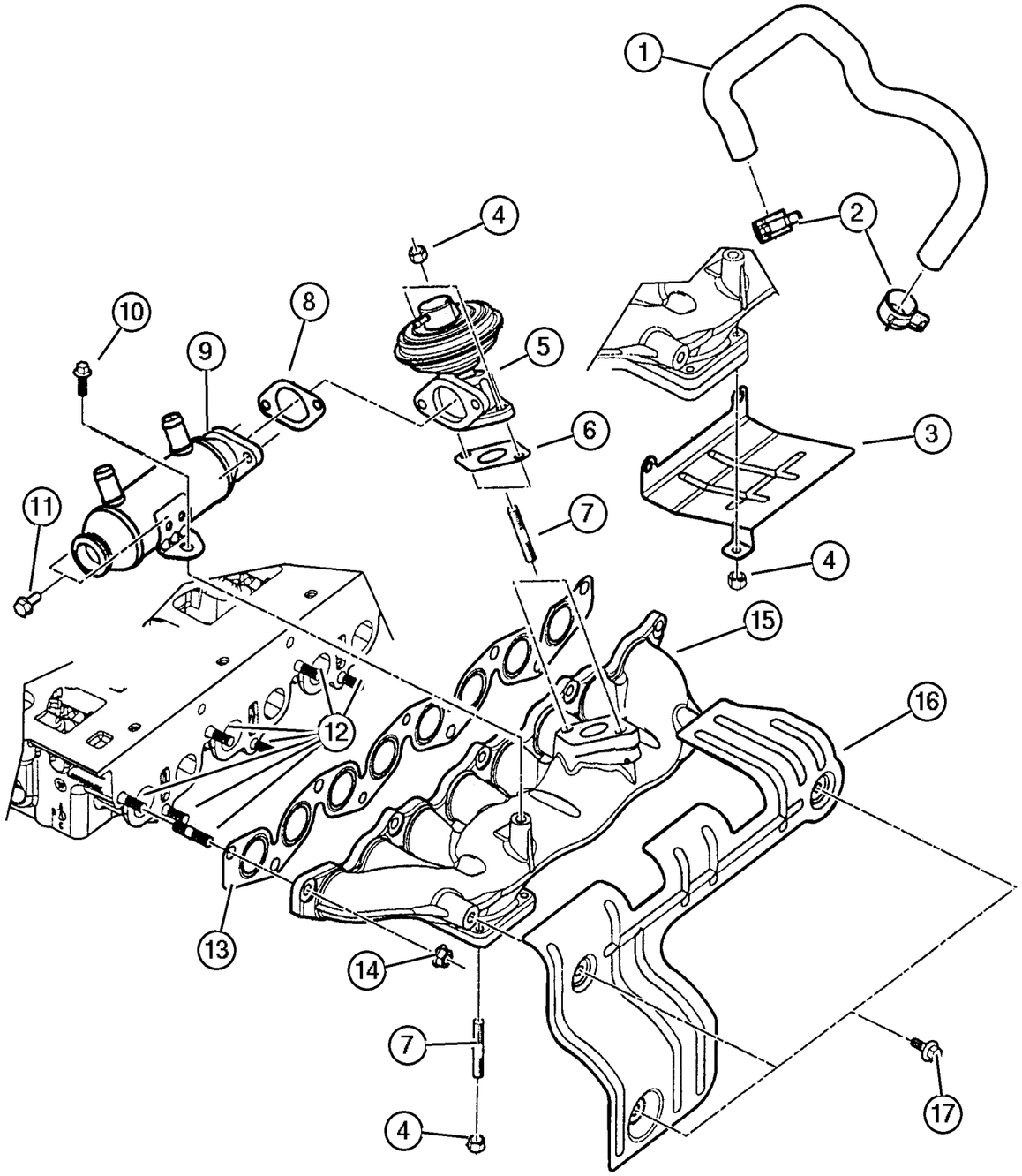

ITEM	PART NUMBER	QTY	LINE	SERIES	BODY	ENGINE	TRANS	TRIM	DESCRIPTION
Note; Sales Codes									
[DBB]= All Manual Transmissions									
[EN0]= All 4/5 Cylinder Turbo Diesels									
1	5072 689AA	1				EN0	DG0		PIPE, EGR to Manifold
2	4883 924AA	2				EN0	DG0		CLAMP, Heater Hose
3									SHIELD, Exhaust Manifold, (NOT SERVICED) (Not Serviced)
4	4882 610	6				EN0	DG0		NUT, Lock
5	5066 800AB	1				EN0	DG0		VALVE, EGR
6	5083 261AA	1				EN0	DG0		GASKET, EGR Tube Flange
7	4882 606	6				EN0	DG0		STUD, Turbo Elbow
8	5083 261AA	1				EN0	DG0		GASKET, EGR Tube Flange
9	5072 687AB	1				EN0	DG0		COOLER, EGR
10	5072 688AA	4				EN0	DG0		SCREW
11	5066 986AA	2				EN0	DG0		SCREW
12	5066 796AA	9				EN0	DG0		STUD, Turbo Elbow
13	#5093 904AA	1				EN0	DG0		GASKET, Intake/Exhaust Manifold
14	#5093 903AA	9				EN0	DG0		NUT, Lock
15	5072 686AA	1				EN0	DG0		MANIFOLD, Exhaust
16	5072 691AA	1				EN0	DG0		SHIELD, Exhaust Manifold
17	5072 688AA	4				EN0	DG0		SCREW

JEEP LIBERTY (KJ)

SERIES	LINE	BODY	ENGINE	TRANSMISSION
P = Limited	J = LHD (4WD)	74 = 4 Dr. (104.3 WB)	ED1, ED0 = 2.4L Power Tech	DDK = 5 Speed HDManual
H = Sport	U = RHD (4WD)		EKG, EK0 = 3.7L Power Tech	DDD = 5 Speed HD Manual
M = Renegade	T = LHD (2WD)		ENJ = 2.5L 4Cyl Turbo Diesel	DG4,DGQ = Multi-Speed Auto
			ENR = 2.8L 4Cyl Turbo Diesel	DG6 = 4 Speed Auto Transm
			EN0 = 4Cyl Turbo Diesel	DG0 = All Automatic Transm
				DBB = All Manual Transm

AR = Use as required - = Non illustrated part # = New this model year **June 3, 2003**

« RETURN TO GROUP INDEX

Crankcase Ventilation 2.8 Diesel [ENR]
Figure 2.8L-910

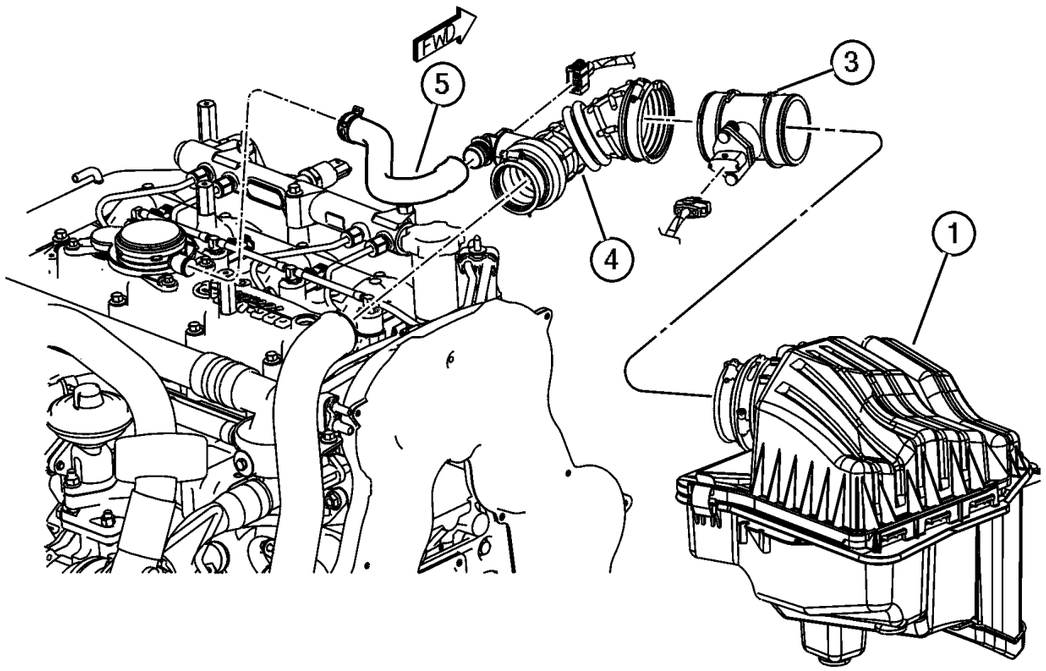

ITEM	PART NUMBER	QTY	LINE	SERIES	BODY	ENGINE	TRANS	TRIM	DESCRIPTION
Note; Sales Codes									
[EN0]= All 4/5 Cylinder Turbo Diesels									
1	53013 107AB	1				EN0			AIR CLEANER
-2	5018 777AA	1				EN0			FILTER, Air
3									SENSOR PACKAGE, Air Flow Meter, (NOT SERVICED) (Not Serviced)
4	#53013 104AB	1				EN0			HOSE, Clean Air
5	53013 094AC	1				EN0			HOSE, Oil Separator

JEEP LIBERTY (KJ)

SERIES	LINE	BODY	ENGINE	TRANSMISSION
P = Limited	J = LHD (4WD)	74 = 4 Dr. (104.3 WB)	ED1, ED0 = 2.4L Power Tech	DDK = 5 Speed HDManual
H = Sport	U = RHD (4WD)		EKG, EK0 = 3.7L Power Tech	DDD = 5 Speed HD Manual
M = Renegade	T = LHD (2WD)		ENJ = 2.5L 4Cyl Turbo Diesel	DG4,DGQ = Multi-Speed Auto
			ENR = 2.8L 4Cyl Turbo Diesel	DG6 = 4 Speed Auto Transm
			EN0 = 4Cyl Turbo Diesel	DG0 = All Automatic Transm
				DBB = All Manual Transm

Group – 2.5LD

Engine 2.5L Four Cylinder (Turbo Diesel)

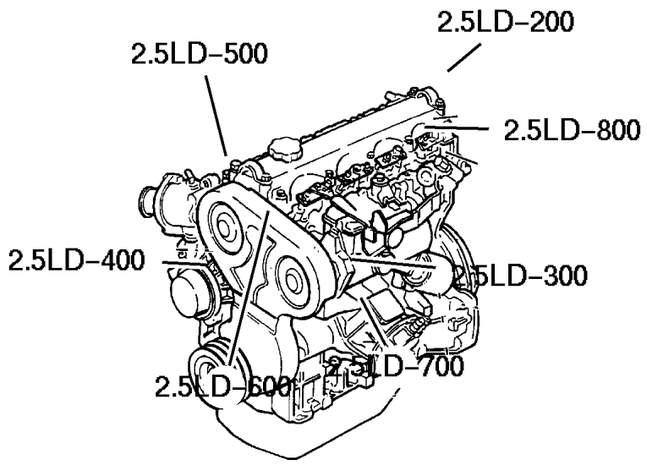

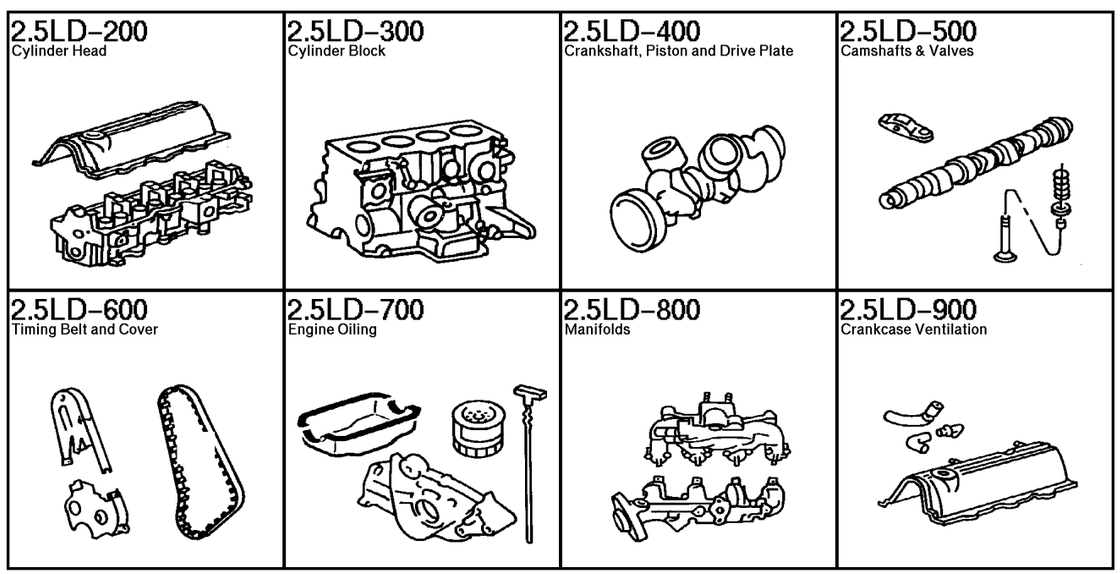

GROUP 2.5LD - Engine 2.5L Four Cylinder (Turbo Diesel)

Illustration Title	Group-Fig. No.
Cylinder Head	
Cylinder Head 2.5 [ENJ] [ENJ]	Fig. 2.5LD-210
Cylinder Block	
Cylinder Block 2.5 [ENJ] [ENJ]	Fig. 2.5LD-310
Crankshaft, Piston and Drive Plate	
Crankshaft,Pistons & Related Parts 2.5 [ENJ] [ENJ]	Fig. 2.5LD-410
Camshafts & Valves	
Camshaft & Valves 2.5 [ENJ] [ENJ]	Fig. 2.5LD-510
Timing Belt and Cover	
Timing Cover & Related Parts [ENJ]	Fig. 2.5LD-610
Engine Oiling	
Engine Oiling & Balance Shafts [ENJ]	Fig. 2.5LD-710
Oil Cooler [ENJ]	Fig. 2.5LD-720
Oil Lines [ENJ]	Fig. 2.5LD-730
Manifolds	
Manifolds [ENJ]	Fig. 2.5LD-810
Crankcase Ventilation	
Crankcase Ventilation [ENJ]	Fig. 2.5LD-910

Cylinder Head 2.5 [ENJ] [ENJ]
Figure 2.5LD-210

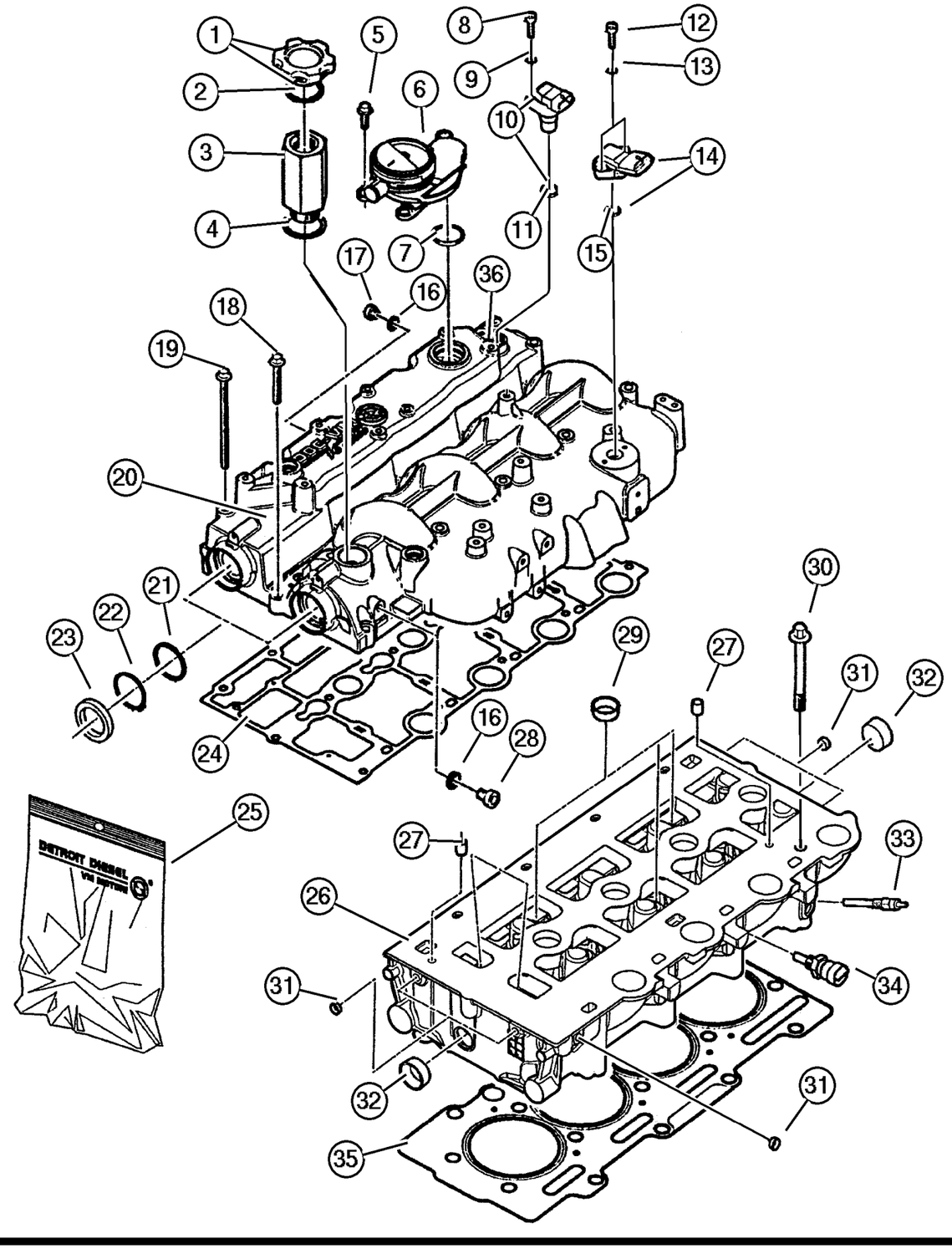

ITEM	PART NUMBER	QTY	LINE	SERIES	BODY	ENGINE	TRANS	TRIM	DESCRIPTION
NOTE:									
Sales Codes:									
[DBB] = All Manual Transmissions									
[DG0] = All Automatic Transmissions									
[EN0] = All 4 Cylinder Turbo Diesel Engines									
1	4863 741	1				EN0	DBB		CAP, Oil Filler
2	4720 300	1				EN0	DBB		GASKET, Oil Filler Cap
3	5072 678AA	1				EN0	DBB		SPACER, Oil Filler
4	5066 853AA	1				EN0	DBB		GASKET, Oil Filler Connector
5	5003 553AA	1				EN0	DBB		SCREW
6	5066 845AA	1				EN0	DBB		VALVE, Pressure Control
7	5069 132AA	1				EN0	DBB		O RING, Pressure Relief Valve
8	5003 551AA	1				EN0	DBB		BOLT, M6x10
9	4723 204	1				EN0	DBB		WASHER, Implement Attaching
10	5066 856AA	1				EN0	DBB		SENSOR, Camshaft
11	5066 860AA	1				EN0	DBB		O RING
12	5010 858AA	1				EN0	DBB		SCREW
13	4723 168	1				EN0	DBB		WASHER, Fuel Solenoid Wire
14	#5093 898AA	1				EN0	DBB		SENSOR, Air Temperature
15	4864 689	1				EN0	DBB		O RING
16	4720 713	1				EN0	DBB		WASHER, Implement Attaching
17	5066 787AA	2				EN0	DBB		PLUG, Cylinder Block
18	5066 960AA	6				EN0	DBB		SCREW
19	5066 959AA	1				EN0	DBB		SCREW
20	#5093 896AA	1				EN0	DBB		COVER, Cylinder Head
21	5066 844AA	1				EN0	DBB		SPACER
22	5066 841AA	2				EN0	DBB		SNAP RING
23	5066 958AA	1				EN0	DBB		SEAL
24	5066 786AA	1				EN0	DBB		GASKET, Valve Cover
25	5066 785AA	1				EN0	DBB		GASKET KIT, Cylinder Head Overhall
26	#5093 893AA	1				EN0	DBB		HEAD, Cylinder
27	4720 165	1				EN0	DBB		DOWEL, Rocker
28	5066 913AA	1				EN0	DBB		STUD
29	4723 228	3				EN0	DBB		PLUG, Cylinder Block Oil Hole
30	5066 957AB	18				EN0	DBB		BOLT, Cylinder Head
31	5066 837AA	5				EN0	DBB		PLUG, Cylinder Block
32	5066 836AA	2				EN0	DBB		PLUG, Cylinder Block
33	5066 840AA	4				EN0	DBB		GLOW PLUG
34	5066 779AA	1				EN0	DBB		SENSOR, Temperature Sending Unit
35									GASKET, Cylinder Head

JEEP LIBERTY (KJ)

SERIES	LINE	BODY	ENGINE	TRANSMISSION
P = Limited	J = LHD (4WD)	74 = 4 Dr. (104.3 WB)	ED1, ED0 = 2.4L Power Tech	DDK = 5 Speed HDManual
H = Sport	U = RHD (4WD)		EKG, EK0 = 3.7L Power Tech	DDD = 5 Speed HD Manual
M = Renegade	T = LHD (2WD)		ENJ = 2.5L 4Cyl Turbo Diesel	DG4,DGQ = Multi-Speed Auto
			ENR = 2.8L 4Cyl Turbo Diesel	DG6 = 4 Speed Auto Transm
			EN0 = 4Cyl Turbo Diesel	DG0 = All Automatic Transm
				DBB = All Manual Transm

AR = Use as required - = Non illustrated part # = New this model year

June 3, 2003

« RETURN TO GROUP INDEX »

Cylinder Head 2.5 [ENJ] [ENJ]
Figure 2.5LD-210

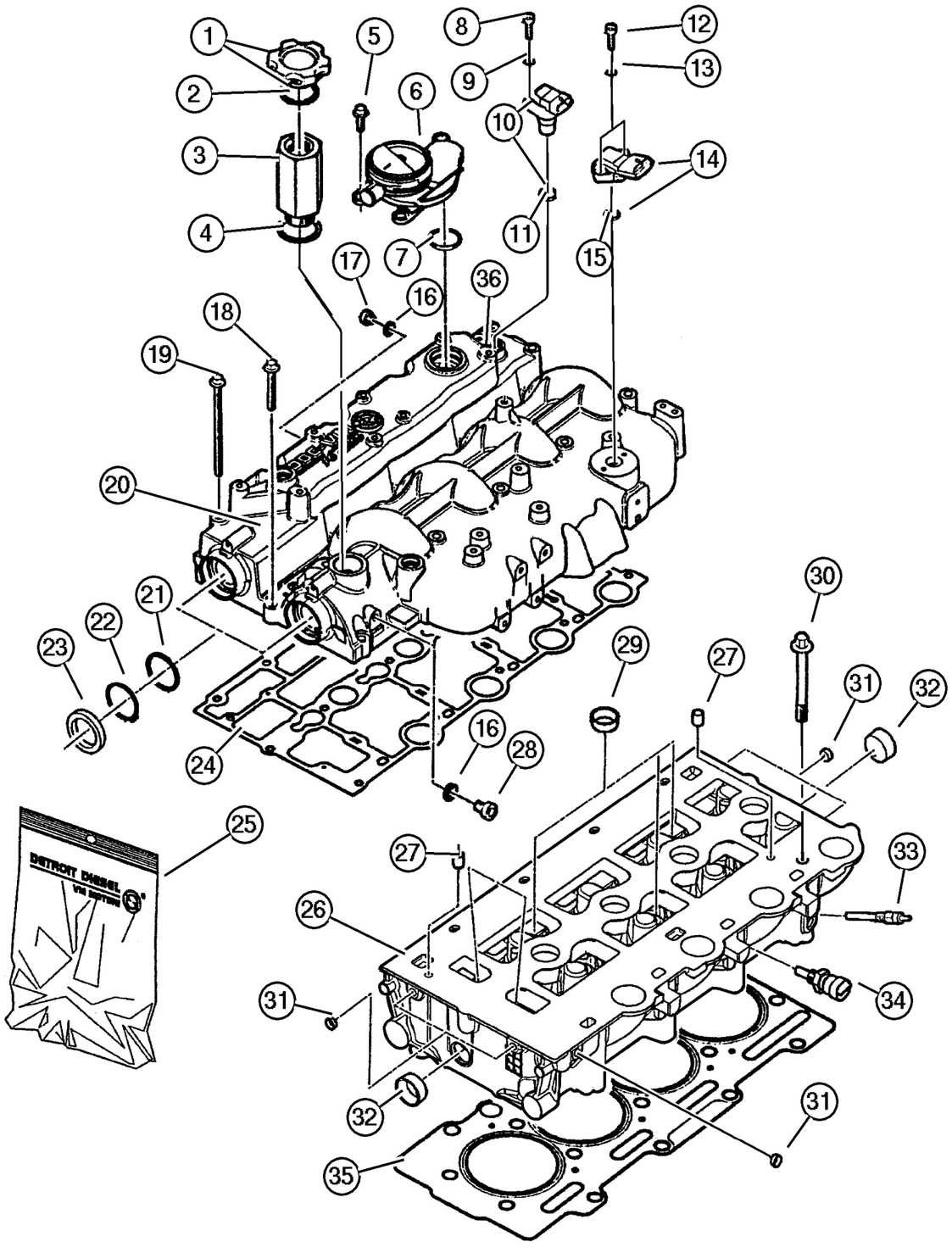

ITEM	PART NUMBER	QTY	LINE	SERIES	BODY	ENGINE	TRANS	TRIM	DESCRIPTION
	5072 675AA	1				EN0	DBB		[1.32MM]
	5072 676AA	1				EN0	DBB		[1.42MM]
	5072 677AA	1				EN0	DBB		[1.52MM]
36	#5093 895AA	1				EN0	DBB		STUD
-37	4882 405	4				EN0	DBB		STUD

JEEP LIBERTY (KJ)

SERIES	LINE	BODY	ENGINE	TRANSMISSION
P = Limited	J = LHD (4WD)	74 = 4 Dr. (104.3 WB)	ED1, ED0 = 2.4L Power Tech	DDK = 5 Speed HDManual
H = Sport	U = RHD (4WD)		EKG, EK0 = 3.7L Power Tech	DDD = 5 Speed HD Manual
M = Renegade	T = LHD (2WD)		ENJ = 2.5L 4Cyl Turbo Diesel	DG4,DGQ = Multi-Speed Auto
			ENR = 2.8L 4Cyl Turbo Diesel	DG6 = 4 Speed Auto Transm
			EN0 = 4Cyl Turbo Diesel	DG0 = All Automatic Transm
				DBB = All Manual Transm

AR = Use as required - = Non illustrated part # = New this model year

June 3, 2003

« RETURN TO GROUP INDEX

Cylinder Block 2.5 [ENJ] [ENJ]
Figure 2.5LD-310

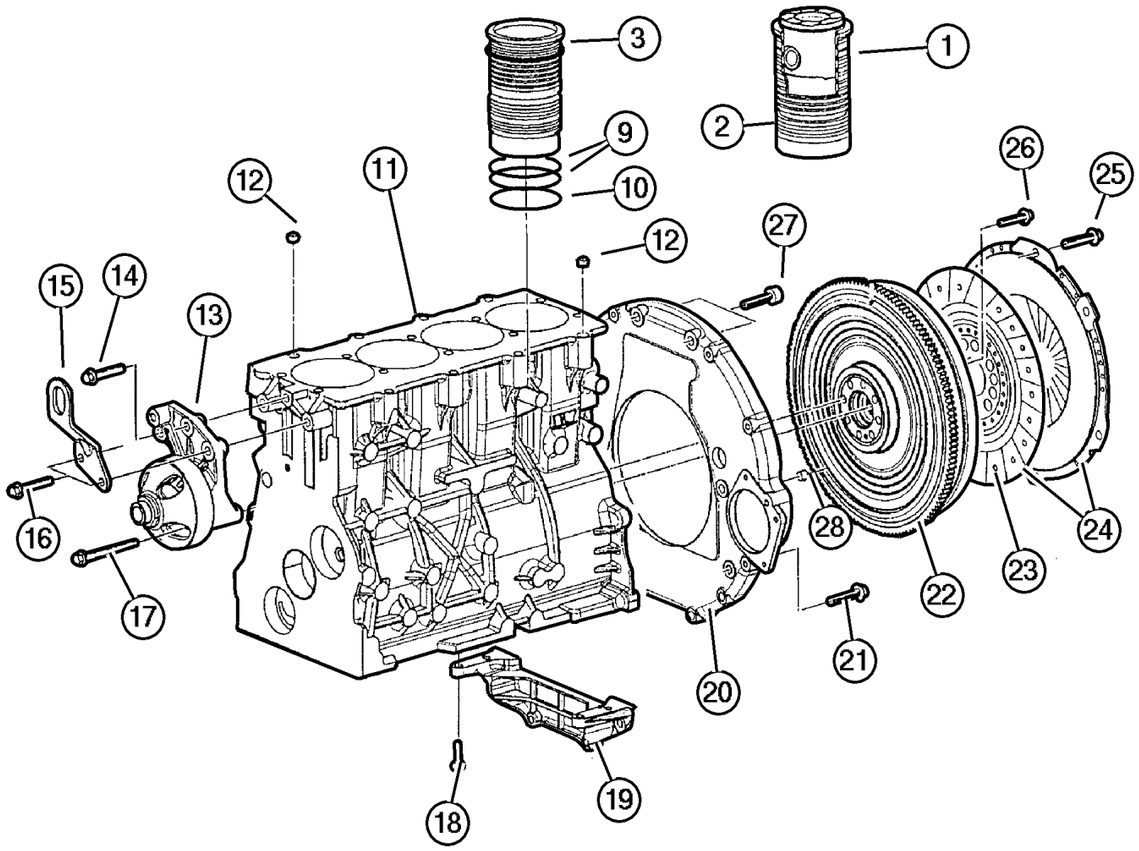

ITEM	PART NUMBER	QTY	LINE	SERIES	BODY	ENGINE	TRANS	TRIM	DESCRIPTION
NOTE:									
Sales Codes:									
[DBB]=All Manual Transmissions									
[DG0]=All Automatic Transmissions									
[EN0]=All 4 Cylinder Turbo Diesel Engines									
1	#5093 877AA	4				EN0	DBB		LINER AND PISTON, Cylinder, Complete Assembly
2	#5093 878AA	4				EN0	DBB		LINER, Cylinder, Liner Only
3	4720 620	4				EN0	DBB		SHIM, Cylinder Liner, 0.15mm
-4	5066 747AA	4				EN0	DBB		SHIM KIT, Cylinder Liner, Standard
-5	4720 624	4				EN0	DBB		SHIM, Cylinder Liner, 0.17mm
-6	4720 621	4				EN0	DBB		SHIM, Cylinder Liner, 0.20mm
-7	4720 623	4				EN0	DBB		SHIM, Cylinder Liner, 0.23mm
-8	4720 622	4				EN0	DBB		SHIM, Cylinder Liner, 0.25mm
9	4720 627	8				EN0	DBB		O RING, Cylinder Liner
10	4720 625	4				EN0	DBB		O RING, Cylinder Liner
11	#5096 179AA	1				EN0	DBB		ENGINE, 3/4 Tested, Diesel
12	4720 237	2				EN0	DBB		DOWEL, Transmission Adapter
13	5072 447AA	1				EN0	DBB		BRACKET, Fan
14	5066 939AA	1				EN0	DBB		SCREW
15	5072 754AA	1				EN0	DBB		BRACKET, Engine Lift
16	5003 533AA	2				EN0	DBB		BOLT, M10x45
17	5015 067AA	1				EN0	DBB		BOLT, Hex Flange Head
18	4720 684	4				EN0	DBB		BOLT
19	5072 753AA	1				EN0	DBB		BRACKET
20	#5093 879AA	1				EN0	DBB		HOUSING, Flywheel
21	5003 532AA	4				EN0	DBB		BOLT, Adaptor Plate
22	52104 420AB	1				EN0	DBB		FLYWHEEL
23	52104 303AA	1				EN0	DBB		DISC, Clutch
24	5066 191AA	1				EN0	DBB		CLUTCH PACKAGE
25	5072 396AA	6				EN0	DBB		BOLT
26	5072 664AA	8				EN0	DBB		BOLT
27	4864 757	2				EN0	DBB		BOLT
28	5015 045AA	2				EN0	DBB		DOWEL, Transmission Adapter
-29	4720 304	1				EN0	DBB		DOWEL, Front Cover
-30	#5093 909AA	1				EN0	DBB		PLUG, Cylinder Block

JEEP LIBERTY (KJ)

SERIES	LINE	BODY	ENGINE	TRANSMISSION
P = Limited	J = LHD (4WD)	74 = 4 Dr. (104.3 WB)	ED1, ED0 = 2.4L Power Tech	DDK = 5 Speed HDManual
H = Sport	U = RHD (4WD)		EKG, EK0 = 3.7L Power Tech	DDD = 5 Speed HD Manual
M = Renegade	T = LHD (2WD)		ENJ = 2.5L 4Cyl Turbo Diesel	DG4,DGQ = Multi-Speed Auto
			ENR = 2.8L 4Cyl Turbo Diesel	DG6 = 4 Speed Auto Transm
			EN0 = 4Cyl Turbo Diesel	DG0 = All Automatic Transm
				DBB = All Manual Transm

Crankshaft,Pistons & Related Parts 2.5 [ENJ] [ENJ]
Figure 2.5LD-410

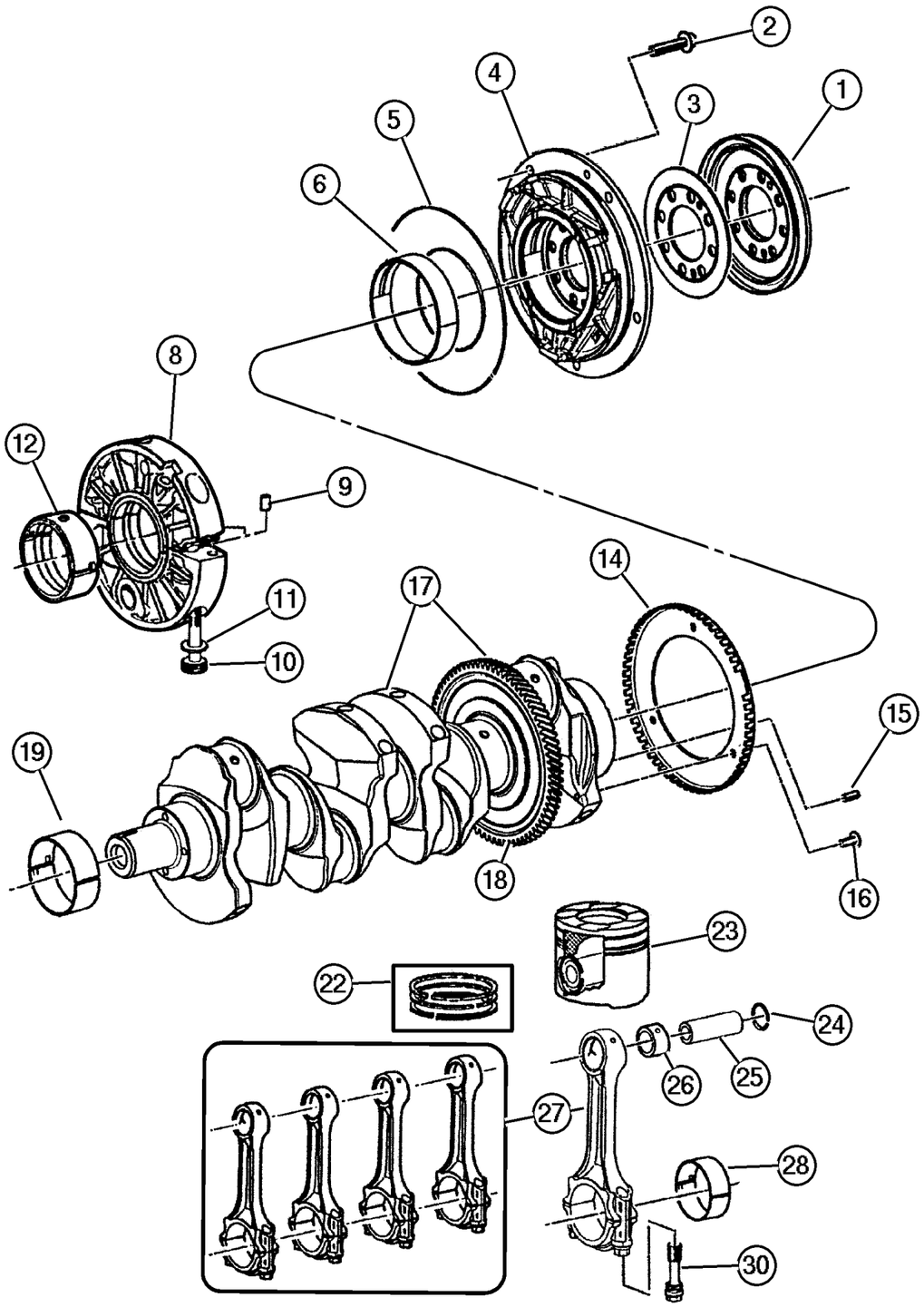

ITEM	PART NUMBER	QTY	LINE	SERIES	BODY	ENGINE	TRANS	TRIM	DESCRIPTION
NOTE:									
Sales Codes:									
[DBB]=All Manual Transmissions									
[DG0]=All Automatic Transmissions									
[EN0]=All 4 Cylinder Turbo Diesel Engines									
1	5066 756AA	1				EN0	DBB		SEAL, Crankshaft Oil, Rear
2	4864 537	5				EN0	DBB		BOLT, 8Mx20
3	#5093 882AA	1				EN0	DBB		WASHER, Thrust
4	#5101 924AA	1				EN0	DBB		HOUSING, Rear Bearing
5	4720 277	1				EN0	DBB		O RING, Crankshaft Rear Support
6	5066 761AA	1				EN0	DBB		BEARING, Crankshaft
-7	5066 762AA	1				EN0	DBB		BEARING, Crankshaft
8	5066 757AA	1				EN0	DBB		HOUSING, Crankshaft Bearing
9	4720 241	6				EN0	DBB		DOWEL, Center Bearing Housing
10	4720 242	1				EN0	DBB		SCREW
11	4720 243	1				EN0	DBB		WASHER, Lock, M10
12	5069 079AA	3				EN0	DBB		BEARING, Crankshaft, STD.
-13	5069 080AA	3				EN0	DBB		BEARING, Crankshaft, .250mm U/S
14	5066 833AB	1				EN0	DBB		SENSOR, Crankshaft
15	#5093 885AA	1				EN0	DBB		PIN, Spring
16	5069 137AA	3				EN0	DBB		SCREW
17	#5093 880AB	1				EN0	DBB		CRANKSHAFT
18	5066 977AA	1				EN0	DBB		GEAR, Ring
19	5069 077AA	1				EN0	DBB		BEARING, Crankshaft, STD.
-20	5018 726AA	8				EN0	DBB		BEARING, Crankshaft
-21	5069 078AA	1				EN0	DBB		BEARING, Crankshaft, .250mm U/S
22	5066 759AA	4				EN0	DBB		RING KIT, Piston, Standard
23	#5093 884AA	4				EN0	DBB		PISTON
24	#5093 886AA	8				EN0	DBB		RING, Piston Pin
25									PIN, Piston, Serviced With Item 22, (NOT SERVICED) (Not Serviced)
26	#5093 887AA	4				EN0	DBB		BUSHING, Connecting Rod
27	#5093 883AA	1				EN0	DBB		ROD, Connecting
28	4720 877	4				EN0	DBB		BEARING, Connecting Rod, STD.
-29	4720 883	4				EN0	DBB		BEARING, Connecting Rod, .25 mm U/S
30	#5093 889AA	8				EN0	DBB		BOLT, Connecting Rod
-31	5072 673AA	1				EN0	DBB		PUMP, Vacuum
-32	5066 763AA	1				EN0	DBB		O RING, Crankshaft Rear Support

JEEP LIBERTY (KJ)

SERIES	LINE	BODY	ENGINE	TRANSMISSION
P = Limited	J = LHD (4WD)	74 = 4 Dr. (104.3 WB)	ED1, ED0 = 2.4L Power Tech	DDK = 5 Speed HDManual
H = Sport	U = RHD (4WD)		EKG, EK0 = 3.7L Power Tech	DDD = 5 Speed HD Manual
M = Renegade	T = LHD (2WD)		ENJ = 2.5L 4Cyl Turbo Diesel	DG4,DGQ = Multi-Speed Auto
			ENR = 2.8L 4Cyl Turbo Diesel	DG6 = 4 Speed Auto Transm
			EN0 = 4Cyl Turbo Diesel	DG0 = All Automatic Transm
				DBB = All Manual Transm

AR = Use as required - = Non illustrated part # = New this model year **June 3, 2003**

« RETURN TO GROUP INDEX

Camshaft & Valves 2.5 [ENJ] [ENJ]
Figure 2.5LD-510

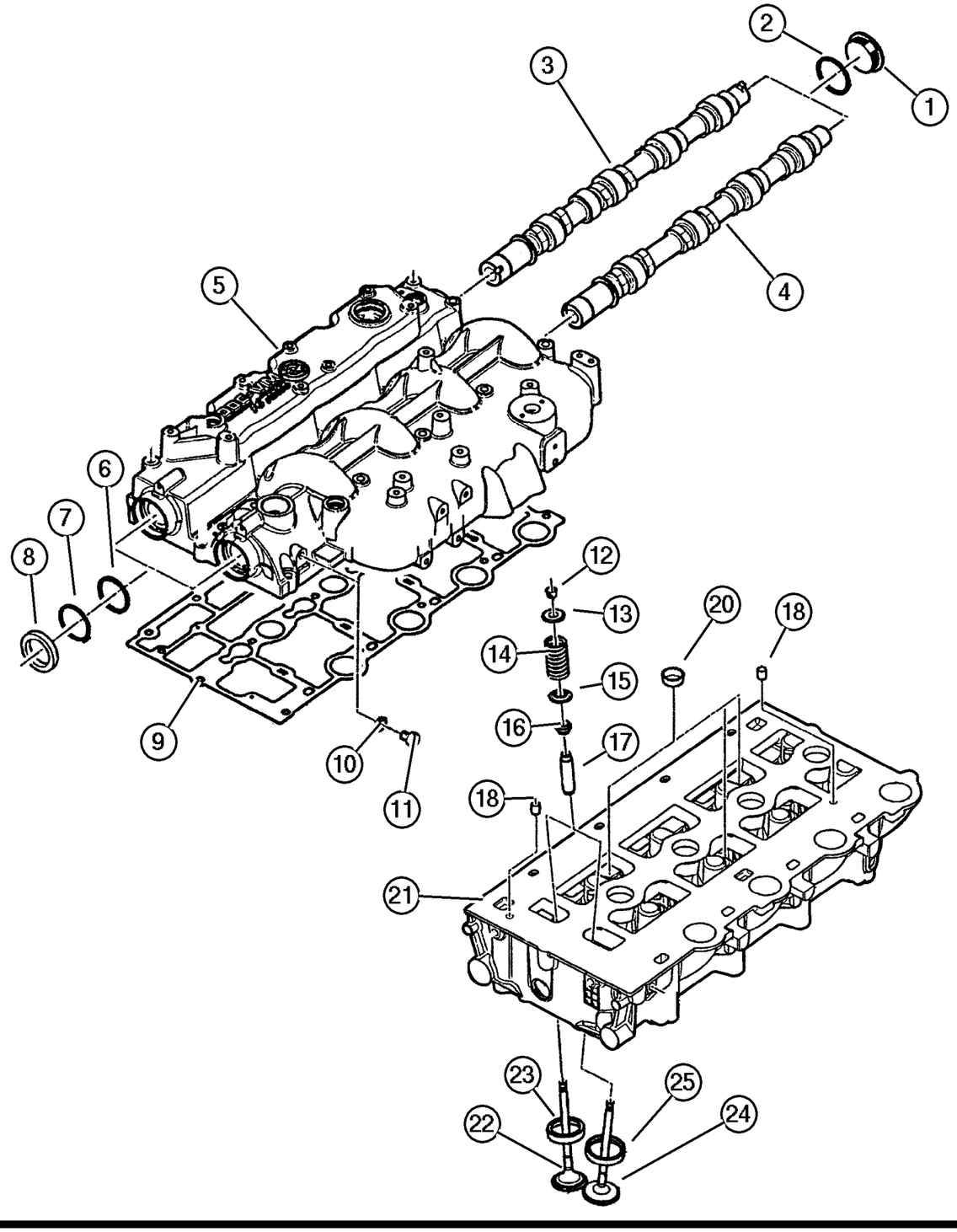

ITEM	PART NUMBER	QTY	LINE	SERIES	BODY	ENGINE	TRANS	TRIM	DESCRIPTION
NOTE:									
Sales Codes:									
[DBB]=All Manual Transmissions									
[DG0]=All Automatic Transmissions									
[EN0]=All 4 Cylinder Turbo Diesel Engines									
1	5066 855AA	2				EN0	DBB		PLUG, Camshaft
2	5066 811AA	2				EN0	DBB		WASHER, Plain, 16.2x19.9x1.5
3	5066 847AB	1				EN0	DBB		CAMSHAFT, Intake
4	5066 850AB	1				EN0	DBB		CAMSHAFT, Exhaust
5	#5093 896AA	1				EN0	DBB		COVER, Cylinder Head
6	5066 844AA	2				EN0	DBB		SPACER
7	5066 841AA	2				EN0	DBB		SNAP RING
8	5066 958AA	2				EN0	DBB		SEAL
9	5066 786AA	1				EN0	DBB		GASKET, Valve Cover
10	4720 713	2				EN0	DBB		WASHER, Implement Attaching
11	5066 787AA	2				EN0	DBB		PLUG, Cylinder Block
12	5066 778AA	32				EN0	DBB		LOCK, Valve Spring Retainer
13	#5093 892AA	16				EN0	DBB		RETAINER, Valve Spring
14	5066 776AA	16				EN0	DBB		SPRING, Valve
15	5066 775AA	16				EN0	DBB		SEAL, Valve Guide
16	#5093 891AA	16				EN0	DBB		SEAL, Valve Guide
17	5066 773AA	16				EN0	DBB		GUIDE, Intake/Exhaust Valve, Standard Size
18	4720 165	2				EN0	DBB		DOWEL, Rocker
-19	5066 780AA	16				EN0	DBB		ROCKER ARM, Inlet and Exhaust Valve
20	4723 211	2				EN0	DBB		PLUG, Cylinder Block Oil Hole
21	#5093 893AA	1				EN0	DBB		HEAD, Cylinder
22	5066 769AA	8				EN0	DBB		VALVE, Exhaust, Standard
23	5066 771AA	8				EN0	DBB		SEAT, Exhaust Valve, 0.30mm Oversize
24	5066 770AA	8				EN0	DBB		VALVE, Intake, Standard
25	5066 772AA	8				EN0	DBB		SEAT, Intake Valve

JEEP LIBERTY (KJ)

SERIES	LINE	BODY	ENGINE	TRANSMISSION
P = Limited	J = LHD (4WD)	74 = 4 Dr. (104.3 WB)	ED1, ED0 = 2.4L Power Tech	DDK = 5 Speed HDManual
H = Sport	U = RHD (4WD)		EKG, EK0 = 3.7L Power Tech	DDD = 5 Speed HD Manual
M = Renegade	T = LHD (2WD)		ENJ = 2.5L 4Cyl Turbo Diesel	DG4,DGQ = Multi-Speed Auto
			ENR = 2.8L 4Cyl Turbo Diesel	DG6 = 4 Speed Auto Transm
			EN0 = 4Cyl Turbo Diesel	DG0 = All Automatic Transm
				DBB = All Manual Transm

AR = Use as required - = Non illustrated part # = New this model year

June 3, 2003

« RETURN TO GROUP INDEX

Timing Cover & Related Parts [ENJ]
Figure 2.5LD-610

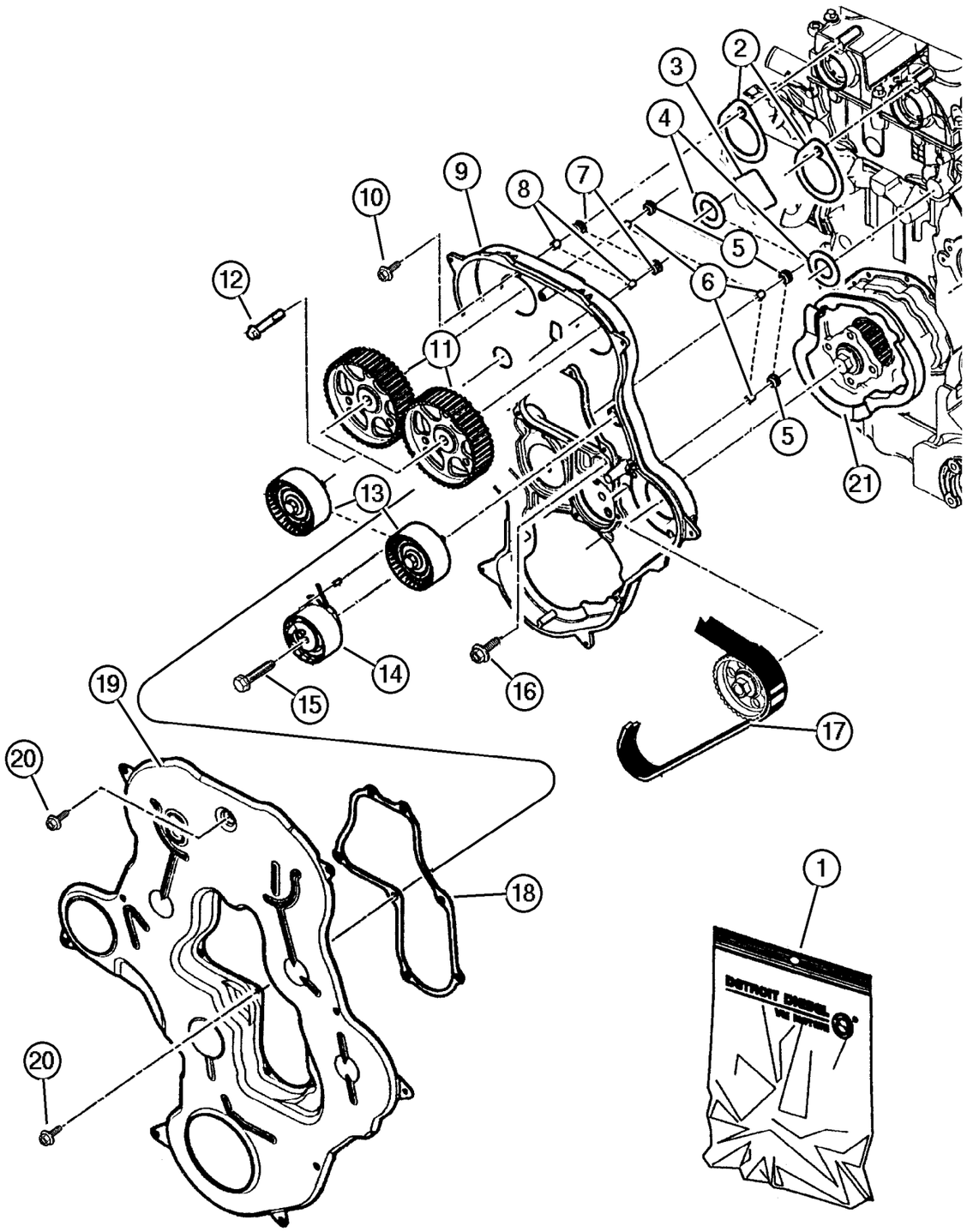

ITEM	PART NUMBER	QTY	LINE	SERIES	BODY	ENGINE	TRANS	TRIM	DESCRIPTION
NOTE:									
Sales Codes:									
[DBB]=All Manual Transmissions									
[DG0]=All Automatic Transmissions									
[EN0]=All 4 Cylinder Turbo Diesel Engines									
1	5019 861AA	1				EN0	DBB		GASKET KIT, Timing Cover
2									GASKET, Serviced In # 1, (NOT SERVICED) (Not Serviced)
3									GASKET, Serviced In # 1, (NOT SERVICED) (Not Serviced)
4									GASKET, Serviced In # 1, (NOT SERVICED) (Not Serviced)
5									DAMPER, Vibration, Serviced In # 1, (NOT SERVICED) (Not Serviced)
6									BUSHING, Balance Shaft, Serviced In # 1, (NOT SERVICED) (Not Serviced)
7									DAMPER, Vibration, Serviced In # 1, (NOT SERVICED) (Not Serviced)
8									BUSHING, Balance Shaft, Serviced In # 1, (NOT SERVICED) (Not Serviced)
9	5073 446AB	1				EN0	DBB		COVER, Timing Case
10	5069 114AA	5				EN0	DBB		SCREW
11	5066 926AA	2				EN0	DBB		GEAR, Balance Shaft
12	4897 825AA	2				EN0	DBB		SCREW
13	#5093 931AA	2				EN0	DBB		PULLEY, Idler
14	5066 826AA	1				EN0	DBB		TENSIONER, Belt
15	5015 031AA	1				EN0	DBB		SCREW
16	5003 532AA	3				EN0	DBB		BOLT, Adaptor Plate
17	5066 928AA	1				EN0	DBB		BELT, Timing
18	5066 921AA	1				EN0	DBB		GASKET, Timing Cover
19	5066 919AB	1				EN0	DBB		COVER, Timing Case
20	5069 112AA	17				EN0	DBB		SCREW
21	4863 779	1				EN0	DBB		GASKET, Vacuum Pump, .

JEEP LIBERTY (KJ)

SERIES	LINE	BODY	ENGINE	TRANSMISSION
P = Limited	J = LHD (4WD)	74 = 4 Dr. (104.3 WB)	ED1, ED0 = 2.4L Power Tech	DDK = 5 Speed HDManual
H = Sport	U = RHD (4WD)		EKG, EK0 = 3.7L Power Tech	DDD = 5 Speed HD Manual
M = Renegade	T = LHD (2WD)		ENJ = 2.5L 4Cyl Turbo Diesel	DG4,DGQ = Multi-Speed Auto
			ENR = 2.8L 4Cyl Turbo Diesel	DG6 = 4 Speed Auto Transm
			EN0 = 4Cyl Turbo Diesel	DG0 = All Automatic Transm
				DBB = All Manual Transm

Engine Oiling & Balance Shafts [ENJ]
Figure 2.5LD-710

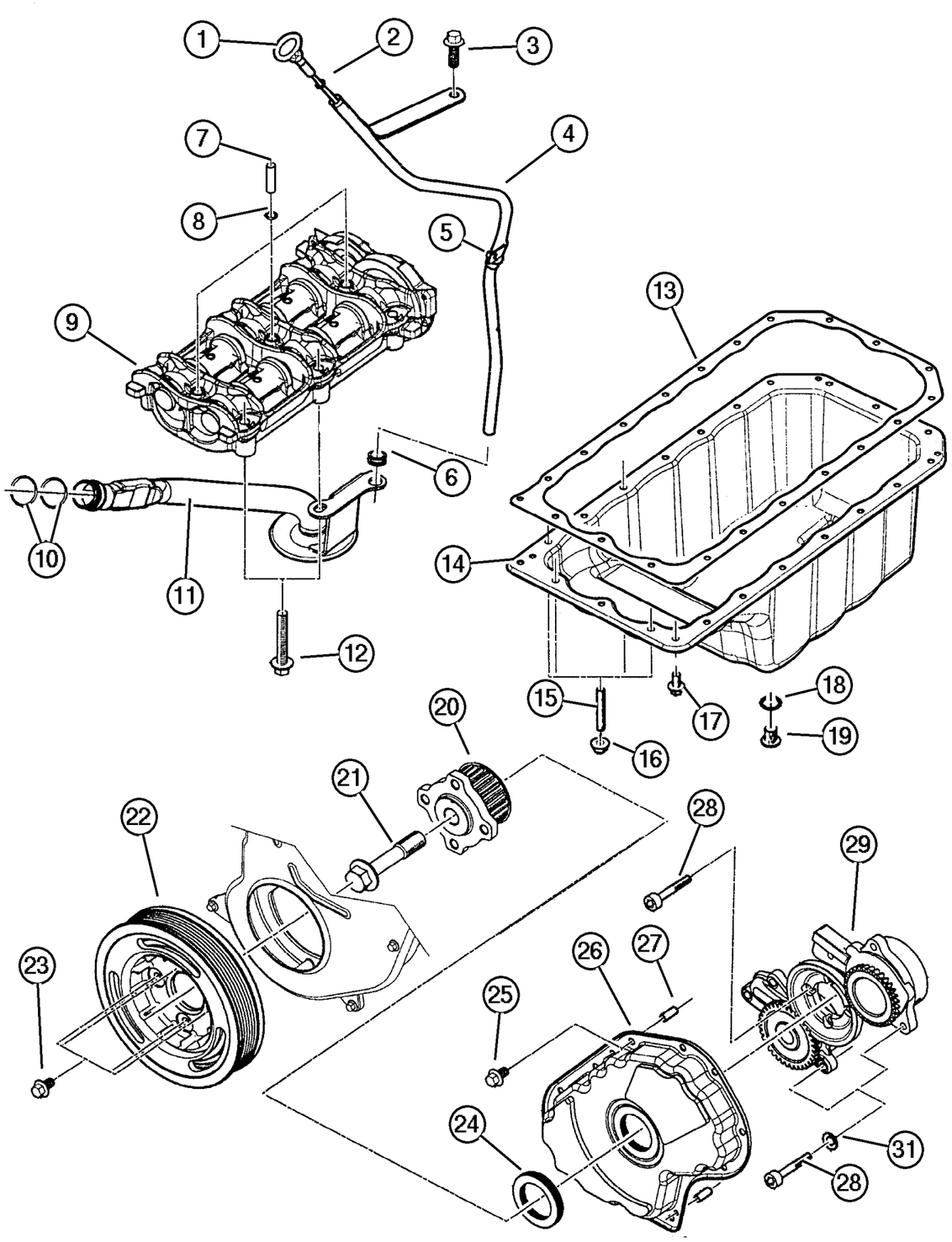

ITEM	PART NUMBER	QTY	LINE	SERIES	BODY	ENGINE	TRANS	TRIM	DESCRIPTION
NOTE:									
Sales Codes:									
[DBB]=All Manual Transmissions									
[DG0]=All Automatic Transmissions									
[EN0]=All 4 Cylinder Turbo Diesel Engines									
1	5072 682AB	1				EN0	DBB		INDICATOR, Engine Oil Level
2	4720 373	1				EN0	DBB		O RING, Engine Oil Indicator
3	5003 554AA	1				EN0	DBB		SCREW
4	5072 681AC	1				EN0	DBB		TUBE, Oil Gauge
5	5083 157AA	1				EN0	DBB		O RING
6	4720 362	1				EN0	DBB		GASKET, Engine Oil Indicator Pipe
7	#5093 899AA	3				EN0	DBB		PIN
8	5066 899AA	3				EN0	DBB		O RING
9	5066 890AA	1				EN0	DBB		SHAFT, Balance
10	5066 789AB	2				EN0	DBB		O RING, Oil Suction Tube
11	5072 680AB	1				EN0	DBB		PICKUP, Engine Oil
12	5066 962AA	6				EN0	DBB		SCREW
13	5066 901AA	1				EN0	DBB		GASKET, Oil Pan
14	5072 683AA	1				EN0	DBB		PAN, Engine Oil
15	4864 748	21				EN0	DBB		BOLT
16									NUT, Suction Pipe Attaching, (NOT REQUIRED)
17	4864 748	21				EN0	DBB		BOLT
18	4720 353	1				EN0	DBB		WASHER, Plain
19	4720 352	1				EN0	DBB		PLUG, Oil Drain
20	5066 978AA	1				EN0	DBB		PULLEY, Crankshaft
21	5066 832AA	1				EN0	DBB		SCREW
22	5072 669AA	1				EN0	DBB		PULLEY, Crankshaft
23	5069 138AA	4				EN0	DBB		SCREW, Damper Mounting
24	5072 670AA	1				EN0	DBB		SEAL, Front Main Crankshaft
25	4864 748	12				EN0	DBB		BOLT
26	5066 955AA	1				EN0	DBB		COVER, Timing Belt
27	5066 834AA	2				EN0	DBB		PIN
28	4720 658	10				EN0	DBB		SCREW, Intake Manifold Elbow
29	#5093 890AA	1				EN0	DBB		PUMP, Engine Oil
-30	5072 672AA	1				EN0	DBB		GEAR, Ring
31	4723 204	5				EN0	DBB		WASHER, Implement Attaching

JEEP LIBERTY (KJ)

SERIES	LINE	BODY	ENGINE	TRANSMISSION
P = Limited	J = LHD (4WD)	74 = 4 Dr. (104.3 WB)	ED1, ED0 = 2.4L Power Tech	DDK = 5 Speed HDManual
H = Sport	U = RHD (4WD)		EKG, EK0 = 3.7L Power Tech	DDD = 5 Speed HD Manual
M = Renegade	T = LHD (2WD)		ENJ = 2.5L 4Cyl Turbo Diesel	DG4,DGQ = Multi-Speed Auto
			ENR = 2.8L 4Cyl Turbo Diesel	DG6 = 4 Speed Auto Transm
			EN0 = 4Cyl Turbo Diesel	DG0 = All Automatic Transm
				DBB = All Manual Transm

AR = Use as required - = Non illustrated part # = New this model year **June 3, 2003**

« RETURN TO GROUP INDEX

Oil Cooler [ENJ]
Figure 2.5LD-720

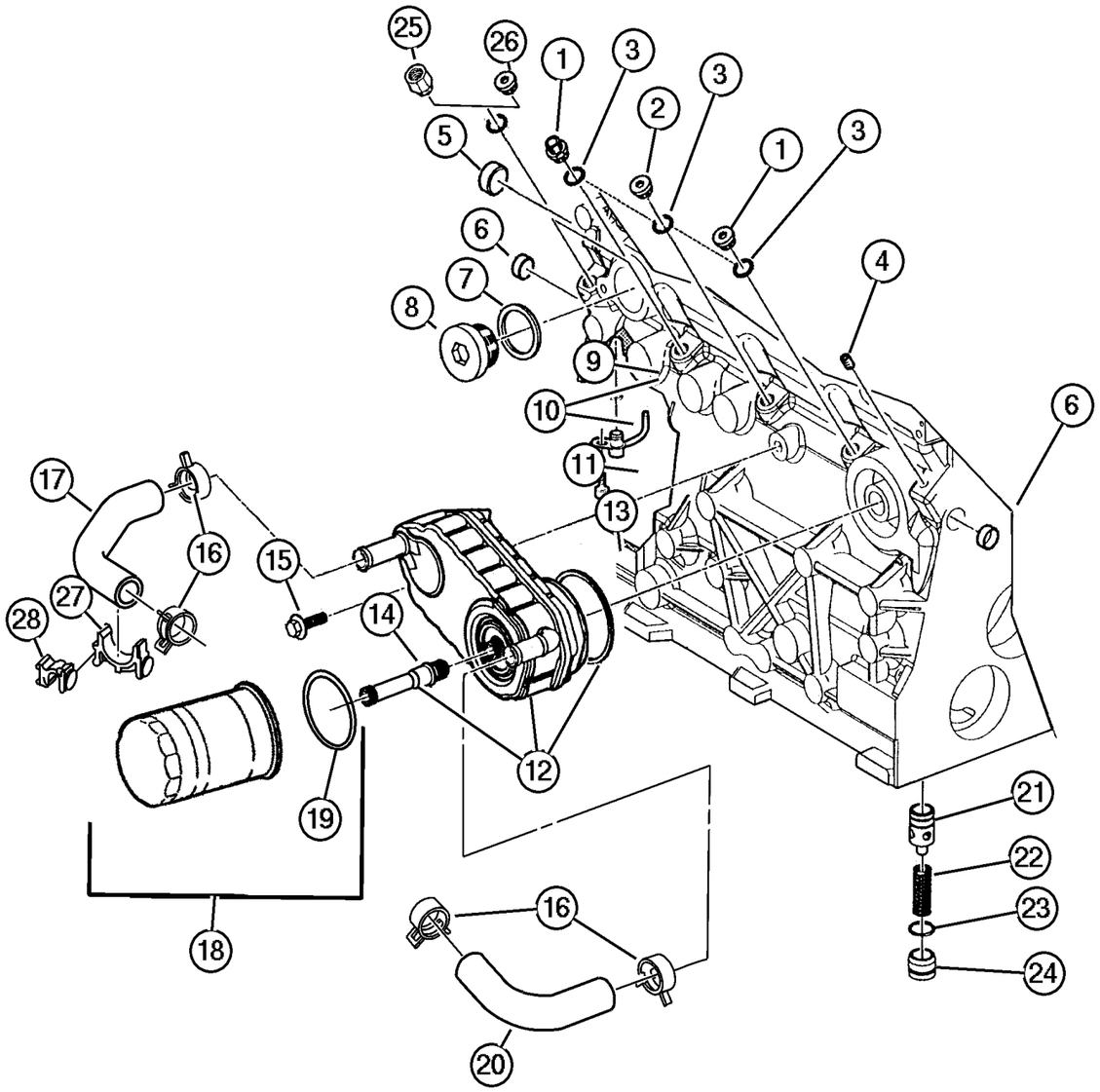

ITEM	PART NUMBER	QTY	LINE	SERIES	BODY	ENGINE	TRANS	TRIM	DESCRIPTION
NOTE:									
Sales Codes:									
[DBB]=All Manual Transmissions									
[DG0]=All Automatic Transmissions									
[EN0]=All 4 Cylinder Turbo Diesel Engines									
1	5066 889AA	2				EN0	DBB		BOLT, Oil Feed To Turbo Adapter
2	5066 814AA	1				EN0	DBB		BOLT, Turbo Oil Feed Adapter
3	4720 704	4				EN0	DBB		WASHER, Oil Pressure Transduser
4	4883 424AA	1				EN0	DBB		PLUG, Cylinder Block
5	4778 887	1				EN0	DBB		PLUG, Cylinder Block Oil Hole
6	4723 211	2				EN0	DBB		PLUG, Cylinder Block Oil Hole
7	5066 811AA	1				EN0	DBB		WASHER, Plain, 16.2x19.9x1.5
8	5066 855AA	1				EN0	DBB		PLUG, Camshaft
9	4864 689	4				EN0	DBB		O RING
10	5066 812AB	4				EN0	DBB		JET, Valve Body
11	4882 620	4				EN0	DBB		SCREW
12	#5093 913AA	1				EN0	DBB		COOLER, Engine Oil
13	4723 217	1				EN0	DBB		O RING, Oil Cooler
14	5015 178AA	1				EN0	DBB		FITTING, Engine Oil Cooler
15	5003 724AA	1				EN0	DBB		SCREW
16	4883 924AA	4				EN0	DBB		CLAMP, Heater Hose
17	5072 710AA	1				EN0	DBB		HOSE, Engine Oil Cooler
18	5003 558AA	1				EN0	DBB		FILTER, Engine Oil
19	5066 946AA	1				EN0	DBB		GASKET
20	5072 709AA	1				EN0	DBB		HOSE, Engine Oil Cooler
21	5066 816AA	1				EN0	DBB		VALVE, Oil Pressure Relief
22	#5093 915AA	1				EN0	DBB		SPRING, Oil Pressure Relief Valve
23	5066 887AA	1				EN0	DBB		O RING
24	5066 886AA	1				EN0	DBB		PLUG
25	#5093 916AA	1				EN0	DBB		ADAPTER
26	5066 889AA	2				EN0	DBB		BOLT, Oil Feed To Turbo Adapter
27	#5093 906AA	1				EN0	DBB		CLAMP
28	#5093 914AA	1				EN0	DBB		CLAMP

JEEP LIBERTY (KJ)

SERIES	LINE	BODY	ENGINE	TRANSMISSION
P = Limited	J = LHD (4WD)	74 = 4 Dr. (104.3 WB)	ED1, ED0 = 2.4L Power Tech	DDK = 5 Speed HDManual
H = Sport	U = RHD (4WD)		EKG, EK0 = 3.7L Power Tech	DDD = 5 Speed HD Manual
M = Renegade	T = LHD (2WD)		ENJ = 2.5L 4Cyl Turbo Diesel	DG4,DGQ = Multi-Speed Auto
			ENR = 2.8L 4Cyl Turbo Diesel	DG6 = 4 Speed Auto Transm
			EN0 = 4Cyl Turbo Diesel	DG0 = All Automatic Transm
				DBB = All Manual Transm

Oil Lines [ENJ]
Figure 2.5LD-730

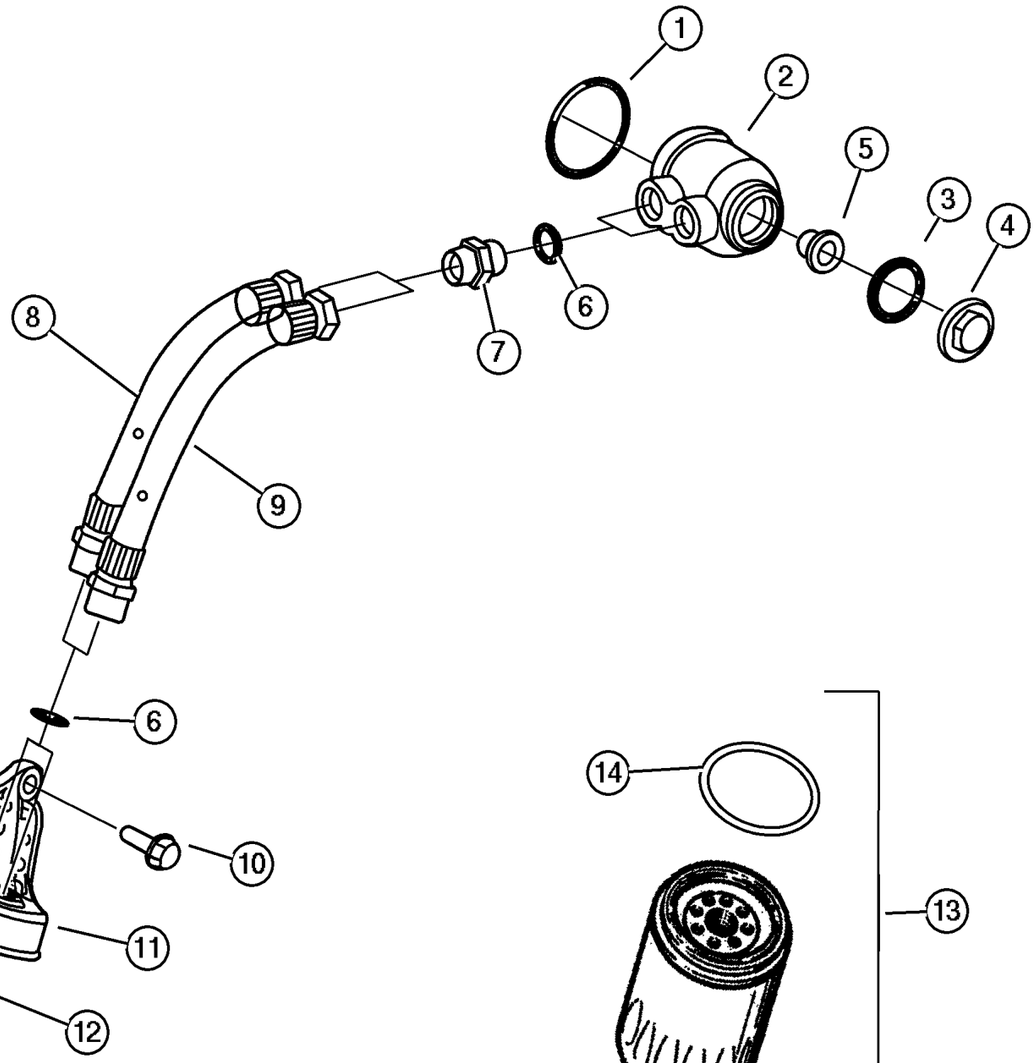

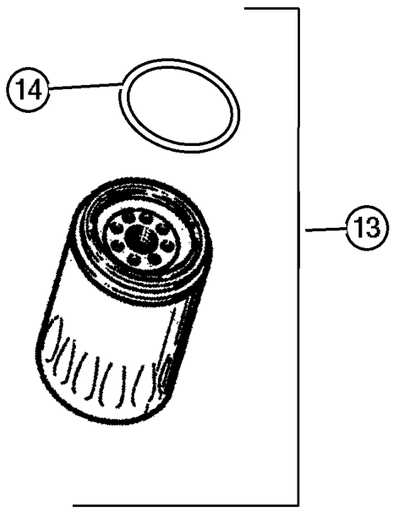

ITEM	PART NUMBER	QTY	LINE	SERIES	BODY	ENGINE	TRANS	TRIM	DESCRIPTION
NOTE:									
Sales Codes:									
[DBB]=All Manual Transmissions									
[DG0]=All Automatic Transmissions									
[EN0]=All 4 Cylinder Turbo Diesel Engines									
1	4720 375	1				EN0	DBB		O RING, Oil Filter Base
2	5072 716AA	1				EN0	DBB		ADAPTER, Oil Filter
3	4886 305AA	1				EN0	DBB		O RING, Oil Filter Adapter
4	5072 718AB	1				EN0	DBB		NUT
5	4723 334	1				EN0	DBB		GASKET, Valve
6	5066 946AA	1				EN0	DBB		GASKET
7	#5093 920AA	2				EN0	DBB		UNION
8	#5093 921AA	1				EN0	DBB		PIPE
9	#5093 919AA	1				EN0	DBB		PIPE
10	5003 532AA	1				EN0	DBB		BOLT, Adaptor Plate
11	5072 711AB	1				EN0	DBB		BRACKET, Oil Filter Housing
12	4897 252AA	1				EN0	DBB		UNION, Oil Filter Base
13	5003 558AA	1				EN0	DBB		FILTER, Engine Oil
14	5066 946AA	1				EN0	DBB		GASKET

JEEP LIBERTY (KJ)

SERIES	LINE	BODY	ENGINE	TRANSMISSION
P = Limited	J = LHD (4WD)	74 = 4 Dr. (104.3 WB)	ED1, ED0 = 2.4L Power Tech	DDK = 5 Speed HDManual
H = Sport	U = RHD (4WD)		EKG, EK0 = 3.7L Power Tech	DDD = 5 Speed HD Manual
M = Renegade	T = LHD (2WD)		ENJ = 2.5L 4Cyl Turbo Diesel	DG4,DGQ = Multi-Speed Auto
			ENR = 2.8L 4Cyl Turbo Diesel	DG6 = 4 Speed Auto Transm
			EN0 = 4Cyl Turbo Diesel	DG0 = All Automatic Transm
				DBB = All Manual Transm

Manifolds [ENJ]
Figure 2.5LD-810

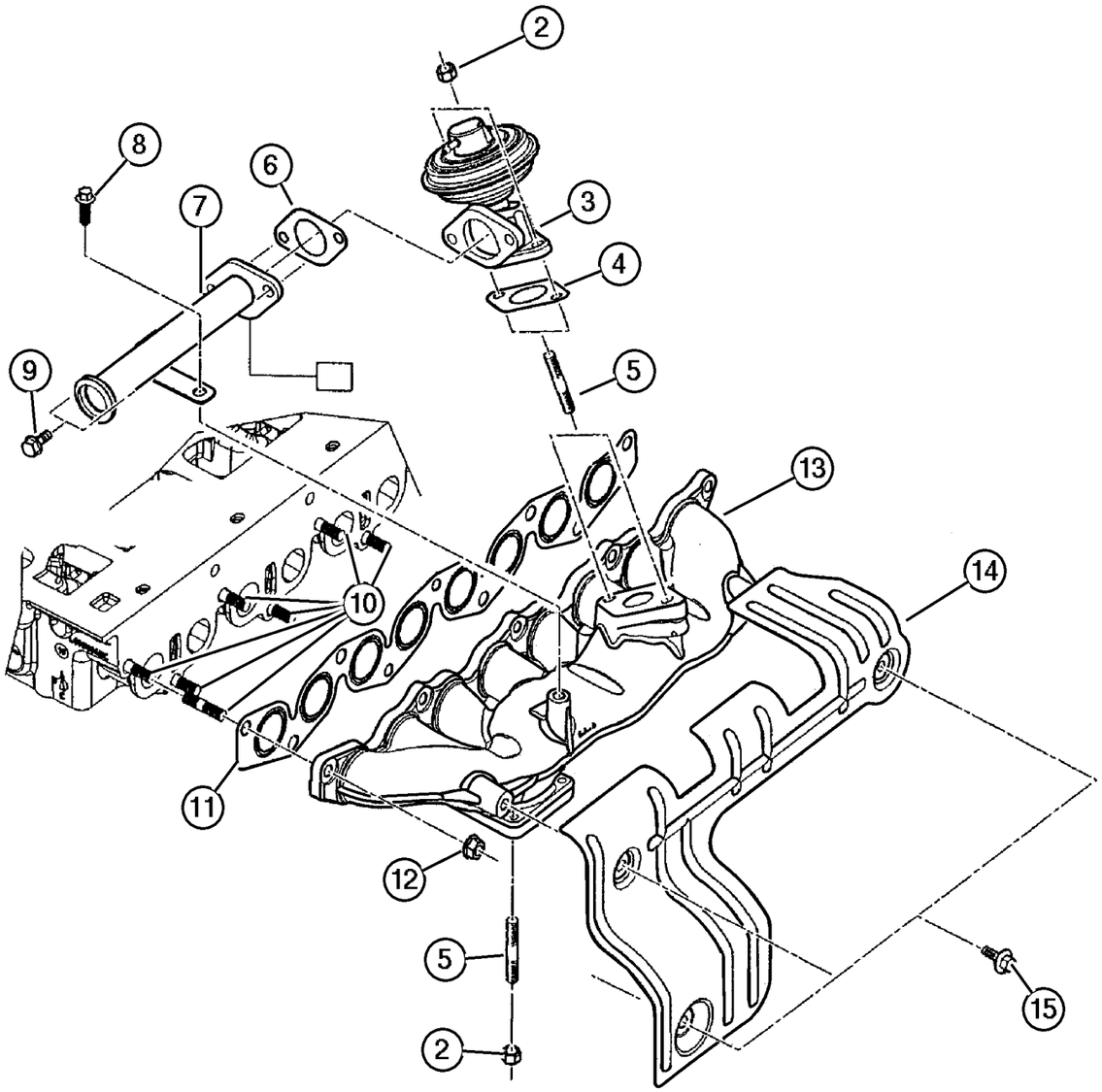

ITEM	PART NUMBER	QTY	LINE	SERIES	BODY	ENGINE	TRANS	TRIM	DESCRIPTION
NOTE:									
Sales Codes:									
[DBB]=All Manual Transmissions									
[DG0]=All Automatic Transmissions									
[EN0]=All 4 Cylinder Turbo Diesel Engines									
-1									SHIELD, Exhaust Manifold, (NOT SERVICED) (Not Serviced)
2	4882 610	6				EN0	DBB		NUT, Lock
3	5066 800AB	1				EN0	DBB		VALVE, EGR
4	5083 261AA	1				EN0	DBB		GASKET, EGR Tube Flange
5	4882 606	6				EN0	DBB		STUD, Turbo Elbow
6	5083 261AA	1				EN0	DBB		GASKET, EGR Tube Flange
7	#5103 249AA	1				EN0	DBB		TUBE
8	5072 688AA	4				EN0	DBB		SCREW
9	5066 986AA	2				EN0	DBB		SCREW
10	5066 796AA	9				EN0	DBB		STUD, Turbo Elbow
11	#5093 904AA	1				EN0	DBB		GASKET, Intake/Exhaust Manifold
12	#5093 903AA	9				EN0	DBB		NUT, Lock
13	5072 686AA	1				EN0	DBB		MANIFOLD, Exhaust
14	5072 691AA	1				EN0	DBB		SHIELD, Exhaust Manifold
15	5072 688AA	4				EN0	DBB		SCREW

JEEP LIBERTY (KJ)

SERIES	LINE	BODY	ENGINE	TRANSMISSION
P = Limited	J = LHD (4WD)	74 = 4 Dr. (104.3 WB)	ED1, ED0 = 2.4L Power Tech	DDK = 5 Speed HDManual
H = Sport	U = RHD (4WD)		EKG, EK0 = 3.7L Power Tech	DDD = 5 Speed HD Manual
M = Renegade	T = LHD (2WD)		ENJ = 2.5L 4Cyl Turbo Diesel	DG4,DGQ = Multi-Speed Auto
			ENR = 2.8L 4Cyl Turbo Diesel	DG6 = 4 Speed Auto Transm
			EN0 = 4Cyl Turbo Diesel	DG0 = All Automatic Transm
				DBB = All Manual Transm

Crankcase Ventilation [ENJ]
Figure 2.5LD-910

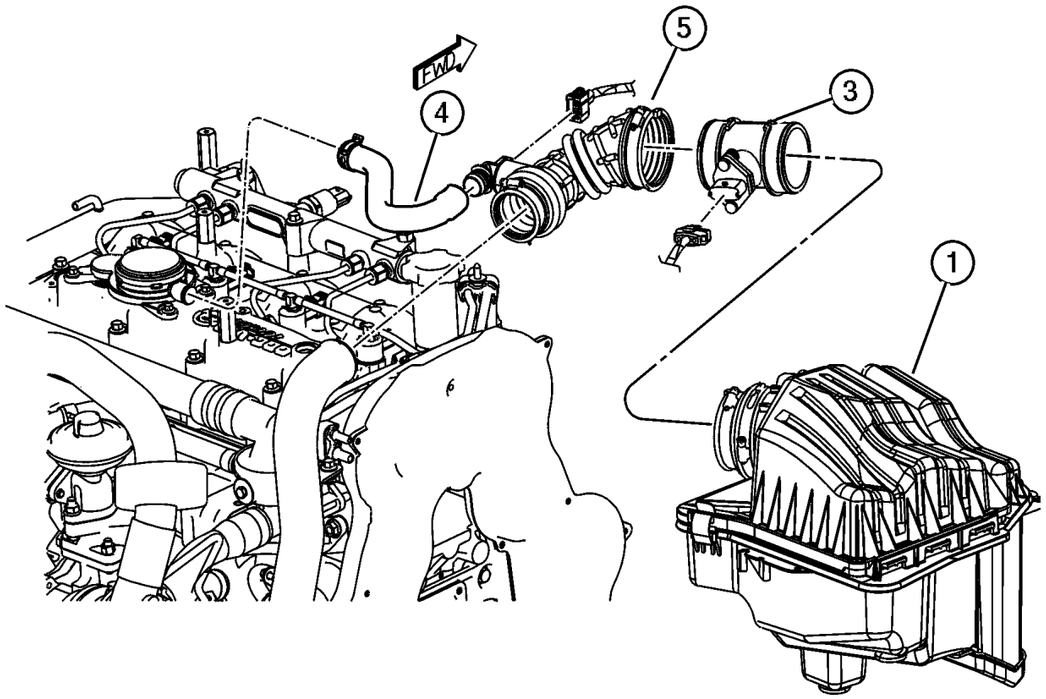

ITEM	PART NUMBER	QTY	LINE	SERIES	BODY	ENGINE	TRANS	TRIM	DESCRIPTION
NOTE:									
Sales Codes:									
[DBB]=All Manual Transmissions									
[DG0]=All Automatic Transmissions									
[EN0]=All 4 Cylinder Turbo Diesel Engines									
1	53013 107AB	1				EN0			AIR CLEANER
-2	5018 777AA	1				EN0			FILTER, Air
3									SENSOR PACKAGE, Air Flow Meter, (NOT SERVICED) (Not Serviced)
4	53013 094AC	1				EN0			HOSE, Oil Separator
5	#53013 104AB	1				EN0			HOSE, Clean Air

JEEP LIBERTY (KJ)

SERIES	LINE	BODY	ENGINE	TRANSMISSION
P = Limited	J = LHD (4WD)	74 = 4 Dr. (104.3 WB)	ED1, ED0 = 2.4L Power Tech	DDK = 5 Speed HDManual
H = Sport	U = RHD (4WD)		EKG, EK0 = 3.7L Power Tech	DDD = 5 Speed HD Manual
M = Renegade	T = LHD (2WD)		ENJ = 2.5L 4Cyl Turbo Diesel	DG4,DGQ = Multi-Speed Auto
			ENR = 2.8L 4Cyl Turbo Diesel	DG6 = 4 Speed Auto Transm
			EN0 = 4Cyl Turbo Diesel	DG0 = All Automatic Transm
				DBB = All Manual Transm

Group – 011
Exhaust

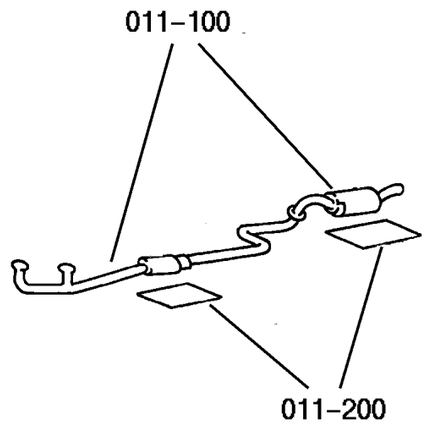

011–100 Exhaust System	011–200 Heat Shields		
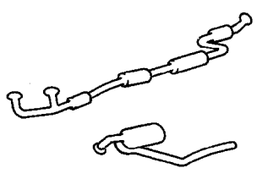	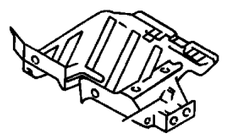		

GROUP 11 - Exhaust

Illustration Title	Group-Fig. No.
Exhaust System	
Exhaust System, 2.5L/2.8 Turbo Diesel [EN0]	Fig. 011-110
Exhaust System 2.4L [ED1]	Fig. 011-120
Exhaust System 3.7L [EKG]	Fig. 011-130
Heat Shields	
Heat Shields	Fig. 011-210

Exhaust System, 2.5L/2.8 Turbo Diesel [EN0]
Figure 011-110

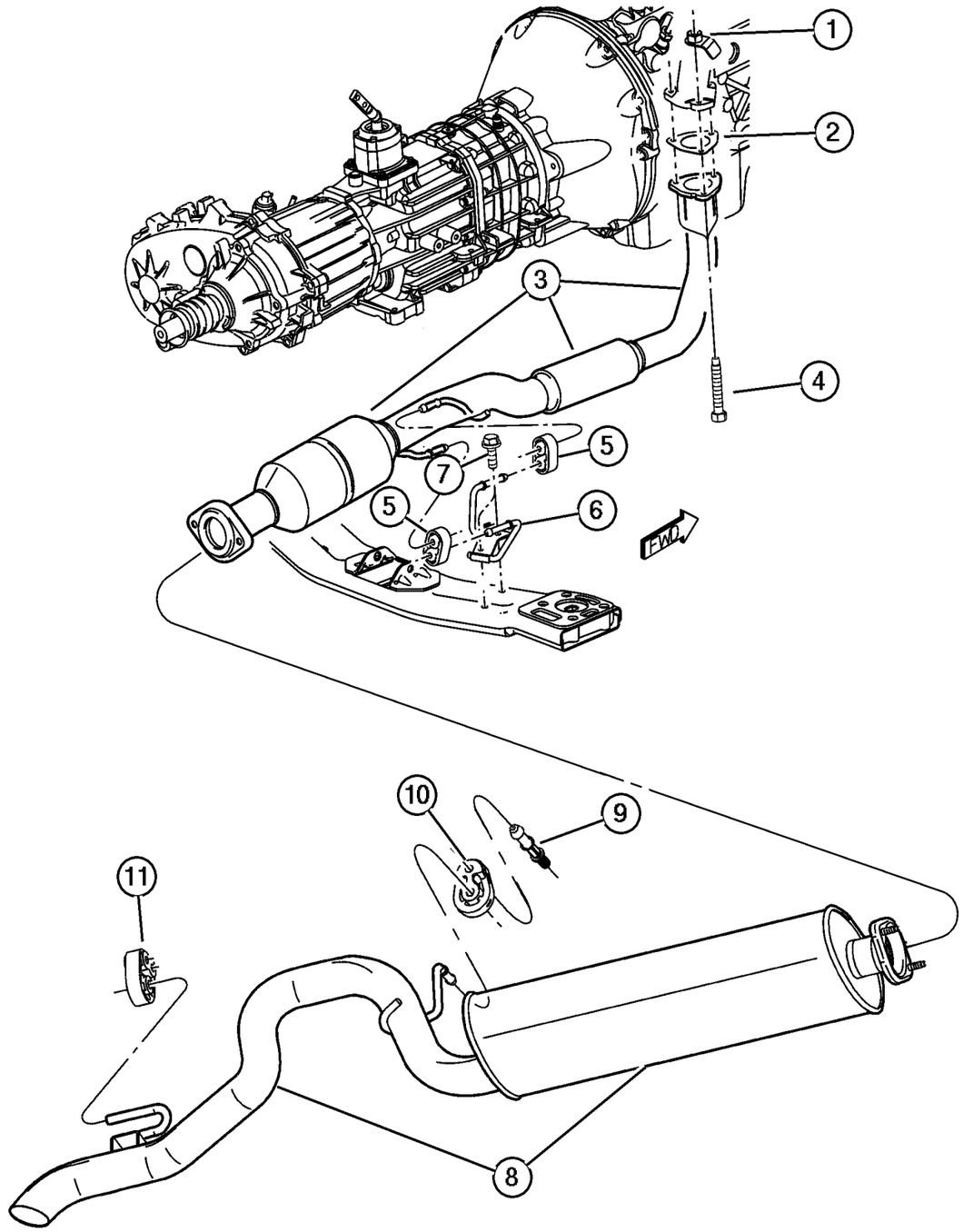

ITEM	PART NUMBER	QTY	LINE	SERIES	BODY	ENGINE	TRANS	TRIM	DESCRIPTION
Note; Sales Codes									
[EN0]= All 4/5 Cylinder Turbo Diesels									
1	4682 810AB	4				ED0			NUT, Hex Flange, M8x1.25
2	52101 165AA	1				EN0			GASKET, Manifold To Pipe
3	#52128 766AA	1				EN0			CONVERTER, Exhaust, Catalytic
4									BOLT AND WASHER, Self Taping Flange Head, M8x1.25x40.00, (NOT SERVICED) (Not Serviced)
5	5210 1035	2				EN0			INSULATOR, Exhaust
6	52101 169AA	1				EN0			HANGER, Exhaust
7	6101 611	2				EN0			SCREW AND WASHER, Hex Head, M8x1.25x25
8	52101 120AC	1							MUFFLER AND TAILPIPE, Exhaust
9	52128 502AB	1							HANGER, Exhaust
10	52128 501AA	1							ISOLATOR, Exhaust
11	52101 126AA	1							ISOLATOR, Exhaust

JEEP LIBERTY (KJ)

SERIES	LINE	BODY	ENGINE	TRANSMISSION
P = Limited	J = LHD (4WD)	74 = 4 Dr. (104.3 WB)	ED1, ED0 = 2.4L Power Tech	DDK = 5 Speed HDManual
H = Sport	U = RHD (4WD)		EKG, EK0 = 3.7L Power Tech	DDD = 5 Speed HD Manual
M = Renegade	T = LHD (2WD)		ENJ = 2.5L 4Cyl Turbo Diesel	DG4,DGQ = Multi-Speed Auto
			ENR = 2.8L 4Cyl Turbo Diesel	DG6 = 4 Speed Auto Transm
			EN0 = 4Cyl Turbo Diesel	DG0 = All Automatic Transm
				DBB = All Manual Transm

AR = Use as required - = Non illustrated part # = New this model year

June 3, 2003

« RETURN TO GROUP INDEX

Exhaust System 2.4L [ED1]
Figure 011-120

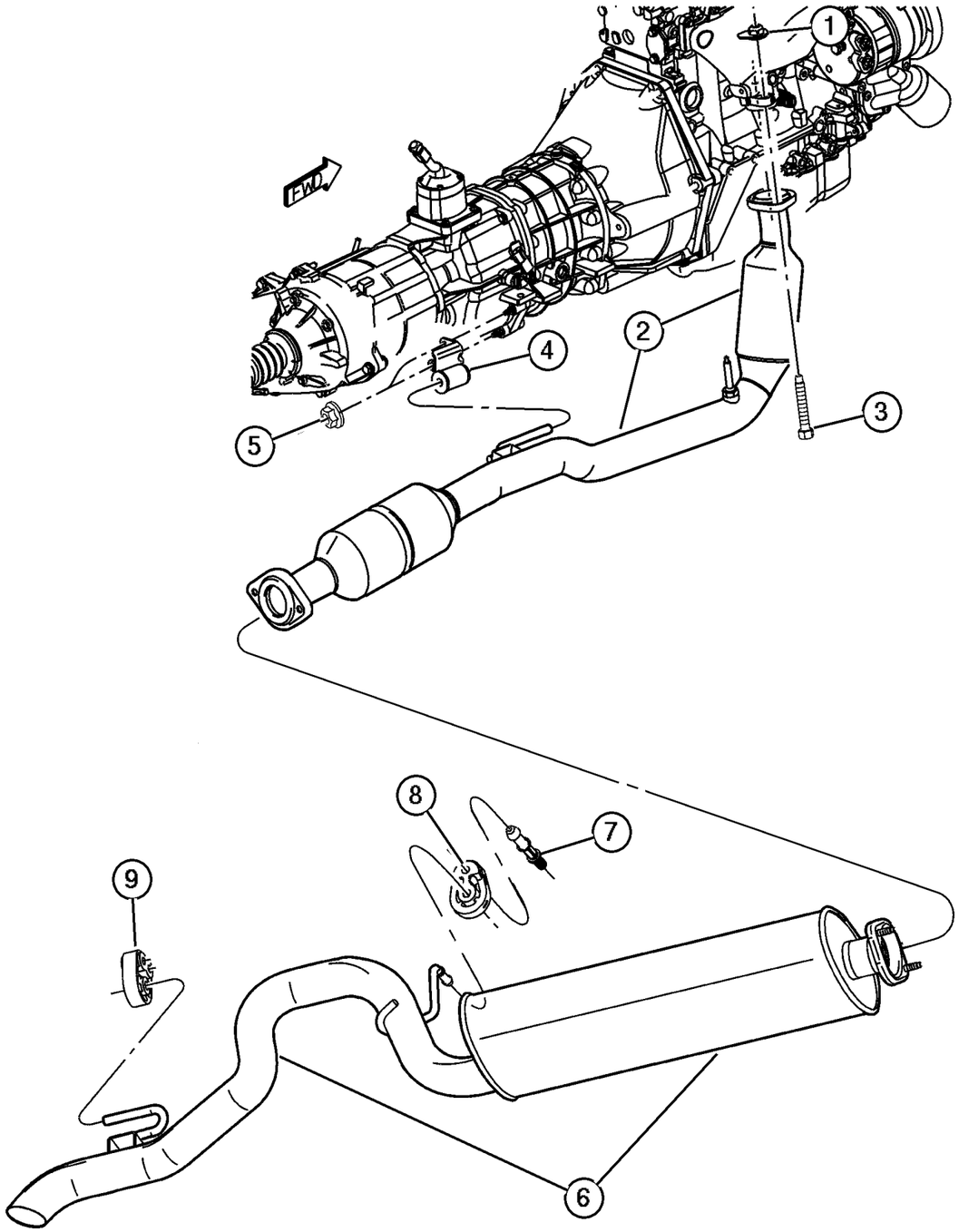

ITEM	PART NUMBER	QTY	LINE	SERIES	BODY	ENGINE	TRANS	TRIM	DESCRIPTION
Note; Sales Codes									
[DD0]= All 5 Speed Manual Transmissions									
[ED0]= All 2.2L,2.5L,2.4L, 4 Cylinder Gas Engines									
1	4682 810AB	4				ED0			NUT, Hex Flange, M8x1.25
2	52101 249AD	1				ED0			PIPE AND CONVERTER, Exhaust
3	6505 954AA	2				ED0			SCREW, Hex Head Pilot Point, M8x1.25x65.00
4	52101 150AB	1				ED0	DD0		HANGER, Exhaust
5	6101 695	2				ED0			NUT, Hex Flange Lock
6	52101 120AC	1							MUFFLER AND TAILPIPE, Exhaust
7	52128 502AB	1							HANGER, Exhaust
8	52128 501AA	1							ISOLATOR, Exhaust
9	52101 126AA	1							ISOLATOR, Exhaust

JEEP LIBERTY (KJ)

SERIES	LINE	BODY	ENGINE	TRANSMISSION
P = Limited	J = LHD (4WD)	74 = 4 Dr. (104.3 WB)	ED1, ED0 = 2.4L Power Tech	DDK = 5 Speed HDManual
H = Sport	U = RHD (4WD)		EKG, EK0 = 3.7L Power Tech	DDD = 5 Speed HD Manual
M = Renegade	T = LHD (2WD)		ENJ = 2.5L 4Cyl Turbo Diesel	DG4,DGQ = Multi-Speed Auto
			ENR = 2.8L 4Cyl Turbo Diesel	DG6 = 4 Speed Auto Transm
			EN0 = 4Cyl Turbo Diesel	DG0 = All Automatic Transm
				DBB = All Manual Transm

Exhaust System 3.7L [EKG]
Figure 011-130

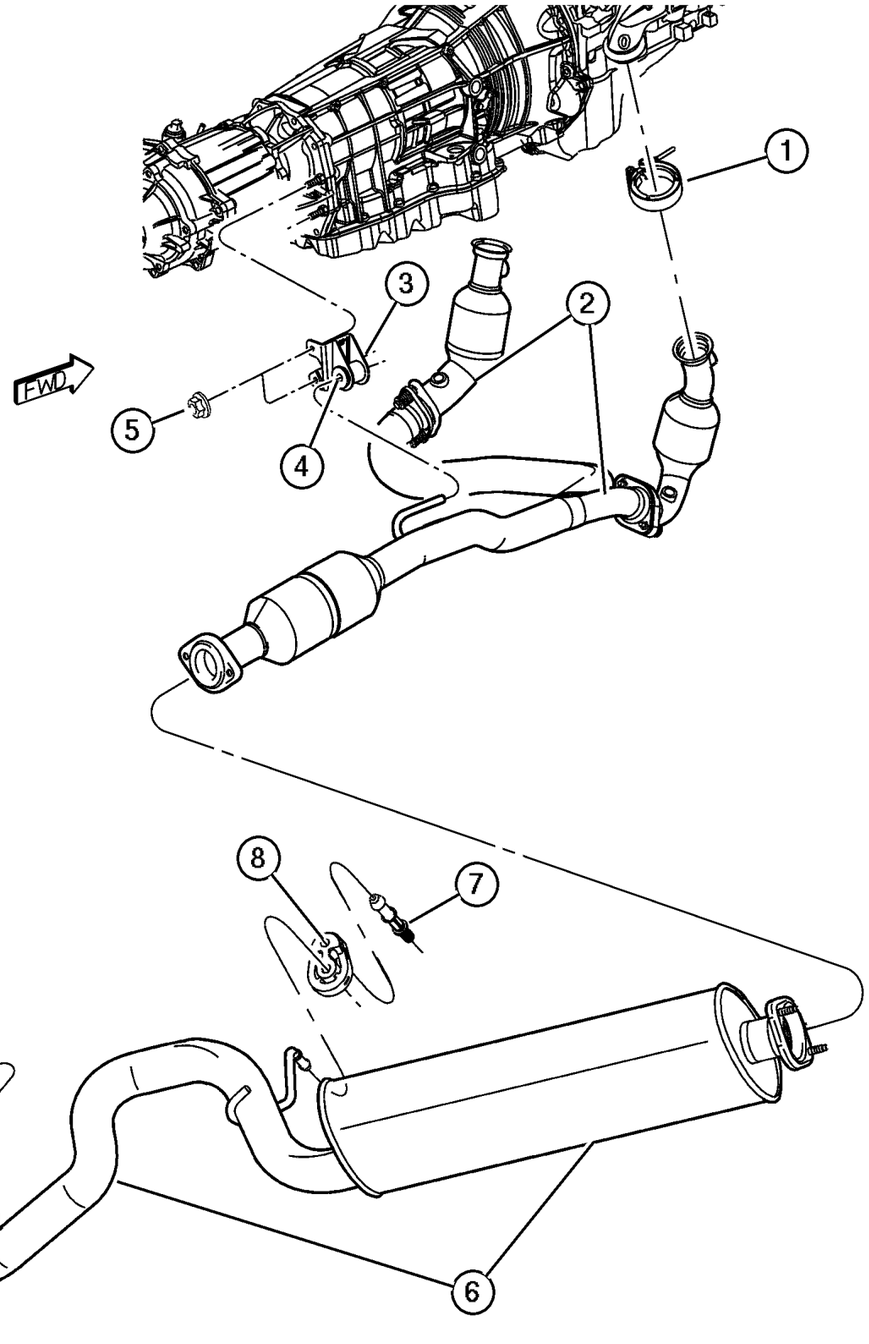

ITEM	PART NUMBER	QTY	LINE	SERIES	BODY	ENGINE	TRANS	TRIM	DESCRIPTION
Note; Sales Codes									
[DD0]=All 5 Speed Manual Transmissions									
[DG0]= All Automatic Transmissions									
[EK0]= All 3.7L 6 Cylinder Gas Engines									
1	52128 587AA	2				EK0			CLAMP, Exhaust Manifold
2	52128 736AB	1				EK0			PIPE AND CONVERTER, Exhaust
3									HANGER, Exhaust
	52128 598AA	1				EK0	DD0		
	52101 124AA	1				EK0	DG4		
	#52128 597AA	1				EK0	DG6		
4									BUSHING, Exhaust Hanger
	5208 5085	1				EK0	DG6		
		1				EK0	DD0		
5									NUT, Hex Flange Lock, M8x1.25, (NOT SERVICED) (Not Serviced)
6	52101 120AC	1							MUFFLER AND TAILPIPE, Exhaust
7	52128 502AB	1							HANGER, Exhaust
8	52128 501AA	1							ISOLATOR, Exhaust
9	52101 126AA	1							ISOLATOR, Exhaust
-10	6502 058	2				EK0	DD0		SCREW AND WASHER, Hex Head Special Point, M8x1.25x17, Front Hanger to Trans

JEEP LIBERTY (KJ)

SERIES	LINE	BODY	ENGINE	TRANSMISSION
P = Limited	J = LHD (4WD)	74 = 4 Dr. (104.3 WB)	ED1, ED0 = 2.4L Power Tech	DDK = 5 Speed HDManual
H = Sport	U = RHD (4WD)		EKG, EK0 = 3.7L Power Tech	DDD = 5 Speed HD Manual
M = Renegade	T = LHD (2WD)		ENJ = 2.5L 4Cyl Turbo Diesel	DG4,DGQ = Multi-Speed Auto
			ENR = 2.8L 4Cyl Turbo Diesel	DG6 = 4 Speed Auto Transm
			EN0 = 4Cyl Turbo Diesel	DG0 = All Automatic Transm
				DBB = All Manual Transm

AR = Use as required - = Non illustrated part # = New this model year **June 3, 2003**

« RETURN TO GROUP INDEX

Heat Shields
Figure 011-210

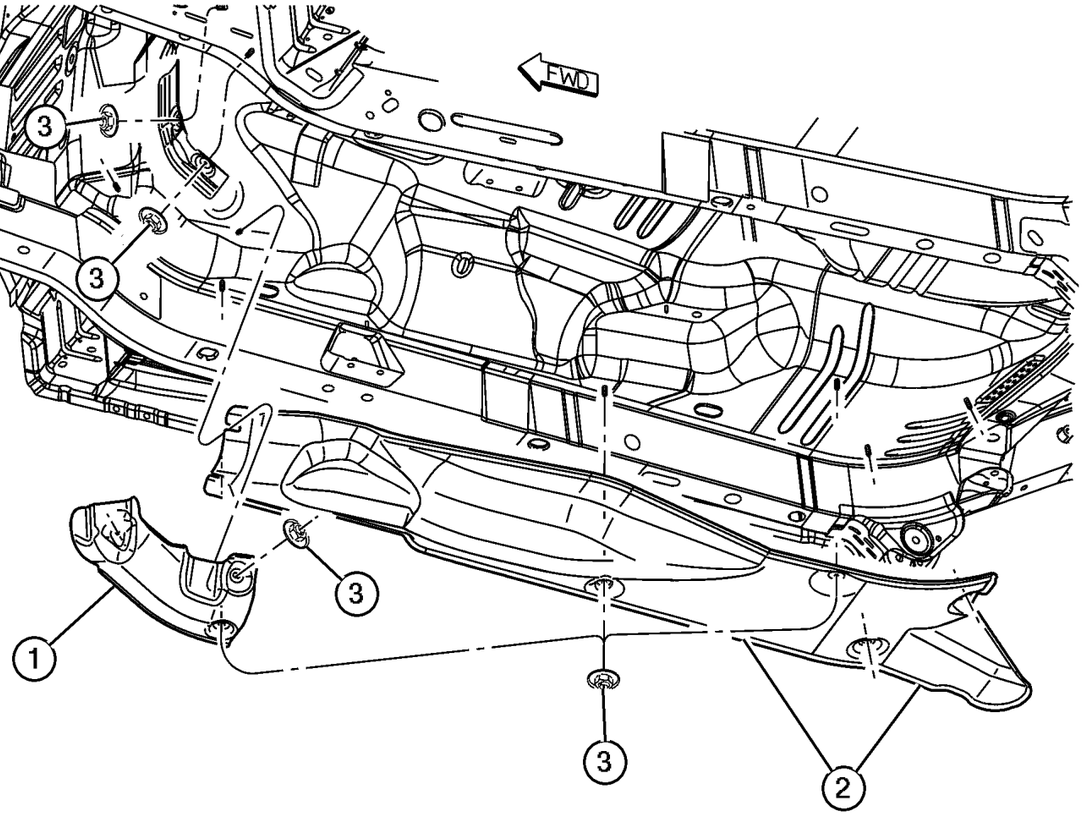

ITEM	PART NUMBER	QTY	LINE	SERIES	BODY	ENGINE	TRANS	TRIM	DESCRIPTION
1	55176 791AA	1							SHIELD, Floor Pan
2	55176 792AB	1							SHIELD, Floor Pan
3									NUT, Heat Shield Attach, M5x1.60, (NOT SERVICED) (Not Serviced)
-4	55352 844AE	1							PAD, Tunnel

JEEP LIBERTY (KJ)

SERIES	LINE	BODY	ENGINE	TRANSMISSION
P = Limited	J = LHD (4WD)	74 = 4 Dr. (104.3 WB)	ED1, ED0 = 2.4L Power Tech	DDK = 5 Speed HDManual
H = Sport	U = RHD (4WD)		EKG, EK0 = 3.7L Power Tech	DDD = 5 Speed HD Manual
M = Renegade	T = LHD (2WD)		ENJ = 2.5L 4Cyl Turbo Diesel	DG4,DGQ = Multi-Speed Auto
			ENR = 2.8L 4Cyl Turbo Diesel	DG6 = 4 Speed Auto Transm
			EN0 = 4Cyl Turbo Diesel	DG0 = All Automatic Transm
				DBB = All Manual Transm

Group – 013

Frames and Bumpers

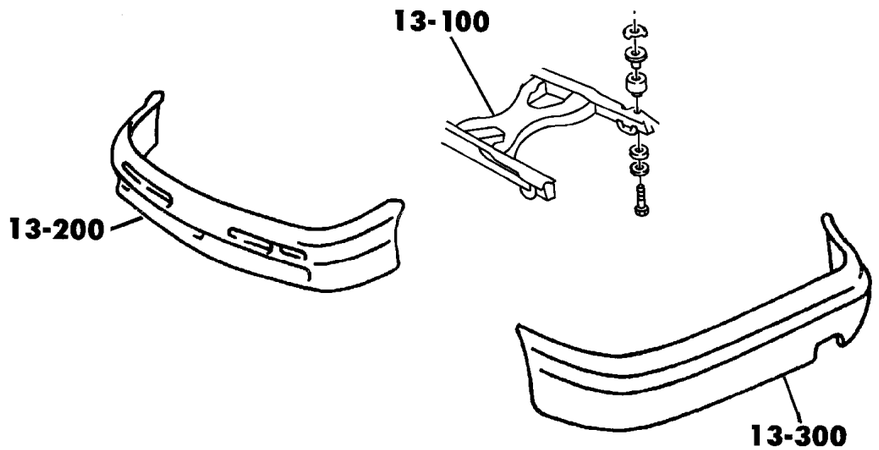

013–100	013–200	013–300	013–600
Frames	Front Bumper and Fascia	Rear Bumper and Fascia	Trailer Tow
	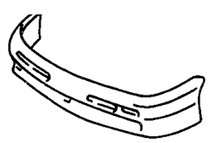		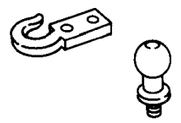

GROUP 13 - Frames and Bumpers

Illustration Title	Group-Fig. No.
Frames	
Frame Cradle	Fig. 013-110
Front Bumper and Fascia	
Bumper, Front	Fig. 013-210
Rear Bumper and Fascia	
Bumper, Rear	Fig. 013-310
Trailer Tow	
Tow Hooks - Front	Fig. 013-610
Tow Hooks - Rear	Fig. 013-620

Frame Cradle
Figure 013-110

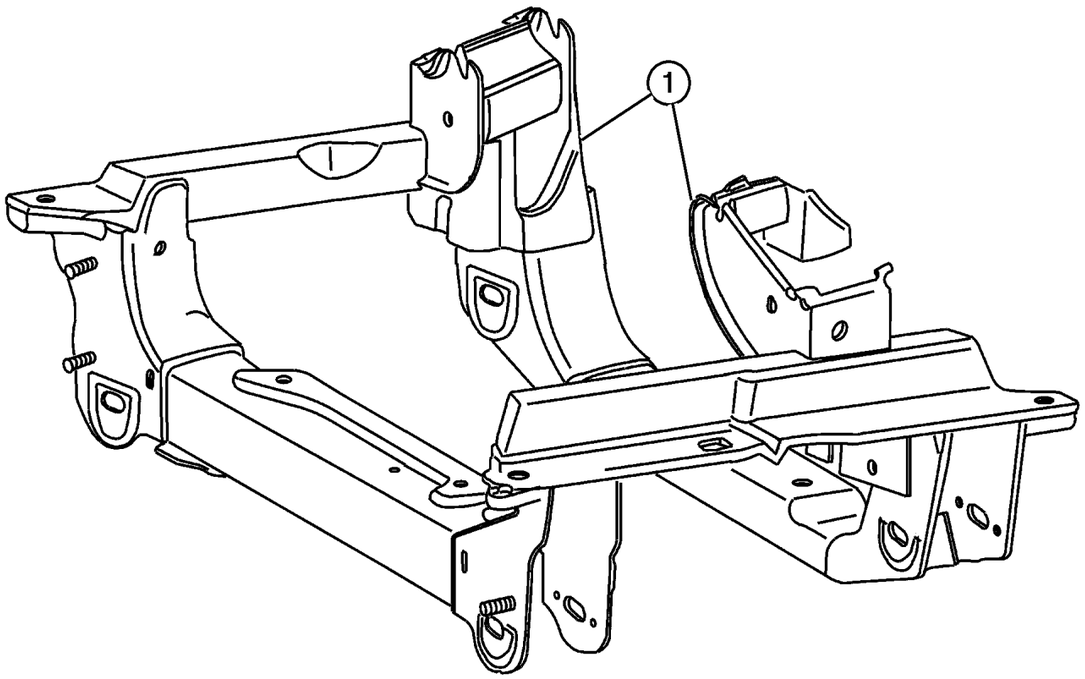

ITEM	PART NUMBER	QTY	LINE	SERIES	BODY	ENGINE	TRANS	TRIM	DESCRIPTION
Note: When replacing Crossmember Cradle it is recommended to relace mounting screws.									
1									CROSSMEMBER, Front Suspension
	52059 462AE	1	J						[EK0]
		1	U						[EK0]
		1	T						[EK0]
	#52059 463AG	1	J						[ED0]
		1	U						[ED0]
		1	T						[ED0]
-2	6506 672AA	2							SCREW AND WASHER, Hex, M14X2.0X135.0, Cradle Bolt
-3	6507 135AA	2							SCREW, M12X1.75X135, Cradle Bolt
-4									SKID PLATE, Front
	52128 539AC	1	J, U						[EK0]
	52128 540AC	1	J, U						[ED0,EN0]
-5	6507 371AA	AR							SCREW AND WASHER, Hex Head, M7 x 1.25 x 20.00, Front Structure to Crossmember

JEEP LIBERTY (KJ)

SERIES	LINE	BODY	ENGINE	TRANSMISSION
P = Limited	J = LHD (4WD)	74 = 4 Dr. (104.3 WB)	ED1, ED0 = 2.4L Power Tech	DDK = 5 Speed HDManual
H = Sport	U = RHD (4WD)		EKG, EK0 = 3.7L Power Tech	DDD = 5 Speed HD Manual
M = Renegade	T = LHD (2WD)		ENJ = 2.5L 4Cyl Turbo Diesel	DG4,DGQ = Multi-Speed Auto
			ENR = 2.8L 4Cyl Turbo Diesel	DG6 = 4 Speed Auto Transm
			EN0 = 4Cyl Turbo Diesel	DG0 = All Automatic Transm
				DBB = All Manual Transm

Bumper, Front
Figure 013-210

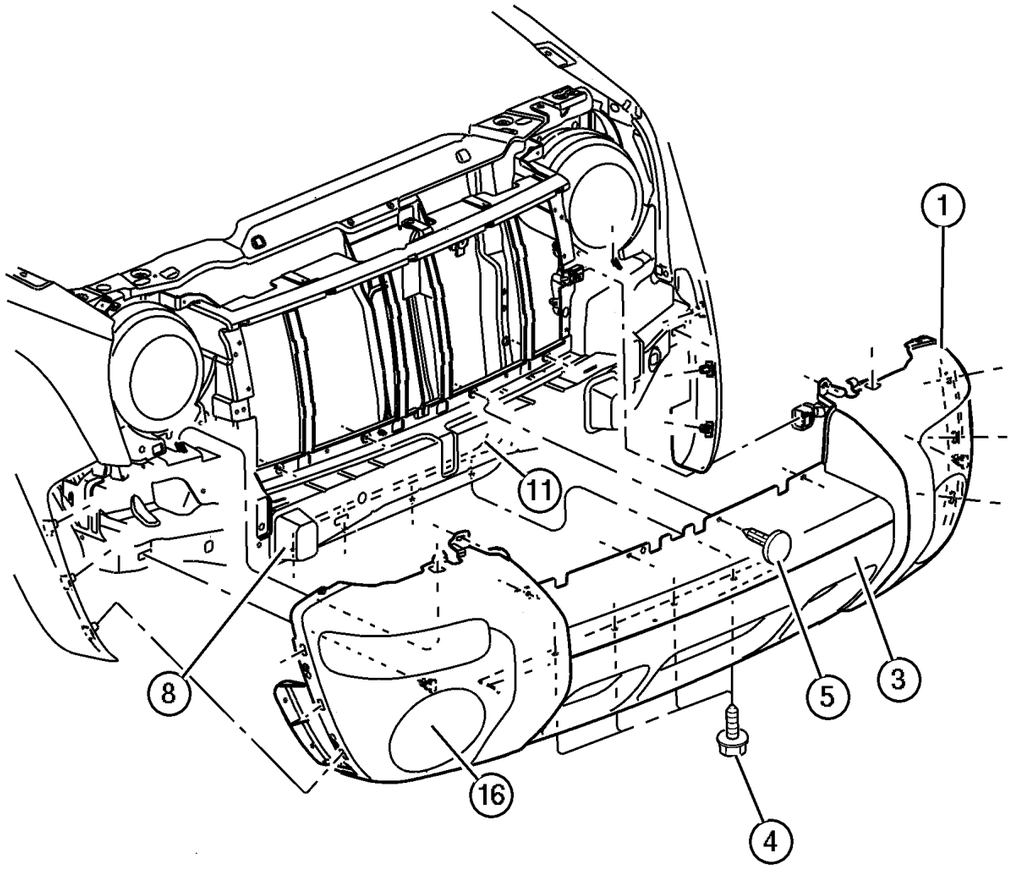

ITEM	PART NUMBER	QTY	LINE	SERIES	BODY	ENGINE	TRANS	TRIM	DESCRIPTION
NOTE: Sales Codes									
[LNJ]=Fog Lamps									
[MLA]=Fascia - Body Color									
[MLC]=Fascia - Gray									
1									FASCIA, Front, Primed
	5066 606AC	1							[MLA]
	5073 488AB	1							[ML3] With Renegade Package
	5GJ63 HS5AC	1							[MLC]
	5066 606AC	1							[MCU]
-2	55156 719AA	2							CLIP, Fascia
3	5HX12 WS2AB	1							BUMPER, Center Bezel
4									SCREW AND WASHER, Self Tapping, M6x1x22, (NOT SERVICED) (Not Serviced)
5	6506 008AA	6							RETAINER, Fascia
-6	55156 042AB	1							ABSORBER, Front Energy
-7	55155 963AC	1							AIR DAM
8	55360 410AA	2							BUMPER, Suspension Jounce
-9									SCREW AND WASHER, Self Tapping, M6x1x22, (NOT SERVICED) (Not Serviced)
-10	55255 994AB	1							BRACKET, License Plate, Package
11	55360 190AE	1							CROSSMEMBER, Front Support
-12	6035 201	3							RIVET, On bottom Atttaches Air Dam and Absorber
-13	6036 148AA	6							RIVET, Blind, Three Leg, Outboard Absorber to Fascia
-14	6505 049AA	2							NUT, M5
-15									BRACKET, License Plate
	55155 966AA	1							Export
	55255 992AB	1							
16									COVER, Lamp Opening
	55156 018AA	1							With [LNJ]
	55156 019AA	1							Without [LNJ]

JEEP LIBERTY (KJ)

SERIES	LINE	BODY	ENGINE	TRANSMISSION
P = Limited	J = LHD (4WD)	74 = 4 Dr. (104.3 WB)	ED1, ED0 = 2.4L Power Tech	DDK = 5 Speed HDManual
H = Sport	U = RHD (4WD)		EKG, EK0 = 3.7L Power Tech	DDD = 5 Speed HD Manual
M = Renegade	T = LHD (2WD)		ENJ = 2.5L 4Cyl Turbo Diesel	DG4,DGQ = Multi-Speed Auto
			ENR = 2.8L 4Cyl Turbo Diesel	DG6 = 4 Speed Auto Transm
			EN0 = 4Cyl Turbo Diesel	DG0 = All Automatic Transm
				DBB = All Manual Transm

Bumper, Rear
Figure 013-310

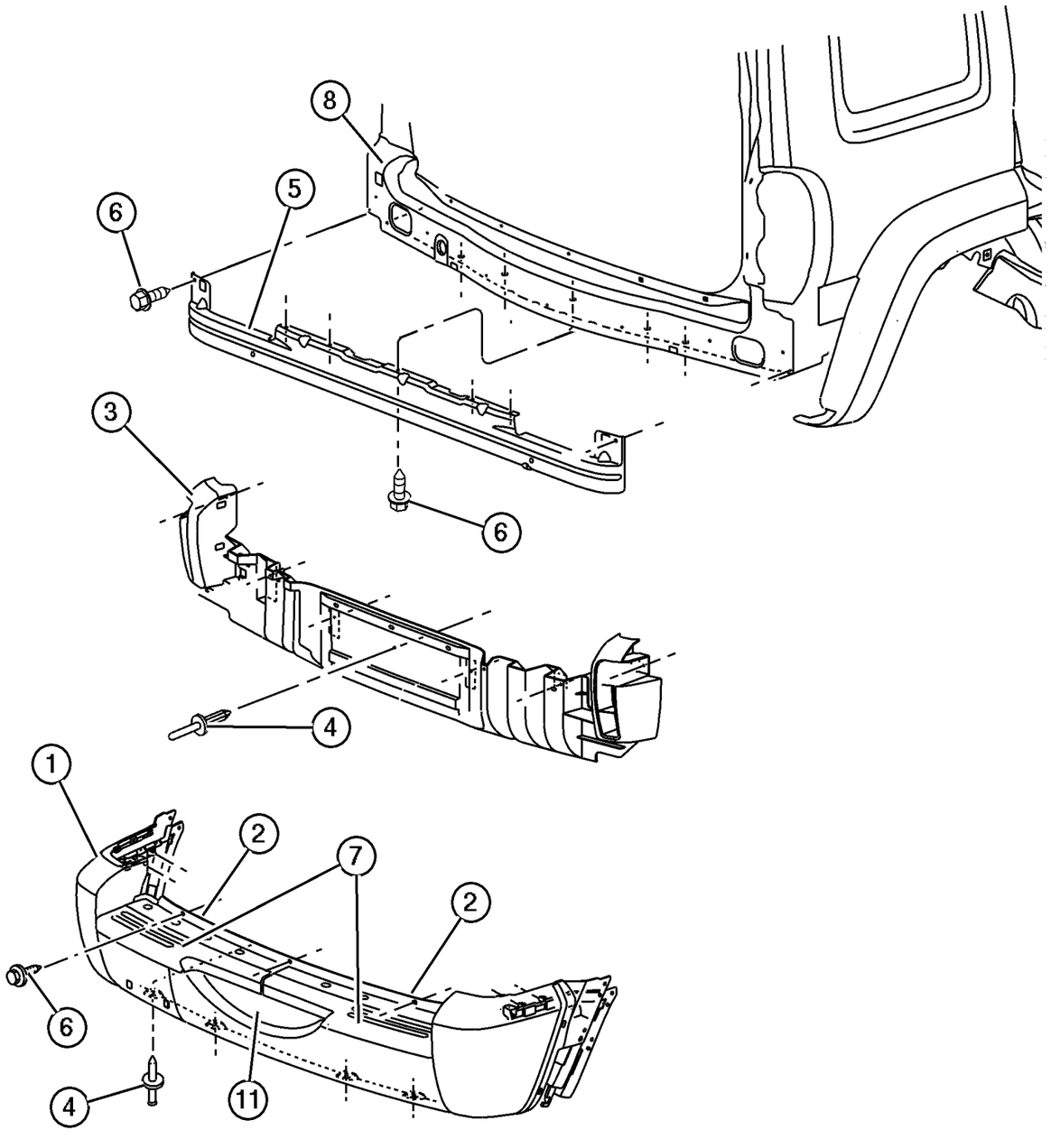

ITEM	PART NUMBER	QTY	LINE	SERIES	BODY	ENGINE	TRANS	TRIM	DESCRIPTION
NOTE : Sales Codes									
[ABE] = Export Equipment Group									
[MLA] = Fascias - Body Color									
[MLC] = Fascias - Silverstone									
1									FASCIA, Rear
	5066 317AD	1							[MLA], Without [ABE]
	5066 328AD	1							[MLA], With [ABE]
	5GJ58 HS5AB	1							[MLC], Without [ABE]
	5GE72 HS5AD	1							[MLC], With [ABE]
	#5066 317AE	1							[MCU]
2									RETAINER, Fascia
	55155 998AB	1							Right
	55155 999AB	1							Left
3									SUPPORT, Rear Fascia, Attaches directly to 55360227AB for Domestic vehicles
	55155 962AB	1							Center
	#55360 678AA	1							Right
	#55360 679AA	1							Left
4									RIVET, (NOT SERVICED) (Not Serviced)
5	55155 820AA	1	J, U						CROSSMEMBER, Bumper, Rear, Export only
6	6505 900AA	7	J, U						SCREW, Tapping Hex Flange Head, M6.3 x 1.81 x 19.00, Export only
7									STEP PAD, Rear Bumper
	55155 996AA	1							Right
	55155 997AA	1							Left
8	55360 227AC	1							PANEL, Liftgate Opening
-9	4399 791	2							REFLECTOR, Fascia
-10	#55255 994AC	1							BRACKET, License Plate
11	#55156 801AA	1							TROUGH, Drip, Diverter

JEEP LIBERTY (KJ)

SERIES	LINE	BODY	ENGINE	TRANSMISSION
P = Limited	J = LHD (4WD)	74 = 4 Dr. (104.3 WB)	ED1, ED0 = 2.4L Power Tech	DDK = 5 Speed HDManual
H = Sport	U = RHD (4WD)		EKG, EK0 = 3.7L Power Tech	DDD = 5 Speed HD Manual
M = Renegade	T = LHD (2WD)		ENJ = 2.5L 4Cyl Turbo Diesel	DG4,DGQ = Multi-Speed Auto
			ENR = 2.8L 4Cyl Turbo Diesel	DG6 = 4 Speed Auto Transm
			EN0 = 4Cyl Turbo Diesel	DG0 = All Automatic Transm
				DBB = All Manual Transm

AR = Use as required - = Non illustrated part # = New this model year

June 3, 2003

« RETURN TO GROUP INDEX

Tow Hooks - Front
Figure 013-610

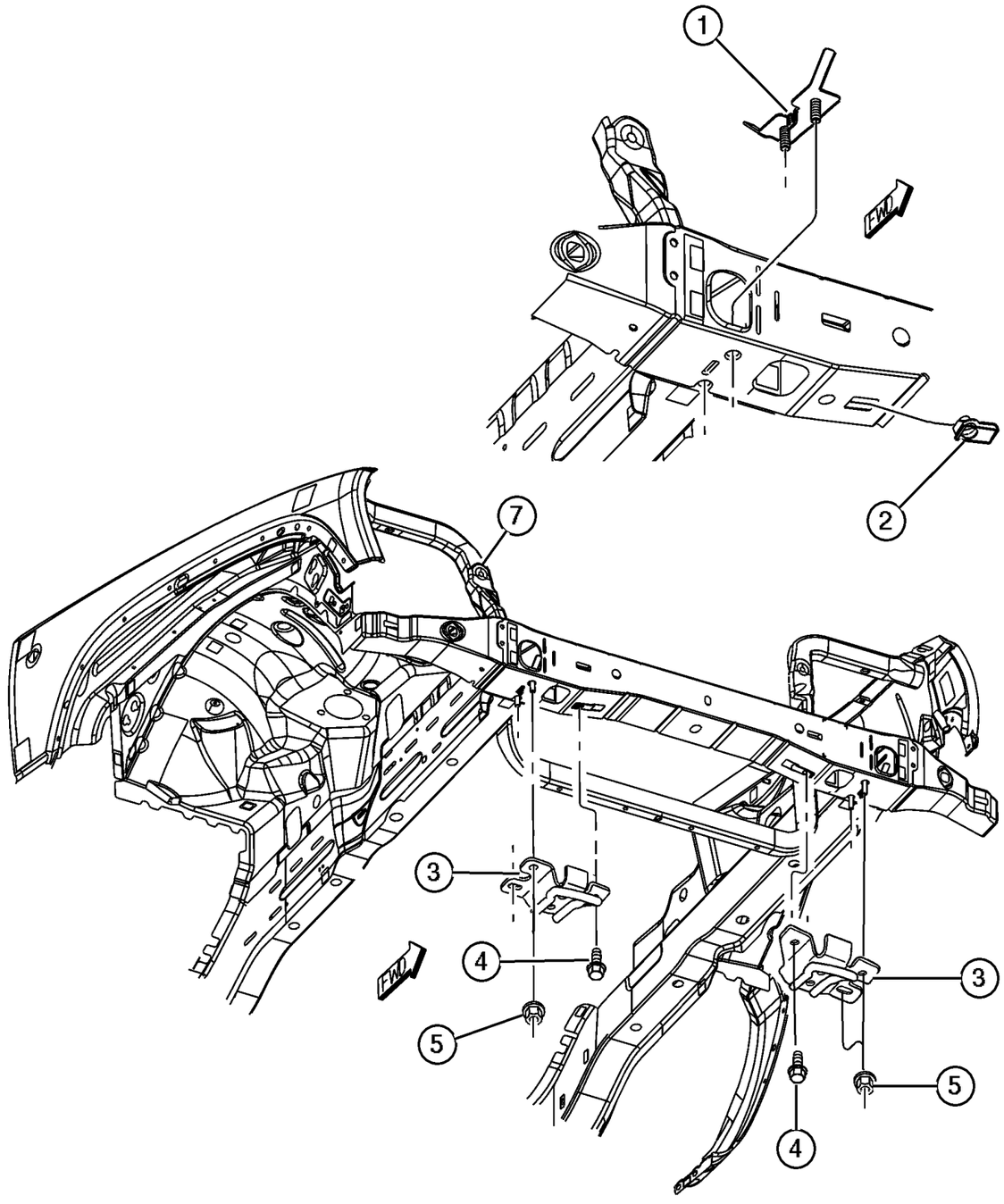

ITEM	PART NUMBER	QTY	LINE	SERIES	BODY	ENGINE	TRANS	TRIM	DESCRIPTION
1	52059 352AA	1							STUD PLATE
2	6504 818AA	1							NUT, M10x1.50
3	52059 353AA	1							EYE, Tow
4	6503 699	8							SCREW AND WASHER, Hex Head, M10x1.5x28
5	6504 818AA	1							NUT, M10x1.50
-6									HOOK, Tow
	52059 236AB	1							Right
	52059 237AB	1							Left
7	55176 756AD	1							SUPPORT, Radiator

JEEP LIBERTY (KJ)

SERIES	LINE	BODY	ENGINE	TRANSMISSION
P = Limited	J = LHD (4WD)	74 = 4 Dr. (104.3 WB)	ED1, ED0 = 2.4L Power Tech	DDK = 5 Speed HDManual
H = Sport	U = RHD (4WD)		EKG, EK0 = 3.7L Power Tech	DDD = 5 Speed HD Manual
M = Renegade	T = LHD (2WD)		ENJ = 2.5L 4Cyl Turbo Diesel	DG4,DGQ = Multi-Speed Auto
			ENR = 2.8L 4Cyl Turbo Diesel	DG6 = 4 Speed Auto Transm
			EN0 = 4Cyl Turbo Diesel	DG0 = All Automatic Transm
				DBB = All Manual Transm

AR = Use as required - = Non illustrated part # = New this model year

June 3, 2003

« RETURN TO GROUP INDEX

Tow Hooks - Rear
Figure 013-620

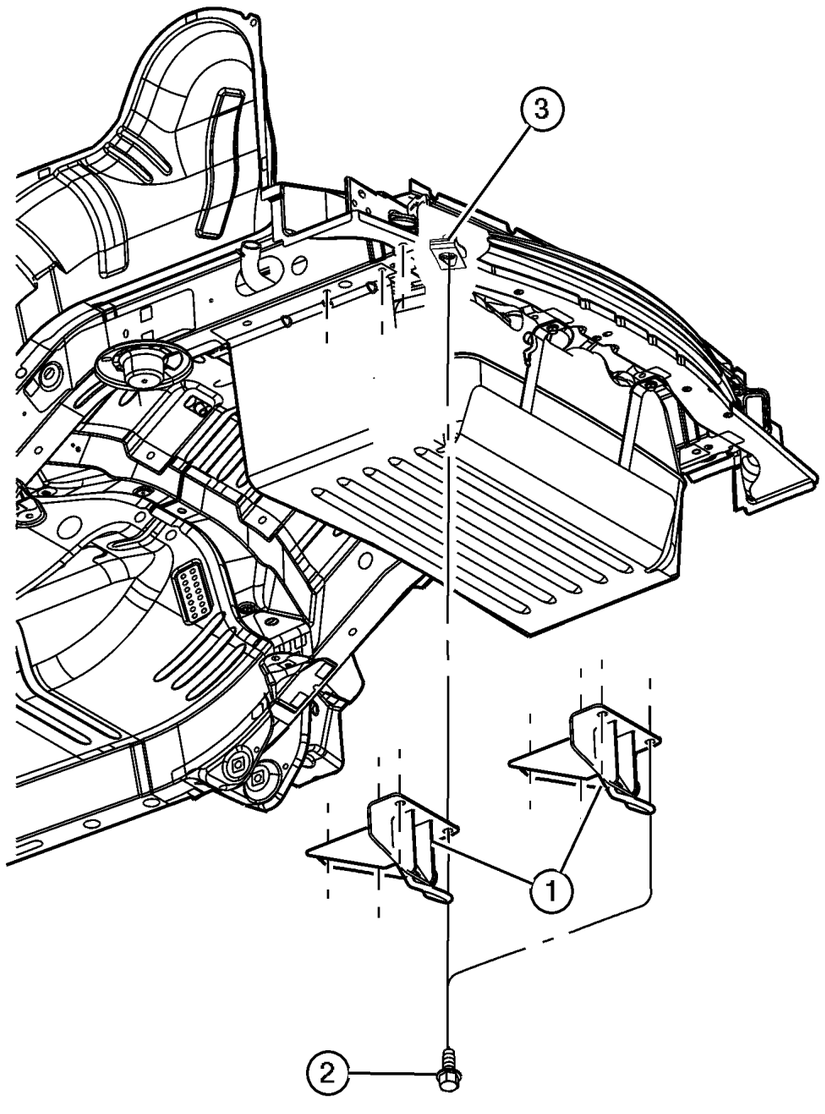

ITEM	PART NUMBER	QTY	LINE	SERIES	BODY	ENGINE	TRANS	TRIM	DESCRIPTION
1									HOOK, Tow
	52059 233AB	1							Hook
	52059 360AA	1							Eye
2	6502 557	6							BOLT, Hex Flange Head, M12x1.75x40
3	6504 565	1							NUT, U Multi Thread

JEEP LIBERTY (KJ)

SERIES	LINE	BODY	ENGINE	TRANSMISSION
P = Limited	J = LHD (4WD)	74 = 4 Dr. (104.3 WB)	ED1, ED0 = 2.4L Power Tech	DDK = 5 Speed HDManual
H = Sport	U = RHD (4WD)		EKG, EK0 = 3.7L Power Tech	DDD = 5 Speed HD Manual
M = Renegade	T = LHD (2WD)		ENJ = 2.5L 4Cyl Turbo Diesel	DG4,DGQ = Multi-Speed Auto
			ENR = 2.8L 4Cyl Turbo Diesel	DG6 = 4 Speed Auto Transm
			EN0 = 4Cyl Turbo Diesel	DG0 = All Automatic Transm
				DBB = All Manual Transm

Group – 014
Fuel

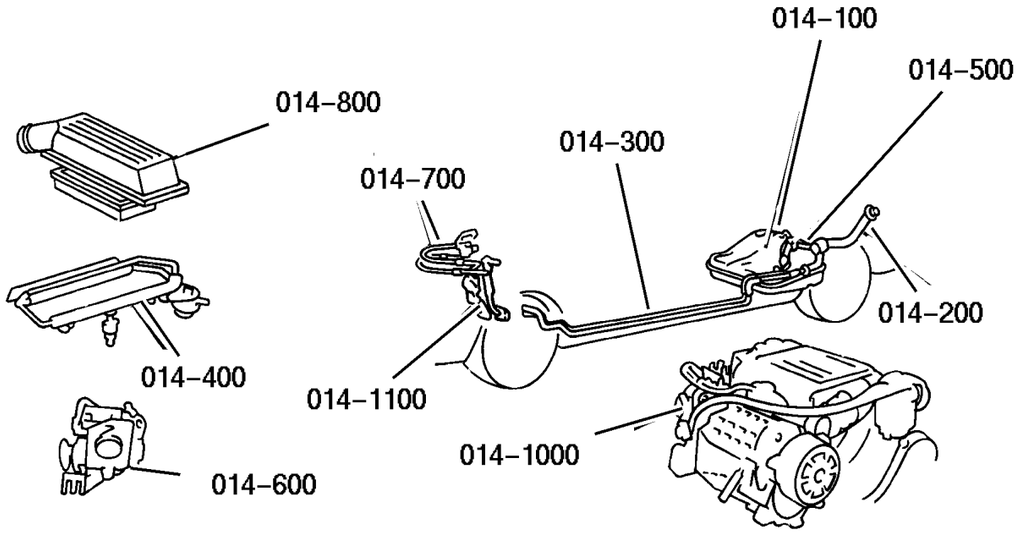

014–100 Tank, Fuel	014–200 Fuel Tank Filler Tube	014–300 Fuel Lines	014–400 Fuel Rail
014–500 Fuel Pump and Sending Unit	014–600 Throttle Body	014–700 Throttle Controls	014–800 Air Cleaner

Group – 014
Fuel

014–1000 Speed Control	014–1100 Accelerator Pedal		

GROUP 14 - Fuel

Illustration Title	Group-Fig. No.
Tank, Fuel	
Tank, Fuel, All Engines	Fig. 014-110
Fuel Tank Filler Tube	
Fuel Tank Filler Tube, All Engines	Fig. 014-210
Fuel Lines	
Fuel Lines Front, 2.4L [ED1]	Fig. 014-310
Fuel Lines Rear, 2.4L [ED1]	Fig. 014-315
Fuel Lines Front, 3.7L [EKG]	Fig. 014-320
Fuel Lines Rear, 3.7L [EKG]	Fig. 014-325
Fuel Lines Front 2.5L/2.8 Diesel [EN0]	Fig. 014-330
Fuel Lines Rear, 2.5L/2.8 Diesel [EN0]	Fig. 014-335
Fuel Filter And Water Separator, 2.5/2.8 [EN0]	Fig. 014-340
Fuel Rail	
Fuel Rail, 2.4L [ED1]	Fig. 014-410
Fuel Rail, 3.7L [EKG]	Fig. 014-415
Fuel Injection System 2.5L/2.8 Diesel [EN0]	Fig. 014-420
Fuel Injection Pump 2.5/2.8 Diesel [EN0]	Fig. 014-430
Fuel Injection Pump Mounting	Fig. 014-435
Fuel Pump and Sending Unit	
Fuel Pump and Sending Unit, 2.4L [ED1], 3.7L [EKG], 2.5L Diesel [ENJ]	Fig. 014-510
Throttle Body	
Throttle Body, 2.4L [ED1], 3.7, [EKG]	Fig. 014-610
Turbocharger 2.5 Diesel [ENJ] [ENR]	Fig. 014-620
Throttle Controls	
Throttle Controls, 2.4L [ED1]	Fig. 014-710
Throttle Controls, 3.7L [EKG]	Fig. 014-720
Throttle Controls, 2.5L/2.8 Diesel [EN0]	Fig. 014-730
Air Cleaner	
Air Cleaner, 2.4L [ED1]	Fig. 014-810
Air Cleaner, 3.7L [EKG]	Fig. 014-820
Air Cleaner, 2.5L/2.8 Diesel [EN0]	Fig. 014-830
Speed Control	
Speed Control	Fig. 014-1010
Accelerator Pedal	
Accelerator Pedal	Fig. 014-1110

Tank, Fuel, All Engines
Figure 014-110

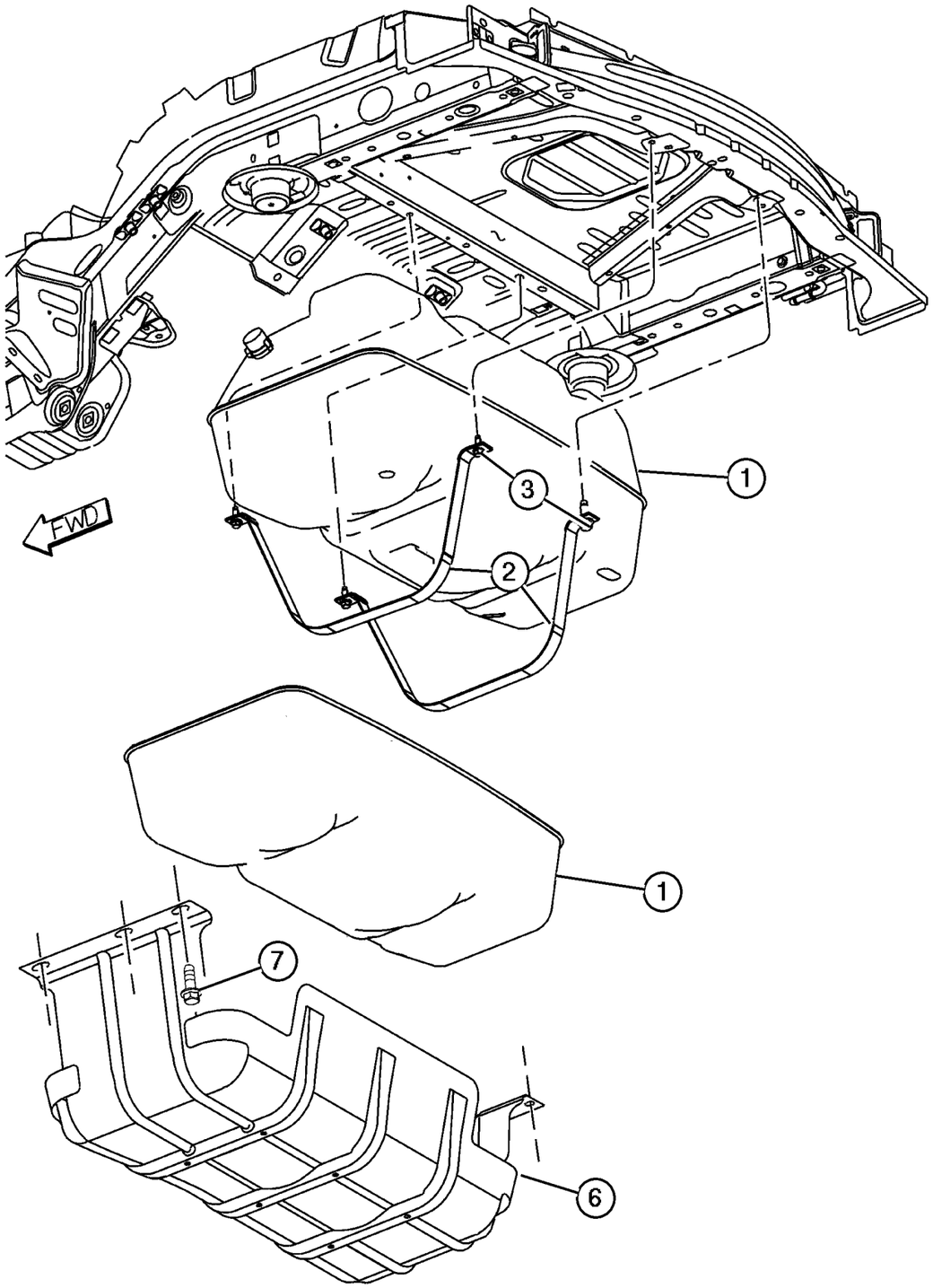

ITEM	PART NUMBER	QTY	LINE	SERIES	BODY	ENGINE	TRANS	TRIM	DESCRIPTION
Note; Sales Codes									
[ED0]= All 2.2L,2.5L,2.4L, 4 Cylinder Gas Engines									
[EK0]= All 3.7L 6 Cylinder Gas Engines									
[EN0]= All 4/5 Cylinder Turbo Diesels									
[XEE]=Skid Plate Shield, Fuel Tank									
1									TANK, Fuel
	52100 336AF	1				ED0, EK0			
	52100 521AF	1				EN0			
2	52100 334AE	2							STRAP, Fuel Tank
3	6503 183	4							SCREW, Hex Head, M10x1.5x30
-4									SHIELD, Heat
	5072 731AA	1				EN0	DBB		
		1				EN0	DG0		
	55360 343AA	1				ED0, EK0			
		1				EN0			[NF2]
-5									NUT, Heat Shield Attach
	52100 525AA	4				ED0, EK0			
		4				EN0			
6	52100 332AF	1							PLATE, Skid, [XEE]
7	6502 557	6							BOLT, Hex Flange Head, M12x1.75x40
-8									FILTER, Fuel
	52100 402AF	1				ED0, EK0			
	52128 698AA	1				EN0			
-9	6505 775AA	2				EN0			CLAMP, Hose, Fuel Hose to Filter
-10	52100 469AD	1				EN0			HOSE, Fuel Vapor, Fuel Tank

JEEP LIBERTY (KJ)

SERIES	LINE	BODY	ENGINE	TRANSMISSION
P = Limited	J = LHD (4WD)	74 = 4 Dr. (104.3 WB)	ED1, ED0 = 2.4L Power Tech	DDK = 5 Speed HDManual
H = Sport	U = RHD (4WD)		EKG, EK0 = 3.7L Power Tech	DDD = 5 Speed HD Manual
M = Renegade	T = LHD (2WD)		ENJ = 2.5L 4Cyl Turbo Diesel	DG4,DGQ = Multi-Speed Auto
			ENR = 2.8L 4Cyl Turbo Diesel	DG6 = 4 Speed Auto Transm
			EN0 = 4Cyl Turbo Diesel	DG0 = All Automatic Transm
				DBB = All Manual Transm

AR = Use as required - = Non illustrated part # = New this model year **June 3, 2003**

« RETURN TO GROUP INDEX

Fuel Tank Filler Tube, All Engines
Figure 014-210

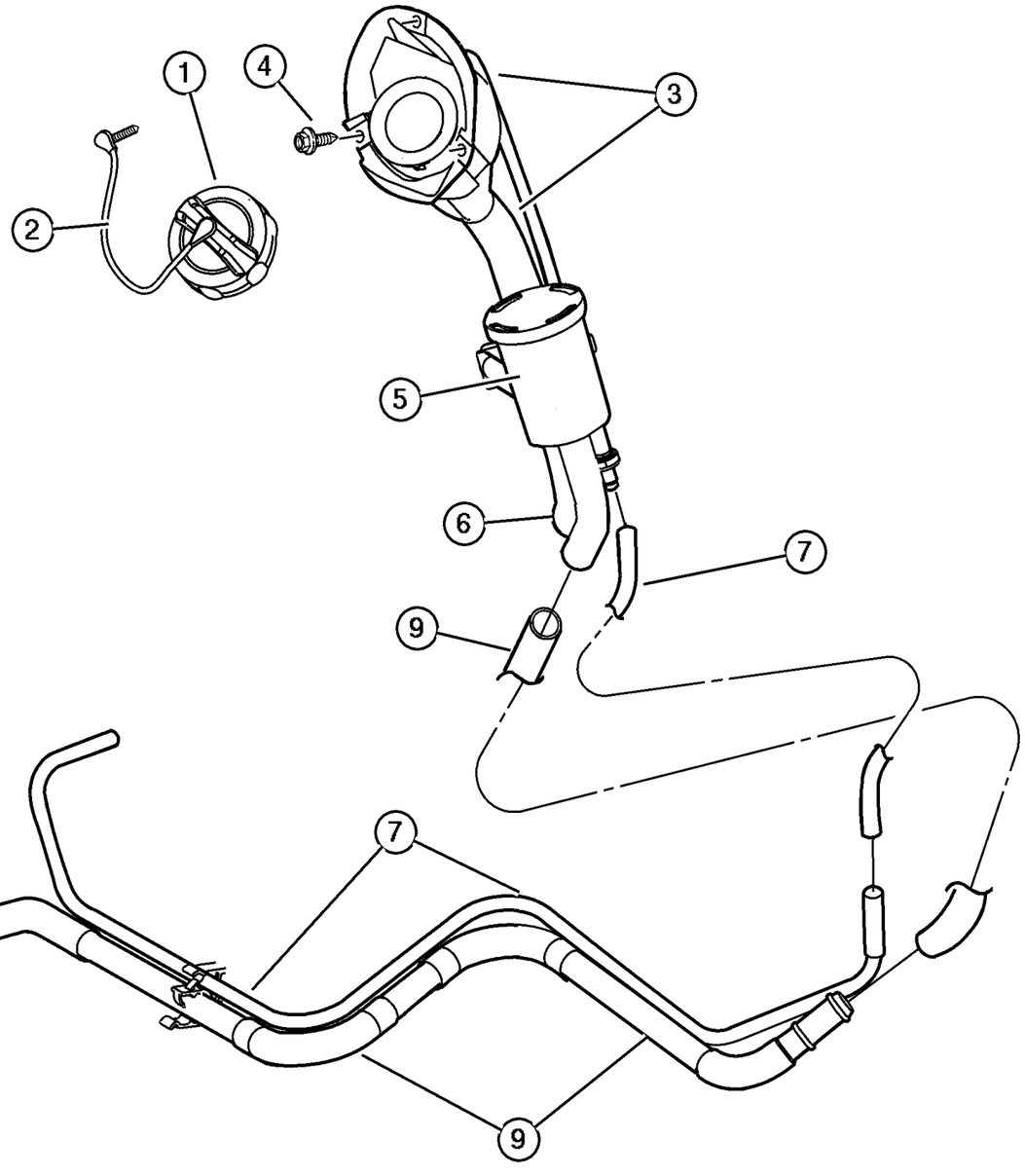

ITEM	PART NUMBER	QTY	LINE	SERIES	BODY	ENGINE	TRANS	TRIM	DESCRIPTION
Note; Sales Codes									
[ED0]= All 2.4L, 4 Cylinder Gas Engines									
[EK0]= All 3.7L 6 Cylinder Gas Engines									
[EN0]= All 2.5L Turbo Diesels									
1	52102 464AA	1							CAP, Fuel Filler
2	4682 676	1							TETHER, Fuel Filler Cap
3									TUBE, Fuel Filler
	52100 329AG	1				ED0, EK0			
	52100 330AG	1				EN0			
4	6035 204	3							SCREW, Tapping, .19-16x.75
5	4612 901	1				ED0, EK0			FILTER, Fuel Vapor Vent
6									HOSE, Fuel Filler
	52100 339AD	1				EN0			
		1				ED0, EK0			
7									TUBE, Fuel, Serviced With Fuel Flow Valve , (NOT SERVICED) (Not Serviced)
-8	52100 557AJ	1				ED0, EK0			VALVE, Flow
9	52128 546AD	1				ED0, EK0			TUBE, Vapor
-10	5278 660AA	1				ED0, EK0			VALVE, Check, Fuel Filler Tube

JEEP LIBERTY (KJ)

SERIES	LINE	BODY	ENGINE	TRANSMISSION
P = Limited	J = LHD (4WD)	74 = 4 Dr. (104.3 WB)	ED1, ED0 = 2.4L Power Tech	DDK = 5 Speed HDManual
H = Sport	U = RHD (4WD)		EKG, EK0 = 3.7L Power Tech	DDD = 5 Speed HD Manual
M = Renegade	T = LHD (2WD)		ENJ = 2.5L 4Cyl Turbo Diesel	DG4,DGQ = Multi-Speed Auto
			ENR = 2.8L 4Cyl Turbo Diesel	DG6 = 4 Speed Auto Transm
			EN0 = 4Cyl Turbo Diesel	DG0 = All Automatic Transm
				DBB = All Manual Transm

AR = Use as required - = Non illustrated part # = New this model year **June 3, 2003**

« RETURN TO GROUP INDEX

Fuel Lines Front, 2.4L [ED1]
Figure 014-310

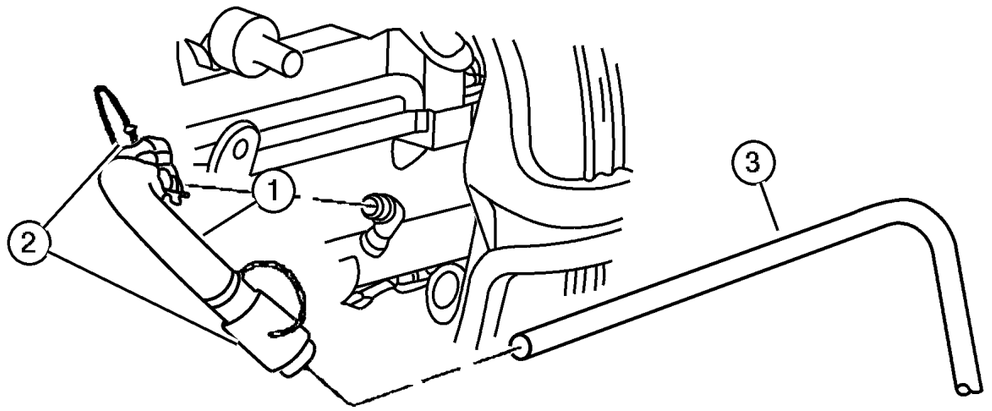

ITEM	PART NUMBER	QTY	LINE	SERIES	BODY	ENGINE	TRANS	TRIM	DESCRIPTION
Note; Sales Codes									
[ED0]= All 2.2L,2.5L,2.4L, 4 Cylinder Gas Engines									
1	52100 352AB	1				ED0			BUNDLE, Fuel Line
2	5212 7788	2				ED0			CLIP, Fuel Line
3									TUBE, Fuel, Serviced In Chassis Bundle, (NOT SERVICED) (Not Serviced)

JEEP LIBERTY (KJ)

SERIES	LINE	BODY	ENGINE	TRANSMISSION
P = Limited	J = LHD (4WD)	74 = 4 Dr. (104.3 WB)	ED1, ED0 = 2.4L Power Tech	DDK = 5 Speed HDManual
H = Sport	U = RHD (4WD)		EKG, EK0 = 3.7L Power Tech	DDD = 5 Speed HD Manual
M = Renegade	T = LHD (2WD)		ENJ = 2.5L 4Cyl Turbo Diesel	DG4,DGQ = Multi-Speed Auto
			ENR = 2.8L 4Cyl Turbo Diesel	DG6 = 4 Speed Auto Transm
			EN0 = 4Cyl Turbo Diesel	DG0 = All Automatic Transm
				DBB = All Manual Transm

Fuel Lines Rear, 2.4L [ED1]
Figure 014-315

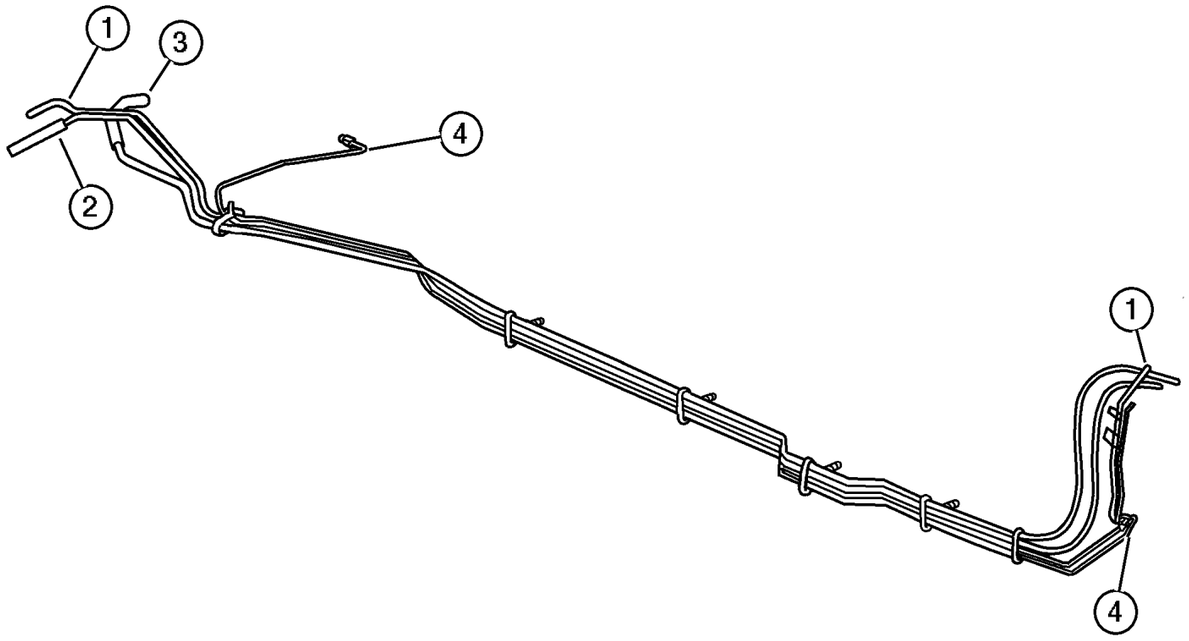

ITEM	PART NUMBER	QTY	LINE	SERIES	BODY	ENGINE	TRANS	TRIM	DESCRIPTION
Note; Sales Codes									
[ED0]= All 2.2 l,2.5L, 2.4L, 4 Cylinde Gas Engines									
[EK0]= All 3.7L 6 Cylinder Gas Engines									
1	5072 373AA	1				ED0, EK0			TUBE, Fuel Supply
2	53013 091AF	1				ED0, EK0			TUBE, Fuel Vapor
3	53013 330AC	1				ED0, EK0			TUBE, Vacuum
4									TUBE, Brake, See Brake Group, (NOT SERVICED) (Not Serviced)

JEEP LIBERTY (KJ)

SERIES	LINE	BODY	ENGINE	TRANSMISSION
P = Limited	J = LHD (4WD)	74 = 4 Dr. (104.3 WB)	ED1, ED0 = 2.4L Power Tech	DDK = 5 Speed HDManual
H = Sport	U = RHD (4WD)		EKG, EK0 = 3.7L Power Tech	DDD = 5 Speed HD Manual
M = Renegade	T = LHD (2WD)		ENJ = 2.5L 4Cyl Turbo Diesel	DG4,DGQ = Multi-Speed Auto
			ENR = 2.8L 4Cyl Turbo Diesel	DG6 = 4 Speed Auto Transm
			EN0 = 4Cyl Turbo Diesel	DG0 = All Automatic Transm
				DBB = All Manual Transm

Fuel Lines Front, 3.7L [EKG]
Figure 014-320

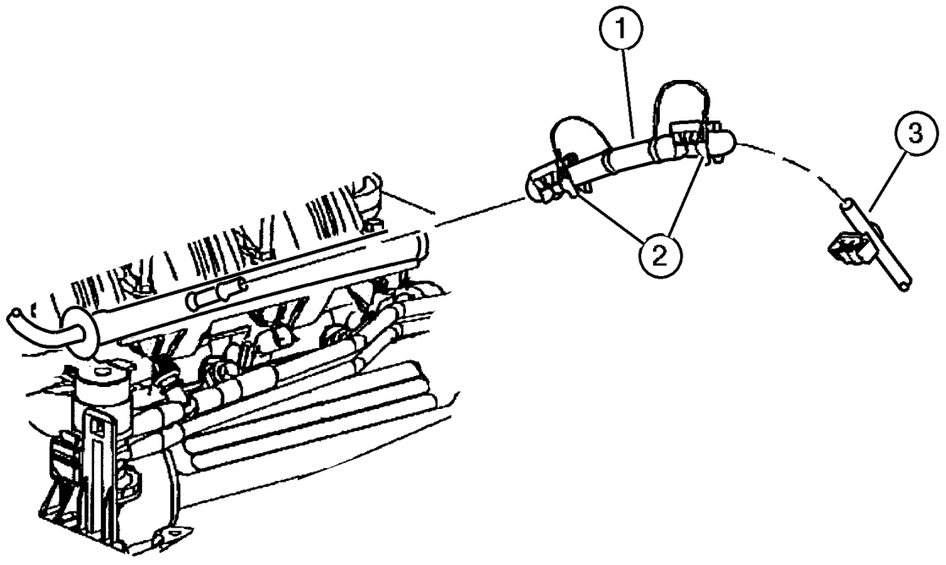

ITEM	PART NUMBER	QTY	LINE	SERIES	BODY	ENGINE	TRANS	TRIM	DESCRIPTION
Note; Sales Codes									
[EK0]= All 3.7L 6 Cylinder Gas Engines									
1	52100 320AB	1				EK0			BUNDLE, Fuel Line
2	5212 7788	2				EK0			CLIP, Fuel Line
3									BUNDLE, Fuel Line, Reference, See Rear Fuel Lines, (NOT SERVICED) (Not Serviced)

JEEP LIBERTY (KJ)

SERIES	LINE	BODY	ENGINE	TRANSMISSION
P = Limited	J = LHD (4WD)	74 = 4 Dr. (104.3 WB)	ED1, ED0 = 2.4L Power Tech	DDK = 5 Speed HDManual
H = Sport	U = RHD (4WD)		EKG, EK0 = 3.7L Power Tech	DDD = 5 Speed HD Manual
M = Renegade	T = LHD (2WD)		ENJ = 2.5L 4Cyl Turbo Diesel	DG4,DGQ = Multi-Speed Auto
			ENR = 2.8L 4Cyl Turbo Diesel	DG6 = 4 Speed Auto Transm
			EN0 = 4Cyl Turbo Diesel	DG0 = All Automatic Transm
				DBB = All Manual Transm

Fuel Lines Rear, 3.7L [EKG]
Figure 014-325

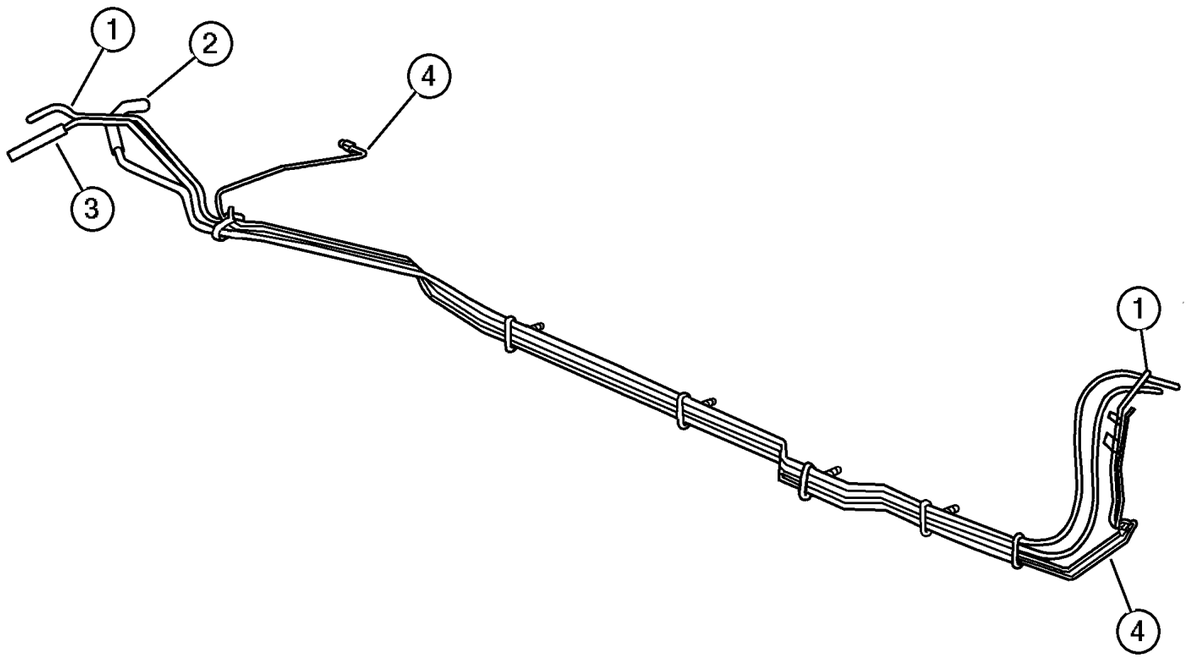

ITEM	PART NUMBER	QTY	LINE	SERIES	BODY	ENGINE	TRANS	TRIM	DESCRIPTION
Note; Sales Codes									
[ED0]= All 2.2L, 2.5L, 2.4L, 4 Cylinder Gas Engines									
[EK0]= All 3.7L 6 Cylinder Gas Engines									
1	5072 373AA	1				ED0, EK0			TUBE, Fuel Supply
2	53013 091AF	1				ED0, EK0			TUBE, Fuel Vapor
3	53013 330AC	1				ED0, EK0			TUBE, Vacuum
4									TUBE, Brake, See Brake Group, (NOT SERVICED) (Not Serviced)
-5									CLIP, Fuel Bundle
	5072 645AB	1				ED0, EK0			2 Way
	5072 646AA	1				ED0, EK0			4 Way
	5072 647AA	5				ED0, EK0			Bundle to Rail

JEEP LIBERTY (KJ)

SERIES	LINE	BODY	ENGINE	TRANSMISSION
P = Limited	J = LHD (4WD)	74 = 4 Dr. (104.3 WB)	ED1, ED0 = 2.4L Power Tech	DDK = 5 Speed HDManual
H = Sport	U = RHD (4WD)		EKG, EK0 = 3.7L Power Tech	DDD = 5 Speed HD Manual
M = Renegade	T = LHD (2WD)		ENJ = 2.5L 4Cyl Turbo Diesel	DG4,DGQ = Multi-Speed Auto
			ENR = 2.8L 4Cyl Turbo Diesel	DG6 = 4 Speed Auto Transm
			EN0 = 4Cyl Turbo Diesel	DG0 = All Automatic Transm
				DBB = All Manual Transm

Fuel Lines Front 2.5L/2.8 Diesel [EN0]
Figure 014-330

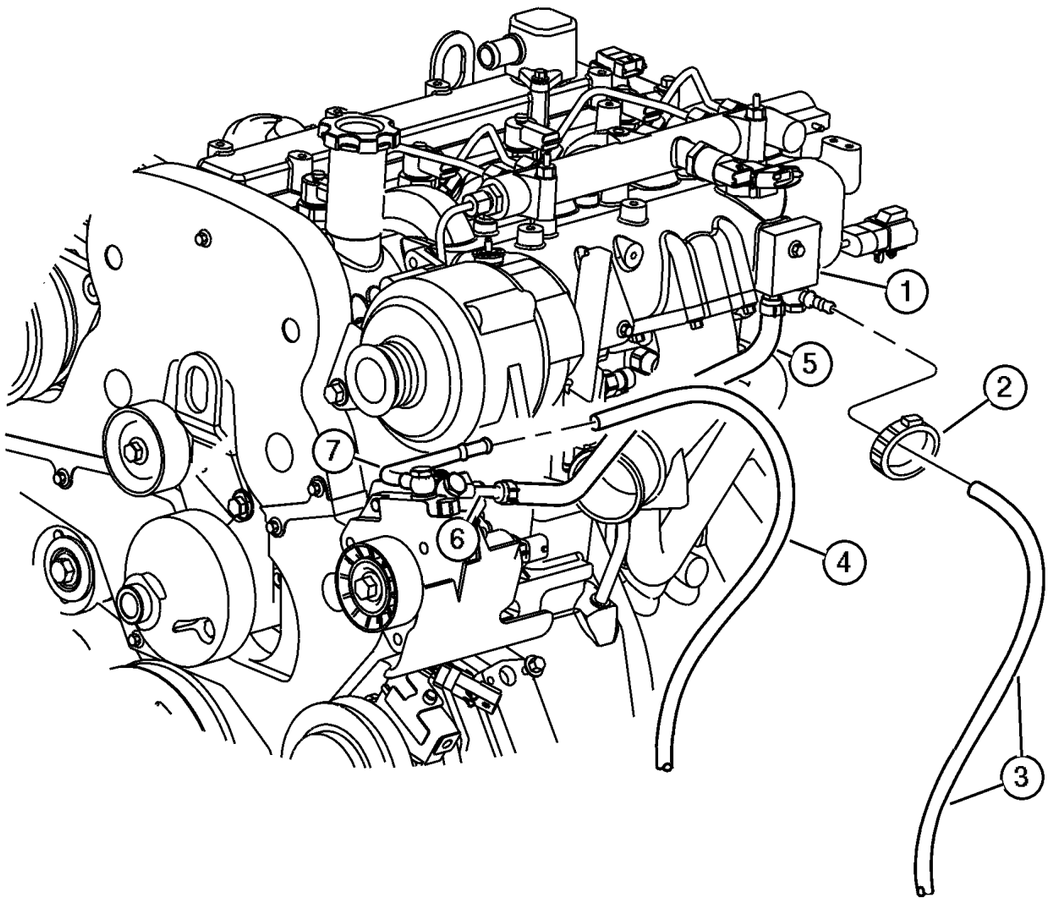

ITEM	PART NUMBER	QTY	LINE	SERIES	BODY	ENGINE	TRANS	TRIM	DESCRIPTION
Note; Sales Codes									
[DBB]= All Manual Transmissions									
[EN0]= All 4/5 Cylinder Turbo Diesels									
1									BLOCK, Fuel Return
	5072 743AA	1				EN0	DBB		
		1				EN0	DG0		
2	6504 502	2	J, T			EN0			CLAMP, Fuel Hose, 1/4‘‘
3	52100 397AG	1				EN0			BUNDLE, Fuel Line
4	52100 325AC	1				EN0			HOSE, Fuel
5									HOSE, Fuel
	5072 725AB	1				EN0	DBB		
		1				EN0	DG0		
6									BANJO, Fuel
	5072 723AB	1				EN0	DBB		
		1				EN0	DG0		
7									BANJO, Fuel
	5072 721AA	1				EN0	DBB		
		1				EN0	DG0		

JEEP LIBERTY (KJ)

SERIES	LINE	BODY	ENGINE	TRANSMISSION
P = Limited	J = LHD (4WD)	74 = 4 Dr. (104.3 WB)	ED1, ED0 = 2.4L Power Tech	DDK = 5 Speed HDManual
H = Sport	U = RHD (4WD)		EKG, EK0 = 3.7L Power Tech	DDD = 5 Speed HD Manual
M = Renegade	T = LHD (2WD)		ENJ = 2.5L 4Cyl Turbo Diesel	DG4,DGQ = Multi-Speed Auto
			ENR = 2.8L 4Cyl Turbo Diesel	DG6 = 4 Speed Auto Transm
			EN0 = 4Cyl Turbo Diesel	DG0 = All Automatic Transm
				DBB = All Manual Transm

Fuel Lines Rear, 2.5L/2.8 Diesel [EN0]
Figure 014-335

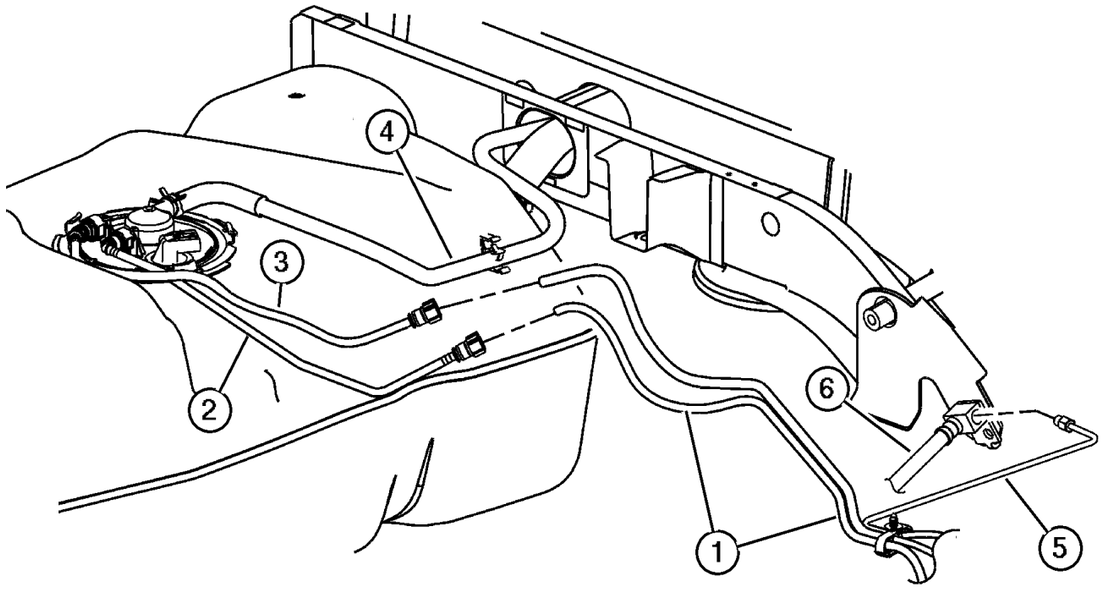

ITEM	PART NUMBER	QTY	LINE	SERIES	BODY	ENGINE	TRANS	TRIM	DESCRIPTION
Note; Sales Codes									
[EN0]= All 4/5 Cylinder Turbo Diesels									
1	52100 397AG	1				EN0			BUNDLE, Fuel Line
2	52100 323AC	1				EN0			TUBE, Fuel Supply
3	52100 324AC	1				EN0			TUBE, Fuel Supply
4	52100 469AD	1				EN0			HOSE, Fuel Vapor
5									TUBE, Brake, Serviced In Item 1, (NOT SERVICED) (Not Serviced)
6									HOSE, Brake, See Catalog Group 5, (NOT SERVICED) (Not Serviced)

JEEP LIBERTY (KJ)

SERIES	LINE	BODY	ENGINE	TRANSMISSION
P = Limited	J = LHD (4WD)	74 = 4 Dr. (104.3 WB)	ED1, ED0 = 2.4L Power Tech	DDK = 5 Speed HDManual
H = Sport	U = RHD (4WD)		EKG, EK0 = 3.7L Power Tech	DDD = 5 Speed HD Manual
M = Renegade	T = LHD (2WD)		ENJ = 2.5L 4Cyl Turbo Diesel	DG4,DGQ = Multi-Speed Auto
			ENR = 2.8L 4Cyl Turbo Diesel	DG6 = 4 Speed Auto Transm
			EN0 = 4Cyl Turbo Diesel	DG0 = All Automatic Transm
				DBB = All Manual Transm

Fuel Filter And Water Separator, 2.5/2.8 [EN0]
Figure 014-340

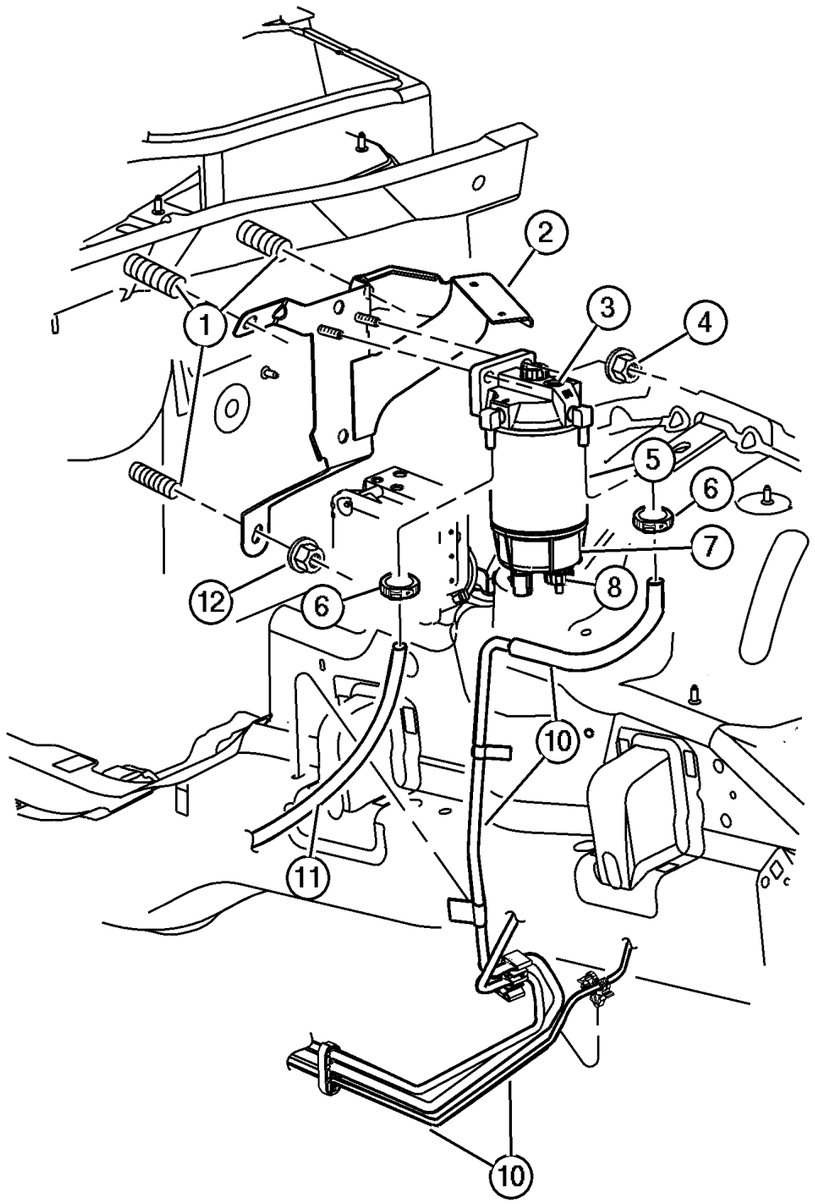

ITEM	PART NUMBER	QTY	LINE	SERIES	BODY	ENGINE	TRANS	TRIM	DESCRIPTION
Note; Sales Codes									
[EN0]= All 4/5 Cylinder Turbo Diesels									
1									STUD, (NOT SERVICED) (Not Serviced)
2	53013 304AC	1				EN0			BRACKET, Fuel Filter
3	5069 072AA	1				EN0			HEAD, Fuel Filter
4	6502 756	2				EN0			NUT, Hex Lock, M8x1.25
5	52128 698AA	1				EN0			FILTER, Fuel
6	6504 502	2	J, T			EN0			CLAMP, Fuel Hose, 1/4‘‘
7	5014 018AA	1				EN0			BOWL, Fuel Filter
8	4723 907	1				EN0			DRAIN, Fuel Filter Bowl
-9	4723 901	1				EN0			VALVE KIT, Fuel Filter Check
10	52100 397AG	1				EN0			BUNDLE, Fuel Line
11	52100 325AC	1				EN0			HOSE, Fuel
12									NUT, (NOT SERVICED) (Not Serviced)
-13									HEATER
	#5093 937AA	1				EN0	DBB		
		1				EN0	DG0		

JEEP LIBERTY (KJ)

SERIES	LINE	BODY	ENGINE	TRANSMISSION
P = Limited	J = LHD (4WD)	74 = 4 Dr. (104.3 WB)	ED1, ED0 = 2.4L Power Tech	DDK = 5 Speed HDManual
H = Sport	U = RHD (4WD)		EKG, EK0 = 3.7L Power Tech	DDD = 5 Speed HD Manual
M = Renegade	T = LHD (2WD)		ENJ = 2.5L 4Cyl Turbo Diesel	DG4,DGQ = Multi-Speed Auto
			ENR = 2.8L 4Cyl Turbo Diesel	DG6 = 4 Speed Auto Transm
			EN0 = 4Cyl Turbo Diesel	DG0 = All Automatic Transm
				DBB = All Manual Transm

AR = Use as required - = Non illustrated part # = New this model year **June 3, 2003**

« RETURN TO GROUP INDEX

Fuel Rail, 2.4L [ED1]
Figure 014-410

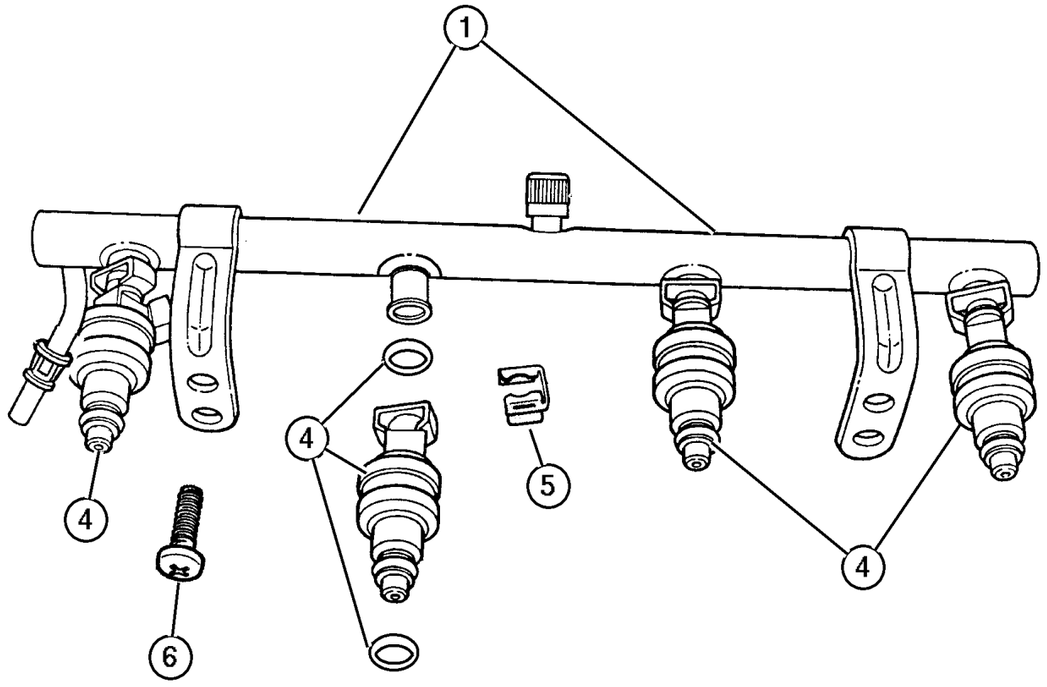

ITEM	PART NUMBER	QTY	LINE	SERIES	BODY	ENGINE	TRANS	TRIM	DESCRIPTION
Note; Sales Codes									
[ED0]= All 2.2L, 2.5L, 2.4L, 4 Cylinder Gas Engines									
1	#5072 484AB	1				ED0			RAIL, Fuel
-2									REGULATOR, Fuel Pressure, Serviced With Fuel Rail, (NOT SERVICED) (Not Serviced)
-3									FASTENER, Serviced With Fuel Rail, (NOT SERVICED) (Not Serviced)
4	53013 490AA	4				ED0			INJECTOR, Fuel
5	53013 504AA	4				ED0			CLIP, Fuel Injector
6	6101 506	2				ED0			BOLT AND CONED WASHER, M8x1.25x18

JEEP LIBERTY (KJ)

SERIES	LINE	BODY	ENGINE	TRANSMISSION
P = Limited	J = LHD (4WD)	74 = 4 Dr. (104.3 WB)	ED1, ED0 = 2.4L Power Tech	DDK = 5 Speed HDManual
H = Sport	U = RHD (4WD)		EKG, EK0 = 3.7L Power Tech	DDD = 5 Speed HD Manual
M = Renegade	T = LHD (2WD)		ENJ = 2.5L 4Cyl Turbo Diesel	DG4,DGQ = Multi-Speed Auto
			ENR = 2.8L 4Cyl Turbo Diesel	DG6 = 4 Speed Auto Transm
			EN0 = 4Cyl Turbo Diesel	DG0 = All Automatic Transm
				DBB = All Manual Transm

Fuel Rail, 3.7L [EKG]
Figure 014-415

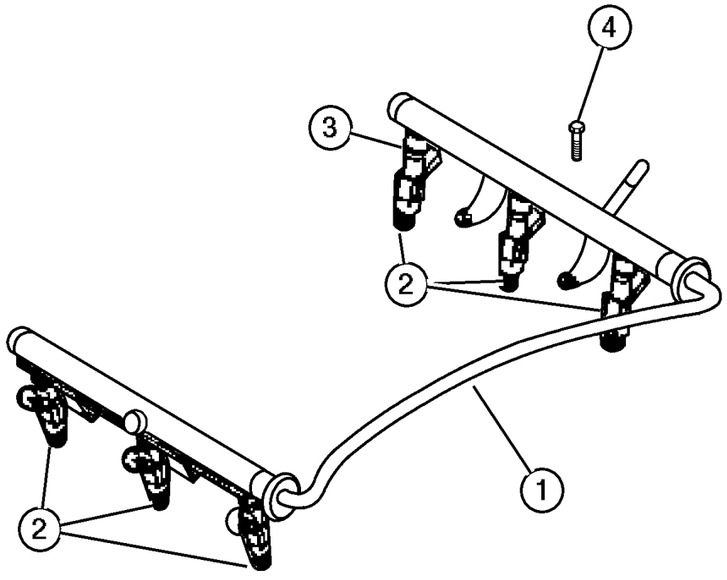

ITEM	PART NUMBER	QTY	LINE	SERIES	BODY	ENGINE	TRANS	TRIM	DESCRIPTION
Note; Sales Codes									
[EK0]= All 3.7L 6 Cylinder Gas Engines									
1	5303 1102	1				EK0			RAIL, Fuel
2	5303 1099	6				EK0			INJECTOR, Fuel
3	4418 257AB	6				EK0			CLIP, Fuel Injector
4	6505 504AA	4				EK0			SCREW

JEEP LIBERTY (KJ)

SERIES	LINE	BODY	ENGINE	TRANSMISSION
P = Limited	J = LHD (4WD)	74 = 4 Dr. (104.3 WB)	ED1, ED0 = 2.4L Power Tech	DDK = 5 Speed HDManual
H = Sport	U = RHD (4WD)		EKG, EK0 = 3.7L Power Tech	DDD = 5 Speed HD Manual
M = Renegade	T = LHD (2WD)		ENJ = 2.5L 4Cyl Turbo Diesel	DG4,DGQ = Multi-Speed Auto
			ENR = 2.8L 4Cyl Turbo Diesel	DG6 = 4 Speed Auto Transm
			EN0 = 4Cyl Turbo Diesel	DG0 = All Automatic Transm
				DBB = All Manual Transm

Fuel Injection System 2.5L/2.8 Diesel [EN0]
Figure 014-420

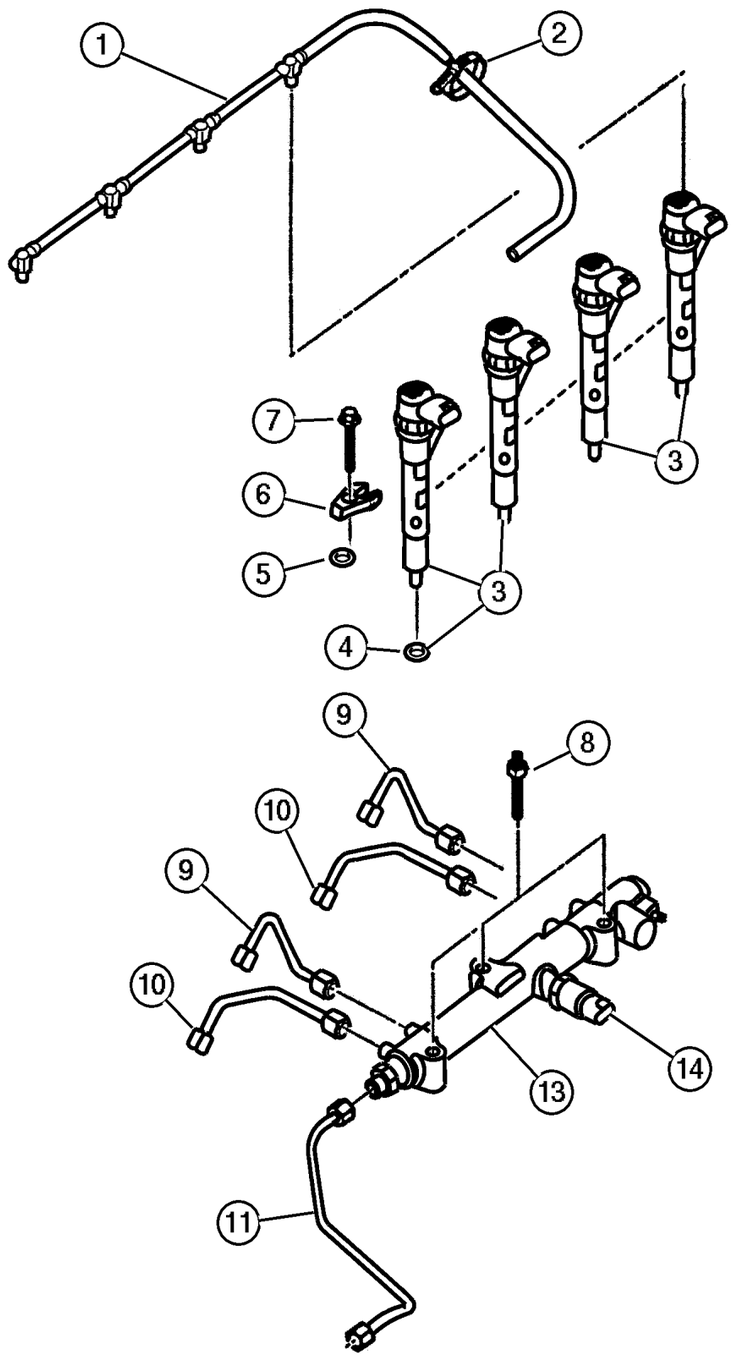

ITEM	PART NUMBER	QTY	LINE	SERIES	BODY	ENGINE	TRANS	TRIM	DESCRIPTION
Note; Sales Codes									
[DBB]= All Manual Transmissions									
[EN0]= All 4/5 Cylinder Turbo Diesels									
1									PIPE, Fuel Spill Return
	#5093 923AA	1				EN0	DBB		
		1				EN0	DG0		
2									CLIP, Spill Return Pipe
	4728 184	1				EN0	DBB		
		1				EN0	DG0		
3									INJECTOR, Fuel
	5066 820AA	4				EN0	DBB		
		4				EN0	DG0		
4									O RING, Fuel Injector
	5072 722AA	4				EN0	DBB		
		4				EN0	DG0		
5									PLATE
	#5093 922AA	4				EN0	DBB		
		4				EN0	DG0		
6									CONNECTOR, Injector
	5066 904AA	4				EN0	DBB		
		4				EN0	DG0		
7									SCREW
	5066 962AA	4				EN0	DBB		
		4				EN0	DG0		
8									STUD
	5066 913AA	3				EN0	DBB		
		3				EN0	DG0		
9									TUBE, Fuel Injector Supply
	5066 909AB	1				EN0	DBB		
		1				EN0	DG0		
10									TUBE, Fuel Injector Supply
	5066 910AB	2				EN0	DBB		
		2				EN0	DG0		
11									TUBE, Fuel Supply from Pump
	5066 911AA	1				EN0	DBB		
		1				EN0	DG0		
-12									CLAMP, Item 11 Attach
	#5093 925AA	1				EN0	DBB		
		1				EN0	DG0		
13									RAIL, Fuel
	#5093 924AA	1				EN0	DBB		

JEEP LIBERTY (KJ)

SERIES	LINE	BODY	ENGINE	TRANSMISSION
P = Limited	J = LHD (4WD)	74 = 4 Dr. (104.3 WB)	ED1, ED0 = 2.4L Power Tech	DDK = 5 Speed HDManual
H = Sport	U = RHD (4WD)		EKG, EK0 = 3.7L Power Tech	DDD = 5 Speed HD Manual
M = Renegade	T = LHD (2WD)		ENJ = 2.5L 4Cyl Turbo Diesel	DG4,DGQ = Multi-Speed Auto
			ENR = 2.8L 4Cyl Turbo Diesel	DG6 = 4 Speed Auto Transm
			EN0 = 4Cyl Turbo Diesel	DG0 = All Automatic Transm
				DBB = All Manual Transm

AR = Use as required - = Non illustrated part # = New this model year **June 3, 2003**

« RETURN TO GROUP INDEX »

Fuel Injection System 2.5L/2.8 Diesel [EN0]
Figure 014-420

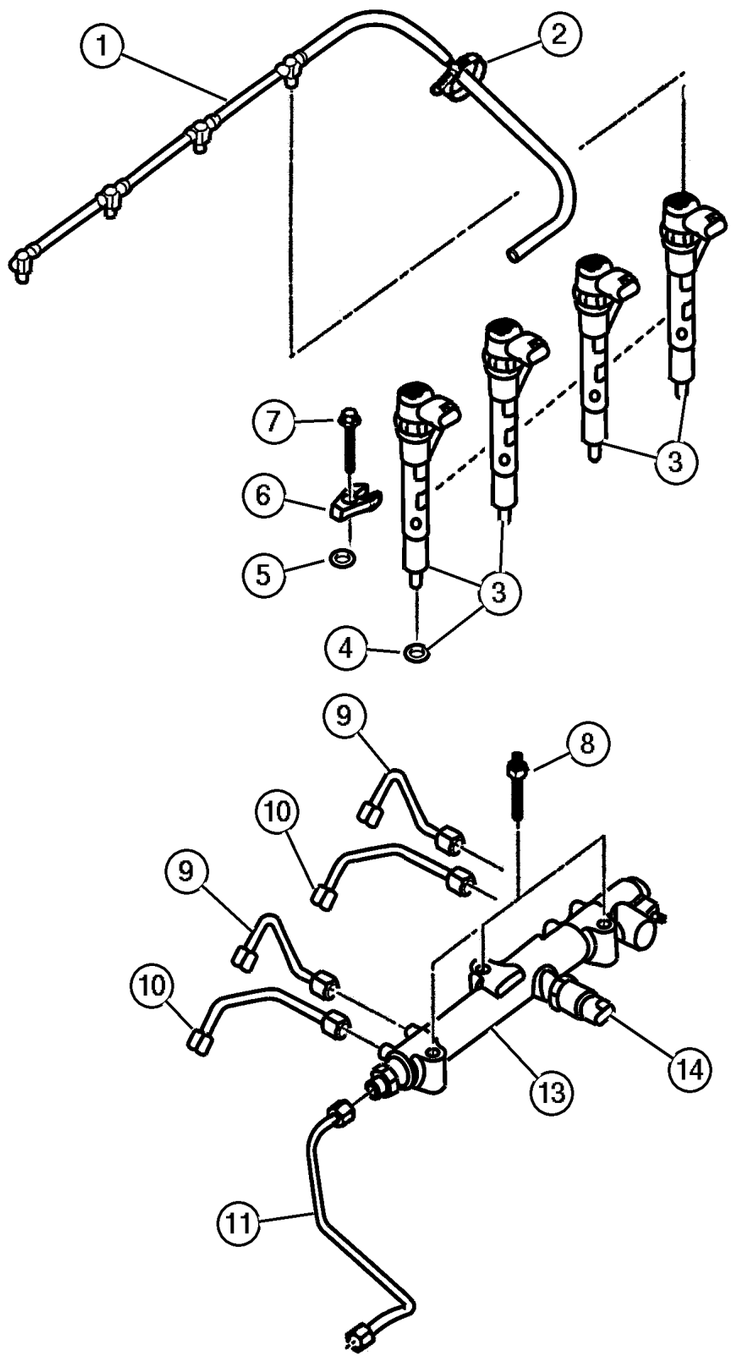

ITEM	PART NUMBER	QTY	LINE	SERIES	BODY	ENGINE	TRANS	TRIM	DESCRIPTION
		1				EN0	DG0		
14									SENSOR, Fuel Pressure
	5072 726AA	1				EN0	DBB		
		1				EN0	DG0		
-15									VALVE, Flow Control
	5083 671AA	1				EN0	DBB		
		1				EN0	DG0		

JEEP LIBERTY (KJ)

SERIES	LINE	BODY	ENGINE	TRANSMISSION
P = Limited	J = LHD (4WD)	74 = 4 Dr. (104.3 WB)	ED1, ED0 = 2.4L Power Tech	DDK = 5 Speed HDManual
H = Sport	U = RHD (4WD)		EKG, EK0 = 3.7L Power Tech	DDD = 5 Speed HD Manual
M = Renegade	T = LHD (2WD)		ENJ = 2.5L 4Cyl Turbo Diesel	DG4,DGQ = Multi-Speed Auto
			ENR = 2.8L 4Cyl Turbo Diesel	DG6 = 4 Speed Auto Transm
			EN0 = 4Cyl Turbo Diesel	DG0 = All Automatic Transm
				DBB = All Manual Transm

AR = Use as required - = Non illustrated part # = New this model year **June 3, 2003**

« RETURN TO GROUP INDEX

Fuel Injection Pump 2.5/2.8 Diesel [EN0]
Figure 014-430

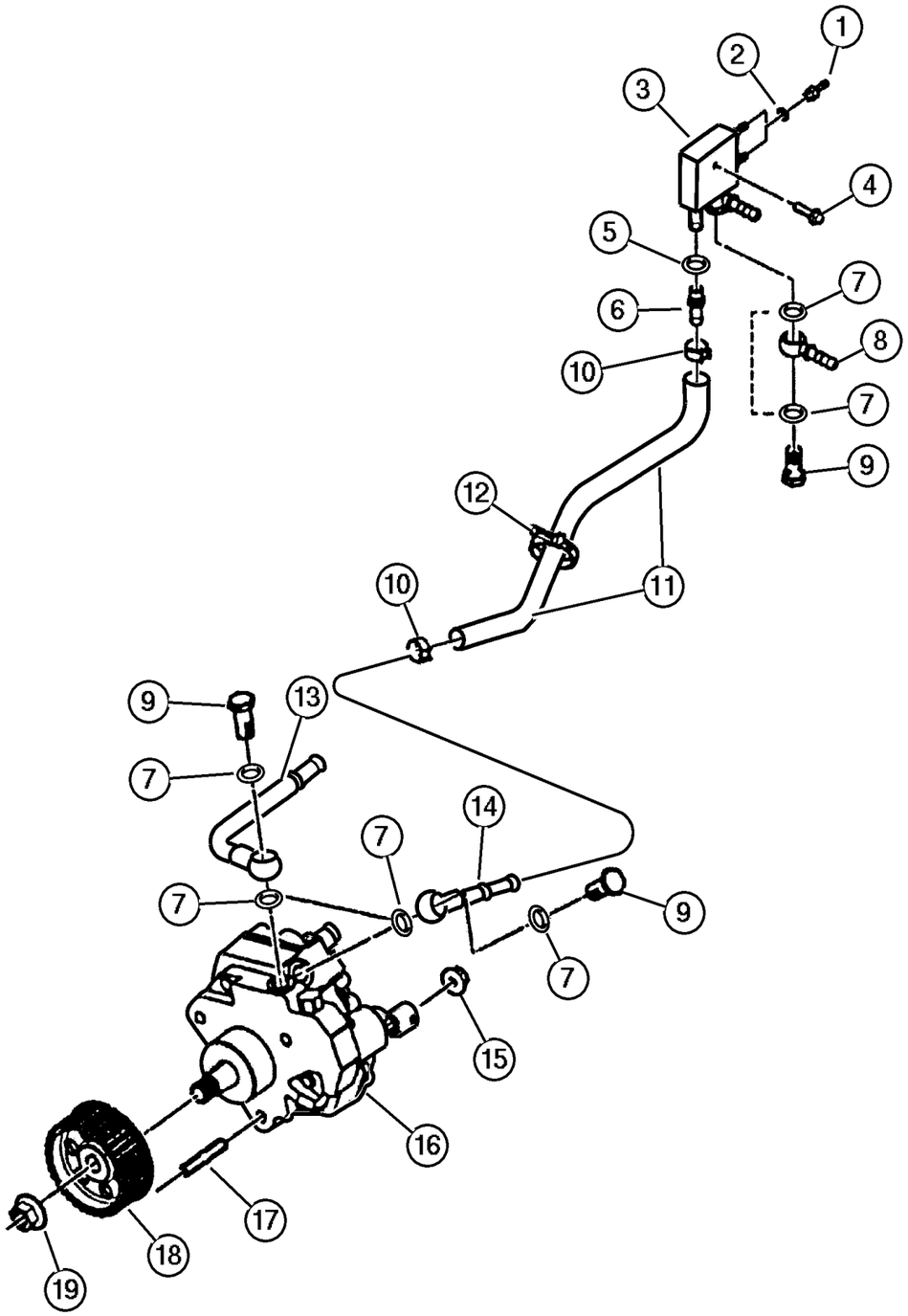

ITEM	PART NUMBER	QTY	LINE	SERIES	BODY	ENGINE	TRANS	TRIM	DESCRIPTION
Note; Sales Codes									
[DBB] = All Manual Transmissions									
[EN0]= All 4/5 Cylinder Turbo Diesels									
1									UNION
	5072 727AA	2				EN0	DBB		
		2				EN0	DG0		
2									O RING
	5072 728AA	2				EN0	DBB		
		2				EN0	DG0		
3									BLOCK, Fuel Return
	5072 743AA	1				EN0	DBB		
		1				EN0	DG0		
4									SCREW
	5072 729AA	1				EN0	DBB		
		1				EN0	DG0		
5									WASHER, Implement Attaching
	4720 713	1				EN0	DBB		
		1				EN0	DG0		
6									UNION
	5072 724AA	1				EN0	DBB		
		1				EN0	DG0		
7									WASHER, Plain
	4720 703	6				EN0	DBB		
		6				EN0	DG0		
8									CONNECTOR
	4728 185	1				EN0	DBB		
		1				EN0	DG0		
9									BOLT, Banjo
	4720 367	1				EN0	DBB		
		1				EN0	DG0		
10									CLAMP, Heater Hose
	4886 051AA	2				EN0	DBB		
		2				EN0	DG0		
11									HOSE, Fuel
	5072 725AB	1				EN0	DBB		
		1				EN0	DG0		
12									CLIP, Spill Return Pipe
	4728 184	1				EN0	DBB		
		1				EN0	DG0		
13									BANJO, Fuel
	5072 721AA	1				EN0	DBB		

JEEP LIBERTY (KJ)

SERIES	LINE	BODY	ENGINE	TRANSMISSION
P = Limited	J = LHD (4WD)	74 = 4 Dr. (104.3 WB)	ED1, ED0 = 2.4L Power Tech	DDK = 5 Speed HDManual
H = Sport	U = RHD (4WD)		EKG, EK0 = 3.7L Power Tech	DDD = 5 Speed HD Manual
M = Renegade	T = LHD (2WD)		ENJ = 2.5L 4Cyl Turbo Diesel	DG4,DGQ = Multi-Speed Auto
			ENR = 2.8L 4Cyl Turbo Diesel	DG6 = 4 Speed Auto Transm
			EN0 = 4Cyl Turbo Diesel	DG0 = All Automatic Transm
				DBB = All Manual Transm

AR = Use as required - = Non illustrated part # = New this model year

June 3, 2003

« RETURN TO GROUP INDEX »

Fuel Injection Pump 2.5/2.8 Diesel [EN0]
Figure 014-430

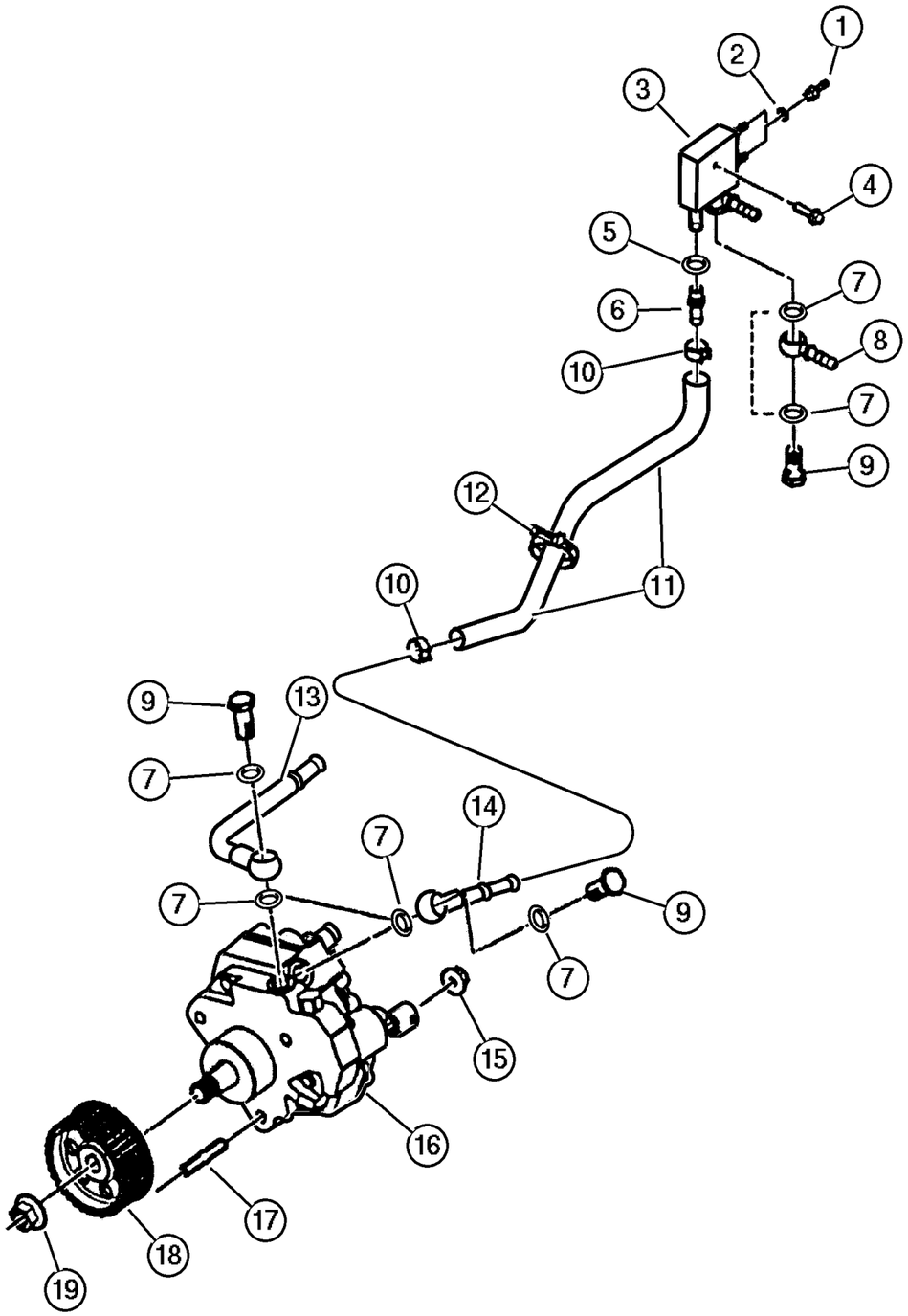

ITEM	PART NUMBER	QTY	LINE	SERIES	BODY	ENGINE	TRANS	TRIM	DESCRIPTION
		1				EN0	DG0		
14									BANJO, Fuel
	5072 723AB	1				EN0	DBB		
		1				EN0	DG0		
15									NUT
	4778 961	3				EN0	DBB		
		3				EN0	DG0		
16	5066 819AB	1				EN0	DBB		PUMP, Fuel Injection
17									STUD, Injection Pump
	5066 908AA	1				EN0	DBB		
		1				EN0	DG0		
18									GEAR, Injection Pump
	5066 903AA	1				EN0	DBB		
		1				EN0	DG0		
19									NUT
	5066 817AA	1				EN0	DBB		
		1				EN0	DG0		
-20									VALVE, Vacuum Pump
	5015 037AA	1				EN0	DBB		
		1				EN0	DG0		
-21	5083 712AA	4				EN0	DBB		CLIP, Fuel Injector

JEEP LIBERTY (KJ)

SERIES	LINE	BODY	ENGINE	TRANSMISSION
P = Limited	J = LHD (4WD)	74 = 4 Dr. (104.3 WB)	ED1, ED0 = 2.4L Power Tech	DDK = 5 Speed HDManual
H = Sport	U = RHD (4WD)		EKG, EK0 = 3.7L Power Tech	DDD = 5 Speed HD Manual
M = Renegade	T = LHD (2WD)		ENJ = 2.5L 4Cyl Turbo Diesel	DG4,DGQ = Multi-Speed Auto
			ENR = 2.8L 4Cyl Turbo Diesel	DG6 = 4 Speed Auto Transm
			EN0 = 4Cyl Turbo Diesel	DG0 = All Automatic Transm
				DBB = All Manual Transm

AR = Use as required - = Non illustrated part # = New this model year

June 3, 2003

« RETURN TO GROUP INDEX

Fuel Injection Pump Mounting
Figure 014-435

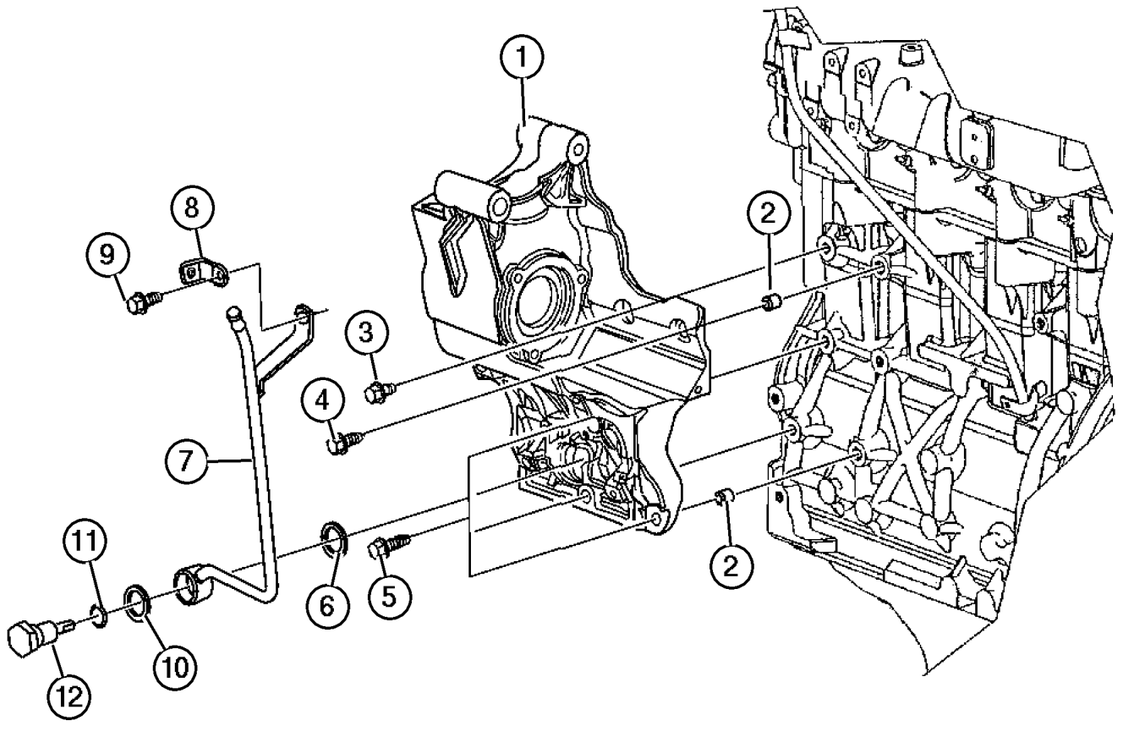

ITEM	PART NUMBER	QTY	LINE	SERIES	BODY	ENGINE	TRANS	TRIM	DESCRIPTION
Note; Sales Codes;									
[DBB] = All Manual Transmissions									
[DG0] = All Automatic Transmissions									
[EN0] = All 4/5 Cylinder Turbo Diesel Engines									
1									BRACKET
	#5093 901AA	1				EN0	DBB		
		1				EN0	DG0		
2									PIN
	5066 862AA	2				EN0	DBB		
		2				EN0	DG0		
3									SCREW
	#5093 900AA	1				EN0	DBB		
		1				EN0	DG0		
4									BOLT, Adaptor Plate
	5003 532AA	1				EN0	DBB		
		1				EN0	DG0		
5									SCREW
	5066 939AA	3				EN0	DBB		
		3				EN0	DG0		
6									GASKET, Vacuum Pump, .
	4863 779	1				EN0	DBB		
		1				EN0	DG0		
7									TUBE, Vacuum
	5072 684AB	1				EN0	DBB		
		1				EN0	DG0		
8									BRACKET
	#5093 902AA	1				EN0	DBB		
		1				EN0	DG0		
9									SCREW
	5003 557AA	1				EN0	DBB		
		1				EN0	DG0		
10									WASHER, Plain
	5015 040AA	1				EN0	DBB		
		1				EN0	DG0		
11									O RING
	5066 860AA	1				EN0	DBB		
		1				EN0	DG0		
12									VALVE, Vacuum Pump
	5015 037AA	1				EN0	DBB		
		1				EN0	DG0		

JEEP LIBERTY (KJ)

SERIES	LINE	BODY	ENGINE	TRANSMISSION
P = Limited	J = LHD (4WD)	74 = 4 Dr. (104.3 WB)	ED1, ED0 = 2.4L Power Tech	DDK = 5 Speed HDManual
H = Sport	U = RHD (4WD)		EKG, EK0 = 3.7L Power Tech	DDD = 5 Speed HD Manual
M = Renegade	T = LHD (2WD)		ENJ = 2.5L 4Cyl Turbo Diesel	DG4,DGQ = Multi-Speed Auto
			ENR = 2.8L 4Cyl Turbo Diesel	DG6 = 4 Speed Auto Transm
			EN0 = 4Cyl Turbo Diesel	DG0 = All Automatic Transm
				DBB = All Manual Transm

AR = Use as required - = Non illustrated part # = New this model year **June 3, 2003**

« RETURN TO GROUP INDEX

Fuel Pump and Sending Unit, 2.4L [ED1], 3.7L [EKG], 2.5L Diesel [ENJ]
Figure 014-510

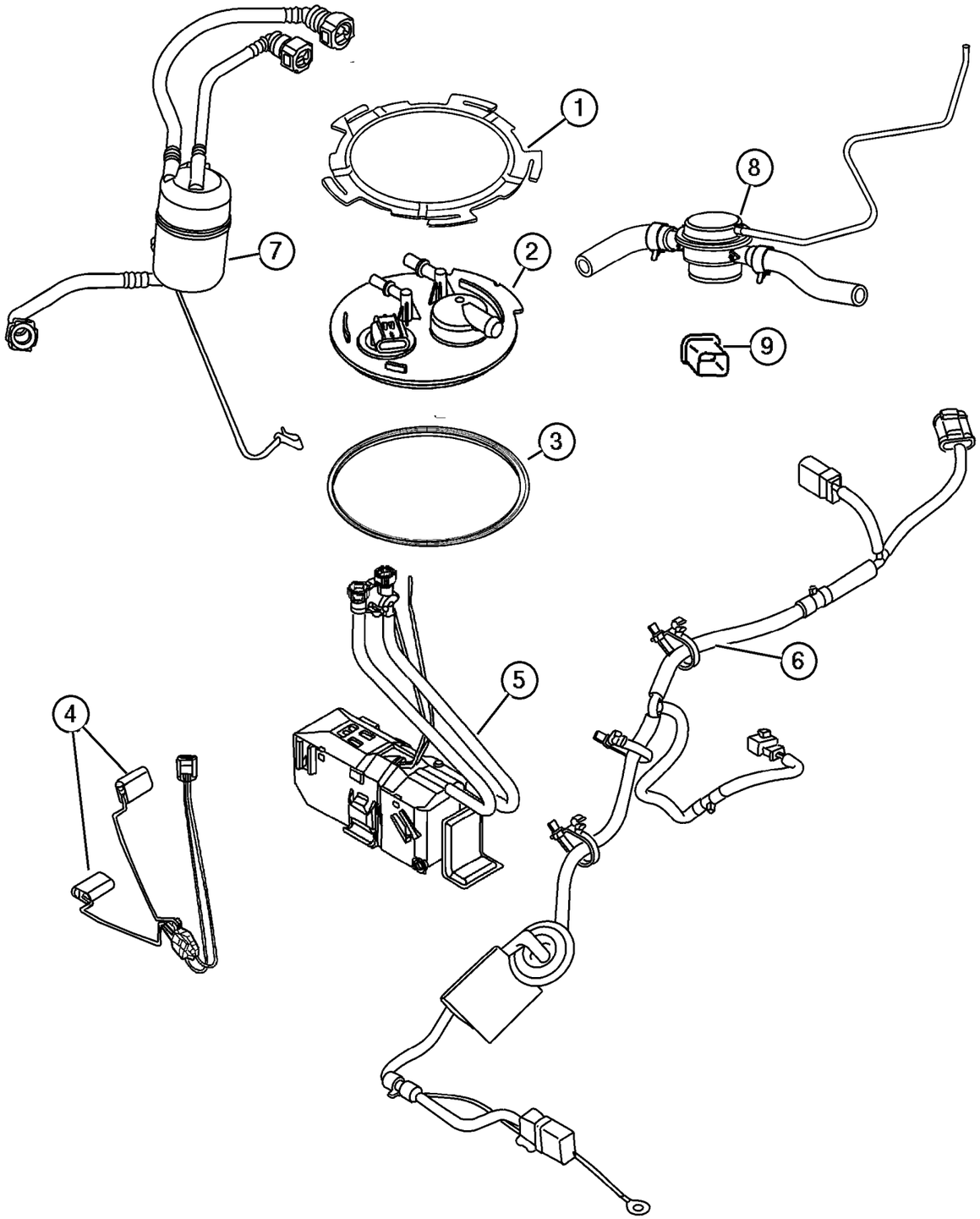

ITEM	PART NUMBER	QTY	LINE	SERIES	BODY	ENGINE	TRANS	TRIM	DESCRIPTION
Note; Sales Codes									
[ED0]= All 2.2L, 2.5L, 2.4L, 4 Cylinder Gas Engines									
[EK0]= All 3.7L, 6 Cylinder Gas Engines									
[EN0]= All 4/5 Cylinder Turb Diesels									
1									NUT, Fuel Pump Module
	52100 409AA	1				ED0, EK0			
		1				EN0			
2									FLANGE PACKAGE, Fuel
	5069 055AC	1				ED0, EK0			
	5072 755AA	1				EN0			
3									SEAL, Fuel Pump and Level Unit
	52100 410AA	1				ED0, EK0			
		1				EN0			
4									LEVEL UNIT PACKAGE, Fuel, Includes Pump Wires
	5019 863AB	1				ED0, EK0			Before 11/25/02 use
	#5102 528AA	1				ED0, EK0			After 11/25/02 use
5									RESERVOIR PACKAGE, Fuel, Fuel Pump Included with Package
	#5102 527AA	1				ED0, EK0			After 11/25/02 use
	5066 999AB	1				EN0			
	5069 054AC	1				ED0, EK0			Before 11/25/02 use
6									WIRING, Fuel Module
	56010 096AC	1				ED0, EK0			
	56010 097AC	1				EN0			
7									FILTER, Fuel
	52100 402AE	1				ED0, EK0			
	52128 698AA	1				EN0			
8	52100 557AJ	1				ED0, EK0			VALVE, Flow, Components to Flow Valve are Not to be Service
9	52100 556AA	1				ED0, EK0			SLEEVE, Insert

JEEP LIBERTY (KJ)

SERIES	LINE	BODY	ENGINE	TRANSMISSION
P = Limited	J = LHD (4WD)	74 = 4 Dr. (104.3 WB)	ED1, ED0 = 2.4L Power Tech	DDK = 5 Speed HDManual
H = Sport	U = RHD (4WD)		EKG, EK0 = 3.7L Power Tech	DDD = 5 Speed HD Manual
M = Renegade	T = LHD (2WD)		ENJ = 2.5L 4Cyl Turbo Diesel	DG4,DGQ = Multi-Speed Auto
			ENR = 2.8L 4Cyl Turbo Diesel	DG6 = 4 Speed Auto Transm
			EN0 = 4Cyl Turbo Diesel	DG0 = All Automatic Transm
				DBB = All Manual Transm

Throttle Body, 2.4L [ED1], 3.7, [EKG]
Figure 014-610

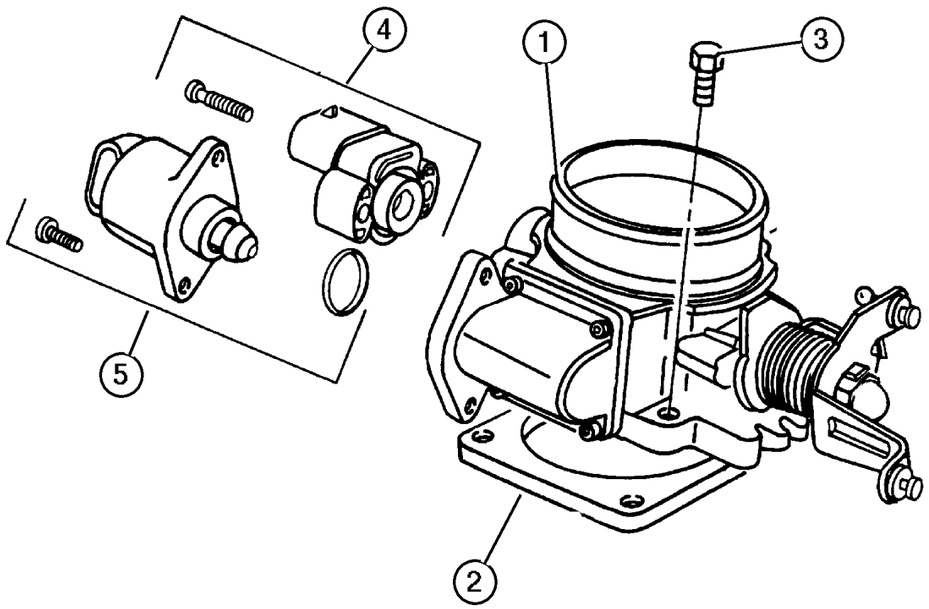

ITEM	PART NUMBER	QTY	LINE	SERIES	BODY	ENGINE	TRANS	TRIM	DESCRIPTION
Note; Sales Codes									
[ED0]= All 2.2L, 2.5L, 2.4L, 4 Cylinder Gas Engines									
[EK0]= All 3.7L, 6 Cylinder Gas Engines									
1									THROTTLE BODY
	53031 143AC	1				EK0			
	53013 359AC	1				ED0			
2									GASKET, Throttle Body To Intake
	53013 292AB	1				EK0			
	53013 533AA	1				ED0			
3									SCREW, Hex Head, M6 x 1.00 x 40.00, (NOT SERVICED) (Not Serviced)
4									SENSOR, Throttle Position
	4874 371AD	1				ED0			
	5019 411AB	1				EK0			
5									MOTOR, Air Idle Speed
	4591 611AA	1				ED0			
	5303 0840	1				EK0			

JEEP LIBERTY (KJ)

SERIES	LINE	BODY	ENGINE	TRANSMISSION
P = Limited	J = LHD (4WD)	74 = 4 Dr. (104.3 WB)	ED1, ED0 = 2.4L Power Tech	DDK = 5 Speed HDManual
H = Sport	U = RHD (4WD)		EKG, EK0 = 3.7L Power Tech	DDD = 5 Speed HD Manual
M = Renegade	T = LHD (2WD)		ENJ = 2.5L 4Cyl Turbo Diesel	DG4,DGQ = Multi-Speed Auto
			ENR = 2.8L 4Cyl Turbo Diesel	DG6 = 4 Speed Auto Transm
			EN0 = 4Cyl Turbo Diesel	DG0 = All Automatic Transm
				DBB = All Manual Transm

Turbocharger 2.5 Diesel [ENJ] [ENR]
Figure 014-620

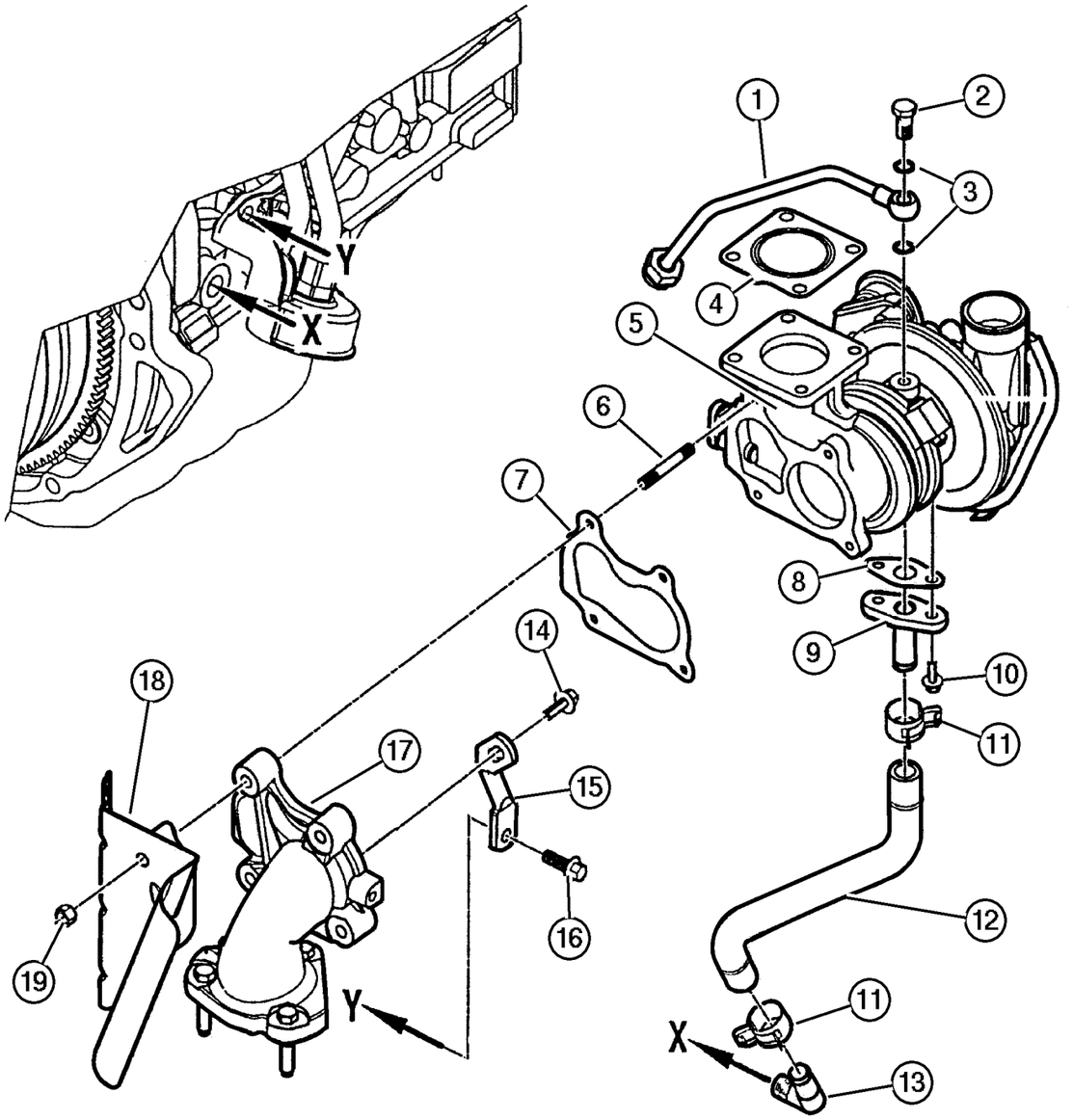

ITEM	PART NUMBER	QTY	LINE	SERIES	BODY	ENGINE	TRANS	TRIM	DESCRIPTION
Note; Sales Codes									
[DBB]= All Manual Transmissions									
[EN0]= All 4/5 Cylinder Turbo Diesels									
1									PIPE, Oil Supply
	#5093 927AA	1				EN0	DBB		
		1				EN0	DG0		
2									BOLT, Banjo
	5066 824AA	1				EN0	DBB		
		1				EN0	DG0		
3									WASHER, Implement Attaching
	4720 713	2				EN0	DBB		
		2				EN0	DG0		
4									GASKET, Turbocharger To Manifold
	5066 822AA	1				EN0	DBB		
		1				EN0	DG0		
5									TURBOCHARGER
	#5093 928AA	1				EN0	DBB		
	#5134 235AA	1				EN0	DG0		
6									STUD, Turbo Elbow
	5066 796AA	9				EN0	DBB		
		9				EN0	DG0		
7									GASKET, Turbocharger To Manifold
	5066 915AA	1				EN0	DBB		
		1				EN0	DG0		
8									GASKET, Turbo Oil Return Pipe
	4796 007AB	1				EN0	DBB		
		1				EN0	DG0		
9									TUBE, Oil Drain
	#5093 929AA	1				EN0	DBB		
		1				EN0	DG0		
10									SCREW
	5003 553AA	2				EN0	DBB		
		2				EN0	DG0		
11									CLAMP, Heater Hose
	5019 342AB	2				EN0	DBB		
		2				EN0	DG0		
12									PIPE, Oil Drain
	#5093 930AA	1				EN0	DBB		
		1				EN0	DG0		
13									ADAPTER, Oil Drain Pipe
	4773 709	1				EN0	DBB		

JEEP LIBERTY (KJ)

SERIES	LINE	BODY	ENGINE	TRANSMISSION
P = Limited	J = LHD (4WD)	74 = 4 Dr. (104.3 WB)	ED1, ED0 = 2.4L Power Tech	DDK = 5 Speed HDManual
H = Sport	U = RHD (4WD)		EKG, EK0 = 3.7L Power Tech	DDD = 5 Speed HD Manual
M = Renegade	T = LHD (2WD)		ENJ = 2.5L 4Cyl Turbo Diesel	DG4,DGQ = Multi-Speed Auto
			ENR = 2.8L 4Cyl Turbo Diesel	DG6 = 4 Speed Auto Transm
			EN0 = 4Cyl Turbo Diesel	DG0 = All Automatic Transm
				DBB = All Manual Transm

AR = Use as required - = Non illustrated part # = New this model year

June 3, 2003

« RETURN TO GROUP INDEX »

Turbocharger 2.5 Diesel [ENJ] [ENR]
Figure 014-620

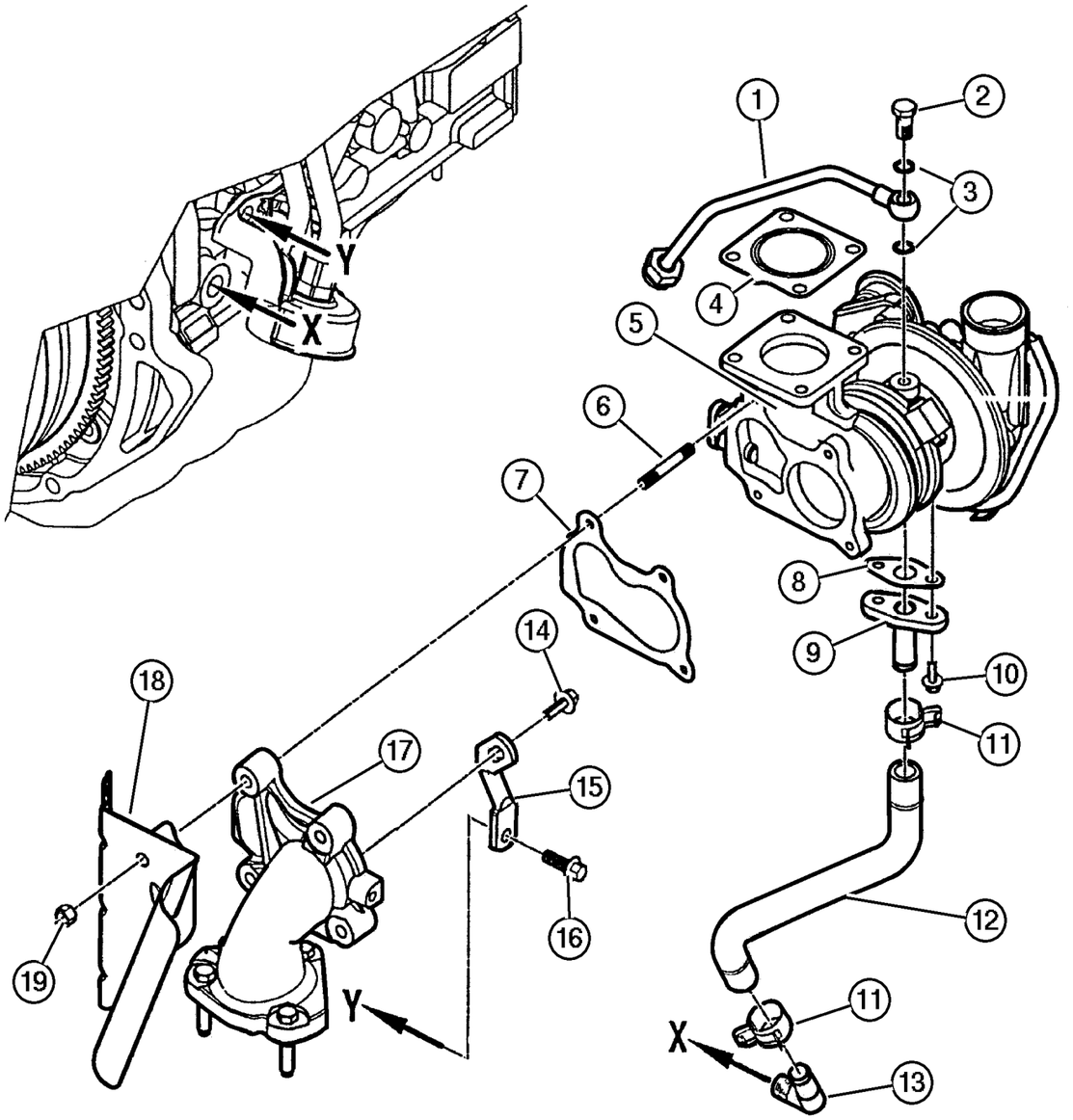

ITEM	PART NUMBER	QTY	LINE	SERIES	BODY	ENGINE	TRANS	TRIM	DESCRIPTION
		1				EN0	DG0		
14									SCREW
	5003 554AA	3				EN0	DBB		
		3				EN0	DG0		
15									BRACKET, Turbo Charger
	5072 733AA	1				EN0	DBB		
		1				EN0	DG0		
16									BOLT, Adaptor Plate
	5003 532AA	1				EN0	DBB		
		1				EN0	DG0		
17									ELBOW, Turbo Exhaust Outlet
	5072 732AB	1				EN0	DBB		
		1				EN0	DG0		
18									SHIELD, Heat
	5072 731AA	1				EN0	DBB		
		1				EN0	DG0		
19									NUT, Lock
	4882 610	4				EN0	DBB		
		4				EN0	DG0		
-20									VALVE
	5083 711AA	1				EN0	DBB		
		1				EN0	DG0		
-21									HOSE
	#5093 932AA	1				EN0	DBB		Manifold Vacuum
		1				EN0	DG0		Manifold Vacuum
-22									ELBOW, Intake Manifold Vacuum
	5072 739AA	1				EN0	DBB		
		1				EN0	DG0		
-23	5066 944AA	4				EN0	DG0		SCREW, Elbow Mounting

JEEP LIBERTY (KJ)

SERIES	LINE	BODY	ENGINE	TRANSMISSION
P = Limited	J = LHD (4WD)	74 = 4 Dr. (104.3 WB)	ED1, ED0 = 2.4L Power Tech	DDK = 5 Speed HDManual
H = Sport	U = RHD (4WD)		EKG, EK0 = 3.7L Power Tech	DDD = 5 Speed HD Manual
M = Renegade	T = LHD (2WD)		ENJ = 2.5L 4Cyl Turbo Diesel	DG4,DGQ = Multi-Speed Auto
			ENR = 2.8L 4Cyl Turbo Diesel	DG6 = 4 Speed Auto Transm
			EN0 = 4Cyl Turbo Diesel	DG0 = All Automatic Transm
				DBB = All Manual Transm

AR = Use as required - = Non illustrated part # = New this model year

June 3, 2003

« RETURN TO GROUP INDEX

Throttle Controls, 2.4L [ED1]
Figure 014-710

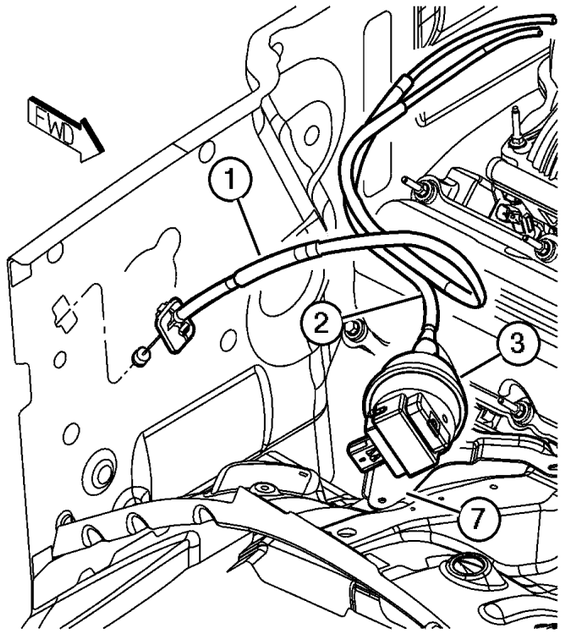

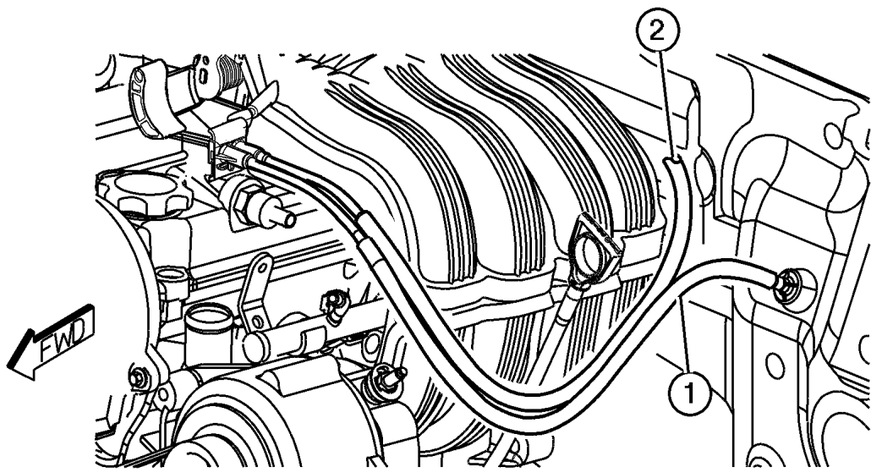

ITEM	PART NUMBER	QTY	LINE	SERIES	BODY	ENGINE	TRANS	TRIM	DESCRIPTION
Note; Sales Codes									
[ED0]= All 2.2L, 2.5L, 2.4L, 4 Cylinder Gas Engines									
1									CABLE, Accelerator
	53013 137AB	1	J, T			ED0			
	53013 239AB	1	U			ED0			
2	53013 346AB	1				ED0			CABLE, Speed Control
3	4669 979	1				ED0			SERVO, Speed Control
-4	6025 867	1				ED0			CLIP, Cable to Servo Attach
-5	6502 493	2				ED0			NUT, Hex Flange Serration, M6x1
-6	6025 867	1				ED0			CLIP, Cable to Servo Attach
7	53013 348AA	1				ED0			BRACKET, Speed Control Servo

JEEP LIBERTY (KJ)

SERIES	LINE	BODY	ENGINE	TRANSMISSION
P = Limited	J = LHD (4WD)	74 = 4 Dr. (104.3 WB)	ED1, ED0 = 2.4L Power Tech	DDK = 5 Speed HDManual
H = Sport	U = RHD (4WD)		EKG, EK0 = 3.7L Power Tech	DDD = 5 Speed HD Manual
M = Renegade	T = LHD (2WD)		ENJ = 2.5L 4Cyl Turbo Diesel	DG4,DGQ = Multi-Speed Auto
			ENR = 2.8L 4Cyl Turbo Diesel	DG6 = 4 Speed Auto Transm
			EN0 = 4Cyl Turbo Diesel	DG0 = All Automatic Transm
				DBB = All Manual Transm

Throttle Controls, 3.7L [EKG]
Figure 014-720

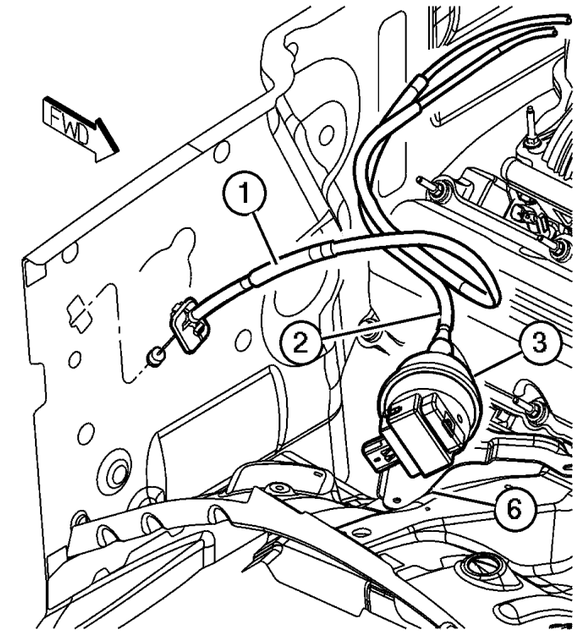

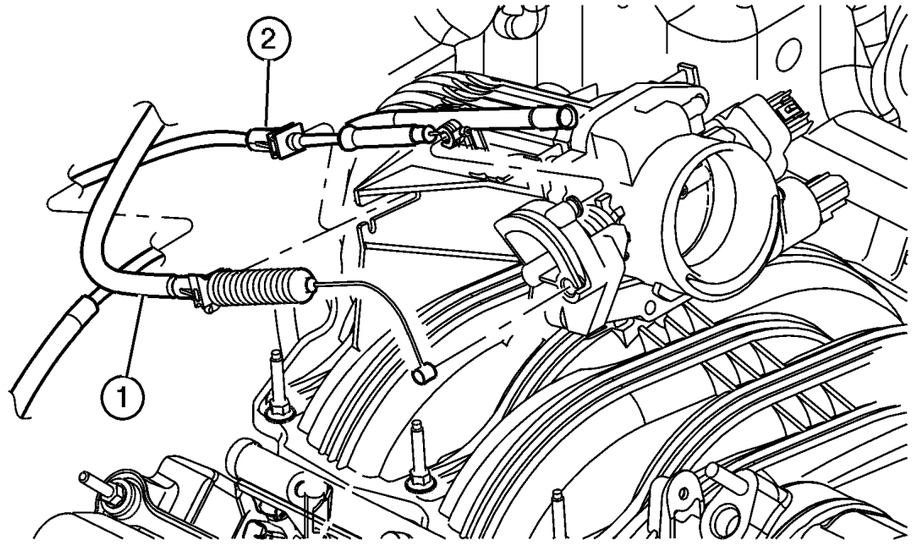

ITEM	PART NUMBER	QTY	LINE	SERIES	BODY	ENGINE	TRANS	TRIM	DESCRIPTION
Note; Sales Codes									
[EKG]= 3.7L Magnum V-6									
[EK0]= All 3.7L V-6 Gas Engines									
1									CABLE, Accelerator
	53013 136AC	1	J, T			EKG			
	53013 138AC	1	U			EKG			
2	53013 367AC	1				EK0			CABLE, Speed Control
3	4669 979	1				EK0			SERVO, Speed Control
-4	6502 493	2				EK0			NUT, Hex Flange Serration, M6x1
-5	6025 867	1				EK0			CLIP, Cable to Servo Attach
6	53013 348AA	1				EK0			BRACKET, Speed Control Servo
-7	5214 613	1	J, T						CLIP, Cable, Accelerator Cable to Pedal

JEEP LIBERTY (KJ)

SERIES	LINE	BODY	ENGINE	TRANSMISSION
P = Limited	J = LHD (4WD)	74 = 4 Dr. (104.3 WB)	ED1, ED0 = 2.4L Power Tech	DDK = 5 Speed HDManual
H = Sport	U = RHD (4WD)		EKG, EK0 = 3.7L Power Tech	DDD = 5 Speed HD Manual
M = Renegade	T = LHD (2WD)		ENJ = 2.5L 4Cyl Turbo Diesel	DG4,DGQ = Multi-Speed Auto
			ENR = 2.8L 4Cyl Turbo Diesel	DG6 = 4 Speed Auto Transm
			EN0 = 4Cyl Turbo Diesel	DG0 = All Automatic Transm
				DBB = All Manual Transm

Throttle Controls, 2.5L/2.8 Diesel [EN0]
Figure 014-730

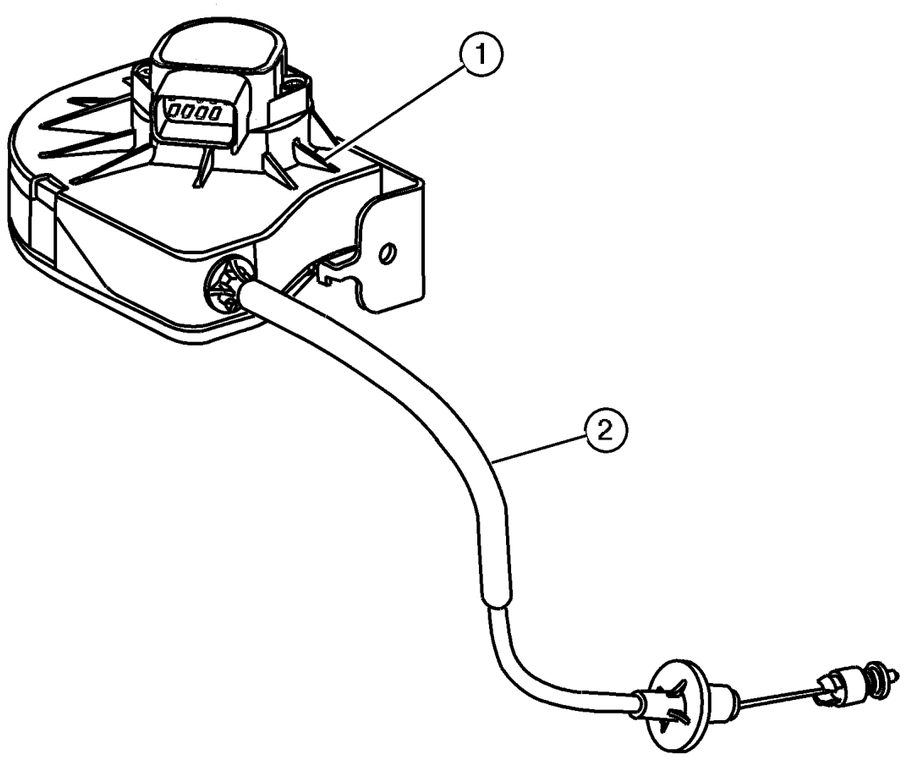

ITEM	PART NUMBER	QTY	LINE	SERIES	BODY	ENGINE	TRANS	TRIM	DESCRIPTION
Note; Sales Codes									
[EN0]= All 4/5 Cylinder Turbo Diesels									
1	#52850 616AE	1				EN0			BELLCRANK, Accelerator and Cruise
2									CABLE, Accelerator
	52851 243AC	1	J, T			EN0			
	52851 244AC	1	U			EN0			
-3	6501 957	2				EN0			SCREW, Bell Crank to Bracket attaching

JEEP LIBERTY (KJ)

SERIES	LINE	BODY	ENGINE	TRANSMISSION
P = Limited	J = LHD (4WD)	74 = 4 Dr. (104.3 WB)	ED1, ED0 = 2.4L Power Tech	DDK = 5 Speed HDManual
H = Sport	U = RHD (4WD)		EKG, EK0 = 3.7L Power Tech	DDD = 5 Speed HD Manual
M = Renegade	T = LHD (2WD)		ENJ = 2.5L 4Cyl Turbo Diesel	DG4,DGQ = Multi-Speed Auto
			ENR = 2.8L 4Cyl Turbo Diesel	DG6 = 4 Speed Auto Transm
			EN0 = 4Cyl Turbo Diesel	DG0 = All Automatic Transm
				DBB = All Manual Transm

Air Cleaner, 2.4L [ED1]
Figure 014-810

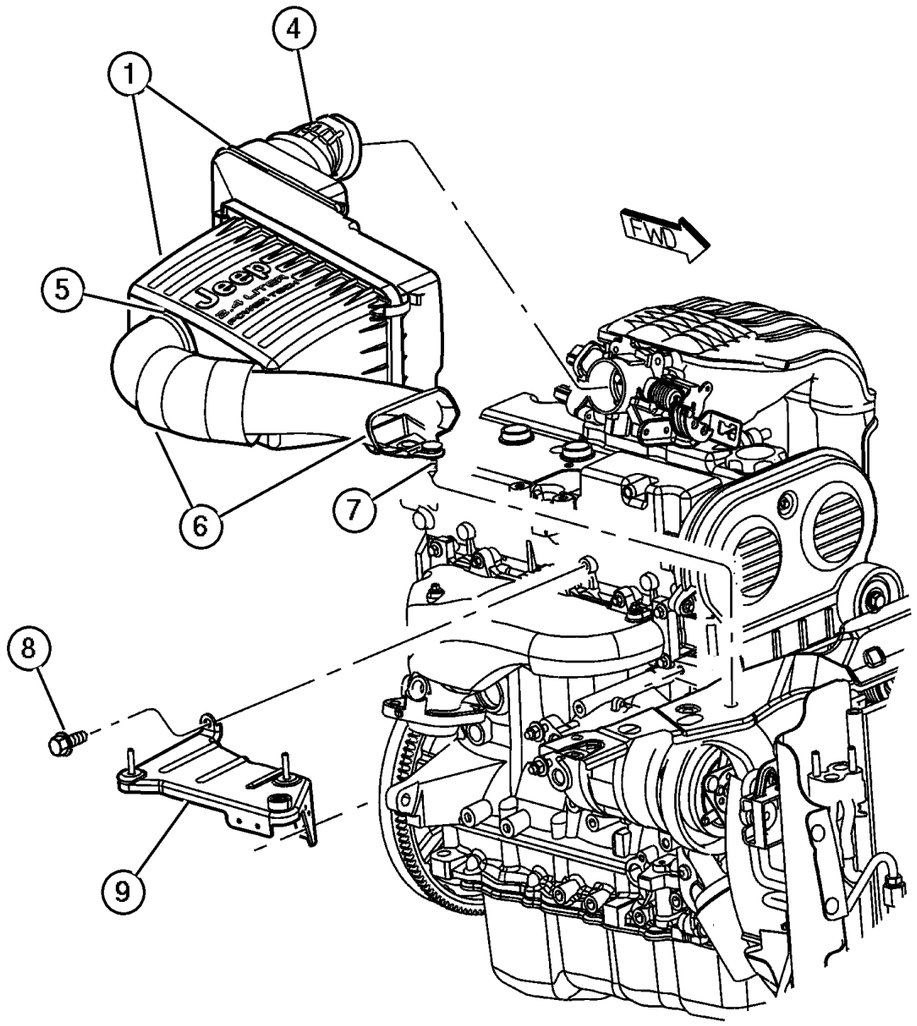

ITEM	PART NUMBER	QTY	LINE	SERIES	BODY	ENGINE	TRANS	TRIM	DESCRIPTION
Note; Sales Codes									
[ED0]= All 2.2L, 2.5L, 2.4L, 4 Cylinder Gas Engines									
1	53013 102AA	1				ED0			BODY, Air Cleaner
-2	5019 443AA	1				ED0			FILTER, Air
-3	53013 093AA	1				ED0			TUBE, Crankcase Vent To Air Cleaner
4	53013 475AA	1				ED0			CLAMP, Hose to Throttle Body
5	53013 476AA	1				ED0			CLAMP, Hose to Air Cleaner
6	53013 101AB	1				ED0			INLET, Fresh Air
7	6036 456AA	1				ED0			RIVET
8	6503 692	2				ED0			SCREW, M8-1.25
9	53013 473AA	1				ED0			BRACKET, Air Cleaner
-10	53013 357AA	1				ED0			GROMMET, Air Cleaner
-11	4669 177	2				ED0, EK0			GROMMET, Air Cleaner Bracket

JEEP LIBERTY (KJ)

SERIES	LINE	BODY	ENGINE	TRANSMISSION
P = Limited	J = LHD (4WD)	74 = 4 Dr. (104.3 WB)	ED1, ED0 = 2.4L Power Tech	DDK = 5 Speed HDManual
H = Sport	U = RHD (4WD)		EKG, EK0 = 3.7L Power Tech	DDD = 5 Speed HD Manual
M = Renegade	T = LHD (2WD)		ENJ = 2.5L 4Cyl Turbo Diesel	DG4,DGQ = Multi-Speed Auto
			ENR = 2.8L 4Cyl Turbo Diesel	DG6 = 4 Speed Auto Transm
			EN0 = 4Cyl Turbo Diesel	DG0 = All Automatic Transm
				DBB = All Manual Transm

Air Cleaner, 3.7L [EKG]
Figure 014-820

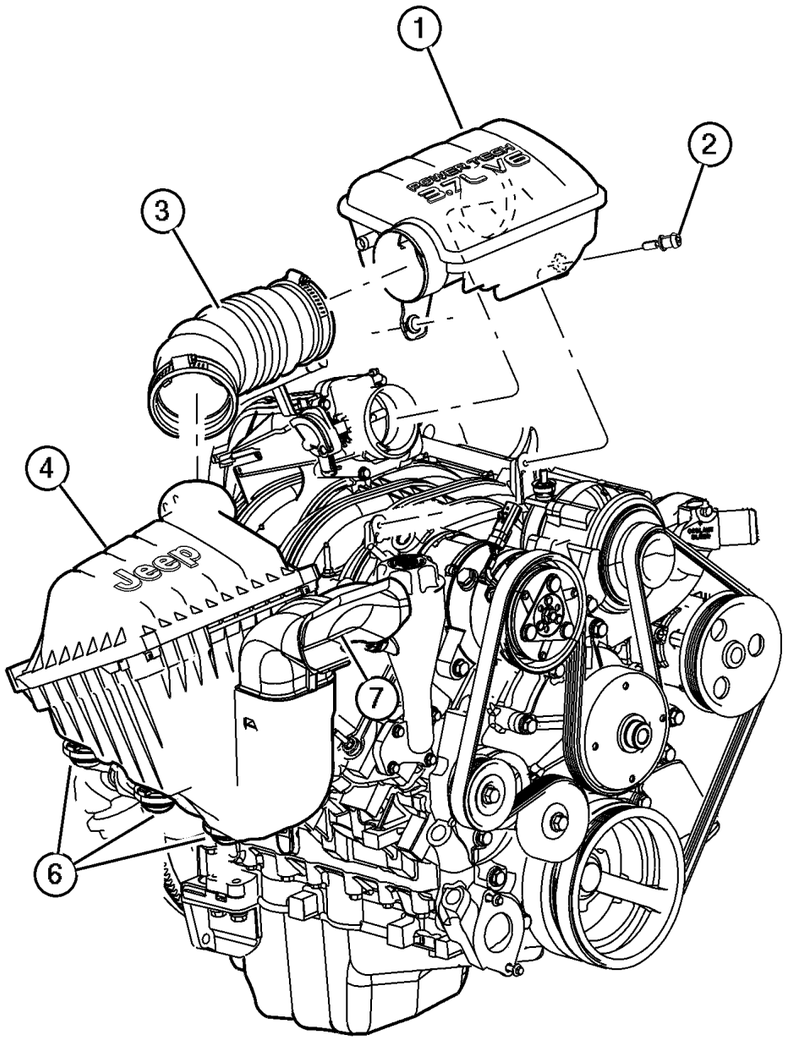

ITEM	PART NUMBER	QTY	LINE	SERIES	BODY	ENGINE	TRANS	TRIM	DESCRIPTION
Note; Sales Codes									
[EK0]= All 3.7L, 6 Cylinder Gas Engines									
[EN0]= All 4/5 Cylinder Turbo Diesels									
1	53013 105AA	1				EK0			RESONATOR, Air Cleaner
2	53013 378AA	2				EK0			STUD
3	53013 099AA	1				EK0			HOSE, Air Cleaner
4	53013 108AA	1				EK0			AIR CLEANER
-5	5018 777AA	1				EK0			FILTER, Air
6	53013 357AA	3				EK0, EN0			GROMMET, Air Cleaner
7	53013 103AA	1				EK0, EN0			INLET, Fresh Air
-8	53013 458AB	1				EK0			HOSE, Breather
-9	6036 456AA	1				EK0, EN0			RIVET
-10	53013 509AA	1				EK0, EN0			BAFFLE, Air Inlet
-11	4669 177	2				ED0, EK0			GROMMET, Air Cleaner Bracket

JEEP LIBERTY (KJ)

SERIES	LINE	BODY	ENGINE	TRANSMISSION
P = Limited	J = LHD (4WD)	74 = 4 Dr. (104.3 WB)	ED1, ED0 = 2.4L Power Tech	DDK = 5 Speed HDManual
H = Sport	U = RHD (4WD)		EKG, EK0 = 3.7L Power Tech	DDD = 5 Speed HD Manual
M = Renegade	T = LHD (2WD)		ENJ = 2.5L 4Cyl Turbo Diesel	DG4,DGQ = Multi-Speed Auto
			ENR = 2.8L 4Cyl Turbo Diesel	DG6 = 4 Speed Auto Transm
			EN0 = 4Cyl Turbo Diesel	DG0 = All Automatic Transm
				DBB = All Manual Transm

Air Cleaner, 2.5L/2.8 Diesel [EN0]
Figure 014-830

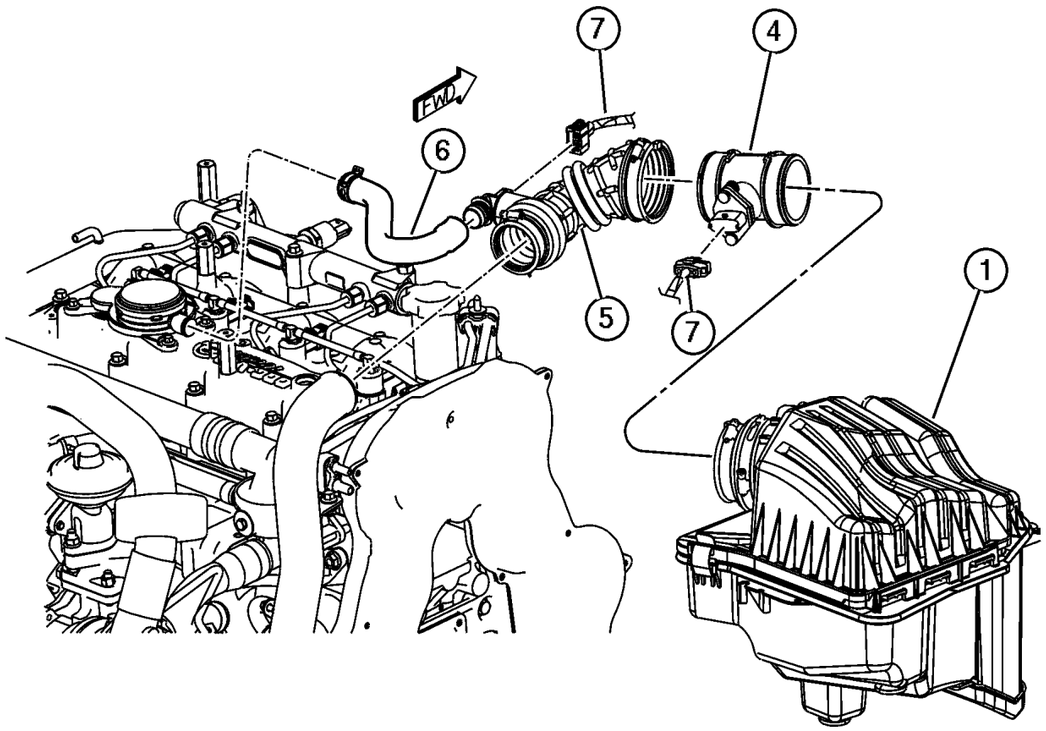

ITEM	PART NUMBER	QTY	LINE	SERIES	BODY	ENGINE	TRANS	TRIM	DESCRIPTION
Note; Sales Codes									
[EK0]= All 3.7L, 6 Cylinder Gas Engines									
[EN0]= All 4/5 Cylinder Turbo Diesels									
1	53013 107AB	1				EN0			AIR CLEANER
-2	5018 777AA	1				EN0			FILTER, Air
-3	53013 103AA	1				EK0, EN0			INLET, Fresh Air
4									SENSOR PACKAGE, Air Flow Meter, (NOT SERVICED) (Not Serviced)
5	#53013 104AB	1				EN0			HOSE, Clean Air
6	53013 094AC	1				EN0			HOSE, Oil Separator
7									WIRING, Engine, See Group 8, (NOT SERVICED) (Not Serviced)

JEEP LIBERTY (KJ)

SERIES	LINE	BODY	ENGINE	TRANSMISSION
P = Limited	J = LHD (4WD)	74 = 4 Dr. (104.3 WB)	ED1, ED0 = 2.4L Power Tech	DDK = 5 Speed HDManual
H = Sport	U = RHD (4WD)		EKG, EK0 = 3.7L Power Tech	DDD = 5 Speed HD Manual
M = Renegade	T = LHD (2WD)		ENJ = 2.5L 4Cyl Turbo Diesel	DG4,DGQ = Multi-Speed Auto
			ENR = 2.8L 4Cyl Turbo Diesel	DG6 = 4 Speed Auto Transm
			EN0 = 4Cyl Turbo Diesel	DG0 = All Automatic Transm
				DBB = All Manual Transm

Speed Control
Figure 014-1010

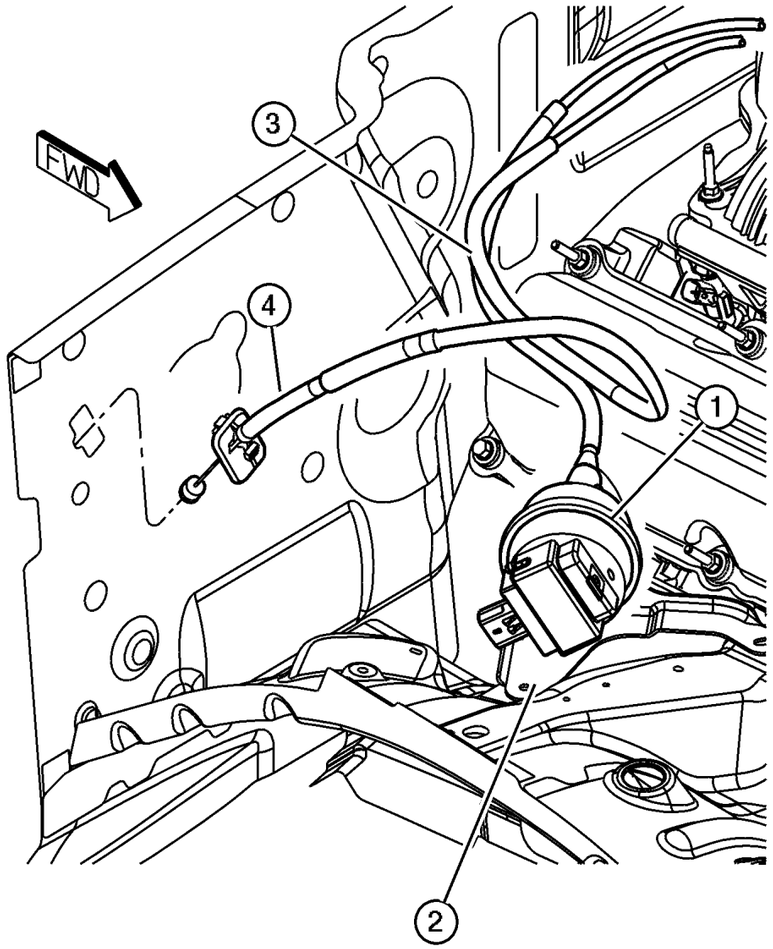

ITEM	PART NUMBER	QTY	LINE	SERIES	BODY	ENGINE	TRANS	TRIM	DESCRIPTION
Note; Sales Codes									
[ED0]= All 2.2L, 2.5L, 2.4L, 4 Cylinder Gas Engines									
[EKG]= 3.7L Power Tech V-6									
[EK0]= All 3.7L 6 Cylinder Gas Engines									
1									SERVO, Speed Control
	4669 979	1				ED0			
		1				EK0			
2									BRACKET, Speed Control Servo
	53013 348AA	1				ED0			
		1				EK0			
3									CABLE, Speed Control
	53013 346AB	1				ED0			
	53013 367AC	1				EK0			
4									CABLE, Accelerator
	53013 137AB	1	J, T			ED0			
	53013 136AC	1	J, T			EKG			
	53013 138AC	1	U			EKG			
-5									HARNESS, Speed Control Vacuum
	53013 347AB	1				ED0			
		1				EK0			
-6									NUT, Hex Flange Serration, M6x1
	6502 493	2				ED0			
		2				EK0			
-7									CLIP, Cable to Servo Attach
	6025 867	1				ED0			
		1				EK0			
-8	55037 536AB	1							RESERVOIR, Speed Control Vacuum

JEEP LIBERTY (KJ)

SERIES	LINE	BODY	ENGINE	TRANSMISSION
P = Limited	J = LHD (4WD)	74 = 4 Dr. (104.3 WB)	ED1, ED0 = 2.4L Power Tech	DDK = 5 Speed HDManual
H = Sport	U = RHD (4WD)		EKG, EK0 = 3.7L Power Tech	DDD = 5 Speed HD Manual
M = Renegade	T = LHD (2WD)		ENJ = 2.5L 4Cyl Turbo Diesel	DG4,DGQ = Multi-Speed Auto
			ENR = 2.8L 4Cyl Turbo Diesel	DG6 = 4 Speed Auto Transm
			EN0 = 4Cyl Turbo Diesel	DG0 = All Automatic Transm
				DBB = All Manual Transm

Accelerator Pedal
Figure 014-1110

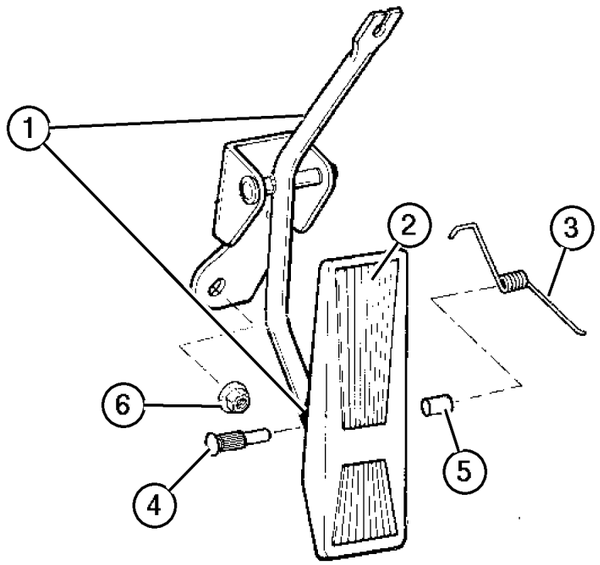

ITEM	PART NUMBER	QTY	LINE	SERIES	BODY	ENGINE	TRANS	TRIM	DESCRIPTION
Note; Sales Codes									
[ED0]= All 2.2L, 2.5L, 2.4L, 4 Cylinder Gas Engines									
[EK0]= All 3.7L 6 Cylinder Gas Engines									
[EN0]= All 4/5 Cylinder Turbo Diesels									
1									PEDAL, Accelerator
	53013 527AA	1	J, T			ED0, EK0, EN0			
	53013 528AA	1	U			ED0, EK0, EN0			
2									PAD, Accelerator Pedal, Also Serviced In Item 1
	53003 932AB	1	J, T			ED0, EK0, EN0			
		1	U			ED0, EK0, EN0			
3									SPRING, Accelerator Pedal Return, Also Serviced In Item 1
	5207 8168	1	J, T			ED0, EK0, EN0			
		1	U			ED0, EK0, EN0			
4									PIN, Accelerator Pedal Mtg., Also Serviced In Item 1
	J322 0231	1	J, T			ED0, EK0, EN0			
		1	U			ED0, EK0, EN0			
5									BUSHING, Accelerator Pedal, Also Serviced In Item 1
	5207 8653	2	J, T			ED0, EK0, EN0			

JEEP LIBERTY (KJ)

SERIES	LINE	BODY	ENGINE	TRANSMISSION
P = Limited	J = LHD (4WD)	74 = 4 Dr. (104.3 WB)	ED1, ED0 = 2.4L Power Tech	DDK = 5 Speed HDManual
H = Sport	U = RHD (4WD)		EKG, EK0 = 3.7L Power Tech	DDD = 5 Speed HD Manual
M = Renegade	T = LHD (2WD)		ENJ = 2.5L 4Cyl Turbo Diesel	DG4,DGQ = Multi-Speed Auto
			ENR = 2.8L 4Cyl Turbo Diesel	DG6 = 4 Speed Auto Transm
			EN0 = 4Cyl Turbo Diesel	DG0 = All Automatic Transm
				DBB = All Manual Transm

Accelerator Pedal
Figure 014-1110

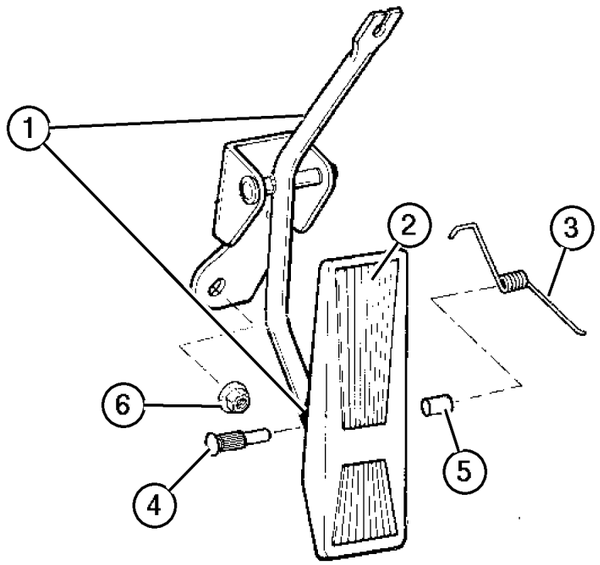

ITEM	PART NUMBER	QTY	LINE	SERIES	BODY	ENGINE	TRANS	TRIM	DESCRIPTION
		2	U			ED0, EK0, EN0			
6	6502 843	2							NUT AND WASHER, Hex Nut-Coned Washer, M6 x 1.00

JEEP LIBERTY (KJ)

SERIES	LINE	BODY	ENGINE	TRANSMISSION
P = Limited	J = LHD (4WD)	74 = 4 Dr. (104.3 WB)	ED1, ED0 = 2.4L Power Tech	DDK = 5 Speed HDManual
H = Sport	U = RHD (4WD)		EKG, EK0 = 3.7L Power Tech	DDD = 5 Speed HD Manual
M = Renegade	T = LHD (2WD)		ENJ = 2.5L 4Cyl Turbo Diesel	DG4,DGQ = Multi-Speed Auto
			ENR = 2.8L 4Cyl Turbo Diesel	DG6 = 4 Speed Auto Transm
			EN0 = 4Cyl Turbo Diesel	DG0 = All Automatic Transm
				DBB = All Manual Transm

Group – 016

Propeller Shafts and U–Joints

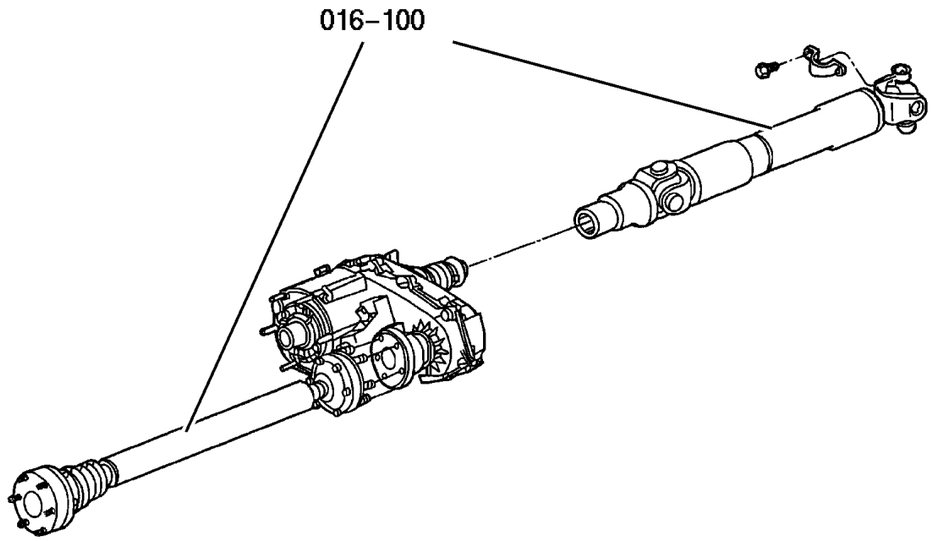

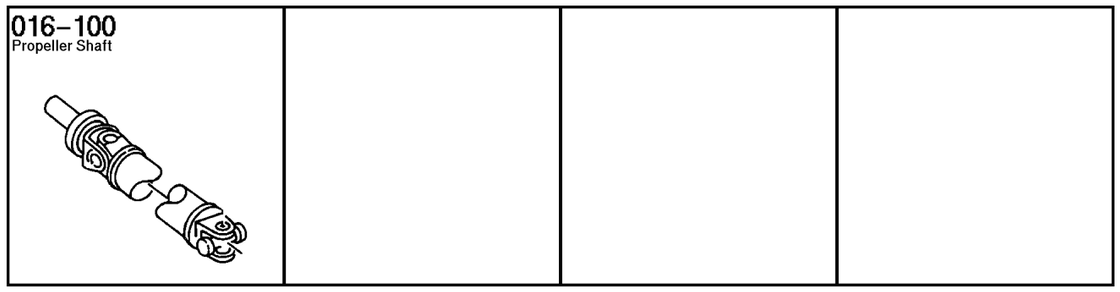

GROUP 16 - Propeller Shafts and U-Joints

Illustration Title	Group-Fig. No.
Propeller Shaft	
Propeller Shaft,2 Wheel Drive	Fig. 016-110
Propeller Shaft,4 Wheel Drive	Fig. 016-120

Propeller Shaft,2 Wheel Drive
Figure 016-110

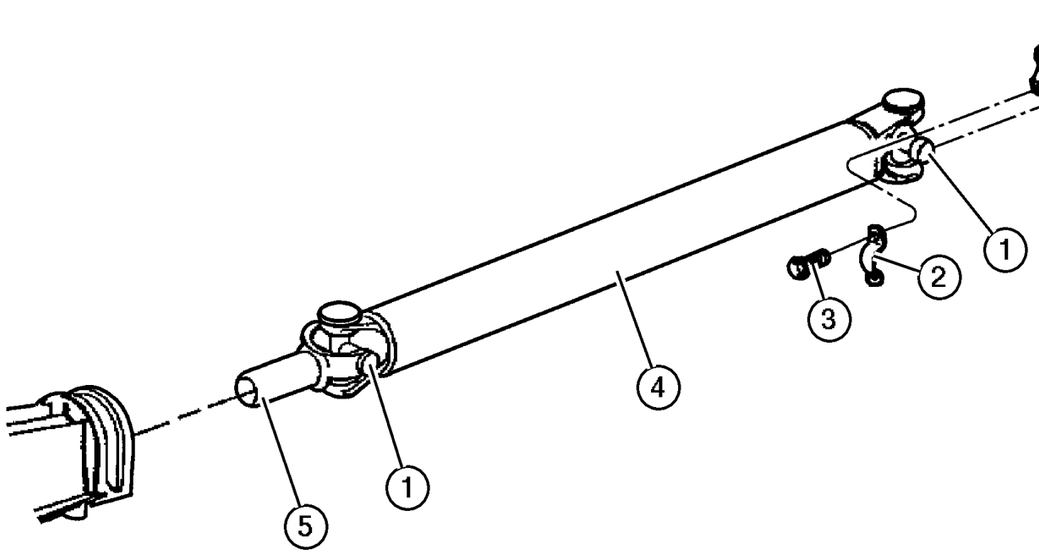

ITEM	PART NUMBER	QTY	LINE	SERIES	BODY	ENGINE	TRANS	TRIM	DESCRIPTION
Note:Sales Codes									
[DBB]=Transmissions - All Manual									
[DG4]=Transmission - Multi-Speed Automatic, 45RF									
[DG6]=Transmission - 4-Speed Automatic, 42RL									
[DRA]= Axle - Rear, Corporate 8.25									
[ED0]=Engines - All 2.2, 2.5, 2.4L 4 Cylinder Gas									
[EK0]=Engines - All 3.7L 6 Cylinder Gas									
1									U JOINT
	5015 694AA	1	T			ED0	DBB		Up To and Including 12-01-02, Front
	5014 733AA	1	T			ED0	DBB		Up To and Including 12-01-02, Rear
	5015 694AA	2	T			ED0	DBB		12-02-02 and After, Front or Rear
	5014 733AA	2	T			EK0	DBB		Up To and Including 12-01-02, Front or Rear
	5015 694AA	2	T			EK0	DBB		12-02-02 and After, Front or Rear
	5014 733AA	2	T			EK0	DG4		Front or Rear
	5015 694AA	2	T			EK0	DG6		Front or Rear
2	J324 0553	2							STRAP, Prop Shaft
3	J400 6928	4							BOLT
4									SHAFT, Drive, Rear 1-Piece
	#52111 555AG	1	T			ED0	DBB		Up To and Including 12-01-02
	#52853 126AA	1	T			ED0	DBB		12-02-02 and After
	52111 565AD	1	T			EK0	DBB		Up To and Including 12-01-02
	#52853 127AA	1	T			EK0	DBB		12-02-02 and After
	#52111 557AI	1	T			EK0	DG4		
	#52853 118AA	1	T			EK0	DG6		
5									YOKE, Drive Shaft
	5073 280AA	1	T			ED0	DBB		
	5069 412AA	1	T			EK0	DBB		Up To and Including 12-01-02
	#5093 963AA	1	T			EK0	DBB		12-02-02 and After
	5073 281AA	1	T			EK0	DG4		
	#5103 210AA	1	T			EK0	DG6		
-6									RING, U Joint
	J320 7886	4	T			ED0	DBB		Front or Rear
		4	T			EK0	DG4		Front or Rear
		4	T			EK0	DBB		Front or Rear
		4	T			EK0	DG6		Front or Rear
-7									FLANGE, Drive Shaft
	#5103 372AA	1	T			ED0	DBB		Rear
		1	T			EK0	DBB		Rear

JEEP LIBERTY (KJ)

SERIES	LINE	BODY	ENGINE	TRANSMISSION
P = Limited	J = LHD (4WD)	74 = 4 Dr. (104.3 WB)	ED1, ED0 = 2.4L Power Tech	DDK = 5 Speed HDManual
H = Sport	U = RHD (4WD)		EKG, EK0 = 3.7L Power Tech	DDD = 5 Speed HD Manual
M = Renegade	T = LHD (2WD)		ENJ = 2.5L 4Cyl Turbo Diesel	DG4,DGQ = Multi-Speed Auto
			ENR = 2.8L 4Cyl Turbo Diesel	DG6 = 4 Speed Auto Transm
			EN0 = 4Cyl Turbo Diesel	DG0 = All Automatic Transm
				DBB = All Manual Transm

AR = Use as required - = Non illustrated part # = New this model year **June 3, 2003**

« RETURN TO GROUP INDEX »

Propeller Shaft,2 Wheel Drive
Figure 016-110

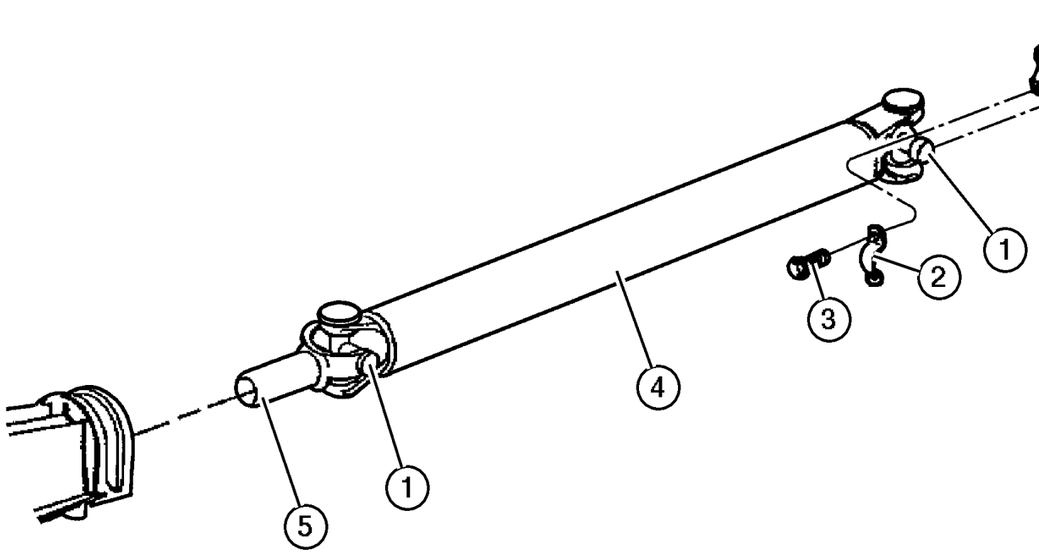

ITEM	PART NUMBER	QTY	LINE	SERIES	BODY	ENGINE	TRANS	TRIM	DESCRIPTION
-8	6506 497AA	4							BOLT, Hex Head, M12, Drive Shaft Flange, Mounting

JEEP LIBERTY (KJ)

SERIES	LINE	BODY	ENGINE	TRANSMISSION
P = Limited	J = LHD (4WD)	74 = 4 Dr. (104.3 WB)	ED1, ED0 = 2.4L Power Tech	DDK = 5 Speed HDManual
H = Sport	U = RHD (4WD)		EKG, EK0 = 3.7L Power Tech	DDD = 5 Speed HD Manual
M = Renegade	T = LHD (2WD)		ENJ = 2.5L 4Cyl Turbo Diesel	DG4,DGQ = Multi-Speed Auto
			ENR = 2.8L 4Cyl Turbo Diesel	DG6 = 4 Speed Auto Transm
			EN0 = 4Cyl Turbo Diesel	DG0 = All Automatic Transm
				DBB = All Manual Transm

AR = Use as required - = Non illustrated part # = New this model year

June 3, 2003

« RETURN TO GROUP INDEX

«

Propeller Shaft,4 Wheel Drive
Figure 016-120

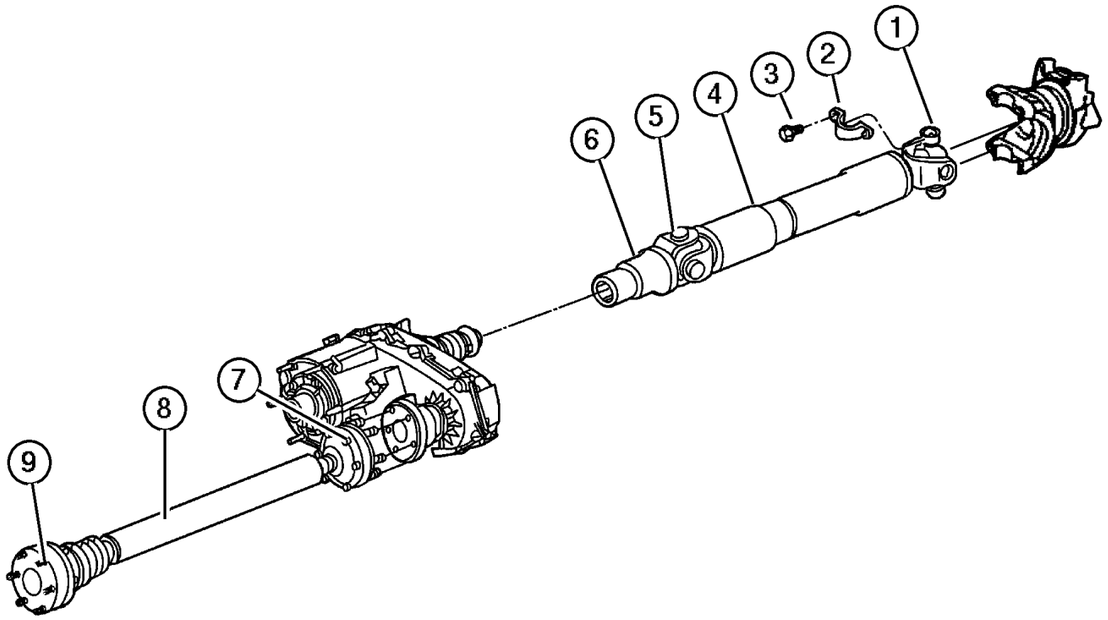

ITEM	PART NUMBER	QTY	LINE	SERIES	BODY	ENGINE	TRANS	TRIM	DESCRIPTION
Note:Sales Codes									
Note:There are no separate parts available for shaft 52111567AE.									
Note:Items 7,9 that one part number consists of 2 bolts and 1 strap									
[DBB]=Transmissions - All Manual									
[DG4]=Transmission-Multi-speed Automatic 45RFAutomatic									
[DG6]=Transmission - 4-Speed Automatic, 42RL									
[ED0]=Engines - All 2.2L,2.5L,2.4L 4 CYL GA									
[EK0]=Engines - All 3.7L 6 Cylinder Gas									
[EN0]=Engines - All 4/5 Cylinder Turbo Diesel									
1									U JOINT
	5015 694AA	1	J, U			ED0	DBB		Up To and Including 12-01-02, Front
	5014 733AA	1	J, U			ED0	DBB		Up To and Including 12-01-02, Rear
	5015 694AA	2	J, U			ED0	DBB		12-02-02 and After, Front or Rear
	5014 733AA	2	J, U			EK0	DBB		Up To and Including 12-01-02, Front or Rear
	5015 694AA	2	J, U			EK0	DBB		12-02-02 and After, Front or Rear
	5014 733AA	2	J, U			EK0	DG4		Front or Rear
	5015 694AA	2	J, U			EK0	DG6		Front or Rear
	5014 733AA	2	J, U			EN0	DBB		Up To and Including 12-01-02, Front or Rear
	5015 694AA	2	J, U			EN0	DBB		12-02-02 and After, Front or Rear
2	J324 0553	2							STRAP, Prop Shaft
3	J400 6928	4							BOLT
4									SHAFT, Drive, Rear 1-Piece
	#52111 554AG	1	J, U			ED0	DBB		Up To and Including 12-01-02
	#52853 125AA	1	J, U			ED0	DBB		12-02-02 and After
	52111 566AD	1	J, U			EK0	DBB		Up To and Including 12-01-02
	#52853 128AA	1	J, U			EK0	DBB		12-02-02 and After
	52111 558AD	1	J, U			EK0	DG4		
	#52853 119AA	1	J, U			EK0	DG6		
	#52111 567AE	1	J, U			EN0	DG0		
	52111 563AD	1	J, U			EN0	DBB		Up To and Including 12-01-02
	#52853 129AA	1	J, U			EN0	DBB		12-02-02 and After
5									RING, U Joint
	J320 7886	4	J, U			ED0	DBB		
		4	J, U			EK0	DG4		
		4	J, U			EN0	DBB		
		4	J, U			EK0	DBB		
		4	J, U			EK0	DG6		
6									YOKE, Drive Shaft

JEEP LIBERTY (KJ)

SERIES	LINE	BODY	ENGINE	TRANSMISSION
P = Limited	J = LHD (4WD)	74 = 4 Dr. (104.3 WB)	ED1, ED0 = 2.4L Power Tech	DDK = 5 Speed HDManual
H = Sport	U = RHD (4WD)		EKG, EK0 = 3.7L Power Tech	DDD = 5 Speed HD Manual
M = Renegade	T = LHD (2WD)		ENJ = 2.5L 4Cyl Turbo Diesel	DG4,DGQ = Multi-Speed Auto
			ENR = 2.8L 4Cyl Turbo Diesel	DG6 = 4 Speed Auto Transm
			EN0 = 4Cyl Turbo Diesel	DG0 = All Automatic Transm
				DBB = All Manual Transm

Propeller Shaft,4 Wheel Drive
Figure 016-120

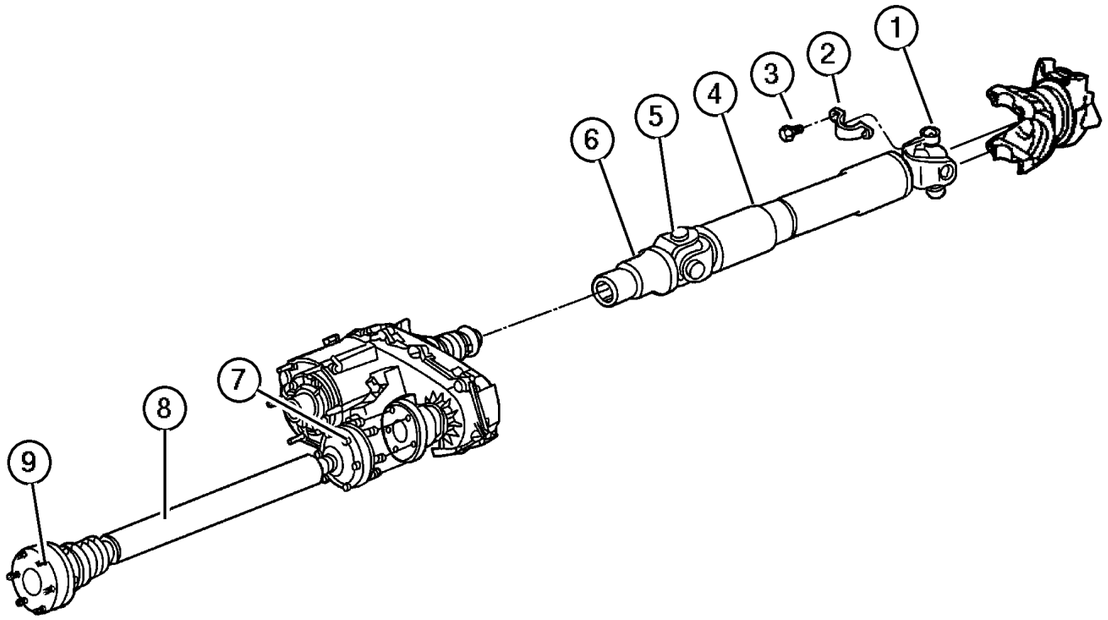

ITEM	PART NUMBER	QTY	LINE	SERIES	BODY	ENGINE	TRANS	TRIM	DESCRIPTION
	5073 275AA	1	J, U			ED0	DBB		
	5069 410AA	1	J, U			EK0	DBB		Up To and Including 12-01-02
	#5093 960AA	1	J, U			EK0	DBB		12-02-02 and After
	5080 649AA	1	J, U			EK0	DG4		
	#5093 961AA	1	J, U			EK0	DG6		
	5069 410AA	1	J, U			EN0	DBB		Up To and Including 12-01-02
	5073 275AA	1	J, U			EN0	DBB		12-02-02 and After
7									BOLT AND WASHER, Part Number Has 1 strap and 2 Bolts
	5015 109AA	3	J, U			EN0	DBB		To Transfer Case, Rear
		3	J, U			EN0	DG0		To Transfer Case, Rear
		3	J, U			ED0	DBB		To Transfer Case, Rear
		3	J, U			EK0	DBB, DG6		To Transfer Case, Rear
		3	J, U			EK0	DG4		To Transfer Case, Rear
8									SHAFT, Drive, Front
	52111 591AA	1	J, U			EN0	DBB		
	#52111 593AA	1	J, U			EN0	DG0		
	52111 594AA	1	J, U			ED0	DBB		
	52111 596AA	1	J, U			EK0	DBB, DG6		
	52111 597AA	1	J, U			EK0	DG4		
9									BOLT AND WASHER, Part Number Has 1 strap and 2 Bolts
	5015 996AA	3	J, U			EN0	DBB		To Front Axle, Front
		3	J, U			EN0	DG0		To Front Axle, Front
		3	J, U			ED0	DBB		To Front Axle, Front
		3	J, U			EK0	DBB, DG6		To Front Axle, Front
		3	J, U			EK0	DG4		To Front Axle, Front
-10									FLANGE, Drive Shaft
	#5103 372AA	1	J, U			ED0	DBB		Rear
		1	J, U			EK0	DBB		Rear
		1	J, U			EN0	DBB		Rear
-11	6506 497AA	4							BOLT, Hex Head, M12, Drive Shaft Flange, Mounting

JEEP LIBERTY (KJ)

SERIES	LINE	BODY	ENGINE	TRANSMISSION
P = Limited	J = LHD (4WD)	74 = 4 Dr. (104.3 WB)	ED1, ED0 = 2.4L Power Tech	DDK = 5 Speed HDManual
H = Sport	U = RHD (4WD)		EKG, EK0 = 3.7L Power Tech	DDD = 5 Speed HD Manual
M = Renegade	T = LHD (2WD)		ENJ = 2.5L 4Cyl Turbo Diesel	DG4,DGQ = Multi-Speed Auto
			ENR = 2.8L 4Cyl Turbo Diesel	DG6 = 4 Speed Auto Transm
			EN0 = 4Cyl Turbo Diesel	DG0 = All Automatic Transm
				DBB = All Manual Transm

AR = Use as required - = Non illustrated part # = New this model year **June 3, 2003**

« RETURN TO GROUP INDEX

Group – 017
Rear Suspension

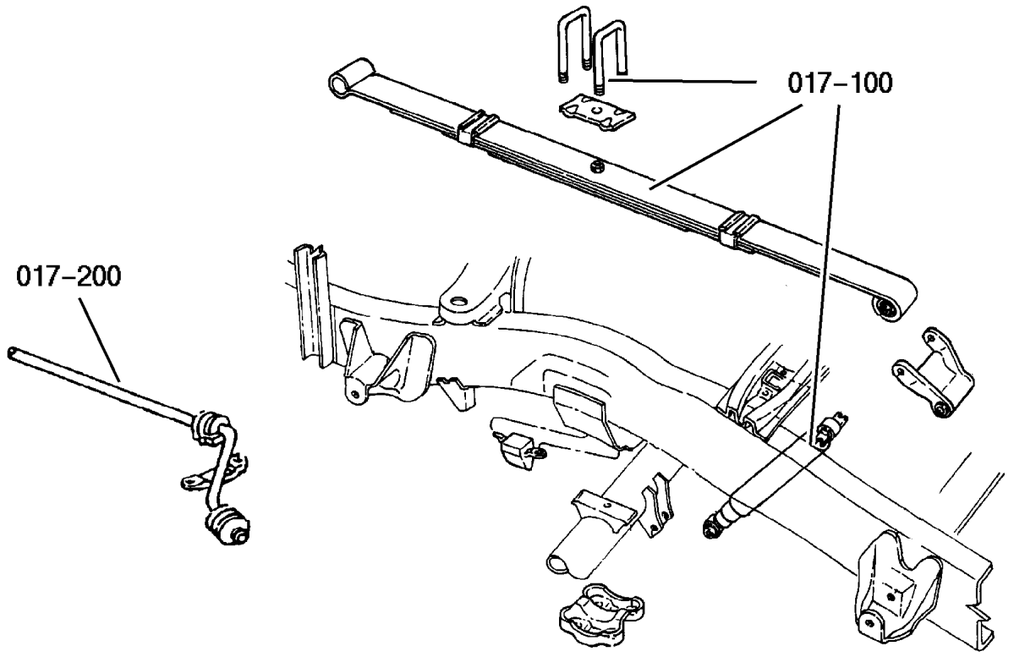

017–100 Rear Suspension	017–200 Rear Stabilizer		
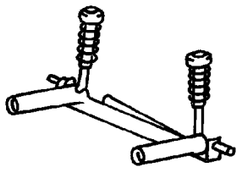	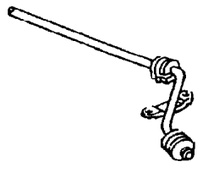		

GROUP 17 - Rear Suspension

Illustration Title	Group-Fig. No.
Rear Suspension	
Suspension,Rear and Shock	Fig. 017-110
Rear Stabilizer	
Stabilizer Bar,Rear	Fig. 017-210

Suspension,Rear and Shock
Figure 017-110

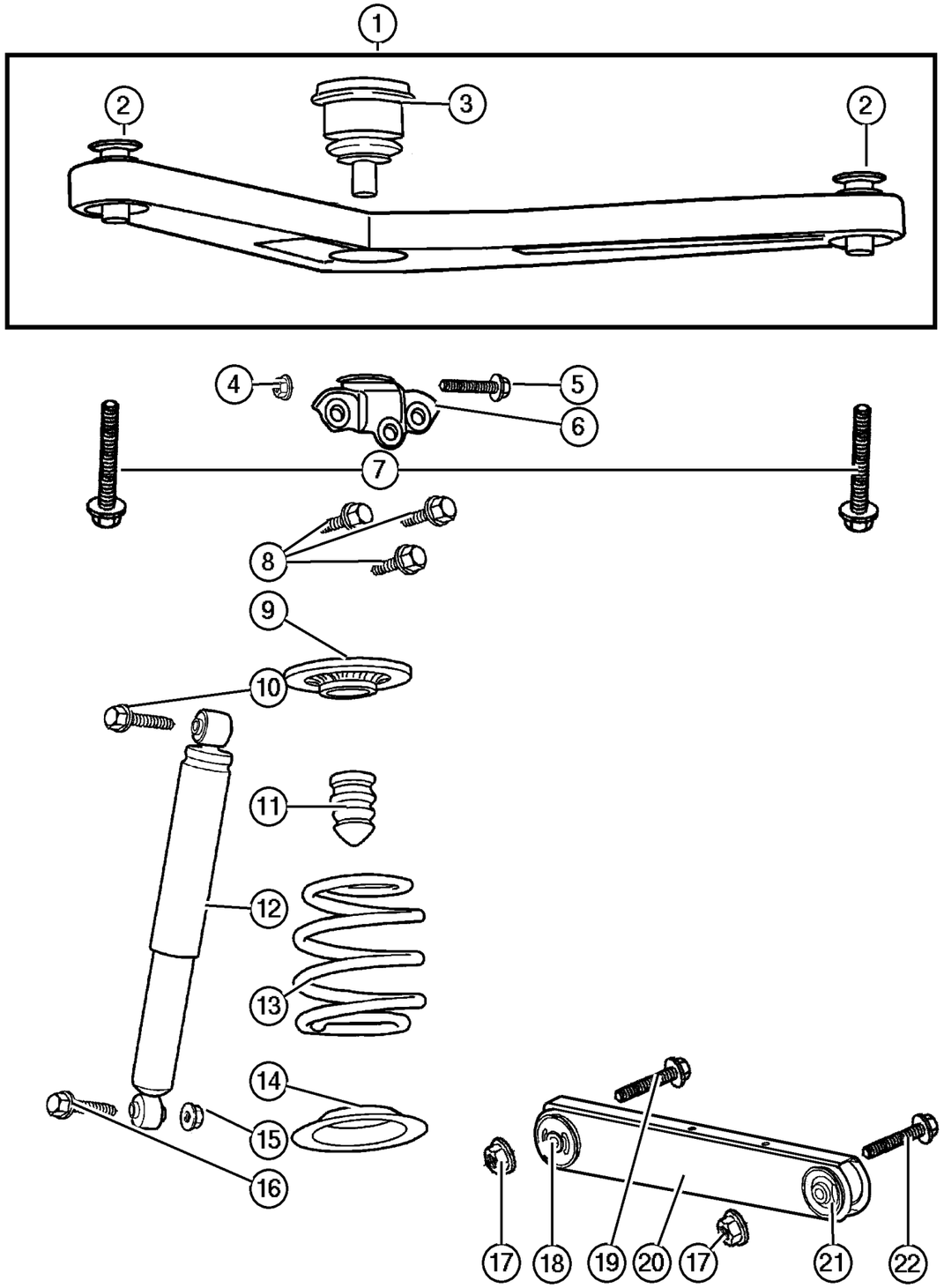

ITEM	PART NUMBER	QTY	LINE	SERIES	BODY	ENGINE	TRANS	TRIM	DESCRIPTION
Note:Sales Codes;									
[DRA]= Axle - Rear, Corporate 8.25									
[ZCT] Through [ZRW] = Spring Sales Codes will be found on Vehicle Identification Number [VIN] Sales Code Listing									
1	#52088 901AD	1							ARM, Upper Control, Rear
2	5208 8425	2							BUSHING, Control Arm
3	52088 647AB	1							BALL JOINT, Upper Control Arm
4	6503 711	1							NUT, Hex Flange Lock, M12x1.75, Ball Joint Bracket, Mounting
5	6503 610	1							BOLT, Hex Flange Head, M12-1. 75x62.0, Ball Joint Bracket Pinch, Mounting
6	52128 586AA	1							BRACKET, Ballstud
7	6504 748	2							SCREW, Hex Flange Head, M12x1. 75x117, UCA to Body, Mounting
8	6505 445AA	3							BOLT, Ball Joint Bracket, Mounting
9	52088 707AA	2							ISOLATOR, Spring, Upper
10	6506 147AA	2							SCREW, Hex Flange Head, M12x1. 75x80, Shock Mounting, Upper
11	52088 705AB	2							BUMPER, Jounce, Upper
12	52088 673AC	2							SHOCK ABSORBER, Suspension, Rear
13									SPRING, Suspension, Rear
	52088 695AC	1							[ZCT,ZRT]
	52088 696AC	1							[ZCU,ZRU]
	52088 697AC	1							[ZCV,ZRV]
	52088 698AC	1							[ZCW,ZRW]
14	52128 524AA	2							ISOLATOR, Spring, Lower
15	6502 697	2							NUT, Hex Flange Lock, M12x1.75, Shock Mounting, Lower
16	6505 935AA	2							SCREW, Shock Mounting, Lower
17	6102 251AA	4							NUT, M14X2, LCA to Axle and Sill, Mounting
18	52089 065AA	2							BUSHING, Control Arm, to Axle, Lower
19	6504 408	2							BOLT, LCA to Body, Mounting
20	52088 682AB	2							ARM, Lower Control, Rear, with Bushings
21	52088 648AA	2							BUSHING, Control Arm, to Sill, Lower
22	6506 033AA	2							BOLT, Hex Flange Head, M14x2. 0x105, LCA to Body, Mounting

JEEP LIBERTY (KJ)

SERIES	LINE	BODY	ENGINE	TRANSMISSION
P = Limited	J = LHD (4WD)	74 = 4 Dr. (104.3 WB)	ED1, ED0 = 2.4L Power Tech	DDK = 5 Speed HDManual
H = Sport	U = RHD (4WD)		EKG, EK0 = 3.7L Power Tech	DDD = 5 Speed HD Manual
M = Renegade	T = LHD (2WD)		ENJ = 2.5L 4Cyl Turbo Diesel	DG4,DGQ = Multi-Speed Auto
			ENR = 2.8L 4Cyl Turbo Diesel	DG6 = 4 Speed Auto Transm
			EN0 = 4Cyl Turbo Diesel	DG0 = All Automatic Transm
				DBB = All Manual Transm

AR = Use as required - = Non illustrated part # = New this model year **June 3, 2003**

« RETURN TO GROUP INDEX

Stabilizer Bar,Rear
Figure 017-210

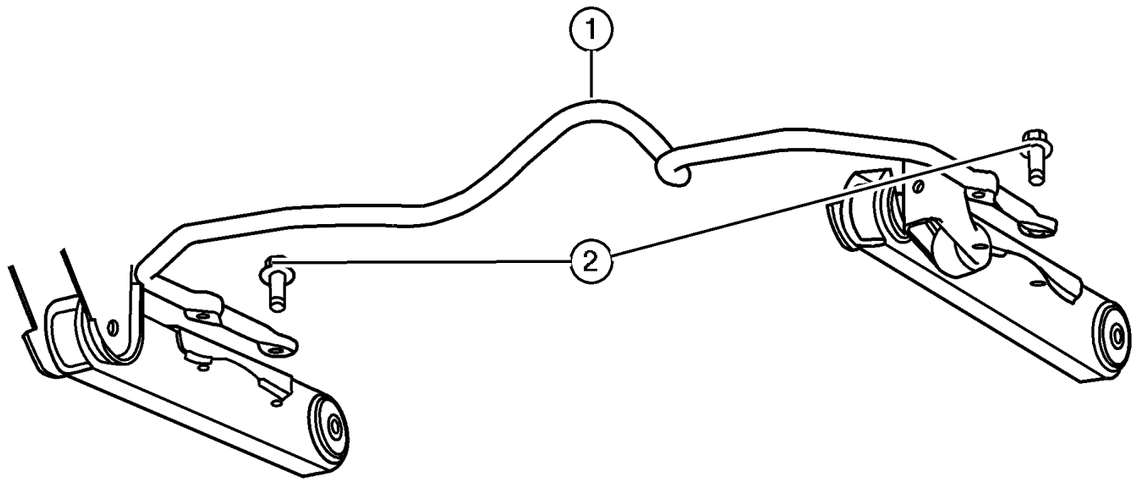

ITEM	PART NUMBER	QTY	LINE	SERIES	BODY	ENGINE	TRANS	TRIM	DESCRIPTION
1	52088 677AA	1							STABILIZER BAR, Rear Suspension
2	6506 887AA	4							SCREW AND WASHER, Hex, Stabilizer Bar to Lower Control Arm, Mounting

JEEP LIBERTY (KJ)

SERIES	LINE	BODY	ENGINE	TRANSMISSION
P = Limited	J = LHD (4WD)	74 = 4 Dr. (104.3 WB)	ED1, ED0 = 2.4L Power Tech	DDK = 5 Speed HDManual
H = Sport	U = RHD (4WD)		EKG, EK0 = 3.7L Power Tech	DDD = 5 Speed HD Manual
M = Renegade	T = LHD (2WD)		ENJ = 2.5L 4Cyl Turbo Diesel	DG4,DGQ = Multi-Speed Auto
			ENR = 2.8L 4Cyl Turbo Diesel	DG6 = 4 Speed Auto Transm
			EN0 = 4Cyl Turbo Diesel	DG0 = All Automatic Transm
				DBB = All Manual Transm

Group – 019

Steering

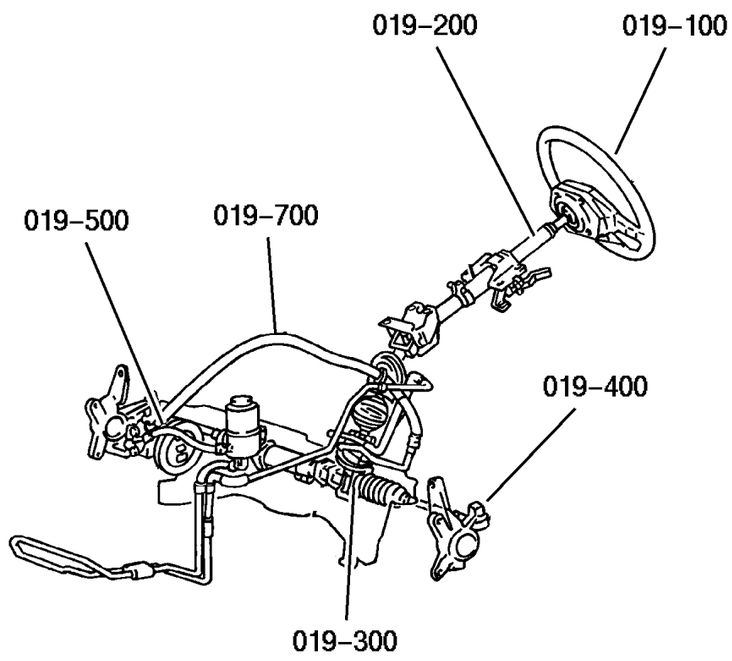

019–100 Steering Wheel 	019–200 Steering Column 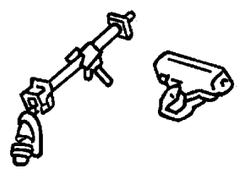	019–300 Steering Gear 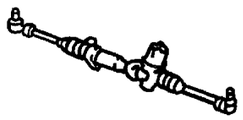	019–500 Power Steering Pump 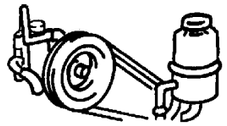
019–700 Power Steering Hoses 			

GROUP 19 - Steering

Illustration Title	Group-Fig. No.
Steering Wheel	
Steering Wheel	Fig. 019-110
Steering Column	
Column,Steering	Fig. 019-210
Steering Gear	
Gear Assembly,Steering,Rack and Pinion	Fig. 019-310
Power Steering Pump	
Pump,Power Steering,2.4L [ED0] Gas Engine	Fig. 019-510
Pump,Power Steering,2.5L [EN0] Diesel Engine	Fig. 019-520
Pump,Power Steering,3.7L [EK0] Gas Engine	Fig. 019-530
Power Steering Hoses	
Hoses and Reservoir,LHD,2.4L [ED0] Gas,2.5L [EN0] Diesel Engines	Fig. 019-710
Hoses and Reservior,RHD,2.4L [ED0] Gas,2.5L [EN0] Diesel Engines	Fig. 019-720
Hoses and Reservior,LHD,3.7L [EK0] Gas Engine	Fig. 019-730
Hoses and Reservior,RHD,3.7L [EK0] Gas Engine	Fig. 019-740

Steering Wheel
Figure 019-110

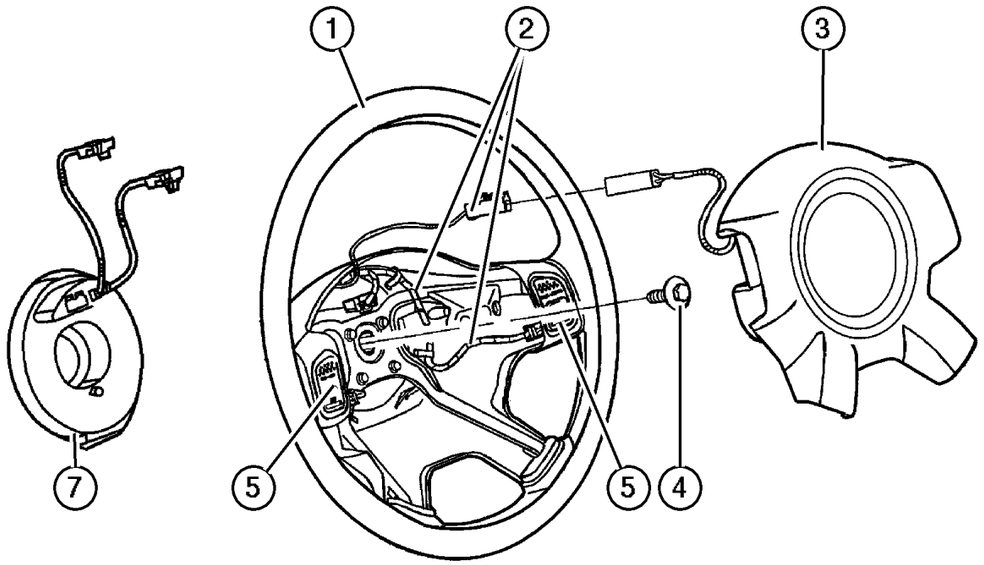

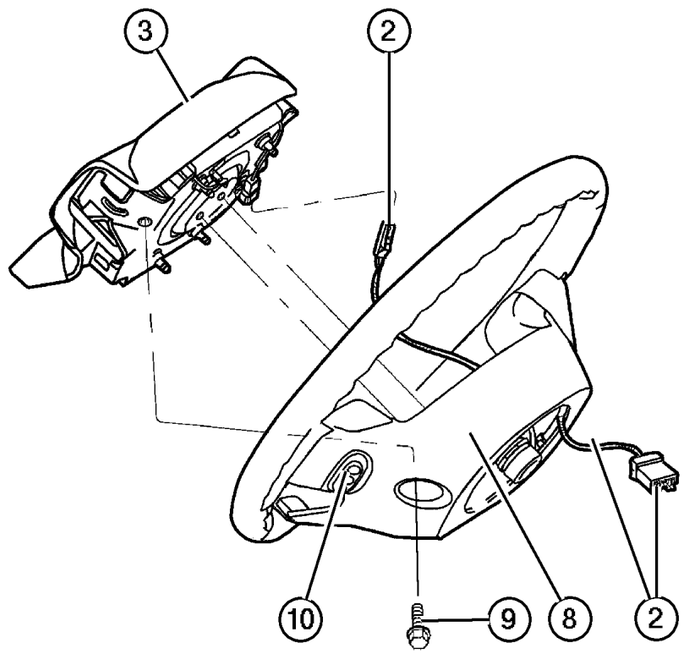

ITEM	PART NUMBER	QTY	LINE	SERIES	BODY	ENGINE	TRANS	TRIM	DESCRIPTION
Note:Sales Codes									
[NHM]=Speed Control									
[RDZ]= Audio Controls - Steering Wheel Mounted									
[SCD]= Steering Wheel - Luxury									
[SCG]=Steering Wheel - Leather Wrapped									
1									WHEEL, Steering
	UR71 DX9AB	1							[SCD]
	UR67 1X9AC	1		H, M					[SCG,NHM] With or Without [RDZ]
		1		P					[SCG,NHM] With or Without [RDZ]
2									WIRING, Steering Wheel
	56010 170AC	1		H, M					[SCG,NHM]
	56010 171AC	1		H, M					[SCG,NHM,RDZ]
	56010 170AC	1		P					[SCG,NHM]
	56010 171AC	1		P					[SCG,NHM,RDZ]
3									AIR BAG, Driver
	5GG30 DX9AE	1		H, M					
	5HK02 1X9AE	1		P					
4	6505 656AA	1							SCREW, Hex Flange Head, M10x1.5x35., Steering Wheel to Column, Mounting
5									SWITCH, Speed Control
	56010 088AC	1		H, M					[SCG,NHM], Right
	56010 089AC	1		H, M					[SCG,NHM], Left
	56010 358AB	1		P					[SCG,NHM], Right
	56010 359AB	1		P					[SCG,NHM], Left
-6									BEZEL, Steering Wheel
	5GN02 DX9AA	1							[SCD] Without [NHM], Right
	5GN03 DX9AA	1							[SCD] Without [NHM], Left
7									CLOCKSPRING
	56010 146AF	1							Without [RDZ]
	56010 187AG	1							With [RDZ]
8									COVER, Steering Wheel Back
	5083 981AA	1		H, M					[SCG,NHM]
	5086 215AA	1		H, M					[SCG,NHM,RDZ]
	5083 981AA	1		P					[SCG,NHM]
	5086 215AA	1		P					[SCG,NHM,RDZ]
9	6506 091AA	2							SCREW, M6x1x25, Air Bag Module, Mounting
10									SWITCH, Remote Radio
	56042 312AB	1		H, M					Radio Control-Volume, Right
	56042 313AB	1		H, M					Radio Control-Seek, Left

JEEP LIBERTY (KJ)

SERIES	LINE	BODY	ENGINE	TRANSMISSION
P = Limited	J = LHD (4WD)	74 = 4 Dr. (104.3 WB)	ED1, ED0 = 2.4L Power Tech	DDK = 5 Speed HDManual
H = Sport	U = RHD (4WD)		EKG, EK0 = 3.7L Power Tech	DDD = 5 Speed HD Manual
M = Renegade	T = LHD (2WD)		ENJ = 2.5L 4Cyl Turbo Diesel	DG4,DGQ = Multi-Speed Auto
			ENR = 2.8L 4Cyl Turbo Diesel	DG6 = 4 Speed Auto Transm
			EN0 = 4Cyl Turbo Diesel	DG0 = All Automatic Transm
				DBB = All Manual Transm

AR = Use as required - = Non illustrated part # = New this model year

June 3, 2003

« RETURN TO GROUP INDEX »

Steering Wheel
Figure 019-110

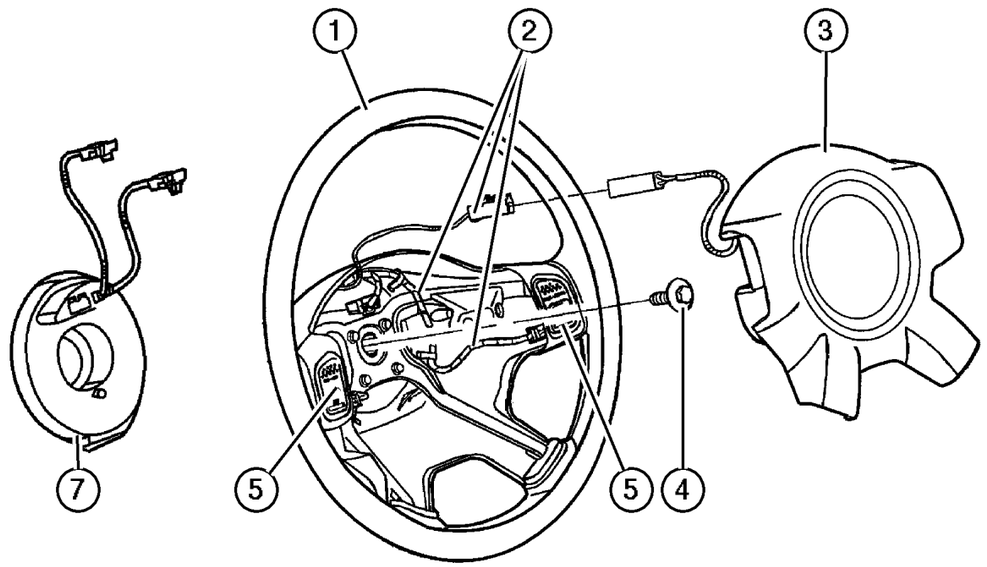

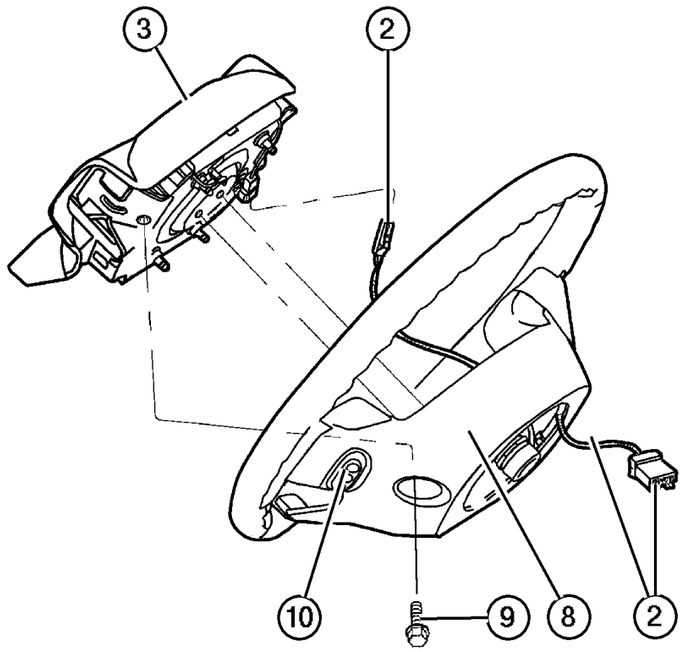

ITEM	PART NUMBER	QTY	LINE	SERIES	BODY	ENGINE	TRANS	TRIM	DESCRIPTION
	56042 312AB	1		P					Radio Control-Volume, Right
	56042 313AB	1		P					Radio Control-Seek, Left

JEEP LIBERTY (KJ)

SERIES	LINE	BODY	ENGINE	TRANSMISSION
P = Limited	J = LHD (4WD)	74 = 4 Dr. (104.3 WB)	ED1, ED0 = 2.4L Power Tech	DDK = 5 Speed HDManual
H = Sport	U = RHD (4WD)		EKG, EK0 = 3.7L Power Tech	DDD = 5 Speed HD Manual
M = Renegade	T = LHD (2WD)		ENJ = 2.5L 4Cyl Turbo Diesel	DG4,DGQ = Multi-Speed Auto
			ENR = 2.8L 4Cyl Turbo Diesel	DG6 = 4 Speed Auto Transm
			EN0 = 4Cyl Turbo Diesel	DG0 = All Automatic Transm
				DBB = All Manual Transm

AR = Use as required - = Non illustrated part # = New this model year

June 3, 2003

« RETURN TO GROUP INDEX

Column,Steering
Figure 019-210

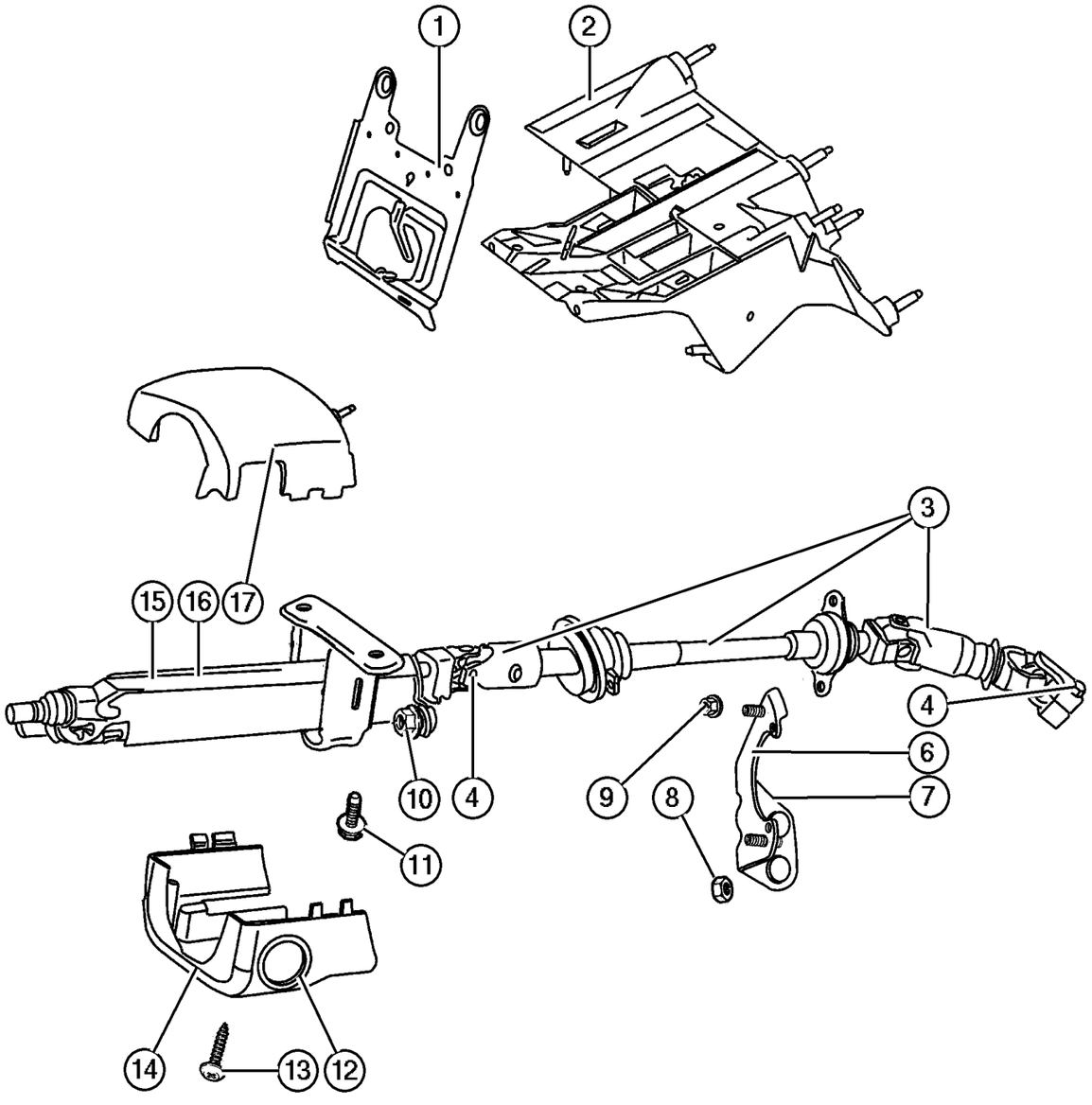

ITEM	PART NUMBER	QTY	LINE	SERIES	BODY	ENGINE	TRANS	TRIM	DESCRIPTION
Note:Sales Codes;									
[ABB]=European Equipment Group									
[DBB]=Transmissions - All Manual									
[DG0]=Transmissions - All Automatic									
[ED0]=Engines - All 2.2,2.5,2.4L 4 Cylinder Gas									
[EK0]= Engines - All 3.7L 6 Cylinder Gas									
[SUA]=Steering Column - Tilt									
1									BRACKET, Steering Column
	55314 992AA	1	J, T						
	55315 011AA	1	U						
2									BRACKET, Steering Column
	55314 987AA	1	J, T						
	55314 988AA	1	U						
3									SHAFT, Intermediate
	55315 022AB	1	J, T						
	55315 024AB	1	U			ED0, EK0			
	55315 057AA	1	U			EN0			Upper
	55315 058AA	1	U			EN0			Lower
4	6504 926AA	2							SCREW, Hex Flange Head, M10x1.5x40
-5	6502 808	2	U						SCREW, M6x1x25, Intermediate Shaft Bracket
6	55315 003AB	1	J, T						BRACKET, Intermediate Shaft
7	55315 009AA	1	U						BRACKET, Steering Column
8	6100 048	2							NUT, Hex, M6x1.00
9	6100 516	2							NUT, Hex Flange Lock, M6 Phosphate, Bearing to Bracket
10	6503 182	2							NUT AND WASHER, Hex Lock Nut-Coned Teeth Washer, M8 x 1.25, Steering Column Lower, Mounting
11	6506 128AA	2							SCREW AND WASHER, Hex Head, Steering Column Upper, Mounting
12	55314 965AB	1					DG0		TRIM RING, Ignition Key Cylinder
13									SCREW AND WASHER, Pan Head
	6036 381AA	2	J, T						Upper to Lower Shroud, Mounting
		2	U						Upper to Lower Shroud, Mounting
14									SHROUD, Steering Column
	5GE00 DX9AB	1					DBB		Without [SUA] & with [DBB], Lower
	5GE04 DX9AB	1					DBB		With [SUA] & [DBB], Lower
	5GE06 DX9AB	1					DG0		Without [SUA] & [DG0], Lower

JEEP LIBERTY (KJ)

SERIES	LINE	BODY	ENGINE	TRANSMISSION
P = Limited	J = LHD (4WD)	74 = 4 Dr. (104.3 WB)	ED1, ED0 = 2.4L Power Tech	DDK = 5 Speed HDManual
H = Sport	U = RHD (4WD)		EKG, EK0 = 3.7L Power Tech	DDD = 5 Speed HD Manual
M = Renegade	T = LHD (2WD)		ENJ = 2.5L 4Cyl Turbo Diesel	DG4,DGQ = Multi-Speed Auto
			ENR = 2.8L 4Cyl Turbo Diesel	DG6 = 4 Speed Auto Transm
			EN0 = 4Cyl Turbo Diesel	DG0 = All Automatic Transm
				DBB = All Manual Transm

AR = Use as required - = Non illustrated part # = New this model year

June 3, 2003

« RETURN TO GROUP INDEX »

Column,Steering
Figure 019-210

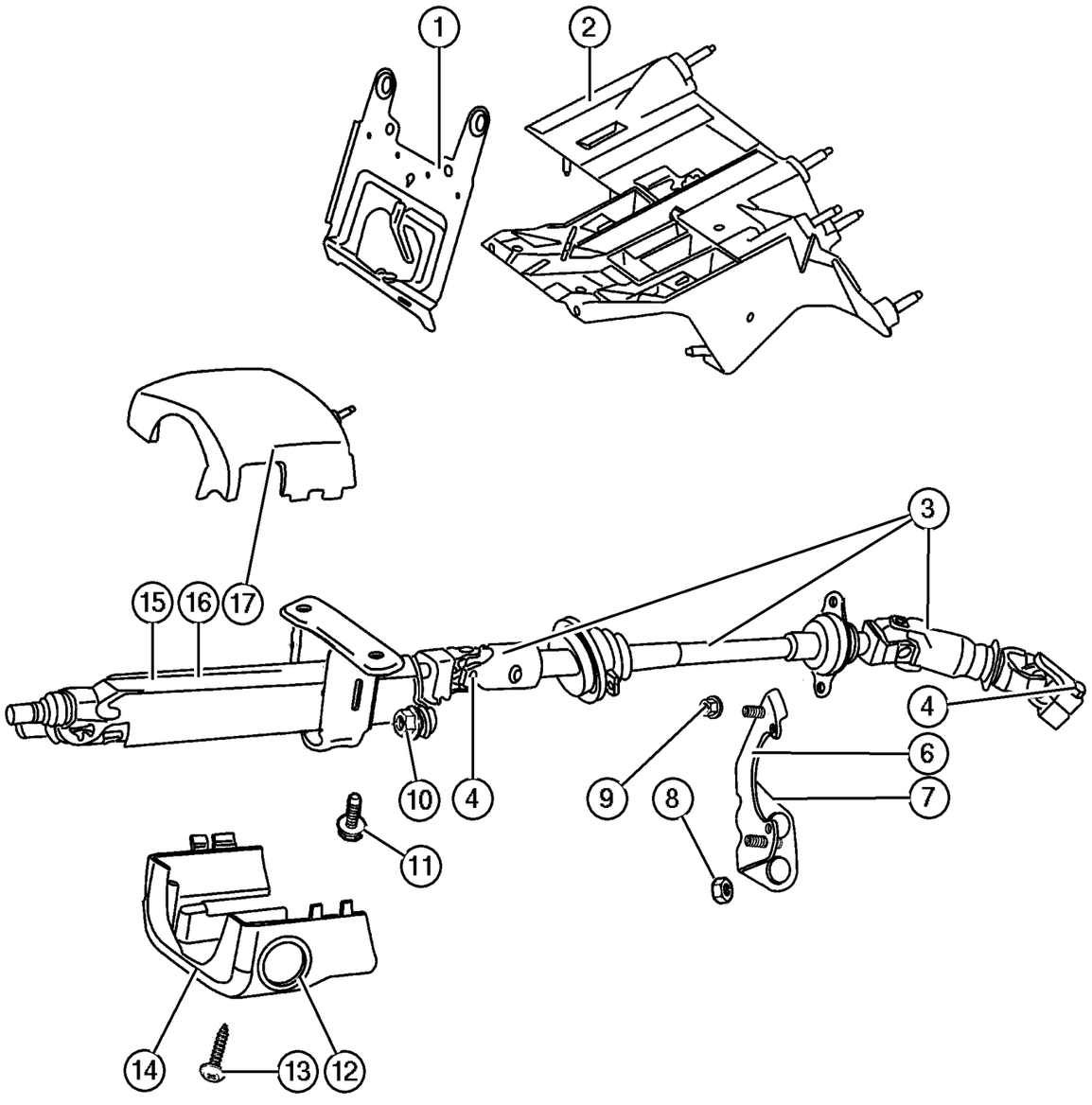

ITEM	PART NUMBER	QTY	LINE	SERIES	BODY	ENGINE	TRANS	TRIM	DESCRIPTION
	5GE08 DX9AB	1					DG0		With [SUA] & [DG0], Lower
15									COLUMN, steering, non tilt
	5057 077AA	1					DBB		[DBB]
	5057 078AA	1					DG0		[DG0]
16									COLUMN, Steering, Tilt
	5057 082AA	1					DBB		With [ABB] & [DBB]
	5057 080AA	1					DBB		Without [ABB] & [DBB]
	5057 081AA	1					DG0		With [ABB] & [DG0]
	5057 079AA	1					DG0		Without [ABB] & [DG0]
17									SHROUD, Steering Column
	5GK59 DX9AD	1					DBB		[DBB], Upper
		1					DG0		[DG0], Upper

JEEP LIBERTY (KJ)

SERIES	LINE	BODY	ENGINE	TRANSMISSION
P = Limited	J = LHD (4WD)	74 = 4 Dr. (104.3 WB)	ED1, ED0 = 2.4L Power Tech	DDK = 5 Speed HDManual
H = Sport	U = RHD (4WD)		EKG, EK0 = 3.7L Power Tech	DDD = 5 Speed HD Manual
M = Renegade	T = LHD (2WD)		ENJ = 2.5L 4Cyl Turbo Diesel	DG4,DGQ = Multi-Speed Auto
			ENR = 2.8L 4Cyl Turbo Diesel	DG6 = 4 Speed Auto Transm
			EN0 = 4Cyl Turbo Diesel	DG0 = All Automatic Transm
				DBB = All Manual Transm

Gear Assembly,Steering,Rack and Pinion
Figure 019-310

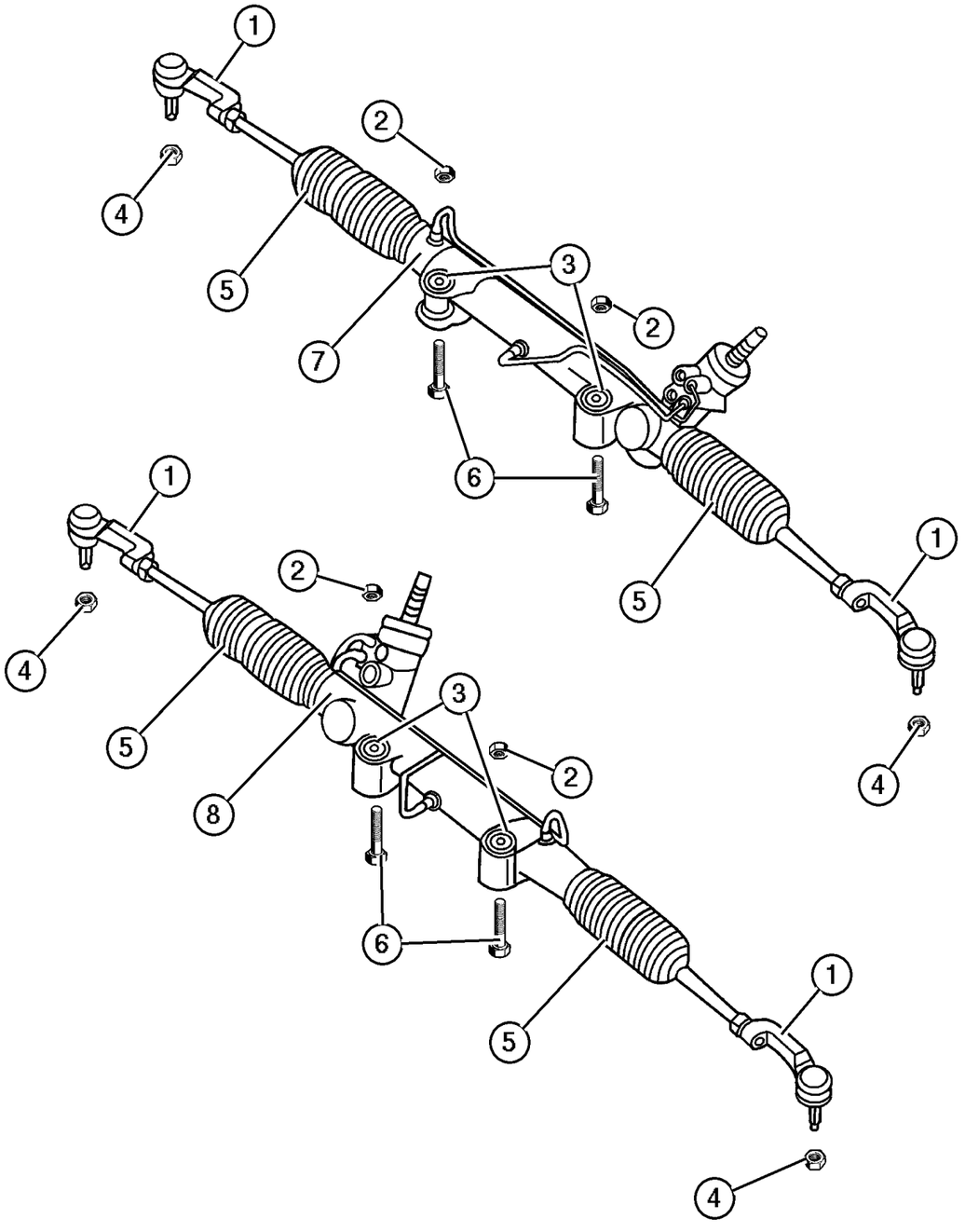

ITEM	PART NUMBER	QTY	LINE	SERIES	BODY	ENGINE	TRANS	TRIM	DESCRIPTION
Note:Sales Codes									
[ED0]=Engines - All 2.2, 2.5, 2.4L 4 Cylinder Gas									
[EK0]=Engines - All 3.7L 6 Cylinder Gas									
[EN0]=Engines - All 4/5 Cylinder Turbo Diesel									
1									SOCKET PACKAGE, Tie Rod End, Outer
	5072 444AA	1	J			ED0			Right
	5072 445AA	1	T			EK0			Left
	5072 444AA	1	U			ED0			Right
	5072 445AA	1	U			ED0			Left
	5072 444AA	1	U			EK0			Right
	5072 445AA	1	U			EK0			Left
	5072 444AA	1	U			EN0			Right
	5072 445AA	1	U			EN0			Left
		1	J			ED0			Left
	5072 444AA	1	J			EK0			Right
	5072 445AA	1	J			EK0			Left
	5072 444AA	1	J			EN0			Right
	5072 445AA	1	J			EN0			Left
	5072 444AA	1	T			ED0			Right
	5072 445AA	1	T			ED0			Left
	5072 444AA	1	T			EK0			Right
2									NUT
	6504 707	2	J			EK0			Gear to Cradle, Mounting
		2	J			EN0			Gear to Cradle, Mounting
		2	J			ED0			Gear to Cradle, Mounting
		2	T			ED0			Gear to Cradle, Mounting
		2	T			EK0			Gear to Cradle, Mounting
		2	U			ED0			Gear to Cradle, Mounting
		2	U			EK0			Gear to Cradle, Mounting
		2	U			EN0			Gear to Cradle, Mounting
3									BUSHING, Steering Gear
	52038 783AB	2	J			ED0			Gear to Cradle, Mounting
		2	J			EK0			Gear to Cradle, Mounting
		2	J			EN0			Gear to Cradle, Mounting
		2	T			ED0			Gear to Cradle, Mounting
		2	T			EK0			Gear to Cradle, Mounting
		2	U			ED0			Gear to Cradle, Mounting
		2	U			EK0			Gear to Cradle, Mounting
		2	U			EN0			Gear to Cradle, Mounting
4	6505 623AA	2							NUT AND WASHER, Tie Rod, Mounting

JEEP LIBERTY (KJ)

SERIES	LINE	BODY	ENGINE	TRANSMISSION
P = Limited	J = LHD (4WD)	74 = 4 Dr. (104.3 WB)	ED1, ED0 = 2.4L Power Tech	DDK = 5 Speed HDManual
H = Sport	U = RHD (4WD)		EKG, EK0 = 3.7L Power Tech	DDD = 5 Speed HD Manual
M = Renegade	T = LHD (2WD)		ENJ = 2.5L 4Cyl Turbo Diesel	DG4,DGQ = Multi-Speed Auto
			ENR = 2.8L 4Cyl Turbo Diesel	DG6 = 4 Speed Auto Transm
			EN0 = 4Cyl Turbo Diesel	DG0 = All Automatic Transm
				DBB = All Manual Transm

AR = Use as required - = Non illustrated part # = New this model year **June 3, 2003**

« RETURN TO GROUP INDEX »

Gear Assembly,Steering,Rack and Pinion
Figure 019-310

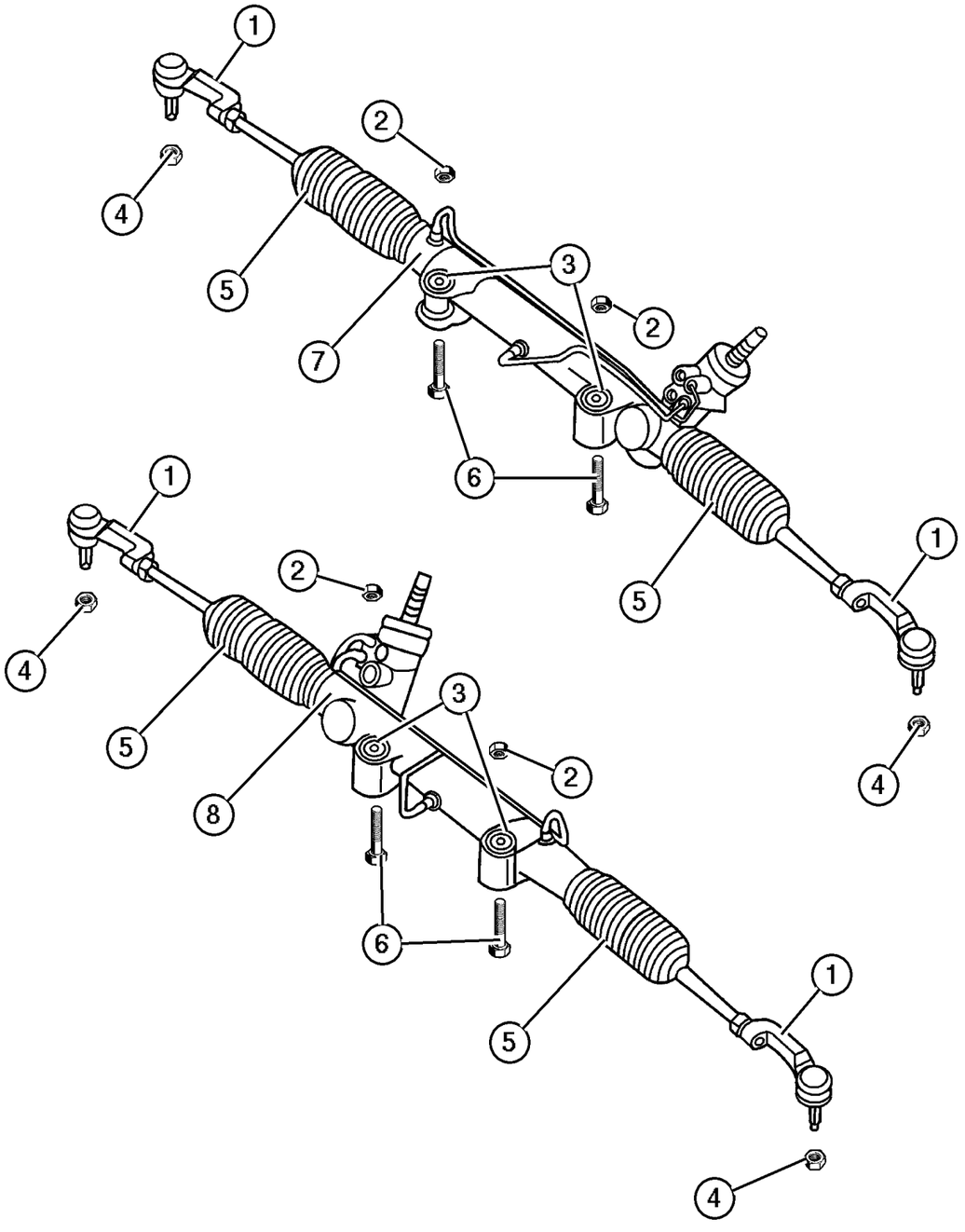

ITEM	PART NUMBER	QTY	LINE	SERIES	BODY	ENGINE	TRANS	TRIM	DESCRIPTION
5									BOOT KIT, Repair, (NOT SERVICED) (Not Serviced)
6									BOLT AND WASHER
	6506 517AA	2	J			ED0			Gear to Cradle, Mounting
		2	J			EK0			Gear to Cradle, Mounting
		2	J			EN0			Gear to Cradle, Mounting
		2	T			ED0			Gear to Cradle, Mounting
		2	T			EK0			Gear to Cradle, Mounting
		2	U			ED0			Gear to Cradle, Mounting
		2	U			EK0			Gear to Cradle, Mounting
		2	U			EN0			Gear to Cradle, Mounting
7									RACK, Steering Gear
	52128 517AB	1	J			ED0			
		1	J			EK0			
		1	J			EN0			
		1	T			ED0			
		1	T			EK0			
8									RACK, Steering Gear
	52128 588AB	1	U			ED0			
	52128 518AB	1	U			EK0			
	52128 588AB	1	U			EN0			

JEEP LIBERTY (KJ)

SERIES	LINE	BODY	ENGINE	TRANSMISSION
P = Limited	J = LHD (4WD)	74 = 4 Dr. (104.3 WB)	ED1, ED0 = 2.4L Power Tech	DDK = 5 Speed HDManual
H = Sport	U = RHD (4WD)		EKG, EK0 = 3.7L Power Tech	DDD = 5 Speed HD Manual
M = Renegade	T = LHD (2WD)		ENJ = 2.5L 4Cyl Turbo Diesel	DG4,DGQ = Multi-Speed Auto
			ENR = 2.8L 4Cyl Turbo Diesel	DG6 = 4 Speed Auto Transm
			EN0 = 4Cyl Turbo Diesel	DG0 = All Automatic Transm
				DBB = All Manual Transm

AR = Use as required - = Non illustrated part # = New this model year

June 3, 2003

« RETURN TO GROUP INDEX

Pump,Power Steering,2.4L [ED0] Gas Engine
Figure 019-510

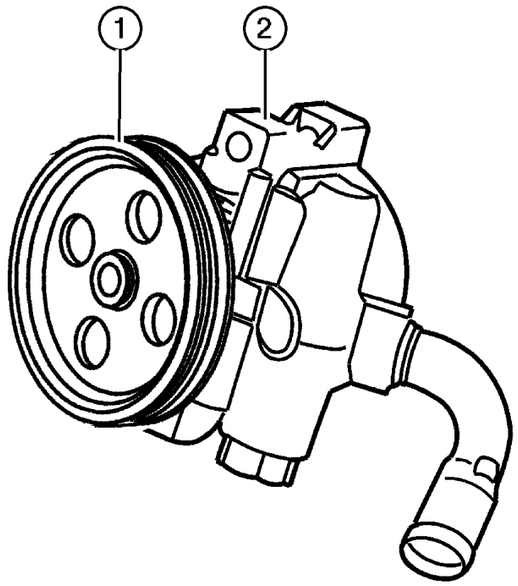

ITEM	PART NUMBER	QTY	LINE	SERIES	BODY	ENGINE	TRANS	TRIM	DESCRIPTION
Note: Sales Codes;									
[ED0]=Engines - All 2.2, 2.5, 2.4L 4 Cylinder Gas									
1	53031 722AA	1				ED0			PULLEY, Power Steering Pump
2	52088 711AB	1				ED0			PUMP, Power Steering
-3	6102 097AA	3				ED0			BOLT
-4									BRACKET, Power Steering
	52089 289AA	1	J			ED0			
		1	U			ED0			
		1	T			ED0			
-5									BRACKET, Power Steering
	52128 516AB	2	J			ED0			
		2	U			ED0			
		2	T			ED0			

JEEP LIBERTY (KJ)

SERIES	LINE	BODY	ENGINE	TRANSMISSION
P = Limited	J = LHD (4WD)	74 = 4 Dr. (104.3 WB)	ED1, ED0 = 2.4L Power Tech	DDK = 5 Speed HDManual
H = Sport	U = RHD (4WD)		EKG, EK0 = 3.7L Power Tech	DDD = 5 Speed HD Manual
M = Renegade	T = LHD (2WD)		ENJ = 2.5L 4Cyl Turbo Diesel	DG4,DGQ = Multi-Speed Auto
			ENR = 2.8L 4Cyl Turbo Diesel	DG6 = 4 Speed Auto Transm
			EN0 = 4Cyl Turbo Diesel	DG0 = All Automatic Transm
				DBB = All Manual Transm

Pump,Power Steering,2.5L [EN0] Diesel Engine
Figure 019-520

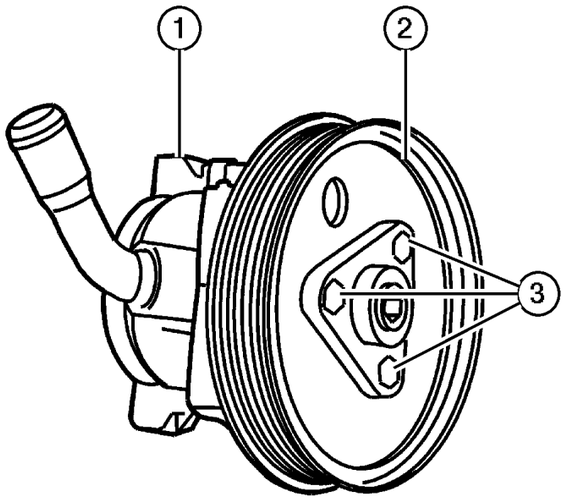

ITEM	PART NUMBER	QTY	LINE	SERIES	BODY	ENGINE	TRANS	TRIM	DESCRIPTION
Note:Sales Codes;									
[DBB]=Transmissions - All Manual									
[EN0]=Engines - All 4/5 Cylinder Turbo Diesel									
1									PUMP, Power Steering
	52088 712AC	1				EN0	DBB		High Temperature
		1				EN0	DG0		High Temperature
2									PULLEY, Power Steering Pump
	5072 441AA	1				EN0	DBB		
		1				EN0	DG0		
3									SCREW
	5003 554AA	3				EN0	DBB		Pump to Pulley, Mounting
		3				EN0	DG0		Pump to Pulley, Mounting
-4									BRACKET, Tensioner
	#5093 935AA	1				EN0	DBB		
		1				EN0	DG0		
-5									BOLT, 8Mx20
	4864 537	1				EN0	DBB		Pump to Bracket, Mounting
		1				EN0	DG0		Pump to Bracket, Mounting
-6									BRACKET, Power Steering
	52089 289AA	2	J			EN0			
		1	U			EN0			

JEEP LIBERTY (KJ)

SERIES	LINE	BODY	ENGINE	TRANSMISSION
P = Limited	J = LHD (4WD)	74 = 4 Dr. (104.3 WB)	ED1, ED0 = 2.4L Power Tech	DDK = 5 Speed HDManual
H = Sport	U = RHD (4WD)		EKG, EK0 = 3.7L Power Tech	DDD = 5 Speed HD Manual
M = Renegade	T = LHD (2WD)		ENJ = 2.5L 4Cyl Turbo Diesel	DG4,DGQ = Multi-Speed Auto
			ENR = 2.8L 4Cyl Turbo Diesel	DG6 = 4 Speed Auto Transm
			EN0 = 4Cyl Turbo Diesel	DG0 = All Automatic Transm
				DBB = All Manual Transm

AR = Use as required - = Non illustrated part # = New this model year **June 3, 2003**

« RETURN TO GROUP INDEX

Pump,Power Steering,3.7L [EK0] Gas Engine
Figure 019-530

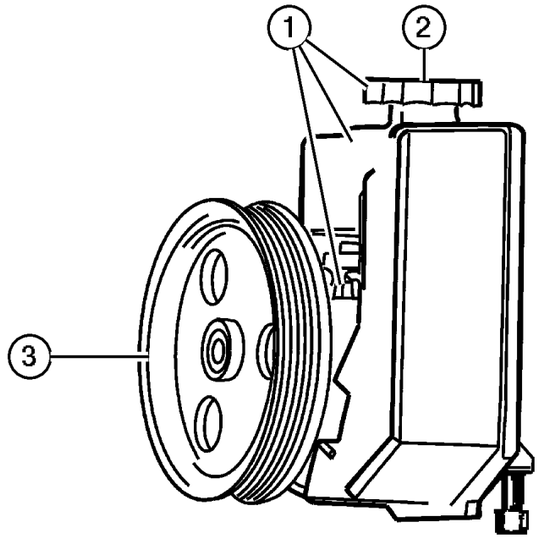

ITEM	PART NUMBER	QTY	LINE	SERIES	BODY	ENGINE	TRANS	TRIM	DESCRIPTION
Note:Sales Codes:									
[EK0]=Engines - All 3.7L 6 Cylinder Gas									
1	52088 710AB	1				EK0			PUMP, Power Steering
2	52088 956AA	1				EK0			CAP, Power Steering Pump
3	53010 258AC	1				EK0			PULLEY, Power Steering Pump
-4	6102 045AA	3				EK0			SCREW AND WASHER, Hex Head, Power Steering Pump Mounting

JEEP LIBERTY (KJ)

SERIES	LINE	BODY	ENGINE	TRANSMISSION
P = Limited	J = LHD (4WD)	74 = 4 Dr. (104.3 WB)	ED1, ED0 = 2.4L Power Tech	DDK = 5 Speed HDManual
H = Sport	U = RHD (4WD)		EKG, EK0 = 3.7L Power Tech	DDD = 5 Speed HD Manual
M = Renegade	T = LHD (2WD)		ENJ = 2.5L 4Cyl Turbo Diesel	DG4,DGQ = Multi-Speed Auto
			ENR = 2.8L 4Cyl Turbo Diesel	DG6 = 4 Speed Auto Transm
			EN0 = 4Cyl Turbo Diesel	DG0 = All Automatic Transm
				DBB = All Manual Transm

Hoses and Reservoir,LHD,2.4L [ED0] Gas,2.5L [EN0] Diesel Engines
Figure 019-710

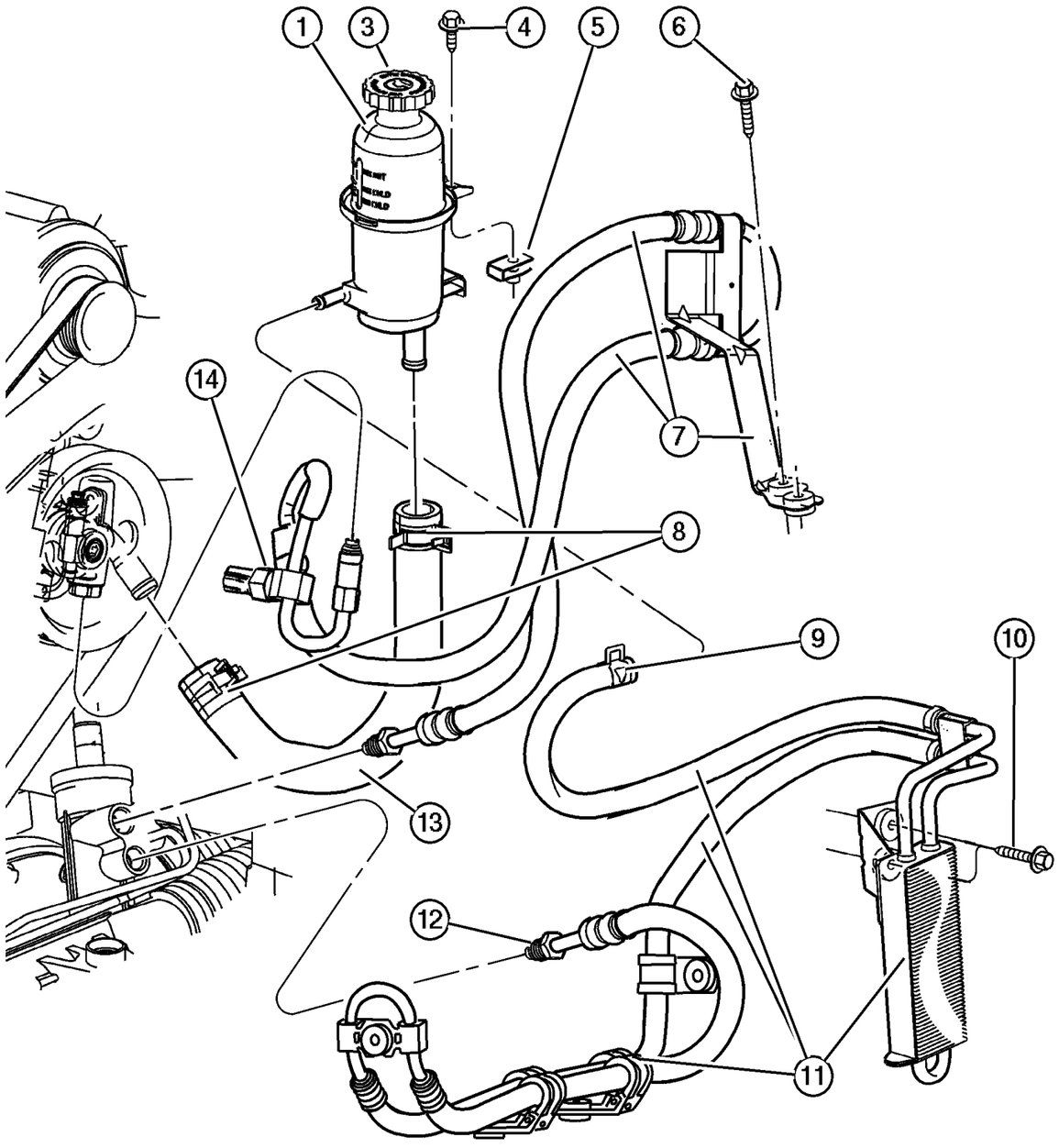

ITEM	PART NUMBER	QTY	LINE	SERIES	BODY	ENGINE	TRANS	TRIM	DESCRIPTION
Note: Sales Codes;									
[ED0]=Engines - All 2.2, 2.5, 2.4L 4 Cylinder Gas									
[EN0]=Engines - All 4/5 Cylinder Turbo Diesel									
1									RESERVOIR, Power Steering Pump
	52088 713AA	1				ED0			Includes Item 3
		1				EN0			Includes Item 3
-2	52088 874AD	1				EN0			BRACKET, Power Steering Reservoir
3									CAP, Power Steering Reservoir
	52128 513AA	1				ED0			
		1				EN0			
4	6102 132AA	1				ED0, EN0			SCREW, Hex Head, M6x1x20, Reservoir To Bracket
5	6101 712	2							NUT, U, M6x1
6									SCREW, Hex Head, M6x1x35, Pressure Hose Mounting (Qty 2), (NOT SERVICED) (Not Serviced)
7									HOSE, Power Steering Pressure
	52088 722AF	1	J, T			ED0			Includes Items 12,14
	52088 726AE	1	J			EN0			Includes Item 12
8									CLAMP, Hose, M28.9 x 1.60
	6502 018	1				EN0			
		2				ED0			
9									CLAMP, Hose, M18.5
	6504 217	1	J			ED0			
		1	T			ED0			
		1	J			EN0			
10									SCREW, Hex Head, M6x1x35, Cooler Mounting (Qty 2), (NOT SERVICED) (Not Serviced)
11									COOLER, Power Steering With Hose
	52088 931AE	1	J			EN0			Includes Items 9,12
	52128 561AB	1	J			ED0			Includes Items 9,12
		1	T			ED0			Includes Items 9,12
12									O RING, Power Steering Hose
	5205 254	1	J			ED0			As Required
		1	T			ED0			As Required
		2	J			EN0			As Required
13									HOSE, Power Steering Reservoir
	52088 718AD	1				ED0			Includes Item 8, Reservoir To Pump
	52088 719AE	1				EN0			Includes Item 8, Reservoir To Pump

JEEP LIBERTY (KJ)

SERIES	LINE	BODY	ENGINE	TRANSMISSION
P = Limited	J = LHD (4WD)	74 = 4 Dr. (104.3 WB)	ED1, ED0 = 2.4L Power Tech	DDK = 5 Speed HDManual
H = Sport	U = RHD (4WD)		EKG, EK0 = 3.7L Power Tech	DDD = 5 Speed HD Manual
M = Renegade	T = LHD (2WD)		ENJ = 2.5L 4Cyl Turbo Diesel	DG4,DGQ = Multi-Speed Auto
			ENR = 2.8L 4Cyl Turbo Diesel	DG6 = 4 Speed Auto Transm
			EN0 = 4Cyl Turbo Diesel	DG0 = All Automatic Transm
				DBB = All Manual Transm

Hoses and Reservoir,LHD,2.4L [ED0] Gas,2.5L [EN0] Diesel Engines
Figure 019-710

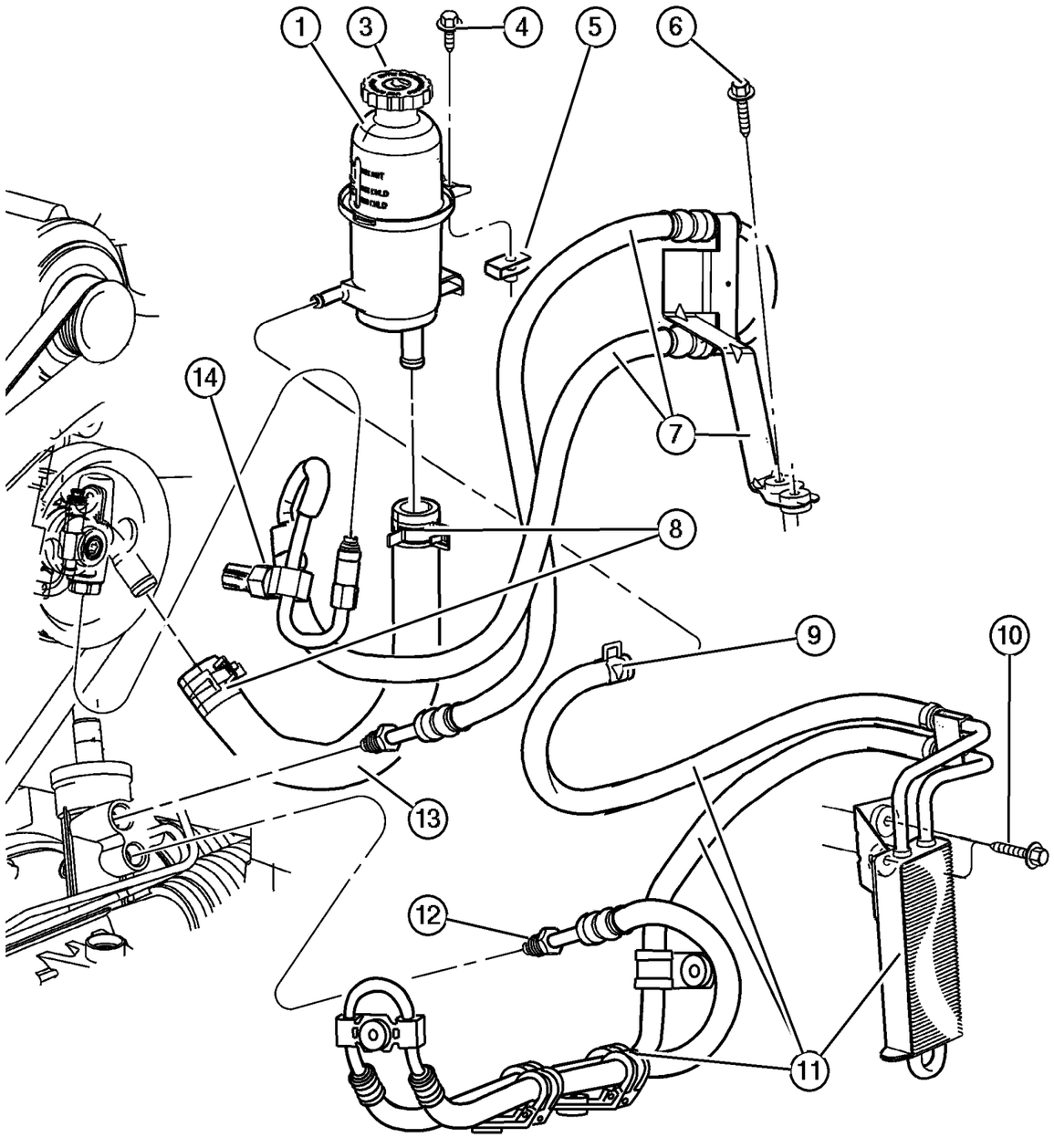

ITEM	PART NUMBER	QTY	LINE	SERIES	BODY	ENGINE	TRANS	TRIM	DESCRIPTION
14	4606 045	1	J, T			ED0			SWITCH, Power Steering

JEEP LIBERTY (KJ)

SERIES	LINE	BODY	ENGINE	TRANSMISSION
P = Limited	J = LHD (4WD)	74 = 4 Dr. (104.3 WB)	ED1, ED0 = 2.4L Power Tech	DDK = 5 Speed HDManual
H = Sport	U = RHD (4WD)		EKG, EK0 = 3.7L Power Tech	DDD = 5 Speed HD Manual
M = Renegade	T = LHD (2WD)		ENJ = 2.5L 4Cyl Turbo Diesel	DG4,DGQ = Multi-Speed Auto
			ENR = 2.8L 4Cyl Turbo Diesel	DG6 = 4 Speed Auto Transm
			EN0 = 4Cyl Turbo Diesel	DG0 = All Automatic Transm
				DBB = All Manual Transm

Hoses and Reservior,RHD,2.4L [ED0] Gas,2.5L [EN0] Diesel Engines
Figure 019-720

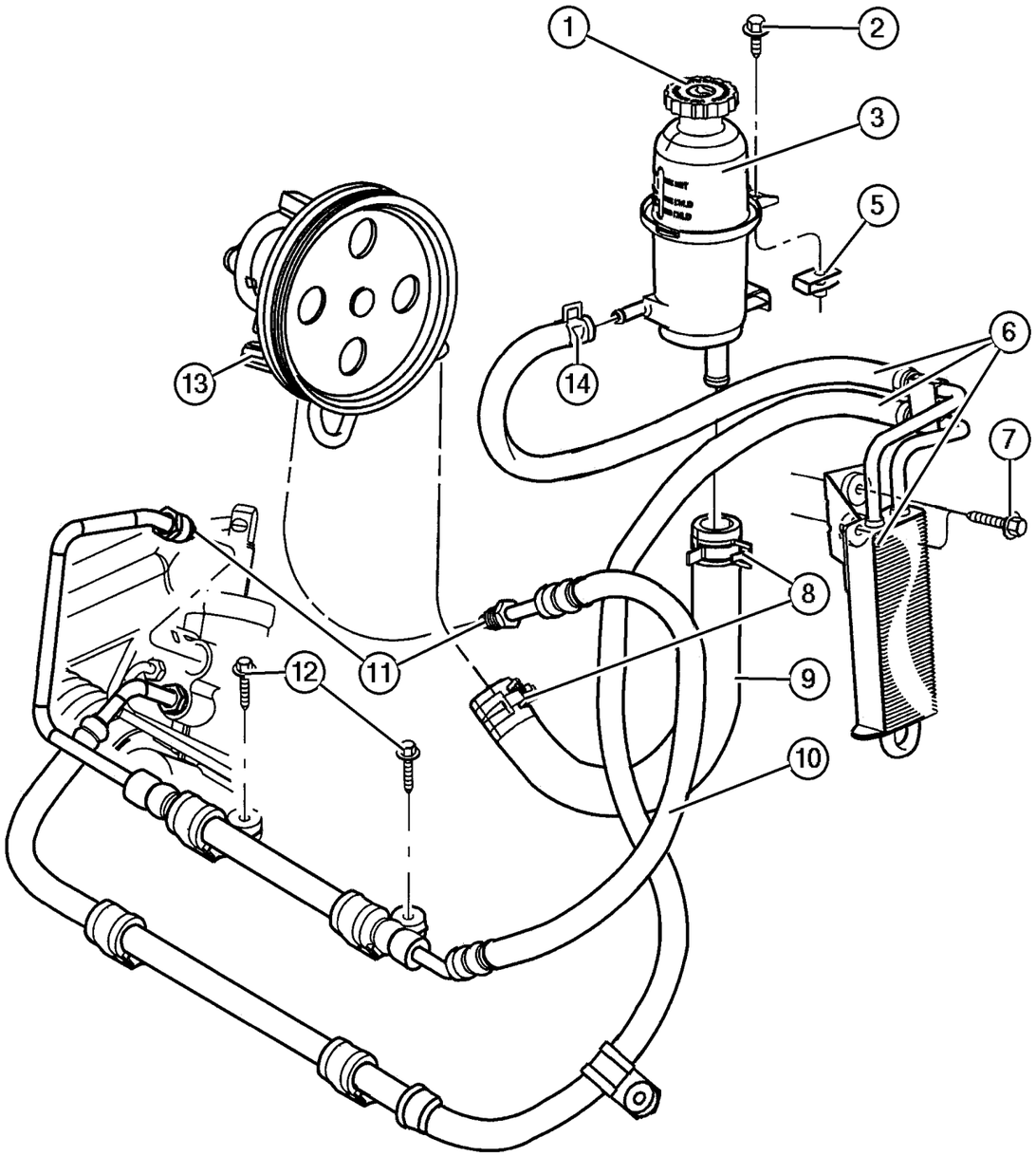

ITEM	PART NUMBER	QTY	LINE	SERIES	BODY	ENGINE	TRANS	TRIM	DESCRIPTION
Note: Sales Codes;									
[ED0]=Engines - All 2.2, 2.5, 2.4L 4 Cylinder Gas									
[EK0]=Engines - All 3.7L 6 Cylinder Gas									
[EN0]=Engines - All 4/5 Cylinder Turbo Diesel									
1									CAP, Power Steering Reservoir
	52128 513AA	1				ED0			
		1				EN0			
2	6102 132AA	1				ED0, EN0			SCREW, Hex Head, M6x1x20
3									RESERVOIR, Power Steering Pump
	52088 713AA	1				ED0			Includes Item 4
		1				EN0			Includes Item 4
-4	52088 874AD	1				EN0			BRACKET, Power Steering Reservoir
5	6101 712	2							NUT, U, M6x1
6									COOLER, Power Steering With Hose
	52088 927AE	1	U			ED0			Includes Items 1,12
	52088 928AE	1	U			EN0			Includes Items 1,12
7									SCREW, Hex Flange Head, M6x1. 00x35.00, (NOT SERVICED) (Not Serviced)
8									CLAMP, Hose, M28.9 x 1.60
	6502 018	1				EN0			
		2				ED0			
9									HOSE, Power Steering Reservoir
	52088 718AD	1				ED0			Includes Item 9
	52088 719AE	1				EN0			Includes Item 9
10									HOSE, Power Steering Pressure
	52088 716AE	1	U			EN0			Includes Items 12,14
	52088 724AE	1	U			ED0			Includes Items 12,14
11									O RING, Power Steering Hose
	5205 254	1	U			ED0			As Required
		1	U			EN0			As Required
12									SCREW, Hex Flange Head, M6x1. 00x35.00, (NOT SERVICED) (Not Serviced)
13									SWITCH, Power Steering
	#56044 169AA	1	U			EK0			
		1	U			ED0			
14									CLAMP, Hose, M18.5
	6504 217	1	U			ED0			
		1	U			EN0			

JEEP LIBERTY (KJ)

SERIES	LINE	BODY	ENGINE	TRANSMISSION
P = Limited	J = LHD (4WD)	74 = 4 Dr. (104.3 WB)	ED1, ED0 = 2.4L Power Tech	DDK = 5 Speed HDManual
H = Sport	U = RHD (4WD)		EKG, EK0 = 3.7L Power Tech	DDD = 5 Speed HD Manual
M = Renegade	T = LHD (2WD)		ENJ = 2.5L 4Cyl Turbo Diesel	DG4,DGQ = Multi-Speed Auto
			ENR = 2.8L 4Cyl Turbo Diesel	DG6 = 4 Speed Auto Transm
			EN0 = 4Cyl Turbo Diesel	DG0 = All Automatic Transm
				DBB = All Manual Transm

AR = Use as required - = Non illustrated part # = New this model year **June 3, 2003**

« RETURN TO GROUP INDEX

Hoses and Reservior,LHD,3.7L [EK0] Gas Engine
Figure 019-730

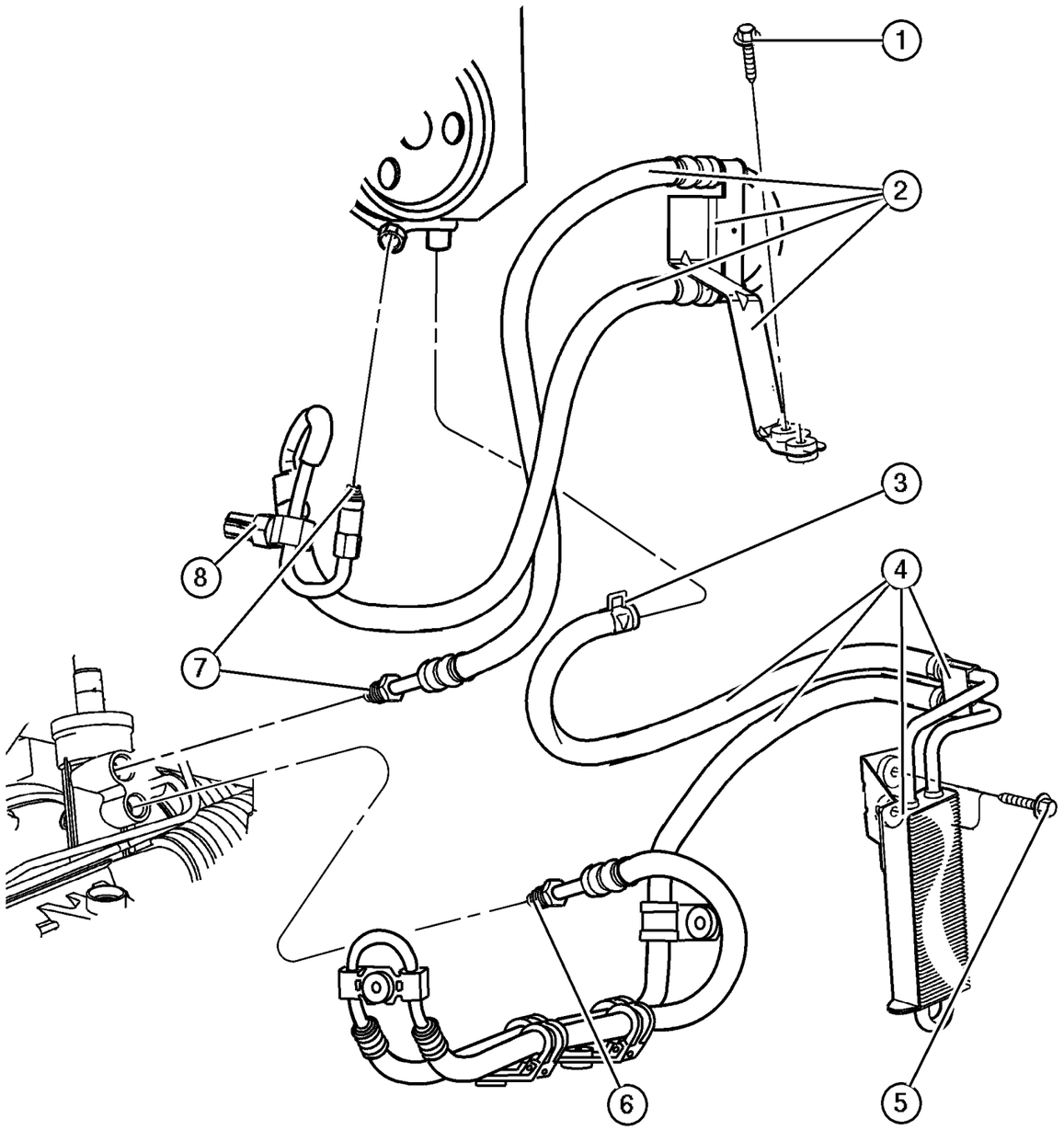

ITEM	PART NUMBER	QTY	LINE	SERIES	BODY	ENGINE	TRANS	TRIM	DESCRIPTION
Note:Sales Codes;									
[EK0]=Engines - All 3.7L 6 Cylinder Gas									
1									SCREW, Hex Flange Head, M6x1.
									00x35.00, (NOT SERVICED) (Not Serviced)
2	52088 714AF	1	J, T			EK0			HOSE, Power Steering Pressure
3									CLAMP, Hose, M18.5
	6504 217	1	J			EK0			
		1	T			EK0			
4									COOLER, Power Steering With Hose
	52128 561AB	1	J			EK0			
		1	T			EK0			
5									SCREW, Hex Flange Head, M6x1.
									00x35.00, (NOT SERVICED) (Not Serviced)
6									O RING, Power Steering Hose
	5205 254	1	J			EK0			
		1	T			EK0			
7									O RING, Power Steering Hose
	5205 254	1	J			EK0			
		1	T			EK0			
8	4606 045	1	J, T			EK0			SWITCH, Power Steering
-9	53013 506AA	1	J			EK0			GUARD, Splash, Oil
-10	6100 267	1	J			EK0			BOLT AND CONED WASHER, Hex
									Head, M6x25x12.5, Splash Guard
									to Left Front Axle, Mounting
-11									NUT AND WASHER, Hex, M8x1.25
	6100 050	1	J			EK0			Oil Splash Guard to Axle
		1	U			EK0			Oil Splash Guard to Axle

JEEP LIBERTY (KJ)

SERIES	LINE	BODY	ENGINE	TRANSMISSION
P = Limited	J = LHD (4WD)	74 = 4 Dr. (104.3 WB)	ED1, ED0 = 2.4L Power Tech	DDK = 5 Speed HDManual
H = Sport	U = RHD (4WD)		EKG, EK0 = 3.7L Power Tech	DDD = 5 Speed HD Manual
M = Renegade	T = LHD (2WD)		ENJ = 2.5L 4Cyl Turbo Diesel	DG4,DGQ = Multi-Speed Auto
			ENR = 2.8L 4Cyl Turbo Diesel	DG6 = 4 Speed Auto Transm
			EN0 = 4Cyl Turbo Diesel	DG0 = All Automatic Transm
				DBB = All Manual Transm

Hoses and Reservior,RHD,3.7L [EK0] Gas Engine
Figure 019-740

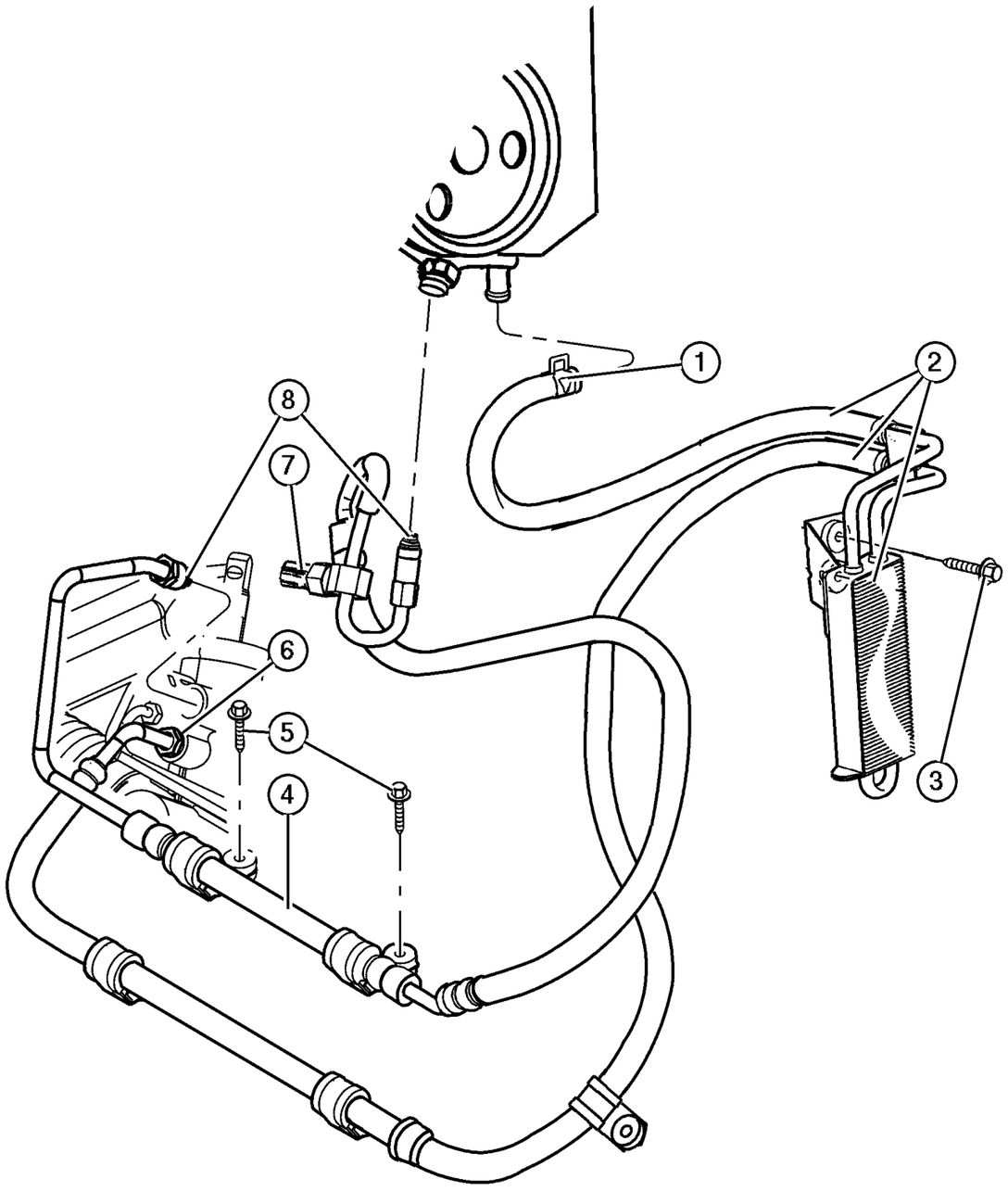

ITEM	PART NUMBER	QTY	LINE	SERIES	BODY	ENGINE	TRANS	TRIM	DESCRIPTION
Note:Sales Codes;									
[EKG]=Engine -3.7L Power Tech V6									
[EK0]=Engines - All 3.7L 6 Cylinder Gas									
1	6504 217	1	U			EK0			CLAMP, Hose, M18.5
2	52088 927AE	1	U			EK0			COOLER, Power Steering With Hose, Includes Items 1,6
3									SCREW, Hex Flange Head, M6x1.00x35.00, (NOT SERVICED) (Not Serviced)
4	52088 720AD	1	U			EK0			HOSE, Power Steering Pressure, Includes Items 7,8
5									SCREW, Hex Flange Head, M6x1.00x35.00, (NOT SERVICED) (Not Serviced)
6	5205 254	2	U			EK0			O RING, Power Steering Hose
7	4606 045	1	U			EK0			SWITCH, Power Steering
8	5205 254	2	U			EK0			O RING, Power Steering Hose
-9	53013 506AA	1	U			EK0			GUARD, Splash, Splash Guard to Left Front Axle, Oil
-10	6100 267	1	U			EK0			BOLT AND CONED WASHER, Hex Head, M6x25x12.5, Mounting
-11									NUT AND WASHER, Hex, M8x1.25
	6100 050	1	J			EK0			Oil Splash Guard to Axle
		1	U			EK0			Oil Splash Guard to Axle

JEEP LIBERTY (KJ)

SERIES	LINE	BODY	ENGINE	TRANSMISSION
P = Limited	J = LHD (4WD)	74 = 4 Dr. (104.3 WB)	ED1, ED0 = 2.4L Power Tech	DDK = 5 Speed HDManual
H = Sport	U = RHD (4WD)		EKG, EK0 = 3.7L Power Tech	DDD = 5 Speed HD Manual
M = Renegade	T = LHD (2WD)		ENJ = 2.5L 4Cyl Turbo Diesel	DG4,DGQ = Multi-Speed Auto
			ENR = 2.8L 4Cyl Turbo Diesel	DG6 = 4 Speed Auto Transm
			EN0 = 4Cyl Turbo Diesel	DG0 = All Automatic Transm
				DBB = All Manual Transm

AR = Use as required - = Non illustrated part # = New this model year **June 3, 2003**

« RETURN TO GROUP INDEX

Group – 42RLE

Automatic Transaxle 4 Speed

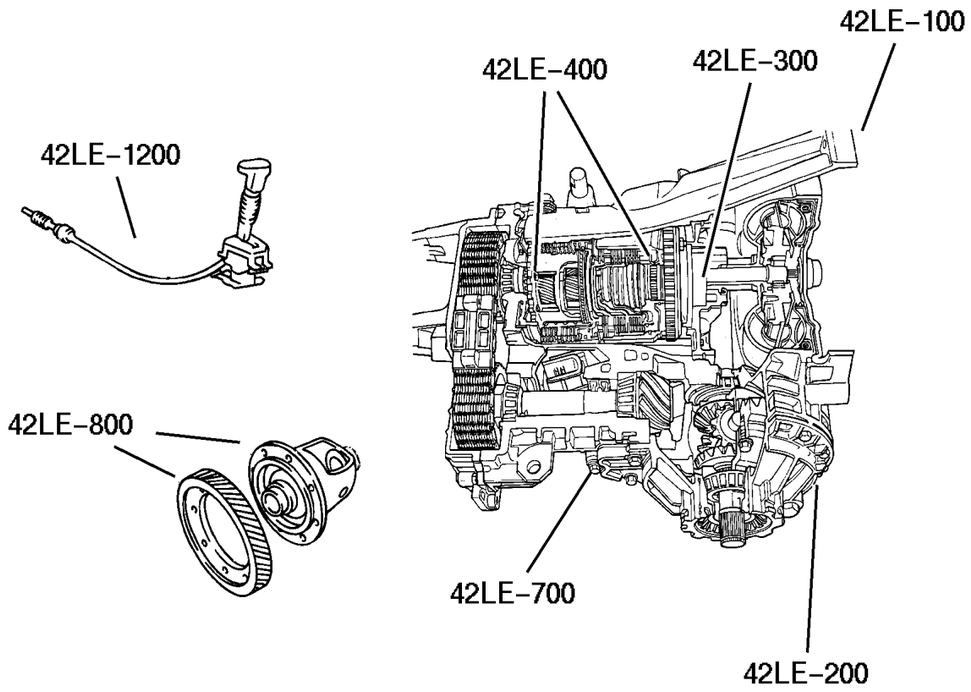

42RLE–100 Transaxle Assembly	42RLE–200 Case and Extension	42RLE–300 Oil Pump	42RLE–400 Gear Train
	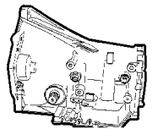		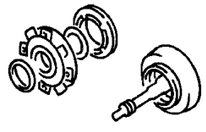
42RLE–700 Valve Body	**42RLE–1200** Gearshift Controls		
	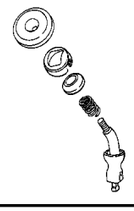		

GROUP 42RLE - Automatic Transaxle 4 Speed

Illustration Title	Group-Fig. No.
Transaxle Assembly	
Transaxle Assembly [DG6]	Fig. 42RLE-110
Mounting, Transmission [42RLE] [DG6] [EKG + DG6]	Fig. 42RLE-120
Collar, Structural [42RLE] [DG6] [EKG +	Fig. 42RLE-130
Case and Extension	
Transmission Case [42RLE] [DG6] [DG6]	Fig. 42RLE-210
Adapter & Extension Rear [42RLE] [DG6] [DG6]	Fig. 42RLE-220
Oil Pump	
Oil Pump & Reaction Shaft [42RLE] [DG6] [DG6	Fig. 42RLE-310
Gear Train	
Clutch, Input Shaft [42RLE] [DG6] [DG6]	Fig. 42RLE-410
Gear Train [42RLE] [DG6] [DG6]	Fig. 42RLE-420
Valve Body	
Valve Body [42RLE] [DG6] [DG6]	Fig. 42RLE-710
Accumulator Piston & Springs [42RLE] [DG6] [DG6]	Fig. 42RLE-720
Parking Sprag [42RLE] [DG6] [DG6]	Fig. 42RLE-730
Gearshift Controls	
Gearshift Controls [42RLE] [DG6] [DG6]	Fig. 42RLE-1210

Transaxle Assembly [DG6]
Figure 42RLE-110

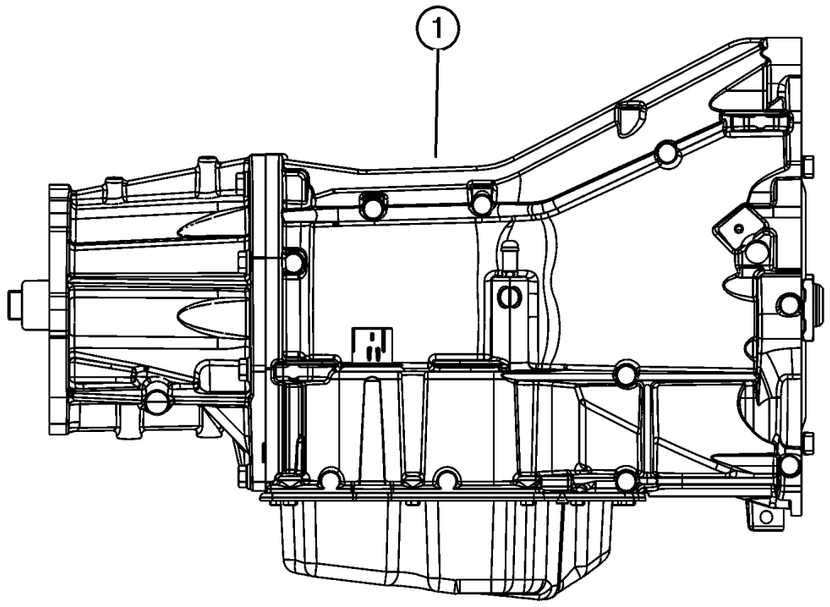

ITEM	PART NUMBER	QTY	LINE	SERIES	BODY	ENGINE	TRANS	TRIM	DESCRIPTION
NOTE:									
Sales Codes:									
[DG6]=4 Speed Automatic Transmission - 42RLE									
1									TRANSMISSION PACKAGE
	#5101 883AA	1	T				DG6		
	#5101 884AA	1	J, U				DG6		
-2									CONVERTER PACKAGE, Torque
	#5093 944AA	1	T				DG6		
		1	J, U				DG6		
-3									OVERHAUL PACKAGE, Transmission
	#5101 920AA	1	T				DG6		
		1	J, U				DG6		
	#5103 073AA	1	T				DG6		Use 10/21/02 and after
		1	J, U				DG6		Use 10/21/02 and after

JEEP LIBERTY (KJ)

SERIES	LINE	BODY	ENGINE	TRANSMISSION
P = Limited	J = LHD (4WD)	74 = 4 Dr. (104.3 WB)	ED1, ED0 = 2.4L Power Tech	DDK = 5 Speed HDManual
H = Sport	U = RHD (4WD)		EKG, EK0 = 3.7L Power Tech	DDD = 5 Speed HD Manual
M = Renegade	T = LHD (2WD)		ENJ = 2.5L 4Cyl Turbo Diesel	DG4,DGQ = Multi-Speed Auto
			ENR = 2.8L 4Cyl Turbo Diesel	DG6 = 4 Speed Auto Transm
			EN0 = 4Cyl Turbo Diesel	DG0 = All Automatic Transm
				DBB = All Manual Transm

Mounting, Transmission [42RLE] [DG6] [EKG + DG6]
Figure 42RLE-120

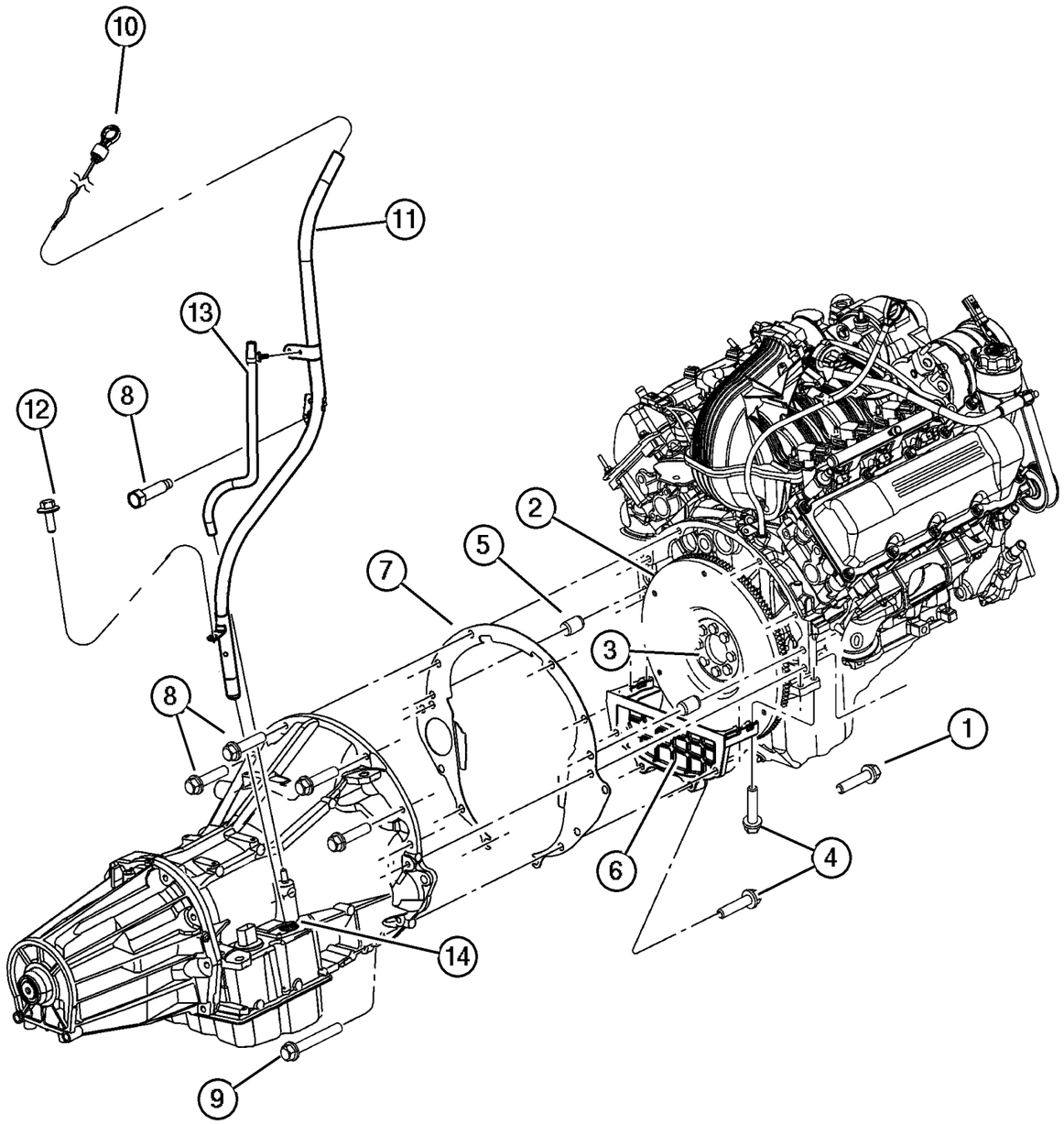

ITEM	PART NUMBER	QTY	LINE	SERIES	BODY	ENGINE	TRANS	TRIM	DESCRIPTION
NOTE:									
Sales Codes:									
[DG6]=4 Speed Automatic Transmission - 42RLE									
[DG0]=All Automatic Transmissions									
[EK0]=All 3.7L V-6 Engines									
1	6036 385AA	2				EK0	DG0		SCREW AND WASHER, Hex Head, .437-14x2.00
2	#4736 253AA	1				EK0	DG6		PLATE, Torque Converter Drive
3	6503 465	8				EK0	DG0		BOLT, Drive Plate and Flywheel
4	6101 985	8				EK0			SCREW AND WASHER, M10x1.50x45.00
5	1122 532	2				EK0			DOWEL, Block To Clutch Housing
6	53021 282AA	1				EK0			COVER, Engine
7	52104 344AA	1				EK0	DG0		COVER, Transmission Dust
8	6022 266	4				EK0	DG0		SCREW, Hex Head, .375-16x1.5
9	6101 985	8				EK0			SCREW AND WASHER, M10x1.50x45.00
10	#53013 592AA	1					DG6		INDICATOR, Transmission Fluid Level
11	#53013 591AB	1				EK0	DG6		TUBE, Transmission Oil Filler
12	6501 979	1							SCREW AND WASHER, Hex Head, M6x1x17
13	#53013 593AA	1					DG6		TUBE, Vent
14									GROMMET
	4810 021	1	T				DG6		
		1	J, U				DG6		
-15									SEAL, Torque Converter Hub
	5222 629	1	T				DG6		
		1	J, U				DG6		

JEEP LIBERTY (KJ)

SERIES	LINE	BODY	ENGINE	TRANSMISSION
P = Limited	J = LHD (4WD)	74 = 4 Dr. (104.3 WB)	ED1, ED0 = 2.4L Power Tech	DDK = 5 Speed HDManual
H = Sport	U = RHD (4WD)		EKG, EK0 = 3.7L Power Tech	DDD = 5 Speed HD Manual
M = Renegade	T = LHD (2WD)		ENJ = 2.5L 4Cyl Turbo Diesel	DG4,DGQ = Multi-Speed Auto
			ENR = 2.8L 4Cyl Turbo Diesel	DG6 = 4 Speed Auto Transm
			EN0 = 4Cyl Turbo Diesel	DG0 = All Automatic Transm
				DBB = All Manual Transm

AR = Use as required - = Non illustrated part # = New this model year **June 3, 2003**

« RETURN TO GROUP INDEX

Collar, Structural [42RLE] [DG6] [EKG +
Figure 42RLE-130

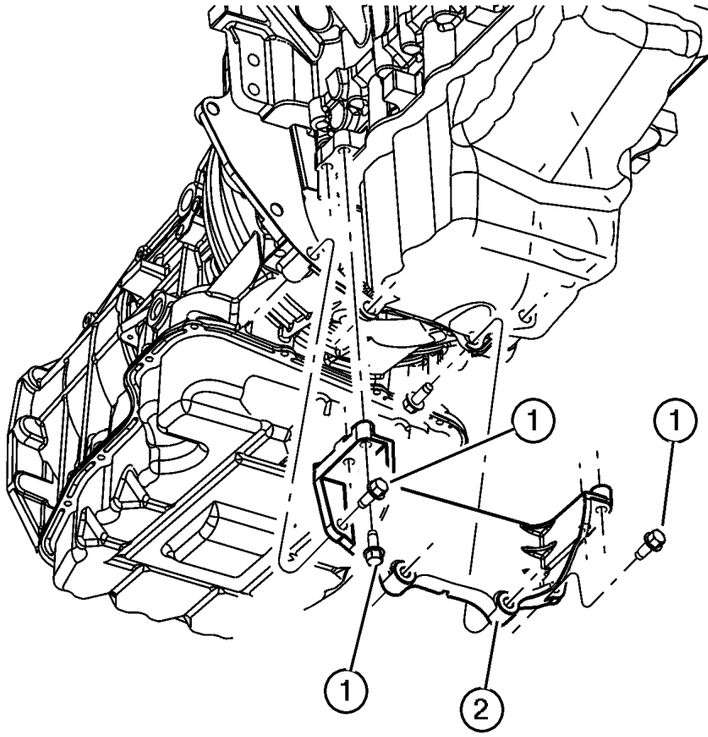

ITEM	PART NUMBER	QTY	LINE	SERIES	BODY	ENGINE	TRANS	TRIM	DESCRIPTION
NOTE:									
Sales Codes:									
[EK0]=All 3.7L V-6 Engines									
1	6101 985	8				EK0			SCREW AND WASHER, M10x1.50x45.00
2	53021 282AA	1				EK0			COVER, Engine, Structural Collar & Cover

JEEP LIBERTY (KJ)

SERIES	LINE	BODY	ENGINE	TRANSMISSION
P = Limited	J = LHD (4WD)	74 = 4 Dr. (104.3 WB)	ED1, ED0 = 2.4L Power Tech	DDK = 5 Speed HDManual
H = Sport	U = RHD (4WD)		EKG, EK0 = 3.7L Power Tech	DDD = 5 Speed HD Manual
M = Renegade	T = LHD (2WD)		ENJ = 2.5L 4Cyl Turbo Diesel	DG4,DGQ = Multi-Speed Auto
			ENR = 2.8L 4Cyl Turbo Diesel	DG6 = 4 Speed Auto Transm
			EN0 = 4Cyl Turbo Diesel	DG0 = All Automatic Transm
				DBB = All Manual Transm

Transmission Case [42RLE] [DG6] [DG6]
Figure 42RLE-210

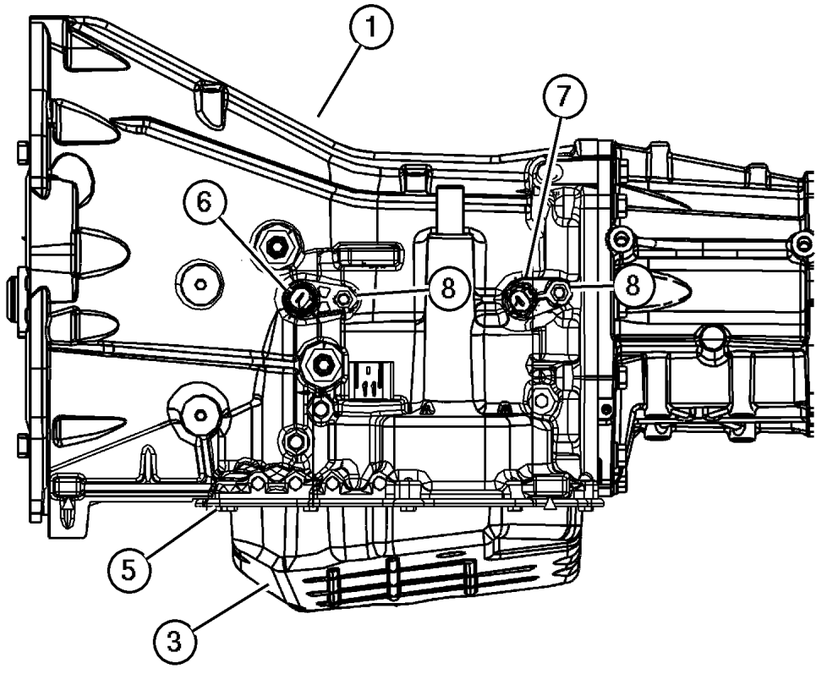

ITEM	PART NUMBER	QTY	LINE	SERIES	BODY	ENGINE	TRANS	TRIM	DESCRIPTION
NOTE:									
Sales Codes:									
[DG6]=4 Speed Automatic Transmission - 42RLE									
[ED0]=All 2.4L 4 Cyl. Engines									
[ER0]=All 4.0L Inline 6 Engines									
1									CASE, Transmission
	#5101 881AA	1	T				DG6		
		1	J, U				DG6		
-2									PLUG, Transaxle Case
	4567 312	1	T				DG6		
		1	J, U				DG6		
3									PAN, Transmission Oil
	#52852 912AA	5	T				DG6		
		5	J, U				DG6		
-4									MAGNET, Transmission
	3681 601	5	T				DG6		
		5	J, U				DG6		
5									BOLT, Hex Head, M8x1.25x16
	6501 474	15	T				DG6		
		15	J, U				DG6		
6									SENSOR, Transmission Input Speed
	#4799 061AB	1	T				DG6		
		1	J, U				DG6		
7									SENSOR, Transmission Output Speed
	#52854 001AA	1	T				DG6		
		1	J, U				DG6		
8									BOLT, M6x1.00x20
	6101 331	2	T				DG6		
		2	J, U				DG6		
-9									VALVE, Cooler Bypass
	4659 946AB	1	T				DG6		
		1	J, U				DG6		
-10									BUSHING, Dowel
	4531 412	1	T				DG6		
		1	J, U				DG6		

JEEP LIBERTY (KJ)

SERIES	LINE	BODY	ENGINE	TRANSMISSION
P = Limited	J = LHD (4WD)	74 = 4 Dr. (104.3 WB)	ED1, ED0 = 2.4L Power Tech	DDK = 5 Speed HDManual
H = Sport	U = RHD (4WD)		EKG, EK0 = 3.7L Power Tech	DDD = 5 Speed HD Manual
M = Renegade	T = LHD (2WD)		ENJ = 2.5L 4Cyl Turbo Diesel	DG4,DGQ = Multi-Speed Auto
			ENR = 2.8L 4Cyl Turbo Diesel	DG6 = 4 Speed Auto Transm
			EN0 = 4Cyl Turbo Diesel	DG0 = All Automatic Transm
				DBB = All Manual Transm

AR = Use as required - = Non illustrated part # = New this model year **June 3, 2003**

« RETURN TO GROUP INDEX

Adapter & Extension Rear [42RLE] [DG6] [DG6]
Figure 42RLE-220

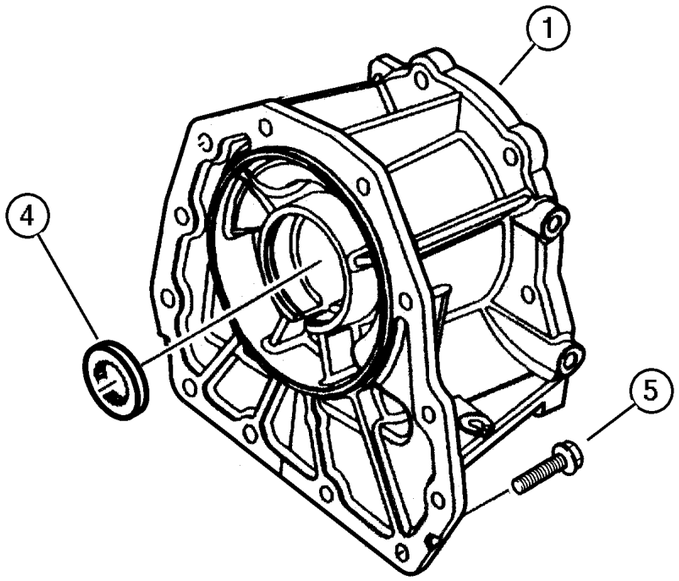

ITEM	PART NUMBER	QTY	LINE	SERIES	BODY	ENGINE	TRANS	TRIM	DESCRIPTION
NOTE:									
Sales Codes:									
[DG6]=4 Speed Automatic Transmission - 42RLE									
1	#52852 986AB	1	J, U				DG6		ADAPTER, Transfer Case
-2									TUBE
	#52854 166AA	1	T				DG6		
	#52854 177AA	1	J, U				DG6		
-3									SEAL, Transmission
	#52852 998AA	1	T				DG6		
		1	J, U				DG6		
4	4269 956AB	1	J, U				DG6		SEAL, Adapter
5									SCREW AND WASHER, Hex Head, M10x1.5x37
	6504 774	7	T				DG6		
		7	J, U				DG6		
-6									HOUSING, Transmission Rear Extension
	#52852 987AA	1	T				DG6		
	#52852 987AB	1	T				DG6		Use 1/13/03 and after
-7	4531 216AB	1	T				DG6		SEAL, Output Shaft

JEEP LIBERTY (KJ)

SERIES	LINE	BODY	ENGINE	TRANSMISSION
P = Limited	J = LHD (4WD)	74 = 4 Dr. (104.3 WB)	ED1, ED0 = 2.4L Power Tech	DDK = 5 Speed HDManual
H = Sport	U = RHD (4WD)		EKG, EK0 = 3.7L Power Tech	DDD = 5 Speed HD Manual
M = Renegade	T = LHD (2WD)		ENJ = 2.5L 4Cyl Turbo Diesel	DG4,DGQ = Multi-Speed Auto
			ENR = 2.8L 4Cyl Turbo Diesel	DG6 = 4 Speed Auto Transm
			EN0 = 4Cyl Turbo Diesel	DG0 = All Automatic Transm
				DBB = All Manual Transm

AR = Use as required - = Non illustrated part # = New this model year **June 3, 2003**

« RETURN TO GROUP INDEX

Oil Pump & Reaction Shaft [42RLE] [DG6] [DG6
Figure 42RLE-310

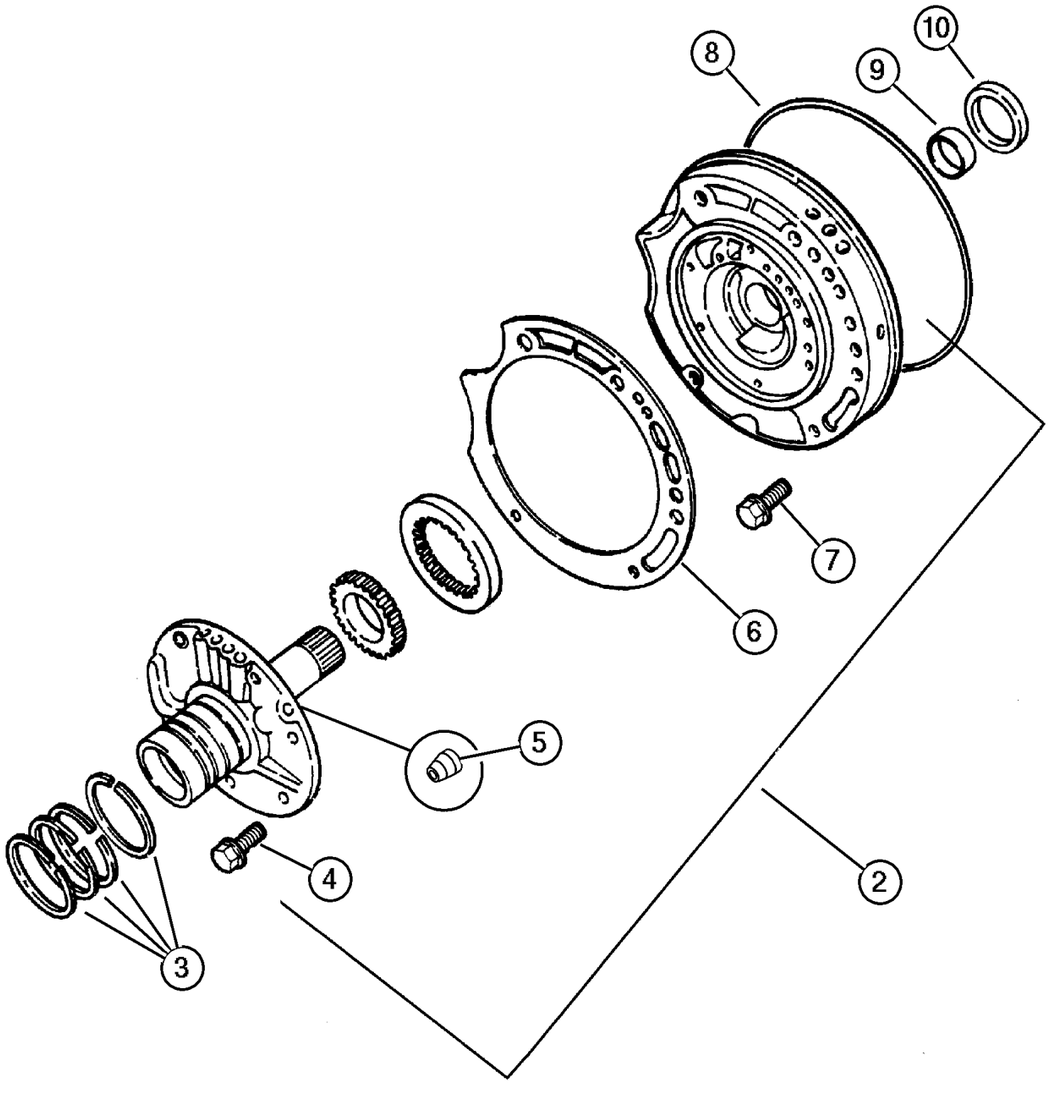

ITEM	PART NUMBER	QTY	LINE	SERIES	BODY	ENGINE	TRANS	TRIM	DESCRIPTION
NOTE:									
Sales Codes:									
[DG6]=4 Speed Automatic Transmission - 42RLE									
-1									SEAL AND GASKET PACKAGE, Transmission Oil Pump
	4883 260	1	T				DG6		
		1	J, U				DG6		
2									PUMP, Transmission Oil
	#5101 872AA	1	T				DG6		
		1	J, U				DG6		
3									SEAL, Ring Reaction Support, 2 1/16 O.D.
	4471 874	4	T				DG6		
		4	J, U				DG6		
4									BOLT, Hex Head, M8x1.25x19
	6500 211	6	T				DG6		
		6	J, U				DG6		
5									BALL, Transmission Oil Pump
	0152 127	6	T				DG6		
		6	J, U				DG6		
6									GASKET, Transmission Oil Pump
	4412 844	1	T				DG6		
		1	J, U				DG6		
7									SCREW AND WASHER, Hex Flange Head, M8x1.25x25
	6506 408AA	5	T				DG6		
		5	J, U				DG6		
8									SEAL, Oil Pump
	4659 945	1	T				DG6		
		1	J, U				DG6		
9									BUSHING, Front Pump
	4659 515	1	T				DG6		
		1	J, U				DG6		
10									SEAL, Impeller Hub, 57.25mm OD
	4412 475	1	T				DG6		
		1	J, U				DG6		
-11									GASKET, Transmission Oil Pump
	4659 126	1	T				DG6		
		1	J, U				DG6		
-12									BALL, Check
	0147 482	2	T				DG6		Transmission Reaction Shaft

JEEP LIBERTY (KJ)

SERIES	LINE	BODY	ENGINE	TRANSMISSION
P = Limited	J = LHD (4WD)	74 = 4 Dr. (104.3 WB)	ED1, ED0 = 2.4L Power Tech	DDK = 5 Speed HDManual
H = Sport	U = RHD (4WD)		EKG, EK0 = 3.7L Power Tech	DDD = 5 Speed HD Manual
M = Renegade	T = LHD (2WD)		ENJ = 2.5L 4Cyl Turbo Diesel	DG4,DGQ = Multi-Speed Auto
			ENR = 2.8L 4Cyl Turbo Diesel	DG6 = 4 Speed Auto Transm
			EN0 = 4Cyl Turbo Diesel	DG0 = All Automatic Transm
				DBB = All Manual Transm

AR = Use as required - = Non illustrated part # = New this model year **June 3, 2003**

« RETURN TO GROUP INDEX »

Oil Pump & Reaction Shaft [42RLE] [DG6] [DG6
Figure 42RLE-310

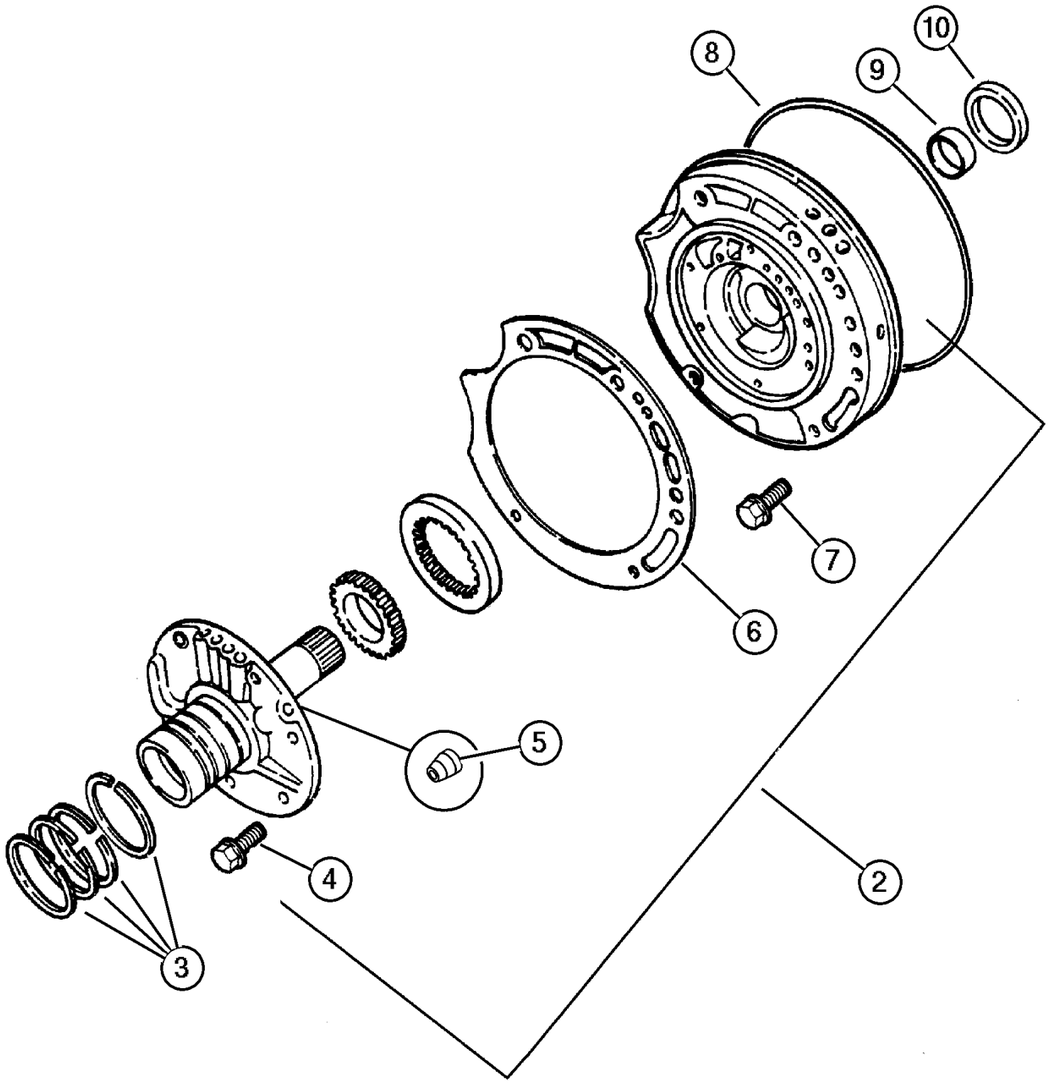

ITEM	PART NUMBER	QTY	LINE	SERIES	BODY	ENGINE	TRANS	TRIM	DESCRIPTION
		2	J, U				DG6		Transmission Reaction Shaft
	4446 616	2	T				DG6		Support
		2	J, U				DG6		Support

JEEP LIBERTY (KJ)

SERIES	LINE	BODY	ENGINE	TRANSMISSION
P = Limited	J = LHD (4WD)	74 = 4 Dr. (104.3 WB)	ED1, ED0 = 2.4L Power Tech	DDK = 5 Speed HDManual
H = Sport	U = RHD (4WD)		EKG, EK0 = 3.7L Power Tech	DDD = 5 Speed HD Manual
M = Renegade	T = LHD (2WD)		ENJ = 2.5L 4Cyl Turbo Diesel	DG4,DGQ = Multi-Speed Auto
			ENR = 2.8L 4Cyl Turbo Diesel	DG6 = 4 Speed Auto Transm
			EN0 = 4Cyl Turbo Diesel	DG0 = All Automatic Transm
				DBB = All Manual Transm

AR = Use as required - = Non illustrated part # = New this model year

June 3, 2003

« RETURN TO GROUP INDEX

Clutch, Input Shaft [42RLE] [DG6] [DG6]
Figure 42RLE-410

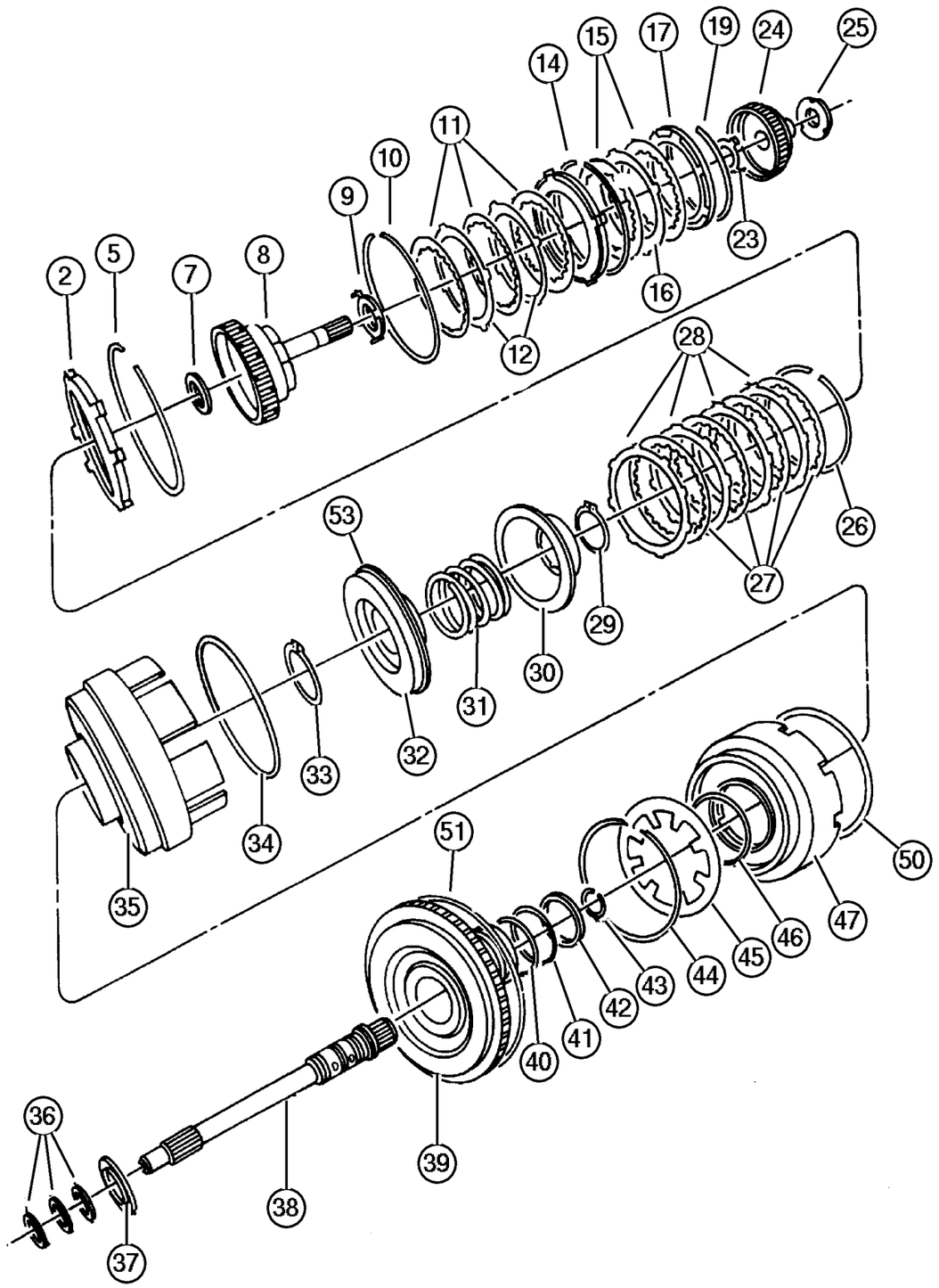

ITEM	PART NUMBER	QTY	LINE	SERIES	BODY	ENGINE	TRANS	TRIM	DESCRIPTION
NOTE:									
Sales Codes:									
[DG6]=4 Speed Automatic Transmission - 42RLE									
-1									SEAL AND GASKET PACKAGE, Transmission Front Clutch
	4883 240AB	1	T				DG6		
		1	J, U				DG6		
2									PLATE PACKAGE, Underdrive Reaction, 5.72/5.82
	4883 013AB	1	T				DG6		
		1	J, U				DG6		
-3									PLATE PACKAGE, Underdrive Reaction, 6.21/6.31
	4883 014AB	1	T				DG6		
		1	J, U				DG6		
-4									PLATE PACKAGE, Underdrive Reaction, 6.70/6.80
	4883 015AB	1	T				DG6		
		1	J, U				DG6		
5									SNAP RING, Underdrive Clutch, Tapered
	4659 934	1	T				DG6		
		1	J, U				DG6		
-6									SNAP RING, Underdrive Clutch, Flat
	4659 980	1	T				DG6		
		1	J, U				DG6		
7									THRUST BEARING
	4567 262	1	T				DG6		
		1	J, U				DG6		
8									HUB AND SHAFT PACKAGE, Underdrive Clutch
	4864 936AC	1	T				DG6		
		1	J, U				DG6		
9									PLATE AND WASHER PACKAGE, Thrust
	5018 923AA	1	T				DG6		
		1	J, U				DG6		
10									SNAP RING
	4505 621	1	T				DG6		
		1	J, U				DG6		
11									DISC, Clutch

JEEP LIBERTY (KJ)

SERIES	LINE	BODY	ENGINE	TRANSMISSION
P = Limited	J = LHD (4WD)	74 = 4 Dr. (104.3 WB)	ED1, ED0 = 2.4L Power Tech	DDK = 5 Speed HDManual
H = Sport	U = RHD (4WD)		EKG, EK0 = 3.7L Power Tech	DDD = 5 Speed HD Manual
M = Renegade	T = LHD (2WD)		ENJ = 2.5L 4Cyl Turbo Diesel	DG4,DGQ = Multi-Speed Auto
			ENR = 2.8L 4Cyl Turbo Diesel	DG6 = 4 Speed Auto Transm
			EN0 = 4Cyl Turbo Diesel	DG0 = All Automatic Transm
				DBB = All Manual Transm

AR = Use as required - = Non illustrated part # = New this model year **June 3, 2003**

« RETURN TO GROUP INDEX »

Clutch, Input Shaft [42RLE] [DG6] [DG6]
Figure 42RLE-410

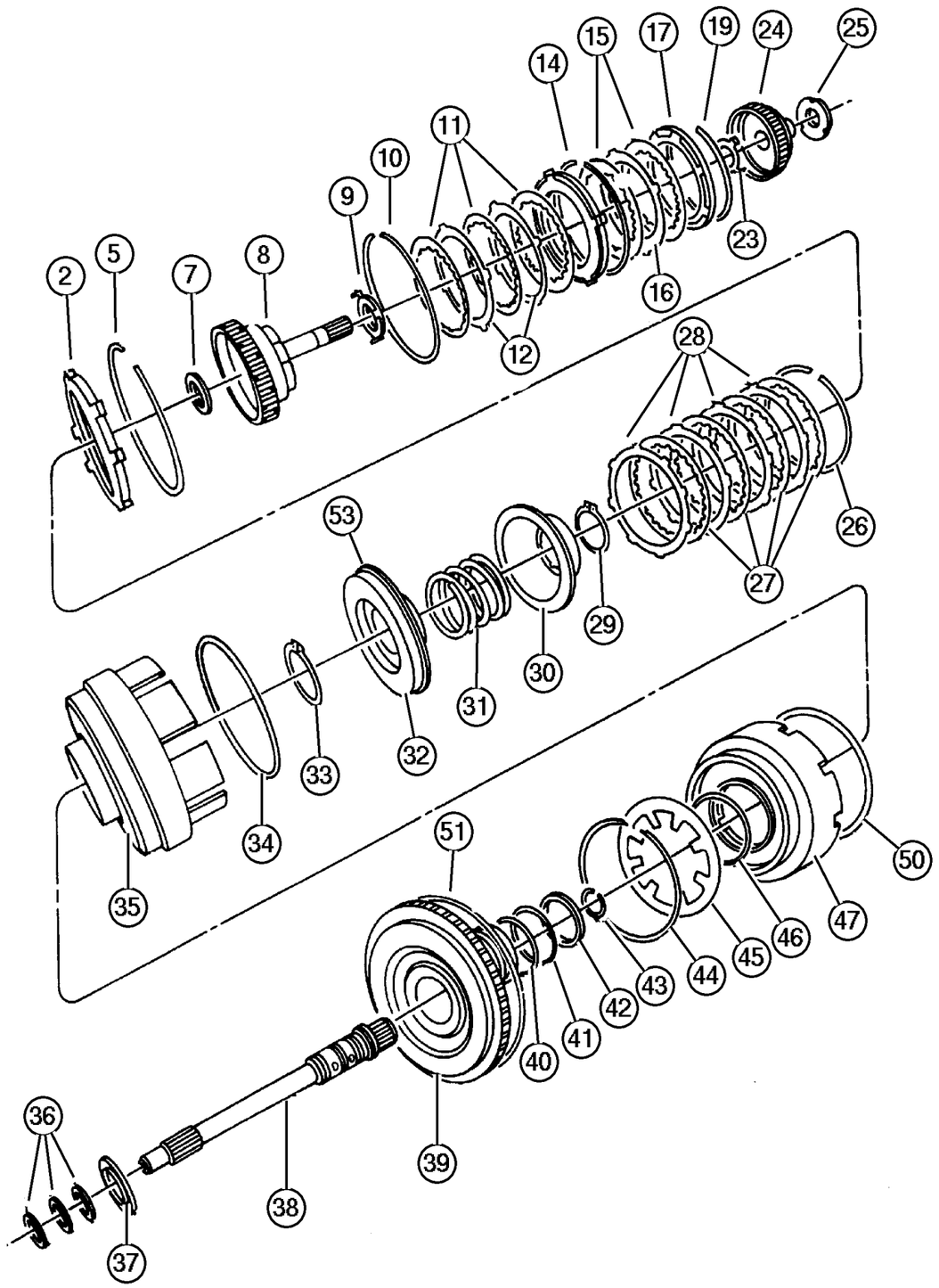

ITEM	PART NUMBER	QTY	LINE	SERIES	BODY	ENGINE	TRANS	TRIM	DESCRIPTION
	4531 678	4	J, U				DG6		
		4	T				DG6		
12									PLATE, Transmission O/Drive Clutch
	4659 053	3	T				DG6		
		3	J, U				DG6		
-13									HUB PACKAGE, Input Clutch
	5017 518AB	1	T				DG6		
		1	J, U				DG6		
14									SNAP RING
	4505 622	1	T				DG6		
		1	J, U				DG6		
15									DISC, Clutch
	4531 678	4	T				DG6		
		4	J, U				DG6		
16									PLATE, Transmission O/Drive Clutch
	4659 053	3	T				DG6		
		3	J, U				DG6		
17									PLATE, Transmission Clutch Reaction
	4377 194	1	T				DG6		
		1	J, U				DG6		
-18									PLATE, Transmission O/Drive Clutch
	4531 556AC	1	T				DG6		
		1	J, U				DG6		
19									SNAP RING
	4377 195	1	T				DG6		
		1	J, U				DG6		
-20									SNAP RING, Reverse Clutch, 1.77-1.83mm
	4412 871	1	T				DG6		
		1	J, U				DG6		
-21									SNAP RING, Reverse Clutch, 2.02-2.07mm
	4412 872	1	T				DG6		
		1	J, U				DG6		
-22									SNAP RING, Reverse Clutch, 2.27-2.32mm
	4412 873	1	T				DG6		
		1	J, U				DG6		
23									PLATE AND WASHER PACKAGE, Thrust

JEEP LIBERTY (KJ)

SERIES	LINE	BODY	ENGINE	TRANSMISSION
P = Limited	J = LHD (4WD)	74 = 4 Dr. (104.3 WB)	ED1, ED0 = 2.4L Power Tech	DDK = 5 Speed HDManual
H = Sport	U = RHD (4WD)		EKG, EK0 = 3.7L Power Tech	DDD = 5 Speed HD Manual
M = Renegade	T = LHD (2WD)		ENJ = 2.5L 4Cyl Turbo Diesel	DG4,DGQ = Multi-Speed Auto
			ENR = 2.8L 4Cyl Turbo Diesel	DG6 = 4 Speed Auto Transm
			EN0 = 4Cyl Turbo Diesel	DG0 = All Automatic Transm
				DBB = All Manual Transm

AR = Use as required - = Non illustrated part # = New this model year

June 3, 2003

« RETURN TO GROUP INDEX

Clutch, Input Shaft [42RLE] [DG6] [DG6]
Figure 42RLE-410

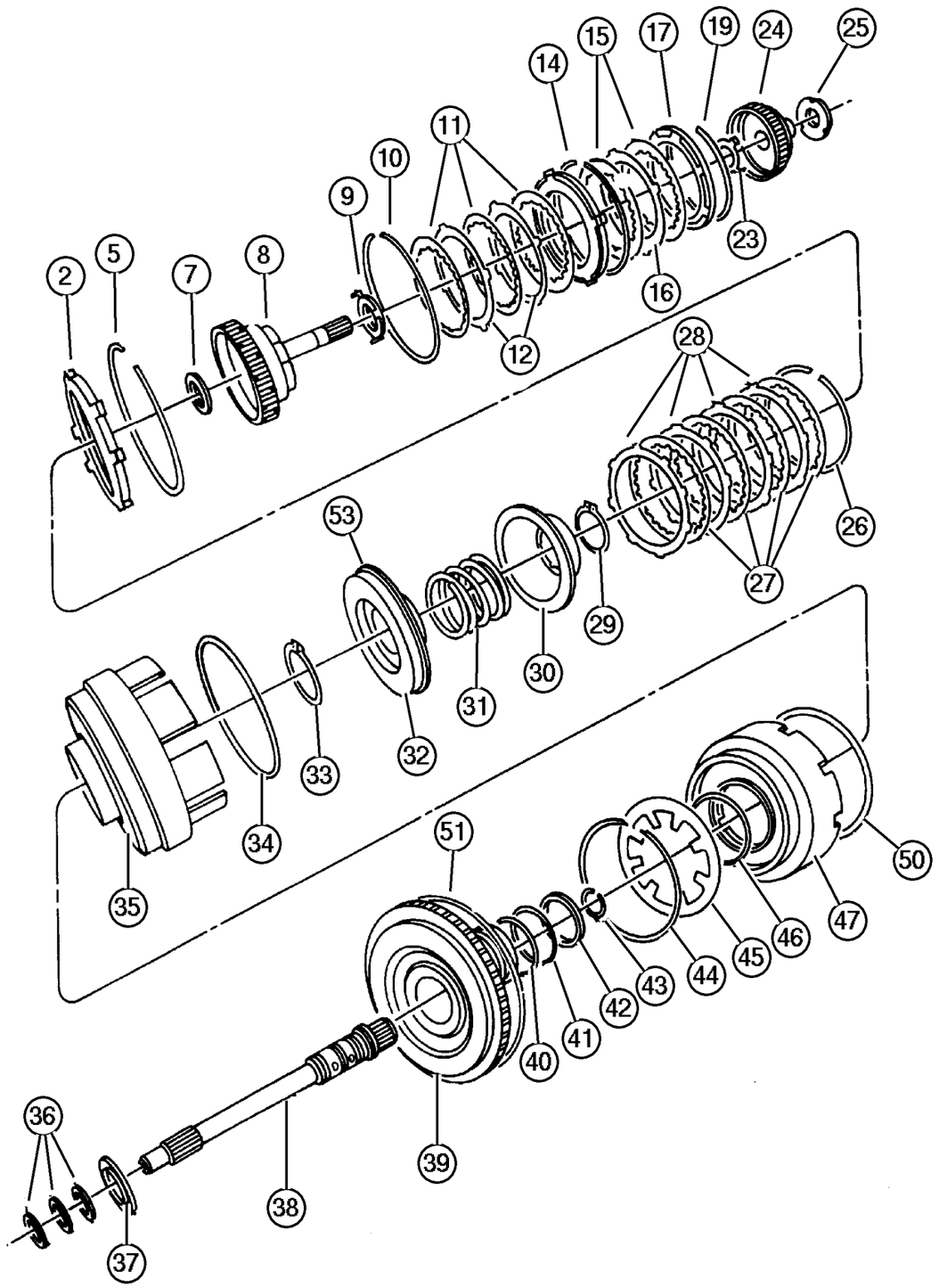

ITEM	PART NUMBER	QTY	LINE	SERIES	BODY	ENGINE	TRANS	TRIM	DESCRIPTION
	5018 923AA	1	T				DG6		
		1	J, U				DG6		
24									HUB AND SHAFT, Overdrive Clutch
	4659 993	1	T				DG6		
		1	J, U				DG6		
25									PLATE, Transmission O/Drive Clutch
	3836 237AB	AR	T				DG6		[1.70 - 1.77MM]
	3836 241AB	AR	J, U				DG6		[2.58 - 2.65MM]
	4431 665AB	AR	T				DG6		[1.55 - 1.66MM]
		AR	J, U				DG6		[1.55 - 1.66MM]
	4431 666AB	AR	T				DG6		[1.81 - 1.88MM]
		AR	J, U				DG6		[1.81 - 1.88MM]
	4431 667AB	AR	T				DG6		[2.03 - 2.10MM]
		AR	J, U				DG6		[2.03 - 2.10MM]
	4431 668AB	AR	T				DG6		[2.25 - 2.32MM]
		AR	J, U				DG6		[2.25 - 2.32MM]
	4431 669AB	AR	T				DG6		[2.47 - 2.54MM]
	3836 237AB	AR	J, U				DG6		[1.70 - 1.77MM]
	4431 669AB	AR	J, U				DG6		[2.47 - 2.54MM]
	4446 670AB	AR	T				DG6		[2.69 - 2.76MM]
		AR	J, U				DG6		[2.69 - 2.76MM]
	4446 671AB	AR	T				DG6		2.91 - 2.98MM]
		AR	J, U				DG6		2.91 - 2.98MM]
	3836 238AB	AR	T				DG6		[1.92 - 1.99MM]
		AR	J, U				DG6		[1.92 - 1.99MM]
	3836 239AB	AR	T				DG6		[2.14 - 2.21MM]
		AR	J, U				DG6		[2.14 - 2.21MM]
	3836 240AB	AR	T				DG6		[2.36 - 2.43MM]
		AR	J, U				DG6		[2.36 - 2.43MM]
	3836 241AB	AR	T				DG6		[2.58 - 2.65MM]
26									SNAP RING, Underdrive Clutch, Flat
	4659 980	1	T				DG6		[1.53 - 1.58MM]
		1	J, U				DG6		[1.53 - 1.58MM]
27									DISC, Clutch
	4531 678	4	T				DG6		
		4	J, U				DG6		
28									PLATE, Transmission O/Drive Clutch
	4659 053	4	T				DG6		
		4	J, U				DG6		
29									SNAP RING
	6501 715	1	T				DG6		

JEEP LIBERTY (KJ)

SERIES	LINE	BODY	ENGINE	TRANSMISSION
P = Limited	J = LHD (4WD)	74 = 4 Dr. (104.3 WB)	ED1, ED0 = 2.4L Power Tech	DDK = 5 Speed HDManual
H = Sport	U = RHD (4WD)		EKG, EK0 = 3.7L Power Tech	DDD = 5 Speed HD Manual
M = Renegade	T = LHD (2WD)		ENJ = 2.5L 4Cyl Turbo Diesel	DG4,DGQ = Multi-Speed Auto
			ENR = 2.8L 4Cyl Turbo Diesel	DG6 = 4 Speed Auto Transm
			EN0 = 4Cyl Turbo Diesel	DG0 = All Automatic Transm
				DBB = All Manual Transm

AR = Use as required - = Non illustrated part # = New this model year

June 3, 2003

« RETURN TO GROUP INDEX

« »

Clutch, Input Shaft [42RLE] [DG6] [DG6]
Figure 42RLE-410

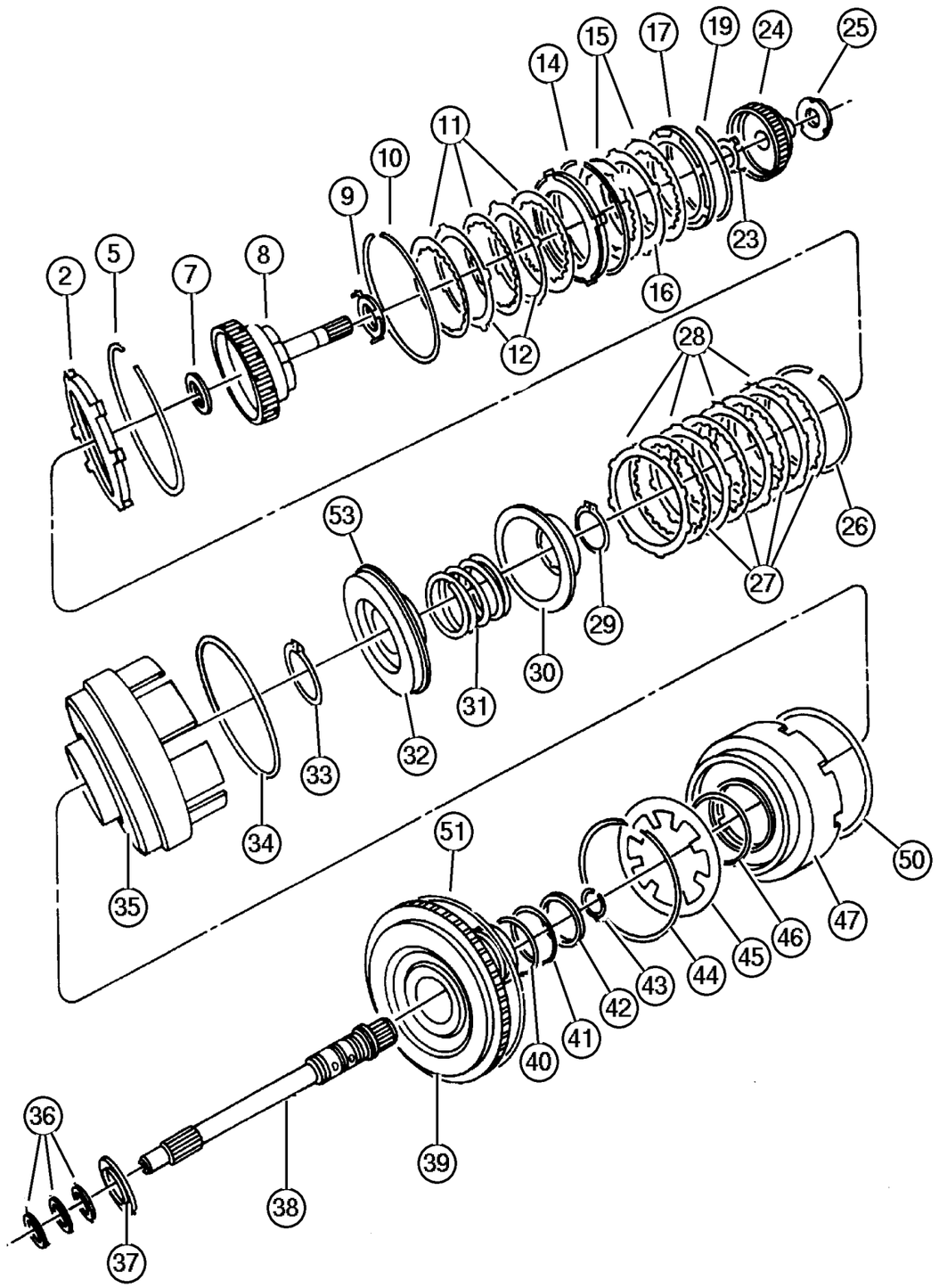

ITEM	PART NUMBER	QTY	LINE	SERIES	BODY	ENGINE	TRANS	TRIM	DESCRIPTION
		1	J, U				DG6		
30									RETAINER AND SEAL, Transmission U/Drive Spring
	4431 612	1	T				DG6		
		1	J, U				DG6		
31									SPRING, Drive Lower Case
	4377 177	1	T				DG6		
		1	J, U				DG6		
32									OVERHAUL PACKAGE, Transmission
	#5101 920AA	1	T				DG6		Includes Underdrive Piston & Seals
		1	J, U				DG6		Includes Underdrive Piston & Seals
33									SNAP RING
	6507 226AA	1	T				DG6		
		1	J, U				DG6		
34									SEAL, Piston Outer, 140mm OD
	4659 871	1	T				DG6		
		1	J, U				DG6		
35									RETAINER, Transmission Input Clutch
	4659 935	1	T				DG6		
		1	J, U				DG6		
36									SEAL, Input Shaft
	4446 543	3	T				DG6		
		3	J, U				DG6		
37									THRUST BEARING
	4412 209	1	T				DG6		
		1	J, U				DG6		
38									INPUT SHAFT PACKAGE, Transaxle
	4626 452AB	1	T				DG6		
		1	J, U				DG6		
39									HUB, Input Clutch, Serviced in Assembly, (NOT SERVICED) (Not Serviced)
40									O RING, Transmission Clutch
	6502 271	1	T				DG6		
		1	J, U				DG6		
41									O RING, Transmission Clutch
	6502 269	1	T				DG6		

JEEP LIBERTY (KJ)

SERIES	LINE	BODY	ENGINE	TRANSMISSION
P = Limited	J = LHD (4WD)	74 = 4 Dr. (104.3 WB)	ED1, ED0 = 2.4L Power Tech	DDK = 5 Speed HDManual
H = Sport	U = RHD (4WD)		EKG, EK0 = 3.7L Power Tech	DDD = 5 Speed HD Manual
M = Renegade	T = LHD (2WD)		ENJ = 2.5L 4Cyl Turbo Diesel	DG4,DGQ = Multi-Speed Auto
			ENR = 2.8L 4Cyl Turbo Diesel	DG6 = 4 Speed Auto Transm
			EN0 = 4Cyl Turbo Diesel	DG0 = All Automatic Transm
				DBB = All Manual Transm

AR = Use as required - = Non illustrated part # = New this model year

June 3, 2003

« RETURN TO GROUP INDEX

« »

Clutch, Input Shaft [42RLE] [DG6] [DG6]
Figure 42RLE-410

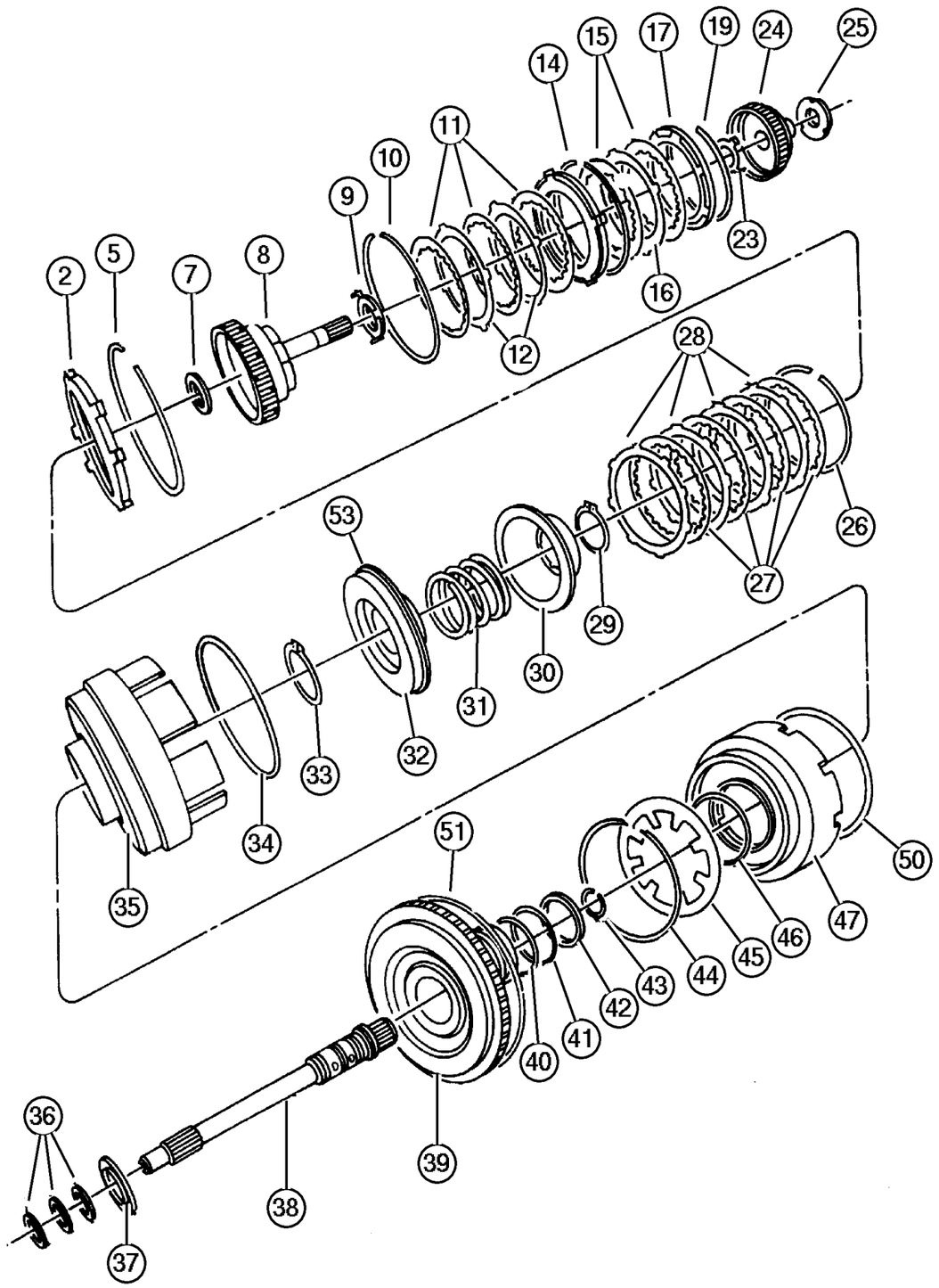

ITEM	PART NUMBER	QTY	LINE	SERIES	BODY	ENGINE	TRANS	TRIM	DESCRIPTION
		1	J, U				DG6		
42									SEAL, Under Drive
	4659 391AB	1	T				DG6		
		1	J, U				DG6		
43									SNAP RING
	6501 702	1	T				DG6		
		1	J, U				DG6		
44									SNAP RING
	4412 203	1	T				DG6		
		1	J, U				DG6		
45									SPRING, Overdrive Piston
	4412 202	1	T				DG6		
		1	J, U				DG6		
46									O RING, Reverse & O/Drive Clutch Piston, Transmission
	6033 158	1	T				DG6		
		1	J, U				DG6		
47									HUB PACKAGE, Input Clutch
	5017 518AB	1	T				DG6		
		1	J, U				DG6		
-48									PISTON, Reverse and Overdrive, Serviced in Assembly, (NOT SERVICED) (Not Serviced)
-49									FILTER, Reverse And O/D Clutch
	4531 903	1	T				DG6		
		1	J, U				DG6		
50									SEAL, Reverse Servo Piston
	4659 056	1	T				DG6		
		1	J, U				DG6		
51									SEAL, Reverse Servo Piston
	4659 056	1	T				DG6		
		1	J, U				DG6		
-52									PISTON, 2nd and 4th Clutch
	4431 647	1	T				DG6		
		1	J, U				DG6		
53									PISTON, Underdrive
	4431 610	1	T				DG6		Also Avalable In Overhaul Package
		1	J, U				DG6		Also Avalable In Overhaul Package

JEEP LIBERTY (KJ)

SERIES	LINE	BODY	ENGINE	TRANSMISSION
P = Limited	J = LHD (4WD)	74 = 4 Dr. (104.3 WB)	ED1, ED0 = 2.4L Power Tech	DDK = 5 Speed HDManual
H = Sport	U = RHD (4WD)		EKG, EK0 = 3.7L Power Tech	DDD = 5 Speed HD Manual
M = Renegade	T = LHD (2WD)		ENJ = 2.5L 4Cyl Turbo Diesel	DG4,DGQ = Multi-Speed Auto
			ENR = 2.8L 4Cyl Turbo Diesel	DG6 = 4 Speed Auto Transm
			EN0 = 4Cyl Turbo Diesel	DG0 = All Automatic Transm
				DBB = All Manual Transm

AR = Use as required - = Non illustrated part # = New this model year

June 3, 2003

« RETURN TO GROUP INDEX

Gear Train [42RLE] [DG6] [DG6]
Figure 42RLE-420

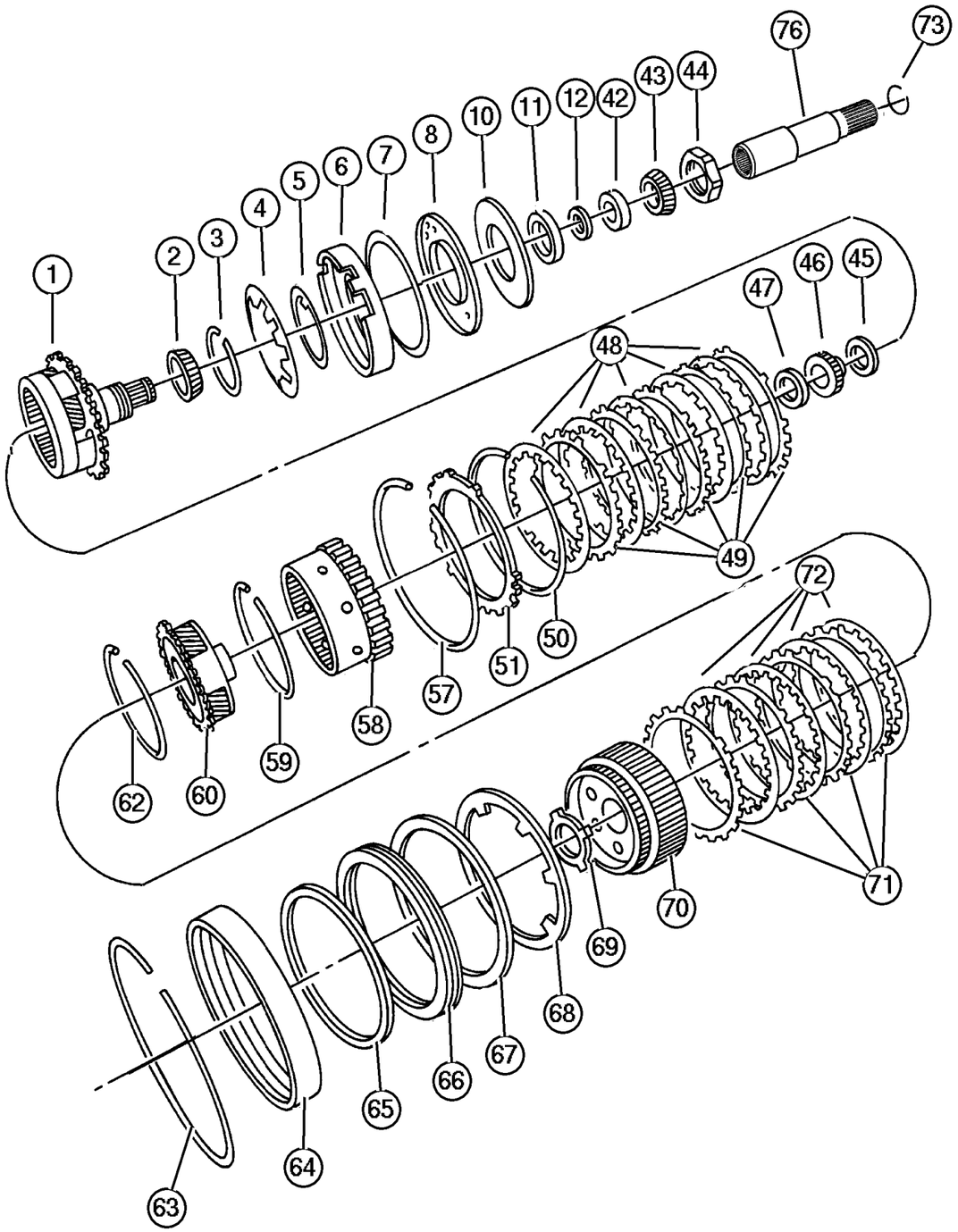

ITEM	PART NUMBER	QTY	LINE	SERIES	BODY	ENGINE	TRANS	TRIM	DESCRIPTION
NOTE:									
Sales Codes:									
[DG6]=4 Speed Automatic Transmission - 42RLE									
1									CARRIER AND BEARING, Planet Pinion
	#5101 874AA	1	T				DG6		
		1	J, U				DG6		
2									BEARING CONE, Output Shaft
	4412 235	1	T				DG6		
		1	J, U				DG6		
3									SNAP RING
	6501 853	1	T				DG6		
		1	J, U				DG6		
4									SPRING, Low/Reverse Clutch Piston
	4412 261	1	T				DG6		
		1	J, U				DG6		
5									SEAL PACKAGE, Transmission Clutch
	4882 917	1	T				DG6		
		1	J, U				DG6		
6									PISTON, Low and Reverse Clutch
	#52852 946AA	1	T				DG6		
		1	J, U				DG6		
7									SEAL PACKAGE, Transmission Clutch
	4882 917	1	T				DG6		
		1	J, U				DG6		
8									RETAINER, Transmission Low and Reverse Clutch Pistion
	#4800 255AA	1	T				DG6		
		1	J, U				DG6		
-9									SCREW AND WASHER, Pan Head, M5x0.8x11.00
	6501 819	3	T				DG6		
		3	J, U				DG6		
10									GASKET, Clutch Retainer
	4431 649	1	T				DG6		
		1	J, U				DG6		
11									BEARING CUP, Output Shaft
	4412 234	1	T				DG6		
		1	J, U				DG6		

JEEP LIBERTY (KJ)

SERIES	LINE	BODY	ENGINE	TRANSMISSION
P = Limited	J = LHD (4WD)	74 = 4 Dr. (104.3 WB)	ED1, ED0 = 2.4L Power Tech	DDK = 5 Speed HDManual
H = Sport	U = RHD (4WD)		EKG, EK0 = 3.7L Power Tech	DDD = 5 Speed HD Manual
M = Renegade	T = LHD (2WD)		ENJ = 2.5L 4Cyl Turbo Diesel	DG4,DGQ = Multi-Speed Auto
			ENR = 2.8L 4Cyl Turbo Diesel	DG6 = 4 Speed Auto Transm
			EN0 = 4Cyl Turbo Diesel	DG0 = All Automatic Transm
				DBB = All Manual Transm

AR = Use as required - = Non illustrated part # = New this model year **June 3, 2003**

« RETURN TO GROUP INDEX »

Gear Train [42RLE] [DG6] [DG6]
Figure 42RLE-420

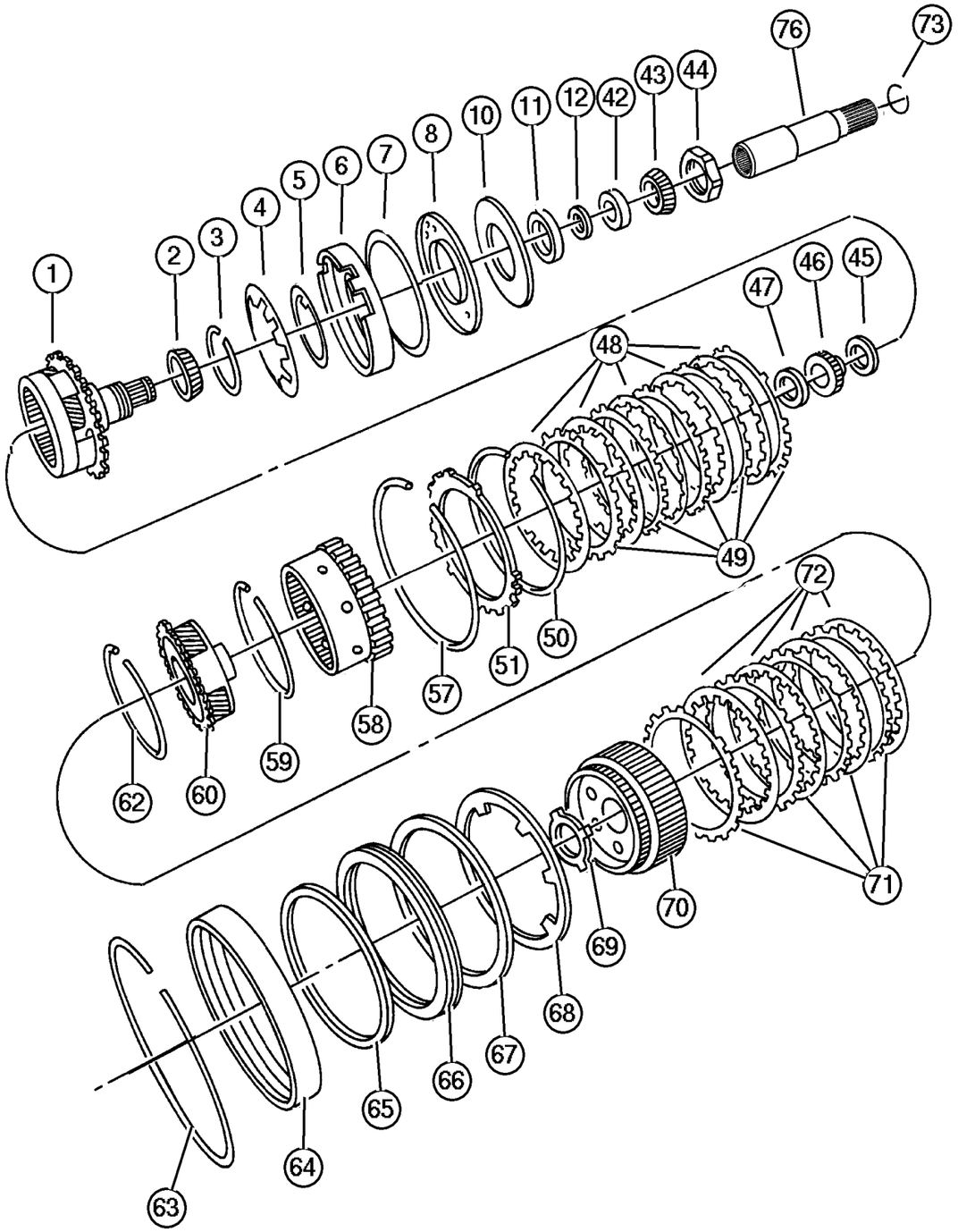

ITEM	PART NUMBER	QTY	LINE	SERIES	BODY	ENGINE	TRANS	TRIM	DESCRIPTION
12									SHIM, Carrier Bearing, 5.17 - 5.
									19mm
	5280 020	AR	T				DG6		
		AR	J, U				DG6		
-13									SHIM, Carrier Bearing, 5.20 - 5.
									22mm
	5280 021	AR	T				DG6		
		AR	J, U				DG6		
-14									SHIM, Carrier Bearing, 5.23 - 5.
									25mm
	5280 022	AR	T				DG6		
		AR	J, U				DG6		
-15									SHIM, Carrier Bearing, 5.26 - 5.
									28mm
	5280 023	AR	T				DG6		
		AR	J, U				DG6		
-16									SHIM, Carrier Bearing, 5.29 - 5.
									31mm
	5280 024	AR	T				DG6		
		AR	J, U				DG6		
-17									SHIM, Carrier Bearing, 5.32 - 5.
									34mm
	5280 025	AR	T				DG6		
		AR	J, U				DG6		
-18									SHIM, Carrier Bearing, 5.35 - 5.
									37mm
	5280 026	AR	T				DG6		
		AR	J, U				DG6		
-19									SHIM, Carrier Bearing, 5.38 - 5.
									40mm
	5280 027	AR	T				DG6		
		AR	J, U				DG6		
-20									SHIM, Carrier Bearing, 5.41 - 5.
									43mm
	5280 028	AR	T				DG6		
		AR	J, U				DG6		
-21									SHIM, Carrier Bearing, 5.44 - 5.
									46mm
	5280 029	AR	T				DG6		
		AR	J, U				DG6		
-22									SHIM, Carrier Bearing, 5.47 - 5.
									49mm

JEEP LIBERTY (KJ)

SERIES	LINE	BODY	ENGINE	TRANSMISSION
P = Limited	J = LHD (4WD)	74 = 4 Dr. (104.3 WB)	ED1, ED0 = 2.4L Power Tech	DDK = 5 Speed HDManual
H = Sport	U = RHD (4WD)		EKG, EK0 = 3.7L Power Tech	DDD = 5 Speed HD Manual
M = Renegade	T = LHD (2WD)		ENJ = 2.5L 4Cyl Turbo Diesel	DG4,DGQ = Multi-Speed Auto
			ENR = 2.8L 4Cyl Turbo Diesel	DG6 = 4 Speed Auto Transm
			EN0 = 4Cyl Turbo Diesel	DG0 = All Automatic Transm
				DBB = All Manual Transm

AR = Use as required - = Non illustrated part # = New this model year

June 3, 2003

« RETURN TO GROUP INDEX

Gear Train [42RLE] [DG6] [DG6]
Figure 42RLE-420

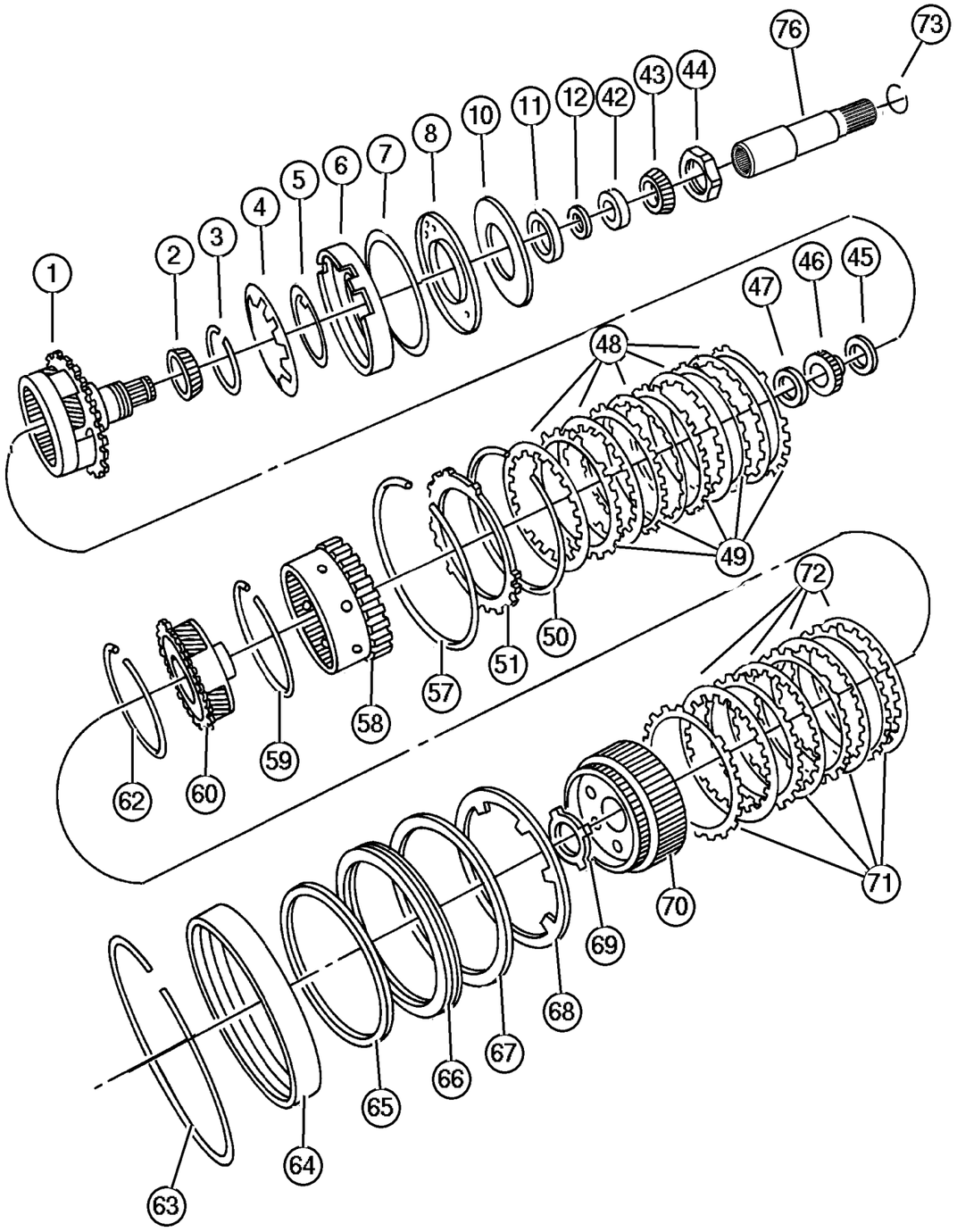

ITEM	PART NUMBER	QTY	LINE	SERIES	BODY	ENGINE	TRANS	TRIM	DESCRIPTION
	5280 030	AR	T				DG6		
		AR	J, U				DG6		
-23									SHIM, Carrier Bearing, 5.50 - 5.52mm
	5280 031	AR	T				DG6		
		AR	J, U				DG6		
-24									SHIM, Carrier Bearing, 5.53 - 5.55mm
	5280 032	AR	T				DG6		
		AR	J, U				DG6		
-25									SHIM, Carrier Bearing, 5.56 - 5.58mm
	5280 033	AR	T				DG6		
		AR	J, U				DG6		
-26									SHIM, Carrier Bearing, 5.59 - 5.61mm
	5280 034	AR	T				DG6		
		AR	J, U				DG6		
-27									SHIM, Carrier Bearing, 5.62 - 5.64mm
	5280 035	AR	T				DG6		
		AR	J, U				DG6		
-28									SHIM, Carrier Bearing, 5.65 - 5.67mm
	5280 036	AR	T				DG6		
		AR	J, U				DG6		
-29									SHIM, Carrier Bearing, 5.68 - 5.70mm
	5280 037	AR	T				DG6		
		AR	J, U				DG6		
-30									SHIM, Carrier Bearing, 5.71 - 5.73mm
	5280 038	AR	T				DG6		
		AR	J, U				DG6		
-31									SHIM, Carrier Bearing, 5.74 - 5.76mm
	5280 039	AR	T				DG6		
		AR	J, U				DG6		
-32									SHIM, Carrier Bearing, 5.77 - 5.79mm
	5280 040	AR	T				DG6		

JEEP LIBERTY (KJ)

SERIES	LINE	BODY	ENGINE	TRANSMISSION
P = Limited	J = LHD (4WD)	74 = 4 Dr. (104.3 WB)	ED1, ED0 = 2.4L Power Tech	DDK = 5 Speed HDManual
H = Sport	U = RHD (4WD)		EKG, EK0 = 3.7L Power Tech	DDD = 5 Speed HD Manual
M = Renegade	T = LHD (2WD)		ENJ = 2.5L 4Cyl Turbo Diesel	DG4,DGQ = Multi-Speed Auto
			ENR = 2.8L 4Cyl Turbo Diesel	DG6 = 4 Speed Auto Transm
			EN0 = 4Cyl Turbo Diesel	DG0 = All Automatic Transm
				DBB = All Manual Transm

AR = Use as required - = Non illustrated part # = New this model year

June 3, 2003

« RETURN TO GROUP INDEX

Gear Train [42RLE] [DG6] [DG6]
Figure 42RLE-420

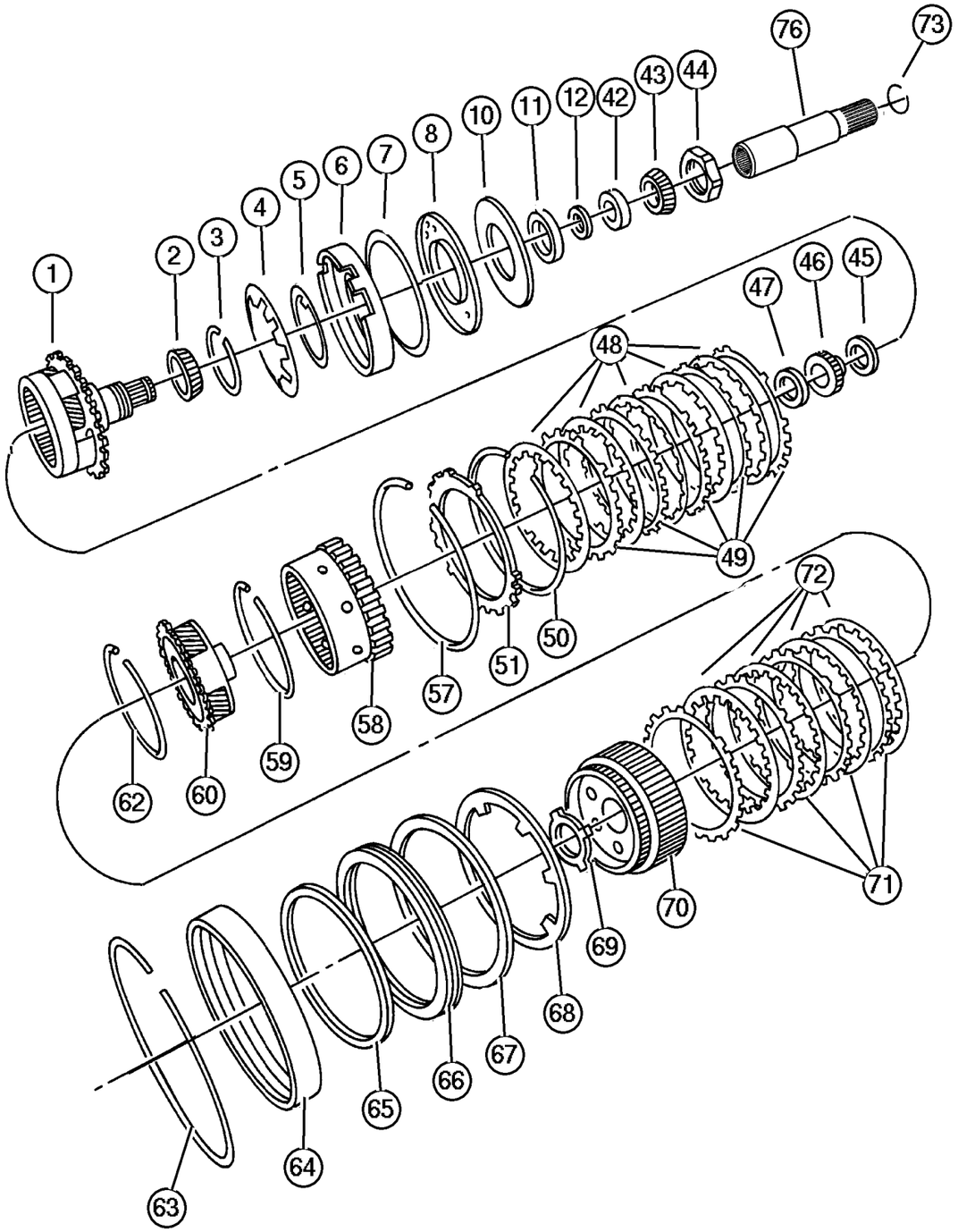

ITEM	PART NUMBER	QTY	LINE	SERIES	BODY	ENGINE	TRANS	TRIM	DESCRIPTION
		AR	J, U				DG6		
-33									SHIM, Carrier Bearing, 5.80 - 5.82mm
	5280 041	AR	T				DG6		
		AR	J, U				DG6		
-34									SHIM, Carrier Bearing, 5.83 - 5.85mm
	5280 042	AR	T				DG6		
		AR	J, U				DG6		
-35									SHIM, Carrier Bearing, 5.86 - 5.88mm
	5280 043	AR	T				DG6		
		AR	J, U				DG6		
-36									SHIM, Carrier Bearing, 5.89 - 5.91mm
	5280 044	AR	T				DG6		
		AR	J, U				DG6		
-37									SHIM, Carrier Bearing, 5.92 - 5.94mm
	5280 045	AR	T				DG6		
		AR	J, U				DG6		
-38									SHIM, Carrier Bearing, 5.95 - 5.97mm
	5280 046	AR	T				DG6		
		AR	J, U				DG6		
-39									SHIM, Carrier Bearing, 5.98 - 6.00mm
	5280 047	AR	T				DG6		
		AR	J, U				DG6		
-40									SHIM, Carrier Bearing, 6.01 - 6.03mm
	5280 048	AR	T				DG6		
		AR	J, U				DG6		
-41									SHIM, Carrier Bearing, 6.04 - 6.06mm
	5280 049	AR	T				DG6		
		AR	J, U				DG6		
42									BEARING CUP, Differential
	4567 022	1	T				DG6		
		1	J, U				DG6		
43									BEARING

JEEP LIBERTY (KJ)

SERIES	LINE	BODY	ENGINE	TRANSMISSION
P = Limited	J = LHD (4WD)	74 = 4 Dr. (104.3 WB)	ED1, ED0 = 2.4L Power Tech	DDK = 5 Speed HDManual
H = Sport	U = RHD (4WD)		EKG, EK0 = 3.7L Power Tech	DDD = 5 Speed HD Manual
M = Renegade	T = LHD (2WD)		ENJ = 2.5L 4Cyl Turbo Diesel	DG4,DGQ = Multi-Speed Auto
			ENR = 2.8L 4Cyl Turbo Diesel	DG6 = 4 Speed Auto Transm
			EN0 = 4Cyl Turbo Diesel	DG0 = All Automatic Transm
				DBB = All Manual Transm

AR = Use as required - = Non illustrated part # = New this model year

June 3, 2003

« RETURN TO GROUP INDEX

Gear Train [42RLE] [DG6] [DG6]
Figure 42RLE-420

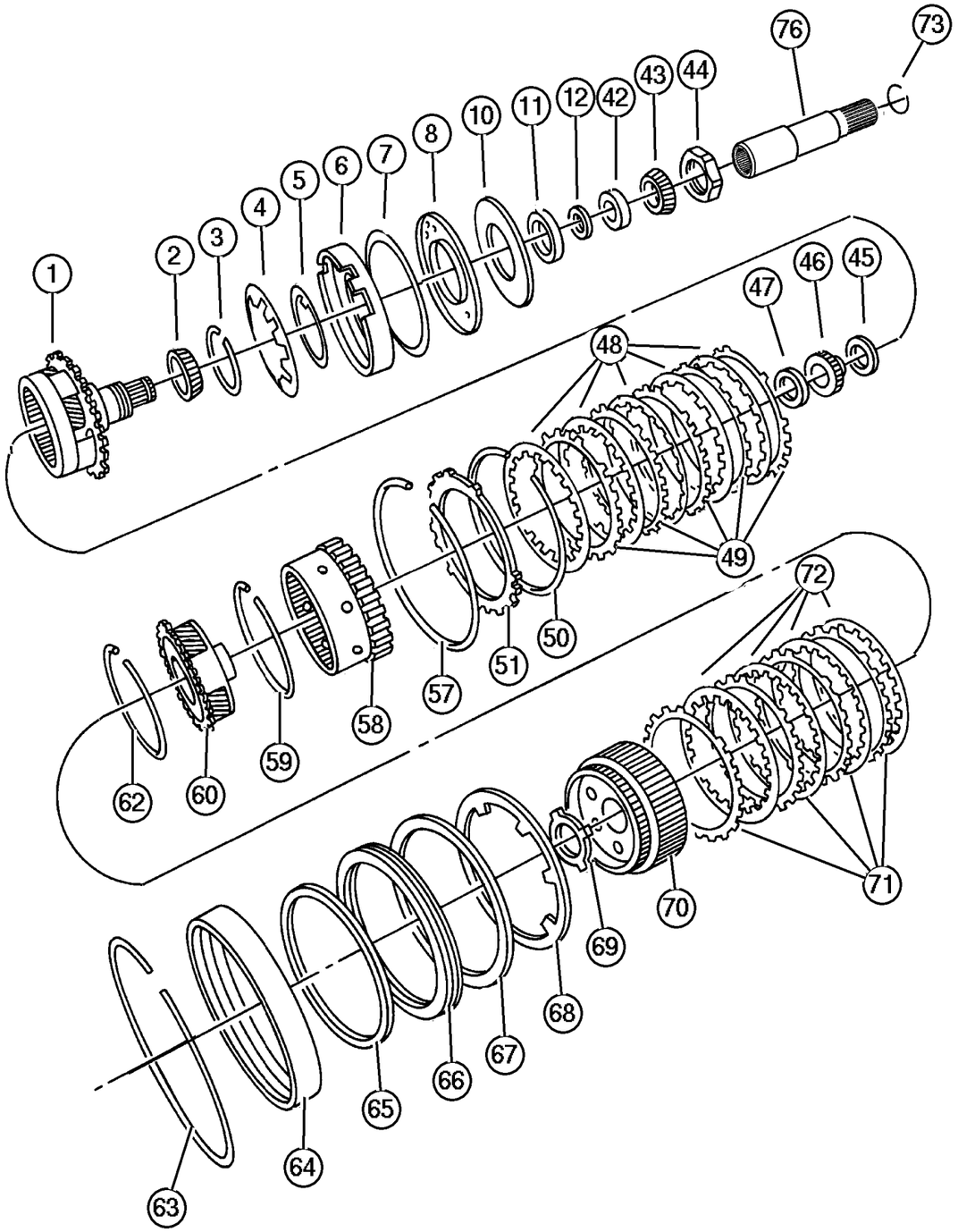

ITEM	PART NUMBER	QTY	LINE	SERIES	BODY	ENGINE	TRANS	TRIM	DESCRIPTION
	4567 025AB	1	T				DG6		
		1	J, U				DG6		
44									NUT, Rear Carrier, M36 x 1.50
	6502 476	1	T				DG6		
		1	J, U				DG6		
45									THRUST BEARING
	4412 209	1	T				DG6		
		1	J, U				DG6		
46									GEAR, Sun
	4377 080	1	T				DG6		
		1	J, U				DG6		
47									THRUST BEARING, Rear Sun Gear, Front
	4412 229AB	1	T				DG6		
		1	J, U				DG6		
48									DISC, Clutch
	4567 573AB	5	T				DG6		
		5	J, U				DG6		
49									PLATE, Transmission Clutch Reaction
	4659 055	5	T				DG6		
		5	J, U				DG6		
50									SNAP RING
	4412 395	1	T				DG6		
		1	J, U				DG6		
51									PLATE, Transmission Clutch Reaction
	4377 194	1	T				DG6		
		1	J, U				DG6		
-52									PLATE PACKAGE, Low/Reverse Clutch, 5.753/6.012
	4897 452AA	1	T				DG6		
		1	J, U				DG6		
-53									PLATE PACKAGE, Low/Reverse Clutch, 6.013/6.272
	4897 453AA	1	T				DG6		
		1	J, U				DG6		
-54									PLATE PACKAGE, Low/Reverse Clutch, 6.273/6.532
	4897 454AA	1	T				DG6		
		1	J, U				DG6		

JEEP LIBERTY (KJ)

SERIES	LINE	BODY	ENGINE	TRANSMISSION
P = Limited	J = LHD (4WD)	74 = 4 Dr. (104.3 WB)	ED1, ED0 = 2.4L Power Tech	DDK = 5 Speed HDManual
H = Sport	U = RHD (4WD)		EKG, EK0 = 3.7L Power Tech	DDD = 5 Speed HD Manual
M = Renegade	T = LHD (2WD)		ENJ = 2.5L 4Cyl Turbo Diesel	DG4,DGQ = Multi-Speed Auto
			ENR = 2.8L 4Cyl Turbo Diesel	DG6 = 4 Speed Auto Transm
			EN0 = 4Cyl Turbo Diesel	DG0 = All Automatic Transm
				DBB = All Manual Transm

AR = Use as required - = Non illustrated part # = New this model year

June 3, 2003

« RETURN TO GROUP INDEX

Gear Train [42RLE] [DG6] [DG6]
Figure 42RLE-420

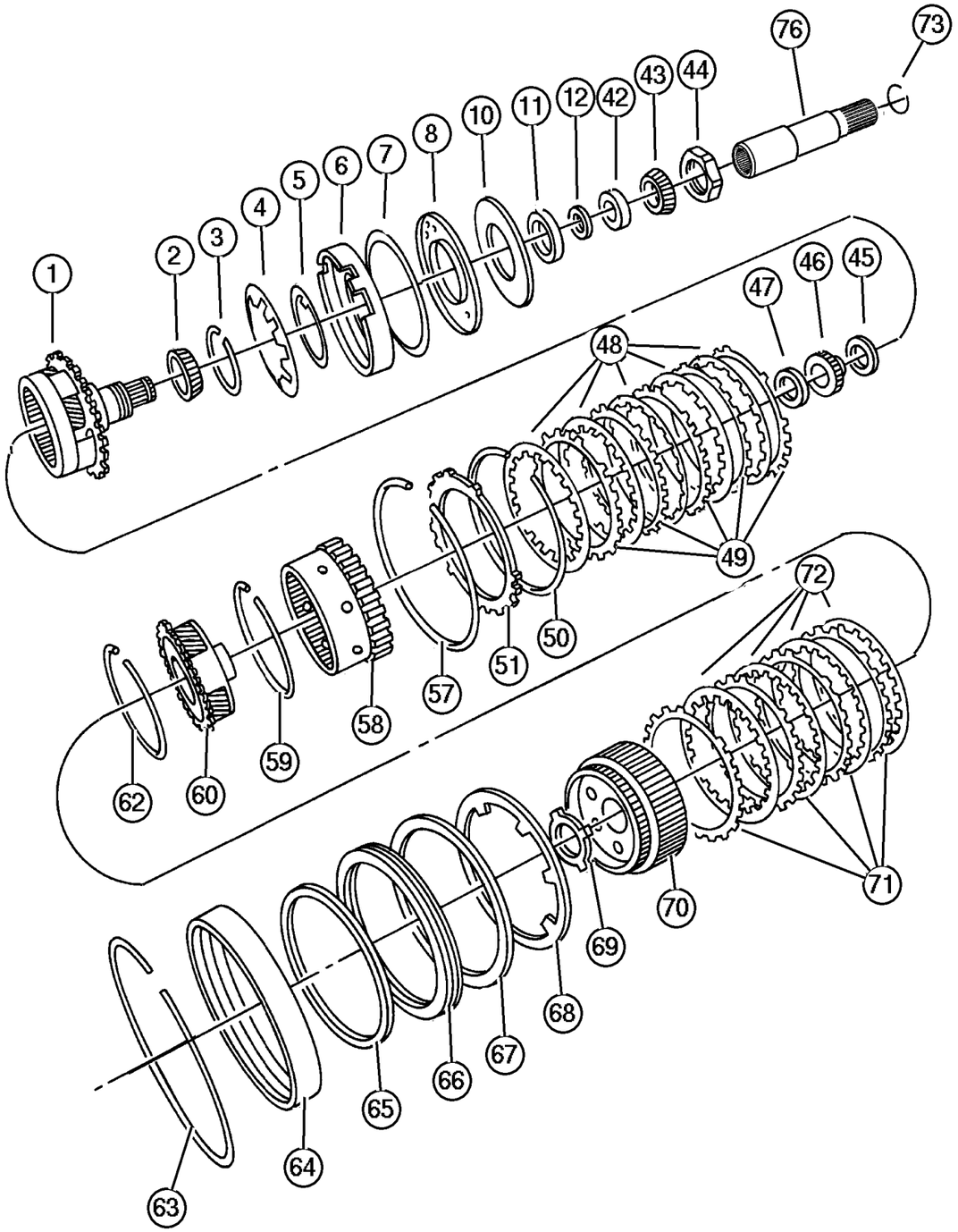

ITEM	PART NUMBER	QTY	LINE	SERIES	BODY	ENGINE	TRANS	TRIM	DESCRIPTION
-55									PLATE PACKAGE, Low/Reverse Clutch, 6.533/6.792
	4897 455AA	1	T				DG6		
		1	J, U				DG6		
-56									PLATE PACKAGE, Low/Reverse Clutch, 6.793/7.052
	4897 456AA	1	T				DG6		
		1	J, U				DG6		
57									SNAP RING
	4799 858AA	1	T				DG6		
		1	J, U				DG6		
58									GEAR, Annulus
	4799 794	1	T				DG6		
		1	J, U				DG6		
59									SNAP RING
	6035 238	2	T				DG6		
		2	J, U				DG6		
60									CARRIER, Planetary Pinion
	4567 539AB	1	T				DG6		
		1	J, U				DG6		
-61									THRUST BEARING
	4412 209	1	T				DG6		
		1	J, U				DG6		
62									SNAP RING
	6035 238	2	T				DG6		
		2	J, U				DG6		
63									SNAP RING
	4505 591	1	T				DG6		
		1	J, U				DG6		
64									RETAINER PACKAGE, 2nd & 4th Clutch Piston
	4883 078	1	T				DG6		
		1	J, U				DG6		
65									SEAL PACKAGE, Transmission Clutch
	4856 002	1	T				DG6		
		1	J, U				DG6		
66									RETAINER PACKAGE, 2nd & 4th Clutch Piston
	4883 078	1	T				DG6		
		1	J, U				DG6		

JEEP LIBERTY (KJ)

SERIES	LINE	BODY	ENGINE	TRANSMISSION
P = Limited	J = LHD (4WD)	74 = 4 Dr. (104.3 WB)	ED1, ED0 = 2.4L Power Tech	DDK = 5 Speed HDManual
H = Sport	U = RHD (4WD)		EKG, EK0 = 3.7L Power Tech	DDD = 5 Speed HD Manual
M = Renegade	T = LHD (2WD)		ENJ = 2.5L 4Cyl Turbo Diesel	DG4,DGQ = Multi-Speed Auto
			ENR = 2.8L 4Cyl Turbo Diesel	DG6 = 4 Speed Auto Transm
			EN0 = 4Cyl Turbo Diesel	DG0 = All Automatic Transm
				DBB = All Manual Transm

AR = Use as required - = Non illustrated part # = New this model year

June 3, 2003

« RETURN TO GROUP INDEX

Gear Train [42RLE] [DG6] [DG6]
Figure 42RLE-420

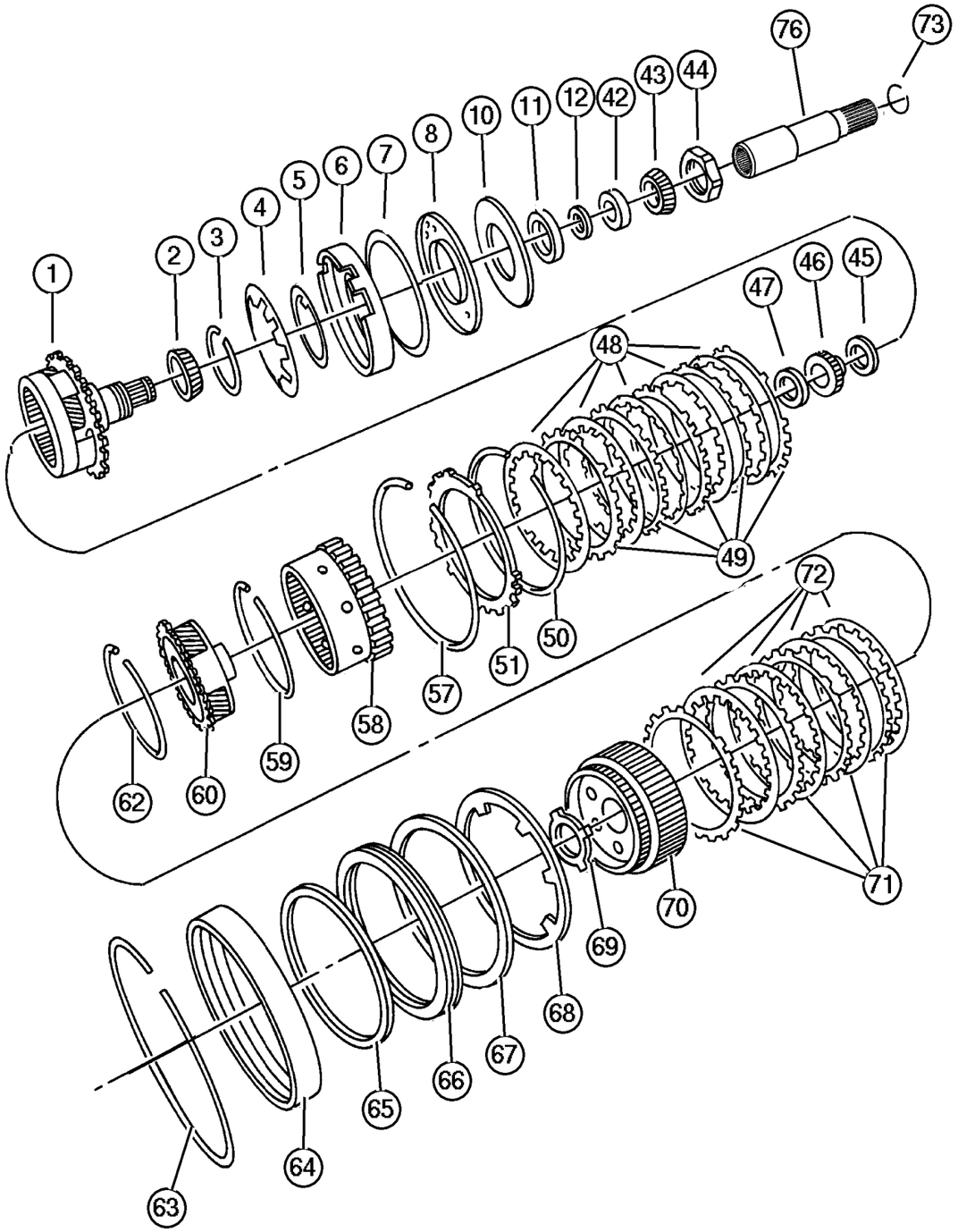

ITEM	PART NUMBER	QTY	LINE	SERIES	BODY	ENGINE	TRANS	TRIM	DESCRIPTION
67									SEAL PACKAGE, Transmission Clutch
	4856 002	1	T				DG6		
		1	J, U				DG6		
68									SPRING, 2nd And 4th Clutch Piston
	4412 248	1	T				DG6		
		1	J, U				DG6		
69									THRUST WASHER, Second and Fourth Clutch
	4412 216AB	1	T				DG6		
		1	J, U				DG6		
70									HUB AND GEAR, Second And Fourth Clutch
	4659 618AB	1	T				DG6		
		1	J, U				DG6		
71									PLATE, Transmission Clutch Reaction
	4659 054	4	T				DG6		
		4	J, U				DG6		
72									DISC, Clutch
	4799 860AB	4	T				DG6		
		4	J, U				DG6		
73									SNAP RING
	4377 195	1	T				DG6		
		1	J, U				DG6		
-74									THRUST WASHER, Planet Pinion
	3681 949	6	T				DG6		
		10	T				DG6		
-75									ROLLER, Front and Rear Pinion
	3743 664	95	T				DG6		
		95	J, U				DG6		
76	#52852 915AA	1	J, U				DG6		SHAFT, Intermediate
-77	#52852 916AA	1	J, U				DG6		CLIP, Secure Intermediate Shaft
-78	#52854 168AA	1	T				DG6		SHAFT, Output
-79	2466 224	1	T				DG6		BEARING, Output Shaft

JEEP LIBERTY (KJ)

SERIES	LINE	BODY	ENGINE	TRANSMISSION
P = Limited	J = LHD (4WD)	74 = 4 Dr. (104.3 WB)	ED1, ED0 = 2.4L Power Tech	DDK = 5 Speed HDManual
H = Sport	U = RHD (4WD)		EKG, EK0 = 3.7L Power Tech	DDD = 5 Speed HD Manual
M = Renegade	T = LHD (2WD)		ENJ = 2.5L 4Cyl Turbo Diesel	DG4,DGQ = Multi-Speed Auto
			ENR = 2.8L 4Cyl Turbo Diesel	DG6 = 4 Speed Auto Transm
			EN0 = 4Cyl Turbo Diesel	DG0 = All Automatic Transm
				DBB = All Manual Transm

AR = Use as required - = Non illustrated part # = New this model year **June 3, 2003**

« RETURN TO GROUP INDEX

Valve Body [42RLE] [DG6] [DG6]
Figure 42RLE-710

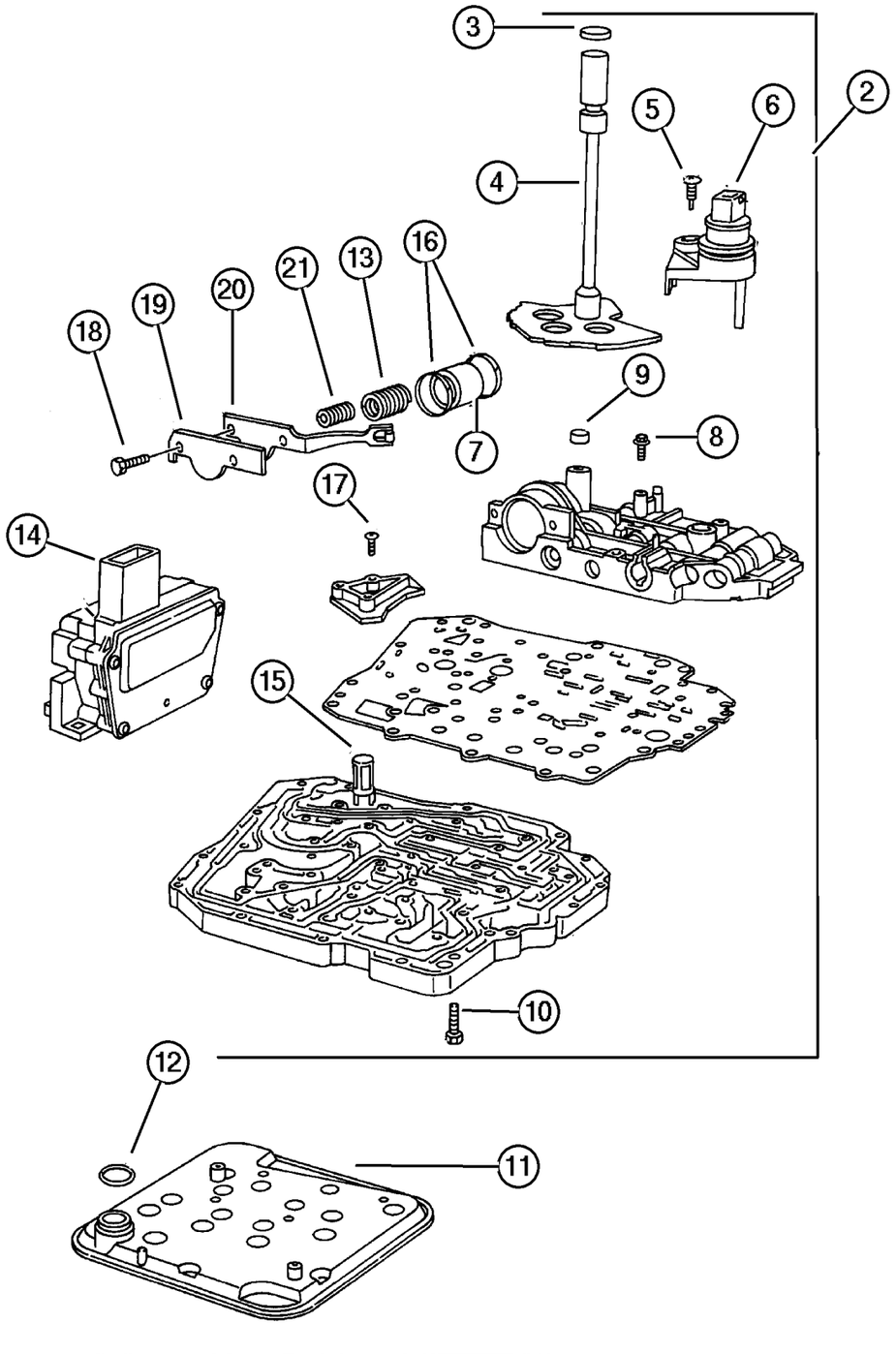

ITEM	PART NUMBER	QTY	LINE	SERIES	BODY	ENGINE	TRANS	TRIM	DESCRIPTION
NOTE:									
Sales Codes:									
[DG6]=4 Speed Automatic Transmission - 42RLE									
-1									GASKET AND SEAL PACKAGE, Valve Body
	#5101 917AA	1	T				DG6		
		1	J, U				DG6		
2									VALVE BODY
	#52854 169AA	1	T				DG6		
		1	J, U				DG6		
3									SEAL, Manual Valve Lever
	4412 836	1	T				DG6		
		1	J, U				DG6		
4									LEVER, Manual Valve
	4539 665	1	T				DG6		
		1	J, U				DG6		
5									SCREW
	6506 245AA	1	T				DG6		
		1	J, U				DG6		
6									SENSOR, Manual Valve Lever
	4659 677AC	1	T				DG6		
		1	J, U				DG6		
7									PISTON, 2nd and 4th Accumulator
	4446 620	1	T				DG6		
		1	J, U				DG6		
8									SCREW AND WASHER, Pan Head, M5x.8x25
	6500 215	28	T				DG6		
		2	J, U				DG6		
9									SEAL, Clutch Feed
	4412 291	1	T				DG6		
		1	J, U				DG6		
10									SCREW AND WASHER, Pan Head, M5x.8x25
	6500 215	28	T				DG6		
		2	J, U				DG6		
11									FILTER, Transmission Oil
	#52852 913AB	1	T				DG6		
		1	J, U				DG6		
12									O RING, Trans Oil Filter
	6032 780	1	T				DG6		

JEEP LIBERTY (KJ)

SERIES	LINE	BODY	ENGINE	TRANSMISSION
P = Limited	J = LHD (4WD)	74 = 4 Dr. (104.3 WB)	ED1, ED0 = 2.4L Power Tech	DDK = 5 Speed HDManual
H = Sport	U = RHD (4WD)		EKG, EK0 = 3.7L Power Tech	DDD = 5 Speed HD Manual
M = Renegade	T = LHD (2WD)		ENJ = 2.5L 4Cyl Turbo Diesel	DG4,DGQ = Multi-Speed Auto
			ENR = 2.8L 4Cyl Turbo Diesel	DG6 = 4 Speed Auto Transm
			EN0 = 4Cyl Turbo Diesel	DG0 = All Automatic Transm
				DBB = All Manual Transm

AR = Use as required - = Non illustrated part # = New this model year **June 3, 2003**

« RETURN TO GROUP INDEX »

Valve Body [42RLE] [DG6] [DG6]
Figure 42RLE-710

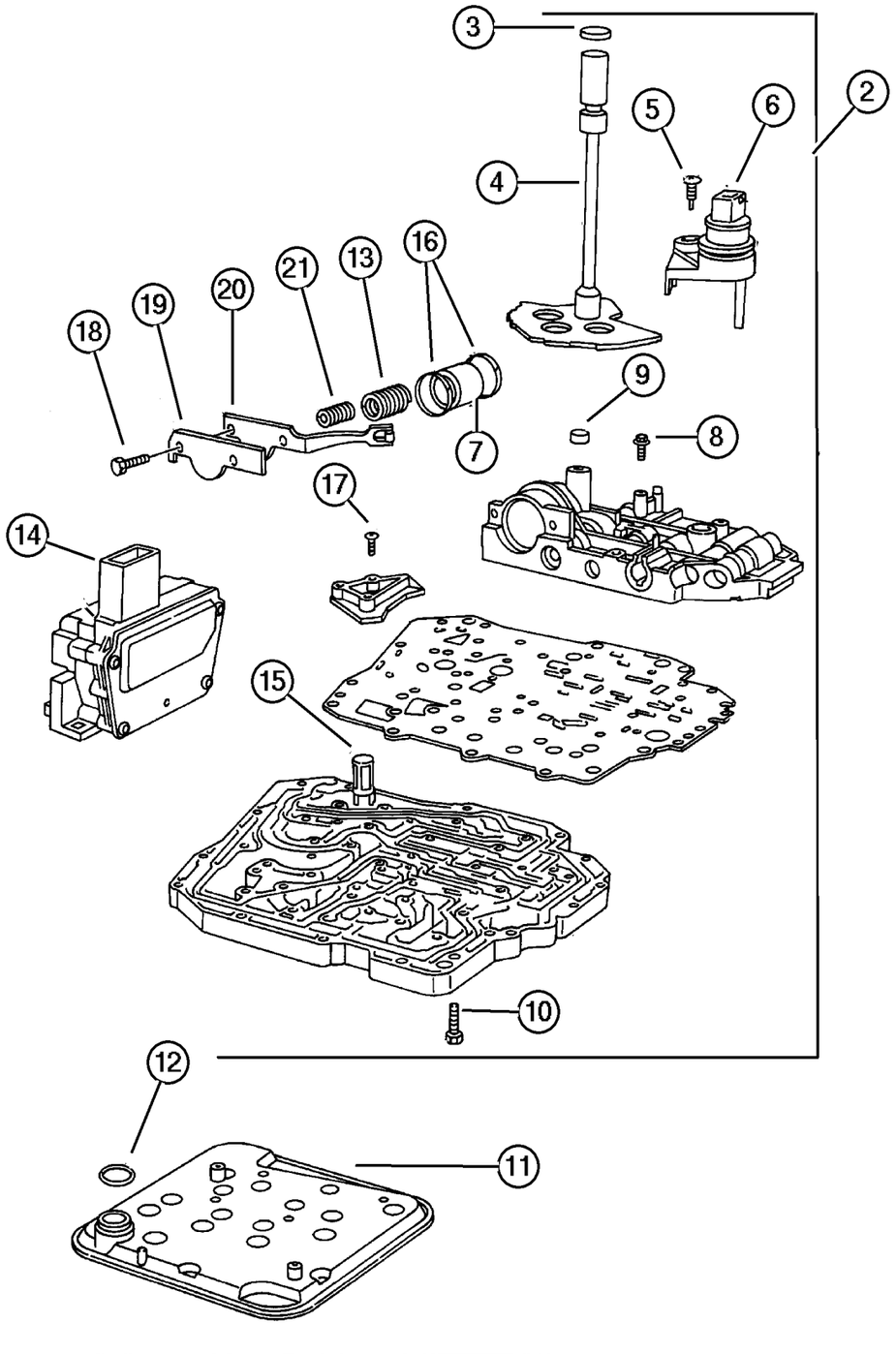

ITEM	PART NUMBER	QTY	LINE	SERIES	BODY	ENGINE	TRANS	TRIM	DESCRIPTION
		1	J, U				DG6		
13									SPRING, Accumulator
	4471 880	1	T				DG6		
		1	J, U				DG6		
14									SOLENOID, Transmission
	#4800 171AA	1	T				DG6		
		1	J, U				DG6		
15									SCREEN, Transmission Regulator Valve
	3878 313	1	T				DG6		
		1	J, U				DG6		
16									SEAL, Accumulator
	4446 544	2	T				DG6		
		2	J, U				DG6		
17									SCREW AND WASHER, Pan Head, M5x.8x25
	6500 215	28	T				DG6		
		2	J, U				DG6		
18									SCREW, Pan Head, M5 x 0.8 x 12. 60
	6503 232	7	T				DG6		
		7	J, U				DG6		
19									RETAINER, Transmission 2nd and 4th Accumulator Piston
	4431 711	1	T				DG6		
		1	J, U				DG6		
20									DETENT, Valve Body
	4431 710	1	T				DG6		
		1	J, U				DG6		
21									SPRING, Accumulator
	4471 880	1	T				DG6		
		1	J, U				DG6		
-22									DOWEL, M6x16
	6100 994	1	T				DG6		
		1	J, U				DG6		
-23									VALVE, Transmission Regulator
	4659 081	1	T				DG6		
		1	J, U				DG6		
-24									BALL, Check
	5211 8261	4	T				DG6		
		4	J, U				DG6		
-25									BALL, Valve Body Check

JEEP LIBERTY (KJ)

SERIES	LINE	BODY	ENGINE	TRANSMISSION
P = Limited	J = LHD (4WD)	74 = 4 Dr. (104.3 WB)	ED1, ED0 = 2.4L Power Tech	DDK = 5 Speed HDManual
H = Sport	U = RHD (4WD)		EKG, EK0 = 3.7L Power Tech	DDD = 5 Speed HD Manual
M = Renegade	T = LHD (2WD)		ENJ = 2.5L 4Cyl Turbo Diesel	DG4,DGQ = Multi-Speed Auto
			ENR = 2.8L 4Cyl Turbo Diesel	DG6 = 4 Speed Auto Transm
			EN0 = 4Cyl Turbo Diesel	DG0 = All Automatic Transm
				DBB = All Manual Transm

AR = Use as required - = Non illustrated part # = New this model year **June 3, 2003**

« RETURN TO GROUP INDEX

Valve Body [42RLE] [DG6] [DG6]
Figure 42RLE-710

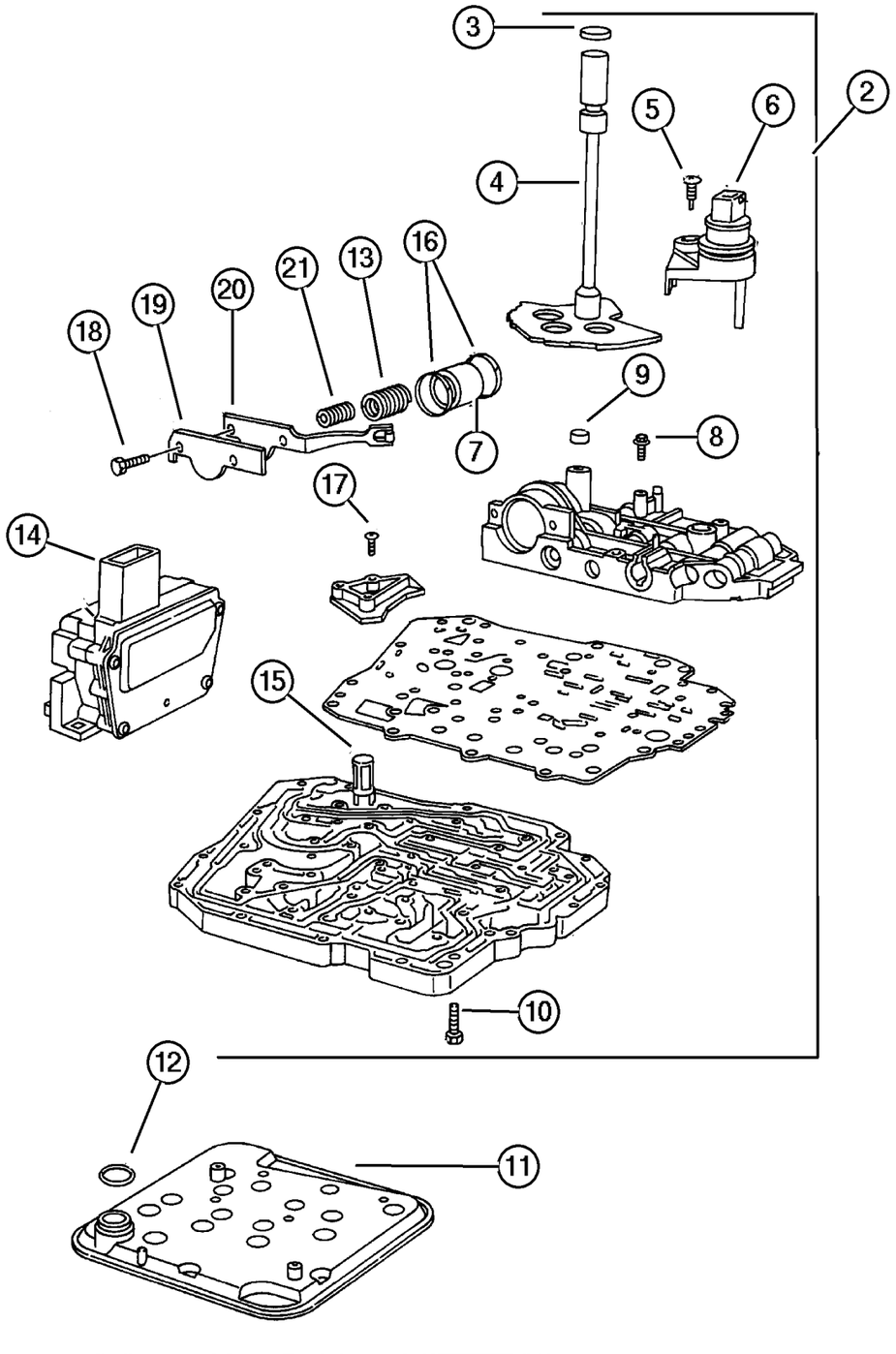

ITEM	PART NUMBER	QTY	LINE	SERIES	BODY	ENGINE	TRANS	TRIM	DESCRIPTION
	0104 918	1	T				DG6		Cooler Bypass Valve
		1	J, U				DG6		Cooler Bypass Valve

JEEP LIBERTY (KJ)

SERIES	LINE	BODY	ENGINE	TRANSMISSION
P = Limited	J = LHD (4WD)	74 = 4 Dr. (104.3 WB)	ED1, ED0 = 2.4L Power Tech	DDK = 5 Speed HDManual
H = Sport	U = RHD (4WD)		EKG, EK0 = 3.7L Power Tech	DDD = 5 Speed HD Manual
M = Renegade	T = LHD (2WD)		ENJ = 2.5L 4Cyl Turbo Diesel	DG4,DGQ = Multi-Speed Auto
			ENR = 2.8L 4Cyl Turbo Diesel	DG6 = 4 Speed Auto Transm
			EN0 = 4Cyl Turbo Diesel	DG0 = All Automatic Transm
				DBB = All Manual Transm

AR = Use as required - = Non illustrated part # = New this model year

June 3, 2003

« RETURN TO GROUP INDEX

Accumulator Piston & Springs [42RLE] [DG6] [DG6]
Figure 42RLE-720

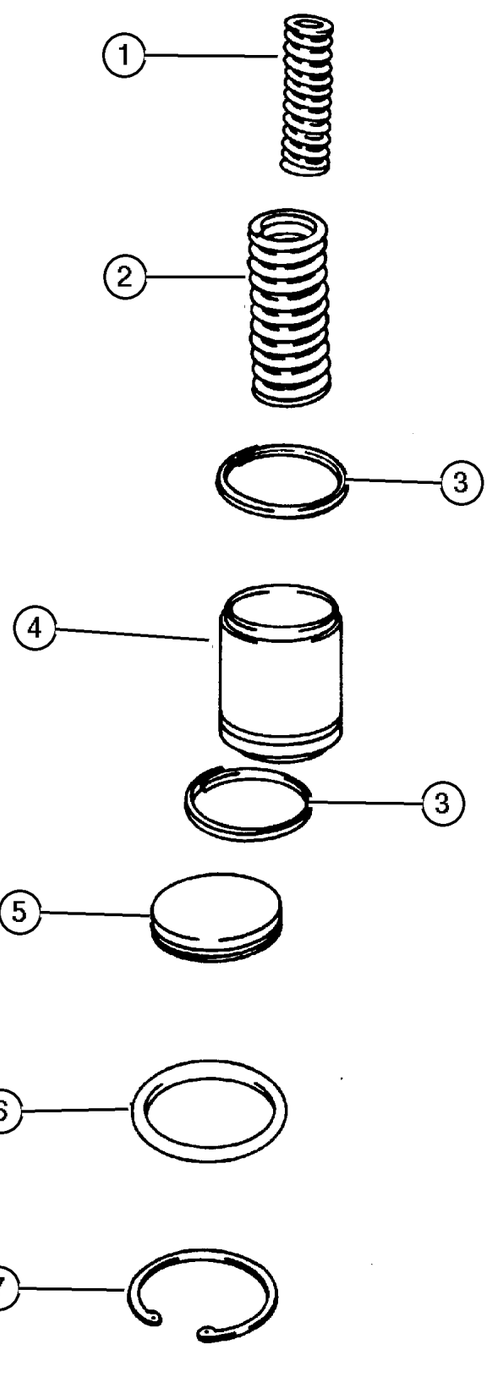

ITEM	PART NUMBER	QTY	LINE	SERIES	BODY	ENGINE	TRANS	TRIM	DESCRIPTION
NOTE:									
Sales Codes:									
[DG6]=4 Speed Automatic Transmission - 42RLE									
1									SPRING, Accumulator
	4567 575	1	T				DG6		
		1	J, U				DG6		
2									SPRING, Accumulator
	4471 880	1	T				DG6		
		1	J, U				DG6		
3									SEAL, Accumulator
	4446 544	2	T				DG6		
		2	J, U				DG6		
4									PISTON, 2nd and 4th Accumulator
	4446 620	1	T				DG6		
		1	J, U				DG6		
5									COVER, Accumulator
	4431 617	1	T				DG6		
		1	J, U				DG6		
6									O RING, Accumulator, Transmission
	6501 549	1	T				DG6		
		1	J, U				DG6		
7									SNAP RING
	6501 695	1	T				DG6		
		1	J, U				DG6		
-8									COVER, Accumulator
	4431 617	1	T				DG6		
		1	J, U				DG6		

JEEP LIBERTY (KJ)

SERIES	LINE	BODY	ENGINE	TRANSMISSION
P = Limited	J = LHD (4WD)	74 = 4 Dr. (104.3 WB)	ED1, ED0 = 2.4L Power Tech	DDK = 5 Speed HDManual
H = Sport	U = RHD (4WD)		EKG, EK0 = 3.7L Power Tech	DDD = 5 Speed HD Manual
M = Renegade	T = LHD (2WD)		ENJ = 2.5L 4Cyl Turbo Diesel	DG4,DGQ = Multi-Speed Auto
			ENR = 2.8L 4Cyl Turbo Diesel	DG6 = 4 Speed Auto Transm
			EN0 = 4Cyl Turbo Diesel	DG0 = All Automatic Transm
				DBB = All Manual Transm

Parking Sprag [42RLE] [DG6] [DG6]
Figure 42RLE-730

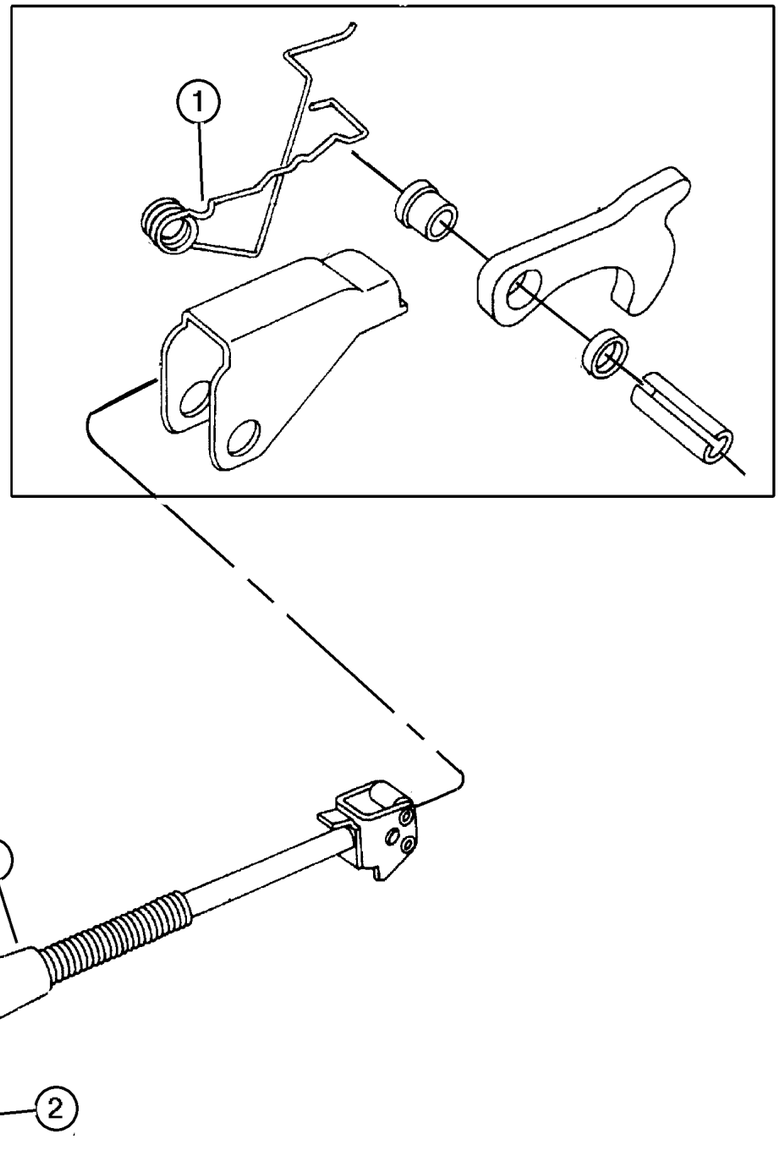

ITEM	PART NUMBER	QTY	LINE	SERIES	BODY	ENGINE	TRANS	TRIM	DESCRIPTION
NOTES:									
Sales Codes									
[DG6]= 4 Speed Automatic Transmission [42RLE]									
1									SPRING, Parking Sprag Return
	#52852 949AA	1	T				DG6		
		1	J, U				DG6		
2									SNAP RING, Rod
	6035 256	1	T				DG6		
		1	J, U				DG6		
-3									SCREW AND WASHER, Park Sprag Shaft, M5X0.8X12
	6503 384	1	T				DG6		
		1	J, U				DG6		
4									SHAFT, Parking Sprag
	4431 999	1	T				DG6		
		1	J, U				DG6		
-5									ROD, Parking Sprag
	#52852 956AA	1	T				DG6		
		1	J, U				DG6		
-6									BRACKET, Parking Sprag
	#52852 948AA	1	T				DG6		
		1	J, U				DG6		

JEEP LIBERTY (KJ)

SERIES	LINE	BODY	ENGINE	TRANSMISSION
P = Limited	J = LHD (4WD)	74 = 4 Dr. (104.3 WB)	ED1, ED0 = 2.4L Power Tech	DDK = 5 Speed HDManual
H = Sport	U = RHD (4WD)		EKG, EK0 = 3.7L Power Tech	DDD = 5 Speed HD Manual
M = Renegade	T = LHD (2WD)		ENJ = 2.5L 4Cyl Turbo Diesel	DG4,DGQ = Multi-Speed Auto
			ENR = 2.8L 4Cyl Turbo Diesel	DG6 = 4 Speed Auto Transm
			EN0 = 4Cyl Turbo Diesel	DG0 = All Automatic Transm
				DBB = All Manual Transm

Gearshift Controls [42RLE] [DG6] [DG6]
Figure 42RLE-1210

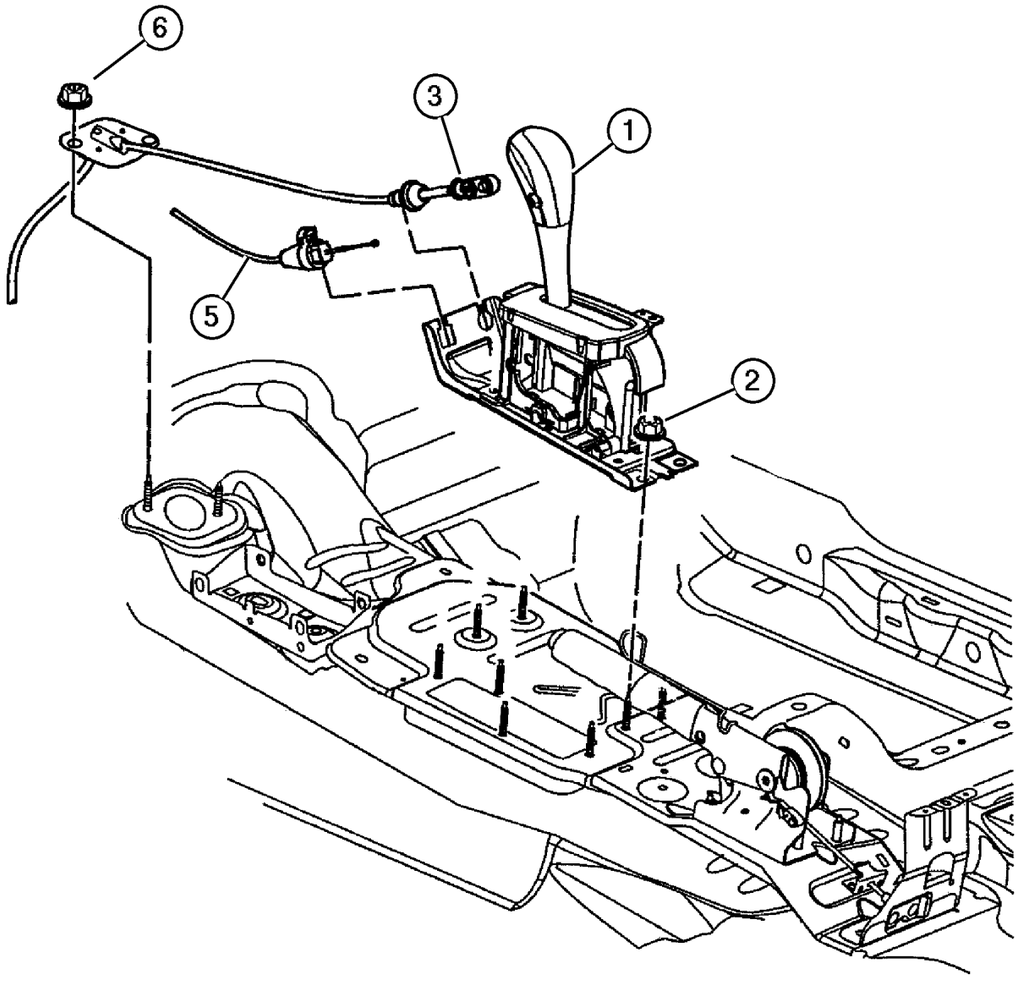

ITEM	PART NUMBER	QTY	LINE	SERIES	BODY	ENGINE	TRANS	TRIM	DESCRIPTION
NOTES:									
Sales Codes									
[DG0] = All Automatic Transmjssions									
1									HOUSING AND LEVER, Shifter
	52104 312AE	1	J, T				DG0		
	52104 313AE	1	U				DG0		
2	6101 444	4							NUT AND WASHER, Hex, M6x1.0
3	#52109 748AA	1					DG6		CABLE, Gearshift Control
-4	#52109 623AB	1					DG6		BRACKET, Shift Cable, Shift Cable Mounting
5	52104 319AC	1					DG0		CABLE, Gearshift Lock
6	6100 047	2							NUT AND WASHER, Hex Nut-Coned Washer, M6 x 1.00
-7	6101 767	2					DG6		SCREW AND WASHER, M8x1.25x25
-8	#52109 749AA	1				EK0	DG6		LEVER, Manual Control

JEEP LIBERTY (KJ)

SERIES	LINE	BODY	ENGINE	TRANSMISSION
P = Limited	J = LHD (4WD)	74 = 4 Dr. (104.3 WB)	ED1, ED0 = 2.4L Power Tech	DDK = 5 Speed HDManual
H = Sport	U = RHD (4WD)		EKG, EK0 = 3.7L Power Tech	DDD = 5 Speed HD Manual
M = Renegade	T = LHD (2WD)		ENJ = 2.5L 4Cyl Turbo Diesel	DG4,DGQ = Multi-Speed Auto
			ENR = 2.8L 4Cyl Turbo Diesel	DG6 = 4 Speed Auto Transm
			EN0 = 4Cyl Turbo Diesel	DG0 = All Automatic Transm
				DBB = All Manual Transm

AR = Use as required - = Non illustrated part # = New this model year **June 3, 2003**

« RETURN TO GROUP INDEX

Group – 45RFE

Automatic Transmission Multi–Speed

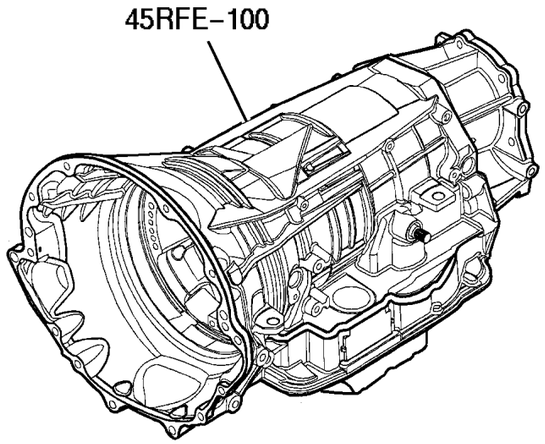

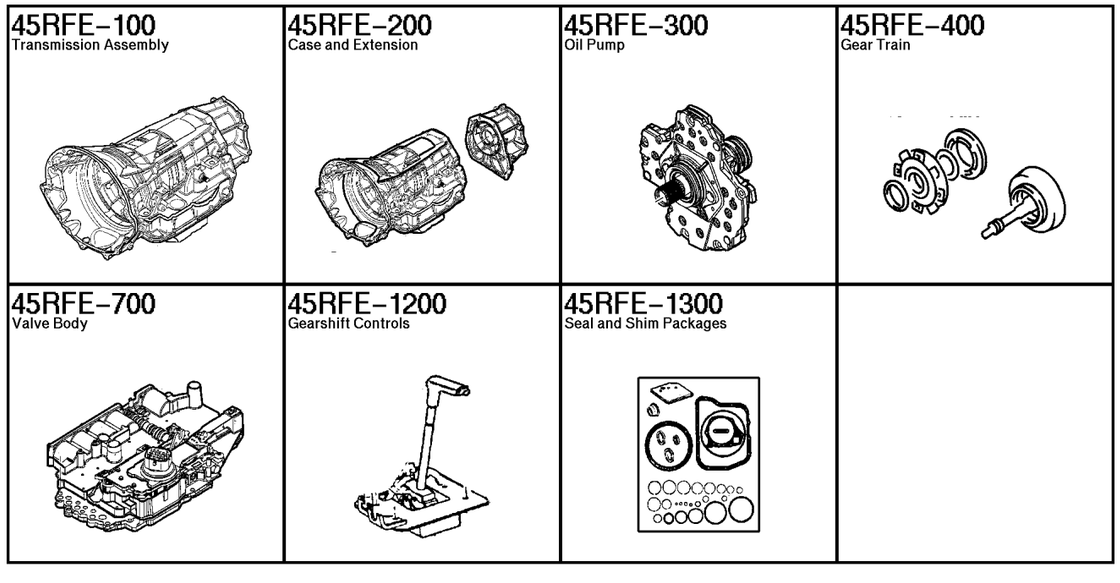

GROUP 45RFE - Automatic Transmission Multi-Speed

Illustration Title	Group-Fig. No.
Transmission Assembly	
Transmission [45RFE] [DG4] [DGQ]	Fig. 45RFE-110
Case and Extension	
Related Parts 45RFE [DG4] [DGQ]	Fig. 45RFE-210
Adapter & Extension [DG4 & DGQ]	Fig. 45RFE-220
Oil Pump	
Oil Pump [45RFE] [DG4] [DGQ]	Fig. 45RFE-310
Gear Train	
Input Shaft [45RFE] [DG4] [DGQ]	Fig. 45RFE-410
Underdrive [45RFE] [DG4] [DGQ]	Fig. 45RFE-420
Overdrive [45RFE] [DG4] [DGQ]	Fig. 45RFE-430
2/4 Clutch Retainer [45RFE] [DG4] [DGQ]	Fig. 45RFE-440
Input/Reverse Planetary [45RFE] [DG4] [DGQ]	Fig. 45RFE-450
Reaction Annulus/Sun Gear [45RFE] [DG4] [DGQ]	Fig. 45RFE-460
Low / Reverse Clutch [DG4, DGQ]	Fig. 45RFE-470
Valve Body	
Valve Body [45RFE] [DG4] [DGQ]	Fig. 45RFE-710
Parking Sprag [45RFE] [DG4] [DGQ]	Fig. 45RFE-730
Gearshift Controls	
Gearshift Controls [45RFE] [DG4] [DGQ]	Fig. 45RFE-1210
Seal and Shim Packages	
LR Clutch [45RFE] [DG4] [DGQ]	Fig. 45RFE-1302
Input Clutch Plate [45RFE] [DG4] [DGQ]	Fig. 45RFE-1303
O/H [45RFE] [DG4] [DGQ]	Fig. 45RFE-1304
Input Clutch [45RFE] [DG4] [DGQ]	Fig. 45RFE-1305
Planetary Plate [45RFE] [DG4] [DGQ]	Fig. 45RFE-1306
2&4 Clutch [45RFE] [DG4] [DGQ]	Fig. 45RFE-1310

Transmission [45RFE] [DG4] [DGQ]
Figure 45RFE-110

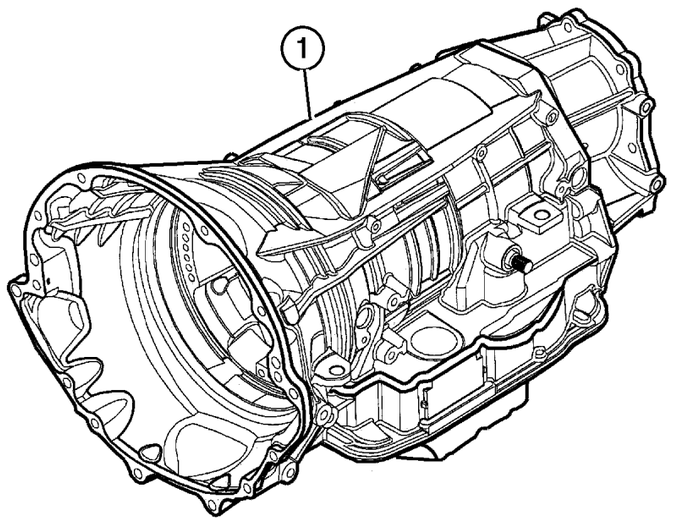

ITEM	PART NUMBER	QTY	LINE	SERIES	BODY	ENGINE	TRANS	TRIM	DESCRIPTION
NOTE; Sales Codes									
[DG4]= Mult - Speed Automatic Transmission 45RFE									
[DGQ]=5 Speed Automatic Transmission 45RFE									
1									TRANSMISSION KIT, Automatic
	#5093 109AA	1	J, U				DG4		
	#5093 110AA	1	T				DG4		
	#5093 121AA	1	J, U			EN0	DGQ		
-2									TORQUE CONVERTER
	4736 582	1	J, U			EN0	DGQ		
	4752 496AA	1	T				DG4		
		1	J, U				DG4		

JEEP LIBERTY (KJ)

SERIES	LINE	BODY	ENGINE	TRANSMISSION
P = Limited	J = LHD (4WD)	74 = 4 Dr. (104.3 WB)	ED1, ED0 = 2.4L Power Tech	DDK = 5 Speed HDManual
H = Sport	U = RHD (4WD)		EKG, EK0 = 3.7L Power Tech	DDD = 5 Speed HD Manual
M = Renegade	T = LHD (2WD)		ENJ = 2.5L 4Cyl Turbo Diesel	DG4,DGQ = Multi-Speed Auto
			ENR = 2.8L 4Cyl Turbo Diesel	DG6 = 4 Speed Auto Transm
			EN0 = 4Cyl Turbo Diesel	DG0 = All Automatic Transm
				DBB = All Manual Transm

AR = Use as required - = Non illustrated part # = New this model year

June 3, 2003

« RETURN TO GROUP INDEX

Related Parts 45RFE [DG4] [DGQ]
Figure 45RFE-210

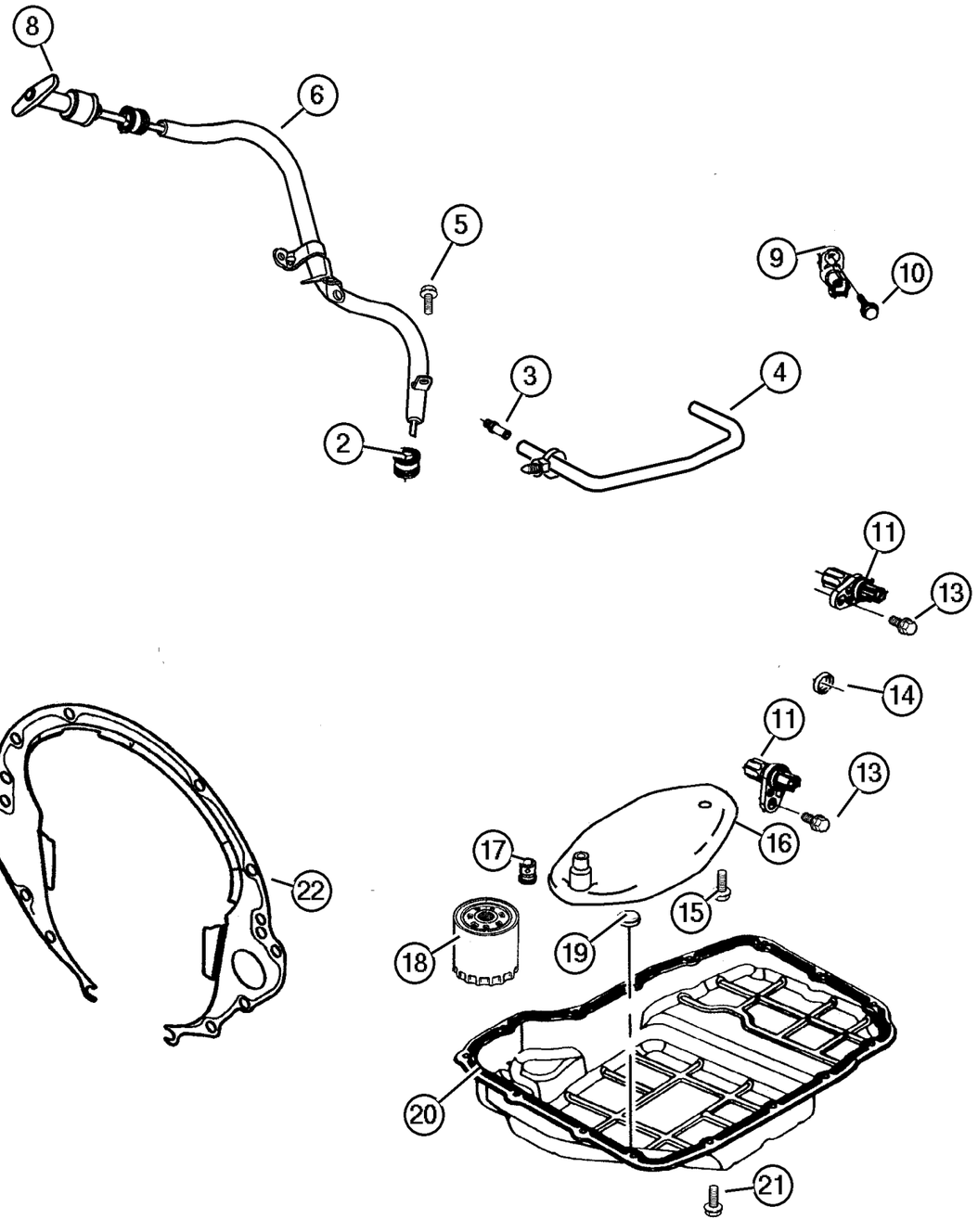

ITEM	PART NUMBER	QTY	LINE	SERIES	BODY	ENGINE	TRANS	TRIM	DESCRIPTION
NOTE; Sales Codes									
[DG4]= Multi - Speed Automatic Transmission 45RFE									
[DGQ]=5 Speed Automatic Transmission 45RFE									
[ED0] = All 2.2,2.5,2.4 L 4 Cylinder Gas Engines									
[EK0] = All 3.7L 6 Cylinder Gas Engines									
-1									OVERHAUL PACKAGE, Transmission
	#5014 221AJ	1	J, U				DG4		
		1	T				DG4		
		1	J, U			EN0	DGQ		
2									GROMMET
	4810 021	1	T				DG4		
		1	J, U				DG4		
		1	J, U			EN0	DGQ		
3									VENT, Transmission
	4799 861AB	1	T				DG4		
		1	J, U				DG4		
		1	J, U			EN0	DGQ		
4	53032 457AA	1					DG4		TUBE, Vent
5	6501 979	6							SCREW AND WASHER, Hex Head, M6x1x17
6									TUBE, Transmission Oil Filler
	52104 332AB	1				EK0	DG4		
	#53013 497AC	1				EN0	DG0		
-7	6506 220AA	1					DG4		SCREW, Hex Flange Head, M6x1x25, Tube to Trans Case
8									INDICATOR, Transmission Fluid Level
	52104 327AB	1					DG4		
	52104 137AB	1					DGQ		
9									TRANSDUCER, Pressure Sensor
	4799 758AC	1	J, U			EN0	DGQ		
		1	T				DG4		
		1	J, U				DG4		
10									SCREW
	6101 221	1	J, U			EN0	DGQ		
		1	T				DG4		
		1	J, U				DG4		
11									SENSOR, Transmission Output Speed
	4799 061	2	T				DG4		

JEEP LIBERTY (KJ)

SERIES	LINE	BODY	ENGINE	TRANSMISSION
P = Limited	J = LHD (4WD)	74 = 4 Dr. (104.3 WB)	ED1, ED0 = 2.4L Power Tech	DDK = 5 Speed HDManual
H = Sport	U = RHD (4WD)		EKG, EK0 = 3.7L Power Tech	DDD = 5 Speed HD Manual
M = Renegade	T = LHD (2WD)		ENJ = 2.5L 4Cyl Turbo Diesel	DG4,DGQ = Multi-Speed Auto
			ENR = 2.8L 4Cyl Turbo Diesel	DG6 = 4 Speed Auto Transm
			EN0 = 4Cyl Turbo Diesel	DG0 = All Automatic Transm
				DBB = All Manual Transm

AR = Use as required - = Non illustrated part # = New this model year **June 3, 2003**

« RETURN TO GROUP INDEX »

Related Parts 45RFE [DG4] [DGQ]
Figure 45RFE-210

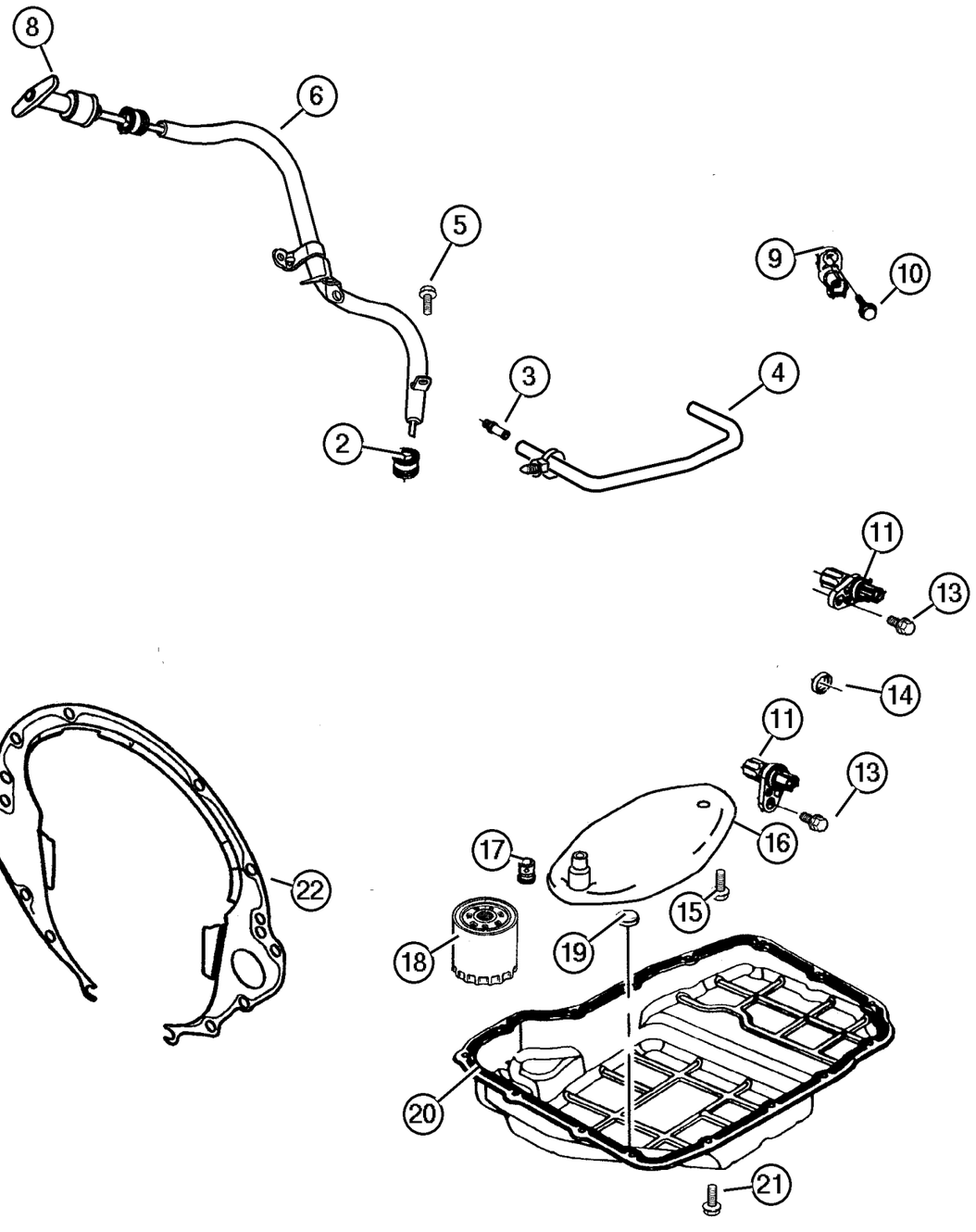

ITEM	PART NUMBER	QTY	LINE	SERIES	BODY	ENGINE	TRANS	TRIM	DESCRIPTION
		2	J, U				DG4		
		2	J, U			EN0	DGQ		
-12									O RING
	4799 062	2	T				DG4		
		2	J, U				DG4		
13									BOLT, M6x1.00x20
	6101 331	2	T				DG4		
		2	J, U				DG4		
		2	J, U			EN0	DGQ		
14									SEAL
	4799 346	1	T				DG4		
		1	J, U				DG4		
		1	J, U			EN0	DGQ		
15									SCREW, Pan Head, M5 x 0.8 x 12.60
	6503 232	7	T				DG4		
		7	J, U				DG4		
		7	J, U			EN0	DGQ		
16									FILTER PACKAGE, Transmission Oil
	5013 470AC	1	J, U				DG4		
	5015 267AC	1	T				DG4		
	5013 470AC	1	J, U			EN0	DGQ		
17									VALVE, Flow Control
	4799 681	1	T				DG4		
		1	J, U				DG4		
		1	J, U			EN0	DGQ		
18									FILTER, Transmission Oil
	4799 662	1	T				DG4		
		1	J, U				DG4		
		1	J, U			EN0	DGQ		
19									MAGNET, Transmission
	4446 728	1	T				DG4		
		1	J, U				DG4		
		1	J, U			EN0	DGQ		
20									PAN, Transmission Oil
	4800 078AA	1	T				DG4		
	5013 681AA	1	J, U				DG4		
		1	J, U			EN0	DGQ		
21									SCREW
	6101 221	15	T				DG4		
		15	J, U				DG4		

JEEP LIBERTY (KJ)

SERIES	LINE	BODY	ENGINE	TRANSMISSION
P = Limited	J = LHD (4WD)	74 = 4 Dr. (104.3 WB)	ED1, ED0 = 2.4L Power Tech	DDK = 5 Speed HDManual
H = Sport	U = RHD (4WD)		EKG, EK0 = 3.7L Power Tech	DDD = 5 Speed HD Manual
M = Renegade	T = LHD (2WD)		ENJ = 2.5L 4Cyl Turbo Diesel	DG4,DGQ = Multi-Speed Auto
			ENR = 2.8L 4Cyl Turbo Diesel	DG6 = 4 Speed Auto Transm
			EN0 = 4Cyl Turbo Diesel	DG0 = All Automatic Transm
				DBB = All Manual Transm

AR = Use as required - = Non illustrated part # = New this model year

June 3, 2003

« RETURN TO GROUP INDEX

Related Parts 45RFE [DG4] [DGQ]
Figure 45RFE-210

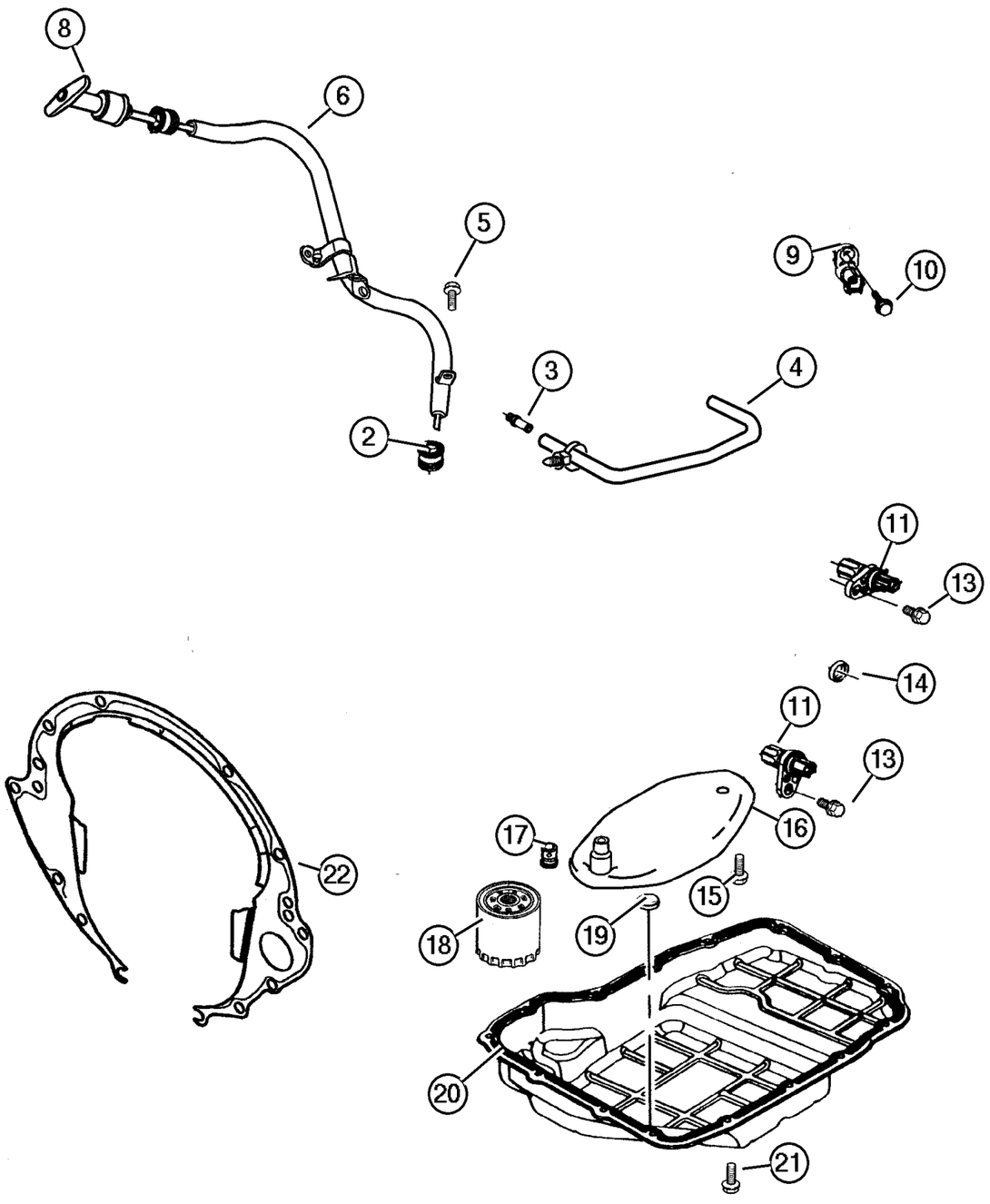

ITEM	PART NUMBER	QTY	LINE	SERIES	BODY	ENGINE	TRANS	TRIM	DESCRIPTION
		15	J, U			EN0	DGQ		
22	52104 344AA	1					DG4		COVER, Transmission Dust
-23	53013 567AA	1				EN0			BRACKET, Engine Cover
-24	4891 547AA	3				EN0			BALL STUD, Engine Cover Attach
-25									NUT, Transmission Case
	4799 433AB	2	T				DG4		
		2	J, U				DG4		
		2	J, U			EN0	DGQ		
-26									SNAP RING, Transmission
	4799 466	1	T				DG4		L/R Retainer to Case
		1	J, U				DG4		L/R Retainer to Case
		1	J, U			EN0	DGQ		
-27									O RING, Control Valve
	6505 335AA	1	T				DG4		
		1	J, U				DG4		
		1	J, U			EN0	DGQ		
-28									SEAL, Insulator
	4799 986AA	1	T				DG4		
		1	J, U				DG4		
-29									SCREW, Pan Head Locking, M5x0.8x30.00
	6505 262AA	6	T				DG4		
		6	J, U				DG4		

JEEP LIBERTY (KJ)

SERIES	LINE	BODY	ENGINE	TRANSMISSION
P = Limited	J = LHD (4WD)	74 = 4 Dr. (104.3 WB)	ED1, ED0 = 2.4L Power Tech	DDK = 5 Speed HDManual
H = Sport	U = RHD (4WD)		EKG, EK0 = 3.7L Power Tech	DDD = 5 Speed HD Manual
M = Renegade	T = LHD (2WD)		ENJ = 2.5L 4Cyl Turbo Diesel	DG4,DGQ = Multi-Speed Auto
			ENR = 2.8L 4Cyl Turbo Diesel	DG6 = 4 Speed Auto Transm
			EN0 = 4Cyl Turbo Diesel	DG0 = All Automatic Transm
				DBB = All Manual Transm

AR = Use as required - = Non illustrated part # = New this model year

June 3, 2003

« RETURN TO GROUP INDEX

Adapter & Extension [DG4 & DGQ]
Figure 45RFE-220

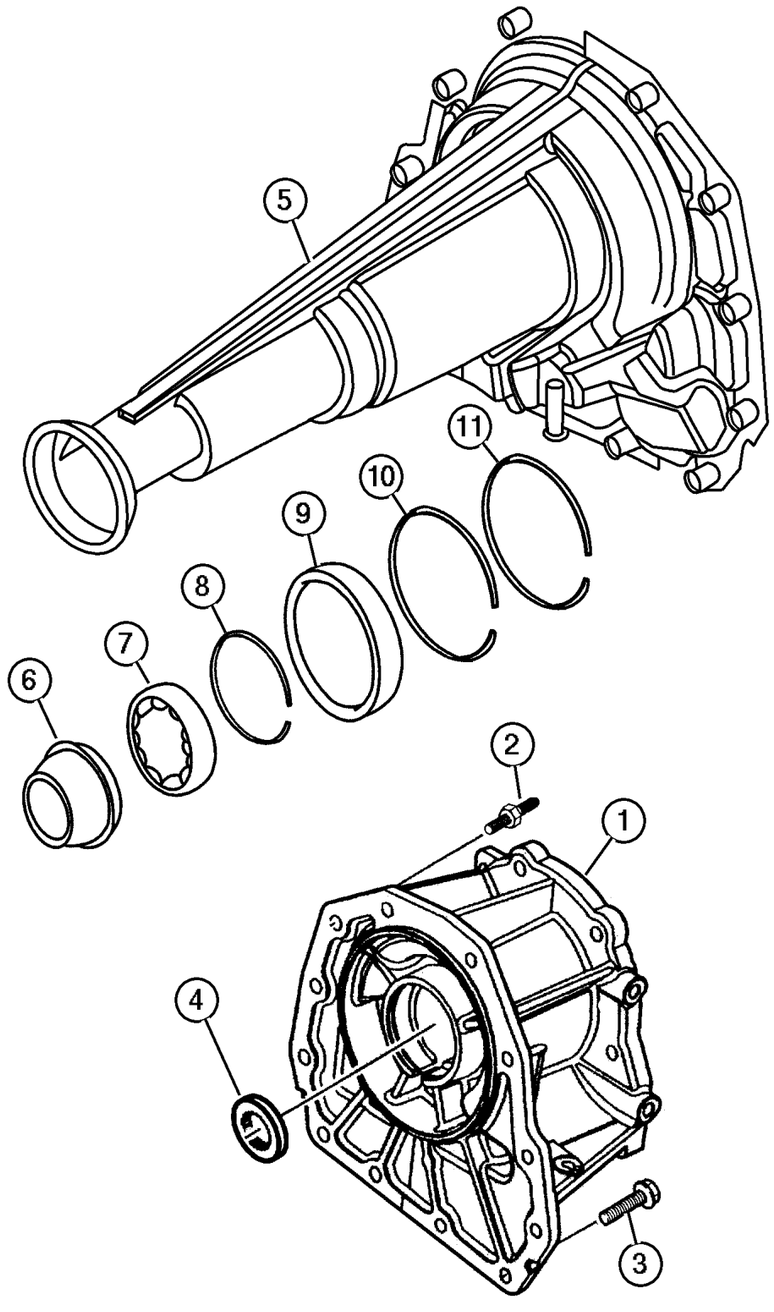

ITEM	PART NUMBER	QTY	LINE	SERIES	BODY	ENGINE	TRANS	TRIM	DESCRIPTION
NOTE:									
Sales Code:									
[DG4]=Multy Speed Automatic Transmission									
1	52104 357AA	1	J, U			EN0	DGQ		ADAPTER, Transfer Case
2									STUD, M10x1.5x62
	6505 064AA	2	J, U			EN0	DGQ		
		2	T				DG4		
3									SCREW AND WASHER, Hex Head, M10x1.5x37
	6504 774	10	J, U			EN0	DGQ		
		10	T				DG4		
4									SEAL, Input
	4799 090	1	J, U			EN0	DGQ		
		1	T				DG4		
5	4799 495	1	T				DG4		HOUSING, Transmission Rear Extension
6	4531 216AB	1	T				DG4		SEAL, Output Shaft
7	2466 224	1	T				DG4		BEARING, Output Shaft
8	4461 069	1	T				DG4		SNAP RING
9	5086 303AA	1	T				DG4		BEARING, Input Gear
10	5086 304AA	1	T				DG4		SNAP RING
11	5086 314AA	1	T				DG4		SNAP RING

JEEP LIBERTY (KJ)

SERIES	LINE	BODY	ENGINE	TRANSMISSION
P = Limited	J = LHD (4WD)	74 = 4 Dr. (104.3 WB)	ED1, ED0 = 2.4L Power Tech	DDK = 5 Speed HDManual
H = Sport	U = RHD (4WD)		EKG, EK0 = 3.7L Power Tech	DDD = 5 Speed HD Manual
M = Renegade	T = LHD (2WD)		ENJ = 2.5L 4Cyl Turbo Diesel	DG4,DGQ = Multi-Speed Auto
			ENR = 2.8L 4Cyl Turbo Diesel	DG6 = 4 Speed Auto Transm
			EN0 = 4Cyl Turbo Diesel	DG0 = All Automatic Transm
				DBB = All Manual Transm

AR = Use as required - = Non illustrated part # = New this model year **June 3, 2003**

« RETURN TO GROUP INDEX

Oil Pump [45RFE] [DG4] [DGQ]
Figure 45RFE-310

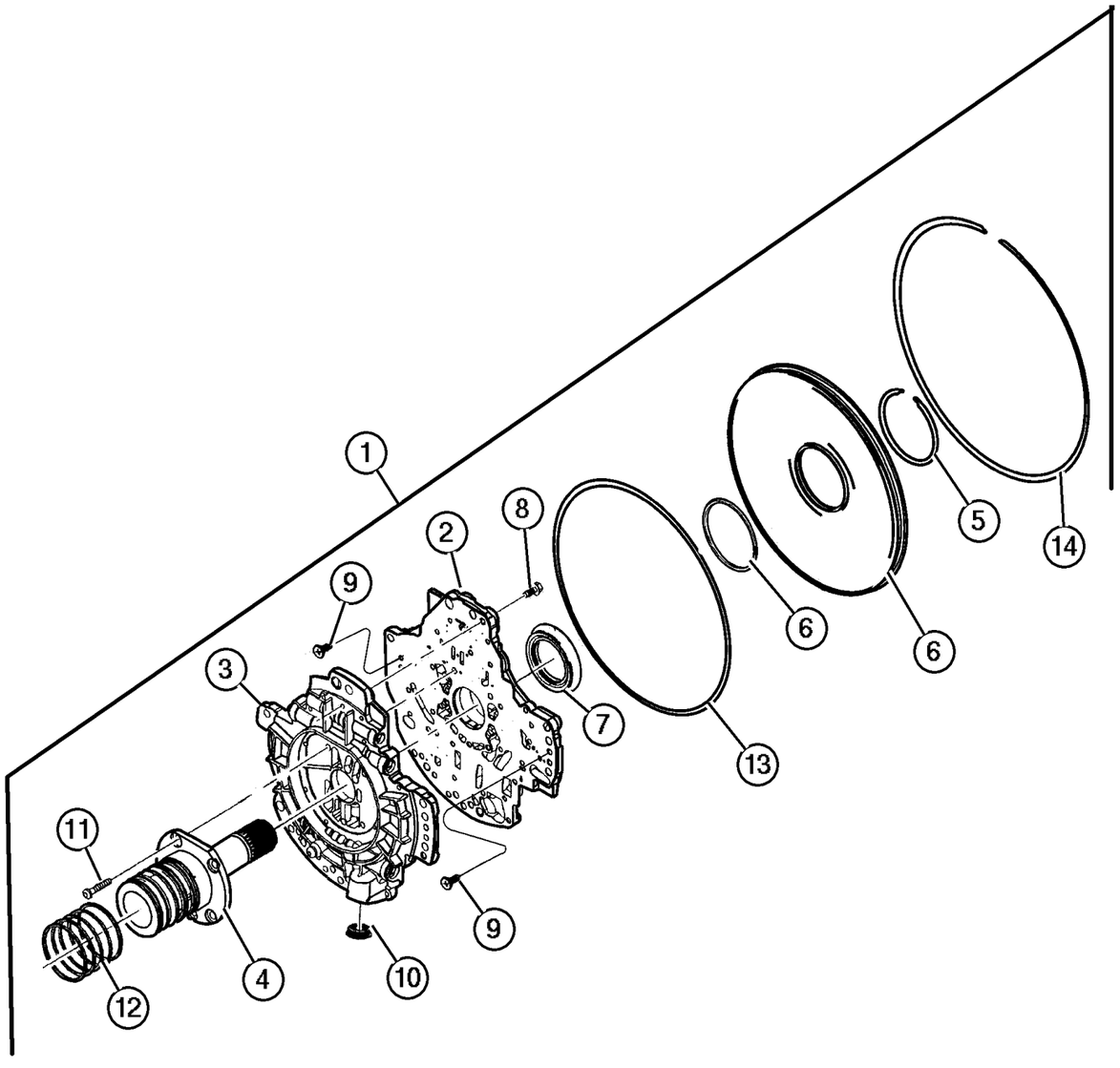

ITEM	PART NUMBER	QTY	LINE	SERIES	BODY	ENGINE	TRANS	TRIM	DESCRIPTION
NOTE; Sales Codes									
[DG4]= Multi - Speed Automatic Transmission 45RFE									
[DGQ]=5 Speed Automatic Transmission 45RFE									
1									PUMP PACKAGE, Transmission
	#5073 004AB	1	T				DG4		
		1	J, U				DG4		
		1	J, U			EN0	DGQ		
2									HOUSING, Pump, (NOT SERVICED) (Not Serviced)
3									BODY, Oil Pump Valve, (NOT SERVICED) (Not Serviced)
4									SUPPORT, Reaction Shaft, (NOT SERVICED) (Not Serviced)
5									SNAP RING, Transmission
	4799 082	1	T				DG4		
		1	J, U				DG4		
		1	J, U			EN0	DGQ		
6									COVER, Oil Pump
	4799 609	1	T				DG4		
		1	J, U				DG4		
		1	J, U			EN0	DGQ		
7									SEAL, Transmission Oil Pump
	4617 919	1	T				DG4		
		1	J, U				DG4		
		1	J, U			EN0	DGQ		
8									SCREW AND WASHER, Pan Head, M5x.8x25
	6500 215	24	T				DG4		
		24	J, U				DG4		
		24	J, U			EN0	DGQ		
9									SCREW, Pan Head, M5 x 0.8 x 12.60
	6503 232	2	T				DG4		
		2	J, U				DG4		
		2	J, U			EN0	DGQ		
10									SEAL, Oil Pump
	4799 964AB	1	T				DG4		
		1	J, U				DG4		
		1	J, U			EN0	DGQ		
11									SCREW, Button Head
	6504 661	5	T				DG4		
		5	J, U				DG4		

JEEP LIBERTY (KJ)

SERIES	LINE	BODY	ENGINE	TRANSMISSION
P = Limited	J = LHD (4WD)	74 = 4 Dr. (104.3 WB)	ED1, ED0 = 2.4L Power Tech	DDK = 5 Speed HDManual
H = Sport	U = RHD (4WD)		EKG, EK0 = 3.7L Power Tech	DDD = 5 Speed HD Manual
M = Renegade	T = LHD (2WD)		ENJ = 2.5L 4Cyl Turbo Diesel	DG4,DGQ = Multi-Speed Auto
			ENR = 2.8L 4Cyl Turbo Diesel	DG6 = 4 Speed Auto Transm
			EN0 = 4Cyl Turbo Diesel	DG0 = All Automatic Transm
				DBB = All Manual Transm

AR = Use as required - = Non illustrated part # = New this model year **June 3, 2003**

« RETURN TO GROUP INDEX »

Oil Pump [45RFE] [DG4] [DGQ]
Figure 45RFE-310

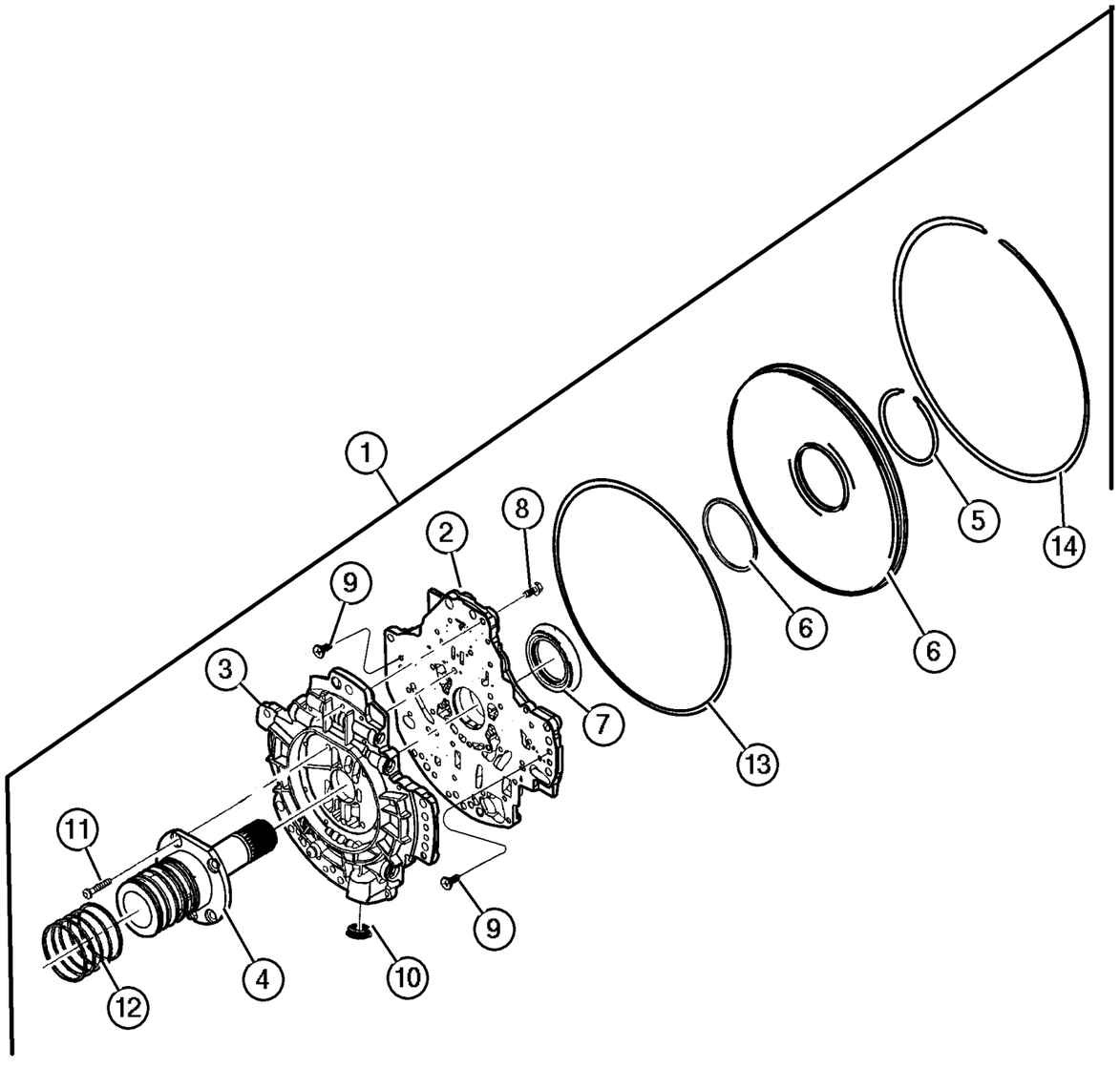

ITEM	PART NUMBER	QTY	LINE	SERIES	BODY	ENGINE	TRANS	TRIM	DESCRIPTION
		5	J, U			EN0	DGQ		
12									RING, Transmission
	4799 056AB	5	T				DG4		
		5	J, U				DG4		
		5	J, U			EN0	DGQ		
13									O RING, Oil Pump, .
	4799 003	1	T				DG4		
		1	J, U				DG4		
		1	J, U			EN0	DGQ		
14									SNAP RING, Transmission
	4799 005	1	T				DG4		
		1	J, U				DG4		
		1	J, U			EN0	DGQ		
-15									SEAL, Torque Converter Hub
	4736 547	1	T				DG4		
		1	J, U				DG4		

JEEP LIBERTY (KJ)

SERIES	LINE	BODY	ENGINE	TRANSMISSION
P = Limited	J = LHD (4WD)	74 = 4 Dr. (104.3 WB)	ED1, ED0 = 2.4L Power Tech	DDK = 5 Speed HDManual
H = Sport	U = RHD (4WD)		EKG, EK0 = 3.7L Power Tech	DDD = 5 Speed HD Manual
M = Renegade	T = LHD (2WD)		ENJ = 2.5L 4Cyl Turbo Diesel	DG4,DGQ = Multi-Speed Auto
			ENR = 2.8L 4Cyl Turbo Diesel	DG6 = 4 Speed Auto Transm
			EN0 = 4Cyl Turbo Diesel	DG0 = All Automatic Transm
				DBB = All Manual Transm

AR = Use as required - = Non illustrated part # = New this model year **June 3, 2003**

« RETURN TO GROUP INDEX

Input Shaft [45RFE] [DG4] [DGQ]
Figure 45RFE-410

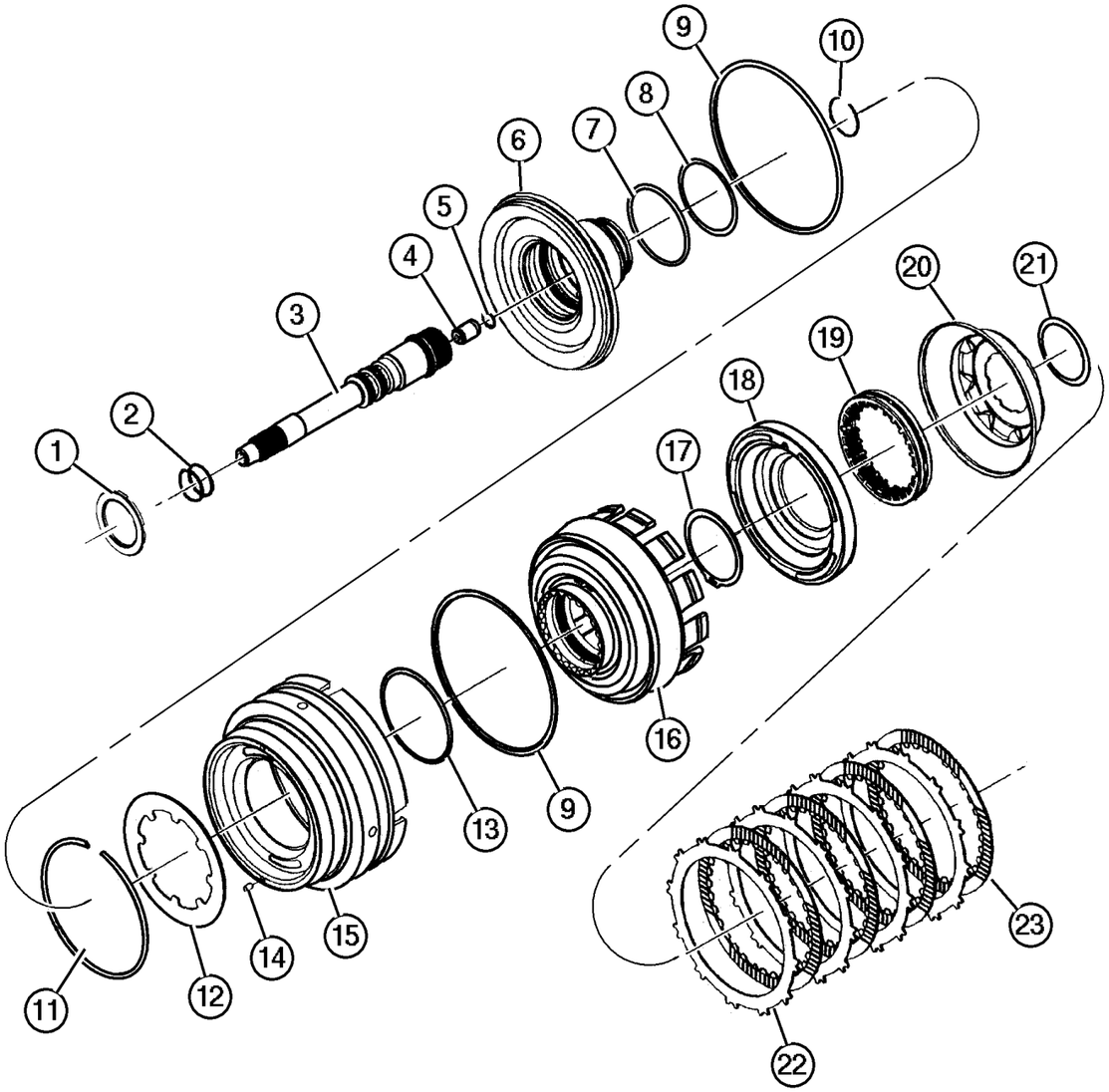

ITEM	PART NUMBER	QTY	LINE	SERIES	BODY	ENGINE	TRANS	TRIM	DESCRIPTION
NOTE; Sales Codes									
[DG4]= Multi - Speed Automatic Transmission 45RFE									
[DGQ]=5 Speed Automatic Transmission 45RFE									
1									THRUST BEARING, Needle Roller
	4799 469	1	T				DG4		
		1	J, U				DG4		
		1	J, U			EN0	DGQ		
2									SEAL, Input Shaft, PKG 05013090AA
	4799 539	2	T				DG4		
		2	J, U				DG4		
		2	J, U			EN0	DGQ		
3									SHAFT, Input
	4799 537	1	T				DG4		
		1	J, U				DG4		
		1	J, U			EN0	DGQ		
4									CHECK VALVE, Transmission
	4799 974AA	1	T				DG4		
		1	J, U				DG4		
		1	J, U			EN0	DGQ		
5									SNAP RING
	4799 978AA	1	T				DG4		
		1	J, U				DG4		
		1	J, U			EN0	DGQ		
6									HUB, Input Clutch
	4799 536AC	1	T				DG4		
		1	J, U				DG4		
		1	J, U			EN0	DGQ		
7									O RING, Transmission Clutch, PKG 05013090AA
	4799 073	1	T				DG4		
		1	J, U				DG4		
		1	J, U			EN0	DGQ		
8									O RING, Transmission Clutch, PKG 05013090AA
	4799 755	1	J, U				DG4		Input Hub to Retainer (Small)
		1	T				DG4		Input Hub to Retainer (Small)
		1	J, U			EN0	DGQ		Input Hub to Retainer (Small)
	4799 073	1	J, U				DG4		Input Clutch Hub (Large)
		1	J, U			EN0	DGQ		Input Clutch Hub (Large)
		1	T				DG4		Input Clutch Hub (Large)
9									SEAL, Input, PKG 05013090AA

JEEP LIBERTY (KJ)

SERIES	LINE	BODY	ENGINE	TRANSMISSION
P = Limited	J = LHD (4WD)	74 = 4 Dr. (104.3 WB)	ED1, ED0 = 2.4L Power Tech	DDK = 5 Speed HDManual
H = Sport	U = RHD (4WD)		EKG, EK0 = 3.7L Power Tech	DDD = 5 Speed HD Manual
M = Renegade	T = LHD (2WD)		ENJ = 2.5L 4Cyl Turbo Diesel	DG4,DGQ = Multi-Speed Auto
			ENR = 2.8L 4Cyl Turbo Diesel	DG6 = 4 Speed Auto Transm
			EN0 = 4Cyl Turbo Diesel	DG0 = All Automatic Transm
				DBB = All Manual Transm

AR = Use as required - = Non illustrated part # = New this model year **June 3, 2003**

« RETURN TO GROUP INDEX »

Input Shaft [45RFE] [DG4] [DGQ]
Figure 45RFE-410

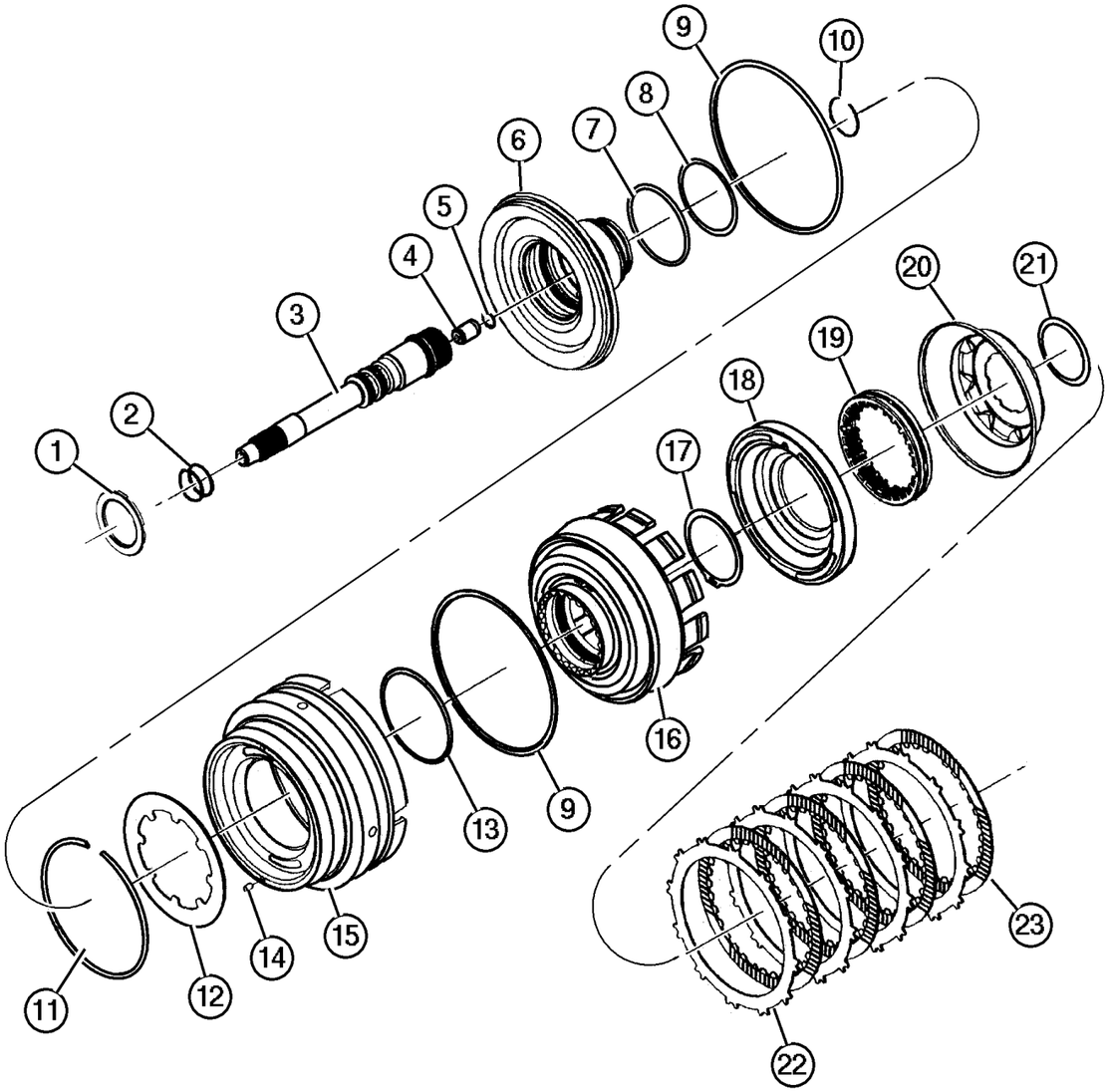

ITEM	PART NUMBER	QTY	LINE	SERIES	BODY	ENGINE	TRANS	TRIM	DESCRIPTION
	4799 090	1	T				DG4		
		1	J, U				DG4		
		1	J, U			EN0	DGQ		
10									SNAP RING, Input Shaft
	4799 538	1	T				DG4		
		1	J, U				DG4		
		1	J, U			EN0	DGQ		
11									SNAP RING, Transmission
	4799 088	1	T				DG4		
		1	J, U				DG4		
		1	J, U			EN0	DGQ		
12									SPRING, Piston Return
	4799 087	1	T				DG4		
		1	J, U				DG4		
		1	J, U			EN0	DGQ		
13									O RING, Reverse & O/Drive Clutch Piston, Transmission, PKG 05013090AA
	4799 089	1	T				DG4		
		1	J, U				DG4		
		1	J, U			EN0	DGQ		
14									FILTER, Reverse And O/D Clutch
	4531 903	1	T				DG4		
		1	J, U				DG4		
		1	J, U			EN0	DGQ		
15									PISTON, Reverse and Overdrive
	5073 525AA	1	J, U				DG4		
		1	T				DG4		
		1	J, U			EN0	DGQ		
16									RETAINER, Transmission Input Clutch
	4799 648	1	T				DG4		
		1	J, U				DG4		
		1	J, U			EN0	DGQ		
17									SNAP RING
	4799 247	1	T				DG4		
		1	J, U				DG4		
		1	J, U			EN0	DGQ		
18									PISTON, Underdrive
	4799 650	1	T				DG4		
		1	J, U				DG4		

JEEP LIBERTY (KJ)

SERIES	LINE	BODY	ENGINE	TRANSMISSION
P = Limited	J = LHD (4WD)	74 = 4 Dr. (104.3 WB)	ED1, ED0 = 2.4L Power Tech	DDK = 5 Speed HDManual
H = Sport	U = RHD (4WD)		EKG, EK0 = 3.7L Power Tech	DDD = 5 Speed HD Manual
M = Renegade	T = LHD (2WD)		ENJ = 2.5L 4Cyl Turbo Diesel	DG4,DGQ = Multi-Speed Auto
			ENR = 2.8L 4Cyl Turbo Diesel	DG6 = 4 Speed Auto Transm
			EN0 = 4Cyl Turbo Diesel	DG0 = All Automatic Transm
				DBB = All Manual Transm

Input Shaft [45RFE] [DG4] [DGQ]
Figure 45RFE-410

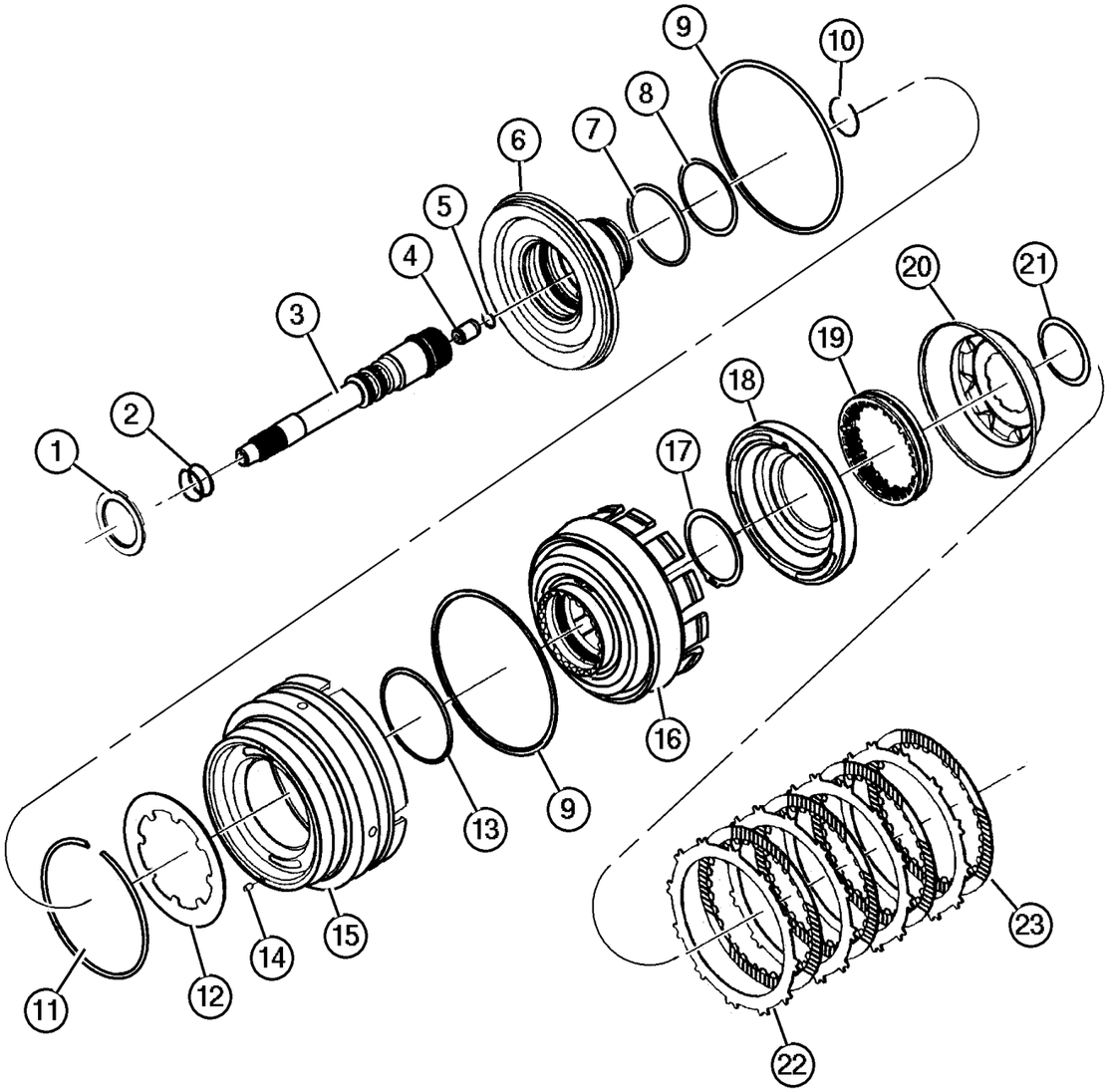

ITEM	PART NUMBER	QTY	LINE	SERIES	BODY	ENGINE	TRANS	TRIM	DESCRIPTION
		1	J, U			EN0	DGQ		
19									SPRING, Undredrive Piston, PKG 05013090AA
	4799 101	1	T				DG4		
		1	J, U				DG4		
		1	J, U			EN0	DGQ		
20									PISTON, Underdrive
	4799 652	1	J, U			EN0	DGQ		
		1	J, U				DG4		
		1	T				DG4		
21									SNAP RING, Transmission, PKG 05013090AA
	4799 103	1	T				DG4		
		1	J, U				DG4		
		1	J, U			EN0	DGQ		
22									PLATE, PKG 05013090AA, (NOT SERVICED) (Not Serviced)
23									DISC, Clutch, PKG 05013090AA, (NOT SERVICED) (Not Serviced)
-24									BEARING, Input Gear
	4746 155	1	J, U			EN0			
	5086 303AA	1	T				DG4		Input Retainer to Hub Snap Ring
-25									SNAP RING
	5086 304AA	1	T				DG4		
	5072 304AA	1	J, U						
	4799 097	1	J, U				DG4		Input Retainer to Hub
		1	T				DG4		Input Retainer to Hub
-26	5086 314AA	1	T				DG4		SNAP RING

JEEP LIBERTY (KJ)

SERIES	LINE	BODY	ENGINE	TRANSMISSION
P = Limited	J = LHD (4WD)	74 = 4 Dr. (104.3 WB)	ED1, ED0 = 2.4L Power Tech	DDK = 5 Speed HDManual
H = Sport	U = RHD (4WD)		EKG, EK0 = 3.7L Power Tech	DDD = 5 Speed HD Manual
M = Renegade	T = LHD (2WD)		ENJ = 2.5L 4Cyl Turbo Diesel	DG4,DGQ = Multi-Speed Auto
			ENR = 2.8L 4Cyl Turbo Diesel	DG6 = 4 Speed Auto Transm
			EN0 = 4Cyl Turbo Diesel	DG0 = All Automatic Transm
				DBB = All Manual Transm

Underdrive [45RFE] [DG4] [DGQ]
Figure 45RFE-420

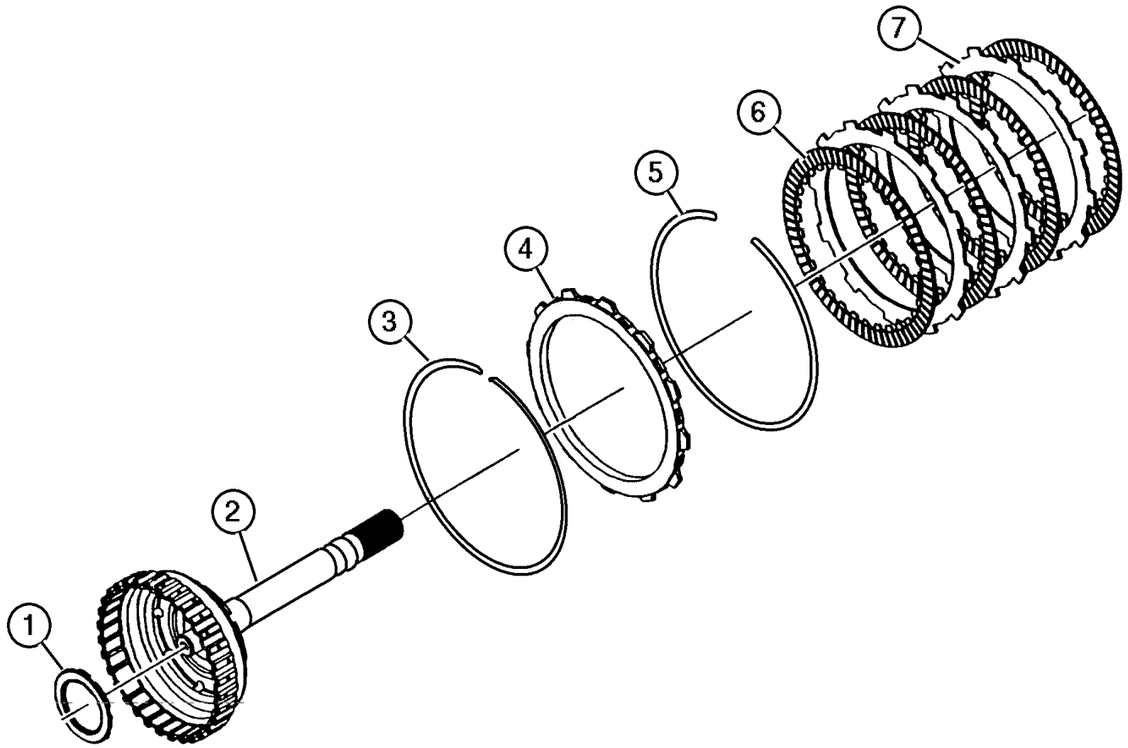

ITEM	PART NUMBER	QTY	LINE	SERIES	BODY	ENGINE	TRANS	TRIM	DESCRIPTION
NOTE; Sales Codes									
[DG4]= Mult - Speed Automatic Transmission 45RFE									
[DGQ]=5 Speed Automatic Transmission 45RFE									
1									THRUST BEARING, Needle Roller
	4799 459	1	T				DG4		
		1	J, U				DG4		
		1	J, U			EN0	DGQ		
2									HUB AND SHAFT, Underdrive Clutch
	4799 546	1	T				DG4		
		1	J, U				DG4		
		1	J, U			EN0	DGQ		
3									SNAP RING, Transmission
	4799 760	1	T				DG4		
		1	J, U				DG4		
		1	J, U			EN0	DGQ		
4									PLATE, Transmission Clutch Reaction
	#4799 108AD	AR	T				DG4		Under & Over Drive
		AR	J, U				DG4		
		AR	J, U			EN0	DGQ		
5									SNAP RING, Serviced In Pkg. (05013090AA), (NOT SERVICED) (Not Serviced)
6									DISC, Clutch, Serviced In Pkg. (05013090AA), (NOT SERVICED) (Not Serviced)
7									PLATE, Serviced In Pkg. (05013090AA), (NOT SERVICED) (Not Serviced)
-8									PLATE, Transmission Clutch Reaction
	4799 667	1	T				DG4		Low/Reverse Clutch
		1	J, U				DG4		Low/Reverse Clutch
		1	J, U			EN0	DGQ		Low/Reverse Clutch
-9									PLATE, Transmission Clutch Reaction
	4799 687AB	1	T				DG4		2nd Clutch
		1	J, U				DG4		2nd Clutch
		1	J, U			EN0	DGQ		2nd Clutch

JEEP LIBERTY (KJ)

SERIES	LINE	BODY	ENGINE	TRANSMISSION
P = Limited	J = LHD (4WD)	74 = 4 Dr. (104.3 WB)	ED1, ED0 = 2.4L Power Tech	DDK = 5 Speed HDManual
H = Sport	U = RHD (4WD)		EKG, EK0 = 3.7L Power Tech	DDD = 5 Speed HD Manual
M = Renegade	T = LHD (2WD)		ENJ = 2.5L 4Cyl Turbo Diesel	DG4,DGQ = Multi-Speed Auto
			ENR = 2.8L 4Cyl Turbo Diesel	DG6 = 4 Speed Auto Transm
			EN0 = 4Cyl Turbo Diesel	DG0 = All Automatic Transm
				DBB = All Manual Transm

AR = Use as required - = Non illustrated part # = New this model year **June 3, 2003**

« RETURN TO GROUP INDEX

Overdrive [45RFE] [DG4] [DGQ]
Figure 45RFE-430

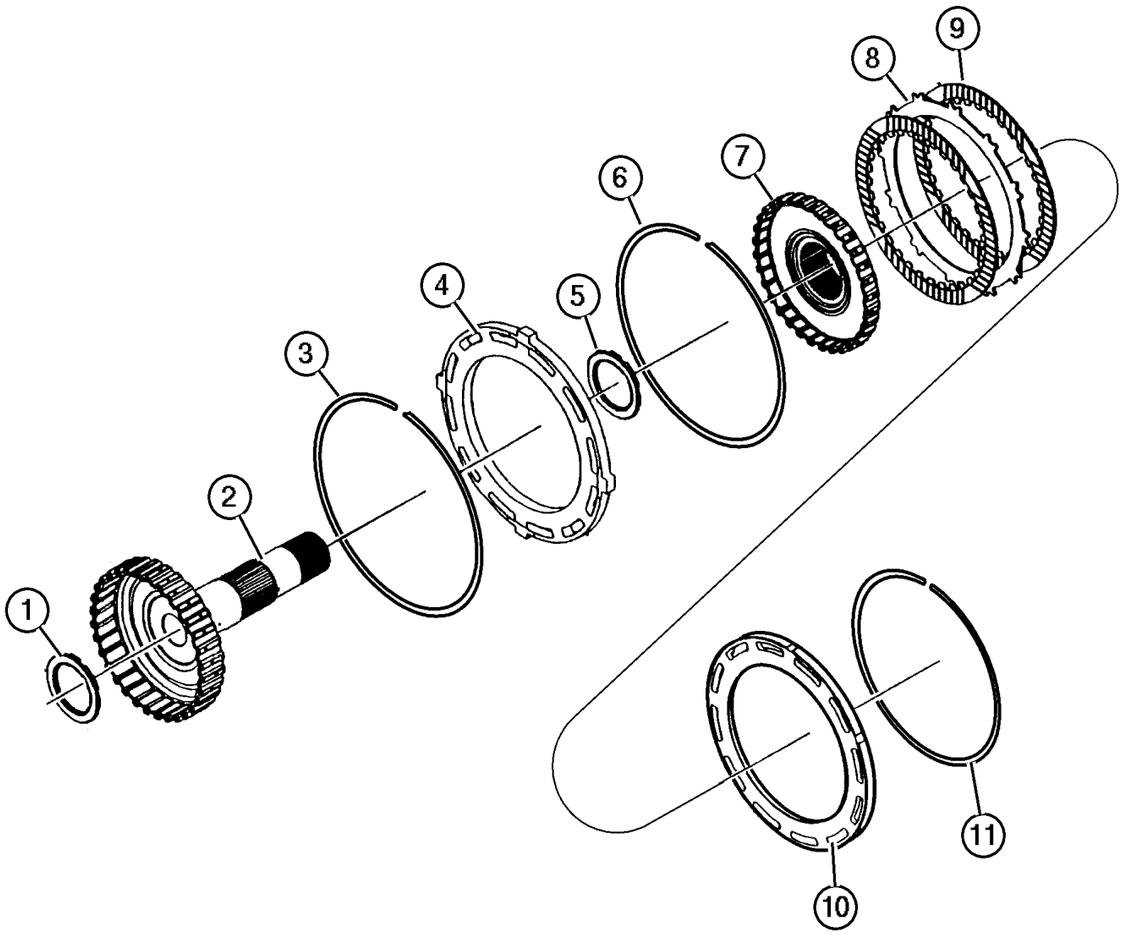

ITEM	PART NUMBER	QTY	LINE	SERIES	BODY	ENGINE	TRANS	TRIM	DESCRIPTION
NOTE; Sales Codes									
[DG4]= Multi - Speed Automatic Transmission 45RFE									
[DGQ]=5 Speed Automatic Transmission 45RFE									
1									THRUST BEARING, Needle Roller
	4799 469	1	T				DG4		
		1	J, U				DG4		
		1	J, U			EN0	DGQ		
2									HUB AND SHAFT, Overdrive Clutch
	4799 550	1	T				DG4		
		1	J, U				DG4		
		1	J, U			EN0	DGQ		
3									SNAP RING, Overdrive Clutch
	4799 118	1	T				DG4		
		1	J, U				DG4		
		1	J, U			EN0	DGQ		
4									PLATE, Clutch Pressure
	#4799 116AB	1	T				DG4		
		1	J, U				DG4		
		1	J, U			EN0	DGQ		
5									THRUST BEARING, Needle Roller
	4799 469	1	T				DG4		
		1	J, U				DG4		
		1	J, U			EN0	DGQ		
6									SNAP RING, Transmission
	4799 117	1	T				DG4		
		1	J, U				DG4		
		1	J, U			EN0	DGQ		
7									HUB AND SHAFT, Reverse Clutch
	4799 556	1	T				DG4		
		1	J, U				DG4		
		1	J, U			EN0	DGQ		
8									PLATE, PKG 05013090AA, (NOT SERVICED) (Not Serviced)
9									DISC, Clutch, PKG 05013090AA, (NOT SERVICED) (Not Serviced)
10									PLATE, Transmission Clutch Reaction
	4799 121	1	T				DG4		
		1	J, U				DG4		
		1	J, U			EN0	DGQ		
11									SNAP RING, PKG 05013090AA, (NOT SERVICED) (Not Serviced)

JEEP LIBERTY (KJ)

SERIES	LINE	BODY	ENGINE	TRANSMISSION
P = Limited	J = LHD (4WD)	74 = 4 Dr. (104.3 WB)	ED1, ED0 = 2.4L Power Tech	DDK = 5 Speed HDManual
H = Sport	U = RHD (4WD)		EKG, EK0 = 3.7L Power Tech	DDD = 5 Speed HD Manual
M = Renegade	T = LHD (2WD)		ENJ = 2.5L 4Cyl Turbo Diesel	DG4,DGQ = Multi-Speed Auto
			ENR = 2.8L 4Cyl Turbo Diesel	DG6 = 4 Speed Auto Transm
			EN0 = 4Cyl Turbo Diesel	DG0 = All Automatic Transm
				DBB = All Manual Transm

AR = Use as required - = Non illustrated part # = New this model year **June 3, 2003**

« RETURN TO GROUP INDEX

2/4 Clutch Retainer [45RFE] [DG4] [DGQ]
Figure 45RFE-440

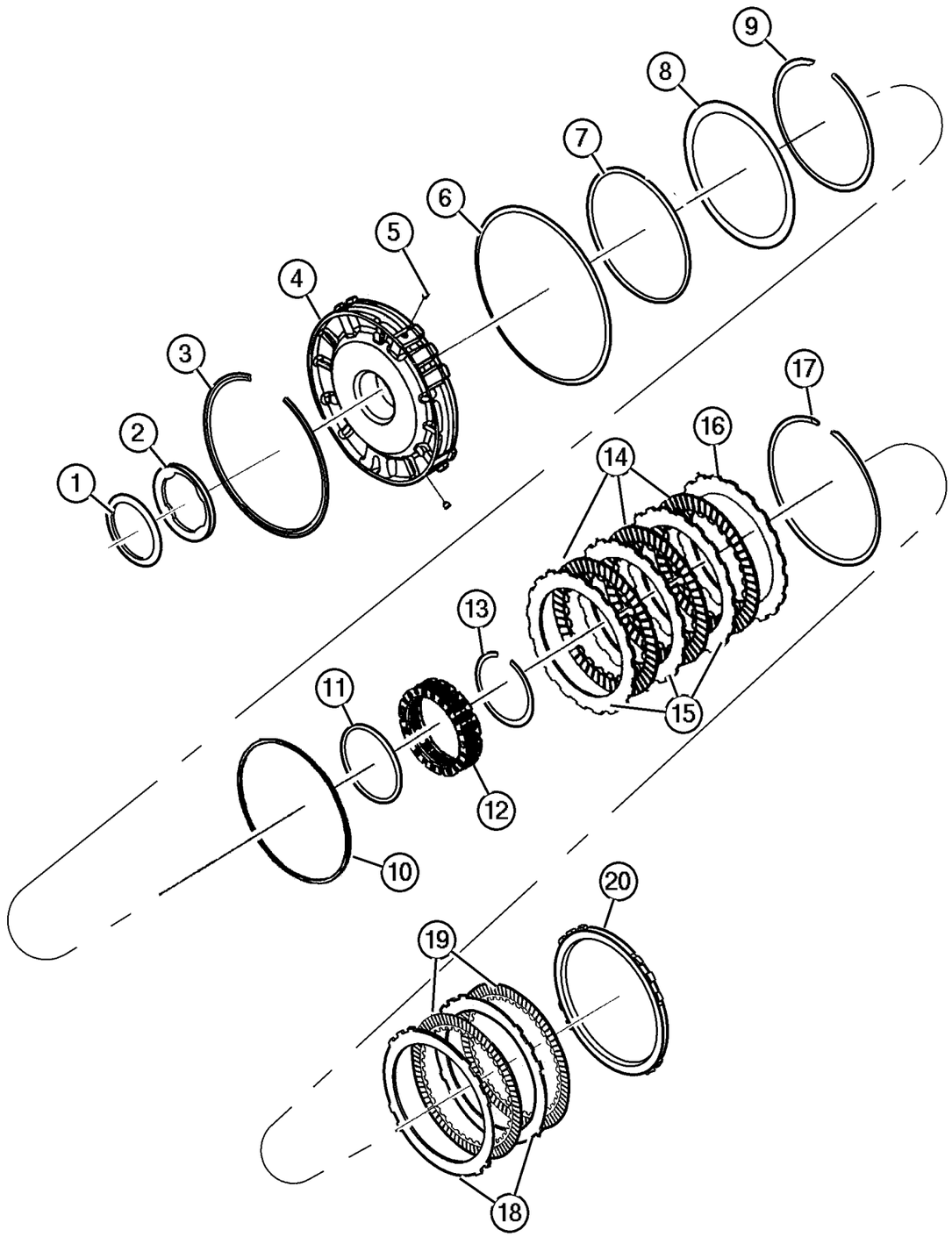

ITEM	PART NUMBER	QTY	LINE	SERIES	BODY	ENGINE	TRANS	TRIM	DESCRIPTION
NOTE; Sales Codes									
[DG4]= Multi -Speed Automatic Transmission 45RFE									
[DGQ]=5 Speed Automatic Transmission 45RFE									
1									THRUST BEARING, Needle Roller
	4799 936AB	1	T				DG4		
		1	J, U				DG4		
		1	J, U			EN0	DGQ		
2									PLATE, Clutch Hub Thrust, PKG 05013093AB, (NOT SERVICED) (Not Serviced)
3									SNAP RING, Transmission
	4799 680AB	1	T				DG4		
		1	J, U				DG4		
		1	J, U			EN0	DGQ		
4									RETAINER, Transmission 2nd and 4th Clutch Piston
	#4799 498AB	1	T				DG4		
		1	J, U				DG4		
		1	J, U			EN0	DGQ		
5									BLEED ORIFICE, Transmission
	4799 086	1	T				DG4		
		1	J, U				DG4		
		1	J, U			EN0	DGQ		
6									SNAP RING, Transmission
	4799 174	1	T				DG4		
		1	J, U				DG4		
		1	J, U			EN0	DGQ		
7									RING, PKG 05013093AB, (NOT SERVICED) (Not Serviced)
8									SPRING, 2nd And 4th Clutch Piston
	4799 521	1	T				DG4		
		1	J, U				DG4		
		1	J, U			EN0	DGQ		
9									SNAP RING, Transmission
	4799 522AB	1	T				DG4		
		1	J, U				DG4		
		1	J, U			EN0	DGQ		
10									RING, PKG 05013093AB, (NOT SERVICED) (Not Serviced)
11									RING, PKG 05013093AB, (NOT SERVICED) (Not Serviced)
12									SPRING, 2nd And 4th Clutch Piston

JEEP LIBERTY (KJ)

SERIES	LINE	BODY	ENGINE	TRANSMISSION
P = Limited	J = LHD (4WD)	74 = 4 Dr. (104.3 WB)	ED1, ED0 = 2.4L Power Tech	DDK = 5 Speed HDManual
H = Sport	U = RHD (4WD)		EKG, EK0 = 3.7L Power Tech	DDD = 5 Speed HD Manual
M = Renegade	T = LHD (2WD)		ENJ = 2.5L 4Cyl Turbo Diesel	DG4,DGQ = Multi-Speed Auto
			ENR = 2.8L 4Cyl Turbo Diesel	DG6 = 4 Speed Auto Transm
			EN0 = 4Cyl Turbo Diesel	DG0 = All Automatic Transm
				DBB = All Manual Transm

AR = Use as required - = Non illustrated part # = New this model year **June 3, 2003**

« RETURN TO GROUP INDEX »

2/4 Clutch Retainer [45RFE] [DG4] [DGQ]
Figure 45RFE-440

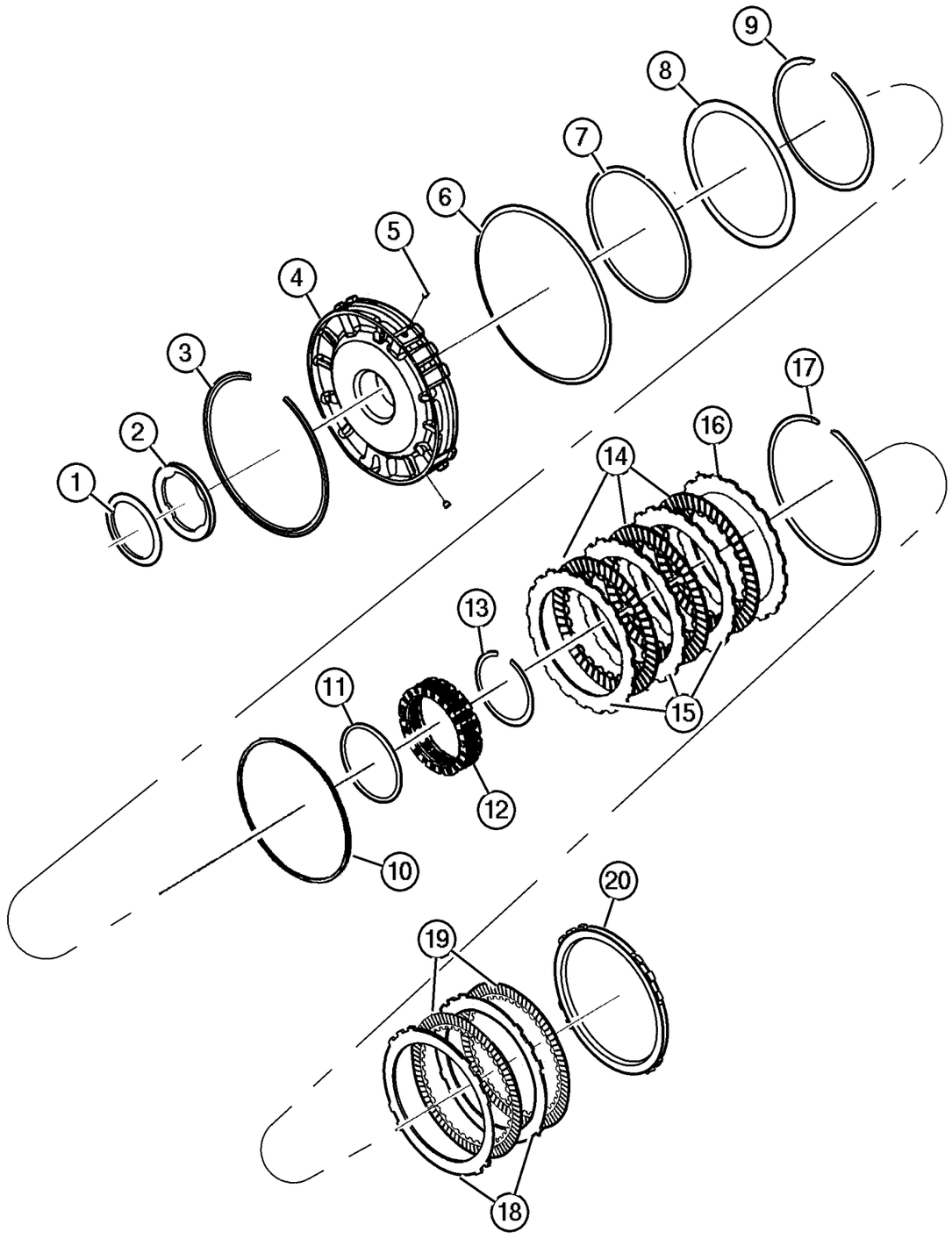

ITEM	PART NUMBER	QTY	LINE	SERIES	BODY	ENGINE	TRANS	TRIM	DESCRIPTION
	4799 527AB	1	T				DG4		
		1	J, U				DG4		
		1	J, U			EN0	DGQ		
13									SNAP RING, Transmission
	4799 680AB	1	T				DG4		
		1	J, U				DG4		
		1	J, U			EN0	DGQ		
14									DISC, Clutch, PKG 05013087AA, (NOT SERVICED) (Not Serviced)
15									PLATE, Clutch Separator, PKG 05013087AA, (NOT SERVICED) (Not Serviced)
16									PLATE, Transmission Clutch Reaction
	4799 533	1	T				DG4		
		1	J, U				DG4		
		1	J, U			EN0	DGQ		
17									SNAP RING, Transmission, PKG 05013087AA, (NOT SERVICED) (Not Serviced)
18									PLATE, PKG 05013087AA, (NOT SERVICED) (Not Serviced)
19									DISC, Clutch, PKG 05013087AA, (NOT SERVICED) (Not Serviced)
20									PLATE, PKG 05013087AA, (NOT SERVICED) (Not Serviced)
-21									CLUTCH, Overrunning
	4799 465	1	T				DG4		Low
		1	J, U				DG4		
		1	J, U			EN0	DGQ		
-22									CLUTCH, L/R Clutch
	4799 457AB	1	T				DG4		
		1	J, U				DG4		
	#4799 457AC	1	J, U			EN0	DGQ		
-23									CLUTCH PACKAGE, Automatic Transmission, 2/4
	#K5013 087AC	1	J, U				DG4		
		1	T				DG4		
		1	J, U			EN0	DGQ		
-24									SNAP RING
	4799 863AA	1	T				DG4		OWC to LR Retainer-Rear

JEEP LIBERTY (KJ)

SERIES	LINE	BODY	ENGINE	TRANSMISSION
P = Limited	J = LHD (4WD)	74 = 4 Dr. (104.3 WB)	ED1, ED0 = 2.4L Power Tech	DDK = 5 Speed HDManual
H = Sport	U = RHD (4WD)		EKG, EK0 = 3.7L Power Tech	DDD = 5 Speed HD Manual
M = Renegade	T = LHD (2WD)		ENJ = 2.5L 4Cyl Turbo Diesel	DG4,DGQ = Multi-Speed Auto
			ENR = 2.8L 4Cyl Turbo Diesel	DG6 = 4 Speed Auto Transm
			EN0 = 4Cyl Turbo Diesel	DG0 = All Automatic Transm
				DBB = All Manual Transm

AR = Use as required - = Non illustrated part # = New this model year

June 3, 2003

« RETURN TO GROUP INDEX

2/4 Clutch Retainer [45RFE] [DG4] [DGQ]
Figure 45RFE-440

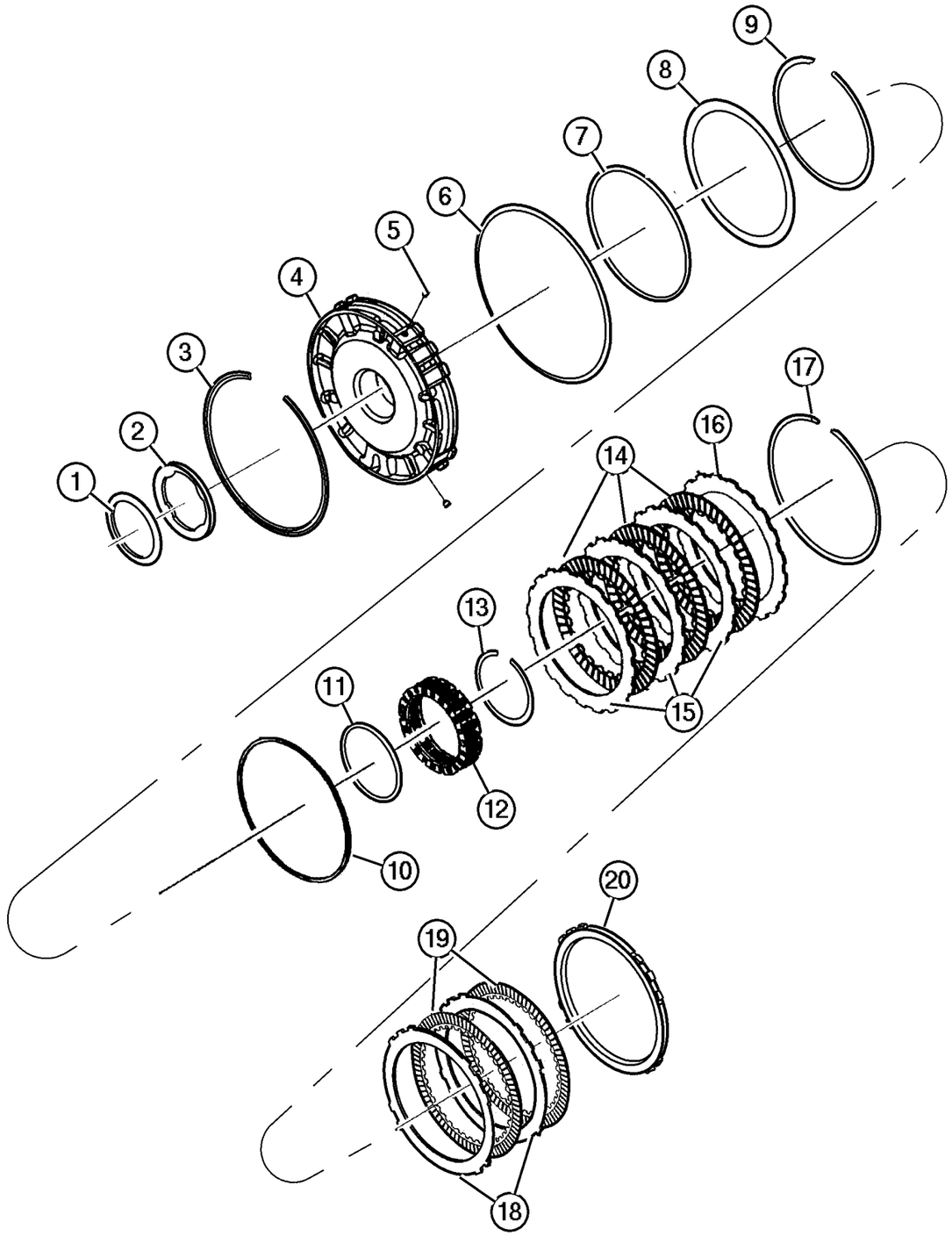

ITEM	PART NUMBER	QTY	LINE	SERIES	BODY	ENGINE	TRANS	TRIM	DESCRIPTION
		1	J, U				DG4		OWC to LR Retainer-Rear
		1	J, U			EN0	DGQ		
-25									SNAP RING, Transmission
	4799 528AB	1	T				DG4		4th Clutch Return Spring
		1	J, U				DG4		4th Clutch Return Spring
		1	J, U			EN0	DGQ		
-26									RETAINER, Clutch
	4799 635	1	T				DG4		
		1	J, U				DG4		
		1	J, U			EN0	DGQ		
-27									SPRING, Low/Reverse Clutch Piston
	4799 640	1	T				DG4		
		1	J, U				DG4		
		1	J, U			EN0	DGQ		

JEEP LIBERTY (KJ)

SERIES	LINE	BODY	ENGINE	TRANSMISSION
P = Limited	J = LHD (4WD)	74 = 4 Dr. (104.3 WB)	ED1, ED0 = 2.4L Power Tech	DDK = 5 Speed HDManual
H = Sport	U = RHD (4WD)		EKG, EK0 = 3.7L Power Tech	DDD = 5 Speed HD Manual
M = Renegade	T = LHD (2WD)		ENJ = 2.5L 4Cyl Turbo Diesel	DG4,DGQ = Multi-Speed Auto
			ENR = 2.8L 4Cyl Turbo Diesel	DG6 = 4 Speed Auto Transm
			EN0 = 4Cyl Turbo Diesel	DG0 = All Automatic Transm
				DBB = All Manual Transm

Input/Reverse Planetary [45RFE] [DG4] [DGQ]
Figure 45RFE-450

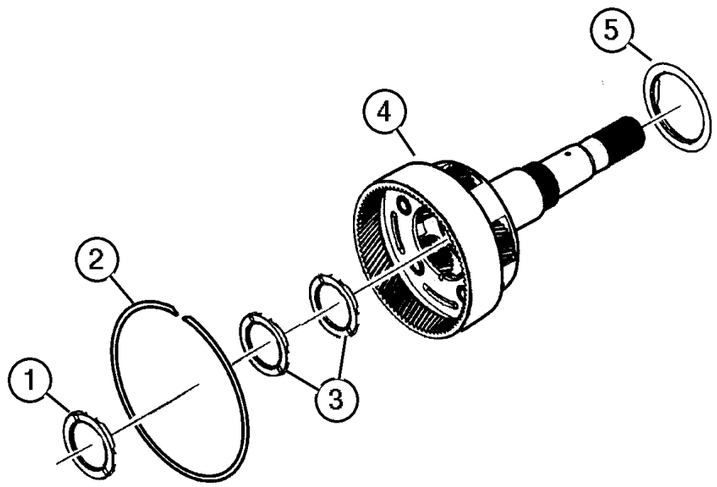

ITEM	PART NUMBER	QTY	LINE	SERIES	BODY	ENGINE	TRANS	TRIM	DESCRIPTION
NOTE; Sales Codes									
[DG4]= Multi -Speed Automatic Transmission 45RFE									
[DGQ]=5 Speed Automatic Transmission 45RFE									
1									THRUST BEARING, Needle Roller
	4799 469	1	J, U				DG4		
		1	J, U			EN0	DGQ		
		1	T				DG4		
2									SNAP RING
	4799 247	1	T				DG4		
		1	J, U				DG4		
		1	J, U			EN0	DGQ		
3									THRUST BEARING, Needle Roller
	4799 469	1	T				DG4		
		1	J, U				DG4		
		1	J, U			EN0	DGQ		
4									CARRIER, Input Complete
	#4799 500AC	1	T				DG4		
		1	J, U				DG4		
		1	J, U			EN0	DGQ		
5									THRUST BEARING, Needle Roller
	4799 459	1	T				DG4		
		1	J, U				DG4		
		1	J, U			EN0	DGQ		

JEEP LIBERTY (KJ)

SERIES	LINE	BODY	ENGINE	TRANSMISSION
P = Limited	J = LHD (4WD)	74 = 4 Dr. (104.3 WB)	ED1, ED0 = 2.4L Power Tech	DDK = 5 Speed HDManual
H = Sport	U = RHD (4WD)		EKG, EK0 = 3.7L Power Tech	DDD = 5 Speed HD Manual
M = Renegade	T = LHD (2WD)		ENJ = 2.5L 4Cyl Turbo Diesel	DG4,DGQ = Multi-Speed Auto
			ENR = 2.8L 4Cyl Turbo Diesel	DG6 = 4 Speed Auto Transm
			EN0 = 4Cyl Turbo Diesel	DG0 = All Automatic Transm
				DBB = All Manual Transm

Reaction Annulus/Sun Gear [45RFE] [DG4] [DGQ]
Figure 45RFE-460

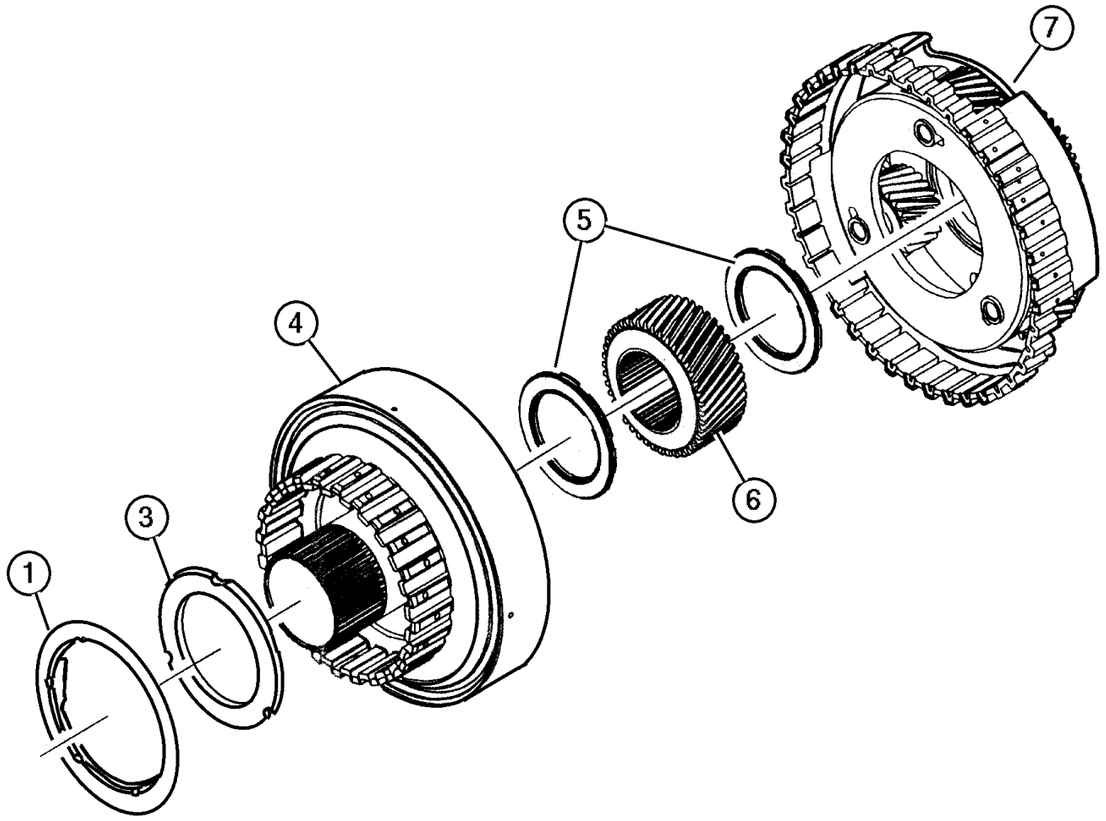

ITEM	PART NUMBER	QTY	LINE	SERIES	BODY	ENGINE	TRANS	TRIM	DESCRIPTION
NOTE; Sales Codes									
[DG4]= Multi - Speed Automatic Transmission 45RFE									
[DGQ]=5 Speed Automatic Transmission 45RFE									
1									THRUST BEARING, Needle Roller
	4799 459	1	T				DG4		Ret. to I-Carrier, Right & Left
		1	J, U				DG4		Ret. to I-Carrier
		1	J, U			EN0	DGQ		Ret. to I-Carrier
-2									THRUST BEARING, Needle Roller
	#52119 464AA	1	T				DG4		Input Sun Bearing
		1	J, U				DG4		Input Sun Bearing
		1	J, U			EN0	DGQ		Input Sun Bearing
3									THRUST WASHER, Planetary
									Carrier, PKG 05013092AA, (NOT SERVICED) (Not Serviced)
4									GEAR, Annulus
	4799 501	1	T				DG4		
		1	J, U				DG4		
		1	J, U			EN0	DGQ		
5									THRUST BEARING, Needle Roller
	4799 469	1	T				DG4		
		1	J, U				DG4		
		1	J, U			EN0	DGQ		
6									GEAR, Reaction Sun
	4799 602	1	T				DG4		
		1	J, U				DG4		
		1	J, U			EN0	DGQ		
7									CARRIER, Reaction Complete
	#4799 619AB	1	T				DG4		
		1	J, U				DG4		
		1	J, U			EN0	DGQ		
-8									GEAR, Input Sun
	4799 586	1	T				DG4		
		1	J, U				DG4		
		1	J, U			EN0	DGQ		

JEEP LIBERTY (KJ)

SERIES	LINE	BODY	ENGINE	TRANSMISSION
P = Limited	J = LHD (4WD)	74 = 4 Dr. (104.3 WB)	ED1, ED0 = 2.4L Power Tech	DDK = 5 Speed HDManual
H = Sport	U = RHD (4WD)		EKG, EK0 = 3.7L Power Tech	DDD = 5 Speed HD Manual
M = Renegade	T = LHD (2WD)		ENJ = 2.5L 4Cyl Turbo Diesel	DG4,DGQ = Multi-Speed Auto
			ENR = 2.8L 4Cyl Turbo Diesel	DG6 = 4 Speed Auto Transm
			EN0 = 4Cyl Turbo Diesel	DG0 = All Automatic Transm
				DBB = All Manual Transm

Low / Reverse Clutch [DG4, DGQ]
Figure 45RFE-470

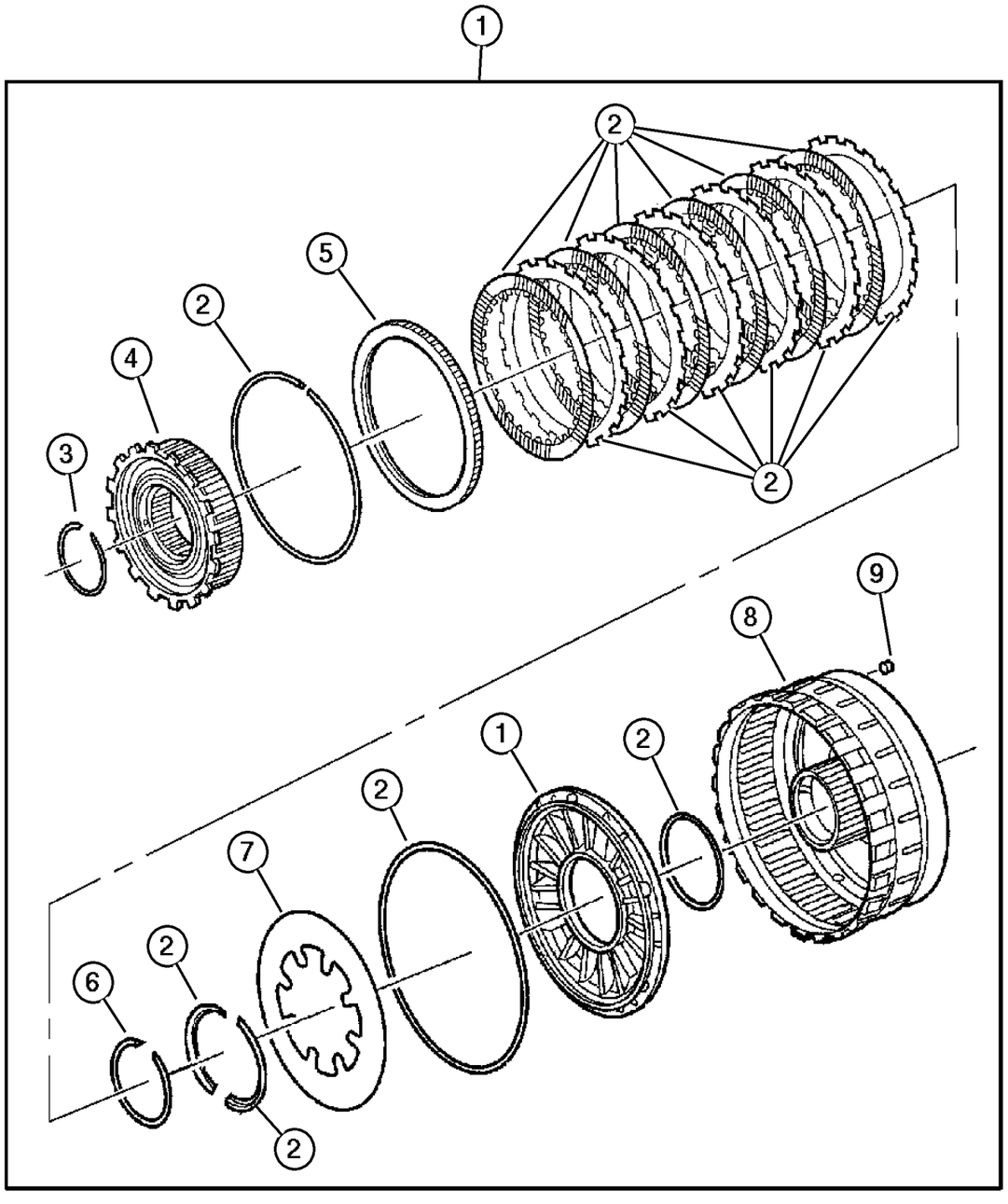

ITEM	PART NUMBER	QTY	LINE	SERIES	BODY	ENGINE	TRANS	TRIM	DESCRIPTION
NOTE:									
Sales Codes									
[DGQ]=5 Speed Automatic Transmission [5-45RFE]									
[DG4] = MultI Speed Automatic Transmission [45RFE]									
1									CLUTCH, L/R Clutch
	4799 457AB	1	J, U			EN0	DGQ		
		1	T				DG4		
		1	J, U				DG4		
2									CLUTCH PACKAGE, Automatic Transmission, Low/Reverse
	5073 003AA	1	T				DG4		
		1	J, U			EN0	DGQ		
		1	J, U				DG4		
3									SNAP RING
	4799 863AA	1	J, U			EN0	DGQ		
		1	T				DG4		
		1	J, U				DG4		
4									CLUTCH, Overrunning
	4799 465	1	J, U			EN0	DGQ		
		1	T				DG4		
		1	J, U				DG4		
5									PLATE, Transmission Clutch Reaction
	4799 667	1	J, U			EN0	DGQ		
		1	T				DG4		
		1	J, U				DG4		
6									SNAP RING
	4799 863AA	1	J, U			EN0	DGQ		
		1	T				DG4		
		1	J, U				DG4		
7									SPRING, Low/Reverse Clutch Piston
	4799 640	1	J, U			EN0	DGQ		
		1	T				DG4		
		1	J, U				DG4		
8									RETAINER, Clutch
	4799 635	1	J, U			EN0	DGQ		
		1	T				DG4		
		1	J, U				DG4		
9									BLEED ORIFICE, Transmission
	4799 086	1	J, U			EN0	DGQ		
		1	T				DG4		

JEEP LIBERTY (KJ)

SERIES	LINE	BODY	ENGINE	TRANSMISSION
P = Limited	J = LHD (4WD)	74 = 4 Dr. (104.3 WB)	ED1, ED0 = 2.4L Power Tech	DDK = 5 Speed HDManual
H = Sport	U = RHD (4WD)		EKG, EK0 = 3.7L Power Tech	DDD = 5 Speed HD Manual
M = Renegade	T = LHD (2WD)		ENJ = 2.5L 4Cyl Turbo Diesel	DG4,DGQ = Multi-Speed Auto
			ENR = 2.8L 4Cyl Turbo Diesel	DG6 = 4 Speed Auto Transm
			EN0 = 4Cyl Turbo Diesel	DG0 = All Automatic Transm
				DBB = All Manual Transm

Low / Reverse Clutch [DG4, DGQ]
Figure 45RFE-470

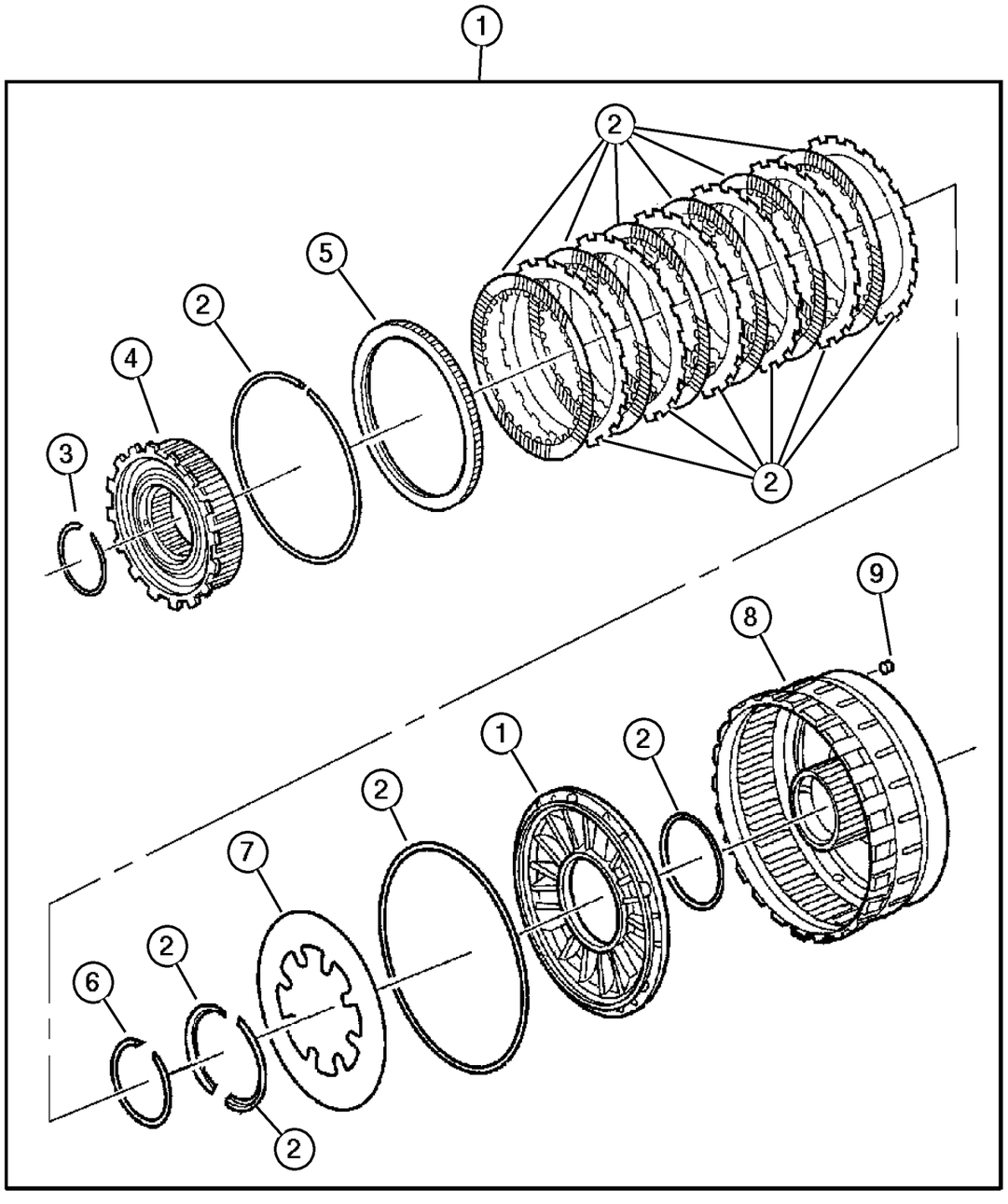

ITEM	PART NUMBER	QTY	LINE	SERIES	BODY	ENGINE	TRANS	TRIM	DESCRIPTION
		1	J, U				DG4		

JEEP LIBERTY (KJ)

SERIES	LINE	BODY	ENGINE	TRANSMISSION
P = Limited	J = LHD (4WD)	74 = 4 Dr. (104.3 WB)	ED1, ED0 = 2.4L Power Tech	DDK = 5 Speed HDManual
H = Sport	U = RHD (4WD)		EKG, EK0 = 3.7L Power Tech	DDD = 5 Speed HD Manual
M = Renegade	T = LHD (2WD)		ENJ = 2.5L 4Cyl Turbo Diesel	DG4,DGQ = Multi-Speed Auto
			ENR = 2.8L 4Cyl Turbo Diesel	DG6 = 4 Speed Auto Transm
			EN0 = 4Cyl Turbo Diesel	DG0 = All Automatic Transm
				DBB = All Manual Transm

Valve Body [45RFE] [DG4] [DGQ]
Figure 45RFE-710

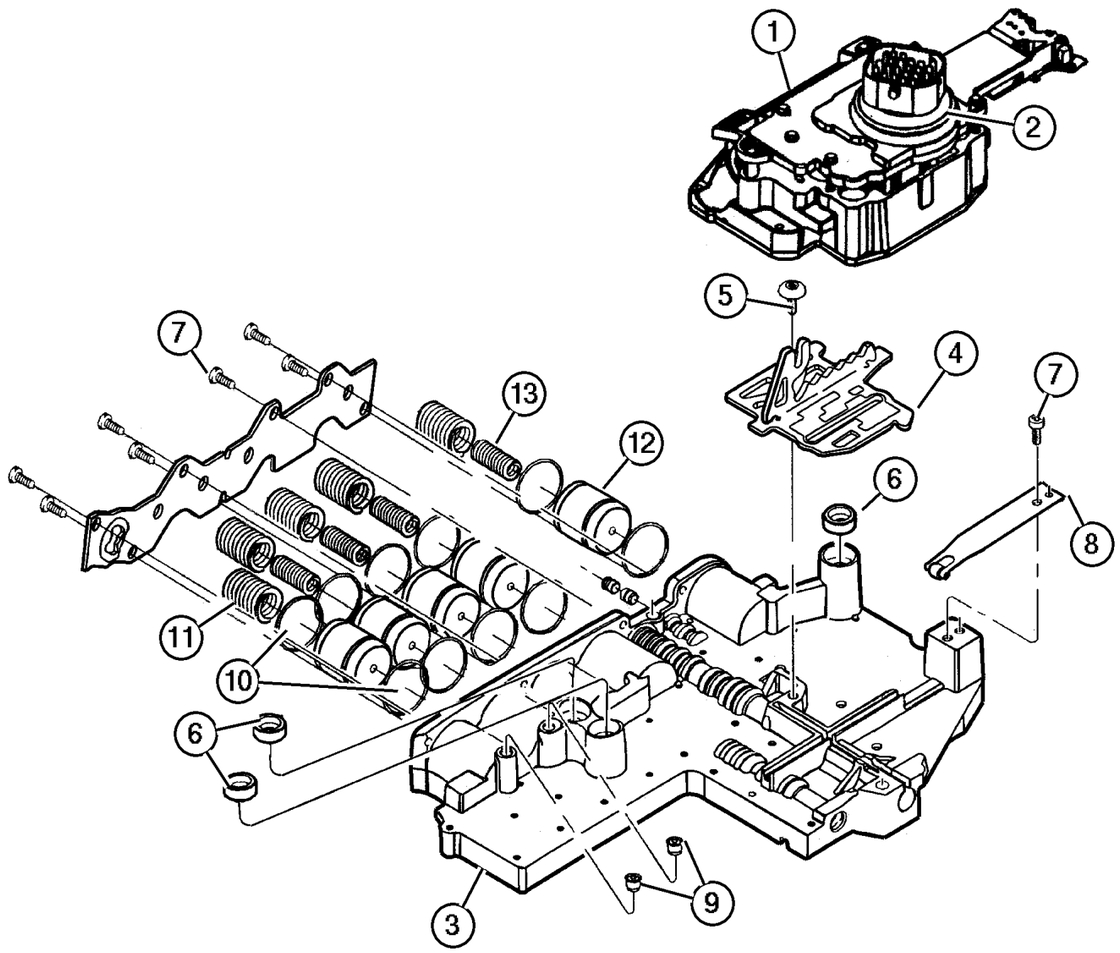

ITEM	PART NUMBER	QTY	LINE	SERIES	BODY	ENGINE	TRANS	TRIM	DESCRIPTION
NOTE; Sales Codes									
[DG4]= Multi - Speed Automatic Transmission 45RFE									
[DGQ]=5 Speed Automatic Transmission 45RFE									
1									SOLENOID, Transmission
	#52119 435AA	1	T				DG4		
		1	J, U				DG4		
		1	J, U			EN0	DGQ		
2									SEAL, Manual Valve Position Sensor
	4659 678	1	T				DG6		
		1	J, U				DG6		
3									VALVE BODY, Transfer Plate and Valve
	#5093 108AA	1	J, U				DG4		
		1	J, U			EN0	DGQ		
		1	T				DG4		
4									PLATE, Manual Valve Cam
	4799 654	1	T				DG4		
		1	J, U				DG4		
		1	J, U			EN0	DGQ		
5									SCREW, Shoulder/Truss, M5x. 8x12.5
	6501 710	1	T				DG4		
		1	J, U				DG4		
		1	J, U			EN0	DGQ		
6									SEAL, Clutch Feed
	4799 778	3	T				DG4		
		3	J, U				DG4		
		3	J, U			EN0	DGQ		
7									SCREW, Pan Head, M5 x 0.8 x 12. 60
	6503 232	1	T				DG4		
		1	J, U				DG4		
		1	J, U			EN0	DGQ		
8									DETENT, Valve Body
	4799 593	1	T				DG4		
		1	J, U				DG4		
	#52119 501AA	1	T				DG4		Use 10/05/02 and after
		1	J, U				DG4		Use 10/05/02 and after
9									BLEED ORIFICE, Transmission
	4799 086	2	T				DG4		
		2	J, U				DG4		

JEEP LIBERTY (KJ)

SERIES	LINE	BODY	ENGINE	TRANSMISSION
P = Limited	J = LHD (4WD)	74 = 4 Dr. (104.3 WB)	ED1, ED0 = 2.4L Power Tech	DDK = 5 Speed HDManual
H = Sport	U = RHD (4WD)		EKG, EK0 = 3.7L Power Tech	DDD = 5 Speed HD Manual
M = Renegade	T = LHD (2WD)		ENJ = 2.5L 4Cyl Turbo Diesel	DG4,DGQ = Multi-Speed Auto
			ENR = 2.8L 4Cyl Turbo Diesel	DG6 = 4 Speed Auto Transm
			EN0 = 4Cyl Turbo Diesel	DG0 = All Automatic Transm
				DBB = All Manual Transm

Valve Body [45RFE] [DG4] [DGQ]
Figure 45RFE-710

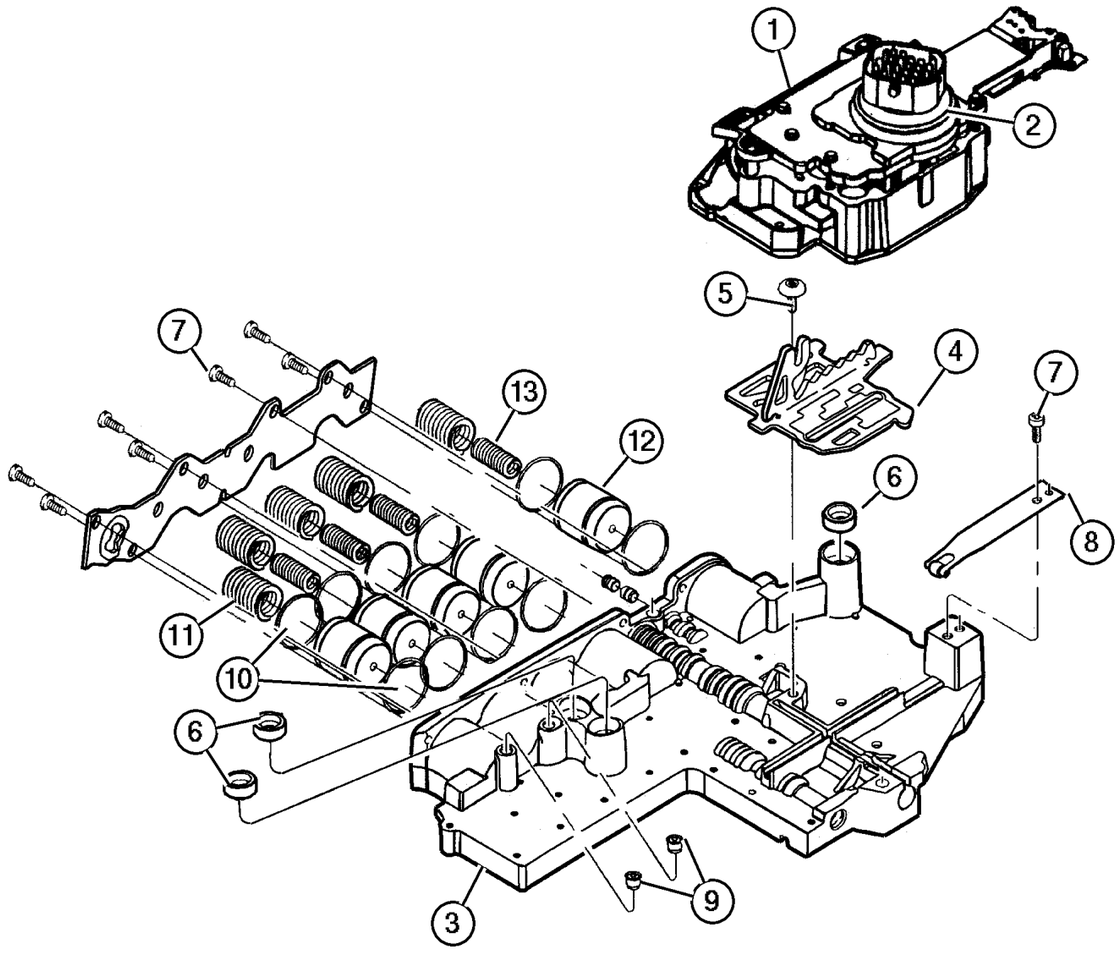

ITEM	PART NUMBER	QTY	LINE	SERIES	BODY	ENGINE	TRANS	TRIM	DESCRIPTION
		2	J, U			EN0	DGQ		
10									SEAL, Accumulator
	4446 544	10	T				DG4		
		10	J, U				DG4		
		10	J, U			EN0	DGQ		
11									SPRING, Accumulator
	4471 880	5	T				DG4		
		5	J, U				DG4		
		5	J, U			EN0	DGQ		
12									PISTON, 2nd and 4th Accumulator
	4446 620	5	T				DG4		
		5	J, U				DG4		
		5	J, U			EN0	DGQ		
13									SPRING, Accumulator
	4567 575	4	T				DG4		
		4	J, U				DG4		
		4	J, U			EN0	DGQ		
-14									BALL, Check
	4446 602	7	T				DG4		
		7	J, U				DG4		
		7	J, U			EN0	DGQ		

JEEP LIBERTY (KJ)

SERIES	LINE	BODY	ENGINE	TRANSMISSION
P = Limited	J = LHD (4WD)	74 = 4 Dr. (104.3 WB)	ED1, ED0 = 2.4L Power Tech	DDK = 5 Speed HDManual
H = Sport	U = RHD (4WD)		EKG, EK0 = 3.7L Power Tech	DDD = 5 Speed HD Manual
M = Renegade	T = LHD (2WD)		ENJ = 2.5L 4Cyl Turbo Diesel	DG4,DGQ = Multi-Speed Auto
			ENR = 2.8L 4Cyl Turbo Diesel	DG6 = 4 Speed Auto Transm
			EN0 = 4Cyl Turbo Diesel	DG0 = All Automatic Transm
				DBB = All Manual Transm

AR = Use as required - = Non illustrated part # = New this model year

June 3, 2003

« RETURN TO GROUP INDEX

Parking Sprag [45RFE] [DG4] [DGQ]
Figure 45RFE-730

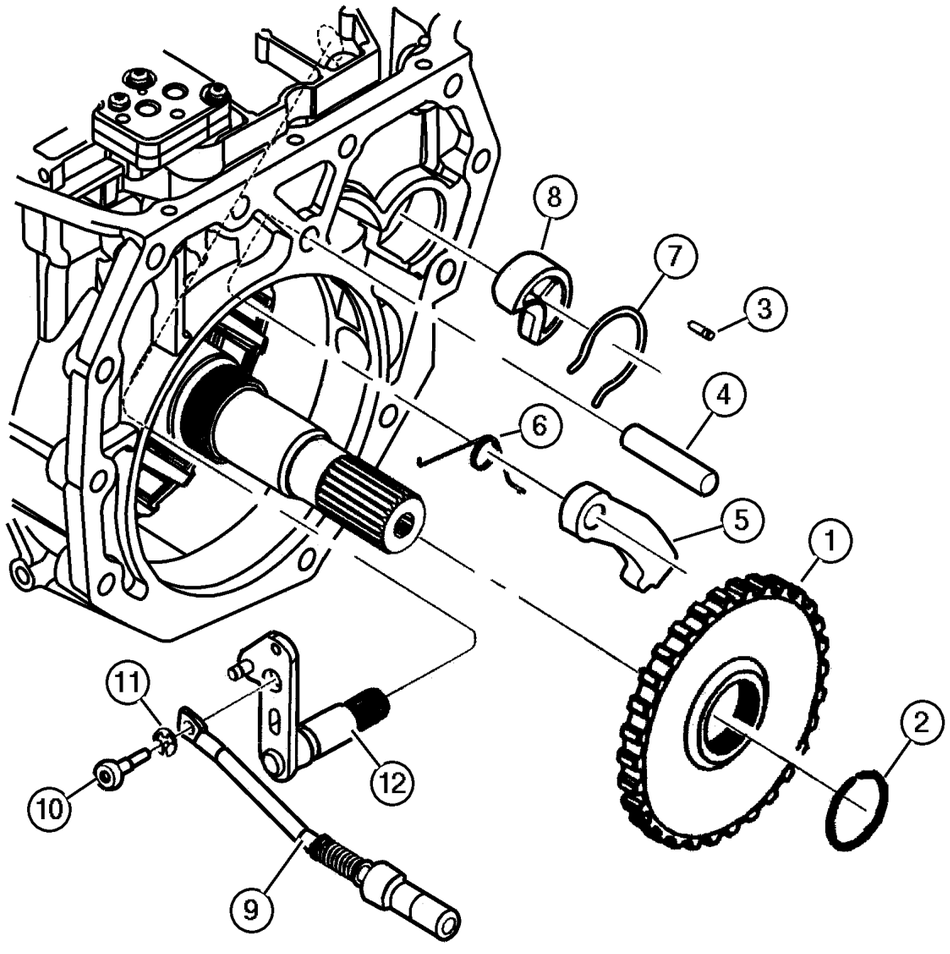

ITEM	PART NUMBER	QTY	LINE	SERIES	BODY	ENGINE	TRANS	TRIM	DESCRIPTION
NOTE; Sales Codes									
[DG4]= Multi - Speed Automatic Transmission 45RFE									
[DGQ]=5 Speed Automatic Transmission 45RFE									
1									SPRAG, Transmission Parking, Serviced with Parking Sprag Rod Assembly (04799611AB), (NOT SERVICED) (Not Serviced)
2									SNAP RING, Transmission
	4799 704	1	T				DG4		
		1	J, U				DG4		
		1	J, U			EN0	DGQ		
3									PIN
	0456 636	1	T				DG4		
		1	J, U				DG4		
		1	J, U			EN0	DGQ		
4									SHAFT, Parking Pawl
	4799 450	1	T				DG4		
		1	J, U				DG4		
		1	J, U			EN0	DGQ		
5									PAWL, Parking Sprag
	#4799 744AD	1	T				DG4		
		1	J, U				DG4		
		1	J, U			EN0	DGQ		
6									SPRING, Torsion
	4799 451	1	T				DG4		
		1	J, U				DG4		
		1	J, U			EN0	DGQ		
7									SNAP RING
	4799 313	1	T				DG4		
		1	J, U				DG4		
		1	J, U			EN0	DGQ		
8									GUIDE, Parking Sprag Pawl
	4799 774	1	T				DG4		
		1	J, U				DG4		
		1	J, U			EN0	DGQ		
9									ROD, Parking Sprag
	#4799 611AB	1	T				DG4		
		1	J, U				DG4		
		1	J, U			EN0	DGQ		
10									SCREW, M6x1x30
	6504 548	1	T				DG4		

JEEP LIBERTY (KJ)

SERIES	LINE	BODY	ENGINE	TRANSMISSION
P = Limited	J = LHD (4WD)	74 = 4 Dr. (104.3 WB)	ED1, ED0 = 2.4L Power Tech	DDK = 5 Speed HDManual
H = Sport	U = RHD (4WD)		EKG, EK0 = 3.7L Power Tech	DDD = 5 Speed HD Manual
M = Renegade	T = LHD (2WD)		ENJ = 2.5L 4Cyl Turbo Diesel	DG4,DGQ = Multi-Speed Auto
			ENR = 2.8L 4Cyl Turbo Diesel	DG6 = 4 Speed Auto Transm
			EN0 = 4Cyl Turbo Diesel	DG0 = All Automatic Transm
				DBB = All Manual Transm

AR = Use as required - = Non illustrated part # = New this model year **June 3, 2003**

« RETURN TO GROUP INDEX »

Parking Sprag [45RFE] [DG4] [DGQ]
Figure 45RFE-730

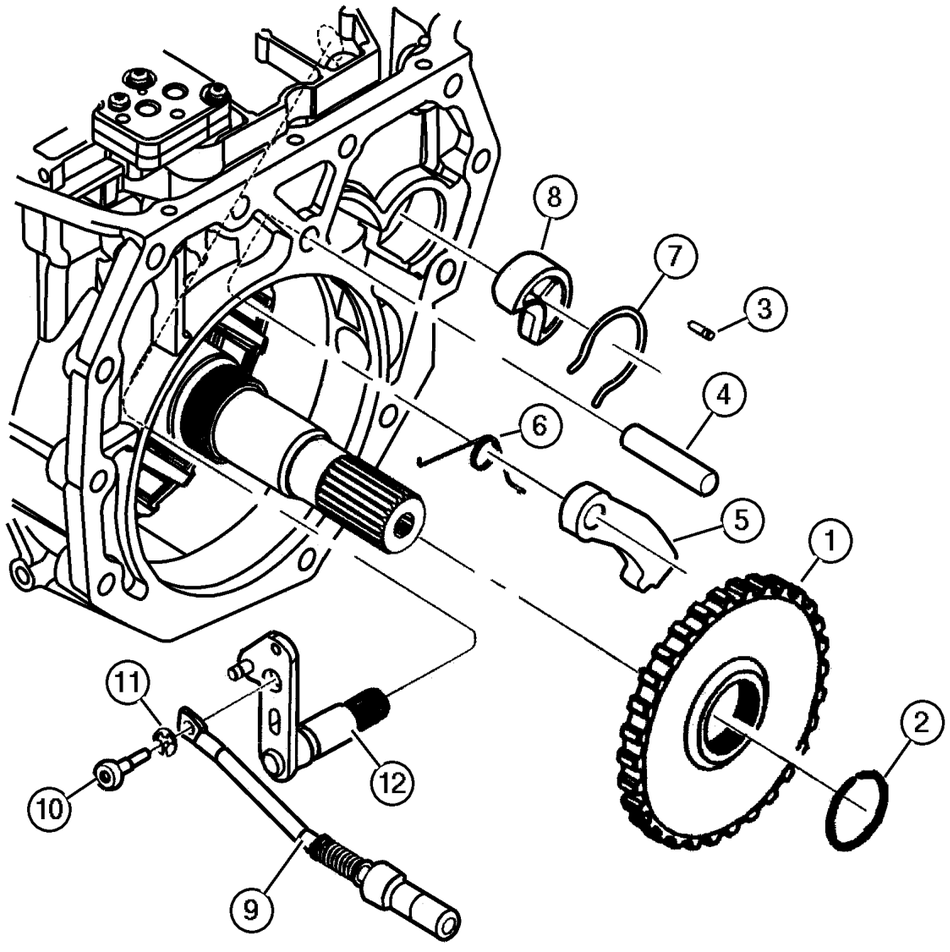

ITEM	PART NUMBER	QTY	LINE	SERIES	BODY	ENGINE	TRANS	TRIM	DESCRIPTION
		1	J, U				DG4		
		1	J, U			EN0	DGQ		
11									SNAP RING, Rod
	6035 256	1	T				DG4		
		1	J, U				DG4		
		1	J, U			EN0	DGQ		
12									LEVER, Shift Shaft
	4799 453	1	T				DG4		
		1	J, U				DG4		
		1	J, U			EN0	DGQ		

JEEP LIBERTY (KJ)

SERIES	LINE	BODY	ENGINE	TRANSMISSION
P = Limited	J = LHD (4WD)	74 = 4 Dr. (104.3 WB)	ED1, ED0 = 2.4L Power Tech	DDK = 5 Speed HDManual
H = Sport	U = RHD (4WD)		EKG, EK0 = 3.7L Power Tech	DDD = 5 Speed HD Manual
M = Renegade	T = LHD (2WD)		ENJ = 2.5L 4Cyl Turbo Diesel	DG4,DGQ = Multi-Speed Auto
			ENR = 2.8L 4Cyl Turbo Diesel	DG6 = 4 Speed Auto Transm
			EN0 = 4Cyl Turbo Diesel	DG0 = All Automatic Transm
				DBB = All Manual Transm

AR = Use as required - = Non illustrated part # = New this model year

June 3, 2003

« RETURN TO GROUP INDEX

«

Gearshift Controls [45RFE] [DG4] [DGQ]
Figure 45RFE-1210

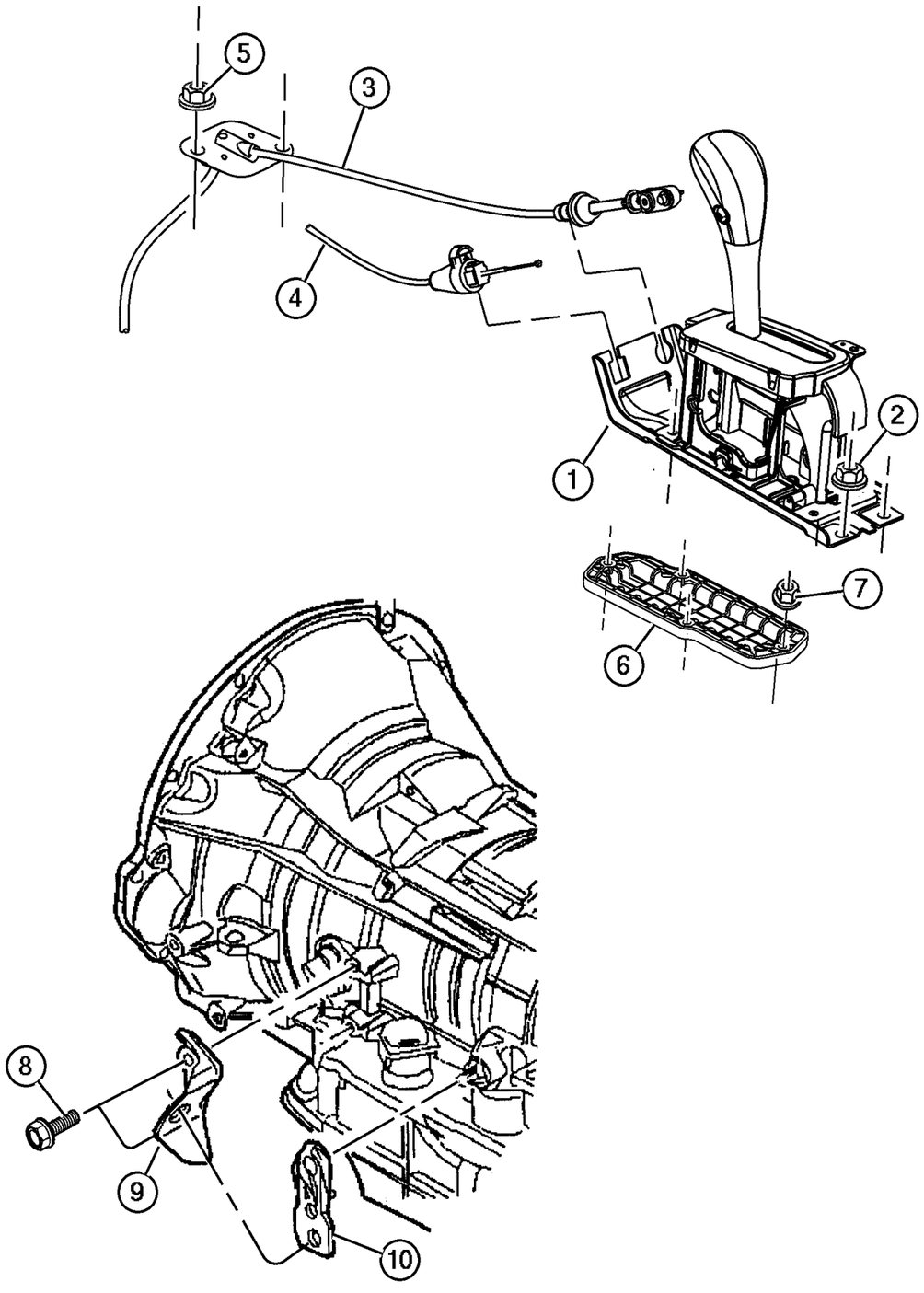

ITEM	PART NUMBER	QTY	LINE	SERIES	BODY	ENGINE	TRANS	TRIM	DESCRIPTION
NOTE; Sales Codes									
[DG0] = All Automatic Transmissions									
[DG4]= Multi Speed Automatic Transmission 45RFE									
[DGQ]=5 Speed Automatic Transmission 45RFE									
[EK0] = All 3.7L 6 Cylinder Gas Engines									
1									HOUSING AND LEVER, Shifter
	52104 312AE	1	J, T				DG0		
	52104 313AE	1	U				DG0		
2	6101 444	4							NUT AND WASHER, Hex, M6x1.0
3	52104 320AA	1					DG0		CABLE, Gearshift Control
4	52104 319AC	1					DG0		CABLE, Gearshift Lock
5	6100 047	2							NUT AND WASHER, Hex Nut-Coned Washer, M6 x 1.00
6	52104 321AA	1	T						COVER, Transfer Case Lever Hole
7	6101 444	4							NUT AND WASHER, Hex, M6x1.0
8	6101 758	2					DGQ, DG4		SCREW, Hex Head, M8x1.25x20
9	52104 371AC	1				EK0	DGQ, DG4		BRACKET, Shift Cable
10	52104 177AB	1				EK0	DGQ, DG4		LEVER, Manual Control

JEEP LIBERTY (KJ)

SERIES	LINE	BODY	ENGINE	TRANSMISSION
P = Limited	J = LHD (4WD)	74 = 4 Dr. (104.3 WB)	ED1, ED0 = 2.4L Power Tech	DDK = 5 Speed HDManual
H = Sport	U = RHD (4WD)		EKG, EK0 = 3.7L Power Tech	DDD = 5 Speed HD Manual
M = Renegade	T = LHD (2WD)		ENJ = 2.5L 4Cyl Turbo Diesel	DG4,DGQ = Multi-Speed Auto
			ENR = 2.8L 4Cyl Turbo Diesel	DG6 = 4 Speed Auto Transm
			EN0 = 4Cyl Turbo Diesel	DG0 = All Automatic Transm
				DBB = All Manual Transm

AR = Use as required - = Non illustrated part # = New this model year

June 3, 2003

« RETURN TO GROUP INDEX

LR Clutch [45RFE] [DG4] [DGQ]
Figure 45RFE-1302

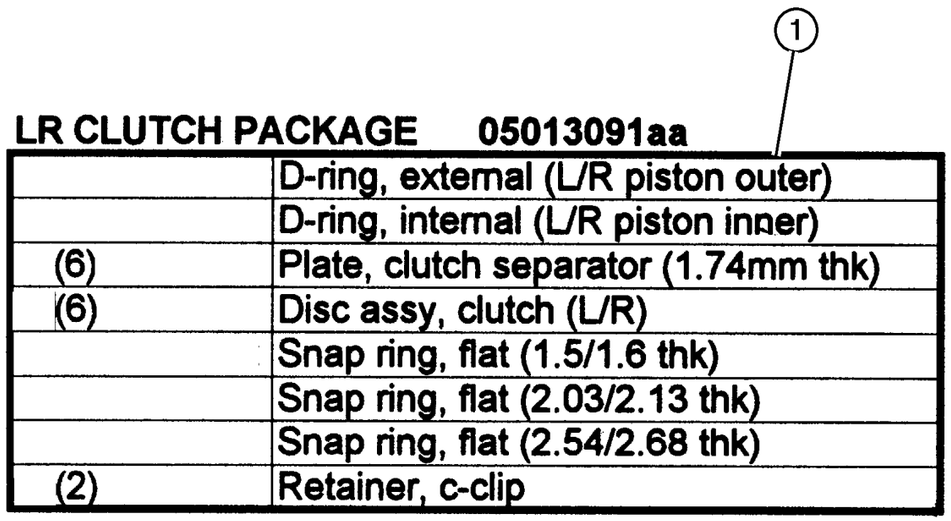

ITEM	PART NUMBER	QTY	LINE	SERIES	BODY	ENGINE	TRANS	TRIM	DESCRIPTION
NOTE; Sales Codes									
[DG4]= Multi - Speed Automatic Transmission 45RFE									
[DGQ]=5 Speed Automatic Transmission 45RFE									
1									CLUTCH PACKAGE, Automatic Transmission, Low/Reverse
	5073 003AA	1	T				DG4		
		1	J, U				DG4		
		1	J, U			EN0	DGQ		

JEEP LIBERTY (KJ)

SERIES	LINE	BODY	ENGINE	TRANSMISSION
P = Limited	J = LHD (4WD)	74 = 4 Dr. (104.3 WB)	ED1, ED0 = 2.4L Power Tech	DDK = 5 Speed HDManual
H = Sport	U = RHD (4WD)		EKG, EK0 = 3.7L Power Tech	DDD = 5 Speed HD Manual
M = Renegade	T = LHD (2WD)		ENJ = 2.5L 4Cyl Turbo Diesel	DG4,DGQ = Multi-Speed Auto
			ENR = 2.8L 4Cyl Turbo Diesel	DG6 = 4 Speed Auto Transm
			EN0 = 4Cyl Turbo Diesel	DG0 = All Automatic Transm
				DBB = All Manual Transm

Input Clutch Plate [45RFE] [DG4] [DGQ]
Figure 45RFE-1303

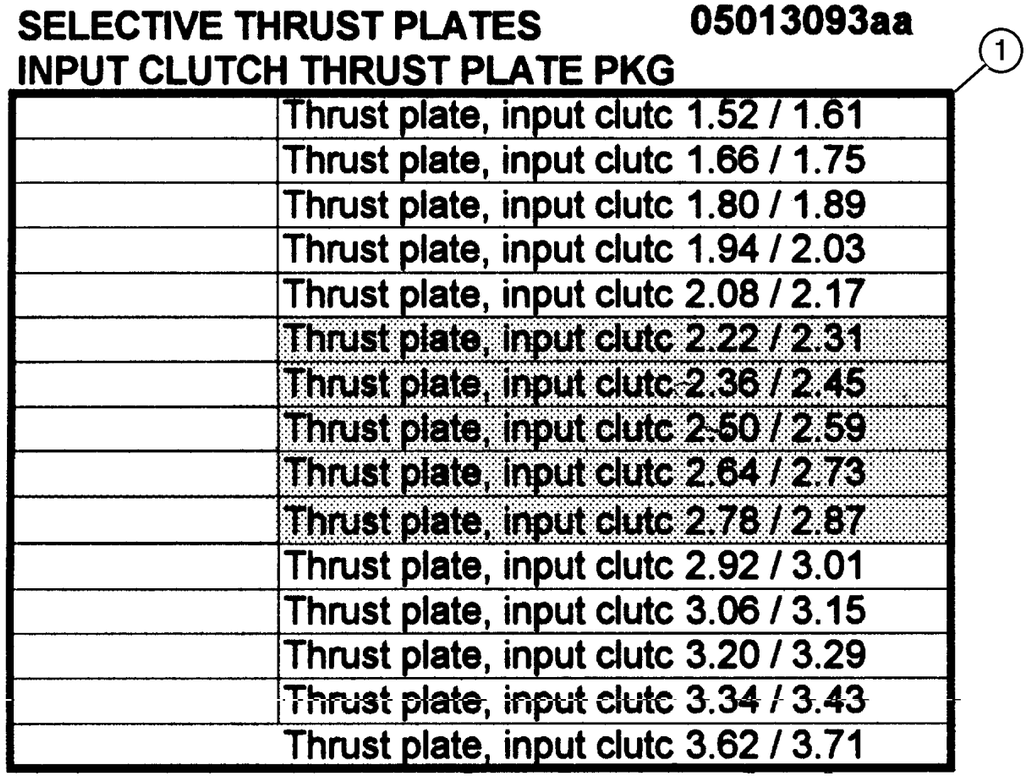

ITEM	PART NUMBER	QTY	LINE	SERIES	BODY	ENGINE	TRANS	TRIM	DESCRIPTION
NOTE; Sales Codes									
[DG4]= Multi - Speed Automatic Transmission 45RFE									
[DGQ]=5 Speed Automatic Transmission 45RFE									
1									PLATE PACKAGE, Input Clutch Thrust
	5013 093AA	1	J, U				DG4		
		1	T				DG4		
		1	J, U			EN0	DGQ		

JEEP LIBERTY (KJ)

SERIES	LINE	BODY	ENGINE	TRANSMISSION
P = Limited	J = LHD (4WD)	74 = 4 Dr. (104.3 WB)	ED1, ED0 = 2.4L Power Tech	DDK = 5 Speed HDManual
H = Sport	U = RHD (4WD)		EKG, EK0 = 3.7L Power Tech	DDD = 5 Speed HD Manual
M = Renegade	T = LHD (2WD)		ENJ = 2.5L 4Cyl Turbo Diesel	DG4,DGQ = Multi-Speed Auto
			ENR = 2.8L 4Cyl Turbo Diesel	DG6 = 4 Speed Auto Transm
			EN0 = 4Cyl Turbo Diesel	DG0 = All Automatic Transm
				DBB = All Manual Transm

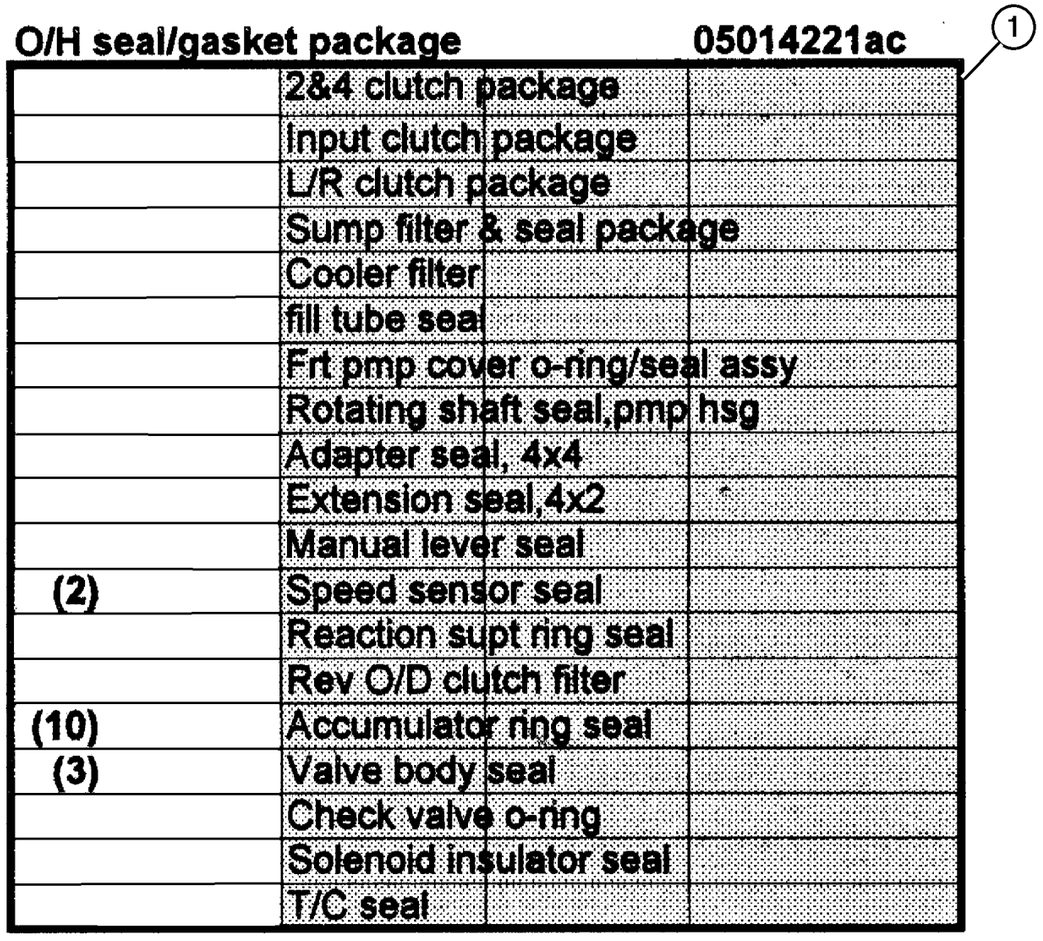

ITEM	PART NUMBER	QTY	LINE	SERIES	BODY	ENGINE	TRANS	TRIM	DESCRIPTION
NOTE; Sales Codes									
[DG4]= Multi - Speed Automatic Transmission 45RFE									
[DGQ]=5 Speed Automatic Transmission 45RFE									
1									OVERHAUL PACKAGE, Transmission
	#5014 221AJ	1	J, U				DG4		
		1	T				DG4		
		1	J, U			EN0	DGQ		

JEEP LIBERTY (KJ)

SERIES	LINE	BODY	ENGINE	TRANSMISSION
P = Limited	J = LHD (4WD)	74 = 4 Dr. (104.3 WB)	ED1, ED0 = 2.4L Power Tech	DDK = 5 Speed HDManual
H = Sport	U = RHD (4WD)		EKG, EK0 = 3.7L Power Tech	DDD = 5 Speed HD Manual
M = Renegade	T = LHD (2WD)		ENJ = 2.5L 4Cyl Turbo Diesel	DG4,DGQ = Multi-Speed Auto
			ENR = 2.8L 4Cyl Turbo Diesel	DG6 = 4 Speed Auto Transm
			EN0 = 4Cyl Turbo Diesel	DG0 = All Automatic Transm
				DBB = All Manual Transm

Input Clutch [45RFE] [DG4] [DGQ]
Figure 45RFE-1305

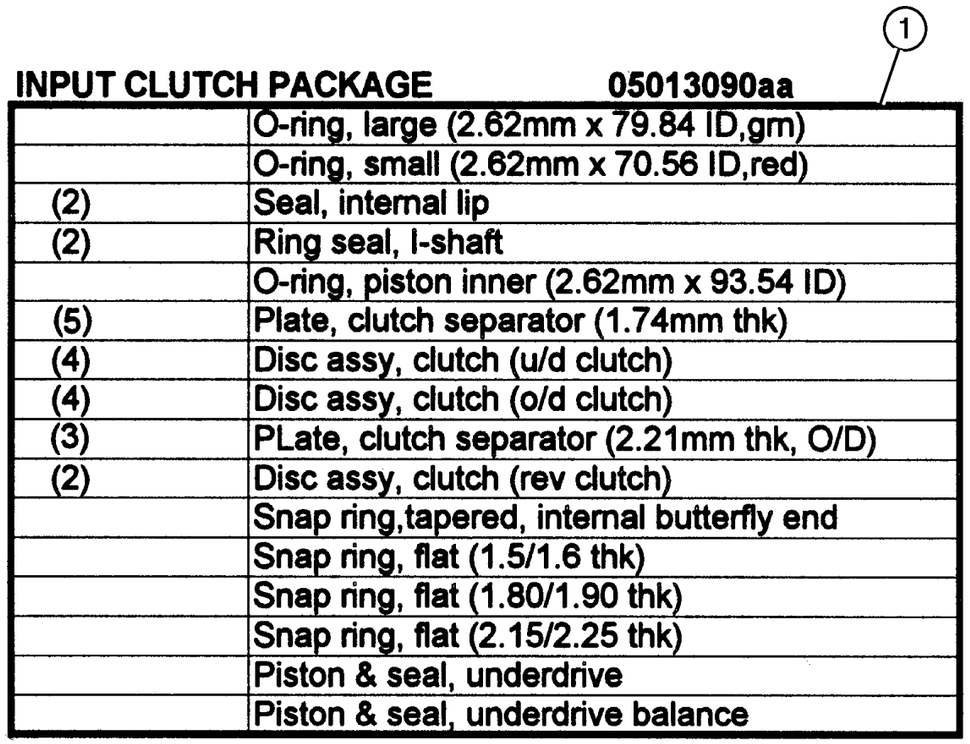

ITEM	PART NUMBER	QTY	LINE	SERIES	BODY	ENGINE	TRANS	TRIM	DESCRIPTION
NOTE; Sales Codes									
[DG4]= Multi - Speed Automatic Transmission 45RFE									
[DGQ]=5 Speed Automatic Transmission 45RFE									
1									CLUTCH PACKAGE, Automatic Transmission, Input
	5013 090AC	1	T				DG4		
		1	J, U				DG4		
		1	J, U			EN0	DGQ		

JEEP LIBERTY (KJ)

SERIES	LINE	BODY	ENGINE	TRANSMISSION
P = Limited	J = LHD (4WD)	74 = 4 Dr. (104.3 WB)	ED1, ED0 = 2.4L Power Tech	DDK = 5 Speed HDManual
H = Sport	U = RHD (4WD)		EKG, EK0 = 3.7L Power Tech	DDD = 5 Speed HD Manual
M = Renegade	T = LHD (2WD)		ENJ = 2.5L 4Cyl Turbo Diesel	DG4,DGQ = Multi-Speed Auto
			ENR = 2.8L 4Cyl Turbo Diesel	DG6 = 4 Speed Auto Transm
			EN0 = 4Cyl Turbo Diesel	DG0 = All Automatic Transm
				DBB = All Manual Transm

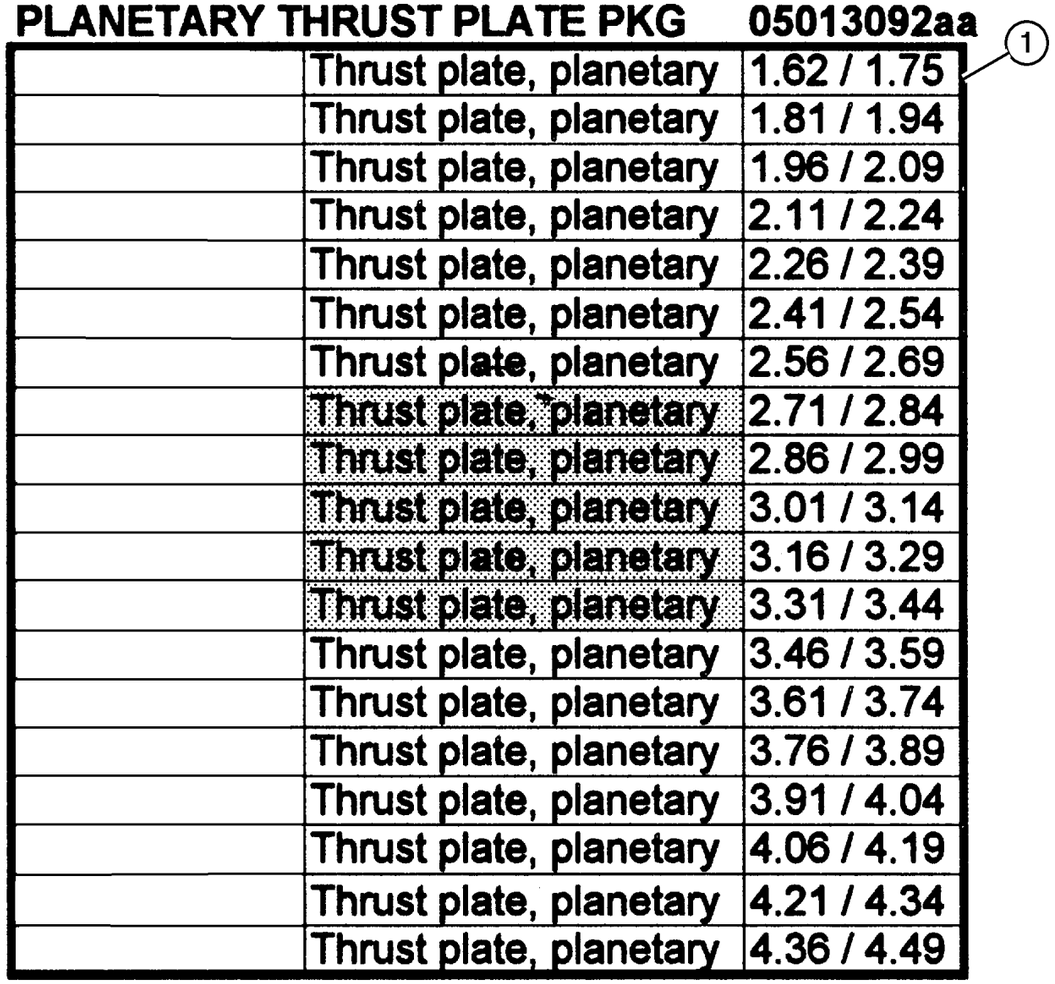

ITEM	PART NUMBER	QTY	LINE	SERIES	BODY	ENGINE	TRANS	TRIM	DESCRIPTION
NOTE; Sales Codes									
[DG4]= Multi - Speed Automatic Transmission 45RFE									
[DGQ]=5 Speed Automatic Transmission 45RFE									
1									PLATE PACKAGE, Planetary Thrust
	5013 092AA	1	J, U				DG4		
		1	T				DG4		
		1	J, U			EN0	DGQ		
-2									PLATE, Clutch Hub Thrust, Input Clutch Plate
	4799 830AB	AR	T				DG4		1.94 / 2.03
	4799 834AB	AR	J, U				DG4		2.50 / 2.59
	4799 835AB	AR	T				DG4		2.64 / 2.73
		AR	J, U				DG4		2.64 / 2.73
	4799 836AB	AR	T				DG4		2.78 / 2.87
		AR	J, U				DG4		2.78 / 2.87
	4799 837AB	AR	T				DG4		2.92 / 3.01
		AR	J, U				DG4		2.92 / 3.01
	4799 830AB	AR	J, U			EN0	DGQ		1.94 / 2.03
	4799 831AB	AR	J, U			EN0	DGQ		2.08 / 2.17
	4799 832AB	AR	J, U			EN0	DGQ		2.22 / 2.31
	4799 830AB	AR	J, U				DG4		1.94 / 2.03
	4799 833AB	AR	J, U			EN0	DGQ		2.36 / 2.45
	4799 834AB	AR	J, U			EN0	DGQ		2.50 / 2.59
	4799 835AB	AR	J, U			EN0	DGQ		2.64 / 2.73
	4799 836AB	AR	J, U			EN0	DGQ		2.78 / 2.87
	4799 837AB	AR	J, U			EN0	DGQ		2.92 / 3.01
	4799 831AB	AR	T				DG4		2.08 / 2.17
		AR	J, U				DG4		2.08 / 2.17
	4799 832AB	AR	T				DG4		2.22 / 2.31
		AR	J, U				DG4		2.22 / 2.31
	4799 833AB	AR	T				DG4		2.36 / 2.45
		AR	J, U				DG4		2.36 / 2.45
	4799 834AB	AR	T				DG4		2.50 / 2.59
-3									PLATE, Planetary, Thrust Plate
	4799 810AC	AR	T				DG4		2.26 / 2.39
	4799 814AC	AR	J, U				DG4		2.86 / 2.99
	4799 816AC	AR	T				DG4		3.16 / 3.29
		AR	J, U				DG4		3.16 / 3.29
	4799 817AC	AR	T				DG4		3.31 / 3.44
		AR	J, U				DG4		3.31 / 3.44
	4799 818AC	AR	T				DG4		3.46 / 3.59

JEEP LIBERTY (KJ)

SERIES	LINE	BODY	ENGINE	TRANSMISSION
P = Limited	J = LHD (4WD)	74 = 4 Dr. (104.3 WB)	ED1, ED0 = 2.4L Power Tech	DDK = 5 Speed HDManual
H = Sport	U = RHD (4WD)		EKG, EK0 = 3.7L Power Tech	DDD = 5 Speed HD Manual
M = Renegade	T = LHD (2WD)		ENJ = 2.5L 4Cyl Turbo Diesel	DG4,DGQ = Multi-Speed Auto
			ENR = 2.8L 4Cyl Turbo Diesel	DG6 = 4 Speed Auto Transm
			EN0 = 4Cyl Turbo Diesel	DG0 = All Automatic Transm
				DBB = All Manual Transm

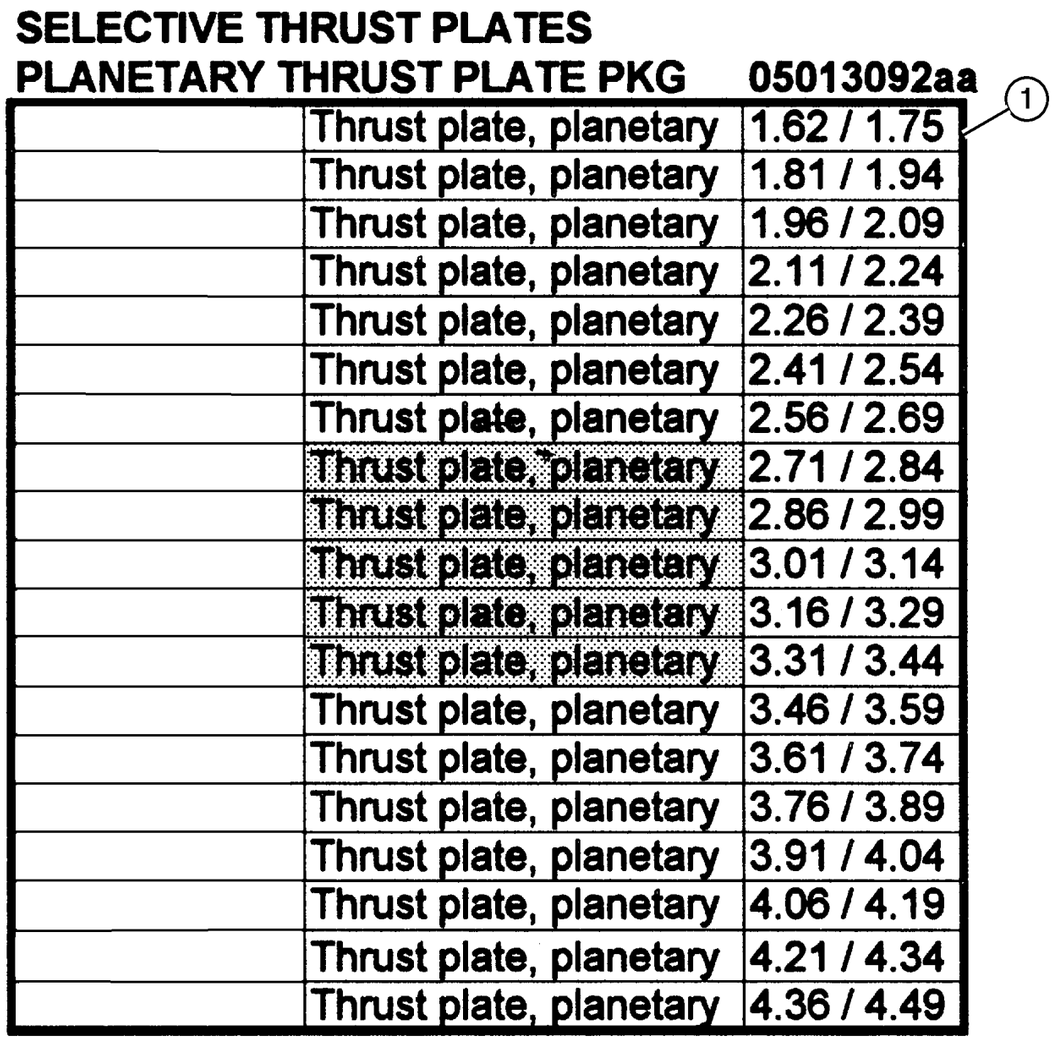

ITEM	PART NUMBER	QTY	LINE	SERIES	BODY	ENGINE	TRANS	TRIM	DESCRIPTION
		AR	J, U				DG4		3.46 / 3.59
	4799 819AC	AR	T				DG4		3.61 / 3.74
		AR	J, U				DG4		3.61 / 3.74
	4799 843AC	AR	T				DG4		3.01 / 3.14
	4799 810AC	AR	J, U				DG4		2.26 / 2.39
	4799 843AC	AR	J, U				DG4		3.01 / 3.14
	4799 810AC	AR	J, U			EN0	DGQ		2.26 / 2.39
	4799 811AC	AR	J, U			EN0	DGQ		2.41 /2.54
	4799 812AC	AR	J, U			EN0	DGQ		2.56 / 2.69
	4799 813AC	AR	J, U			EN0	DGQ		2.71 / 2.84
	4799 814AC	AR	J, U			EN0	DGQ		2.86 / 2.99
	4799 816AC	AR	J, U			EN0	DGQ		3.16 / 3.29
	4799 817AC	AR	J, U			EN0	DGQ		3.31 / 3.44
	4799 818AC	AR	J, U			EN0	DGQ		3.46 / 3.59
	4799 819AC	AR	J, U			EN0	DGQ		3.61 / 3.74
	4799 811AC	AR	T				DG4		2.41 /2.54
	4799 843AC	AR	J, U			EN0	DGQ		3.01 / 3.14
	4799 811AC	AR	J, U				DG4		2.41 /2.54
	4799 812AC	AR	T				DG4		2.56 / 2.69
		AR	J, U				DG4		2.56 / 2.69
	4799 813AC	AR	T				DG4		2.71 / 2.84
		AR	J, U				DG4		2.71 / 2.84
	4799 814AC	AR	T				DG4		2.86 / 2.99

JEEP LIBERTY (KJ)

SERIES	LINE	BODY	ENGINE	TRANSMISSION
P = Limited	J = LHD (4WD)	74 = 4 Dr. (104.3 WB)	ED1, ED0 = 2.4L Power Tech	DDK = 5 Speed HDManual
H = Sport	U = RHD (4WD)		EKG, EK0 = 3.7L Power Tech	DDD = 5 Speed HD Manual
M = Renegade	T = LHD (2WD)		ENJ = 2.5L 4Cyl Turbo Diesel	DG4,DGQ = Multi-Speed Auto
			ENR = 2.8L 4Cyl Turbo Diesel	DG6 = 4 Speed Auto Transm
			EN0 = 4Cyl Turbo Diesel	DG0 = All Automatic Transm
				DBB = All Manual Transm

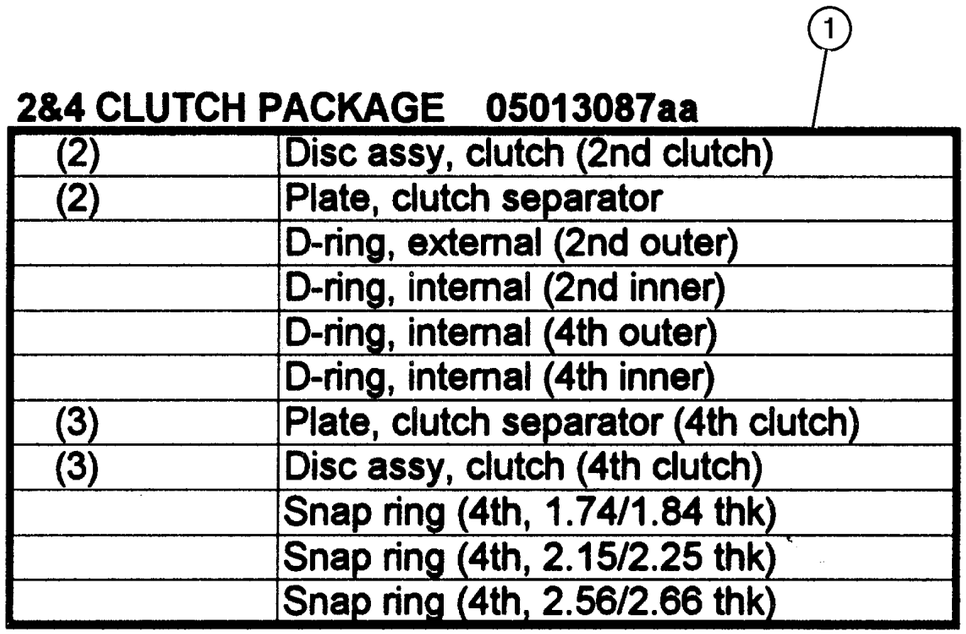

ITEM	PART NUMBER	QTY	LINE	SERIES	BODY	ENGINE	TRANS	TRIM	DESCRIPTION
NOTE; Sales Codes									
[DG4]= Multi -Speed Automatic Transmission 45RFE									
[DGQ]=5 Speed Automatic Transmission 45RFE									
1									CLUTCH PACKAGE, Automatic Transmission, 2/4
	#5013 087AC	1	J, U				DG4		
		1	T				DG4		
		1	J, U			EN0	DGQ		

JEEP LIBERTY (KJ)

SERIES	LINE	BODY	ENGINE	TRANSMISSION
P = Limited	J = LHD (4WD)	74 = 4 Dr. (104.3 WB)	ED1, ED0 = 2.4L Power Tech	DDK = 5 Speed HDManual
H = Sport	U = RHD (4WD)		EKG, EK0 = 3.7L Power Tech	DDD = 5 Speed HD Manual
M = Renegade	T = LHD (2WD)		ENJ = 2.5L 4Cyl Turbo Diesel	DG4,DGQ = Multi-Speed Auto
			ENR = 2.8L 4Cyl Turbo Diesel	DG6 = 4 Speed Auto Transm
			EN0 = 4Cyl Turbo Diesel	DG0 = All Automatic Transm
				DBB = All Manual Transm

Group – 3550

Manual Transmission 5 Speed

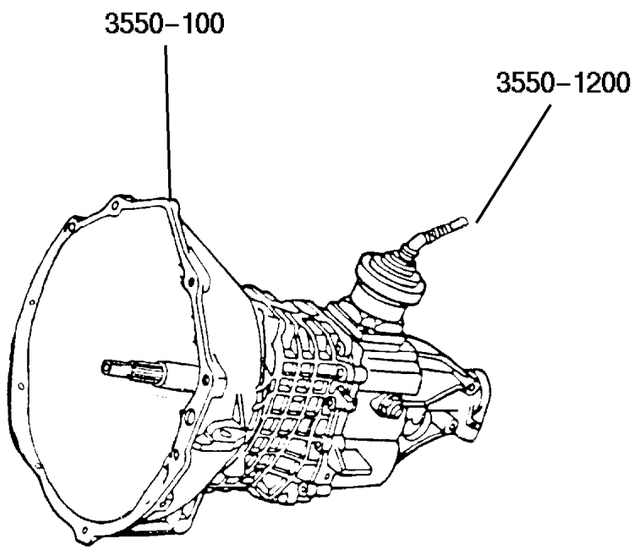

3550–100 Transmission Assembly	3550–200 Case and Extension	3550–400 Gear Train	3550–900 Fork and Rails
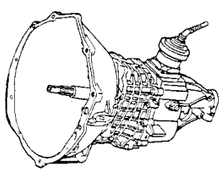	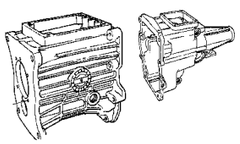	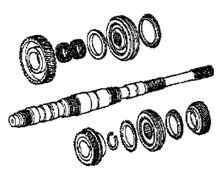	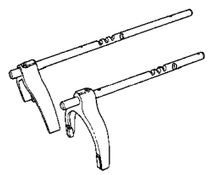
3550–1200 Gearshift Controls 			

GROUP 3550 - Manual Transmission 5 Speed

Illustration Title	Group-Fig. No.
Transmission Assembly	
Transmission Assembly [DDD]	Fig. 3550-110
Case and Extension	
Case and Extension [DDD]	Fig. 3550-210
Gear Train	
Gear Train [DDD]	Fig. 3550-410
Fork and Rails	
Fork and Rails [DDD]	Fig. 3550-910
Gearshift Controls	
Gearshift Controls [DDD]	Fig. 3550-1210

Transmission Assembly [DDD]
Figure 3550-110

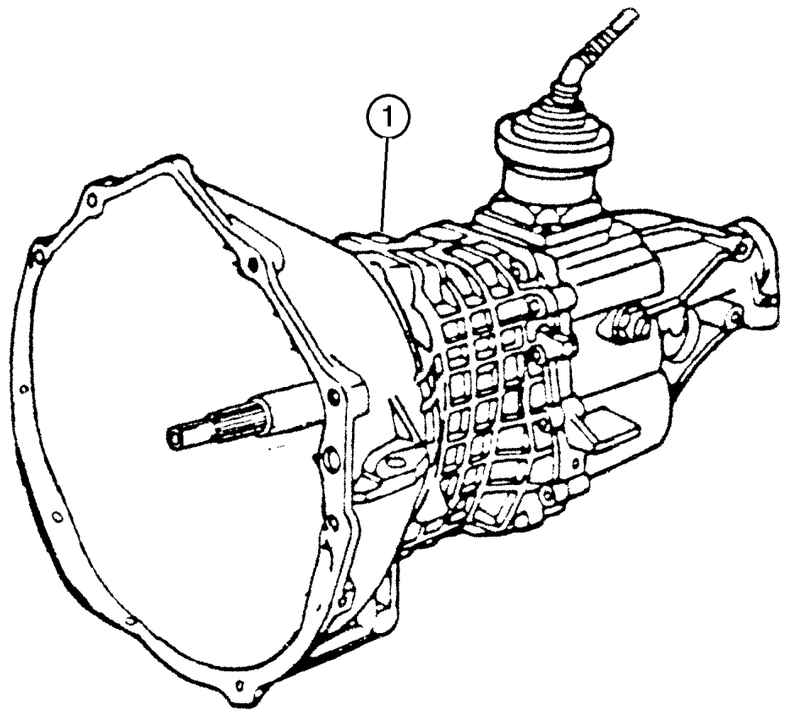

ITEM	PART NUMBER	QTY	LINE	SERIES	BODY	ENGINE	TRANS	TRIM	DESCRIPTION
NOTE; Sales Codes									
[DDD] = 5 Speed Heavy Duty Manual Transmissions									
[EKG] = Magnum 3.7L V6 Engine									
[EN0] = All 4/5 Cylinder Turbo Diesel Engines									
1									TRANSMISSION, 5 Speed
	#52104 817AD	1	J			EKG	DDD		
	#52104 818AD	1	T			EKG	DDD		
	#52104 820AE	1	J, U			EN0	DDD		

JEEP LIBERTY (KJ)

SERIES	LINE	BODY	ENGINE	TRANSMISSION
P = Limited	J = LHD (4WD)	74 = 4 Dr. (104.3 WB)	ED1, ED0 = 2.4L Power Tech	DDK = 5 Speed HDManual
H = Sport	U = RHD (4WD)		EKG, EK0 = 3.7L Power Tech	DDD = 5 Speed HD Manual
M = Renegade	T = LHD (2WD)		ENJ = 2.5L 4Cyl Turbo Diesel	DG4,DGQ = Multi-Speed Auto
			ENR = 2.8L 4Cyl Turbo Diesel	DG6 = 4 Speed Auto Transm
			EN0 = 4Cyl Turbo Diesel	DG0 = All Automatic Transm
				DBB = All Manual Transm

Case and Extension [DDD]
Figure 3550-210

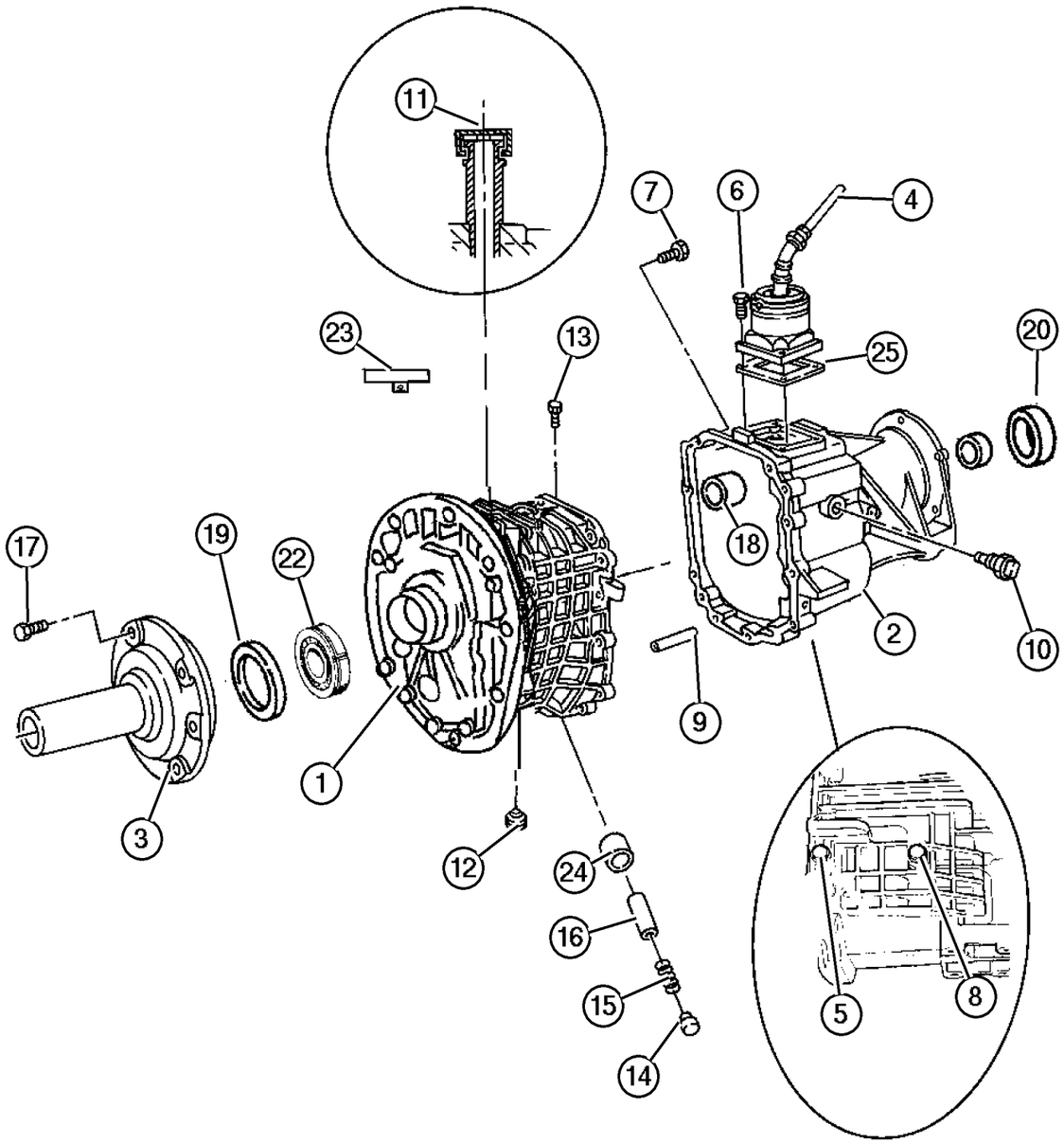

ITEM	PART NUMBER	QTY	LINE	SERIES	BODY	ENGINE	TRANS	TRIM	DESCRIPTION
NOTE; Sales Codes									
[DDD] = 5 Speed Heavy Duty Manual Transmissions									
[EKG] = Magnum 3.7L V6 Engine									
1									CASE, Transmission
	#5096 102AA	1	J			EKG	DDD		
		1	T			EKG	DDD		
	#5096 101AA	1	J, U			EN0	DDD		
2									CASE, Transmission Rear
	#5069 035AC	1	T			EKG	DDD		
	5069 042AC	1	J			EKG	DDD		
		1	J, U			EN0	DDD		
3									RETAINER, Shaft
	5013 306AA	1	J			EKG	DDD		
		1	T			EKG	DDD		
		1	J, U			EN0	DDD		
4									LEVER, Gearshift
	#5101 817AA	1	T			EKG	DDD		
		1	J			EKG	DDD		
	#5101 818AA	1	J, U			EN0	DDD		
5									BOLT, M8-1.25x70
	4741 313	1	J			EKG	DDD		
		1	T			EKG	DDD		
		1	J, U			EN0	DDD		
6									BOLT, Hex Head
	4741 144	4	J			EKG	DDD		
		4	T			EKG	DDD		
		4	J, U			EN0	DDD		
7									BOLT, Hex Head, M8x1.25x50
	4741 123	11	J			EKG	DDD		
		11	T			EKG	DDD		
		11	J, U			EN0	DDD		
8									BOLT, Hex
	4741 115	1	J			EKG	DDD		
		1	T			EKG	DDD		
		1	J, U			EN0	DDD		
9									PIN, Locating
	4741 122	2	J			EKG	DDD		
		2	T			EKG	DDD		
		2	J, U			EN0	DDD		
10									SWITCH, Back Up Lamp
	5600 7163	1	J			EKG	DDD		

JEEP LIBERTY (KJ)

SERIES	LINE	BODY	ENGINE	TRANSMISSION
P = Limited	J = LHD (4WD)	74 = 4 Dr. (104.3 WB)	ED1, ED0 = 2.4L Power Tech	DDK = 5 Speed HDManual
H = Sport	U = RHD (4WD)		EKG, EK0 = 3.7L Power Tech	DDD = 5 Speed HD Manual
M = Renegade	T = LHD (2WD)		ENJ = 2.5L 4Cyl Turbo Diesel	DG4,DGQ = Multi-Speed Auto
			ENR = 2.8L 4Cyl Turbo Diesel	DG6 = 4 Speed Auto Transm
			EN0 = 4Cyl Turbo Diesel	DG0 = All Automatic Transm
				DBB = All Manual Transm

AR = Use as required - = Non illustrated part # = New this model year **June 3, 2003**

« RETURN TO GROUP INDEX »

Case and Extension [DDD]
Figure 3550-210

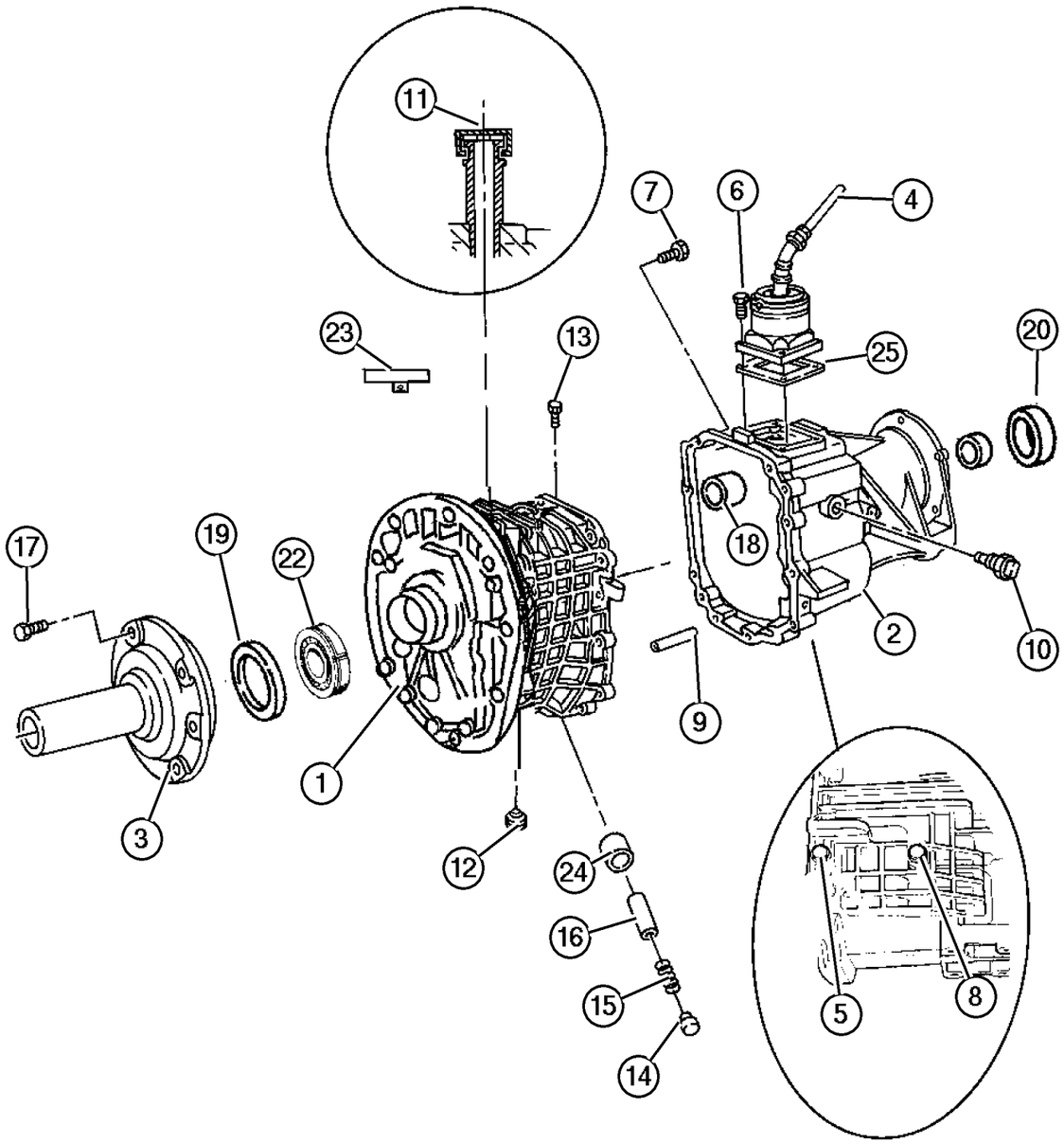

ITEM	PART NUMBER	QTY	LINE	SERIES	BODY	ENGINE	TRANS	TRIM	DESCRIPTION
		1	T			EKG	DDD		
		1	J, U			EN0	DDD		
11									VENT, Transmission
	5015 945AA	1	J			EKG	DDD		
		1	T			EKG	DDD		
		1	J, U			EN0	DDD		
12									PLUG, Oil Fill
	4882 280	1	J			EKG	DDD		
		1	T			EKG	DDD		
		1	J, U			EN0	DDD		
13									PIN, Detent
	5013 321AA	1	J, U			EKG	DDD		
		1	T			EKG	DDD		
		1	J, U			EN0	DDD		
14									CAP, Detent
	4741 128	1	J			EKG	DDD		
		1	T			EKG	DDD		
		1	J, U			EN0	DDD		
15									SPRING, Shift Detent
	4773 182	1	J			EKG	DDD		
		1	T			EKG	DDD		
		1	J, U			EN0	DDD		
16									PLUNGER
	5015 949AA	1	J			EKG	DDD		
		1	T			EKG	DDD		
		1	J, U			EN0	DDD		
17									BOLT, Hex Head, M6x1.00x25
	4741 300	1	J			EKG	DDD		
		6	T			EKG	DDD		
		6	J, U			EN0	DDD		
18									BEARING, Ball
	4741 112	1	J, U			EKG	DDD		
		1	T			EKG	DDD		
		1	J, U			EN0	DDD		
19									SEAL, Input Shaft
	4741 296	1	J			EKG	DDD		
		1	T			EKG	DDD		
		1	J, U			EN0	DDD		
20									SEAL, Output Shaft
	4741 118	1	J			EKG	DDD		
		1	J, U			EN0	DDD		

JEEP LIBERTY (KJ)

SERIES	LINE	BODY	ENGINE	TRANSMISSION
P = Limited	J = LHD (4WD)	74 = 4 Dr. (104.3 WB)	ED1, ED0 = 2.4L Power Tech	DDK = 5 Speed HDManual
H = Sport	U = RHD (4WD)		EKG, EK0 = 3.7L Power Tech	DDD = 5 Speed HD Manual
M = Renegade	T = LHD (2WD)		ENJ = 2.5L 4Cyl Turbo Diesel	DG4,DGQ = Multi-Speed Auto
			ENR = 2.8L 4Cyl Turbo Diesel	DG6 = 4 Speed Auto Transm
			EN0 = 4Cyl Turbo Diesel	DG0 = All Automatic Transm
				DBB = All Manual Transm

AR = Use as required - = Non illustrated part # = New this model year

June 3, 2003

« RETURN TO GROUP INDEX

Case and Extension [DDD]
Figure 3550-210

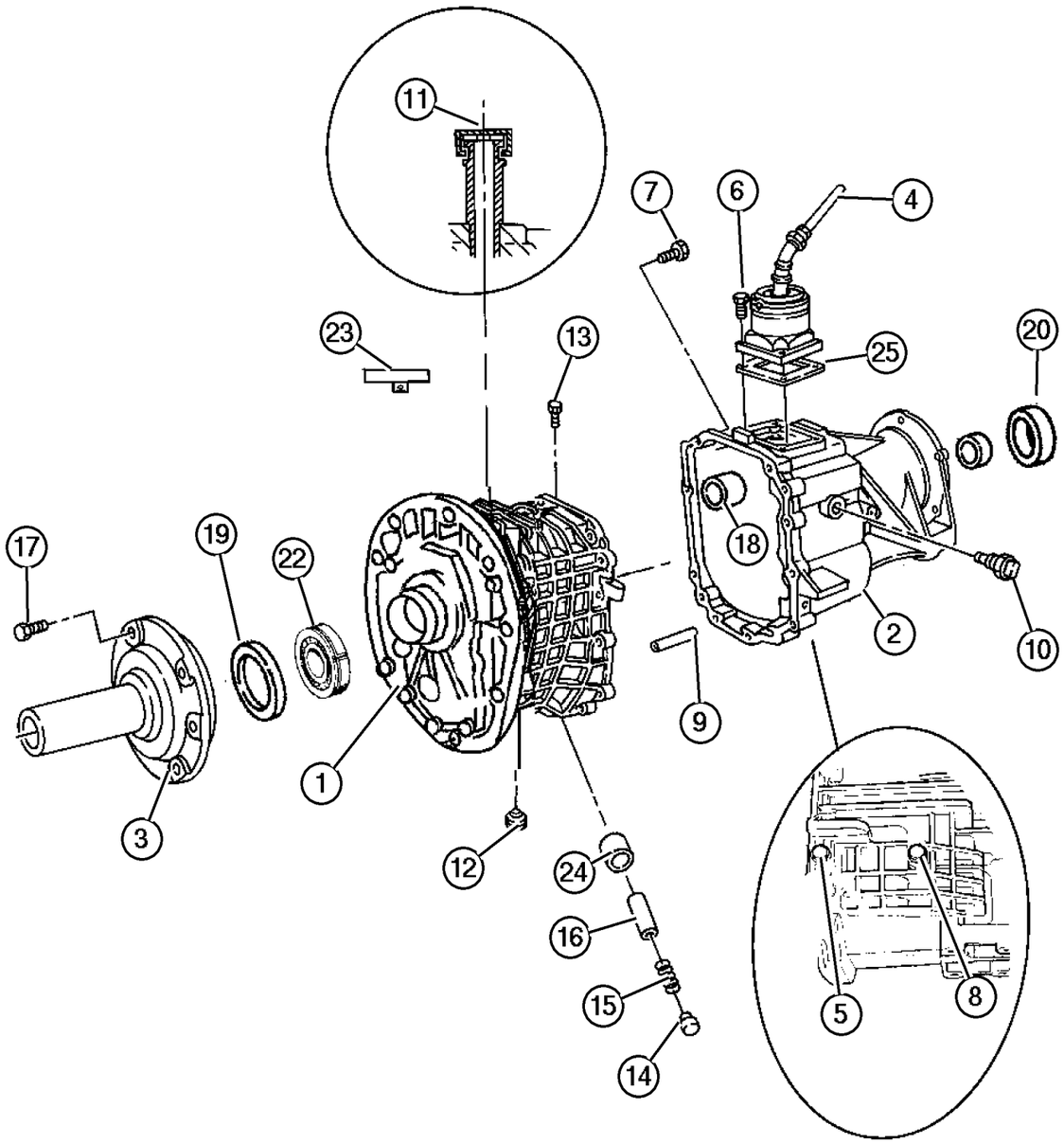

ITEM	PART NUMBER	QTY	LINE	SERIES	BODY	ENGINE	TRANS	TRIM	DESCRIPTION
	4531 216AB	1	T			EKG	DDD		
-21	4864 409	1	T			EKG	DDD		SEAL, Extension
22									BEARING, Input Shaft
	4874 174	1	J			EKG	DDD		
		1	T			EKG	DDD		
		1	J, U			EN0	DDD		
23									VENT, Transmission
	5015 945AA	1	J			EKG	DDD		
		1	T			EKG	DDD		
		1	J, U			EN0	DDD		
24									BUSHING, Transmission
	5012 337AA	1	J			EKG	DDD		
		1	T			EKG	DDD		
		1	J, U			EN0	DDD		
25									SEAL, Shift Lever
	4886 153AA	1	J			EKG	DDD		
		1	T			EKG	DDD		
		1	J, U			EN0	DDD		
-26	5019 023AA	1	T			EKG	DDD		BUSHING, Transmission, Rear Case
-27									CLIP
	5019 683AA	1	J, U			EKG	DDD		
		1	T			EKG	DDD		
-28									PLUG, Oil Drain
	4740 903	1	T			EKG	DDD		
		1	J, U			EN0	DDD		

JEEP LIBERTY (KJ)

SERIES	LINE	BODY	ENGINE	TRANSMISSION
P = Limited	J = LHD (4WD)	74 = 4 Dr. (104.3 WB)	ED1, ED0 = 2.4L Power Tech	DDK = 5 Speed HDManual
H = Sport	U = RHD (4WD)		EKG, EK0 = 3.7L Power Tech	DDD = 5 Speed HD Manual
M = Renegade	T = LHD (2WD)		ENJ = 2.5L 4Cyl Turbo Diesel	DG4,DGQ = Multi-Speed Auto
			ENR = 2.8L 4Cyl Turbo Diesel	DG6 = 4 Speed Auto Transm
			EN0 = 4Cyl Turbo Diesel	DG0 = All Automatic Transm
				DBB = All Manual Transm

AR = Use as required - = Non illustrated part # = New this model year **June 3, 2003**

« RETURN TO GROUP INDEX

Gear Train [DDD]
Figure 3550-410

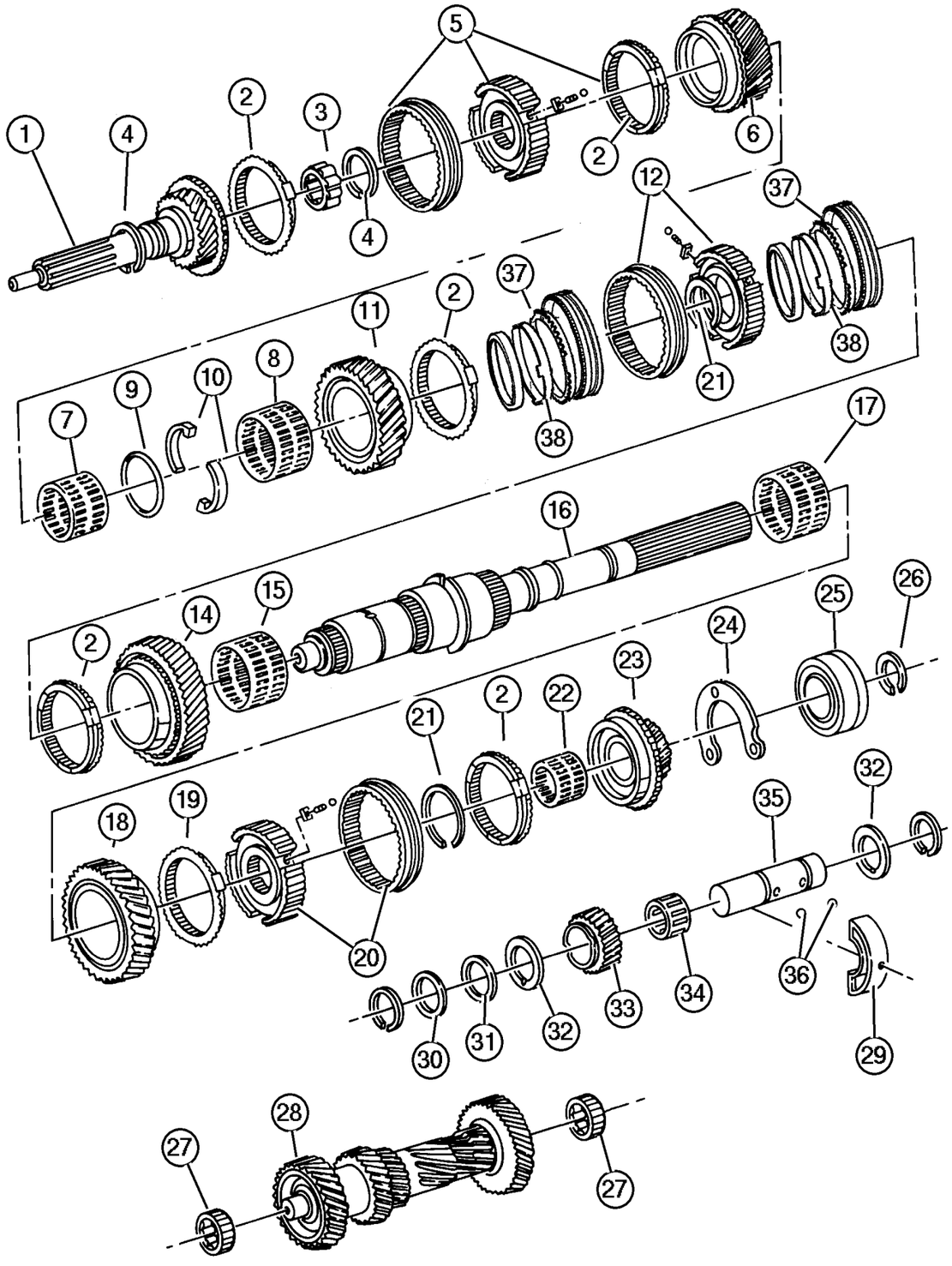

ITEM	PART NUMBER	QTY	LINE	SERIES	BODY	ENGINE	TRANS	TRIM	DESCRIPTION
NOTE; Sales Codes									
[DDD] = 5 Speed Heavy Duty Manual Transmissions									
[EKG] = Magnum 3.7L V6 Engine									
1									SHAFT, Input
	5019 723AA	1	J			EKG	DDD		
		1	T			EKG	DDD		
		1	J, U			EN0	DDD		
2									STOP RING, Synchronizer
	4741 277	2	T			EKG	DDD		
		1	J, U			EN0	DDD		
		2	J, U			EN0	DDD		
3									NEEDLE BEARING, Input Shaft
	4741 878	1	J			EKG	DDD		
		1	T			EKG	DDD		
		1	J, U			EN0	DDD		
4									SNAP RING, Output Shaft Bearing
	4741 266	1	J			EKG	DDD		
		1	T			EKG	DDD		
		1	J, U			EN0	DDD		
5									SYNCHRONIZER, Third and Fourth
	4741 293AB	1	J			EKG	DDD		
		1	T			EKG	DDD		
		1	J, U			EN0	DDD		
6									GEAR, Third
	4883 718AB	1	J			EKG	DDD		
		1	T			EKG	DDD		
		1	J, U			EN0	DDD		
7									NEEDLE BEARING, Third Gear
	4741 874	1	J, U			EKG	DDD		
		1	T			EKG	DDD		
8									NEEDLE BEARING, Second Gear
	5003 039AA	1	J			EKG	DDD		
		1	T			EKG	DDD		
		1	J, U			EN0	DDD		
9									SNAP RING
	4897 922AA	1	J			EKG	DDD		
		1	T			EKG	DDD		
		1	J, U			EN0	DDD		
10									WASHER, Output Shaft
	5019 721AA	2	J			EKG	DDD		
		2	T			EKG	DDD		

JEEP LIBERTY (KJ)

SERIES	LINE	BODY	ENGINE	TRANSMISSION
P = Limited	J = LHD (4WD)	74 = 4 Dr. (104.3 WB)	ED1, ED0 = 2.4L Power Tech	DDK = 5 Speed HDManual
H = Sport	U = RHD (4WD)		EKG, EK0 = 3.7L Power Tech	DDD = 5 Speed HD Manual
M = Renegade	T = LHD (2WD)		ENJ = 2.5L 4Cyl Turbo Diesel	DG4,DGQ = Multi-Speed Auto
			ENR = 2.8L 4Cyl Turbo Diesel	DG6 = 4 Speed Auto Transm
			EN0 = 4Cyl Turbo Diesel	DG0 = All Automatic Transm
				DBB = All Manual Transm

AR = Use as required - = Non illustrated part # = New this model year

June 3, 2003

« RETURN TO GROUP INDEX »

Gear Train [DDD]
Figure 3550-410

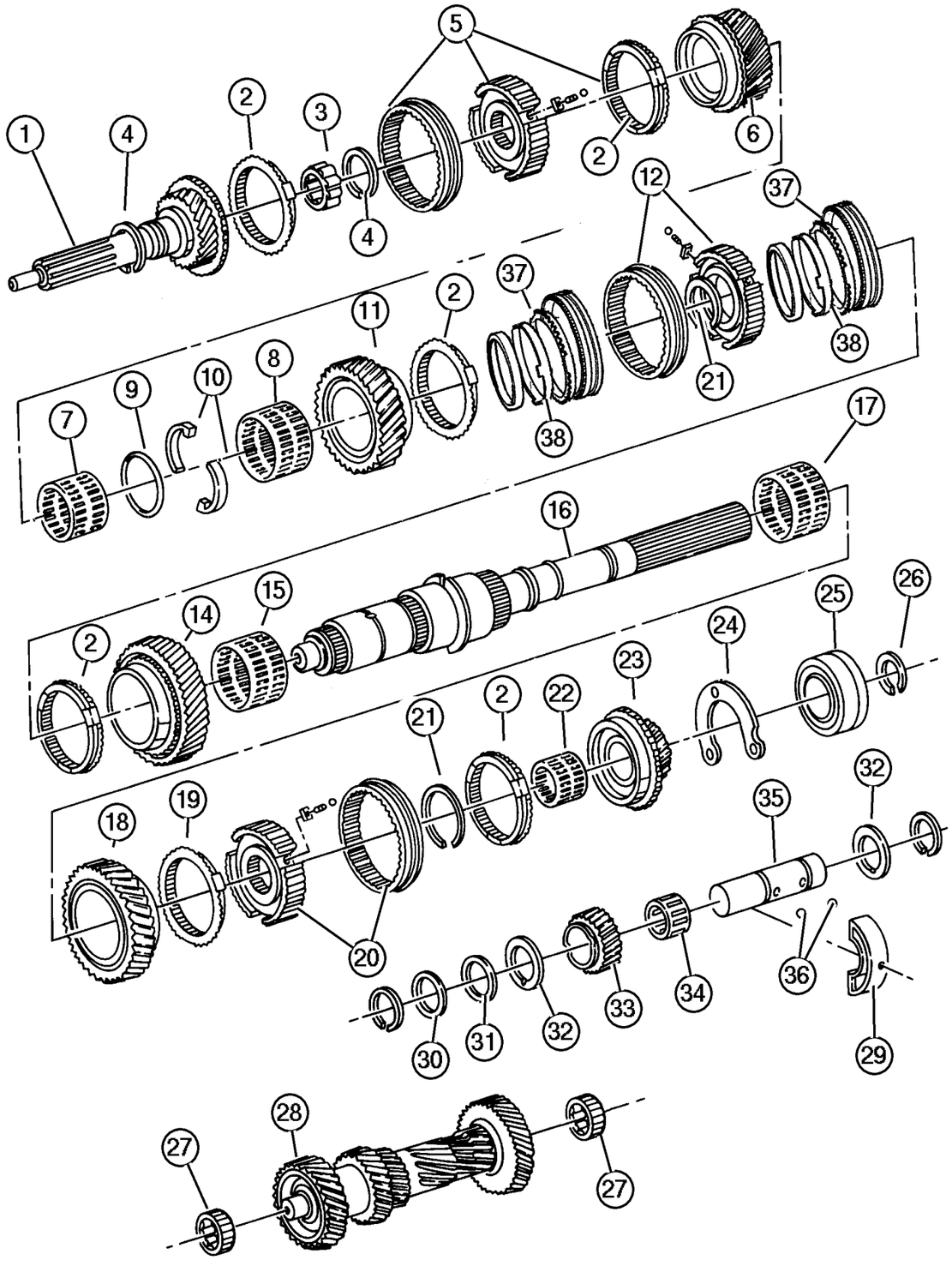

ITEM	PART NUMBER	QTY	LINE	SERIES	BODY	ENGINE	TRANS	TRIM	DESCRIPTION
		2	J, U			EN0	DDD		
11									GEAR, Second
	4874 358AB	1	J			EKG	DDD		
		1	T			EKG	DDD		
		1	J, U			EN0	DDD		
12									SYNCHRONIZER, First and Second
	4874 356AB	1	J			EKG	DDD		
		1	T			EKG	DDD		
		1	J, U			EN0	DDD		
-13									STOP RING, Synchronizer
	4741 277	1	J, U			EN0	DDD		
		1	T			EKG	DDD		
		1	J			EKG	DDD		
14									GEAR, First
	4874 355AB	1	J			EKG	DDD		
		1	T			EKG	DDD		
		1	J, U			EN0	DDD		
15									NEEDLE BEARING, Transmission
	4741 871	1	J			EKG	DDD		
		1	T			EKG	DDD		
		1	J, U			EN0	DDD		
16									SHAFT, Output
	4874 309	1	J			EKG	DDD		
		1	J, U			EN0	DDD		
	5003 288AA	1	T			EKG	DDD		
17									NEEDLE BEARING, Transmission
	4741 871	1	J			EKG	DDD		
		1	T			EKG	DDD		
		1	J, U			EN0	DDD		
18									GEAR, Reverse
	5019 029AA	1	J			EKG	DDD		
		1	T			EKG	DDD		
		1	J, U			EN0	DDD		
19									STOP RING, Synchronizer
	4741 285	1	J			EKG	DDD		
		1	T			EKG	DDD		
		1	J, U			EN0	DDD		
20									SYNCHRONIZER, Fifth And Reverse
	4741 278AB	1	J			EKG	DDD		
		1	T			EKG	DDD		
		1	J, U			EN0	DDD		
21									STOP RING, Synchronizer

JEEP LIBERTY (KJ)

SERIES	LINE	BODY	ENGINE	TRANSMISSION
P = Limited	J = LHD (4WD)	74 = 4 Dr. (104.3 WB)	ED1, ED0 = 2.4L Power Tech	DDK = 5 Speed HDManual
H = Sport	U = RHD (4WD)		EKG, EK0 = 3.7L Power Tech	DDD = 5 Speed HD Manual
M = Renegade	T = LHD (2WD)		ENJ = 2.5L 4Cyl Turbo Diesel	DG4,DGQ = Multi-Speed Auto
			ENR = 2.8L 4Cyl Turbo Diesel	DG6 = 4 Speed Auto Transm
			EN0 = 4Cyl Turbo Diesel	DG0 = All Automatic Transm
				DBB = All Manual Transm

AR = Use as required - = Non illustrated part # = New this model year

June 3, 2003

« RETURN TO GROUP INDEX

« »

Gear Train [DDD]
Figure 3550-410

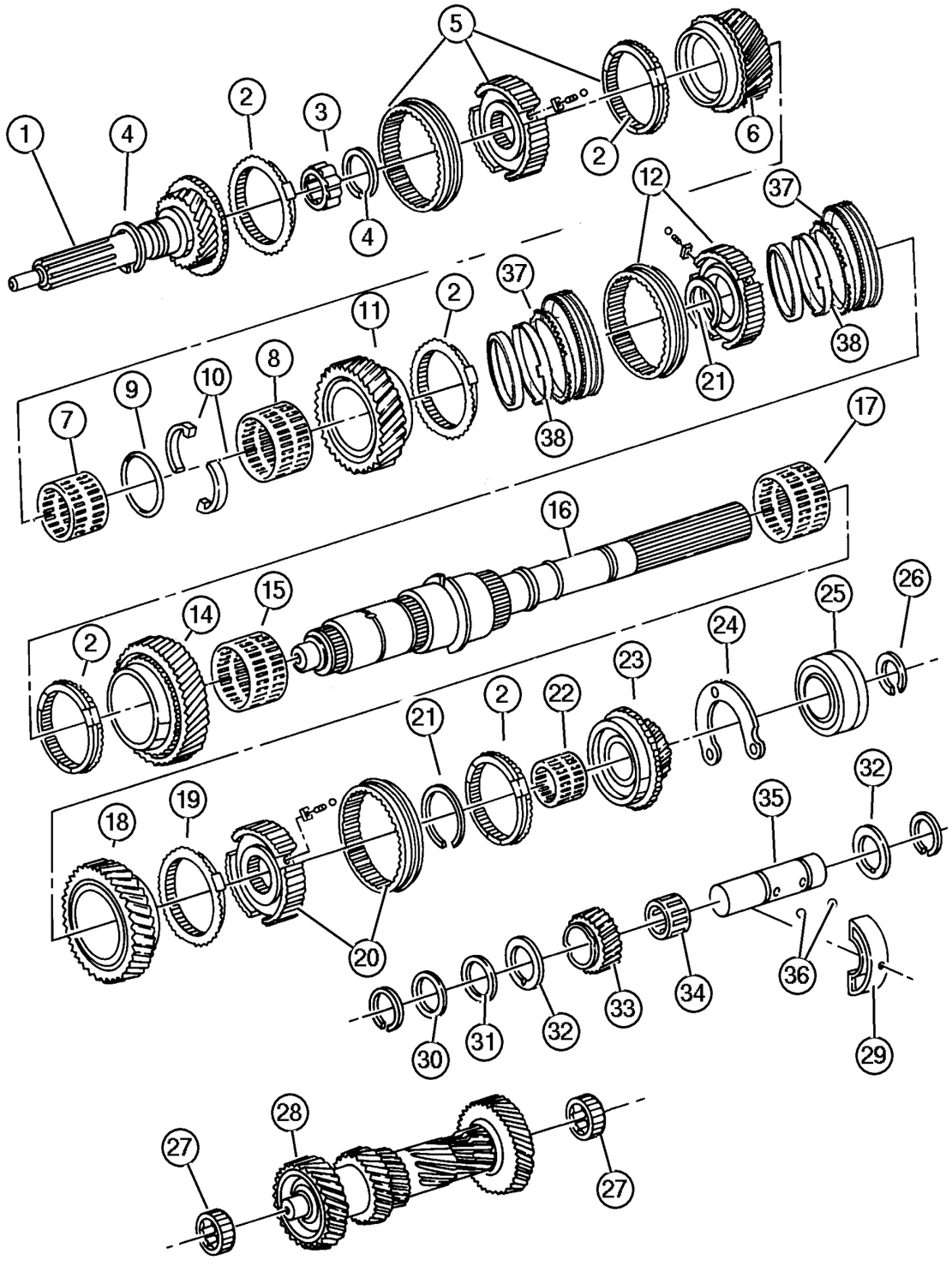

ITEM	PART NUMBER	QTY	LINE	SERIES	BODY	ENGINE	TRANS	TRIM	DESCRIPTION
	4741 277	1	J			EKG	DDD		
		1	T			EKG	DDD		
		1	J, U			EN0	DDD		
22									BEARING, Needle
	4741 273	1	J			EKG	DDD		
		1	T			EKG	DDD		
		1	J, U			EN0	DDD		
23									GEAR, Fifth
	5069 040AA	1	J			EKG	DDD		
		1	T			EKG	DDD		
		1	J, U			EN0	DDD		
24									RETAINER, Transmission Output Shaft Bearing
	4741 114	1	J			EKG	DDD		
		1	J, U			EN0	DDD		
	4741 116	1	T			EKG	DDD		
25									BEARING, Output Shaft
	#4741 866AB	1	T			EKG	DDD		
		1	J			EKG	DDD		
		1	J, U			EN0	DDD		
26									SNAP RING, Output Shaft Bearing
	4741 266	1	J			EKG	DDD		
		1	T			EKG	DDD		
		1	J, U			EN0	DDD		
27									BEARING, Countershaft
	5066 646AA	1	J			EKG	DDD		
		1	T			EKG	DDD		
		1	J, U			EN0	DDD		
28									SHAFT, Counter
	5066 650AA	1	J			EKG	DDD		
		1	T			EKG	DDD		
		1	J, U			EN0	DDD		
29									SUPPORT, Segment Idler Shaft
	4741 312	1	J			EKG	DDD		
		1	T			EKG	DDD		
		1	J, U			EN0	DDD		
30									WASHER, Flat
	4741 310	1	J			EKG	DDD		
		1	T			EKG	DDD		
		1	J, U			EN0	DDD		
31									WASHER, Idler Gear

JEEP LIBERTY (KJ)

SERIES	LINE	BODY	ENGINE	TRANSMISSION
P = Limited	J = LHD (4WD)	74 = 4 Dr. (104.3 WB)	ED1, ED0 = 2.4L Power Tech	DDK = 5 Speed HDManual
H = Sport	U = RHD (4WD)		EKG, EK0 = 3.7L Power Tech	DDD = 5 Speed HD Manual
M = Renegade	T = LHD (2WD)		ENJ = 2.5L 4Cyl Turbo Diesel	DG4,DGQ = Multi-Speed Auto
			ENR = 2.8L 4Cyl Turbo Diesel	DG6 = 4 Speed Auto Transm
			EN0 = 4Cyl Turbo Diesel	DG0 = All Automatic Transm
				DBB = All Manual Transm

AR = Use as required - = Non illustrated part # = New this model year

June 3, 2003

« RETURN TO GROUP INDEX

« »

Gear Train [DDD]
Figure 3550-410

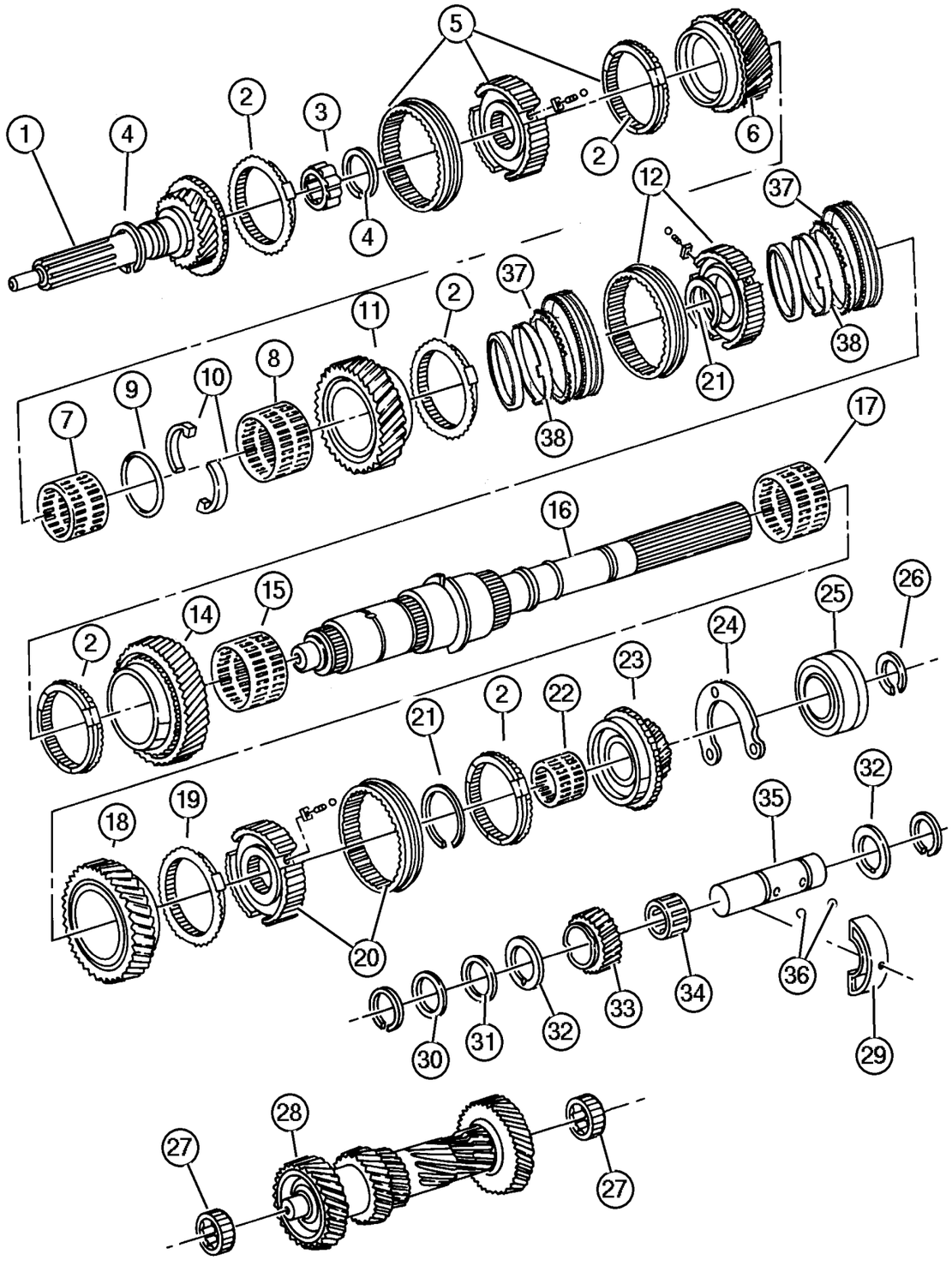

ITEM	PART NUMBER	QTY	LINE	SERIES	BODY	ENGINE	TRANS	TRIM	DESCRIPTION
	4741 309	1	J			EKG	DDD		
		1	T			EKG	DDD		
		1	J, U			EN0	DDD		
32									THRUST WASHER, Reverse Idler
	4741 307	2	J			EKG	DDD		
		2	T			EKG	DDD		
		2	J, U			EN0	DDD		
33									GEAR, Reverse Idler
	5066 651AA	1	J			EKG	DDD		
		1	T			EKG	DDD		
		1	J, U			EN0	DDD		
34									BEARING, Idler
	4874 359	1	J			EKG	DDD		
		1	T			EKG	DDD		
		1	J, U			EN0	DDD		
35									IDLER SHAFT, Transmission
	4741 303	1	J			EKG	DDD		
		1	T			EKG	DDD		
		1	J, U			EN0	DDD		
36									BALL, Check, 4 mm
	4741 891	2	J			EKG	DDD		
		2	T			EKG	DDD		
		2	J, U			EN0	DDD		
37									RING, Synchronizer Blocker
	4874 363	2	J			EKG	DDD		
		2	T			EKG	DDD		
		2	J, U			EN0	DDD		
38									CONE, Synchronizer
	4874 405	2	J			EKG	DDD		
		2	T			EKG	DDD		
		2	J, U			EN0	DDD		
-39									BEARING, First Gear
	4874 353	1	J			EKG	DDD		
		1	T			EKG	DDD		
		1	J, U			EN0	DDD		
-40									RING
	4874 403	1	J, U			EKG	DDD		Synch Interim Ring
		2	T			EKG	DDD		Synch Interim Ring
		2	J, U			EN0	DDD		Synch Interim Ring
	4874 404	1	J, U			EKG	DDD		Synch Reaction Cone Ring
		2	T			EKG	DDD		Synch Reaction Cone Ring

JEEP LIBERTY (KJ)

SERIES	LINE	BODY	ENGINE	TRANSMISSION
P = Limited	J = LHD (4WD)	74 = 4 Dr. (104.3 WB)	ED1, ED0 = 2.4L Power Tech	DDK = 5 Speed HDManual
H = Sport	U = RHD (4WD)		EKG, EK0 = 3.7L Power Tech	DDD = 5 Speed HD Manual
M = Renegade	T = LHD (2WD)		ENJ = 2.5L 4Cyl Turbo Diesel	DG4,DGQ = Multi-Speed Auto
			ENR = 2.8L 4Cyl Turbo Diesel	DG6 = 4 Speed Auto Transm
			EN0 = 4Cyl Turbo Diesel	DG0 = All Automatic Transm
				DBB = All Manual Transm

AR = Use as required - = Non illustrated part # = New this model year

June 3, 2003

« RETURN TO GROUP INDEX

« »

Gear Train [DDD]
Figure 3550-410

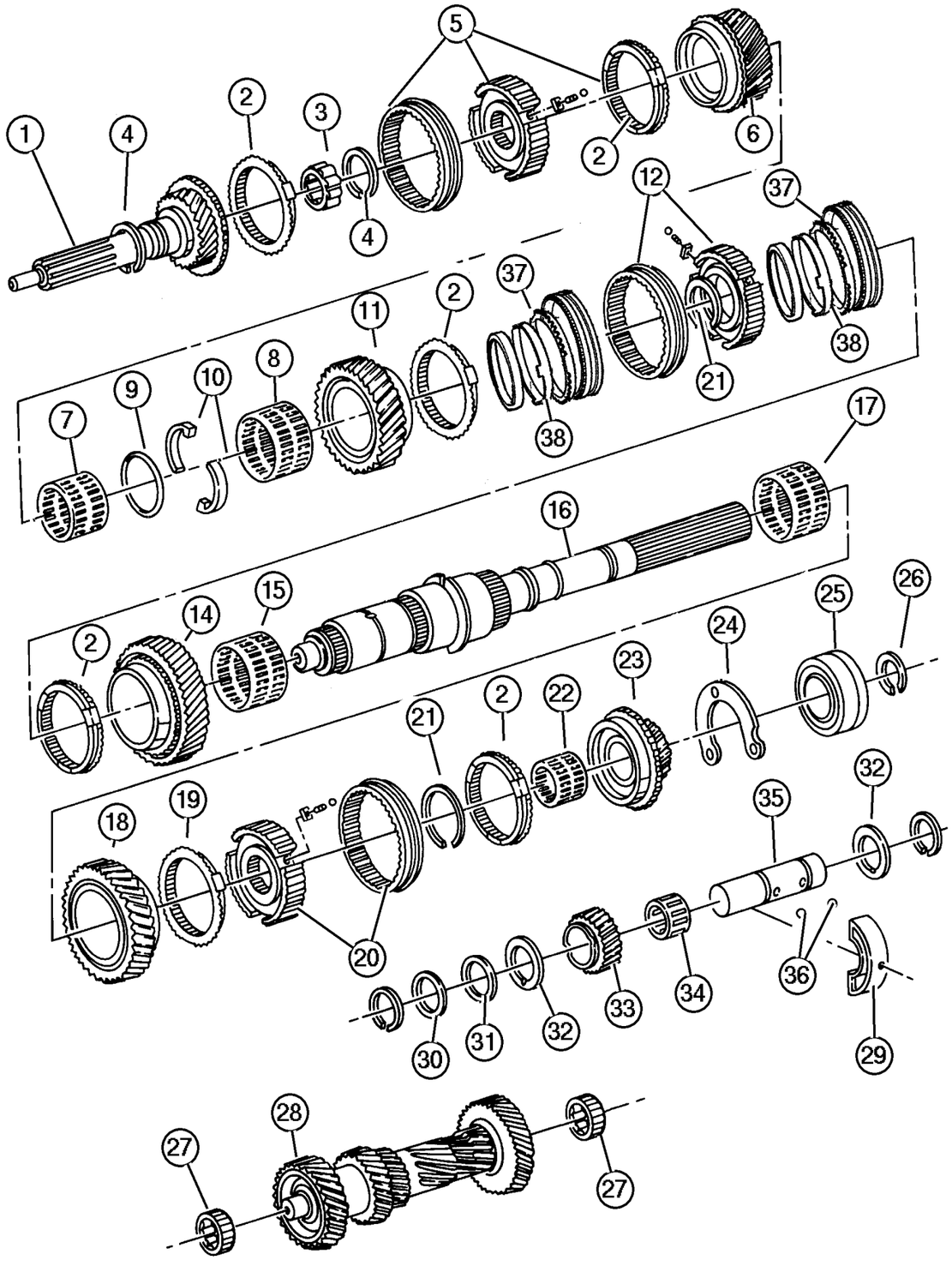

ITEM	PART NUMBER	QTY	LINE	SERIES	BODY	ENGINE	TRANS	TRIM	DESCRIPTION
		2	J, U			EN0	DDD		Synch Reaction Cone Ring
-41									RING, Transmission
	4741 805	1	J, U			EKG	DDD		Used on 1/2 & 5/R Hub Location
		1	T			EKG	DDD		Used on 1/2 & 5/R Hub Location
		1	J, U			EN0	DDD		Used on 1/2 & 5/R Hub Location
-42									SNAP RING
	4741 311	1	J, U			EKG	DDD		
		2	T			EKG	DDD		
		2	J, U			EN0	DDD		
-43									SNAP RING PACKAGE, Transmission
	4741 807	1	J			EKG	DDD		
		1	T			EKG	DDD		
		1	J, U			EN0	DDD		
-44									PLATE, Retaining
	5015 943AA	1	J, U			EKG	DDD		
		1	T			EKG	DDD		
		1	J, U			EN0	DDD		
-45									CAM, Reverse Block
	5015 942AA	1	J, U			EKG	DDD		
		1	T			EKG	DDD		
		1	J, U			EN0	DDD		

JEEP LIBERTY (KJ)

SERIES	LINE	BODY	ENGINE	TRANSMISSION
P = Limited	J = LHD (4WD)	74 = 4 Dr. (104.3 WB)	ED1, ED0 = 2.4L Power Tech	DDK = 5 Speed HDManual
H = Sport	U = RHD (4WD)		EKG, EK0 = 3.7L Power Tech	DDD = 5 Speed HD Manual
M = Renegade	T = LHD (2WD)		ENJ = 2.5L 4Cyl Turbo Diesel	DG4,DGQ = Multi-Speed Auto
			ENR = 2.8L 4Cyl Turbo Diesel	DG6 = 4 Speed Auto Transm
			EN0 = 4Cyl Turbo Diesel	DG0 = All Automatic Transm
				DBB = All Manual Transm

AR = Use as required - = Non illustrated part # = New this model year

June 3, 2003

« RETURN TO GROUP INDEX

Fork and Rails [DDD]
Figure 3550-910

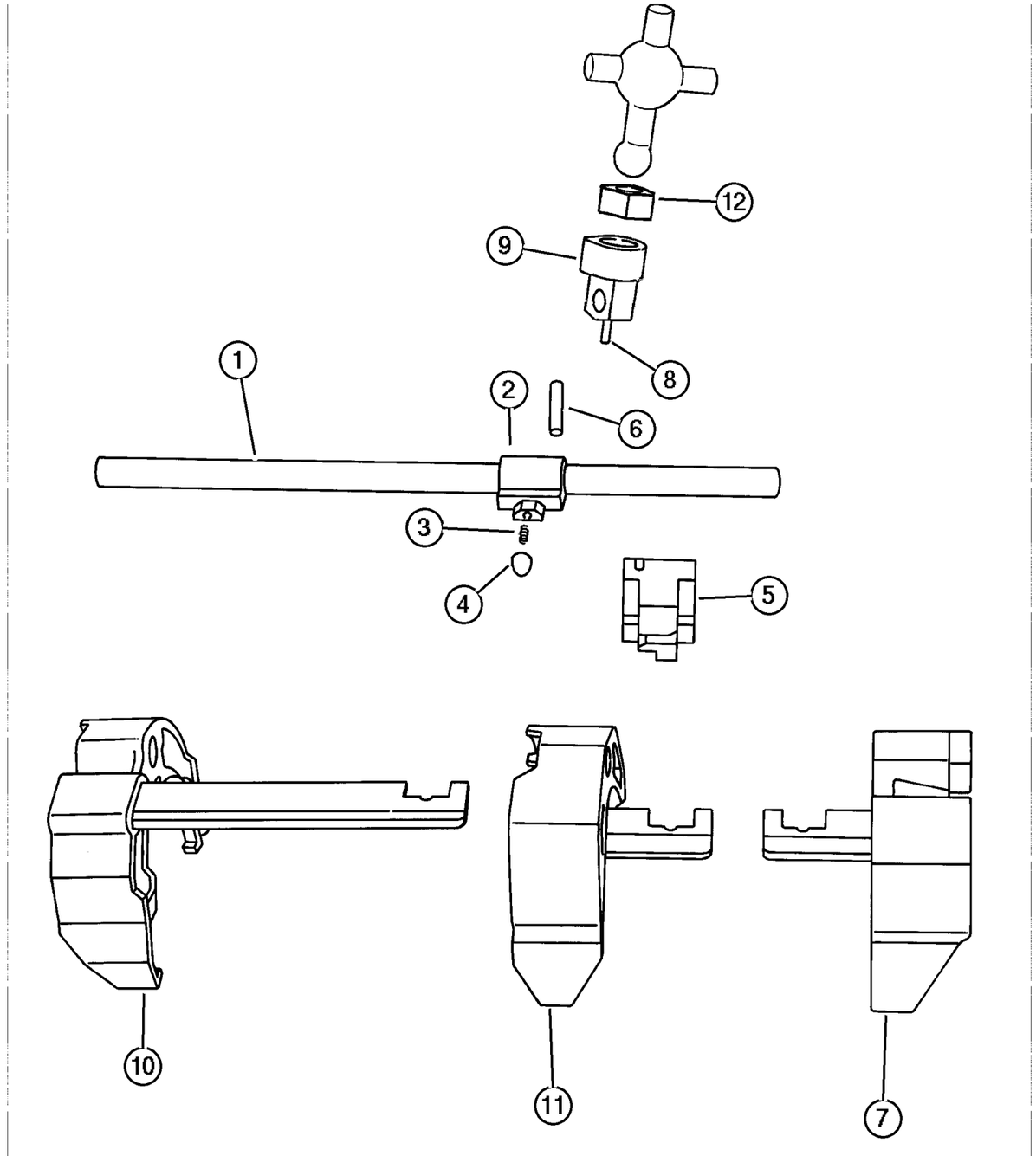

ITEM	PART NUMBER	QTY	LINE	SERIES	BODY	ENGINE	TRANS	TRIM	DESCRIPTION
NOTE; Sales Codes									
[DDD] = 5 Speed Heavy Duty Manual Transmissions									
[EKG] = Magnum 3.7L V6 Engine									
1									SHAFT, Selector
	5015 951AB	1	T			EKG	DDD		
		1	J			EKG	DDD		
		1	J, U			EN0	DDD		
2									LEVER, Shift Shaft
	5072 248AA	1	J			EKG	DDD		
		1	T			EKG	DDD		
		1	J, U			EN0	DDD		
3									SPRING, Lever
	4741 137	3	J			EKG	DDD		
		3	T			EKG	DDD		
		3	J, U			EN0	DDD		
4									PLUNGER
	5015 949AA	1	J			EKG	DDD		
		1	T			EKG	DDD		
		1	J, U			EN0	DDD		
5									BUSHING, Transmission
	5012 337AA	1	J			EKG	DDD		
		1	T			EKG	DDD		
		1	J, U			EN0	DDD		
6									PIN, Shift Shaft
	4741 139	1	J			EKG	DDD		
		1	T			EKG	DDD		
		1	J, U			EN0	DDD		
7									FORK, Third and Fourth
	5066 352AB	1	J			EKG	DDD		
		1	T			EKG	DDD		
		1	J, U			EN0	DDD		
8									PIN, Shift Shaft
	4741 139	1	J			EKG	DDD		
		1	T			EKG	DDD		
		1	J, U			EN0	DDD		
9									SOCKET, Shift Shaft
	4874 352	1	J			EKG	DDD		
		1	T			EKG	DDD		
		1	J, U			EN0	DDD		
10									FORK, Transmission
	5083 104AA	1	T			EKG	DDD		

JEEP LIBERTY (KJ)

SERIES	LINE	BODY	ENGINE	TRANSMISSION
P = Limited	J = LHD (4WD)	74 = 4 Dr. (104.3 WB)	ED1, ED0 = 2.4L Power Tech	DDK = 5 Speed HDManual
H = Sport	U = RHD (4WD)		EKG, EK0 = 3.7L Power Tech	DDD = 5 Speed HD Manual
M = Renegade	T = LHD (2WD)		ENJ = 2.5L 4Cyl Turbo Diesel	DG4,DGQ = Multi-Speed Auto
			ENR = 2.8L 4Cyl Turbo Diesel	DG6 = 4 Speed Auto Transm
			EN0 = 4Cyl Turbo Diesel	DG0 = All Automatic Transm
				DBB = All Manual Transm

Fork and Rails [DDD]
Figure 3550-910

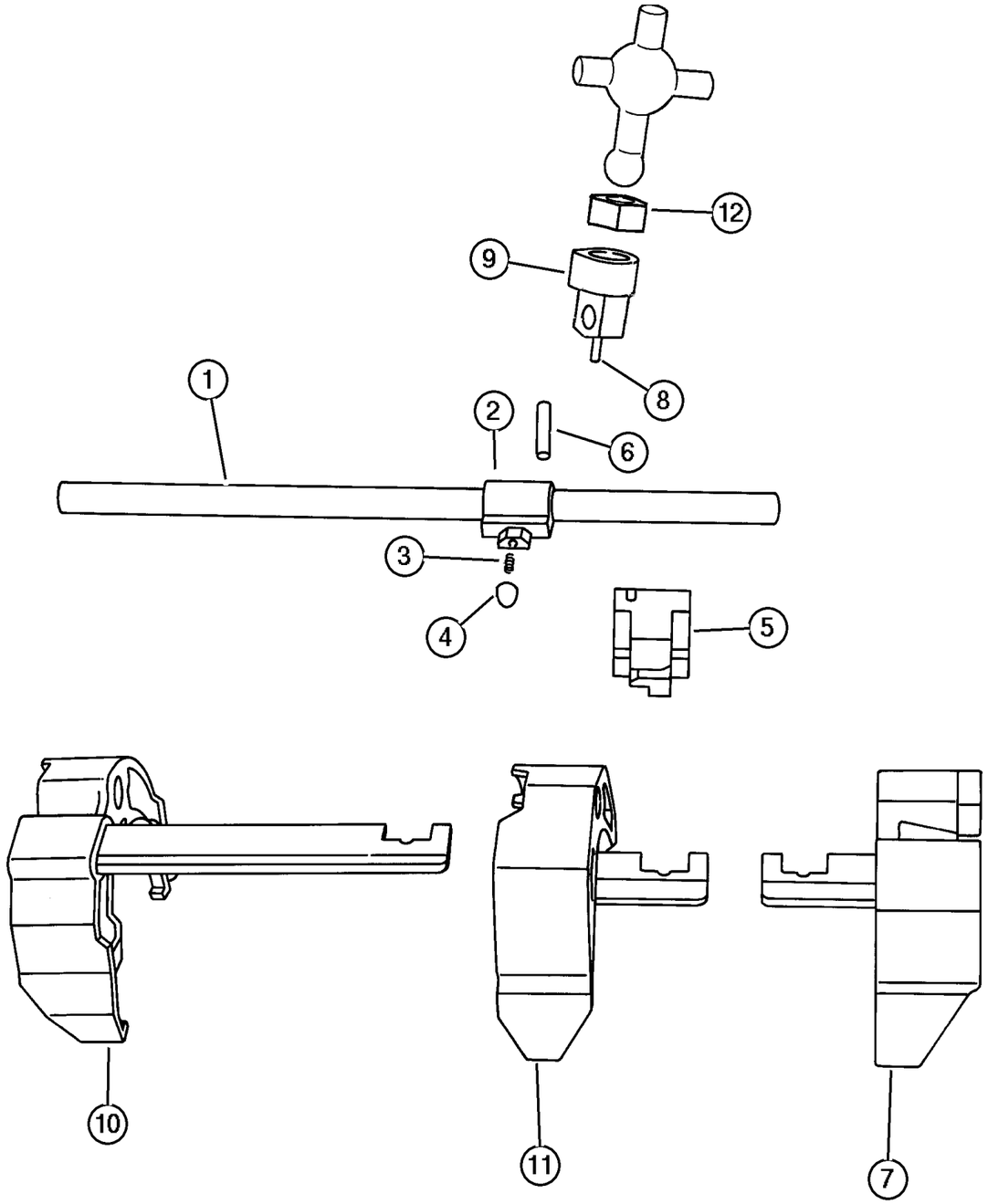

ITEM	PART NUMBER	QTY	LINE	SERIES	BODY	ENGINE	TRANS	TRIM	DESCRIPTION
		1	J			EKG	DDD		
		1	J, U			EN0	DDD		
11									FORK, First and Second
	4886 077AB	1	J			EKG	DDD		
		1	T			EKG	DDD		
		1	J, U			EN0	DDD		
12									ISOLATOR, Shift Lever
	5012 020AA	1	J			EKG	DDD		
		1	T			EKG	DDD		
		1	J, U			EN0	DDD		
-13	5019 023AA	1	T			EKG	DDD		BUSHING, Transmission, Rear Case
-14									PIN
	5019 024AA	1	J			EKG	DDD		Shift Fork Trac
		1	T			EKG	DDD		Shift Fork Trac
		1	J, U			EN0	DDD		Shift Fork Trac
-15									PIN, Detent
	4740 904	1	J			EKG	DDD		
		1	T			EKG	DDD		
		1	J, U			EN0	DDD		

JEEP LIBERTY (KJ)

SERIES	LINE	BODY	ENGINE	TRANSMISSION
P = Limited	J = LHD (4WD)	74 = 4 Dr. (104.3 WB)	ED1, ED0 = 2.4L Power Tech	DDK = 5 Speed HDManual
H = Sport	U = RHD (4WD)		EKG, EK0 = 3.7L Power Tech	DDD = 5 Speed HD Manual
M = Renegade	T = LHD (2WD)		ENJ = 2.5L 4Cyl Turbo Diesel	DG4,DGQ = Multi-Speed Auto
			ENR = 2.8L 4Cyl Turbo Diesel	DG6 = 4 Speed Auto Transm
			EN0 = 4Cyl Turbo Diesel	DG0 = All Automatic Transm
				DBB = All Manual Transm

AR = Use as required - = Non illustrated part # = New this model year

June 3, 2003

« RETURN TO GROUP INDEX

Gearshift Controls [DDD]
Figure 3550-1210

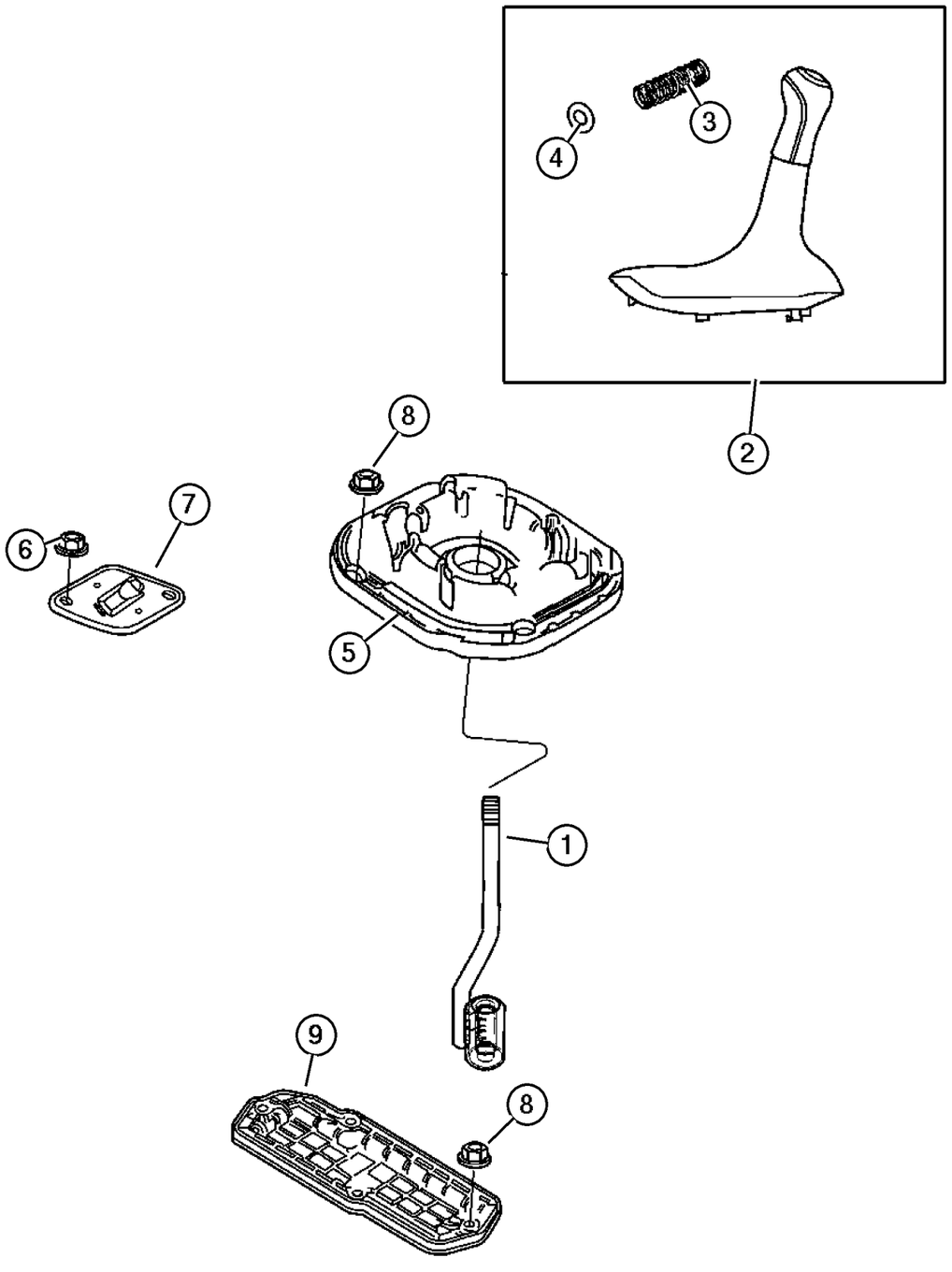

ITEM	PART NUMBER	QTY	LINE	SERIES	BODY	ENGINE	TRANS	TRIM	DESCRIPTION
NOTE; Sales Codes									
[DBB]= All Manual Transmissions									
[ED0]= All 4 Cylinder Gas Engines									
[EK0] = All 3.7L 6 Cylinder Gas Engines									
[EN0]= All 4/5 Cylinder Turbo Diesel									
1	#5102 826AA	1					DBB		LEVER, Gearshift
2	#5102 830AA	1					DBB		BOOT KIT, Gearshift
3	#5102 828AA	1					DBB		SPRING, Gearshift Lever
4	#5102 827AA	1					DBB		O RING, Gearshift Boot
5	52104 306AA	1				ED0, EK0, EN0	DBB		BOOT, Gearshift Lever
6	6100 047	2							NUT AND WASHER, Hex Nut-Coned Washer, M6 x 1.00
7	52104 382AA	1					DBB		COVER, Gearshift
8	6101 444	4					DBB		NUT AND WASHER, Hex, M6x1.0
		4					DBB		
9	52104 321AA	1	T						COVER, Transfer Case Lever Hole
-10	#6506 668AA	1					DBB		SCREW, Cap, Trans Gear Shift Control Lever
-11									PLATE, Retaining
	5015 943AA	1	J, U			EKG	DDD		
		1	T			EKG	DDD		
		1	J, U			EN0	DDD		
-12									CAM, Reverse Block
	5015 942AA	1	J, U			EKG	DDD		
		1	T			EKG	DDD		
		1	J, U			EN0	DDD		

JEEP LIBERTY (KJ)

SERIES	LINE	BODY	ENGINE	TRANSMISSION
P = Limited	J = LHD (4WD)	74 = 4 Dr. (104.3 WB)	ED1, ED0 = 2.4L Power Tech	DDK = 5 Speed HDManual
H = Sport	U = RHD (4WD)		EKG, EK0 = 3.7L Power Tech	DDD = 5 Speed HD Manual
M = Renegade	T = LHD (2WD)		ENJ = 2.5L 4Cyl Turbo Diesel	DG4,DGQ = Multi-Speed Auto
			ENR = 2.8L 4Cyl Turbo Diesel	DG6 = 4 Speed Auto Transm
			EN0 = 4Cyl Turbo Diesel	DG0 = All Automatic Transm
				DBB = All Manual Transm

AR = Use as required - = Non illustrated part # = New this model year **June 3, 2003**

« RETURN TO GROUP INDEX

Group – NV1500

Manual Transmission 5 Speed

NV1500–100

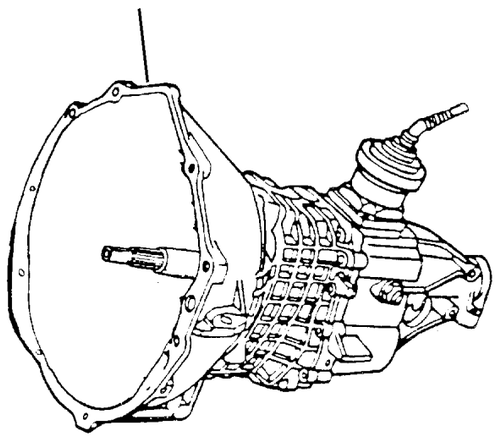

NV1500–100 Transmission Assembly	NV1500–200 Case and Extension	NV1500–400 Gear Train	NV1500–900 Fork and Rails
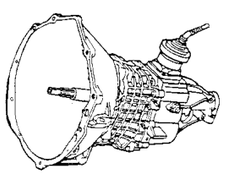	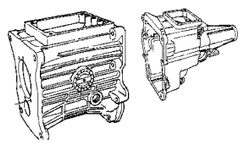	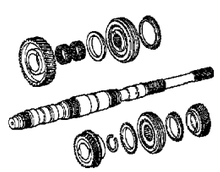	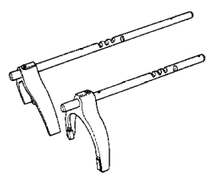
NV1500–1200 Gearshift Controls			

GROUP NV1500 - Manual Transmission 5 Speed

Illustration Title	Group-Fig. No.
Transmission Assembly	
Transmission [NV 1500] [DDK]	Fig. NV1500-110
Case and Extension	
Case and Extension [NV 1500] [DDK]	Fig. NV1500-210
Gear Train	
Gear Train [NV 1500] [DDK]	Fig. NV1500-410
Fork and Rails	
Fork and Rail [NV 1500] [DDK]	Fig. NV1500-910
Gearshift Controls	
Gearshift Controls [DDK]	Fig. NV1500-1210

Transmission [NV 1500] [DDK]
Figure NV1500-110

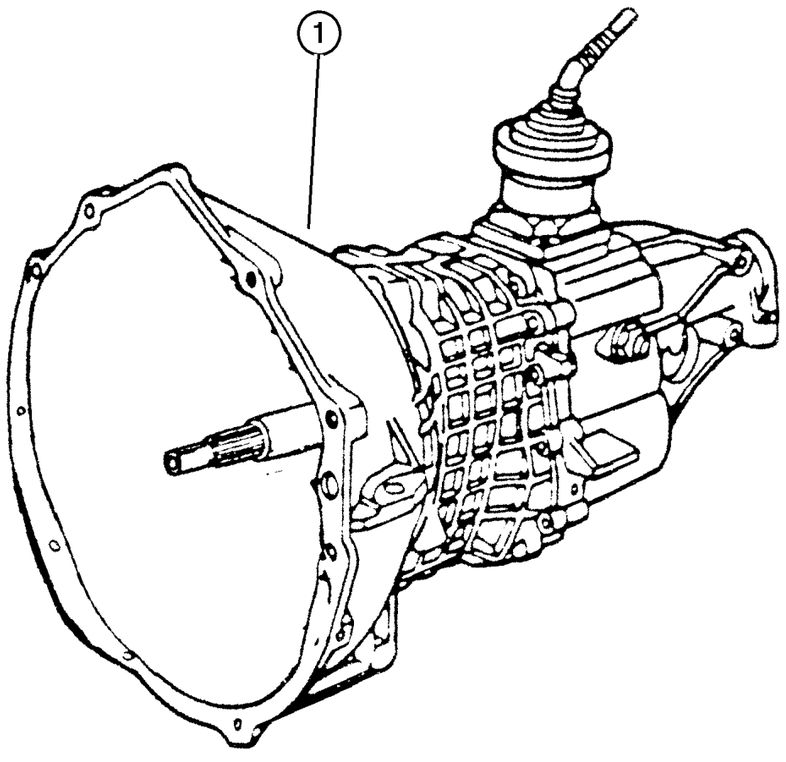

ITEM	PART NUMBER	QTY	LINE	SERIES	BODY	ENGINE	TRANS	TRIM	DESCRIPTION
NOTE; Sales Codes									
[DDK] = 5 Speed Heavy Duty Manual Transmissions									
[ED0] = All 2.2,2.5,2.4 L 4 Cylinder Gas Engines									
1									TRANSMISSION, 5 Speed
	#52108 292AC	1	J, U			ED0	DDK		
	#52108 293AC	1	T			ED0	DDK		
-2									BOLT
	5072 115AA	2	T			ED0	DDK		
		2	J, U			ED0	DDK		

JEEP LIBERTY (KJ)

SERIES	LINE	BODY	ENGINE	TRANSMISSION
P = Limited	J = LHD (4WD)	74 = 4 Dr. (104.3 WB)	ED1, ED0 = 2.4L Power Tech	DDK = 5 Speed HDManual
H = Sport	U = RHD (4WD)		EKG, EK0 = 3.7L Power Tech	DDD = 5 Speed HD Manual
M = Renegade	T = LHD (2WD)		ENJ = 2.5L 4Cyl Turbo Diesel	DG4,DGQ = Multi-Speed Auto
			ENR = 2.8L 4Cyl Turbo Diesel	DG6 = 4 Speed Auto Transm
			EN0 = 4Cyl Turbo Diesel	DG0 = All Automatic Transm
				DBB = All Manual Transm

AR = Use as required - = Non illustrated part # = New this model year **June 3, 2003**

« RETURN TO GROUP INDEX

Case and Extension [NV 1500] [DDK]
Figure NV1500-210

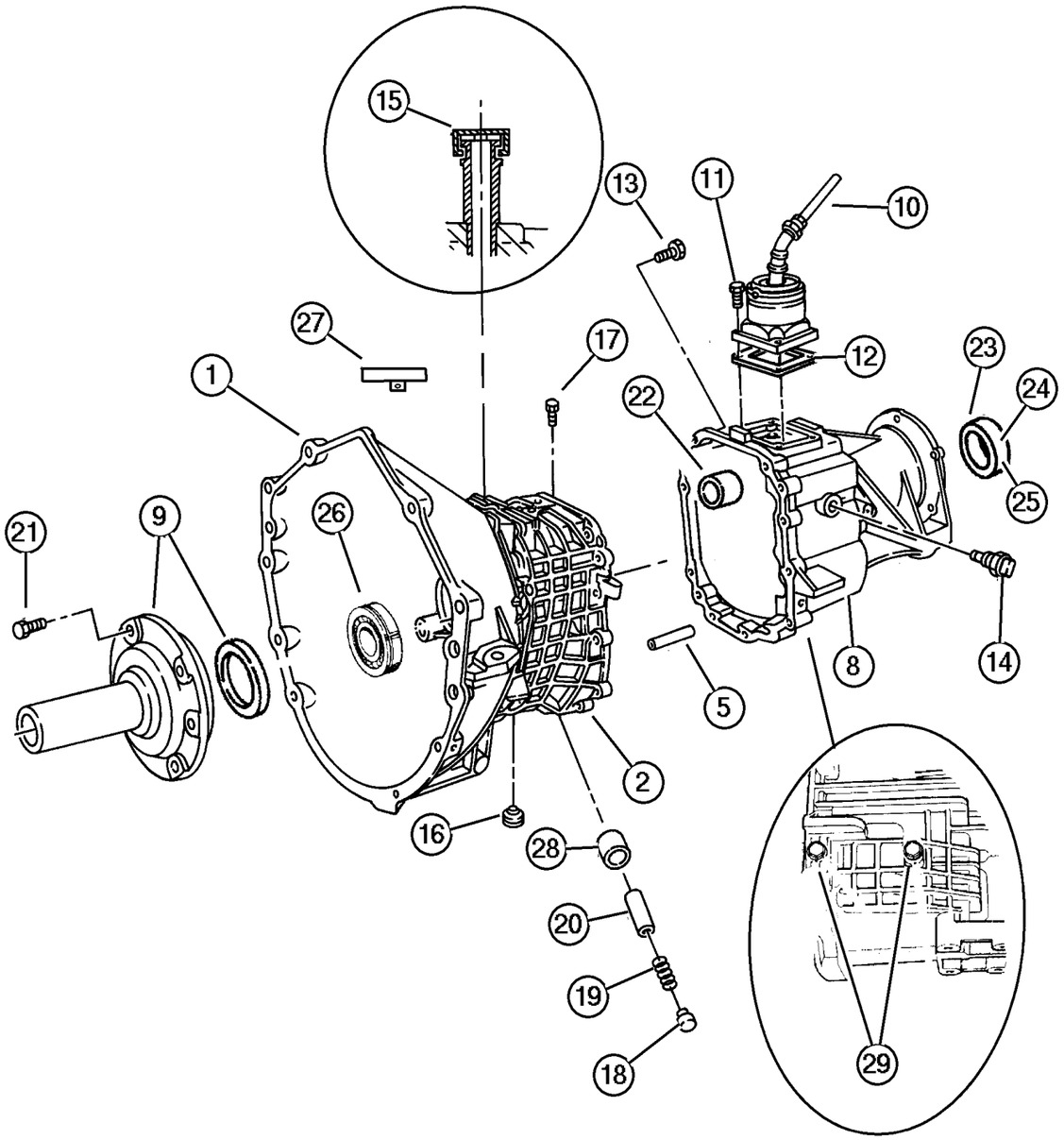

ITEM	PART NUMBER	QTY	LINE	SERIES	BODY	ENGINE	TRANS	TRIM	DESCRIPTION
NOTE; Sales Codes									
[DBB] = All Manual Transmissions									
[DDK] = 5 Speed Heavy Duty Manual Transmissions									
[ED0] = All 2.2,2.5,2.4 L 4 Cylinder Gas Engines									
1	52104 292AA	1				ED0	DBB		HOUSING, Clutch
2									CASE, Transmission
	5018 670AA	1	T			ED0	DDK		
		1	J, U			ED0	DDK		
-3									BUSHING, Shift Rail
	4740 899	1	T			ED0	DDK		
	4338 945	1	J, U						
-4									CUP, Bearing Inner
	5013 313AA	1	T			ED0	DDK		
		1	J, U			ED0	DDK		
5									DOWEL, Transmission Case
	5013 314AA	2	T			ED0	DDK		12 X 16 LG
		1	J, U			ED0	DDK		12 X 16 LG
-6									DOWEL, Transmission Case
	5013 337AA	2	T			ED0	DDK		Hollow 2‘ Dia. X 15MM
		2	J, U			ED0	DDK		Hollow 2‘ Dia. X 15MM
-7									SHIM
	5013 315AA	1	T			ED0	DDK		Size (.050)
		1	J, U			ED0	DDK		Size (.050)
	5013 316AA	1	T			ED0	DDK		Size (.054)
		1	J, U			ED0	DDK		Size (.054)
	5013 317AA	1	T			ED0	DDK		Size (.058)
		1	J, U			ED0	DDK		Size (.058)
8									CASE, Transmission Rear
	5093 073AA	1	J, U			ED0	DDK		
	5093 072AA	1	T			ED0	DDK		
9									RETAINER, Shaft
	5013 413AA	1	T			ED0	DDK		
		1	J, U			ED0	DDK		
10									LEVER, Gearshift
	#5101 839AA	1	T			ED0	DDK		
		1	J, U			ED0	DDK		
	#5101 818AA	1	J, U			EN0	DDD		
11									BOLT, Hex Head
	4741 144	4	T			ED0	DDK		
		4	J, U			ED0	DDK		
12									SEAL, Shift Lever

JEEP LIBERTY (KJ)

SERIES	LINE	BODY	ENGINE	TRANSMISSION
P = Limited	J = LHD (4WD)	74 = 4 Dr. (104.3 WB)	ED1, ED0 = 2.4L Power Tech	DDK = 5 Speed HDManual
H = Sport	U = RHD (4WD)		EKG, EK0 = 3.7L Power Tech	DDD = 5 Speed HD Manual
M = Renegade	T = LHD (2WD)		ENJ = 2.5L 4Cyl Turbo Diesel	DG4,DGQ = Multi-Speed Auto
			ENR = 2.8L 4Cyl Turbo Diesel	DG6 = 4 Speed Auto Transm
			EN0 = 4Cyl Turbo Diesel	DG0 = All Automatic Transm
				DBB = All Manual Transm

Case and Extension [NV 1500] [DDK]
Figure NV1500-210

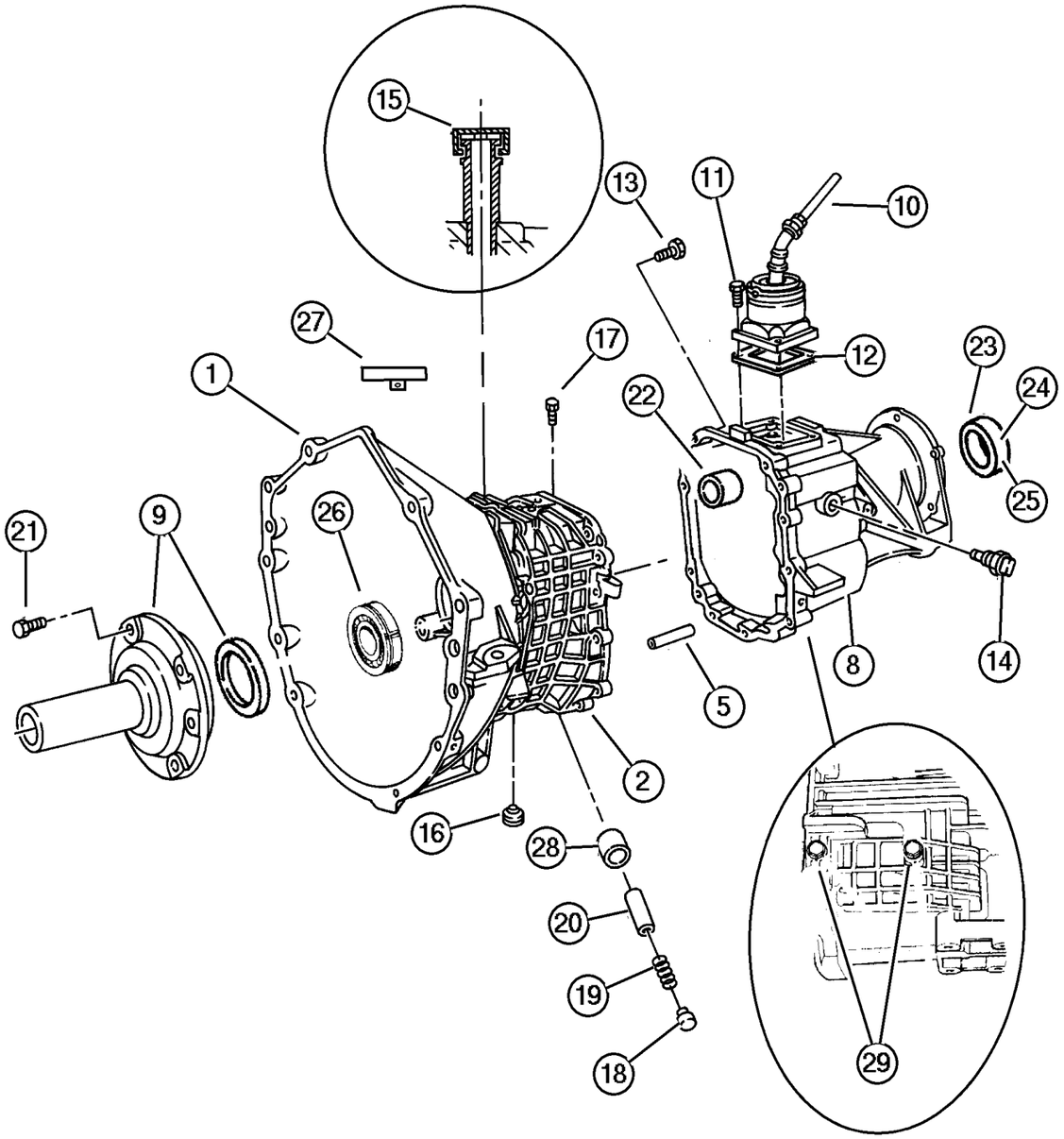

ITEM	PART NUMBER	QTY	LINE	SERIES	BODY	ENGINE	TRANS	TRIM	DESCRIPTION
	4886 153AA	1	T			ED0	DDK		
		1	J, U			ED0	DDK		
13									BOLT, Hex Flange Head, M8x1.25x30
	1150 2628	8	T			ED0	DDK		
		8	J, U			ED0	DDK		
14									SWITCH, Back Up Lamp
	5013 336AA	1	T			ED0	DDK		
		1	J, U			ED0	DDK		
15									VENT, Transmission
	5013 319AA	1	T			ED0	DDK		
		1	J, U			ED0	DDK		
16									PLUG, Oil Fill
	4882 280	1	T			ED0	DDK		
		1	J, U			ED0	DDK		
17									PIN, Detent
	5013 321AA	1	T			ED0	DDK		
		1	J, U			ED0	DDK		
18									PLUG, Shift Rail
	5013 339AA	1	T			ED0	DDK		
		1	J, U			ED0	DDK		
19									SPRING, Shift Detent
	#5093 217AA	1	T			ED0	DDK		
		1	J, U			ED0	DDK		
20									PLUNGER
	5015 949AA	1	T			ED0	DDK		
		1	J, U			ED0	DDK		
	5013 348AA	1	J			EKG	DDD		
		1	T			EKG	DDD		
		1	J, U			EN0	DDD		
21									BOLT, Hex Head, M8x1.25x50
	4741 123	8	T			ED0	DDK		
		8	J, U			ED0	DDK		
22									BEARING, Ball, (NOT SERVICED) (Not Serviced)
23	5013 334AA	1	T			ED0	DDK		SEAL, Output Shaft
24	5013 332AA	1	T			ED0	DDK		SEAL, Extension Yoke
25	5013 333AA	1	J, U			ED0	DDK		SEAL, Adapter
26	5013 411AA	1	T			ED0	DDK		BEARING, Input Shaft
27									VENT, Transmission
	5013 319AA	1	T			ED0	DDK		

JEEP LIBERTY (KJ)

SERIES	LINE	BODY	ENGINE	TRANSMISSION
P = Limited	J = LHD (4WD)	74 = 4 Dr. (104.3 WB)	ED1, ED0 = 2.4L Power Tech	DDK = 5 Speed HDManual
H = Sport	U = RHD (4WD)		EKG, EK0 = 3.7L Power Tech	DDD = 5 Speed HD Manual
M = Renegade	T = LHD (2WD)		ENJ = 2.5L 4Cyl Turbo Diesel	DG4,DGQ = Multi-Speed Auto
			ENR = 2.8L 4Cyl Turbo Diesel	DG6 = 4 Speed Auto Transm
			EN0 = 4Cyl Turbo Diesel	DG0 = All Automatic Transm
				DBB = All Manual Transm

AR = Use as required - = Non illustrated part # = New this model year

June 3, 2003

« RETURN TO GROUP INDEX

« »

Case and Extension [NV 1500] [DDK]
Figure NV1500-210

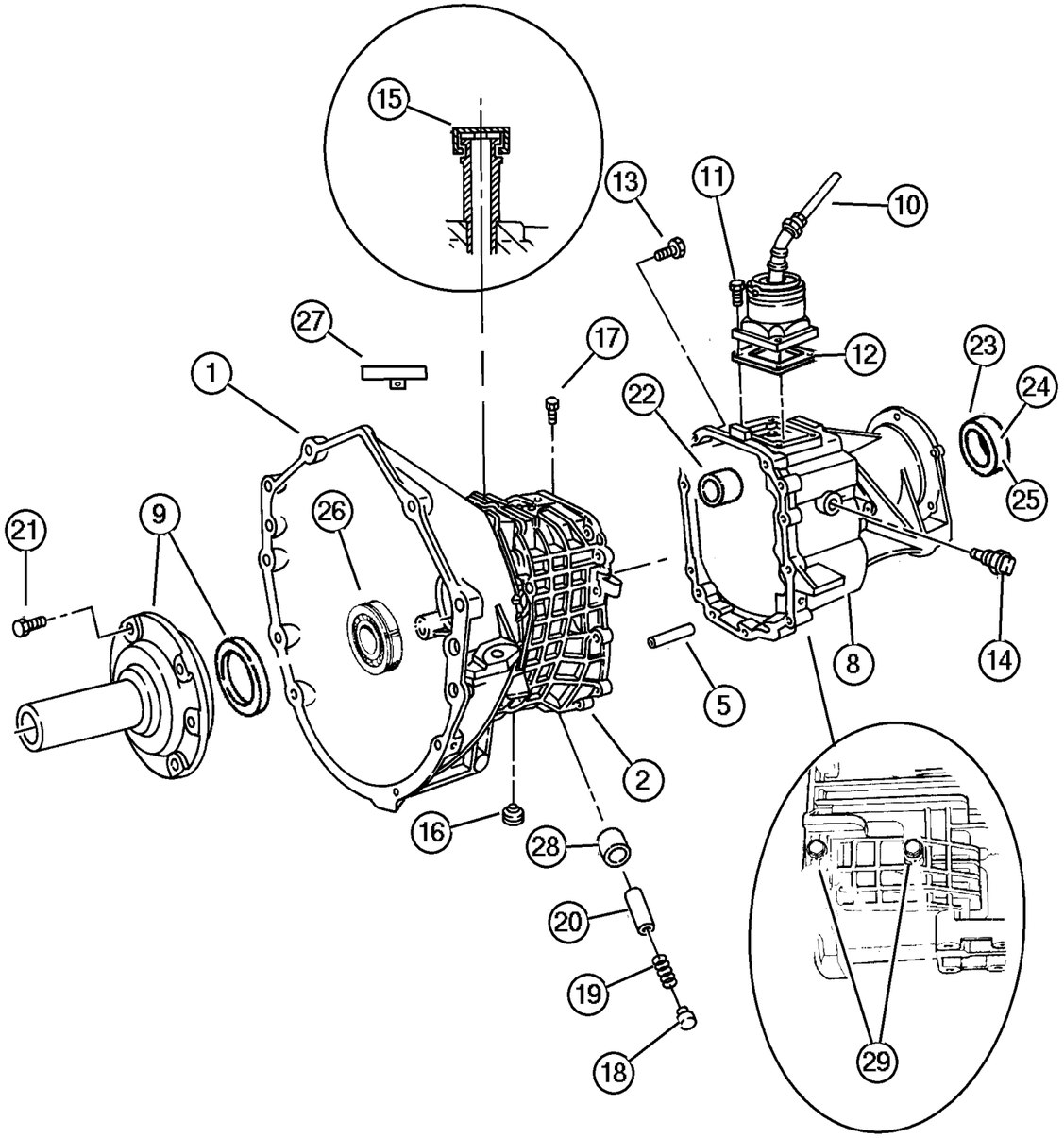

ITEM	PART NUMBER	QTY	LINE	SERIES	BODY	ENGINE	TRANS	TRIM	DESCRIPTION
		1	J, U			ED0	DDK		
28									BUSHING, Detent
	4740 892	2	T			ED0	DDK		
		2	J, U			ED0	DDK		
29									BOLT
	5013 329AA	3	T			ED0	DDK		
		1	J, U			ED0	DDK		
-30									MAGNET, Transmission
	5013 327AA	1	T			ED0	DDK		
		1	J, U			ED0	DDK		
-31									SEAL, O-Ring
	5013 331AA	3	T			ED0	DDK		
		1	J, U			ED0	DDK		
-32									RETAINER, Transmission Output Shaft Bearing
	5013 328AA	1	T			ED0	DDK		
		1	J, U			ED0	DDK		
-33									O RING
	5013 320AA	1	J, U			ED0	DDK		
		1	T			ED0	DDK		

JEEP LIBERTY (KJ)

SERIES	LINE	BODY	ENGINE	TRANSMISSION
P = Limited	J = LHD (4WD)	74 = 4 Dr. (104.3 WB)	ED1, ED0 = 2.4L Power Tech	DDK = 5 Speed HDManual
H = Sport	U = RHD (4WD)		EKG, EK0 = 3.7L Power Tech	DDD = 5 Speed HD Manual
M = Renegade	T = LHD (2WD)		ENJ = 2.5L 4Cyl Turbo Diesel	DG4,DGQ = Multi-Speed Auto
			ENR = 2.8L 4Cyl Turbo Diesel	DG6 = 4 Speed Auto Transm
			EN0 = 4Cyl Turbo Diesel	DG0 = All Automatic Transm
				DBB = All Manual Transm

Gear Train [NV 1500] [DDK]
Figure NV1500-410

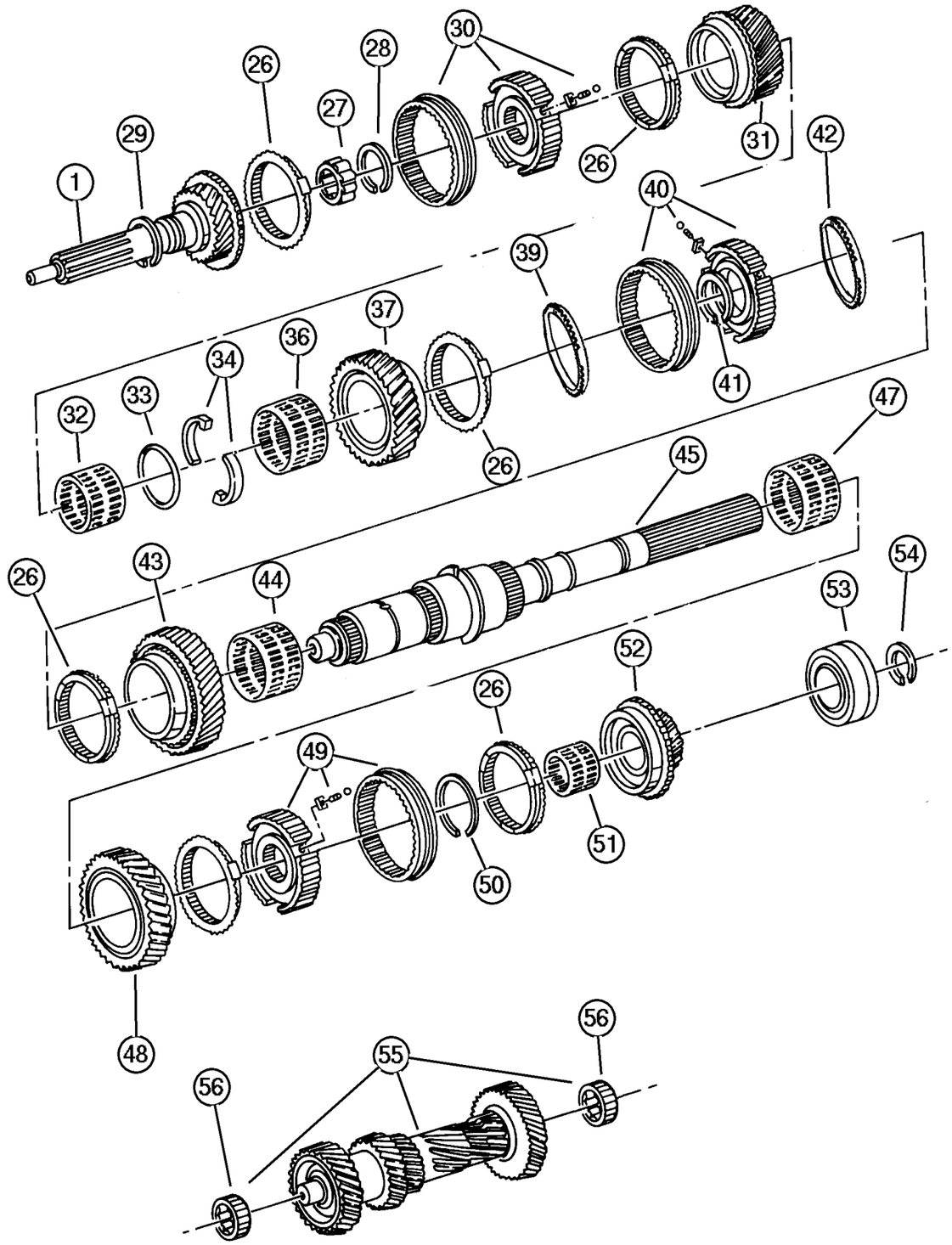

ITEM	PART NUMBER	QTY	LINE	SERIES	BODY	ENGINE	TRANS	TRIM	DESCRIPTION
NOTE; Sales Codes									
[DDK] = 5 Speed Heavy Duty Manual Transmissions									
[ED0] = All 2.2,2.5,2.4 L 4 Cylinder Gas Engines									
1									SHAFT, Input
	5013 409AA	1	T			ED0	DDK		
		1	J, U			ED0	DDK		
-2									NEEDLE BEARING, Input Shaft
	5013 410AA	1	T			ED0	DDK		
		1	J, U			ED0	DDK		
-3									BEARING, Input Shaft
	5013 411AA	1	T			ED0	DDK		
		1	J, U			ED0	DDK		
-4									SPACER, Input Shaft, 0.62mm(.024")
	4202 751	1	T			ED0	DDK		
		1	J, U			ED0	DDK		
-5									SPACER, Input Shaft, 0.66mm(.026")
	4202 301	1	T			ED0	DDK		
		1	J, U			ED0	DDK		
-6									SPACER, Input Shaft, 0.70mm(.028")
	4202 302	1	T			ED0	DDK		
		1	J, U			ED0	DDK		
-7									SPACER, Input Shaft, 0.74mm(.029")
	4202 303	1	T			ED0	DDK		
		1	J, U			ED0	DDK		
-8									SPACER, Input Shaft, 0.78mm(.031")
	4202 304	1	T			ED0	DDK		
		1	J, U			ED0	DDK		
-9									SPACER, Input Shaft, 0.90mm(.035")
	4202 307	1	T			ED0	DDK		
		1	J, U			ED0	DDK		
-10									SPACER, Input Shaft, 0.94mm(.037")
	4202 308	1	T			ED0	DDK		
		1	J, U			ED0	DDK		
-11									SPACER, Input Shaft, 0.98mm(.039")
	4202 309	1	T			ED0	DDK		
		1	J, U			ED0	DDK		
-12									SPACER, Input Shaft, 1.02mm(.040")
	4202 310	1	T			ED0	DDK		
		1	J, U			ED0	DDK		
-13									SPACER, Input Shaft, 1.06mm(.042")
	4202 311	1	T			ED0	DDK		

JEEP LIBERTY (KJ)

SERIES	LINE	BODY	ENGINE	TRANSMISSION
P = Limited	J = LHD (4WD)	74 = 4 Dr. (104.3 WB)	ED1, ED0 = 2.4L Power Tech	DDK = 5 Speed HDManual
H = Sport	U = RHD (4WD)		EKG, EK0 = 3.7L Power Tech	DDD = 5 Speed HD Manual
M = Renegade	T = LHD (2WD)		ENJ = 2.5L 4Cyl Turbo Diesel	DG4,DGQ = Multi-Speed Auto
			ENR = 2.8L 4Cyl Turbo Diesel	DG6 = 4 Speed Auto Transm
			EN0 = 4Cyl Turbo Diesel	DG0 = All Automatic Transm
				DBB = All Manual Transm

AR = Use as required - = Non illustrated part # = New this model year

June 3, 2003

« RETURN TO GROUP INDEX »

Gear Train [NV 1500] [DDK]
Figure NV1500-410

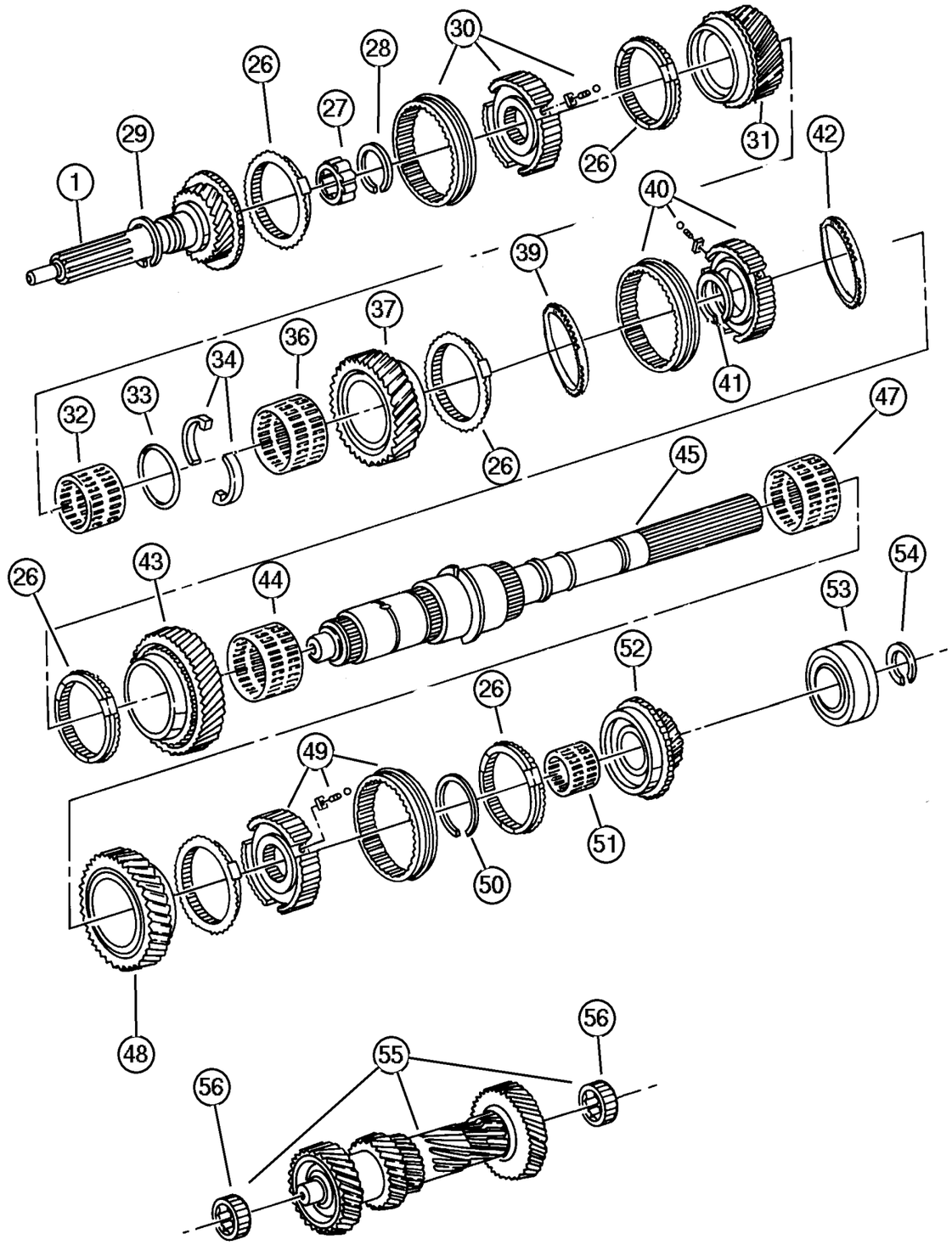

ITEM	PART NUMBER	QTY	LINE	SERIES	BODY	ENGINE	TRANS	TRIM	DESCRIPTION
		1	J, U			ED0	DDK		
-14									SPACER, Input Shaft, 1.10mm(.043")
	4202 312	1	T			ED0	DDK		
		1	J, U			ED0	DDK		
-15									SPACER, Input Shaft, 1.14mm(.045")
	4202 313	1	T			ED0	DDK		
		1	J, U			ED0	DDK		
-16									SPACER, Input Shaft, 1.18mm(.046")
	4202 314	1	T			ED0	DDK		
		1	J, U			ED0	DDK		
-17									SPACER, Input Shaft, 1.22mm(.048")
	4202 315	1	T			ED0	DDK		
		1	J, U			ED0	DDK		
-18									SPACER, Input Shaft, 1.26mm(.050")
	4202 316	1	T			ED0	DDK		
		1	J, U			ED0	DDK		
-19									SPACER, Input Shaft, 1.30mm(.051")
	4202 317	1	T			ED0	DDK		
		1	J, U			ED0	DDK		
-20									SPACER, Input Shaft, 1.34mm(.053")
	4202 318	1	T			ED0	DDK		
		1	J, U			ED0	DDK		
-21									SPACER, Input Shaft, 1,38mm(.054")
	4202 319	1	T			ED0	DDK		
		1	J, U			ED0	DDK		
-22									SPACER, Input Shaft, 1.42mm(,056")
	4202 320	1	T			ED0	DDK		
		1	J, U			ED0	DDK		
-23									SPACER, Input Shaft, 1.46mm(.057")
	4202 321	1	T			ED0	DDK		
		1	J, U			ED0	DDK		
-24									SPACER, Input Shaft, 1.50mm(.059")
	4202 322	1	T			ED0	DDK		
		1	J, U			ED0	DDK		
-25									SPACER, Input Shaft, 1.54mm(.061")
	4202 323	1	T			ED0	DDK		
		1	J, U			ED0	DDK		
26									RING, Synchronizer Blocker
	5013 366AA	1	T			ED0	DDK		
		1	J, U			ED0	DDK		
	5013 368AA	4	T			ED0	DDK		

JEEP LIBERTY (KJ)

SERIES	LINE	BODY	ENGINE	TRANSMISSION
P = Limited	J = LHD (4WD)	74 = 4 Dr. (104.3 WB)	ED1, ED0 = 2.4L Power Tech	DDK = 5 Speed HDManual
H = Sport	U = RHD (4WD)		EKG, EK0 = 3.7L Power Tech	DDD = 5 Speed HD Manual
M = Renegade	T = LHD (2WD)		ENJ = 2.5L 4Cyl Turbo Diesel	DG4,DGQ = Multi-Speed Auto
			ENR = 2.8L 4Cyl Turbo Diesel	DG6 = 4 Speed Auto Transm
			EN0 = 4Cyl Turbo Diesel	DG0 = All Automatic Transm
				DBB = All Manual Transm

AR = Use as required - = Non illustrated part # = New this model year

June 3, 2003

« RETURN TO GROUP INDEX

« »

Gear Train [NV 1500] [DDK]
Figure NV1500-410

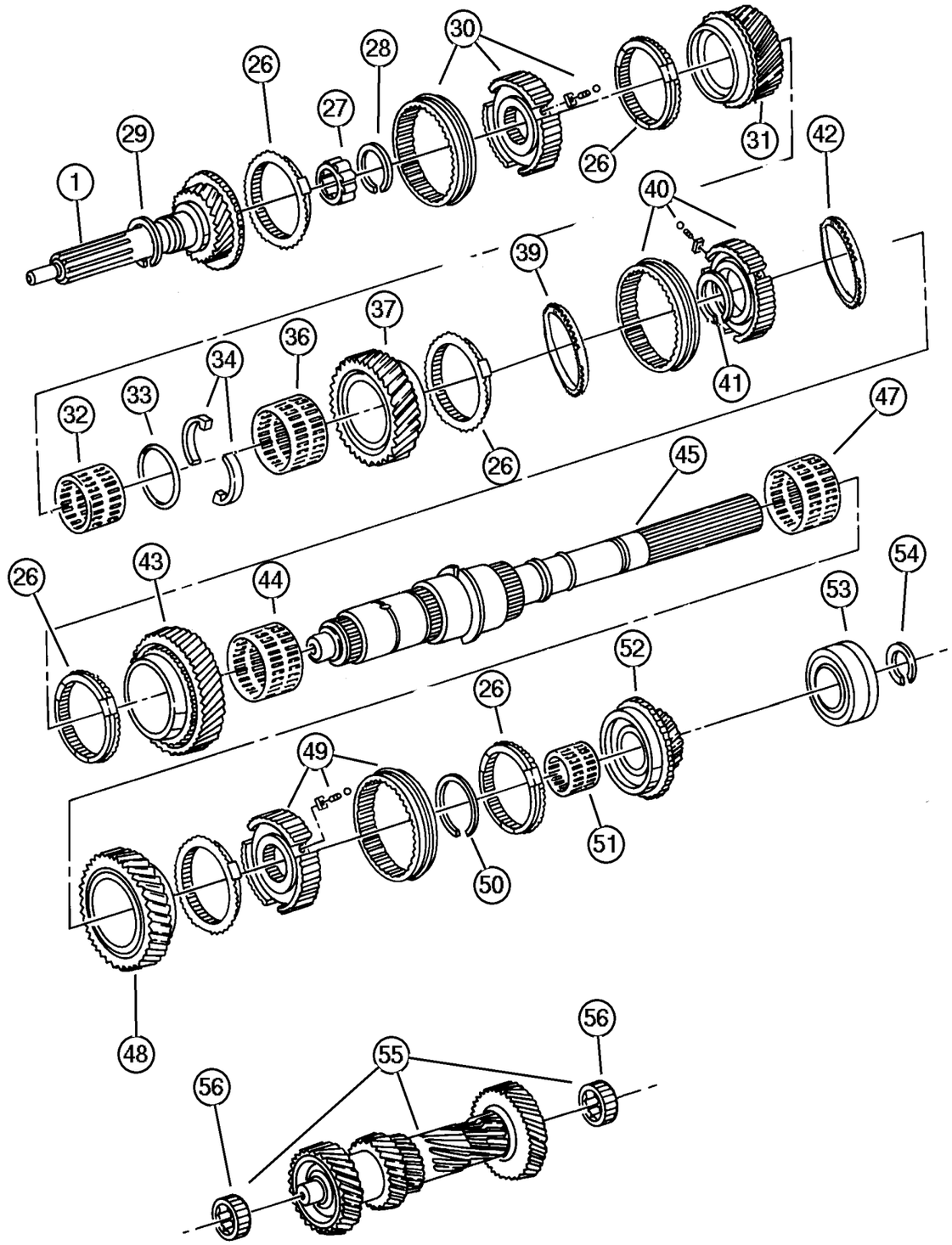

ITEM	PART NUMBER	QTY	LINE	SERIES	BODY	ENGINE	TRANS	TRIM	DESCRIPTION
		4	J, U			ED0	DDK		
27									NEEDLE BEARING, Input Shaft
	5013 410AA	1	T			ED0	DDK		
		1	J, U			ED0	DDK		
28	5013 318AB	1	T			ED0	DDK		SNAP RING PACKAGE, Fifth Gear
29									RING, Snap
	5013 379AA	1	T			ED0	DDK		
		1	J, U			ED0	DDK		
30									SYNCHRONIZER, Fifth And Reverse
	5013 367AA	2	T			ED0	DDK		
		2	J, U			ED0	DDK		
31									GEAR, Third
	5018 679AA	1	T			ED0	DDK		
		1	J, U			ED0	DDK		
32									BEARING, Needle
	5013 365AA	3	T			ED0	DDK		
		3	J, U			ED0	DDK		
33									SNAP RING
	5013 397AA	1	T			ED0	DDK		
		1	J, U			ED0	DDK		
34									WASHER, Output Shaft
	5013 398AA	2	T			ED0	DDK		
		2	J, U			ED0	DDK		
-35									PIN
	5013 378AA	1	T			ED0	DDK		
		1	J, U			ED0	DDK		
36									BEARING, Needle
	5013 365AA	3	T			ED0	DDK		
		3	J, U			ED0	DDK		
37									GEAR, Second
	5013 395AA	1	T			ED0	DDK		
		1	J, U			ED0	DDK		
-38	5013 390AA	1	T			ED0	DDK		SNAP RING PACKAGE, Transmission
39									RING, 1st and 2nd Speed Blocker
	5013 385AB	2	T			ED0	DDK		
		2	J, U			ED0	DDK		
40									SYNCHRONIZER, First and Second
	5013 386AA	1	T			ED0	DDK		
		1	J, U			ED0	DDK		
41	5013 390AA	1	T			ED0	DDK		SNAP RING PACKAGE, Transmission

JEEP LIBERTY (KJ)

SERIES	LINE	BODY	ENGINE	TRANSMISSION
P = Limited	J = LHD (4WD)	74 = 4 Dr. (104.3 WB)	ED1, ED0 = 2.4L Power Tech	DDK = 5 Speed HDManual
H = Sport	U = RHD (4WD)		EKG, EK0 = 3.7L Power Tech	DDD = 5 Speed HD Manual
M = Renegade	T = LHD (2WD)		ENJ = 2.5L 4Cyl Turbo Diesel	DG4,DGQ = Multi-Speed Auto
			ENR = 2.8L 4Cyl Turbo Diesel	DG6 = 4 Speed Auto Transm
			EN0 = 4Cyl Turbo Diesel	DG0 = All Automatic Transm
				DBB = All Manual Transm

AR = Use as required - = Non illustrated part # = New this model year

June 3, 2003

« RETURN TO GROUP INDEX

« »

Gear Train [NV 1500] [DDK]
Figure NV1500-410

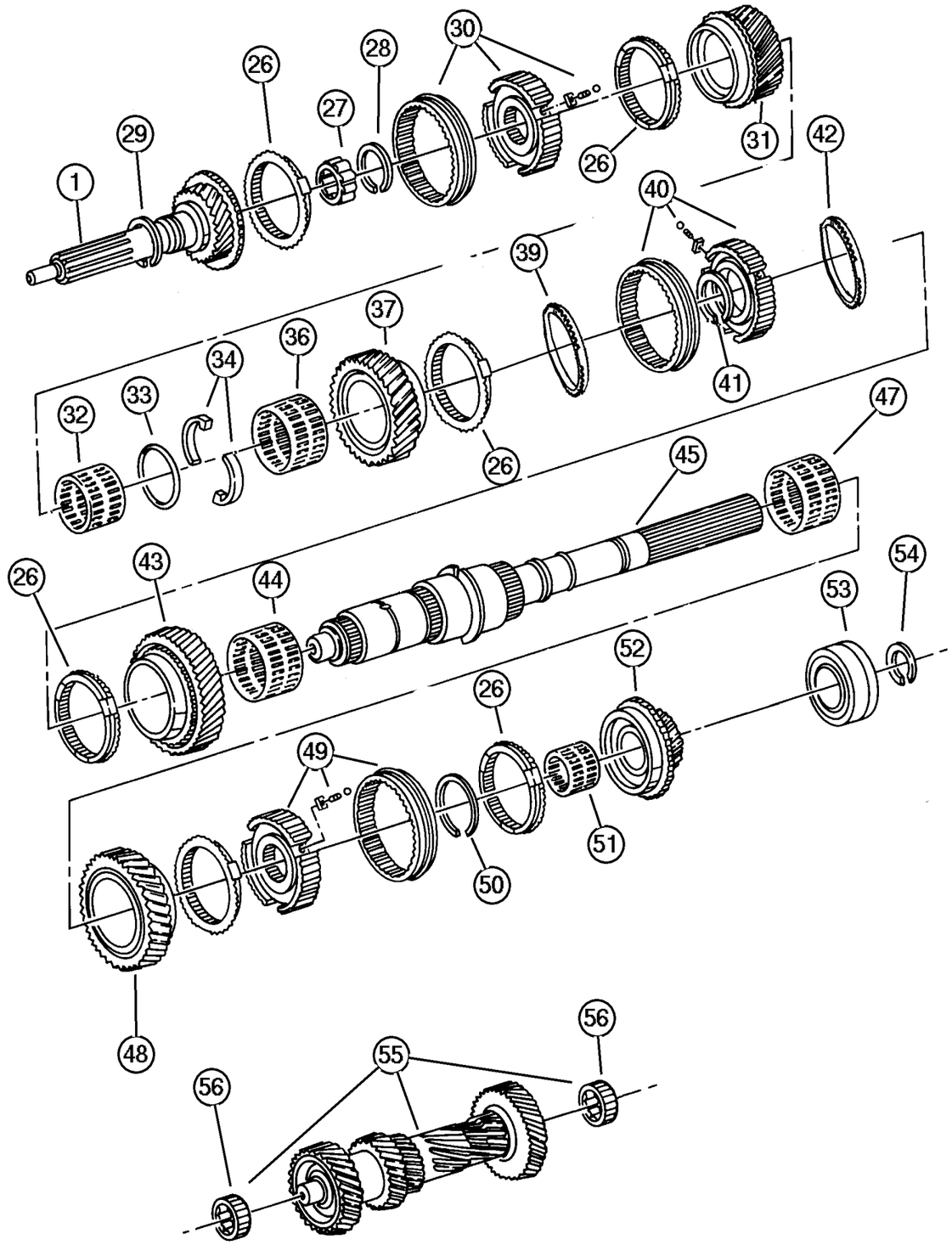

ITEM	PART NUMBER	QTY	LINE	SERIES	BODY	ENGINE	TRANS	TRIM	DESCRIPTION
42									RING, 1st and 2nd Speed Blocker
	5013 385AB	2	T			ED0	DDK		
		2	J, U			ED0	DDK		
43									GEAR, First
	5013 380AA	1	T			ED0	DDK		
		1	J, U			ED0	DDK		
44									BEARING, First Gear
	5013 381AA	1	T			ED0	DDK		
		1	J, U			ED0	DDK		
45									SHAFT, Output
	5013 360AA	1	T			ED0	DDK		
	5018 675AA	1	J, U			ED0	DDK		
-46									RETAINER, Transmission Output Shaft Bearing
	5013 328AA	1	J, U			ED0	DDK		
		1	T			ED0	DDK		
47									BEARING, Needle
	5013 365AA	3	T			ED0	DDK		
		3	J, U			ED0	DDK		
48									GEAR, Reverse
	5013 364AA	1	T			ED0	DDK		
		1	J, U			ED0	DDK		
49									SYNCHRONIZER, Fifth And Reverse
	5013 367AA	2	T			ED0	DDK		
		2	J, U			ED0	DDK		
50	5013 318AB	1	T			ED0	DDK		SNAP RING PACKAGE, Fifth Gear
51									BEARING, Needle
	5013 375AA	1	T			ED0	DDK		
		1	J, U			ED0	DDK		
52									GEAR, Fifth
	5013 373AA	1	T			ED0	DDK		
		1	J, U			ED0	DDK		
53									BEARING, Output Shaft
	5013 376AA	1	T			ED0	DDK		
		1	J, U			ED0	DDK		
54									SNAP RING, Output Shaft Bearing
	5013 377AA	1	T			ED0	DDK		
		1	J, U			ED0	DDK		
55									SHAFT, Counter
	5013 414AA	1	T			ED0	DDK		
		1	J, U			ED0	DDK		
56									CONE ASSEMBLY, Countershaft

JEEP LIBERTY (KJ)

SERIES	LINE	BODY	ENGINE	TRANSMISSION
P = Limited	J = LHD (4WD)	74 = 4 Dr. (104.3 WB)	ED1, ED0 = 2.4L Power Tech	DDK = 5 Speed HDManual
H = Sport	U = RHD (4WD)		EKG, EK0 = 3.7L Power Tech	DDD = 5 Speed HD Manual
M = Renegade	T = LHD (2WD)		ENJ = 2.5L 4Cyl Turbo Diesel	DG4,DGQ = Multi-Speed Auto
			ENR = 2.8L 4Cyl Turbo Diesel	DG6 = 4 Speed Auto Transm
			EN0 = 4Cyl Turbo Diesel	DG0 = All Automatic Transm
				DBB = All Manual Transm

AR = Use as required - = Non illustrated part # = New this model year **June 3, 2003**

« RETURN TO GROUP INDEX

« »

Gear Train [NV 1500] [DDK]
Figure NV1500-410

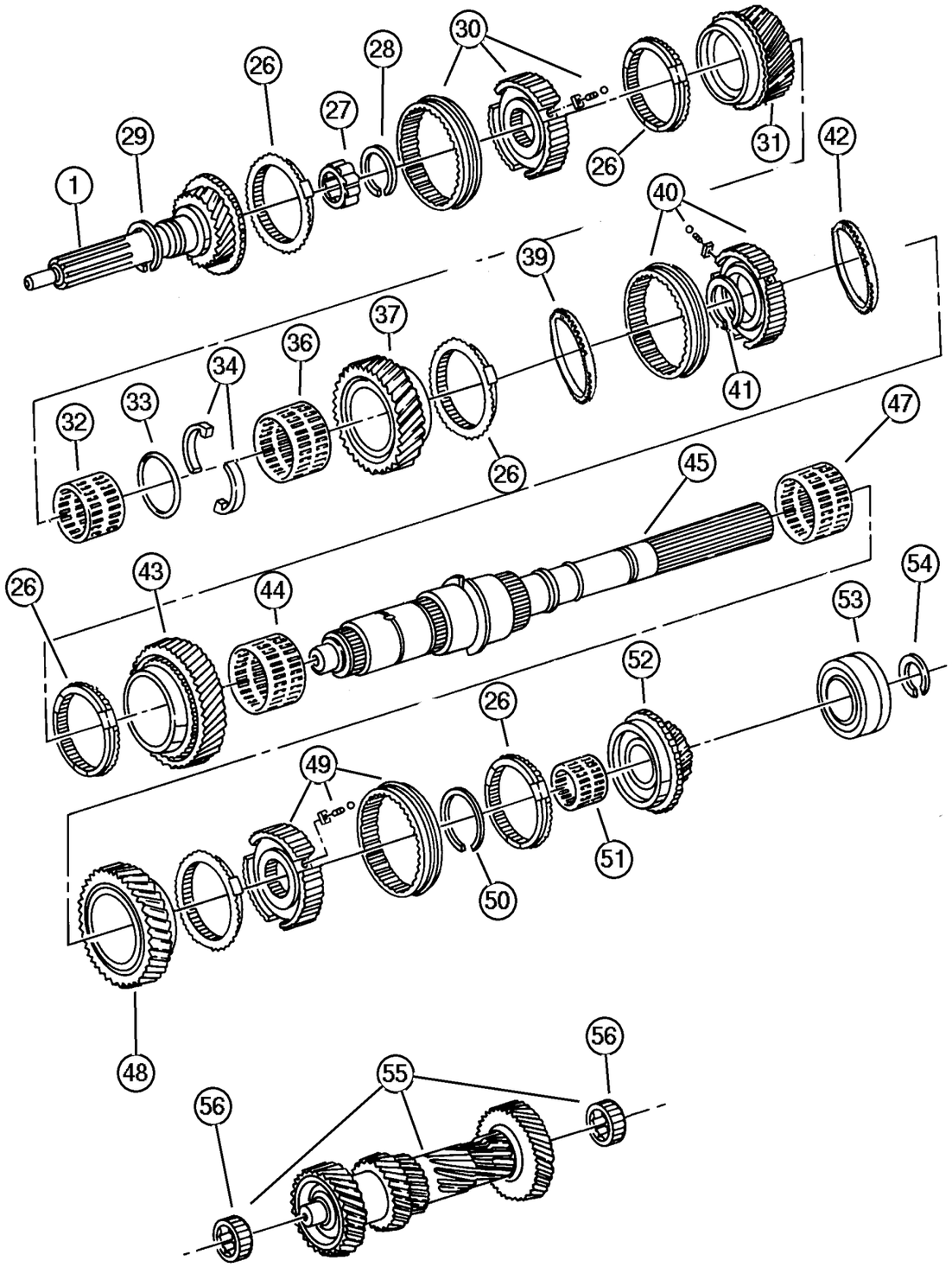

ITEM	PART NUMBER	QTY	LINE	SERIES	BODY	ENGINE	TRANS	TRIM	DESCRIPTION
	5013 416AA	2	T			ED0	DDK		
		2	J, U			ED0	DDK		
-57									SHIM PACKAGE, Countershaft
	4419 650	1	T			ED0	DDK		
		1	J, U			ED0	DDK		
-58									BEARING, Idler
	5013 417AA	1	T			ED0	DDK		
		1	J, U			ED0	DDK		
-59									BALL, Shift Lever, M5
	4741 136	3	T			ED0	DDK		
		3	J, U			ED0	DDK		
-60									SPRING, Synchronizer
	5080 807AA	3	T			ED0	DDK		
		3	J, U			ED0	DDK		

JEEP LIBERTY (KJ)

SERIES	LINE	BODY	ENGINE	TRANSMISSION
P = Limited	J = LHD (4WD)	74 = 4 Dr. (104.3 WB)	ED1, ED0 = 2.4L Power Tech	DDK = 5 Speed HDManual
H = Sport	U = RHD (4WD)		EKG, EK0 = 3.7L Power Tech	DDD = 5 Speed HD Manual
M = Renegade	T = LHD (2WD)		ENJ = 2.5L 4Cyl Turbo Diesel	DG4,DGQ = Multi-Speed Auto
			ENR = 2.8L 4Cyl Turbo Diesel	DG6 = 4 Speed Auto Transm
			EN0 = 4Cyl Turbo Diesel	DG0 = All Automatic Transm
				DBB = All Manual Transm

AR = Use as required - = Non illustrated part # = New this model year

June 3, 2003

« RETURN TO GROUP INDEX

Fork and Rail [NV 1500] [DDK]
Figure NV1500-910

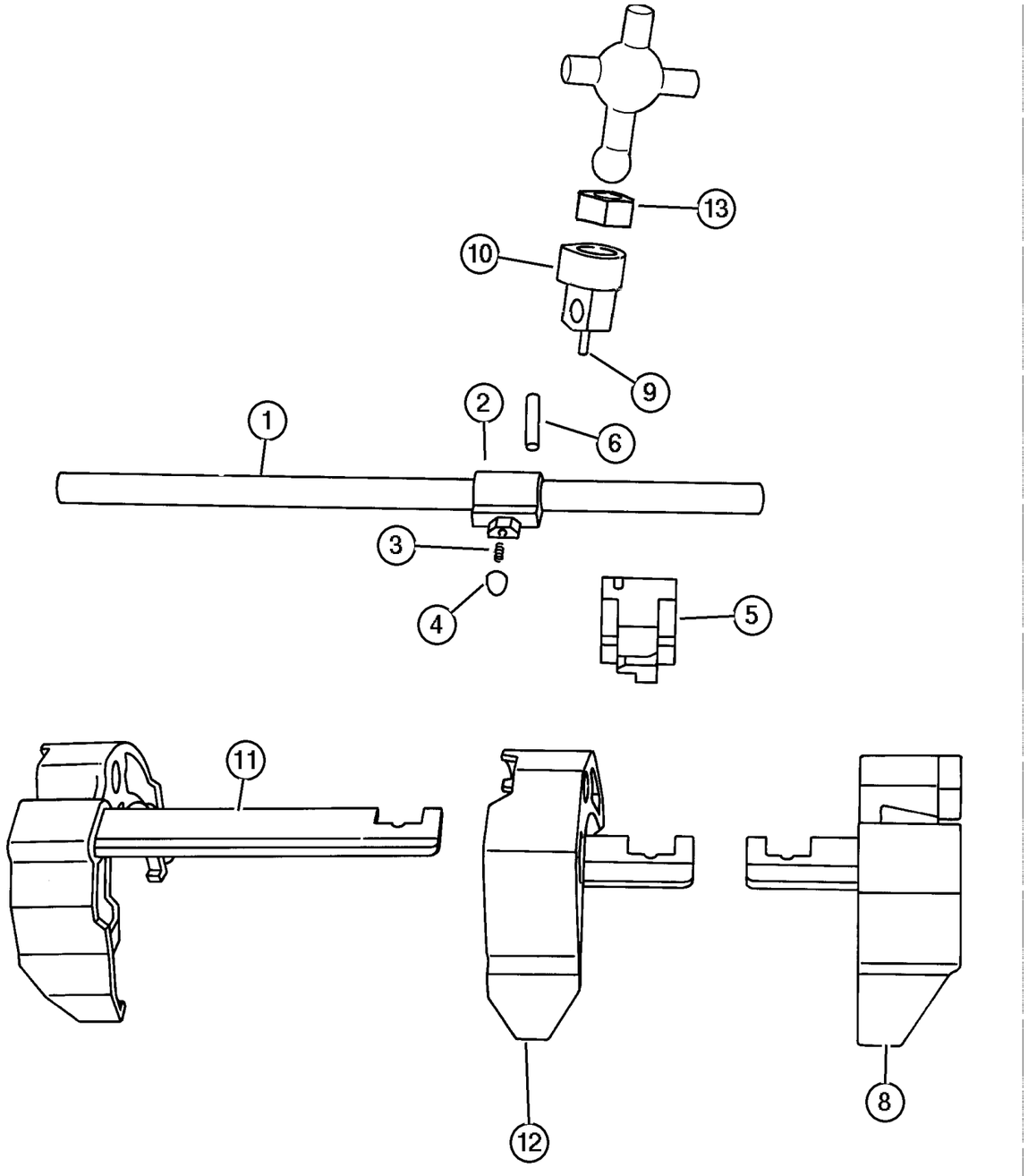

ITEM	PART NUMBER	QTY	LINE	SERIES	BODY	ENGINE	TRANS	TRIM	DESCRIPTION
NOTE; Sales Codes									
[DDK] = 5 Speed Heavy Duty Manual Transmissions									
[ED0] = All 2.2,2.5,2.4 L 4 Cylinder Gas Engines									
1									SHAFT, Shift Lever
	5072 116AA	1	T			ED0	DDK		
		1	J, U			ED0	DDK		
2									LEVER, Shift Shaft
	5016 504AA	1	T			ED0	DDK		
		1	J, U			ED0	DDK		
3									SPRING, Lever, (NOT REQUIRED)
4									PLUNGER
	5015 949AA	1	T			ED0	DDK		
		1	J, U			ED0	DDK		
5									BUSHING, Transmission
	5013 350AA	1	T			ED0	DDK		
		1	J, U			ED0	DDK		
6									PIN, Shift Shaft
	4741 139	1	T			ED0	DDK		
		1	J, U			ED0	DDK		
-7									PIN, Shift Shaft
	4741 139	1	T			ED0	DDK		
		1	J, U			ED0	DDK		
8									FORK, Third and Fourth
	5013 344AA	1	T			ED0	DDK		
		1	J, U			ED0	DDK		
9									PIN, Shift Shaft
	4741 139	1	T			ED0	DDK		
		1	J, U			ED0	DDK		
10									SOCKET, Shift Shaft
	4874 352	1	T			ED0	DDK		
		1	J, U			ED0	DDK		
11									FORK, Fifth Shift
	5013 345AA	1	T			ED0	DDK		
		1	J, U			ED0	DDK		
12									FORK, First and Second
	5013 343AA	1	T			ED0	DDK		
		1	J, U			ED0	DDK		
13									ISOLATOR, Shift Lever
	5012 020AA	1	T			ED0	DDK		
		1	J, U			ED0	DDK		
-14									BUSHING, Detent

JEEP LIBERTY (KJ)

SERIES	LINE	BODY	ENGINE	TRANSMISSION
P = Limited	J = LHD (4WD)	74 = 4 Dr. (104.3 WB)	ED1, ED0 = 2.4L Power Tech	DDK = 5 Speed HDManual
H = Sport	U = RHD (4WD)		EKG, EK0 = 3.7L Power Tech	DDD = 5 Speed HD Manual
M = Renegade	T = LHD (2WD)		ENJ = 2.5L 4Cyl Turbo Diesel	DG4,DGQ = Multi-Speed Auto
			ENR = 2.8L 4Cyl Turbo Diesel	DG6 = 4 Speed Auto Transm
			EN0 = 4Cyl Turbo Diesel	DG0 = All Automatic Transm
				DBB = All Manual Transm

Fork and Rail [NV 1500] [DDK]
Figure NV1500-910

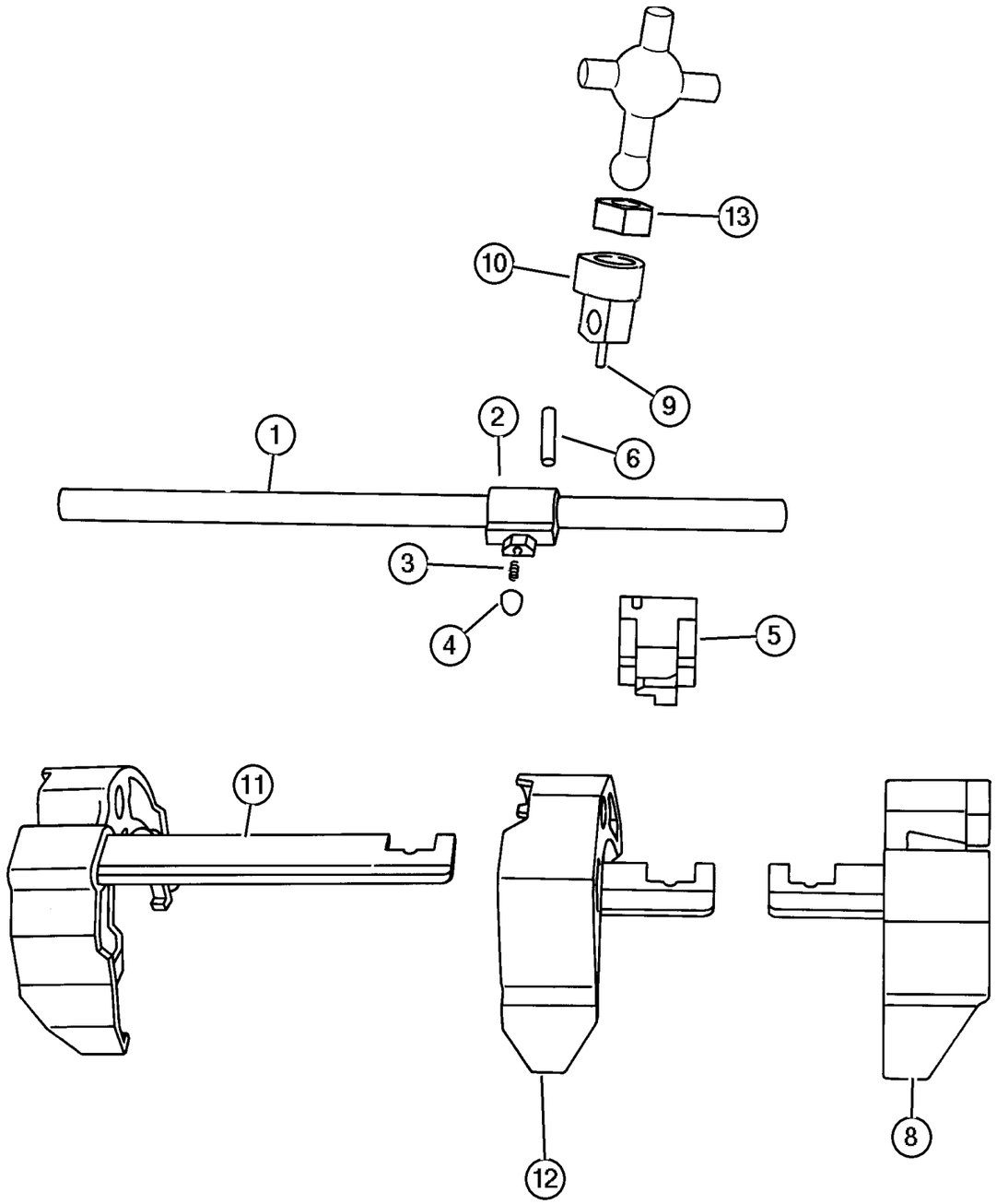

ITEM	PART NUMBER	QTY	LINE	SERIES	BODY	ENGINE	TRANS	TRIM	DESCRIPTION
	4740 892	2	T			ED0	DDK		
		2	J, U			ED0	DDK		

JEEP LIBERTY (KJ)

SERIES	LINE	BODY	ENGINE	TRANSMISSION
P = Limited	J = LHD (4WD)	74 = 4 Dr. (104.3 WB)	ED1, ED0 = 2.4L Power Tech	DDK = 5 Speed HDManual
H = Sport	U = RHD (4WD)		EKG, EK0 = 3.7L Power Tech	DDD = 5 Speed HD Manual
M = Renegade	T = LHD (2WD)		ENJ = 2.5L 4Cyl Turbo Diesel	DG4,DGQ = Multi-Speed Auto
			ENR = 2.8L 4Cyl Turbo Diesel	DG6 = 4 Speed Auto Transm
			EN0 = 4Cyl Turbo Diesel	DG0 = All Automatic Transm
				DBB = All Manual Transm

Gearshift Controls [DDK]
Figure NV1500-1210

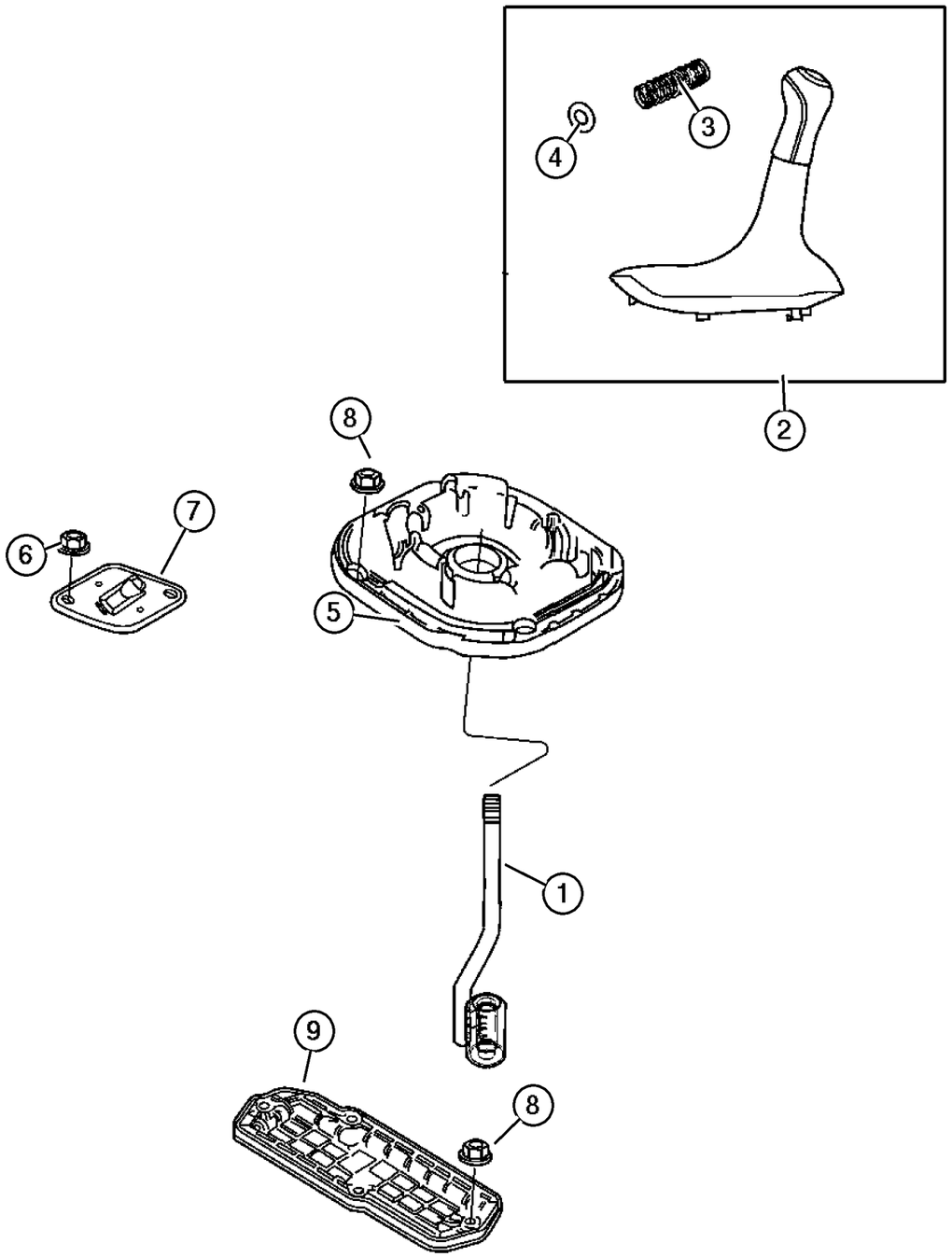

ITEM	PART NUMBER	QTY	LINE	SERIES	BODY	ENGINE	TRANS	TRIM	DESCRIPTION
NOTE; Sales Codes									
[DBB] = All Manual Transmissions									
[ED0] = All 4 Cylinder Gas Engines									
[EK0] = All 3.7L 6 Cylinder Gas Engines									
[EN0] = All 4/5 Cylinder Turbo Diesel									
1	#5102 826AA	1					DBB		LEVER, Gearshift
2	#5102 830AA	1					DBB		BOOT KIT, Gearshift
3	#5102 828AA	1					DBB		SPRING, Gearshift Lever
4	#5102 827AA	1					DBB		O RING, Gearshift Boot
5	52104 306AA	1				ED0, EK0, EN0	DBB		BOOT, Gearshift Lever
6	6100 047	2							NUT AND WASHER, Hex Nut-Coned Washer, M6 x 1.00
7	52104 382AA	1					DBB		COVER, Gearshift
8	6101 444	4							NUT AND WASHER, Hex, M6x1.0
		4					DBB		
9	52104 321AA	1	T						COVER, Transfer Case Lever Hole
-10	#6506 668AA	1					DBB		SCREW, Cap, Trans Gear Shift Control Lever

JEEP LIBERTY (KJ)

SERIES	LINE	BODY	ENGINE	TRANSMISSION
P = Limited	J = LHD (4WD)	74 = 4 Dr. (104.3 WB)	ED1, ED0 = 2.4L Power Tech	DDK = 5 Speed HDManual
H = Sport	U = RHD (4WD)		EKG, EK0 = 3.7L Power Tech	DDD = 5 Speed HD Manual
M = Renegade	T = LHD (2WD)		ENJ = 2.5L 4Cyl Turbo Diesel	DG4,DGQ = Multi-Speed Auto
			ENR = 2.8L 4Cyl Turbo Diesel	DG6 = 4 Speed Auto Transm
			EN0 = 4Cyl Turbo Diesel	DG0 = All Automatic Transm
				DBB = All Manual Transm

AR = Use as required - = Non illustrated part # = New this model year **June 3, 2003**

« RETURN TO GROUP INDEX

Group – 231

Transfer Case Model 231

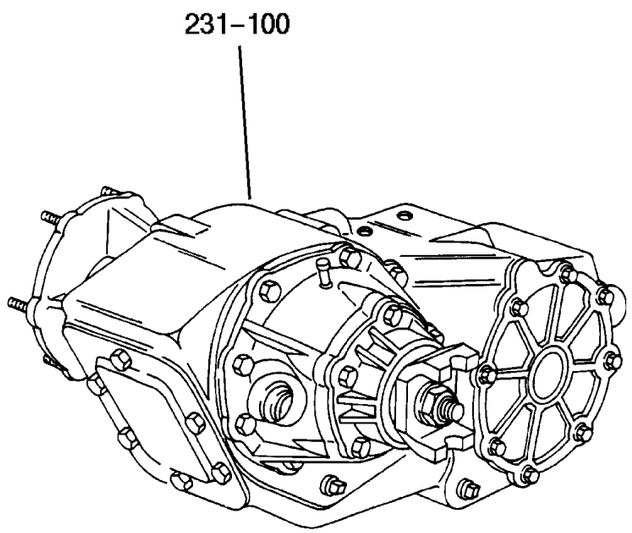

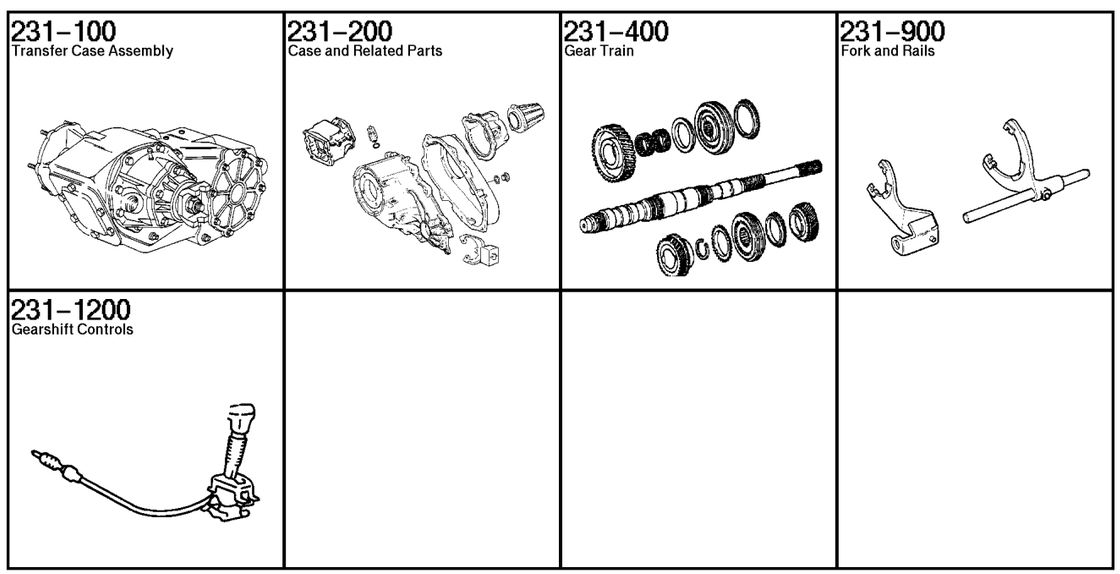

GROUP 231 - Transfer Case Model 231

Illustration Title	Group-Fig. No.
Transfer Case Assembly	
Transfer Case Command Trac [DHN]	Fig. 231-110
Case and Related Parts	
Case and Related Parts Command Trac [DHN]	Fig. 231-210
Gear Train	
Gear Train Command Trac [DHN]	Fig. 231-410
Fork and Rails	
Forks and Rails Command Trac [DHN]	Fig. 231-910
Gearshift Controls	
Gearshift Controls	Fig. 231-1210

Transfer Case Command Trac [DHN]
Figure 231-110

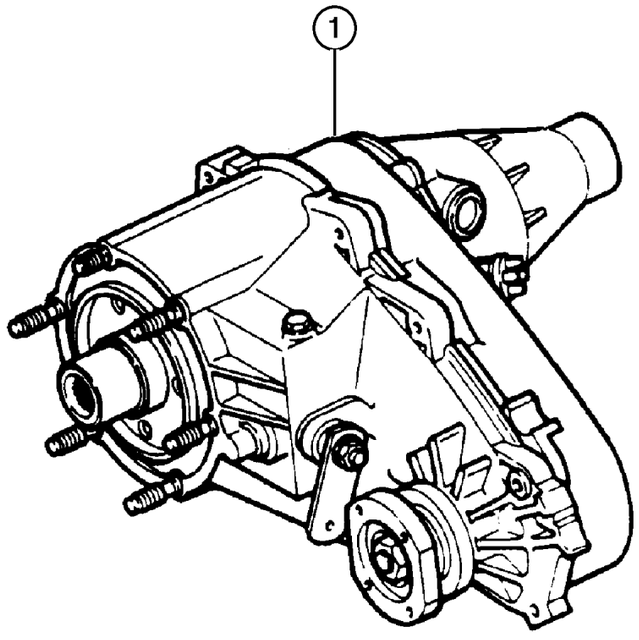

ITEM	PART NUMBER	QTY	LINE	SERIES	BODY	ENGINE	TRANS	TRIM	DESCRIPTION
NOTE; Sales Codes									
[DBB] = All Manual Transmissions									
[DG0] = All Automatic Transmissions									
[ED0] = All 2.2,2.5,2.4,L 4 Cylinder Gas Engines									
[EK0]= All 3.7L 6 Cylinder Gas Egines									
[EN0] = All 4/5 Turbo Diesel Engines									
1	52099 421AD	1	J, U			ED0, EK0, EN0			TRANSFER CASE, NV231

JEEP LIBERTY (KJ)

SERIES	LINE	BODY	ENGINE	TRANSMISSION
P = Limited	J = LHD (4WD)	74 = 4 Dr. (104.3 WB)	ED1, ED0 = 2.4L Power Tech	DDK = 5 Speed HDManual
H = Sport	U = RHD (4WD)		EKG, EK0 = 3.7L Power Tech	DDD = 5 Speed HD Manual
M = Renegade	T = LHD (2WD)		ENJ = 2.5L 4Cyl Turbo Diesel	DG4,DGQ = Multi-Speed Auto
			ENR = 2.8L 4Cyl Turbo Diesel	DG6 = 4 Speed Auto Transm
			EN0 = 4Cyl Turbo Diesel	DG0 = All Automatic Transm
				DBB = All Manual Transm

Case and Related Parts Command Trac [DHN]
Figure 231-210

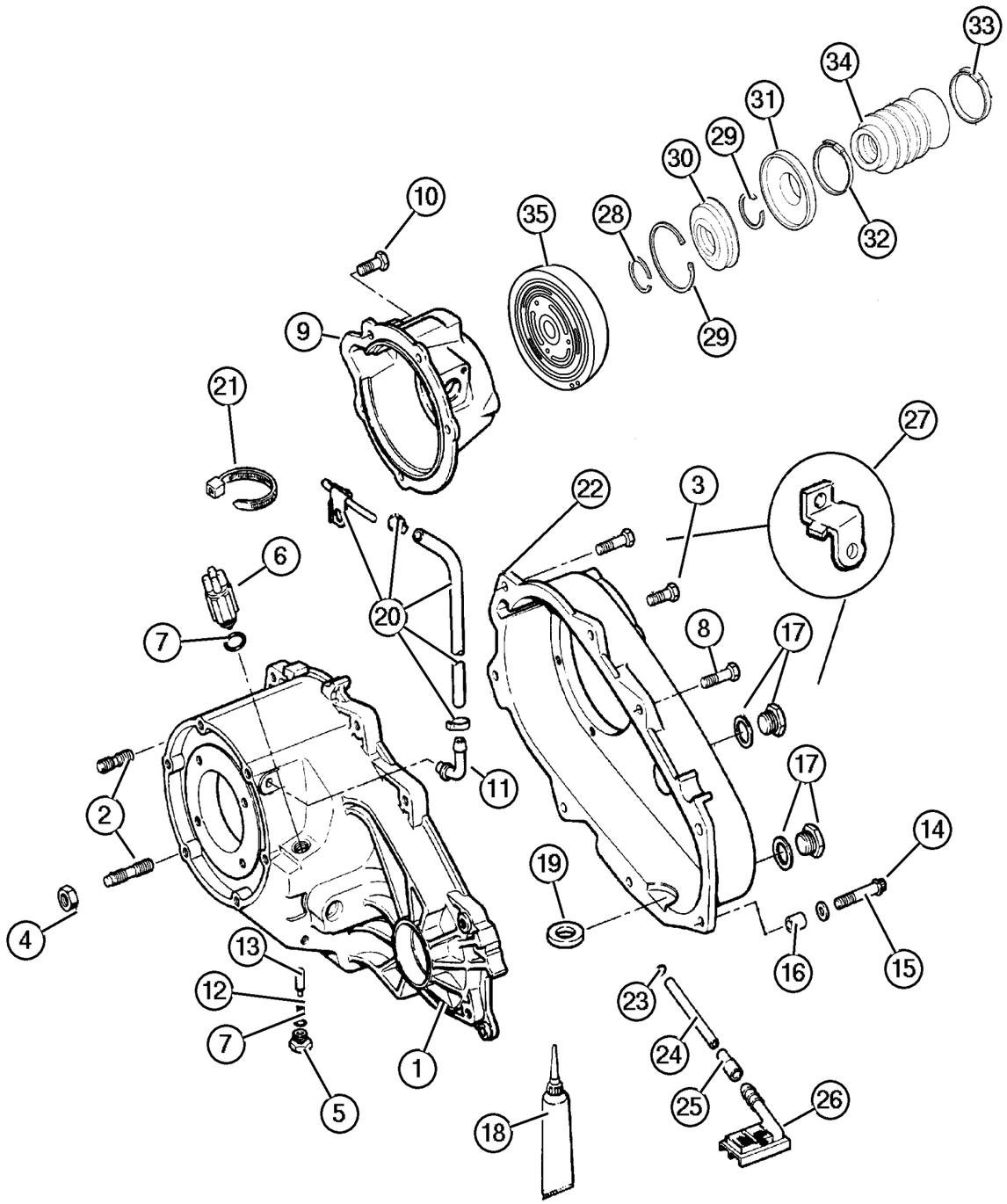

ITEM	PART NUMBER	QTY	LINE	SERIES	BODY	ENGINE	TRANS	TRIM	DESCRIPTION
NOTE; Sales Codes									
[DBB] = All Manual Transmissions									
[DG0] = All Automatic Transmissions									
[ED0] = All 2.2,2.5,2.4,L 4 Cylinder Gas Engines									
[EK0]= All 3.7L 6 Cylinder Gas Egines									
[EN0] = All 4/5 Turbo Diesel Engines									
1	5072 322AA	1	J, U			ED0, EK0, EN0			CASE, Transfer Front
2	4167 922	1	J, U			ED0, EK0, EN0			STUD, Tranmission Case
3	J813 0979	1	J, U			ED0, EK0, EN0			BOLT, Twelve Point Head, M10x1. 5x48
4	J400 6681	6	J, U						NUT AND CONED WASHER, Hex, .375-24
5	4886 473AA	1	J, U			ED0, EK0, EN0			SCREW
6	5083 138AA	1	J, U			ED0, EK0, EN0			SWITCH, Transfer Case, 5 Position
7	4338 956	1	J, U			ED0, EK0, EN0			SEAL, Vacuum Switch
8	4210 617	1	J, U			ED0, EK0, EN0			BOLT, Transfer Case
9	5072 325AA	1	J, U			ED0, EK0, EN0			RETAINER, Transfer Case Rear
10	6501 371	9	J, U			ED0, EK0, EN0			BOLT, Retainer
11	4796 910	1	J, U			ED0, EK0, EN0			VENT, Transfer Case
12	5003 445AA	1	J, U			ED0, EK0, EN0			SPRING, Poppet Plunger

JEEP LIBERTY (KJ)

SERIES	LINE	BODY	ENGINE	TRANSMISSION
P = Limited	J = LHD (4WD)	74 = 4 Dr. (104.3 WB)	ED1, ED0 = 2.4L Power Tech	DDK = 5 Speed HDManual
H = Sport	U = RHD (4WD)		EKG, EK0 = 3.7L Power Tech	DDD = 5 Speed HD Manual
M = Renegade	T = LHD (2WD)		ENJ = 2.5L 4Cyl Turbo Diesel	DG4,DGQ = Multi-Speed Auto
			ENR = 2.8L 4Cyl Turbo Diesel	DG6 = 4 Speed Auto Transm
			EN0 = 4Cyl Turbo Diesel	DG0 = All Automatic Transm
				DBB = All Manual Transm

AR = Use as required - = Non illustrated part # = New this model year **June 3, 2003**

« RETURN TO GROUP INDEX »

Case and Related Parts Command Trac [DHN]
Figure 231-210

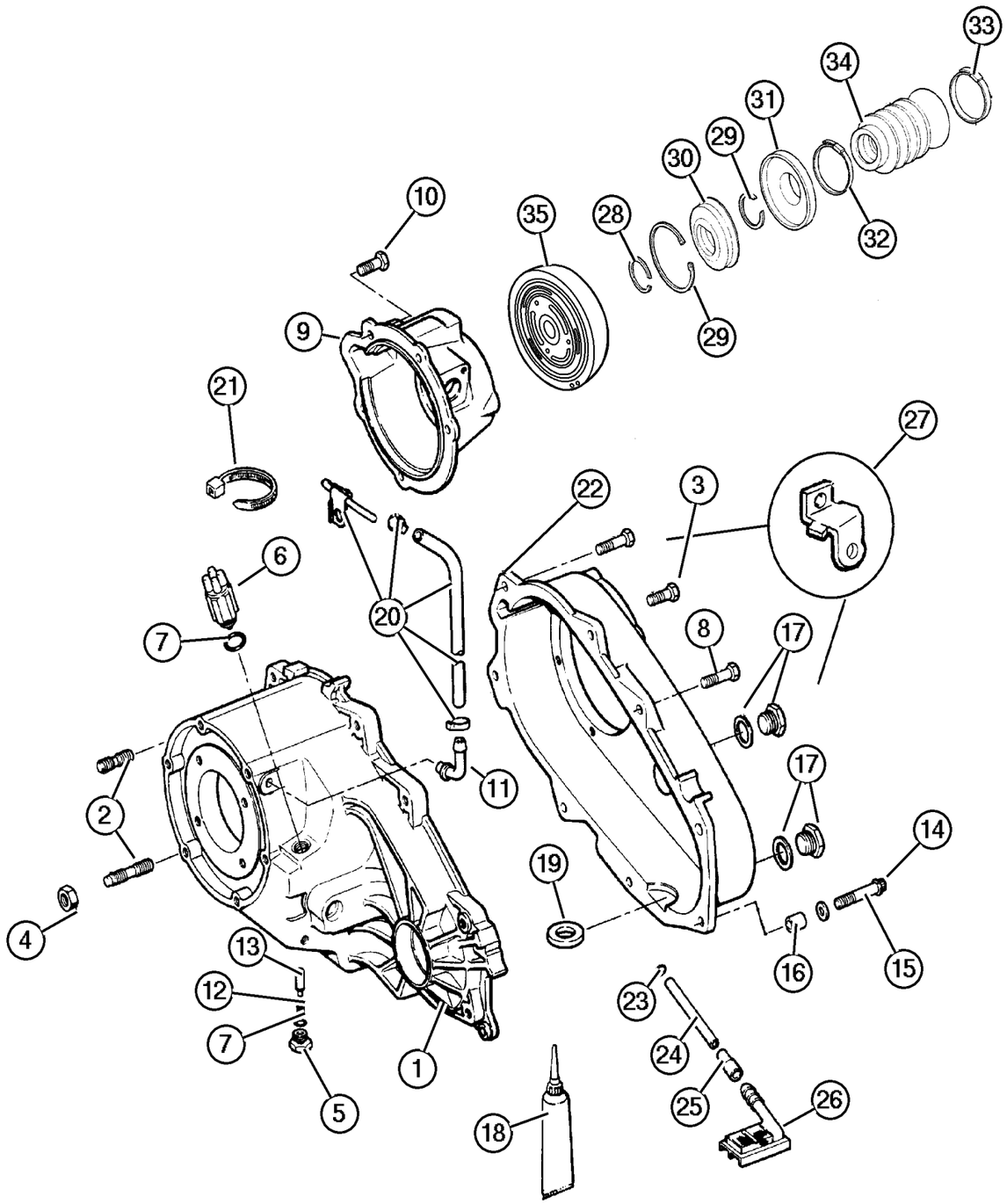

ITEM	PART NUMBER	QTY	LINE	SERIES	BODY	ENGINE	TRANS	TRIM	DESCRIPTION
13	5003 444AA	1	J, U			ED0,			PLUNGER
14	4210 614	2	J, U			EK0, EN0 ED0, EK0,			BOLT, Hex Flange Head
15	4210 983	2	J, U			EN0 ED0, EK0, EN0			WASHER, Flat
16	4116 310	2	J, U			ED0, EK0, EN0			DOWEL, Transfer Case
17	4856 641	2	J, U			ED0,			PLUG, Oil Fill
18	5010 884AA	1	J, U			EK0, EN0 ED0, EK0,			SEALANT, RTV
19	3681 601	1	J, U			EN0 ED0, EK0, EN0			MAGNET, Transmission
20	52105 882AA	1	J, U						VENT, Transfer Case
21	4641 780	1	J, U						STRAP, Tie
22	4886 222AA	1	J, U			ED0, EK0,			CASE, Transfer Rear
23	4338 942	1	J, U			EN0 ED0, EK0, EN0			SEAL, Oil
24	4338 941	1	J, U			ED0, EK0, EN0			TUBE, Oil Pickup
25	4338 944	1	J, U			ED0,			CONNECTOR, Oil Tube Pickup
26	4338 943	1	J, U			EK0, EN0 ED0, EK0,			FILTER, Transfer Case Oil
27						EN0			CLIP, Housing, (NOT REQUIRED)

JEEP LIBERTY (KJ)

SERIES	LINE	BODY	ENGINE	TRANSMISSION
P = Limited	J = LHD (4WD)	74 = 4 Dr. (104.3 WB)	ED1, ED0 = 2.4L Power Tech	DDK = 5 Speed HDManual
H = Sport	U = RHD (4WD)		EKG, EK0 = 3.7L Power Tech	DDD = 5 Speed HD Manual
M = Renegade	T = LHD (2WD)		ENJ = 2.5L 4Cyl Turbo Diesel	DG4,DGQ = Multi-Speed Auto
			ENR = 2.8L 4Cyl Turbo Diesel	DG6 = 4 Speed Auto Transm
			EN0 = 4Cyl Turbo Diesel	DG0 = All Automatic Transm
				DBB = All Manual Transm

AR = Use as required - = Non illustrated part # = New this model year

June 3, 2003

« RETURN TO GROUP INDEX

Case and Related Parts Command Trac [DHN]
Figure 231-210

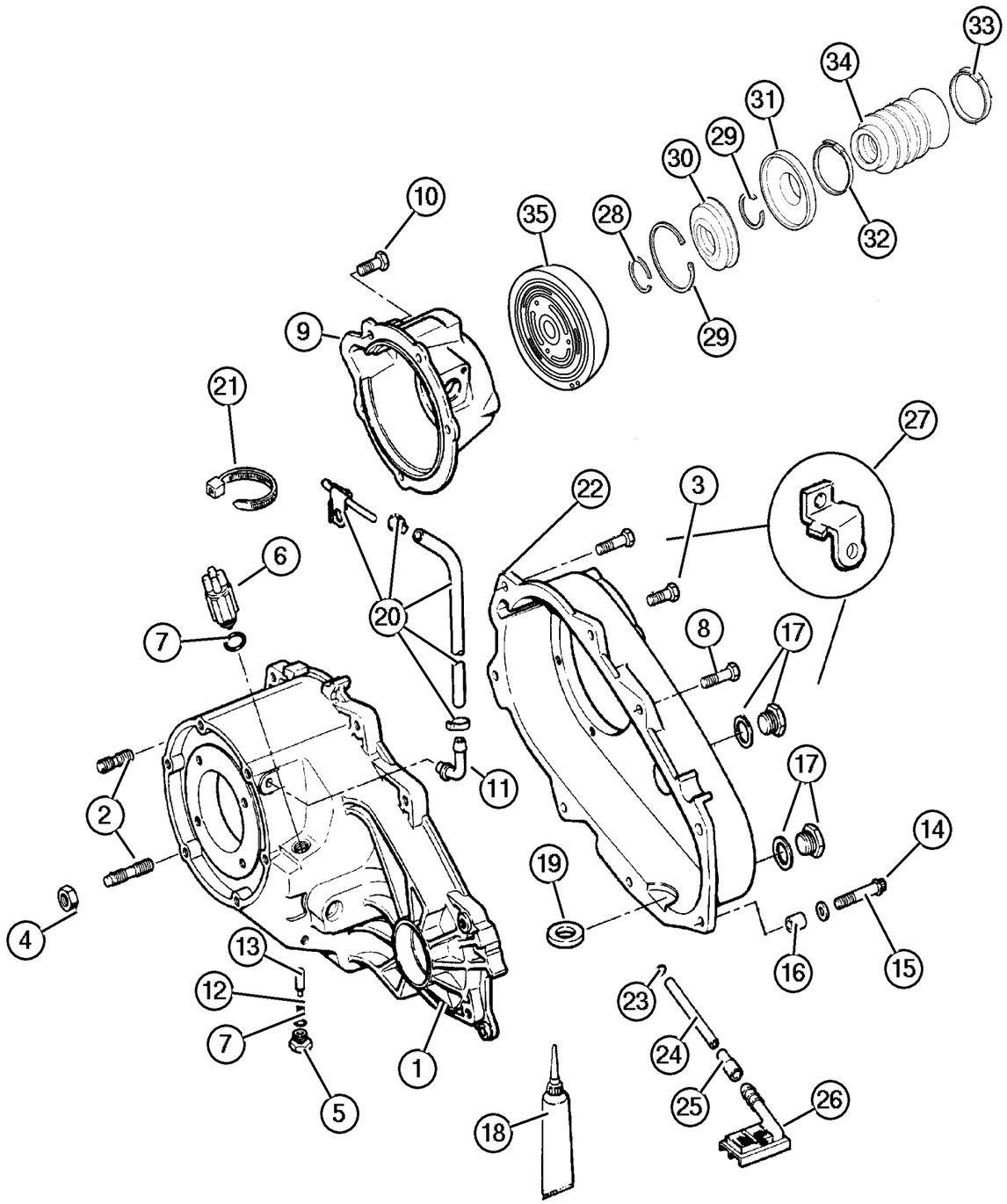

ITEM	PART NUMBER	QTY	LINE	SERIES	BODY	ENGINE	TRANS	TRIM	DESCRIPTION
28	5072 306AB	1	J, U			ED0,			SNAP RING
29	5072 306AB	1	J, U			EK0, EN0 ED0, EK0,			SNAP RING
30	5072 307AA	1	J, U			EN0 ED0, EK0, EN0			SEAL, Output Shaft
31	5072 308AA	1	J, U			ED0,			SLINGER, Transfer Case Flange
32	5072 310AA	1	J, U			EK0, EN0 ED0,			CLAMP, Boot
33	5072 311AA	1	J, U			EK0, EN0 ED0, EK0,			CLAMP, Boot
34	5072 329AA	1	J, U			EN0 ED0, EK0,			BOOT, Output Shaft, None
35	5083 101AA	1	J, U			EN0			DAMPER, Transfer Case
-36	5072 326AA	1	J, U			EN0			CLAMP, Boot, Boot to Damper
-37	5019 020AA	1	J, U			ED0, EK0, EN0			SEAL, Input Gear
-38	4213 328	1	J, U						VENT, Cap, Vent to Breather Tube
-39	4167 922	6	J, U						STUD, Tranmission Case

JEEP LIBERTY (KJ)

SERIES	LINE	BODY	ENGINE	TRANSMISSION
P = Limited	J = LHD (4WD)	74 = 4 Dr. (104.3 WB)	ED1, ED0 = 2.4L Power Tech	DDK = 5 Speed HDManual
H = Sport	U = RHD (4WD)		EKG, EK0 = 3.7L Power Tech	DDD = 5 Speed HD Manual
M = Renegade	T = LHD (2WD)		ENJ = 2.5L 4Cyl Turbo Diesel	DG4,DGQ = Multi-Speed Auto
			ENR = 2.8L 4Cyl Turbo Diesel	DG6 = 4 Speed Auto Transm
			EN0 = 4Cyl Turbo Diesel	DG0 = All Automatic Transm
				DBB = All Manual Transm

AR = Use as required - = Non illustrated part # = New this model year **June 3, 2003**

« RETURN TO GROUP INDEX

Gear Train Command Trac [DHN]
Figure 231-410

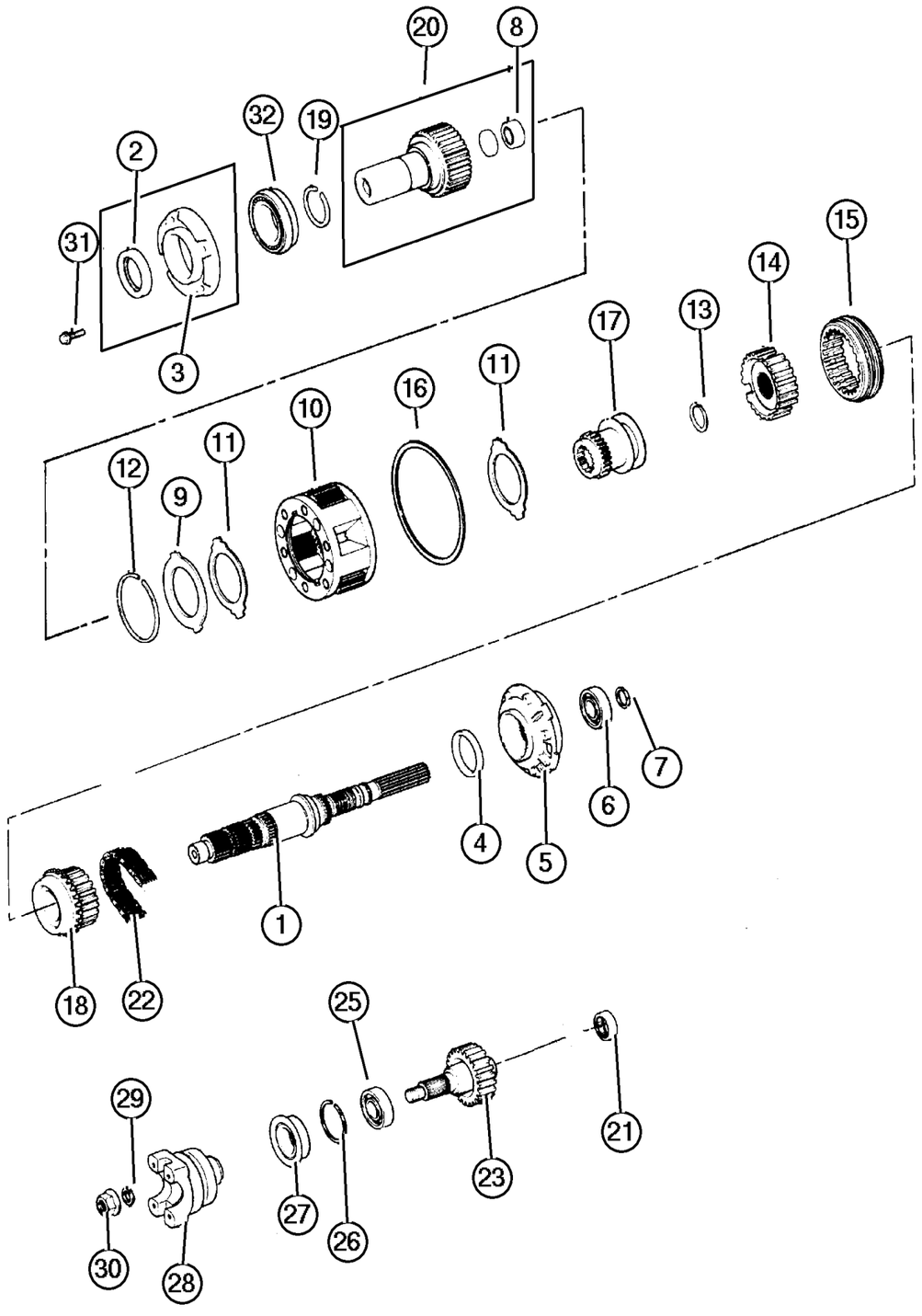

ITEM	PART NUMBER	QTY	LINE	SERIES	BODY	ENGINE	TRANS	TRIM	DESCRIPTION
NOTE; Sales Codes									
[DBB] = All Manual Transmissions									
[DG0] = All Automatic Transmissions									
[ED0] = All 2.2,2.5,2.4L 4 Cylinder Gas Engines									
[EK0] = All 3.7L 6 Cylinder Gas Engines									
[EN0] = All 4/5 Turbo Diesel Engines									
1									MAINSHAFT, Transfer Case
	5072 345AA	1	J, U			ED0, EK0			
	5072 323AA	1	J, U			EN0			
2	5019 020AA	1	J, U			ED0, EK0, EN0			SEAL, Input Gear
3	4338 973	1	J, U			ED0, EK0, EN0			EXTENSION, Transfer Case
4	4210 603	1	J, U			ED0, EK0, EN0			SEAL, Main Shaft
5	4883 596AA	1	J, U			ED0, EK0, EN0			PUMP, Transfer Case Oil
6	4883 601AA	1	J, U			ED0, EK0, EN0			BEARING, Output Shaft
7	4883 597AA	1	J, U			ED0, EK0, EN0			SNAP RING
8	8350 3507	1	J, U			ED0, EK0, EN0			BEARING, Input Shaft
9	4338 909	1	J, U			ED0, EK0, EN0			RING
10	4796 903AB	1	J, U			ED0, EK0, EN0			PLANETARY, Transfer Case
11	4338 908	2	J, U			ED0, EK0, EN0			THRUST WASHER, Planetary Carrier

JEEP LIBERTY (KJ)

SERIES	LINE	BODY	ENGINE	TRANSMISSION
P = Limited	J = LHD (4WD)	74 = 4 Dr. (104.3 WB)	ED1, ED0 = 2.4L Power Tech	DDK = 5 Speed HDManual
H = Sport	U = RHD (4WD)		EKG, EK0 = 3.7L Power Tech	DDD = 5 Speed HD Manual
M = Renegade	T = LHD (2WD)		ENJ = 2.5L 4Cyl Turbo Diesel	DG4,DGQ = Multi-Speed Auto
			ENR = 2.8L 4Cyl Turbo Diesel	DG6 = 4 Speed Auto Transm
			EN0 = 4Cyl Turbo Diesel	DG0 = All Automatic Transm
				DBB = All Manual Transm

Gear Train Command Trac [DHN]
Figure 231-410

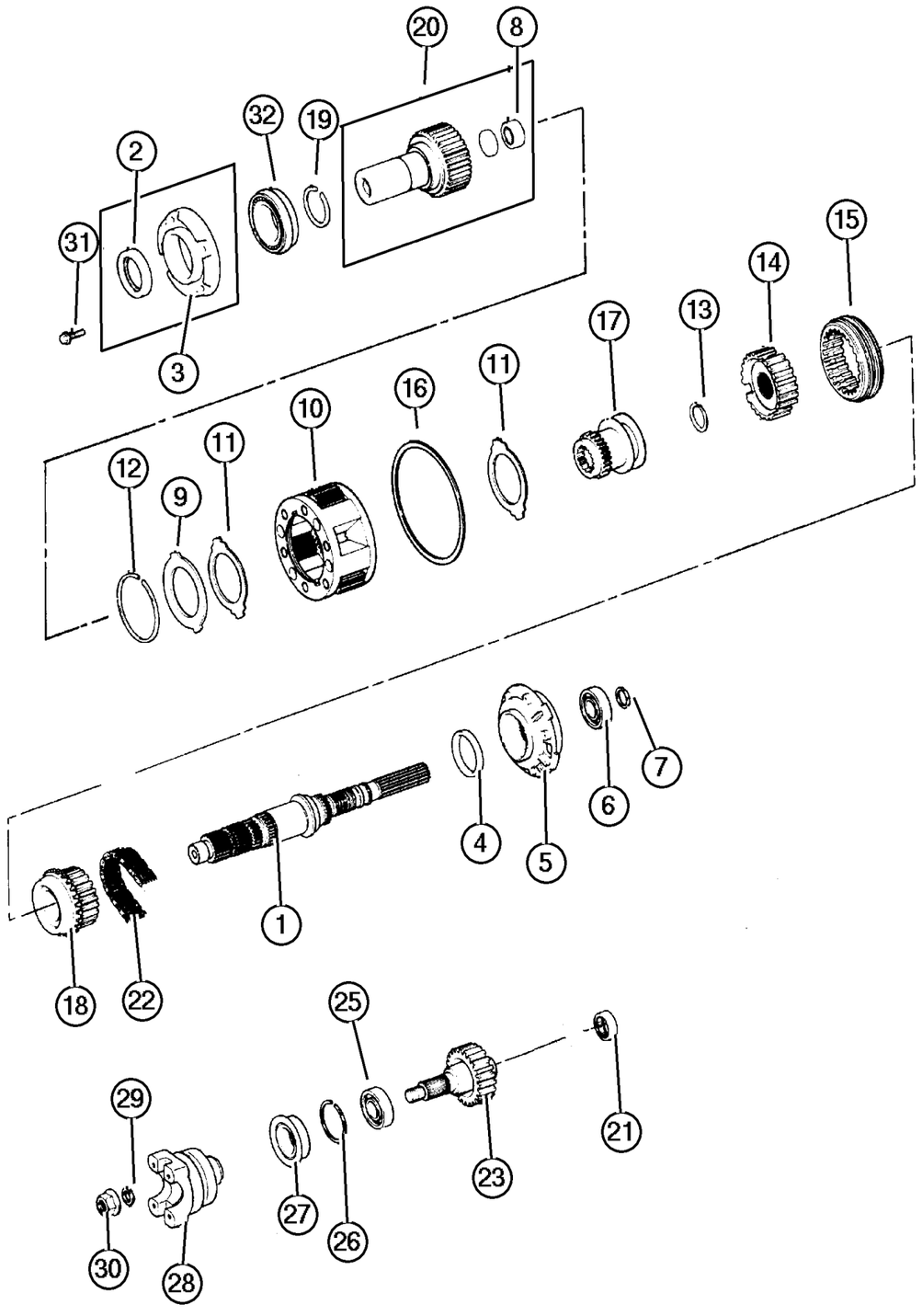

ITEM	PART NUMBER	QTY	LINE	SERIES	BODY	ENGINE	TRANS	TRIM	DESCRIPTION
12	4338 910	1	J, U			ED0,			SNAP RING
13	4338 933	1	J, U			EK0, EN0 ED0, EK0,			SNAP RING
14	4741 240	1	J, U			EN0 ED0, EK0, EN0			HUB, Sychronizer Mode
15	4796 909	1	J, U			ED0,			SLEEVE, Mode Synchronizer
16	4219 065	1	J, U			EK0, EN0 ED0,			SNAP RING, Annulus Gear
17	4797 013	1	J, U			EK0, EN0 ED0, EK0,			SLEEVE, Range Fork
18	4796 908	1	J, U			EN0 ED0, EK0, EN0			SPROCKET, Transfer Case
19	3821 558	1	J, U			ED0,			SNAP RING
20	4798 113	1	J, U			EK0, EN0 ED0,			GEAR, Input
21	4269 189	1	J, U			EK0, EN0 ED0, EK0,			BEARING, Output Shaft
22	4338 935	1	J, U			EN0 ED0, EK0, EN0			CHAIN, Transfer Case
23	5072 324AA	1	J, U			ED0,			OUTPUT SHAFT, Transfer Case
-24	4883 601AA	1	J, U			EK0, EN0 ED0,			BEARING, Output Shaft
						EK0, EN0			

JEEP LIBERTY (KJ)

SERIES	LINE	BODY	ENGINE	TRANSMISSION
P = Limited	J = LHD (4WD)	74 = 4 Dr. (104.3 WB)	ED1, ED0 = 2.4L Power Tech	DDK = 5 Speed HDManual
H = Sport	U = RHD (4WD)		EKG, EK0 = 3.7L Power Tech	DDD = 5 Speed HD Manual
M = Renegade	T = LHD (2WD)		ENJ = 2.5L 4Cyl Turbo Diesel	DG4,DGQ = Multi-Speed Auto
			ENR = 2.8L 4Cyl Turbo Diesel	DG6 = 4 Speed Auto Transm
			EN0 = 4Cyl Turbo Diesel	DG0 = All Automatic Transm
				DBB = All Manual Transm

AR = Use as required - = Non illustrated part # = New this model year

June 3, 2003

« RETURN TO GROUP INDEX

« »

Gear Train Command Trac [DHN]
Figure 231-410

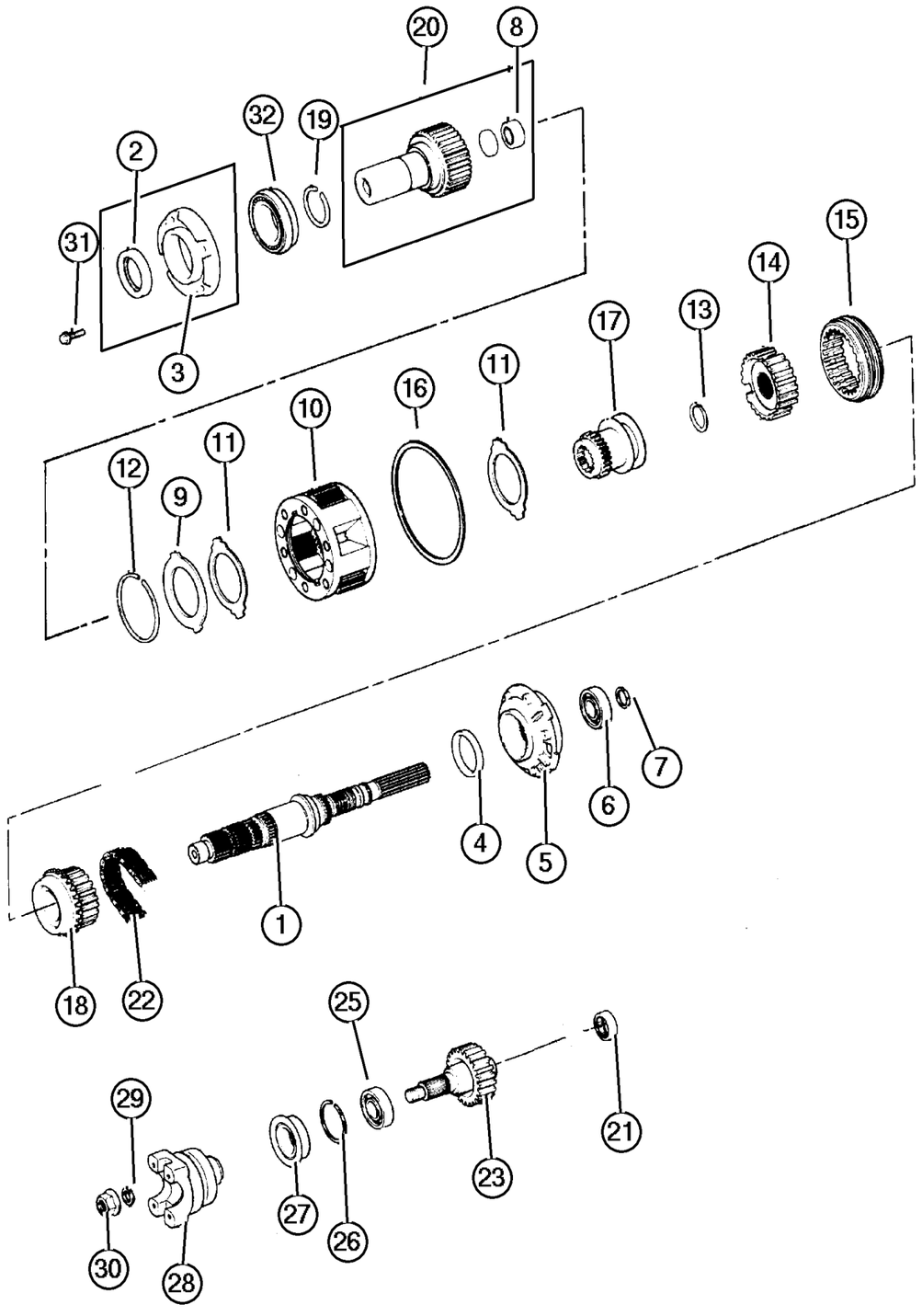

ITEM	PART NUMBER	QTY	LINE	SERIES	BODY	ENGINE	TRANS	TRIM	DESCRIPTION
25	4338 892	1	J, U			ED0,			BEARING
26	4338 894	1	J, U			EK0, EN0 ED0, EK0,			SNAP RING, Bearing
27	5015 847AA	1	J, U			EN0 ED0, EK0, EN0			SEAL, Output Shaft
28	5019 583AA	1	J, U			ED0, EK0, EN0			FLANGE, Driveshaft Yoke
29	4446 487	1	J, U			ED0,			WASHER, Flat
30	4446 488	1	J, U			EK0, EN0 ED0, EK0,			NUT, Hex Flange
31	6501 371	9	J, U			EN0 ED0, EK0, EN0			BOLT, Retainer
32	4746 155	1	J, U			ED0, EK0, EN0			BEARING, Input Gear

JEEP LIBERTY (KJ)

SERIES	LINE	BODY	ENGINE	TRANSMISSION
P = Limited	J = LHD (4WD)	74 = 4 Dr. (104.3 WB)	ED1, ED0 = 2.4L Power Tech	DDK = 5 Speed HDManual
H = Sport	U = RHD (4WD)		EKG, EK0 = 3.7L Power Tech	DDD = 5 Speed HD Manual
M = Renegade	T = LHD (2WD)		ENJ = 2.5L 4Cyl Turbo Diesel	DG4,DGQ = Multi-Speed Auto
			ENR = 2.8L 4Cyl Turbo Diesel	DG6 = 4 Speed Auto Transm
			EN0 = 4Cyl Turbo Diesel	DG0 = All Automatic Transm
				DBB = All Manual Transm

AR = Use as required - = Non illustrated part # = New this model year

June 3, 2003

« RETURN TO GROUP INDEX

Forks and Rails Command Trac [DHN]
Figure 231-910

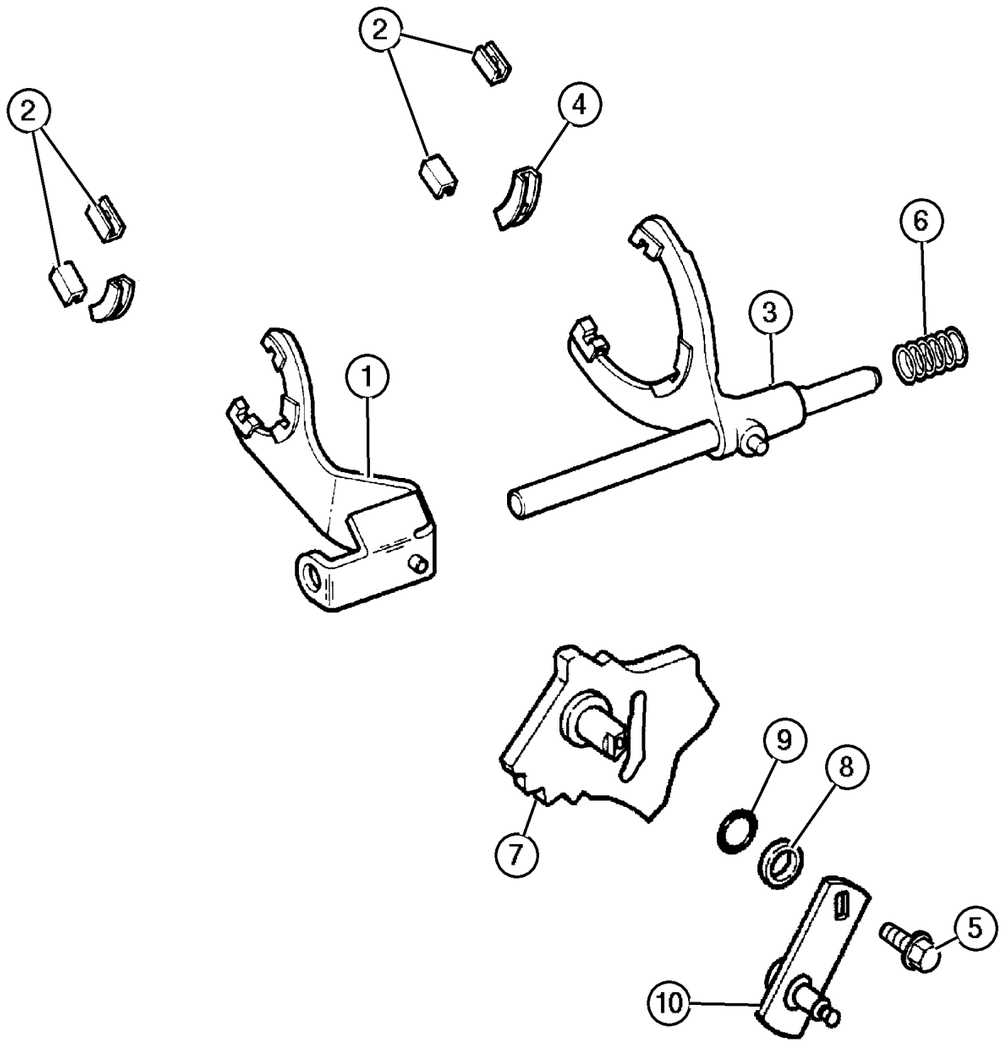

ITEM	PART NUMBER	QTY	LINE	SERIES	BODY	ENGINE	TRANS	TRIM	DESCRIPTION
Notes; Sales Codes									
[DBB] = All Manual Transmissions									
[DG0] = All Automatic Transmissions									
[ED0] = All 2.2,2.5,2.4L 4 Cylinder Gas Engines									
[EK0] = All 3.7L 6 Cylinder Gas Engines									
[EN0] = All 4/5 Turbo Diesel Engines									
1	4798 136	1	J, U			ED0, EK0, EN0			FORK, Range
2	4167 969	2	J, U			ED0, EK0, EN0			PAD, Shift Fork
3	4741 237	1	J, U			ED0, EK0, EN0			FORK, Transfer Case Mode Shift
4	4219 073	1	J, U			ED0, EK0, EN0			PAD, Shift Fork
5	5014 048AA	1	J, U			ED0, EK0, EN0			BOLT, Hex Head
6	4338 925	1	J, U			ED0, EK0, EN0			SPRING, Mode Shift Rail
7	5072 568AA	1	J, U			ED0, EK0, EN0			SECTOR, Transfer Case
8	5003 442AA	1	J, U			ED0, EK0, EN0			BEARING, Shift Lever Linkage
9	5014 046AA	1	J, U			ED0, EK0, EN0			SEAL, Sector Shaft
10	5072 328AA	1	J, U			ED0, EK0, EN0			LEVER, Selector

JEEP LIBERTY (KJ)

SERIES	LINE	BODY	ENGINE	TRANSMISSION
P = Limited	J = LHD (4WD)	74 = 4 Dr. (104.3 WB)	ED1, ED0 = 2.4L Power Tech	DDK = 5 Speed HDManual
H = Sport	U = RHD (4WD)		EKG, EK0 = 3.7L Power Tech	DDD = 5 Speed HD Manual
M = Renegade	T = LHD (2WD)		ENJ = 2.5L 4Cyl Turbo Diesel	DG4,DGQ = Multi-Speed Auto
			ENR = 2.8L 4Cyl Turbo Diesel	DG6 = 4 Speed Auto Transm
			EN0 = 4Cyl Turbo Diesel	DG0 = All Automatic Transm
				DBB = All Manual Transm

Gearshift Controls
Figure 231-1210

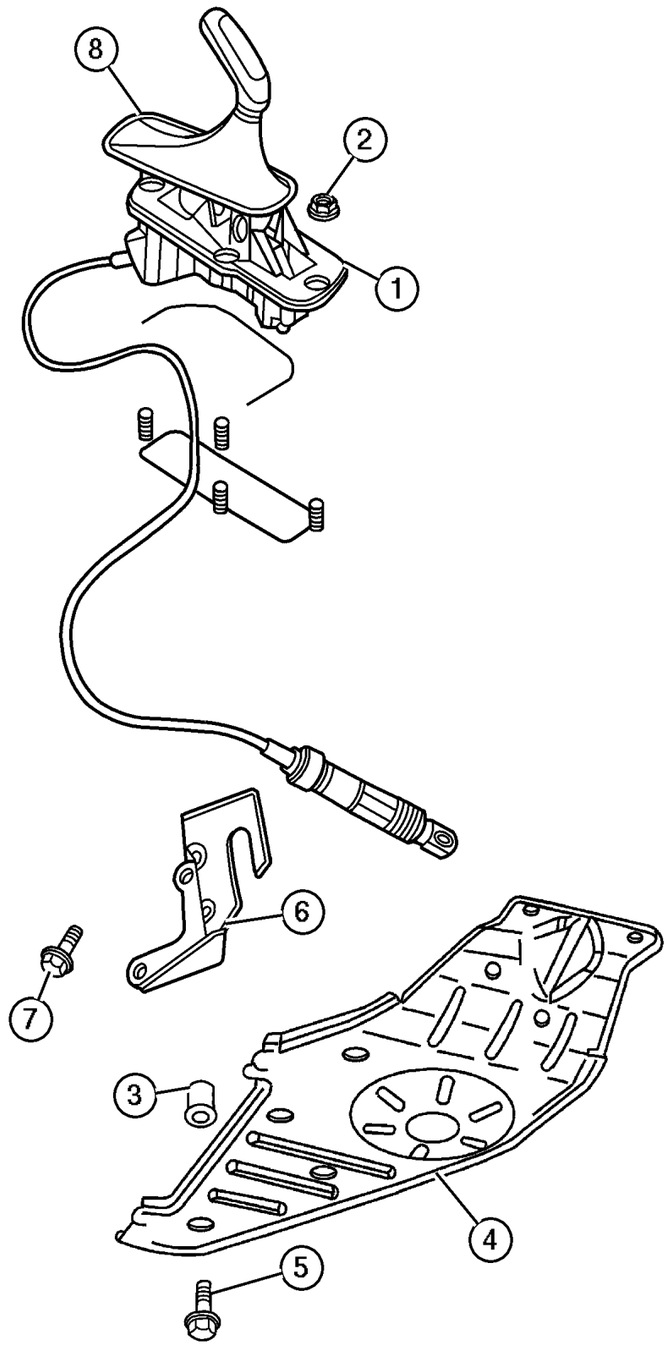

ITEM	PART NUMBER	QTY	LINE	SERIES	BODY	ENGINE	TRANS	TRIM	DESCRIPTION
NOTE; Sales Codes									
[DBB] = All Manual Transmissions									
[DG0] = All Automatic Transmissions									
[DG4]= Multi- Speed Automatic Transmission [45RFE]									
1									SHIFTER, Transfer Case
	52104 308AD	1	J						
	52104 309AD	1	U						
2	3420 1358	4							NUT AND WASHER, Hex Nut-Sealing Washer, M6 x 1.00
3	6506 644AA	4	J, U						RIVET
4									PLATE, Transfer Case Skid
	52059 223AA	1	J, U				DGQ, DG4		
	#52128 649AA	1	J, U				DG6		
5	6506 644AA	4	J, U						RIVET
6									BRACKET, Shifter
	52104 390AC	1	J, U				DBB		
	52104 389AB	1	J, U				DGQ, DG4		
	#52109 747AB	1	J, U				DG6		
7	6101 752	3	J, U				DG0		SCREW AND WASHER, Hex Head, M10x1.5x28
8	52109 709AB	1	J, U						BOOT, Gearshift

JEEP LIBERTY (KJ)

SERIES	LINE	BODY	ENGINE	TRANSMISSION
P = Limited	J = LHD (4WD)	74 = 4 Dr. (104.3 WB)	ED1, ED0 = 2.4L Power Tech	DDK = 5 Speed HDManual
H = Sport	U = RHD (4WD)		EKG, EK0 = 3.7L Power Tech	DDD = 5 Speed HD Manual
M = Renegade	T = LHD (2WD)		ENJ = 2.5L 4Cyl Turbo Diesel	DG4,DGQ = Multi-Speed Auto
			ENR = 2.8L 4Cyl Turbo Diesel	DG6 = 4 Speed Auto Transm
			EN0 = 4Cyl Turbo Diesel	DG0 = All Automatic Transm
				DBB = All Manual Transm

AR = Use as required - = Non illustrated part # = New this model year

June 3, 2003

« RETURN TO GROUP INDEX

Group – 242

Transfer Case Model 242

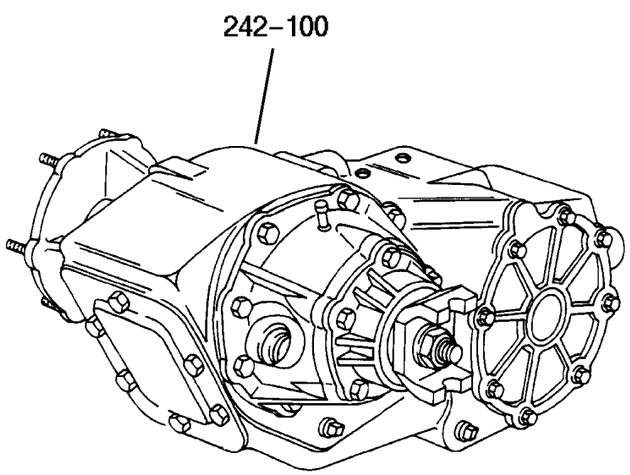

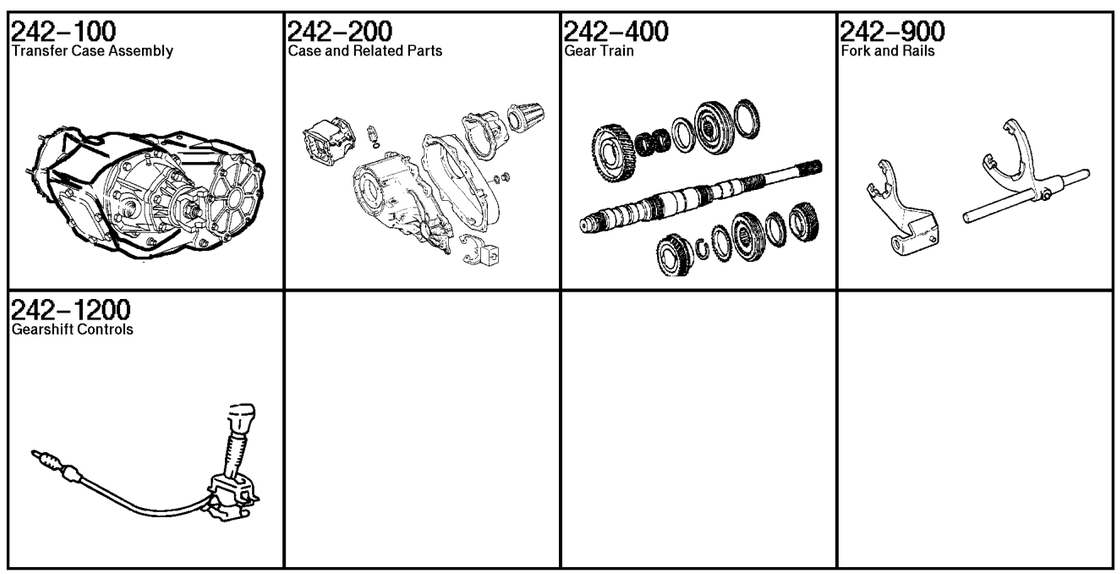

GROUP 242 - Transfer Case Model 242

Illustration Title	Group-Fig. No.
Transfer Case Assembly	
Transfer Case Select Trac [DHP]	Fig. 242-110
Case and Related Parts	
Case and Related Parts Select Trac [DHP]	Fig. 242-210
Gear Train	
Gear Train Select Trac [DHP]	Fig. 242-410
Fork and Rails	
Forks and Rails Select Trac [DHP]	Fig. 242-910
Gearshift Controls	
Gearshift Controls	Fig. 242-1210

Transfer Case Select Trac [DHP]
Figure 242-110

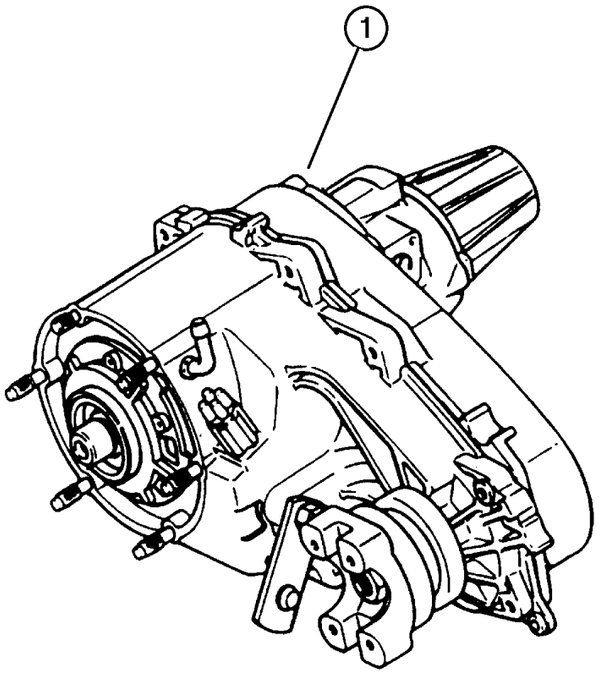

ITEM	PART NUMBER	QTY	LINE	SERIES	BODY	ENGINE	TRANS	TRIM	DESCRIPTION
Notes: Sales Code									
ED0=All 2.2,2.4,2.5,L 4Cylinder Gas Engines									
EK0=All 3.7L Gas Engines									
EN0=All 4/5 Cylinber Turbo Diesel Engines									
1									TRANSFER CASE, NP242
	#52111 022AF	1	J, U						Thru 9/9/02
	#52853 123AA	1	J, U			EN0			From 9/10/02
	#52111 022AG	1	J, U			ED0, EK0			After 9/10/02

JEEP LIBERTY (KJ)

SERIES	LINE	BODY	ENGINE	TRANSMISSION
P = Limited	J = LHD (4WD)	74 = 4 Dr. (104.3 WB)	ED1, ED0 = 2.4L Power Tech	DDK = 5 Speed HDManual
H = Sport	U = RHD (4WD)		EKG, EK0 = 3.7L Power Tech	DDD = 5 Speed HD Manual
M = Renegade	T = LHD (2WD)		ENJ = 2.5L 4Cyl Turbo Diesel	DG4,DGQ = Multi-Speed Auto
			ENR = 2.8L 4Cyl Turbo Diesel	DG6 = 4 Speed Auto Transm
			EN0 = 4Cyl Turbo Diesel	DG0 = All Automatic Transm
				DBB = All Manual Transm

AR = Use as required - = Non illustrated part # = New this model year **June 3, 2003**

« RETURN TO GROUP INDEX

Case and Related Parts Select Trac [DHP]
Figure 242-210

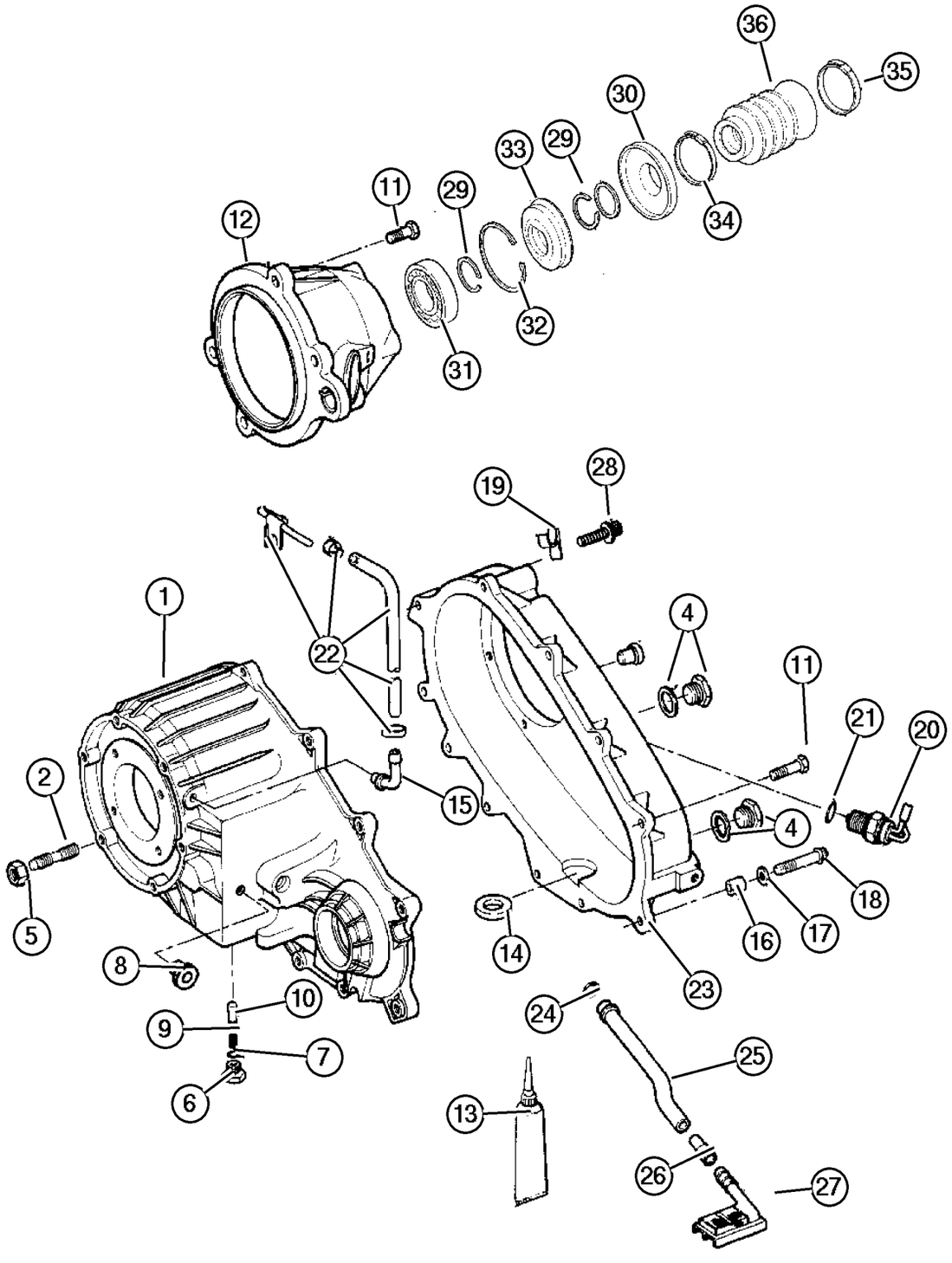

ITEM	PART NUMBER	QTY	LINE	SERIES	BODY	ENGINE	TRANS	TRIM	DESCRIPTION
NOTE; Sales Code									
[ED0] = 2.2,2.5,2.4L 4 Cylinder Gas Engines									
1									CASE, Transfer Front
	5072 315AA	1	J, U						Thru 9/9/02
		1	J, U			ED0, EK0			From 9/10/02
		1	J, U			EN0			From 9/10/02
2									STUD, Tranmission Case
	4167 922	6	J, U						Thru 9/9/02
		6	J, U			ED0, EK0			From 9/10/02
		6	J, U			EN0			From 9/10/02
-3	4746 253	6	J, U						STUD
4									PLUG, Oil Fill
	4856 641	2	J, U						Thru 9/9/02
		2	J, U			ED0, EK0			From 9/10/02
		2	J, U			EN0			From 9/10/02
5	J400 6681	6	J, U						NUT AND CONED WASHER, Hex, .375-24
6									SCREW
	4886 473AA	1	J, U						Thru 9/9/02
		1	J, U			ED0, EK0			From 9/10/02
		1	J, U			EN0			From 9/10/02
7									SEAL, Vacuum Switch
	4338 956	1	J, U						Thru 9/9/02
		1	J, U			ED0, EK0			From 9/10/02
		1	J, U			EN0			From 9/10/02
8									PLUG
	0015 105	1	J, U						Thru 9/9/02
		1	J, U			ED0, EK0			From 9/10/02
		1	J, U			EN0			From 9/10/02
9									SPRING, Poppet Plunger
	5003 445AA	1	J, U						Thru 9/9/02
		1	J, U			ED0, EK0			From 9/10/02
		1	J, U			EN0			From 9/10/02
10									PLUNGER

JEEP LIBERTY (KJ)

SERIES	LINE	BODY	ENGINE	TRANSMISSION
P = Limited	J = LHD (4WD)	74 = 4 Dr. (104.3 WB)	ED1, ED0 = 2.4L Power Tech	DDK = 5 Speed HDManual
H = Sport	U = RHD (4WD)		EKG, EK0 = 3.7L Power Tech	DDD = 5 Speed HD Manual
M = Renegade	T = LHD (2WD)		ENJ = 2.5L 4Cyl Turbo Diesel	DG4,DGQ = Multi-Speed Auto
			ENR = 2.8L 4Cyl Turbo Diesel	DG6 = 4 Speed Auto Transm
			EN0 = 4Cyl Turbo Diesel	DG0 = All Automatic Transm
				DBB = All Manual Transm

AR = Use as required - = Non illustrated part # = New this model year

June 3, 2003

« RETURN TO GROUP INDEX »

Case and Related Parts Select Trac [DHP]
Figure 242-210

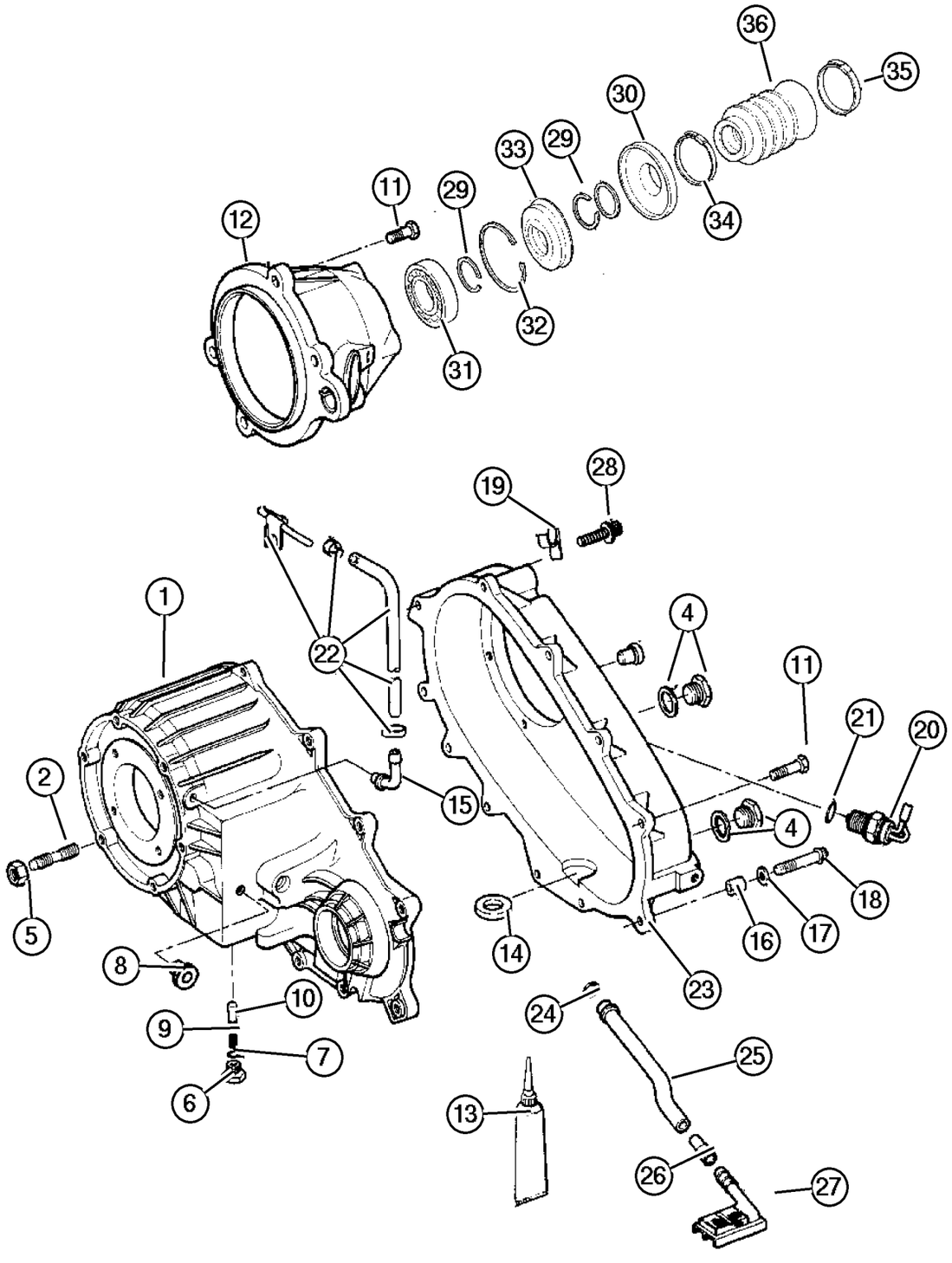

ITEM	PART NUMBER	QTY	LINE	SERIES	BODY	ENGINE	TRANS	TRIM	DESCRIPTION
	5003 444AA	1	J, U						Thru 9/9/02
		1	J, U			ED0, EK0			From 9/10/02
		1	J, U			EN0			From 9/10/02
11									BOLT, Transfer Case
	4210 617	8	J, U						Thru 9/9/02
		8	J, U			ED0, EK0			From 9/10/02
		8	J, U			EN0			From 9/10/02
12									RETAINER, Transfer Case Rear
	5072 305AA	1	J, U						Thru 9/9/02
		1	J, U			ED0, EK0			From 9/10/02
		1	J, U			EN0			From 9/10/02
13									SEALANT, RTV
	5010 884AA	1	J, U						Thru 9/9/02
		1	J, U			ED0, EK0			From 9/10/02
		1	J, U			EN0			From 9/10/02
14									MAGNET, Transmission
	3681 601	1	J, U						Thru 9/9/02
		1	J, U			ED0, EK0			From 9/10/02
		1	J, U			EN0			From 9/10/02
15									VENT, Transfer Case
	4796 910	1	J, U						Thru 9/9/02
		1	J, U			ED0, EK0			From 9/10/02
		1	J, U			EN0			From 9/10/02
16									DOWEL, Transfer Case
	4116 310	2	J, U						Thru 9/9/02
		2	J, U			ED0, EK0			From 9/10/02
		2	J, U			EN0			From 9/10/02
17									WASHER, Flat
	4210 983	2	J, U						Thru 9/9/02
		1	J, U			ED0, EK0			From 9/10/02
		1	J, U			EN0			From 9/10/02
18									BOLT, Hex Flange Head
	4210 614	6	J, U						Thru 9/9/02

JEEP LIBERTY (KJ)

SERIES	LINE	BODY	ENGINE	TRANSMISSION
P = Limited	J = LHD (4WD)	74 = 4 Dr. (104.3 WB)	ED1, ED0 = 2.4L Power Tech	DDK = 5 Speed HDManual
H = Sport	U = RHD (4WD)		EKG, EK0 = 3.7L Power Tech	DDD = 5 Speed HD Manual
M = Renegade	T = LHD (2WD)		ENJ = 2.5L 4Cyl Turbo Diesel	DG4,DGQ = Multi-Speed Auto
			ENR = 2.8L 4Cyl Turbo Diesel	DG6 = 4 Speed Auto Transm
			EN0 = 4Cyl Turbo Diesel	DG0 = All Automatic Transm
				DBB = All Manual Transm

Case and Related Parts Select Trac [DHP]
Figure 242-210

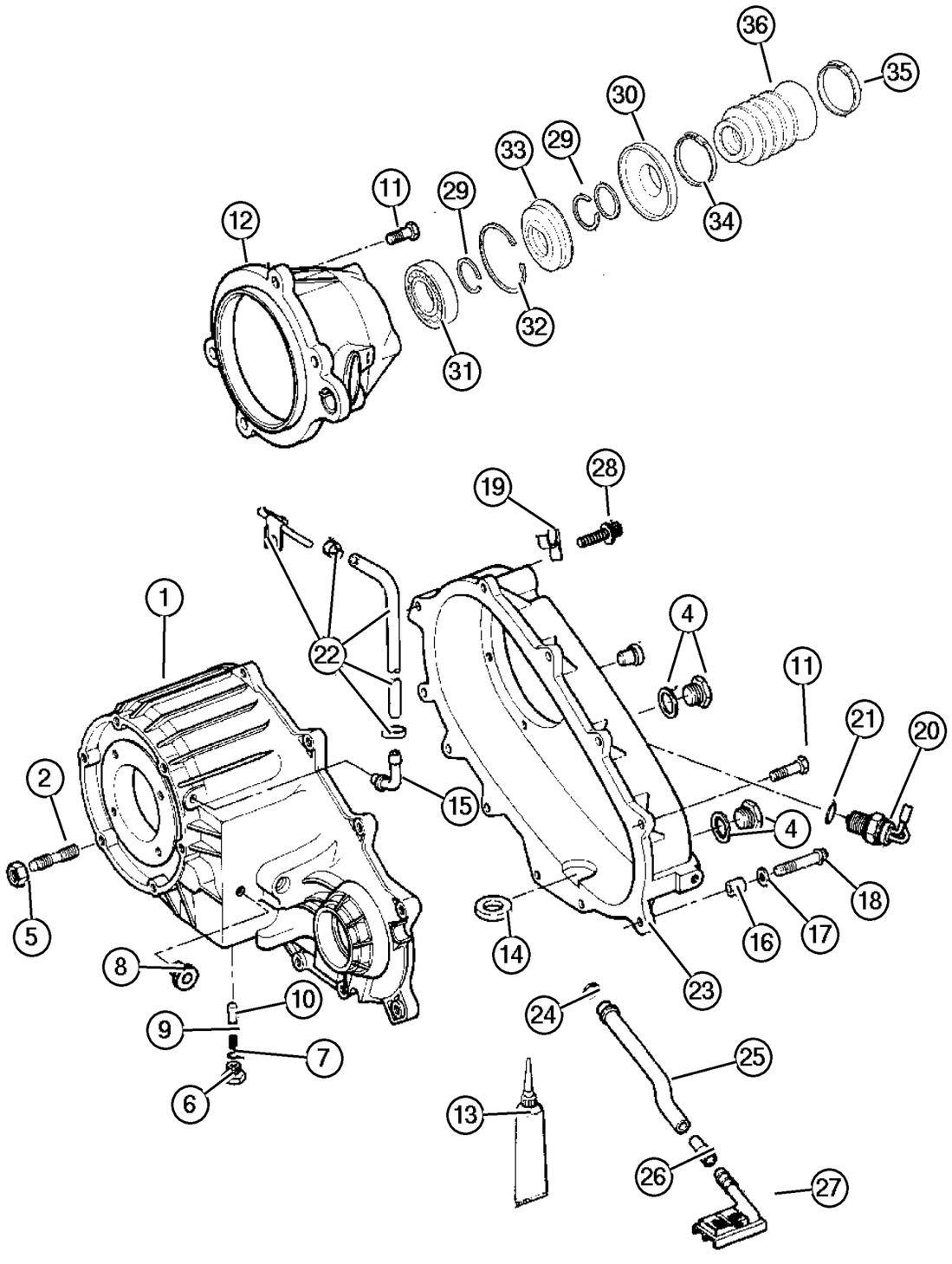

ITEM	PART NUMBER	QTY	LINE	SERIES	BODY	ENGINE	TRANS	TRIM	DESCRIPTION
		6	J, U			ED0,			From 9/10/02
						EK0			
		6	J, U			EN0			From 9/10/02
19	5211 8181	1				ED0			CLIP
20									SWITCH, Transfer Case, 5 Position
	5083 138AA	1	J, U						Thru 9/9/02
		1	J, U			ED0,			From 9/10/02
						EK0			
		1	J, U			EN0			From 9/10/02
21									SEAL, Vacuum Switch
	4338 956	1	J, U						Thru 9/9/02
		1	J, U			ED0,			From 9/10/02
						EK0			
		1	J, U			EN0			From 9/10/02
22	HFV00 516AB	1							HOSE, Fuel And Vapor, 25 Foot Roll 5/16"
23									CASE, Transfer Case Rear
	5013 858AA	1	J, U						Thru 9/9/02
		1	J, U			ED0,			From 9/10/02
						EK0			
		1	J, U			EN0			From 9/10/02
24									SEAL, Oil
	4338 942	1	J, U						Thru 9/9/02
		1	J, U			ED0,			From 9/10/02
						EK0			
		1	J, U			EN0			From 9/10/02
25									TUBE, Oil Pickup
	5003 455AA	1	J, U						Thru 9/9/02
		1	J, U			ED0,			From 9/10/02
						EK0			
		1	J, U			EN0			From 9/10/02
26									CONNECTOR, Oil Tube Pickup
	4338 944	1	J, U						Thru 9/9/02
		1	J, U			ED0,			From 9/10/02
						EK0			
		1	J, U			EN0			From 9/10/02
27									FILTER, Transfer Case Oil
	4338 943	1	J, U						Thru 9/9/02
		1	J, U			ED0,			From 9/10/02
						EK0			
		1	J, U			EN0			From 9/10/02

JEEP LIBERTY (KJ)

SERIES	LINE	BODY	ENGINE	TRANSMISSION
P = Limited	J = LHD (4WD)	74 = 4 Dr. (104.3 WB)	ED1, ED0 = 2.4L Power Tech	DDK = 5 Speed HDManual
H = Sport	U = RHD (4WD)		EKG, EK0 = 3.7L Power Tech	DDD = 5 Speed HD Manual
M = Renegade	T = LHD (2WD)		ENJ = 2.5L 4Cyl Turbo Diesel	DG4,DGQ = Multi-Speed Auto
			ENR = 2.8L 4Cyl Turbo Diesel	DG6 = 4 Speed Auto Transm
			EN0 = 4Cyl Turbo Diesel	DG0 = All Automatic Transm
				DBB = All Manual Transm

AR = Use as required - = Non illustrated part # = New this model year

June 3, 2003

« RETURN TO GROUP INDEX

Case and Related Parts Select Trac [DHP]
Figure 242-210

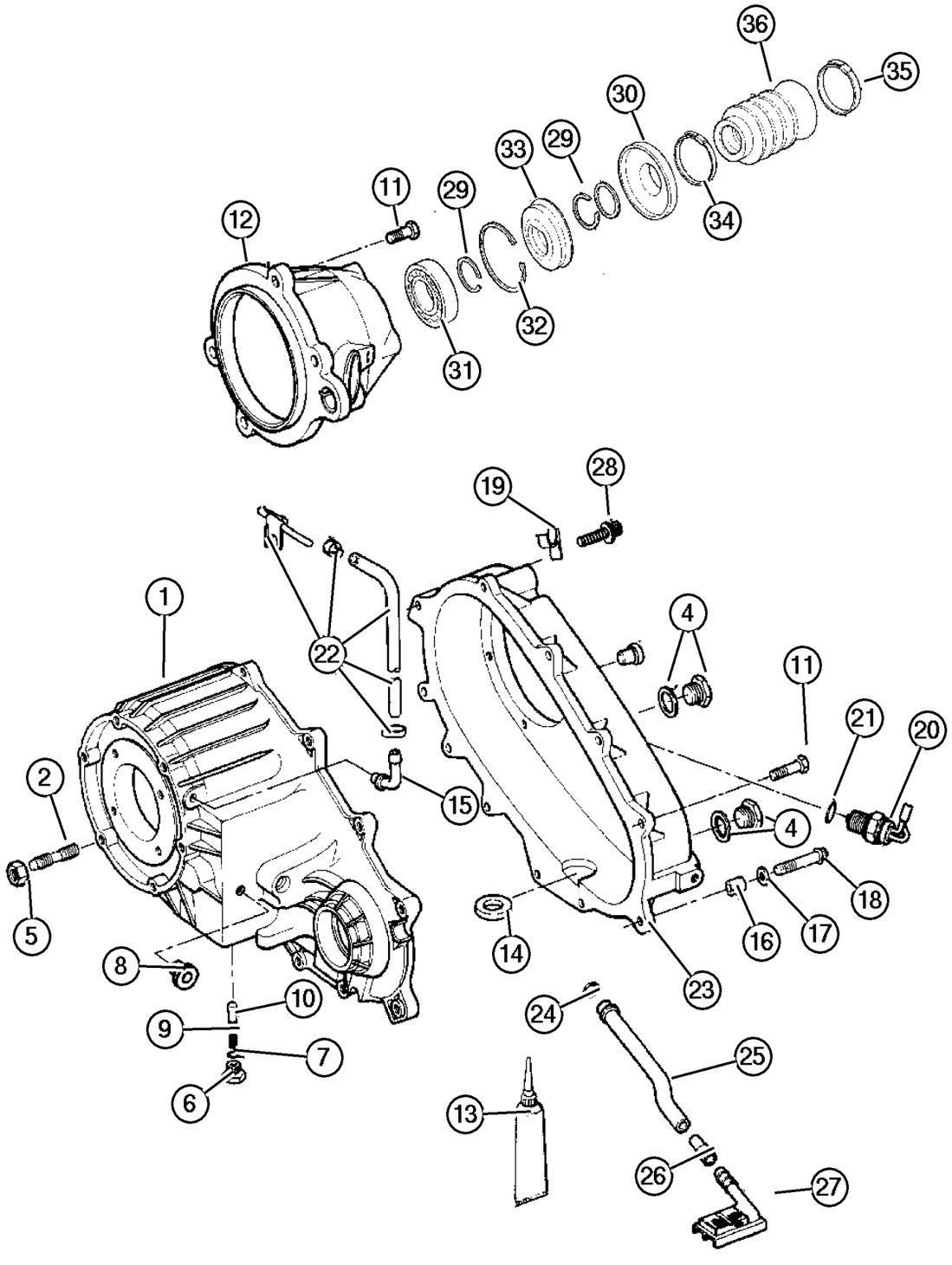

ITEM	PART NUMBER	QTY	LINE	SERIES	BODY	ENGINE	TRANS	TRIM	DESCRIPTION
28									BOLT, Twelve Point Head, M10x1. 5x48
	J813 0979	1	J, U						Thru 9/9/02
		1	J, U			ED0, EK0			From 9/10/02
		1	J, U			EN0			From 9/10/02
29									SNAP RING
	4883 597AA	2	J, U						Thru 9/9/02
		2	J, U			ED0, EK0			From 9/10/02
		2	J, U			EN0			From 9/10/02
30									SLINGER, Transfer Case Flange
	5072 308AA	1	J, U						Thru 9/9/02
		1	J, U			ED0, EK0			From 9/10/02
		1	J, U			EN0			From 9/10/02
31									BEARING, Output Shaft
	2466 224	1	J, U			EN0			From 9/10/02
	4883 601AA	1	J, U						Thru 9/9/02
		1	J, U			ED0, EK0			From /9/10/02
		1	J, U			ED0, EK0			From /9/10/02
32									SNAP RING
	5072 306AB	1	J, U						Thru 9/9/02
		1	J, U			ED0, EK0			From 9/10/02
		1	J, U			EN0			From 9/10/02
33									SEAL, Output Shaft
	5072 307AA	1	J, U						Thru 9/9/ 02
		1	J, U			ED0, EK0			From 9/10/ 02
		1	J, U			EN0			From 9/10/ 02
34									CLAMP, Boot
	5072 310AA	1	J, U						Thru 9/9/ 02
		1	J, U			ED0, EK0			From 9/10/ 02
		1	J, U			EN0			From 9/10/ 02
35									CLAMP, Boot
	5072 311AA	1	J, U						Thru 9/9/02
		1	J, U			ED0, EK0			From 9/10/02
		1	J, U			EN0			From 9/10/02
36									BOOT, Output Shaft, None

JEEP LIBERTY (KJ)

SERIES	LINE	BODY	ENGINE	TRANSMISSION
P = Limited	J = LHD (4WD)	74 = 4 Dr. (104.3 WB)	ED1, ED0 = 2.4L Power Tech	DDK = 5 Speed HDManual
H = Sport	U = RHD (4WD)		EKG, EK0 = 3.7L Power Tech	DDD = 5 Speed HD Manual
M = Renegade	T = LHD (2WD)		ENJ = 2.5L 4Cyl Turbo Diesel	DG4,DGQ = Multi-Speed Auto
			ENR = 2.8L 4Cyl Turbo Diesel	DG6 = 4 Speed Auto Transm
			EN0 = 4Cyl Turbo Diesel	DG0 = All Automatic Transm
				DBB = All Manual Transm

AR = Use as required - = Non illustrated part # = New this model year

June 3, 2003

« RETURN TO GROUP INDEX

Case and Related Parts Select Trac [DHP]
Figure 242-210

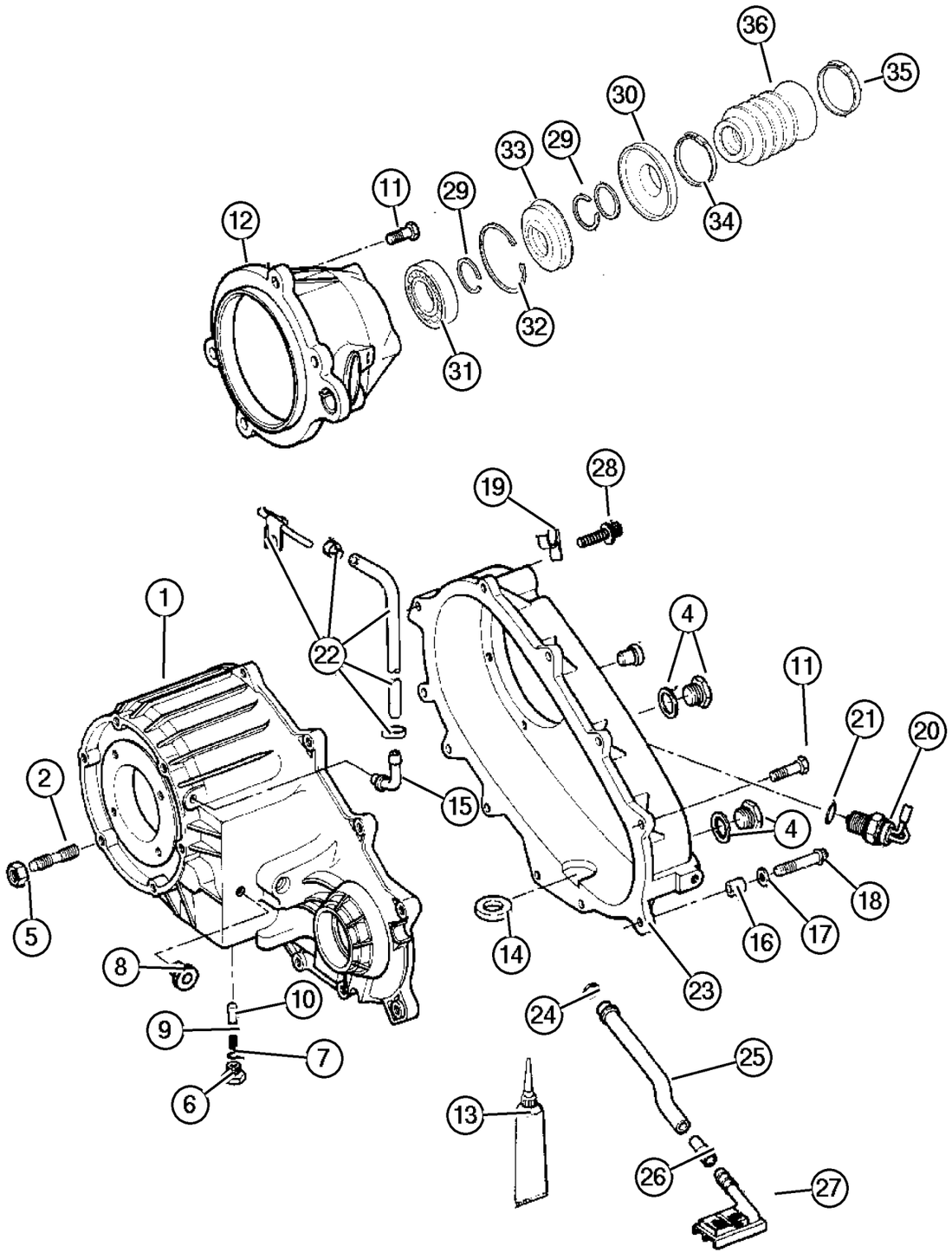

ITEM	PART NUMBER	QTY	LINE	SERIES	BODY	ENGINE	TRANS	TRIM	DESCRIPTION
	5072 329AA	1	J, U						Thru 9/9/02
	#5072 329AB	1	J, U			EN0			From 9/10/02
		1	J, U			ED0, EK0			From 9/10/02
-37									DOWEL
	4638 953	1	J, U						Thru 9/9/02
		1	J, U			ED0, EK0			From 9/10/02
		1	J, U			EN0			From 9/10/02
-38	5012 324AA	1	J, U						SNUBBER, Drive Chain
-39	5012 325AA	2	J, U						BOLT, Snubber Holder

JEEP LIBERTY (KJ)

SERIES	LINE	BODY	ENGINE	TRANSMISSION
P = Limited	J = LHD (4WD)	74 = 4 Dr. (104.3 WB)	ED1, ED0 = 2.4L Power Tech	DDK = 5 Speed HDManual
H = Sport	U = RHD (4WD)		EKG, EK0 = 3.7L Power Tech	DDD = 5 Speed HD Manual
M = Renegade	T = LHD (2WD)		ENJ = 2.5L 4Cyl Turbo Diesel	DG4,DGQ = Multi-Speed Auto
			ENR = 2.8L 4Cyl Turbo Diesel	DG6 = 4 Speed Auto Transm
			EN0 = 4Cyl Turbo Diesel	DG0 = All Automatic Transm
				DBB = All Manual Transm

Gear Train Select Trac [DHP]
Figure 242-410

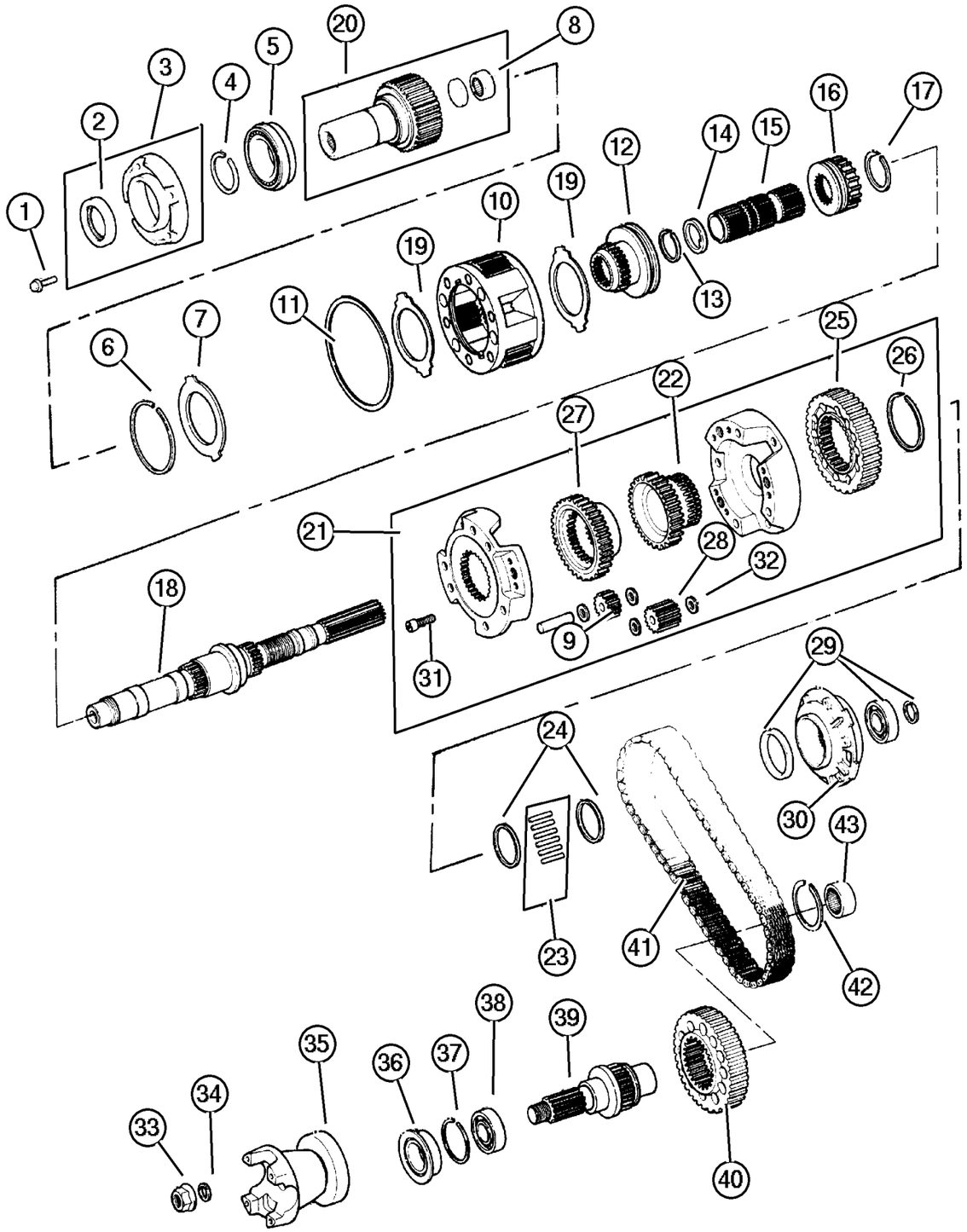

ITEM	PART NUMBER	QTY	LINE	SERIES	BODY	ENGINE	TRANS	TRIM	DESCRIPTION
1									BOLT, Retainer
	6501 371	4	J, U						Thru 9/9/02
		4	J, U			ED0, EK0			From 9/9/02
		4	J, U			EN0			From 9/9/02
2									SEAL, Input Gear
	5019 020AA	1	J, U						Thru 9/9/02
		1	J, U			ED0, EK0			From 9/9 02
		1	J, U			EN0			From 9/9 02
3									EXTENSION, Transfer Case
	4338 973	1	J, U						Thru 9/9/02
		1	J, U			ED0, EK0			From 9/10/02
		1	J, U			EN0			From 9/10/02
4									SNAP RING
	3821 558	1	J, U						Thru 9/9/02
		1	J, U			ED0, EK0			From 9/10/02
		1	J, U			EN0			From 9/10/02
5									BEARING, Input Gear
	4746 155	1	J, U						Thru 9/9/02
		1	J, U			ED0, EK0			From 9/10/02
		1	J, U			EN0			From 9/10/02
6									SNAP RING
	4338 910	1	J, U						Thru 9/9/02
		1	J, U			ED0, EK0			From 9/10/02
		1	J, U			EN0			From 9/10/02
7									RING
	4338 909	1	J, U						Thru 9/9/02
		1	J, U			ED0, EK0			From 9/10/02
		1	J, U			EN0			From 9/10/02
8									BEARING, Input Shaft
	8350 3507	1	J, U						Thru 9/9/02
		1	J, U			ED0, EK0			From 9/10/02
		1	J, U			EN0			From 9/10/02
9									GEAR, Planetary

JEEP LIBERTY (KJ)

SERIES	LINE	BODY	ENGINE	TRANSMISSION
P = Limited	J = LHD (4WD)	74 = 4 Dr. (104.3 WB)	ED1, ED0 = 2.4L Power Tech	DDK = 5 Speed HDManual
H = Sport	U = RHD (4WD)		EKG, EK0 = 3.7L Power Tech	DDD = 5 Speed HD Manual
M = Renegade	T = LHD (2WD)		ENJ = 2.5L 4Cyl Turbo Diesel	DG4,DGQ = Multi-Speed Auto
			ENR = 2.8L 4Cyl Turbo Diesel	DG6 = 4 Speed Auto Transm
			EN0 = 4Cyl Turbo Diesel	DG0 = All Automatic Transm
				DBB = All Manual Transm

AR = Use as required - = Non illustrated part # = New this model year **June 3, 2003**

« RETURN TO GROUP INDEX »

Gear Train Select Trac [DHP]
Figure 242-410

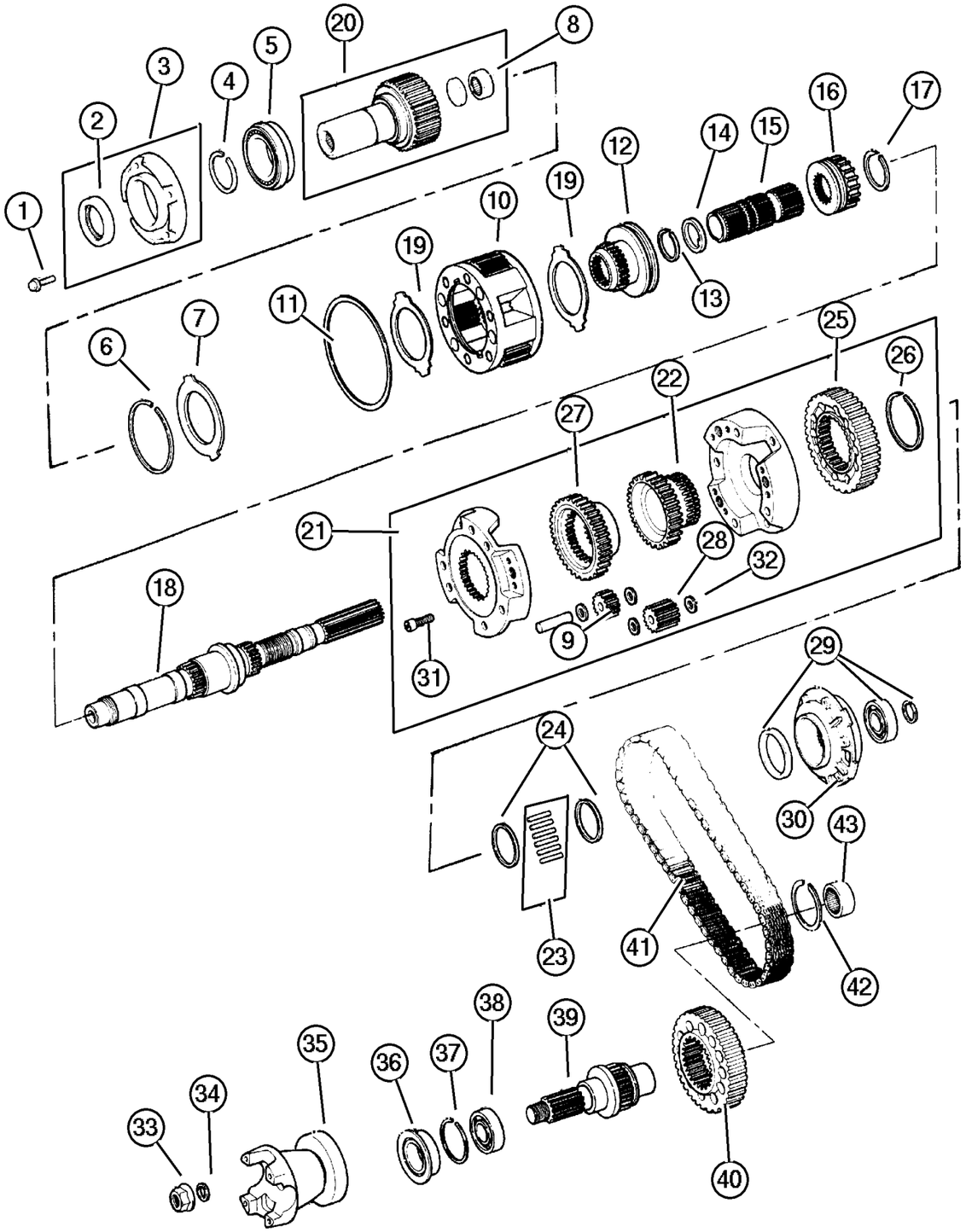

ITEM	PART NUMBER	QTY	LINE	SERIES	BODY	ENGINE	TRANS	TRIM	DESCRIPTION
	8350 4170	3	J, U						Thru 9/9/02
		1	J, U			ED0, EK0			From 9/10/02
		1	J, U			EN0			From 9/10/02
10									PLANETARY, Transfer Case
	4796 903AB	1	J, U						Thru 9/9/02
		1	J, U			ED0, EK0			From 9/10/02
		1	J, U			EN0			From 9/10/02
11									SNAP RING, Annulus Gear
	4219 065	1	J, U						Thru 9/9/02
		1	J, U			ED0, EK0			From 9/10/02
		1	J, U			EN0			From 9/10/02
12									SLEEVE, Shift Range
	5003 746AA	1	J, U						Thru 9/9/02
		1	J, U			ED0, EK0			From 9/10/02
		1	J, U			EN0			From 9/10/02
13									SNAP RING
	8350 3540	1	J, U						Thru 9/9/02
		1	J, U			ED0, EK0			From 9/10/02
		1	J, U			EN0			From 9/10/02
14									WASHER, Intermediate Sleeve
	8350 3539	1	J, U						Thru 9/9/02
		1	J, U			ED0, EK0			From 9/10/02
		1	J, U			EN0			From 9/10/02
15									SHAFT, Intermediate
	4798 277	1	J, U						Thru 9/9/02
		1	J, U			ED0, EK0			From 9/10/02
		1	J, U			EN0			From 9/10/02
16									SLEEVE, Mode Synchronizer
	8350 3542	1	J, U						Thru 9/9/02
		1	J, U			ED0, EK0			From 9/10/02
		1	J, U			EN0			From 9/10/02
17									SNAP RING
	8350 3537	1	J, U						Thru 9/9/02

JEEP LIBERTY (KJ)

SERIES	LINE	BODY	ENGINE	TRANSMISSION
P = Limited	J = LHD (4WD)	74 = 4 Dr. (104.3 WB)	ED1, ED0 = 2.4L Power Tech	DDK = 5 Speed HDManual
H = Sport	U = RHD (4WD)		EKG, EK0 = 3.7L Power Tech	DDD = 5 Speed HD Manual
M = Renegade	T = LHD (2WD)		ENJ = 2.5L 4Cyl Turbo Diesel	DG4,DGQ = Multi-Speed Auto
			ENR = 2.8L 4Cyl Turbo Diesel	DG6 = 4 Speed Auto Transm
			EN0 = 4Cyl Turbo Diesel	DG0 = All Automatic Transm
				DBB = All Manual Transm

AR = Use as required - = Non illustrated part # = New this model year **June 3, 2003**

« RETURN TO GROUP INDEX

Gear Train Select Trac [DHP]
Figure 242-410

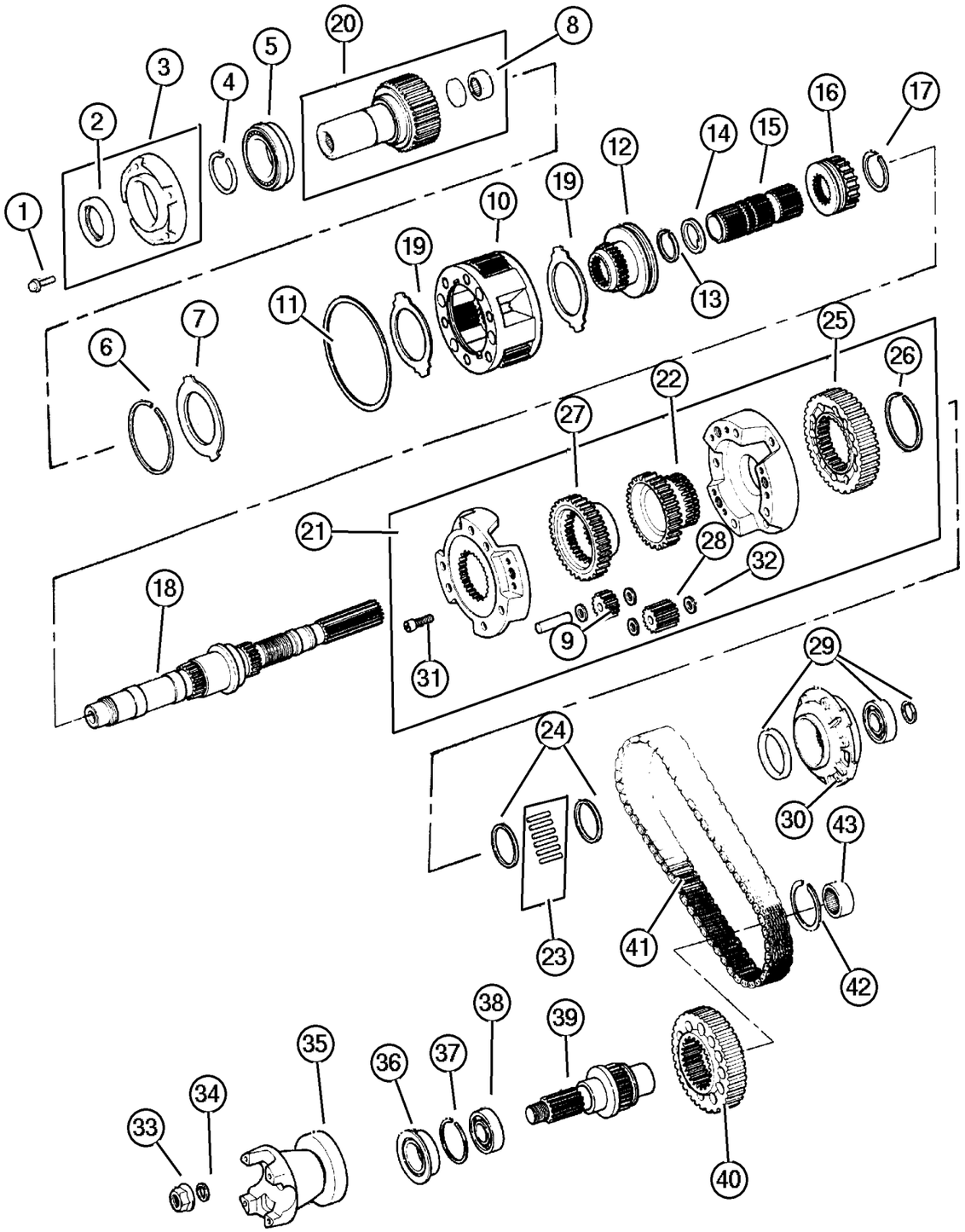

ITEM	PART NUMBER	QTY	LINE	SERIES	BODY	ENGINE	TRANS	TRIM	DESCRIPTION
		1	J, U			ED0,			From 9/10/02
						EK0			
		1	J, U			EN0			From 9/10/02
18									MAINSHAFT, Transfer Case
	5072 299AA	1	J, U						Thru 9/9/02
		1	J, U			ED0,			From 9/10/02
						EK0			
		1	J, U			EN0			From 9/10/02
19									THRUST WASHER, Planetary Carrier
	4338 908	2	J, U						Thru 9/9/02
		2	J, U			ED0,			From 9/10/02
						EK0			
		2	J, U			EN0			From 9/10/02
20									GEAR, Input
	5072 298AA	1	J, U						Thru 9/9/02
		1	J, U			ED0,			From 9/10/02
						EK0			
		1	J, U			EN0			From 9/10/02
21									DIFFERENTIAL, Transfer Case
	5072 300AA	1	J, U						Thru 9/9/02
		1	J, U			ED0,			From 9/10/02
						EK0			
		1	J, U			EN0			From 9/10/02
22									SPROCKET, Transfer Case
	5072 301AA	1	J, U						Thru 9/9/02
		1	J, U			ED0,			From 9/10/02
						EK0			
		1	J, U			EN0			From 9/10/02
23									NEEDLE BEARING, Roller Cage, None
	5066 996AA	1	J, U						Thru 9/9/02
		1	J, U			ED0,			From 9/10/02
						EK0			
		1	J, U			EN0			From 9/10/02
24									THRUST WASHER, Planetary Carrier
	4338 908	2	J, U						Thru 9/9/02
		2	J, U			ED0,			From 9/10/02
						EK0			
		2	J, U			EN0			From 9/10/02
25									SPROCKET, Differential

JEEP LIBERTY (KJ)

SERIES	LINE	BODY	ENGINE	TRANSMISSION
P = Limited	J = LHD (4WD)	74 = 4 Dr. (104.3 WB)	ED1, ED0 = 2.4L Power Tech	DDK = 5 Speed HDManual
H = Sport	U = RHD (4WD)		EKG, EK0 = 3.7L Power Tech	DDD = 5 Speed HD Manual
M = Renegade	T = LHD (2WD)		ENJ = 2.5L 4Cyl Turbo Diesel	DG4,DGQ = Multi-Speed Auto
			ENR = 2.8L 4Cyl Turbo Diesel	DG6 = 4 Speed Auto Transm
			EN0 = 4Cyl Turbo Diesel	DG0 = All Automatic Transm
				DBB = All Manual Transm

AR = Use as required - = Non illustrated part # = New this model year **June 3, 2003**

« RETURN TO GROUP INDEX

« »

Gear Train Select Trac [DHP]
Figure 242-410

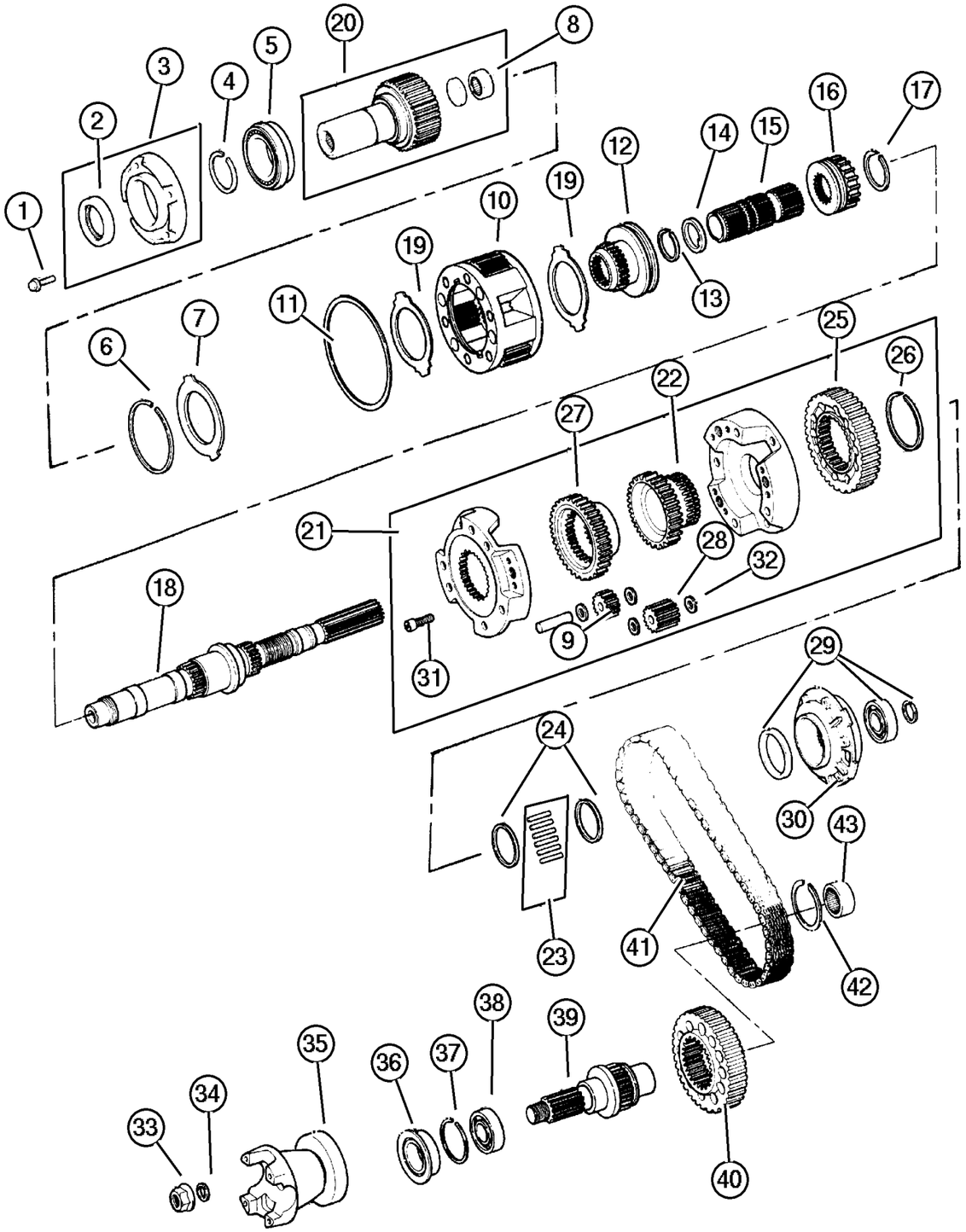

ITEM	PART NUMBER	QTY	LINE	SERIES	BODY	ENGINE	TRANS	TRIM	DESCRIPTION
	8350 3536	1	J, U						Thru 9/9/02
		1	J, U			ED0, EK0			From 9/10/02
		1	J, U			EN0			From 9/10/02
26	8350 3532	1	J, U						SNAP RING
27									GEAR, Differential Drive
	5003 450AA	1	J, U						Thru 9/9/02
		1	J, U			ED0, EK0			From 9/10/02
		1	J, U			EN0			From 9/10/02
28									GEAR, Planetary
	8350 4169	3	J, U						Thru 9/9/02
		3	J, U			ED0, EK0			From 9/10/02
		3	J, U			EN0			From 9/10/02
29									SEAL, Main Shaft, (NOT REQUIRED)
30									PUMP, Transfer Case Oil
	4883 596AA	1	J, U						Thru 9/9/02
		1	J, U			ED0, EK0			From 9/10/02
		1	J, U			EN0			From 9/10/02
31									SCREW
	3820 898	3	J, U						Thru 9/9/02
		1	J, U			ED0, EK0			From 9/10/02
		1	J, U			EN0			From 9/10/02
32									WASHER, Differential Gear
	8350 4168	12	J, U						Thru 9/9/02
		12	J, U			ED0, EK0			From 9/10/02
		12	J, U			EN0			From 9/10/02
33									NUT, Transfer Case Yoke
	4167 924	1	J, U						Thru 9/9/02
		1	J, U			ED0, EK0			From 9/10/02
		1	J, U			EN0			From 9/10/02
34									WASHER, Transfer Case Yoke
	4210 973	1	J, U						Thru 9/9/02
		1	J, U			ED0, EK0			From 9/10/02

JEEP LIBERTY (KJ)

SERIES	LINE	BODY	ENGINE	TRANSMISSION
P = Limited	J = LHD (4WD)	74 = 4 Dr. (104.3 WB)	ED1, ED0 = 2.4L Power Tech	DDK = 5 Speed HDManual
H = Sport	U = RHD (4WD)		EKG, EK0 = 3.7L Power Tech	DDD = 5 Speed HD Manual
M = Renegade	T = LHD (2WD)		ENJ = 2.5L 4Cyl Turbo Diesel	DG4,DGQ = Multi-Speed Auto
			ENR = 2.8L 4Cyl Turbo Diesel	DG6 = 4 Speed Auto Transm
			EN0 = 4Cyl Turbo Diesel	DG0 = All Automatic Transm
				DBB = All Manual Transm

AR = Use as required - = Non illustrated part # = New this model year

June 3, 2003

« RETURN TO GROUP INDEX

« »

Gear Train Select Trac [DHP]
Figure 242-410

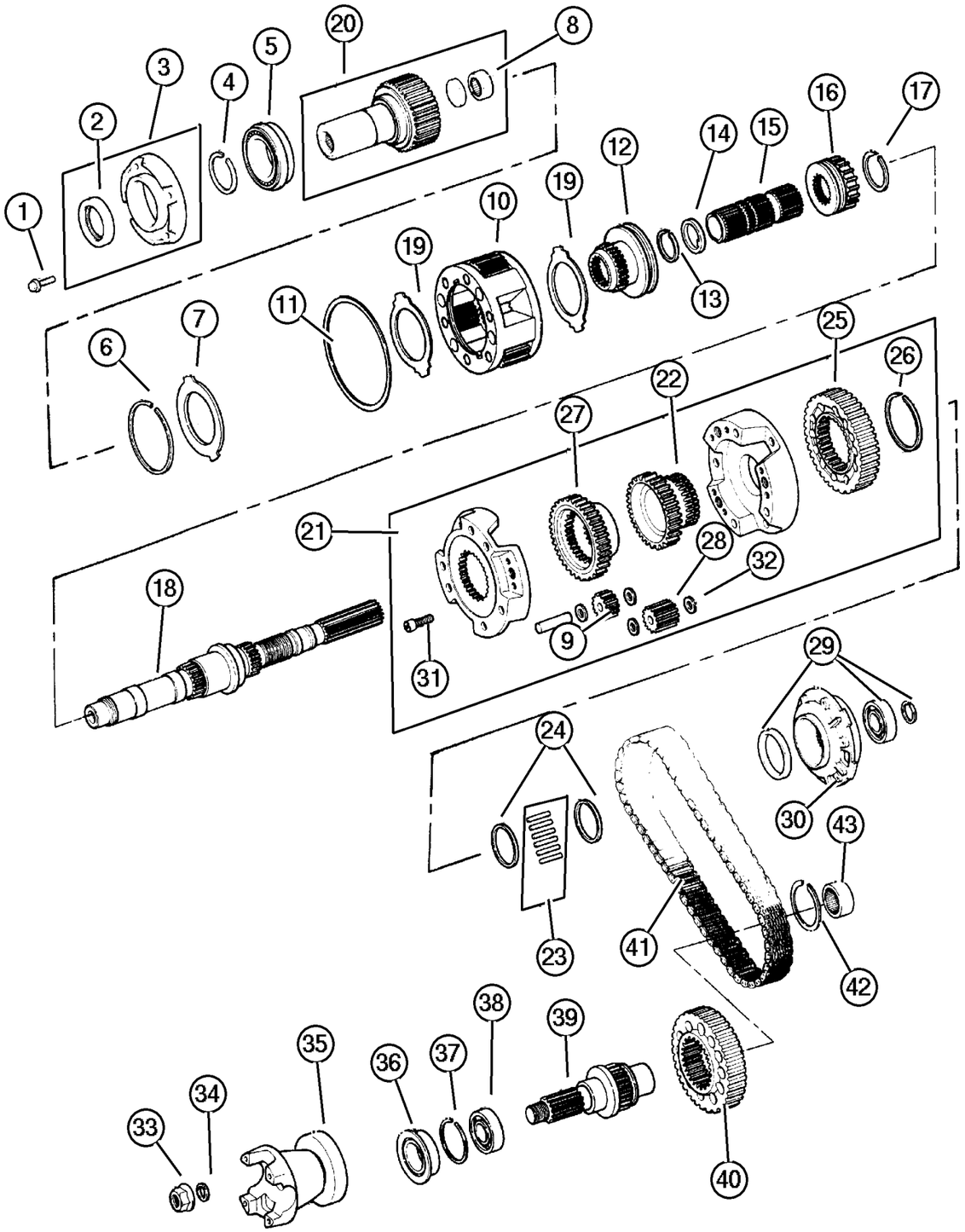

ITEM	PART NUMBER	QTY	LINE	SERIES	BODY	ENGINE	TRANS	TRIM	DESCRIPTION
		1	J, U			EN0			From 9/10/02
35									FLANGE, Driveshaft Yoke
	5066 927AA	1	J, U			ED0,			From 9/10/02
						EK0			
		1	J, U						Thru 9/9/02
	#5103 223AA	1	J, U			EN0			From 9/10/02
36									SEAL, Output Shaft
	4798 125	1	J, U						Thru 9/9/02
		1	J, U			ED0,			From 9/10/02
						EK0			
		1	J, U			EN0			From 9/10/02
37									SNAP RING
	0893 31A	1	J, U						Thru 9/9/02
		1	J, U			ED0,			From 9/10/02
						EK0			
		1	J, U			EN0			From 9/10/02
38									BEARING, Output Shaft
	2466 224	1	J, U						Thru 9/9/02
		1	J, U			ED0,			From 9/10/02
						EK0			
		1	J, U			EN0			From 9/10/02
39									OUTPUT SHAFT, Transfer Case
	5012 336AA	1	J, U						Thru 9/9/02
		1	J, U			ED0,			From 9/10/02
						EK0			
		1	J, U			EN0			From 9/10/02
40									SPROCKET, Transfer Case
	5072 302AA	1	J, U						Thru 9/9/02
		1	J, U			ED0,			From 9/10/02
						EK0			
		1	J, U			EN0			From 9/10/02
41									CHAIN, Transfer Case
	5012 322AB	1	J, U						Thru 9/9/02
		1	J, U			ED0,			From 9/10/02
						EK0			
		1	J, U			EN0			From 9/10/02
42									SNAP RING, Bearing
	4167 991	1	J, U						
		1	J, U						Thru 9/9/02
		1	J, U			ED0,			From 9/10/02
						EK0			

JEEP LIBERTY (KJ)

SERIES	LINE	BODY	ENGINE	TRANSMISSION
P = Limited	J = LHD (4WD)	74 = 4 Dr. (104.3 WB)	ED1, ED0 = 2.4L Power Tech	DDK = 5 Speed HDManual
H = Sport	U = RHD (4WD)		EKG, EK0 = 3.7L Power Tech	DDD = 5 Speed HD Manual
M = Renegade	T = LHD (2WD)		ENJ = 2.5L 4Cyl Turbo Diesel	DG4,DGQ = Multi-Speed Auto
			ENR = 2.8L 4Cyl Turbo Diesel	DG6 = 4 Speed Auto Transm
			EN0 = 4Cyl Turbo Diesel	DG0 = All Automatic Transm
				DBB = All Manual Transm

AR = Use as required - = Non illustrated part # = New this model year **June 3, 2003**

« RETURN TO GROUP INDEX

Gear Train Select Trac [DHP]
Figure 242-410

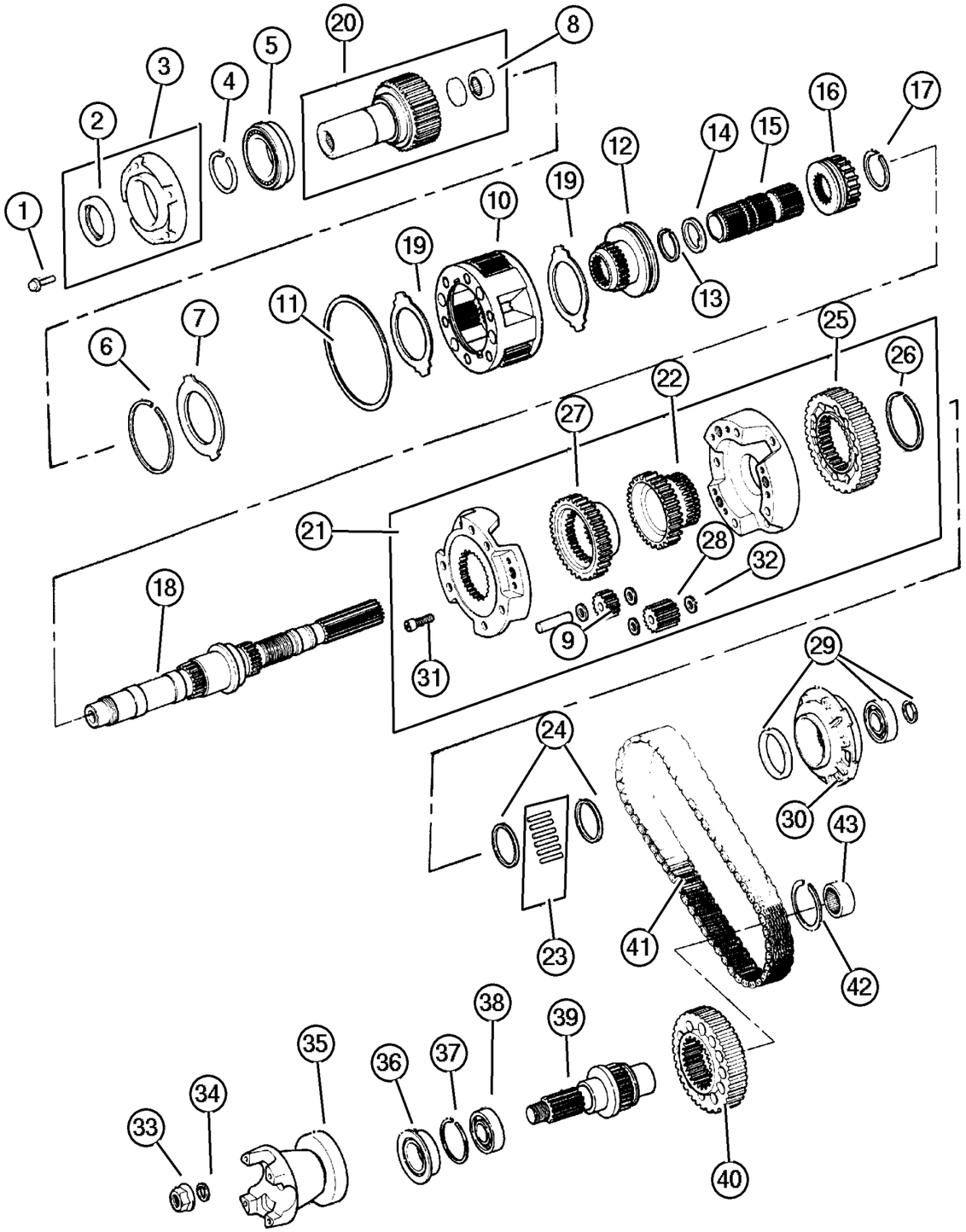

ITEM	PART NUMBER	QTY	LINE	SERIES	BODY	ENGINE	TRANS	TRIM	DESCRIPTION
		1	J, U			EN0			From 9/10/02
43									BEARING, Output Shaft
	2466 224	1	J, U						Thru 9/9/02
		1	J, U			ED0, EK0			From 9/10/02
		1	J, U			EN0			From 9/10/02

JEEP LIBERTY (KJ)

SERIES	LINE	BODY	ENGINE	TRANSMISSION
P = Limited	J = LHD (4WD)	74 = 4 Dr. (104.3 WB)	ED1, ED0 = 2.4L Power Tech	DDK = 5 Speed HDManual
H = Sport	U = RHD (4WD)		EKG, EK0 = 3.7L Power Tech	DDD = 5 Speed HD Manual
M = Renegade	T = LHD (2WD)		ENJ = 2.5L 4Cyl Turbo Diesel	DG4,DGQ = Multi-Speed Auto
			ENR = 2.8L 4Cyl Turbo Diesel	DG6 = 4 Speed Auto Transm
			EN0 = 4Cyl Turbo Diesel	DG0 = All Automatic Transm
				DBB = All Manual Transm

AR = Use as required - = Non illustrated part # = New this model year

June 3, 2003

« RETURN TO GROUP INDEX

Forks and Rails Select Trac [DHP]
Figure 242-910

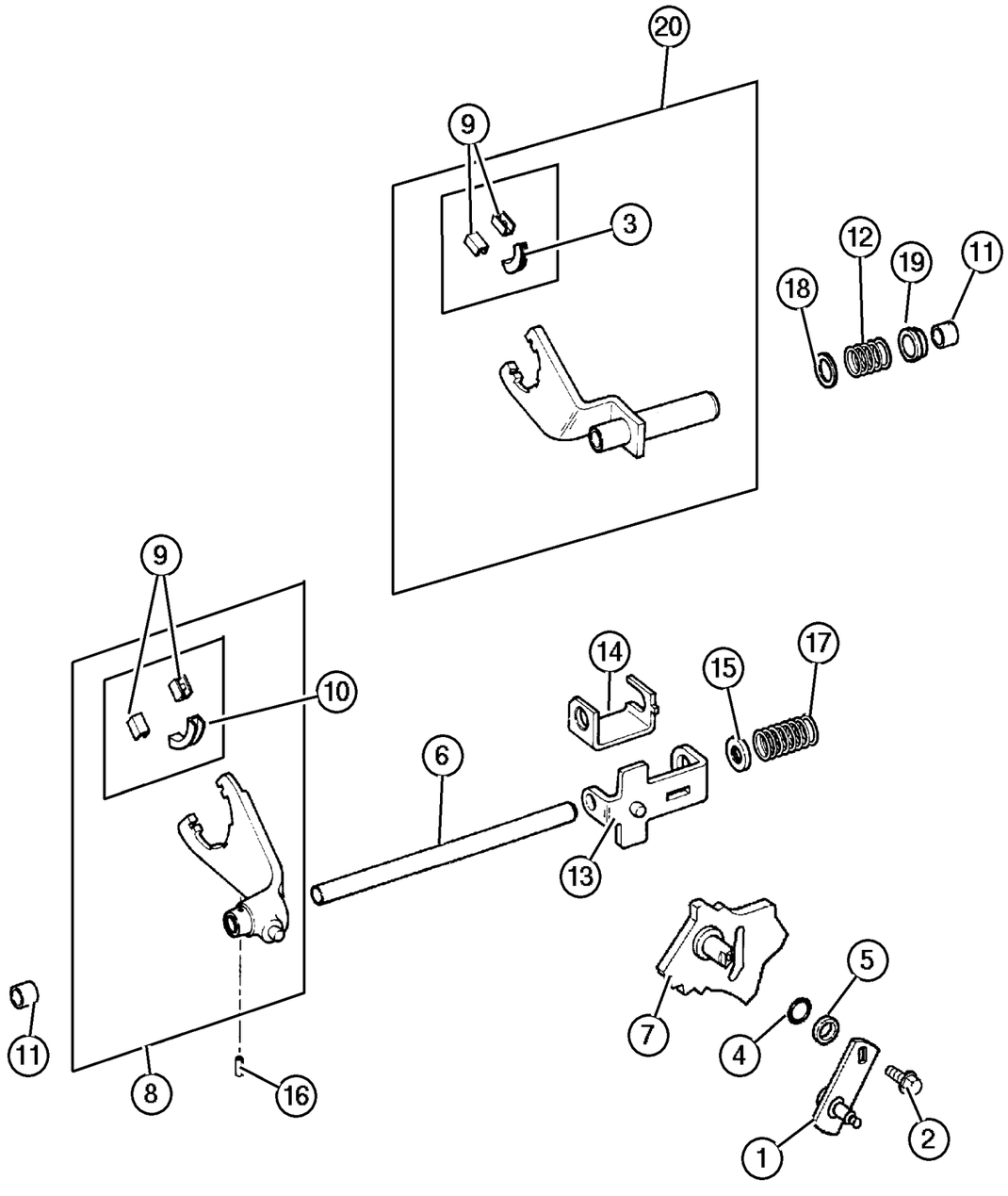

ITEM	PART NUMBER	QTY	LINE	SERIES	BODY	ENGINE	TRANS	TRIM	DESCRIPTION
1									LEVER, Transfer Case
	5072 316AA	1	J, U						Thru 9/9/02
		1	J, U			ED0, EK0			From 9/10/02
		1	J, U			EN0			From 9/10/02
2									BOLT, Hex Head
	5014 048AA	1	J, U			EN0			From 9/10/02
		1	J, U			ED0, EK0			From 9/10/02
		1	J, U						Thru 9/9/02
3									PAD, Shift Fork
	4338 376	1	J, U			EN0			From 9/10/02
		1	J, U			ED0, EK0			From 9/10/02
		1	J, U						Thru 9/9/02
4									SEAL, Sector Shaft
	5014 046AA	1	J, U						Thru 9/9/02
		1	J, U			ED0, EK0			From 9/10/02
		1	J, U			EN0			From 9/10/02
5									BEARING, Shift Lever Linkage
	5003 442AA	1	J, U						Thru 9/9/02
		1	J, U			ED0, EK0			From 9/10/02
		1	J, U			EN0			From 9/10/02
6									RAIL, Transfer Case
	8350 4469	1	J, U						Thru 9/9/02
		1	J, U			ED0, EK0			From 9/10/02
		1	J, U			EN0			From 9/10/02
7									SECTOR, Transfer Case
	5072 569AA	1	J, U			EN0			From 9/10/02
		1	J, U			ED0, EK0			From 9/10/02
		1	J, U						Thru 9/9/02
8									FORK, Range
	5003 459AA	1	J, U			EN0			From 9/10/02
		1	J, U			ED0, EK0			From 9/10/02
		1	J, U						Thru 9/9/02
9									PAD, Shift Fork

JEEP LIBERTY (KJ)

SERIES	LINE	BODY	ENGINE	TRANSMISSION
P = Limited	J = LHD (4WD)	74 = 4 Dr. (104.3 WB)	ED1, ED0 = 2.4L Power Tech	DDK = 5 Speed HDManual
H = Sport	U = RHD (4WD)		EKG, EK0 = 3.7L Power Tech	DDD = 5 Speed HD Manual
M = Renegade	T = LHD (2WD)		ENJ = 2.5L 4Cyl Turbo Diesel	DG4,DGQ = Multi-Speed Auto
			ENR = 2.8L 4Cyl Turbo Diesel	DG6 = 4 Speed Auto Transm
			EN0 = 4Cyl Turbo Diesel	DG0 = All Automatic Transm
				DBB = All Manual Transm

AR = Use as required - = Non illustrated part # = New this model year

June 3, 2003

« RETURN TO GROUP INDEX »

Forks and Rails Select Trac [DHP]
Figure 242-910

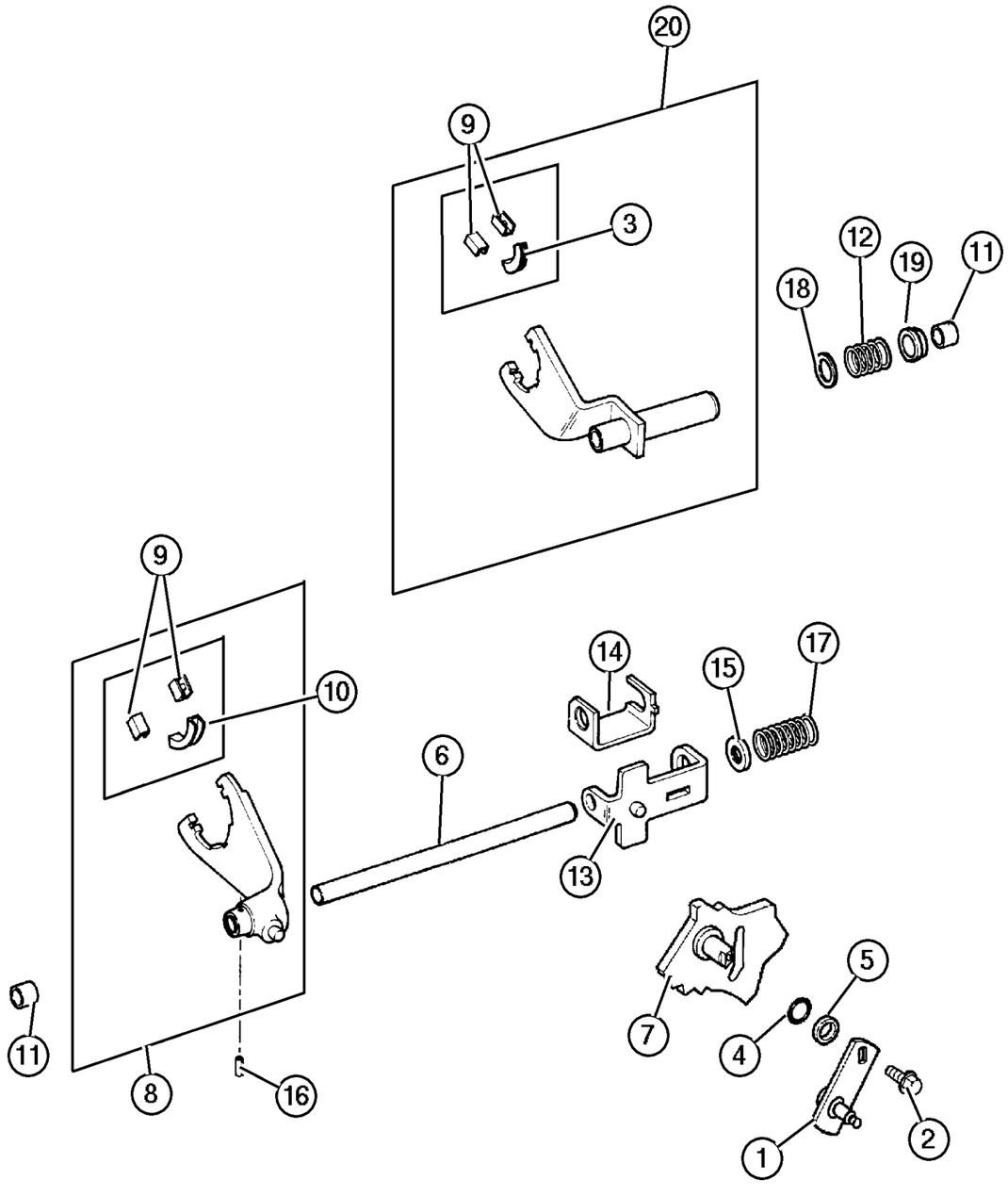

ITEM	PART NUMBER	QTY	LINE	SERIES	BODY	ENGINE	TRANS	TRIM	DESCRIPTION
	4167 969	2	J, U						Thru 9/9/02
		2	J, U			ED0, EK0			From 9/10/02
		2	J, U			EN0			From 9/10/02
10									PAD, Shift Fork
	4167 970	1	J, U						Thru 9/9/02
		1	J, U			ED0, EK0			From 9/10/02
		1	J, U			EN0			From 9/10/02
11	J813 4291	2	J, U						BUSHING, Shift Fork
12									SPRING, Mode Shift Fork
	8350 3513	1	J, U						Thru 9/9/02
		1	J, U			ED0, EK0			From 9/10/02
		1	J, U			EN0			From 9/10/02
13									BRACKET, Shift Mode
	8350 3510	1	J, U						Thru 9/9/02
		1	J, U			ED0, EK0			From 9/10/02
		1	J, U			EN0			From 9/10/02
14									BRACKET, Shift Mode
	8350 3511	1	J, U						Thru 9/9/02
		1	J, U			ED0, EK0			From 9/10/02
		1	J, U			EN0			From 9/10/02
15									CUP, Shift Fork Spring
	8350 3515	1	J, U						Thru 9/9/02
		1	J, U			ED0, EK0			From 9/10/02
		1	J, U			EN0			From 9/10/02
16									PIN, Shift Fork
	1664 355	1	J, U						Thru 9/9/02
		1	J, U			ED0, EK0			From 9/10/02
		1	J, U			EN0			From 9/10/02
17									SPRING, Mode Shift Fork
	8350 3516	1	J, U						Thru 9/9/02
		1	J, U			ED0, EK0			From 9/10/02
		1	J, U			EN0			From 9/10/02
18									WASHER, Flat

JEEP LIBERTY (KJ)

SERIES	LINE	BODY	ENGINE	TRANSMISSION
P = Limited	J = LHD (4WD)	74 = 4 Dr. (104.3 WB)	ED1, ED0 = 2.4L Power Tech	DDK = 5 Speed HDManual
H = Sport	U = RHD (4WD)		EKG, EK0 = 3.7L Power Tech	DDD = 5 Speed HD Manual
M = Renegade	T = LHD (2WD)		ENJ = 2.5L 4Cyl Turbo Diesel	DG4,DGQ = Multi-Speed Auto
			ENR = 2.8L 4Cyl Turbo Diesel	DG6 = 4 Speed Auto Transm
			EN0 = 4Cyl Turbo Diesel	DG0 = All Automatic Transm
				DBB = All Manual Transm

AR = Use as required - = Non illustrated part # = New this model year

June 3, 2003

« RETURN TO GROUP INDEX

Forks and Rails Select Trac [DHP]
Figure 242-910

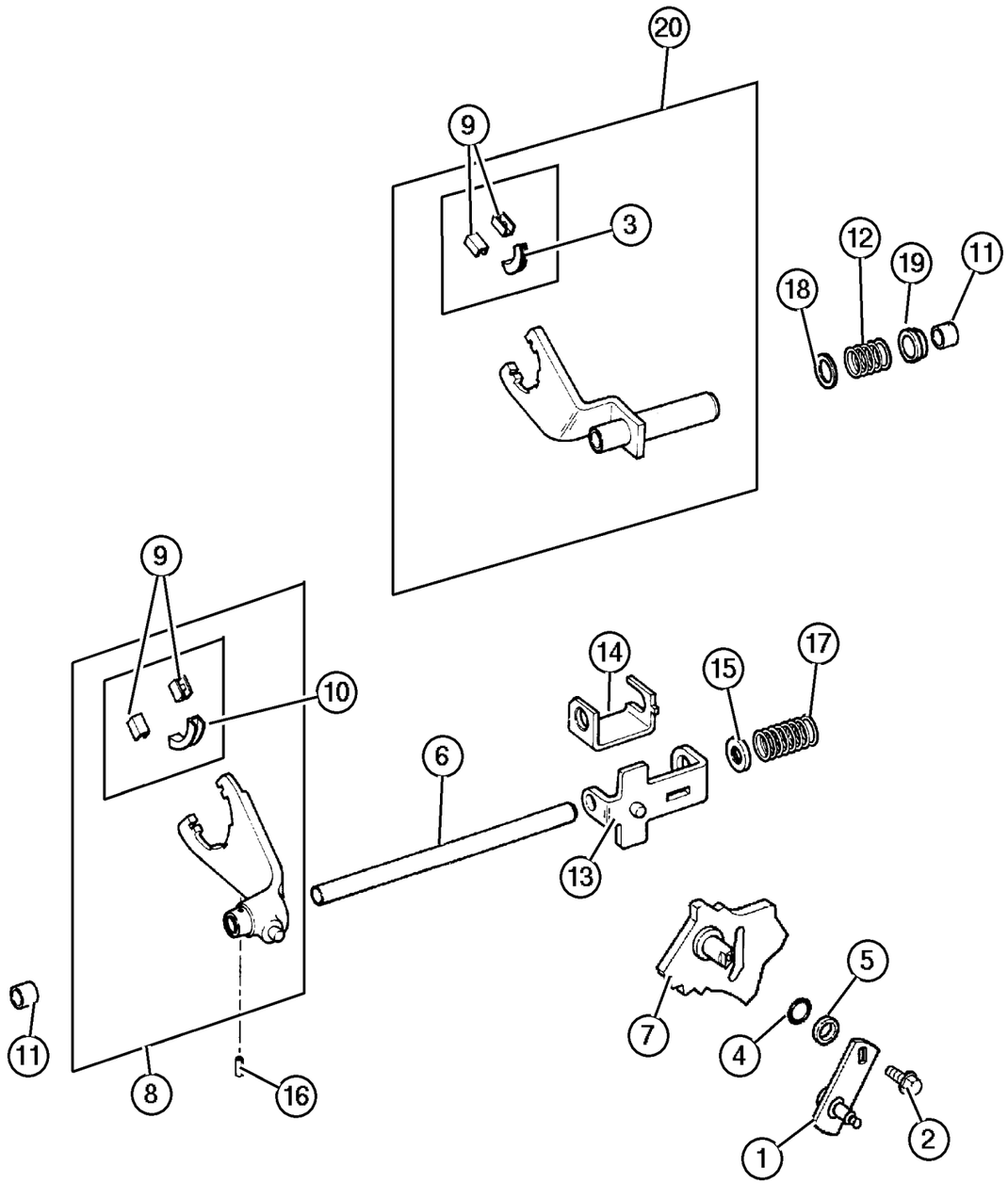

ITEM	PART NUMBER	QTY	LINE	SERIES	BODY	ENGINE	TRANS	TRIM	DESCRIPTION
	8350 3512	1	J, U						Thru 9/902
		1	J, U			ED0, EK0			From 9/10/02
		1	J, U			EN0			From 9/10/02
19									BUSHING, Shift Rail
	8350 3514	1	J, U						Thru 9/902
		1	J, U			ED0, EK0			From 9/10/02
		1	J, U			EN0			From 9/10/02
20									FORK, Transfer Case Mode Shift
	#4638 950AB	1	J, U						Thru 9/902
		1	J, U			ED0, EK0			From 9/10/02
		1	J, U			EN0			From 9/10/02
-21									SNAP RING
	5072 304AA	1	J, U						Thru 9/9/02
		1	J, U			ED0, EK0			From 9/10/02
		1	J, U			EN0			From 9/10/02
-22									SNAP RING
	0893 31A	1	J, U						Thru 9/9/02
		1	J, U			ED0, EK0			From 9/10/02
		1	J, U			EN0			From 9/10/02

JEEP LIBERTY (KJ)

SERIES	LINE	BODY	ENGINE	TRANSMISSION
P = Limited	J = LHD (4WD)	74 = 4 Dr. (104.3 WB)	ED1, ED0 = 2.4L Power Tech	DDK = 5 Speed HDManual
H = Sport	U = RHD (4WD)		EKG, EK0 = 3.7L Power Tech	DDD = 5 Speed HD Manual
M = Renegade	T = LHD (2WD)		ENJ = 2.5L 4Cyl Turbo Diesel	DG4,DGQ = Multi-Speed Auto
			ENR = 2.8L 4Cyl Turbo Diesel	DG6 = 4 Speed Auto Transm
			EN0 = 4Cyl Turbo Diesel	DG0 = All Automatic Transm
				DBB = All Manual Transm

AR = Use as required - = Non illustrated part # = New this model year

June 3, 2003

« RETURN TO GROUP INDEX

Gearshift Controls
Figure 242-1210

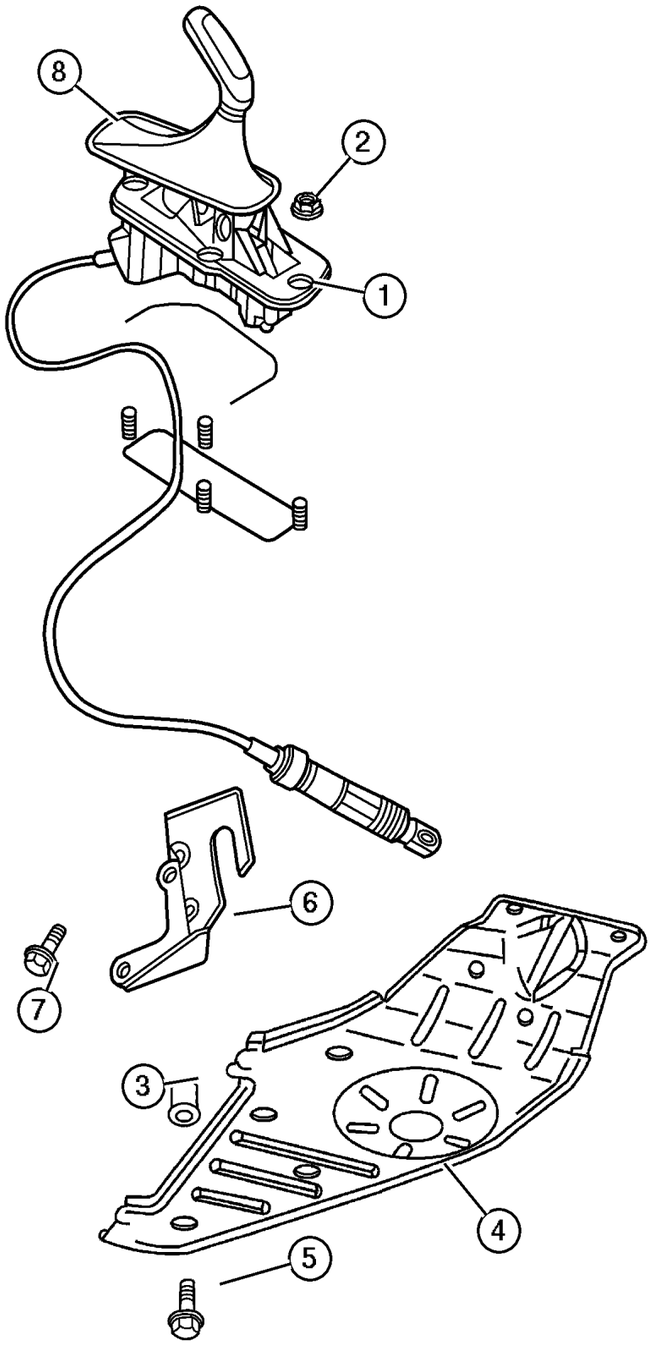

ITEM	PART NUMBER	QTY	LINE	SERIES	BODY	ENGINE	TRANS	TRIM	DESCRIPTION
NOTE; Sales Codes									
[DBB] = All Manual Transmissions									
[DG0]= All Automatic Transmissions									
[DG4]= Multi-Speed Automatic Transmission [45RFE]									
1									SHIFTER, Transfer Case
	52104 310AD	1	J						
	52104 311AD	1	U						
2	3420 1358	4							NUT AND WASHER, Hex Nut-Sealing Washer, M6 x 1.00
3	6506 644AA	4	J, U						RIVET
4									PLATE, Transfer Case Skid
	52059 223AA	1	J, U				DGQ, DG4		
	#52128 649AA	1	J, U				DG6		
5	6506 027AA	4	J, U						SCREW, Hex Head
6									BRACKET, Shifter
	52104 390AC	1	J, U				DBB		
	52104 389AB	1	J, U				DGQ, DG4		
	#52109 747AB	1	J, U				DG6		
7	6101 752	3	J, U				DG0		SCREW AND WASHER, Hex Head, M10x1.5x28
8	52109 709AB	1	J, U						BOOT, Gearshift

JEEP LIBERTY (KJ)

SERIES	LINE	BODY	ENGINE	TRANSMISSION
P = Limited	J = LHD (4WD)	74 = 4 Dr. (104.3 WB)	ED1, ED0 = 2.4L Power Tech	DDK = 5 Speed HDManual
H = Sport	U = RHD (4WD)		EKG, EK0 = 3.7L Power Tech	DDD = 5 Speed HD Manual
M = Renegade	T = LHD (2WD)		ENJ = 2.5L 4Cyl Turbo Diesel	DG4,DGQ = Multi-Speed Auto
			ENR = 2.8L 4Cyl Turbo Diesel	DG6 = 4 Speed Auto Transm
			EN0 = 4Cyl Turbo Diesel	DG0 = All Automatic Transm
				DBB = All Manual Transm

AR = Use as required - = Non illustrated part # = New this model year

June 3, 2003

« RETURN TO GROUP INDEX

Group – 022

Wheels, Covers and Jacks

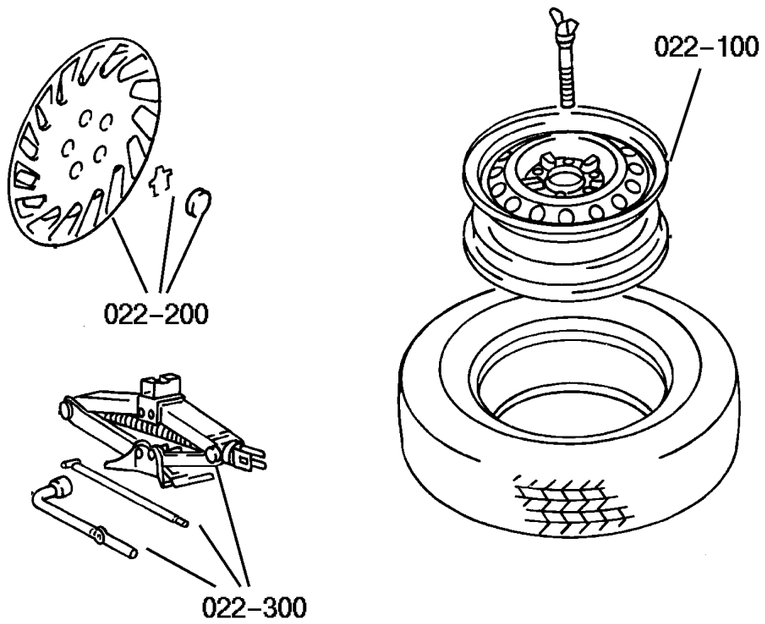

022–100 Wheels and Hardware	022–200 Wheel Covers and Center Caps	022–300 Jack Stowage	022–400 Spare Tire Stowage
	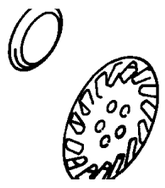	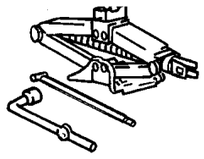	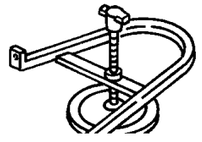

GROUP 22 - Wheels, Covers and Jacks

Illustration Title	Group-Fig. No.
Wheels and Hardware	
Wheels and Hardware	Fig. 022-110
Wheel Covers and Center Caps	
Wheel Caps	Fig. 022-210
Jack Stowage	
Jack and Hardware	Fig. 022-310
Spare Tire Stowage	
Spare Wheel	Fig. 022-410
Spare Wheel, Export	Fig. 022-420

Wheels and Hardware
Figure 022-110

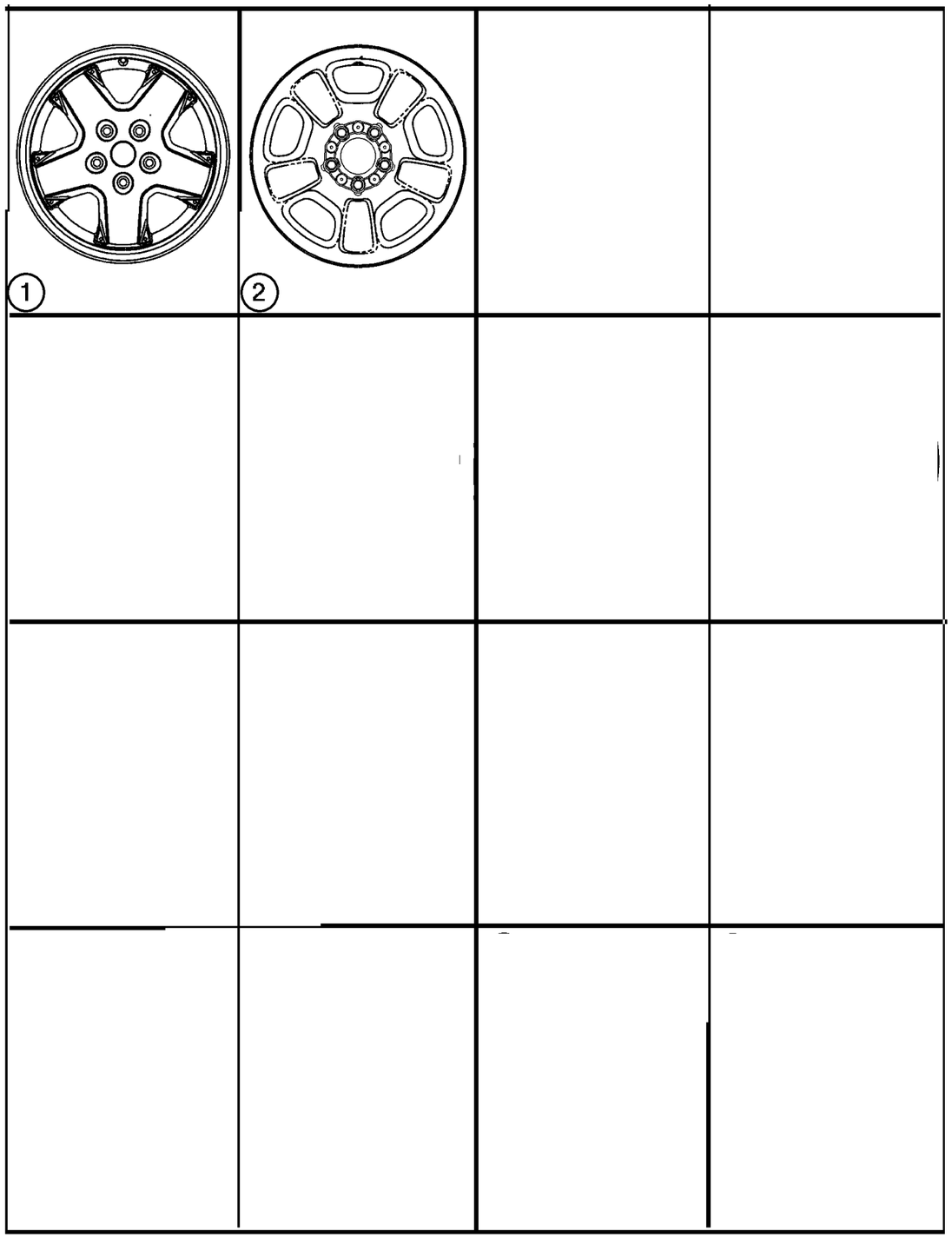

ITEM	PART NUMBER	QTY	LINE	SERIES	BODY	ENGINE	TRANS	TRIM	DESCRIPTION
Note; Sales Codes									
[WND]= 16x7 Cast Aluminum									
[WLD,WLC]= 16x7 Lux Aluminum									
[WGR]= 17x7.5 Cast Aluminum									
[WGQ]= 17x7.5 Aluminum									
1									WHEEL, Aluminum
	5GL66 PAKAC	4							[WND]
	5GL66 AFMAC	1							[WN8]
	5GL66 ZDRAC	1							[WD5]
	5GL67 PAKAB	4							[WLD]
	5HW90 AFMAA	4							[WGR]
	5HW90 ZDRAA	4							[WGQ]
	#5HW90 ZDRAB	4							[WFM]
	#52128 674AA	4							[WGW]
	#5GK75 ZDRAB	1							[WDN]
2	5GL65 S4AAB	4							WHEEL, Steel, [WLC]
-3	6036 310AA	20							NUT, Wheel, .50x20
-4	2073 355	4							STEM, Wheel Valve

JEEP LIBERTY (KJ)

SERIES	LINE	BODY	ENGINE	TRANSMISSION
P = Limited	J = LHD (4WD)	74 = 4 Dr. (104.3 WB)	ED1, ED0 = 2.4L Power Tech	DDK = 5 Speed HDManual
H = Sport	U = RHD (4WD)		EKG, EK0 = 3.7L Power Tech	DDD = 5 Speed HD Manual
M = Renegade	T = LHD (2WD)		ENJ = 2.5L 4Cyl Turbo Diesel	DG4,DGQ = Multi-Speed Auto
			ENR = 2.8L 4Cyl Turbo Diesel	DG6 = 4 Speed Auto Transm
			EN0 = 4Cyl Turbo Diesel	DG0 = All Automatic Transm
				DBB = All Manual Transm

Wheel Caps
Figure 022-210

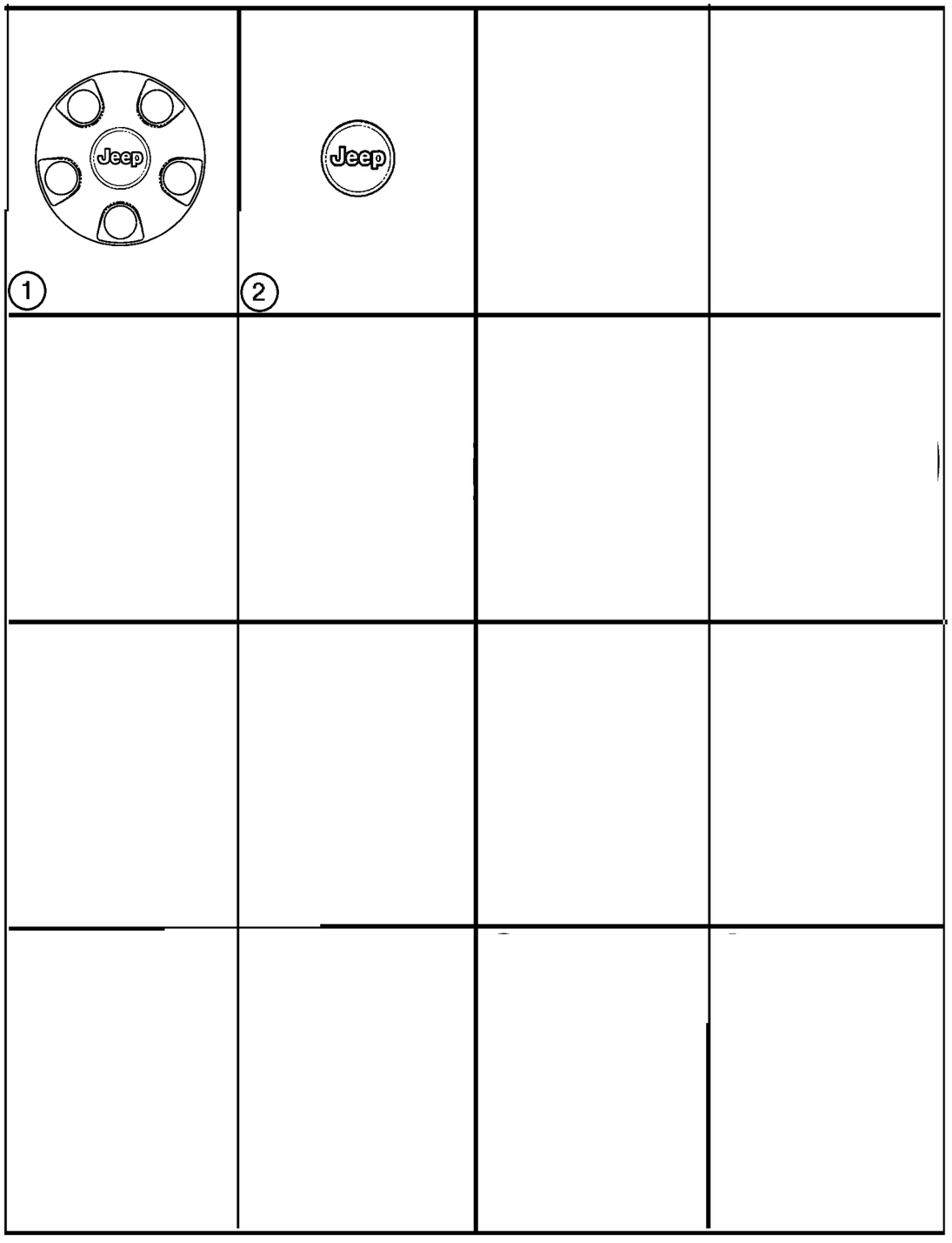

ITEM	PART NUMBER	QTY	LINE	SERIES	BODY	ENGINE	TRANS	TRIM	DESCRIPTION
Note; Sales Codes									
[WLD,WLC]= 16x7 Lux Aluminum									
[WND]= 16x7 Cast Aluminum									
[WGR]= 17x7.5 Cast Aluminum									
[WGQ]= 17x7.5 Aluminum									
1									CAP, Wheel Center
	5GL69 S4AAA	4							[WLC]
	#52128 525AA	1							[WGW,WKB]
2	52059 522AA	4							CAP, Wheel Center, [WND,WGQ, WLD,WGR,WGN,WD5,WN8,WGR,]

JEEP LIBERTY (KJ)

SERIES	LINE	BODY	ENGINE	TRANSMISSION
P = Limited	J = LHD (4WD)	74 = 4 Dr. (104.3 WB)	ED1, ED0 = 2.4L Power Tech	DDK = 5 Speed HDManual
H = Sport	U = RHD (4WD)		EKG, EK0 = 3.7L Power Tech	DDD = 5 Speed HD Manual
M = Renegade	T = LHD (2WD)		ENJ = 2.5L 4Cyl Turbo Diesel	DG4,DGQ = Multi-Speed Auto
			ENR = 2.8L 4Cyl Turbo Diesel	DG6 = 4 Speed Auto Transm
			EN0 = 4Cyl Turbo Diesel	DG0 = All Automatic Transm
				DBB = All Manual Transm

AR = Use as required - = Non illustrated part # = New this model year **June 3, 2003**

« RETURN TO GROUP INDEX

Jack and Hardware
Figure 022-310

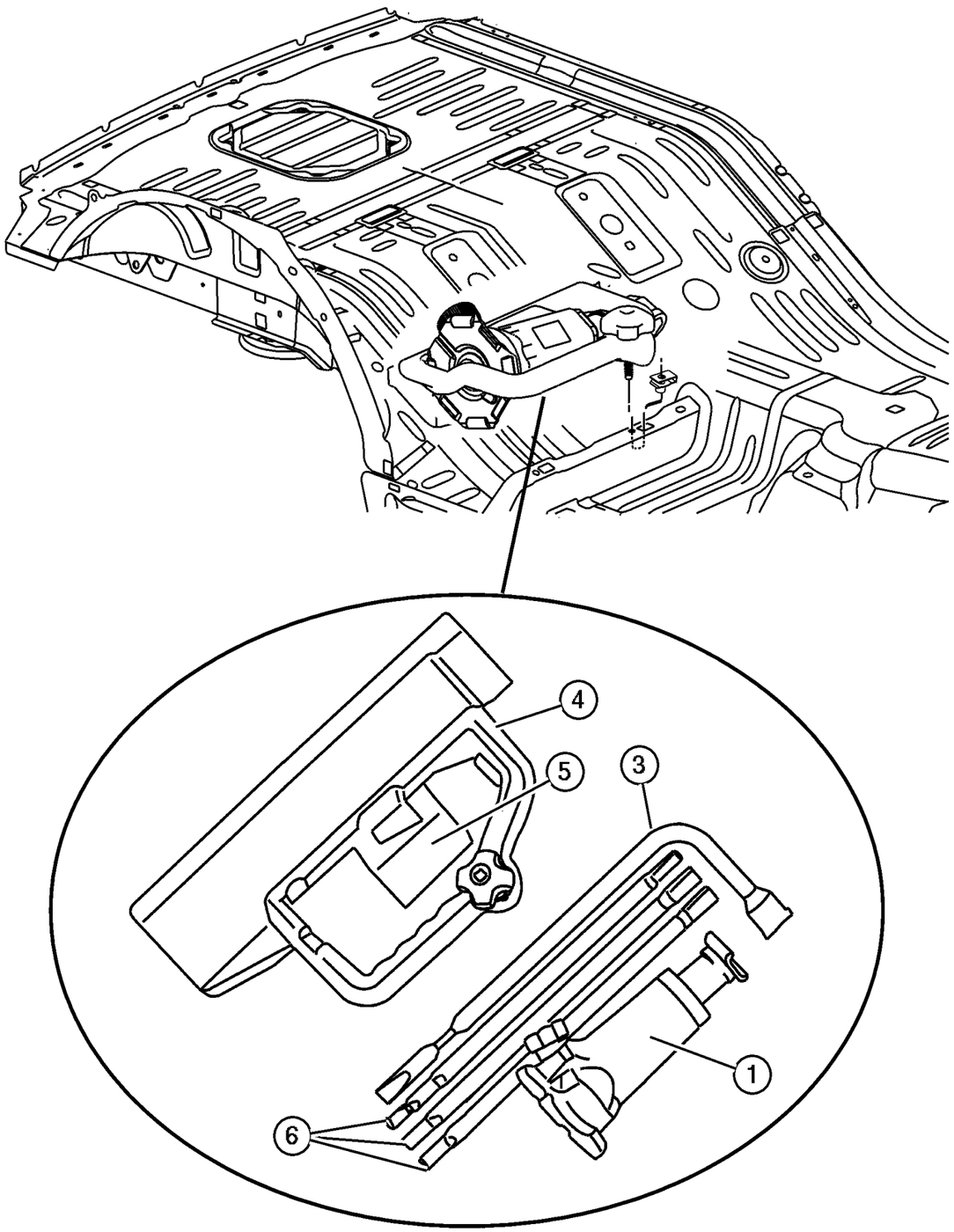

ITEM	PART NUMBER	QTY	LINE	SERIES	BODY	ENGINE	TRANS	TRIM	DESCRIPTION
1	5205 9104	1							JACK, Bottle Type
-2	5093 791AA	1							JACK ASSEMBLY, Screw Type
3	52059 478AA	1							WRENCH, Wheel Lug Nut
4									BRACKET AND LOCATOR, Jack Stowage
	52059 369AA	1							Bottle Type Jack
	#52128 755AB	1							Screw Type Jack
5	52059 412AB	1							LABEL, Jack Instructions
6									EXTENSION KIT, JACK HANDLE
	5019 980AA	1							Bottle Type Jack
	#5093 510AA	1							Screw Type Jack

JEEP LIBERTY (KJ)

SERIES	LINE	BODY	ENGINE	TRANSMISSION
P = Limited	J = LHD (4WD)	74 = 4 Dr. (104.3 WB)	ED1, ED0 = 2.4L Power Tech	DDK = 5 Speed HDManual
H = Sport	U = RHD (4WD)		EKG, EK0 = 3.7L Power Tech	DDD = 5 Speed HD Manual
M = Renegade	T = LHD (2WD)		ENJ = 2.5L 4Cyl Turbo Diesel	DG4,DGQ = Multi-Speed Auto
			ENR = 2.8L 4Cyl Turbo Diesel	DG6 = 4 Speed Auto Transm
			EN0 = 4Cyl Turbo Diesel	DG0 = All Automatic Transm
				DBB = All Manual Transm

AR = Use as required - = Non illustrated part # = New this model year **June 3, 2003**

« RETURN TO GROUP INDEX

Spare Wheel
Figure 022-410

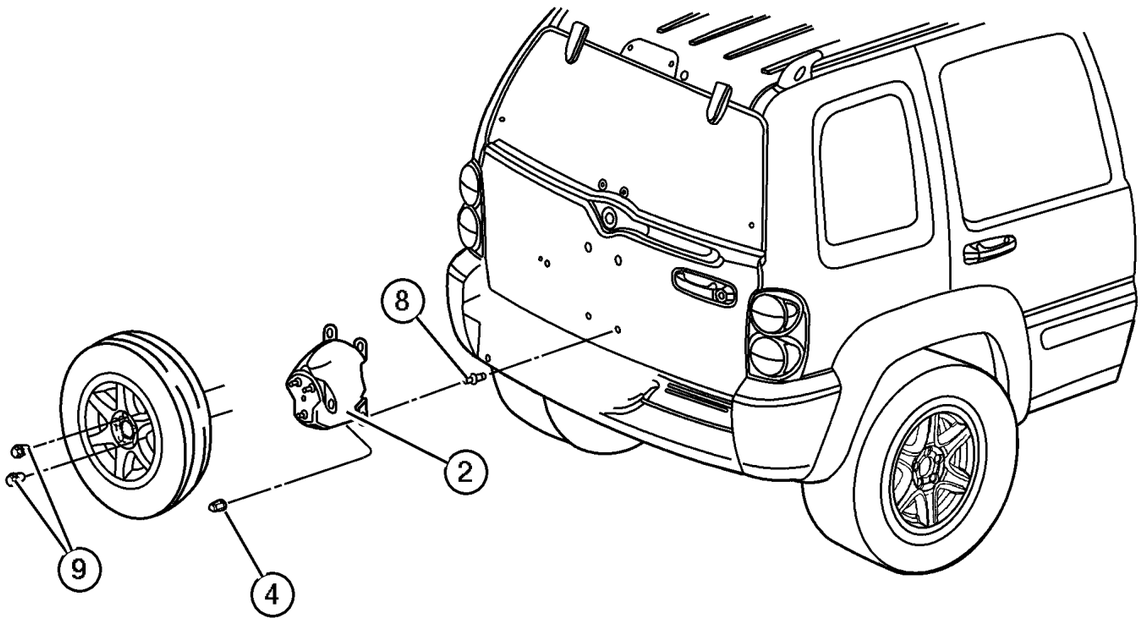

ITEM	PART NUMBER	QTY	LINE	SERIES	BODY	ENGINE	TRANS	TRIM	DESCRIPTION
Note; Sales Codes									
[WND]= 16x7 Cast Aluminum									
[WLD]= 16x7 Lux Aluminum									
[WGR]= 17x7.5 Cast Aluminum									
[WGQ]= 17x7.5 Aluminum									
-1									BRACKET, License Plate
	5HF06 1S5AI	1	J, U	H, P					
	5HF06 RXFAI	1	J, U	M					
2									BRACKET, Spare Tire
	55155 933AC	1							
	55360 618AA	2							
-3	55360 585AA	2							GASKET, Spare Tire Bracket
4	6506 924AA	4							NUT, Wheel
-5									WHEEL, Aluminum
	5GL66 PAKAC	4							[WND]
	5HW90 AFMAA	4							[WGR]
	5HW90 ZDRAA	4							[WGQ]
-6									COVER, Spare Tire
	5JG14 1X7AA	1							[CSA]
	5JG71 1X7AA	1							[CSB]
-7	5GL65 S4AAB	4							WHEEL, Steel, [WLC]
8									STUD
	6507 623AA	AR							
	6507 016AA	AR							Repair Outsidie Spare Tire Carrier
9	6506 924AA	4							NUT, Wheel

JEEP LIBERTY (KJ)

SERIES	LINE	BODY	ENGINE	TRANSMISSION
P = Limited	J = LHD (4WD)	74 = 4 Dr. (104.3 WB)	ED1, ED0 = 2.4L Power Tech	DDK = 5 Speed HDManual
H = Sport	U = RHD (4WD)		EKG, EK0 = 3.7L Power Tech	DDD = 5 Speed HD Manual
M = Renegade	T = LHD (2WD)		ENJ = 2.5L 4Cyl Turbo Diesel	DG4,DGQ = Multi-Speed Auto
			ENR = 2.8L 4Cyl Turbo Diesel	DG6 = 4 Speed Auto Transm
			EN0 = 4Cyl Turbo Diesel	DG0 = All Automatic Transm
				DBB = All Manual Transm

Spare Wheel, Export
Figure 022-420

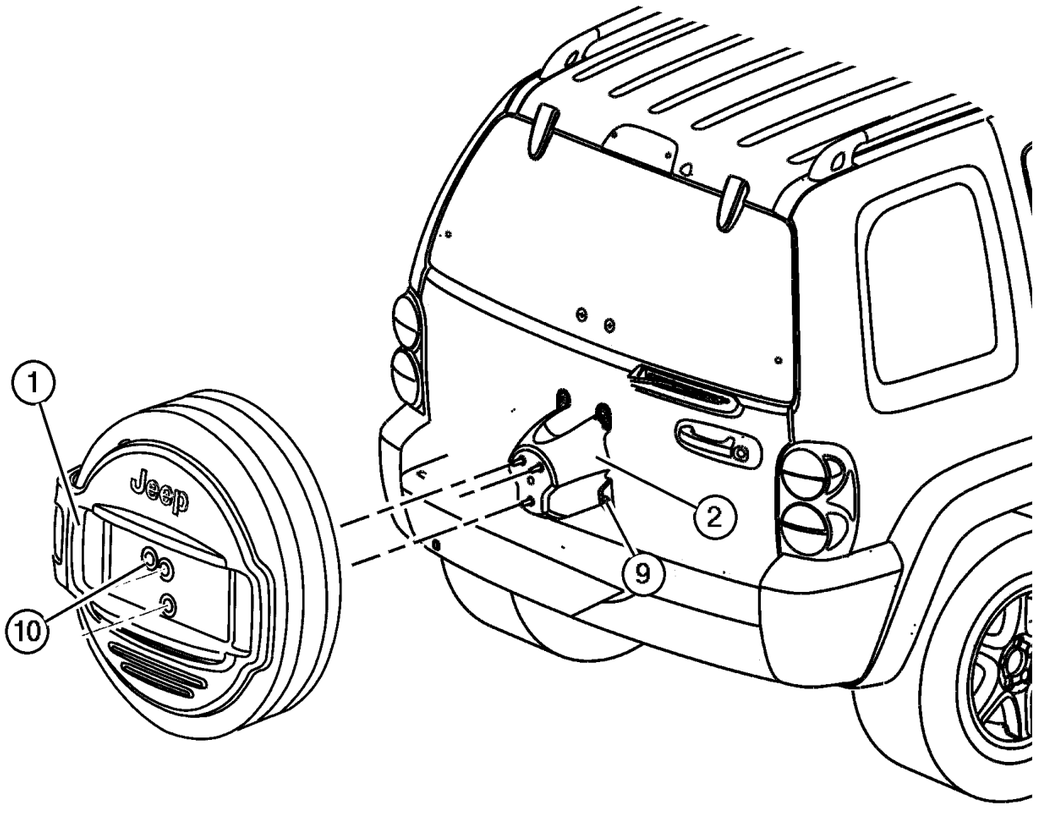

ITEM	PART NUMBER	QTY	LINE	SERIES	BODY	ENGINE	TRANS	TRIM	DESCRIPTION
1									BRACKET, License Plate
	5HF06 1S5AI	1	J, U	H, P					
	5HF06 RXFAI	1	J, U	M					
2	55155 933AC	1							BRACKET, Spare Tire
-3	6036 303AA	2	J, U						NUT, .50-20
-4	6036 310AA	2							NUT, Wheel, .50x20
-5	5GL67 PAKAB	1							WHEEL, Aluminum
-6	5GL64 S4AAA	1							WHEEL, Steel
-7	5JG14 1X7AA	1							COVER, Spare Tire
-8	6035 201	3							RIVET
9	6506 924AA	4							NUT, Wheel
10	6506 429AA	2	J, U						SCREW, M8x1.25x21

JEEP LIBERTY (KJ)

SERIES	LINE	BODY	ENGINE	TRANSMISSION
P = Limited	J = LHD (4WD)	74 = 4 Dr. (104.3 WB)	ED1, ED0 = 2.4L Power Tech	DDK = 5 Speed HDManual
H = Sport	U = RHD (4WD)		EKG, EK0 = 3.7L Power Tech	DDD = 5 Speed HD Manual
M = Renegade	T = LHD (2WD)		ENJ = 2.5L 4Cyl Turbo Diesel	DG4,DGQ = Multi-Speed Auto
			ENR = 2.8L 4Cyl Turbo Diesel	DG6 = 4 Speed Auto Transm
			EN0 = 4Cyl Turbo Diesel	DG0 = All Automatic Transm
				DBB = All Manual Transm

Group – 23D

Wiper/Lock Cylinder and Keys

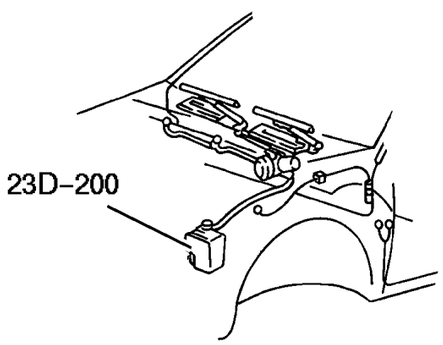

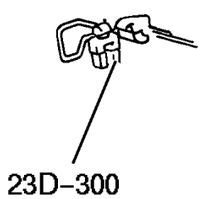

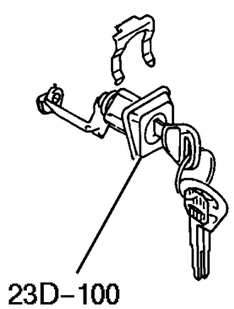

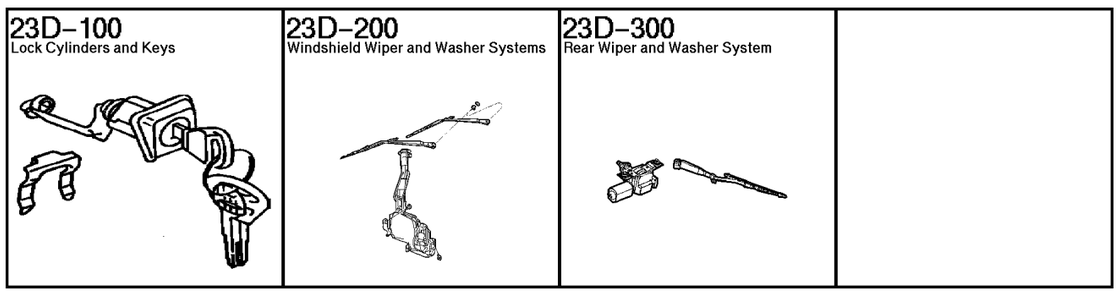

GROUP 23D - Wiper/Lock Cylinder and Keys

Illustration Title	Group-Fig. No.
Lock Cylinders and Keys	
Lock Cylinder & Keys	Fig. 23D-110
Windshield Wiper and Washer Systems	
Windshield Wiper & Washer	Fig. 23D-210
Rear Wiper and Washer System	
Rear Wiper & Washer	Fig. 23D-310

Lock Cylinder & Keys
Figure 23D-110

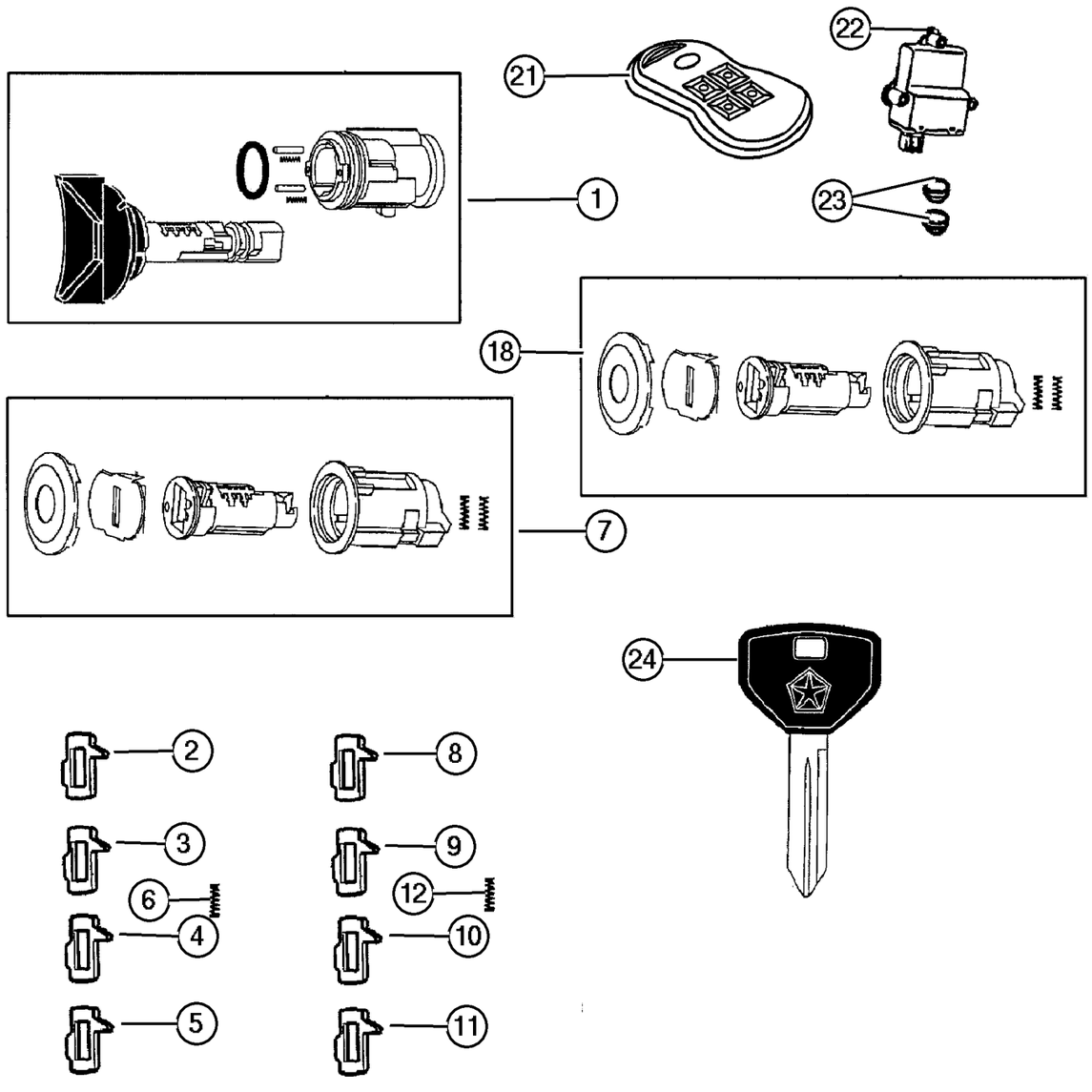

ITEM	PART NUMBER	QTY	LINE	SERIES	BODY	ENGINE	TRANS	TRIM	DESCRIPTION
1	5083 915AA	1							CYLINDER, Ignition Lock
2	5257 132	1							TUMBLER, Ignition Number 1
3	5257 133	1							TUMBLER, Ignition Number 2
4	5257 134	1							TUMBLER, Ignition Number 3
5	5257 135	1							TUMBLER, Ignition Number 4
6	4746 873	1							SPRING, Lock Cylinder Tumbler
7	5072 294AA	1							CYLINDER, Door Lock
8	4778 117	1							TUMBLER, Door and Deck Number 1, Wide
9	4778 118	1							TUMBLER, Door and Deck Number 2, Wide
10	4778 119	1							TUMBLER, Door and Deck Number 3, Wide
11	4778 120	1							TUMBLER, Door and Deck Number 4, Wide
12	4778 121	7							SPRING, Door and Deck Tumbler
-13	5071 039AA	1							LEVER, Door Lock
-14									RETAINER, Lock Rod
	5071 063AA	1							Right Door
	5071 155AA	1							Left Door
-15									ROD, Lock Cylinder
	5072 942AA	1							Right Door
	5072 944AA	1							Left Door
-16									BRACKET, Door Inside
	5072 943AA	1							Right Door
	5072 945AA	1							Left Door
-17	5071 201AA	1							SPACER, Lock Cylinder
18	5013 682AA	1							CYLINDER, Door Lock, Without SAM Swing Gate
-19	5071 163AA	1							BRACKET, Door Inside
-20	5071 283AA	1							SPACER, Lock Cylinder
21									TRANSMITTER, Keyless Entry
	4602 260AA	2							Remote with 4 Button
	4602 261AB	2							Remote with 4 Button (Export)
	56010 562AB	2							Remote with315MHZ BCM Interconnect (Export)
22	56010 209AC	1							MODULE, Immobilizer, (Located on the Steering Column)
23	8350 4802	1							BATTERY, Transmitter
24									KEY, Master
	5018 699AA	1							With Sentry Key Theft Deterrent System

JEEP LIBERTY (KJ)

SERIES	LINE	BODY	ENGINE	TRANSMISSION
P = Limited	J = LHD (4WD)	74 = 4 Dr. (104.3 WB)	ED1, ED0 = 2.4L Power Tech	DDK = 5 Speed HDManual
H = Sport	U = RHD (4WD)		EKG, EK0 = 3.7L Power Tech	DDD = 5 Speed HD Manual
M = Renegade	T = LHD (2WD)		ENJ = 2.5L 4Cyl Turbo Diesel	DG4,DGQ = Multi-Speed Auto
			ENR = 2.8L 4Cyl Turbo Diesel	DG6 = 4 Speed Auto Transm
			EN0 = 4Cyl Turbo Diesel	DG0 = All Automatic Transm
				DBB = All Manual Transm

AR = Use as required - = Non illustrated part # = New this model year **June 3, 2003**

« RETURN TO GROUP INDEX »

Lock Cylinder & Keys
Figure 23D-110

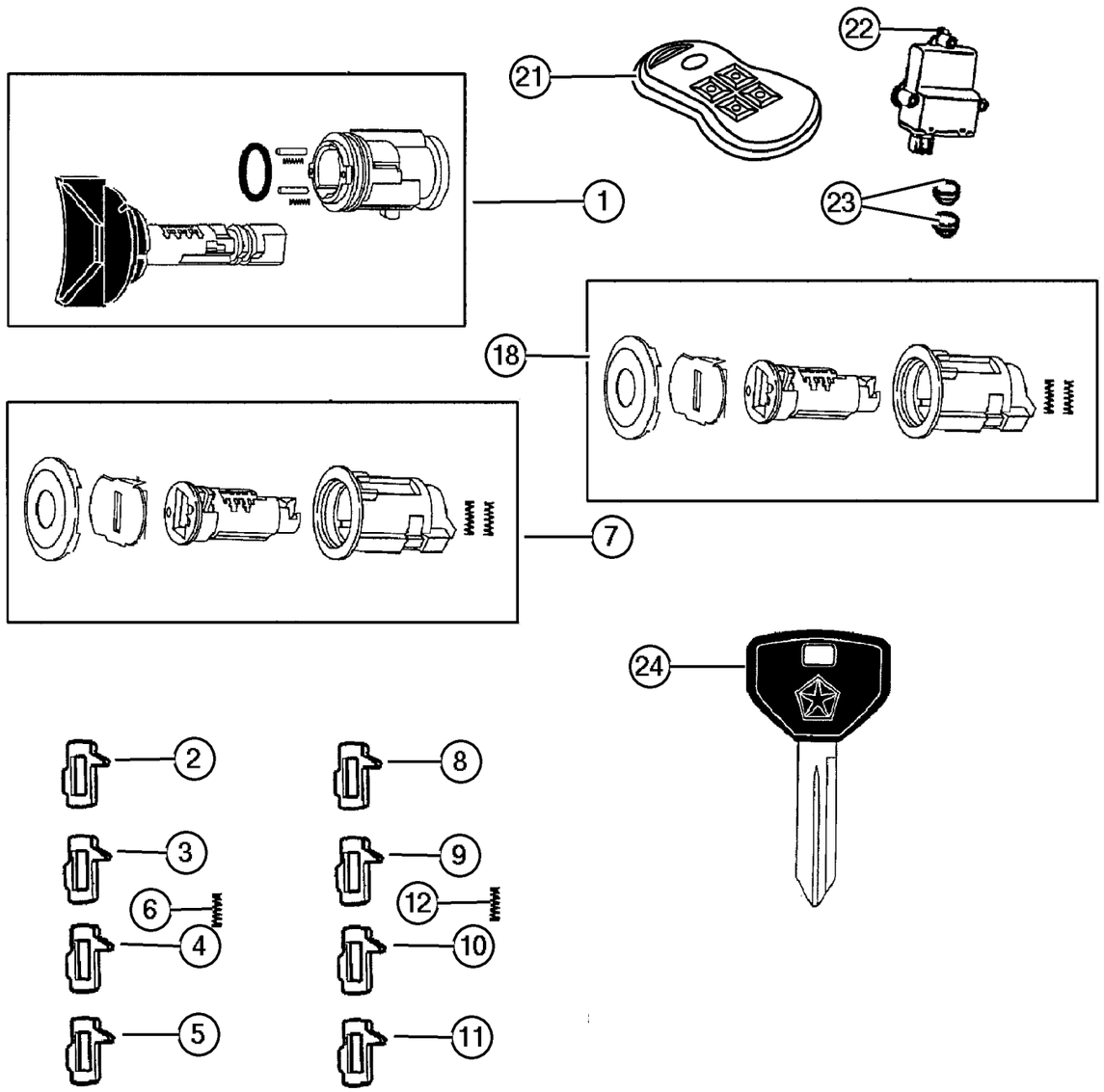

ITEM	PART NUMBER	QTY	LINE	SERIES	BODY	ENGINE	TRANS	TRIM	DESCRIPTION
	5018 700AA	1	J, T						Without Sentry Key Theft Deterrent System
-25	56042 844AD	1							LABEL, General Information, Impbilizer Transmitter & Receiver Label (Export)
-26	56010 424AA	1							RECEIVER, Keyless Entry, Remote with315MHZ BCM Interconnect (Export)
-27	56010 335AC	1							SIREN, Alarm, Security Alarm with Bracket (Europe)
-28									SHUTTER, Lock Cylinder, Serviced in Lock Kit Only, (NOT SERVICED) (Not Serviced)
-29									CAP, Door Lock Cylinder, Serviced in Lock Kit Only, (NOT SERVICED) (Not Serviced)
-30	5010 879AA	1							TUMBLER, Ignition Number 1, Sidebar
-31	5010 880AA	1							TUMBLER, Ignition Number 2, Sidebar
-32	5010 881AA	1							TUMBLER, Ignition Number 3, Sidebar
-33	5010 882AA	1							TUMBLER, Ignition Number 4, Sidebar
-34	5010 883AB	1							SPRING, Ignition Tumbler, Sidebar

JEEP LIBERTY (KJ)

SERIES	LINE	BODY	ENGINE	TRANSMISSION
P = Limited	J = LHD (4WD)	74 = 4 Dr. (104.3 WB)	ED1, ED0 = 2.4L Power Tech	DDK = 5 Speed HDManual
H = Sport	U = RHD (4WD)		EKG, EK0 = 3.7L Power Tech	DDD = 5 Speed HD Manual
M = Renegade	T = LHD (2WD)		ENJ = 2.5L 4Cyl Turbo Diesel	DG4,DGQ = Multi-Speed Auto
			ENR = 2.8L 4Cyl Turbo Diesel	DG6 = 4 Speed Auto Transm
			EN0 = 4Cyl Turbo Diesel	DG0 = All Automatic Transm
				DBB = All Manual Transm

AR = Use as required - = Non illustrated part # = New this model year **June 3, 2003**

« RETURN TO GROUP INDEX

Windshield Wiper & Washer
Figure 23D-210

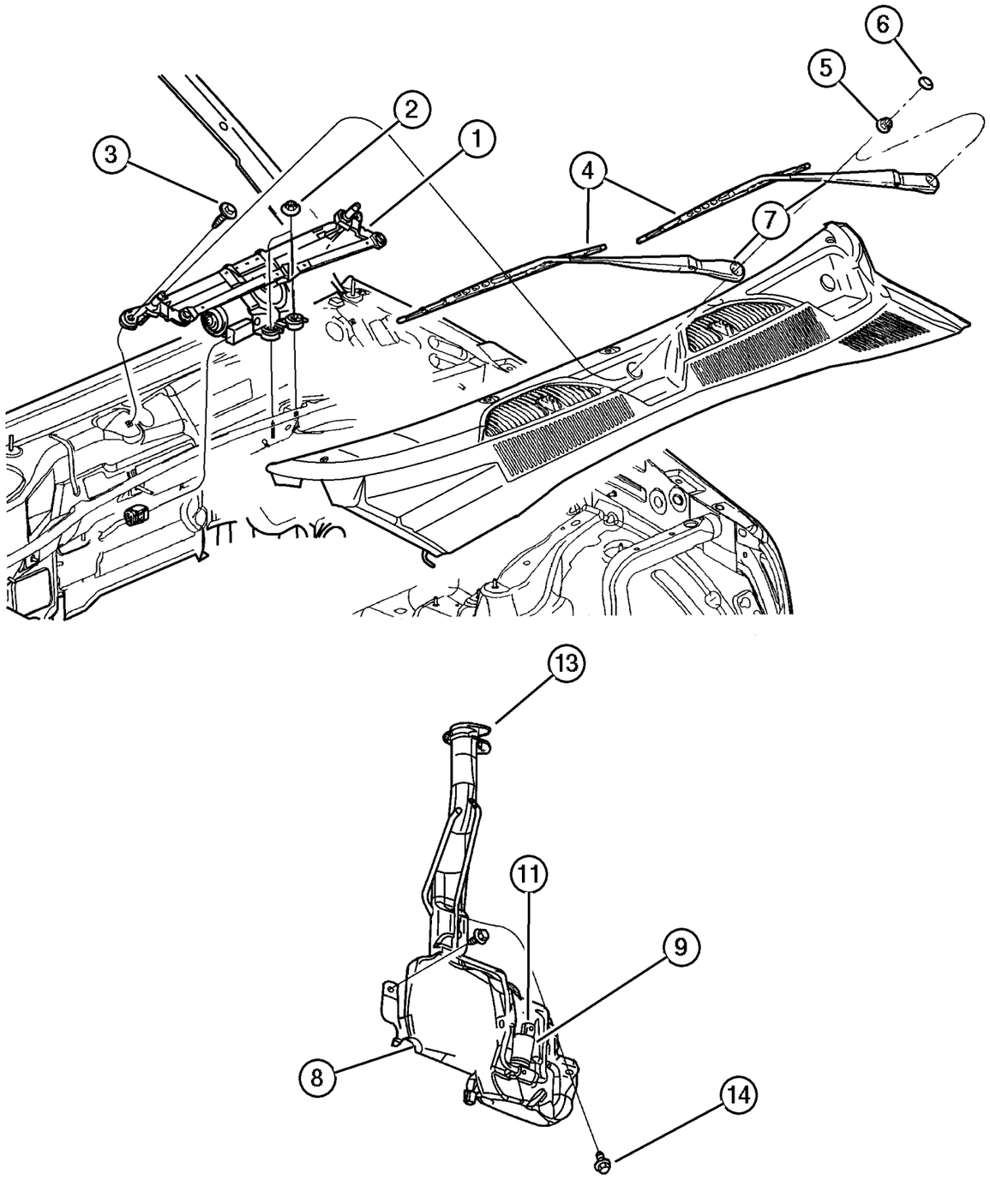

ITEM	PART NUMBER	QTY	LINE	SERIES	BODY	ENGINE	TRANS	TRIM	DESCRIPTION
1									MODULE, Wiper
	55155 895AB	1	J, T						
	#55155 894AD	1	U						
2	3420 1358	2							NUT AND WASHER, Hex Nut-Sealing Washer, M6 x 1.00
3									SCREW, Hex Flange Head, M6x1.00x35.00, (NOT SERVICED) (Not Serviced)
4									BLADE, Wiper
	5066 972AA	1	J, T						Left
	5066 973AA	1	U						Left
	5066 974AA	1	J, T						Right
5	6503 335	2							NUT, Hex, M10X1.25
6	55155 765AA	2							CAP, Wiper Arm Nut
7									ARM, Wiper
	5066 969AA	1	U						Left
	5066 970AA	1	J, T						Right
	5066 971AA	1	U						Right
	5096 337AA	1	J, T						Left
8	5066 867AA	1							RESERVOIR, Washer
9	5066 880AB	1							PUMP, Washer, Windshield
-10	5011 809AA	1							GROMMET, Windshield Washer Pump
11	4882 797	1							SENSOR, Washer Fluid Level
-12	5013 755AA	1							GROMMET, Washer Reservoir
13	5066 881AA	1							CAP, Washer Reservoir
14	6034 716	2							SCREW AND WASHER, Hex Flange Head, .25-14x.875
-15	HWV00 532AB	1	J, T						HOSE 1FT, Windshield Washer, 5/32"
-16									NOZZLE, Washer, Windshield
	55155 854AB	2	U						
		2	J, T						
-17									HOSE, Washer Reservoir
	55155 892AC	1	U						
		1	J, T						
-18	4778 097	2							GROMMET, WIPER FRAME
-19	6036 456AA	1							RIVET, Wiper Cap to Core Support

JEEP LIBERTY (KJ)

SERIES	LINE	BODY	ENGINE	TRANSMISSION
P = Limited	J = LHD (4WD)	74 = 4 Dr. (104.3 WB)	ED1, ED0 = 2.4L Power Tech	DDK = 5 Speed HDManual
H = Sport	U = RHD (4WD)		EKG, EK0 = 3.7L Power Tech	DDD = 5 Speed HD Manual
M = Renegade	T = LHD (2WD)		ENJ = 2.5L 4Cyl Turbo Diesel	DG4,DGQ = Multi-Speed Auto
			ENR = 2.8L 4Cyl Turbo Diesel	DG6 = 4 Speed Auto Transm
			EN0 = 4Cyl Turbo Diesel	DG0 = All Automatic Transm
				DBB = All Manual Transm

AR = Use as required - = Non illustrated part # = New this model year **June 3, 2003**

« RETURN TO GROUP INDEX

Rear Wiper & Washer
Figure 23D-310

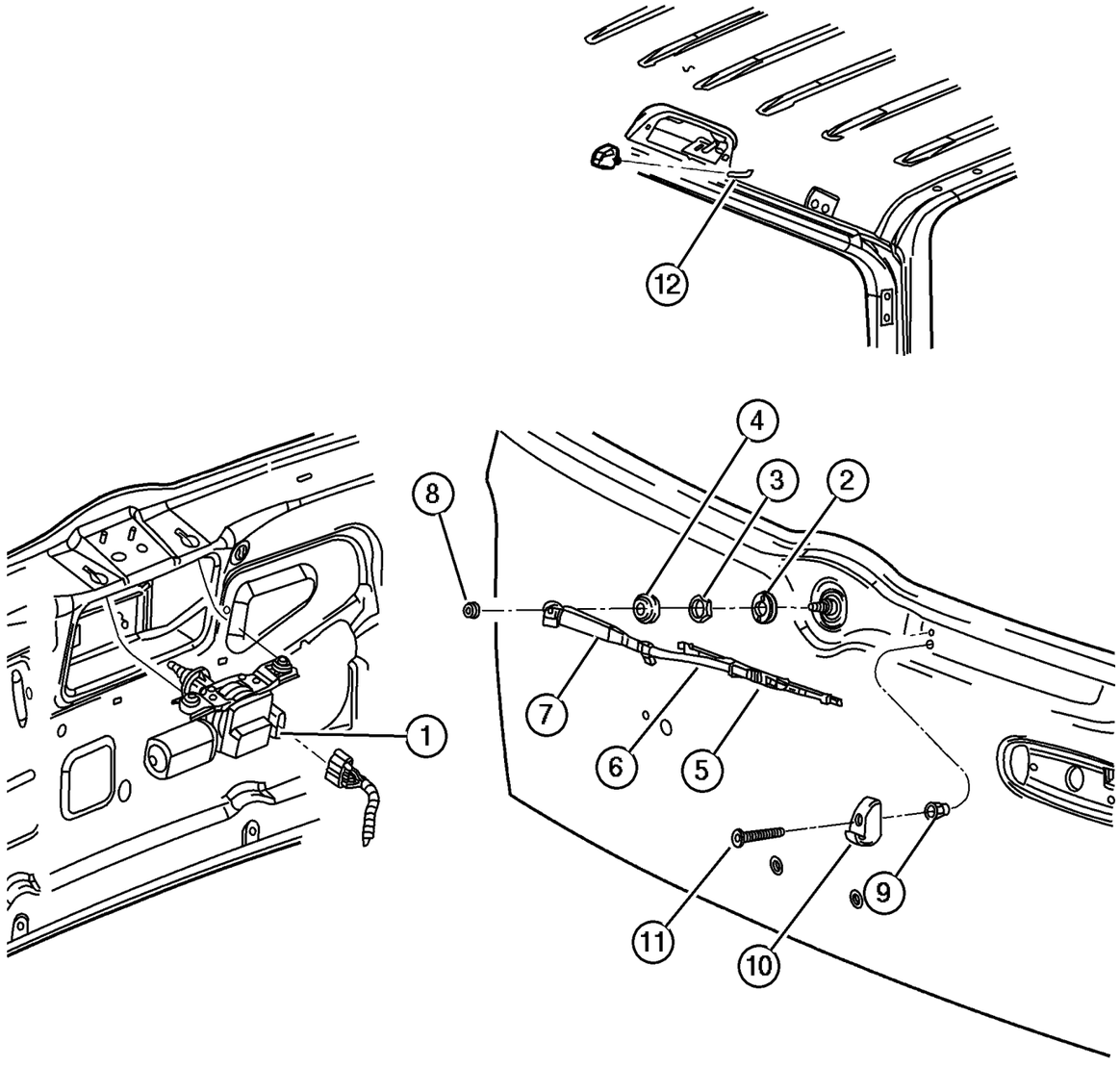

ITEM	PART NUMBER	QTY	LINE	SERIES	BODY	ENGINE	TRANS	TRIM	DESCRIPTION
1	55155 884AB	1							MOTOR, Wiper
2	55155 887AB	1							BEZEL, Wiper Motor
3	6502 263	1							NUT, Hex, M20x1.00
4	5507 6650	1							COVER, Rear Wiper Motor
5	5066 964AA	1							BLADE, Wiper
6	5066 965AA	1							ARM, Liftgate Wiper
7	5014 217AA	1							COVER, Rear Wiper Motor
8	6500 165	1							NUT, Wiper Arm
9	6503 245	2							RIVET
10	55155 886AA	1							RAMP, Wiper Park
11	6505 062AA	1							SCREW, Pilot Point
12	55156 158AC	1							NOZZLE, Washer, Windshield
-13	HWV00 532AB	1	J, T						HOSE 1FT, Windshield Washer, 5/32"

JEEP LIBERTY (KJ)

SERIES	LINE	BODY	ENGINE	TRANSMISSION
P = Limited	J = LHD (4WD)	74 = 4 Dr. (104.3 WB)	ED1, ED0 = 2.4L Power Tech	DDK = 5 Speed HDManual
H = Sport	U = RHD (4WD)		EKG, EK0 = 3.7L Power Tech	DDD = 5 Speed HD Manual
M = Renegade	T = LHD (2WD)		ENJ = 2.5L 4Cyl Turbo Diesel	DG4,DGQ = Multi-Speed Auto
			ENR = 2.8L 4Cyl Turbo Diesel	DG6 = 4 Speed Auto Transm
			EN0 = 4Cyl Turbo Diesel	DG0 = All Automatic Transm
				DBB = All Manual Transm

Group – 024

Air Conditioning & Heater

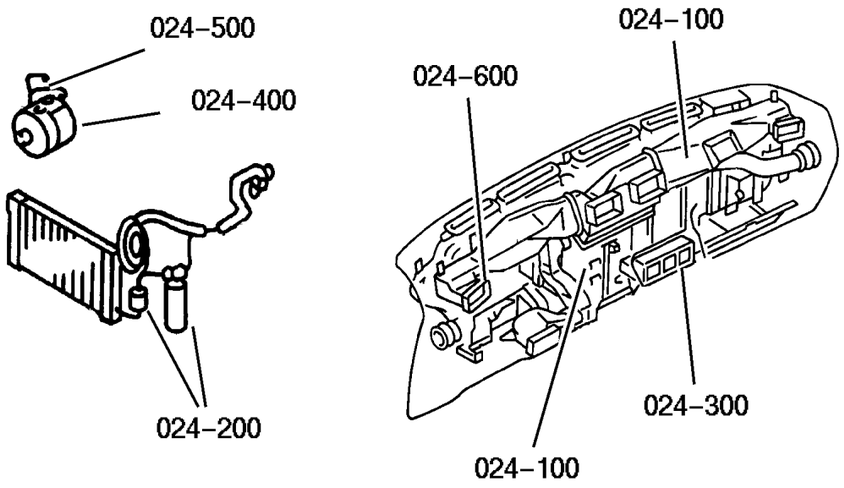

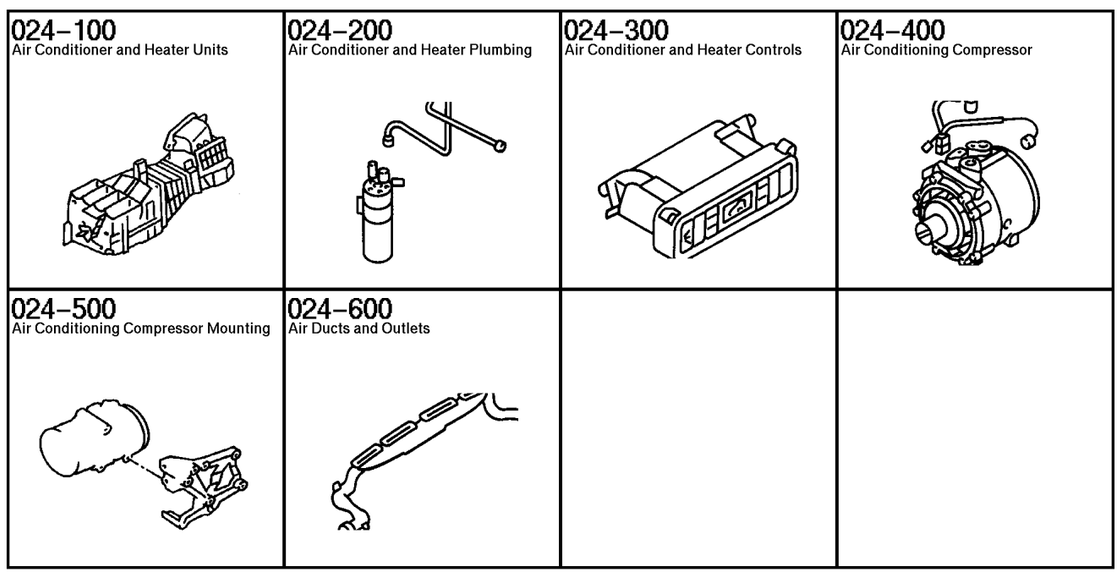

GROUP 24 - Air Conditioning & Heater

Illustration Title	Group-Fig. No.
Air Conditioner and Heater Units	
HEVAC Unit	Fig. 024-110
Air Conditioner and Heater Plumbing	
Plumbing, Heater 2.4L Engine, LHD	Fig. 024-210
Plumbing, Heater 2.4L Engine, RHD	Fig. 024-220
Plumbing, Heater 3.7L Engine, LHD	Fig. 024-230
Plumbing, Heater 3.7L Engine, RHD	Fig. 024-240
Plumbing, Heater 2.5,2.8L Diesel Engine, LHD	Fig. 024-250
Plumbing, Heater 2.5,2.8L Diesel Engine, RHD	Fig. 024-260
Plumbing, Air Conditioning 2.4L Engine, LHD	Fig. 024-270
Plumbing, Air Conditioning 2.4L Engine, RHD	Fig. 024-280
Plumbing, Air Conditioning 3.7L Engine, LHD	Fig. 024-285
Plumbing, Air Conditioning 3.7L Engine, RHD	Fig. 024-288
Plumbing, Air Conditioning 2.5,2.8L Diesel Engine, LHD	Fig. 024-290
Plumbing, Air Conditioning 2.5,2.8L Diesel Engine, RHD	Fig. 024-295
Air Conditioner and Heater Controls	
Control, Heater and Air Conditioning	Fig. 024-310
Air Conditioning Compressor	
Compressor, 2.4L - 3.7L Engine	Fig. 024-410
Compressor, 2.5,2.8L Diesel Engine	Fig. 024-430
Air Conditioning Compressor Mounting	
Compressor Mounting, 2.4L - 3.7L Engine	Fig. 024-510
Compressor Mounting, 2.5,2.8L Diesel Engine	Fig. 024-530
Air Ducts and Outlets	
Air Distribution Ducts	Fig. 024-610

HEVAC Unit
Figure 024-110

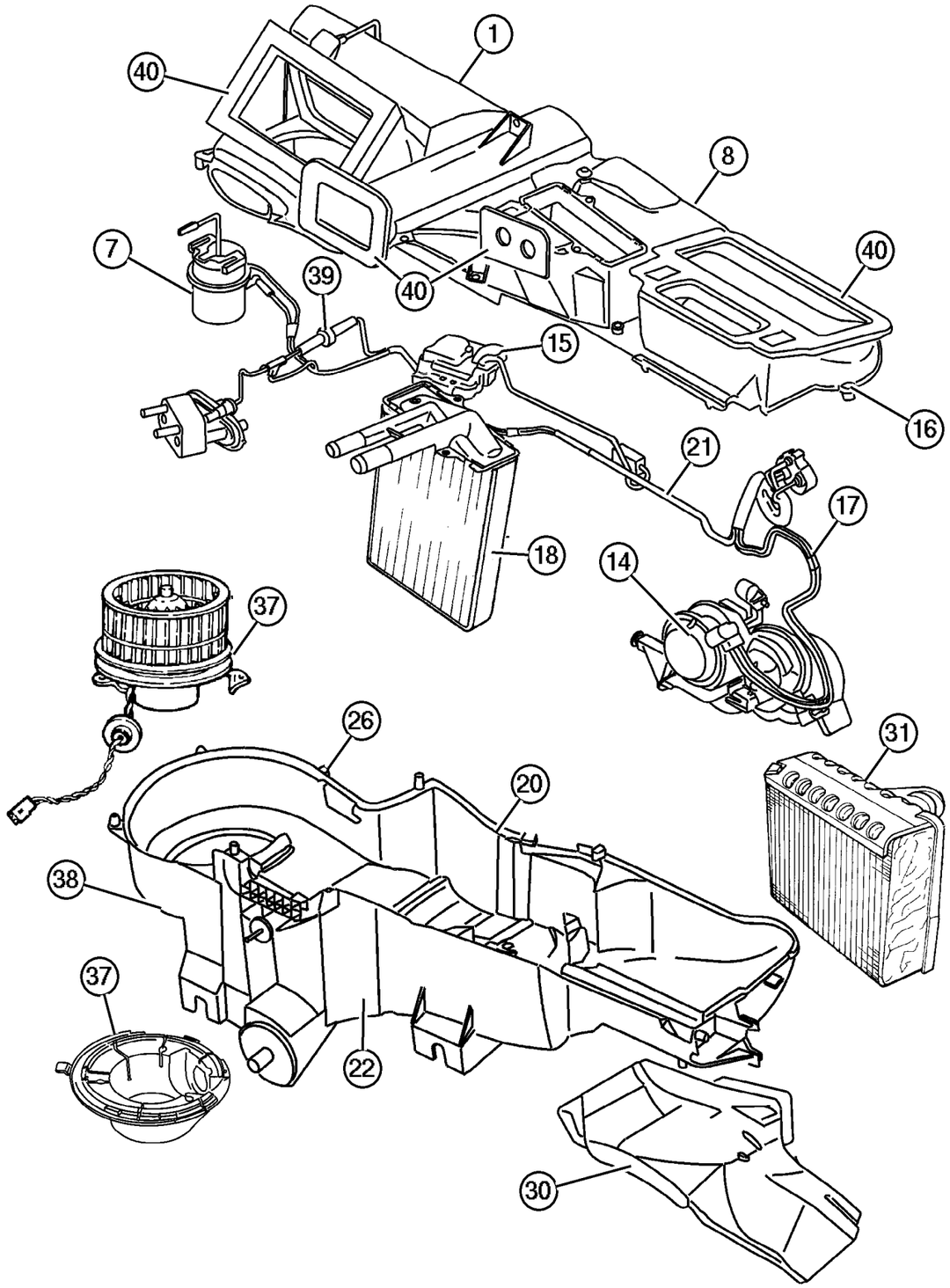

ITEM	PART NUMBER	QTY	LINE	SERIES	BODY	ENGINE	TRANS	TRIM	DESCRIPTION
1									HOUSING, Air Inlet
	5066 496AA	1	J, T						
	5066 507AA	1	U						
-2									HOUSING, Air Inlet, (NOT SERVICED) (Not Serviced)
-3									DOOR, Air Inlet, (NOT SERVICED) (Not Serviced)
-4									CAM, Recirculating Door, (NOT SERVICED) (Not Serviced)
-5									LEVER, A/C Recirculation Door, (NOT SERVICED) (Not Serviced)
-6									SEAL, Air Inlet, (NOT SERVICED) (Not Serviced)
7									ACTUATOR, A/C and Heater
	5066 510AA	1	J, T						Recirculation Door, Vacuumed Controled
	5066 511AA	1	U						
8									HOUSING, A/C Upper
	5066 501AA	1	J, T						
	5066 509AA	1	U						
-9									HOUSING, A/C Upper, (NOT SERVICED) (Not Serviced)
-10									DOOR, Panel, (NOT SERVICED) (Not Serviced)
-11									LEVER, Panel Door, (NOT SERVICED) (Not Serviced)
-12									SEAL, Evaporator, Tubes To Dash, (NOT SERVICED) (Not Serviced)
-13									SEAL, Defroster To Panel, (NOT SERVICED) (Not Serviced)
14									ACTUATOR, A/C and Heater
	5066 518AA	1	J, T						Floor and Defrost Door, Vacuumed Controled
		1	U						Floor and Defrost Door, Vacuumed Controled
15									ACTUATOR, A/C and Heater
	5066 519AA	1	J, T						Blend Door, Electric Controled
	5066 522AA	1	U						
16									SCREW, Hex Head, M4.8-1.59x19
	4734 227	22	J, T						
		22	U						
17									HARNESS, Jumper

JEEP LIBERTY (KJ)

SERIES	LINE	BODY	ENGINE	TRANSMISSION
P = Limited	J = LHD (4WD)	74 = 4 Dr. (104.3 WB)	ED1, ED0 = 2.4L Power Tech	DDK = 5 Speed HDManual
H = Sport	U = RHD (4WD)		EKG, EK0 = 3.7L Power Tech	DDD = 5 Speed HD Manual
M = Renegade	T = LHD (2WD)		ENJ = 2.5L 4Cyl Turbo Diesel	DG4,DGQ = Multi-Speed Auto
			ENR = 2.8L 4Cyl Turbo Diesel	DG6 = 4 Speed Auto Transm
			EN0 = 4Cyl Turbo Diesel	DG0 = All Automatic Transm
				DBB = All Manual Transm

AR = Use as required - = Non illustrated part # = New this model year **June 3, 2003**

« RETURN TO GROUP INDEX »

HEVAC Unit
Figure 024-110

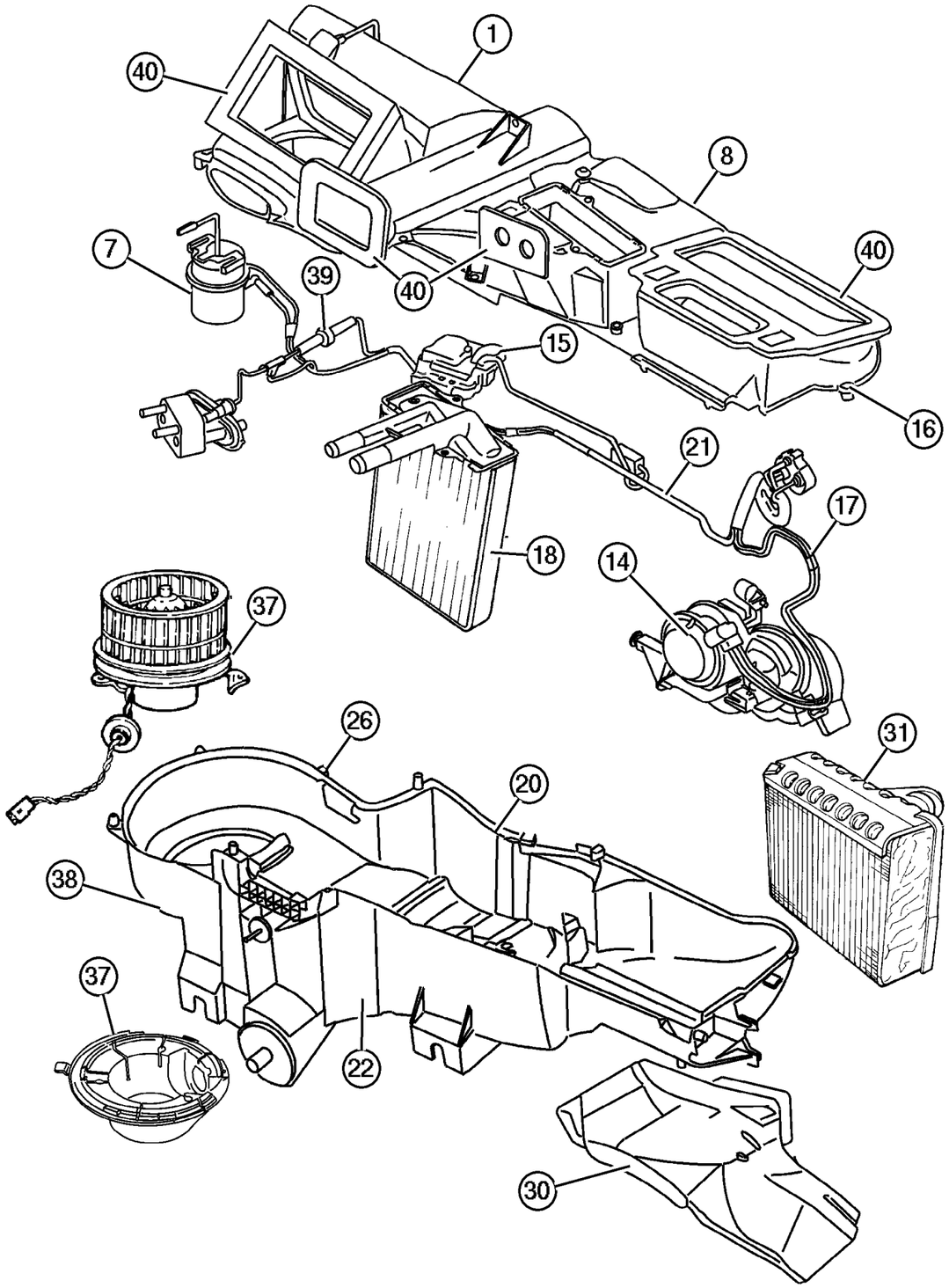

ITEM	PART NUMBER	QTY	LINE	SERIES	BODY	ENGINE	TRANS	TRIM	DESCRIPTION
	5066 528AA	1	J, T						
		1	U						
18									HEATER, Core Kit
	5066 555AA	1	J, T						
		1	U						
-19	5066 551AA	1	J, T						ISOLATOR, Tube
20									CLIP, A/C Heater Housing
	4644 388	4	J, T						
		4	U						
21									VACUUM HARNESS, Heater and A/C
	5066 531AA	1	J, T						
		1	U						
22									HOUSING, A/C Lower
	5066 532AB	1	J, T						
	5066 534AB	1	U						
-23									HOUSING, A/C Lower, (NOT SERVICED) (Not Serviced)
-24									STUD, A/C and Heater Housing Mtg., (NOT SERVICED) (Not Serviced)
-25									WASHER, A/C Unit Mounting Stud, (NOT SERVICED) (Not Serviced)
26	6101 712	2							NUT, U, M6x1
-27									DOOR, Blend Air, (NOT SERVICED) (Not Serviced)
-28									DOOR, A/C and Heater Mode, (NOT SERVICED) (Not Serviced)
-29									LINK, Blend Door, (NOT SERVICED) (Not Serviced)
30									DUCT, Floor
	5066 535AA	1	J, T						
	5066 536AA	1	U						
31									EVAPORATOR, Air Conditioning
	5066 549AA	1	J, T						
	5066 550AA	1	U						
	4885 853AA	1							Coil Only
-32									LINER, Evaporator, (NOT SERVICED) (Not Serviced)
-33									EVAPORATOR, Air Conditioning, (NOT SERVICED) (Not Serviced)
-34									ISOLATOR, Evaporator Tube, (NOT SERVICED) (Not Serviced)

JEEP LIBERTY (KJ)

SERIES	LINE	BODY	ENGINE	TRANSMISSION
P = Limited	J = LHD (4WD)	74 = 4 Dr. (104.3 WB)	ED1, ED0 = 2.4L Power Tech	DDK = 5 Speed HDManual
H = Sport	U = RHD (4WD)		EKG, EK0 = 3.7L Power Tech	DDD = 5 Speed HD Manual
M = Renegade	T = LHD (2WD)		ENJ = 2.5L 4Cyl Turbo Diesel	DG4,DGQ = Multi-Speed Auto
			ENR = 2.8L 4Cyl Turbo Diesel	DG6 = 4 Speed Auto Transm
			EN0 = 4Cyl Turbo Diesel	DG0 = All Automatic Transm
				DBB = All Manual Transm

AR = Use as required - = Non illustrated part # = New this model year **June 3, 2003**

« RETURN TO GROUP INDEX

« »

HEVAC Unit
Figure 024-110

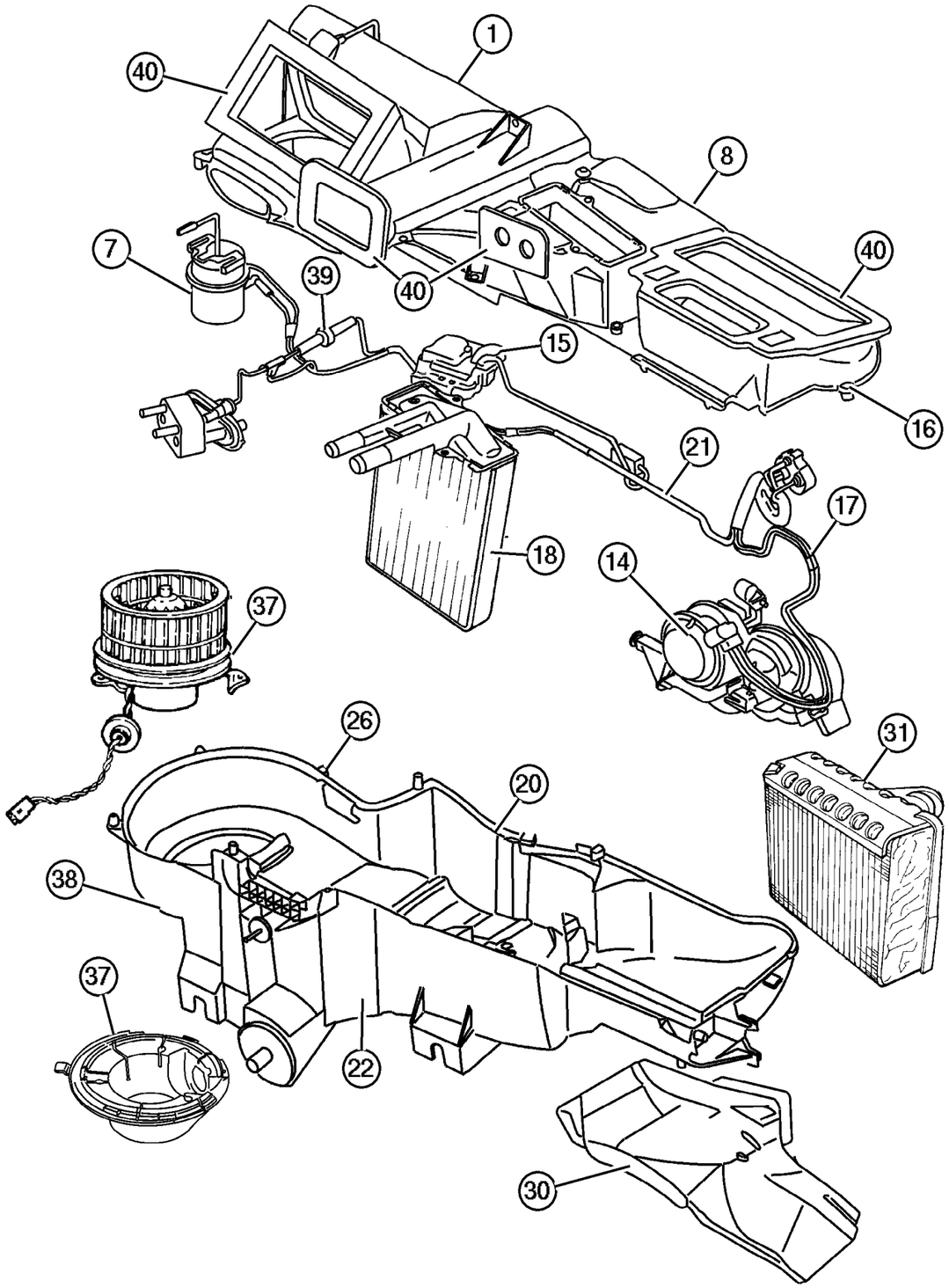

ITEM	PART NUMBER	QTY	LINE	SERIES	BODY	ENGINE	TRANS	TRIM	DESCRIPTION
-35	55037 651AA	1	J, T						TUBE, Evaporator Housing
-36									SEAL, Evaporator Tube, (NOT SERVICED) (Not Serviced)
37									MOTOR, Blower with Wheel
	5066 553AA	1	J, T						
	5066 554AA	1	U						
38									RESISTOR, A/C Heater
	5066 552AA	1	J, T						
		1	U						
39									VALVE, Vacuum Check
	5503 6068	1	J, T						
		1	U						
40									SEAL KIT, A/C And Heater Unit
	5071 491AA	1	J, T						
	5072 576AA	1	U						
-41									RESISTOR, A/C Heater
	5066 552AA	1	J, T						
		1	U						
-42									HOSE AND VALVE, Vacuum
	55038 432AC	1	J, T						Air Conditioning
	55038 433AC	1	U						Air Conditioning
-43	6504 441	1				EK0			SCREW AND WASHER, A/C Unit mounting

JEEP LIBERTY (KJ)

SERIES	LINE	BODY	ENGINE	TRANSMISSION
P = Limited	J = LHD (4WD)	74 = 4 Dr. (104.3 WB)	ED1, ED0 = 2.4L Power Tech	DDK = 5 Speed HDManual
H = Sport	U = RHD (4WD)		EKG, EK0 = 3.7L Power Tech	DDD = 5 Speed HD Manual
M = Renegade	T = LHD (2WD)		ENJ = 2.5L 4Cyl Turbo Diesel	DG4,DGQ = Multi-Speed Auto
			ENR = 2.8L 4Cyl Turbo Diesel	DG6 = 4 Speed Auto Transm
			EN0 = 4Cyl Turbo Diesel	DG0 = All Automatic Transm
				DBB = All Manual Transm

AR = Use as required - = Non illustrated part # = New this model year

June 3, 2003

« RETURN TO GROUP INDEX

Plumbing, Heater 2.4L Engine, LHD
Figure 024-210

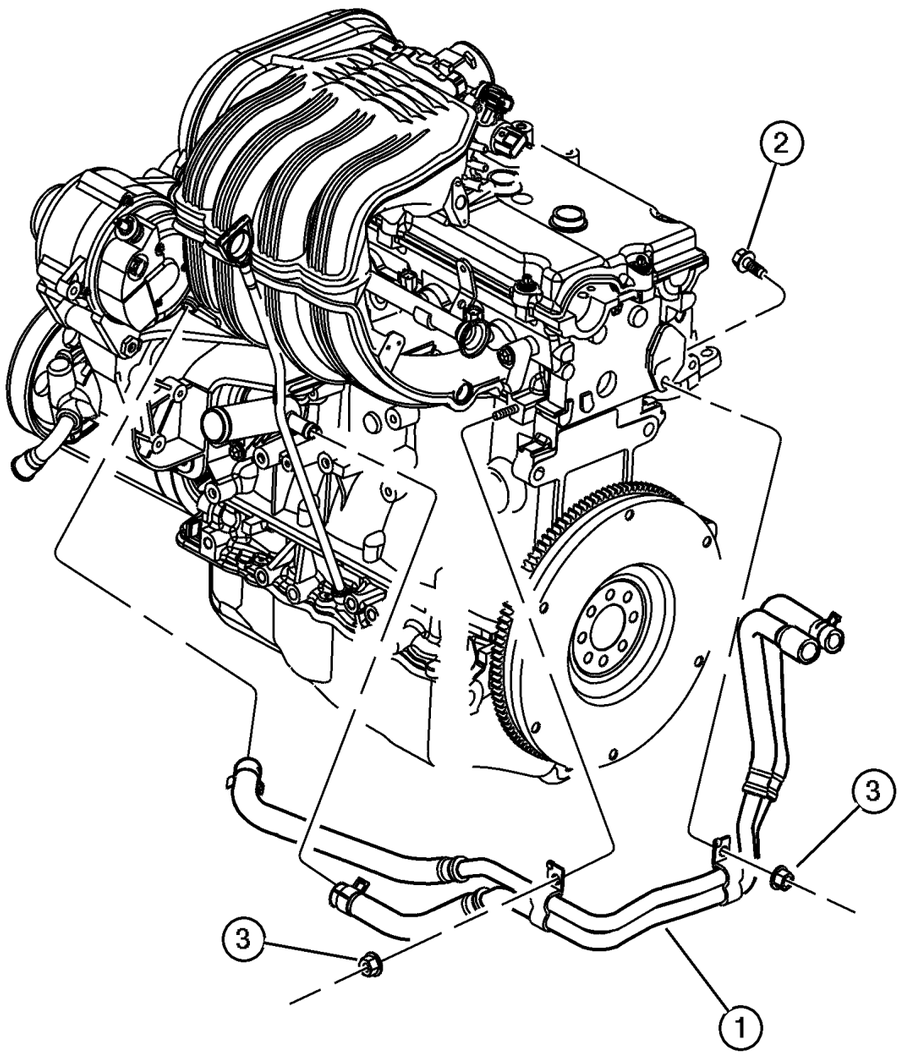

ITEM	PART NUMBER	QTY	LINE	SERIES	BODY	ENGINE	TRANS	TRIM	DESCRIPTION
NOTE:									
Sales Codes:									
[ED0]=All 2.4L 4 Cyl. 16-V Engines									
1	55038 330AB	1	J, T			ED0			HOSE, Heater Supply
2	6501 474	1	J, T			ED0			BOLT, Hex Head, M8x1.25x16
3	6101 445	1	J, T			ED0			NUT AND WASHER, Hex Nut-Coned Washer, M8 x 1.25

JEEP LIBERTY (KJ)

SERIES	LINE	BODY	ENGINE	TRANSMISSION
P = Limited	J = LHD (4WD)	74 = 4 Dr. (104.3 WB)	ED1, ED0 = 2.4L Power Tech	DDK = 5 Speed HDManual
H = Sport	U = RHD (4WD)		EKG, EK0 = 3.7L Power Tech	DDD = 5 Speed HD Manual
M = Renegade	T = LHD (2WD)		ENJ = 2.5L 4Cyl Turbo Diesel	DG4,DGQ = Multi-Speed Auto
			ENR = 2.8L 4Cyl Turbo Diesel	DG6 = 4 Speed Auto Transm
			EN0 = 4Cyl Turbo Diesel	DG0 = All Automatic Transm
				DBB = All Manual Transm

Plumbing, Heater 2.4L Engine, RHD
Figure 024-220

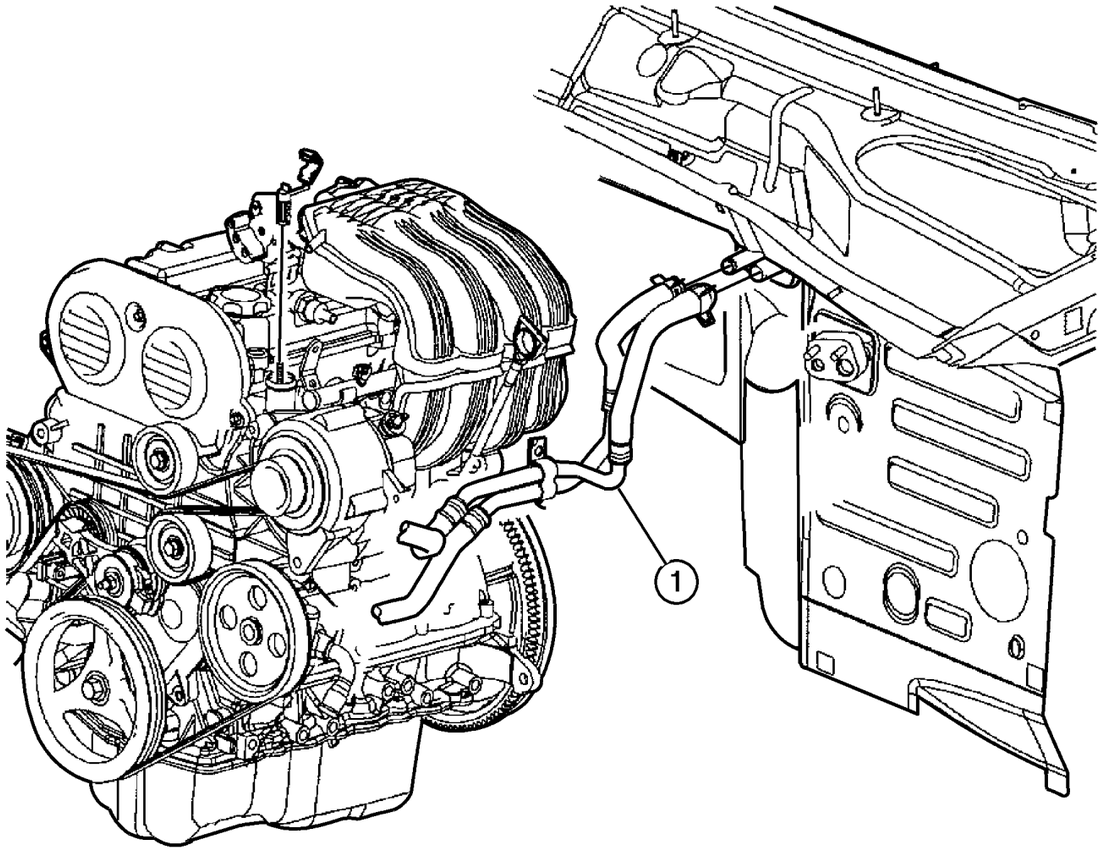

ITEM	PART NUMBER	QTY	LINE	SERIES	BODY	ENGINE	TRANS	TRIM	DESCRIPTION
Note; Sales Codes									
[ED0]= All 2.2L, 2.5L, 2.4L, 4 Cylinder Gas Engines									
1	55038 333AB	1	U			ED0			HOSE, Heater Supply
-2	6101 445	1				ED0			NUT AND WASHER, Hex Nut-Coned Washer, M8 x 1.25, Hose to Cylinder Head

JEEP LIBERTY (KJ)

SERIES	LINE	BODY	ENGINE	TRANSMISSION
P = Limited	J = LHD (4WD)	74 = 4 Dr. (104.3 WB)	ED1, ED0 = 2.4L Power Tech	DDK = 5 Speed HDManual
H = Sport	U = RHD (4WD)		EKG, EK0 = 3.7L Power Tech	DDD = 5 Speed HD Manual
M = Renegade	T = LHD (2WD)		ENJ = 2.5L 4Cyl Turbo Diesel	DG4,DGQ = Multi-Speed Auto
			ENR = 2.8L 4Cyl Turbo Diesel	DG6 = 4 Speed Auto Transm
			EN0 = 4Cyl Turbo Diesel	DG0 = All Automatic Transm
				DBB = All Manual Transm

Plumbing, Heater 3.7L Engine, LHD
Figure 024-230

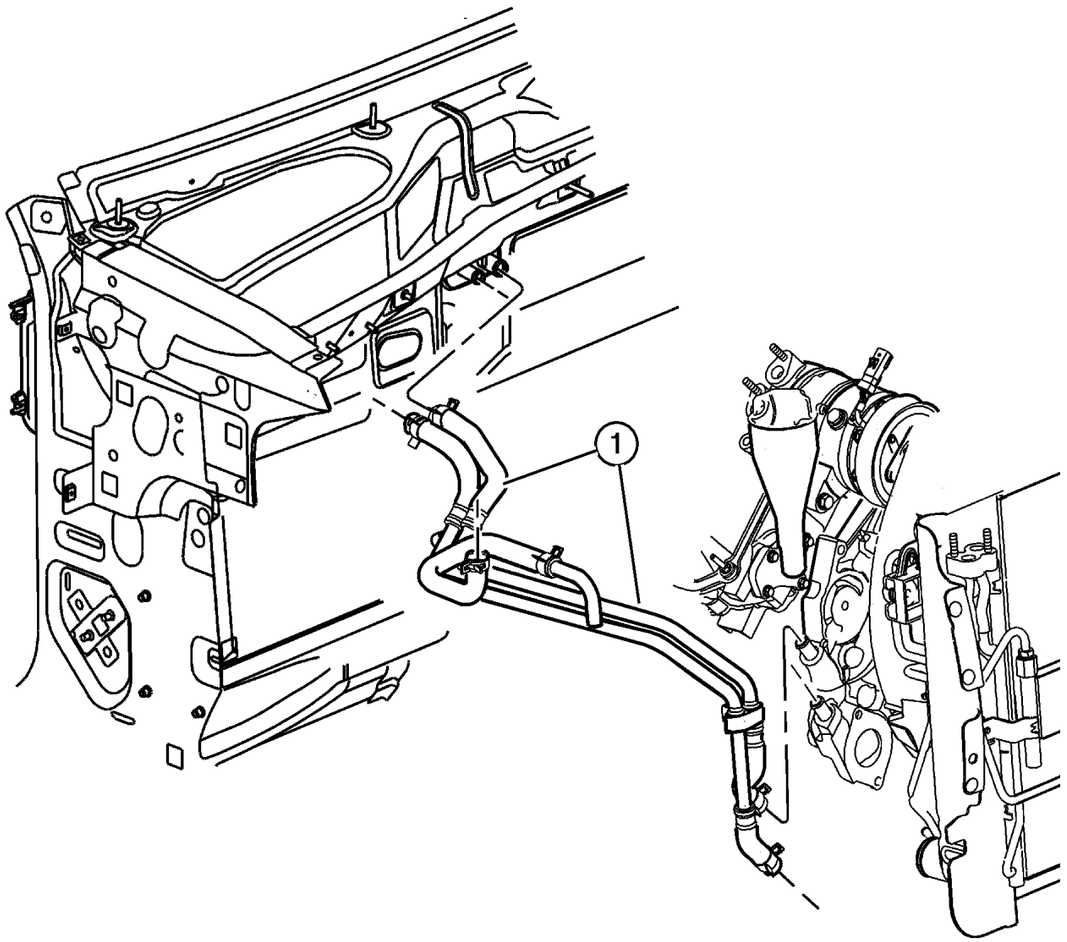

ITEM	PART NUMBER	QTY	LINE	SERIES	BODY	ENGINE	TRANS	TRIM	DESCRIPTION
NOTE:									
Sales Codes:									
[EK0]=All 3.7L V-6 Engines									
1	55038 331AD	1	J, T			EK0			HOSE, Heater Supply
-2	5072 449AA	1	J, T			EK0			BRACKET
-3	5072 450AB	1	J, T			EK0			BRACKET
-4	HHR00 034AA	1							HOSE 1FT, Heater, 3/4"

JEEP LIBERTY (KJ)

SERIES	LINE	BODY	ENGINE	TRANSMISSION
P = Limited	J = LHD (4WD)	74 = 4 Dr. (104.3 WB)	ED1, ED0 = 2.4L Power Tech	DDK = 5 Speed HDManual
H = Sport	U = RHD (4WD)		EKG, EK0 = 3.7L Power Tech	DDD = 5 Speed HD Manual
M = Renegade	T = LHD (2WD)		ENJ = 2.5L 4Cyl Turbo Diesel	DG4,DGQ = Multi-Speed Auto
			ENR = 2.8L 4Cyl Turbo Diesel	DG6 = 4 Speed Auto Transm
			EN0 = 4Cyl Turbo Diesel	DG0 = All Automatic Transm
				DBB = All Manual Transm

Plumbing, Heater 3.7L Engine, RHD
Figure 024-240

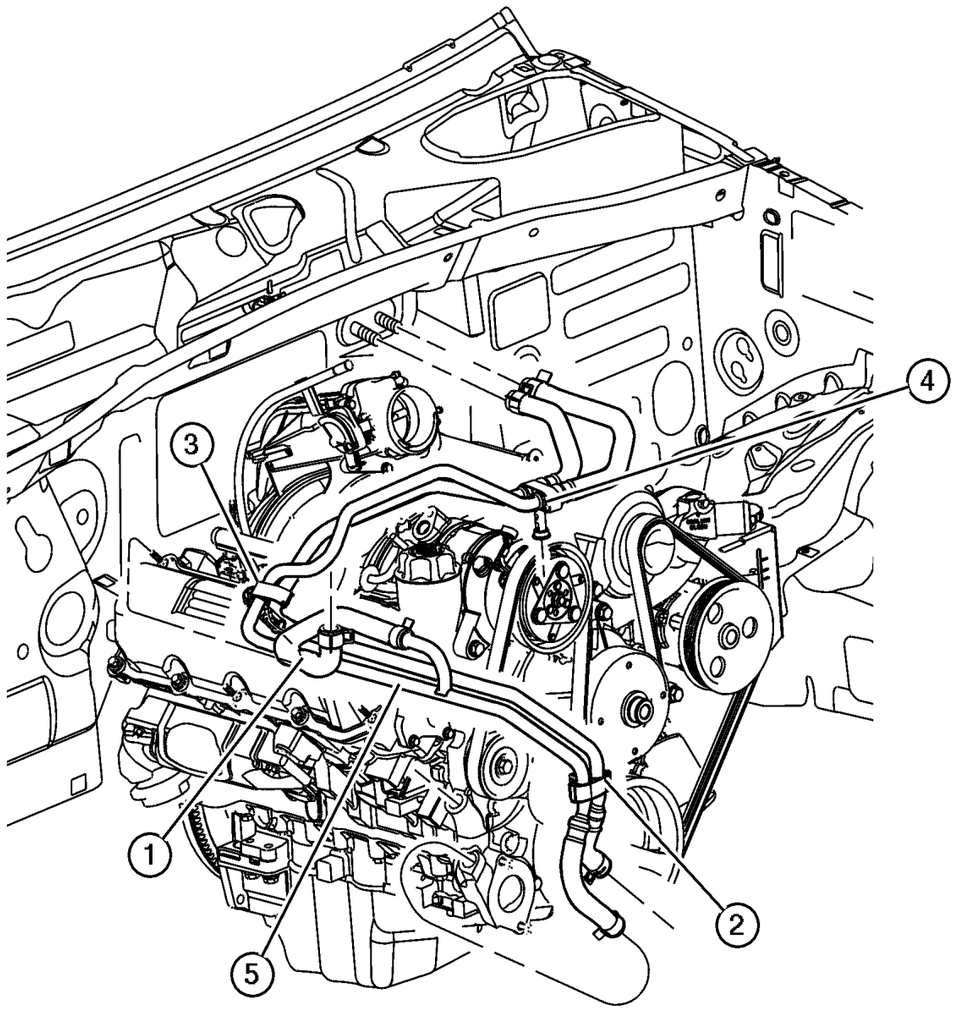

ITEM	PART NUMBER	QTY	LINE	SERIES	BODY	ENGINE	TRANS	TRIM	DESCRIPTION
Note; Sales Codes									
[EK0]= All 3.7L, 6 Cylinder Gas Engines									
1	5072 448AA	1	U			EK0			HOSE, Hot Bottle
2	5072 449AA	1	U			EK0			BRACKET, Oil Fill
3	5072 450AB	1	U			EK0			BRACKET, Valve Cover
4	5072 451AB	1	U			EK0			BRACKET, Intake Manifold
5	55038 334AD	1	U			EK0			HOSE, Heater Supply

JEEP LIBERTY (KJ)

SERIES	LINE	BODY	ENGINE	TRANSMISSION
P = Limited	J = LHD (4WD)	74 = 4 Dr. (104.3 WB)	ED1, ED0 = 2.4L Power Tech	DDK = 5 Speed HDManual
H = Sport	U = RHD (4WD)		EKG, EK0 = 3.7L Power Tech	DDD = 5 Speed HD Manual
M = Renegade	T = LHD (2WD)		ENJ = 2.5L 4Cyl Turbo Diesel	DG4,DGQ = Multi-Speed Auto
			ENR = 2.8L 4Cyl Turbo Diesel	DG6 = 4 Speed Auto Transm
			EN0 = 4Cyl Turbo Diesel	DG0 = All Automatic Transm
				DBB = All Manual Transm

Plumbing, Heater 2.5,2.8L Diesel Engine, LHD
Figure 024-250

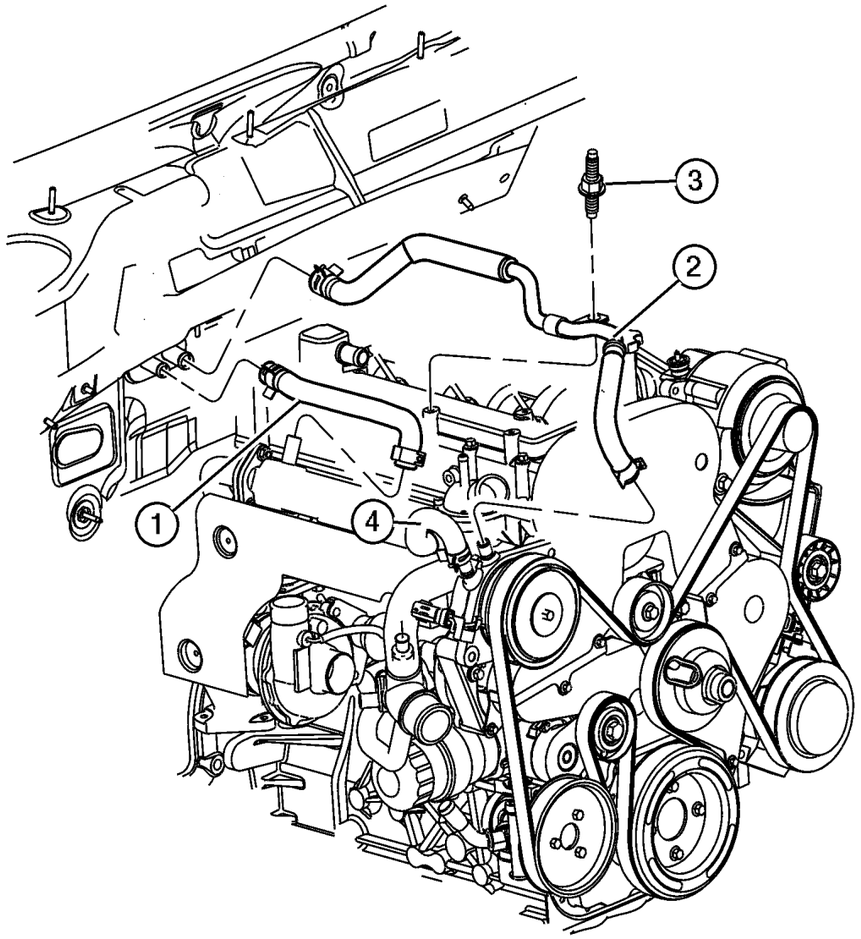

ITEM	PART NUMBER	QTY	LINE	SERIES	BODY	ENGINE	TRANS	TRIM	DESCRIPTION
1	55037 605AB	1	J, T			EN0			HOSE
2	#55037 703AA	1	J, T			EN0			HOSE, Heater Supply
3	6504 035	1	J, T			EN0			STUD, M8x1.25x41.00
4	5072 740AB	1				EN0			PIPE

JEEP LIBERTY (KJ)

SERIES	LINE	BODY	ENGINE	TRANSMISSION
P = Limited	J = LHD (4WD)	74 = 4 Dr. (104.3 WB)	ED1, ED0 = 2.4L Power Tech	DDK = 5 Speed HDManual
H = Sport	U = RHD (4WD)		EKG, EK0 = 3.7L Power Tech	DDD = 5 Speed HD Manual
M = Renegade	T = LHD (2WD)		ENJ = 2.5L 4Cyl Turbo Diesel	DG4,DGQ = Multi-Speed Auto
			ENR = 2.8L 4Cyl Turbo Diesel	DG6 = 4 Speed Auto Transm
			EN0 = 4Cyl Turbo Diesel	DG0 = All Automatic Transm
				DBB = All Manual Transm

AR = Use as required - = Non illustrated part # = New this model year **June 3, 2003**

« RETURN TO GROUP INDEX

Plumbing, Heater 2.5,2.8L Diesel Engine, RHD
Figure 024-260

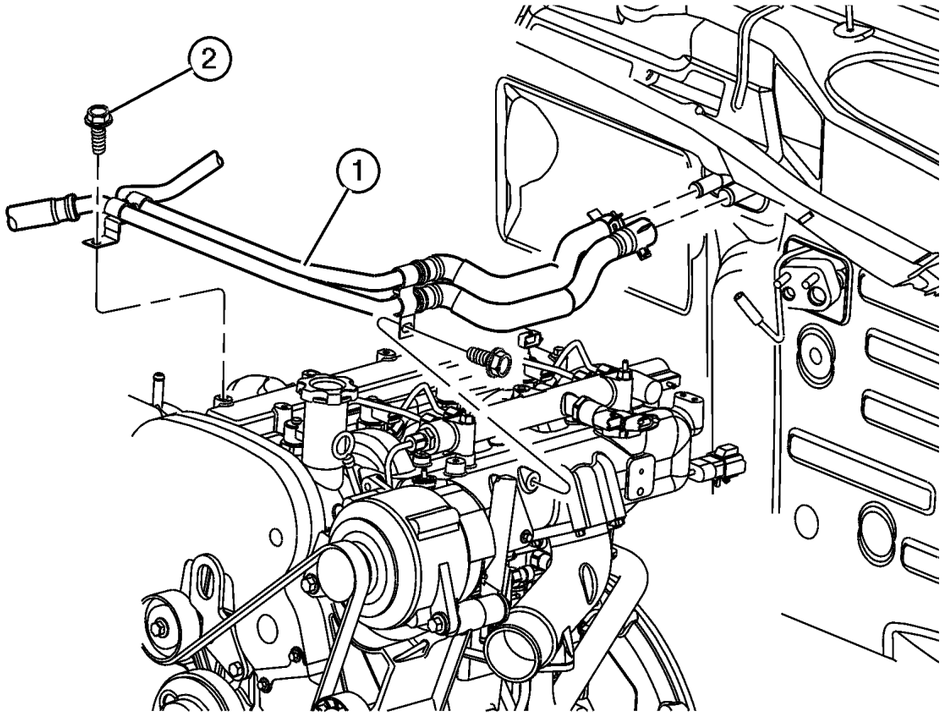

ITEM	PART NUMBER	QTY	LINE	SERIES	BODY	ENGINE	TRANS	TRIM	DESCRIPTION
1	#55037 704AA	1	T, U			EN0			HOSE, Heater Supply
2	6501 474	2	U			EN0			BOLT, Hex Head, M8x1.25x16
-3	5072 740AB	1				EN0			PIPE, Heater To Water Housing

JEEP LIBERTY (KJ)

SERIES	LINE	BODY	ENGINE	TRANSMISSION
P = Limited	J = LHD (4WD)	74 = 4 Dr. (104.3 WB)	ED1, ED0 = 2.4L Power Tech	DDK = 5 Speed HDManual
H = Sport	U = RHD (4WD)		EKG, EK0 = 3.7L Power Tech	DDD = 5 Speed HD Manual
M = Renegade	T = LHD (2WD)		ENJ = 2.5L 4Cyl Turbo Diesel	DG4,DGQ = Multi-Speed Auto
			ENR = 2.8L 4Cyl Turbo Diesel	DG6 = 4 Speed Auto Transm
			EN0 = 4Cyl Turbo Diesel	DG0 = All Automatic Transm
				DBB = All Manual Transm

AR = Use as required - = Non illustrated part # = New this model year **June 3, 2003**

« RETURN TO GROUP INDEX

Plumbing, Air Conditioning 2.4L Engine, LHD
Figure 024-270

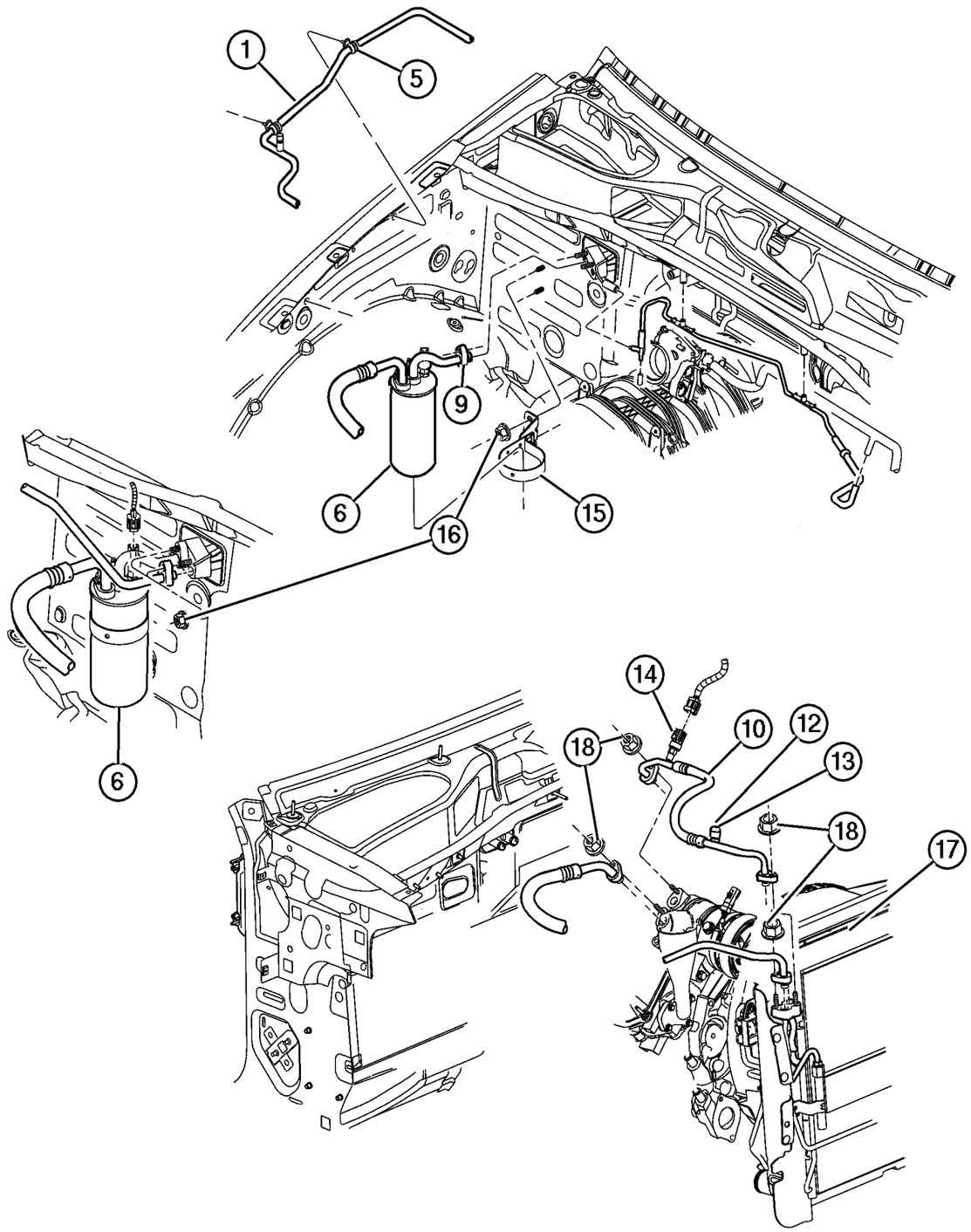

ITEM	PART NUMBER	QTY	LINE	SERIES	BODY	ENGINE	TRANS	TRIM	DESCRIPTION
Note; Sales Codes									
[ED0]= All 2.2L, 2.5L, 2.4L, 4 Cylinder Gas Engines									
1	55037 809AB	1	J, T						LINE, A/C Liquid
-2	5072 141AA	2	J, T						GASKET & O RING KIT, A/C Line
-3	4882 334	1	J, T						VALVE, A/C Discharge Line Check
-4	4882 335	1	J, T						CAP, A/C Check Valve
5	5602 1384	2							CLIP, Wiring
6	55037 803AB	1	J, T			ED0			ACCUMULATOR, Suction Line, with Suction Line
-7	5072 139AA	1	J, T			ED0			ACCUMULATOR, Air Conditioning, Without Suction Line
-8	5072 141AA	2	J, T						GASKET & O RING KIT, A/C Line, Suction Line
9	5072 160AA	1	J, T			ED0			LINE, A/C Liquid
10	55037 800AC	1				ED0			LINE, A/C Discharge
-11	5066 497AA	2				ED0			GASKET & O RING KIT, A/C Line
12	4723 029	1				ED0			VALVE, A/C Discharge Line Check
13	5264 642	1				ED0			CAP, A/C Check Valve
14	5072 138AA	1				ED0			TRANSDUCER KIT, A/C Pressure
15	55037 476AA	1	J, T						BRACKET, Accumulator
16	6506 152AA	2	J, T						NUT AND CONED WASHER, Hex, M8x1.25
17	55037 465AB	1				ED0			CONDENSER, Air Conditioning
18	6506 152AA	2							NUT AND CONED WASHER, Hex, M8x1.25

JEEP LIBERTY (KJ)

SERIES	LINE	BODY	ENGINE	TRANSMISSION
P = Limited	J = LHD (4WD)	74 = 4 Dr. (104.3 WB)	ED1, ED0 = 2.4L Power Tech	DDK = 5 Speed HDManual
H = Sport	U = RHD (4WD)		EKG, EK0 = 3.7L Power Tech	DDD = 5 Speed HD Manual
M = Renegade	T = LHD (2WD)		ENJ = 2.5L 4Cyl Turbo Diesel	DG4,DGQ = Multi-Speed Auto
			ENR = 2.8L 4Cyl Turbo Diesel	DG6 = 4 Speed Auto Transm
			EN0 = 4Cyl Turbo Diesel	DG0 = All Automatic Transm
				DBB = All Manual Transm

Plumbing, Air Conditioning 2.4L Engine, RHD
Figure 024-280

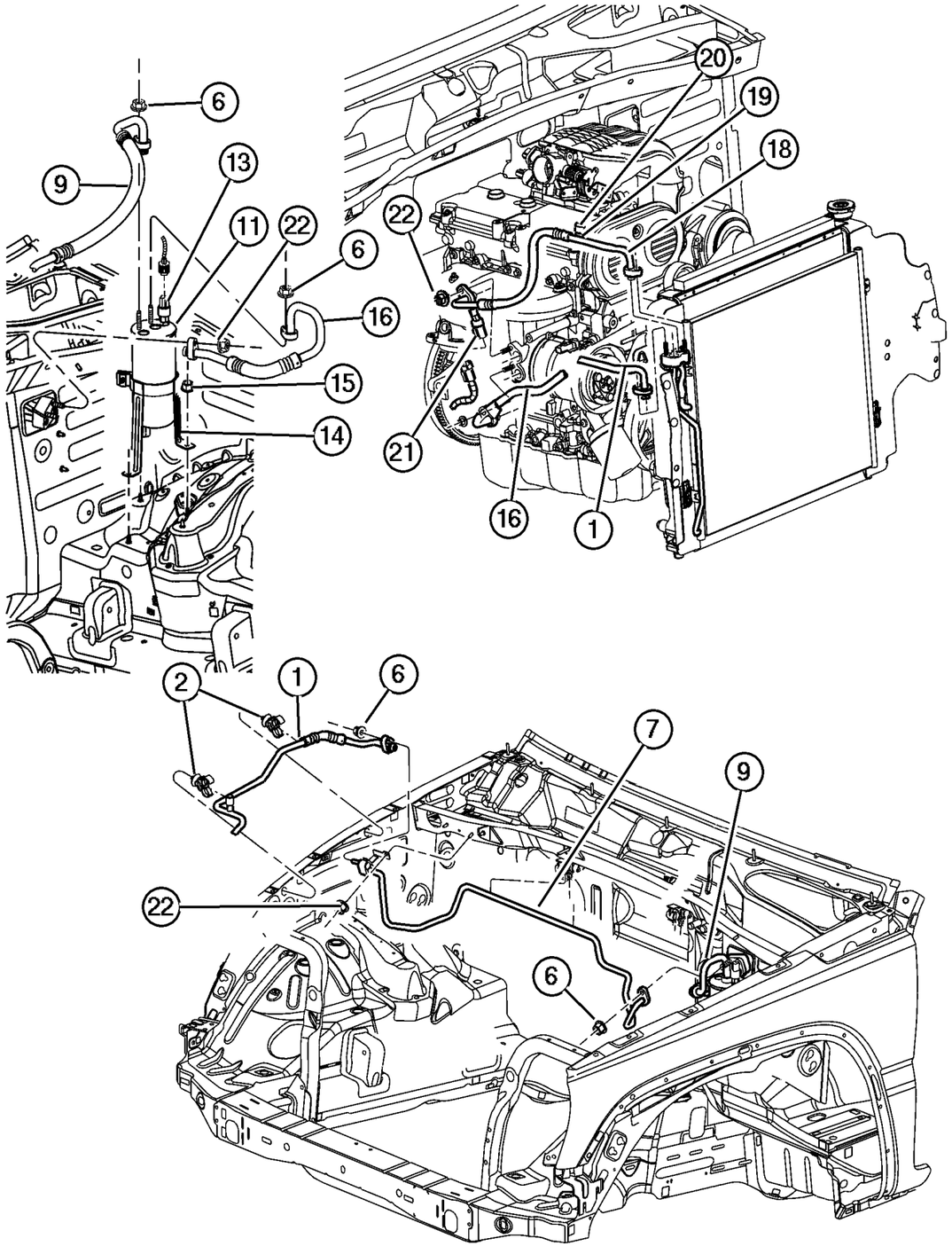

ITEM	PART NUMBER	QTY	LINE	SERIES	BODY	ENGINE	TRANS	TRIM	DESCRIPTION
Note; Sales Codes									
[ED0]= All 2.2L, 2.5L, 2.4L, 4 Cylinder Gas Engines									
1	55037 810AC	1	U						LINE, A/C Liquid
2	5602 1384	2							CLIP, Wiring
-3	4882 334	1	U						VALVE, A/C Discharge Line Check
-4	4882 335	1	U						CAP, A/C Check Valve
-5	5066 497AA	1	U						GASKET & O RING KIT, A/C Line
6	6506 152AA	1	U						NUT AND CONED WASHER, Hex, M8x1.25
7	55037 811AB	1	U						LINE, A/C Liquid
-8	5066 497AA	1	U						GASKET & O RING KIT, A/C Line
9									LINE, A/C Suction
	55037 804AB	1	U			ED0			
	55037 595AA	1	U						
-10	5066 497AA	1	U						GASKET & O RING KIT, A/C Line
11	55037 471AC	1	U						ACCUMULATOR, Air Conditioning
-12	55037 588AA	1	U			ED0			CLIP, A/C Suction Line
13	4799 758	1	J, U						TRANSDUCER, Pressure Sensor
14	55037 476AA	1	J, T						BRACKET, Accumulator
15	6101 447	1	U						NUT
16	55037 595AA	1	U						LINE, A/C Suction
-17	5072 141AA	1	U						GASKET & O RING KIT, A/C Line
18	55037 800AC	1				ED0			LINE, A/C Discharge
19	4723 029	1				ED0			VALVE, A/C Discharge Line Check
20	5264 642	1				ED0			CAP, A/C Check Valve
21	5072 138AA	1				ED0			TRANSDUCER KIT, A/C Pressure
22	6506 152AA	2							NUT AND CONED WASHER, Hex, M8x1.25

JEEP LIBERTY (KJ)

SERIES	LINE	BODY	ENGINE	TRANSMISSION
P = Limited	J = LHD (4WD)	74 = 4 Dr. (104.3 WB)	ED1, ED0 = 2.4L Power Tech	DDK = 5 Speed HDManual
H = Sport	U = RHD (4WD)		EKG, EK0 = 3.7L Power Tech	DDD = 5 Speed HD Manual
M = Renegade	T = LHD (2WD)		ENJ = 2.5L 4Cyl Turbo Diesel	DG4,DGQ = Multi-Speed Auto
			ENR = 2.8L 4Cyl Turbo Diesel	DG6 = 4 Speed Auto Transm
			EN0 = 4Cyl Turbo Diesel	DG0 = All Automatic Transm
				DBB = All Manual Transm

Plumbing, Air Conditioning 3.7L Engine, LHD
Figure 024-285

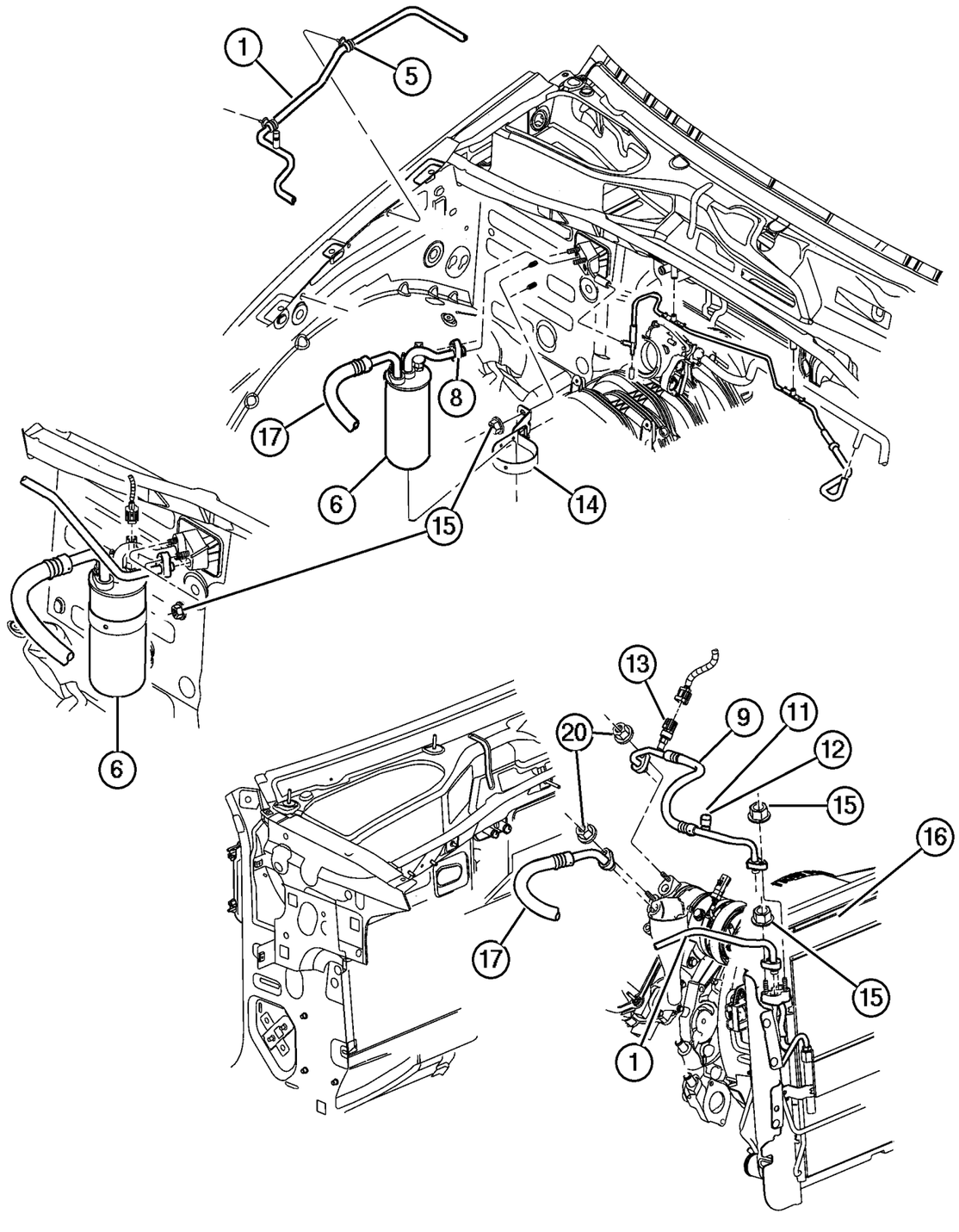

ITEM	PART NUMBER	QTY	LINE	SERIES	BODY	ENGINE	TRANS	TRIM	DESCRIPTION
Note; Sales Codes									
[EK0]= All 3.7L, 6 Cylinder Gas Engines									
1	55037 809AB	1	J, T						LINE, A/C Liquid
-2	5072 141AA	2	J, T						GASKET & O RING KIT, A/C Line
-3	4882 334	1	J, T						VALVE, A/C Discharge Line Check
-4	4882 335	1	J, T						CAP, A/C Check Valve
5	5602 1384	2							CLIP, Wiring
6	55037 807AC	1	J, T			EK0			ACCUMULATOR, Air Conditioning, With Suction Line
-7	5072 139AA	1	J, T			EK0			ACCUMULATOR, Air Conditioning, Without Suction Line
8	5072 160AA	1	J, T			EK0			LINE, A/C Liquid
9	55037 801AB	1				EK0			LINE, A/C Discharge
-10	5066 497AA	2				EK0			GASKET & O RING KIT, A/C Line
11	4882 334	1	J, T						VALVE, A/C Discharge Line Check
12	5264 642	1				EK0			CAP, A/C Check Valve
13	5072 138AA	1				EK0			TRANSDUCER KIT, A/C Pressure, Discharge Line
14	55037 476AA	1	J, T						BRACKET, Accumulator
15	6506 152AA	2	J, T						NUT AND CONED WASHER, Hex, M8x1.25
16	55037 465AC	1				EK0			CONDENSER, Air Conditioning
17	5072 199AA	1	J, T			EK0			LINE, A/C Suction
-18	5072 141AA	2	J, T						GASKET & O RING KIT, A/C Line
-19	5072 200AA	1	J, T			EK0			TRANSDUCER, Pressure Sensor, Suction Line
20	6506 152AA	2							NUT AND CONED WASHER, Hex, M8x1.25

JEEP LIBERTY (KJ)

SERIES	LINE	BODY	ENGINE	TRANSMISSION
P = Limited	J = LHD (4WD)	74 = 4 Dr. (104.3 WB)	ED1, ED0 = 2.4L Power Tech	DDK = 5 Speed HDManual
H = Sport	U = RHD (4WD)		EKG, EK0 = 3.7L Power Tech	DDD = 5 Speed HD Manual
M = Renegade	T = LHD (2WD)		ENJ = 2.5L 4Cyl Turbo Diesel	DG4,DGQ = Multi-Speed Auto
			ENR = 2.8L 4Cyl Turbo Diesel	DG6 = 4 Speed Auto Transm
			EN0 = 4Cyl Turbo Diesel	DG0 = All Automatic Transm
				DBB = All Manual Transm

AR = Use as required - = Non illustrated part # = New this model year **June 3, 2003**

« RETURN TO GROUP INDEX

Plumbing, Air Conditioning 3.7L Engine, RHD
Figure 024-288

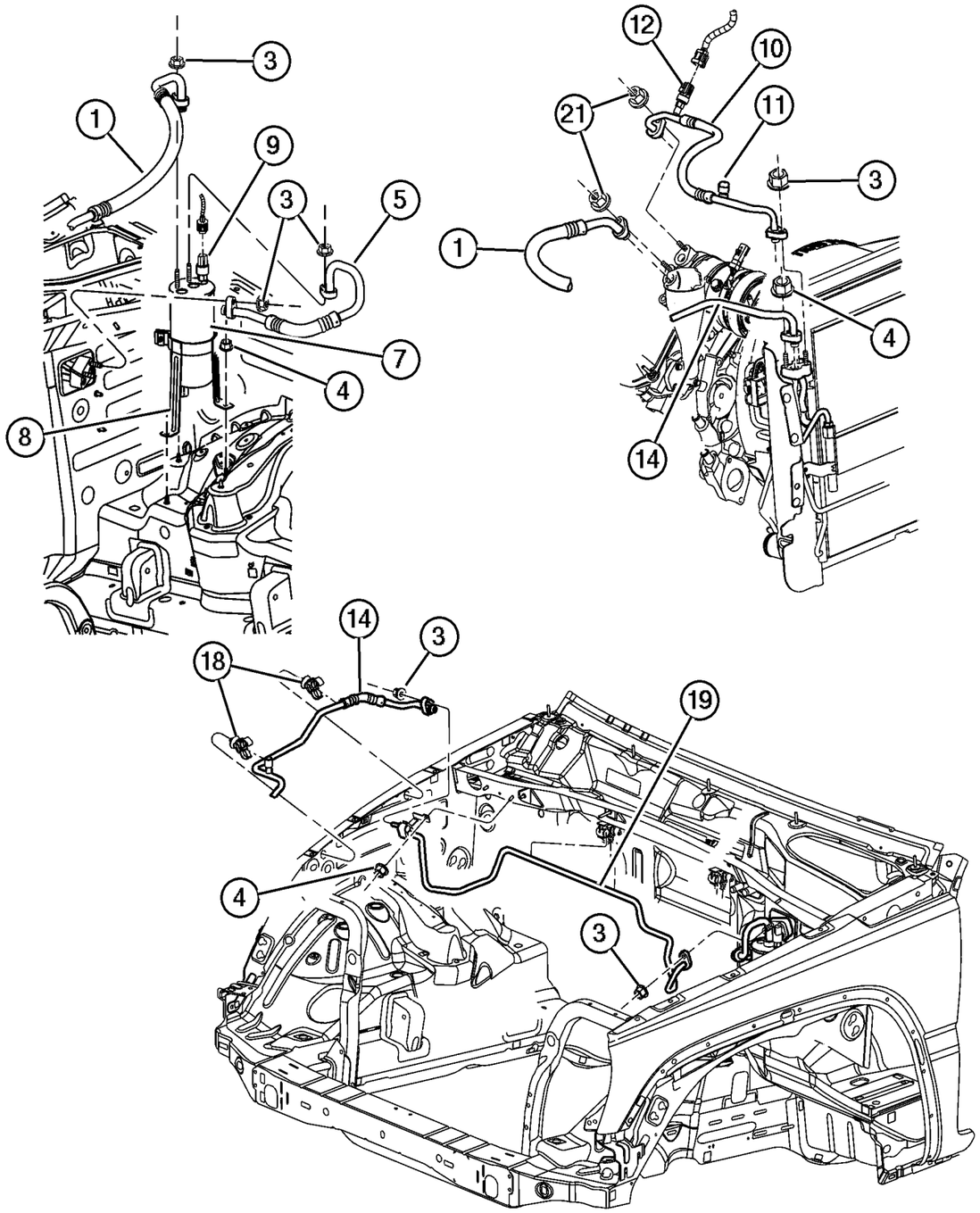

ITEM	PART NUMBER	QTY	LINE	SERIES	BODY	ENGINE	TRANS	TRIM	DESCRIPTION
Note; Sales Codes									
[EK0]= All 3.7L, 6 Cylinder Gas Engines									
1	55037 808AA	1	U			EK0			LINE, A/C Suction
-2	5072 141AA	2	J, T						GASKET & O RING KIT, A/C Line
3	6506 152AA	1	U						NUT AND CONED WASHER, Hex, M8x1.25
4	6101 447	1	U						NUT
5	55037 595AA	1	U						LINE, A/C Suction, to Evaporator
-6	5072 141AA	1	U						GASKET & O RING KIT, A/C Line
7	55037 471AC	1	U						ACCUMULATOR, Air Conditioning
8	55037 476AA	1	J, T						BRACKET, Accumulator
9	5072 200AA	1	J, T			EK0			TRANSDUCER, Pressure Sensor
10	55037 801AB	1				EK0			LINE, A/C Discharge
11	5264 642	1				EK0			CAP, A/C Check Valve
12	5072 138AA	1				EK0			TRANSDUCER KIT, A/C Pressure
-13	5066 497AA	1	U						GASKET & O RING KIT, A/C Line
14	55037 810AC	1	U						LINE, A/C Liquid
-15	4882 334	1	U						VALVE, A/C Discharge Line Check
-16	4882 335	1	U						CAP, A/C Check Valve
-17	5066 497AA	1	U						GASKET & O RING KIT, A/C Line
18	5602 1384	2							CLIP, Wiring
19	55037 811AB	1	U						LINE, A/C Liquid
-20	5066 497AA	1	U						GASKET & O RING KIT, A/C Line
21	6506 152AA	2							NUT AND CONED WASHER, Hex, M8x1.25

JEEP LIBERTY (KJ)

SERIES	LINE	BODY	ENGINE	TRANSMISSION
P = Limited	J = LHD (4WD)	74 = 4 Dr. (104.3 WB)	ED1, ED0 = 2.4L Power Tech	DDK = 5 Speed HDManual
H = Sport	U = RHD (4WD)		EKG, EK0 = 3.7L Power Tech	DDD = 5 Speed HD Manual
M = Renegade	T = LHD (2WD)		ENJ = 2.5L 4Cyl Turbo Diesel	DG4,DGQ = Multi-Speed Auto
			ENR = 2.8L 4Cyl Turbo Diesel	DG6 = 4 Speed Auto Transm
			EN0 = 4Cyl Turbo Diesel	DG0 = All Automatic Transm
				DBB = All Manual Transm

AR = Use as required - = Non illustrated part # = New this model year **June 3, 2003**

« RETURN TO GROUP INDEX

Plumbing, Air Conditioning 2.5,2.8L Diesel Engine, LHD
Figure 024-290

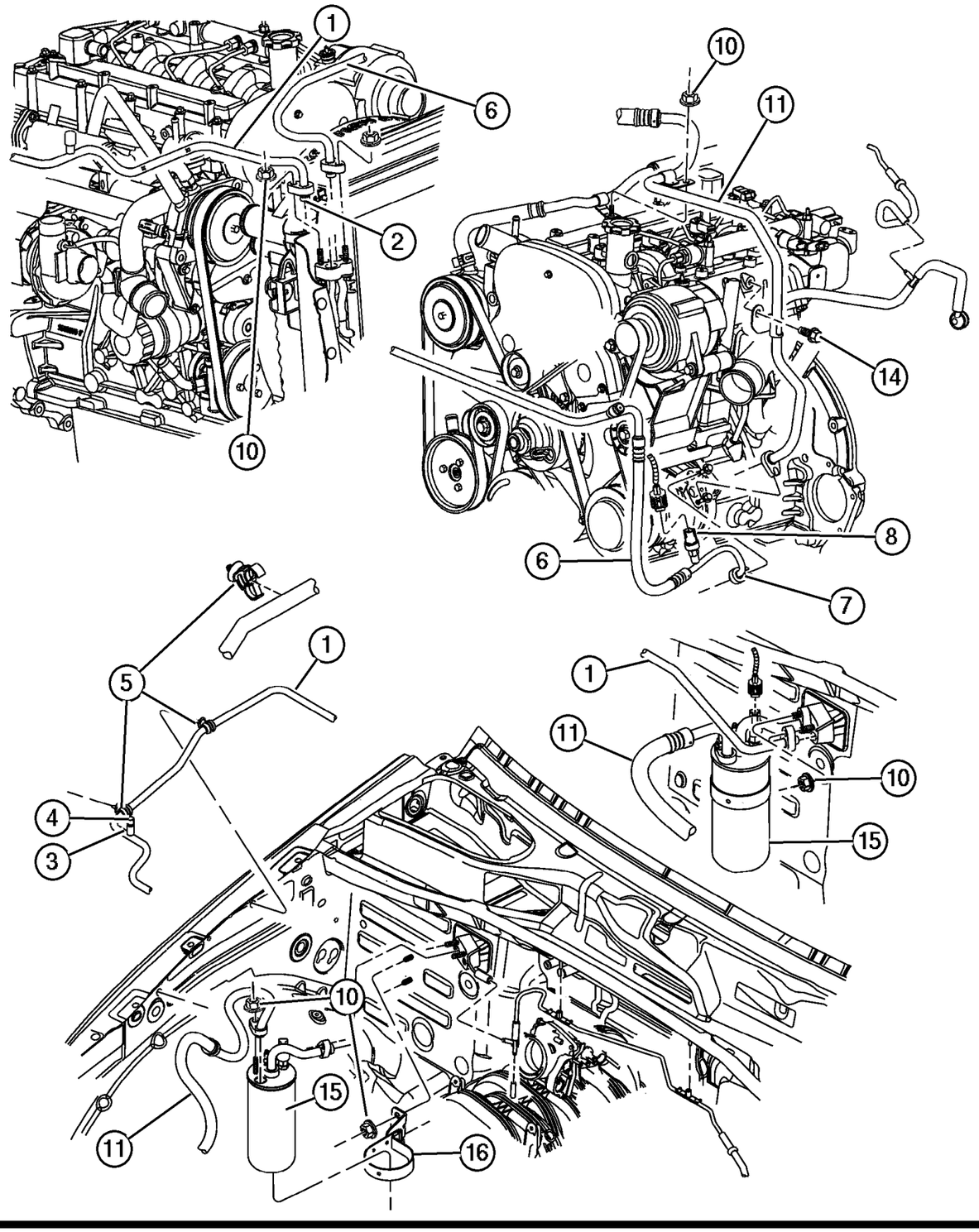

ITEM	PART NUMBER	QTY	LINE	SERIES	BODY	ENGINE	TRANS	TRIM	DESCRIPTION
1	55037 809AB	1	J, T						LINE, A/C Liquid
2	5072 141AA	2	J, T						GASKET & O RING KIT, A/C Line
3	4882 334	1	J, T						VALVE, A/C Discharge Line Check
4	4882 335	1	J, T						CAP, A/C Check Valve
5	5503 6022	1				EN0			CLIP, A/C Liquid Line
6	55037 802AA	1				EN0			LINE, A/C Discharge
7	5066 497AA	2				EN0			GASKET & O RING KIT, A/C Line
8	5072 138AA	1				EN0			TRANSDUCER KIT, A/C Pressure
-9	4796 565	1				EN0			O RING, A/C Line, 1/2 inch - Red
10	6506 152AA	2	J, T						NUT AND CONED WASHER, Hex, M8x1.25
11	55037 805AB	1	J, T			EN0			LINE, A/C Suction
-12	4796 564	1	J, T			EN0			O RING, A/C Line, 5/8 inch - Red
-13	5072 141AA	1	J, T			EN0			GASKET & O RING KIT, A/C Line
14	6501 474	1	J, T			EN0			BOLT, Hex Head, M8x1.25x16
15	55037 470AC	1	J, T			EN0			ACCUMULATOR, Suction and Discharge Line
16	55037 476AA	1	J, T						BRACKET, Accumulator

JEEP LIBERTY (KJ)

SERIES	LINE	BODY	ENGINE	TRANSMISSION
P = Limited	J = LHD (4WD)	74 = 4 Dr. (104.3 WB)	ED1, ED0 = 2.4L Power Tech	DDK = 5 Speed HDManual
H = Sport	U = RHD (4WD)		EKG, EK0 = 3.7L Power Tech	DDD = 5 Speed HD Manual
M = Renegade	T = LHD (2WD)		ENJ = 2.5L 4Cyl Turbo Diesel	DG4,DGQ = Multi-Speed Auto
			ENR = 2.8L 4Cyl Turbo Diesel	DG6 = 4 Speed Auto Transm
			EN0 = 4Cyl Turbo Diesel	DG0 = All Automatic Transm
				DBB = All Manual Transm

AR = Use as required - = Non illustrated part # = New this model year

June 3, 2003

« RETURN TO GROUP INDEX

Plumbing, Air Conditioning 2.5,2.8L Diesel Engine, RHD
Figure 024-295

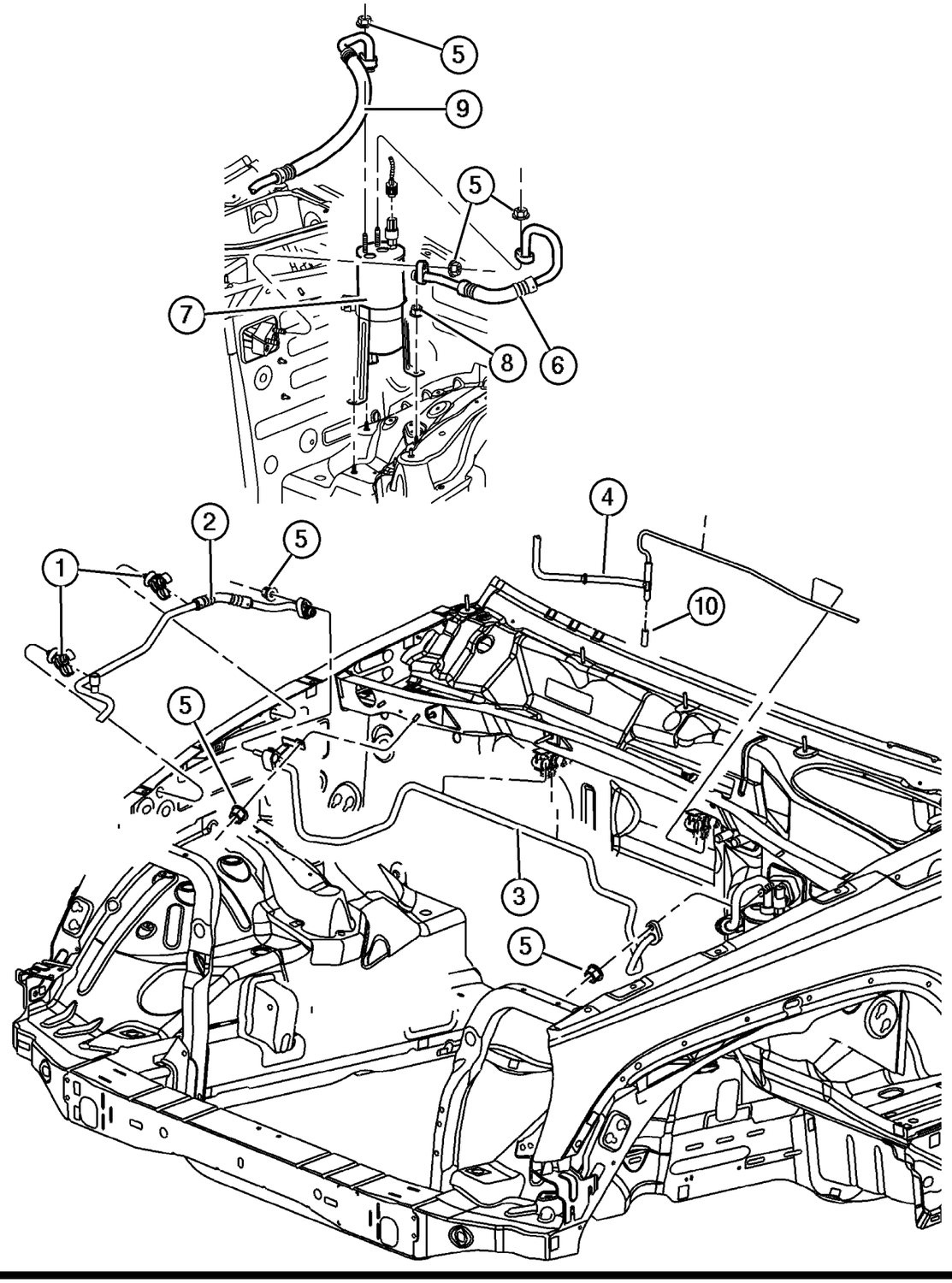

ITEM	PART NUMBER	QTY	LINE	SERIES	BODY	ENGINE	TRANS	TRIM	DESCRIPTION
1	5602 1384	2							CLIP, Wiring
2	55037 802AA	1				EN0			LINE, A/C Discharge
3	55037 811AB	1	U						LINE, A/C Liquid
4	55038 433AC	1	U						HOSE AND VALVE, Vacuum
5	6506 152AA	3				EN0			NUT AND CONED WASHER, Hex, M8x1.25
6	55037 595AA	1	U						LINE, A/C Suction
7	55037 471AC	1	U						ACCUMULATOR, Air Conditioning
8	6101 447	1	U						NUT
9	55037 806AA	1	U			EN0			LINE, A/C Suction
10	3580 172	1							CAP, Vacuum

JEEP LIBERTY (KJ)

SERIES	LINE	BODY	ENGINE	TRANSMISSION
P = Limited	J = LHD (4WD)	74 = 4 Dr. (104.3 WB)	ED1, ED0 = 2.4L Power Tech	DDK = 5 Speed HDManual
H = Sport	U = RHD (4WD)		EKG, EK0 = 3.7L Power Tech	DDD = 5 Speed HD Manual
M = Renegade	T = LHD (2WD)		ENJ = 2.5L 4Cyl Turbo Diesel	DG4,DGQ = Multi-Speed Auto
			ENR = 2.8L 4Cyl Turbo Diesel	DG6 = 4 Speed Auto Transm
			EN0 = 4Cyl Turbo Diesel	DG0 = All Automatic Transm
				DBB = All Manual Transm

AR = Use as required - = Non illustrated part # = New this model year

June 3, 2003

« RETURN TO GROUP INDEX

Control, Heater and Air Conditioning
Figure 024-310

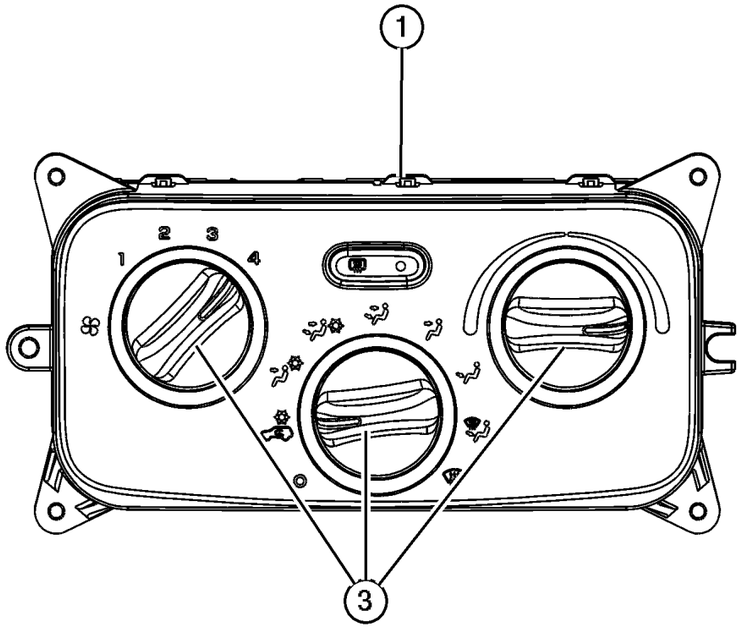

ITEM	PART NUMBER	QTY	LINE	SERIES	BODY	ENGINE	TRANS	TRIM	DESCRIPTION
1	55037 533AC	1							CONTROL, A/C And Heater, with Air Conditioning
-2	55037 531AC	1							CONTROL, Heater, without Air Conditioning
3	5069 169AA	3							KNOB, A/C And Heater Control - Rotary
-4	5069 170AA	2							BULB, Heater and A/C Control

JEEP LIBERTY (KJ)

SERIES	LINE	BODY	ENGINE	TRANSMISSION
P = Limited	J = LHD (4WD)	74 = 4 Dr. (104.3 WB)	ED1, ED0 = 2.4L Power Tech	DDK = 5 Speed HDManual
H = Sport	U = RHD (4WD)		EKG, EK0 = 3.7L Power Tech	DDD = 5 Speed HD Manual
M = Renegade	T = LHD (2WD)		ENJ = 2.5L 4Cyl Turbo Diesel	DG4,DGQ = Multi-Speed Auto
			ENR = 2.8L 4Cyl Turbo Diesel	DG6 = 4 Speed Auto Transm
			EN0 = 4Cyl Turbo Diesel	DG0 = All Automatic Transm
				DBB = All Manual Transm

Compressor, 2.4L - 3.7L Engine
Figure 024-410

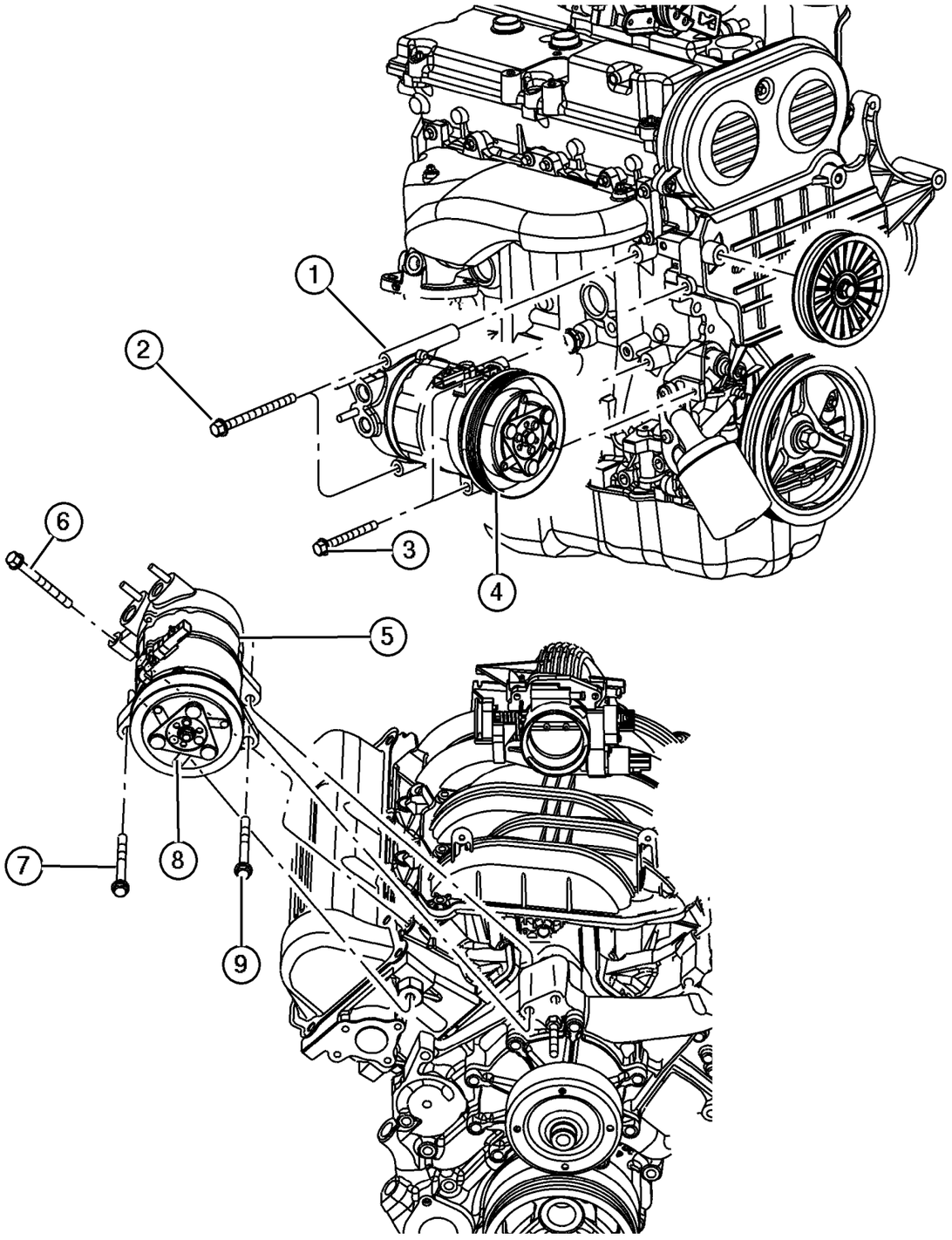

ITEM	PART NUMBER	QTY	LINE	SERIES	BODY	ENGINE	TRANS	TRIM	DESCRIPTION
Note; Sales Codes									
[ED0]= All 2.2L, 2.5L, 2.4L, 4 Cylinder Gas Engines									
[EK0]= All 3.7L, 6 Cylinder Gas Engines									
1	55037 524AC	1				ED0			COMPRESSOR, Air Conditioning
2	6102 178AA	2				ED0			SCREW, Hex Flange Head, M8x1.25x130
3									BOLT, (NOT SERVICED) (Not Serviced)
4									CLUTCH, A/C Compressor
	5072 536AB	1				ED0			
	5083 076AA	1				EK0			
5	55037 466AC	1				EK0			COMPRESSOR, Air Conditioning
6	6505 482AA	1				EK0			SCREW AND WASHER, Hex Head, M8x1.25x50
7	6505 487AA	1				EK0			SCREW AND WASHER, M10x1.5x45
8	5083 076AA	1				EK0			CLUTCH, A/C Compressor
9	6504 344	1				EK0			SCREW AND WASHER, Hex Head

JEEP LIBERTY (KJ)

SERIES	LINE	BODY	ENGINE	TRANSMISSION
P = Limited	J = LHD (4WD)	74 = 4 Dr. (104.3 WB)	ED1, ED0 = 2.4L Power Tech	DDK = 5 Speed HDManual
H = Sport	U = RHD (4WD)		EKG, EK0 = 3.7L Power Tech	DDD = 5 Speed HD Manual
M = Renegade	T = LHD (2WD)		ENJ = 2.5L 4Cyl Turbo Diesel	DG4,DGQ = Multi-Speed Auto
			ENR = 2.8L 4Cyl Turbo Diesel	DG6 = 4 Speed Auto Transm
			EN0 = 4Cyl Turbo Diesel	DG0 = All Automatic Transm
				DBB = All Manual Transm

AR = Use as required - = Non illustrated part # = New this model year **June 3, 2003**

« RETURN TO GROUP INDEX

Compressor, 2.5,2.8L Diesel Engine
Figure 024-430

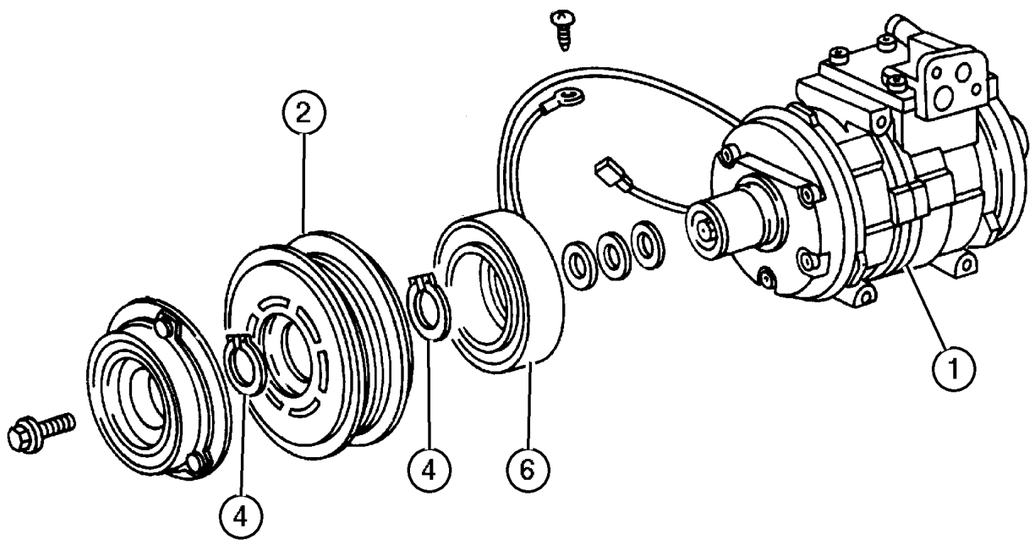

ITEM	PART NUMBER	QTY	LINE	SERIES	BODY	ENGINE	TRANS	TRIM	DESCRIPTION
1									COMPRESSOR, Air Conditioning
	#5093 940AA	1				EN0			Without Clutch
	55037 467AB	1				EN0			With Clutch
2	5072 864AA	1				EN0			PULLEY, A/C Compressor
-3	5066 228AA	1				EN0			CLUTCH OVERHAUL KIT, A/C Compressor
4	5264 454	1				EN0			SNAP RING KIT, A/C Clutch
-5	8230 0102	1				EN0			LUBRICANT, Oil, 75w90
6	5003 681AA	1				EN0			COIL, Air Conditioning Clutch

JEEP LIBERTY (KJ)

SERIES	LINE	BODY	ENGINE	TRANSMISSION
P = Limited	J = LHD (4WD)	74 = 4 Dr. (104.3 WB)	ED1, ED0 = 2.4L Power Tech	DDK = 5 Speed HDManual
H = Sport	U = RHD (4WD)		EKG, EK0 = 3.7L Power Tech	DDD = 5 Speed HD Manual
M = Renegade	T = LHD (2WD)		ENJ = 2.5L 4Cyl Turbo Diesel	DG4,DGQ = Multi-Speed Auto
			ENR = 2.8L 4Cyl Turbo Diesel	DG6 = 4 Speed Auto Transm
			EN0 = 4Cyl Turbo Diesel	DG0 = All Automatic Transm
				DBB = All Manual Transm

AR = Use as required - = Non illustrated part # = New this model year **June 3, 2003**

« RETURN TO GROUP INDEX

Compressor Mounting, 2.4L - 3.7L Engine
Figure 024-510

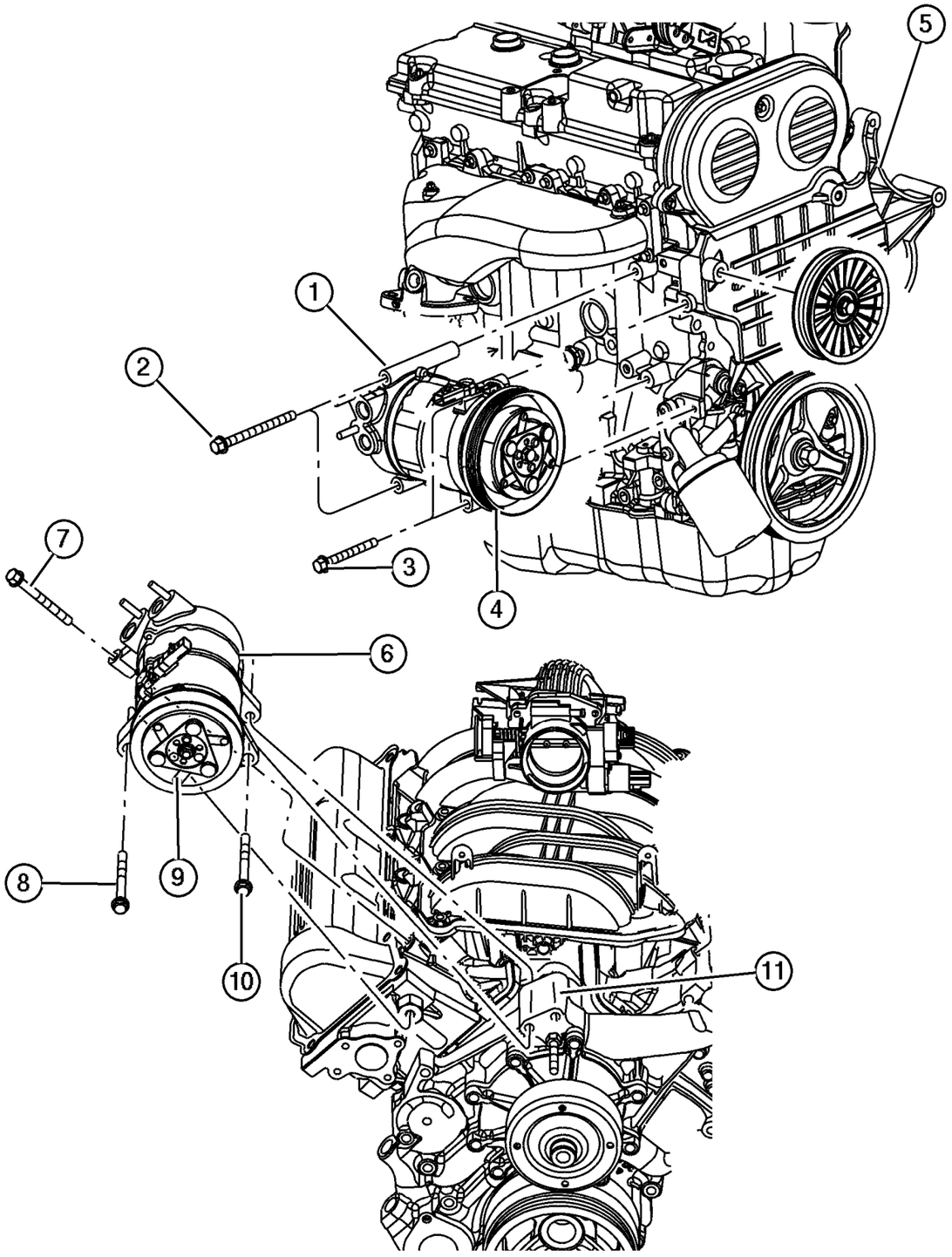

ITEM	PART NUMBER	QTY	LINE	SERIES	BODY	ENGINE	TRANS	TRIM	DESCRIPTION
Note; Sales Codes									
[ED0]= All 2.2L, 2.5L, 2.4L, 4 Cylinder Gas Engines									
[EK0]= All 3.7L, 6 Cylinder Gas Engines									
1	55037 524AC	1				ED0			COMPRESSOR, Air Conditioning
2	6102 178AA	2				ED0			SCREW, Hex Flange Head, M8x1.25x130
3									BOLT, (NOT SERVICED) (Not Serviced)
4	5072 536AB	1				ED0			CLUTCH, A/C Compressor
5	4861 371AA	1				ED0			BRACKET, Alternator
6	55037 466AC	1				EK0			COMPRESSOR, Air Conditioning
7	6505 482AA	1				EK0			SCREW AND WASHER, Hex Head, M8x1.25x50
8	6507 372AA	2				ED0			STUD, Double Ended
9	5083 076AA	1				EK0			CLUTCH, A/C Compressor
10	6504 344	1				EK0			SCREW AND WASHER, Hex Head
11	53021 238AB	1				EK0			COVER, Timing Belt

JEEP LIBERTY (KJ)

SERIES	LINE	BODY	ENGINE	TRANSMISSION
P = Limited	J = LHD (4WD)	74 = 4 Dr. (104.3 WB)	ED1, ED0 = 2.4L Power Tech	DDK = 5 Speed HDManual
H = Sport	U = RHD (4WD)		EKG, EK0 = 3.7L Power Tech	DDD = 5 Speed HD Manual
M = Renegade	T = LHD (2WD)		ENJ = 2.5L 4Cyl Turbo Diesel	DG4,DGQ = Multi-Speed Auto
			ENR = 2.8L 4Cyl Turbo Diesel	DG6 = 4 Speed Auto Transm
			EN0 = 4Cyl Turbo Diesel	DG0 = All Automatic Transm
				DBB = All Manual Transm

Compressor Mounting, 2.5,2.8L Diesel Engine
Figure 024-530

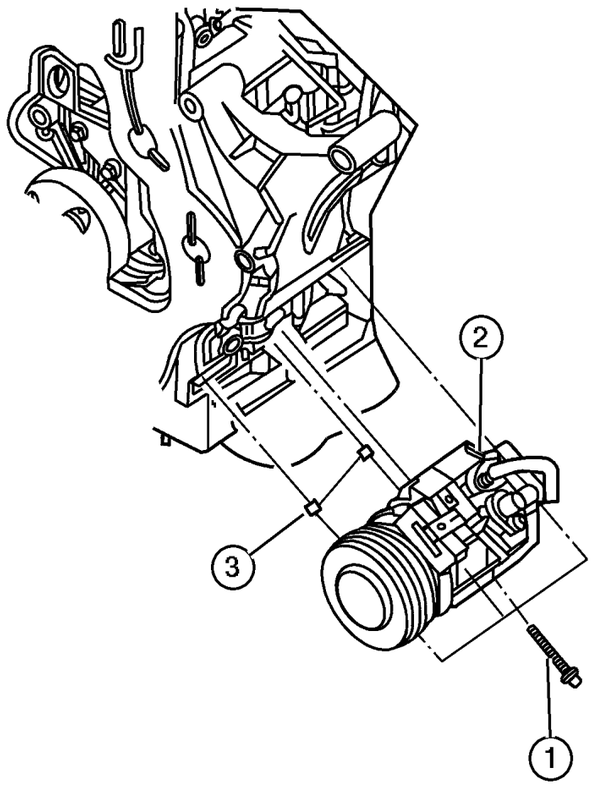

ITEM	PART NUMBER	QTY	LINE	SERIES	BODY	ENGINE	TRANS	TRIM	DESCRIPTION
1	4897 253AA	1				EN0			BOLT, Hex Flange Head, M10x35
2									COMPRESSOR, Air Conditioning
	#5093 940AA	1				EN0			Without Clutch
	55037 467AB	1				EN0			With Clutch
3	5066 930AA	2				EN0			PIN

JEEP LIBERTY (KJ)

SERIES	LINE	BODY	ENGINE	TRANSMISSION
P = Limited	J = LHD (4WD)	74 = 4 Dr. (104.3 WB)	ED1, ED0 = 2.4L Power Tech	DDK = 5 Speed HDManual
H = Sport	U = RHD (4WD)		EKG, EK0 = 3.7L Power Tech	DDD = 5 Speed HD Manual
M = Renegade	T = LHD (2WD)		ENJ = 2.5L 4Cyl Turbo Diesel	DG4,DGQ = Multi-Speed Auto
			ENR = 2.8L 4Cyl Turbo Diesel	DG6 = 4 Speed Auto Transm
			EN0 = 4Cyl Turbo Diesel	DG0 = All Automatic Transm
				DBB = All Manual Transm

AR = Use as required - = Non illustrated part # = New this model year **June 3, 2003**

« RETURN TO GROUP INDEX

Air Distribution Ducts
Figure 024-610

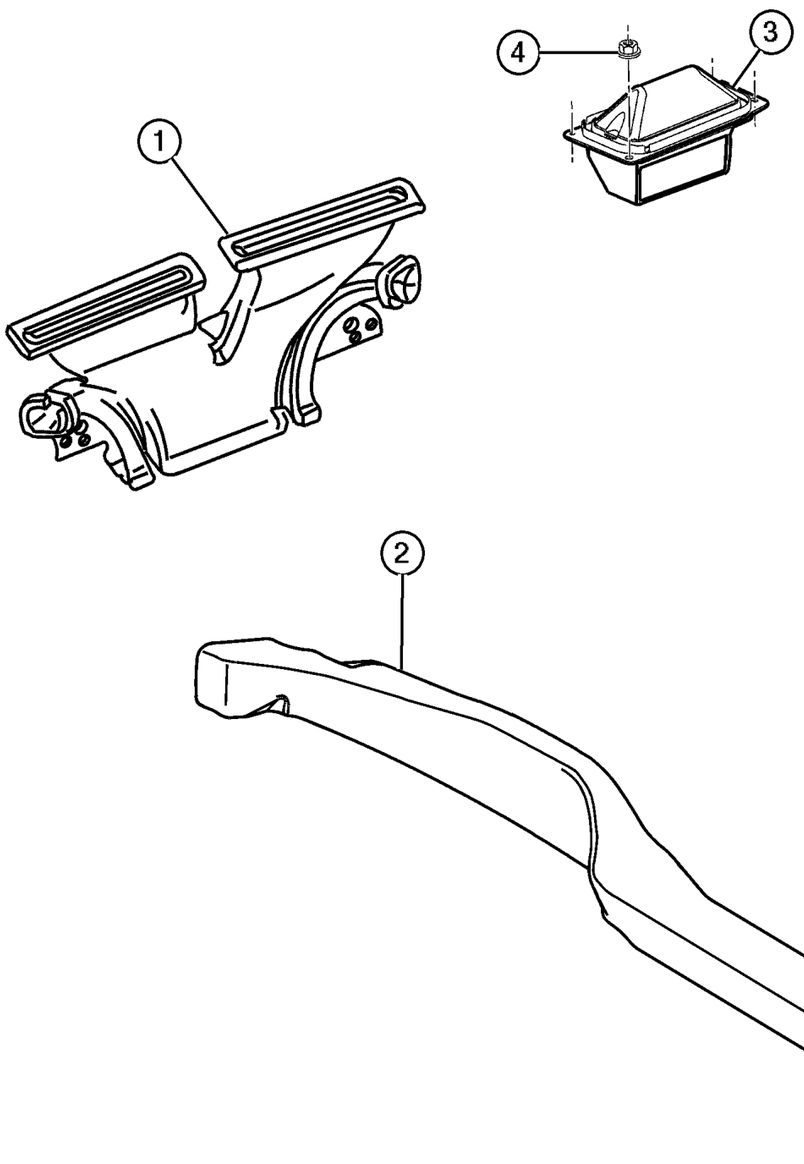

ITEM	PART NUMBER	QTY	LINE	SERIES	BODY	ENGINE	TRANS	TRIM	DESCRIPTION
NOTE : SALES CODES									
[DBB]= Transmission - All Manual									
[DG0] = Transmission - All Automatic									
1									DUCT, Defroster
	55037 448AB	1	J, T						
	55037 535AB	1	U						
2									DUCT, Rear Floor Heat
	55037 480AA	1							[DG0]
	55037 562AA	1							[DBB]
3									BAFFLE, Air Inlet
	55037 522AA	1	J, T						
	55037 523AA	1	U						
4									NUT, (NOT SERVICED) (Not Serviced)

JEEP LIBERTY (KJ)

SERIES	LINE	BODY	ENGINE	TRANSMISSION
P = Limited	J = LHD (4WD)	74 = 4 Dr. (104.3 WB)	ED1, ED0 = 2.4L Power Tech	DDK = 5 Speed HDManual
H = Sport	U = RHD (4WD)		EKG, EK0 = 3.7L Power Tech	DDD = 5 Speed HD Manual
M = Renegade	T = LHD (2WD)		ENJ = 2.5L 4Cyl Turbo Diesel	DG4,DGQ = Multi-Speed Auto
			ENR = 2.8L 4Cyl Turbo Diesel	DG6 = 4 Speed Auto Transm
			EN0 = 4Cyl Turbo Diesel	DG0 = All Automatic Transm
				DBB = All Manual Transm

Group – 025
Emission Systems

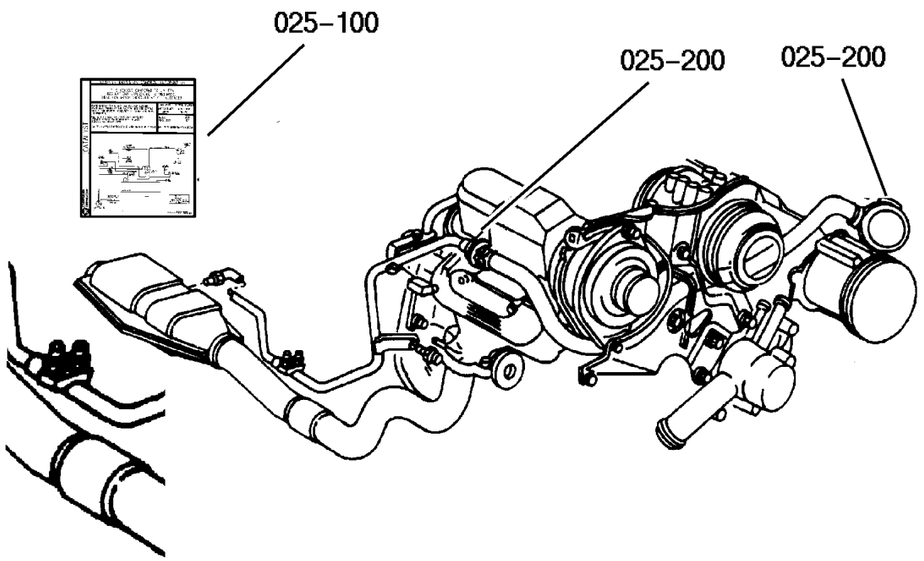

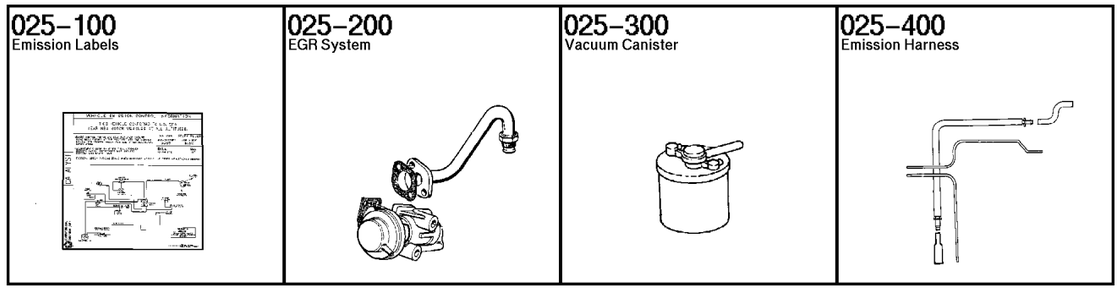

GROUP 25 - Emission Systems

Illustration Title	Group-Fig. No.
Emission Labels	
Emission Labels	Fig. 025-110
EGR System	
EGR System 2.5/2.8 Diesel [EN0]	Fig. 025-210
Vacuum Canister	
Vapor Canister 2.4L [ED1], 3.7L [EKG]	Fig. 025-310
Emission Harness	
Emission Vacuum Harness 2.5/2.8 Diesel [EN0]	Fig. 025-410
Emission Vacuum Harness 2.4L [ED1], 3.7L [EKG]	Fig. 025-420
Leak Detection Pump, 2.4L [ED1], 3.7L [EKG]	Fig. 025-430

Emission Labels
Figure 025-110

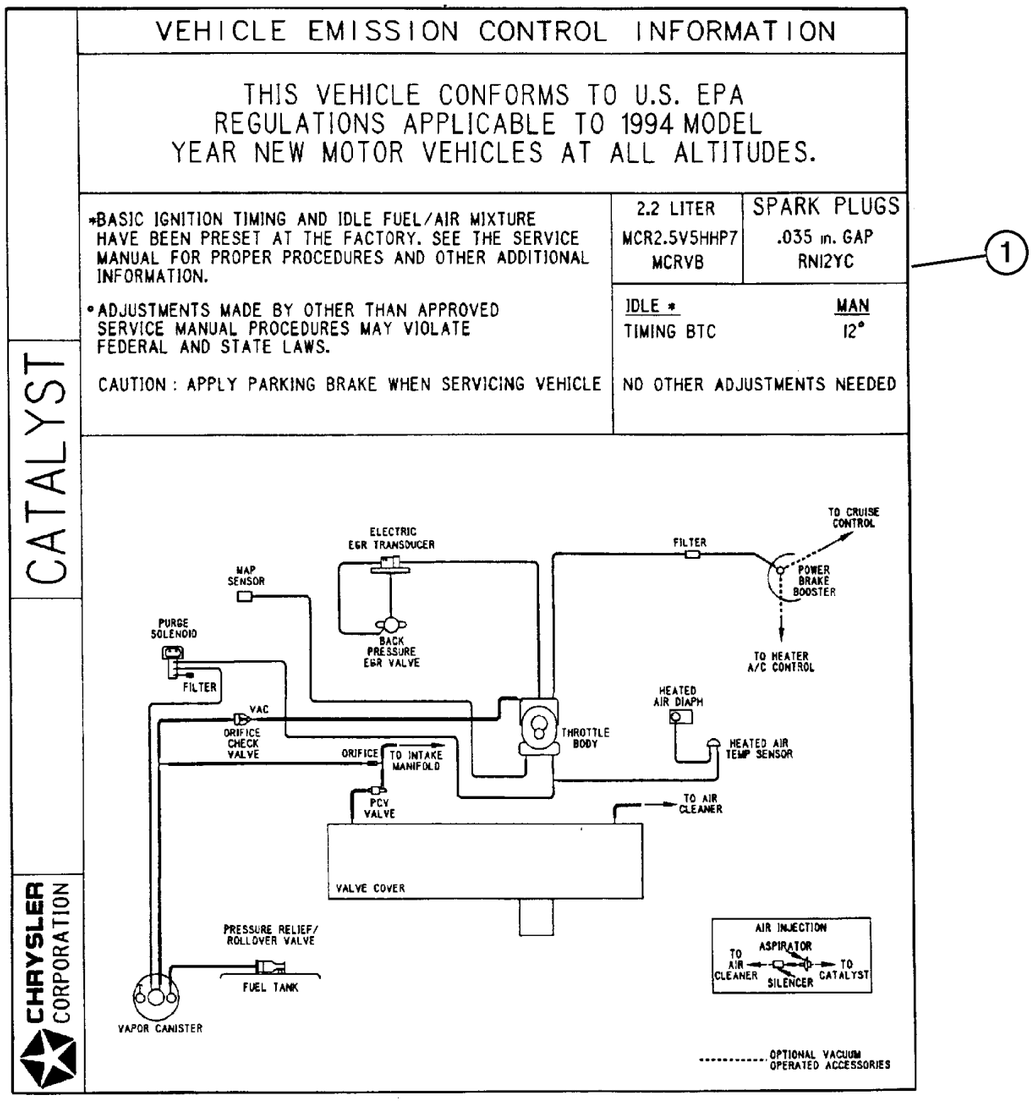

ITEM	PART NUMBER	QTY	LINE	SERIES	BODY	ENGINE	TRANS	TRIM	DESCRIPTION
Note; Sales Codes									
[ED0]= All 2.2L, 2.5L, 2.4L, 4 Cylinder Gas Engines									
[EK0]= All 3.7L, 6 Cylinder Gas Engines									
1									LABEL, Emission
	#52128 775AA	1				ED0			[NAS]
	#52128 776AB	1				EK0			[NAS]
	53013 385AA	1				ED0			[NA1]
	53013 388AA	1				EK0			[NA1]
	53014 004AB	1				EN0			[ABA]

JEEP LIBERTY (KJ)

SERIES	LINE	BODY	ENGINE	TRANSMISSION
P = Limited	J = LHD (4WD)	74 = 4 Dr. (104.3 WB)	ED1, ED0 = 2.4L Power Tech	DDK = 5 Speed HDManual
H = Sport	U = RHD (4WD)		EKG, EK0 = 3.7L Power Tech	DDD = 5 Speed HD Manual
M = Renegade	T = LHD (2WD)		ENJ = 2.5L 4Cyl Turbo Diesel	DG4,DGQ = Multi-Speed Auto
			ENR = 2.8L 4Cyl Turbo Diesel	DG6 = 4 Speed Auto Transm
			EN0 = 4Cyl Turbo Diesel	DG0 = All Automatic Transm
				DBB = All Manual Transm

EGR System 2.5/2.8 Diesel [EN0]
Figure 025-210

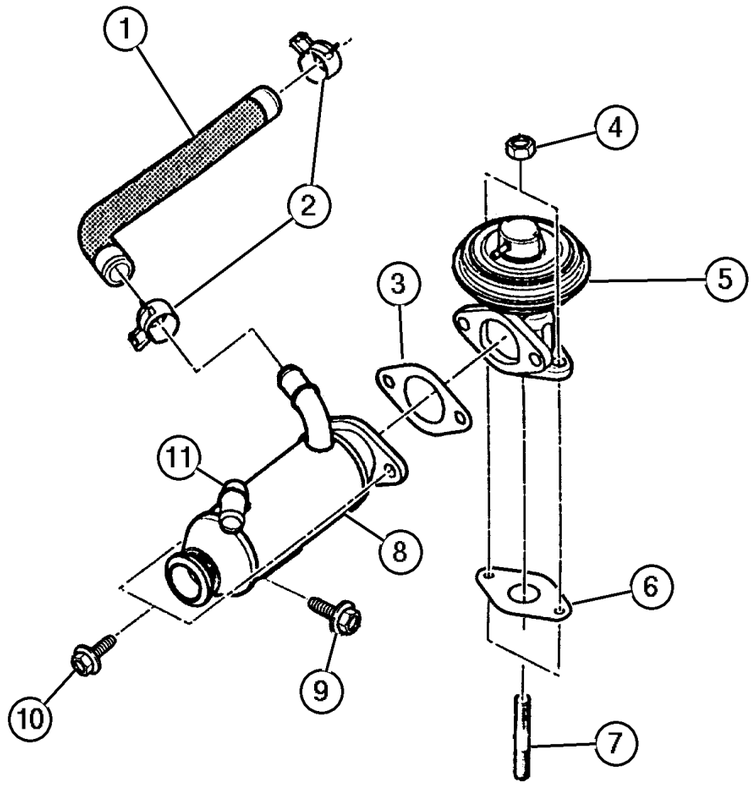

ITEM	PART NUMBER	QTY	LINE	SERIES	BODY	ENGINE	TRANS	TRIM	DESCRIPTION
Note; Sales Codes									
[DBB]= All Manual Transmissions									
[EN0]= All 4/5 Cylinder Turbo Diesels									
1	5072 689AA	1				EN0	DG0		PIPE, EGR to Manifold
2	4883 924AA	4				EN0	DG0		CLAMP, Heater Hose
3									GASKET, EGR Tube Flange
	5083 261AA	1				EN0	DBB		
		1				EN0	DG0		
4									NUT, Lock
	4882 610	6				EN0	DBB		
		6				EN0	DG0		
5									VALVE, EGR
	5066 800AB	1				EN0	DBB		
		1				EN0	DG0		
6	4663 247AB	1				ED0			GASKET, EGR Valve
7									STUD, Turbo Elbow
	4882 606	6				EN0	DBB		
		6				EN0	DG0		
8	5072 687AB	1				EN0	DG0		COOLER, EGR
9									SCREW
	5072 688AA	4				EN0	DBB		
		4				EN0	DG0		
10									SCREW
	5066 986AA	2				EN0	DBB		
		2				EN0	DG0		
11									CLAMP
	5066 942AA	1				EN0	DBB		
		1				EN0	DG0		
-12									CLAMP, Hose
	5066 943AA	1				EN0	DBB		
		1				EN0	DG0		

JEEP LIBERTY (KJ)

SERIES	LINE	BODY	ENGINE	TRANSMISSION
P = Limited	J = LHD (4WD)	74 = 4 Dr. (104.3 WB)	ED1, ED0 = 2.4L Power Tech	DDK = 5 Speed HDManual
H = Sport	U = RHD (4WD)		EKG, EK0 = 3.7L Power Tech	DDD = 5 Speed HD Manual
M = Renegade	T = LHD (2WD)		ENJ = 2.5L 4Cyl Turbo Diesel	DG4,DGQ = Multi-Speed Auto
			ENR = 2.8L 4Cyl Turbo Diesel	DG6 = 4 Speed Auto Transm
			EN0 = 4Cyl Turbo Diesel	DG0 = All Automatic Transm
				DBB = All Manual Transm

Vapor Canister 2.4L [ED1], 3.7L [EKG]
Figure 025-310

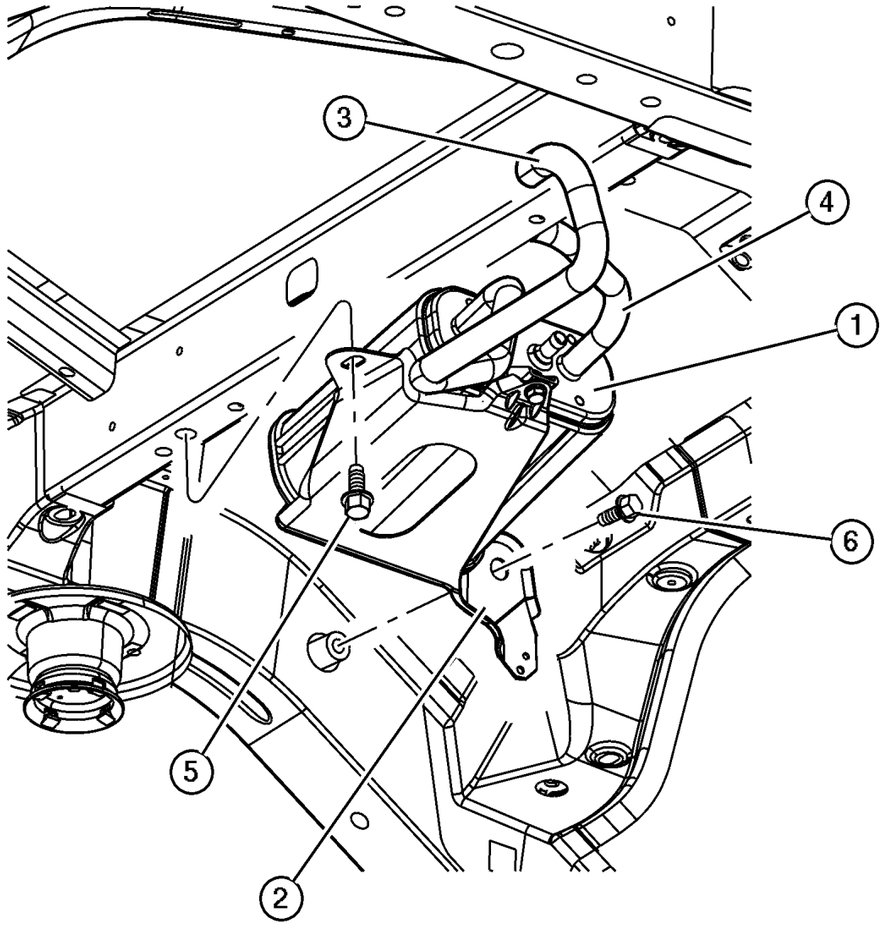

ITEM	PART NUMBER	QTY	LINE	SERIES	BODY	ENGINE	TRANS	TRIM	DESCRIPTION
1	53013 096AB	1				ED0, EK0			CANISTER, Vapor
2	53013 097AA	1				ED0, EK0			BRACKET, Vapor Canister
3	52109 571AD	1				ED0, EK0			HOSE, Canister to LDP
4	52109 572AC	1				ED0, EK0			HOSE, Canister to Vent Valve
5	6101 452	1				ED0, EK0			SCREW AND WASHER, Hex Head, M8x1.25x20
6	6503 900	2				ED0, EK0			SCREW AND WASHER, Hex Head, M12x1.75x40
-7	6101 467	1				ED0, EK0			NUT, Hex Flange, M8x1.25
-8	4885 705AA	2				ED0, EK0			CLAMP, Hose, Snap Type, Canister Hose

JEEP LIBERTY (KJ)

SERIES	LINE	BODY	ENGINE	TRANSMISSION
P = Limited	J = LHD (4WD)	74 = 4 Dr. (104.3 WB)	ED1, ED0 = 2.4L Power Tech	DDK = 5 Speed HDManual
H = Sport	U = RHD (4WD)		EKG, EK0 = 3.7L Power Tech	DDD = 5 Speed HD Manual
M = Renegade	T = LHD (2WD)		ENJ = 2.5L 4Cyl Turbo Diesel	DG4,DGQ = Multi-Speed Auto
			ENR = 2.8L 4Cyl Turbo Diesel	DG6 = 4 Speed Auto Transm
			EN0 = 4Cyl Turbo Diesel	DG0 = All Automatic Transm
				DBB = All Manual Transm

Emission Vacuum Harness 2.5/2.8 Diesel [EN0]
Figure 025-410

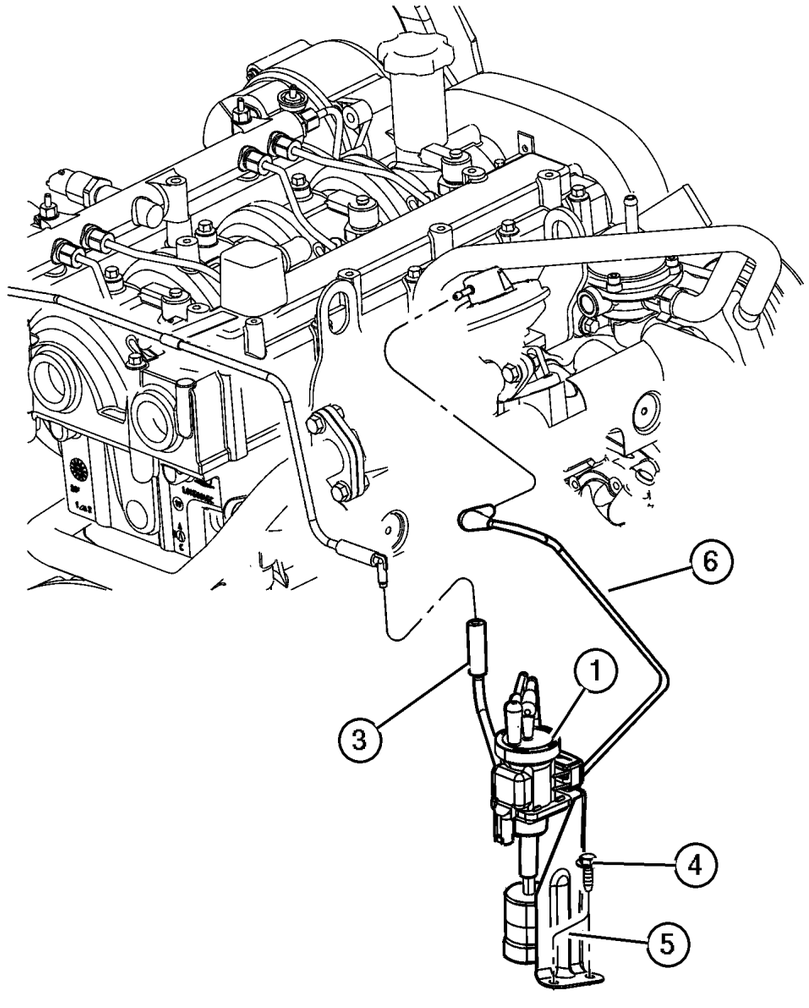

ITEM	PART NUMBER	QTY	LINE	SERIES	BODY	ENGINE	TRANS	TRIM	DESCRIPTION
Note; Sales Codes									
[EN0]= All 4/5 Cylinder Turbo Diesels									
1	5274 478AA	1				EN0			SOLENOID, Vacuum
-2	5274 510AA	1				EN0			FILTER, Vacuum Solenoid
3	52109 619AB	1				EN0			HOSE, Solenoid
4									SCREW, M4.8-1.59X15.00, (NOT SERVICED) (Not Serviced)
5	53013 411AB	1				EN0			BRACKET
6	53013 088AC	1				EN0			TUBE, EGR To Vacuum Regulator

JEEP LIBERTY (KJ)

SERIES	LINE	BODY	ENGINE	TRANSMISSION
P = Limited	J = LHD (4WD)	74 = 4 Dr. (104.3 WB)	ED1, ED0 = 2.4L Power Tech	DDK = 5 Speed HDManual
H = Sport	U = RHD (4WD)		EKG, EK0 = 3.7L Power Tech	DDD = 5 Speed HD Manual
M = Renegade	T = LHD (2WD)		ENJ = 2.5L 4Cyl Turbo Diesel	DG4,DGQ = Multi-Speed Auto
			ENR = 2.8L 4Cyl Turbo Diesel	DG6 = 4 Speed Auto Transm
			EN0 = 4Cyl Turbo Diesel	DG0 = All Automatic Transm
				DBB = All Manual Transm

AR = Use as required - = Non illustrated part # = New this model year **June 3, 2003**

« RETURN TO GROUP INDEX

Emission Vacuum Harness 2.4L [ED1], 3.7L [EKG]
Figure 025-420

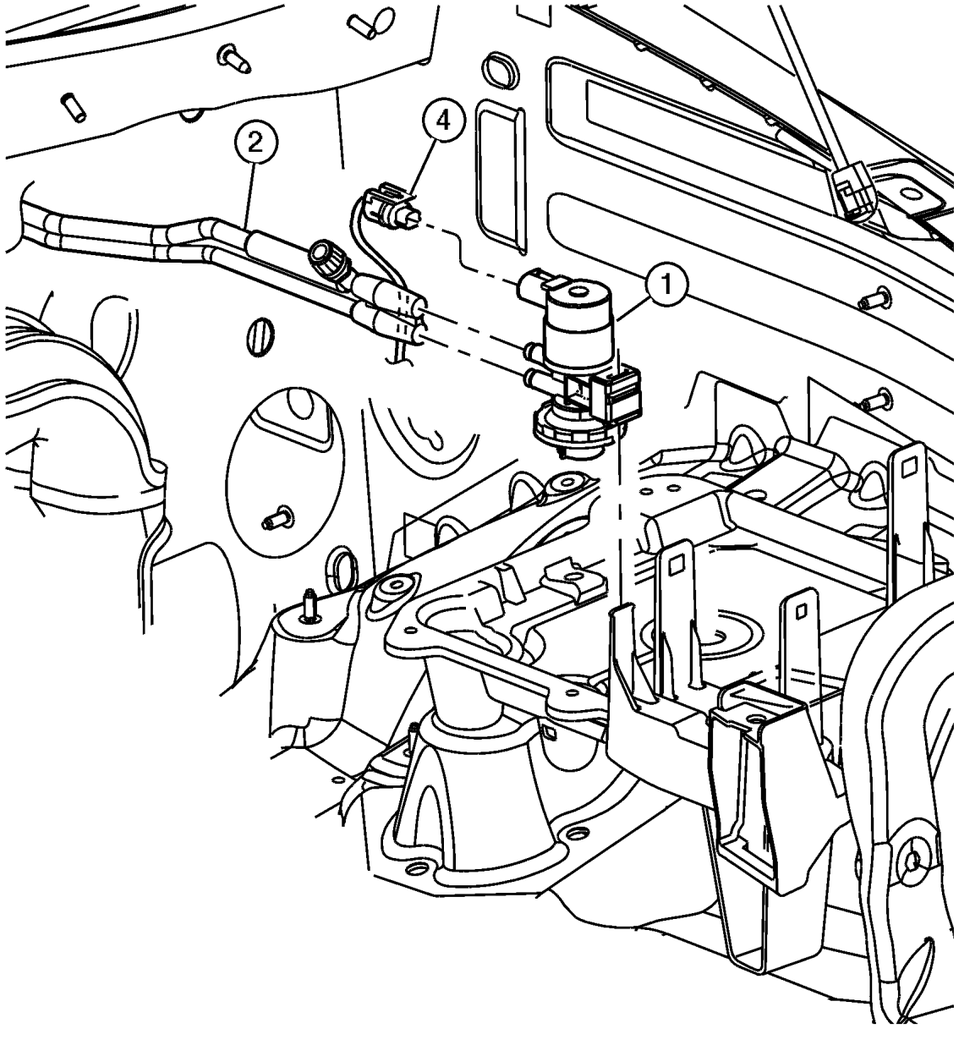

ITEM	PART NUMBER	QTY	LINE	SERIES	BODY	ENGINE	TRANS	TRIM	DESCRIPTION
Note; Sales Codes									
[ED0]= All 2.2L, 2.5L, 2.4L, 4 Cylinder Gas Engines									
[EK0]= All 3.7L 6 Cylinder Gas Engines									
1	52128 550AA	1				ED0, EK0			SOLENOID, Duty Cycle Purge
2	53013 427AD	1				ED0, EK0			HARNESS, Vapor Purge
-3									TUBE, Vacuum, From Vapor Harness To Throttle Body
	52109 574AB	1				ED0			
	53013 363AC	1				EK0			
4									CONNECTOR, See Headlamp To Dash Wiring , Group 8, (NOT SERVICED) (Not Serviced)
-5	3580 172	1							CAP, Vacuum

JEEP LIBERTY (KJ)

SERIES	LINE	BODY	ENGINE	TRANSMISSION
P = Limited	J = LHD (4WD)	74 = 4 Dr. (104.3 WB)	ED1, ED0 = 2.4L Power Tech	DDK = 5 Speed HDManual
H = Sport	U = RHD (4WD)		EKG, EK0 = 3.7L Power Tech	DDD = 5 Speed HD Manual
M = Renegade	T = LHD (2WD)		ENJ = 2.5L 4Cyl Turbo Diesel	DG4,DGQ = Multi-Speed Auto
			ENR = 2.8L 4Cyl Turbo Diesel	DG6 = 4 Speed Auto Transm
			EN0 = 4Cyl Turbo Diesel	DG0 = All Automatic Transm
				DBB = All Manual Transm

Leak Detection Pump, 2.4L [ED1], 3.7L [EKG]
Figure 025-430

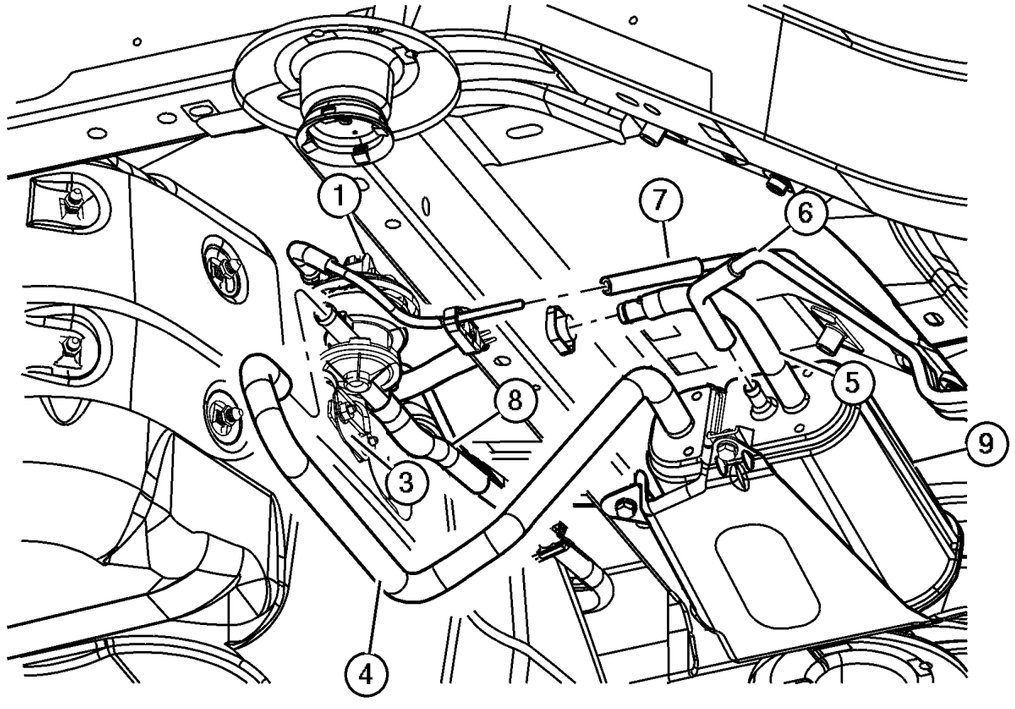

ITEM	PART NUMBER	QTY	LINE	SERIES	BODY	ENGINE	TRANS	TRIM	DESCRIPTION
Note; Sales Code									
[ED0]= All 2.2L, 2.5L, 2.4L, 4 Cylinder Gas Engines									
[EK0]= All 3.7L 6 Cylinder Gas Engines									
1	4891 416AD	1				ED0, EK0			PUMP, Leak Detection
-2	4612 901	1				ED0, EK0			FILTER, Fuel Vapor Vent
3	52100 567AC	1				ED0, EK0			BRACKET, Leak Detection Pump
4	52109 571AD	1				ED0, EK0			HOSE, Canister to LDP
5	52109 572AC	1				ED0, EK0			HOSE, Canister to Vent Valve
6	53013 330AC	1				ED0, EK0			TUBE, Vacuum
7	53013 091AF	1				ED0, EK0			TUBE, Fuel Vapor
8	52128 546AD	1				ED0, EK0			TUBE, Vapor
9	53013 096AB	1				ED0, EK0			CANISTER, Vapor
-10	5114 487AA	1				ED0, EK0			HOSE, Leak Detection Pump

JEEP LIBERTY (KJ)

SERIES	LINE	BODY	ENGINE	TRANSMISSION
P = Limited	J = LHD (4WD)	74 = 4 Dr. (104.3 WB)	ED1, ED0 = 2.4L Power Tech	DDK = 5 Speed HDManual
H = Sport	U = RHD (4WD)		EKG, EK0 = 3.7L Power Tech	DDD = 5 Speed HD Manual
M = Renegade	T = LHD (2WD)		ENJ = 2.5L 4Cyl Turbo Diesel	DG4,DGQ = Multi-Speed Auto
			ENR = 2.8L 4Cyl Turbo Diesel	DG6 = 4 Speed Auto Transm
			EN0 = 4Cyl Turbo Diesel	DG0 = All Automatic Transm
				DBB = All Manual Transm

AR = Use as required - = Non illustrated part # = New this model year **June 3, 2003**

« RETURN TO GROUP INDEX

Group – DKJ

Doors and Related Parts

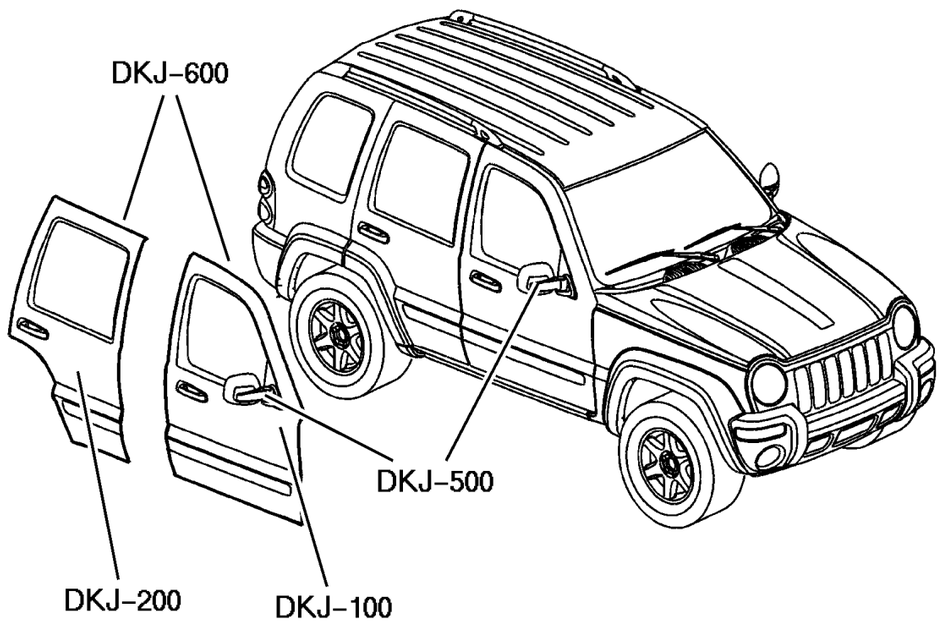

DKJ–100 Front Door	DKJ–200 Rear Door	DKJ–500 Exterior Mirror	DKJ–600 Weatherstrips and Seals
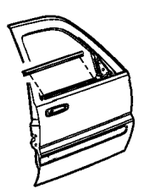	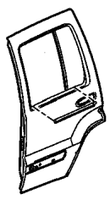		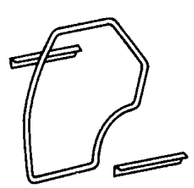

GROUP DKJ - Doors and Related Parts

Illustration Title	Group-Fig. No.
Front Door	
Door, Front, Shell and Hinges	Fig. DKJ-110
Door, Front, Glass and Regulator	Fig. DKJ-120
Door, Front, Lock and Controls	Fig. DKJ-130
Rear Door	
Door, Rear, Shell and Hinges	Fig. DKJ-210
Door, Rear, Glass and Regulator	Fig. DKJ-220
Door, Rear, Lock and Controls	Fig. DKJ-230
Exterior Mirror	
Mirrors, Exterior	Fig. DKJ-510
Weatherstrips and Seals	
Door, Front	Fig. DKJ-610
Door, Rear	Fig. DKJ-620

Door, Front, Shell and Hinges
Figure DKJ-110

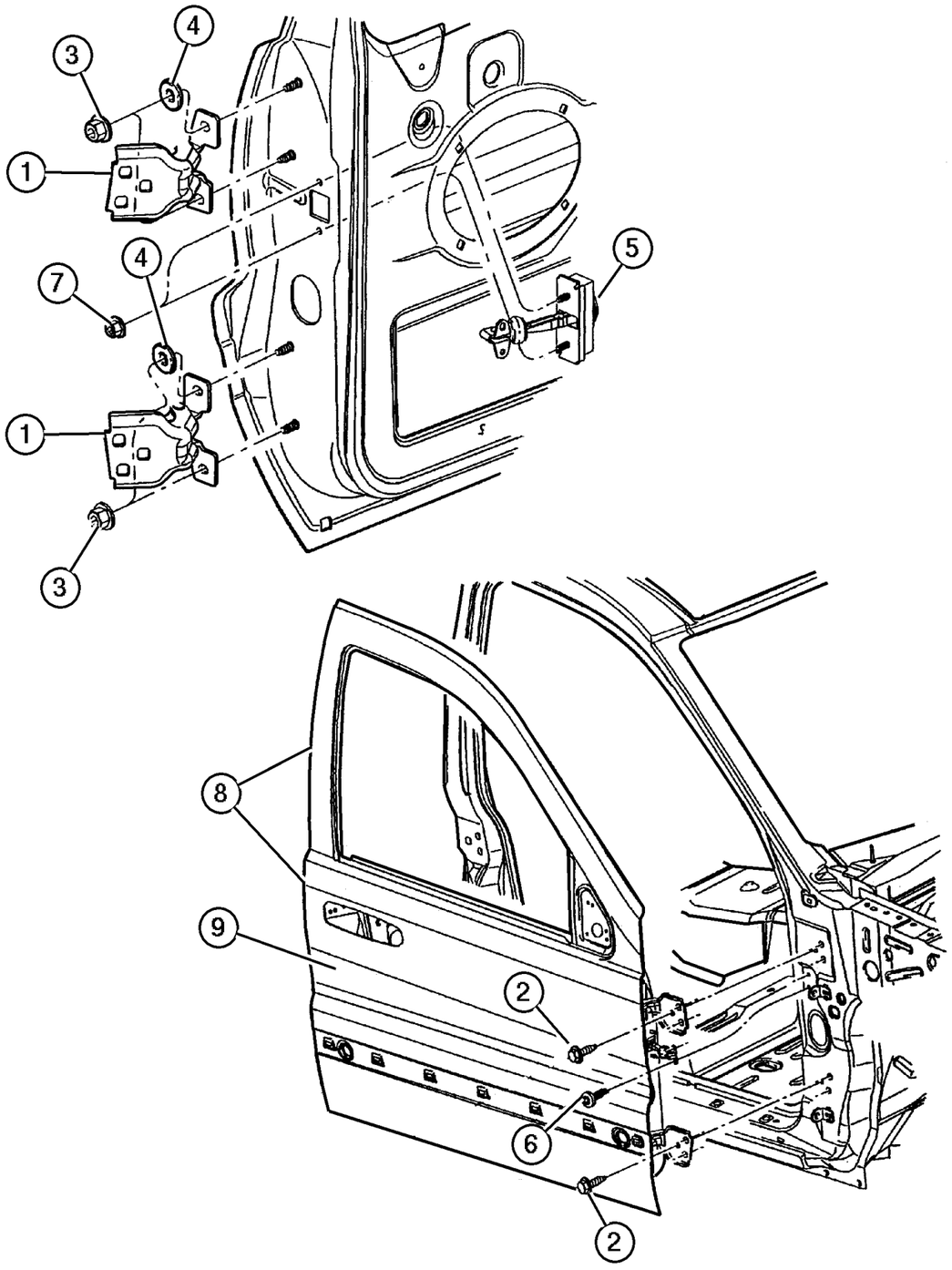

ITEM	PART NUMBER	QTY	LINE	SERIES	BODY	ENGINE	TRANS	TRIM	DESCRIPTION
1	55177 026AA	4							HINGE, Door
2	6503 328	4							SCREW, Hex Head, M8x1.25x30
3	6101 809	1							NUT AND WASHER, Hex, M8x1.25
4	55136 971AC	4							WASHER, Flat
5	55177 028AB	2							CHECK, Front Door
6									SCREW, Torx Round Head, M6-1. 0x20.0, (NOT SERVICED) (Not Serviced)
7	6503 504	2							NUT AND WASHER, Hex, M6x1
8									DOOR, Front
	55176 890AF	1							Right
	55176 891AF	1							Left
9									PANEL, Front Door Outer Repair
	55176 882AB	1							Right
	55176 883AB	1							Left
-10									NUT, Rivet, M5x.080x26.41, (NOT SERVICED) (Not Serviced)
-11									BRACKET, Door Inside
	#55360 636AA	1	J, T						Right
	#55360 637AA	1	J, T						Left

JEEP LIBERTY (KJ)

SERIES	LINE	BODY	ENGINE	TRANSMISSION
P = Limited	J = LHD (4WD)	74 = 4 Dr. (104.3 WB)	ED1, ED0 = 2.4L Power Tech	DDK = 5 Speed HDManual
H = Sport	U = RHD (4WD)		EKG, EK0 = 3.7L Power Tech	DDD = 5 Speed HD Manual
M = Renegade	T = LHD (2WD)		ENJ = 2.5L 4Cyl Turbo Diesel	DG4,DGQ = Multi-Speed Auto
			ENR = 2.8L 4Cyl Turbo Diesel	DG6 = 4 Speed Auto Transm
			EN0 = 4Cyl Turbo Diesel	DG0 = All Automatic Transm
				DBB = All Manual Transm

AR = Use as required - = Non illustrated part # = New this model year

June 3, 2003

« RETURN TO GROUP INDEX

Door, Front, Glass and Regulator
Figure DKJ-120

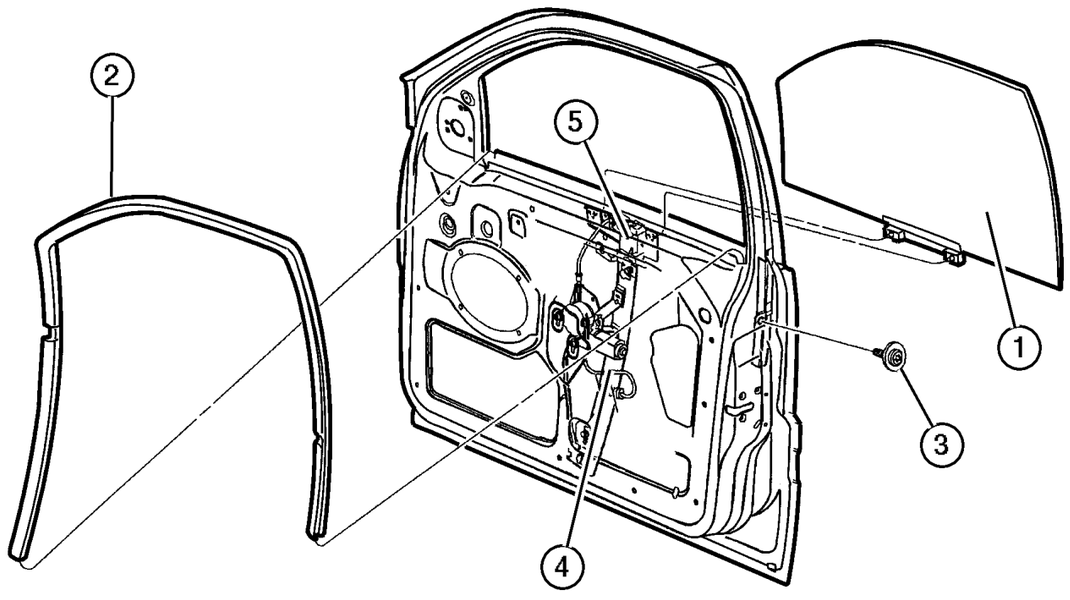

ITEM	PART NUMBER	QTY	LINE	SERIES	BODY	ENGINE	TRANS	TRIM	DESCRIPTION
1									GLASS, Front Door
	55360 374AD	1							Right
	55360 375AD	1							Left
2									WEATHERSTRIP, Glass Channel Run
	55235 874AC	1							Right
	55235 875AC	1							Left
3									SCREW AND WASHER, Tapping, M6-1.0x20.0, (NOT SERVICED) (Not Serviced)
4									REGULATOR, Front Door Window
	55360 030AG	1							With Power Windows, Right
	55360 031AG	1							With Power Windows, Left
	55360 032AD	1							Without Power Windows, Right
	55360 033AD	1							Without Power Windows, Left
5									SCREW, M6X1.00X16.00, (NOT SERVICED) (Not Serviced)
-6	FW80 XDV	2							HANDLE, Window Regulator

JEEP LIBERTY (KJ)

SERIES	LINE	BODY	ENGINE	TRANSMISSION
P = Limited	J = LHD (4WD)	74 = 4 Dr. (104.3 WB)	ED1, ED0 = 2.4L Power Tech	DDK = 5 Speed HDManual
H = Sport	U = RHD (4WD)		EKG, EK0 = 3.7L Power Tech	DDD = 5 Speed HD Manual
M = Renegade	T = LHD (2WD)		ENJ = 2.5L 4Cyl Turbo Diesel	DG4,DGQ = Multi-Speed Auto
			ENR = 2.8L 4Cyl Turbo Diesel	DG6 = 4 Speed Auto Transm
			EN0 = 4Cyl Turbo Diesel	DG0 = All Automatic Transm
				DBB = All Manual Transm

Door, Front, Lock and Controls
Figure DKJ-130

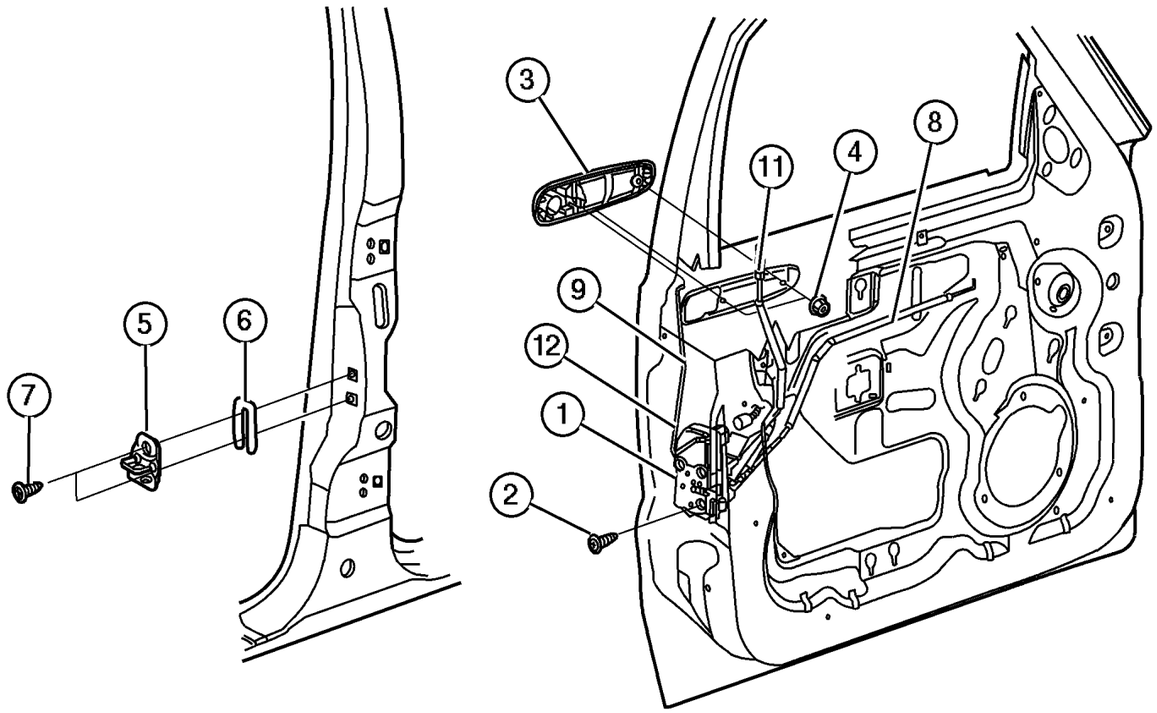

ITEM	PART NUMBER	QTY	LINE	SERIES	BODY	ENGINE	TRANS	TRIM	DESCRIPTION
Note; Sales Codes									
[JPB]= Power Locks									
1									LATCH, Front Door
	55177 040AH	1							Without [JPB], Right
	55177 041AH	1							Without [JPB], Left
	55177 042AH	1							[JPB,JPH], Right
	#55360 611AB	1							[JPB,JPH], Without Cylinder, Right
	55177 043AH	1							[JPB,JPH], Left
2	6033 876	6							SCREW, Tapping, M6.3x1.8x38.1
3									HANDLE, Front Door Exterior
	55360 332AF	1							With Cylinder, Right
	#55360 614AB	1							Without Cylinder, Right
	55360 333AF	1							Left
4	6503 226	2							NUT, Hex Flange, M5x.8
5	4780 607AA	2							STRIKER, Door
6	4520 289	AR							SPACER, Door Latch Striker
7	6504 573	4							SCREW, Oval Head, SCREW
8									ROD, Inside Handle to Latch
	5072 350AA	1							Right
	5072 351AA	1							Left
9									ROD, Inside Lock to Latch
	5072 354AA	1							Right
	5072 355AA	1							Left
-10	4658 677	2							CLIP, Latch Link
11									ROD, Latch To Knob
	55360 534AC	1							Right
	55360 535AC	1							Left
12									LINK, Exterior Door Handle
	5072 358AB	1							With Cylinder, Right
	#5103 132AA	1							Without Cylinder, Right
	5072 359AB	1							Left
-13									CLIP, Outside Door Handle
	4615 346	1							Inner
	4615 347	1							Outer

JEEP LIBERTY (KJ)

SERIES	LINE	BODY	ENGINE	TRANSMISSION
P = Limited	J = LHD (4WD)	74 = 4 Dr. (104.3 WB)	ED1, ED0 = 2.4L Power Tech	DDK = 5 Speed HDManual
H = Sport	U = RHD (4WD)		EKG, EK0 = 3.7L Power Tech	DDD = 5 Speed HD Manual
M = Renegade	T = LHD (2WD)		ENJ = 2.5L 4Cyl Turbo Diesel	DG4,DGQ = Multi-Speed Auto
			ENR = 2.8L 4Cyl Turbo Diesel	DG6 = 4 Speed Auto Transm
			EN0 = 4Cyl Turbo Diesel	DG0 = All Automatic Transm
				DBB = All Manual Transm

AR = Use as required - = Non illustrated part # = New this model year **June 3, 2003**

« RETURN TO GROUP INDEX

Door, Rear, Shell and Hinges
Figure DKJ-210

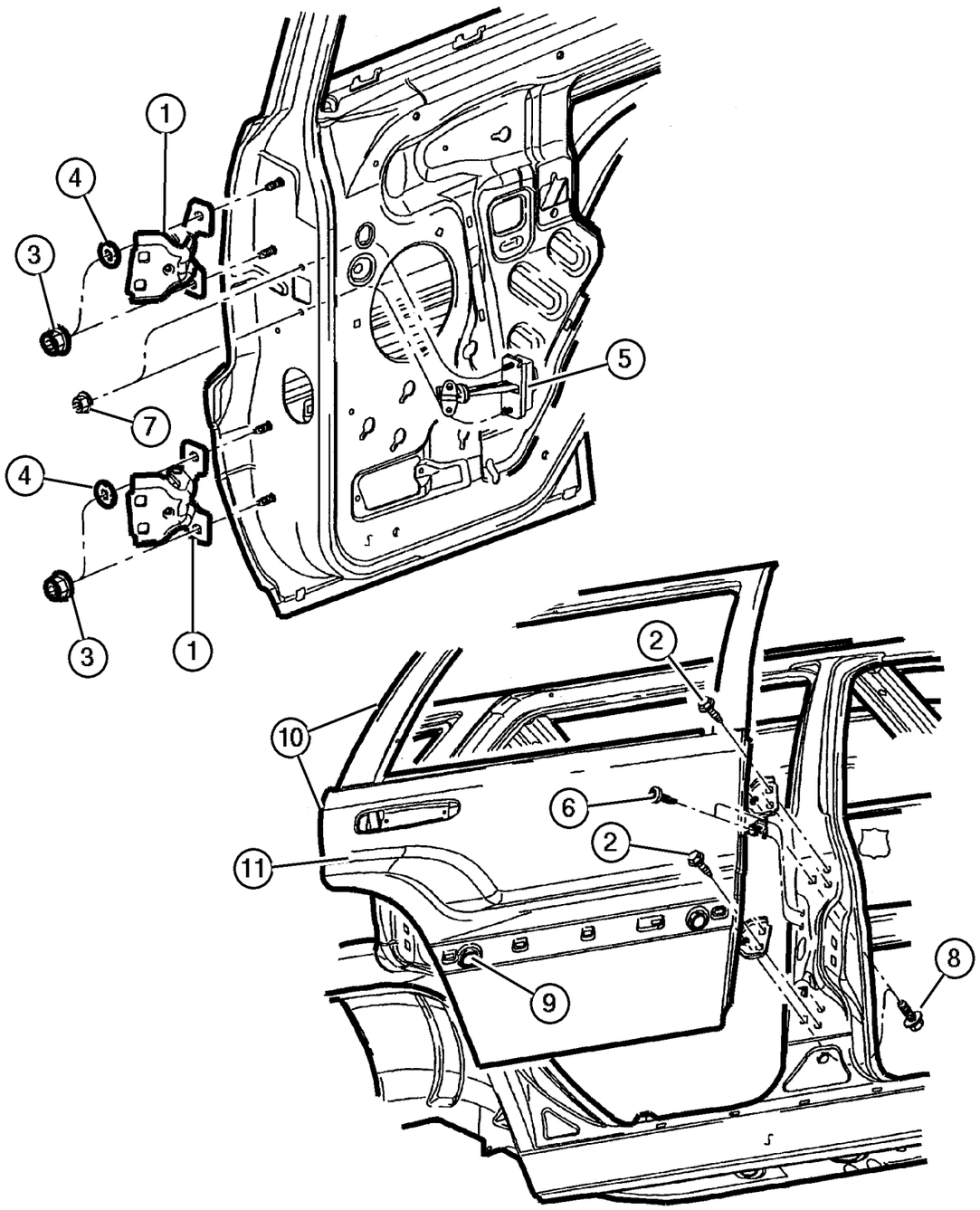

ITEM	PART NUMBER	QTY	LINE	SERIES	BODY	ENGINE	TRANS	TRIM	DESCRIPTION
1	55177 030AC	4							HINGE, Door
2	6503 328	4							SCREW, Hex Head, M8x1.25x30
3	6101 809	1							NUT AND WASHER, Hex, M8x1.25
4	55136 971AC	4							WASHER, Flat
5	55177 036AB	2							CHECK, Rear Door
6									SCREW, Torx Head, M6x1.0x16, (NOT SERVICED) (Not Serviced)
7	6503 504	2							NUT AND WASHER, Hex, M6x1
8									SCREW AND WASHER, Hex Head, M8x1.25x30, (NOT SERVICED) (Not Serviced)
9	55136 859AA	2							PLUG
10									DOOR, Rear
	55176 906AE	1							Right
	55176 907AC	1							Left
11									PANEL, Rear Door
	55176 908AC	1							Right
	55176 909AC	1							Left

JEEP LIBERTY (KJ)

SERIES	LINE	BODY	ENGINE	TRANSMISSION
P = Limited	J = LHD (4WD)	74 = 4 Dr. (104.3 WB)	ED1, ED0 = 2.4L Power Tech	DDK = 5 Speed HDManual
H = Sport	U = RHD (4WD)		EKG, EK0 = 3.7L Power Tech	DDD = 5 Speed HD Manual
M = Renegade	T = LHD (2WD)		ENJ = 2.5L 4Cyl Turbo Diesel	DG4,DGQ = Multi-Speed Auto
			ENR = 2.8L 4Cyl Turbo Diesel	DG6 = 4 Speed Auto Transm
			EN0 = 4Cyl Turbo Diesel	DG0 = All Automatic Transm
				DBB = All Manual Transm

AR = Use as required - = Non illustrated part # = New this model year

June 3, 2003

« RETURN TO GROUP INDEX

Door, Rear, Glass and Regulator
Figure DKJ-220

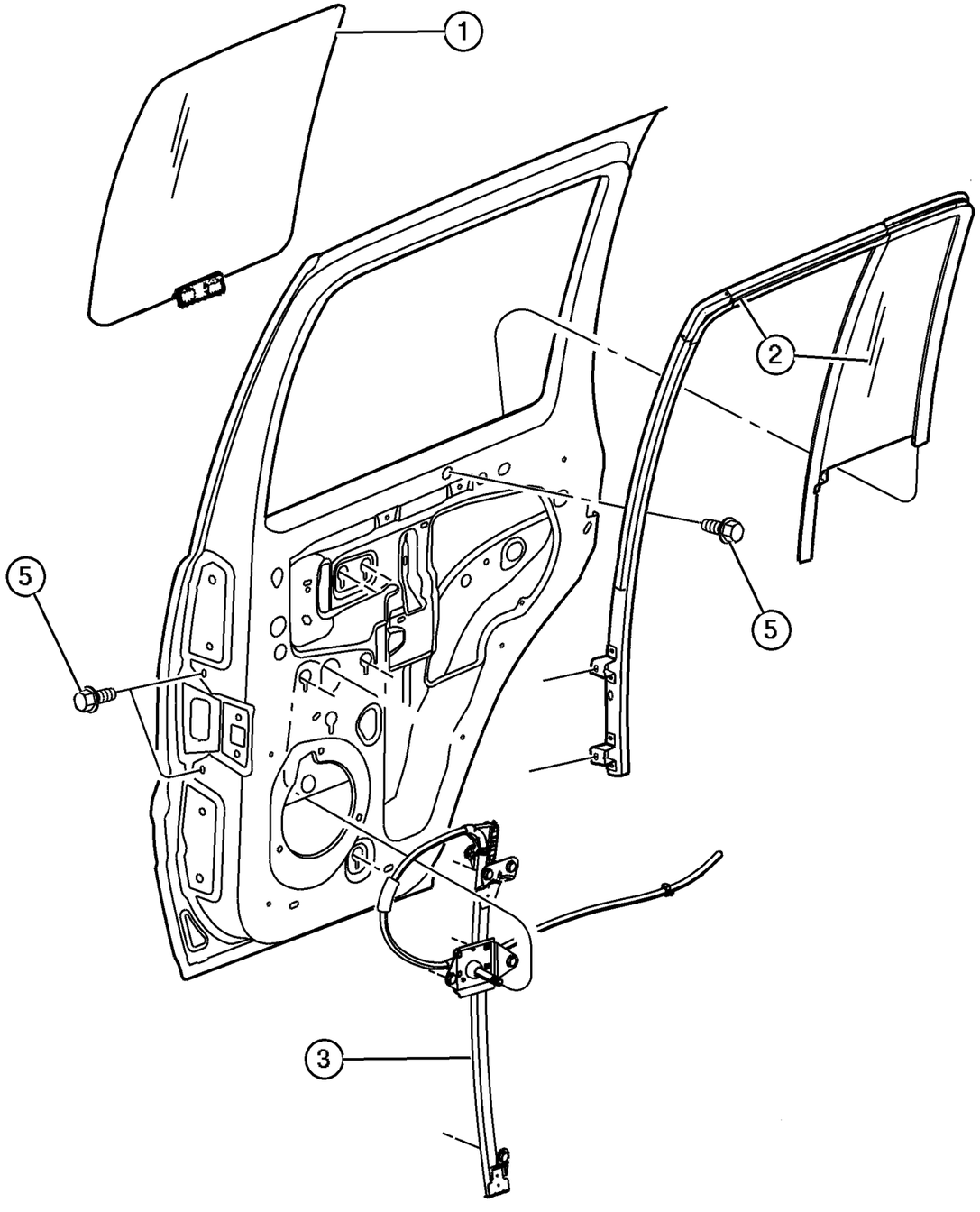

ITEM	PART NUMBER	QTY	LINE	SERIES	BODY	ENGINE	TRANS	TRIM	DESCRIPTION
Note; Sales Codes									
[GEG] = Glass - Deep Tint Sunscreen									
[GEJ] = Glass - Tinted									
[JPD] = Window - Power									
1									GLASS, Rear Door, Roll Up
	55360 378AE	1							[GEG], Right
	55360 379AE	1							[GEG], Left
	55360 376AE	1							[GEJ], Right
	55360 377AE	1							[GEJ], Left
2									GLASS, Rear Door, Fixed, With Weatherstrip
	5103 252AB	1							[GEG], Right
	5103 251AB	1							[GEG], Left
	5103 248AA	1							[GEJ], Right
	5103 247AB	1							[GEJ], Left
3									REGULATOR, Rear Door Window
	55360 034AF	1							With Power Windows, Right
	55360 035AF	1							With Power Windows, Left
	55360 036AC	1							Without Power Windows, Right
	55360 037AC	1							Without Power Windows, Left
-4	FW80 WL5	2							HANDLE, Window Regulator
5									SCREW, (NOT SERVICED) (Not Serviced)

JEEP LIBERTY (KJ)

SERIES	LINE	BODY	ENGINE	TRANSMISSION
P = Limited	J = LHD (4WD)	74 = 4 Dr. (104.3 WB)	ED1, ED0 = 2.4L Power Tech	DDK = 5 Speed HDManual
H = Sport	U = RHD (4WD)		EKG, EK0 = 3.7L Power Tech	DDD = 5 Speed HD Manual
M = Renegade	T = LHD (2WD)		ENJ = 2.5L 4Cyl Turbo Diesel	DG4,DGQ = Multi-Speed Auto
			ENR = 2.8L 4Cyl Turbo Diesel	DG6 = 4 Speed Auto Transm
			EN0 = 4Cyl Turbo Diesel	DG0 = All Automatic Transm
				DBB = All Manual Transm

AR = Use as required - = Non illustrated part # = New this model year **June 3, 2003**

« RETURN TO GROUP INDEX

Door, Rear, Lock and Controls
Figure DKJ-230

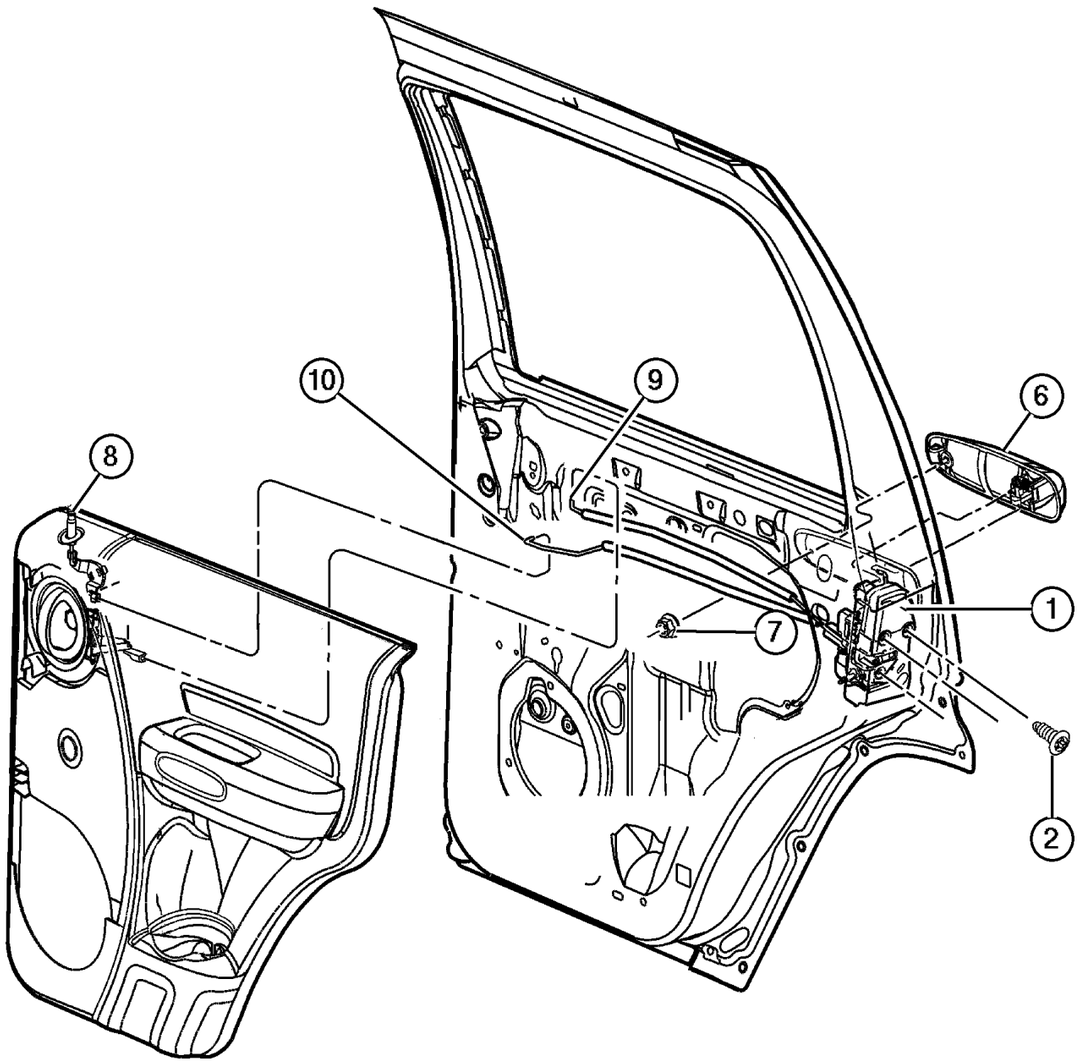

ITEM	PART NUMBER	QTY	LINE	SERIES	BODY	ENGINE	TRANS	TRIM	DESCRIPTION
Note; Sales Codes									
[JPB]- Power Locks									
1									LATCH, Rear Door
	55177 044AE	1							With [JPB,JPH], Right
	55177 045AF	1							With [JPB,JPH], Left
	55177 046AF	1							Without [JPB,JPH], Right
	55177 047AF	1							Without [JPB,JPH], Left
2	6033 876	6							SCREW, Tapping, M6.3x1.8x38.1
-3	4780 607AA	2							STRIKER, Door
-4	4520 289	AR							SPACER, Door Latch Striker
-5	6504 573	4							SCREW, Oval Head, SCREW
6									HANDLE, Exterior Door
	55360 334AF	1							Right
	55360 335AF	1							Left
7	6503 226	2							NUT, Hex Flange, M5x.8
8									KNOB, Door Lock
	55360 464AB	1							Right
	55360 465AB	1							Left
9									ROD, Inside Handle to Latch
	5072 356AA	1							Right
	5072 357AA	1							Left
10									ROD, Inside Lock to Latch
	5072 360AB	1							Right
	5072 361AB	1							Left
-11									LINK, Exterior Door Handle
	5072 358AB	1							Right
	5072 359AB	1							Left
-12									COVER, Latch-Anti Theft
	5014 395AA	1							Right
	5014 396AA	1							Left

JEEP LIBERTY (KJ)

SERIES	LINE	BODY	ENGINE	TRANSMISSION
P = Limited	J = LHD (4WD)	74 = 4 Dr. (104.3 WB)	ED1, ED0 = 2.4L Power Tech	DDK = 5 Speed HDManual
H = Sport	U = RHD (4WD)		EKG, EK0 = 3.7L Power Tech	DDD = 5 Speed HD Manual
M = Renegade	T = LHD (2WD)		ENJ = 2.5L 4Cyl Turbo Diesel	DG4,DGQ = Multi-Speed Auto
			ENR = 2.8L 4Cyl Turbo Diesel	DG6 = 4 Speed Auto Transm
			EN0 = 4Cyl Turbo Diesel	DG0 = All Automatic Transm
				DBB = All Manual Transm

Mirrors, Exterior
Figure DKJ-510

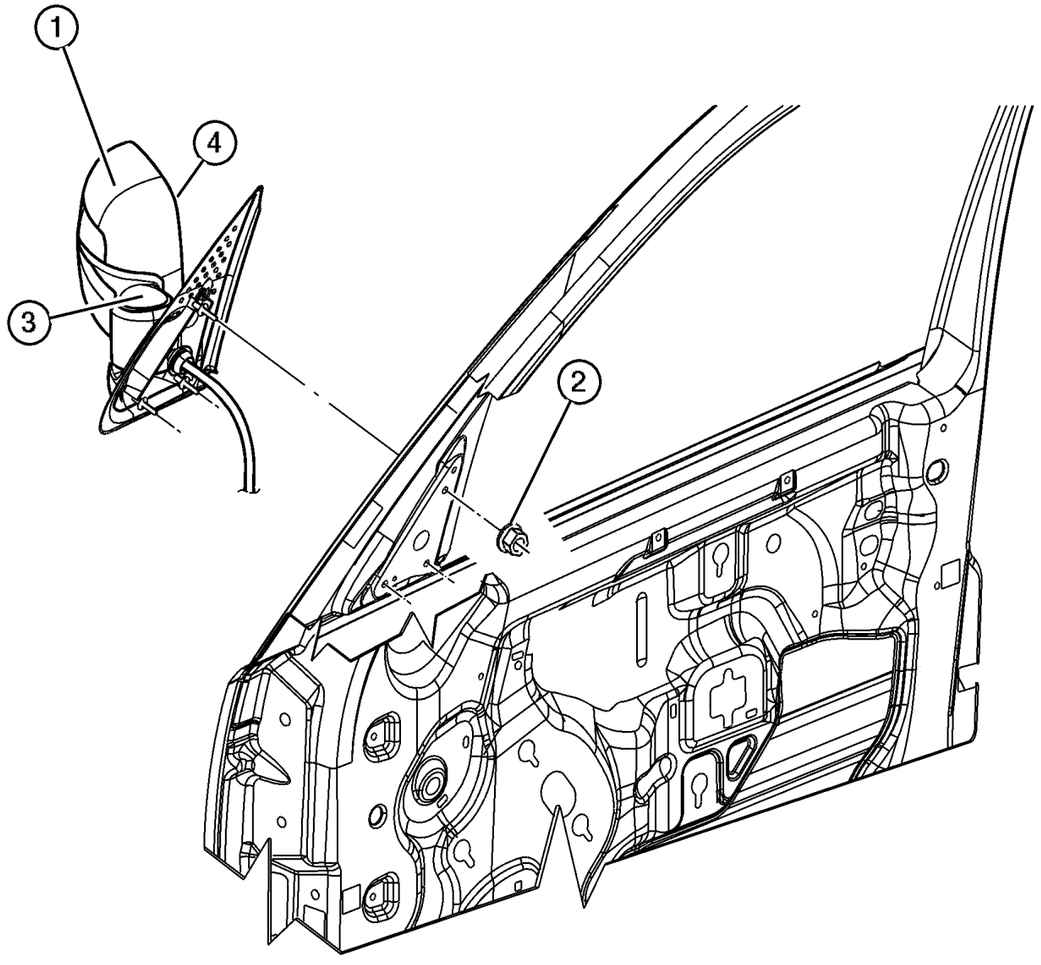

ITEM	PART NUMBER	QTY	LINE	SERIES	BODY	ENGINE	TRANS	TRIM	DESCRIPTION
Note; Sales Codes									
[GT9] = Mirrors - Power Heated Memory F/Away									
[GTB] = Mirrors - Power Heated									
[GTJ] = Mirrors - Power									
[GTP] = Mirrors - Manual - Fold Away									
[GPF] = Mirrors - Manual - Fold Away Black									
[GTS] = Mirrors - Power Heated - Fold Away									
[GUW] = Mirrors - Power Heated - Fold Away									
1									MIRROR, Outside Rearview
	55155 836AC	1	J, T						[GTP], Right
	55155 848AC	1	U						[GPF], Right
	55155 849AC	1	U						[GPF], Left
	#55156 411AB	1							[GUW], Left
	55155 837AC	1	J, T						[GTP], Left
	#55155 839AE	1	J, T						[GTB], Right
	55155 840AC	1	J, T						[GT9], Right
	55155 841AC	1	J, T						[GT9], Left
	55155 842AC	1	J, T						[GTS,GUW], Right
	55155 843AC	1	J, T						[GTS,GTB], Left
	55155 846AC	1	U						[GTJ], Right
	55155 847AC	1	U						[GTJ], Left
2	6504 047	6							NUT AND WASHER, Hex, M5x.80
3									COVER, Mirror Flag
	5086 298AA	1	J, T						Right
	5086 299AA	1	J, T						Left
	5086 298AA	1	U						Right
	5086 299AA	1	U						Left
4									GLASS, Mirror Replacement
	5083 982AA	1	J, T						[GTP], Right
	5083 991AA	1	U						[GTJ], Left
	5083 984AA	1	U						[GPF], Right
	5083 985AA	1	U						[GPF], Left
	5083 983AA	1	J, T						[GTP], Left
	5083 986AA	1	J, T						[GTB], Right
	#5083 987AA	1							[GUW], Left
	5083 982AA	1	J, T						[GT9], Right
	5083 983AA	1	J, T						[GT9], Left
	5083 988AA	1	J, T						[GTS], Right
	5083 989AA	1	J, T						[GTS,GTB], Left
	5083 990AA	1	U						[GTJ], Right

JEEP LIBERTY (KJ)

SERIES	LINE	BODY	ENGINE	TRANSMISSION
P = Limited	J = LHD (4WD)	74 = 4 Dr. (104.3 WB)	ED1, ED0 = 2.4L Power Tech	DDK = 5 Speed HDManual
H = Sport	U = RHD (4WD)		EKG, EK0 = 3.7L Power Tech	DDD = 5 Speed HD Manual
M = Renegade	T = LHD (2WD)		ENJ = 2.5L 4Cyl Turbo Diesel	DG4,DGQ = Multi-Speed Auto
			ENR = 2.8L 4Cyl Turbo Diesel	DG6 = 4 Speed Auto Transm
			EN0 = 4Cyl Turbo Diesel	DG0 = All Automatic Transm
				DBB = All Manual Transm

Door, Front
Figure DKJ-610

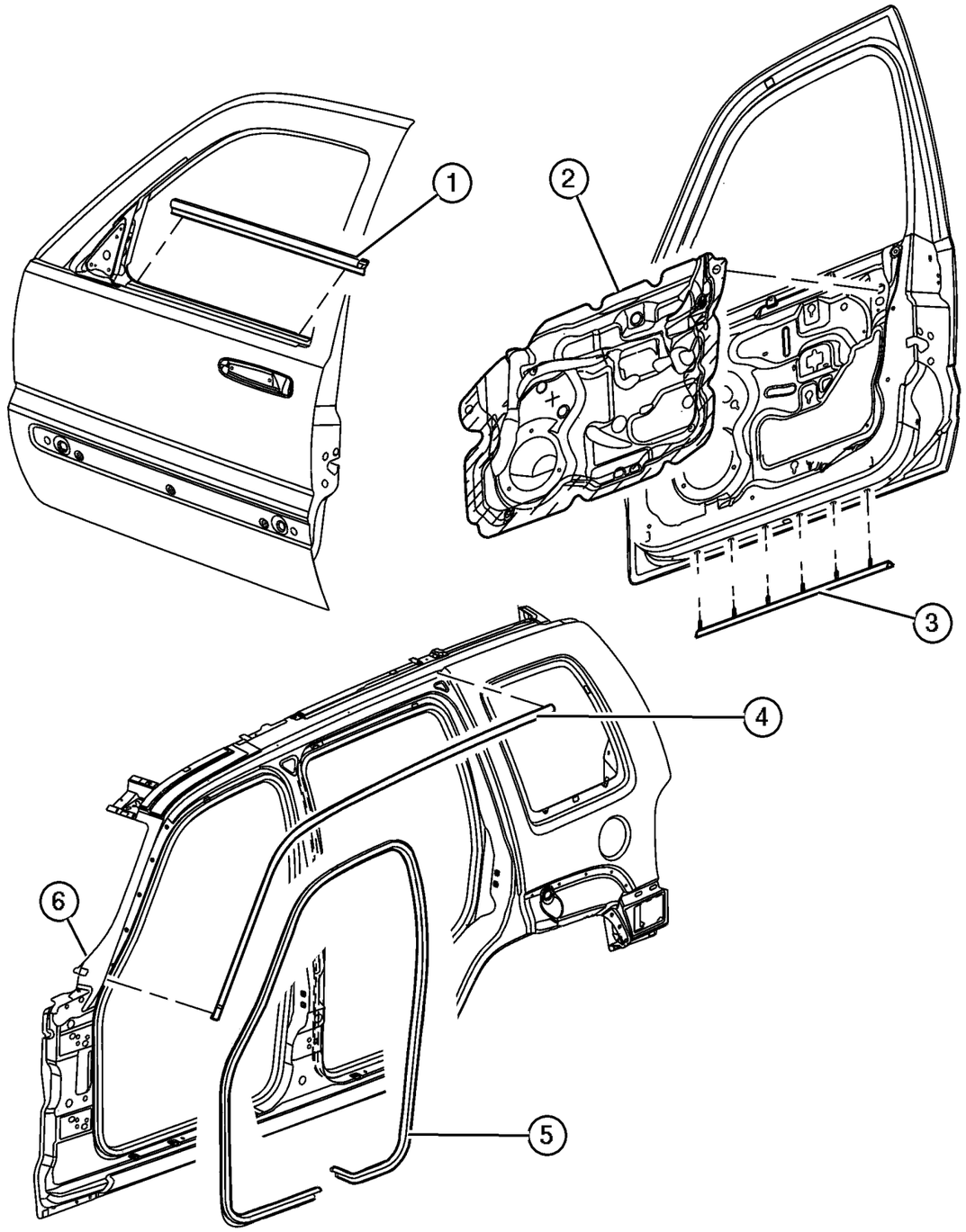

ITEM	PART NUMBER	QTY	LINE	SERIES	BODY	ENGINE	TRANS	TRIM	DESCRIPTION
1									WEATHERSTRIP, Door Belt
	#55360 642AA	1							Right
	#55360 643AA	1							Left
2									WATERDAM, Front Door
	55235 892AG	1							Right
	#55235 893AG	1							Left
3	55235 928AA	2							SEAL, Rocker
4									SEAL, Door
	55235 918AG	1							Right
	55235 919AG	1							Left
5									WEATHERSEAL, Full Door To Body
	5GU15 XXXAG	2		H					[DV,L5]
	5GU15 WL5AG	2		M, P					[L2,L5]
	5GU15 XXXAG	2		M, P					[DV,D2]
6									SEAL, A-Pillar Blocker, Body Mounted
	55360 542AD	1							Right
	55360 543AD	1							Left
-7	55360 256AC	2							SEAL, A-Pillar, Door Mounted

JEEP LIBERTY (KJ)

SERIES	LINE	BODY	ENGINE	TRANSMISSION
P = Limited	J = LHD (4WD)	74 = 4 Dr. (104.3 WB)	ED1, ED0 = 2.4L Power Tech	DDK = 5 Speed HDManual
H = Sport	U = RHD (4WD)		EKG, EK0 = 3.7L Power Tech	DDD = 5 Speed HD Manual
M = Renegade	T = LHD (2WD)		ENJ = 2.5L 4Cyl Turbo Diesel	DG4,DGQ = Multi-Speed Auto
			ENR = 2.8L 4Cyl Turbo Diesel	DG6 = 4 Speed Auto Transm
			EN0 = 4Cyl Turbo Diesel	DG0 = All Automatic Transm
				DBB = All Manual Transm

Door, Rear
Figure DKJ-620

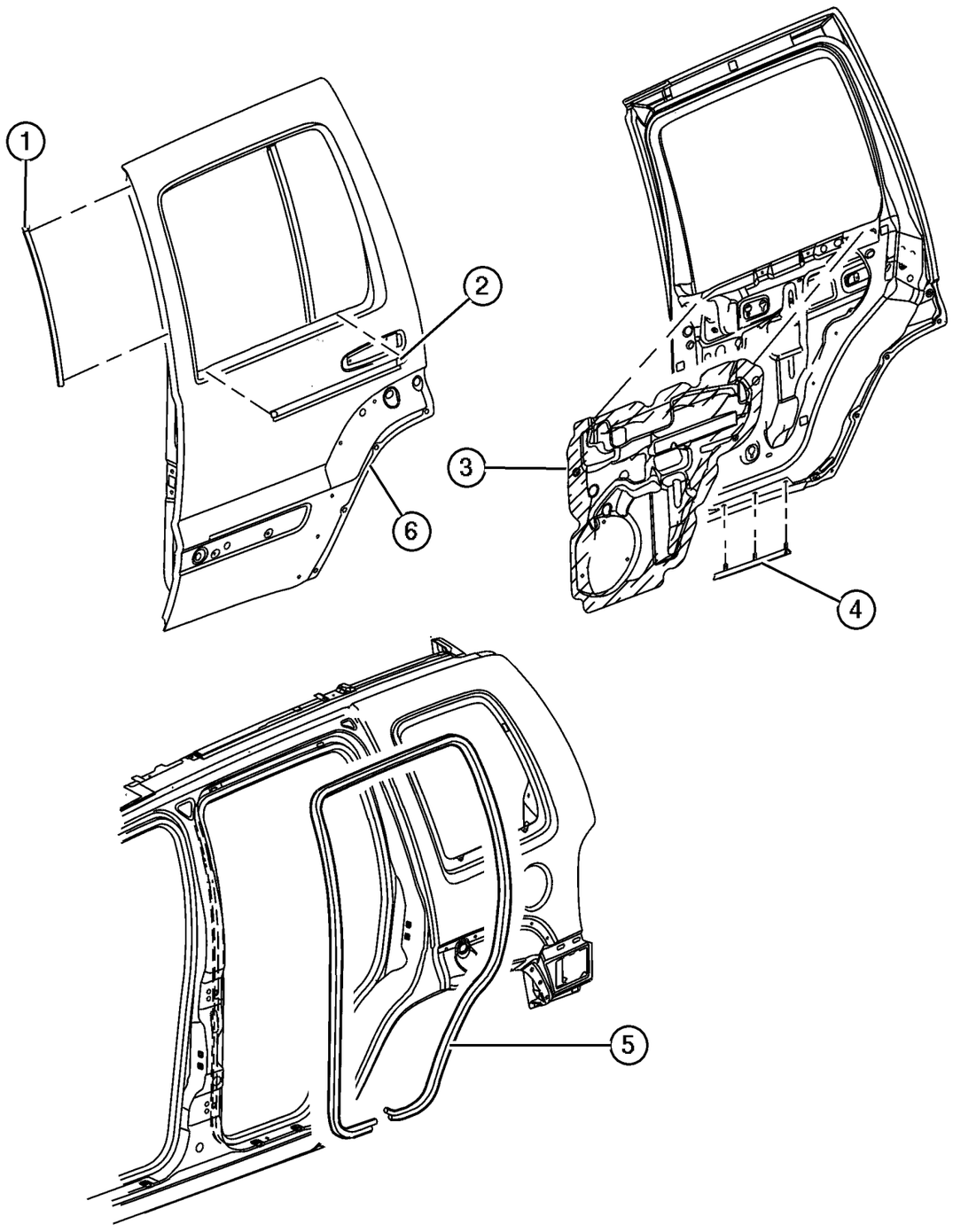

ITEM	PART NUMBER	QTY	LINE	SERIES	BODY	ENGINE	TRANS	TRIM	DESCRIPTION
1	55235 880AB	2							WEATHERSTRIP, B Pillar
									Secondary
2									WEATHERSTRIP, Belt
	#55360 644AC	1							Right
	#55360 645AC	1							Left
3									WATERDAM, Rear Door
	#55235 894AH	1							Right
	#55235 895AH	1							Left
4	55235 930AA	2							SEAL, Rocker
5									WEATHERSEAL, Full Door To Body
	5JD42 XXXAE	1		H					[DV,L5], Right
		1		M, P					[DV,D2], Right
	5JD42 WL5AE	1		M, P					[L2,L5], Right
	5GU13 XXXAF	1		H					[DV,L5], Left
		1		M, P					[DV,D2], Left
	5GU13 WL5AG	1		M, P					[L2,L5], Left
6	55360 254AA	1							SEAL, Moulding

JEEP LIBERTY (KJ)

SERIES	LINE	BODY	ENGINE	TRANSMISSION
P = Limited	J = LHD (4WD)	74 = 4 Dr. (104.3 WB)	ED1, ED0 = 2.4L Power Tech	DDK = 5 Speed HDManual
H = Sport	U = RHD (4WD)		EKG, EK0 = 3.7L Power Tech	DDD = 5 Speed HD Manual
M = Renegade	T = LHD (2WD)		ENJ = 2.5L 4Cyl Turbo Diesel	DG4,DGQ = Multi-Speed Auto
			ENR = 2.8L 4Cyl Turbo Diesel	DG6 = 4 Speed Auto Transm
			EN0 = 4Cyl Turbo Diesel	DG0 = All Automatic Transm
				DBB = All Manual Transm

Group – EKJ

Exterior Ornamentation

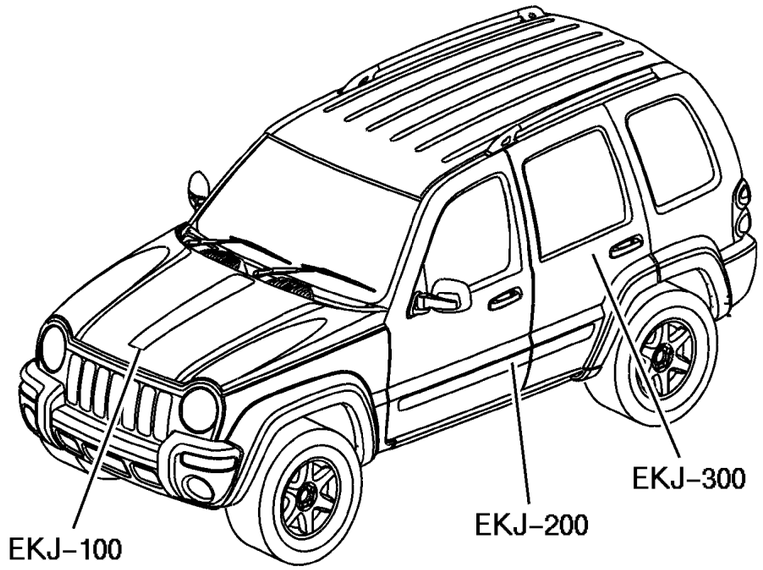

EKJ–100 Nameplates	EKJ–200 Moldings and Ornamentation	EKJ–300 Decals and Tapestripes	
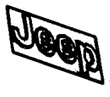	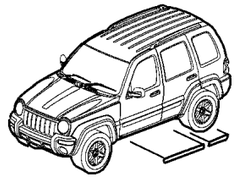		

GROUP EKJ - Exterior Ornamentation

Illustration Title — Group-Fig. No.

Nameplates

Nameplats . . . . . Fig. EKJ-110

Moldings and Ornamentation

Moldings, Body Side . . . . . Fig. EKJ-210

Side Steps, Tubular [MRK] . . . . . Fig. EKJ-220

Decals and Tapestripes

Decals . . . . . Fig. EKJ-310

Nameplats
Figure EKJ-110

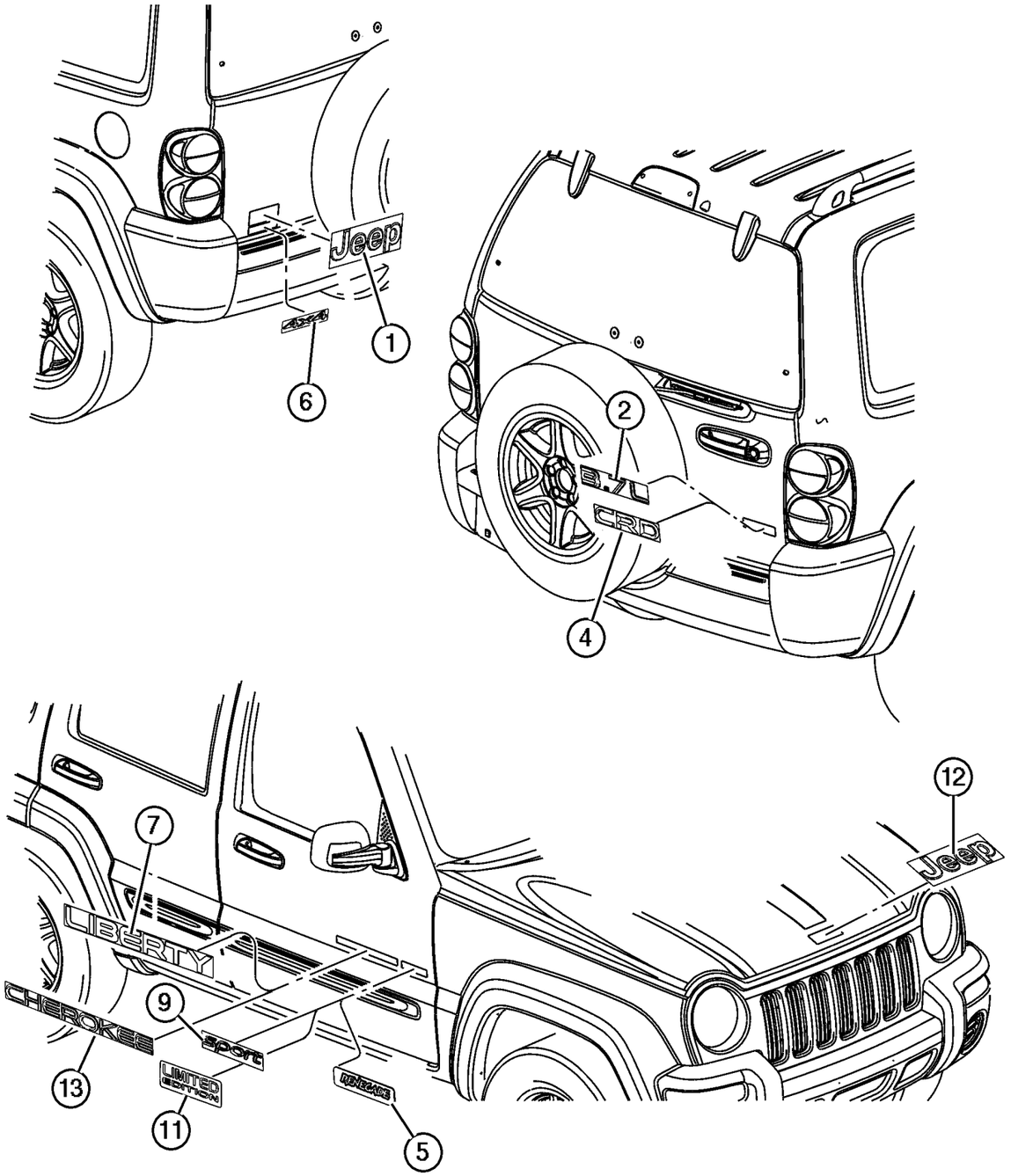

ITEM	PART NUMBER	QTY	LINE	SERIES	BODY	ENGINE	TRANS	TRIM	DESCRIPTION
Note; Sales Codes									
[MZR]= Common Rail Diesel									
1	55156 554AD	1							DECAL, JEEP, [MVC]
2	55156 275AE	1							DECAL, 3.7L, [MZL]
-3	#5JN17 CA1AB	1							NAMEPLATE, 3.7L, [KFS]
4	55156 405AD	1							DECAL, CRD, [MZR]
5	52112 057AA	2							DIMENSIONAL GRAPHIC, Renegade, [MZ2]
6	#5JN16 CA1AB	1	J, U						NAMEPLATE, 4X4, [KRS]
7	#5JN11 CA1AB	2							NAMEPLATE, Liberty, [KLS]
-8	55156 604AC	2							DECAL, Liberty, [MZ3]
9	#5JM88 CA1AA	2							NAMEPLATE, Sport, [KJS]
-10	55156 273AE	2							DECAL, Sport, Sport, [MVJ]
11	55156 605AA	2							DECAL, Limited Edition , [MZ2]
12	55156 554AD	1							DECAL, JEEP, [MVC]
13	55156 272AF	2							DECAL, Cherokee, Export
-14	4399 791	2							REFLECTOR, Fascia
-15	#55156 895AA	2	J, T						DIMENSIONAL GRAPHIC, Freedom Edition, [MZ1]
-16	#55157 022AA	2	J, T						DIMENSIONAL GRAPHIC, Rocky Mountain Edition, [MZW]
-17	#55157 024AA	2	J, U						DIMENSIONAL GRAPHIC, Red River, [MZX]

JEEP LIBERTY (KJ)

SERIES	LINE	BODY	ENGINE	TRANSMISSION
P = Limited	J = LHD (4WD)	74 = 4 Dr. (104.3 WB)	ED1, ED0 = 2.4L Power Tech	DDK = 5 Speed HDManual
H = Sport	U = RHD (4WD)		EKG, EK0 = 3.7L Power Tech	DDD = 5 Speed HD Manual
M = Renegade	T = LHD (2WD)		ENJ = 2.5L 4Cyl Turbo Diesel	DG4,DGQ = Multi-Speed Auto
			ENR = 2.8L 4Cyl Turbo Diesel	DG6 = 4 Speed Auto Transm
			EN0 = 4Cyl Turbo Diesel	DG0 = All Automatic Transm
				DBB = All Manual Transm

Moldings, Body Side
Figure EKJ-210

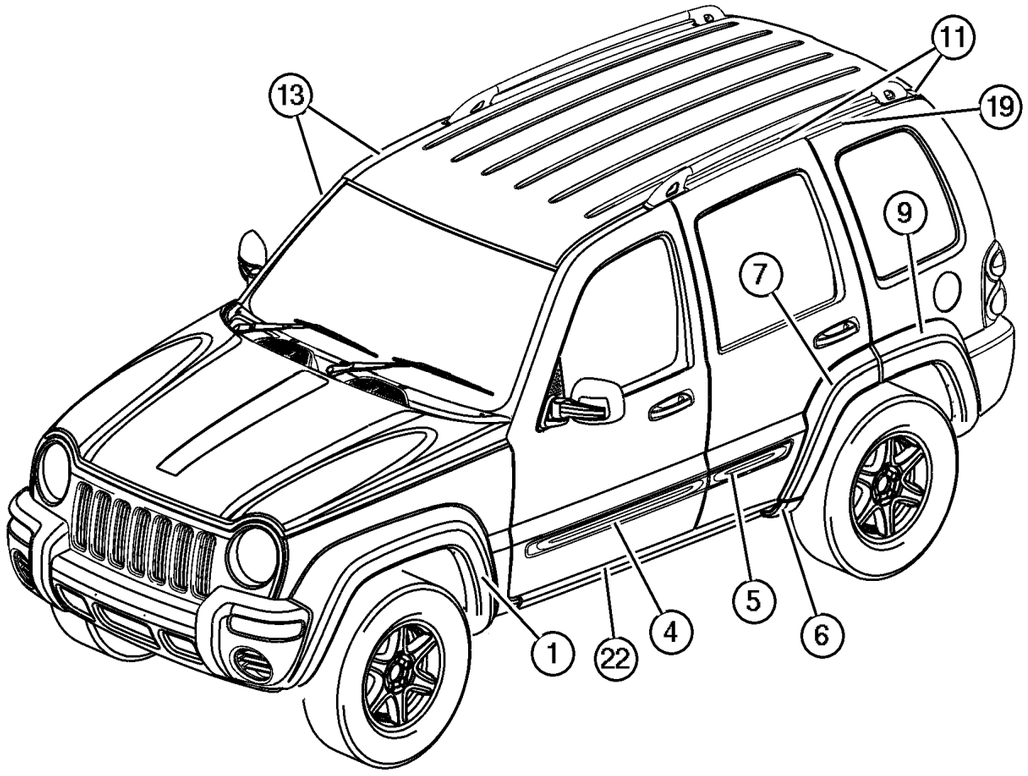

ITEM	PART NUMBER	QTY	LINE	SERIES	BODY	ENGINE	TRANS	TRIM	DESCRIPTION
NOTE									
Sales Code :[MWG] = Roof Rack									
Sales Code :[MRK] = Side Step									
Sales Code : [APA] = Australia Equipment Group									
1									APPLIQUE, Fender Wheel Opening
	5GG96 HS5AG	1		H					[K3A], Right
	5HV45 WS2AC	1							[K4S], Left
	#5HV45 DX8AD	1							[K4X], Left
	#5HV46 ZDRAD	1							[K6X], Left
	5GH00 AJCAF	1		P					[K5K], Right
	5GH00 DX8AF	1		P					[K5X], Right
	5GH00 PR4AF	1		P					[K5R], Right
	5GH00 SW1AF	1		P					[K5W], Right
	5GH00 WB7AF	1		P					[K5B], Right
	5GH00 WS2AF	1		P					[K5S], Right
	5GH00 XGRAF	1		P					[K5E], Right
	5GG97 HS5AG	1		H					[K3A], Left
	5GH00 XRVAF	1		P					[K5M], Right
	5GH00 ZBJAF	1		P					[K5D], Right
	5GH01 AJCAF	1		P					[K5K], Left
	5GH01 DX8AF	1		P					[K5X], Left
	5GH01 PR4AF	1		P					[K5R], Left
	5GH01 SW1AF	1		P					[K5W], Left
	5GH01 WB7AF	1		P					[K5B], Left
	5GH01 WS2AF	1		P					[K5S], Left
	5GH01 XGRAF	1		P					[K5E], Left
	5GH01 XRVAF	1		P					[K5M], Left
	5HV46 AFMAC	1							[K4C], Right
	5GH01 ZBJAF	1		P					[K5D], Left
	5HV46 AJCAC	1							[K4K], Right
	5HV46 WS2AC	1							[K4S], Right
	#5HV46 DX8AD	1							[K4X], Right
	#5HV45 ZDRAD	1							[K6X], Right
	5HV45 AFMAC	1							[K4C], Left
	5HV45 AJCAC	1							[K4K], Left
-2	55156 429AA	3							RETAINER, Applique, Push in Type
-3	55156 447AB	11							PIN, Push
4									MOLDING, Front Door
	5GF34 HS5AB	1		H					[K1A], Right
	5GF55 DX8AB	1		M					[K2X], Left
	5GF54 AJCAB	1		P					[K2K], Right

JEEP LIBERTY (KJ)

SERIES	LINE	BODY	ENGINE	TRANSMISSION
P = Limited	J = LHD (4WD)	74 = 4 Dr. (104.3 WB)	ED1, ED0 = 2.4L Power Tech	DDK = 5 Speed HDManual
H = Sport	U = RHD (4WD)		EKG, EK0 = 3.7L Power Tech	DDD = 5 Speed HD Manual
M = Renegade	T = LHD (2WD)		ENJ = 2.5L 4Cyl Turbo Diesel	DG4,DGQ = Multi-Speed Auto
			ENR = 2.8L 4Cyl Turbo Diesel	DG6 = 4 Speed Auto Transm
			EN0 = 4Cyl Turbo Diesel	DG0 = All Automatic Transm
				DBB = All Manual Transm

Moldings, Body Side
Figure EKJ-210

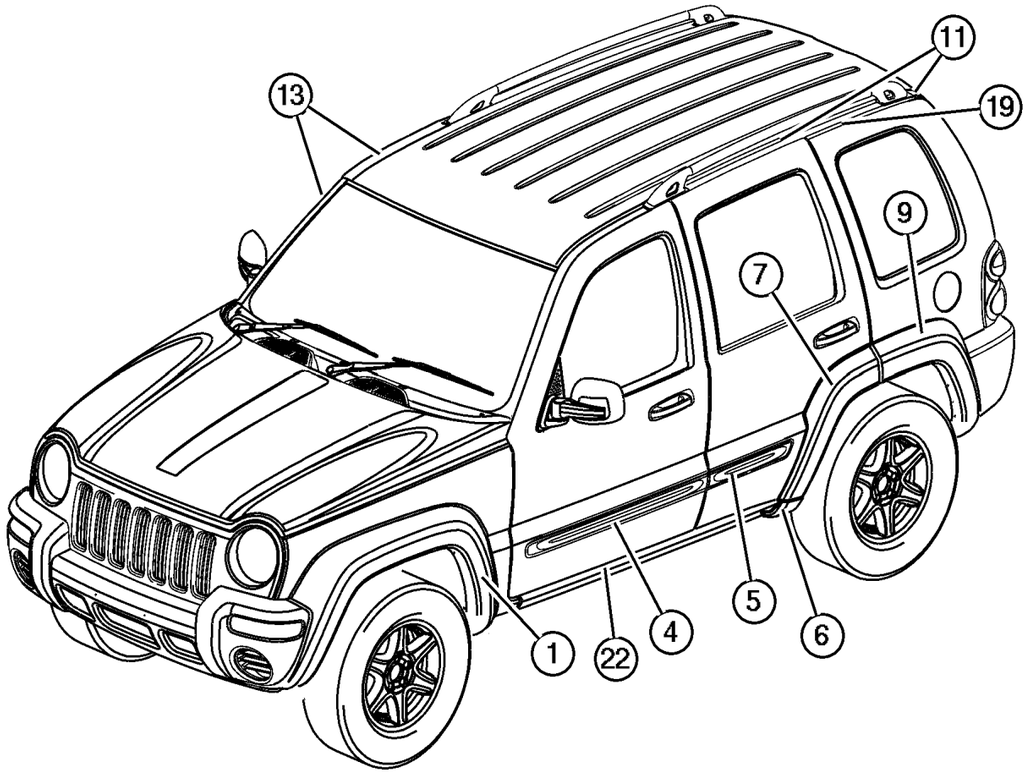

ITEM	PART NUMBER	QTY	LINE	SERIES	BODY	ENGINE	TRANS	TRIM	DESCRIPTION
	5GF54 DX8AB	1		P					[K2X], Right
	5GF54 PR4AB	1		P					[K2R], Right
	5GF54 SW1AB	1		P					[K2W], Right
	5GF54 WB7AB	1		P					[K2B], Right
	5GF54 WE5AB	1		P					[K2F], Right
	5GF54 WS2AB	1		P					[K2S], Right
	5GF54 XRVAB	1		P					[K2M], Right
	5GF54 ZBJAB	1		P					[K2D], Right
	5GF35 HS5AB	1		H					[K1A], Left
	5GF54 XGRAB	1		P					[K2E], Right
	5GF54 YY6AB	1		H					[K2T], Right
	5GF55 AJCAB	1		P					[K2K], Left
	5GF55 DX8AB	1		P					[K2X], Left
	5GF55 PR4AB	1		P					[K2R], Left
	5GF55 SW1AB	1		P					[K2W], Left
	5GF55 WB7AB	1		P					[K2B], Left
	5GF55 WE5AB	1		P					[K2F], Left
	5GF55 WS2AB	1		P					[K2S], Left
	5GF55 XRVAB	1		P					[K2M], Left
	5GF54 AFMAB	1		M					[K2C], Right
	5GF55 ZBJAB	1		P					[K2D], Left
	5GF55 XGRAB	1		P					[K2E], Left
	5GF55 YY6AB	1		H					[K2T], Left
	5GF54 AJCAB	1		M					[K2K], Right
	5GF54 WS2AB	1		M					[K2S], Right
	5GF54 DX8AB	1		M					[K2X], Right
	5GF55 AFMAB	1		M					[K2C], Left
	5GF55 AJCAB	1		M					[K2K], Left
	5GF55 WS2AB	1		M					[K2S], Left
5									MOLDING, Rear Door
	5GF30 HS5AC	1		H					[K1A], Right
	5GF39 DX8AC	1		M					[K2X], Left
	5GF38 AJCAC	1		P					[K2K], Right
	5GF38 DX8AC	1		P					[K2X], Right
	5GF38 PR4AC	1		P					[K2R], Right
	5GF38 SW1AC	1		P					[K2W], Right
	5GF38 WB7AC	1		P					[K2B], Right
	5GF38 WE5AC	1		P					[K2F], Right
	5GF38 WS2AC	1		P					[K2S], Right
	5GF38 XRVAC	1		P					[K2M], Right
	5GF38 ZBJAC	1		P					[K2D], Right

JEEP LIBERTY (KJ)

SERIES	LINE	BODY	ENGINE	TRANSMISSION
P = Limited	J = LHD (4WD)	74 = 4 Dr. (104.3 WB)	ED1, ED0 = 2.4L Power Tech	DDK = 5 Speed HDManual
H = Sport	U = RHD (4WD)		EKG, EK0 = 3.7L Power Tech	DDD = 5 Speed HD Manual
M = Renegade	T = LHD (2WD)		ENJ = 2.5L 4Cyl Turbo Diesel	DG4,DGQ = Multi-Speed Auto
			ENR = 2.8L 4Cyl Turbo Diesel	DG6 = 4 Speed Auto Transm
			EN0 = 4Cyl Turbo Diesel	DG0 = All Automatic Transm
				DBB = All Manual Transm

Moldings, Body Side
Figure EKJ-210

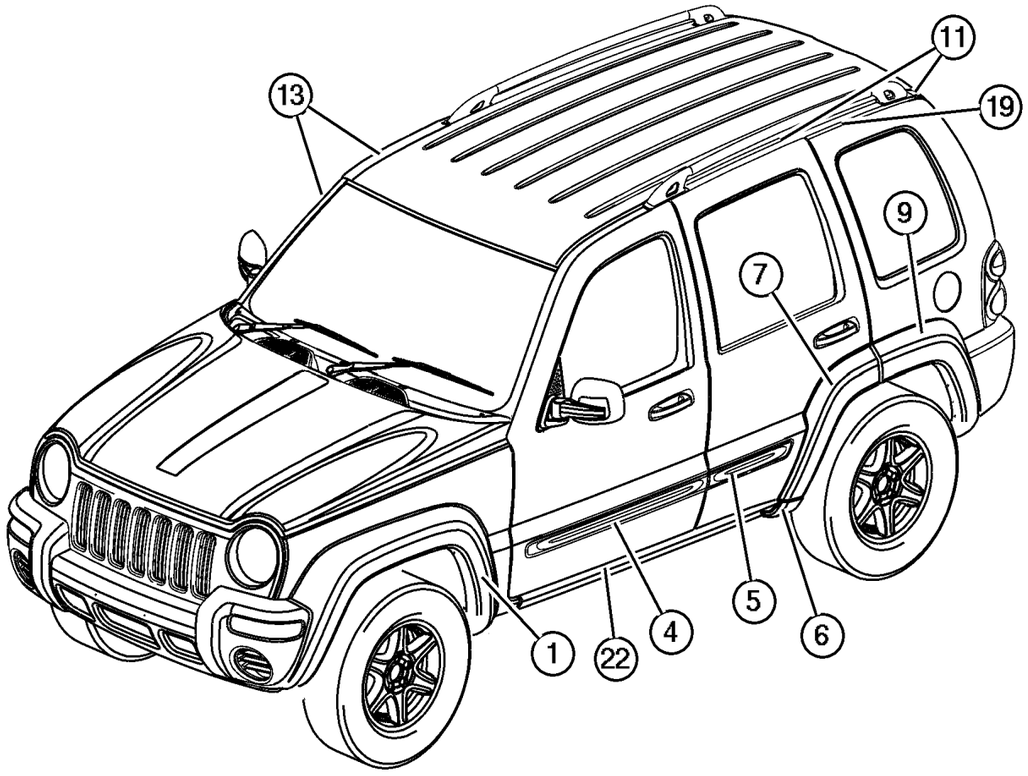

ITEM	PART NUMBER	QTY	LINE	SERIES	BODY	ENGINE	TRANS	TRIM	DESCRIPTION
	5GF31 HS5AC	1		H					[K1A], Left
	5GF39 AJCAC	1		P					[K2K], Left
	5GF39 DX8AC	1		P					[K2X], Left
	5GF39 PR4AC	1		P					[K2R], Left
	5GF39 SW1AC	1		P					[K2W], Left
	5GF39 WB7AC	1		P					[K2B], Left
	5GF39 WE5AC	1		P					[K2F], Left
	5GF39 WS2AC	1		P					[K2S], Left
	5GF39 XRVAC	1		P					[K2M], Left
	5GF39 ZBJAC	1		P					[K2D], Left
	5GF38 AFMAC	1		M					[K2C], Right
	5GF38 AJCAC	1		M					[K2K], Right
	5GF38 WS2AC	1		M					[K2S], Right
	5GF38 DX8AC	1		M					[K2X], Right
	5GF39 AFMAC	1		M					[K2C], Left
	5GF39 AJCAC	1		M					[K2K], Left
	5GF39 WS2AC	1		M					[K2S], Left
6									APPLIQUE, Sill
	5GK86 HS5AD	1		H					[K3A], Right
	5HV51 WS2AD	1							[K4S], Left
	5GK84 AJCAD	1		P					[K5K], Right
	5GK84 DX8AD	1		P					[K5X], Right
	5GK84 PR4AD	1		P					[K5R], Right
	5GK84 SW1AD	1		P					[K5W], Right
	5GK84 WB7AD	1		P					[K5B], Right
	5GK84 WE5AD	1		P					[K5F], Right
	5GK84 WS2AD	1		P					[K5S], Right
	5GK84 XRVAD	1		P					[K5M], Right
	5GK84 ZBJAD	1		P					[K5D], Right
	5GK87 HS5AD	1		H					[K3A], Left
	5GK85 AJCAD	1		P					[K5K], Left
	5GK85 DX8AD	1		P					[K5X], Left
	5GK85 PR4AD	1		P					[K5R], Left
	5GK85 SW1AD	1		P					[K5W], Left
	5GK85 WB7AD	1		P					[K5B], Left
	5GK85 WE5AD	1		P					[K5F], Left
	5GK85 WS2AD	1		P					[K5S], Left
	5GK85 XRVAD	1		P					[K5M], Left
	5GK85 ZBJAD	1		P					[K5D], Left
	5GK86 RXFAD	1		P					[K3A], Right
	5HV52 AFMAD	1							[K4C], Right

JEEP LIBERTY (KJ)

SERIES	LINE	BODY	ENGINE	TRANSMISSION
P = Limited	J = LHD (4WD)	74 = 4 Dr. (104.3 WB)	ED1, ED0 = 2.4L Power Tech	DDK = 5 Speed HDManual
H = Sport	U = RHD (4WD)		EKG, EK0 = 3.7L Power Tech	DDD = 5 Speed HD Manual
M = Renegade	T = LHD (2WD)		ENJ = 2.5L 4Cyl Turbo Diesel	DG4,DGQ = Multi-Speed Auto
			ENR = 2.8L 4Cyl Turbo Diesel	DG6 = 4 Speed Auto Transm
			EN0 = 4Cyl Turbo Diesel	DG0 = All Automatic Transm
				DBB = All Manual Transm

Moldings, Body Side
Figure EKJ-210

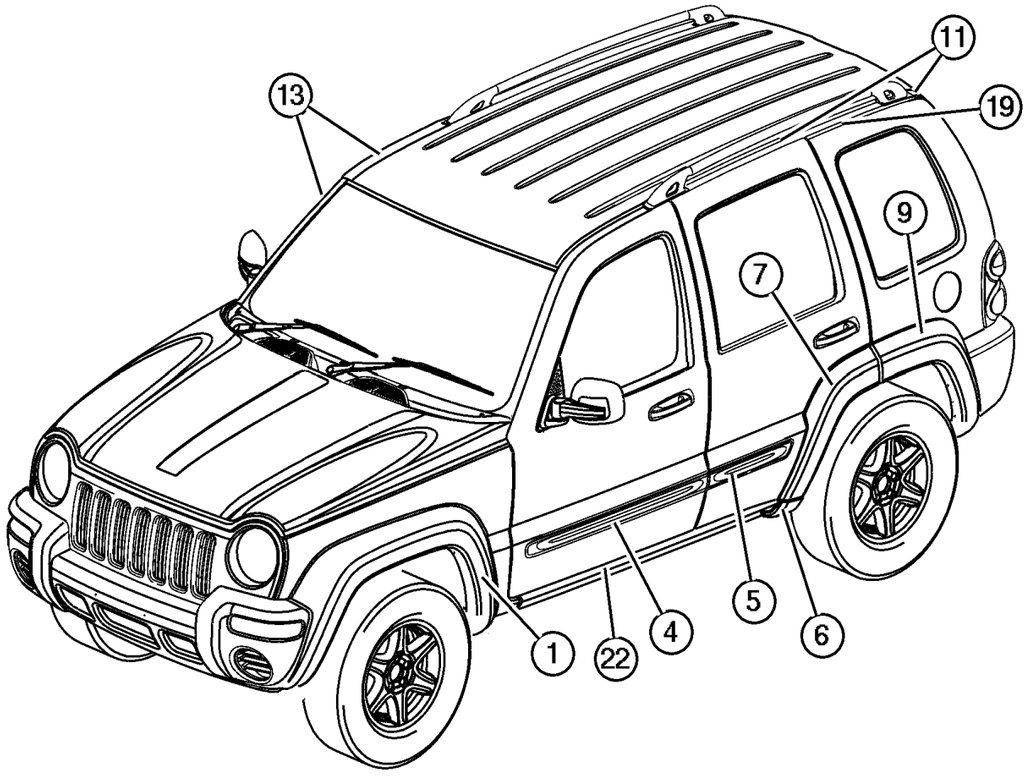

ITEM	PART NUMBER	QTY	LINE	SERIES	BODY	ENGINE	TRANS	TRIM	DESCRIPTION
	5GK87 RXFAD	1		P					[K3A], Left
	5HV52 AJCAD	1							[K4K], Right
	5HV52 DX8AD	1							[K4X], Right
	5HV52 WS2AD	1							[K4S], Right
	5HV51 AFMAD	1							[K4C], Left
	5HV51 AJCAD	1							[K4K], Left
	5HV51 DX8AD	1							[K4X], Left
7									APPLIQUE, Rear Door
	5GF36 HS5AF	1		H					[K3A], Right
	5HV49 WS2AB	1							[K4S], Left
	#5HV49 DX8AC	1							[K4X], Left
	#5HV49 ZDRAC	1							[K6Z], Left
	5GF32 AJCAF	1		P					[K5K], Right
	5GF32 DX8AF	1		P					[K5X], Right
	5GF32 PR4AF	1		P					[K5R], Right
	5GF32 SW1AF	1		P					[K5W], Right
	5GF32 WB7AF	1		P					[K5B], Right
	5GF32 WE5AE	1		P					[K5F], Right
	5GF32 WS2AF	1		P					[K5S], Right
	5GF37 HS5AF	1		H					[K3A], Left
	5GF32 XGRAF	1		P					[K5E], Right
	5GF32 XRVAF	1		P					[K5M], Right
	5GF32 ZBJAF	1		P					[K5D], Right
	5GF33 AJCAF	1		P					[K5K], Left
	5GF33 DX8AF	1		P					[K5X], Left
	5GF33 PR4AF	1		P					[K5R], Left
	5GF33 SW1AF	1		P					[K5W], Left
	5GF33 WB7AF	1		P					[K5B], Left
	5GF33 WE5AE	1		P					[K5F], Left
	5GF33 WS2AF	1		P					[K5S], Left
	5HV50 AFMAB	1							[K4C], Right
	5GF33 XGRAF	1		P					[K5E], Left
	5GF33 XRVAF	1		P					[K5M], Left
	5GF33 ZBJAE	1		P					[K5D], Left
	5HV50 AJCAB	1							[K4K], Right
	5HV50 WS2AB	1							[K4S], Right
	#5HV50 DX8AC	1							[K4X], Right
	#5HV50 ZDRAC	1							[K6Z], Right
	5HV49 AFMAB	1							[K4C], Left
	5HV49 AJCAB	1							[K4K], Left
-8	6506 010AA	5							PIN, Push
9									APPLIQUE, Rear Wheel Opening

JEEP LIBERTY (KJ)

SERIES	LINE	BODY	ENGINE	TRANSMISSION
P = Limited	J = LHD (4WD)	74 = 4 Dr. (104.3 WB)	ED1, ED0 = 2.4L Power Tech	DDK = 5 Speed HDManual
H = Sport	U = RHD (4WD)		EKG, EK0 = 3.7L Power Tech	DDD = 5 Speed HD Manual
M = Renegade	T = LHD (2WD)		ENJ = 2.5L 4Cyl Turbo Diesel	DG4,DGQ = Multi-Speed Auto
			ENR = 2.8L 4Cyl Turbo Diesel	DG6 = 4 Speed Auto Transm
			EN0 = 4Cyl Turbo Diesel	DG0 = All Automatic Transm
				DBB = All Manual Transm

AR = Use as required - = Non illustrated part # = New this model year

June 3, 2003

« RETURN TO GROUP INDEX

« »

Moldings, Body Side
Figure EKJ-210

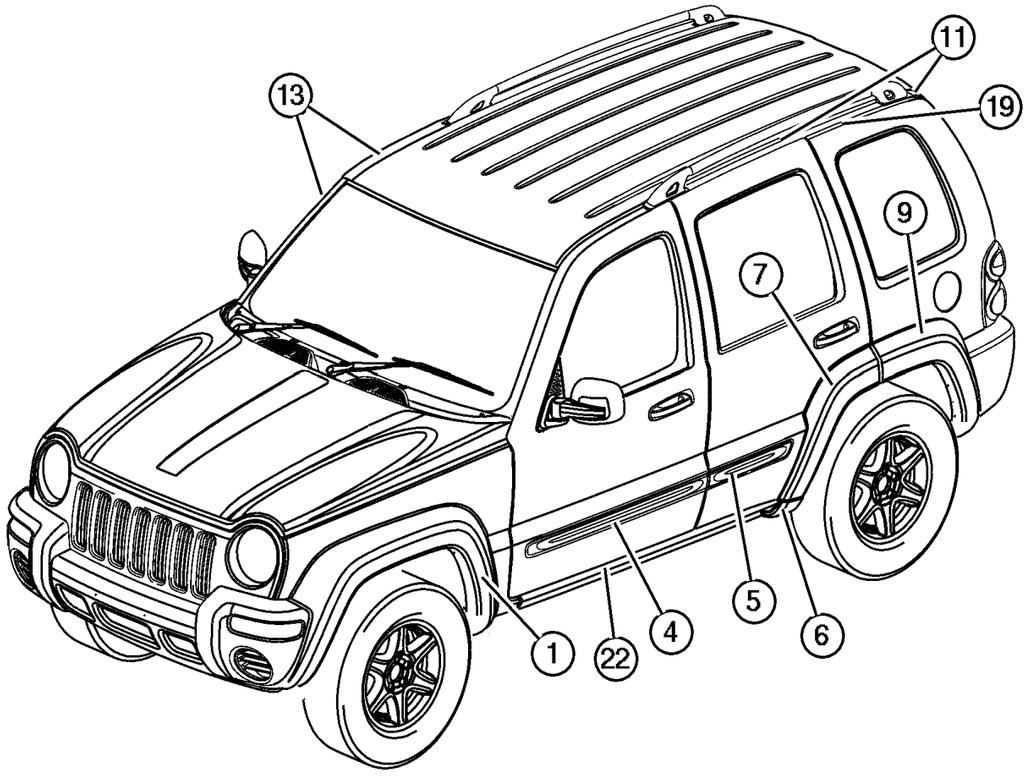

ITEM	PART NUMBER	QTY	LINE	SERIES	BODY	ENGINE	TRANS	TRIM	DESCRIPTION
	5GH02 HS5AC	1		H					[K3A], Right
	5HV47 WS2AB	1							[K4S], Left
	#5HV47 ZDRAC	1							[K6Z], Left
	5GH04 AJCAB	1		P					[K5K], Right
	5GH04 DX8AB	1		P					[K5X], Right
	5GH04 PR4AB	1		P					[K5R], Right
	5GH04 SW1AB	1		P					[K5W], Right
	5GH04 WB7AB	1		P					[K5B], Right
	5GH04 WE5AB	1		P					[K5F], Right
	5GH04 WS2AB	1		P					[K5S], Right
	5GH04 XRVAB	1		P					[K5M], Right
	5GH03 HS5AC	1		H					[K3A], Left
	5GH04 ZBJAB	1		P					[K5D], Right
	5GH05 AJCAB	1		P					[K5K], Left
	5GH05 DX8AB	1		P					[K5X], Left
	5GH05 PR4AB	1		P					[K5R], Left
	5GH05 SW1AB	1		P					[K5W], Left
	5GH05 WB7AB	1		P					[K5B], Left
	5GH05 WE5AB	1		P					[K5F], Left
	5GH05 WS2AB	1		P					[K5S], Left
	5GH05 XRVAB	1		P					[K5M], Left
	5GH05 ZBJAB	1		P					[K5D], Left
	5HV48 AFMAB	1							[K4C], Right
	5HV48 AJCAB	1							[K4K], Right
	5HV48 WS2AB	1							[K4S], Right
	#5HV48 DX8AC	1							[K4X], Right
	#5HV48 ZDRAC	1							[K6Z], Right
	5HV47 AFMAB	1							[K4C], Left
	5HV47 AJCAB	1							[K4K], Left
-10	55360 254AA	1							SEAL, Moulding
11									MOLDING, Roof
	55360 174AC	1							With Roof Rack [MWG], Right
	55360 175AC	1							With Roof Rack [MWG], Left
	55360 176AC	1							Without Roof Rack [MWG], Right
	55360 177AC	1							Without Roof Rack [MWG], Left
-12	55360 509AA	8							SPACER, Windshield
13									MOLDING, A-PILLAR
	55360 052AC	1							Right
	55360 053AC	1							Left
-14									STEP, Right Side
	5HY50 WS2AD	1							Right
	5HY51 WS2AC	1							Left

JEEP LIBERTY (KJ)

SERIES	LINE	BODY	ENGINE	TRANSMISSION
P = Limited	J = LHD (4WD)	74 = 4 Dr. (104.3 WB)	ED1, ED0 = 2.4L Power Tech	DDK = 5 Speed HDManual
H = Sport	U = RHD (4WD)		EKG, EK0 = 3.7L Power Tech	DDD = 5 Speed HD Manual
M = Renegade	T = LHD (2WD)		ENJ = 2.5L 4Cyl Turbo Diesel	DG4,DGQ = Multi-Speed Auto
			ENR = 2.8L 4Cyl Turbo Diesel	DG6 = 4 Speed Auto Transm
			EN0 = 4Cyl Turbo Diesel	DG0 = All Automatic Transm
				DBB = All Manual Transm

AR = Use as required - = Non illustrated part # = New this model year **June 3, 2003**

« RETURN TO GROUP INDEX

« »

Moldings, Body Side
Figure EKJ-210

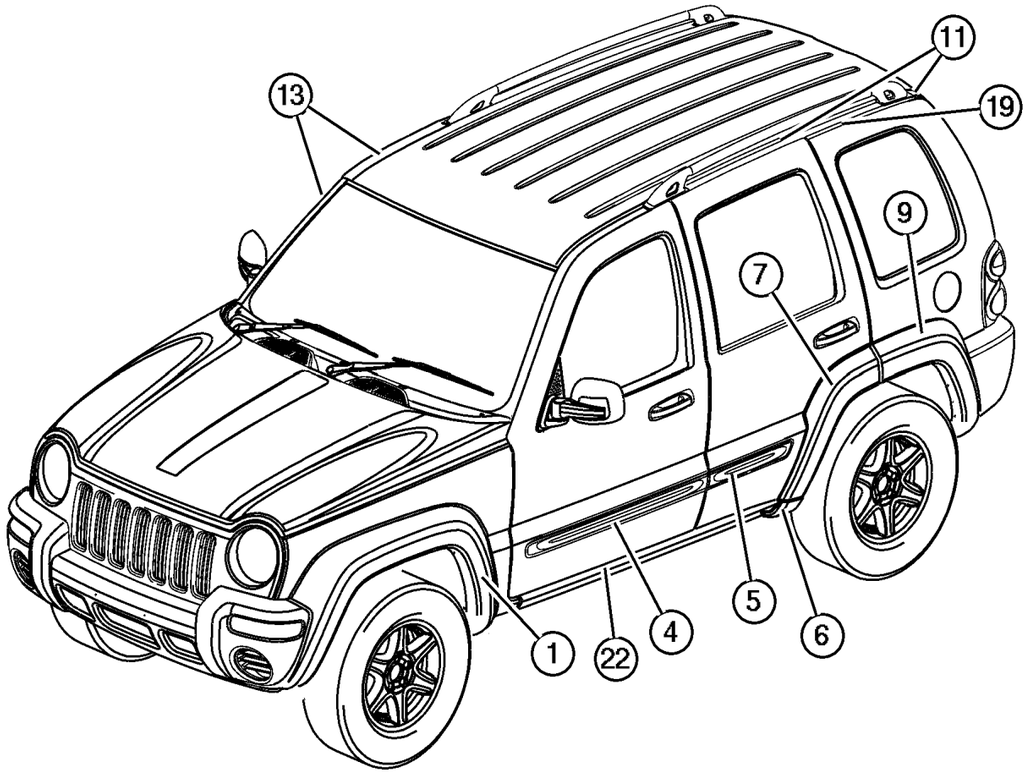

ITEM	PART NUMBER	QTY	LINE	SERIES	BODY	ENGINE	TRANS	TRIM	DESCRIPTION
-15									BRACKET, Side Rail
	55156 580AB	2							[MRK], Right
	55156 581AC	2							[MRK], Left
-16									END CAP, Side Step
	55156 512AC	1							Right Front
	55156 513AD	1							Left Front
	55156 582AC	1							Right Rear
	55156 583AC	1							Left Rear
-17									STEP PAD, Side Step
	55156 508AD	1							Right
	55156 509AC	1							Left
-18									TAPE, Anti Chip
	5JE16 DX9AA	1		P					Right
	5JE17 DX9AA	1		P					Left
19									MOLDING, Roof
	55360 176AC	1							Without Roof Rack [MWG], Right
	55360 177AC	1							Without Roof Rack [MWG], Left
	55360 174AC	1							With Roof Rack [MWG], Right
	55360 175AC	1							With Roof Rack [MWG], Left
-20	#5101 912AA	8		H, P					RETAINER, Molding
-21	0153 732	4							SCREW, .164-15x.500, Roof Molding
22									MOLDING, Sill Cover
	5GU02 RXFAC	1		H, P					Right
	5GU03 RXFAC	1		H, P					Left

JEEP LIBERTY (KJ)

SERIES	LINE	BODY	ENGINE	TRANSMISSION
P = Limited	J = LHD (4WD)	74 = 4 Dr. (104.3 WB)	ED1, ED0 = 2.4L Power Tech	DDK = 5 Speed HDManual
H = Sport	U = RHD (4WD)		EKG, EK0 = 3.7L Power Tech	DDD = 5 Speed HD Manual
M = Renegade	T = LHD (2WD)		ENJ = 2.5L 4Cyl Turbo Diesel	DG4,DGQ = Multi-Speed Auto
			ENR = 2.8L 4Cyl Turbo Diesel	DG6 = 4 Speed Auto Transm
			EN0 = 4Cyl Turbo Diesel	DG0 = All Automatic Transm
				DBB = All Manual Transm

AR = Use as required - = Non illustrated part # = New this model year

June 3, 2003

« RETURN TO GROUP INDEX

«

Side Steps, Tubular [MRK]
Figure EKJ-220

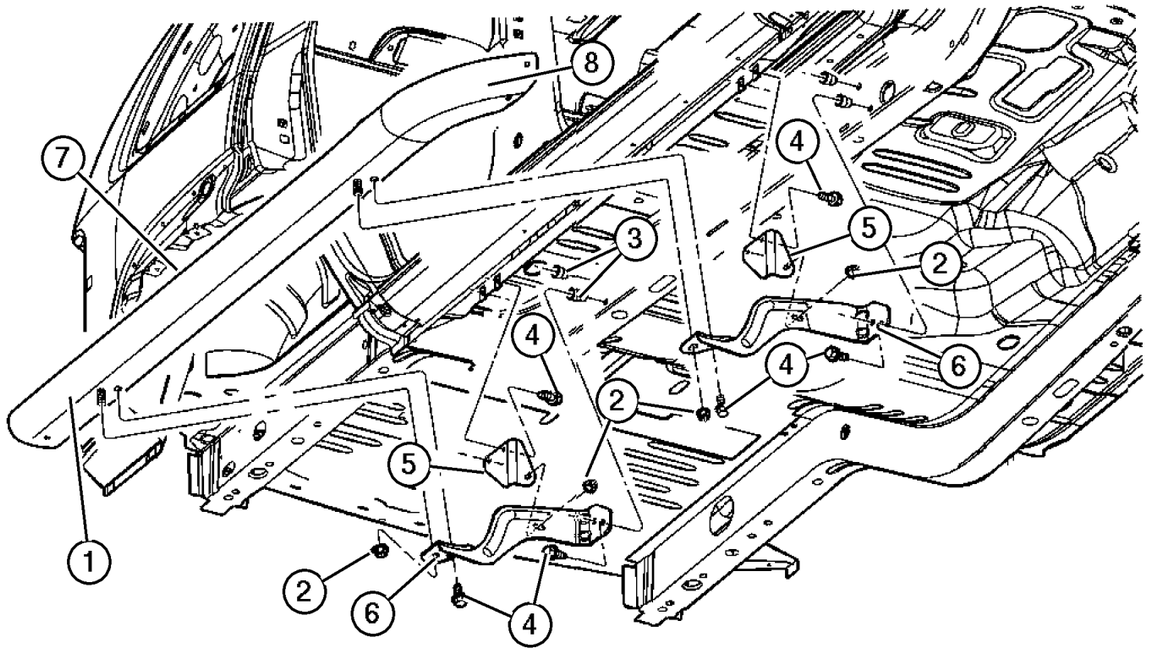

ITEM	PART NUMBER	QTY	LINE	SERIES	BODY	ENGINE	TRANS	TRIM	DESCRIPTION
1									STEP, Right Side
	5HY50 WS2AD	1							Right
	5HY51 WS2AC	1							Left
2									NUT AND WASHER, M8-1.25, (NOT SERVICED) (Not Serviced)
3									NUT/RIVET, M8x1.25x17.78, (NOT SERVICED) (Not Serviced)
4	6100 592	4							SCREW, M8x1.25x30
5									BRACKET, Side Rail
	55156 510AD	1							Front, Right
	55156 511AD	1							Front, Left
	55156 584AD	1							Rear, Right
	55156 587AD	1							Rear, Left
6									BRACKET, Side Rail
	55156 580AC	2							Right
	55156 581AC	2							Left
7									STEP PAD, Side Step
	55156 508AD	1							Right
	55156 509AD	1							Left
8									END CAP, Side Step
	55156 512AD	1							Front, Right
	55156 513AD	1							Front, Left
	55156 582AC	1							Rear, Right
	55156 583AC	1							Rear, Left

JEEP LIBERTY (KJ)

SERIES	LINE	BODY	ENGINE	TRANSMISSION
P = Limited	J = LHD (4WD)	74 = 4 Dr. (104.3 WB)	ED1, ED0 = 2.4L Power Tech	DDK = 5 Speed HDManual
H = Sport	U = RHD (4WD)		EKG, EK0 = 3.7L Power Tech	DDD = 5 Speed HD Manual
M = Renegade	T = LHD (2WD)		ENJ = 2.5L 4Cyl Turbo Diesel	DG4,DGQ = Multi-Speed Auto
			ENR = 2.8L 4Cyl Turbo Diesel	DG6 = 4 Speed Auto Transm
			EN0 = 4Cyl Turbo Diesel	DG0 = All Automatic Transm
				DBB = All Manual Transm

AR = Use as required - = Non illustrated part # = New this model year **June 3, 2003**

« RETURN TO GROUP INDEX

Decals
Figure EKJ-310

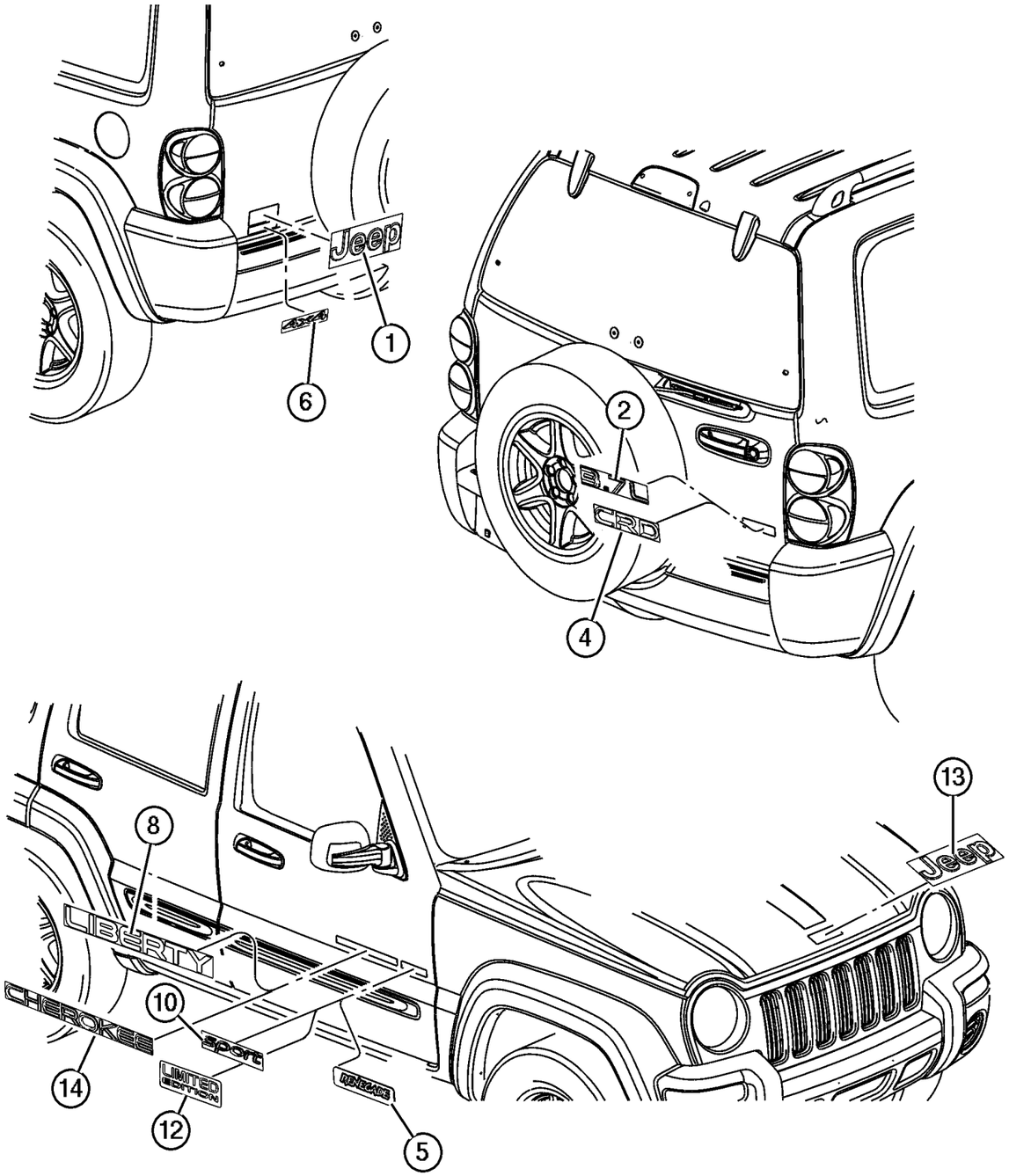

ITEM	PART NUMBER	QTY	LINE	SERIES	BODY	ENGINE	TRANS	TRIM	DESCRIPTION
Note; Sales Codes									
[MZR]= Common Rail Diesel									
1	55156 554AD	1							DECAL, JEEP, [MVC]
2	55156 275AE	1							DECAL, 3.7L, [MZL]
-3	#5JN17 CA1AB	1							NAMEPLATE, 3.7L, [KFS]
4	55156 405AD	1							DECAL, CRD, [MZR]
5	52112 057AA	2							DIMENSIONAL GRAPHIC, Renegade, [MZ2]
6	#5JN16 CA1AB	1	J, U						NAMEPLATE, 4X4, [KRS]
-7	#55156 555AE	1	J, U						DECAL, 4x4, [MVD]
8	#5JN11 CA1AB	2							NAMEPLATE, Liberty, [KLS]
-9	55156 604AC	2							DECAL, Liberty, [MZ3]
10	#5JM88 CA1AA	2							NAMEPLATE, Sport, [KJS]
-11	55156 273AE	2							DECAL, Sport, Sport, [MVJ]
12	55156 605AA	2							DECAL, Limited Edition , [MZ2]
13	55156 554AD	1							DECAL, JEEP, [MVC]
14	55156 272AF	2							DECAL, Cherokee, Export
-15	4399 791	2							REFLECTOR, Fascia
-16	#55156 895AA	2	J, T						DIMENSIONAL GRAPHIC, Freedom Edition, [MZ1]

JEEP LIBERTY (KJ)

SERIES	LINE	BODY	ENGINE	TRANSMISSION
P = Limited	J = LHD (4WD)	74 = 4 Dr. (104.3 WB)	ED1, ED0 = 2.4L Power Tech	DDK = 5 Speed HDManual
H = Sport	U = RHD (4WD)		EKG, EK0 = 3.7L Power Tech	DDD = 5 Speed HD Manual
M = Renegade	T = LHD (2WD)		ENJ = 2.5L 4Cyl Turbo Diesel	DG4,DGQ = Multi-Speed Auto
			ENR = 2.8L 4Cyl Turbo Diesel	DG6 = 4 Speed Auto Transm
			EN0 = 4Cyl Turbo Diesel	DG0 = All Automatic Transm
				DBB = All Manual Transm

AR = Use as required - = Non illustrated part # = New this model year **June 3, 2003**

« RETURN TO GROUP INDEX

Group – IKJ

Interior Trim

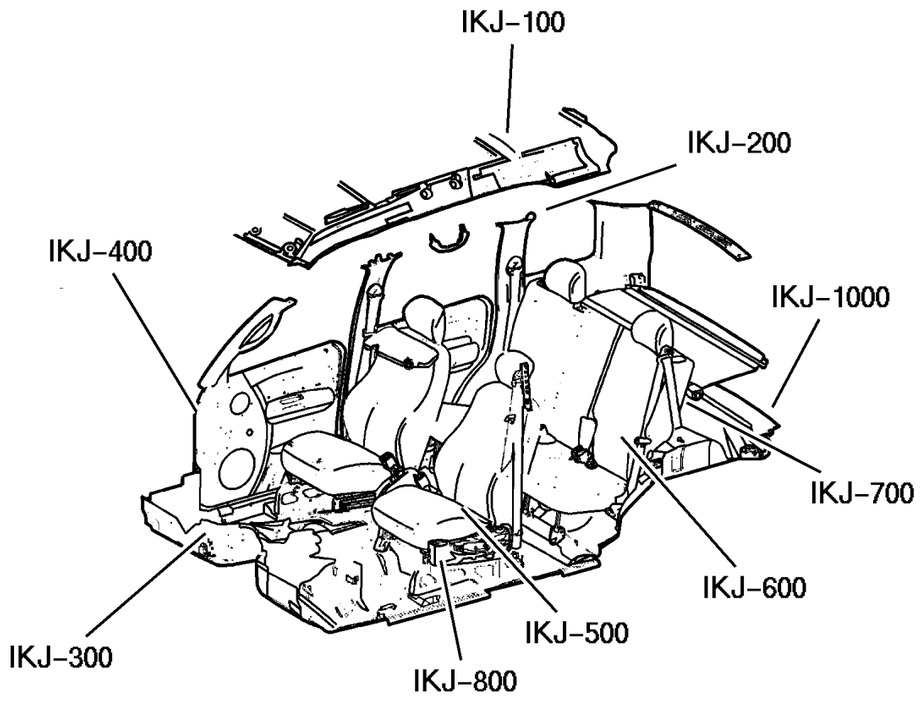

IKJ–100 Headliner and Visor 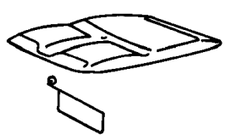	**IKJ–200** Moldings, Scuff Plates 	**IKJ–300** Carpet and Tonneau Cover 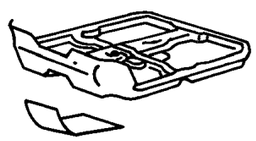	**IKJ–400** Door Trim Panels 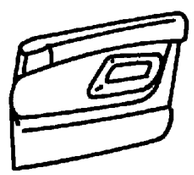
IKJ–500 Front Seats and Attaching Parts 	**IKJ–600** Rear Seats and Attaching Parts 	**IKJ–700** Seat Belts–Front and Rear 	**IKJ–800** Adjusters, Covers, Shields, and Risers 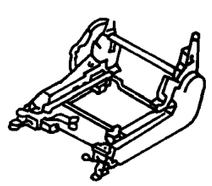

Group – IKJ

Interior Trim

IKJ–1000 Lift Gate Trim 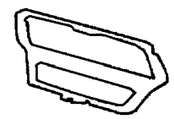			

GROUP IKJ - Interior Trim

Illustration Title	Group-Fig. No.
Headliner and Visor	
Headliner and Visors	Fig. IKJ-110
Moldings, Scuff Plates	
Panels, Interior Trim, Front	Fig. IKJ-210
Panels, Interior Trim, Rear	Fig. IKJ-220
Carpet and Tonneau Cover	
Carpets and Mats	Fig. IKJ-310
Door Trim Panels	
Trim Panel, Front Door	Fig. IKJ-410
Trim Panel, Rear Door	Fig. IKJ-420
Front Seats and Attaching Parts	
Front Seat, Leather, Low Back, Trim Code [DL]	Fig. IKJ-510
Front Seat, Cloth, Low Back, Trim Code [XJ]	Fig. IKJ-520
Front Seat, Cloth, Trim Code [M5]	Fig. IKJ-530
Front Seat, Cloth, Low Back, Trim Code [E7]	Fig. IKJ-540
Front Seat, Cloth, Trim Code [L5]	Fig. IKJ-550
Front Seat, Cloth, Low Back, Trim Code [K7]	Fig. IKJ-560
Front Seat, Cloth With Gray Insert, [H5]	Fig. IKJ-570
Rear Seats and Attaching Parts	
Rear Seats, Trim Code [M5]	Fig. IKJ-610
Rear Seat, Trim Code [DL]	Fig. IKJ-620
Rear Seat, Trim Code [XJ]	Fig. IKJ-630
Rear Seat, Trim Code [E7]	Fig. IKJ-640
Rear Seat, Trim Code [L5]	Fig. IKJ-650
Rear Seat, Trim Code [K7]	Fig. IKJ-660
Rear Seat, Trim Code [H5]	Fig. IKJ-670
Seat Belts-Front and Rear	
Seat Belts, Front	Fig. IKJ-710
Seat Belts, Rear	Fig. IKJ-720
Adjusters, Covers, Shields, and Risers	
Recliner and Adjuster	Fig. IKJ-810
Lift Gate Trim	
Swing Gate Trim Panel	Fig. IKJ-1010

Headliner and Visors
Figure IKJ-110

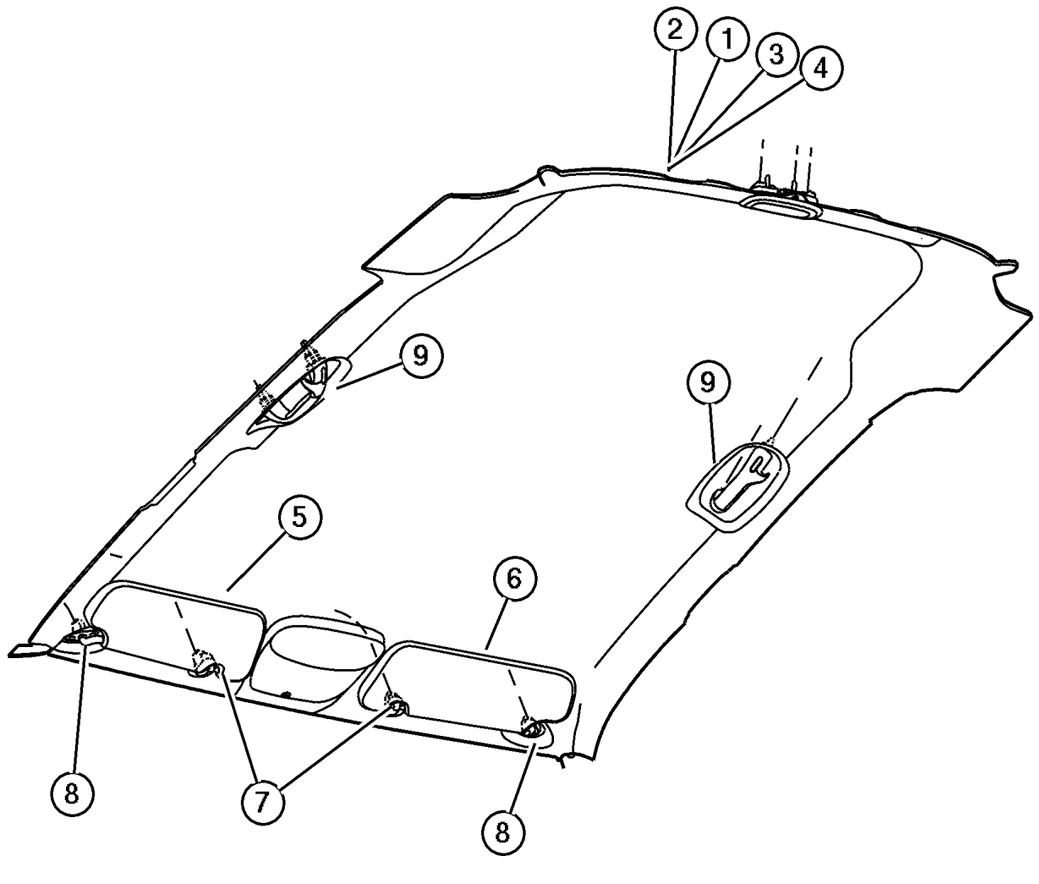

ITEM	PART NUMBER	QTY	LINE	SERIES	BODY	ENGINE	TRANS	TRIM	DESCRIPTION
Sales Codes:									
[AHM] = Convenience Group 1									
[CGS] = Side Air Bags									
[CUD] = Console, Mini Overhead									
[GNA] = Prismatic									
[GNK] = Electrochromic									
[GWA] = Power Sunroof									
[LSC] = Security Alarm									
1									HEADLINER, Without Sunroof [GWA]
	#XP81 TL2AA	1	J, T						With [CGS] Side Air Bags Only
	#XP83 TL2AA	1	J, T						With [AHM] Convenience Group 1 and [CGS] Side Air Bags
	#XP85 TL2AA	1	J, T						Without [AHM] Convenience Group 1, [CUD] Overhead Console, [GWA] Power Sunroof, and [CGS] Side Air Bags
	#XP86 TL2AA	1	J, T						With [AHM] Convenience Group 1, Only
	#XP87 1L2AA	1	J, T						With [AHM] Convenience Group 1, [CUD] Overhead Console, [GNK] Auto Dim Mirror
	#XW08 1L2AA	1	J, T						With [AHM] Convenience Group 1, [CUD] Overhead Console
	#XP82 1L2AA	1	J, T						With [AHM] Convenience Group 1, [CUD] Overhead Console, [CGS] Side Air Bags and [GNK] Auto Dim Mirror
	#XW09 1L2AA	1	J, T						With [AHM] Convenience Group 1, [CUD] Overhead Console, and [CGS] Side Air Bags
2									HEADLINER, With Sunroof [GWA]
	#XP89 TL2AA	1	J, T						With [AHM] Convenience Group 1, [CGS] Side Air Bags
	#XP90 TL2AA	1	J, T						With [AHM] Convenience Group 1, [CUD] Overhead Console, [CGS] Side Air Bags and [GNK] Auto Dim Mirror
	#XP92 TL2AA	1	J, T						With [AHM] Convenience Group 1
	#XP93 TL2AA	1	J, T						With [AHM] Convenience Group 1, [CUD] Overhead Console, and [GNK] Auto Dim Mirror

JEEP LIBERTY (KJ)

SERIES	LINE	BODY	ENGINE	TRANSMISSION
P = Limited	J = LHD (4WD)	74 = 4 Dr. (104.3 WB)	ED1, ED0 = 2.4L Power Tech	DDK = 5 Speed HDManual
H = Sport	U = RHD (4WD)		EKG, EK0 = 3.7L Power Tech	DDD = 5 Speed HD Manual
M = Renegade	T = LHD (2WD)		ENJ = 2.5L 4Cyl Turbo Diesel	DG4,DGQ = Multi-Speed Auto
			ENR = 2.8L 4Cyl Turbo Diesel	DG6 = 4 Speed Auto Transm
			EN0 = 4Cyl Turbo Diesel	DG0 = All Automatic Transm
				DBB = All Manual Transm

Headliner and Visors
Figure IKJ-110

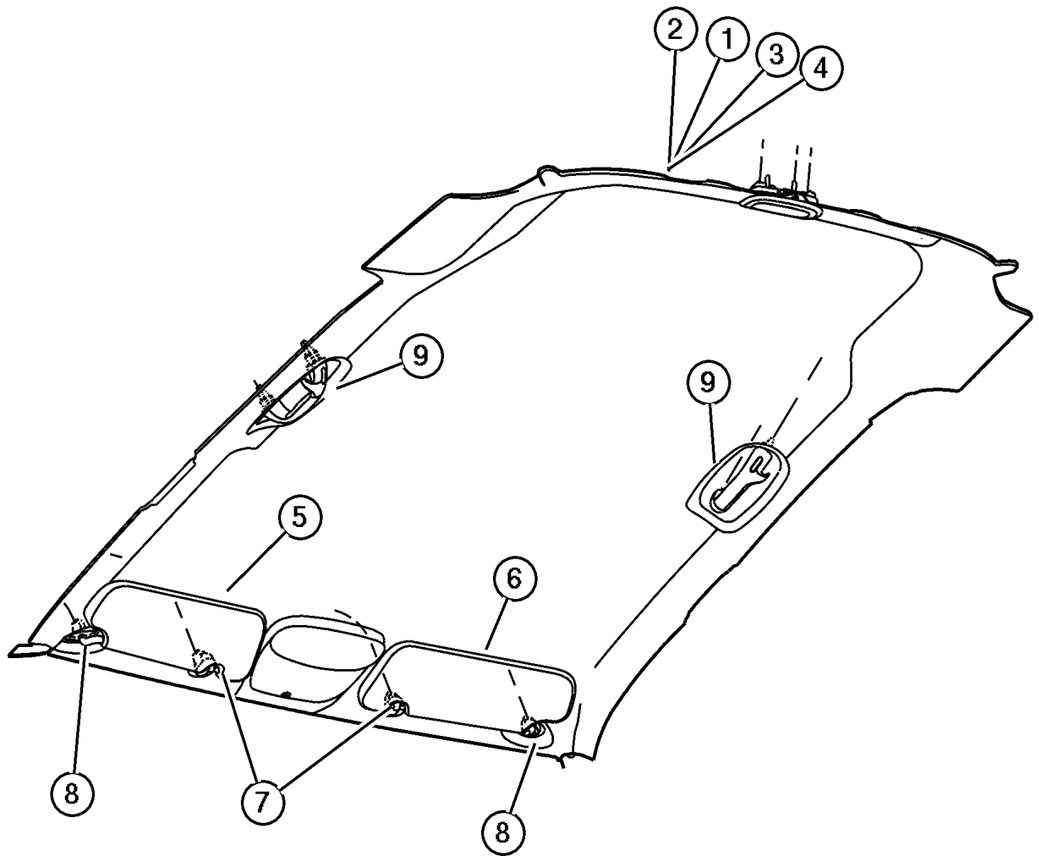

ITEM	PART NUMBER	QTY	LINE	SERIES	BODY	ENGINE	TRANS	TRIM	DESCRIPTION
	#XW10 TL2AA	1	J, T						With [AHM] Convenience Group 1, [CUD] Overhead Console, and [CGS] Side Air Bags
	#XW11 TL2AA	1	J, T						With [AHM] Convenience Group 1, [CUD] Overhead Console
3									HEADLINER, Export, With Sunroof [GWA]
	#XP91 TL2AA	1							With [CGS] Side Air Bags, [CUD] Overhead Console, [LSC] Security Alarm, [GNK] Auto Dim Mirror
	#YL12 TL2AA	1							With [CUD] Overhead Console, [LSC] Security Alarm
	#XW10 TL2AA	1	J, T						With [CGS] Side Air Bags, [CUD] Overhead Console
	#XZ20 TL2AA	1							With [CGS] Side Air Bags Only
	#XZ22 TL2AA	1							With [CGS] Side Air Bags, [CUD] Overhead Console, [GNK] Auto Dim Mirror
	#YL04 TL2AA	1							With [CGS] Side Air Bags, [CUD] Overhead Console, [LSC] Security Alarm
	#XP94 TL2AA	1							With [CUD] Overhead Console, [LSC] Security Alarm, [GNK] Auto Dim Mirror
	#XW11 TL2AA	1	J, T						With [CUD] Overhead Console
	#XY04 TL2AA	1							With Sunroof Only
	#XY06 TL2AA	1							With [CUD] Overhead Console, [GNK] Auto Dim Mirror
4									HEADLINER, Export, Without Sunroof [GWA]
	#XP84 1L2AA	1							With [CGS] Side Air Bags, [CUD] Overhead Console, [GNK] Auto Dim Mirror, [LSC] Security Alarm
	#XW08 1L2AA	1	J, T						With [CUD] Overhead Console
	#YL03 1L2AA	1							With [CGS] Side Air Bags, [CUD] Overhead Console, [LSC] Security Alarm
	#XP88 1L2AA	1							With [CUD] Overhead Console, [GNK] Auto Dim Mirror, [LSC] Security Alarm

JEEP LIBERTY (KJ)

SERIES	LINE	BODY	ENGINE	TRANSMISSION
P = Limited	J = LHD (4WD)	74 = 4 Dr. (104.3 WB)	ED1, ED0 = 2.4L Power Tech	DDK = 5 Speed HDManual
H = Sport	U = RHD (4WD)		EKG, EK0 = 3.7L Power Tech	DDD = 5 Speed HD Manual
M = Renegade	T = LHD (2WD)		ENJ = 2.5L 4Cyl Turbo Diesel	DG4,DGQ = Multi-Speed Auto
			ENR = 2.8L 4Cyl Turbo Diesel	DG6 = 4 Speed Auto Transm
			EN0 = 4Cyl Turbo Diesel	DG0 = All Automatic Transm
				DBB = All Manual Transm

AR = Use as required - = Non illustrated part # = New this model year

June 3, 2003

« RETURN TO GROUP INDEX

Headliner and Visors
Figure IKJ-110

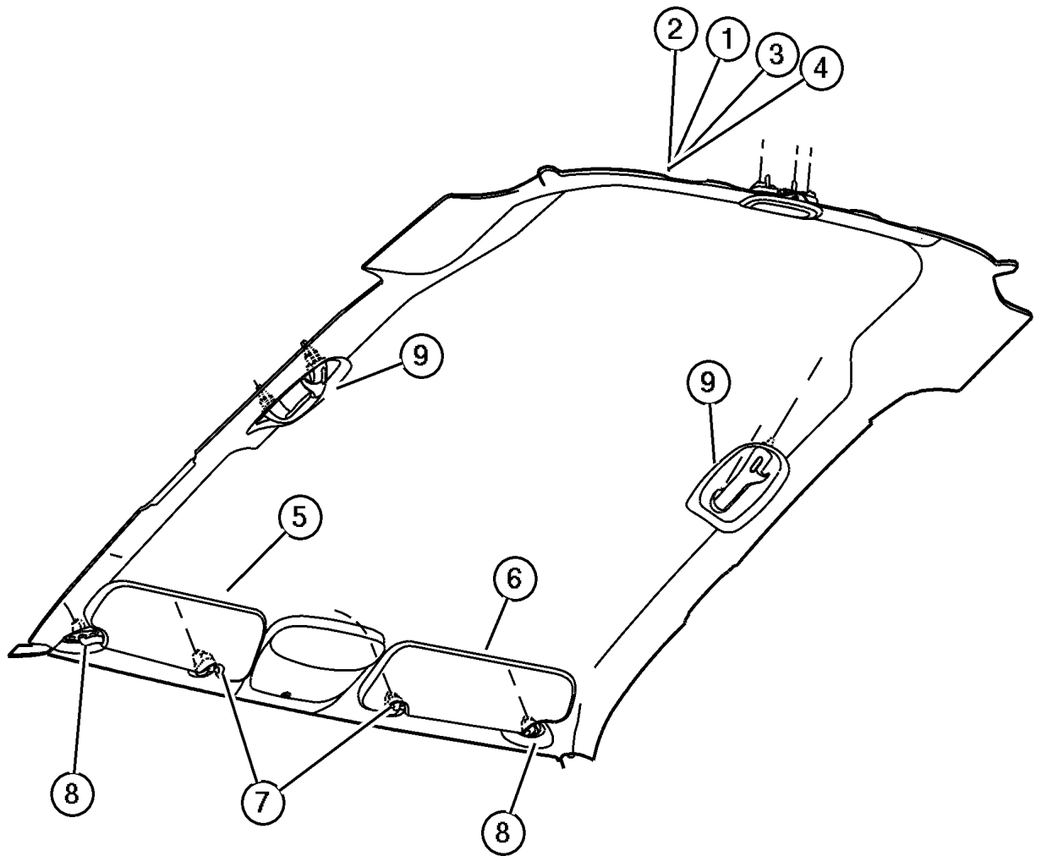

ITEM	PART NUMBER	QTY	LINE	SERIES	BODY	ENGINE	TRANS	TRIM	DESCRIPTION
	#YL09 1L2AA	1							With [CUD] Overhead Console, [LSC] Security Alarm
	#XZ11 TL2AA	1							With [CGS] Side Air Bags Only
	#XY03 TL2AA	1							
	#XZ21 1L2AA	1							With [CGS] Side Air Bags, [CUD] Overhead Console, [GNK] Auto Dim Mirror
	#XW09 1L2AA	1	J, T						With [CGS] Side Air Bags, [CUD] Overhead Console
	#XY05 1L2AA	1							With [CUD] Overhead Console, [GNK] Auto Dim Mirror
5									VISOR
	#XN86 TL2AA	1	J, T						Illuminated, (French and English Labels are not included), Right
	#XQ00 TL2AA	1	J, T						Non-Illuminated, (French and English Labels are not included), Right
6									VISOR
	#XN87 TL2AA	1	J, T						Illuminated, (French and English Labels are not included), Left
	#XQ01 TL2AA	1	J, T						Non-Illuminated, (French and English Labels are not included), Left
7	#XP97 TL2AA	2	J, T						SUPPORT, Visor
8	5072 343AA	2							CLIP, Visor
9									HANDLE, Roof Grab
	UY68 TL2AA	1							Right
	UY69 TL2AA	1							Left
-10	4897 875AA	2							LABEL, Airbag
-11	4787 437AA	2							LABEL, Air Bag Warning, CANADA ONLY, Both Visors, French and English
-12	55352 825AA	1							LABEL, Visor Warning, CANADA ONLY, High Risk Roll Over, French and English, Left Side

JEEP LIBERTY (KJ)

SERIES	LINE	BODY	ENGINE	TRANSMISSION
P = Limited	J = LHD (4WD)	74 = 4 Dr. (104.3 WB)	ED1, ED0 = 2.4L Power Tech	DDK = 5 Speed HDManual
H = Sport	U = RHD (4WD)		EKG, EK0 = 3.7L Power Tech	DDD = 5 Speed HD Manual
M = Renegade	T = LHD (2WD)		ENJ = 2.5L 4Cyl Turbo Diesel	DG4,DGQ = Multi-Speed Auto
			ENR = 2.8L 4Cyl Turbo Diesel	DG6 = 4 Speed Auto Transm
			EN0 = 4Cyl Turbo Diesel	DG0 = All Automatic Transm
				DBB = All Manual Transm

AR = Use as required - = Non illustrated part # = New this model year

June 3, 2003

« RETURN TO GROUP INDEX

«

Panels, Interior Trim, Front
Figure IKJ-210

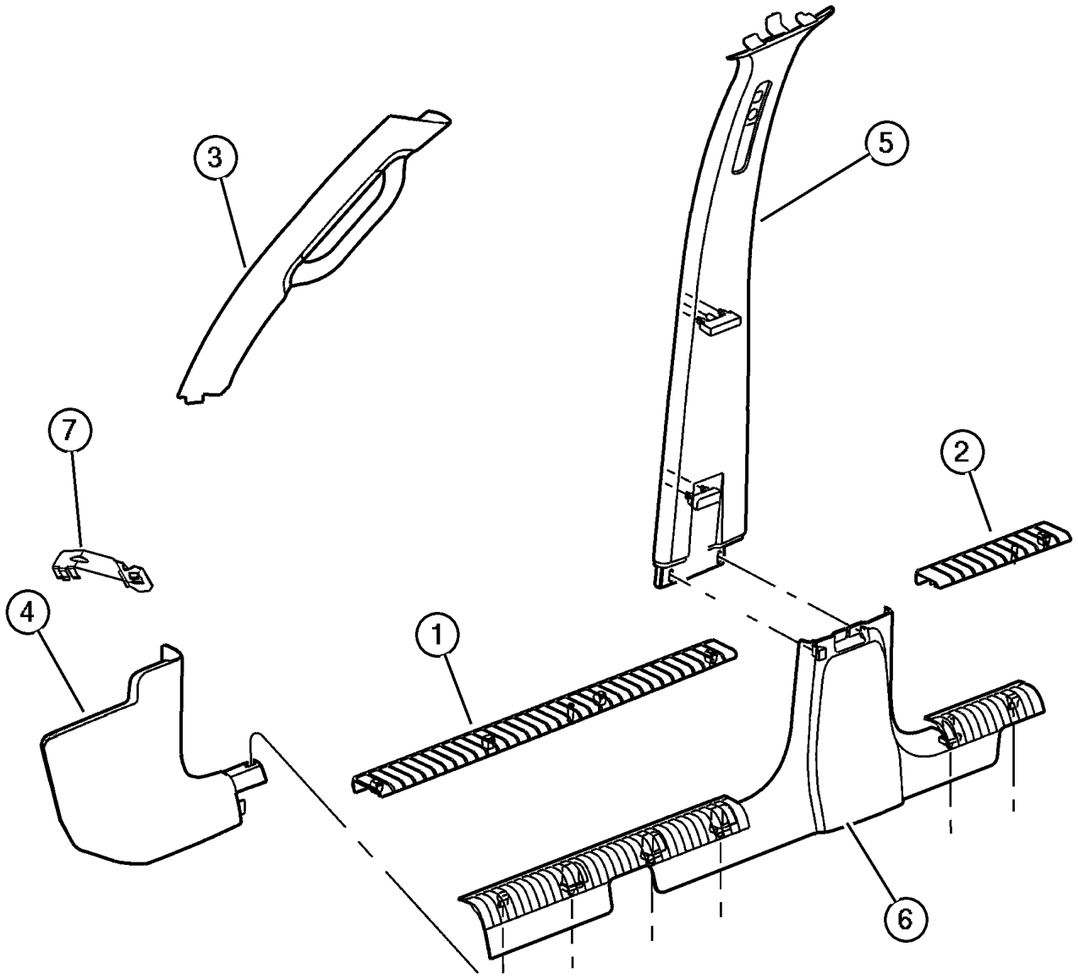

ITEM	PART NUMBER	QTY	LINE	SERIES	BODY	ENGINE	TRANS	TRIM	DESCRIPTION
1									PLATE, Scuff
	55352 778AC	1							Right Front
	55352 779AE	1							Left Front
2									PLATE, Scuff
	55352 780AB	1							Rear Right
	55352 781AB	1							Rear Left
3									PANEL, A Pillar Trim
	#5GM92 TL2AH	1							Right
	#5GM93 TL2AH	1							Left
4									PANEL, Cowl Side Trim
	5GE62 WL5AG	1							[L2, L5], Right
	5GE62 XDVAF	1							[D2, DV], Right
	#5GE67 WL5AH	1							[L2, L5], Left
	5GE67 XDVAF	1							[D2, DV], Left
5									COVER, B Pillar Trim Panel
	#5GE60 WL5AI	1							[L2, L5], Right
	#5GE60 XDVAI	1							[D2, DV], Right
	#5GE61 WL5AI	1							[L2, L5], Left
	#5GE61 XDVAI	1							[D2, DV], Left
6									PANEL, Side Sill
	5GG22 WL5AK	1							[L2, L5], Right
	5GG22 XDVAK	1							[D2, DV], Right
	5GG23 WL5AL	1							[L2, L5], Left
	5GG23 XDVAL	1							[D2, DV], Left
7	55352 837AC	1							BRACKET, Trim Panel, Up to 9/25/02, Not Used After

JEEP LIBERTY (KJ)

SERIES	LINE	BODY	ENGINE	TRANSMISSION
P = Limited	J = LHD (4WD)	74 = 4 Dr. (104.3 WB)	ED1, ED0 = 2.4L Power Tech	DDK = 5 Speed HDManual
H = Sport	U = RHD (4WD)		EKG, EK0 = 3.7L Power Tech	DDD = 5 Speed HD Manual
M = Renegade	T = LHD (2WD)		ENJ = 2.5L 4Cyl Turbo Diesel	DG4,DGQ = Multi-Speed Auto
			ENR = 2.8L 4Cyl Turbo Diesel	DG6 = 4 Speed Auto Transm
			EN0 = 4Cyl Turbo Diesel	DG0 = All Automatic Transm
				DBB = All Manual Transm

Panels, Interior Trim, Rear
Figure IKJ-220

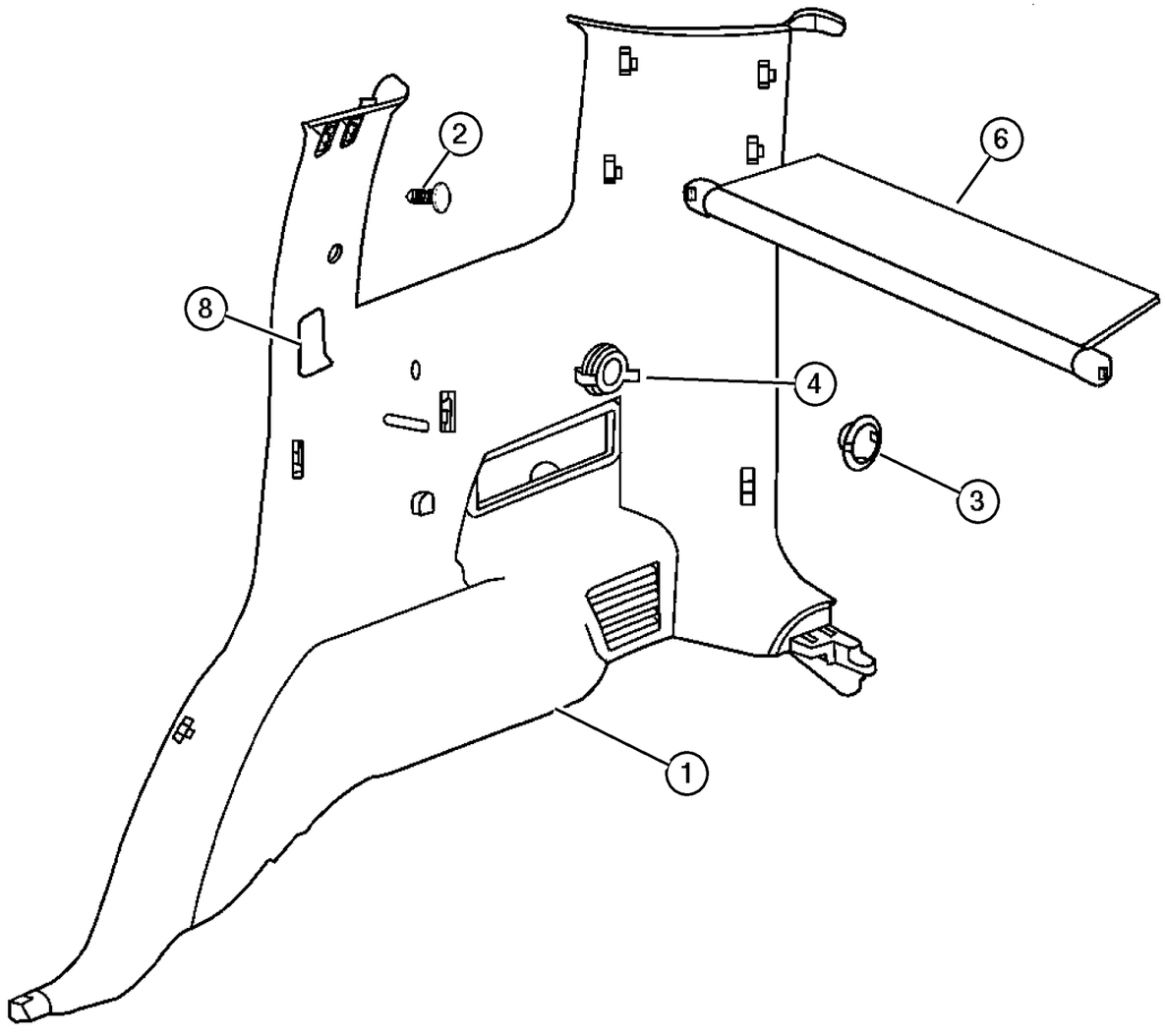

ITEM	PART NUMBER	QTY	LINE	SERIES	BODY	ENGINE	TRANS	TRIM	DESCRIPTION
1									PANEL, Quarter Trim
	5HG52 WL5AK	1							[L2, L5], Up to 9/4/02, Right
	#5HG56 WL5AL	1							[L2, L5], With Trim Panel Net, After 9/4/02, Right
	5HG56 XDVAK	1							[D2, DV], With Trim Panel Net, Up to 9/4/02, Right
	#5HG56 XDVAL	1							[D2, DV], With Trim Panel Net, After 9/4/02, Right
	5HG57 WL5AK	1							[L2, L5], Up to 9/4/02, Left
	#5HG57 WL5AL	1							[L2, L5], After 9/4/02, Left
	5HG57 XDVAJ	1							[D2, DV], Up to 9/4/02, Left
	#5HG57 XDVAL	1							[D2, DV], After 9/4/02, Left
	#5HG52 WL5AL	1							[L2, L5], After 9/4/02, Right
	5HG52 XDVAK	1							[D2, DV], Up to 9/4/02, Right
	#5HG52 XDVAL	1							[D2, DV], After 9/4/02, Right
	5HG55 WL5AK	1							[L2, L5], With CD Changer Opening, Up to 9/4/02, Right
	#5HG55 WL5AL	1							[L2, L5], With CD Changer Opening, After 9/4/02, Right
	5HG55 XDVAK	1							[D2, DV], With CD Changer Opening, Up to 9/4/02, Right
	#5HG55 XDVAL	1							[D2, DV], With CD Changer Opening, After 9/4/02, Right
	5HG56 WL5AK	1							[L2, L5], With Trim Panel Net, Up to 9/4/02, Right
2									PIN, Push
	XD15 WL5AA	1							[L2, L5]
	XD15 XDVAA	1							[D2, DV]
3									PLUG, Quarter Trim Panel
	5HH32 WL5AA	1							[L2, L5]
	5HH32 XDVAA	1							[D2, DV]
4	4793 554AB	1							POWER OUTLET, Cigar Lighter, 2 Terminals
-5	4685 668AA	1							MOUNT, Power Outlet
6									COVER, Cargo Compartment
	5GF74 1DVAB	1							[D2, DV], Up to 9/4/02
	5GF74 1L5AB	1							[L2, L5], Up to 9/4/02
	#5JM75 1DVAA	1							[D2, DV], After 9/4/02
	#5JM75 1L5AA	1							[L2, L5], After 9/4/02
-7									BEZEL, interior trim, Surrounds [CD] Changer
	WL87 WL5AA	1							[L2, L5]

JEEP LIBERTY (KJ)

SERIES	LINE	BODY	ENGINE	TRANSMISSION
P = Limited	J = LHD (4WD)	74 = 4 Dr. (104.3 WB)	ED1, ED0 = 2.4L Power Tech	DDK = 5 Speed HDManual
H = Sport	U = RHD (4WD)		EKG, EK0 = 3.7L Power Tech	DDD = 5 Speed HD Manual
M = Renegade	T = LHD (2WD)		ENJ = 2.5L 4Cyl Turbo Diesel	DG4,DGQ = Multi-Speed Auto
			ENR = 2.8L 4Cyl Turbo Diesel	DG6 = 4 Speed Auto Transm
			EN0 = 4Cyl Turbo Diesel	DG0 = All Automatic Transm
				DBB = All Manual Transm

AR = Use as required - = Non illustrated part # = New this model year **June 3, 2003**

« RETURN TO GROUP INDEX »

Panels, Interior Trim, Rear
Figure IKJ-220

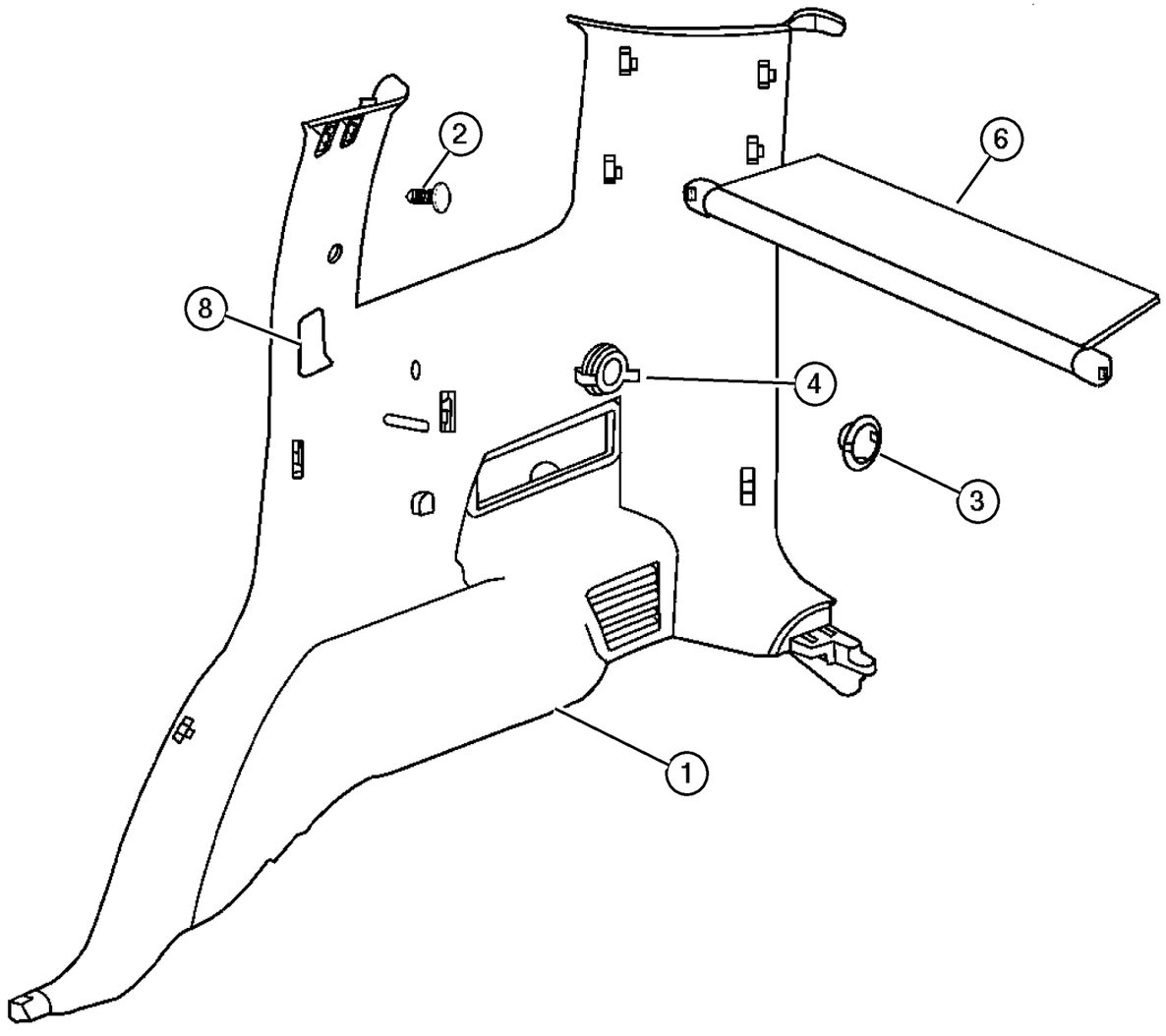

ITEM	PART NUMBER	QTY	LINE	SERIES	BODY	ENGINE	TRANS	TRIM	DESCRIPTION
	WL87 XDVAA	1							[D2, DV]
8									COVER, C Pillar
	WR16 WL5AA	1							[L2, L5], Right
	WR16 XDVAA	1							[D2, DV], Right
	WR17 WL5AA	1							[L2, L5], Left
	WR17 XDVAA	1							[D2, DV], Left

JEEP LIBERTY (KJ)

SERIES	LINE	BODY	ENGINE	TRANSMISSION
P = Limited	J = LHD (4WD)	74 = 4 Dr. (104.3 WB)	ED1, ED0 = 2.4L Power Tech	DDK = 5 Speed HDManual
H = Sport	U = RHD (4WD)		EKG, EK0 = 3.7L Power Tech	DDD = 5 Speed HD Manual
M = Renegade	T = LHD (2WD)		ENJ = 2.5L 4Cyl Turbo Diesel	DG4,DGQ = Multi-Speed Auto
			ENR = 2.8L 4Cyl Turbo Diesel	DG6 = 4 Speed Auto Transm
			EN0 = 4Cyl Turbo Diesel	DG0 = All Automatic Transm
				DBB = All Manual Transm

Carpets and Mats
Figure IKJ-310

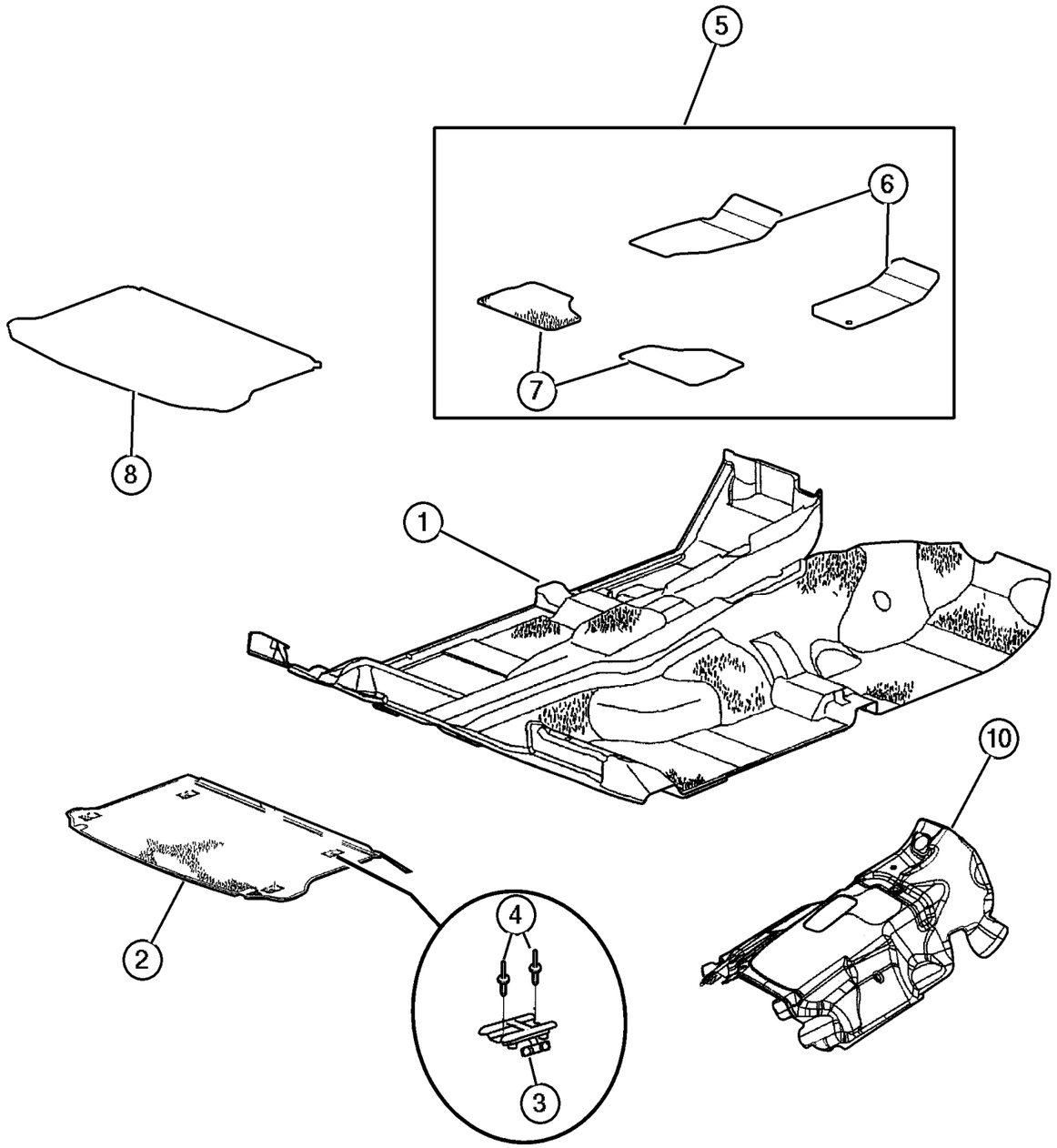

ITEM	PART NUMBER	QTY	LINE	SERIES	BODY	ENGINE	TRANS	TRIM	DESCRIPTION
1									CARPET, Front Floor
	5GF83 WL8AF	1	J, T						[L2, L5], Without Footrest, With Vinyl Heel Pad, With Manual Transmission
	5JH17 XDVAB	1	J, T						[D2, DV], With Footrest, Without Vinyl Heel Pad, With Automatic Transmission
	5JH18 WL8AB	1	J, T						[L2, L5], Without Footrest, Without Vinyl Heel Pad, With Manual Transmission
	5JH18 XDVAB	1	J, T						[D2, DV], Without Footrest, Without Vinyl Heel Pad, With Manual Transmission
	#5JR01 WL8AA	1	J, T						[L2, L5], With Footrest, Without Vinyl Heel Pad, With 2.8L Diesel
	#5JR01 XDVAA	1	J, T						[D2, DV], With Footrest, Without Vinyl Heel Pad, With 2.8L Diesel
	#5JR08 WL8AA	1	U						[L2, L5], With Footrest, With 2.8L Diesel
	#5JR08 XDVAA	1	U						[DV], With Footrest, With 2.8L Diesel
	5GF83 XDVAF	1	J, T						[D2, DV], Without Footrest, With Vinyl Heel Pad, With Manual Transmission
	5GF86 WL8AG	1	U						[L2, L5], Without Footrest, With Manual Transmission
	5GF86 XDVAF	1	U						[D2, DV], Without Footrest, With Manual Transmission
	#5GU95 WL8AG	1	J, T						[L2, L5], With Footrest, With Vinyl Heel Pad, With Automatic Transmission
	5GU95 XDVAF	1	J, T						[D2, DV], With Footrest, With Vinyl Heel Pad, With Automatic Transmission
	5GV15 WL8AF	1	U						[L2, L5], With Footrest, With Automatic Transmission
	5GV15 XDVAG	1	U						[D2, DV], With Footrest, With Automatic Transmission
	5JH17 WL8AB	1	J, T						[L2, L5], With Footrest, Without Vinyl Heel Pad, With Automatic Transmission

JEEP LIBERTY (KJ)

SERIES	LINE	BODY	ENGINE	TRANSMISSION
P = Limited	J = LHD (4WD)	74 = 4 Dr. (104.3 WB)	ED1, ED0 = 2.4L Power Tech	DDK = 5 Speed HDManual
H = Sport	U = RHD (4WD)		EKG, EK0 = 3.7L Power Tech	DDD = 5 Speed HD Manual
M = Renegade	T = LHD (2WD)		ENJ = 2.5L 4Cyl Turbo Diesel	DG4,DGQ = Multi-Speed Auto
			ENR = 2.8L 4Cyl Turbo Diesel	DG6 = 4 Speed Auto Transm
			EN0 = 4Cyl Turbo Diesel	DG0 = All Automatic Transm
				DBB = All Manual Transm

Carpets and Mats
Figure IKJ-310

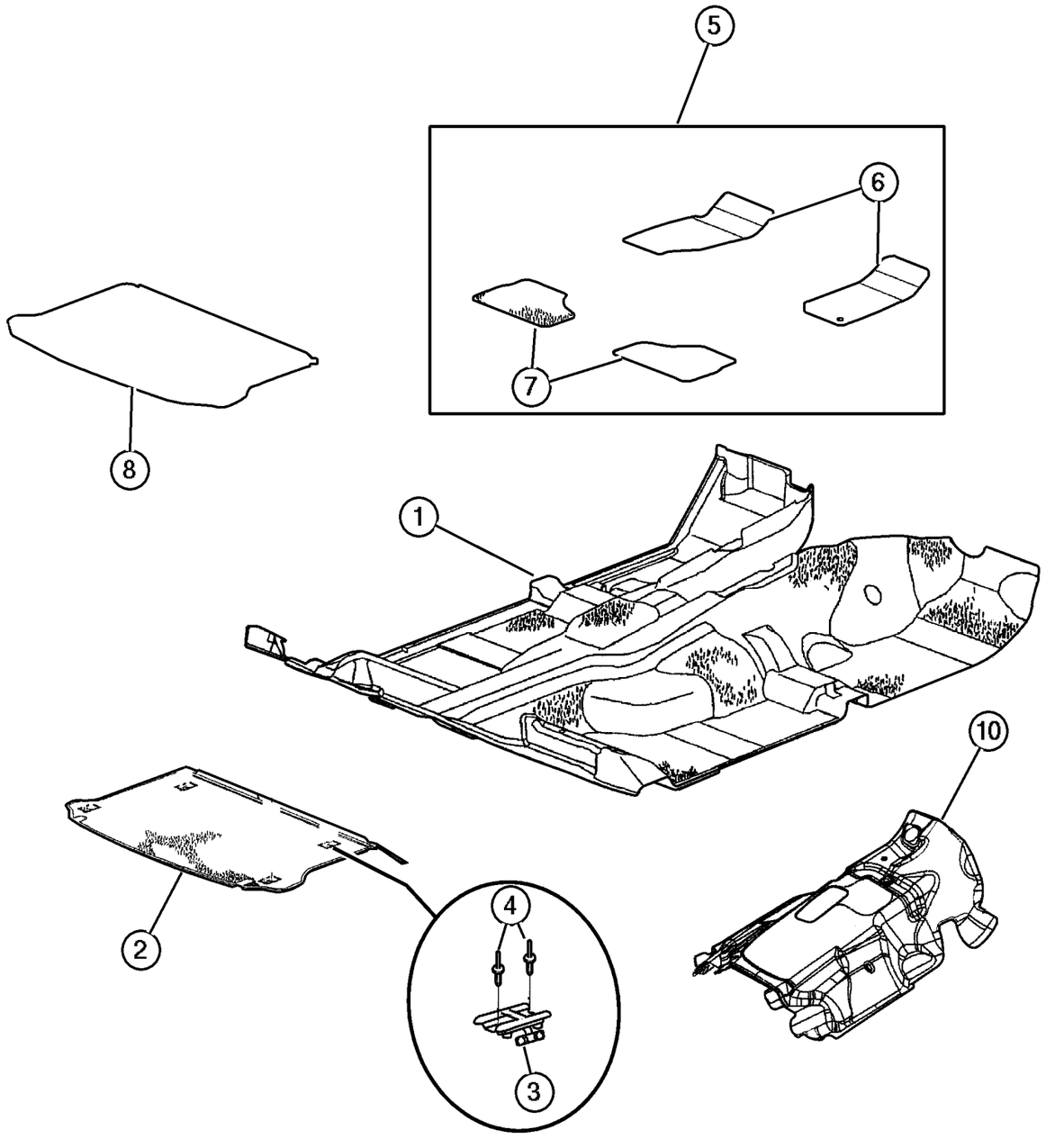

ITEM	PART NUMBER	QTY	LINE	SERIES	BODY	ENGINE	TRANS	TRIM	DESCRIPTION
2									CARPET, Cargo Floor, Includes
									Cargo Tie Down Hooks
	5GF79 WL8AF	1							[L2, L5]
	5GF79 XDVAF	1							[D2, DV]
3	5086 138AA	4							ANCHOR, Tie Down
4	6036 484AA	8							RIVET, Blind Bulb, Open
5									MAT KIT, Floor - Complete, Export Only
	8220 6860	1	U	H, P	74				Dark Taupe, Without Footrest
	8220 6861	1	U	H, P	74				Dark Slate, Without Footrest
	8220 6858	1	J, T	H, M, P	74				Dark Taupe, Without Footrest
	8220 6859	1	J, T	H, M, P	74				Dark Slate, Without Footrest
	8220 7377	1	J, T		74				Dark Taupe, With Footrest
	8220 7378	1	J, T		74				Dark Slate, With Footrest
	8220 7379	1	U		74				Dark Taupe, With Footrest
	8220 7380	1	U		74				Dark Slate, With Footrest
6									MAT KIT, Floor - Front
	8220 6004	1							Dark Slate, Slush, Urethane
	8220 6005	1							Taupe, Slush, Urethane
	8220 6851	1	J, T		74				Dark Taupe
	8220 6852	1	J, T		74				Dark Slate
	8220 6854	1	U	H, P	74				Dark Taupe
	8220 7356	1							Dark Slate, Slush, Urethane, Export
	8220 7357	1							Taupe, Slush, Urethane, Export
	8220 6853	1	U	H, P	74				Dark Slate
7									MAT KIT, Floor - Rear
	8220 6006	1							Dark Slate, Slush, Urethane
	8220 6007	1							Taupe, Slush, Urethane
	8220 6856	1							Dark Taupe
	8220 6857	1							Dark Slate
8	8220 6761	1							MAT KIT, Bed - Interior, One piece mat folds at rear seat and flexes
									with seats when layed flat or in up position.
-9									CLIP, Floor Mat Retention
	5086 365AA	1	J, T						
		1	U						
10	55352 844AC	1							PAD, Tunnel
-11									SILENCER, Floor Pan, 2.8 Diesel Only
	#55352 898AA	1							Right

JEEP LIBERTY (KJ)

SERIES	LINE	BODY	ENGINE	TRANSMISSION
P = Limited	J = LHD (4WD)	74 = 4 Dr. (104.3 WB)	ED1, ED0 = 2.4L Power Tech	DDK = 5 Speed HDManual
H = Sport	U = RHD (4WD)		EKG, EK0 = 3.7L Power Tech	DDD = 5 Speed HD Manual
M = Renegade	T = LHD (2WD)		ENJ = 2.5L 4Cyl Turbo Diesel	DG4,DGQ = Multi-Speed Auto
			ENR = 2.8L 4Cyl Turbo Diesel	DG6 = 4 Speed Auto Transm
			EN0 = 4Cyl Turbo Diesel	DG0 = All Automatic Transm
				DBB = All Manual Transm

AR = Use as required - = Non illustrated part # = New this model year **June 3, 2003**

« RETURN TO GROUP INDEX

« »

Carpets and Mats
Figure IKJ-310

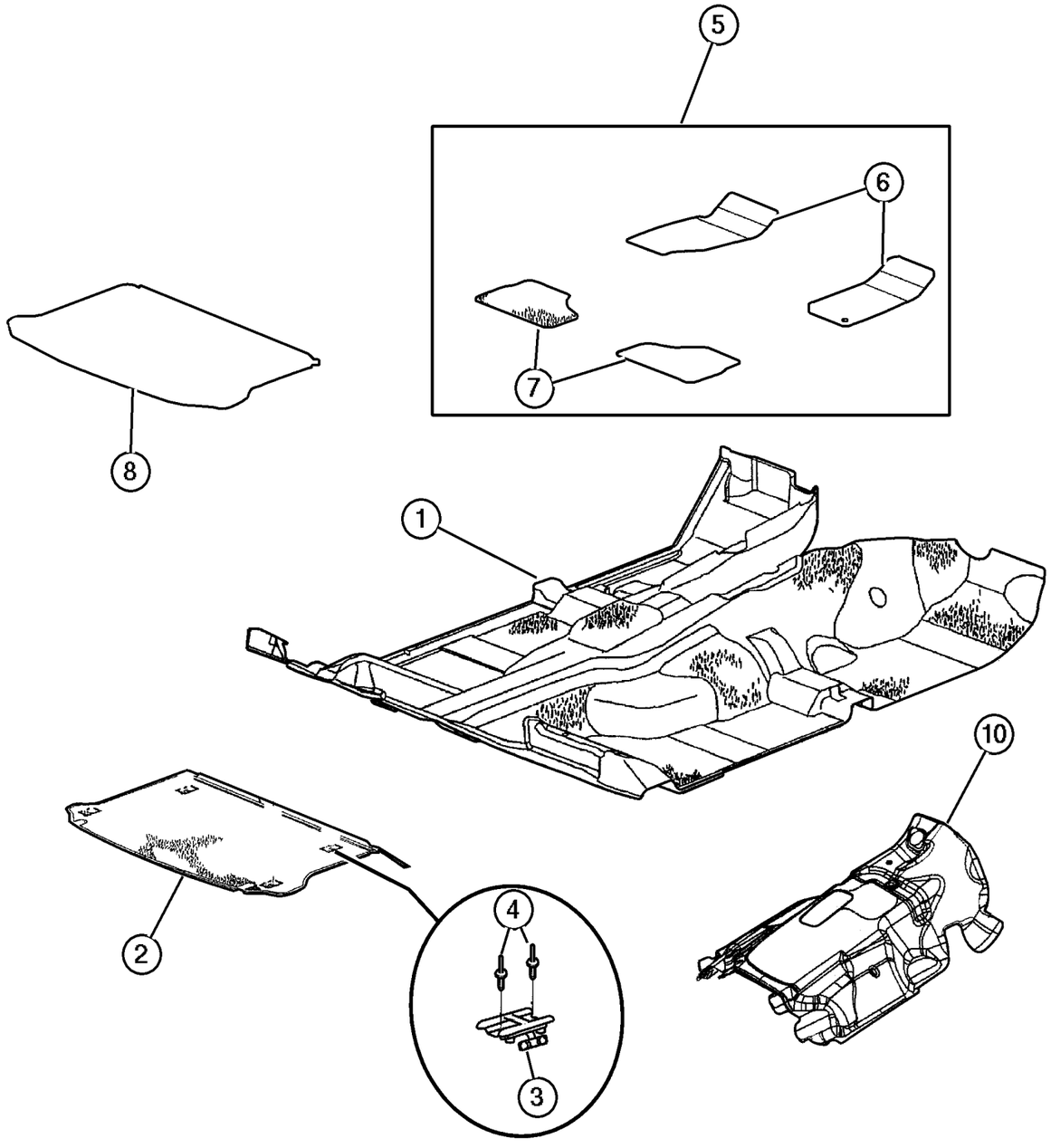

ITEM	PART NUMBER	QTY	LINE	SERIES	BODY	ENGINE	TRANS	TRIM	DESCRIPTION
	#55352 899AA	1							Left

JEEP LIBERTY (KJ)

SERIES	LINE	BODY	ENGINE	TRANSMISSION
P = Limited	J = LHD (4WD)	74 = 4 Dr. (104.3 WB)	ED1, ED0 = 2.4L Power Tech	DDK = 5 Speed HDManual
H = Sport	U = RHD (4WD)		EKG, EK0 = 3.7L Power Tech	DDD = 5 Speed HD Manual
M = Renegade	T = LHD (2WD)		ENJ = 2.5L 4Cyl Turbo Diesel	DG4,DGQ = Multi-Speed Auto
			ENR = 2.8L 4Cyl Turbo Diesel	DG6 = 4 Speed Auto Transm
			EN0 = 4Cyl Turbo Diesel	DG0 = All Automatic Transm
				DBB = All Manual Transm

Trim Panel, Front Door
Figure IKJ-410

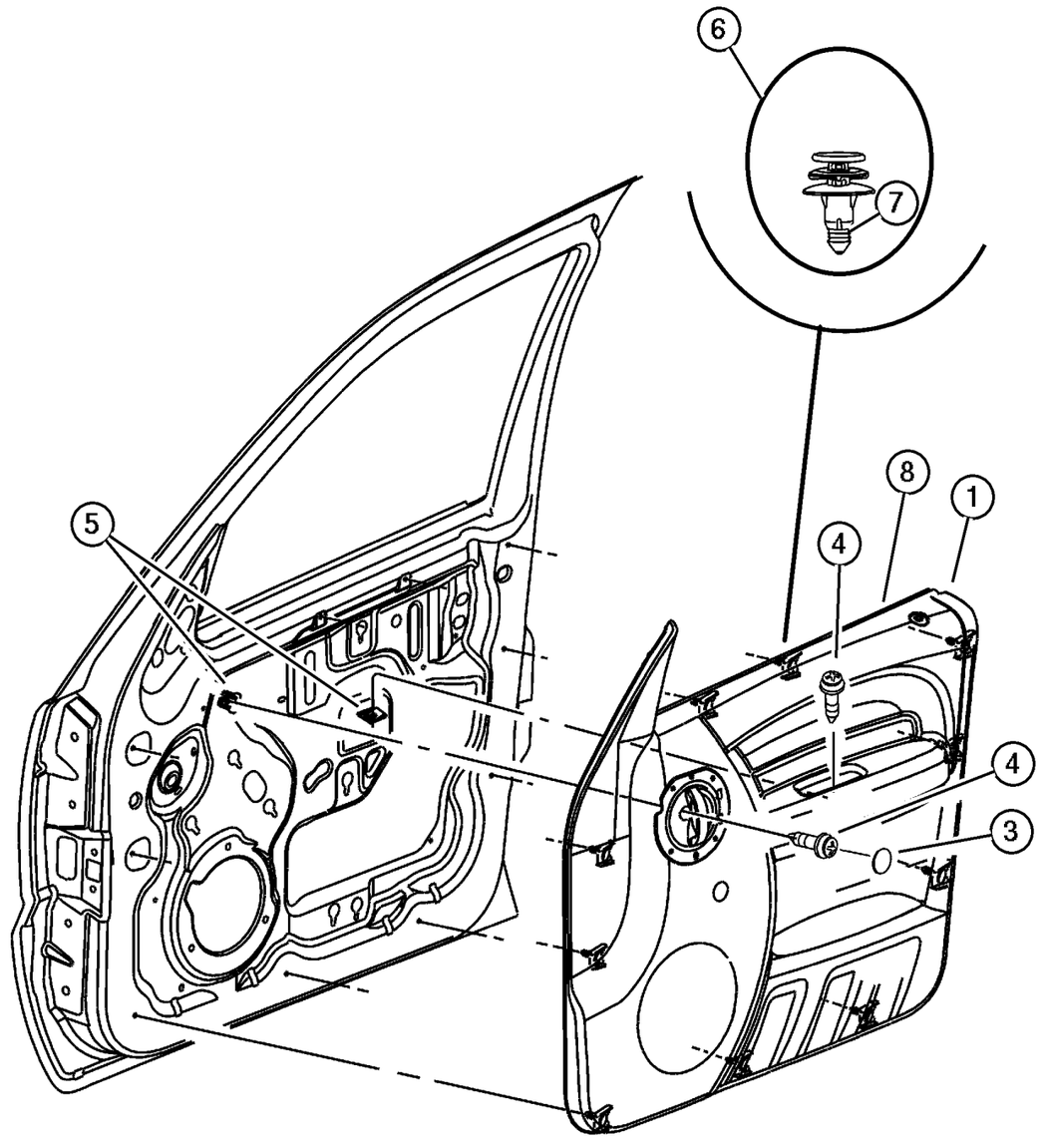

ITEM	PART NUMBER	QTY	LINE	SERIES	BODY	ENGINE	TRANS	TRIM	DESCRIPTION
Sales Codes:									
[CBF] = Premium Cloth Bolster, Bright Door Handle									
[CTC] = Leather									
[CTL] = Base, Cloth Bolster, Color Keyed Door Handle									
1									PANEL, Front Door Trim, Includes Door Handle and Clips
	#5GF00 XDVAM	1							[DV], Without Power, With Sales Code [CTL], Right
	#YB42 WL5AA	1	J, T						[L5], With Power Windows and Locks, With Sales Code [CTL], Right
	#YB43 XDVAA	1	J, T						[DV], With Power Windows and Locks, With Sales Code [CTL], Left
	#YB43 WL5AA	1	J, T						[L5], With Power Windows and Locks, With Sales Code [CTL], Left
	#YC06 XDVAA	1	U						[DV], With Power Windows and Locks, With Sales Code [CTL], Right
	#YC06 WL5AA	1	U						[L5], With Power Windows and Locks, With Sales Code [CTL], Right
	#YC07 XDVAA	1	U						[DV], With Power Windows and Locks, With Sales Code [CTL], Left
	#YC07 WL5AA	1	U						[L5], With Power Windows and Locks, With Sales Code [CTL], Left
	#YC08 1L5AA	1	J, T						[L5], With Sales Code [CBF], Up to 5/21/03, Right
	#YC08 1DVAA	1	J, T						[DV], With Sales Code [CBF], Up to 5/21/03, Right
	#YC08 1L5AA	1	J, T						[L5], Leather, With Sales Code [CTC] or [CBF], After 5/21/03, Right
	#5GF00 WL5AM	1							[L5], Without Power, With Sales Code [CTL], Right
	#YC08 1L2AA	1	J, T						[L2], Leather, With Sales Code [CTC] or [CBF], After 5/21/03, Right

JEEP LIBERTY (KJ)

SERIES	LINE	BODY	ENGINE	TRANSMISSION
P = Limited	J = LHD (4WD)	74 = 4 Dr. (104.3 WB)	ED1, ED0 = 2.4L Power Tech	DDK = 5 Speed HDManual
H = Sport	U = RHD (4WD)		EKG, EK0 = 3.7L Power Tech	DDD = 5 Speed HD Manual
M = Renegade	T = LHD (2WD)		ENJ = 2.5L 4Cyl Turbo Diesel	DG4,DGQ = Multi-Speed Auto
			ENR = 2.8L 4Cyl Turbo Diesel	DG6 = 4 Speed Auto Transm
			EN0 = 4Cyl Turbo Diesel	DG0 = All Automatic Transm
				DBB = All Manual Transm

Trim Panel, Front Door
Figure IKJ-410

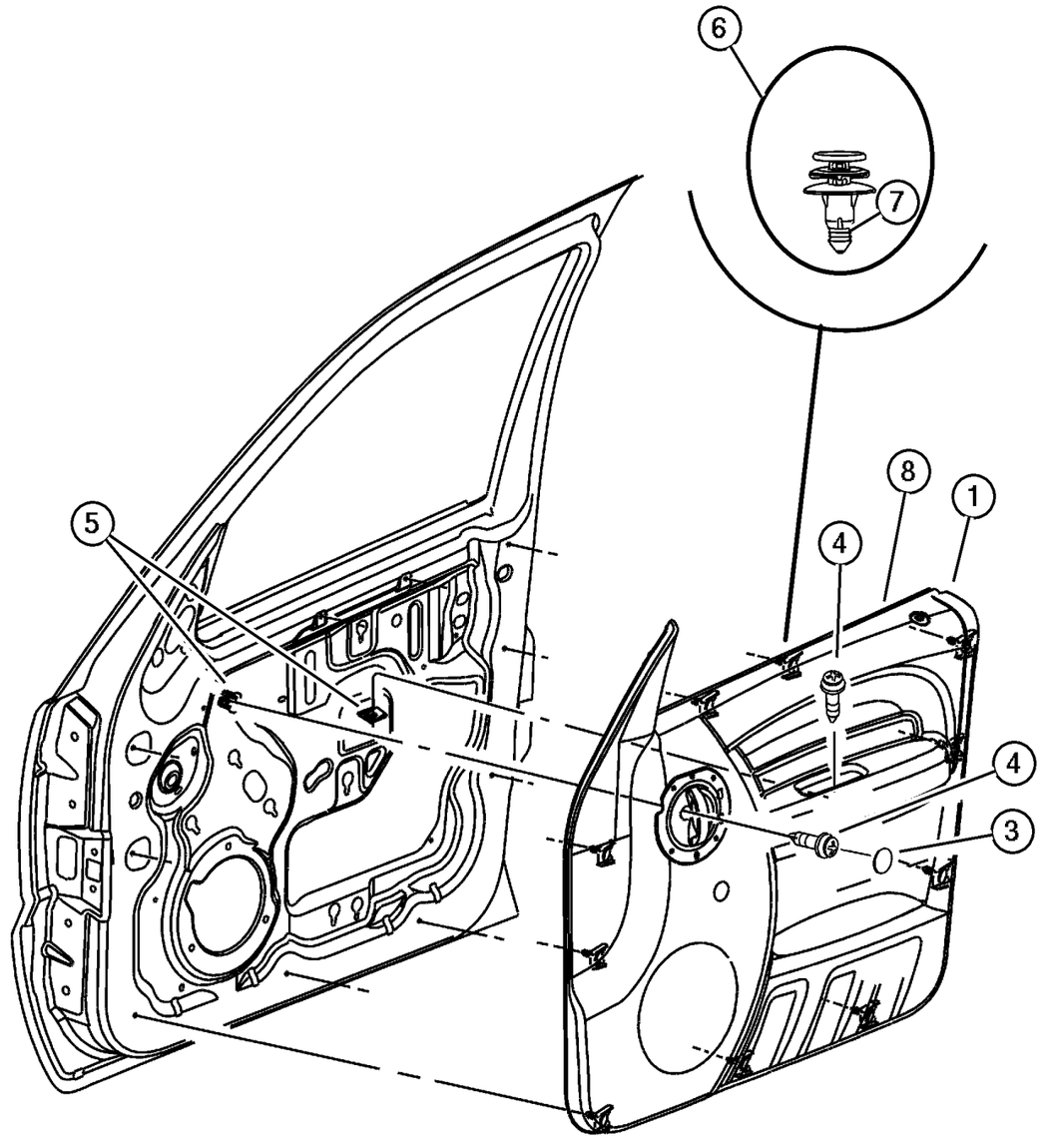

ITEM	PART NUMBER	QTY	LINE	SERIES	BODY	ENGINE	TRANS	TRIM	DESCRIPTION
	#YC08 1DVAA	1	J, T						[DV], Leather, With Sales Code [CTC] or [CBF], After 5/21/03, Right
	#YC08 1D2AA	1	J, T						[D2], Leather, With Sales Code [CTC] or [CBF], After 5/21/03, Right
	UX68 1D2AB	1	J, T						[D2], Leather, With Sales Code [CTC], Up to 5/21/03, Right
	UX68 1DVAB	1	J, T						[DV], Leather, With Sales Code [CTC], Up to 5/21/03, Right
	UX68 1L2AB	1	J, T						[L2], Leather, With Sales Code [CTC], Up to 5/21/03, Right
	#YC09 1DVAA	1	J, T						[DV], With Sales Code [CBF], Up to 5/21/03, Left
	#YC09 1L5AA	1	J, T						[L5], With Sales Code [CBF], Up to 5/21/03, Left
		1	J, T						[L5], Leather, With Sales Code [CTC] or [CBF], After 5/21/03, Left
	#YC09 1L2AA	1	J, T						[L2], Leather, With Sales Code [CTC] or [CBF], After 5/21/03, Left
	#5GF01 XDVAM	1							[DV], Without Power, With Sales Code [CTL], Left
	#YC09 1DVAA	1	J, T						[DV], Leather, With Sales Code [CTC] or [CBF], After 5/21/03, Left
	#YC09 1D2AA	1	J, T						[D2], Leather, With Sales Code [CTC] or [CBF], After 5/21/03, Left
	UX69 1L2AB	1	J, T						[L2], Leather, With Sales Code [CTC], Up to 5/21/03, Left
	UX69 1DVAB	1	J, T						[DV], Leather, With Sales Code [CTC], Up to 5/21/03, Left
	UX69 1D2AB	1	J, T						[D2], Leather, With Sales Code [CTC], Up to 5/21/03, Left
	#YC10 1L5AA	1	U						[L5], With Sales Code [CBF], Up to 5/21/03, Right
	#YC10 1DVAA	1	U						[DV], With Sales Code [CBF], Up to 5/21/03, Right

JEEP LIBERTY (KJ)

SERIES	LINE	BODY	ENGINE	TRANSMISSION
P = Limited	J = LHD (4WD)	74 = 4 Dr. (104.3 WB)	ED1, ED0 = 2.4L Power Tech	DDK = 5 Speed HDManual
H = Sport	U = RHD (4WD)		EKG, EK0 = 3.7L Power Tech	DDD = 5 Speed HD Manual
M = Renegade	T = LHD (2WD)		ENJ = 2.5L 4Cyl Turbo Diesel	DG4,DGQ = Multi-Speed Auto
			ENR = 2.8L 4Cyl Turbo Diesel	DG6 = 4 Speed Auto Transm
			EN0 = 4Cyl Turbo Diesel	DG0 = All Automatic Transm
				DBB = All Manual Transm

Trim Panel, Front Door
Figure IKJ-410

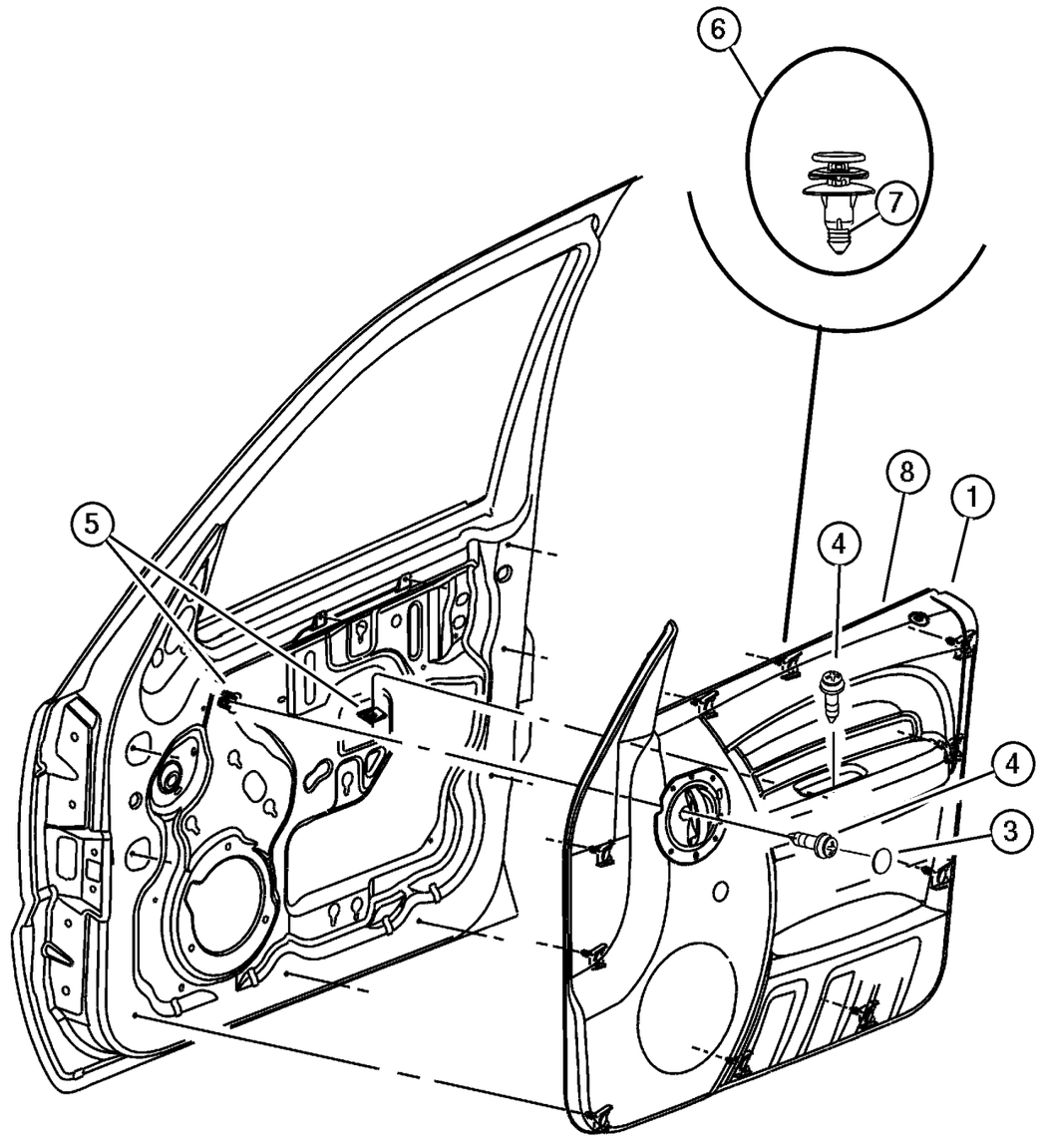

ITEM	PART NUMBER	QTY	LINE	SERIES	BODY	ENGINE	TRANS	TRIM	DESCRIPTION
	#YC10 1L5AA	1	U						[L5], Leather, With Sales Code [CTC] or [CBF], After 5/21/03, Right
	#YC10 1L2AA	1	U						[L2], Leather, With Sales Code [CTC] or [CBF], After 5/21/03, Right
	#YC10 1DVAA	1	U						[DV], Leather, With Sales Code [CTC] or [CBF], After 5/21/03, Right
	#5GF01 WL5AM	1							[L5], Without Power, With Sales Code [CTL], Left
	UX70 1DVAB	1	U						[DV], Leather, With Sales Code [CTC], Up to 5/21/03, Right
	UX70 1L2AB	1	U						[L2], Leather, With Sales Code [CTC], Up to 5/21/03, Right
	#YC11 1DVAA	1	U						[DV], With Sales Code [CBF], Up to 5/21/03, Left
	#YC11 1L5AA	1	U						[L5], With Sales Code [CBF], Up to 5/21/03, Left
		1	U						[L5], Leather, With Sales Code [CTC] or [CBF], After 5/21/03, Left
	#YC11 1L2AA	1	U						[L2], Leather, With Sales Code [CTC] or [CBF], After 5/21/03, Left
	#YC11 1DVAA	1	U						[DV], Leather, With Sales Code [CTC] or [CBF], After 5/21/03, Left
	UX71 1DVAB	1	U						[DV], Leather, With Sales Code [CTC], Up to 5/21/03, Left
	UX71 1L2AB	1	U						[L2], Leather, With Sales Code [CTC], Up to 5/21/03, Left
	#YB40 XDVAA	1	J, T						[DV], With Power Locks Only, With Sales Code [CTL], Right
	#YB40 WL5AA	1	J, T						[L5], With Power Locks Only, With Sales Code [CTL], Right
	#YB41 XDVAA	1	J, T						[DV], With Power Locks Only, With Sales Code [CTL], Left
	#YB41 WL5AA	1	J, T						[L5], With Power Locks Only, With Sales Code [CTL], Left

JEEP LIBERTY (KJ)

SERIES	LINE	BODY	ENGINE	TRANSMISSION
P = Limited	J = LHD (4WD)	74 = 4 Dr. (104.3 WB)	ED1, ED0 = 2.4L Power Tech	DDK = 5 Speed HDManual
H = Sport	U = RHD (4WD)		EKG, EK0 = 3.7L Power Tech	DDD = 5 Speed HD Manual
M = Renegade	T = LHD (2WD)		ENJ = 2.5L 4Cyl Turbo Diesel	DG4,DGQ = Multi-Speed Auto
			ENR = 2.8L 4Cyl Turbo Diesel	DG6 = 4 Speed Auto Transm
			EN0 = 4Cyl Turbo Diesel	DG0 = All Automatic Transm
				DBB = All Manual Transm

AR = Use as required - = Non illustrated part # = New this model year **June 3, 2003**

« RETURN TO GROUP INDEX

Trim Panel, Front Door
Figure IKJ-410

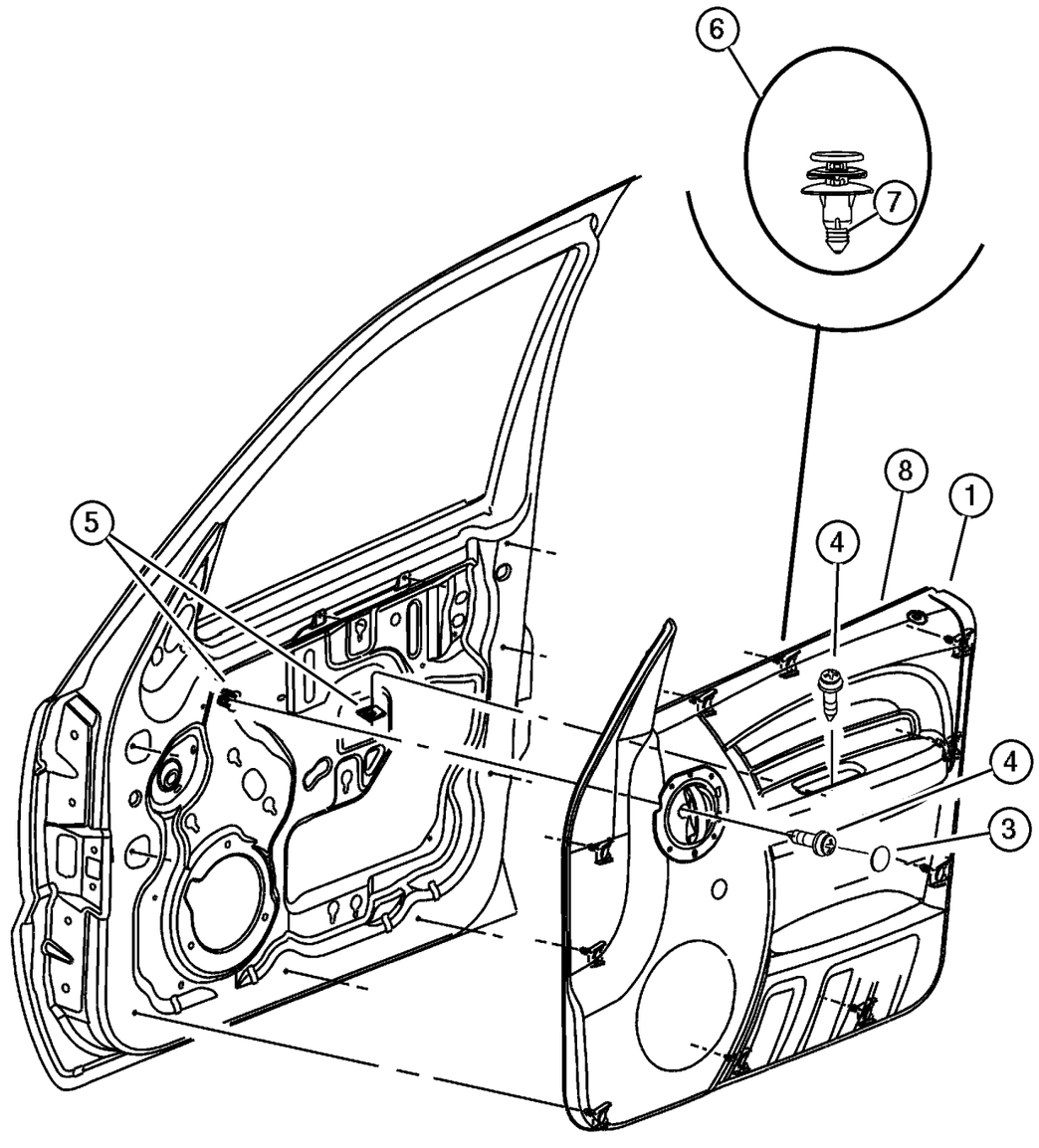

ITEM	PART NUMBER	QTY	LINE	SERIES	BODY	ENGINE	TRANS	TRIM	DESCRIPTION
	#YB42 XDVAA	1	J, T						[DV], With Power Windows and Locks, With Sales Code [CTL], Right
-2	4658 676	2							CLIP, Latch Link
3									PLUG, Door Trim Panel
	5GY30 WL5AA	2							[L2, L5]
	5GY30 XDVAA	2							[D2, DV]
4									SCREW, .164-18x1.00, (NOT SERVICED) (Not Serviced)
5	0152 490	2							NUT, Spring, .16-18
6	5023 173AA	11							RETAINER, Trim Panel, Grommet and Pin, White
7	5023 174AA	11							PIN, Push, Also serviced with 5023173AA
8									WEATHERSTRIP, Door Belt Moulding
	55235 878AC	1							Right
	55235 879AC	1							Left

JEEP LIBERTY (KJ)

SERIES	LINE	BODY	ENGINE	TRANSMISSION
P = Limited	J = LHD (4WD)	74 = 4 Dr. (104.3 WB)	ED1, ED0 = 2.4L Power Tech	DDK = 5 Speed HDManual
H = Sport	U = RHD (4WD)		EKG, EK0 = 3.7L Power Tech	DDD = 5 Speed HD Manual
M = Renegade	T = LHD (2WD)		ENJ = 2.5L 4Cyl Turbo Diesel	DG4,DGQ = Multi-Speed Auto
			ENR = 2.8L 4Cyl Turbo Diesel	DG6 = 4 Speed Auto Transm
			EN0 = 4Cyl Turbo Diesel	DG0 = All Automatic Transm
				DBB = All Manual Transm

AR = Use as required - = Non illustrated part # = New this model year

June 3, 2003

« RETURN TO GROUP INDEX

«

Trim Panel, Rear Door
Figure IKJ-420

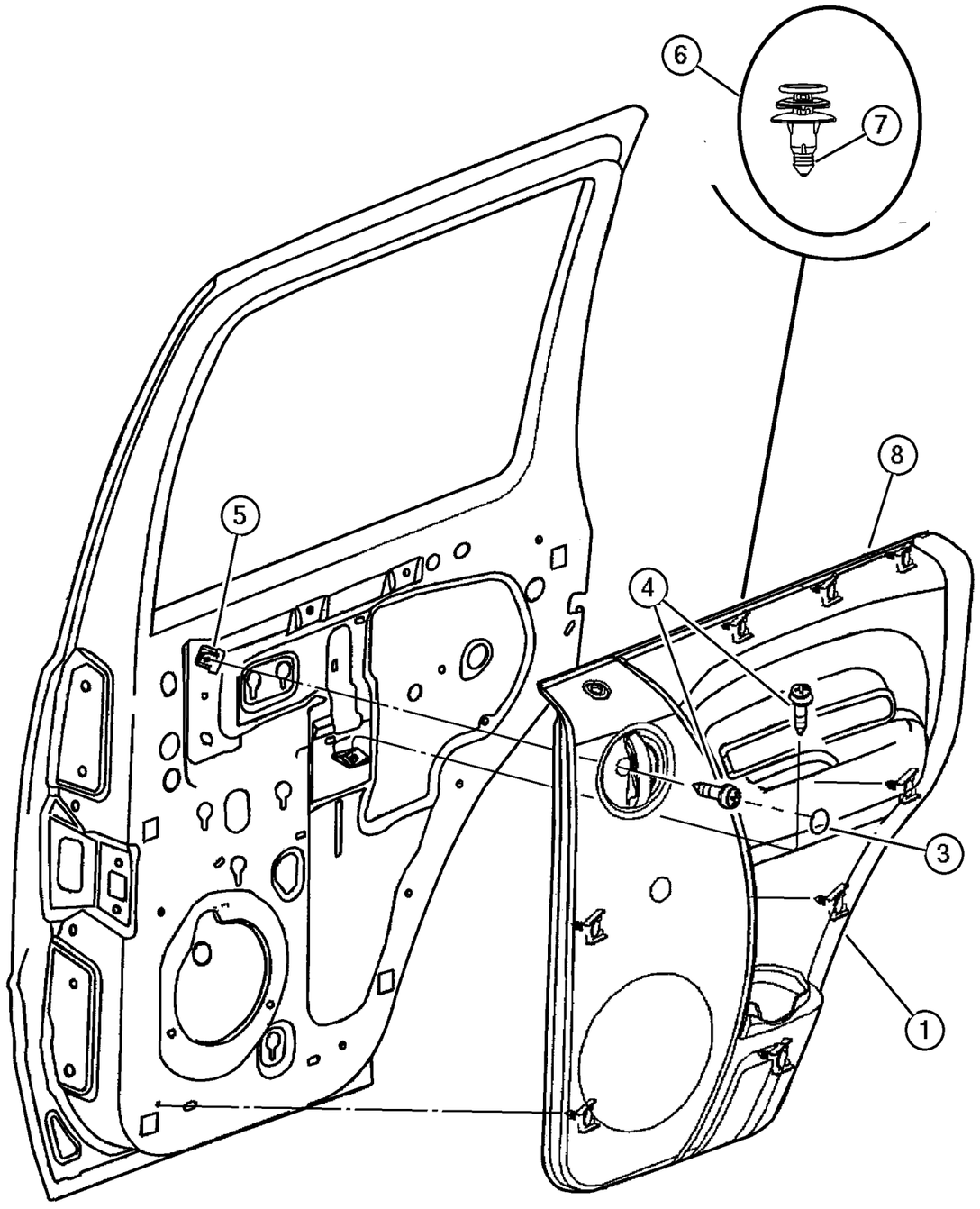

ITEM	PART NUMBER	QTY	LINE	SERIES	BODY	ENGINE	TRANS	TRIM	DESCRIPTION
Sales Codes:									
[CBF] = Premium Vinyl Bolster, Bright Door Handle									
[CTC] = Leather									
[CTL] = Base, Vinyl Bolster, Color Keyed Door Handle									
1									PANEL, Rear Door Trim, Includes Door Handle
	5GF18 WL5AM	1							[L5], With Sales Code [CTL], Right
	#5GF21 1DVAM	1							[DV], With Sales Code [CBF], Up to 5/21/03, Left
	#5GF21 1DVAQ	1							[DV], With Sales Code [CBF] or [CTC], After 5/21/03, Left
	#5GF21 1L2AQ	1							[L2], With Sales Code [CBF] or [CTC], After 5/21/03, Left
	#5GF21 1L5AM	1							[L5], With Sales Code [CBF], Up to 5/21/03, Left
	#5GF21 1L5AQ	1							[L5], With Sales Code [CBF] or [CTC], After 5/21/03, Left
	5GF22 1D2AK	1							[D2], Leather, With Sales Code [CTC], Up to 5/21/03, Right
	5GF22 1DVAK	1							[DV], Leather, With Sales Code [CTC], Up to 5/21/03, Right
	5GF22 1L2AK	1							[L2], Leather, With Sales Code [CTC], Up to 5/21/03, Right
	5GF23 1D2AK	1							[D2], Leather, With Sales Code [CTC], Up to 5/21/03, Left
	5GF23 1DVAK	1							[DV], Leather, With Sales Code [CTC], Left
	5GF18 XDVAM	1							[DV], With Sales Code [CTL], Right
	5GF23 1L2AK	1							[L2], Leather, With Sales Code [CTC], Left
	5GF19 WL5AM	1							[L5], With Sales Code [CTL], Left
	#5GF19 XDVAP	1							[DV], With Sales Code [CTL], Left
	#5GF20 1DVAM	1							[DV], With Sales Code [CBF], Up to 5/21/03, Right
	#5GF20 1DVAQ	1							[DV], With Sales Code [CBF] or [CTC], After 5/21/03, Right
	#5GF20 1L2AQ	1							[L2], With Sales Code [CBF] or [CTC], After 5/21/03, Right
	#5GF20 1L5AM	1							[L5], With Sales Code [CBF], Up to 5/21/03, Right

JEEP LIBERTY (KJ)

SERIES	LINE	BODY	ENGINE	TRANSMISSION
P = Limited	J = LHD (4WD)	74 = 4 Dr. (104.3 WB)	ED1, ED0 = 2.4L Power Tech	DDK = 5 Speed HDManual
H = Sport	U = RHD (4WD)		EKG, EK0 = 3.7L Power Tech	DDD = 5 Speed HD Manual
M = Renegade	T = LHD (2WD)		ENJ = 2.5L 4Cyl Turbo Diesel	DG4,DGQ = Multi-Speed Auto
			ENR = 2.8L 4Cyl Turbo Diesel	DG6 = 4 Speed Auto Transm
			EN0 = 4Cyl Turbo Diesel	DG0 = All Automatic Transm
				DBB = All Manual Transm

Trim Panel, Rear Door
Figure IKJ-420

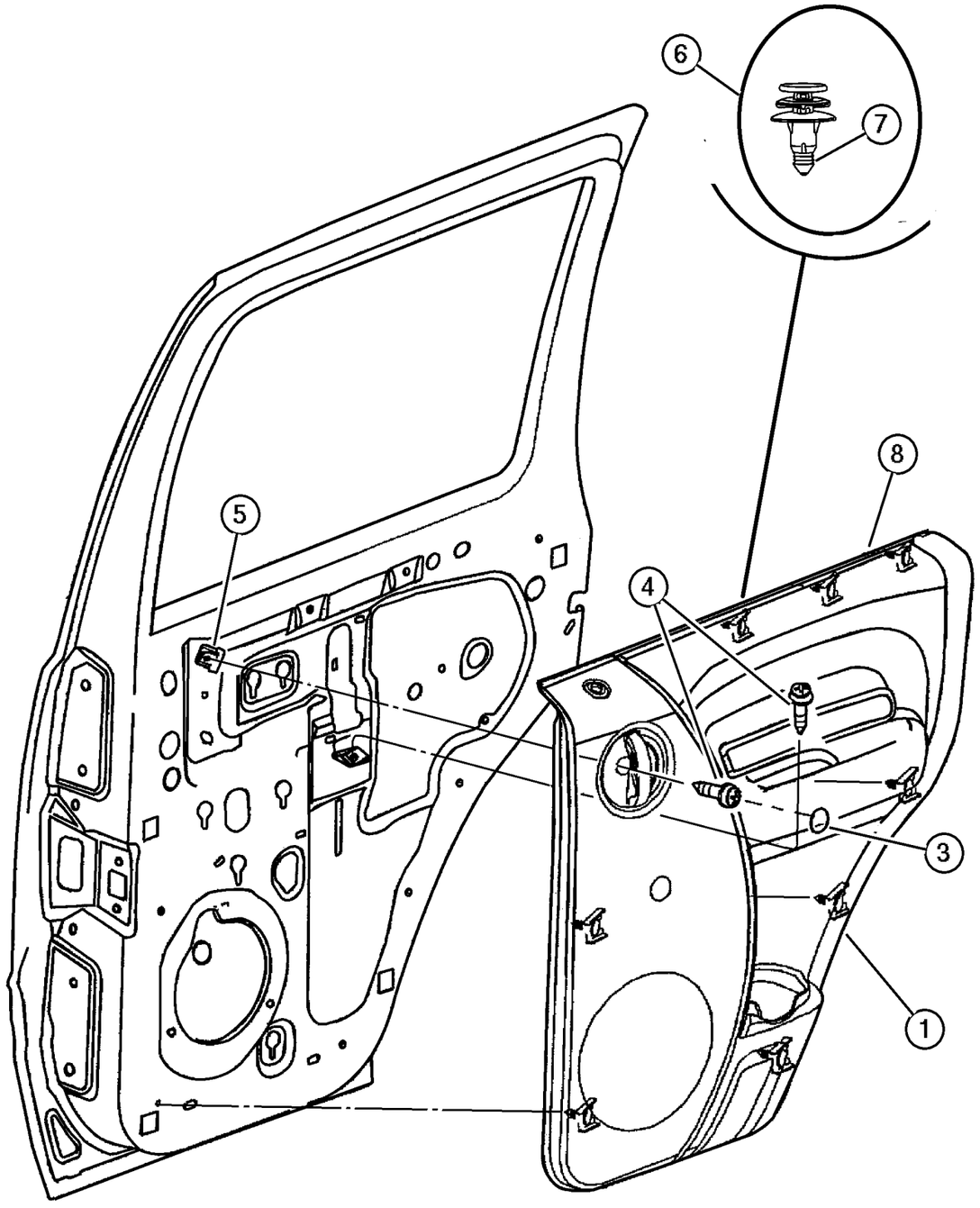

ITEM	PART NUMBER	QTY	LINE	SERIES	BODY	ENGINE	TRANS	TRIM	DESCRIPTION
	#5GF20 1L5AQ	1							[L5], With Sales Code [CBF] or [CTC], After 5/21/03, Right
-2	4658 676	2							CLIP, Latch Link, Also serviced with the Door Panel
3									PLUG, Door Trim Panel
	5GY30 WL5AA	2							[L2, L5]
	5GY30 XDVAA	2							[D2, L2]
4									SCREW, .164-18x1.00, (NOT SERVICED) (Not Serviced)
5	0152 490	2							NUT, Spring, .16-18
6	5023 173AA	9							RETAINER, Trim Panel, Grommet and Pin, White
7	5023 174AA	9							PIN, Push, Also serviced with 5023713AA
8									WEATHERSTRIP, Door Belt Moulding
	55235 886AC	1							Right
	55235 887AC	1							Left

JEEP LIBERTY (KJ)

SERIES	LINE	BODY	ENGINE	TRANSMISSION
P = Limited	J = LHD (4WD)	74 = 4 Dr. (104.3 WB)	ED1, ED0 = 2.4L Power Tech	DDK = 5 Speed HDManual
H = Sport	U = RHD (4WD)		EKG, EK0 = 3.7L Power Tech	DDD = 5 Speed HD Manual
M = Renegade	T = LHD (2WD)		ENJ = 2.5L 4Cyl Turbo Diesel	DG4,DGQ = Multi-Speed Auto
			ENR = 2.8L 4Cyl Turbo Diesel	DG6 = 4 Speed Auto Transm
			EN0 = 4Cyl Turbo Diesel	DG0 = All Automatic Transm
				DBB = All Manual Transm

AR = Use as required - = Non illustrated part # = New this model year

June 3, 2003

« RETURN TO GROUP INDEX

«

Front Seat, Leather, Low Back, Trim Code [DL]
Figure IKJ-510

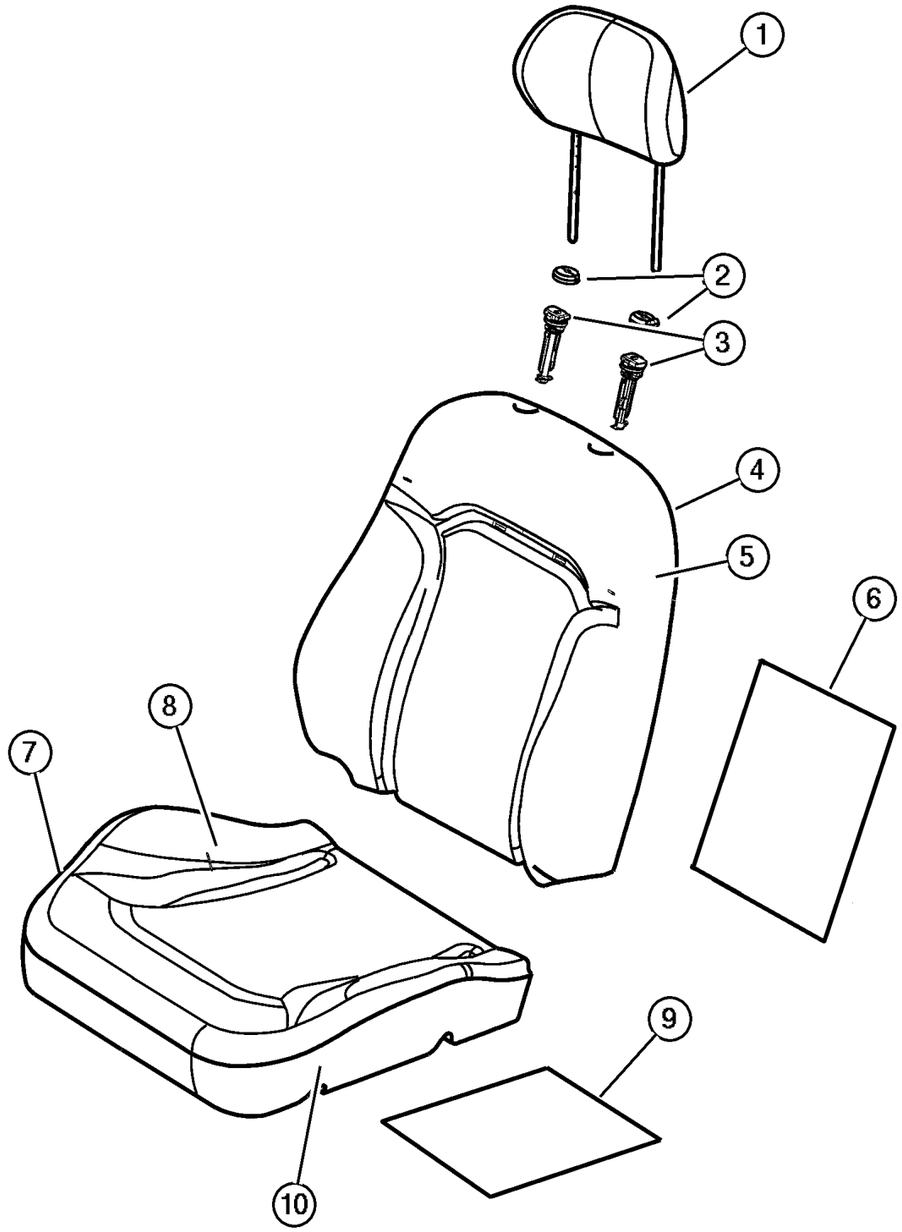

ITEM	PART NUMBER	QTY	LINE	SERIES	BODY	ENGINE	TRANS	TRIM	DESCRIPTION
1									HEADREST, Front
	WA52 1L2AA	2	J, T					DL	[D2, L2]
		2	J, U					DL	[L2], Export
	WA52 1DVAA	2	J, U					DL	[DV], Export
2									CAP, Headrest Adjuster
	WA50 TL2AA	1	J, T					DL	[D2, L2], Without Button
	WA49 TL2AA	1	J, T					DL	[D2, L2], With Button
	WA50 XDVAA	1	J, U					DL	[DV], Without Button, Export
	WA49 XDVAA	1	J, U					DL	[DV], With Button, Export
	WA49 TL2AA	1	J, U					DL	[L2], With Button, Export
	WA50 XDVAA	1	J, U					DL	[L2], Without Button, Export
3									SLEEVE, Headrest
	5066 563AA	2	J, T					DL	
		2	J, U					DL	Export
4									BACK, Front Seat
	UZ36 1DVAA	1	J, U					DL	[DV], Non-Heated, Up to 2/21/03, Right,Export
	#YG45 1DVAA	1	J, U					DL	[DV], Heated, Up to 9/24/02, Left, Export
	#YG45 1L2AA	1	J, U					DL	[L2], Heated, Up to 9/24/02, Left, Export
		1	J, T					DL	[D2, L2], Heated, Up to 9/24/02, Left
	#YR88 1DVAA	1	J, U					DL	[DV], Heated, After 9/24/02 to 2/21/03, Right,Export
	#YR88 1L2AA	1	J, U					DL	[L2], Heated, After 9/24/02 to 3/3/03, Right,Export
		1	J, T					DL	[D2, L2], Heated, After 9/24/02 to 3/3/03, Right
	#YR89 1DVAA	1	J, U					DL	[DV], Heated, After 9/24/02 to 2/21/03, Left,Export
	#YR89 1L2AA	1	J, U					DL	[L2], Heated, After 9/24/02 to 3/3/03, Left,Export
		1	J, T					DL	[D2, L2], Heated, After 9/24/02 to 3/3/03, Left
	#ZD08 1DVAA	1	J, U					DL	[DV], Non-Heated, After 2/21/03, Right,Export
	UZ36 1L2AA	1	J, U					DL	[L2], Non-Heated, Up to 3/3/03, Right,Export
	#ZD08 1L2AA	1	J, U					DL	[L2], Non-Heated, After 3/3/03, Right,Export

JEEP LIBERTY (KJ)

SERIES	LINE	BODY	ENGINE	TRANSMISSION
P = Limited	J = LHD (4WD)	74 = 4 Dr. (104.3 WB)	ED1, ED0 = 2.4L Power Tech	DDK = 5 Speed HDManual
H = Sport	U = RHD (4WD)		EKG, EK0 = 3.7L Power Tech	DDD = 5 Speed HD Manual
M = Renegade	T = LHD (2WD)		ENJ = 2.5L 4Cyl Turbo Diesel	DG4,DGQ = Multi-Speed Auto
			ENR = 2.8L 4Cyl Turbo Diesel	DG6 = 4 Speed Auto Transm
			EN0 = 4Cyl Turbo Diesel	DG0 = All Automatic Transm
				DBB = All Manual Transm

Front Seat, Leather, Low Back, Trim Code [DL]
Figure IKJ-510

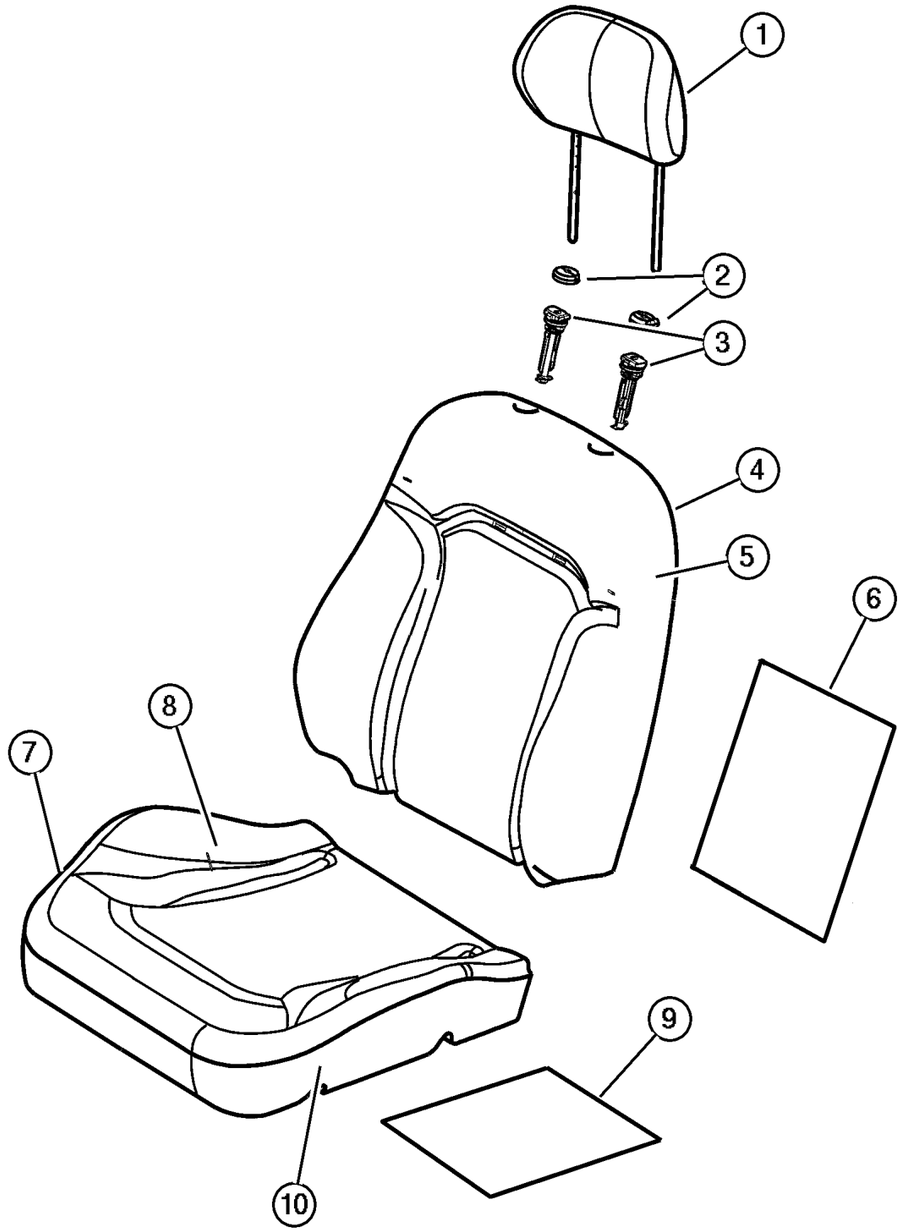

ITEM	PART NUMBER	QTY	LINE	SERIES	BODY	ENGINE	TRANS	TRIM	DESCRIPTION
		1	J, T					DL	[D2, L2], Non-Heated After 3/3/03, Right
	#ZD09 1DVAA	1	J, U					DL	[DV], Non-Heated, After 2/21/03, Left,Export
	#ZD09 1L2AA	1	J, U					DL	[L2], Non-Heated, After 3/3/03, Left,Export
		1	J, T					DL	[D2, L2], Non-Heated After 3/3/03, Left
	#ZD10 1DVAA	1	J, U					DL	[DV], Heated, After 2/21/03, Right, Export
	#ZD10 1L2AA	1	J, U					DL	[L2], Heated, After 3/3/03, Right, Export
		1	J, T					DL	[D2, L2], Heated, After 3/3/03, Right
	#ZD11 1DVAA	1	J, U					DL	[DV], Heated, After 2/21/03, Left, Export
	#ZD11 1L2AA	1	J, U					DL	[L2], Heated, After 3/3/03, Left, Export
	UZ36 1L2AA	1	J, T					DL	[D2, L2], Non-Heated, Up to 3/3/03, Right
	#ZD11 1L2AA	1	J, T					DL	[D2, L2], Heated, After 3/3/03, Left
	#YG43 1DVAA	1	J, U					DL	[DV], Non-Heated, Up to 2/21/03, Left,Export
	#YG43 1L2AA	1	J, U					DL	[L2], Non-Heated, Up to 3/3/03, Left,Export
		1	J, T					DL	[D2, L2], Non-Heated, Up to 3/3/03, Left
	UZ38 1DVAA	1	J, U					DL	[DV], Heated, Up to 9/24/02, Right, Export
	UZ38 1L2AA	1	J, U					DL	[L2], Heated, Up to 9/24/02, Right, Export
		1	J, T					DL	[D2, L2], Heated, Up to 9/24/02, Right
5									COVER, Front Seat Back
	UZ40 1L2AA	1	J, T					DL	[D2, L2], Up to 3/3/03, Right
	#ZD12 1L2AA	1	J, U					DL	[L2], After 2/21/03, Right,Export
	#ZD13 1DVAA	1	J, U					DL	[DV], After 2/21/03, Left,Export
	#ZD13 1L2AA	1	J, U					DL	[L2], After 2/21/03, Left,Export
	#YG41 1L2AA	1	J, T					DL	[D2, L2], Up to 3/3/03, Left
	UZ40 1DVAA	1	J, U					DL	[DV], Up to 2/21/03, Right,Export
	UZ40 1L2AA	1	J, U					DL	[L2], Up to 3/3/03, Right,Export

JEEP LIBERTY (KJ)

SERIES	LINE	BODY	ENGINE	TRANSMISSION
P = Limited	J = LHD (4WD)	74 = 4 Dr. (104.3 WB)	ED1, ED0 = 2.4L Power Tech	DDK = 5 Speed HDManual
H = Sport	U = RHD (4WD)		EKG, EK0 = 3.7L Power Tech	DDD = 5 Speed HD Manual
M = Renegade	T = LHD (2WD)		ENJ = 2.5L 4Cyl Turbo Diesel	DG4,DGQ = Multi-Speed Auto
			ENR = 2.8L 4Cyl Turbo Diesel	DG6 = 4 Speed Auto Transm
			EN0 = 4Cyl Turbo Diesel	DG0 = All Automatic Transm
				DBB = All Manual Transm

Front Seat, Leather, Low Back, Trim Code [DL]
Figure IKJ-510

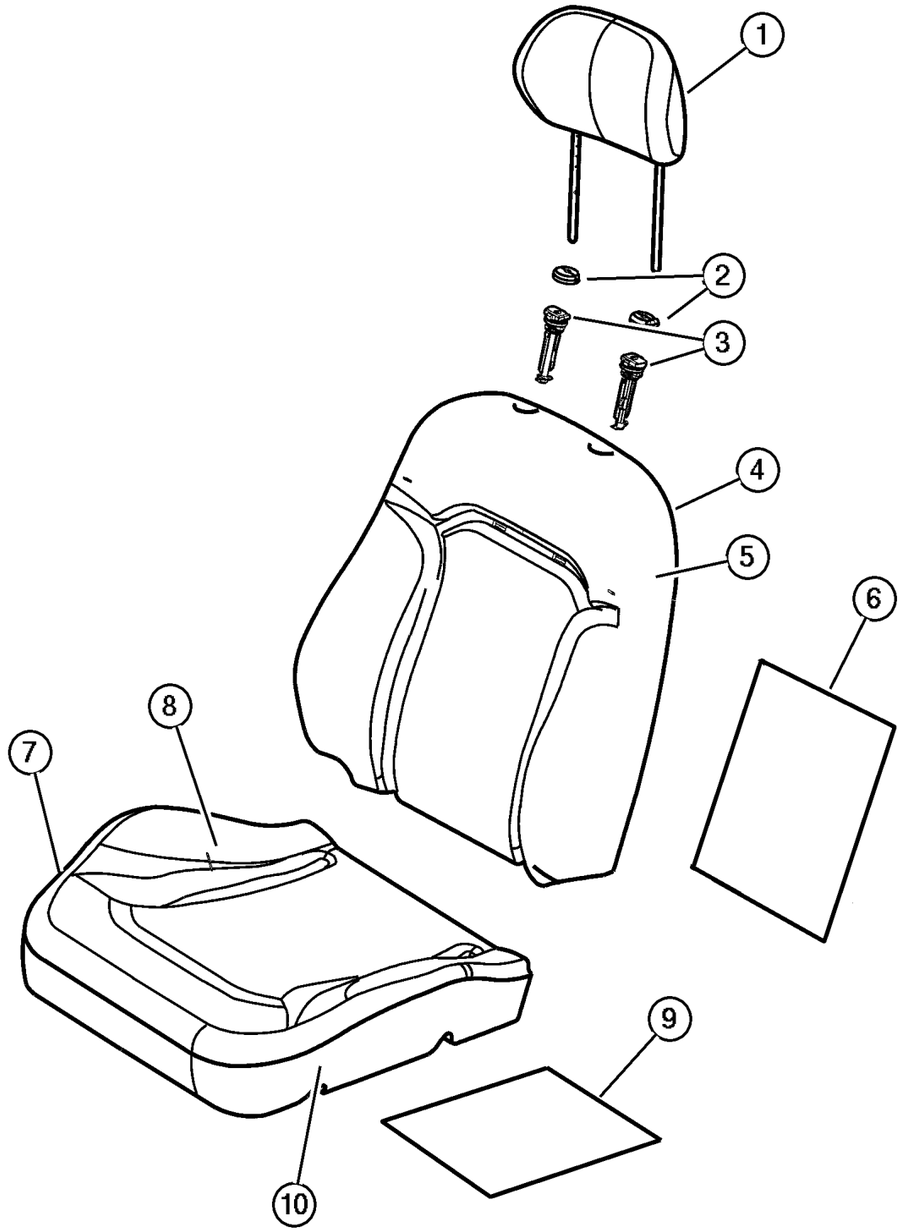

ITEM	PART NUMBER	QTY	LINE	SERIES	BODY	ENGINE	TRANS	TRIM	DESCRIPTION
	#YG41 1DVAA	1	J, U					DL	[DV], Up to 2/21/03, Left,Export
	#YG41 1L2AA	1	J, U					DL	[L2], Up to 3/3/03, Left,Export
	#ZD12 1L2AA	1	J, T					DL	[D2, L2], After 3/3/03, Right
	#ZD13 1L2AA	1	J, T					DL	[D2, L2], After 3/3/03, Left
	#ZD12 1DVAA	1	J, U					DL	[DV], After 2/21/03, Right,Export
6									PAD, Heater, Back
	5072 368AA	2	J, T					DL	Up to 9/24/02
		1	J, U					DL	Up to 9/24/02, Export
	#5103 170AA	2	J, T					DL	After 9/24/02
		2	J, U					DL	After 9/24/02, Export
7									FRAME, Front Seat Cushion
	5072 126AA	2	J, U					DL	Export
		2	J, T					DL	
8									COVER, Front Seat Cushion
	XV84 1L2AA	1	J, U					DL	[L2], Up to 3/3/03, Right,Export
	#ZD05 1DVAA	1	J, U					DL	[DV], After 2/22/03, Left,Export
	#ZD05 1L2AA	1	J, T					DL	[D2, L2], After 3/3/03, Left
		1	J, U					DL	[L2], After 3/3/03, Left,Export
	XV84 1DVAA	1	J, U					DL	[DV], Up to 2/22/03, Right,Export
	XV85 1L2AA	1	J, U					DL	[L2], Up to 3/3/03, Left,Export
	XV85 1DVAA	1	J, U					DL	[DV], Up to 2/22/03, Left,Export
	XV85 1L2AA	1	J, T					DL	[D2, L2], Up to 3/3/03, Left
	XV84 1L2AA	1	J, T					DL	[D2, L2], Up to 3/3/03, Right
	#ZD04 1DVAA	1	J, U					DL	[DV], After 2/22/03, Right,Export
	#ZD04 1L2AA	1	J, T					DL	[D2, L2], After 3/3/03, Right
		1	J, U					DL	[L2], After 3/3/03, Right,Export
9									PAD, Heater, Cushion
	5072 369AA	2	J, T					DL	Up to 9/24/02
		2	J, U					DL	Up to 9/24/02, Export
	#5103 171AA	2	J, T					DL	After 9/24/02
		2	J, U					DL	After 9/24/02, Export
10									FOAM, Seat Cushion
	5093 976AA	2	J, T					DL	
		2	J, U					DL	
-11									WIRE KIT, Trimming
	5093 977AA	2	J, T					DL	
		2	J, U					DL	

JEEP LIBERTY (KJ)

SERIES	LINE	BODY	ENGINE	TRANSMISSION
P = Limited	J = LHD (4WD)	74 = 4 Dr. (104.3 WB)	ED1, ED0 = 2.4L Power Tech	DDK = 5 Speed HDManual
H = Sport	U = RHD (4WD)		EKG, EK0 = 3.7L Power Tech	DDD = 5 Speed HD Manual
M = Renegade	T = LHD (2WD)		ENJ = 2.5L 4Cyl Turbo Diesel	DG4,DGQ = Multi-Speed Auto
			ENR = 2.8L 4Cyl Turbo Diesel	DG6 = 4 Speed Auto Transm
			EN0 = 4Cyl Turbo Diesel	DG0 = All Automatic Transm
				DBB = All Manual Transm

Front Seat, Cloth, Low Back, Trim Code [XJ]
Figure IKJ-520

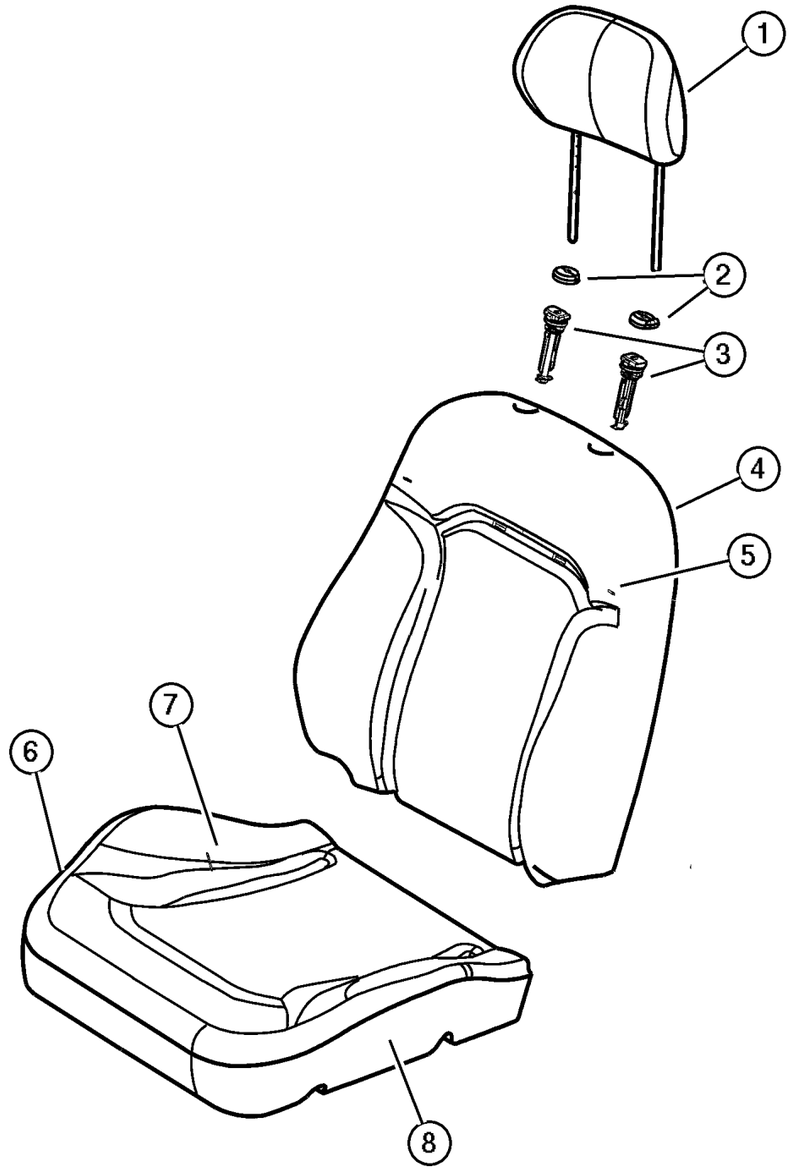

ITEM	PART NUMBER	QTY	LINE	SERIES	BODY	ENGINE	TRANS	TRIM	DESCRIPTION
1									HEADREST, Front
	XP74 1L5AA	2	J, T					XJ	[L5]
	XP74 1DVAA	2	J, T					XJ	[DV]
		2	J, U					XJ	[DV], Export
	XP74 1L5AA	2	J, U					XJ	[L5], Export
2									CAP, Headrest Adjuster
	WA50 XDVAA	1	J, T					XJ	[DV], Without Button
	WA50 WL5AA	1	J, T					XJ	[L5], Without Button
	WA49 XDVAA	1	J, T					XJ	[DV], With Button
	WA49 WL5AA	1	J, T					XJ	[L5], With Button
	WA49 XDVAA	1	J, U					XJ	[DV], With Button, Export
	WA49 WL5AA	1	J, U					XJ	[L5], With Button, Export
	WA50 WL5AA	1	J, U					XJ	[L5], Without Button, Export
	WA50 XDVAA	1	J, U					XJ	[DV], Without Button, Export
3									SLEEVE, Headrest
	5066 563AA	2	J, U					XJ	Export
		2	J, T					XJ	
4									BACK, Front Seat
	#YG84 1DVAA	1	J, T					XJ	[DV], Up to 3/31/03, Right
	#ZD92 1DVAA	1	J, U					XJ	[DV], After 3/31/03, Right,Export
	#ZD92 1L5AA	1	J, T					XJ	[L5], After 3/31/03, Right
		1	J, U					XJ	[L5], After 3/31/03, Right,Export
	#ZD93 1DVAA	1	J, T					XJ	[DV], After 3/31/03, Left
		1	J, U					XJ	[DV], After 3/31/03, Left,Export
	#ZD93 1L5AA	1	J, T					XJ	[L5], After 3/31/03, Left
		1	J, U					XJ	[L5], After 3/31/03, Left,Export
	#YG84 1DVAA	1	J, U					XJ	[DV], Up to 3/31/03, Right,Export
	#YG84 1L5AA	1	J, T					XJ	[L5], Up to 3/31/03, Right
		1	J, U					XJ	[L5], Up to 3/31/03, Right,Export
	#YG85 1DVAA	1	J, T					XJ	[DV], Up to 3/31/03, Left
		1	J, U					XJ	[DV], Up to 3/31/03, Left,Export
	#YG85 1L5AA	1	J, T					XJ	[L5], Up to 3/31/03, Left
		1	J, U					XJ	[L5], Up to 3/31/03, Left,Export
	#ZD92 1DVAA	1	J, T					XJ	[DV], After 3/31/03, Right
5									COVER, Front Seat Back
	#YG82 1DVAA	1	J, T					XJ	[DV], Up to 3/31/03, Right
	#ZD90 1DVAA	1	J, U					XJ	[DV], After 3/31/03, Right,Export
	#ZD90 1L5AA	1	J, T					XJ	[L5], After 3/31/03, Right
		1	J, U					XJ	[L5], After 3/31/03, Right,Export
	#ZD91 1DVAA	1	J, T					XJ	[DV], After 3/31/03, Left
		1	J, U					XJ	[DV], After 3/31/03, Left,Export

JEEP LIBERTY (KJ)

SERIES	LINE	BODY	ENGINE	TRANSMISSION
P = Limited	J = LHD (4WD)	74 = 4 Dr. (104.3 WB)	ED1, ED0 = 2.4L Power Tech	DDK = 5 Speed HDManual
H = Sport	U = RHD (4WD)		EKG, EK0 = 3.7L Power Tech	DDD = 5 Speed HD Manual
M = Renegade	T = LHD (2WD)		ENJ = 2.5L 4Cyl Turbo Diesel	DG4,DGQ = Multi-Speed Auto
			ENR = 2.8L 4Cyl Turbo Diesel	DG6 = 4 Speed Auto Transm
			EN0 = 4Cyl Turbo Diesel	DG0 = All Automatic Transm
				DBB = All Manual Transm

Front Seat, Cloth, Low Back, Trim Code [XJ]
Figure IKJ-520

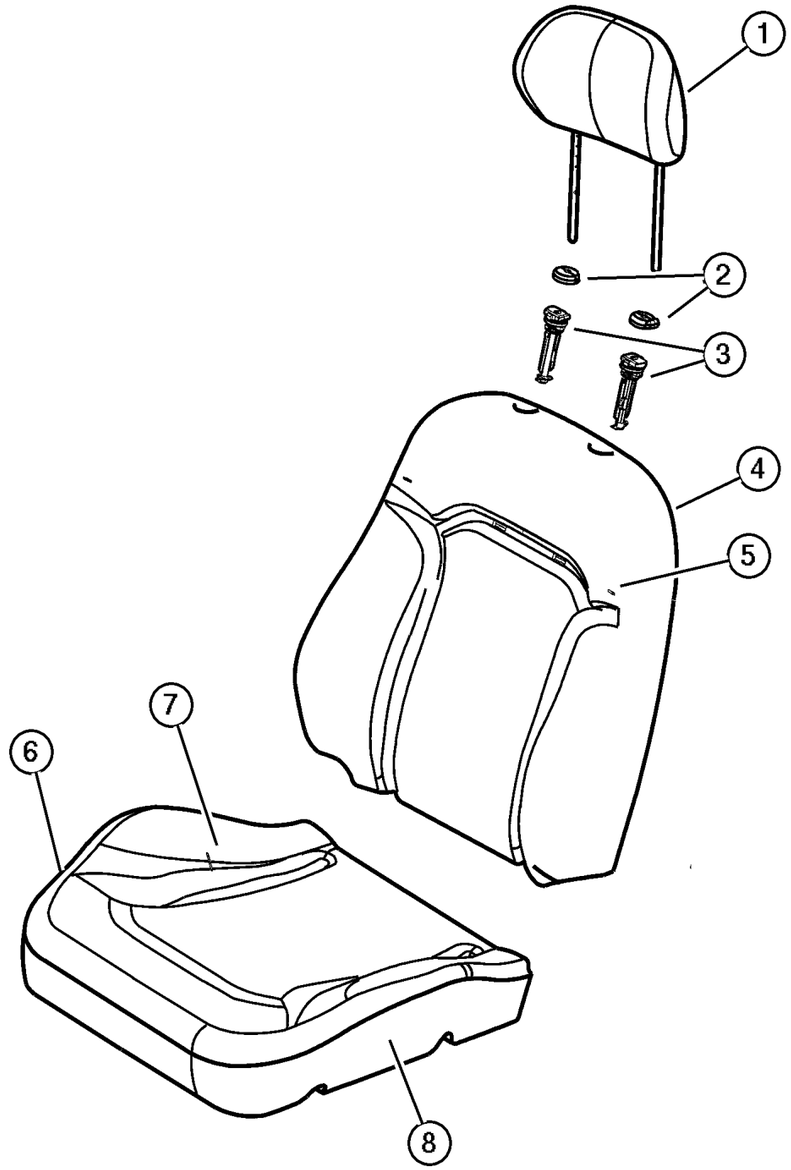

ITEM	PART NUMBER	QTY	LINE	SERIES	BODY	ENGINE	TRANS	TRIM	DESCRIPTION
	#ZD91 1L5AA	1	J, T					XJ	[L5], After 3/31/03, Left
		1	J, U					XJ	[L5], After 3/31/03, Left,Export
	#YG82 1DVAA	1	J, U					XJ	[DV], Up to 3/31/03, Right,Export
	#YG82 1L5AA	1	J, T					XJ	[L5], Up to 3/31/03, Right
		1	J, U					XJ	[L5], Up to 3/31/03, Right,Export
	#YG83 1DVAA	1	J, T					XJ	[DV], Up to 3/31/03, Left
		1	J, U					XJ	[DV], Up to 3/31/03, Left,Export
	#YG83 1L5AA	1	J, T					XJ	[L5], Up to 3/31/03, Left
		1	J, U					XJ	[L5], Up to 3/31/03, Left,Export
	#ZD90 1DVAA	1	J, T					XJ	[DV], After 3/31/03, Right
6									FRAME, Front Seat Cushion
	5072 110AA	1	J, T					XJ	Right,Manual Seat
		1	J, U					XJ	Right,Manual Seat,Export
	5072 111AA	1	J, T					XJ	Left,Manual Seat
		1	J, U					XJ	Left,Manual Seat,Export
	5072 126AA	1	J, T					XJ	Power Seat
		2	J, U					XJ	Power Seat,Export
7									COVER, Front Seat Cushion
	#YG51 1DVAA	2	J, T					XJ	[DV], Right & Left
		2	J, U					XJ	[DV], Right & Left,Export
	#YG51 1L5AA	2	J, T					XJ	[L5], Right & Left
		2	J, U					XJ	[L5], Right & Left,Export
8									FOAM, Seat Cushion
	5093 975AA	2	J, U					XJ	
		2	J, T					XJ	
-9									WIRE KIT, Trimming
	5093 978AA	2	J, T					XJ	
		2	J, U					XJ	

JEEP LIBERTY (KJ)

SERIES	LINE	BODY	ENGINE	TRANSMISSION
P = Limited	J = LHD (4WD)	74 = 4 Dr. (104.3 WB)	ED1, ED0 = 2.4L Power Tech	DDK = 5 Speed HDManual
H = Sport	U = RHD (4WD)		EKG, EK0 = 3.7L Power Tech	DDD = 5 Speed HD Manual
M = Renegade	T = LHD (2WD)		ENJ = 2.5L 4Cyl Turbo Diesel	DG4,DGQ = Multi-Speed Auto
			ENR = 2.8L 4Cyl Turbo Diesel	DG6 = 4 Speed Auto Transm
			EN0 = 4Cyl Turbo Diesel	DG0 = All Automatic Transm
				DBB = All Manual Transm

Front Seat, Cloth, Trim Code [M5]
Figure IKJ-530

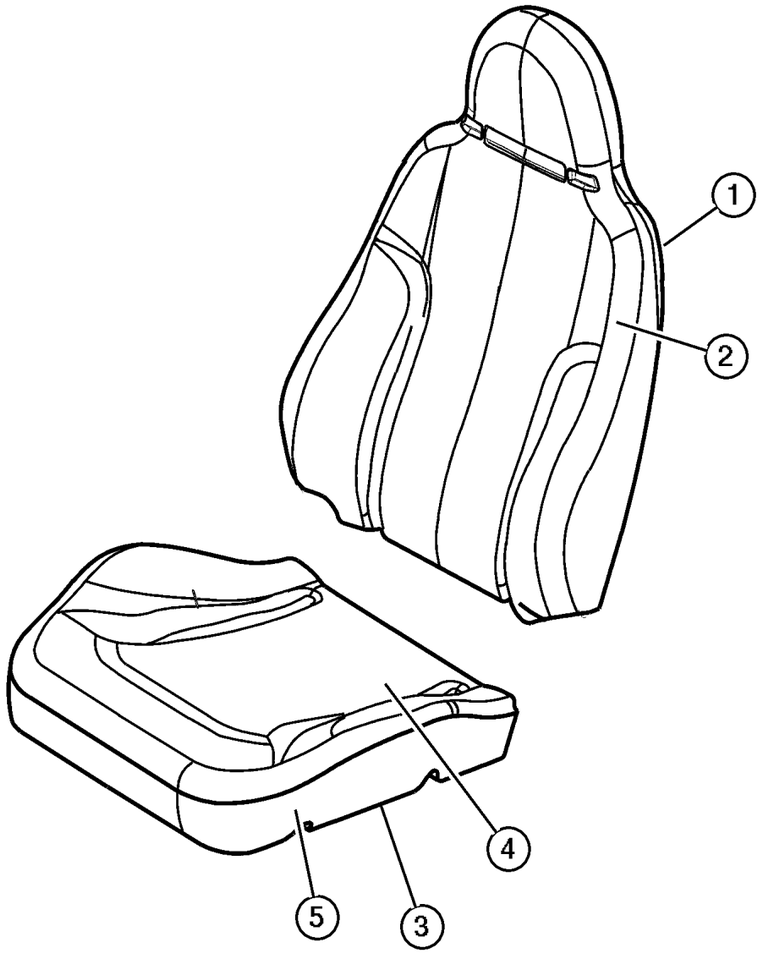

ITEM	PART NUMBER	QTY	LINE	SERIES	BODY	ENGINE	TRANS	TRIM	DESCRIPTION
1									BACK, Front Seat
	UZ32 1DVAA	1	J, T					M5	[DV], Up to 3/31/03, Right
	UZ32 1L5AA	1	J, T					M5	[L5], Up to 3/31/03, Right
	UZ33 1L5AA	1	J, T					M5	[L5], Up to 3/31/03, Left
	UZ33 1DVAA	1	J, T					M5	[DV], Up to 3/31/03, Left
	#ZD64 1DVAA	1	J, T					M5	[DV], After 3/31/03, Right
	#ZD64 1L5AA	1	J, T					M5	[L5], After 3/31/03, Right
	#ZD65 1DVAA	1	J, T					M5	[DV], After 3/31/03, Left
	#ZD65 1L5AA	1	J, T					M5	[L5], After 3/31/03, Left
2									COVER, Front Seat Back
	UZ06 1DVAA	1	J, T					M5	[DV], Up to 3/31/03
	UZ06 1L5AA	1	J, T					M5	[L5], Up to 3/31/03
	#ZD62 1DVAA	2	J, T					M5	[DV], After 3/31/03
	#ZD62 1L5AA	2	J, T					M5	[L5], After 3/31/03
3									FRAME, Front Seat Cushion
	5072 126AA	1	J, T					M5	Driver,Power
	5072 110AA	1	J, T					M5	Passenger
	5072 111AA	1	J, T					M5	Driver,Manual
4									COVER, Front Seat Cushion
	XV81 1L5AA	2	J, T					M5	[L5]
	XV81 1DVAA	2	J, T					M5	[DV]
5	5093 974AA	2	J, T					M5	FOAM, Seat Cushion
-6	5093 977AA	2	J, T					M5	WIRE KIT, Trimming

JEEP LIBERTY (KJ)

SERIES	LINE	BODY	ENGINE	TRANSMISSION
P = Limited	J = LHD (4WD)	74 = 4 Dr. (104.3 WB)	ED1, ED0 = 2.4L Power Tech	DDK = 5 Speed HDManual
H = Sport	U = RHD (4WD)		EKG, EK0 = 3.7L Power Tech	DDD = 5 Speed HD Manual
M = Renegade	T = LHD (2WD)		ENJ = 2.5L 4Cyl Turbo Diesel	DG4,DGQ = Multi-Speed Auto
			ENR = 2.8L 4Cyl Turbo Diesel	DG6 = 4 Speed Auto Transm
			EN0 = 4Cyl Turbo Diesel	DG0 = All Automatic Transm
				DBB = All Manual Transm

AR = Use as required - = Non illustrated part # = New this model year

June 3, 2003

« RETURN TO GROUP INDEX

Front Seat, Cloth, Low Back, Trim Code [E7]
Figure IKJ-540

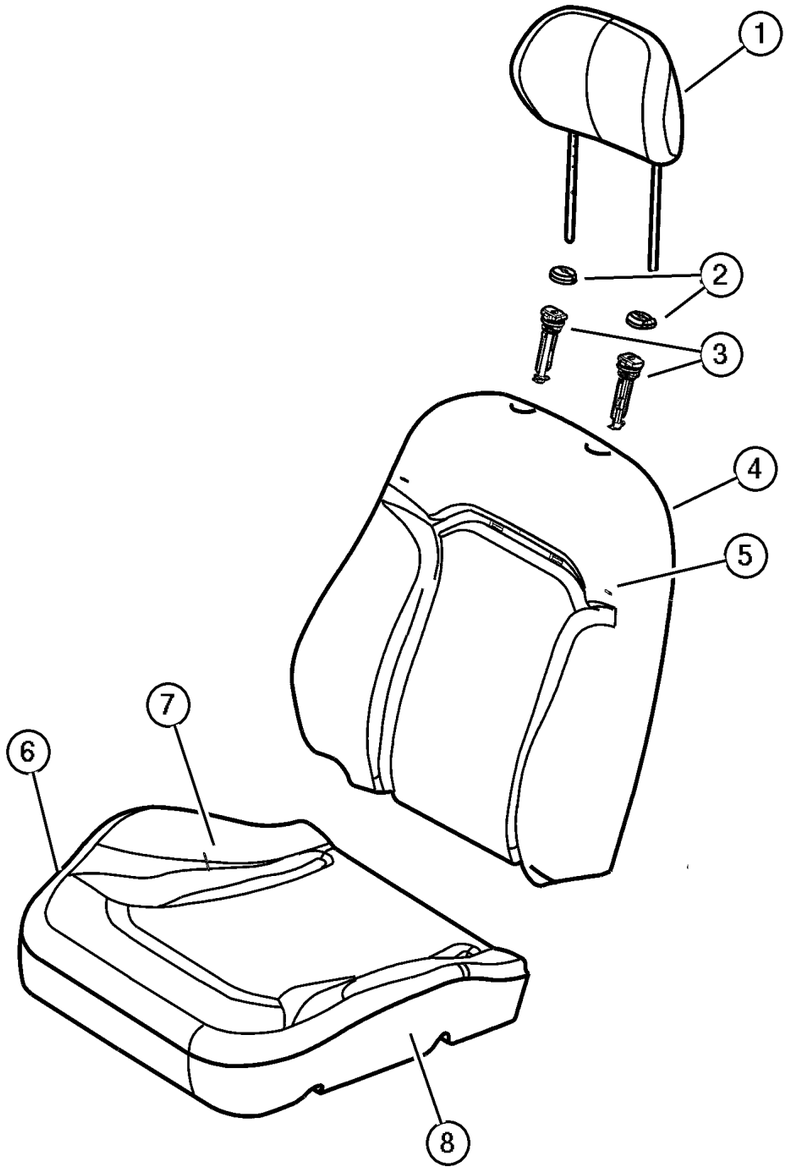

ITEM	PART NUMBER	QTY	LINE	SERIES	BODY	ENGINE	TRANS	TRIM	DESCRIPTION
1									HEADREST, Front
	WK03 1DVAA	2						E7	[DV]
	WK03 1L5AA	2						E7	[L5]
2									CAP, Headrest Adjuster
	WA49 WL5AA	1						E7	[L5], With Button
	WA49 XDVAA	1						E7	[DV], With Button
	WA50 WL5AA	1						E7	[L5], Without Button
	WA50 XDVAA	1						E7	[DV], Without Button
3	5066 017AA	6						E7	SLEEVE, Headrest
4									BACK, Front Seat
	WK00 1DVAA	1						E7	[DV], Up to 3/31/03, Right
	WK00 1L5AA	1						E7	[L5], Up to 3/31/03, Right
	WK01 1DVAA	1						E7	[DV], Up to 3/31/03, Left
	WK01 1L5AA	1						E7	[L5], Up to 3/31/03, Left
	#ZD66 1DVAA	1	J, U					E7	[DV], After 3/31/03, Right
	#ZD66 1L5AA	1	J, U					E7	[L5], After 3/31/03, Right
	#ZD67 1DVAA	1	J, U					E7	[DV], After 3/31/03, Left
	#ZD67 1L5AA	1	J, U					E7	[L5], After 3/31/03, Left
5									COVER, Front Seat Back
	WK02 1DVAA	1						E7	[DV], Up to 3/31/03
	WK02 1L5AA	1						E7	[L5], Up to 3/31/03
	#ZD63 1DVAA	2	J, U					E7	[DV], After 3/31/03
	#ZD63 1L5AA	2	J, U					E7	[L5], After 3/31/03
6									FRAME, Front Seat Cushion
	5072 110AA	1						E7	Right
	5072 111AA	1						E7	Left
7									COVER, Front Seat Cushion
	XV81 1DVAA	2						E7	[DV]
	XV81 1L5AA	2						E7	[L5]
8	5093 974AA	2						E7	FOAM, Seat Cushion
-9	5093 977AA	2						E7	WIRE KIT, Trimming

JEEP LIBERTY (KJ)

SERIES	LINE	BODY	ENGINE	TRANSMISSION
P = Limited	J = LHD (4WD)	74 = 4 Dr. (104.3 WB)	ED1, ED0 = 2.4L Power Tech	DDK = 5 Speed HDManual
H = Sport	U = RHD (4WD)		EKG, EK0 = 3.7L Power Tech	DDD = 5 Speed HD Manual
M = Renegade	T = LHD (2WD)		ENJ = 2.5L 4Cyl Turbo Diesel	DG4,DGQ = Multi-Speed Auto
			ENR = 2.8L 4Cyl Turbo Diesel	DG6 = 4 Speed Auto Transm
			EN0 = 4Cyl Turbo Diesel	DG0 = All Automatic Transm
				DBB = All Manual Transm

Front Seat, Cloth, Trim Code [L5]
Figure IKJ-550

ITEM	PART NUMBER	QTY	LINE	SERIES	BODY	ENGINE	TRANS	TRIM	DESCRIPTION
1									BACK, Front Seat
	XG62 1DVAA	1						L5	[DV], Up to 3/3/03, Right
	XG62 1L5AA	1						L5	[L5], Up to 3/3/03, Right
	#YG39 1DVAA	1						L5	[DV], Without Map Pocket, Up to 3/3/03, Left
	#YG39 1L5AA	1						L5	[L5], Without Map Pocket, Up to 3/3/03, Left
	#ZP12 1DVAA	1	J, T					L5	[DV], After 3/3/03, Right
	#ZP12 1L5AA	1	J, T					L5	[L5], After 3/3/03, Right
	#ZP13 1DVAA	1	J, T					L5	[DV], Without Map Pocket, After 3/3/03, Left
	#ZP13 1L5AA	1	J, T					L5	[L5], Without Map Pocket, After 3/3/03, Left
2									COVER, Front Seat Back
	XG64 1DVAA	1						L5	[DV], Up to 3/3/03, Right
	XG64 1L5AA	1						L5	[L5], Up to 3/3/03, Right
	#YG37 1DVAA	1						L5	[DV], Without Map Pocket, Up to 3/3/03, Left
	#YG37 1L5AA	1						L5	[L5], Without Map Pocket, Up to 3/3/03, Left
	#ZP10 1DVAA	1	J, T					L5	[DV], After 3/3/03
	#ZP10 1L5AA	1	J, T					L5	[L5], After 3/3/03
	#ZP11 1DVAA	1	J, T					L5	[DV], Without Map Pocket, After 3/3/03
	#ZP11 1L5AA	1	J, T					L5	[L5], Without Map Pocket, After 3/3/03
3									FRAME, Front Seat Cushion
	5072 110AA	1						L5	Right
	5072 111AA	1						L5	Left,Manual Seat
	5072 126AA	1						L5	Left,Power Seat
4									COVER, Front Seat Cushion
	XV86 1DVAA	2						L5	[DV], Up to 3/3/03
	XV86 1L5AA	2						L5	[L5], Up to 3/3/03
	#ZP02 1DVAA	2	J, T					L5	[DV], After 3/3/03
	#ZP02 1L5AA	2	J, T					L5	[L5], After 3/3/03
5	5093 974AA	2						L5	FOAM, Seat Cushion
-6	5093 977AA	2						L5	WIRE KIT, Trimming

JEEP LIBERTY (KJ)

SERIES	LINE	BODY	ENGINE	TRANSMISSION
P = Limited	J = LHD (4WD)	74 = 4 Dr. (104.3 WB)	ED1, ED0 = 2.4L Power Tech	DDK = 5 Speed HDManual
H = Sport	U = RHD (4WD)		EKG, EK0 = 3.7L Power Tech	DDD = 5 Speed HD Manual
M = Renegade	T = LHD (2WD)		ENJ = 2.5L 4Cyl Turbo Diesel	DG4,DGQ = Multi-Speed Auto
			ENR = 2.8L 4Cyl Turbo Diesel	DG6 = 4 Speed Auto Transm
			EN0 = 4Cyl Turbo Diesel	DG0 = All Automatic Transm
				DBB = All Manual Transm

AR = Use as required - = Non illustrated part # = New this model year **June 3, 2003**

« RETURN TO GROUP INDEX

Front Seat, Cloth, Low Back, Trim Code [K7]
Figure IKJ-560

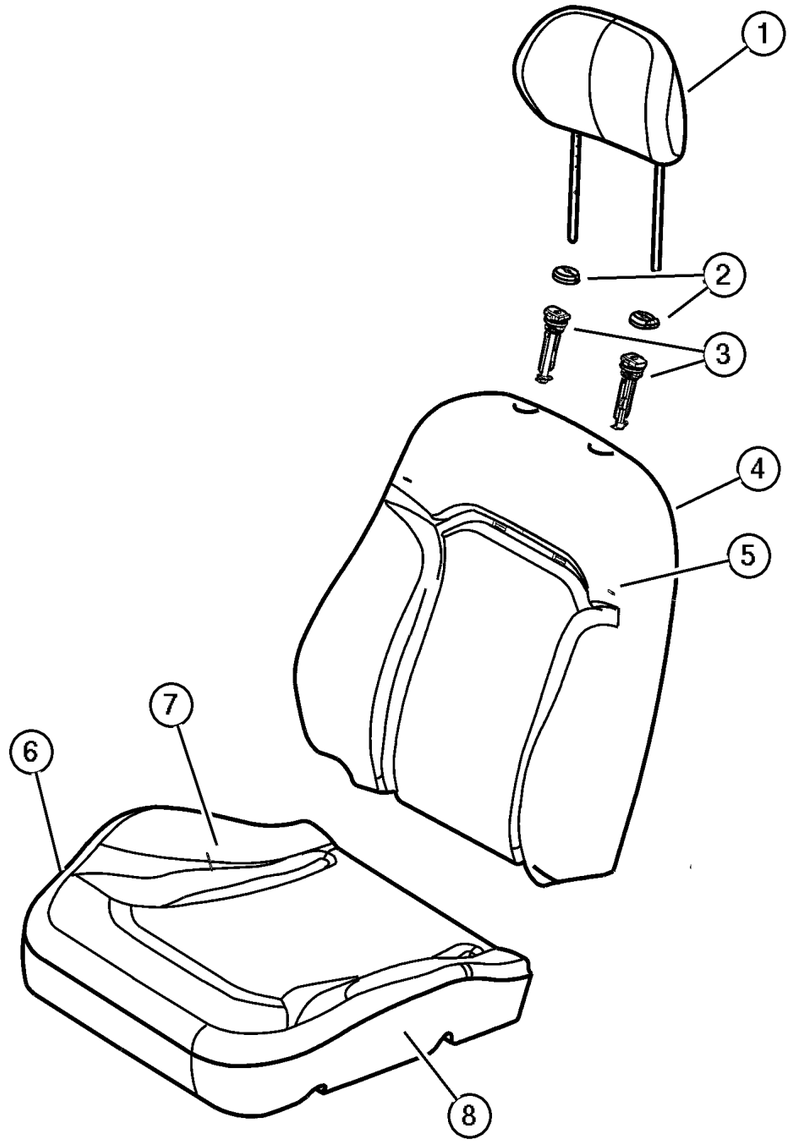

ITEM	PART NUMBER	QTY	LINE	SERIES	BODY	ENGINE	TRANS	TRIM	DESCRIPTION
1									HEADREST, Front
	#XH17 1DVAA	2						K7	[DV]
	#XH17 1L5AA	2						K7	[L5]
2									CAP, Headrest Adjuster
	WA49 WL5AA	1						K7	[L5], With Button
	WA49 XDVAA	1						K7	[DV], With Button
	WA50 WL5AA	1						K7	[L5], Without Button
	WA50 XDVAA	1						K7	[DV], Without Button
3	5066 563AA	2						K7	SLEEVE, Headrest
4									BACK, Front Seat
	#XH18 1DVAA	1						K7	[DV], Up to 3/3/03, Right
	#XH18 1L5AA	1						K7	[L5], Up to 3/3/03, Right
	#XH19 1DVAA	1						K7	[DV], Up to 3/3/03, Left
	#XH19 1L5AA	1						K7	[L5], Up to 3/3/03, Left
	#ZP28 1DVAA	1	J, U					K7	[DV], After 3/3/03, Right
	#ZP28 1L5AA	1	J, U					K7	[L5], After 3/3/03, Right
	#ZP29 1DVAA	1	J, U					K7	[DV], After 3/3/03, Left
	#ZP29 1L5AA	1	J, U					K7	[L5], After 3/3/03, Left
5									COVER, Front Seat Back
	#XH16 1DVAA	1						K7	[DV], With Map Pocket, Up to 3/3/03, Right
	#XH16 1L5AA	1						K7	[L5], With Map Pocket, Up to 3/3/03, Right
	#YG11 1DVAA	1						K7	[DV], Without Map Pocket, Up to 3/3/03, Left
	#YG11 1L5AA	1						K7	[L5], Without Map Pocket, Up to 3/3/03, Left
	#ZP18 1DVAA	1	J, U					K7	[DV], With Map Pocket, After 3/3/03, Right
	#ZP18 1L5AA	1	J, U					K7	[L5], With Map Pocket, After 3/3/03, Right
	#ZP19 1DVAA	1	J, U					K7	[DV], Without Map Pocket, After 3/3/03, Left
	#ZP19 1L5AA	1	J, U					K7	[L5], Without Map Pocket, After 3/3/03, Left
6									FRAME, Front Seat Cushion
	5072 111AA	1						K7	Left,Manual Seat
	5072 110AA	1						K7	Right,Manual Seat
	5072 126AA	2						K7	Power Seat
7									COVER, Front Seat Cushion
	XV86 1DVAA	2						K7	[DV], Up to 3/3/03

JEEP LIBERTY (KJ)

SERIES	LINE	BODY	ENGINE	TRANSMISSION
P = Limited	J = LHD (4WD)	74 = 4 Dr. (104.3 WB)	ED1, ED0 = 2.4L Power Tech	DDK = 5 Speed HDManual
H = Sport	U = RHD (4WD)		EKG, EK0 = 3.7L Power Tech	DDD = 5 Speed HD Manual
M = Renegade	T = LHD (2WD)		ENJ = 2.5L 4Cyl Turbo Diesel	DG4,DGQ = Multi-Speed Auto
			ENR = 2.8L 4Cyl Turbo Diesel	DG6 = 4 Speed Auto Transm
			EN0 = 4Cyl Turbo Diesel	DG0 = All Automatic Transm
				DBB = All Manual Transm

Front Seat, Cloth, Low Back, Trim Code [K7]
Figure IKJ-560

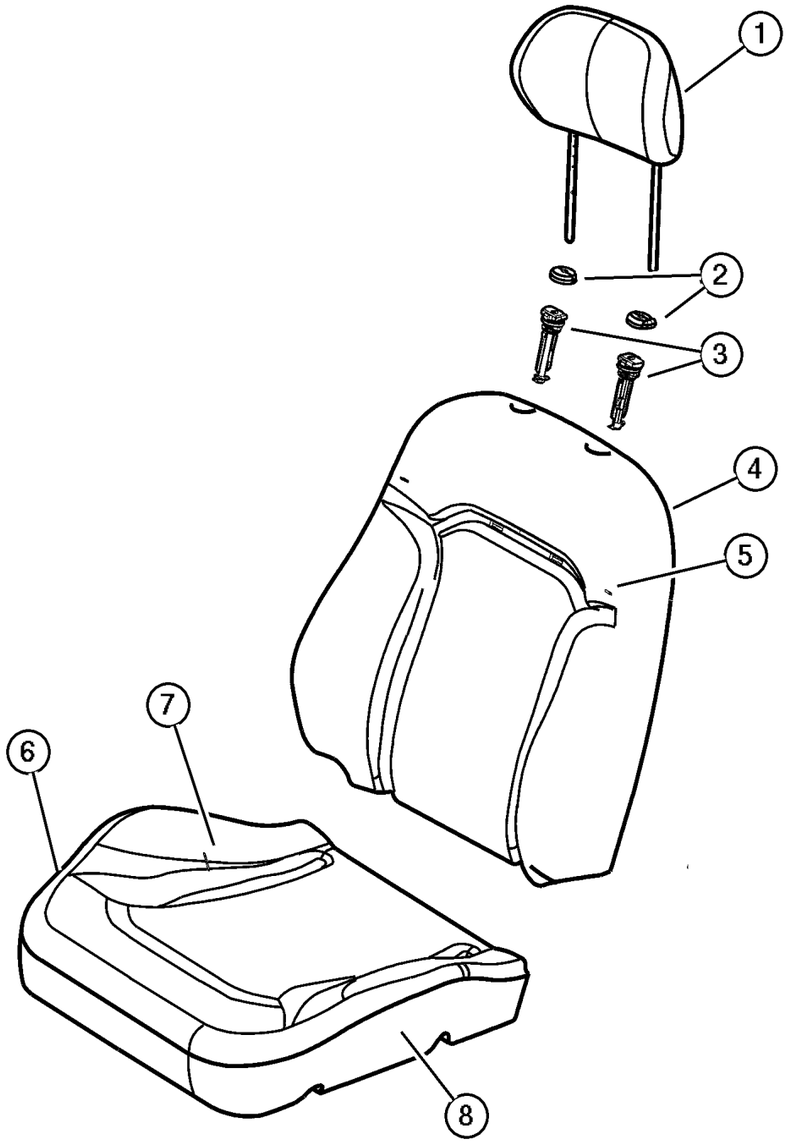

ITEM	PART NUMBER	QTY	LINE	SERIES	BODY	ENGINE	TRANS	TRIM	DESCRIPTION
	XV86 1L5AA	2						K7	[L5], Up to 3/3/03
	#ZP02 1DVAA	2	J, U					K7	[DV], After 3/3/03
	#ZP02 1L5AA	2	J, U					K7	[L5], After 3/3/03
8	5093 974AA	2						K7	FOAM, Seat Cushion
-9	5093 977AA	2						K7	WIRE KIT, Trimming

JEEP LIBERTY (KJ)

SERIES	LINE	BODY	ENGINE	TRANSMISSION
P = Limited	J = LHD (4WD)	74 = 4 Dr. (104.3 WB)	ED1, ED0 = 2.4L Power Tech	DDK = 5 Speed HDManual
H = Sport	U = RHD (4WD)		EKG, EK0 = 3.7L Power Tech	DDD = 5 Speed HD Manual
M = Renegade	T = LHD (2WD)		ENJ = 2.5L 4Cyl Turbo Diesel	DG4,DGQ = Multi-Speed Auto
			ENR = 2.8L 4Cyl Turbo Diesel	DG6 = 4 Speed Auto Transm
			EN0 = 4Cyl Turbo Diesel	DG0 = All Automatic Transm
				DBB = All Manual Transm

Front Seat, Cloth With Gray Insert, [H5]
Figure IKJ-570

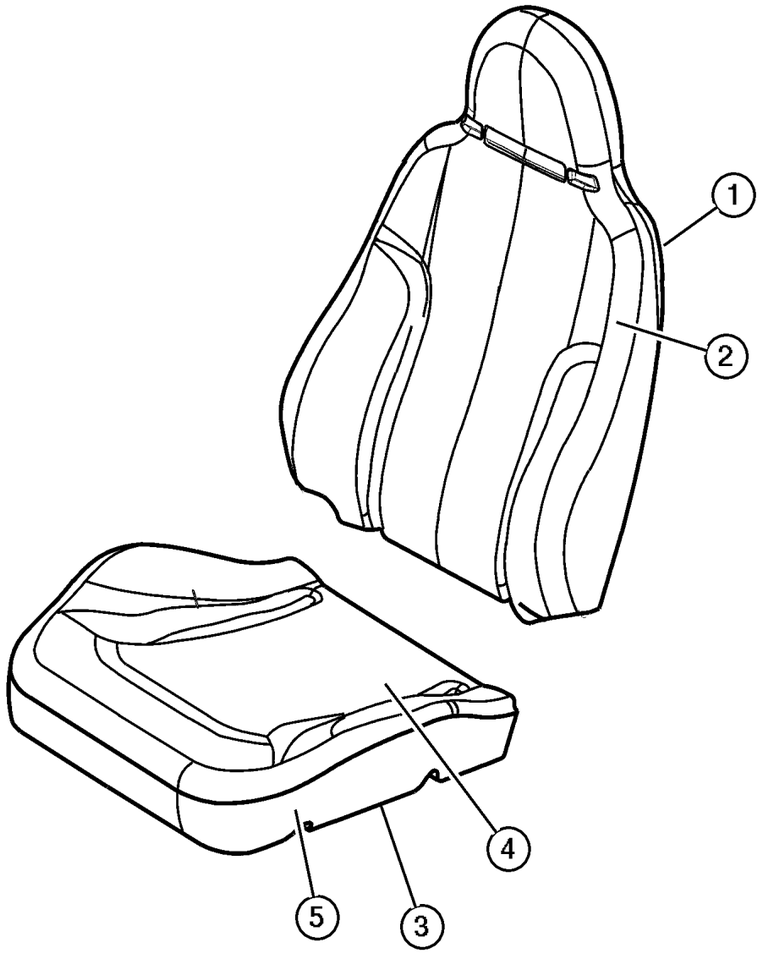

ITEM	PART NUMBER	QTY	LINE	SERIES	BODY	ENGINE	TRANS	TRIM	DESCRIPTION
1									BACK, Front Seat
	#YX76 1L2AA	1	J, T					H5	Passenger
	#YX77 1L2AA	1	J, T					H5	Driver
2									COVER, Front Seat Back
	#YX79 1L2AA	1	J, T					H5	Driver
	#YX78 1L2AA	1	J, T					H5	Passenger
3									FRAME, Front Seat Cushion
	5072 110AA	1	J, T					H5	Passenger
	5072 111AA	1	J, T					H5	Driver
4	#YX74 1L2AA	2	J, T					H5	COVER, Front Seat Cushion
5	5093 974AA	2	J, T					H5	FOAM, Seat Cushion
-6	5093 977AA	2	J, T					H5	WIRE KIT, Trimming

JEEP LIBERTY (KJ)

SERIES	LINE	BODY	ENGINE	TRANSMISSION
P = Limited	J = LHD (4WD)	74 = 4 Dr. (104.3 WB)	ED1, ED0 = 2.4L Power Tech	DDK = 5 Speed HDManual
H = Sport	U = RHD (4WD)		EKG, EK0 = 3.7L Power Tech	DDD = 5 Speed HD Manual
M = Renegade	T = LHD (2WD)		ENJ = 2.5L 4Cyl Turbo Diesel	DG4,DGQ = Multi-Speed Auto
			ENR = 2.8L 4Cyl Turbo Diesel	DG6 = 4 Speed Auto Transm
			EN0 = 4Cyl Turbo Diesel	DG0 = All Automatic Transm
				DBB = All Manual Transm

AR = Use as required - = Non illustrated part # = New this model year **June 3, 2003**

« RETURN TO GROUP INDEX

Rear Seats, Trim Code [M5]
Figure IKJ-610

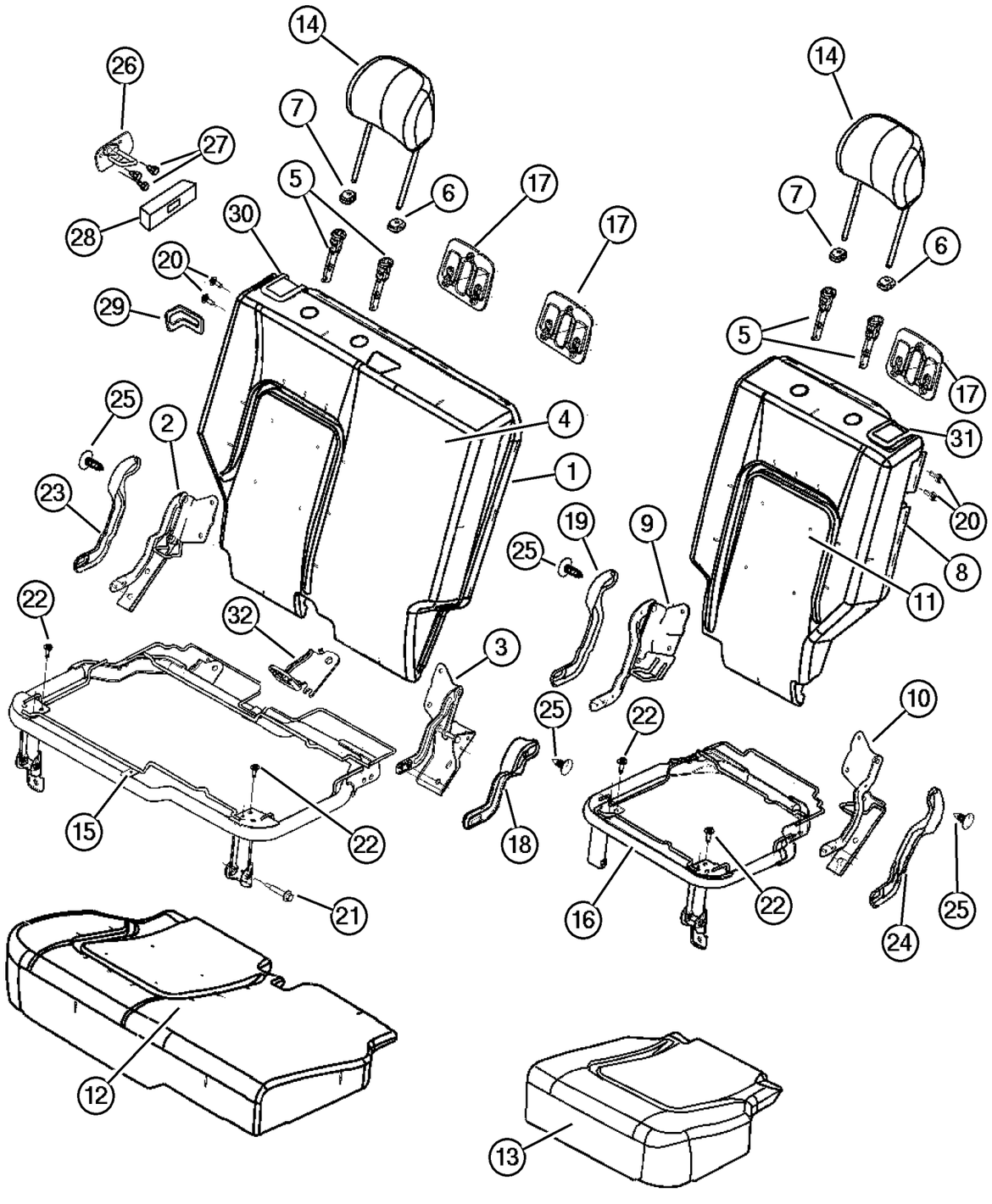

ITEM	PART NUMBER	QTY	LINE	SERIES	BODY	ENGINE	TRANS	TRIM	DESCRIPTION
1									SEAT BACK, Rear, 65%
	#YF80 1DVAA	1	J, T					M5	[DV]
	#YF80 1L5AA	1	J, T					M5	[L5]
2	5071 702AA	1	J, T					M5	BRACKET AND HINGE, Rear Seat Back, 65%, Right,Outboard
3	5071 703AA	1	J, T					M5	BRACKET AND HINGE, Rear Seat Back, 65%, Right,Inboard
4									COVER, Rear Seat Back, 65%
	#YF76 1DVAA	1	J, T					M5	[DV]
	#YF76 1L5AA	1	J, T					M5	[L5]
5	5066 017AA	2	J, T					M5	SLEEVE, Headrest
6									CAP, Headrest Adjuster, With Button
	WA46 1DVAA	2	J, T					M5	[DV]
	WA46 1L5AA	2	J, T					M5	[L5]
7									CAP, Headrest Adjuster, Without Button
	WA31 1DVAA	2	J, T					M5	[DV]
	WA31 1L5AA	2	J, T					M5	[L5]
8									SEAT BACK, Rear, 35%
	#YF81 1DVAA	1	J, T					M5	[DV]
	#YF81 1L5AA	1	J, T					M5	[L5]
9	5071 704AA	1	J, T					M5	BRACKET AND HINGE, Rear Seat Back, 35%, Left,Inboard
10	5071 705AA	1	J, T					M5	BRACKET AND HINGE, Rear Seat Back, 35%, Left,Outboard
11									COVER, Rear Seat Back, 35%
	#YF77 1DVAA	1	J, T					M5	[DV]
	#YF77 1L5AA	1	J, T					M5	[L5]
12									COVER AND PAD, Cushion, 65%
	#YF86 1DVAA	1	J, T					M5	[DV]
	#YF86 1L5AA	1	J, T					M5	[L5]
13									COVER AND PAD, Cushion, 35%
	#YF87 1DVAA	1	J, T					M5	[DV]
	#YF87 1L5AA	1	J, T					M5	[L5]
14									HEADREST, Rear
	#YF83 1DVAA	2	J, T					M5	[DV]
	#YF83 1L5AA	2	J, T					M5	[L5]
15	5072 112AA	1	J, T					M5	PANEL, Seat Cushion Base, 65%
16	5072 113AA	1	J, T					M5	PANEL, Seat Cushion Base, 35%
17									BEZEL, TETHER
	WB44 1DVAA	3	J, T					M5	[DV]

JEEP LIBERTY (KJ)

SERIES	LINE	BODY	ENGINE	TRANSMISSION
P = Limited	J = LHD (4WD)	74 = 4 Dr. (104.3 WB)	ED1, ED0 = 2.4L Power Tech	DDK = 5 Speed HDManual
H = Sport	U = RHD (4WD)		EKG, EK0 = 3.7L Power Tech	DDD = 5 Speed HD Manual
M = Renegade	T = LHD (2WD)		ENJ = 2.5L 4Cyl Turbo Diesel	DG4,DGQ = Multi-Speed Auto
			ENR = 2.8L 4Cyl Turbo Diesel	DG6 = 4 Speed Auto Transm
			EN0 = 4Cyl Turbo Diesel	DG0 = All Automatic Transm
				DBB = All Manual Transm

AR = Use as required - = Non illustrated part # = New this model year **June 3, 2003**

« RETURN TO GROUP INDEX »

Rear Seats, Trim Code [M5]
Figure IKJ-610

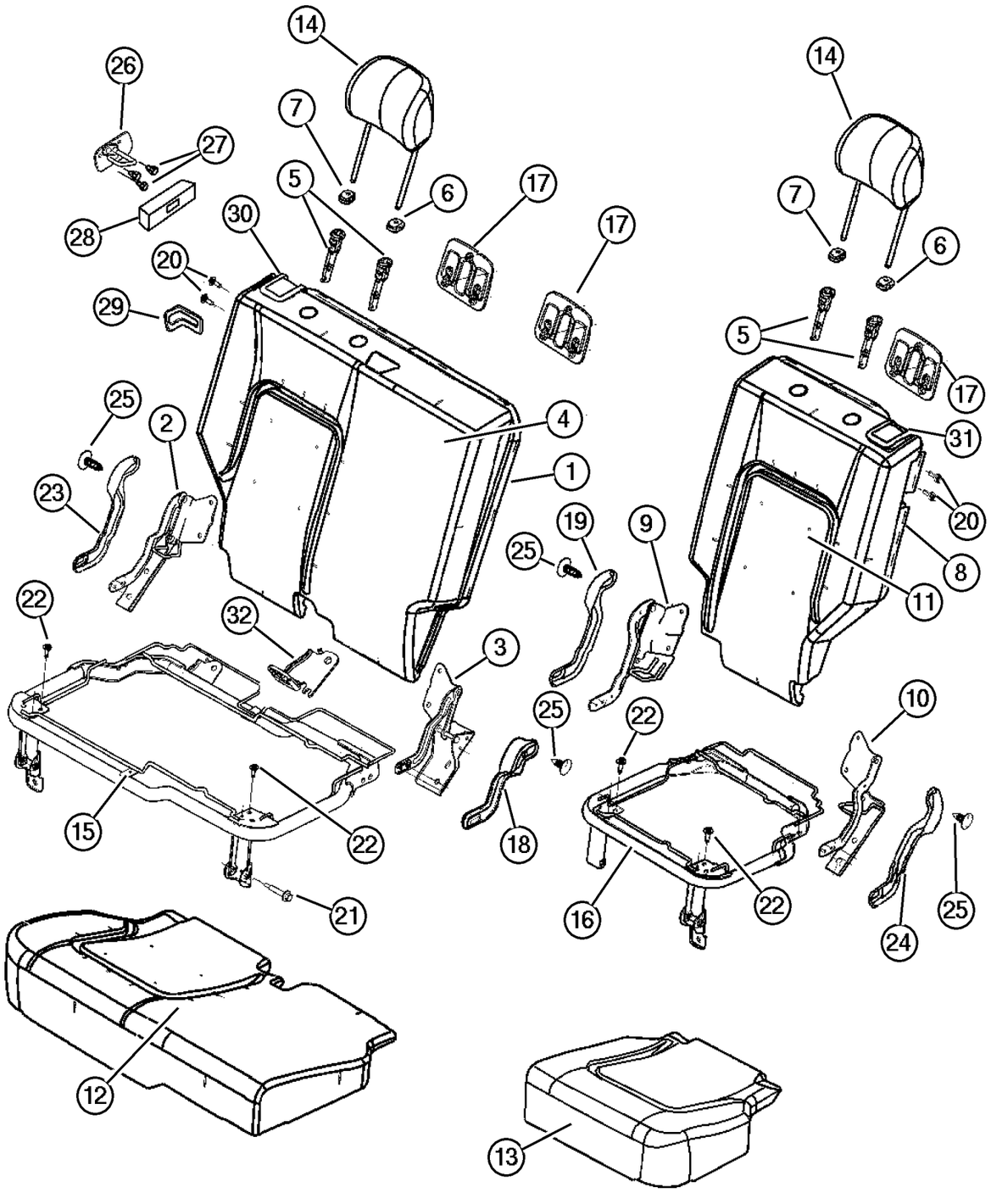

ITEM	PART NUMBER	QTY	LINE	SERIES	BODY	ENGINE	TRANS	TRIM	DESCRIPTION
	WB44 1L5AA	3	J, T					M5	[L5]
18									COVER, Hinge, Right Inboard
	UZ45 WL5AA	1	J, T					M5	[L5]
	UZ45 XDVAA	1	J, T					M5	[DV]
19									COVER, Hinge, Left Inboard
	UZ46 WL5AA	1	J, T					M5	[L5]
	UZ46 XDVAA	1	J, T					M5	[DV]
20	5072 520AA	2	J, T					M5	BOLT, Pivot
21	5072 519AA	1	J, T					M5	BOLT, Seat
22	4761 014	8	J, T					M5	BOLT, Cushion To Adjuster
23									COVER, Hinge, Right Outboard
	UZ44 XDVAA	1	J, T					M5	[DV]
	UZ44 1L5AA	1	J, T					M5	[L5]
24									COVER, Hinge, Left Outboard
	UZ47 WL5AA	1	J, T					M5	[L5]
	UZ47 XDVAA	1	J, T					M5	[DV]
25									PIN, Push
	WA51 WL5AA	34	J, T					M5	[L5]
	WA51 XDVAA	34	J, T					M5	[DV]
26									STRIKER, Seat Back Latch
	55352 816AB	1							Right
	55352 817AB	1							Left
27	6505 434AA	6							SCREW, M8-1.25
28	55352 839AC	2							BEZEL, Seat Latch
29									BEZEL, Seat Latch
	WA92 WL8AA	1	J, T					M5	[L5]
	WA92 XDVAA	1	J, T					M5	[DV]
30									CONTROL, SEAT RELEASE, With Cable and Latch
	XF78 1DVAB	1	J, T					M5	[DV], 65% Side
	XF78 1L5AB	1	J, T					M5	[L5], 65% Side
31									CONTROL, SEAT RELEASE, With Latch
	XF79 1DVAA	1	J, T					M5	[DV], 35% Side
	XF79 1L5AA	1	J, T					M5	[L5], 35% Side
32	5134 366AA	1	J, T					M5	BRACKET, Child Tether Anchor

JEEP LIBERTY (KJ)

SERIES	LINE	BODY	ENGINE	TRANSMISSION
P = Limited	J = LHD (4WD)	74 = 4 Dr. (104.3 WB)	ED1, ED0 = 2.4L Power Tech	DDK = 5 Speed HDManual
H = Sport	U = RHD (4WD)		EKG, EK0 = 3.7L Power Tech	DDD = 5 Speed HD Manual
M = Renegade	T = LHD (2WD)		ENJ = 2.5L 4Cyl Turbo Diesel	DG4,DGQ = Multi-Speed Auto
			ENR = 2.8L 4Cyl Turbo Diesel	DG6 = 4 Speed Auto Transm
			EN0 = 4Cyl Turbo Diesel	DG0 = All Automatic Transm
				DBB = All Manual Transm

Rear Seat, Trim Code [DL]
Figure IKJ-620

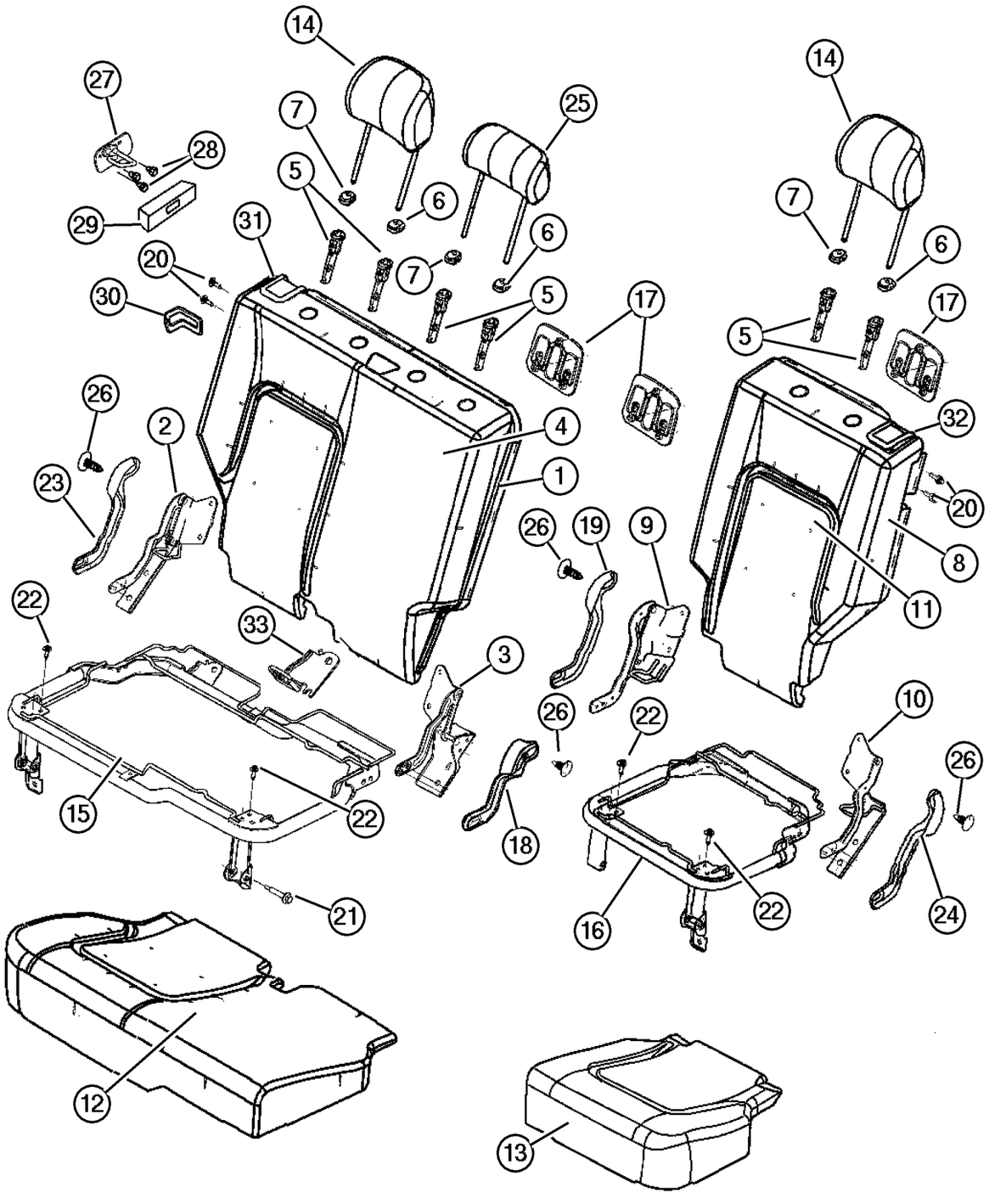

ITEM	PART NUMBER	QTY	LINE	SERIES	BODY	ENGINE	TRANS	TRIM	DESCRIPTION
1									SEAT BACK, Rear, 65%
	WD10 1L2AA	1	J, T					DL	[L2], Up to 3/3/03
	WD10 1D2AA	1	J, T					DL	[D2], Up to 3/3/03
	#ZD14 1D2AA	1	J, T					DL	[D2], After 3/3/03
	#ZD14 1L2AA	1	J, T					DL	[L2], After 3/3/03
	WD18 1L2AA	1	J, U					DL	[L2], Up to 3/3/03, Export
	WD18 1DVAA	1	J, U					DL	[DV], Up to 2/22/03, Export
	#ZD16 1DVAA	1	J, U					DL	[DV], After 2/22/03, Export
	#ZD16 1L2AA	1	J, U					DL	[L2], After 3/3/03, Export
2									BRACKET AND HINGE, Rear Seat Back, 65%
	5071 702AA	1	J, T					DL	Right,Outboard,Export
		1	J, U					DL	Right,Outboard,Export
3									BRACKET AND HINGE, Rear Seat Back, 65%
	5071 703AA	1	J, U					DL	Right,Inboard,Export
		1	J, T					DL	Right,Inboard
4									COVER, Rear Seat Back, 65%
	WD16 1L2AA	1	J, T					DL	[L2], Up to 3/3/03
	WD16 1D2AA	1	J, T					DL	[D2], Up to 3/3/03
	WD19 1L2AA	1	J, U					DL	[L2], Up to 3/3/03, Export
	WD19 1DVAA	1	J, U					DL	[DV], Up to 2/22/03, Export
	#ZD18 1D2AA	1	J, T					DL	[D2], After 3/3/03
	#ZD18 1L2AA	1	J, T					DL	[L2], After 3/3/03
	#ZD20 1DVAA	1	J, U					DL	[DV], After 2/22/03, Export
	#ZD20 1L2AA	1	J, U					DL	[L2], After 3/3/03, Export
5									SLEEVE, Headrest
	5066 017AA	2	J, T					DL	
		4	J, U					DL	Export
6									CAP, Headrest Adjuster, With Button
	WA46 1L2AA	1	J, T					DL	[D2, L2]
	WA46 1DVAA	1	J, U					DL	[DV]
	WA46 1L2AA	1	J, T					DL	[L2]
7									CAP, Headrest Adjuster, Without Button
	WA31 1L2AA	1	J, T					DL	[D2, L2]
		1	J, U					DL	[L2], Export
	WA31 1DVAA	1	J, U					DL	[DV], Export
8									SEAT BACK, Rear, 35%
	WD11 1L2AA	1	J, T					DL	[L2], Up to 3/3/03
	WD11 1D2AA	1	J, T					DL	[D2], Up to 3/3/03

JEEP LIBERTY (KJ)

SERIES	LINE	BODY	ENGINE	TRANSMISSION
P = Limited	J = LHD (4WD)	74 = 4 Dr. (104.3 WB)	ED1, ED0 = 2.4L Power Tech	DDK = 5 Speed HDManual
H = Sport	U = RHD (4WD)		EKG, EK0 = 3.7L Power Tech	DDD = 5 Speed HD Manual
M = Renegade	T = LHD (2WD)		ENJ = 2.5L 4Cyl Turbo Diesel	DG4,DGQ = Multi-Speed Auto
			ENR = 2.8L 4Cyl Turbo Diesel	DG6 = 4 Speed Auto Transm
			EN0 = 4Cyl Turbo Diesel	DG0 = All Automatic Transm
				DBB = All Manual Transm

Rear Seat, Trim Code [DL]
Figure IKJ-620

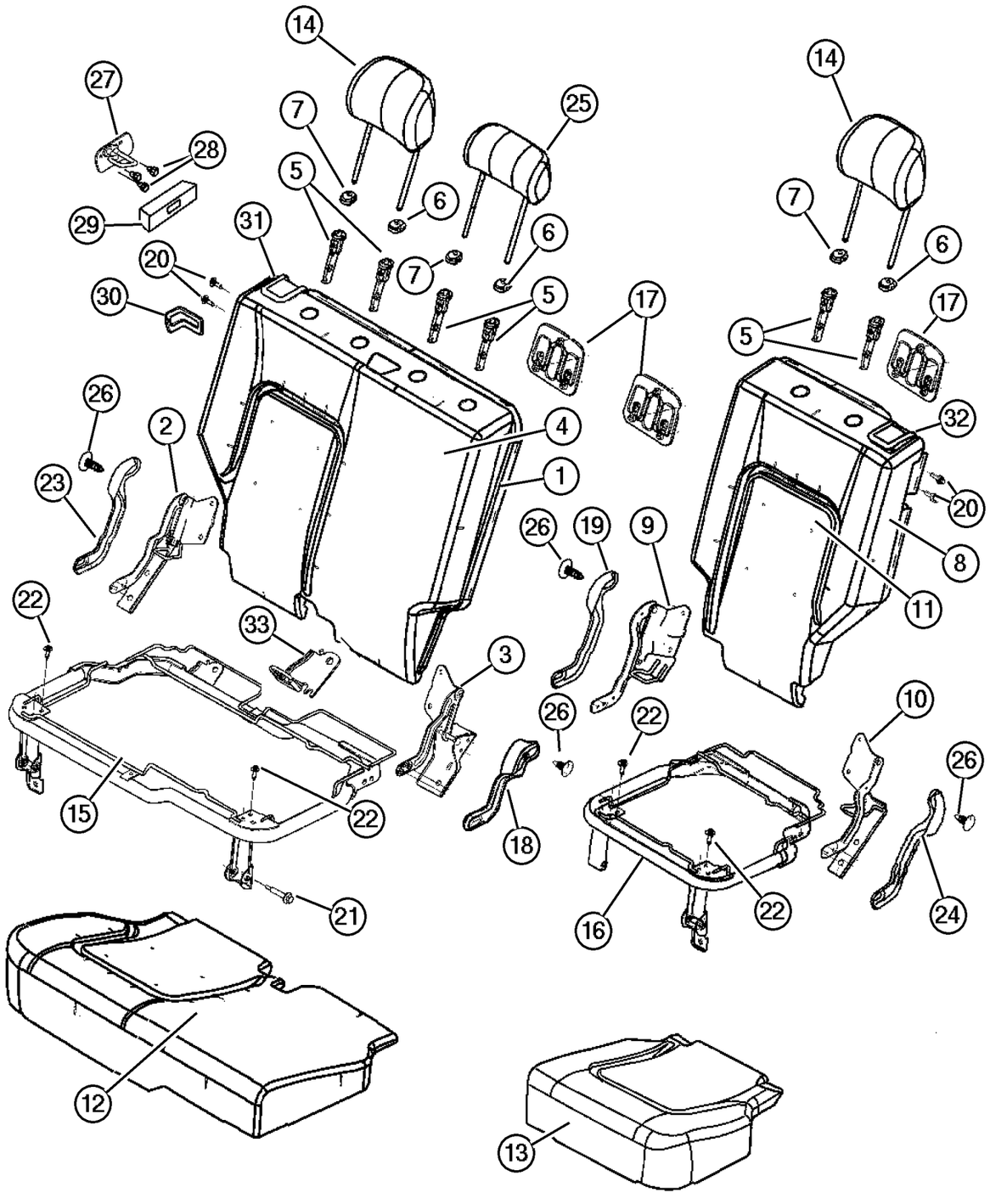

ITEM	PART NUMBER	QTY	LINE	SERIES	BODY	ENGINE	TRANS	TRIM	DESCRIPTION
	WD11 1DVAA	1	J, U					DL	[DV], Up to 2/22/03, Export
	WD11 1L2AA	1	J, U					DL	[L2], Up to 3/3/03, Export
	#ZD15 1D2AA	1	J, T					DL	[D2], After 3/3/03
	#ZD15 1DVAA	1	J, U					DL	[DV], After 2/22/03, Export
	#ZD15 1L2AA	1	J, T					DL	[L2], After 3/3/03
		1	J, U					DL	[L2], After 3/3/03, Export
9									BRACKET AND HINGE, Rear Seat Back, 35%
	5071 704AA	1	J, U					DL	Left,Inboard,Export
		1	J, T					DL	Left,Inboard
10									BRACKET AND HINGE, Rear Seat Back, 35%
	5071 705AA	1	J, T					DL	Left,Outboard
		1	J, U					DL	Left,Outboard,Export
11									COVER, Rear Seat Back, 35%
	WD17 1L2AA	1	J, T					DL	[L2], Up to 3/3/03
	WD17 1D2AA	1	J, T					DL	[D2], Up to 3/3/03
	WD17 1L2AA	1	J, U					DL	[L2], Up to 3/3/03, Export
	WD17 1DVAA	1	J, U					DL	[DV], Up to 2/22/03, Export
	#ZD19 1D2AA	1	J, T					DL	[D2], After 3/3/03
	#ZD19 1L2AA	1	J, T					DL	[L2], After 3/3/03
	#ZD19 1DVAA	1	J, U					DL	[DV], After 2/22/03, Export
	#ZD19 1L2AA	1	J, U					DL	[L2], After 3/3/03, Export
12									COVER AND PAD, Cushion, 65%
	UZ26 1L2AA	1	J, T					DL	[D2, L2], Up to 3/3/03
	#ZD06 1L2AA	1	J, T					DL	[D2, L2], After 3/3/03
	UZ26 1DVAA	1	J, U					DL	[DV], Up to 2/22/03, Export
	UZ26 1L2AA	1	J, U					DL	[L2], Up to 3/3/03, Export
	#ZD06 1DVAA	1	J, U					DL	[DV], After 2/22/03, Export
	#ZD06 1L2AA	1	J, U					DL	[L2], After 3/3/03, Export
13									COVER AND PAD, Cushion, 35%
	UZ27 1L2AA	1	J, T					DL	[D2, L2], Up to 3/3/03
	#ZD07 1L2AA	1	J, T					DL	[D2, L2], After 3/3/03
	UZ27 1L2AA	1	J, U					DL	[L2], Up to 3/3/03, Export
	UZ27 1DVAA	1	J, U					DL	[DV], Up to 2/22/22, Export
	#ZD07 1DVAA	1	J, U					DL	[DV], After 2/22/03, Export
	#ZD07 1L2AA	1	J, U					DL	[L2], After 3/3/03, Export
14									HEADREST, Rear
	XP64 1L2AA	2	J, U					DL	[L2], Export
	XP64 1DVAA	2	J, U					DL	[DV], Export
	XP64 1L2AA	2	J, T					DL	[D2, L2]
15									PANEL, Seat Cushion Base, 65%

JEEP LIBERTY (KJ)

SERIES	LINE	BODY	ENGINE	TRANSMISSION
P = Limited	J = LHD (4WD)	74 = 4 Dr. (104.3 WB)	ED1, ED0 = 2.4L Power Tech	DDK = 5 Speed HDManual
H = Sport	U = RHD (4WD)		EKG, EK0 = 3.7L Power Tech	DDD = 5 Speed HD Manual
M = Renegade	T = LHD (2WD)		ENJ = 2.5L 4Cyl Turbo Diesel	DG4,DGQ = Multi-Speed Auto
			ENR = 2.8L 4Cyl Turbo Diesel	DG6 = 4 Speed Auto Transm
			EN0 = 4Cyl Turbo Diesel	DG0 = All Automatic Transm
				DBB = All Manual Transm

Rear Seat, Trim Code [DL]
Figure IKJ-620

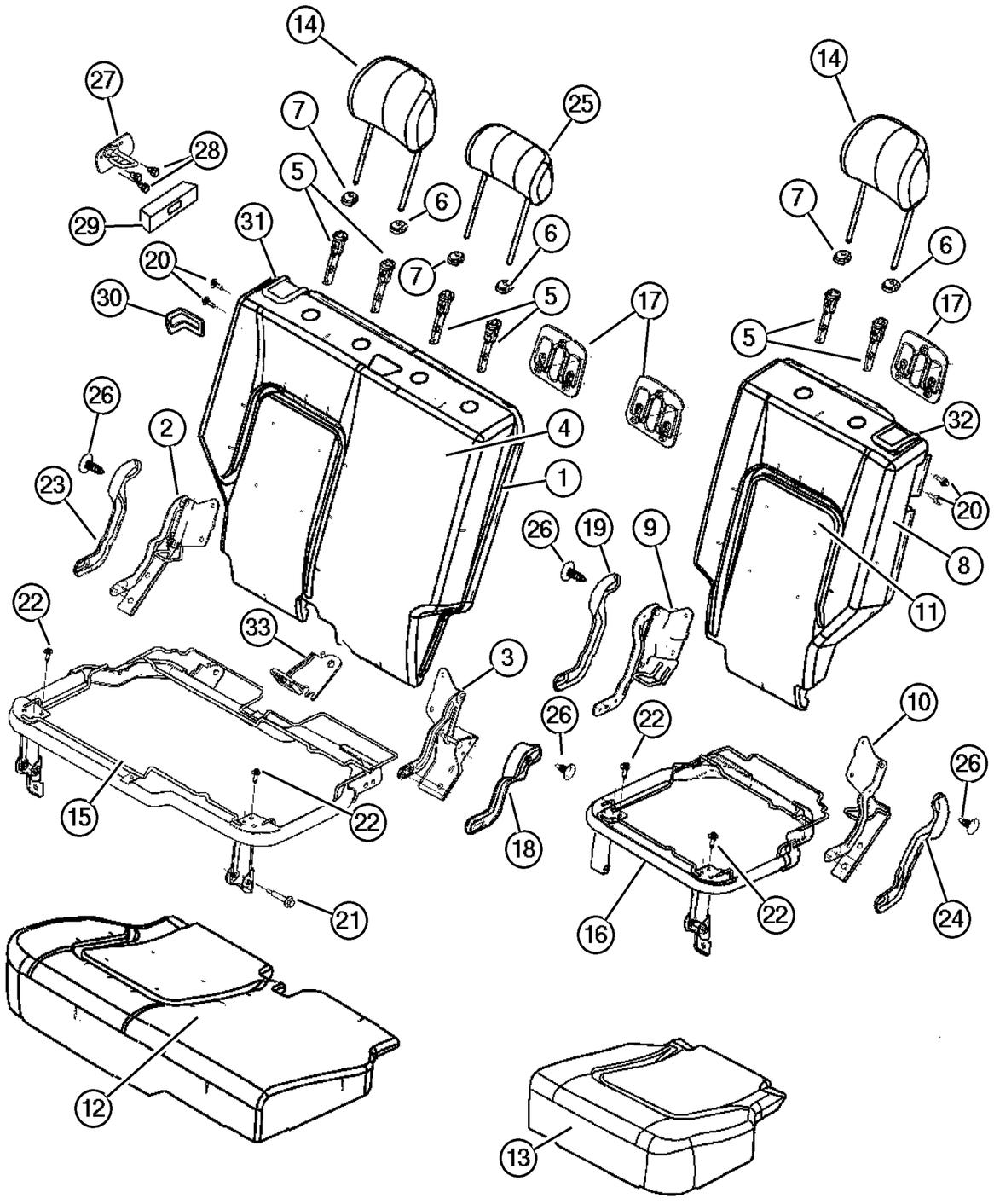

ITEM	PART NUMBER	QTY	LINE	SERIES	BODY	ENGINE	TRANS	TRIM	DESCRIPTION
	5072 112AA	1	J, T					DL	
		1	J, U					DL	Export
16									PANEL, Seat Cushion Base, 35%
	5072 113AA	1	J, U					DL	Export
		1	J, T					DL	
17									BEZEL, TETHER
	WB44 1L5AA	1	J, T					DL	[L2]
	WB44 1DVAA	1	J, T					DL	[D2]
	WB44 1L5AA	1	J, U					DL	[L2], Export
	WB44 1DVAA	1	J, U					DL	[DV], Export
18									COVER, Hinge
	UZ45 TL2AA	1	J, T					DL	[D2, L2]
		1	J, U					DL	[L2], Export
	UZ45 XDVAA	1	J, U					DL	[DV], Export
19									COVER, Hinge
	UZ44 TL2AA	1	J, T					DL	[D2, L2]
	UZ46 XDVAA	1	J, U					DL	[DV], Export
	UZ46 TL2AA	1	J, U					DL	[L2], Export
20									BOLT, Pivot
	5072 520AA	2	J, T					DL	
		2	J, U					DL	Export
21									BOLT, Seat
	5072 519AA	1	J, T					DL	
		1	J, U					DL	Export
22									BOLT, Cushion To Adjuster
	4761 014	8	J, T					DL	
		8	J, U					DL	
23									COVER, Hinge
	UZ44 XDVAA	1	J, U					DL	[DV], Export
	UZ44 TL2AA	1	J, U					DL	[L2], Export
		1	J, T					DL	[D2, L2]
24									COVER, Hinge
	UZ47 TL2AA	1	J, T					DL	[D2, L2]
	UZ44 XDVAA	1	J, U					DL	[DV], Export
	UZ45 TL2AA	1	J, U					DL	[L2], Export
25									HEADREST, Rear
	WA48 1L2AA	1	J, U					DL	[L2], Export
	WA48 1DVAA	1	J, U					DL	[DV], Export
26									PIN, Push
	WA51 1L2AA	32	J, T					DL	[D2, L2]
	WA51 XDVAA	2	J, U					DL	[DV], Export

JEEP LIBERTY (KJ)

SERIES	LINE	BODY	ENGINE	TRANSMISSION
P = Limited	J = LHD (4WD)	74 = 4 Dr. (104.3 WB)	ED1, ED0 = 2.4L Power Tech	DDK = 5 Speed HDManual
H = Sport	U = RHD (4WD)		EKG, EK0 = 3.7L Power Tech	DDD = 5 Speed HD Manual
M = Renegade	T = LHD (2WD)		ENJ = 2.5L 4Cyl Turbo Diesel	DG4,DGQ = Multi-Speed Auto
			ENR = 2.8L 4Cyl Turbo Diesel	DG6 = 4 Speed Auto Transm
			EN0 = 4Cyl Turbo Diesel	DG0 = All Automatic Transm
				DBB = All Manual Transm

Rear Seat, Trim Code [DL]
Figure IKJ-620

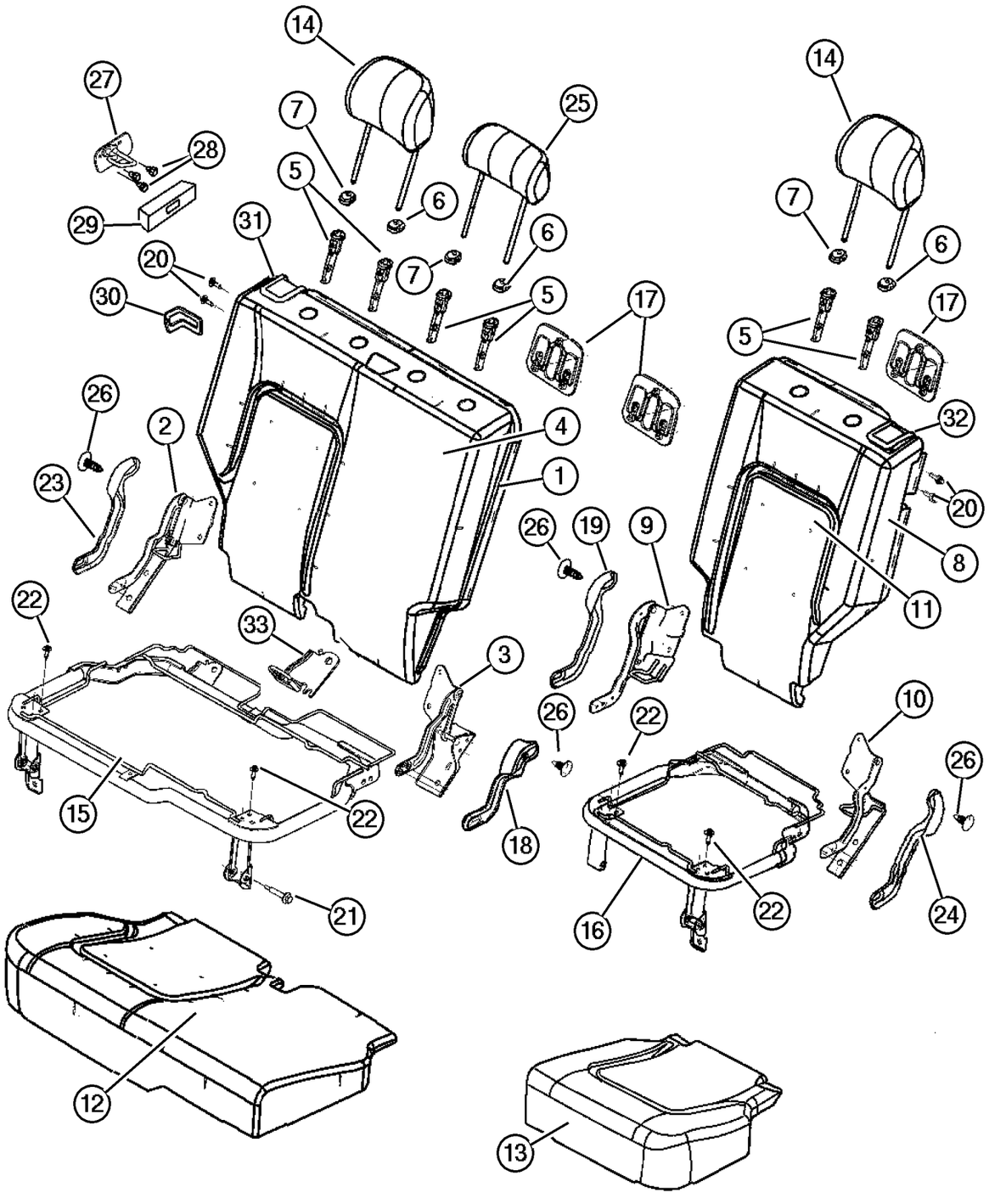

ITEM	PART NUMBER	QTY	LINE	SERIES	BODY	ENGINE	TRANS	TRIM	DESCRIPTION
	WA51 1L2AA	2	J, U					DL	[L2], Export
27									STRIKER, Seat Back Latch
	55352 816AB	1							Right
	55352 817AB	1							Left
28	6505 434AA	6							SCREW, M8-1.25
29	55352 839AC	2							BEZEL, Seat Latch
30									BEZEL, Seat Latch
	WA92 XDVAA	1	J, T					DL	[D2]
	WA92 WL8AA	1	J, U					DL	[L2], Export
	WA92 XDVAA	1	J, U					DL	[DV], Export
	WA92 WL8AA	1	J, T					DL	[L2]
31									CONTROL, SEAT RELEASE, With Cable and Latch
	XF78 1L2AA	1	J, T					DL	[D2, L2], 65%
	XF78 1DVAA	1	J, U					DL	[DV], 65%, Export
	XF78 1L2AA	1	J, U					DL	[L2], 65%, Export
32									CONTROL, SEAT RELEASE, With Latch
	XF79 1L2AA	1	J, T					DL	[D2, L2], 35%
		1	J, U					DL	[L2], 35%, Export
	XF79 1DVAA	1	J, U					DL	[DV], 35%, Export
33									BRACKET, Child Tether Anchor
	5134 366AA	1	J, U					DL	
		1	J, T					DL	

JEEP LIBERTY (KJ)

SERIES	LINE	BODY	ENGINE	TRANSMISSION
P = Limited	J = LHD (4WD)	74 = 4 Dr. (104.3 WB)	ED1, ED0 = 2.4L Power Tech	DDK = 5 Speed HDManual
H = Sport	U = RHD (4WD)		EKG, EK0 = 3.7L Power Tech	DDD = 5 Speed HD Manual
M = Renegade	T = LHD (2WD)		ENJ = 2.5L 4Cyl Turbo Diesel	DG4,DGQ = Multi-Speed Auto
			ENR = 2.8L 4Cyl Turbo Diesel	DG6 = 4 Speed Auto Transm
			EN0 = 4Cyl Turbo Diesel	DG0 = All Automatic Transm
				DBB = All Manual Transm

AR = Use as required - = Non illustrated part # = New this model year

June 3, 2003

« RETURN TO GROUP INDEX

Rear Seat, Trim Code [XJ]
Figure IKJ-630

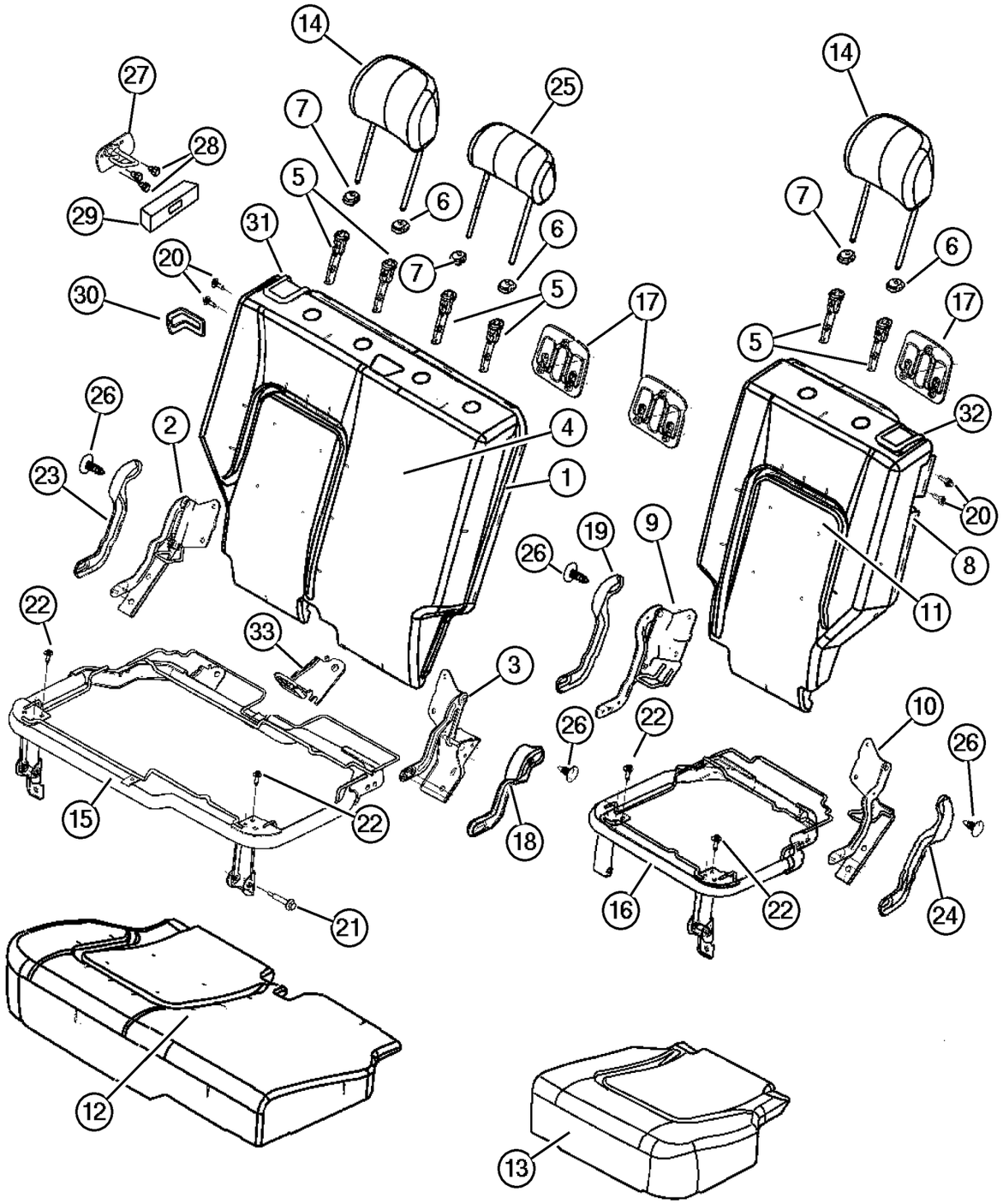

ITEM	PART NUMBER	QTY	LINE	SERIES	BODY	ENGINE	TRANS	TRIM	DESCRIPTION
1									SEAT BACK, Rear, 65%
	#YG88 1DVAA	1	J, T					XJ	[DV]
	#YG88 1L5AA	1	J, T					XJ	[L5]
	#YG92 1L5AA	1	J, U					XJ	[L5], Export
	#YG92 1DVAA	1	J, U					XJ	[DV], Export
2									BRACKET AND HINGE, Rear Seat Back, 65%
	5071 702AA	1	J, T					XJ	Right,Outboard
		1	J, U					XJ	Right,Outboard
3									BRACKET AND HINGE, Rear Seat Back, 65%
	5071 703AA	1	J, T					XJ	Right,Inboard
		1	J, U					XJ	Right,Inboard
4									COVER, Rear Seat Back, 65%
	#YG86 1L5AA	1	J, T					XJ	[L5]
	#YG86 1DVAA	1	J, T					XJ	[DV]
	#YG90 1DVAA	1	J, U					XJ	[DV], Export
	#YG90 1L5AA	1	J, U					XJ	[L5], Export
5									SLEEVE, Headrest
	5066 017AA	2	J, T					XJ	
		4	J, U					XJ	
6									CAP, Headrest Adjuster, With Button
	WA46 1L5AA	1	J, T					XJ	[L5]
	WA46 1DVAA	1	J, T					XJ	[DV]
	WA46 1L5AA	1	J, U					XJ	[L5], Export
	WA46 1DVAA	1	J, U					XJ	[DV], Export
7									CAP, Headrest Adjuster, Without Button
	WA31 1DVAA	1	J, T					XJ	[DV]
	WA31 1L5AA	1	J, T					XJ	[L5]
	WA31 1DVAA	3	J, U					XJ	[DV], Export
	WA31 1L5AA	3	J, U					XJ	[L5], Export
8									SEAT BACK, Rear, 35%
	#YG89 1L5AA	1	J, T					XJ	[L5]
	#YG89 1DVAA	1	J, T					XJ	[DV]
	#YG89 1L5AA	1	J, U					XJ	[L5]
	#YG89 1DVAA	1	J, U					XJ	[DV]
9									BRACKET AND HINGE, Rear Seat Back, 35%
	5071 704AA	1	J, T					XJ	Left,Inboard
		1	J, U					XJ	Left,Inboard

JEEP LIBERTY (KJ)

SERIES	LINE	BODY	ENGINE	TRANSMISSION
P = Limited	J = LHD (4WD)	74 = 4 Dr. (104.3 WB)	ED1, ED0 = 2.4L Power Tech	DDK = 5 Speed HDManual
H = Sport	U = RHD (4WD)		EKG, EK0 = 3.7L Power Tech	DDD = 5 Speed HD Manual
M = Renegade	T = LHD (2WD)		ENJ = 2.5L 4Cyl Turbo Diesel	DG4,DGQ = Multi-Speed Auto
			ENR = 2.8L 4Cyl Turbo Diesel	DG6 = 4 Speed Auto Transm
			EN0 = 4Cyl Turbo Diesel	DG0 = All Automatic Transm
				DBB = All Manual Transm

AR = Use as required - = Non illustrated part # = New this model year **June 3, 2003**

« RETURN TO GROUP INDEX »

Rear Seat, Trim Code [XJ]
Figure IKJ-630

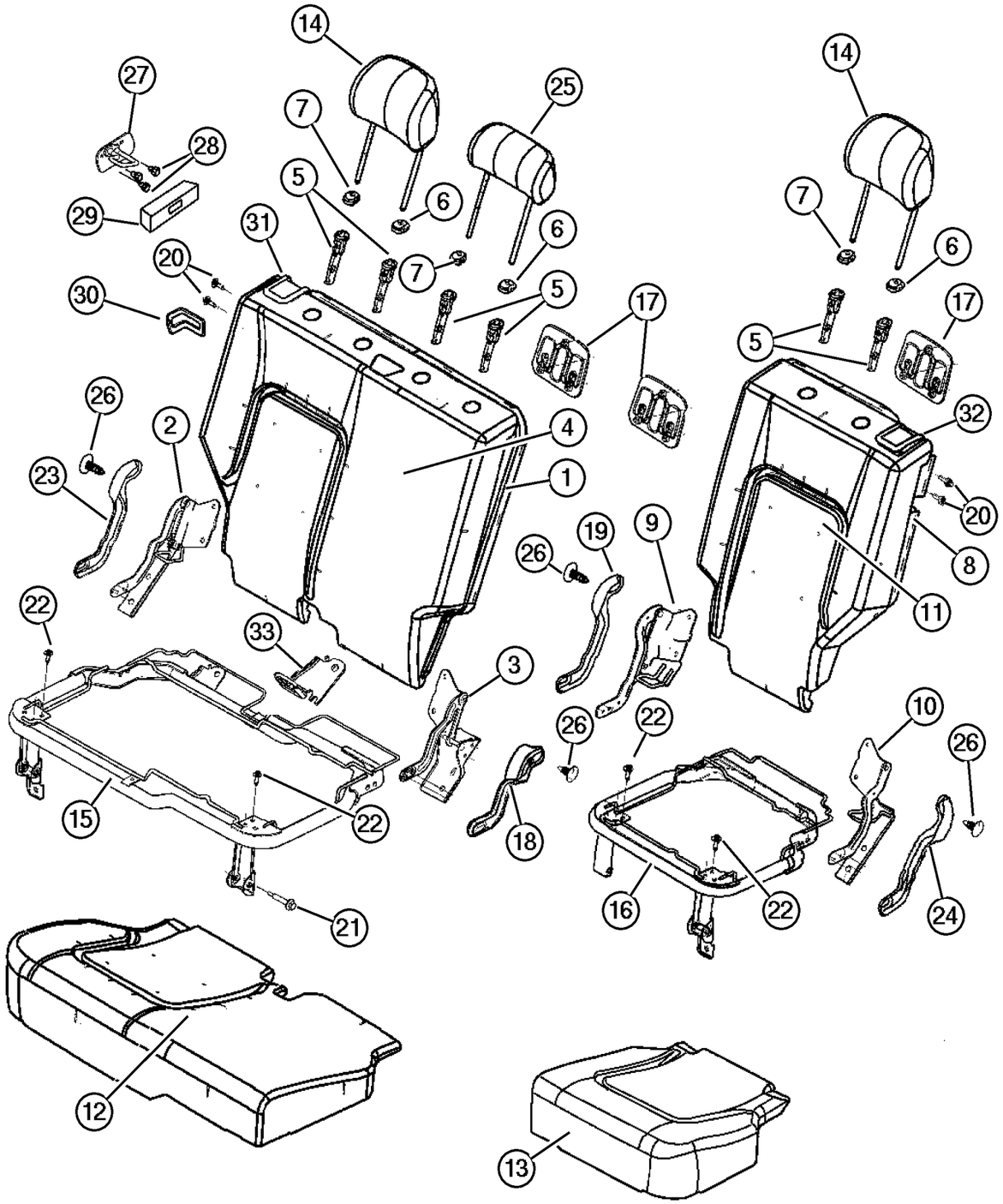

ITEM	PART NUMBER	QTY	LINE	SERIES	BODY	ENGINE	TRANS	TRIM	DESCRIPTION
10									BRACKET AND HINGE, Rear Seat Back, 35%
	5071 705AA	1	J, T					XJ	Left,Outboard
		1	J, U					XJ	Left,Outboard
11									COVER, Rear Seat Back, 35%
	#YG87 1L5AA	1	J, T					XJ	[L5]
	#YG87 1DVAA	1	J, T					XJ	[DV]
		1	J, U					XJ	[DV]
	#YG87 1L5AA	1	J, U					XJ	[L5]
12									COVER AND PAD, Cushion, 65%
	#YG52 1DVAA	1	J, T					XJ	[DV]
	#YG52 1L5AA	1	J, T					XJ	[L5]
	#YG52 1DVAA	1	J, U					XJ	[DV]
	#YG52 1L5AA	1	J, U					XJ	[L5]
13									COVER AND PAD, Cushion, 35%
	#YG53 1L5AA	1	J, T					XJ	[L5]
	#YG53 1DVAA	1	J, T					XJ	[DV]
		1	J, U					XJ	[DV]
	#YG53 1L5AA	1	J, U					XJ	[L5]
14									HEADREST, Rear
	XP75 1DVAA	2	J, T					XJ	[DV]
	XP75 1L5AA	2	J, T					XJ	[L5]
		2	J, U					XJ	[L5]
	XP75 1DVAA	2	J, U					XJ	[DV]
15									PANEL, Seat Cushion Base, 65%
	5072 112AA	1	J, T					XJ	
		1	J, U					XJ	
16									PANEL, Seat Cushion Base, 35%
	5072 113AA	1	J, T					XJ	
		1	J, U					XJ	
17									BEZEL, TETHER
	WB44 1L5AA	2	J, T					XJ	[L5]
	WB44 1DVAA	2	J, T					XJ	[DV]
		1	J, U					XJ	[DV]
	WB44 1L5AA	1	J, U					XJ	[L5]
18									COVER, Hinge, Right Inboard
	UZ45 1DVAA	1	J, T					XJ	[DV]
	UZ45 1L5AA	1	J, T					XJ	[L5]
	UZ45 WL5AA	1	J, U					XJ	[L5]
	UZ45 XDVAA	1	J, U					XJ	[DV]
19									COVER, Hinge, Left Inboard

JEEP LIBERTY (KJ)

SERIES	LINE	BODY	ENGINE	TRANSMISSION
P = Limited	J = LHD (4WD)	74 = 4 Dr. (104.3 WB)	ED1, ED0 = 2.4L Power Tech	DDK = 5 Speed HDManual
H = Sport	U = RHD (4WD)		EKG, EK0 = 3.7L Power Tech	DDD = 5 Speed HD Manual
M = Renegade	T = LHD (2WD)		ENJ = 2.5L 4Cyl Turbo Diesel	DG4,DGQ = Multi-Speed Auto
			ENR = 2.8L 4Cyl Turbo Diesel	DG6 = 4 Speed Auto Transm
			EN0 = 4Cyl Turbo Diesel	DG0 = All Automatic Transm
				DBB = All Manual Transm

AR = Use as required - = Non illustrated part # = New this model year

June 3, 2003

« RETURN TO GROUP INDEX

« »

Rear Seat, Trim Code [XJ]
Figure IKJ-630

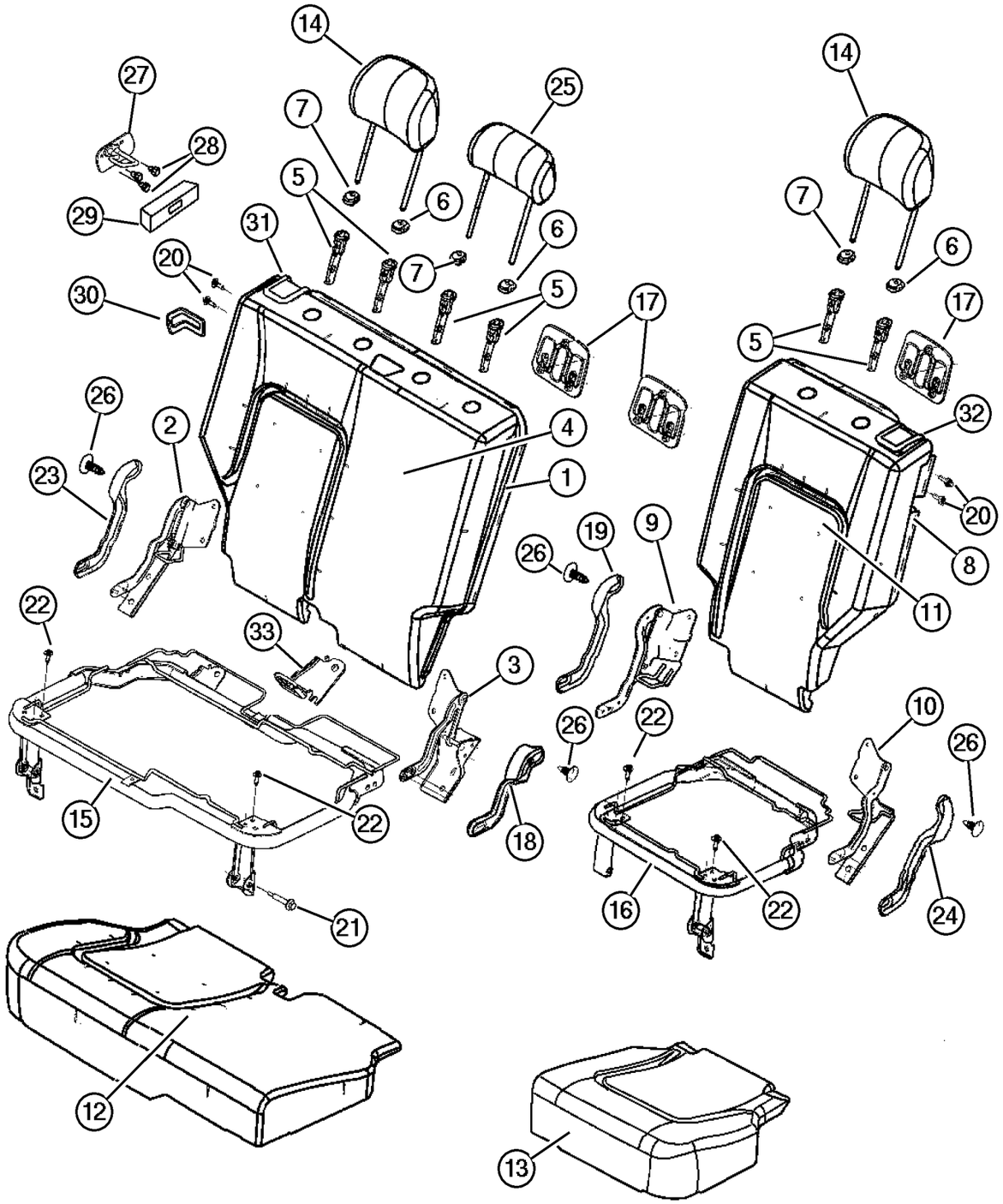

ITEM	PART NUMBER	QTY	LINE	SERIES	BODY	ENGINE	TRANS	TRIM	DESCRIPTION
	UZ46 XDVAA	1	J, T					XJ	[DV]
	UZ46 WL5AA	1	J, T					XJ	[L5]
	UZ46 XDVAA	1	J, U					XJ	[DV]
	UZ46 WL5AA	1	J, U					XJ	[L5]
20									BOLT, Pivot
	5072 520AA	2	J, T					XJ	
		2	J, U					XJ	
21									BOLT, Seat
	5072 519AA	1	J, T					XJ	
		1	J, U					XJ	
22									BOLT, Cushion To Adjuster
	4761 014	8	J, T					XJ	
		8	J, U					XJ	
23									COVER, Hinge, Right Outboard
	UZ44 WL5AA	1	J, T					XJ	[L5]
	UZ44 XDVAA	1	J, T					XJ	[DV]
		1	J, U					XJ	[DV]
	UZ44 WL5AA	1	J, U					XJ	[L5]
24									COVER, Hinge, Left Outboard
	UZ47 XDVAA	1	J, T					XJ	[DV]
	UZ47 WL5AA	1	J, T					XJ	[L5]
		1	J, U					XJ	[L5]
	UZ47 XDVAA	1	J, U					XJ	[DV]
25									HEADREST, Rear
	XP76 1DVAA	1	J, U					XJ	[DV], Export
	XP76 1L5AA	1	J, U					XJ	[L5], Export
26									PIN, Push
	WA51 WL5AA	2	J, T					XJ	[L5]
	WA51 XDVAA	2	J, T					XJ	[DV]
		2	J, U					XJ	[DV]
	WA51 WL5AA	2	J, U					XJ	[L5]
27									STRIKER, Seat Back Latch
	55352 816AB	1							Right
	55352 817AB	1							Left
28	6505 434AA	6							SCREW, M8-1.25
29	55352 839AC	2							BEZEL, Seat Latch
30									BEZEL, Seat Latch
	WA92 XDVAA	1	J, T					XJ	[DV]
	WA92 WL8AA	1	J, T					XJ	[L5]
	WA92 XDVAA	1	J, U					XJ	[DV]
	WA92 WL8AA	1	J, U					XJ	[L5]

JEEP LIBERTY (KJ)

SERIES	LINE	BODY	ENGINE	TRANSMISSION
P = Limited	J = LHD (4WD)	74 = 4 Dr. (104.3 WB)	ED1, ED0 = 2.4L Power Tech	DDK = 5 Speed HDManual
H = Sport	U = RHD (4WD)		EKG, EK0 = 3.7L Power Tech	DDD = 5 Speed HD Manual
M = Renegade	T = LHD (2WD)		ENJ = 2.5L 4Cyl Turbo Diesel	DG4,DGQ = Multi-Speed Auto
			ENR = 2.8L 4Cyl Turbo Diesel	DG6 = 4 Speed Auto Transm
			EN0 = 4Cyl Turbo Diesel	DG0 = All Automatic Transm
				DBB = All Manual Transm

AR = Use as required - = Non illustrated part # = New this model year

June 3, 2003

« RETURN TO GROUP INDEX

« »

Rear Seat, Trim Code [XJ]
Figure IKJ-630

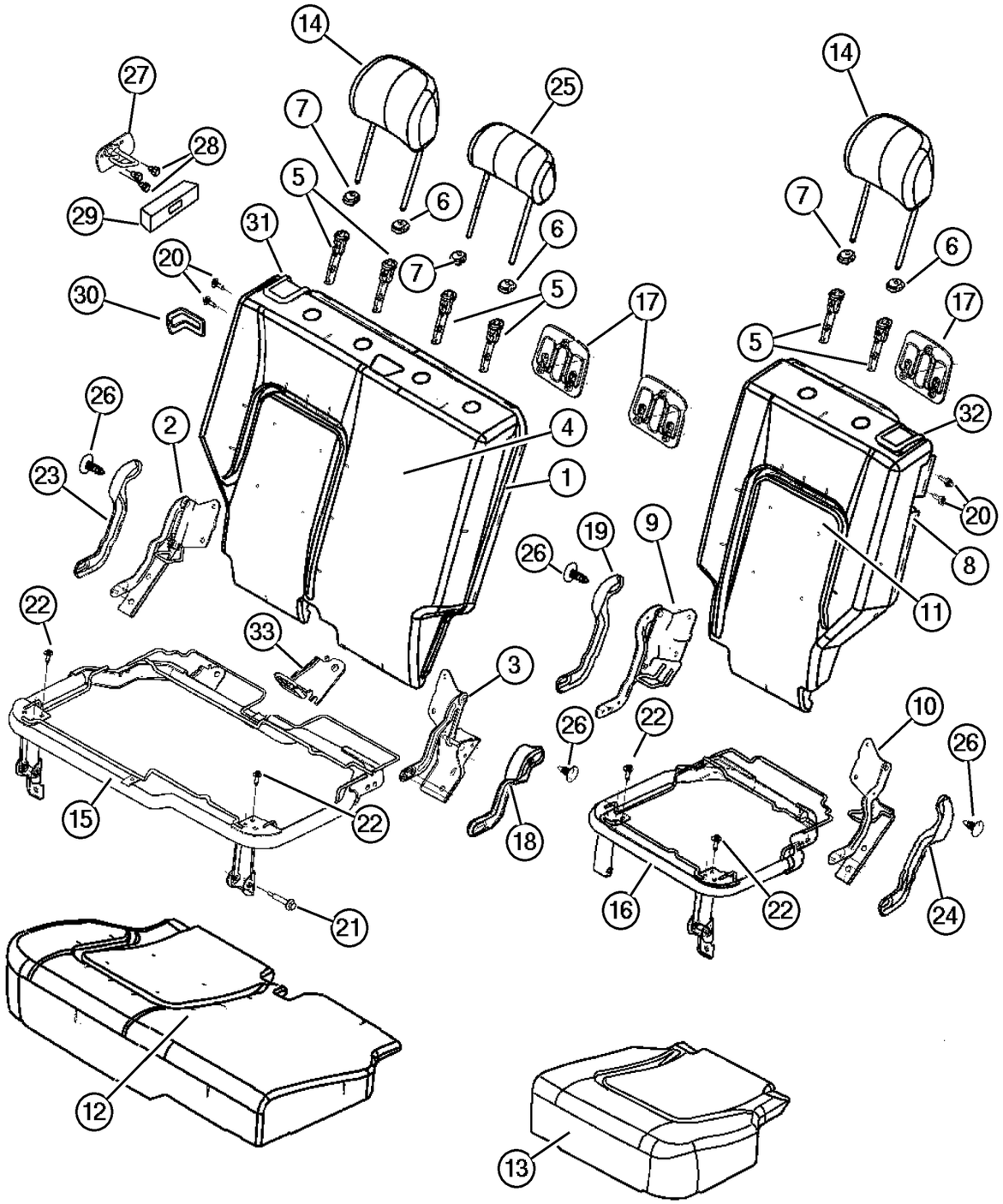

ITEM	PART NUMBER	QTY	LINE	SERIES	BODY	ENGINE	TRANS	TRIM	DESCRIPTION
31									CONTROL, SEAT RELEASE, With Cable and Latch
	XF78 1DVAA	1	J, T					XJ	[DV]
	XF78 1L5AA	1	J, T					XJ	[L5]
	XF78 1DVAA	1	J, U					XJ	[DV]
	XF78 1L5AA	1	J, U					XJ	[L5]
32									CONTROL, SEAT RELEASE, With Latch
	XF79 1DVAA	1	J, T					XJ	[DV]
	XF79 1L5AA	1	J, T					XJ	[L5]
		1	J, U					XJ	[L5]
	XF79 1DVAA	1	J, U					XJ	[DV]
33									BRACKET, Child Tether Anchor
	5134 366AA	1	J, T					XJ	
		1	J, U					XJ	

JEEP LIBERTY (KJ)

SERIES	LINE	BODY	ENGINE	TRANSMISSION
P = Limited	J = LHD (4WD)	74 = 4 Dr. (104.3 WB)	ED1, ED0 = 2.4L Power Tech	DDK = 5 Speed HDManual
H = Sport	U = RHD (4WD)		EKG, EK0 = 3.7L Power Tech	DDD = 5 Speed HD Manual
M = Renegade	T = LHD (2WD)		ENJ = 2.5L 4Cyl Turbo Diesel	DG4,DGQ = Multi-Speed Auto
			ENR = 2.8L 4Cyl Turbo Diesel	DG6 = 4 Speed Auto Transm
			EN0 = 4Cyl Turbo Diesel	DG0 = All Automatic Transm
				DBB = All Manual Transm

Rear Seat, Trim Code [E7]
Figure IKJ-640

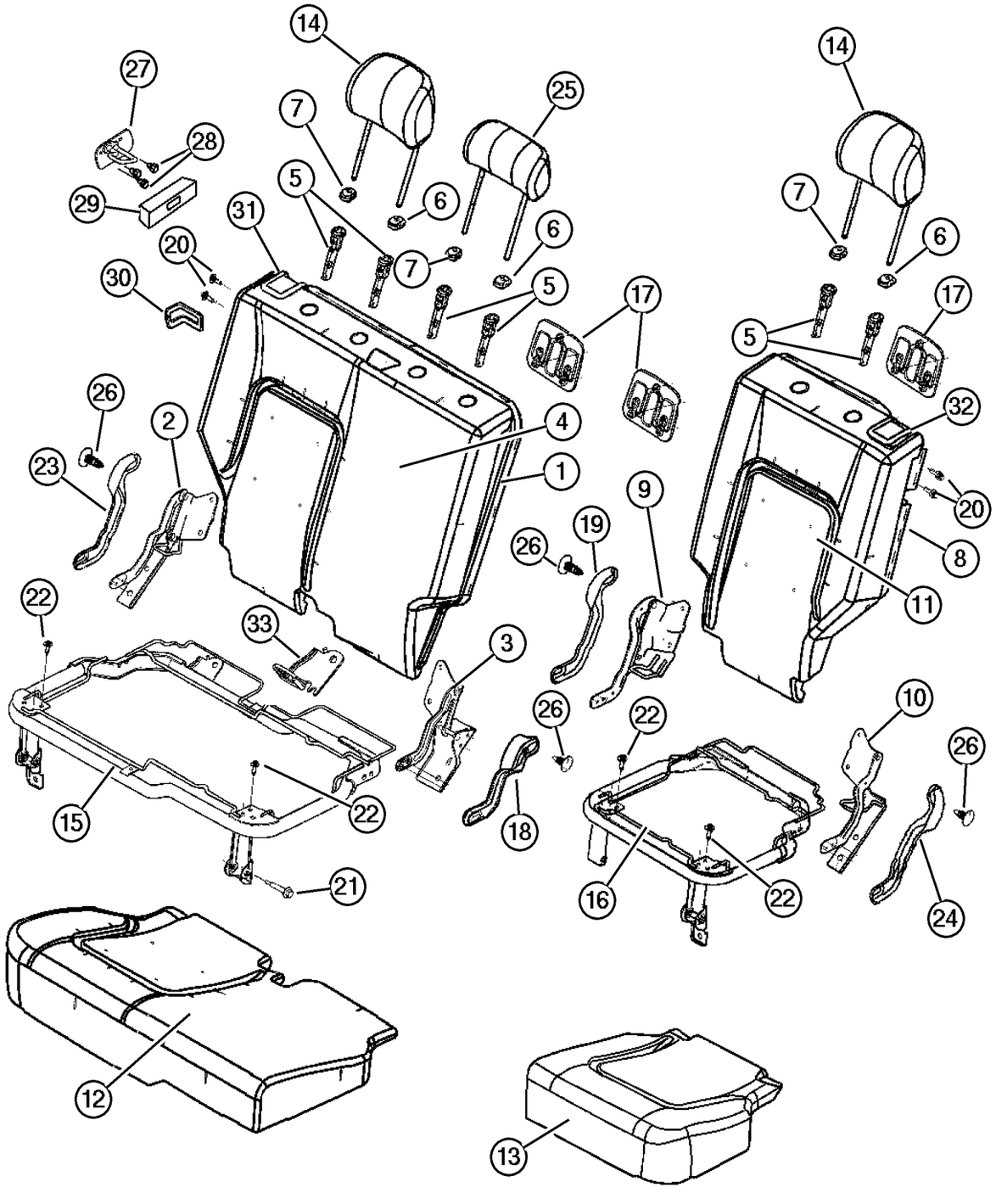

ITEM	PART NUMBER	QTY	LINE	SERIES	BODY	ENGINE	TRANS	TRIM	DESCRIPTION
1									SEAT BACK, Rear, 65%
	#YF84 1DVAA	1						E7	[DV]
	#YF84 1L5AA	1						E7	[L5]
2	5071 702AA	1						E7	BRACKET AND HINGE, Rear Seat Back, 65%, Right,Outboard
3	5071 703AA	1						E7	BRACKET AND HINGE, Rear Seat Back, 65%, Right,Inboard
4									COVER, Rear Seat Back, 65%
	#YF82 1DVAA	1						E7	[DV]
	#YF82 1L5AA	1						E7	[L5]
5	5066 017AA	6						E7	SLEEVE, Headrest
6									CAP, Headrest Adjuster, With Button
	WA46 1DVAA	1						E7	[DV]
	WA46 1L5AA	1						E7	[L5]
7									CAP, Headrest Adjuster, Without Button
	WA31 1DVAA	3						E7	[DV]
	WA31 1L5AA	3						E7	[L5]
8									SEAT BACK, Rear, 35%
	#YF81 1DVAA	1						E7	[DV]
	#YF81 1L5AA	1						E7	[L5]
9	5071 704AA	1						E7	BRACKET AND HINGE, Rear Seat Back, 35%, Left,Inboard
10	5071 705AA	1						E7	BRACKET AND HINGE, Rear Seat Back, 35%, Left,Outboard
11									COVER, Rear Seat Back, 35%
	#YF77 1DVAA	1						E7	[DV]
	#YF77 1L5AA	1						E7	[L5]
12									COVER AND PAD, Cushion, 65%
	#YF86 1DVAA	1						E7	[DV]
	#YF86 1L5AA	1						E7	[L5]
13									COVER AND PAD, Cushion, 35%
	#YF87 1DVAA	1						E7	[DV]
	#YF87 1L5AA	1						E7	[L5]
14									HEADREST, Rear
	#YF83 1DVAA	2						E7	[DV]
	#YF83 1L5AA	2						E7	[L5]
15	5072 112AA	1						E7	PANEL, Seat Cushion Base, 65%
16	5072 113AA	1						E7	PANEL, Seat Cushion Base, 35%
17									BEZEL, TETHER
	WB44 1DVAA	3						E7	[DV]

JEEP LIBERTY (KJ)

SERIES	LINE	BODY	ENGINE	TRANSMISSION
P = Limited	J = LHD (4WD)	74 = 4 Dr. (104.3 WB)	ED1, ED0 = 2.4L Power Tech	DDK = 5 Speed HDManual
H = Sport	U = RHD (4WD)		EKG, EK0 = 3.7L Power Tech	DDD = 5 Speed HD Manual
M = Renegade	T = LHD (2WD)		ENJ = 2.5L 4Cyl Turbo Diesel	DG4,DGQ = Multi-Speed Auto
			ENR = 2.8L 4Cyl Turbo Diesel	DG6 = 4 Speed Auto Transm
			EN0 = 4Cyl Turbo Diesel	DG0 = All Automatic Transm
				DBB = All Manual Transm

AR = Use as required - = Non illustrated part # = New this model year **June 3, 2003**

« RETURN TO GROUP INDEX »

Rear Seat, Trim Code [E7]
Figure IKJ-640

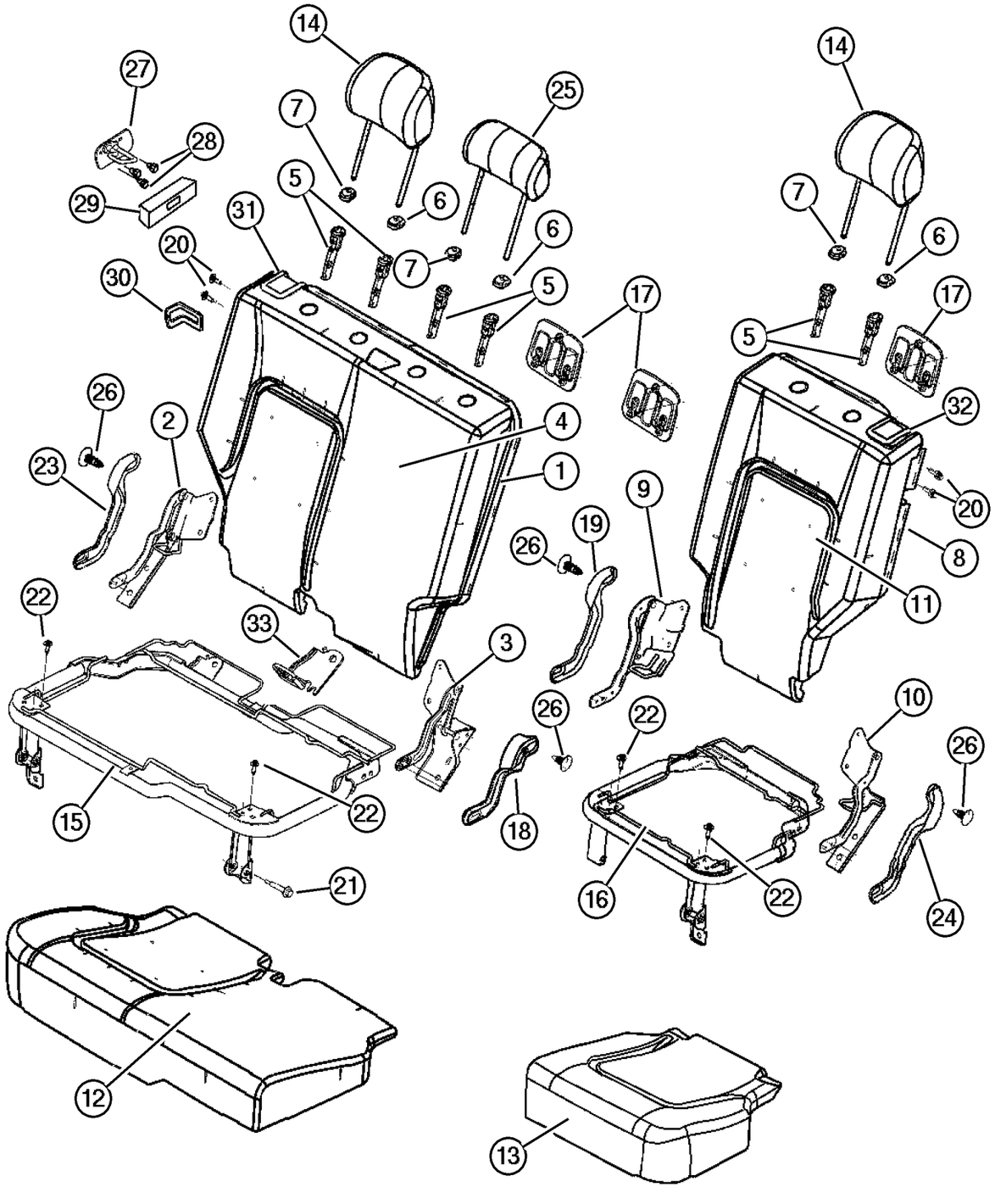

ITEM	PART NUMBER	QTY	LINE	SERIES	BODY	ENGINE	TRANS	TRIM	DESCRIPTION
	WB44 1L5AA	3						E7	[L5]
18									COVER, Hinge
	UZ45 WL5AA	1						E7	[L5]
	UZ45 XDVAA	1						E7	[DV]
19									COVER, Hinge
	UZ46 WL5AA	1						E7	[L5]
	UZ46 XDVAA	1						E7	[DV]
20	5072 520AA	2						E7	BOLT, Pivot
21	5072 519AA	1						E7	BOLT, Seat
22	4761 014	8						E7	BOLT, Cushion To Adjuster
23									COVER, Hinge
	UZ44 WL5AA	1						E7	[L5]
	UZ44 XDVAA	1						E7	[DV]
24									COVER, Hinge
	UZ47 WL5AA	1						E7	[L5]
	UZ47 XDVAA	1						E7	[DV]
25									HEADREST, Rear
	#YF78 1DVAA	1						E7	[DV]
	#YF78 1L5AA	1						E7	[L5]
26									PIN, Push
	WA51 WL5AA	32						E7	[L5]
	WA51 XDVAA	32						E7	[DV]
27									STRIKER, Seat Back Latch
	55352 816AB	1							Right
	55352 817AB	1							Left
28	6505 434AA	6							SCREW, M8-1.25
29	55352 839AC	2							BEZEL, Seat Latch
30									BEZEL, Seat Latch
	WA92 WL8AA	1						E7	[L5]
	WA92 XDVAA	1						E7	[DV]
31									CONTROL, SEAT RELEASE, With Cable and Latch
	XF78 1DVAA	1						E7	[DV], 65% Side
	XF78 1L5AA	1						E7	[L5], 65% Side
32									CONTROL, SEAT RELEASE, With Latch
	XF79 1DVAA	1						E7	[DV], 35% Side
	XF79 1L5AA	1						E7	[L5], 35% Side
33	5134 366AA	1						E7	BRACKET, Child Tether Anchor

JEEP LIBERTY (KJ)

SERIES	LINE	BODY	ENGINE	TRANSMISSION
P = Limited	J = LHD (4WD)	74 = 4 Dr. (104.3 WB)	ED1, ED0 = 2.4L Power Tech	DDK = 5 Speed HDManual
H = Sport	U = RHD (4WD)		EKG, EK0 = 3.7L Power Tech	DDD = 5 Speed HD Manual
M = Renegade	T = LHD (2WD)		ENJ = 2.5L 4Cyl Turbo Diesel	DG4,DGQ = Multi-Speed Auto
			ENR = 2.8L 4Cyl Turbo Diesel	DG6 = 4 Speed Auto Transm
			EN0 = 4Cyl Turbo Diesel	DG0 = All Automatic Transm
				DBB = All Manual Transm

AR = Use as required - = Non illustrated part # = New this model year

June 3, 2003

« RETURN TO GROUP INDEX

Rear Seat, Trim Code [L5]
Figure IKJ-650

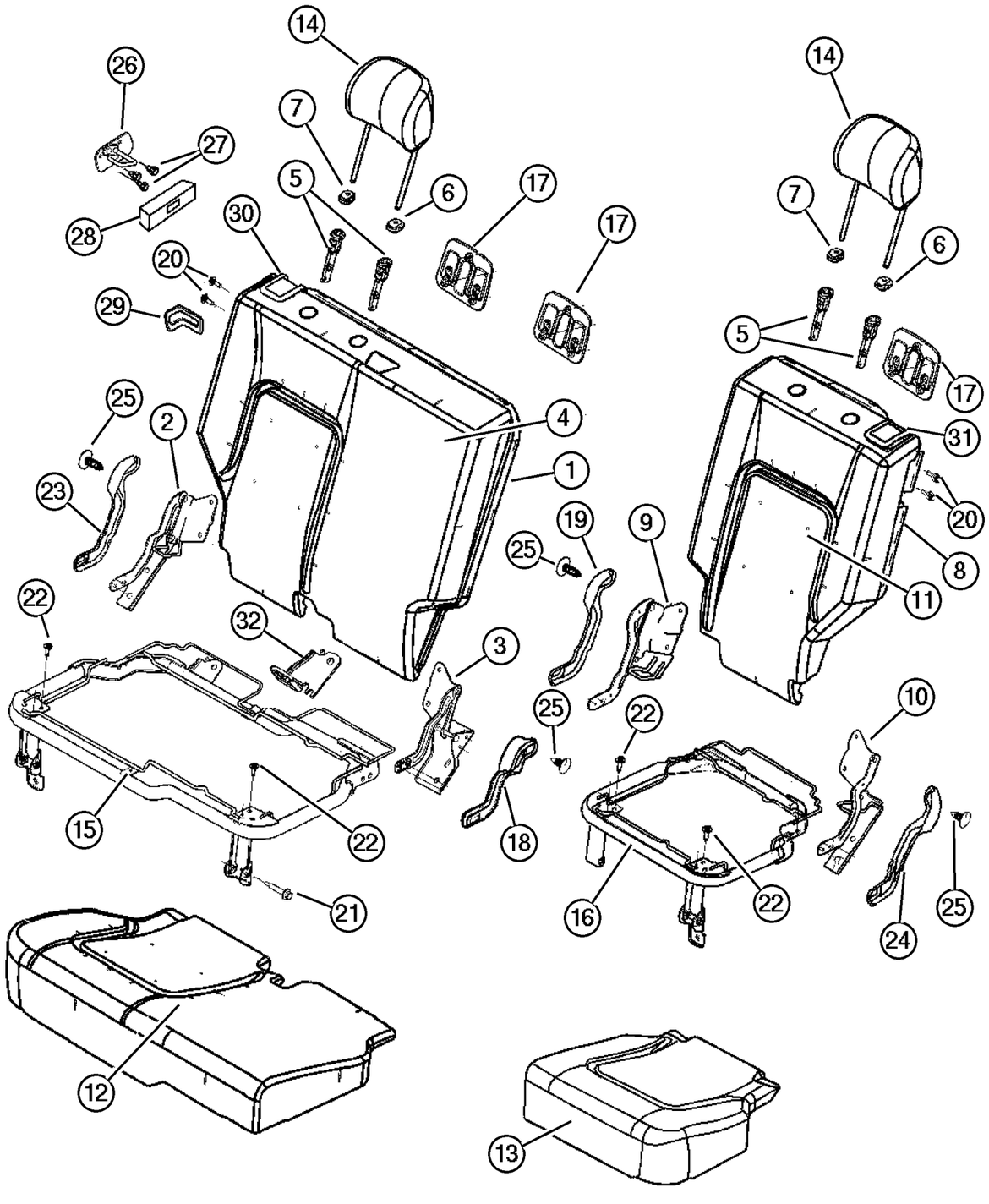

ITEM	PART NUMBER	QTY	LINE	SERIES	BODY	ENGINE	TRANS	TRIM	DESCRIPTION
1									SEAT BACK, Rear, 65%
	XG60 1DVAA	1						L5	[DV], Up to 3/3/03
	XG60 1L5AA	1						L5	[L5], Up to 3/3/03
	#ZP08 1DVAA	1	J, T					L5	[DV], After 3/3/03
	#ZP08 1L5AA	1	J, T					L5	[L5], After 3/3/03
2	5071 702AA	1						L5	BRACKET AND HINGE, Rear Seat Back, 65%, Right,Outboard
3	5071 703AA	1						L5	BRACKET AND HINGE, Rear Seat Back, 65%, Right,Inboard
4									COVER, Rear Seat Back, 65%
	XG58 1DVAA	1						L5	[DV], Up to 3/3/03
	XG58 1L5AA	1						L5	[L5], Up to 3/3/03
	#ZP06 1DVAA	1	J, T					L5	[DV], After 3/3/03
	#ZP06 1L5AA	1	J, T					L5	[L5], After 3/3/03
5	5066 017AA	2						L5	SLEEVE, Headrest
6									CAP, Headrest Adjuster, With Button
	WA46 1DVAA	1						L5	[DV]
	WA46 1L5AA	1						L5	[L5]
7									CAP, Headrest Adjuster, Without Button
	WA31 1DVAA	1						L5	[DV]
	WA31 1L5AA	1						L5	[L5]
8									SEAT BACK, Rear, 35%
	XG61 1L5AA	1						L5	[L5], Up to 3/3/03
	XG61 1DVAA	1						L5	[DV], Up to 3/3/03
	#ZP09 1DVAA	1	J, T					L5	[DV], After 3/3/03
	#ZP09 1L5AA	1	J, T					L5	[L5], After 3/3/03
9	5071 704AA	1						L5	BRACKET AND HINGE, Rear Seat Back, 35%, Left,Inboard
10	5071 705AA	1						L5	BRACKET AND HINGE, Rear Seat Back, 35%, Left,Outboard
11									COVER, Rear Seat Back, 35%
	XG58 1DVAA	1						L5	[DV], Up to 3/3/03
	XG59 1L5AA	1						L5	[L5], Up to 3/3/03
	#ZP07 1DVAA	1	J, T					L5	[DV], After 3/3/03
	#ZP07 1L5AA	1	J, T					L5	[L5], After 3/3/03
12									COVER AND PAD, Cushion, 65%
	XG54 1DVAA	1						L5	[DV], Up to 3/3/03
	XG54 1L5AA	1						L5	[L5], Up to 3/3/03
	#ZP04 1DVAA	1	J, T					L5	[DV], After 3/3/03
	#ZP04 1L5AA	1	J, T					L5	[L5], After 3/3/03
13									COVER AND PAD, Cushion, 35%

JEEP LIBERTY (KJ)

SERIES	LINE	BODY	ENGINE	TRANSMISSION
P = Limited	J = LHD (4WD)	74 = 4 Dr. (104.3 WB)	ED1, ED0 = 2.4L Power Tech	DDK = 5 Speed HDManual
H = Sport	U = RHD (4WD)		EKG, EK0 = 3.7L Power Tech	DDD = 5 Speed HD Manual
M = Renegade	T = LHD (2WD)		ENJ = 2.5L 4Cyl Turbo Diesel	DG4,DGQ = Multi-Speed Auto
			ENR = 2.8L 4Cyl Turbo Diesel	DG6 = 4 Speed Auto Transm
			EN0 = 4Cyl Turbo Diesel	DG0 = All Automatic Transm
				DBB = All Manual Transm

AR = Use as required - = Non illustrated part # = New this model year

June 3, 2003

« RETURN TO GROUP INDEX »

Rear Seat, Trim Code [L5]
Figure IKJ-650

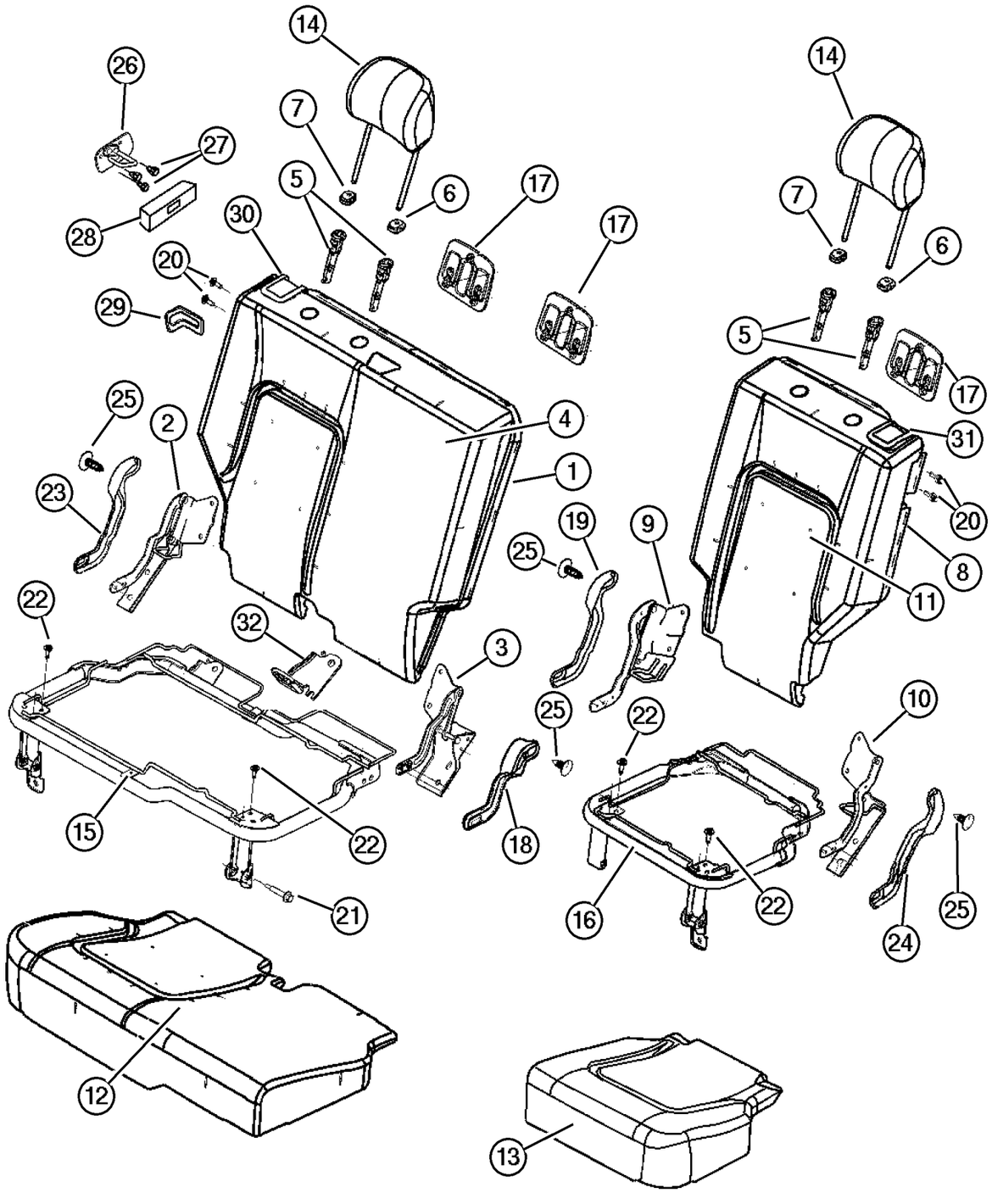

ITEM	PART NUMBER	QTY	LINE	SERIES	BODY	ENGINE	TRANS	TRIM	DESCRIPTION
	XG55 1DVAA	1						L5	[DV], Up to 3/3/03
	XG55 1L5AA	1						L5	[L5], Up to 3/3/03
	#ZP05 1DVAA	1	J, T					L5	[DV], After 3/3/03
	#ZP05 1L5AA	1	J, T					L5	[L5], After 3/3/03
14									HEADREST, Rear
	XG56 1L5AA	2						L5	[L5]
	XG56 1DVAA	2						L5	[DV]
15	5072 112AA	1						L5	PANEL, Seat Cushion Base, 65%
16	5072 113AA	1						L5	PANEL, Seat Cushion Base, 35%
17									BEZEL, TETHER
	WB44 1L5AA	2						L5	[L5]
	WB44 1DVAA	2						L5	[DV]
18									COVER, Hinge
	UZ45 WL5AA	1						L5	[L5]
	UZ45 XDVAA	1						L5	[DV]
19									COVER, Hinge
	UZ46 XDVAA	1						L5	[DV]
	UZ46 WL5AA	1						L5	[L5]
20	5072 520AA	2						L5	BOLT, Pivot
21	5072 519AA	1						L5	BOLT, Seat
22	4761 014	8						L5	BOLT, Cushion To Adjuster
23									COVER, Hinge
	UZ44 WL5AA	1						L5	[L5]
	UZ44 XDVAA	1						L5	[DV]
24									COVER, Hinge
	UZ47 XDVAA	1						L5	[DV]
	UZ47 WL5AA	1						L5	[L5]
25									PIN, Push
	WA51 XDVAA	32						L5	[DV]
	WA51 WL5AA	32						L5	[L5]
26									STRIKER, Seat Back Latch
	55352 816AB	1							Right
	55352 817AB	1							Left
27	6505 434AA	6							SCREW, M8-1.25
28	55352 839AC	2							BEZEL, Seat Latch
29									BEZEL, Seat Latch
	WA92 XDVAA	1						L5	[DV]
	WA92 WL8AA	1						L5	[L5]
30									CONTROL, SEAT RELEASE, With Cable and Latch
	XF78 1L5AA	1						L5	[L5]

JEEP LIBERTY (KJ)

SERIES	LINE	BODY	ENGINE	TRANSMISSION
P = Limited	J = LHD (4WD)	74 = 4 Dr. (104.3 WB)	ED1, ED0 = 2.4L Power Tech	DDK = 5 Speed HDManual
H = Sport	U = RHD (4WD)		EKG, EK0 = 3.7L Power Tech	DDD = 5 Speed HD Manual
M = Renegade	T = LHD (2WD)		ENJ = 2.5L 4Cyl Turbo Diesel	DG4,DGQ = Multi-Speed Auto
			ENR = 2.8L 4Cyl Turbo Diesel	DG6 = 4 Speed Auto Transm
			EN0 = 4Cyl Turbo Diesel	DG0 = All Automatic Transm
				DBB = All Manual Transm

AR = Use as required - = Non illustrated part # = New this model year

June 3, 2003

« RETURN TO GROUP INDEX

Rear Seat, Trim Code [L5]
Figure IKJ-650

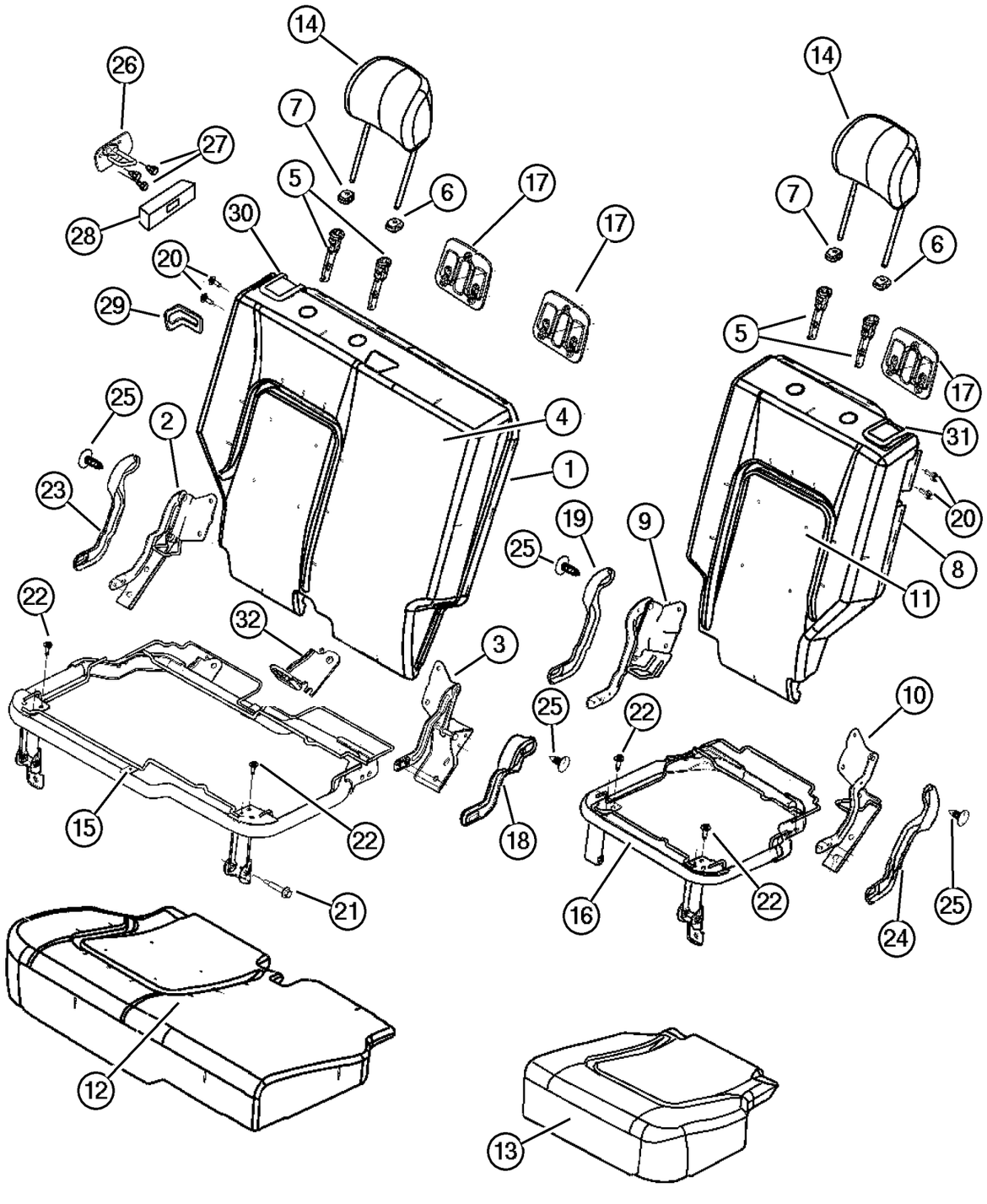

ITEM	PART NUMBER	QTY	LINE	SERIES	BODY	ENGINE	TRANS	TRIM	DESCRIPTION
	XF78 1DVAA	1						L5	[DV]
31									CONTROL, SEAT RELEASE, With Latch
	XF79 1L5AA	1						L5	[L5]
	XF79 1DVAA	1						L5	[DV]
32	5134 366AA	1						L5	BRACKET, Child Tether Anchor

JEEP LIBERTY (KJ)

SERIES	LINE	BODY	ENGINE	TRANSMISSION
P = Limited	J = LHD (4WD)	74 = 4 Dr. (104.3 WB)	ED1, ED0 = 2.4L Power Tech	DDK = 5 Speed HDManual
H = Sport	U = RHD (4WD)		EKG, EK0 = 3.7L Power Tech	DDD = 5 Speed HD Manual
M = Renegade	T = LHD (2WD)		ENJ = 2.5L 4Cyl Turbo Diesel	DG4,DGQ = Multi-Speed Auto
			ENR = 2.8L 4Cyl Turbo Diesel	DG6 = 4 Speed Auto Transm
			EN0 = 4Cyl Turbo Diesel	DG0 = All Automatic Transm
				DBB = All Manual Transm

AR = Use as required - = Non illustrated part # = New this model year

June 3, 2003

« RETURN TO GROUP INDEX

Rear Seat, Trim Code [K7]
Figure IKJ-660

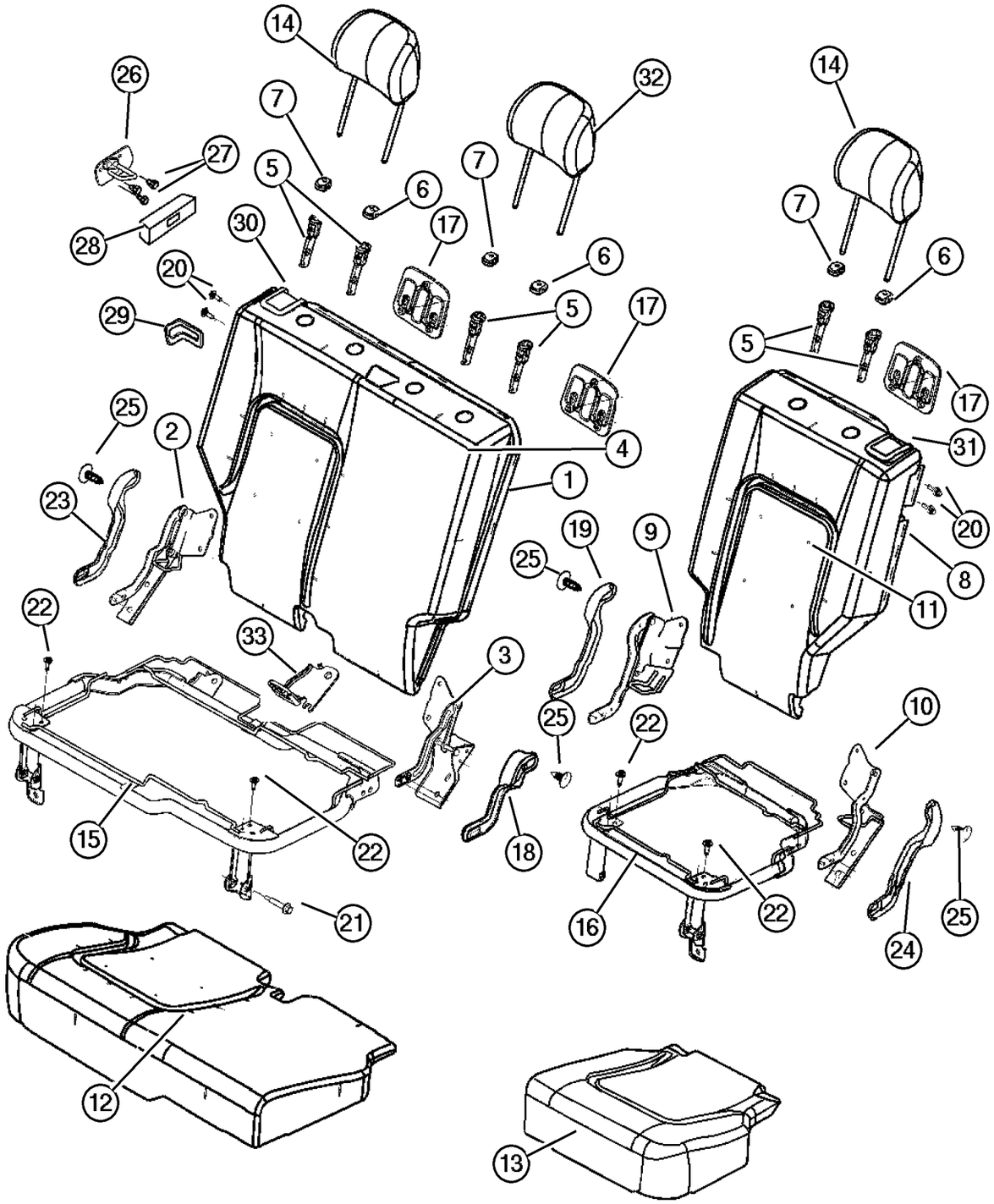

ITEM	PART NUMBER	QTY	LINE	SERIES	BODY	ENGINE	TRANS	TRIM	DESCRIPTION
1									SEAT BACK, Rear, 65%
	#XH24 1L5AA	1						K7	[L5], Up to 3/3/03
	#XH24 1DVAA	1						K7	[DV], Up to 3/3/03
	#ZP16 1DVAA	1	J, U					K7	[DV], After 3/3/03
	#ZP16 1L5AA	1	J, U					K7	[L5], After 3/3/03
2	5071 702AA	1						K7	BRACKET AND HINGE, Rear Seat Back, 65%, Right,Outboard
3	5071 703AA	1						K7	BRACKET AND HINGE, Rear Seat Back, 65%, Right,Inboard
4									COVER, Rear Seat Back, 65%
	#XH26 1L5AA	1						K7	[L5], Up to 3/3/03
	#XH26 1DVAA	1						K7	[DV], Up to 3/3/03
	#ZP14 1DVAA	1	J, U					K7	[DV], After 3/3/03
	#ZP14 1L5AA	1	J, U					K7	[L5], After 3/3/03
5	5066 017AA	2						K7	SLEEVE, Headrest
6									CAP, Headrest Adjuster, With Button
	WA46 1L5AA	1						K7	[L5]
	WA46 1DVAA	1						K7	[DV]
7									CAP, Headrest Adjuster, Without Button
	WA31 1DVAA	3						K7	[DV]
	WA31 1L5AA	3						K7	[L5]
8									SEAT BACK, Rear, 35%
	XG61 1DVAA	1						K7	[DV], Up to 3/3/03
	XG61 1L5AA	1						K7	[L5], Up to 3/3/03
	#ZP09 1DVAA	1	J, U					K7	[DV], After 3/3/03
	#ZP09 1L5AA	1	J, U					K7	[L5], After 3/3/03
9	5071 704AA	1						K7	BRACKET AND HINGE, Rear Seat Back, 35%, Left,Inboard
10	5071 705AA	1						K7	BRACKET AND HINGE, Rear Seat Back, 35%, Left,Outboard
11									COVER, Rear Seat Back, 35%
	XG59 1DVAA	1						K7	[DV], Up to 3/3/03
	XG59 1L5AA	1						K7	[L5], Up to 3/3/03
	#ZP07 1DVAA	1	J, U					K7	[DV], After 3/3/03
	#ZP07 1L5AA	1	J, U					K7	[L5], After 3/3/03
12									COVER AND PAD, Cushion, 65%
	XG54 1L5AA	1						K7	[L5], Up to 3/3/03
	XG54 1DVAA	1						K7	[DV], Up to 3/3/03
	#ZP04 1DVAA	1	J, U					K7	[DV], After 3/3/03
	#ZP04 1L5AA	1	J, U					K7	[L5], After 3/3/03
13									COVER AND PAD, Cushion, 35%

JEEP LIBERTY (KJ)

SERIES	LINE	BODY	ENGINE	TRANSMISSION
P = Limited	J = LHD (4WD)	74 = 4 Dr. (104.3 WB)	ED1, ED0 = 2.4L Power Tech	DDK = 5 Speed HDManual
H = Sport	U = RHD (4WD)		EKG, EK0 = 3.7L Power Tech	DDD = 5 Speed HD Manual
M = Renegade	T = LHD (2WD)		ENJ = 2.5L 4Cyl Turbo Diesel	DG4,DGQ = Multi-Speed Auto
			ENR = 2.8L 4Cyl Turbo Diesel	DG6 = 4 Speed Auto Transm
			EN0 = 4Cyl Turbo Diesel	DG0 = All Automatic Transm
				DBB = All Manual Transm

AR = Use as required - = Non illustrated part # = New this model year **June 3, 2003**

« RETURN TO GROUP INDEX »

Rear Seat, Trim Code [K7]
Figure IKJ-660

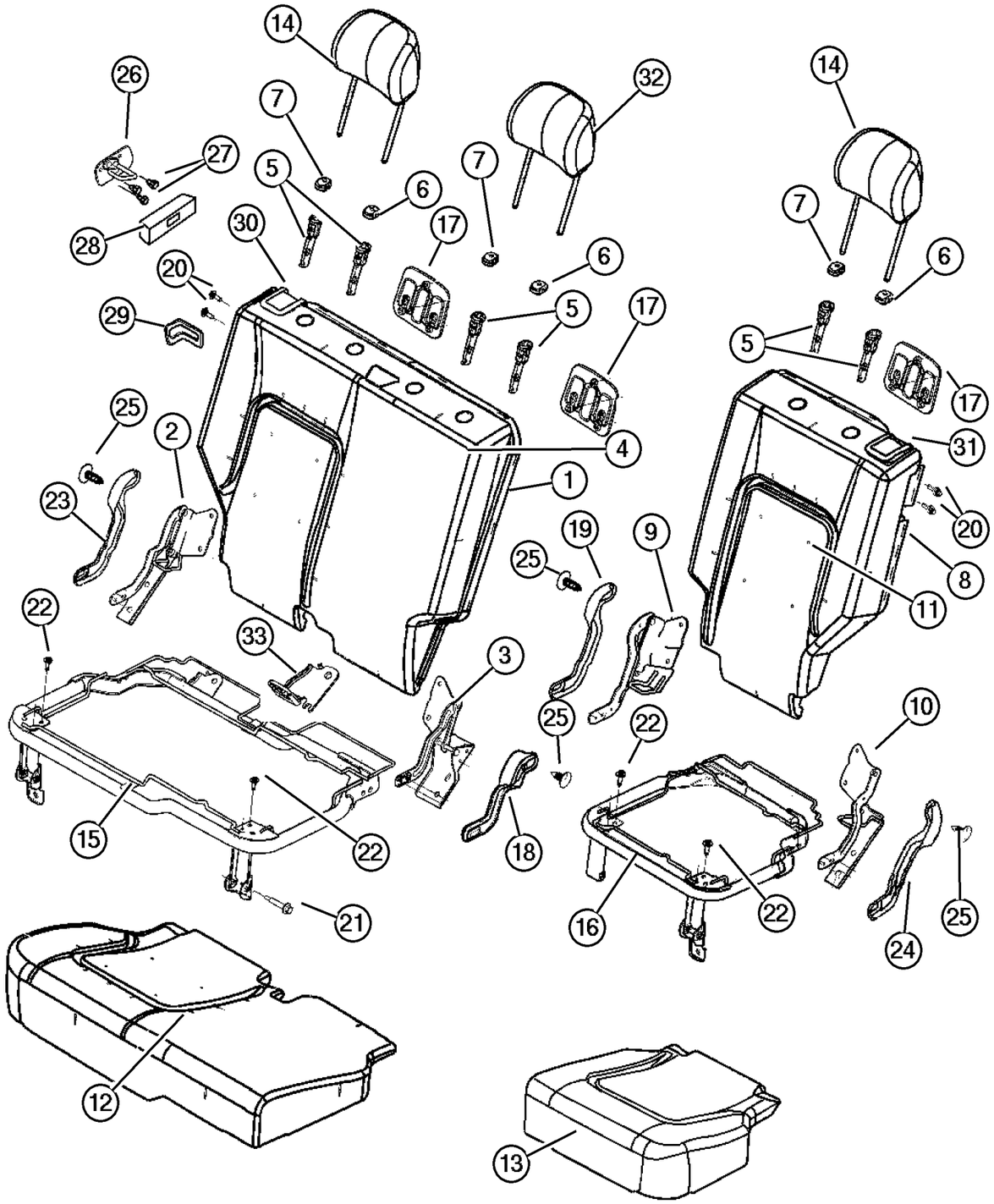

ITEM	PART NUMBER	QTY	LINE	SERIES	BODY	ENGINE	TRANS	TRIM	DESCRIPTION
	XG55 1DVAA	1						K7	[DV], Up to 3/3/03
	XG55 1L5AA	1						K7	[L5], Up to 3/3/03
	#ZP05 1DVAA	1	J, U					K7	[DV], After 3/3/03
	#ZP05 1L5AA	1	J, U					K7	[L5], After 3/3/03
14									HEADREST, Rear
	XG56 1DVAA	2						K7	[DV], After 3/3/03
	XG56 1L5AA	2						K7	[L5]
15	5072 112AA	1						K7	PANEL, Seat Cushion Base, 65%
16	5072 113AA	1						K7	PANEL, Seat Cushion Base, 35%
17									BEZEL, TETHER
	WB44 1L5AA	1						K7	[L5]
	WB44 1DVAA	1						K7	[DV]
18									COVER, Hinge
	UZ45 WL5AA	1						K7	[L5]
	UZ45 XDVAA	1						K7	[DV]
19									COVER, Hinge
	UZ46 XDVAA	1						K7	[DV]
	UZ46 WL5AA	1						K7	[L5]
20	5072 520AA	2						K7	BOLT, Pivot
21	5072 519AA	1						K7	BOLT, Seat
22	4761 014	8						K7	BOLT, Cushion To Adjuster
23									COVER, Hinge
	UZ44 WL5AA	1						K7	[L5]
	UZ44 XDVAA	1						K7	[DV]
24									COVER, Hinge
	UZ47 XDVAA	1						K7	[DV]
	UZ47 WL5AA	1						K7	[L5]
25									PIN, Push
	WA51 XDVAA	32						K7	[DV]
	WA51 WL5AA	32						K7	[L5]
26									STRIKER, Seat Back Latch
	55352 816AB	1							Right
	55352 817AB	1							Left
27	6505 434AA	6							SCREW, M8-1.25
28	55352 839AC	2							BEZEL, Seat Latch
29									BEZEL, Seat Latch
	WA92 WL8AA	1						K7	[L5]
	WA92 XDVAA	1						K7	[DV]
30									CONTROL, SEAT RELEASE, With Cable and Latch
	XF78 1DVAA	1						K7	[DV], 65% Side

JEEP LIBERTY (KJ)

SERIES	LINE	BODY	ENGINE	TRANSMISSION
P = Limited	J = LHD (4WD)	74 = 4 Dr. (104.3 WB)	ED1, ED0 = 2.4L Power Tech	DDK = 5 Speed HDManual
H = Sport	U = RHD (4WD)		EKG, EK0 = 3.7L Power Tech	DDD = 5 Speed HD Manual
M = Renegade	T = LHD (2WD)		ENJ = 2.5L 4Cyl Turbo Diesel	DG4,DGQ = Multi-Speed Auto
			ENR = 2.8L 4Cyl Turbo Diesel	DG6 = 4 Speed Auto Transm
			EN0 = 4Cyl Turbo Diesel	DG0 = All Automatic Transm
				DBB = All Manual Transm

AR = Use as required - = Non illustrated part # = New this model year

June 3, 2003

« RETURN TO GROUP INDEX

« »

Rear Seat, Trim Code [K7]
Figure IKJ-660

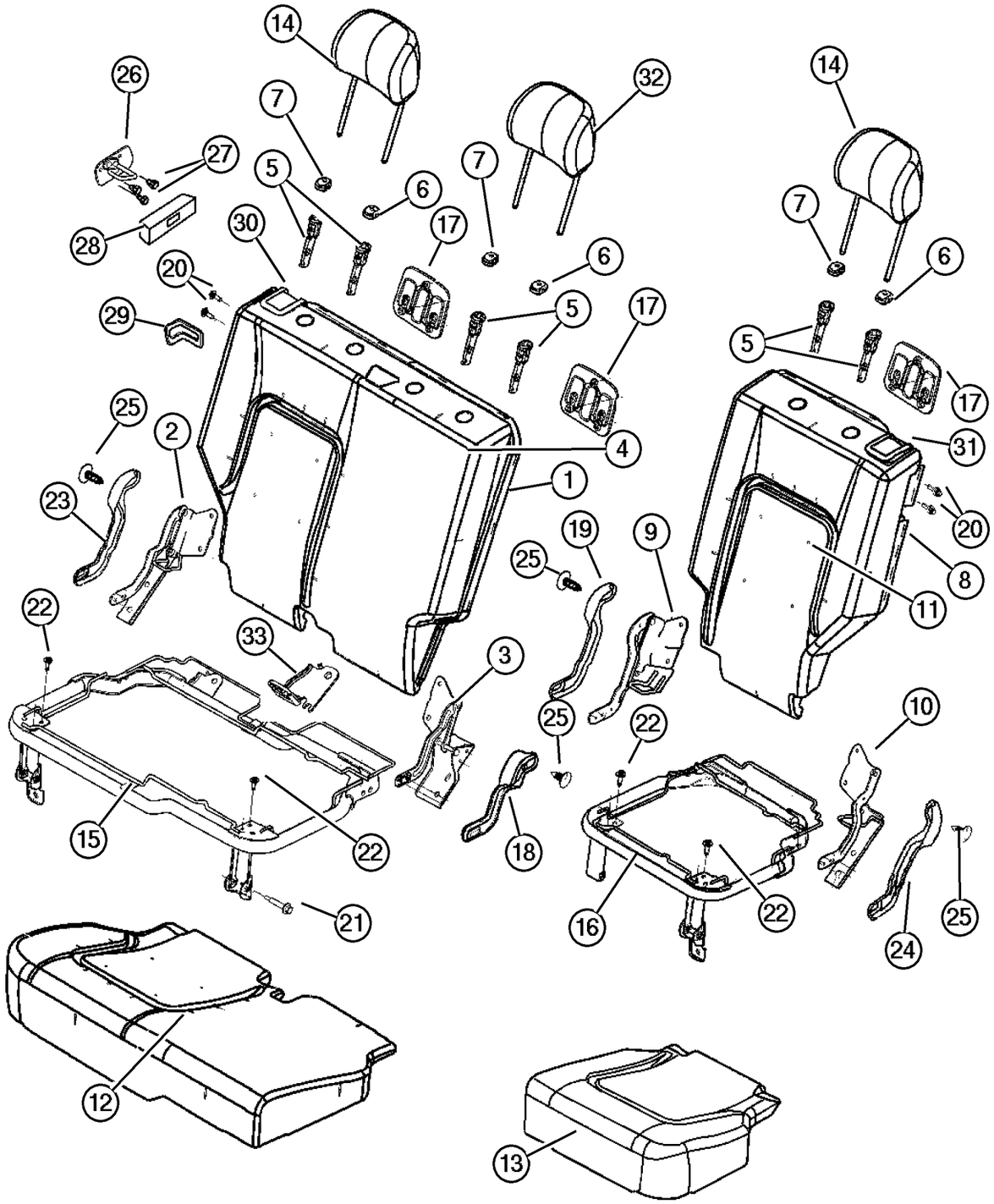

ITEM	PART NUMBER	QTY	LINE	SERIES	BODY	ENGINE	TRANS	TRIM	DESCRIPTION
	XF78 1L5AA	1						K7	[L5], 65% Side
31									CONTROL, SEAT RELEASE, With Latch
	XF79 1DVAA	1						K7	[DV], 35% Side
	XF79 1L5AA	1						K7	[L5], 35% Side
32									HEADREST, Rear, Center
	#XH20 1DVAA	1						K7	[DV]
	#XH20 1L5AA	1						K7	[L5]
33	5134 366AA	1						K7	BRACKET, Child Tether Anchor

JEEP LIBERTY (KJ)

SERIES	LINE	BODY	ENGINE	TRANSMISSION
P = Limited	J = LHD (4WD)	74 = 4 Dr. (104.3 WB)	ED1, ED0 = 2.4L Power Tech	DDK = 5 Speed HDManual
H = Sport	U = RHD (4WD)		EKG, EK0 = 3.7L Power Tech	DDD = 5 Speed HD Manual
M = Renegade	T = LHD (2WD)		ENJ = 2.5L 4Cyl Turbo Diesel	DG4,DGQ = Multi-Speed Auto
			ENR = 2.8L 4Cyl Turbo Diesel	DG6 = 4 Speed Auto Transm
			EN0 = 4Cyl Turbo Diesel	DG0 = All Automatic Transm
				DBB = All Manual Transm

AR = Use as required - = Non illustrated part # = New this model year

June 3, 2003

« RETURN TO GROUP INDEX

Rear Seat, Trim Code [H5]
Figure IKJ-670

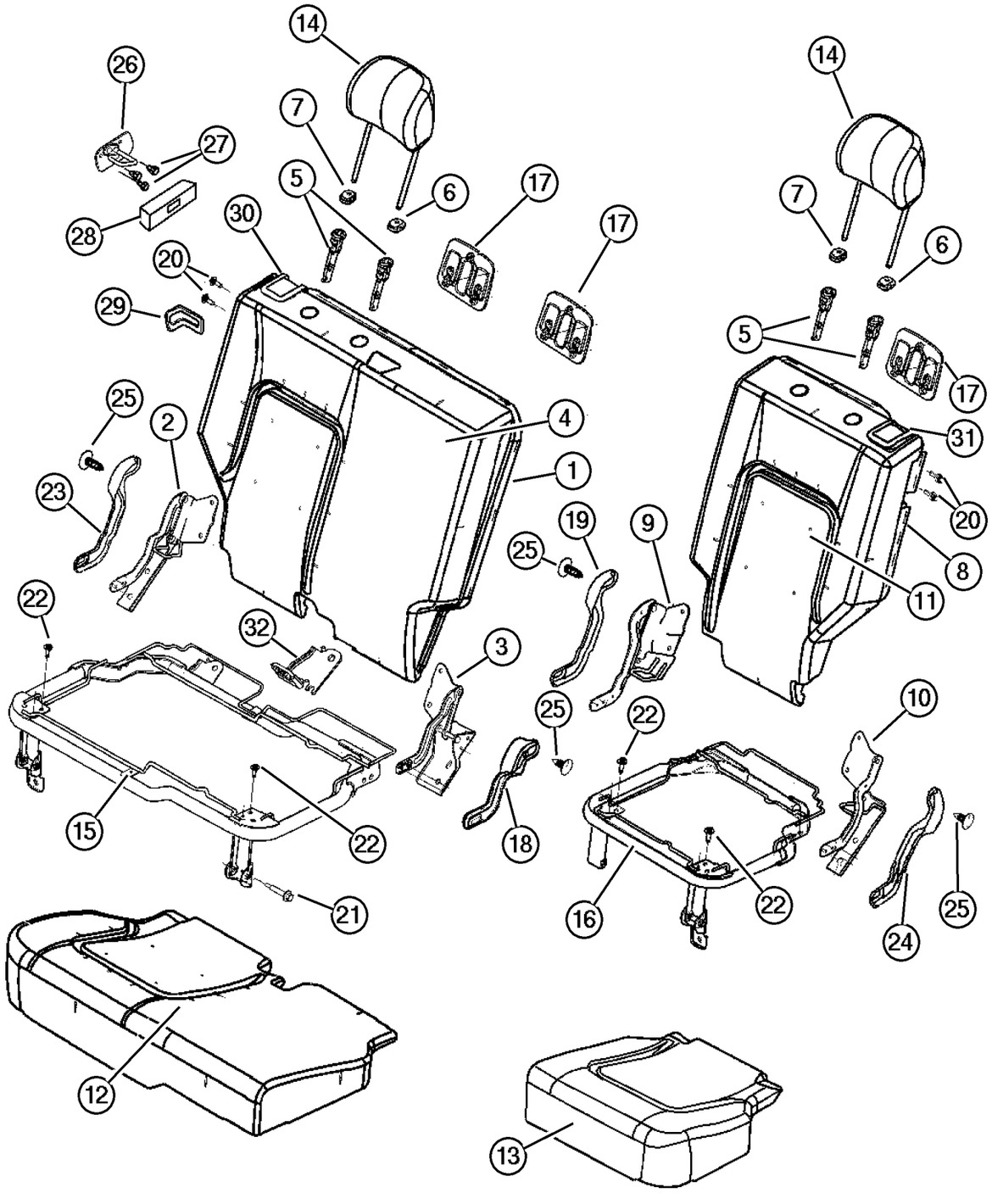

ITEM	PART NUMBER	QTY	LINE	SERIES	BODY	ENGINE	TRANS	TRIM	DESCRIPTION
1	#YX82 1L2AA	1	J, T					H5	SEAT BACK, Rear, 65%
2	5071 702AA	1	J, T					H5	BRACKET AND HINGE, Rear Seat Back, 65%, Right,Outboard
3	5071 703AA	1	J, T					H5	BRACKET AND HINGE, Rear Seat Back, 65%, Right,Inboard
4	#YX84 1L2AA	1	J, T					H5	COVER, Rear Seat Back, 65%
5	5066 017AA	2	J, T					H5	SLEEVE, Headrest
6	WA46 1DVAA	2	J, T					H5	CAP, Headrest Adjuster, With Button
7	WA31 1DVAA	2	J, T					H5	CAP, Headrest Adjuster, Without Button
8	#YX83 1L2AA	1	J, T					H5	SEAT BACK, Rear, 35%
9	5071 704AA	1	J, T					H5	BRACKET AND HINGE, Rear Seat Back, 35%, Left,Inboard
10	5071 705AA	1	J, T					H5	BRACKET AND HINGE, Rear Seat Back, 35%, Left,Outboard
11	#YX85 1L2AA	1	J, T					H5	COVER, Rear Seat Back, 35%
12	#YX80 1L2AA	1	J, T					H5	COVER AND PAD, Cushion, 65%
13	#YX81 1L2AA	1	J, T					H5	COVER AND PAD, Cushion, 35%
14	XG56 1DVAA	2	J, T					H5	HEADREST, Rear
15	5072 112AA	1	J, T					H5	PANEL, Seat Cushion Base, 65%
16	5072 113AA	1	J, T					H5	PANEL, Seat Cushion Base, 35%
17	WB44 1L2AA	1	J, T					H5	BEZEL, TETHER
18	UZ45 XDVAA	1	J, T					H5	COVER, Hinge
19	UZ46 XDVAA	1	J, T					H5	COVER, Hinge
20	5072 520AA	2	J, T					H5	BOLT, Pivot
21	5072 519AA	1	J, T					H5	BOLT, Seat
22	4761 014	8	J, T					H5	BOLT, Cushion To Adjuster
23	UZ44 XDVAA	1	J, T					H5	COVER, Hinge
24	UZ47 XDVAA	1	J, T					H5	COVER, Hinge
25	WA51 XDVAA	32	J, T					H5	PIN, Push
26									STRIKER, Seat Back Latch
	55352 816AB	1							Right
	55352 817AB	1							Left
27	6505 434AA	6							SCREW, M8-1.25
28	55352 839AC	2							BEZEL, Seat Latch
29	WA92 XDVAA	2	J, T					H5	BEZEL, Seat Latch
30	XF78 1DVAB	1	J, T					H5	CONTROL, SEAT RELEASE, With Cable and Latch
31	XF79 1DVAB	1	J, T					H5	CONTROL, SEAT RELEASE, With Latch
32	5134 366AA	1	J, T					H5	BRACKET, Child Tether Anchor

JEEP LIBERTY (KJ)

SERIES	LINE	BODY	ENGINE	TRANSMISSION
P = Limited	J = LHD (4WD)	74 = 4 Dr. (104.3 WB)	ED1, ED0 = 2.4L Power Tech	DDK = 5 Speed HDManual
H = Sport	U = RHD (4WD)		EKG, EK0 = 3.7L Power Tech	DDD = 5 Speed HD Manual
M = Renegade	T = LHD (2WD)		ENJ = 2.5L 4Cyl Turbo Diesel	DG4,DGQ = Multi-Speed Auto
			ENR = 2.8L 4Cyl Turbo Diesel	DG6 = 4 Speed Auto Transm
			EN0 = 4Cyl Turbo Diesel	DG0 = All Automatic Transm
				DBB = All Manual Transm

AR = Use as required - = Non illustrated part # = New this model year **June 3, 2003**

« RETURN TO GROUP INDEX

Seat Belts, Front
Figure IKJ-710

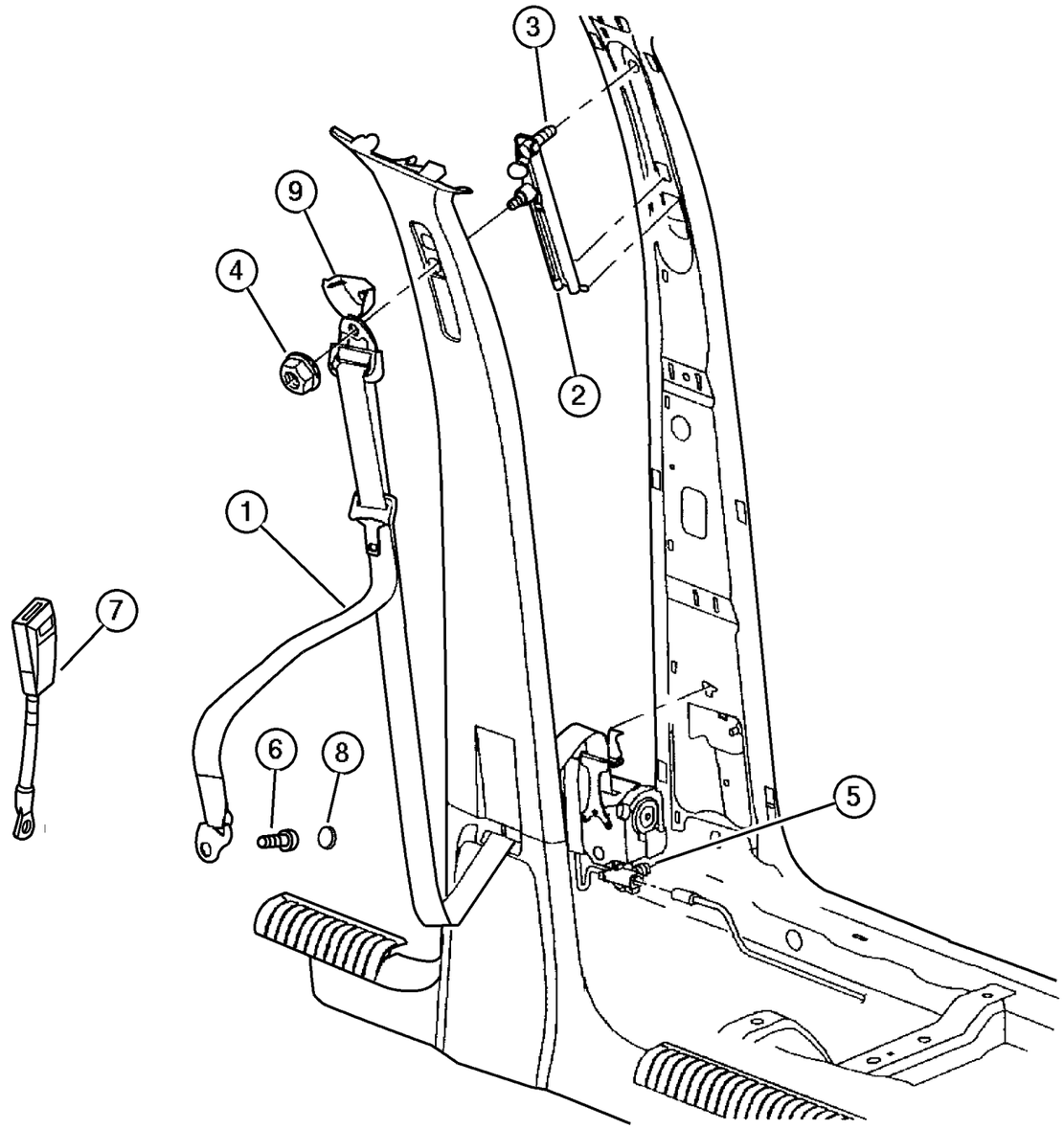

ITEM	PART NUMBER	QTY	LINE	SERIES	BODY	ENGINE	TRANS	TRIM	DESCRIPTION
1									SEAT BELT, Front Outer
	5GZ02 1DVAE	1	J						Right,Export
	5GZ03 1DVAH	1	J						Left,Export
	5GZ06 1DVAH	1	U						Right,Export
	5GZ07 1DVAE	1	U						Left,Export
	5HG33 1DVAF	1	J, T						[DV, D2], Left
	5HG33 1L8AF	1	J, T						[L2, L5], Left
	5HG34 1DVAE	1	J, T						[DV, D2], Right
	5HG34 1L8AE	1	J, T						[L2, L5], Right
2	55315 033AC	2							ADJUSTER, Seat Belt Turning Loop
3	6506 475AA	2							BOLT, Seat Belt
4	6506 002AA	2							NUT, M10x1.5
5	6505 867AA	2							SCREW, SEAT BELT
6	6506 839AA	2							BOLT, Seat Belt
7									SEAT BELT, Front Inner
	#5JW10 1L5AA	1	J, T					DL	[L2], After 3/19/03, Passenger
	#5JW10 1DVAA	1	J, T					H5	After 3/19/03, Passenger
	5GM34 1DVAE	1	J, T					H5	After 3/19/03, Driver
		2	J, T					H5	Up to 3/19/03, Driver and Passenger
	5GM34 1DVAD	2						K7	
		2						L5	[DV], Up to 3/19/03, Driver and Passenger
	5GM34 1L5AD	2						L5	[L5], Up to 3/19/03, Driver and Passenger
	5GM34 1DVAE	1	J, T					L5	[DV], After 3/19/03, Driver
	5GM34 1L5AE	1	J, T					L5	[L5], After 3/19/03, Driver
	#5JW10 1L5AA	1	J, T					L5	[L5], After 3/19/03, Passenger
	#5JW10 1DVAA	1	J, T					L5	[DV], After 3/19/03, Passenger
	5GM34 1DVAD	2	J, U					DL	[L2], Driver and Passenger
		2	J, T					M5	[DV], Up to 3/19/03, Driver and Passenger
	5GM34 1L5AD	2	J, T					M5	[L5], Up to 3/19/03, Driver and Passenger
	5GM34 1DVAE	1	J, T					M5	[DV], After 3/19/03, Driver
	5GM34 1L5AE	1	J, T					M5	[L5], After 3/19/03, Driver
	#5JW10 1L5AA	1	J, T					M5	[L5], After 3/19/03, Passenger
	#5JW10 1DVAA	1	J, T					M5	[DV], After 3/19/03, Passenger
	#5JW10 1L5AA	1	J, T					XJ	[L5], After 3/19/03, Passenger
	#5JW10 1DVAA	1	J, T					XJ	[DV], After 3/19/03, Passenger
	5GM34 1DVAE	1	J, T					XJ	[DV], After 3/19/03, Driver

JEEP LIBERTY (KJ)

SERIES	LINE	BODY	ENGINE	TRANSMISSION
P = Limited	J = LHD (4WD)	74 = 4 Dr. (104.3 WB)	ED1, ED0 = 2.4L Power Tech	DDK = 5 Speed HDManual
H = Sport	U = RHD (4WD)		EKG, EK0 = 3.7L Power Tech	DDD = 5 Speed HD Manual
M = Renegade	T = LHD (2WD)		ENJ = 2.5L 4Cyl Turbo Diesel	DG4,DGQ = Multi-Speed Auto
			ENR = 2.8L 4Cyl Turbo Diesel	DG6 = 4 Speed Auto Transm
			EN0 = 4Cyl Turbo Diesel	DG0 = All Automatic Transm
				DBB = All Manual Transm

Seat Belts, Front
Figure IKJ-710

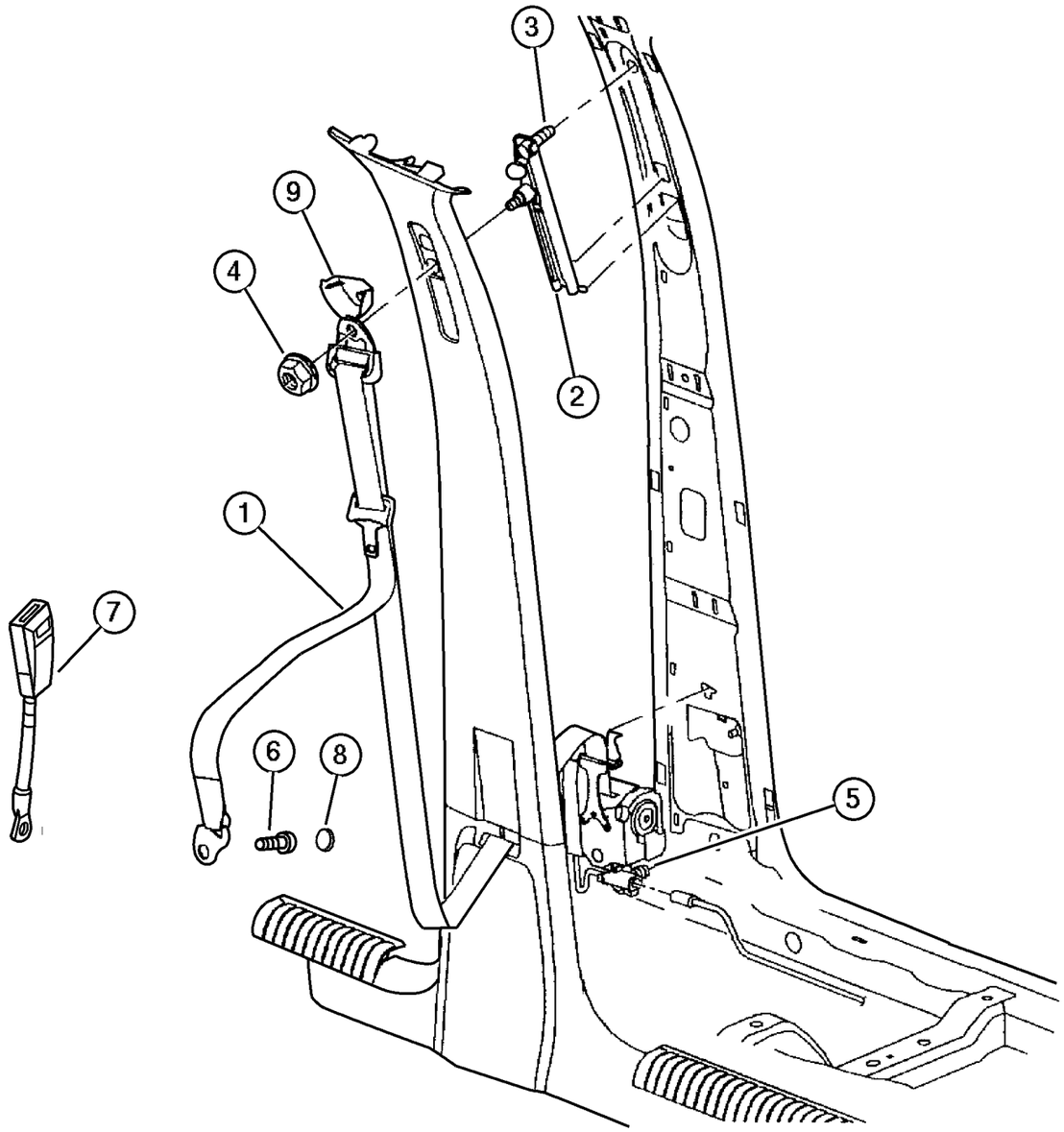

ITEM	PART NUMBER	QTY	LINE	SERIES	BODY	ENGINE	TRANS	TRIM	DESCRIPTION
	5GM34 1L5AE	1	J, T					XJ	[L5], After 3/19/03, Driver
	5GM34 1DVAD	2	J, T					DL	[D2], Up to 3/19/03, Driver and Passenger
		2	J, T					XJ	[DV], Up to 3/19/03, Driver and Passenger
	5GM34 1L5AD	2	J, T					XJ	[L5], Up to 3/19/03, Driver and Passenger
	5GM34 1DVAD	2	J, U					XJ	[DV, L5]
		2	J, U					DL	[DV], Driver and Passenger
	#5JW10 1DVAA	1	J, T					DL	[D2], After 3/19/03, Passenger
	5GM34 1L5AE	1	J, T					DL	[L2], After 3/19/03, Driver
	5GM34 1L5AD	2	J, T					DL	[L2], Up to 3/19/03, Driver and Passenger
	5GM34 1DVAE	1	J, T					DL	[D2], After 3/19/03, Driver
	5GM34 1DVAD	2						E7	Driver and Passenger
8									PLUG, Trim Panel, Side Shieild
	5HM79 TL2AB	2							[D2, L2]
	5HM79 WL5AB	2							[L5]
	5HM79 XDVAB	2							[Dv]
9									COVER, Adjustable Turning Loop
	XC45 1DVAA	1	J, T						[D2, DV]
		1	U						[DV, L2]
	XC45 1L8AA	1	J, T						[L2, L5]
-10	5086 227AA	1	J, T						EXTENDER, Seat Belt

JEEP LIBERTY (KJ)

SERIES	LINE	BODY	ENGINE	TRANSMISSION
P = Limited	J = LHD (4WD)	74 = 4 Dr. (104.3 WB)	ED1, ED0 = 2.4L Power Tech	DDK = 5 Speed HDManual
H = Sport	U = RHD (4WD)		EKG, EK0 = 3.7L Power Tech	DDD = 5 Speed HD Manual
M = Renegade	T = LHD (2WD)		ENJ = 2.5L 4Cyl Turbo Diesel	DG4,DGQ = Multi-Speed Auto
			ENR = 2.8L 4Cyl Turbo Diesel	DG6 = 4 Speed Auto Transm
			EN0 = 4Cyl Turbo Diesel	DG0 = All Automatic Transm
				DBB = All Manual Transm

Seat Belts, Rear
Figure IKJ-720

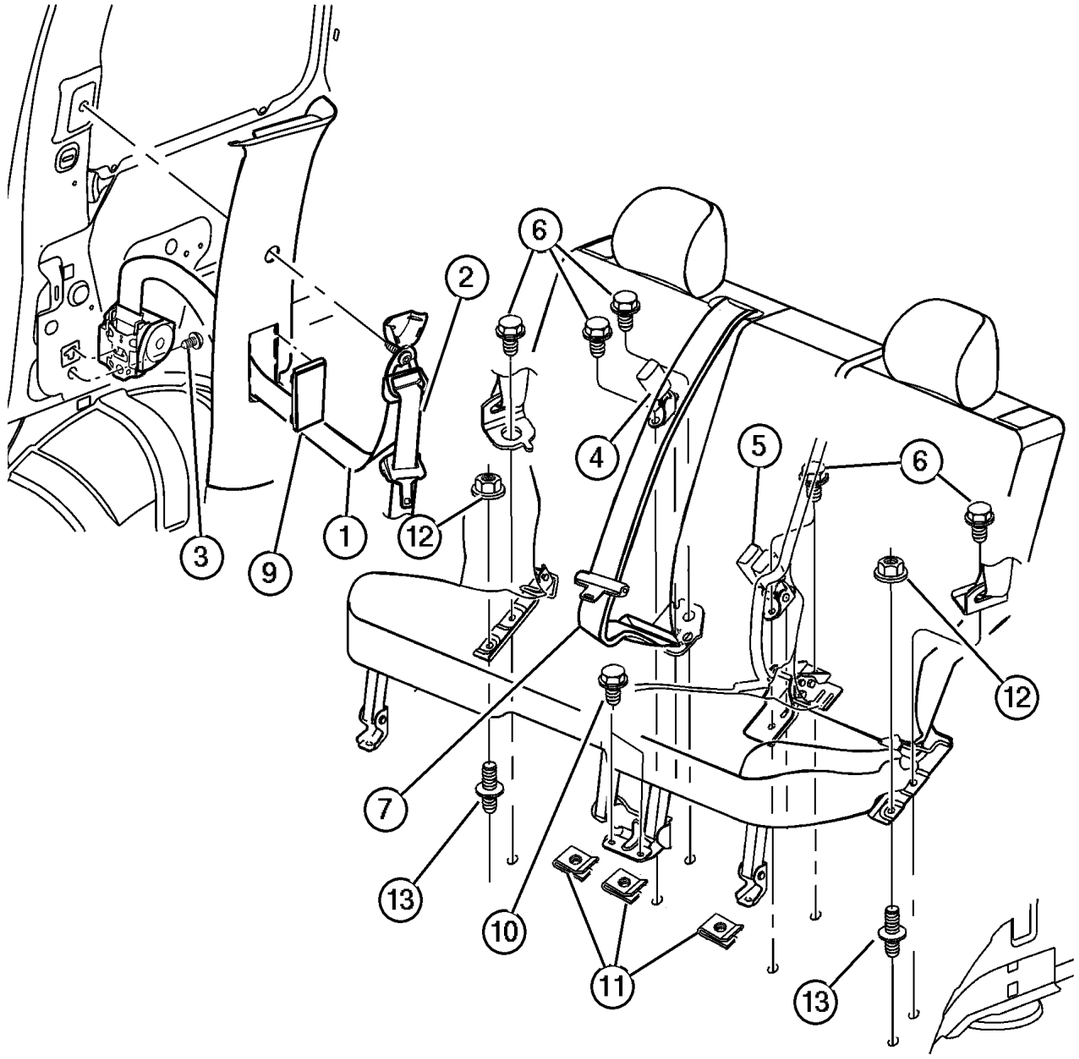

ITEM	PART NUMBER	QTY	LINE	SERIES	BODY	ENGINE	TRANS	TRIM	DESCRIPTION
1									SEAT BELT, Rear Outer
	5GE52 1DVAG	1	J, U						[DV, L2], Right,Export
	5GE53 1DVAG	1	J, U						[DV, L2], Left,Export
	5HG36 1DVAG	1	J, T						[D2, DV], Right
	5HG36 1L8AG	1	J, T						[L2, L5], Right
	5HG37 1DVAG	1	J, T						[D2, DV], Left
	5HG37 1L8AG	1	J, T						[L2, L5], Left
2									BOLT, Seat Belt
	6506 911AA	1	J, U						Export
		1	J, T						
3	6505 867AA	2							SCREW, SEAT BELT
4									SEAT BELT, Buckle Half
	5GU58 1DVAE	1	J, U						[DV, L2], Export
		1	J, T						[D2]
	5GU58 1L5AE	1	J, T						[L2]
5									SEAT BELT, Two Buckles
	5GE49 1DVAD	1	J, U						[DV, L2], Export
		1	J, T						[D2]
	5GE49 1L5AD	1	J, T						[L2]
6	6506 791AA	6							SCREW, Seat
7									SEAT BELT, RR CNTR SHOULDER
	5HK44 1L2AB	1	J, T					DL	[L2]
	5HK44 1L5AB	1						L5	[L5]
	5HK44 XDVAB	1						L5	[DV]
	5HK44 1L5AB	1	J, T					M5	[L5]
	5HK44 XDVAB	1	J, T					M5	[DV]
	5GE48 1L5AD	1	J, U					XJ	[L5], Export
	5GE48 XDVAD	1	J, U					XJ	[DV], Export
	5HK44 1L5AB	1	J, T					XJ	[L5]
	5HK44 XDVAB	1	J, T					XJ	[DV]
	5HK44 1D2AB	1	J, T					DL	[D2]
	5GE48 1L2AD	1	J, U					DL	[L2], Export
	5GE48 XDVAD	1	J, U					DL	[DV], Export
	5GE48 1L2AD	1						E7	[L5], Export
	5GE48 XDVAD	1						E7	[DV], Export
	5HK44 XDVAB	1	J, T					H5	
	5GE48 XDVAD	1						K7	[DV], Export
	5GE48 1L2AD	1						K7	[L5], Export
-8									BUTTON, BELT WEBBING
	YQ76 XDVAA	1	J, U					DL	
		1						E7	

JEEP LIBERTY (KJ)

SERIES	LINE	BODY	ENGINE	TRANSMISSION
P = Limited	J = LHD (4WD)	74 = 4 Dr. (104.3 WB)	ED1, ED0 = 2.4L Power Tech	DDK = 5 Speed HDManual
H = Sport	U = RHD (4WD)		EKG, EK0 = 3.7L Power Tech	DDD = 5 Speed HD Manual
M = Renegade	T = LHD (2WD)		ENJ = 2.5L 4Cyl Turbo Diesel	DG4,DGQ = Multi-Speed Auto
			ENR = 2.8L 4Cyl Turbo Diesel	DG6 = 4 Speed Auto Transm
			EN0 = 4Cyl Turbo Diesel	DG0 = All Automatic Transm
				DBB = All Manual Transm

Seat Belts, Rear
Figure IKJ-720

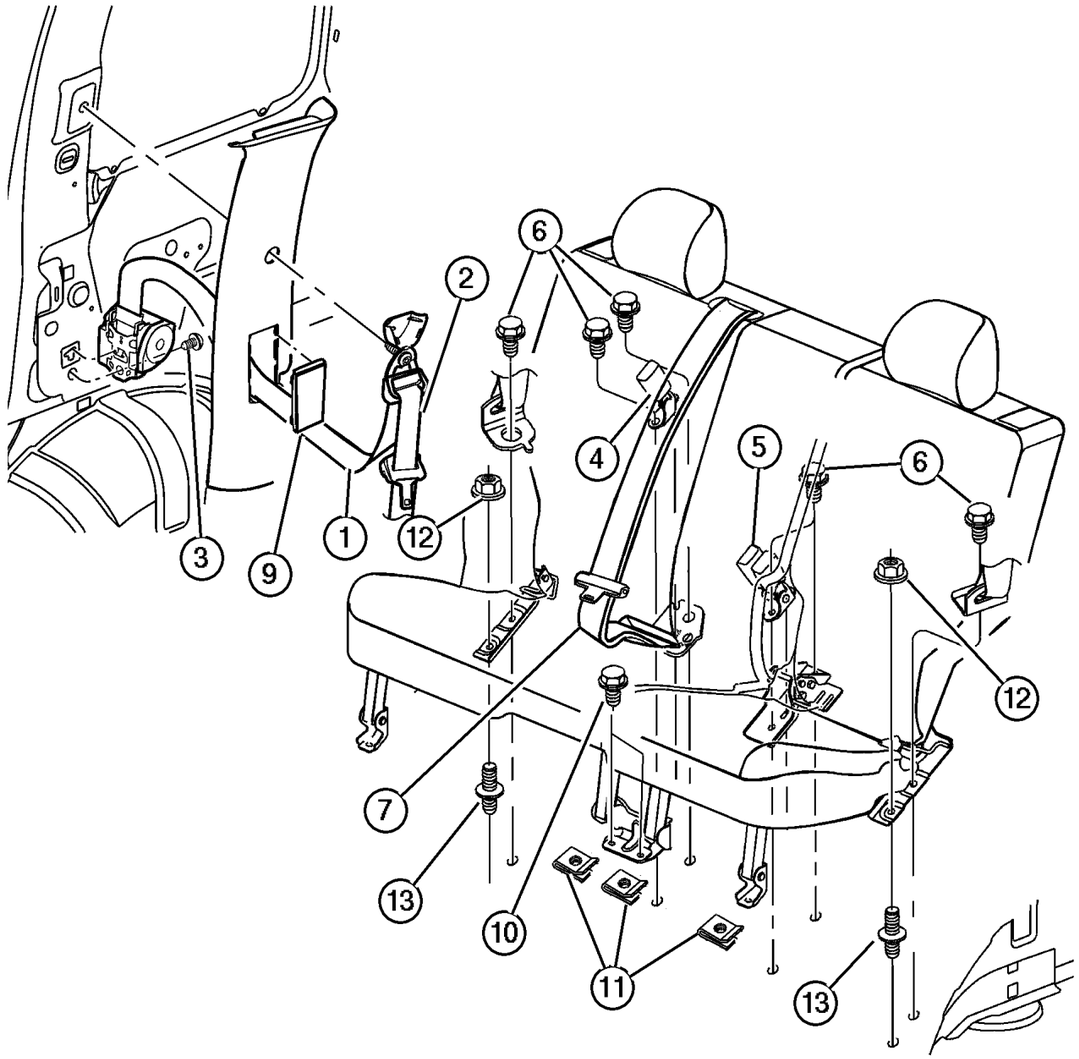

ITEM	PART NUMBER	QTY	LINE	SERIES	BODY	ENGINE	TRANS	TRIM	DESCRIPTION
		1						K7	
		1						L5	
		1	J, T					M5	
		1	J, T					XJ	
9									COVER, C Pillar
	5HF57 WL5AC	1							[L2, L5]
	5HF57 XDVAC	1							[D2, DV]
10	6101 232	4							BOLT, Hex Flange Head, M8x1.25x25
11	6101 283	4							U-NUT, M8x1.25
12	6507 170AA	2							BOLT, Seat
13									STUD, M12x1.75x81.50, (NOT SERVICED) (Not Serviced)
-14	5086 227AA	1	J, T						EXTENDER, Seat Belt

JEEP LIBERTY (KJ)

SERIES	LINE	BODY	ENGINE	TRANSMISSION
P = Limited	J = LHD (4WD)	74 = 4 Dr. (104.3 WB)	ED1, ED0 = 2.4L Power Tech	DDK = 5 Speed HDManual
H = Sport	U = RHD (4WD)		EKG, EK0 = 3.7L Power Tech	DDD = 5 Speed HD Manual
M = Renegade	T = LHD (2WD)		ENJ = 2.5L 4Cyl Turbo Diesel	DG4,DGQ = Multi-Speed Auto
			ENR = 2.8L 4Cyl Turbo Diesel	DG6 = 4 Speed Auto Transm
			EN0 = 4Cyl Turbo Diesel	DG0 = All Automatic Transm
				DBB = All Manual Transm

Recliner and Adjuster
Figure IKJ-810

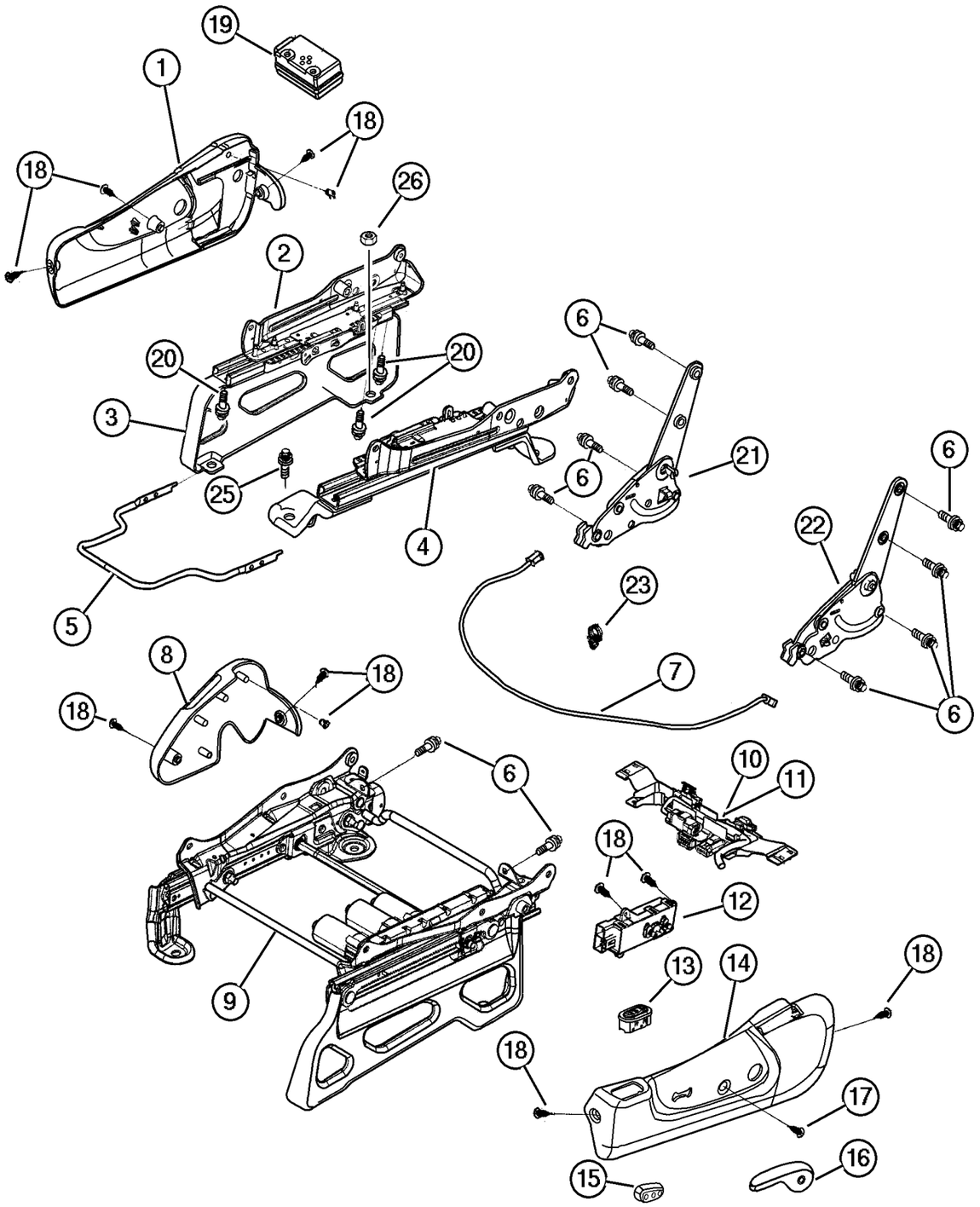

ITEM	PART NUMBER	QTY	LINE	SERIES	BODY	ENGINE	TRANS	TRIM	DESCRIPTION
1									SHIELD, Seat Adjuster
	UZ50 WL5AA	1						E7	[L5], Passenger,Manual
	UZ51 WL5AA	1						K7	[L5], Driver,Manual
	UZ50 XDVAA	1						L5	[DV], Passenger,Manual
	UZ50 WL5AA	1						L5	[L5], Passenger,Manual
	UZ51 XDVAA	1						L5	[DV], Driver,Manual
	UZ51 WL5AA	1						L5	[L5], Driver,Manual
	UZ50 WL5AA	1	J, T					M5	[L5], Passenger,Manual
	UZ50 XDVAA	1	J, T					M5	[DV], Passenger,Manual
	UZ51 WL5AA	1	J, T					M5	[L5], Driver,Manual
	UZ51 XDVAA	1	J, T					M5	[DV], Driver,Manual
	UZ50 WL5AA	1	J, T					XJ	[L5], Passenger,Manual
	UZ50 XDVAA	1						E7	[DV], Passenger,Manual
	UZ50 WL5AA	1	J, U					XJ	[L5], Passenger,Manual,Export
	UZ50 XDVAA	1	J, U					XJ	[DV], Passenger,Manual,Export
		1	J, T					XJ	[DV], Passenger,Manual
	UZ51 WL5AA	1	J, U					XJ	[L5], Driver,Manual,Export
		1	J, T					XJ	[L5], Driver,Manual
	UZ51 XDVAA	1	J, T					XJ	[DV], Driver,Manual
		1	J, U					XJ	[DV], Driver,Manual,Export
	UZ51 WL5AA	1						E7	[L5], Driver,Manual
	UZ51 XDVAA	1						E7	[DV], Driver,Manual
		1	J, T					H5	Driver,Manual
	UZ50 XDVAA	1	J, T					H5	Passenger,Manual
	UZ50 WL5AA	1						K7	[L5], Passenger,Manual
	UZ50 XDVAA	1						K7	[DV], Passenger,Manual
	UZ51 XDVAA	1						K7	[DV], Driver,Manual
2									ADJUSTER, Manual Seat
	5072 107AA	1						E7	Driver
	5072 104AA	1	J, T					M5	Passenger
	5072 107AA	1	J, U					XJ	Driver,Export
	5072 104AA	1	J, T					XJ	Passenger
	5072 107AA	1	J, T					XJ	Driver
	5072 104AA	1	J, U					XJ	Passenger,Export
		1						E7	Passenger
	5072 107AA	1	J, T					H5	Driver
	5072 104AA	1	J, T					H5	Passenger
	5072 107AA	1						K7	Driver
	5072 104AA	1						K7	Passenger
	5072 107AA	1						L5	Driver
	5072 104AA	1						L5	Passenger

JEEP LIBERTY (KJ)

SERIES	LINE	BODY	ENGINE	TRANSMISSION
P = Limited	J = LHD (4WD)	74 = 4 Dr. (104.3 WB)	ED1, ED0 = 2.4L Power Tech	DDK = 5 Speed HDManual
H = Sport	U = RHD (4WD)		EKG, EK0 = 3.7L Power Tech	DDD = 5 Speed HD Manual
M = Renegade	T = LHD (2WD)		ENJ = 2.5L 4Cyl Turbo Diesel	DG4,DGQ = Multi-Speed Auto
			ENR = 2.8L 4Cyl Turbo Diesel	DG6 = 4 Speed Auto Transm
			EN0 = 4Cyl Turbo Diesel	DG0 = All Automatic Transm
				DBB = All Manual Transm

Recliner and Adjuster
Figure IKJ-810

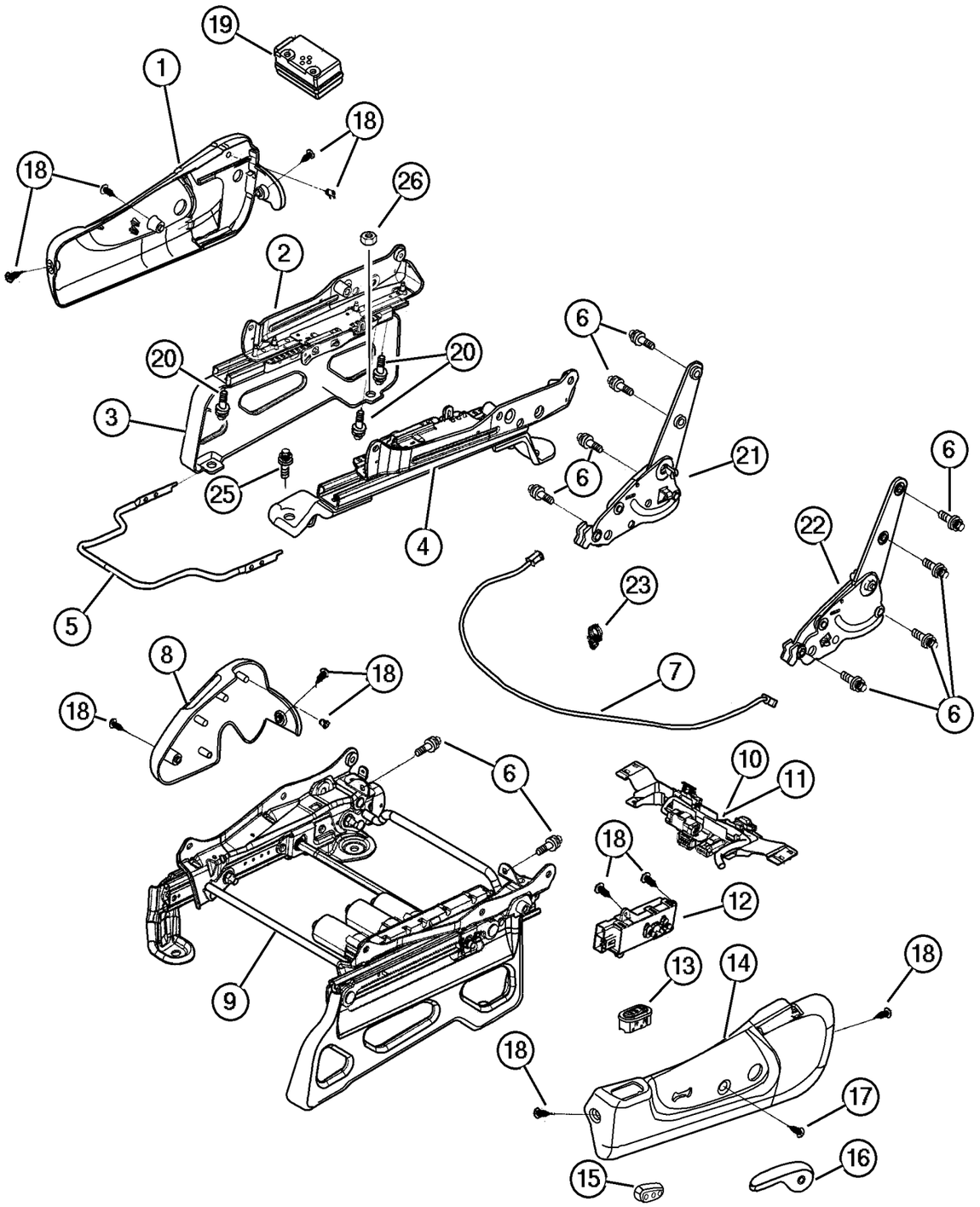

ITEM	PART NUMBER	QTY	LINE	SERIES	BODY	ENGINE	TRANS	TRIM	DESCRIPTION
	5072 107AA	1	J, T					M5	Driver
3									RISER, Seat
	5072 757AA	1						E7	Driver
	UZ48 WL8AA	1	J, T					M5	[L5], Passenger,Export
	UZ48 XDVAA	1	J, T					M5	[DV], Passenger,Export
	5072 756AA	1	J, T					M5	Passenger
	UZ48 XDVAA	1	J, U					XJ	[DV], Passenger,Export
		1	J, T					XJ	[DV], Passenger
	UZ49 WL8AA	1	J, U					XJ	[L5], Driver,Export
		1	J, T					XJ	[L5], Driver
	UZ48 WL8AA	1	J, U					XJ	[L5], Passenger,Export
		1	J, T					XJ	[L5], Passenger
	UZ49 XDVAA	1	J, U					XJ	[DV], Driver,Export
	5072 756AA	1						E7	Passenger
	UZ49 XDVAA	1	J, T					XJ	[DV], Driver
	5072 757AA	1	J, T					H5	Driver
	5072 756AA	1	J, T					H5	Passenger
	5072 757AA	1						K7	Passenger
	5072 756AA	1						K7	Driver
	5072 757AA	1						L5	Driver
	5072 756AA	1						L5	Passenger
	5072 757AA	1	J, T					M5	Driver
4									ADJUSTER, Manual Seat
	5072 106AA	1						E7	Driver,Manual
	5072 105AA	1	J, T					M5	Passenger,Manual
		1	J, U					XJ	Passenger,Manual,Export
	5072 106AA	1	J, U					XJ	Driver,Manual,Export
	5072 105AA	1	J, T					XJ	Passenger,Manual
	5072 106AA	1	J, T					XJ	Driver,Manual
	5072 105AA	1						E7	Passenger,Manual
	5072 106AA	1	J, T					H5	Driver,Manual
	5072 105AA	1	J, T					H5	Passenger,Manual
	5072 106AA	1						K7	Driver,Manual
	5072 105AA	1						K7	Passenger,Manual
	5072 106AA	1						L5	Driver,Manual
	5072 105AA	1						L5	Passenger,Manual
	5072 106AA	1	J, T					M5	Driver,Manual
5									HANDLE, Towel Bar
	5072 003AA	2						E7	
		2	J, T					H5	
		2						K7	

JEEP LIBERTY (KJ)

SERIES	LINE	BODY	ENGINE	TRANSMISSION
P = Limited	J = LHD (4WD)	74 = 4 Dr. (104.3 WB)	ED1, ED0 = 2.4L Power Tech	DDK = 5 Speed HDManual
H = Sport	U = RHD (4WD)		EKG, EK0 = 3.7L Power Tech	DDD = 5 Speed HD Manual
M = Renegade	T = LHD (2WD)		ENJ = 2.5L 4Cyl Turbo Diesel	DG4,DGQ = Multi-Speed Auto
			ENR = 2.8L 4Cyl Turbo Diesel	DG6 = 4 Speed Auto Transm
			EN0 = 4Cyl Turbo Diesel	DG0 = All Automatic Transm
				DBB = All Manual Transm

AR = Use as required - = Non illustrated part # = New this model year

June 3, 2003

« RETURN TO GROUP INDEX

Recliner and Adjuster
Figure IKJ-810

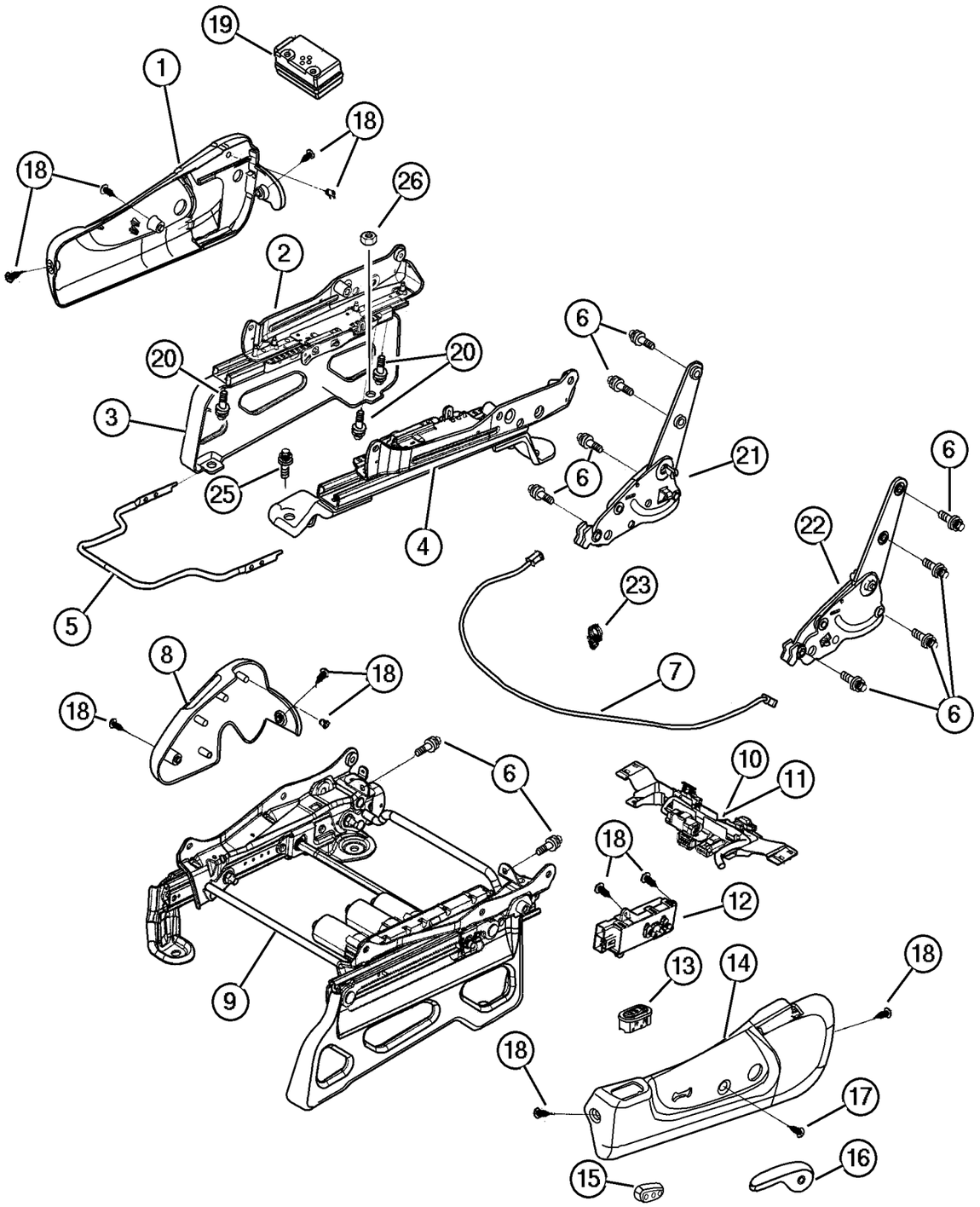

ITEM	PART NUMBER	QTY	LINE	SERIES	BODY	ENGINE	TRANS	TRIM	DESCRIPTION
		2						L5	
		2	J, T					M5	
		2	J, U					XJ	
		2	J, T					XJ	
6									BOLT, Recliner
	5072 128AA	30	J, T					DL	
		30	J, U					DL	
		30						E7	
		30	J, T					H5	
		30						K7	
		30						L5	
		30	J, T					M5	
		30	J, U					XJ	
		30	J, T					XJ	
7									CABLE, Recliner
	5127 463AA	2	J, U					DL	
		2	J, T					DL	
	5066 458AA	2						E7	
	5127 463AA	2	J, T					H5	
		2						K7	
		2						L5	
		2	J, T					M5	
	5066 458AA	2	J, U					XJ	
		2	J, T					XJ	
8									SHIELD, Seat Adjuster
	UZ42 TL2AA	1	J, T					DL	[D2, L2], Passenger,Inboard
	UZ43 WL5AA	1						E7	[L5], Driver,Inboard
	UZ42 1DVAA	1	J, T					H5	Passenger,Inboard
	UZ43 XDVAA	1	J, T					H5	Driver,Inboard
	UZ42 WL5AA	1						K7	[L5], Passenger,Inboard
	UZ42 XDVAA	1						K7	[DV], Passenger,Inboard
	UZ43 XDVAA	1						K7	[DV], Driver,Inboard
	UZ43 WL5AA	1						K7	[L5], Driver,Inboard
	UZ42 WL5AA	1						L5	[L5], Passenger,Inboard
	UZ42 XDVAA	1						L5	[DV], Passenger,Inboard
	UZ43 WL5AA	1						L5	[L5], Driver,Inboard
	UZ42 TL2AA	1	J, U					DL	[L2], Passenger,Inboard,Export
	UZ43 XDVAA	1						L5	[DV], Driver,Inboard
	UZ42 WL5AA	1	J, T					M5	[L5], Passenger,Inboard
	UZ42 XDVAA	1	J, T					M5	[DV], Passenger,Inboard
	UZ43 WL5AA	1	J, T					M5	[L5], Driver,Inboard

JEEP LIBERTY (KJ)

SERIES	LINE	BODY	ENGINE	TRANSMISSION
P = Limited	J = LHD (4WD)	74 = 4 Dr. (104.3 WB)	ED1, ED0 = 2.4L Power Tech	DDK = 5 Speed HDManual
H = Sport	U = RHD (4WD)		EKG, EK0 = 3.7L Power Tech	DDD = 5 Speed HD Manual
M = Renegade	T = LHD (2WD)		ENJ = 2.5L 4Cyl Turbo Diesel	DG4,DGQ = Multi-Speed Auto
			ENR = 2.8L 4Cyl Turbo Diesel	DG6 = 4 Speed Auto Transm
			EN0 = 4Cyl Turbo Diesel	DG0 = All Automatic Transm
				DBB = All Manual Transm

AR = Use as required - = Non illustrated part # = New this model year **June 3, 2003**

« RETURN TO GROUP INDEX

Recliner and Adjuster
Figure IKJ-810

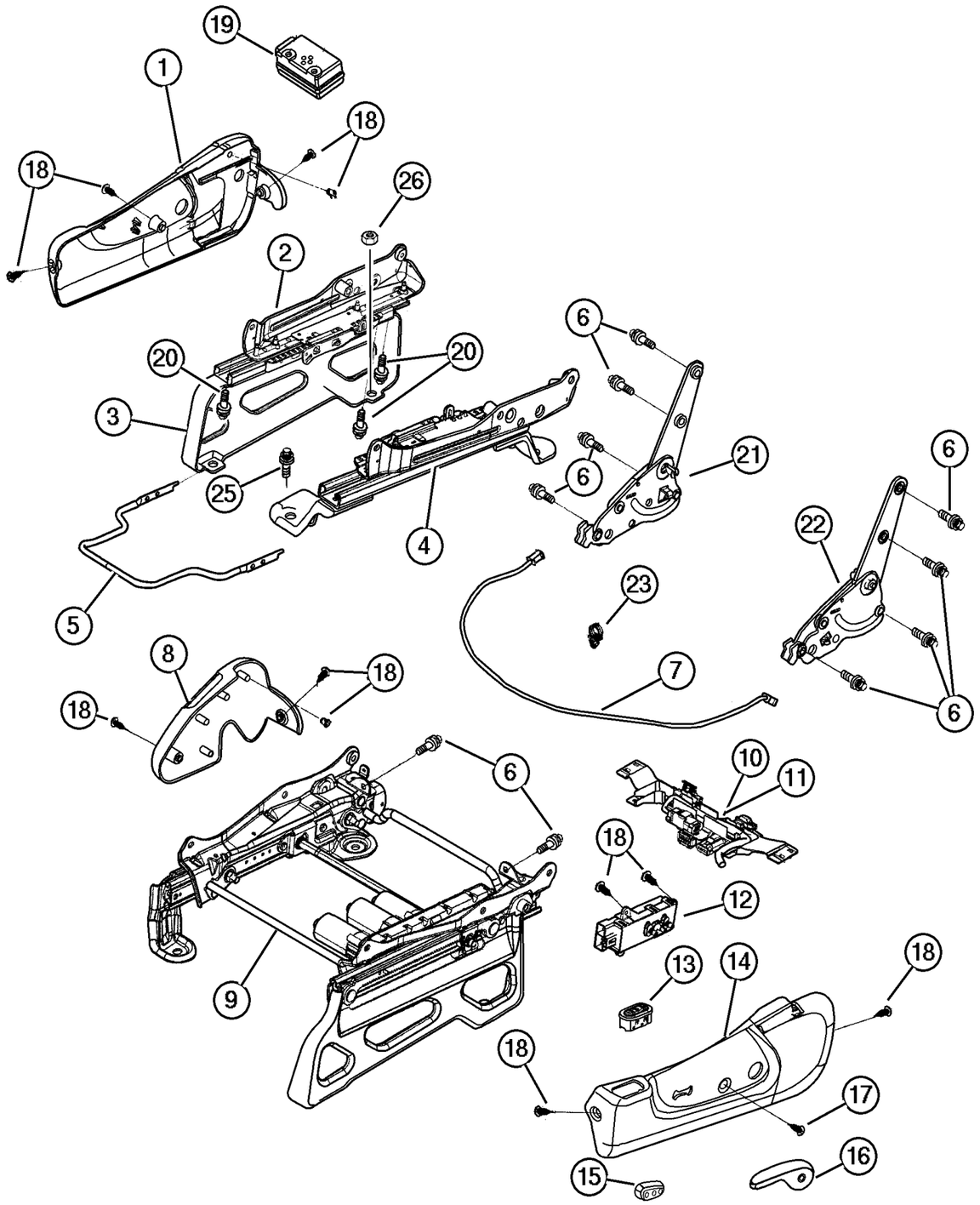

ITEM	PART NUMBER	QTY	LINE	SERIES	BODY	ENGINE	TRANS	TRIM	DESCRIPTION
	UZ43 XDVAA	1	J, T					M5	[DV], Driver,Inboard
	UZ42 WL5AA	1	J, U					XJ	[L5], Passenger,Inboard
		1	J, T					XJ	[L5], Passenger,Inboard
	UZ42 XDVAA	1	J, U					XJ	[DV], Passenger,Inboard
	UZ43 XDVAA	1	J, U					XJ	[DV], Driver,Inboard
	UZ43 WL5AA	1	J, U					XJ	[L5], Driver,Inboard
	UZ42 XDVAA	1	J, U					DL	[DV], Passenger,Inboard,Export
	UZ43 WL5AA	1	J, T					XJ	[L5], Driver,Inboard
	UZ43 TL2AA	1	J, T					DL	[D2, L2], Driver,Inboard
		1	J, U					DL	[L2], Driver,Inboard,Export
	UZ43 XDVAA	1	J, U					DL	[DV], Driver,Inboard,Export
	UZ42 WL5AA	1						E7	[L5], Passenger,Inboard
	UZ42 XDVAA	1						E7	[DV], Passenger,Inboard
	UZ43 XDVAA	1						E7	[DV], Driver,Inboard
9									ADJUSTER, Power Seat
	WZ35 XDVAA	1	J, T					DL	[D2], Driver,Power Seat
		1						K7	[DV], Driver,Power Seat
	WZ34 WL8AA	1						K7	[L5], Passenger,Power Seat
	WZ34 XDVAA	1						K7	[DV], Passenger,Power Seat
	WZ35 WL8AA	1						L5	[L5], Driver,Power Seat
	WZ35 XDVAA	1						L5	[DV], Driver,Power Seat
	WZ35 WL8AA	1	J, T					M5	[L5], Driver,Power Seat
	WZ35 XDVAA	1	J, T					M5	[DV], Driver,Power Seat
	WZ34 WL8AA	1	J, U					XJ	[L5], Passenger,Power Seat,Export
	WZ34 XDVAA	1	J, U					XJ	[DV], Passenger,Power Seat, Export
	WZ35 XDVAA	1	J, T					XJ	[D2, DV], Driver,Power Seat
	WZ35 WL8AA	1	J, T					DL	[L2], Driver,Power Seat
		1	J, T					XJ	[L5], Driver,Power Seat
	WZ35 XDVAA	1	J, U					XJ	[DV], Driver,Power Seat,Export
	WZ35 WL8AA	1	J, U					XJ	[L5], Driver,Power Seat,Export
	WZ35 XDVAA	1	J, U					DL	[DV], Driver,Power Seat,Export
	WZ35 WL8AA	1	J, U					DL	[L2], Driver,Power Seat,Export
	WZ34 WL8AA	1	J, T					DL	[L2], Passenger,Power Seat
	WZ34 XDVAA	1	J, T					DL	[D2], Passenger,Power Seat
		1	J, U					DL	[DV], Passenger,Power Seat, Export
	WZ34 WL8AA	1	J, U					DL	[L2], Passenger,Power Seat,Export
	WZ35 WL8AA	1						K7	[L5], Driver,Power Seat
10									WIRING, Power Seat
	5071 991AA	1	J, T					DL	Left,Power

JEEP LIBERTY (KJ)

SERIES	LINE	BODY	ENGINE	TRANSMISSION
P = Limited	J = LHD (4WD)	74 = 4 Dr. (104.3 WB)	ED1, ED0 = 2.4L Power Tech	DDK = 5 Speed HDManual
H = Sport	U = RHD (4WD)		EKG, EK0 = 3.7L Power Tech	DDD = 5 Speed HD Manual
M = Renegade	T = LHD (2WD)		ENJ = 2.5L 4Cyl Turbo Diesel	DG4,DGQ = Multi-Speed Auto
			ENR = 2.8L 4Cyl Turbo Diesel	DG6 = 4 Speed Auto Transm
			EN0 = 4Cyl Turbo Diesel	DG0 = All Automatic Transm
				DBB = All Manual Transm

Recliner and Adjuster
Figure IKJ-810

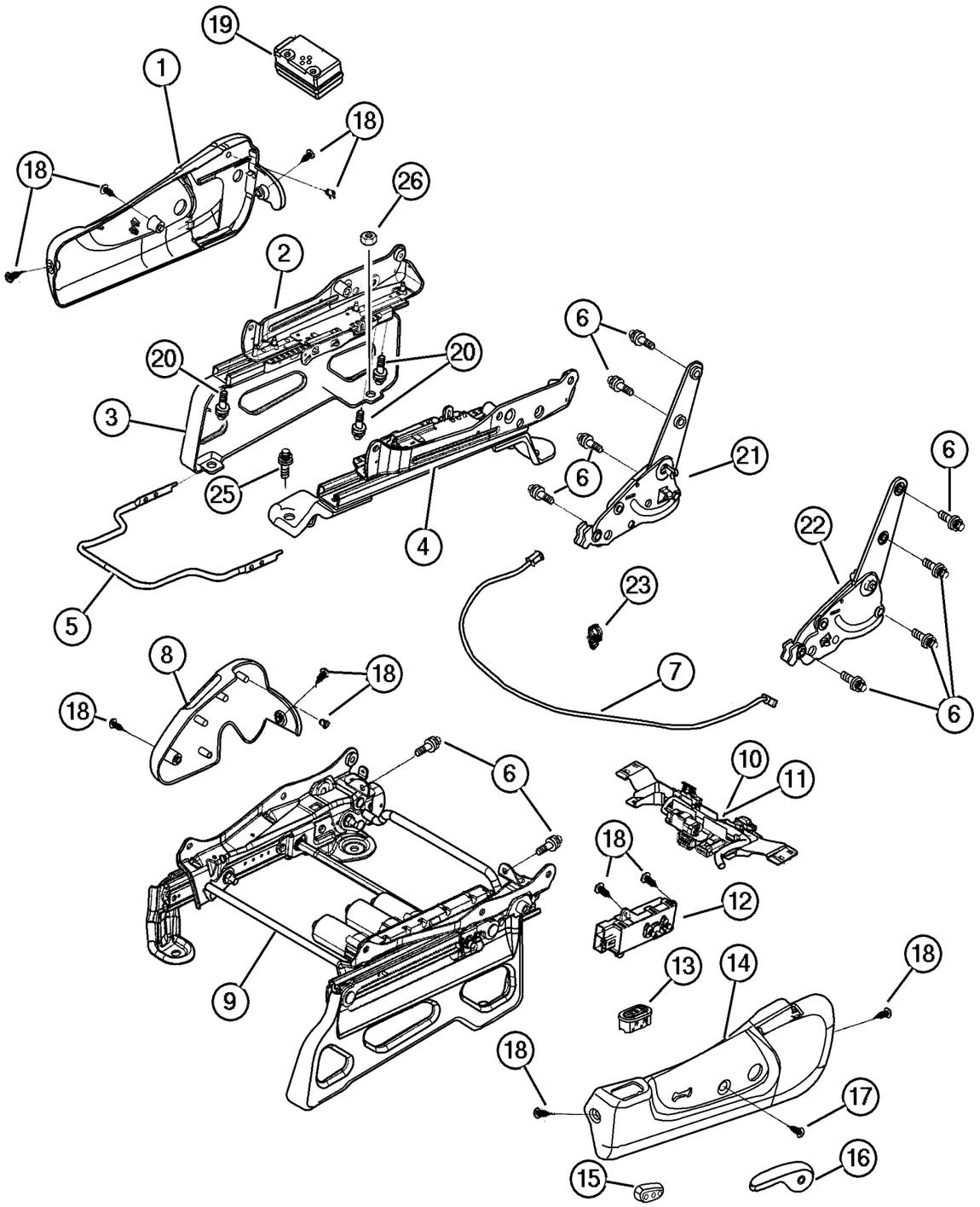

ITEM	PART NUMBER	QTY	LINE	SERIES	BODY	ENGINE	TRANS	TRIM	DESCRIPTION
		1	J, T					XJ	Left,Power
	5071 990AA	1	J, U					XJ	Right,Power,Export
	5071 991AA	1	J, U					DL	Left,Power,Export
	5071 990AA	1	J, U					DL	Right,Power,Export
		1	J, T					DL	Right,Power
	5071 991AA	1						K7	Left,Power
	5071 990AA	1						K7	Right,Power
	5071 991AA	1						L5	Left,Power
		1	J, T					M5	Left,Power
		1	J, U					XJ	Left,Power,Export
11									WIRING, Heated Seat
	5071 996AA	1	J, T					DL	Right
		1	J, U					DL	Right
	5071 997AA	1	J, T					DL	Left
		1	J, U					DL	Left
12									SWITCH, Seat
	55352 782AA	2	J, T					DL	
		2	J, U					DL	
		2						K7	
		1						L5	
		1	J, T					M5	
		2	J, U					XJ	
		1	J, T					XJ	
13									SWITCH, Heated Seat
	5GW44 DX9AB	2	J, U					DL	
		2	J, T					DL	
14									SHIELD, Seat Adjuster
	UZ52 TL2AB	1	J, U					DL	[L2], Right,Power,Export
	UZ53 TL2AB	1	J, T					DL	[D2, L2], Left,Power
	UZ53 WL5AB	1						K7	[L5], Left,Power
		1						L5	[L5], Left,Power
		1	J, U					XJ	[L5], Left,Power,Export
		1	J, T					XJ	[L5], Left,Power
	UZ53 XDVAB	1	J, T					M5	[DV], Left,Power
		1						L5	[DV], Left,Power
		1	J, U					XJ	[DV], Left,Power,Export
		1	J, T					XJ	[DV], Left,Power
		1						K7	[DV], Left,Power
	UZ52 TL2AB	1	J, T					DL	[D2, L2], Right,Power
	UZ53 XDVAB	1	J, U					DL	[DV], Left,Power,Export
	UZ54 1DVAB	1	J, U					DL	[DV], With Heated Seats, Right, Power,Export

JEEP LIBERTY (KJ)

SERIES	LINE	BODY	ENGINE	TRANSMISSION
P = Limited	J = LHD (4WD)	74 = 4 Dr. (104.3 WB)	ED1, ED0 = 2.4L Power Tech	DDK = 5 Speed HDManual
H = Sport	U = RHD (4WD)		EKG, EK0 = 3.7L Power Tech	DDD = 5 Speed HD Manual
M = Renegade	T = LHD (2WD)		ENJ = 2.5L 4Cyl Turbo Diesel	DG4,DGQ = Multi-Speed Auto
			ENR = 2.8L 4Cyl Turbo Diesel	DG6 = 4 Speed Auto Transm
			EN0 = 4Cyl Turbo Diesel	DG0 = All Automatic Transm
				DBB = All Manual Transm

AR = Use as required - = Non illustrated part # = New this model year **June 3, 2003**

« RETURN TO GROUP INDEX

« »

Recliner and Adjuster
Figure IKJ-810

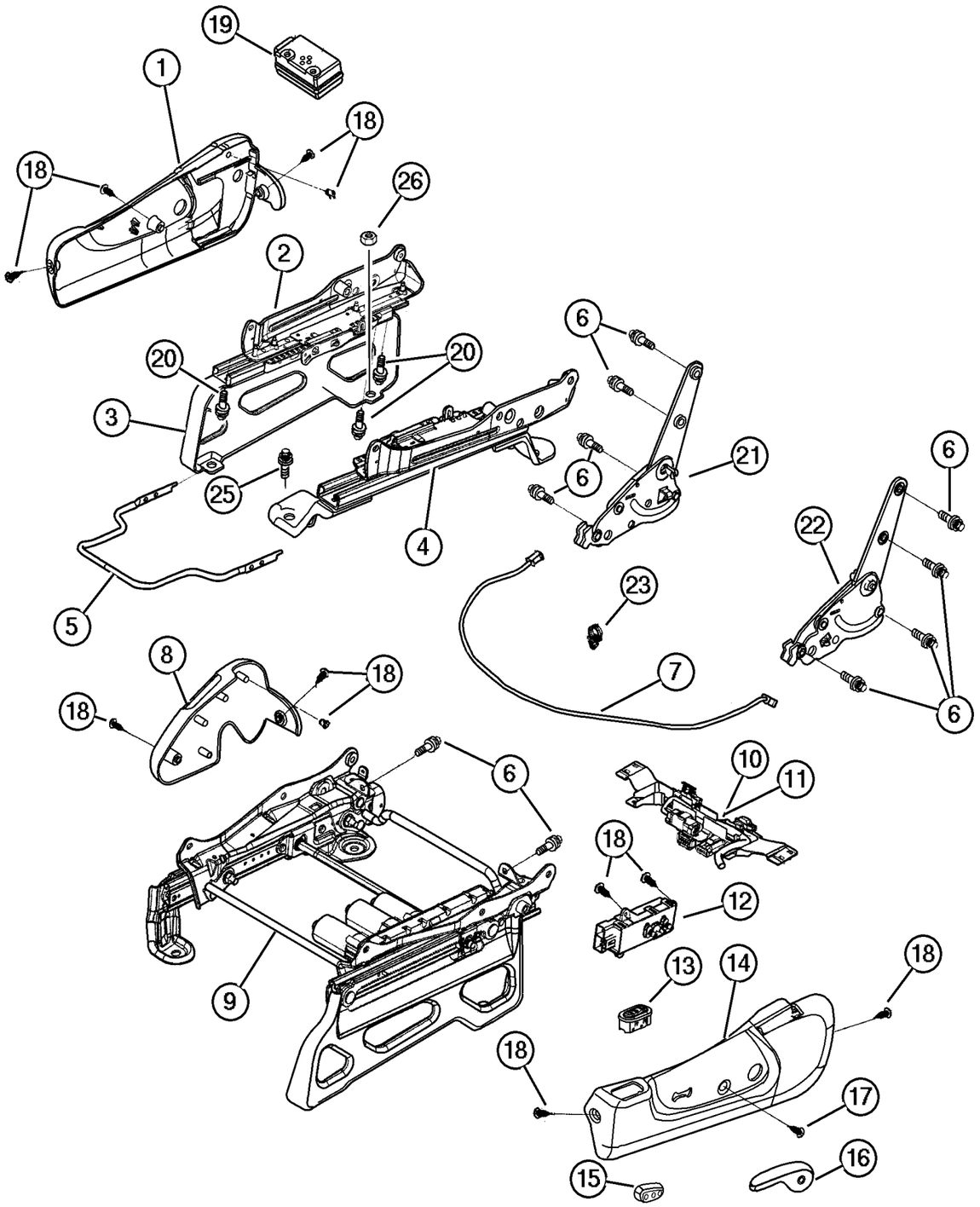

ITEM	PART NUMBER	QTY	LINE	SERIES	BODY	ENGINE	TRANS	TRIM	DESCRIPTION
	UZ54 1L2AB	1	J, U					DL	[L2], With Heated Seats, Right, Power,Export
		1	J, T					DL	[D2, L2], With Heated Seats, Right, Power
	UZ55 1DVAB	1	J, U					DL	[DV], With Heated Seats, Left, Power,Export
	UZ55 1L2AB	1	J, T					DL	[D2, L2], With Heated Seats, Left, Power
		1	J, U					DL	[L2], With Heated Seats, Left, Power,Export
	UZ52 WL5AB	1	J, U					XJ	[L5], Right,Power,Export
		1						K7	[L5], Right,Power
	UZ52 XDVAB	1	J, U					XJ	[DV], Right,Power,Export
		1	J, U					DL	[DV], Right,Power,Export
		1						K7	[DV], Right,Power
	UZ53 1L5AB	1	J, T					M5	[L5], Left,Power
	UZ53 TL2AB	1	J, U					DL	[L2], Left,Power,Export
15									KNOB, Power Seat Switch
	4607 043AB	1	J, T					DL	Left
		1	J, U					XJ	Left
		1	J, T					XJ	Left
		1	J, U					DL	Left
	4607 042AB	1	J, U					DL	Right
		1	J, T					DL	Right
	4607 043AB	1						K7	Left
	4607 042AB	1						K7	Right
	4607 043AB	1						L5	Left
		1	J, T					M5	Left
	4607 042AB	1	J, U					XJ	Right
16									HANDLE, Recliner
	UZ28 1L2AB	1	J, T					DL	[D2, L2], Right
	UZ29 1DVAB	1						E7	[DV], Left
		1	J, T					H5	Left
	UZ28 1DVAB	1	J, T					H5	Right
		1						K7	[DV], Right
	UZ28 1L5AB	1						K7	[L5], Right
	UZ29 1L5AB	1						K7	[L5], Left
	UZ29 1DVAB	1						K7	[DV], Left
	UZ28 1L5AB	1						L5	[L5], Right
	UZ28 1DVAB	1						L5	[DV], Right
	UZ29 1L5AB	1						L5	[L5], Left

JEEP LIBERTY (KJ)

SERIES	LINE	BODY	ENGINE	TRANSMISSION
P = Limited	J = LHD (4WD)	74 = 4 Dr. (104.3 WB)	ED1, ED0 = 2.4L Power Tech	DDK = 5 Speed HDManual
H = Sport	U = RHD (4WD)		EKG, EK0 = 3.7L Power Tech	DDD = 5 Speed HD Manual
M = Renegade	T = LHD (2WD)		ENJ = 2.5L 4Cyl Turbo Diesel	DG4,DGQ = Multi-Speed Auto
			ENR = 2.8L 4Cyl Turbo Diesel	DG6 = 4 Speed Auto Transm
			EN0 = 4Cyl Turbo Diesel	DG0 = All Automatic Transm
				DBB = All Manual Transm

Recliner and Adjuster
Figure IKJ-810

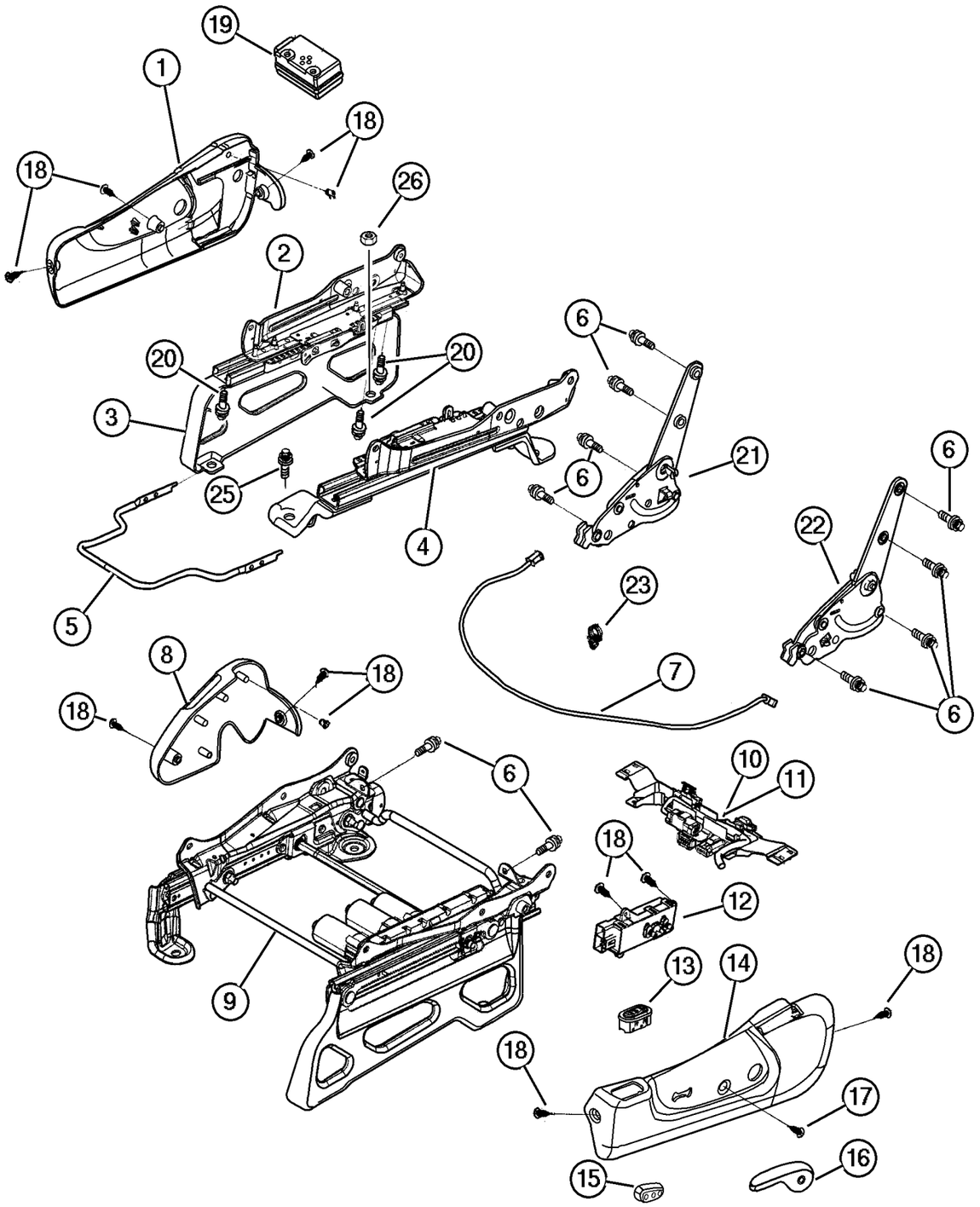

ITEM	PART NUMBER	QTY	LINE	SERIES	BODY	ENGINE	TRANS	TRIM	DESCRIPTION
	UZ28 1L2AB	1	J, T					DL	[L2], Right
	UZ29 1DVAB	1						L5	[DV], Left
		1	J, T					M5	[DV], Left
	UZ28 1L5AB	1	J, T					M5	[L5], Right
	UZ28 1DVAB	1	J, T					M5	[DV], Right
	UZ29 1L5AB	1	J, T					M5	[L5], Left
	UZ29 1L5AA	1	J, T					XJ	[L5], Left
		1	J, U					XJ	[L5], Left
	UZ28 1L5AA	1	J, U					XJ	[L5], Right
	UZ29 1DVAB	1	J, U					XJ	[DV], Left
		1	J, T					XJ	[DV], Left
	UZ28 1DVAB	1	J, U					DL	[DV], Right
	UZ28 1DVAA	1	J, U					XJ	[DV], Right
		1	J, T					XJ	[DV], Right
	UZ28 1L5AB	1	J, T					XJ	[L5], Right
	UZ29 1L2AB	1	J, T					DL	[D2, L2], Left
		1	J, U					DL	[L2], Left
	UZ29 1DVAB	1	J, U					DL	[DV], Left
	UZ28 1DVAB	1						E7	[DV], Right
	UZ28 1L5AB	1						E7	[L5], Right
	UZ29 1L5AB	1						E7	[L5], Left
17									SCREW, Recliner Handle
	5072 127AB	2	J, T					DL	
		2	J, U					DL	
		2						E7	
		2	J, T					H5	
		2						K7	
		2						L5	
		2	J, T					M5	
	5072 127AA	2	J, U					XJ	
		2	J, T					XJ	
18									SCREW, Trim
	5072 741AA	8	J, U					DL	
		8	J, T					DL	
		8						E7	
		8	J, T					H5	
		8						K7	
		8						L5	
		8	J, T					M5	
		8	J, U					XJ	
		8	J, T					XJ	
19									MODULE, Heated Seat Control

JEEP LIBERTY (KJ)

SERIES	LINE	BODY	ENGINE	TRANSMISSION
P = Limited	J = LHD (4WD)	74 = 4 Dr. (104.3 WB)	ED1, ED0 = 2.4L Power Tech	DDK = 5 Speed HDManual
H = Sport	U = RHD (4WD)		EKG, EK0 = 3.7L Power Tech	DDD = 5 Speed HD Manual
M = Renegade	T = LHD (2WD)		ENJ = 2.5L 4Cyl Turbo Diesel	DG4,DGQ = Multi-Speed Auto
			ENR = 2.8L 4Cyl Turbo Diesel	DG6 = 4 Speed Auto Transm
			EN0 = 4Cyl Turbo Diesel	DG0 = All Automatic Transm
				DBB = All Manual Transm

AR = Use as required - = Non illustrated part # = New this model year **June 3, 2003**

« RETURN TO GROUP INDEX

Recliner and Adjuster
Figure IKJ-810

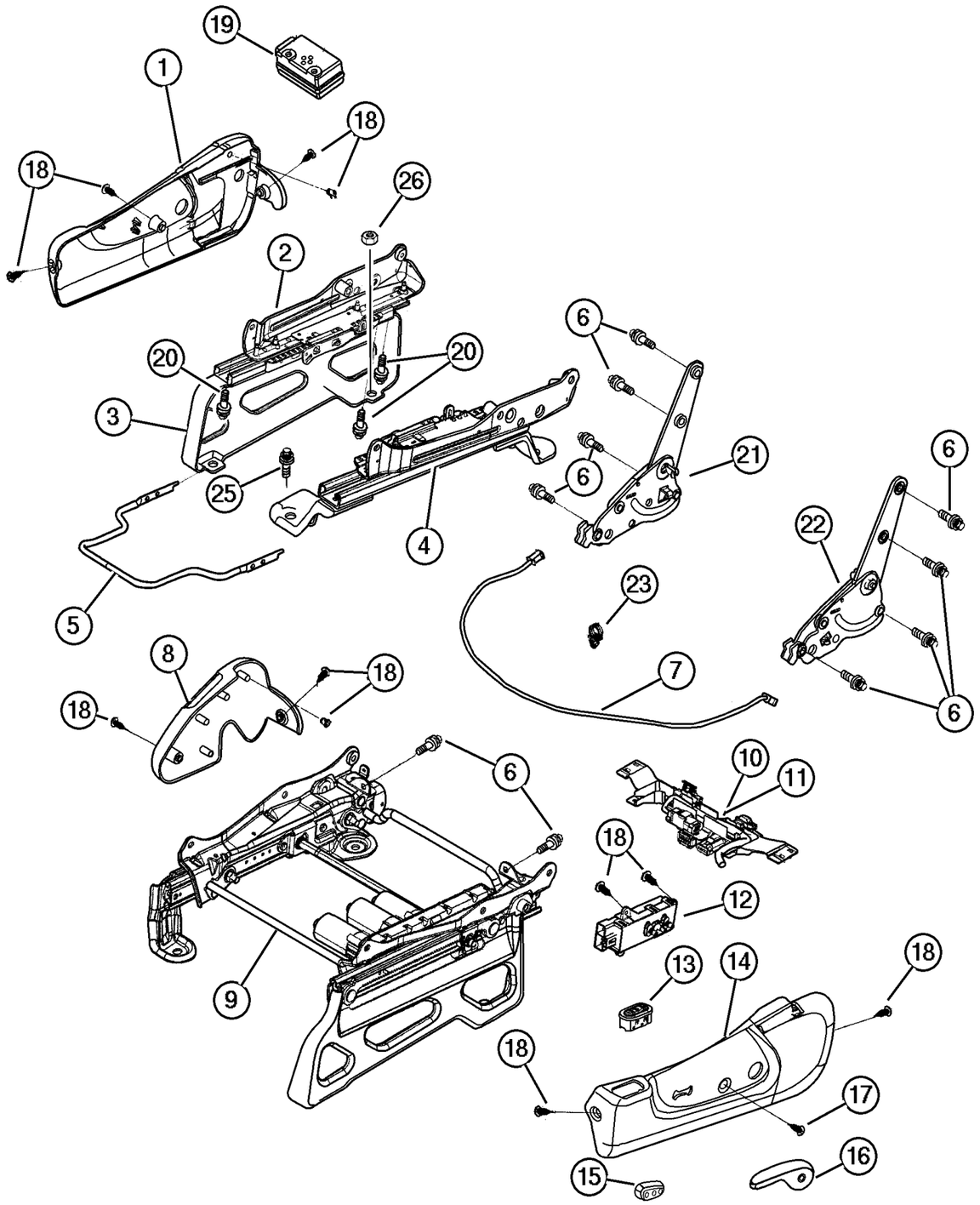

ITEM	PART NUMBER	QTY	LINE	SERIES	BODY	ENGINE	TRANS	TRIM	DESCRIPTION
	56010 113AA	1	J, U					DL	
		1	J, T					DL	
20	6101 452	4							SCREW AND WASHER, Hex Head, M8x1.25x20
21									RECLINER, Front Seat Back
	5072 020AA	1	J, T					DL	Right,Outboard
		1						K7	Right,Outboard
	5072 022AA	1						L5	Left,Inboard
	5072 020AA	1						L5	Right,Outboard
		1	J, T					M5	Right,Outboard
	5072 022AA	1	J, T					M5	Left,Inboard
	5072 020AA	1	J, U					XJ	Right,Outboard
		1	J, T					XJ	Right,Outboard
	5072 022AA	1	J, T					XJ	Left,Inboard
		1	J, U					XJ	Left,Inboard
	5072 020AA	1	J, U					DL	Right,Outboard
	5072 022AA	1	J, T					DL	Left,Inboard
		1	J, U					DL	Left,Inboard
		1						E7	Left,Inboard
	5072 020AA	1						E7	Right,Outboard
		1	J, T					H5	Right,Outboard
	5072 022AA	1	J, T					H5	Left,Inboard
		1						K7	Left,Inboard
22									RECLINER, Front Seat Back
	5072 021AA	1	J, T					DL	Right,Inboard
	5072 023AA	1						K7	Left,Outboard
	5072 021AA	1						L5	Right,Inboard
	5072 023AA	1						L5	Left,Outboard
	5072 021AA	1	J, T					M5	Right,Inboard
	5072 023AA	1	J, T					M5	Left,Outboard
		1	J, T					XJ	Left,Outboard
		1	J, U					XJ	Left,Outboard
	5072 021AA	1	J, T					XJ	Right,Inboard
		1	J, U					XJ	Right,Inboard
		1	J, U					DL	Right,Inboard
	5072 023AA	1	J, T					DL	Left,Outboard
		1	J, U					DL	Left,Outboard
	5072 021AA	1						E7	Right,Inboard
	5072 023AA	1						E7	Left,Outboard
		1	J, T					H5	Left,Outboard
	5072 021AA	1	J, T					H5	Right,Inboard

JEEP LIBERTY (KJ)

SERIES	LINE	BODY	ENGINE	TRANSMISSION
P = Limited	J = LHD (4WD)	74 = 4 Dr. (104.3 WB)	ED1, ED0 = 2.4L Power Tech	DDK = 5 Speed HDManual
H = Sport	U = RHD (4WD)		EKG, EK0 = 3.7L Power Tech	DDD = 5 Speed HD Manual
M = Renegade	T = LHD (2WD)		ENJ = 2.5L 4Cyl Turbo Diesel	DG4,DGQ = Multi-Speed Auto
			ENR = 2.8L 4Cyl Turbo Diesel	DG6 = 4 Speed Auto Transm
			EN0 = 4Cyl Turbo Diesel	DG0 = All Automatic Transm
				DBB = All Manual Transm

Recliner and Adjuster
Figure IKJ-810

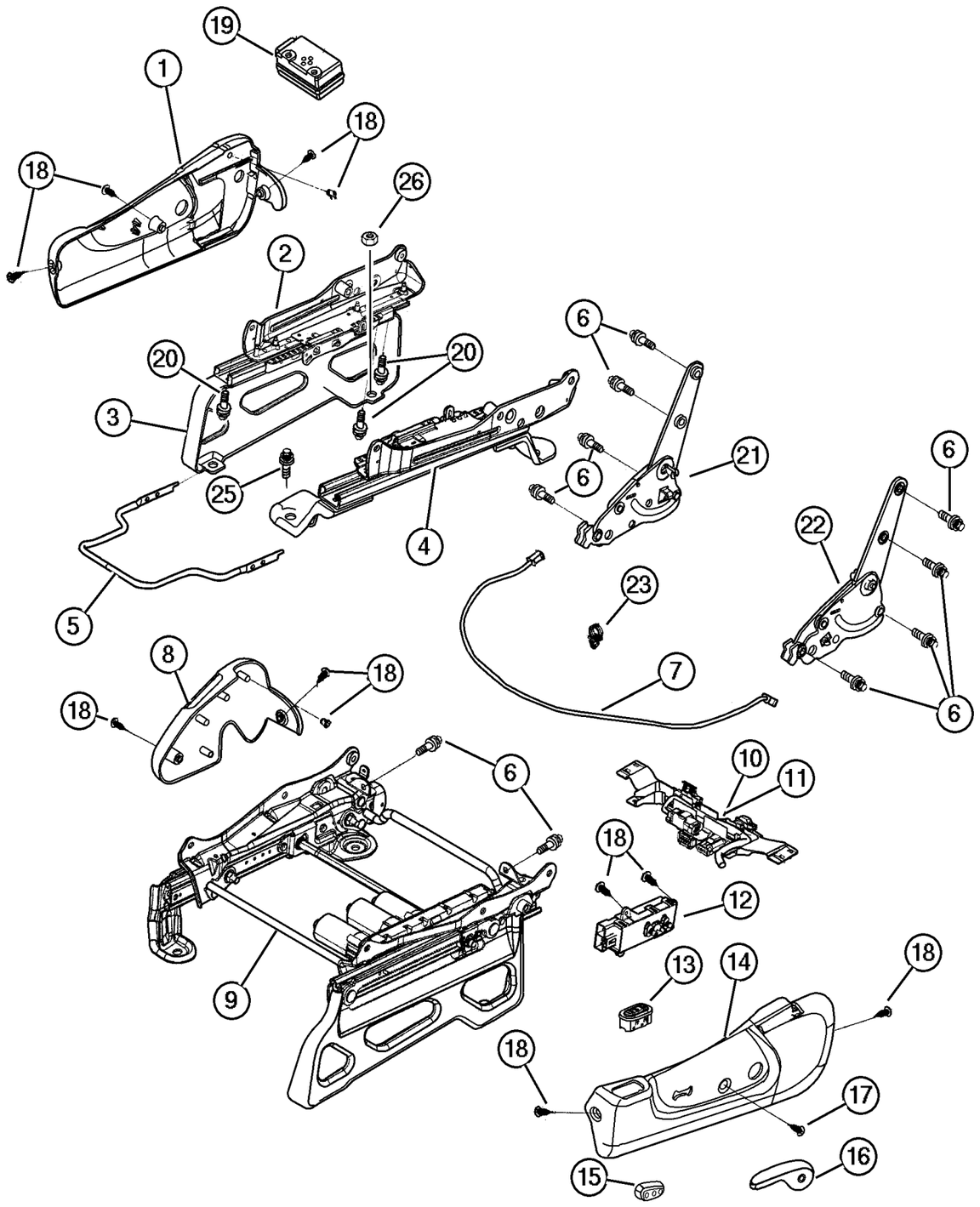

ITEM	PART NUMBER	QTY	LINE	SERIES	BODY	ENGINE	TRANS	TRIM	DESCRIPTION
		1						K7	Right,Inboard
23									CLIP, Cable
	5072 013AA	4	J, T					DL	
		4	J, U					DL	
		4						E7	
		1	J, T					H5	
		4						K7	
		4						L5	
		4	J, T					M5	
		4	J, T					XJ	
		4	J, U					XJ	
-24									WIRING, Seat Belt Jumper
	5072 109AA	2						E7	
		1	J, T					H5	
		2						K7	
		2						L5	
		2	J, T					M5	
		1	J, U					XJ	
		1	J, T					XJ	
25	6506 791AA	6							SCREW, Seat
26	6507 170AA	2							BOLT, Seat
-27	4754 806	1	U						BRACKET, Attaches Flare to Front Outboard Riser, Japan Only

JEEP LIBERTY (KJ)

SERIES	LINE	BODY	ENGINE	TRANSMISSION
P = Limited	J = LHD (4WD)	74 = 4 Dr. (104.3 WB)	ED1, ED0 = 2.4L Power Tech	DDK = 5 Speed HDManual
H = Sport	U = RHD (4WD)		EKG, EK0 = 3.7L Power Tech	DDD = 5 Speed HD Manual
M = Renegade	T = LHD (2WD)		ENJ = 2.5L 4Cyl Turbo Diesel	DG4,DGQ = Multi-Speed Auto
			ENR = 2.8L 4Cyl Turbo Diesel	DG6 = 4 Speed Auto Transm
			EN0 = 4Cyl Turbo Diesel	DG0 = All Automatic Transm
				DBB = All Manual Transm

Swing Gate Trim Panel
Figure IKJ-1010

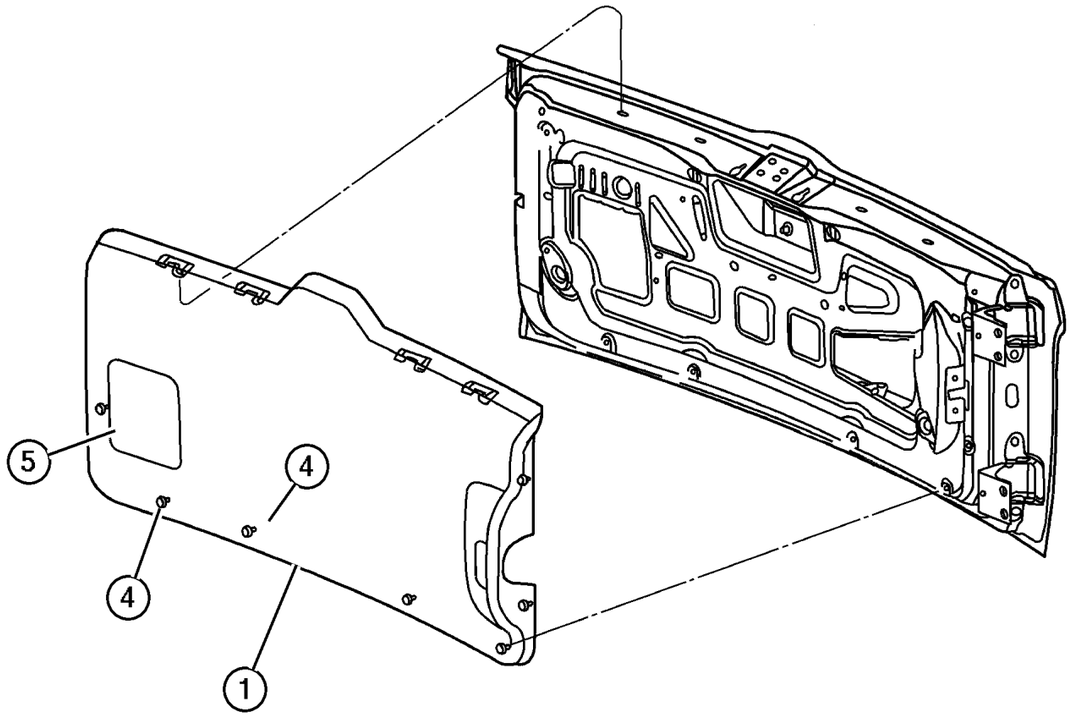

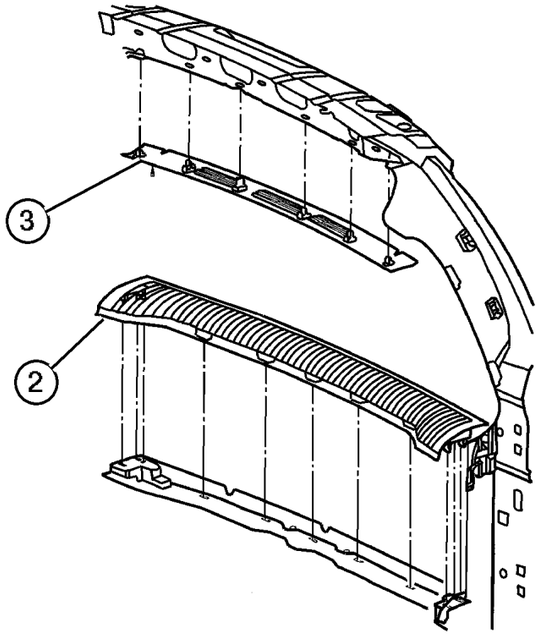

ITEM	PART NUMBER	QTY	LINE	SERIES	BODY	ENGINE	TRANS	TRIM	DESCRIPTION
1									PANEL, Liftgate Lower
	5GE89 WL5AH	1							[L2, L5]
	5GE89 XDVAG	1							[D2, DV]
2									PLATE, Liftgate Scuff, Lower
	5GE73 WL5AJ	1							[L2, L5]
	5GE73 XDVAJ	1							[D2, DV]
3									MOLDING, Headliner
	5GP80 WL5AF	1							[L2, L5]
	5GP80 XDVAF	1							[D2, DV]
4	6506 311AA	9							RETAINER, Trim Panel
5									PANEL, Liftgate Glass Latch
	WZ20 WL5AA	1							[L2, L5]
	WZ20 XDVAA	1							[D2, DV]

JEEP LIBERTY (KJ)

SERIES	LINE	BODY	ENGINE	TRANSMISSION
P = Limited	J = LHD (4WD)	74 = 4 Dr. (104.3 WB)	ED1, ED0 = 2.4L Power Tech	DDK = 5 Speed HDManual
H = Sport	U = RHD (4WD)		EKG, EK0 = 3.7L Power Tech	DDD = 5 Speed HD Manual
M = Renegade	T = LHD (2WD)		ENJ = 2.5L 4Cyl Turbo Diesel	DG4,DGQ = Multi-Speed Auto
			ENR = 2.8L 4Cyl Turbo Diesel	DG6 = 4 Speed Auto Transm
			EN0 = 4Cyl Turbo Diesel	DG0 = All Automatic Transm
				DBB = All Manual Transm

AR = Use as required - = Non illustrated part # = New this model year **June 3, 2003**

« RETURN TO GROUP INDEX

Group – SKJ

Body Sheet Metal Except Doors

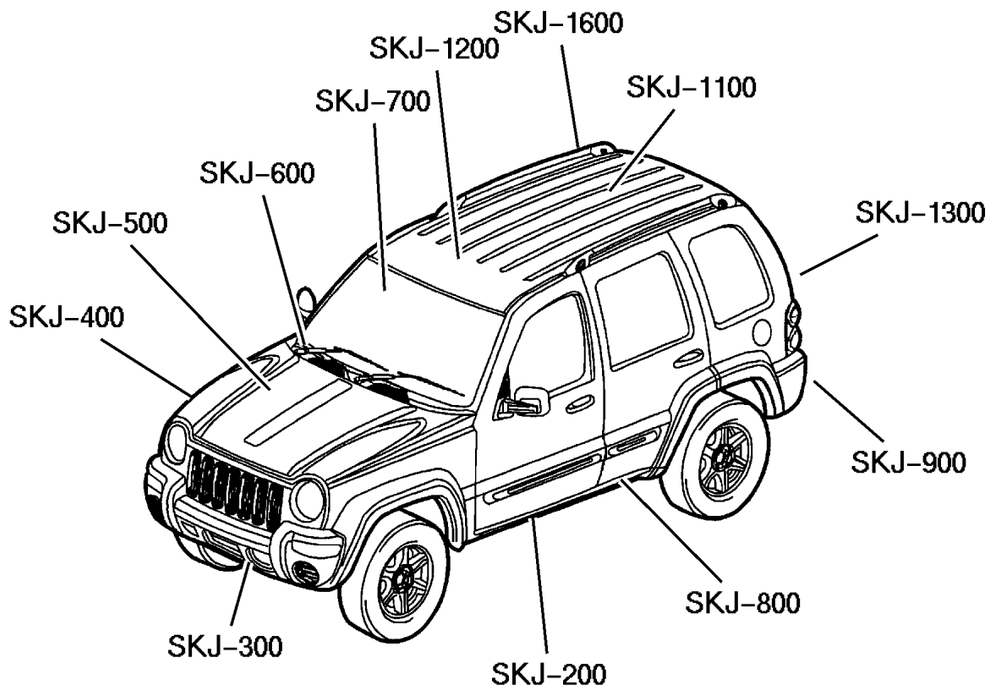

SKJ–200 Floor Pans	SKJ–300 Plugs	SKJ–400 Front Fenders	SKJ–500 Hood & Hood Release
SKJ–600 Cowl and Dash Panel	SKJ–700 Glass and Rear View Mirror	SKJ–800 Aperture Panel	SKJ–900 Quarter Panel and Pillar

Group – SKJ

Body Sheet Metal Except Doors

SKJ–1100 Roof Panels	SKJ–1200 Sunroof	SKJ–1300 Liftgate Panel	SKJ–1600 Luggage Rack

GROUP SKJ - Body Sheet Metal Except Doors

Illustration Title	Group-Fig. No.
Floor Pans	
Front Floor Pan	Fig. SKJ-210
Rear Floor Pan	Fig. SKJ-220
Plates, Underbody Skid	Fig. SKJ-230
Plugs	
Plugs	Fig. SKJ-310
Front Fenders	
Front Fender	Fig. SKJ-410
Hood & Hood Release	
Hood, Latch and Hinges	Fig. SKJ-510
Cowl and Dash Panel	
Cowl and Dash Panel	Fig. SKJ-610
Glass and Rear View Mirror	
Windshield, Quarter Window, Backlite and Mirror	Fig. SKJ-710
Aperture Panel	
Panels, Body Side	Fig. SKJ-810
Quarter Panel and Pillar	
Panels, Rear Quarter	Fig. SKJ-910
Fuel Filler Housing and Door	Fig. SKJ-920
Roof Panels	
Roof Panel	Fig. SKJ-1110
Sunroof	
Sunroof	Fig. SKJ-1210
Liftgate Panel	
Swing Gate, Latch, and Hinges	Fig. SKJ-1310
Luggage Rack	
Luggage Rack	Fig. SKJ-1610

Front Floor Pan
Figure SKJ-210

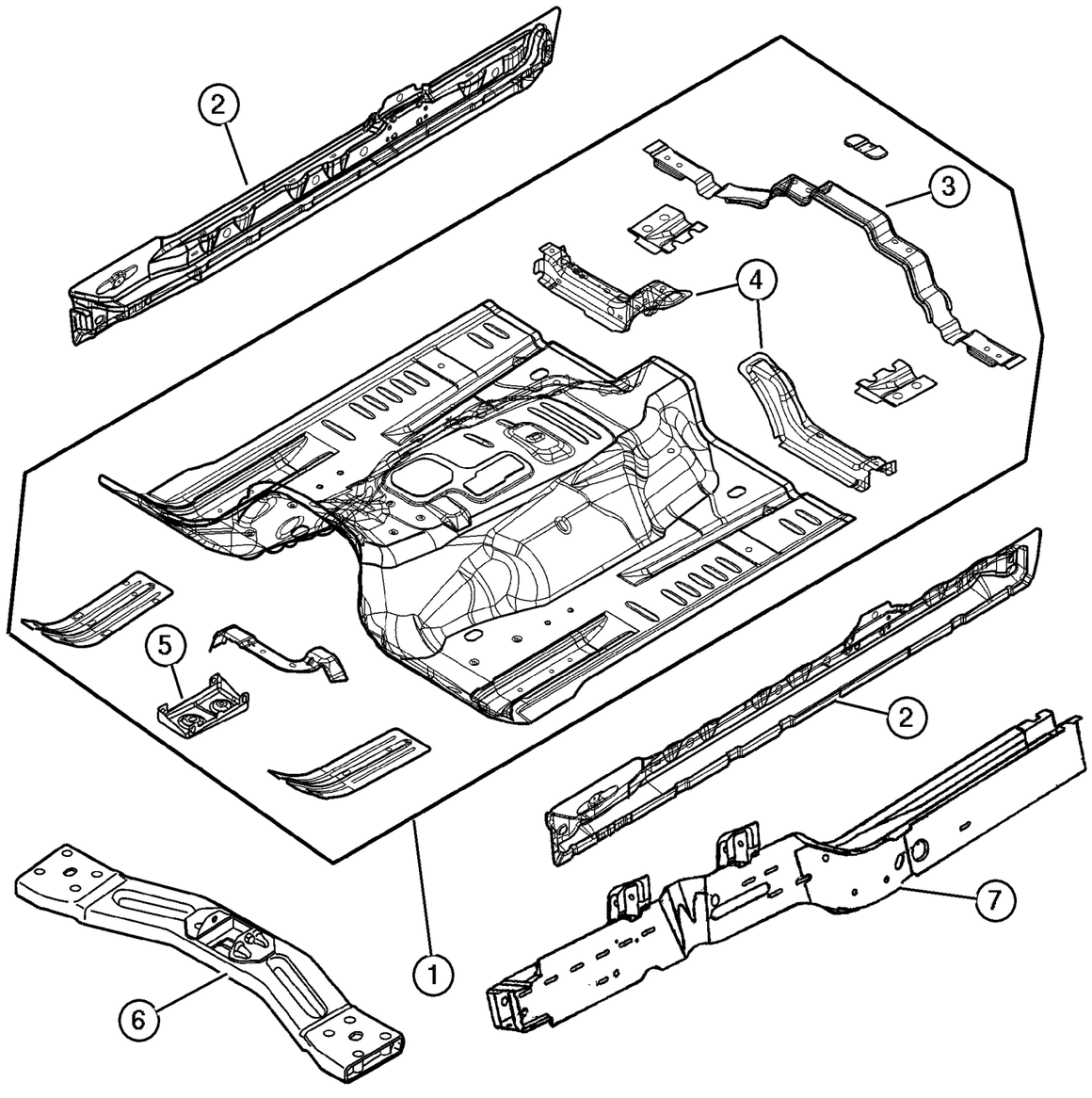

ITEM	PART NUMBER	QTY	LINE	SERIES	BODY	ENGINE	TRANS	TRIM	DESCRIPTION
1	55176 800AC	1							PAN, Floor
2									SILL, Body Side
	55176 878AC	1							Right
	55176 879AC	1							Left
3	55360 060AB	1							CROSSMEMBER, Front Seat Retention, Rear
4	55360 058AA	2							CROSSMEMBER, Front Seat Retention
5	55360 352AB	1							BRACKET, Air Bag Control Module
6									CROSSMEMBER, Transmission
	52059 323AC	1							Diesel
	52058 643AG	1							
7									PANEL, Sill
	5072 846AC	1							Right
	5072 847AC	1							Left

JEEP LIBERTY (KJ)

SERIES	LINE	BODY	ENGINE	TRANSMISSION
P = Limited	J = LHD (4WD)	74 = 4 Dr. (104.3 WB)	ED1, ED0 = 2.4L Power Tech	DDK = 5 Speed HDManual
H = Sport	U = RHD (4WD)		EKG, EK0 = 3.7L Power Tech	DDD = 5 Speed HD Manual
M = Renegade	T = LHD (2WD)		ENJ = 2.5L 4Cyl Turbo Diesel	DG4,DGQ = Multi-Speed Auto
			ENR = 2.8L 4Cyl Turbo Diesel	DG6 = 4 Speed Auto Transm
			EN0 = 4Cyl Turbo Diesel	DG0 = All Automatic Transm
				DBB = All Manual Transm

Rear Floor Pan
Figure SKJ-220

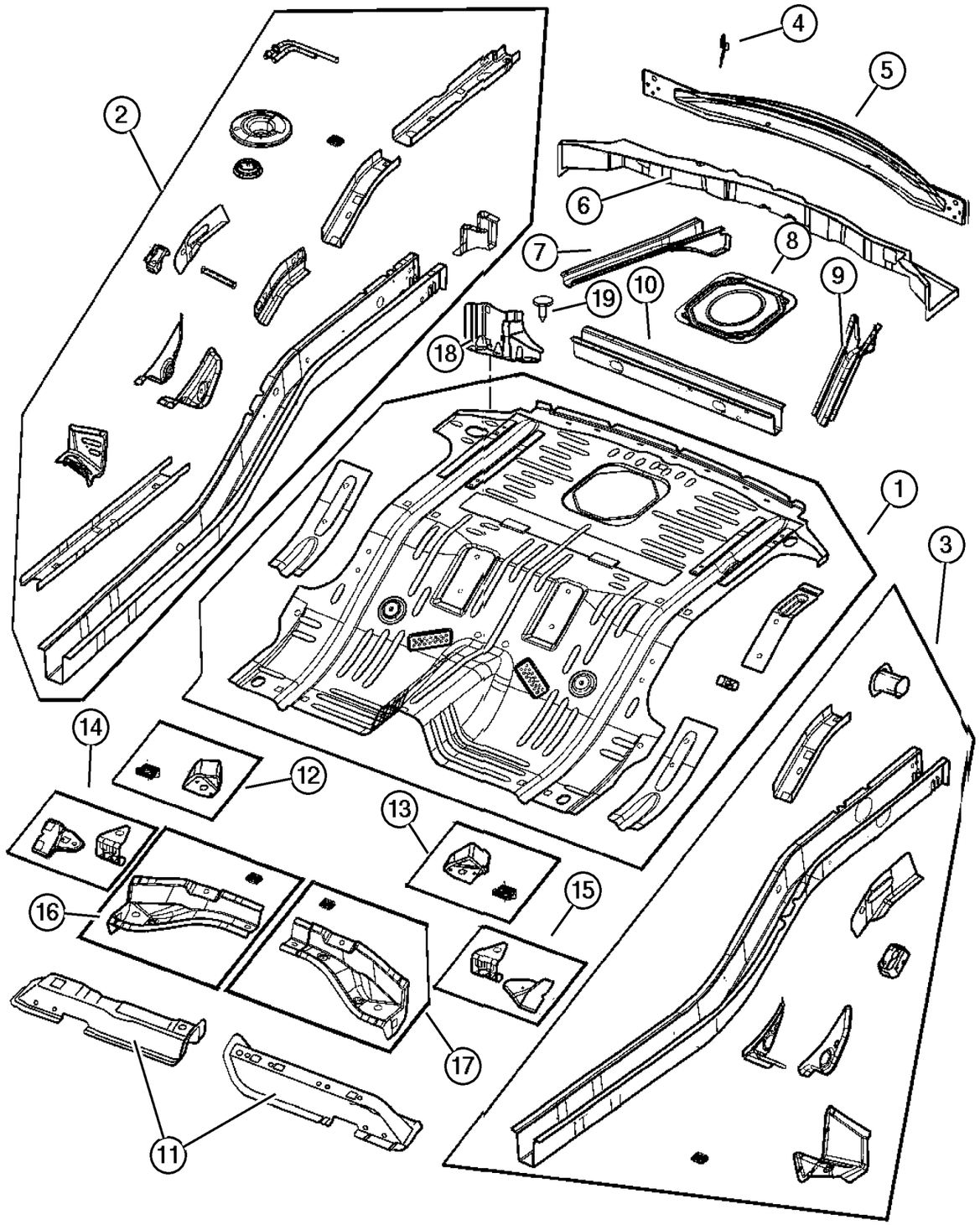

ITEM	PART NUMBER	QTY	LINE	SERIES	BODY	ENGINE	TRANS	TRIM	DESCRIPTION
1	55360 015AE	1							PAN, Floor
2	5080 850AA	1							SILL, Rear, Right
3	5080 851AA	1							SILL, Rear, Left
4									BAFFLE, Air
	55360 260AA	1							Right
	55360 261AA	1							Left
5	55360 371AA	1							REINFORCEMENT, Liftgate Opening
6	55176 846AA	1							CROSSMEMBER, Floor Pan
7	55360 064AB	1							SUPPORT, Fuel Tank
8	55360 187AA	1							DOOR, Fuel Fill
9	55360 387AB	1							SUPPORT, Fuel Tank
10	55360 118AB	1							CROSSMEMBER, Floor Pan
11									CROSSMEMBER, Floor Pan
	55360 062AA	1							Right
	55360 063AA	1							Left
12	5073 062AA	1							REINFORCEMENT, Rear Seat, Right
13	5073 063AA	1							REINFORCEMENT, Rear Seat, Left
14	5073 060AA	1							BRACKET, Control Arm, Right
15	5073 061AA	1							BRACKET, Control Arm, Left
16	5073 058AA	1							CROSSMEMBER, Rear Floor, Right
17	5073 059AA	1							CROSSMEMBER, Rear Floor, Left
18									GUSSET, Side Member
	55360 368AC	1							Right
	55360 369AC	1							Left
19	6507 345AA	4							PIN, Push

JEEP LIBERTY (KJ)

SERIES	LINE	BODY	ENGINE	TRANSMISSION
P = Limited	J = LHD (4WD)	74 = 4 Dr. (104.3 WB)	ED1, ED0 = 2.4L Power Tech	DDK = 5 Speed HDManual
H = Sport	U = RHD (4WD)		EKG, EK0 = 3.7L Power Tech	DDD = 5 Speed HD Manual
M = Renegade	T = LHD (2WD)		ENJ = 2.5L 4Cyl Turbo Diesel	DG4,DGQ = Multi-Speed Auto
			ENR = 2.8L 4Cyl Turbo Diesel	DG6 = 4 Speed Auto Transm
			EN0 = 4Cyl Turbo Diesel	DG0 = All Automatic Transm
				DBB = All Manual Transm

AR = Use as required - = Non illustrated part # = New this model year

June 3, 2003

« RETURN TO GROUP INDEX

Plates, Underbody Skid
Figure SKJ-230

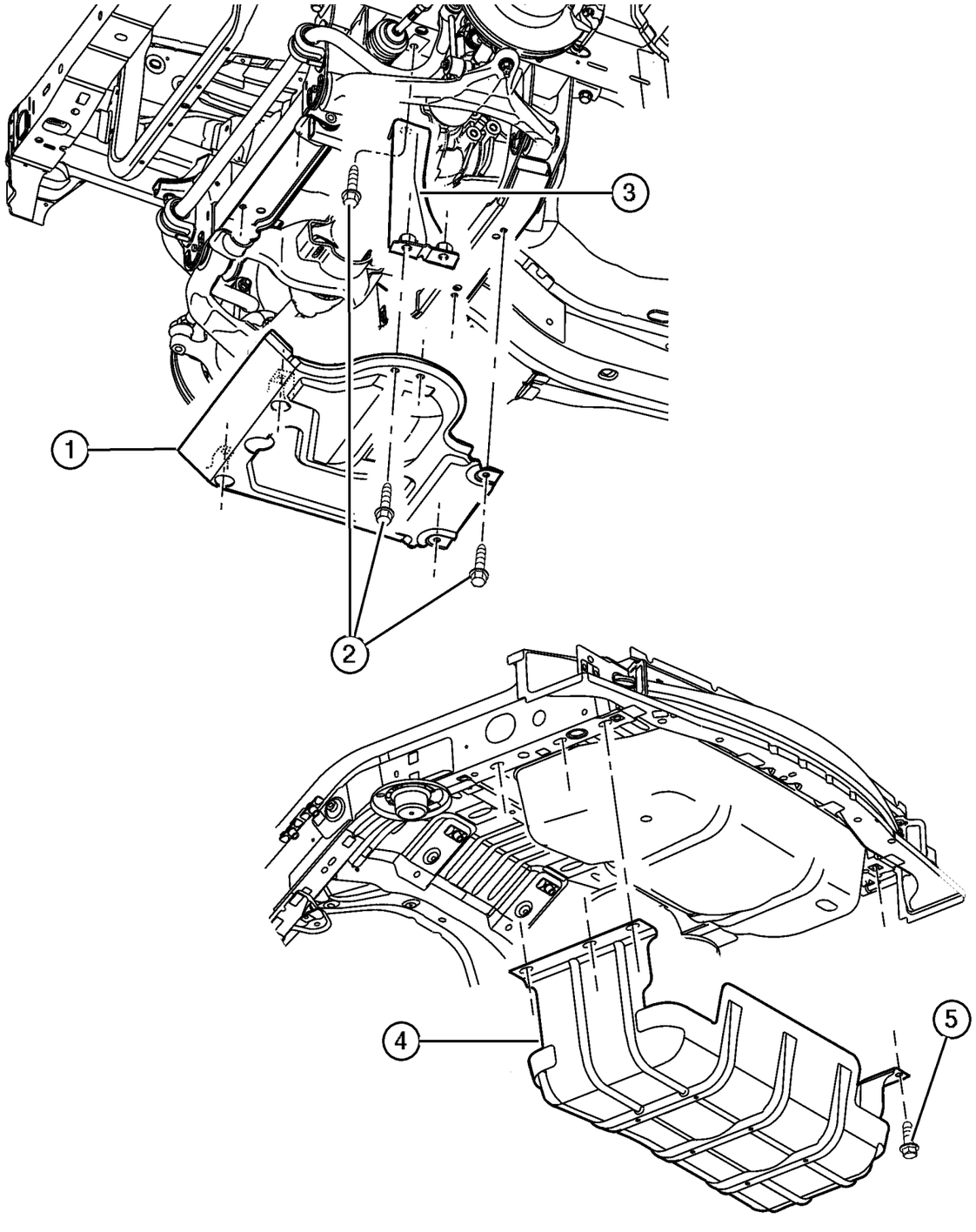

ITEM	PART NUMBER	QTY	LINE	SERIES	BODY	ENGINE	TRANS	TRIM	DESCRIPTION
1									SKID PLATE, Front
	52128 539AC	1	J, U						6 Cylinder
	52128 540AC	1	J, U						4 Cylinder
2									SCREW, M10x1.5x30, (NOT SERVICED) (Not Serviced)
3									BRACKET, Skid Plate
	52128 544AA	1	J, U						Left
	52128 545AA	1	J, U						Right
4	52100 332AF	1							PLATE, Skid
5	6502 557	6							BOLT, Hex Flange Head, M12x1.75x40

JEEP LIBERTY (KJ)

SERIES	LINE	BODY	ENGINE	TRANSMISSION
P = Limited	J = LHD (4WD)	74 = 4 Dr. (104.3 WB)	ED1, ED0 = 2.4L Power Tech	DDK = 5 Speed HDManual
H = Sport	U = RHD (4WD)		EKG, EK0 = 3.7L Power Tech	DDD = 5 Speed HD Manual
M = Renegade	T = LHD (2WD)		ENJ = 2.5L 4Cyl Turbo Diesel	DG4,DGQ = Multi-Speed Auto
			ENR = 2.8L 4Cyl Turbo Diesel	DG6 = 4 Speed Auto Transm
			EN0 = 4Cyl Turbo Diesel	DG0 = All Automatic Transm
				DBB = All Manual Transm

AR = Use as required - = Non illustrated part # = New this model year **June 3, 2003**

« RETURN TO GROUP INDEX

Plugs
Figure SKJ-310

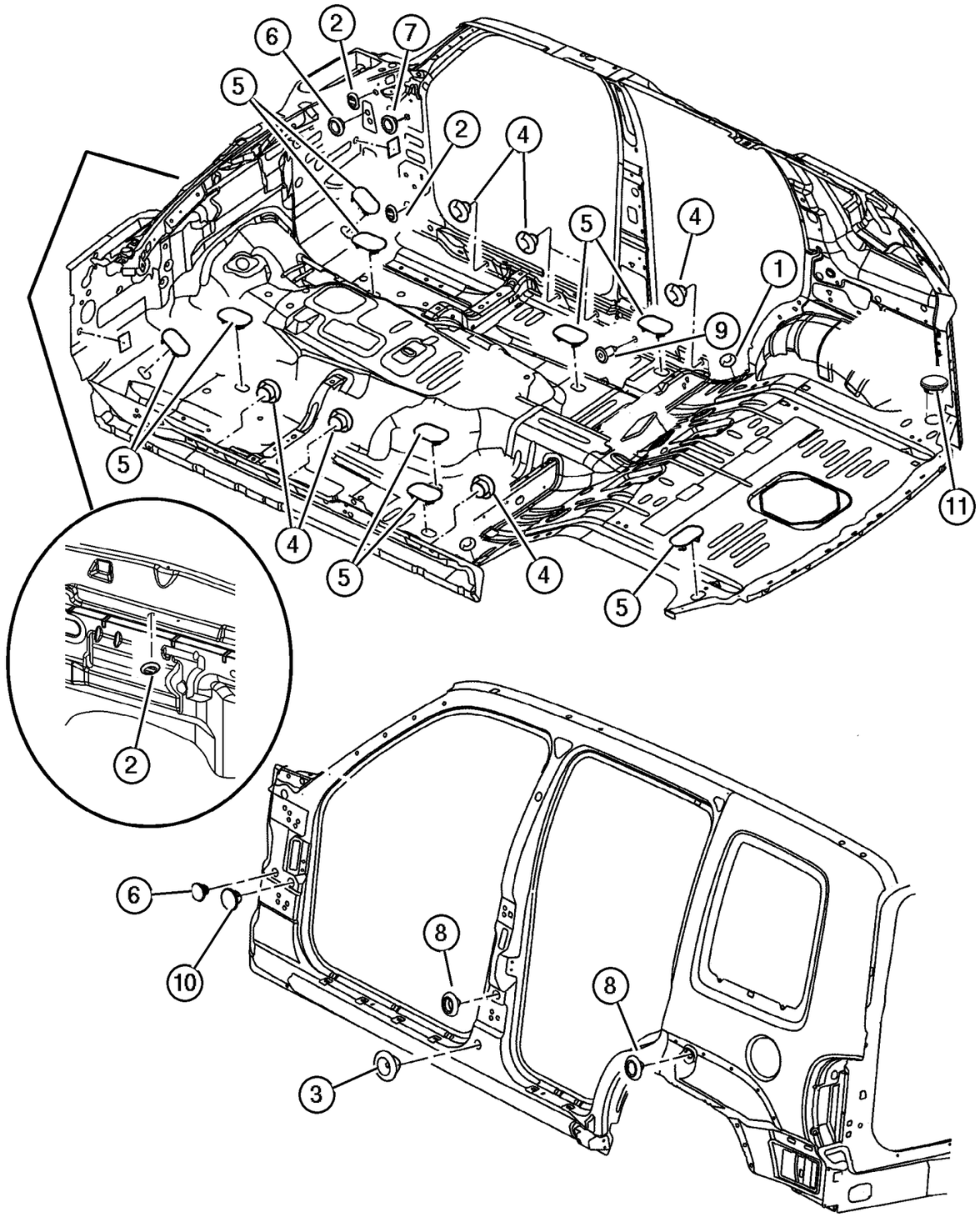

ITEM	PART NUMBER	QTY	LINE	SERIES	BODY	ENGINE	TRANS	TRIM	DESCRIPTION
1	4780 615AB	2							PLUG, Body, .75 Diameter, Rear Floor Pan
2	4716 933	2							PLUG, Body Side Aperture
3	4780 194	2							PLUG, Body Side Outer
4	4780 615AB	8							PLUG, Body, .75 Diameter
5	4646 971	6							PLUG, Floor Pan
6	55136 859AA	2							PLUG, Plastic, Expandable
7	4780 615AB	2							PLUG, Body, .75 Diameter
8	55176 729AA	4							PLUG, Cowl Side
9	3502 6594	6							PLUG, Floor Pan, .187 Rubber
10									PLUG, Plastic Expandable, 25mm, (NOT SERVICED) (Not Serviced)
11	56010 048AB	1							PLUG

JEEP LIBERTY (KJ)

SERIES	LINE	BODY	ENGINE	TRANSMISSION
P = Limited	J = LHD (4WD)	74 = 4 Dr. (104.3 WB)	ED1, ED0 = 2.4L Power Tech	DDK = 5 Speed HDManual
H = Sport	U = RHD (4WD)		EKG, EK0 = 3.7L Power Tech	DDD = 5 Speed HD Manual
M = Renegade	T = LHD (2WD)		ENJ = 2.5L 4Cyl Turbo Diesel	DG4,DGQ = Multi-Speed Auto
			ENR = 2.8L 4Cyl Turbo Diesel	DG6 = 4 Speed Auto Transm
			EN0 = 4Cyl Turbo Diesel	DG0 = All Automatic Transm
				DBB = All Manual Transm

AR = Use as required - = Non illustrated part # = New this model year **June 3, 2003**

« RETURN TO GROUP INDEX

Front Fender
Figure SKJ-410

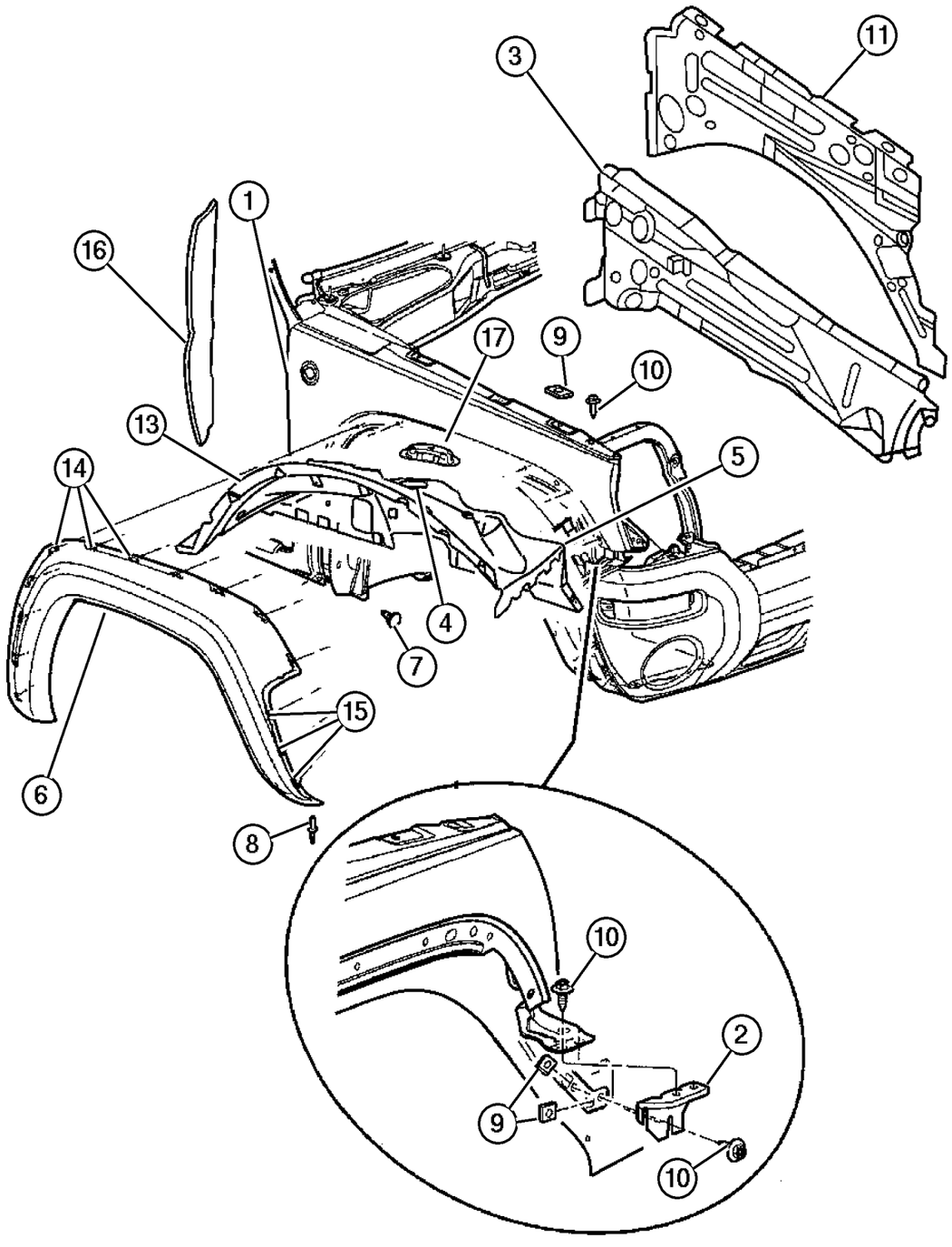

ITEM	PART NUMBER	QTY	LINE	SERIES	BODY	ENGINE	TRANS	TRIM	DESCRIPTION
1									FENDER, Front
	55177 100AD	1							Right
	55177 101AD	1							Left
2									BRACKET, Fender
	55360 236AB	1							Right
	55360 237AB	1							Left
3									REINFORCEMENT, Fender
	55177 414AD	1							Right
	55177 415AD	1							Left
4									LINER, Front Fender
	55360 144AG	1							Right
	55360 145AG	1							Left
5	55155 988AB	2							BRACKET, Fender Applique, Front
6									APPLIQUE, Fender Wheel Opening
	5GH00 TZZAE	1							[K5], Paint as Required, Right
	5HV45 WS2AC	1							[K4S], Left
	5HV46 DX8AC	1							[K4X], Right
	5HV45 DX8AC	1							[K4X], Left
	5GH01 TZZAE	1							[K5], Paint as Required, Left
	5GG96 HS5AF	1							[K3A], Right
	5GG97 HS5AF	1							[K3A], Left
	5HV46 AFMAC	1							[K4C], Right
	5HV45 AFMAC	1							[K4C], Left
	5HV46 AJCAC	1							[K4K], Right
	5HV45 AJCAC	1							[K4K], Left
	5HV46 WS2AC	1							[K4S], Right
	5HV45 AJCAC	1							[K4K], Left
7	6036 155AA	3							PIN, Push
8	6506 007AA	8							RIVET
9	6504 118	6							U-NUT, M6 x 1.00, M6x1.00
10	6505 903AA	2							SCREW AND WASHER, Self Tapping, M6x1x22
11									PANEL, Fender, Inner
	55177 016AC	1							Right
	55177 017AC	1							Left
-12									BRACKET, Ballstud
	55360 428AB	1							Right
	55360 429AB	1							Left
13									WHEELHOUSE, Front Inner
	55176 858AI	1							Right
	55176 859AK	1							Left
14	55156 447AB	11							PIN, Push
15	55156 429AA	3							RETAINER, Applique

JEEP LIBERTY (KJ)

SERIES	LINE	BODY	ENGINE	TRANSMISSION
P = Limited	J = LHD (4WD)	74 = 4 Dr. (104.3 WB)	ED1, ED0 = 2.4L Power Tech	DDK = 5 Speed HDManual
H = Sport	U = RHD (4WD)		EKG, EK0 = 3.7L Power Tech	DDD = 5 Speed HD Manual
M = Renegade	T = LHD (2WD)		ENJ = 2.5L 4Cyl Turbo Diesel	DG4,DGQ = Multi-Speed Auto
			ENR = 2.8L 4Cyl Turbo Diesel	DG6 = 4 Speed Auto Transm
			EN0 = 4Cyl Turbo Diesel	DG0 = All Automatic Transm
				DBB = All Manual Transm

AR = Use as required - = Non illustrated part # = New this model year **June 3, 2003**

« RETURN TO GROUP INDEX »

Front Fender
Figure SKJ-410

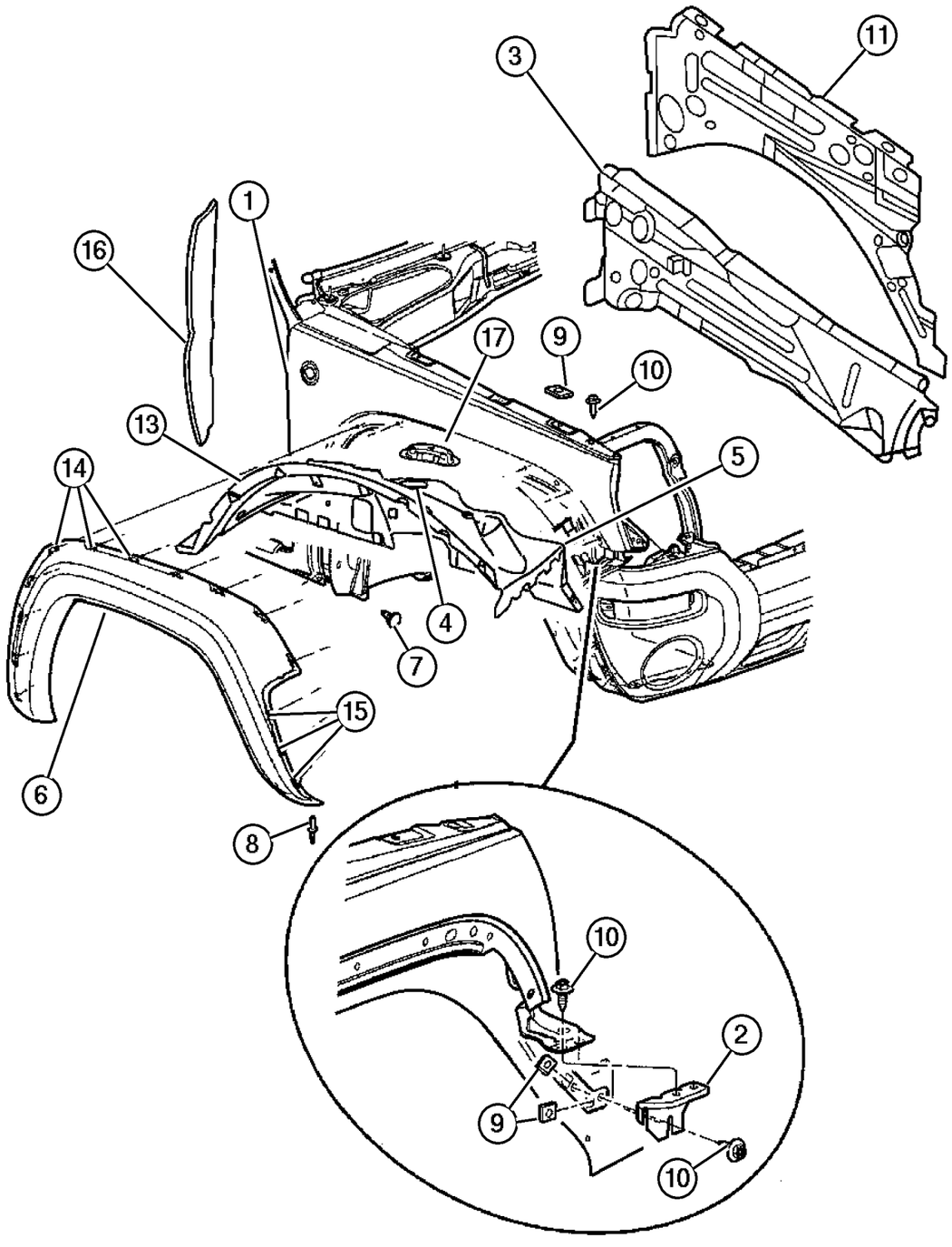

ITEM	PART NUMBER	QTY	LINE	SERIES	BODY	ENGINE	TRANS	TRIM	DESCRIPTION
16	55235 932AB	2							SEAL, Fender To Cowl
17	55360 201AC	1							CUP, Jounce Bumper

JEEP LIBERTY (KJ)

SERIES	LINE	BODY	ENGINE	TRANSMISSION
P = Limited	J = LHD (4WD)	74 = 4 Dr. (104.3 WB)	ED1, ED0 = 2.4L Power Tech	DDK = 5 Speed HDManual
H = Sport	U = RHD (4WD)		EKG, EK0 = 3.7L Power Tech	DDD = 5 Speed HD Manual
M = Renegade	T = LHD (2WD)		ENJ = 2.5L 4Cyl Turbo Diesel	DG4,DGQ = Multi-Speed Auto
			ENR = 2.8L 4Cyl Turbo Diesel	DG6 = 4 Speed Auto Transm
			EN0 = 4Cyl Turbo Diesel	DG0 = All Automatic Transm
				DBB = All Manual Transm

Hood, Latch and Hinges
Figure SKJ-510

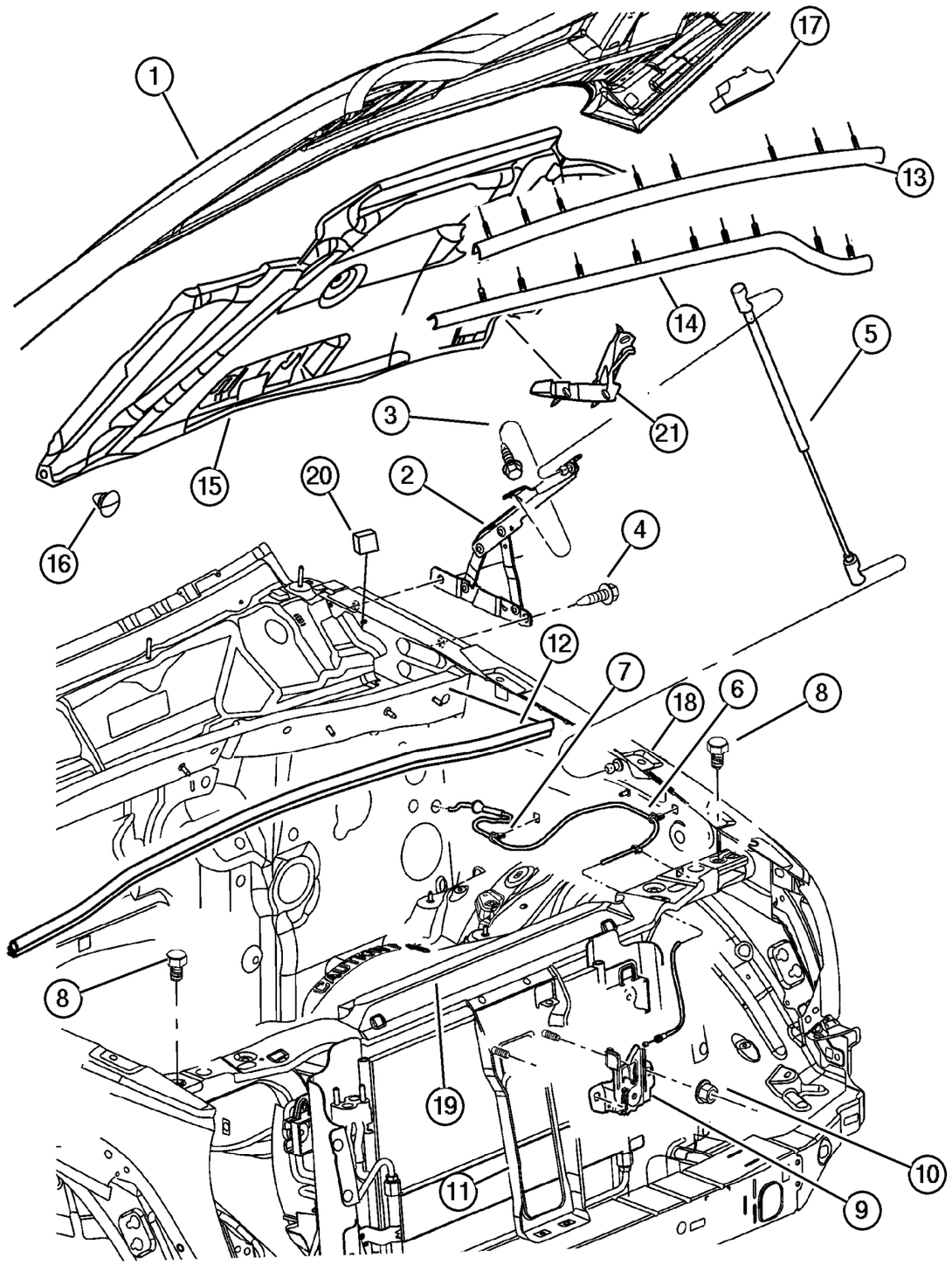

ITEM	PART NUMBER	QTY	LINE	SERIES	BODY	ENGINE	TRANS	TRIM	DESCRIPTION
1	55177 200AC	1							HOOD
2									HINGE, Hood
	55176 928AA	1							Right
	55176 929AA	1							Left
3	6505 907AA	4							SCREW, Self Tapping, M6x1x15
4	6505 940AA	4							SCREW, M8-1.25
5	55360 411AA	2							PROP, Hood
6	55360 280AA	1							CABLE, Hood Release
7	6503 794	3							CLIP, M6.3x11.2
8	4696 592	2							BUMPER, Hood
9	55176 926AB	1							LATCH, Hood
10	6503 102	2							NUT AND WASHER, Hex Nut-Coned Washer, M6 x 1.00
11	55360 229AB	1							REINFORCEMENT, Hood Latch
12	55235 927AB	1							SEAL, Hood To Cowl
13	55360 066AC	1							SEAL, Hood To Radiator
14	55360 341AB	1							SEAL, Hood
15	55352 746AE	1							INSULATION, Hood
16	6504 135	8							PIN, Push In, M6.3x15 LG
17	55360 258AB	2							SEAL, Hood To Plenum
18									BRACKET, Ballstud
	55360 428AB	1							Right
	55360 429AB	1							Left
19	55176 763AD	1							CROSSMEMBER, Radiator
20									SEAL, A-Pillar Blocker
	55360 542AD	1							Right
	55360 543AD	1							Left
21	55360 551AC	1							SEAL, Air Inlet

JEEP LIBERTY (KJ)

SERIES	LINE	BODY	ENGINE	TRANSMISSION
P = Limited	J = LHD (4WD)	74 = 4 Dr. (104.3 WB)	ED1, ED0 = 2.4L Power Tech	DDK = 5 Speed HDManual
H = Sport	U = RHD (4WD)		EKG, EK0 = 3.7L Power Tech	DDD = 5 Speed HD Manual
M = Renegade	T = LHD (2WD)		ENJ = 2.5L 4Cyl Turbo Diesel	DG4,DGQ = Multi-Speed Auto
			ENR = 2.8L 4Cyl Turbo Diesel	DG6 = 4 Speed Auto Transm
			EN0 = 4Cyl Turbo Diesel	DG0 = All Automatic Transm
				DBB = All Manual Transm

AR = Use as required - = Non illustrated part # = New this model year

June 3, 2003

« RETURN TO GROUP INDEX

Cowl and Dash Panel
Figure SKJ-610

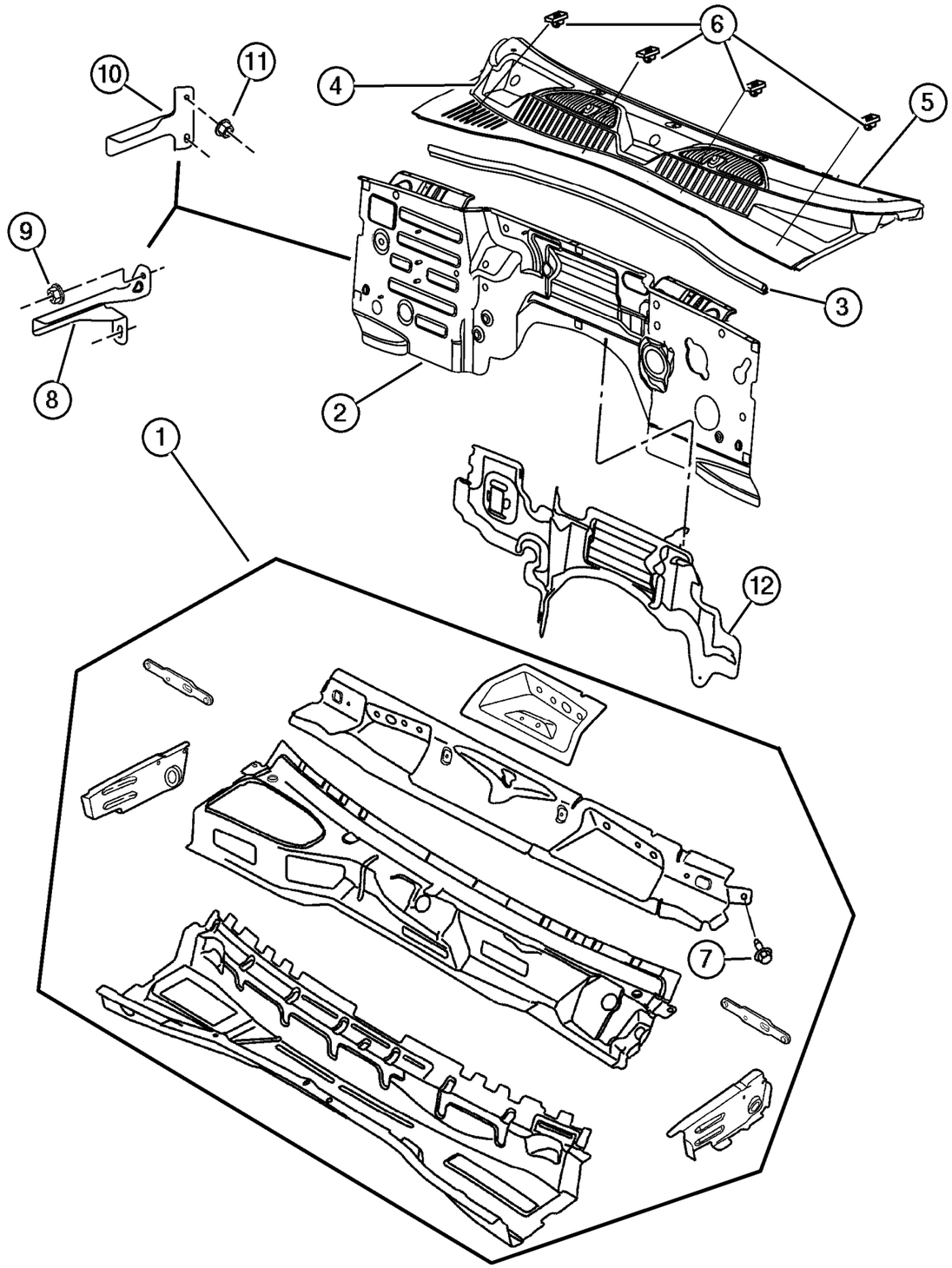

ITEM	PART NUMBER	QTY	LINE	SERIES	BODY	ENGINE	TRANS	TRIM	DESCRIPTION
1									PANEL, Plenum Complete
	55176 767AC	1	J, T						
	55176 776AC	1	U						
2									PANEL, Dash
	55177 300AB	1	J, T						
	55177 350AB	1	U						
3	55235 927AB	1							SEAL, Hood To Cowl
4									COVER, Cowl Grille
	55155 850AG	1	U						
	55155 851AG	1	J, T						
5	5071 165AA	1	J, T						SEAL, Body Side To Cowl Side
6	6501 925	4							PIN, Splash Shield
7	6503 328	4							SCREW, Hex Head, M8x1.25x30
8	55360 516AA	1	J, T						BRACKET, Coolant Recovery Bottle
9	6504 030	2	J, T						NUT AND WASHER, Hex, M6x1
10	55360 203AA	1	U						BRACKET, Coolant Recovery Bottle
11	6101 467	2	U						NUT, Hex Flange, M8x1.25
12									INSULATION, Dash Panel
	55352 847AB	1	J, T						
	55352 720AC	1	U						

JEEP LIBERTY (KJ)

SERIES	LINE	BODY	ENGINE	TRANSMISSION
P = Limited	J = LHD (4WD)	74 = 4 Dr. (104.3 WB)	ED1, ED0 = 2.4L Power Tech	DDK = 5 Speed HDManual
H = Sport	U = RHD (4WD)		EKG, EK0 = 3.7L Power Tech	DDD = 5 Speed HD Manual
M = Renegade	T = LHD (2WD)		ENJ = 2.5L 4Cyl Turbo Diesel	DG4,DGQ = Multi-Speed Auto
			ENR = 2.8L 4Cyl Turbo Diesel	DG6 = 4 Speed Auto Transm
			EN0 = 4Cyl Turbo Diesel	DG0 = All Automatic Transm
				DBB = All Manual Transm

AR = Use as required - = Non illustrated part # = New this model year **June 3, 2003**

« RETURN TO GROUP INDEX

Windshield, Quarter Window, Backlite and Mirror
Figure SKJ-710

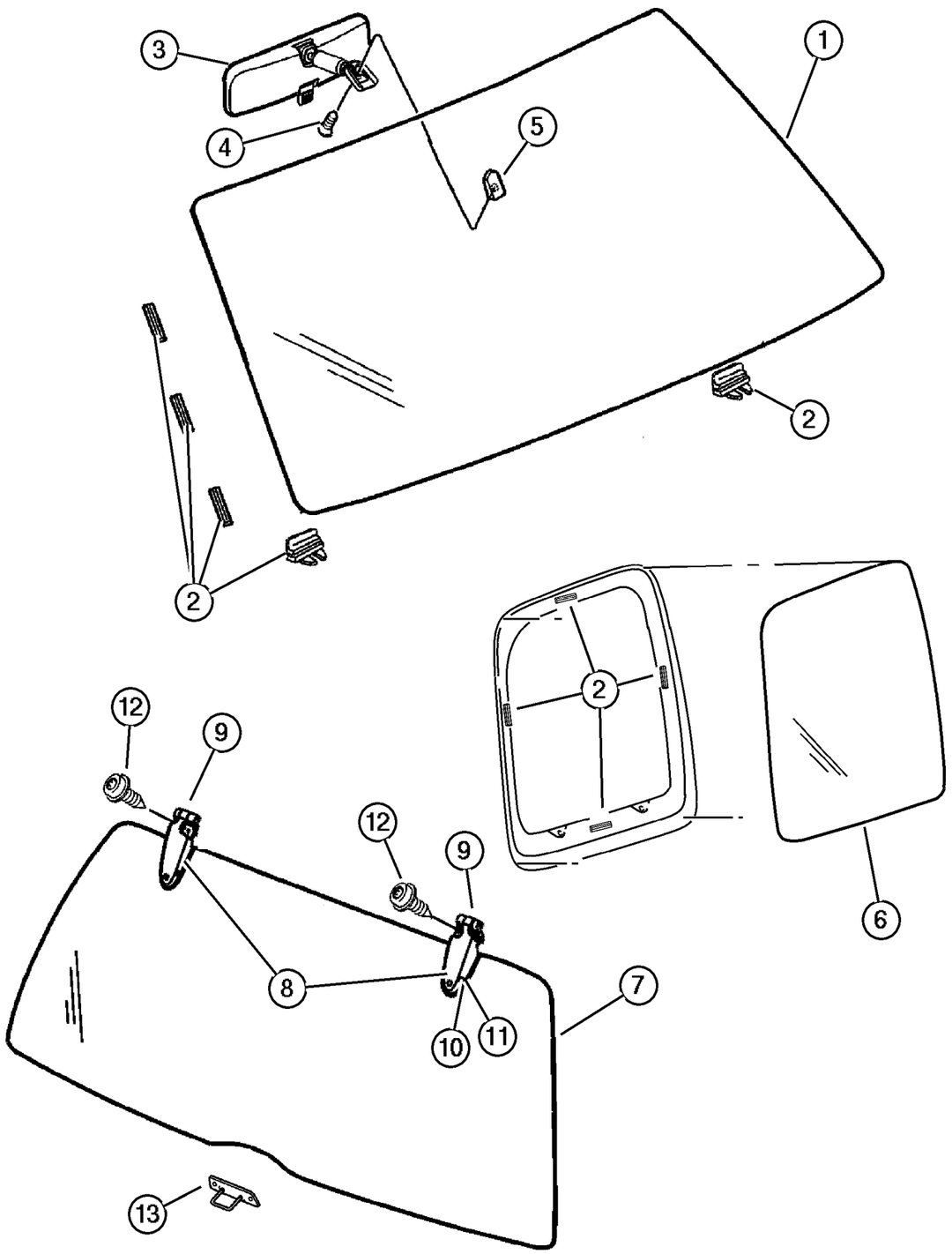

ITEM	PART NUMBER	QTY	LINE	SERIES	BODY	ENGINE	TRANS	TRIM	DESCRIPTION
1	#5093 459AB	1							WINDSHIELD, 30-Lite
2	55360 509AA	4							SPACER, Windshield
3									MIRROR, Inside Rear View
	4805 332AB	1							Prismatic Mirror
	55155 380AB	1							Electrochromic Mirror
4	5073 472AA	1							SCREW
5	5507 6401	1							BUTTON, Rear View Mirror
6									GLASS, Quarter
	55235 921AC	1							Tinted, Left
	55235 920AC	1							Tinted, Right
	55235 923AC	1							Privacy, Left
	55235 922AC	1							Privacy, Right
	55360 054AC	1							Tinted, With Antenna, Export, Right
	55360 056AC	1							Privacy, With Antenna, Export, Right
7									BACKLITE
	55360 340AK	1							Tinted
	55360 342AK	1							Privacy
8									COVER, Hinge
	55360 366AE	1							Right
	55360 367AE	1							Left
9									HINGE, Liftglass
	55360 216AC	1							Right
	55360 217AC	1							Left
10	5529 6025	2							SCREW, Special Head, M6x1x12.7
11	5507 5164	4							GASKET, Liftgate Hinge
12	6505 440AA	4							SCREW, M5x.8x22.50
13	55360 220AB	1							STRIKER, Liftgate Glass
-14	6504 513	2							NUT AND WASHER, Hex Nut-Coned Washer, M6 x 1.00
-15									LABEL, Flipper Glass
	55360 557AA	1							Use With Tinted Glass
	55360 559AA	1							Use With Privacy Glass
	55360 573AA	1							Use With Tinted Glass, French
	55360 582AA	1							Use With Privacy Glass, French
	#55360 583AA	1							Use With Privacy Glass, Arabic
-16	55360 561AA	1							TAPE, Anti-Squeak

JEEP LIBERTY (KJ)

SERIES	LINE	BODY	ENGINE	TRANSMISSION
P = Limited	J = LHD (4WD)	74 = 4 Dr. (104.3 WB)	ED1, ED0 = 2.4L Power Tech	DDK = 5 Speed HDManual
H = Sport	U = RHD (4WD)		EKG, EK0 = 3.7L Power Tech	DDD = 5 Speed HD Manual
M = Renegade	T = LHD (2WD)		ENJ = 2.5L 4Cyl Turbo Diesel	DG4,DGQ = Multi-Speed Auto
			ENR = 2.8L 4Cyl Turbo Diesel	DG6 = 4 Speed Auto Transm
			EN0 = 4Cyl Turbo Diesel	DG0 = All Automatic Transm
				DBB = All Manual Transm

AR = Use as required - = Non illustrated part # = New this model year **June 3, 2003**

« RETURN TO GROUP INDEX

Panels, Body Side
Figure SKJ-810

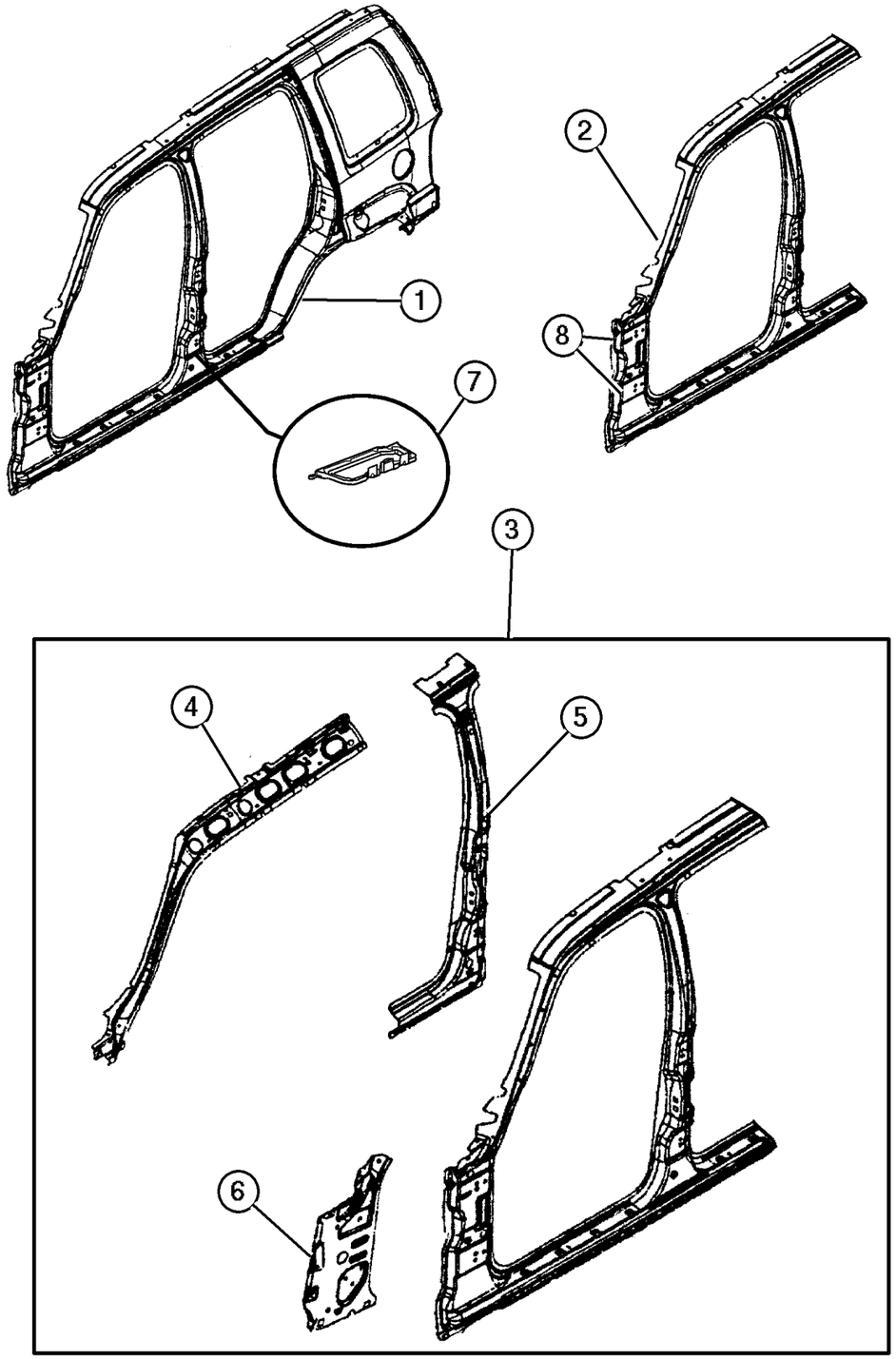

ITEM	PART NUMBER	QTY	LINE	SERIES	BODY	ENGINE	TRANS	TRIM	DESCRIPTION
1									APERTURE, Body Side, Complete
									Outer
	55176 962AC	1							Right
	55176 963AC	1							Left
2									PANEL PACKAGE, Body Side
									Aperture Front, Front Outer Only
	5072 890AA	1							Right
	5072 891AA	1							Left
3									PANEL PACKAGE, Body Side
									Aperture Front, Complete Inner and Outer Front
	5072 888AB	1							Right
	5072 889AB	1							Left
4									REINFORCEMENT, Front Pillar
	55176 960AF	1							Right
	55176 961AF	1							Left
5									REINFORCEMENT, Center Pillar
									Inner
	55176 966AE	1							Right
	55176 967AE	1							Left
6									PANEL, Cowl
	55177 400AC	1							Right
	55177 401AC	1							Left
7									BAFFLE, B Pillar
	55360 196AD	1							Right
	55360 197AD	1							Left
8	55360 233AC	4							TAPPING PLATE, Door Hinge

JEEP LIBERTY (KJ)

SERIES	LINE	BODY	ENGINE	TRANSMISSION
P = Limited	J = LHD (4WD)	74 = 4 Dr. (104.3 WB)	ED1, ED0 = 2.4L Power Tech	DDK = 5 Speed HDManual
H = Sport	U = RHD (4WD)		EKG, EK0 = 3.7L Power Tech	DDD = 5 Speed HD Manual
M = Renegade	T = LHD (2WD)		ENJ = 2.5L 4Cyl Turbo Diesel	DG4,DGQ = Multi-Speed Auto
			ENR = 2.8L 4Cyl Turbo Diesel	DG6 = 4 Speed Auto Transm
			EN0 = 4Cyl Turbo Diesel	DG0 = All Automatic Transm
				DBB = All Manual Transm

Panels, Rear Quarter
Figure SKJ-910

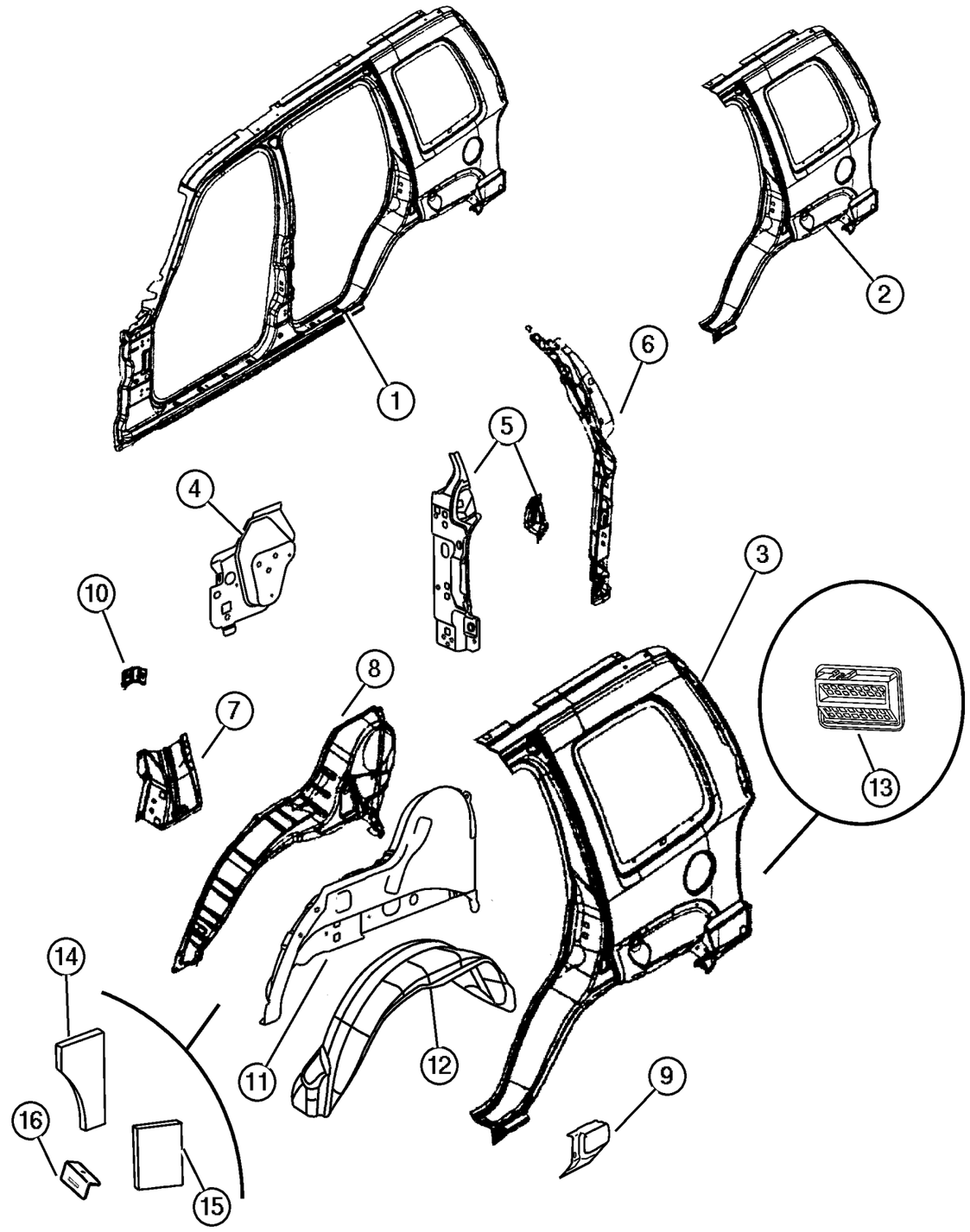

ITEM	PART NUMBER	QTY	LINE	SERIES	BODY	ENGINE	TRANS	TRIM	DESCRIPTION
1									APERTURE, Body Side, Complete Outer
	55176 962AC	1							Right
	55176 963AC	1							Left
2									PANEL, Quarter, Front Outer Only
	5072 884AA	1							Right
	5072 885AA	1							Left
3									PANEL, Quarter, Complete Inner And Outer
	#5072 886AC	1							Right
	#5072 887AC	1							Left
4									REINFORCEMENT, Seat Mount
	55360 298AB	1							Right
	55360 299AB	1							Left
5									PANEL, Taillamp Mounting
	55360 356AB	1							Right
	55360 452AB	1							Left
6									REINFORCEMENT, D Pillar Upper
	55360 354AB	1							Right
	55360 381AB	1							Left
7									REINFORCEMENT, Striker Assembly
	55360 230AD	1							Right
	55360 231AD	1							Left
8									PANEL, Rear Wheelhouse, Outer
	55177 012AC	1							Right
	55177 013AC	1							Left
9									BRACKET, Sill, Molding Mounting
	55360 444AB	1							Right
	55360 445AB	1							Left
10	55360 463AA	2							REINFORCEMENT, Shoulder Belt
11									WHEELHOUSE, Rear Inner
	55360 406AC	1							Right
	55360 407AC	1							Left
12									LINER, Fender Side
	55360 146AD	1							Right
	55360 147AD	1							Left
13	55037 458AB	2							EXHAUSTER, Quarter Panel
14	55352 854AA	1							INSULATION, Side Panel, Right Side,Upper
15	55352 846AA	1							INSULATION, Side Panel, Right Side,Lower

JEEP LIBERTY (KJ)

SERIES	LINE	BODY	ENGINE	TRANSMISSION
P = Limited	J = LHD (4WD)	74 = 4 Dr. (104.3 WB)	ED1, ED0 = 2.4L Power Tech	DDK = 5 Speed HDManual
H = Sport	U = RHD (4WD)		EKG, EK0 = 3.7L Power Tech	DDD = 5 Speed HD Manual
M = Renegade	T = LHD (2WD)		ENJ = 2.5L 4Cyl Turbo Diesel	DG4,DGQ = Multi-Speed Auto
			ENR = 2.8L 4Cyl Turbo Diesel	DG6 = 4 Speed Auto Transm
			EN0 = 4Cyl Turbo Diesel	DG0 = All Automatic Transm
				DBB = All Manual Transm

AR = Use as required - = Non illustrated part # = New this model year **June 3, 2003**

« RETURN TO GROUP INDEX »

Panels, Rear Quarter
Figure SKJ-910

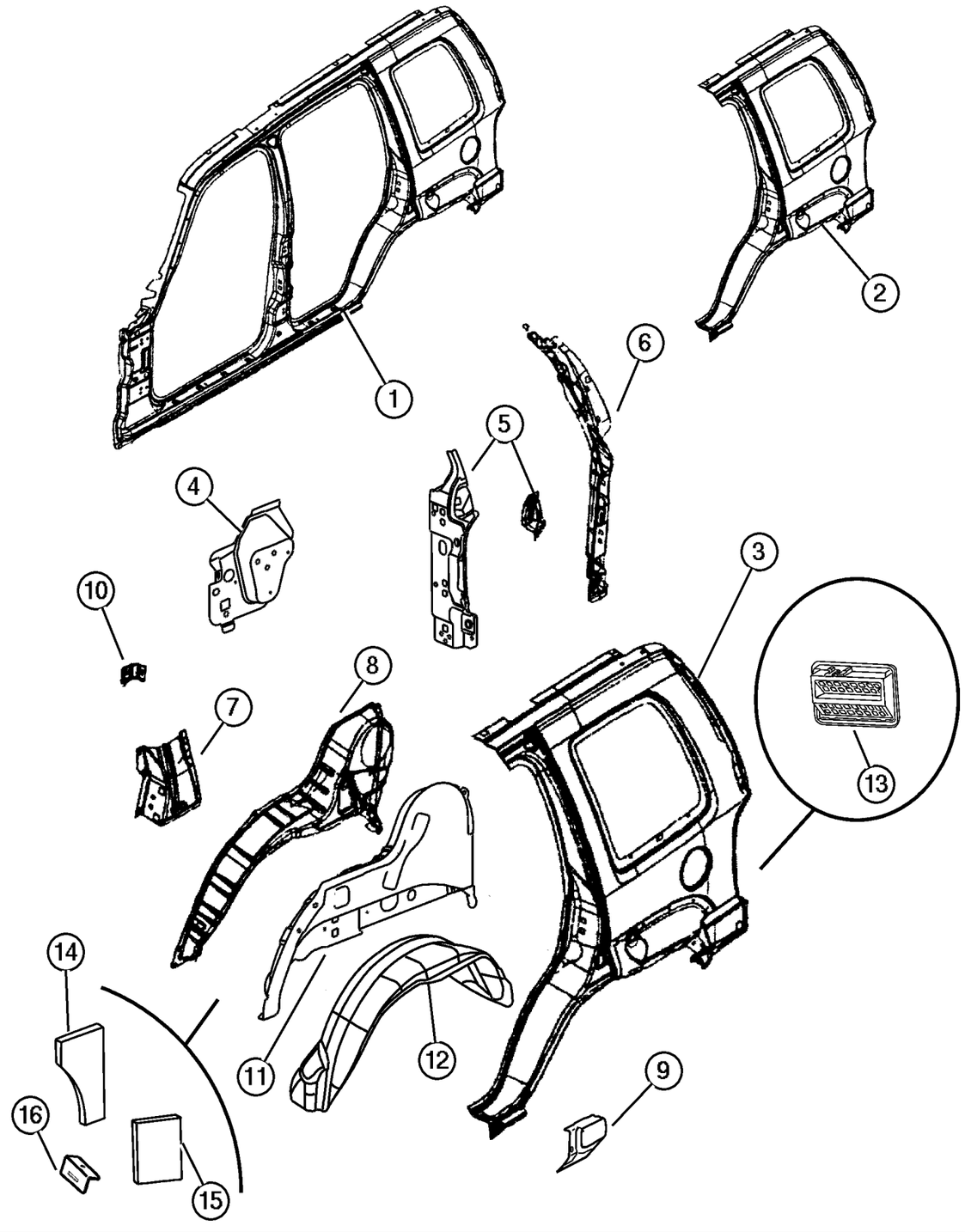

ITEM	PART NUMBER	QTY	LINE	SERIES	BODY	ENGINE	TRANS	TRIM	DESCRIPTION
16	55136 998AA	1							BRACKET, Wheel House

JEEP LIBERTY (KJ)

SERIES	LINE	BODY	ENGINE	TRANSMISSION
P = Limited	J = LHD (4WD)	74 = 4 Dr. (104.3 WB)	ED1, ED0 = 2.4L Power Tech	DDK = 5 Speed HDManual
H = Sport	U = RHD (4WD)		EKG, EK0 = 3.7L Power Tech	DDD = 5 Speed HD Manual
M = Renegade	T = LHD (2WD)		ENJ = 2.5L 4Cyl Turbo Diesel	DG4,DGQ = Multi-Speed Auto
			ENR = 2.8L 4Cyl Turbo Diesel	DG6 = 4 Speed Auto Transm
			EN0 = 4Cyl Turbo Diesel	DG0 = All Automatic Transm
				DBB = All Manual Transm

AR = Use as required - = Non illustrated part # = New this model year

June 3, 2003

« RETURN TO GROUP INDEX

Fuel Filler Housing and Door
Figure SKJ-920

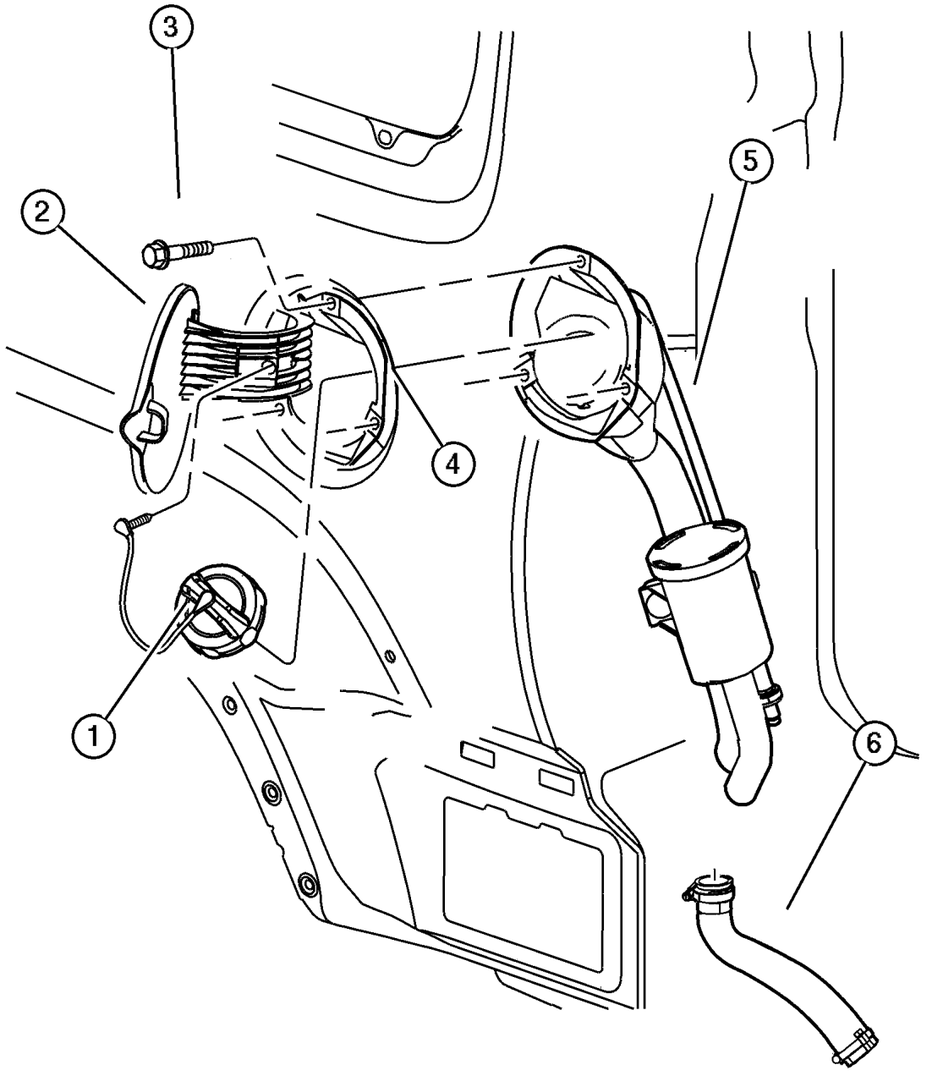

ITEM	PART NUMBER	QTY	LINE	SERIES	BODY	ENGINE	TRANS	TRIM	DESCRIPTION
1	5015 636AB	1							CAP KIT, Fuel Tank Locking
2	4674 991AE	1							DOOR, Fuel Filler Manual Access
3	6035 204	3							SCREW, Tapping, .19-16x.75
4	4716 571AD	1							HOUSING, Fuel Filler
5									TUBE, Fuel Filler
	52100 330AG	1							Export,Diesel
	52100 329AG	1							
6	52100 339AD	1							HOSE, Fuel Filler
-7	4716 532	1							SPRING, Fuel Filler Door

JEEP LIBERTY (KJ)

SERIES	LINE	BODY	ENGINE	TRANSMISSION
P = Limited	J = LHD (4WD)	74 = 4 Dr. (104.3 WB)	ED1, ED0 = 2.4L Power Tech	DDK = 5 Speed HDManual
H = Sport	U = RHD (4WD)		EKG, EK0 = 3.7L Power Tech	DDD = 5 Speed HD Manual
M = Renegade	T = LHD (2WD)		ENJ = 2.5L 4Cyl Turbo Diesel	DG4,DGQ = Multi-Speed Auto
			ENR = 2.8L 4Cyl Turbo Diesel	DG6 = 4 Speed Auto Transm
			EN0 = 4Cyl Turbo Diesel	DG0 = All Automatic Transm
				DBB = All Manual Transm

Roof Panel
Figure SKJ-1110

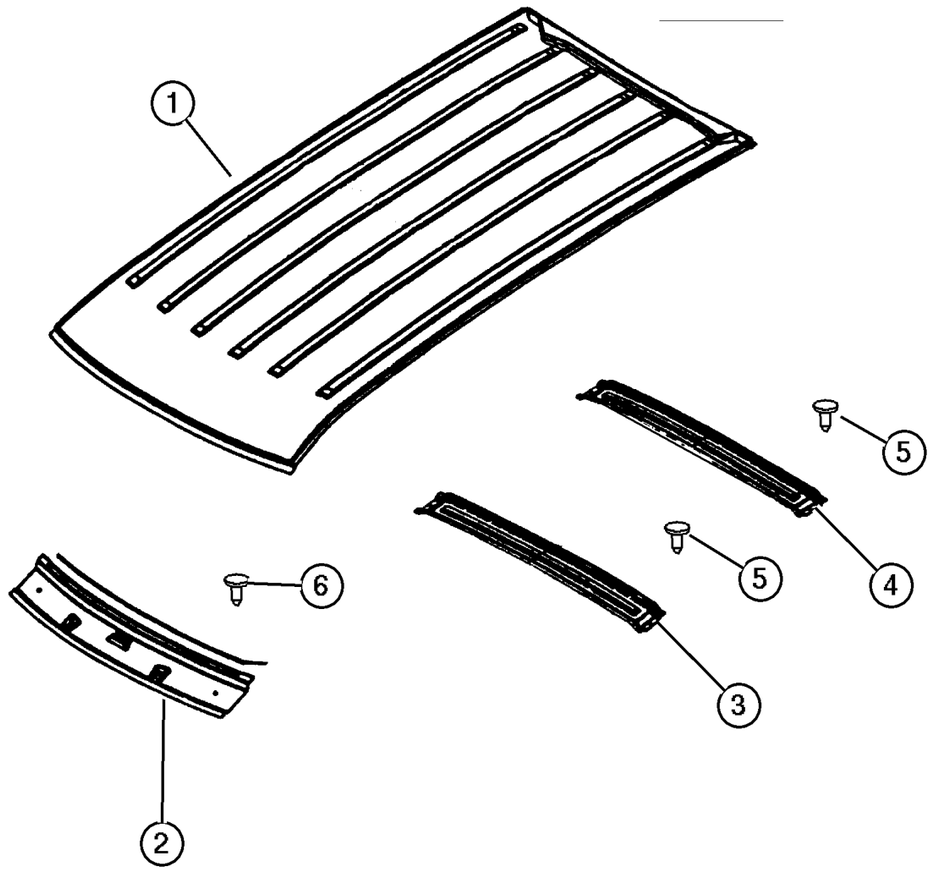

ITEM	PART NUMBER	QTY	LINE	SERIES	BODY	ENGINE	TRANS	TRIM	DESCRIPTION
1									PANEL, Roof
	55176 994AC	1							Without Sunroof
	55176 995AD	1							With Sunroof
2	55177 022AA	1							HEADER, Roof Front
3	55360 281AA	1							BOW, Roof, Without Sunroof
4	55176 998AA	1							BOW, Roof
5									PUSH PIN, M6.35x18.50, (NOT SERVICED) (Not Serviced)
6	6030 441	1							PIN, Retainer

JEEP LIBERTY (KJ)

SERIES	LINE	BODY	ENGINE	TRANSMISSION
P = Limited	J = LHD (4WD)	74 = 4 Dr. (104.3 WB)	ED1, ED0 = 2.4L Power Tech	DDK = 5 Speed HDManual
H = Sport	U = RHD (4WD)		EKG, EK0 = 3.7L Power Tech	DDD = 5 Speed HD Manual
M = Renegade	T = LHD (2WD)		ENJ = 2.5L 4Cyl Turbo Diesel	DG4,DGQ = Multi-Speed Auto
			ENR = 2.8L 4Cyl Turbo Diesel	DG6 = 4 Speed Auto Transm
			EN0 = 4Cyl Turbo Diesel	DG0 = All Automatic Transm
				DBB = All Manual Transm

AR = Use as required - = Non illustrated part # = New this model year **June 3, 2003**

« RETURN TO GROUP INDEX

Sunroof
Figure SKJ-1210

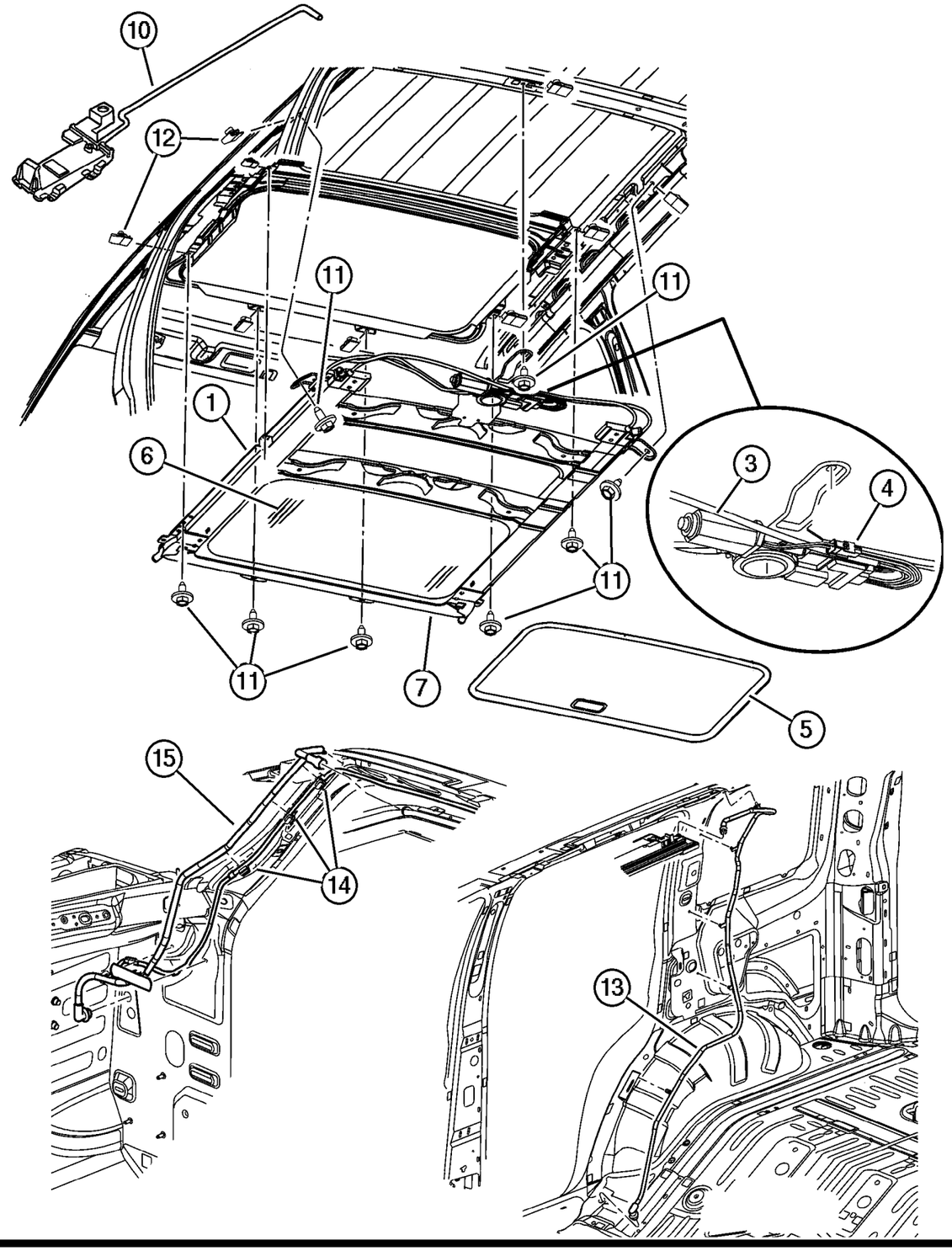

ITEM	PART NUMBER	QTY	LINE	SERIES	BODY	ENGINE	TRANS	TRIM	DESCRIPTION
1									MODULE, Sunroof
	#5101 963AA	1							After 9/9/02
	UX14 TL2AB	1							Up to 9/9/02
-2	5066 895AB	1							DEFLECTOR, Sunroof Wind
3									MOTOR, Sunroof
	#5096 260AA	1							After 9/9/02
	5066 894AA	1							Up to 9/9/02
4	5066 893AB	1							CONTROL UNIT, Sunroof
5	UX06 TL2AA	1							SUNSHADE, Sunroof
6	5066 892AA	1							GLASS, Sunroof
7	5066 896AA	1							SEAL, Sunroof Glass
-8	UX09 TL2AA	1							TRIM LACE, Sunroof
-9	5066 898AA	1							WIRING, Sunroof
10	5066 433AA	1							GUIDE, Sunroof Track, Contains Right & Left Guides and 2 Push Nuts
11	6505 728AA	9							SCREW AND WASHER, Hex Head, M6x1x17
12	6506 035AA	9							NUT, U, M6x1
13									HOSE, Sunroof Drain, Rear
	55360 180AB	1							Up to 9/9/02, Right
	55360 181AB	1							Up to 9/9/02, Left
	#55360 180AD	1							After 9/9/02, Up to 11/15/03, Right
	#55360 181AD	1							After 9/9/02, Up to 11/15/03, Left
	#55360 180AE	1							After 11/15/02, Right
	#55360 181AE	1							After 11/15/02, Left
14	55360 393AA	3							CLIP, Hose
15									HOSE, Sunroof Drain, Front
	55360 178AA	1							Right
	55360 179AA	1							Left
-16	#5101 844AA	1							BRACE, Frame, Water Trough

JEEP LIBERTY (KJ)

SERIES	LINE	BODY	ENGINE	TRANSMISSION
P = Limited	J = LHD (4WD)	74 = 4 Dr. (104.3 WB)	ED1, ED0 = 2.4L Power Tech	DDK = 5 Speed HDManual
H = Sport	U = RHD (4WD)		EKG, EK0 = 3.7L Power Tech	DDD = 5 Speed HD Manual
M = Renegade	T = LHD (2WD)		ENJ = 2.5L 4Cyl Turbo Diesel	DG4,DGQ = Multi-Speed Auto
			ENR = 2.8L 4Cyl Turbo Diesel	DG6 = 4 Speed Auto Transm
			EN0 = 4Cyl Turbo Diesel	DG0 = All Automatic Transm
				DBB = All Manual Transm

AR = Use as required - = Non illustrated part # = New this model year **June 3, 2003**

« RETURN TO GROUP INDEX

Swing Gate, Latch, and Hinges
Figure SKJ-1310

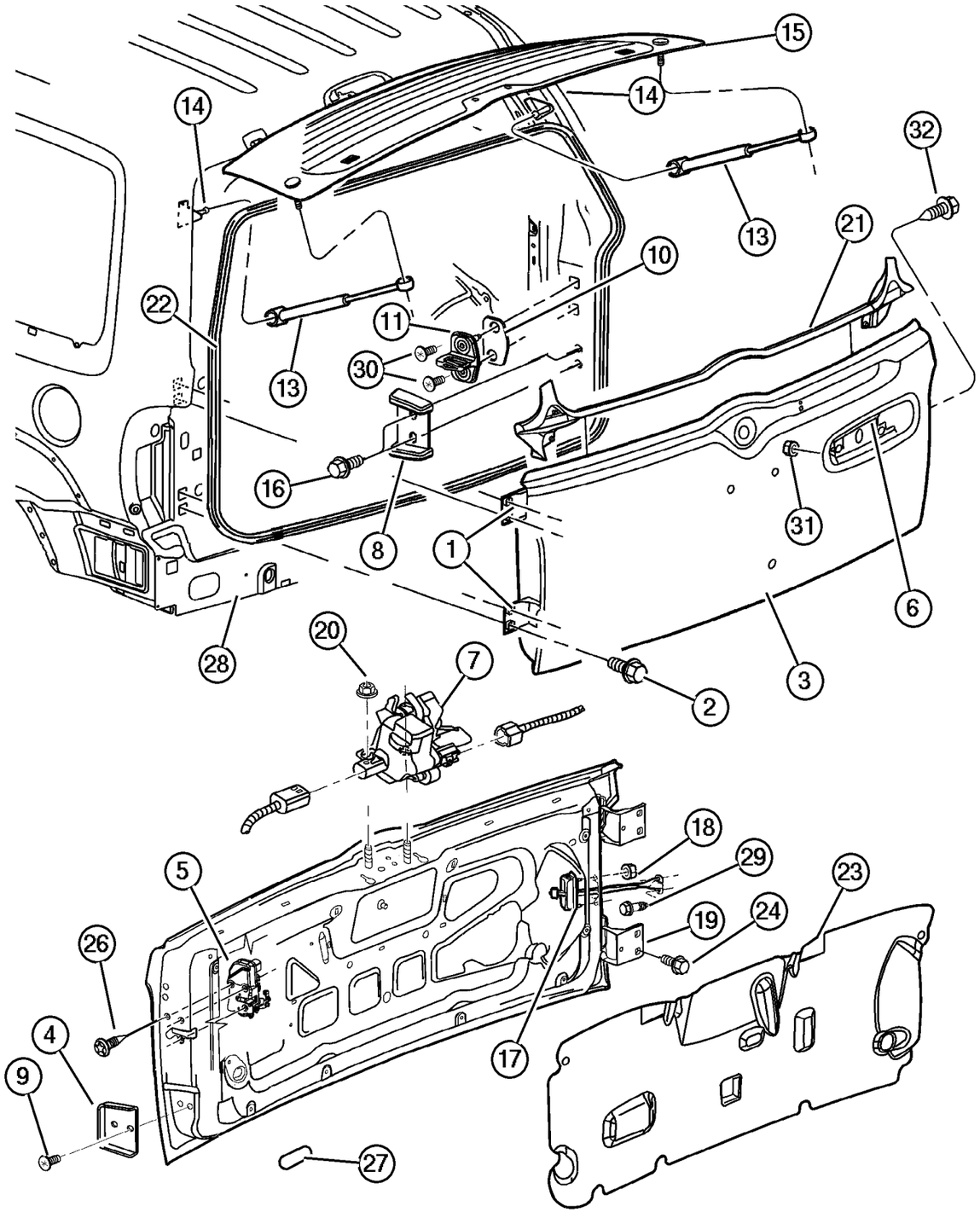

ITEM	PART NUMBER	QTY	LINE	SERIES	BODY	ENGINE	TRANS	TRIM	DESCRIPTION
Note: For Backlite Hinges and Associated Hardware, see Group SKJ Illustration 710									
1									HINGE, Liftgate
	52850 558AB	1							Upper
	52850 559AB	1							Lower
2									SCREW, M8X1.25X42.00 , (NOT SERVICED) (Not Serviced)
3									PANEL, Tailgate
	55176 934AE	1							Up to 10/11/02
	#55176 934AF	1							After 10/11/02
4	52850 562AE	1							BUMPER, Tailgate
5									LATCH, Tailgate
	55360 359AD	1							Up to 10/11/02
	#55360 641AA	1							After 10/11/02
6									HANDLE, Exterior Tailgate
	55360 331AH	1							With Lock Cylinder
	#55360 634AB	1							Without Lock Cylinder
7	55360 357AC	1							LATCH, Liftgate Glass
8	55360 324AC	1							STABILIZER, Swing Gate
9	6507 128AA	2							SCREW AND WASHER, Hex Head, M6 x 1.00 x 26.5
10	5507 5483	AR							SPACER, Door Latch Striker
11									STRIKER, Door
	55176 954AB	1							Up to 10/30/02
	4878 826AA	1							After 10/30/02
-12	6503 692	2							SCREW, M8-1.25
13	55360 171AB	2							GAS CYLINDER, Liftgate Glass
14	55360 394AC	2							BRACKET, Ballstud
15									BACKLITE, Note: For Backlite Hinges and Associated Hardware, see Group SKJ Illustration 710
	55360 340AK	1							Tinted
	55360 342AK	1							Privacy
16	6507 456AA	2							BOLT AND CONED WASHER, Hex Head, M6x20x14
17	55360 170AA	1							ARM, Cargo Door Check
18	6503 504	2							NUT AND WASHER, Hex, M6x1, Check Strap to Body
19									SCREW, Tapping, M6x1x20, (NOT SERVICED) (Not Serviced)
20	6503 102	2							NUT AND WASHER, Hex Nut-Coned Washer, M6 x 1.00
21	55360 065AB	1							WEATHERSEAL, Tailgate

JEEP LIBERTY (KJ)

SERIES	LINE	BODY	ENGINE	TRANSMISSION
P = Limited	J = LHD (4WD)	74 = 4 Dr. (104.3 WB)	ED1, ED0 = 2.4L Power Tech	DDK = 5 Speed HDManual
H = Sport	U = RHD (4WD)		EKG, EK0 = 3.7L Power Tech	DDD = 5 Speed HD Manual
M = Renegade	T = LHD (2WD)		ENJ = 2.5L 4Cyl Turbo Diesel	DG4,DGQ = Multi-Speed Auto
			ENR = 2.8L 4Cyl Turbo Diesel	DG6 = 4 Speed Auto Transm
			EN0 = 4Cyl Turbo Diesel	DG0 = All Automatic Transm
				DBB = All Manual Transm

AR = Use as required - = Non illustrated part # = New this model year **June 3, 2003**

« RETURN TO GROUP INDEX »

Swing Gate, Latch, and Hinges
Figure SKJ-1310

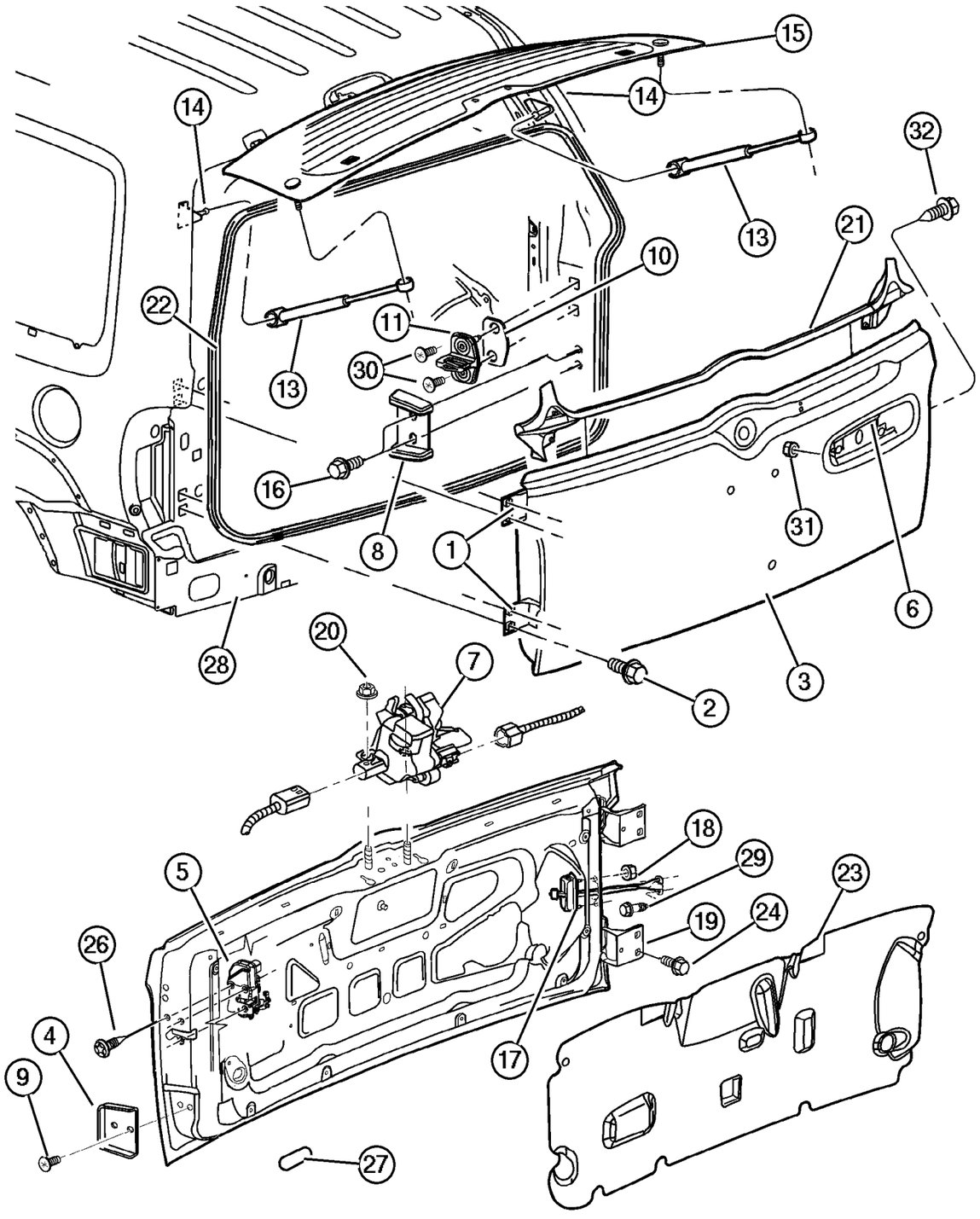

ITEM	PART NUMBER	QTY	LINE	SERIES	BODY	ENGINE	TRANS	TRIM	DESCRIPTION
22	55176 958AF	1							WEATHERSEAL, Tailgate
23	55360 309AA	1							WATERSHIELD, Liftgate Inner
24	6503 328	6							SCREW, Hex Head, M8x1.25x30
-25	4520 289	AR							SPACER, Door Latch Striker
26	6036 364AA	3							SCREW, Oval Head, Swing Gate Latch to Swing Gate
27	4646 527	2							PLUG, Deck Lid
28	55360 227AC	1							PANEL, Liftgate Opening, D-Ring Shaped, Contains Rear Gate Opening and Roof Header
29									SCREW, Hex Flange Head, M6x1.00x20, (NOT SERVICED) (Not Serviced)
30	6506 367AA	2							SCREW, M8-1.25
31	6503 226	2							NUT, Hex Flange, M5x.8
32	6507 011AA	2							SCREW

JEEP LIBERTY (KJ)

SERIES	LINE	BODY	ENGINE	TRANSMISSION
P = Limited	J = LHD (4WD)	74 = 4 Dr. (104.3 WB)	ED1, ED0 = 2.4L Power Tech	DDK = 5 Speed HDManual
H = Sport	U = RHD (4WD)		EKG, EK0 = 3.7L Power Tech	DDD = 5 Speed HD Manual
M = Renegade	T = LHD (2WD)		ENJ = 2.5L 4Cyl Turbo Diesel	DG4,DGQ = Multi-Speed Auto
			ENR = 2.8L 4Cyl Turbo Diesel	DG6 = 4 Speed Auto Transm
			EN0 = 4Cyl Turbo Diesel	DG0 = All Automatic Transm
				DBB = All Manual Transm

AR = Use as required - = Non illustrated part # = New this model year

June 3, 2003

« RETURN TO GROUP INDEX

Luggage Rack
Figure SKJ-1610

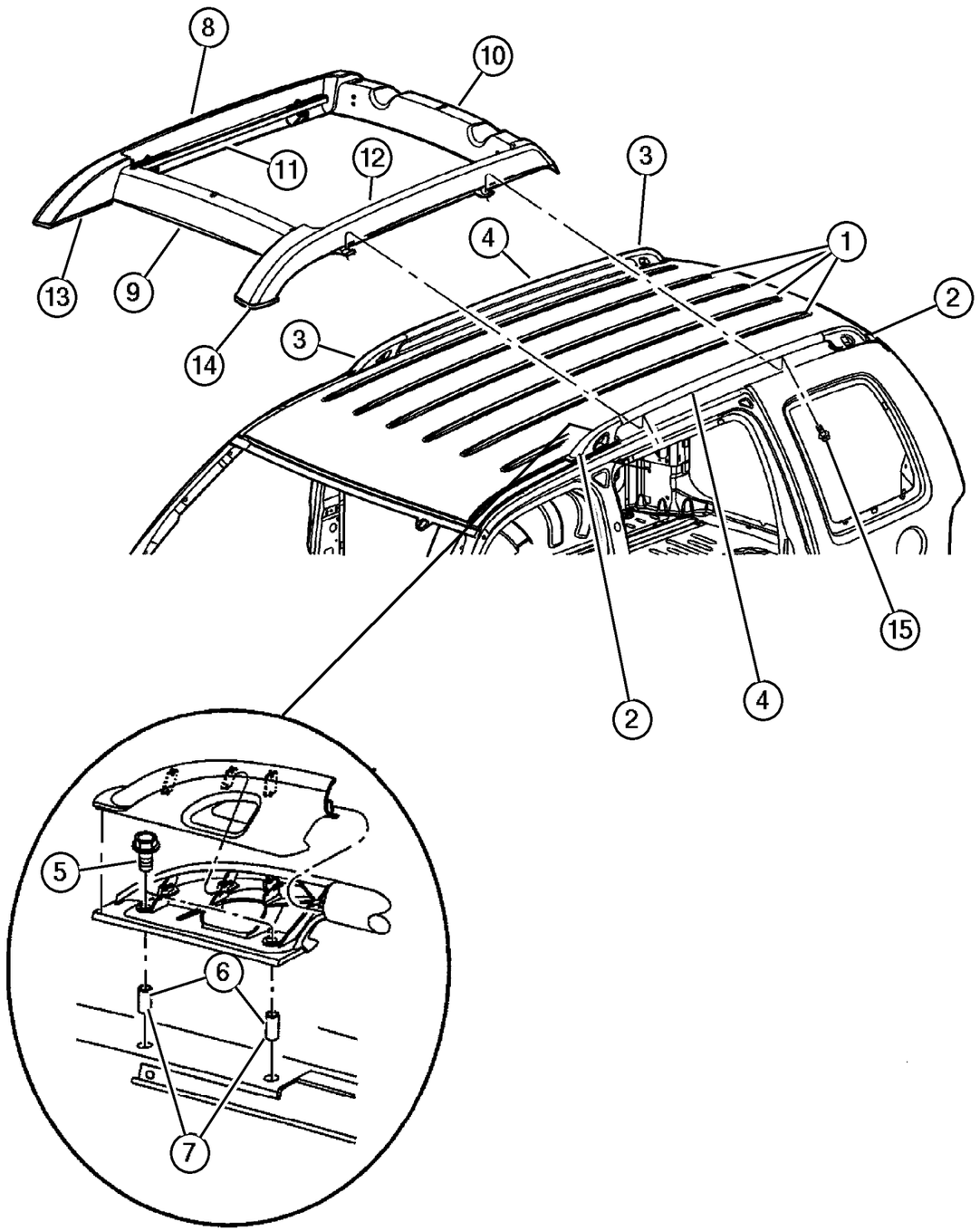

ITEM	PART NUMBER	QTY	LINE	SERIES	BODY	ENGINE	TRANS	TRIM	DESCRIPTION
Note: Production crossrails not used. See accessory catalog for crossrail package.									
1	#55135 987AC	4							SKID STRIP, Roof Rack
2									COVER, Luggage Rack
	55360 425AD	1							Left,Front
	55360 427AB	1							Left,Rear
3									COVER, Luggage Rack
	55360 424AD	1							Right,Front
	55360 426AB	1							Right,Rear
4									RAIL, Luggage Rack Side
	55360 418AG	1							Right
	55360 419AG	1							Left
5	6507 086AA	8							SCREW
6	6503 245	6							RIVET
7	6506 489AA	2							RIVET
8									RAIL, Luggage Rack Side
	#5JA16 RXFAC	1							Right
	#5JA17 RXFAC	1							Left
9	#5JA18 RXFAC	1							COVER, Front
10	#5JA19 RXFAC	1							COVER, Rear
11	#55156 586AC	1							CROSS RAIL, Roof Rack, Right
12	#55360 526AC	1							CROSS RAIL, Roof Rack, Left
13	#55156 594AD	1							ISOLATOR, Right
14	#55156 595AD	1							ISOLATOR, Left
15	6507 449AA	4							SCREW

JEEP LIBERTY (KJ)

SERIES	LINE	BODY	ENGINE	TRANSMISSION
P = Limited	J = LHD (4WD)	74 = 4 Dr. (104.3 WB)	ED1, ED0 = 2.4L Power Tech	DDK = 5 Speed HDManual
H = Sport	U = RHD (4WD)		EKG, EK0 = 3.7L Power Tech	DDD = 5 Speed HD Manual
M = Renegade	T = LHD (2WD)		ENJ = 2.5L 4Cyl Turbo Diesel	DG4,DGQ = Multi-Speed Auto
			ENR = 2.8L 4Cyl Turbo Diesel	DG6 = 4 Speed Auto Transm
			EN0 = 4Cyl Turbo Diesel	DG0 = All Automatic Transm
				DBB = All Manual Transm

Group – LBLS

Labels All Vehicle Locations

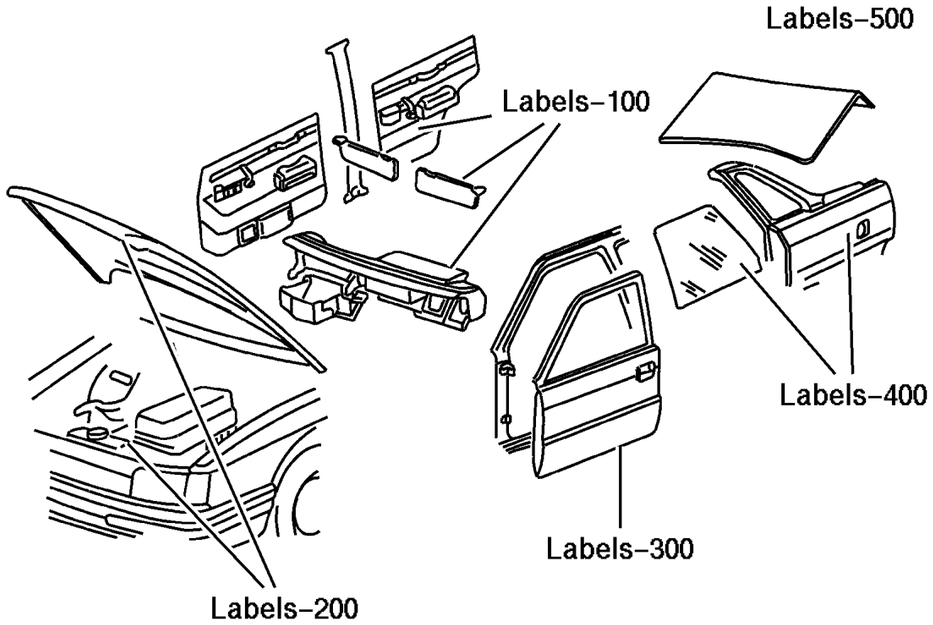

LBLS–100 Interior	LBLS–200 Under Hood	LBLS–300 Doors	LBLS–400 Exterior
LBLS–500 Rear Cargo & Storage			

GROUP LBLS - Labels All Vehicle Locations

Illustration Title	Group-Fig. No.
Interior	
Instrument Panel, Visors & Trim	Fig. LBLS-110
Under Hood	
Engine Compartment	Fig. LBLS-210
Doors	
Door and Pillars	Fig. LBLS-310
Rear Glass	Fig. LBLS-320
Exterior	
Fuel Door/Filler	Fig. LBLS-410
Rear Cargo & Storage	
Jack Assembly	Fig. LBLS-510

Instrument Panel, Visors & Trim
Figure LBLS-110

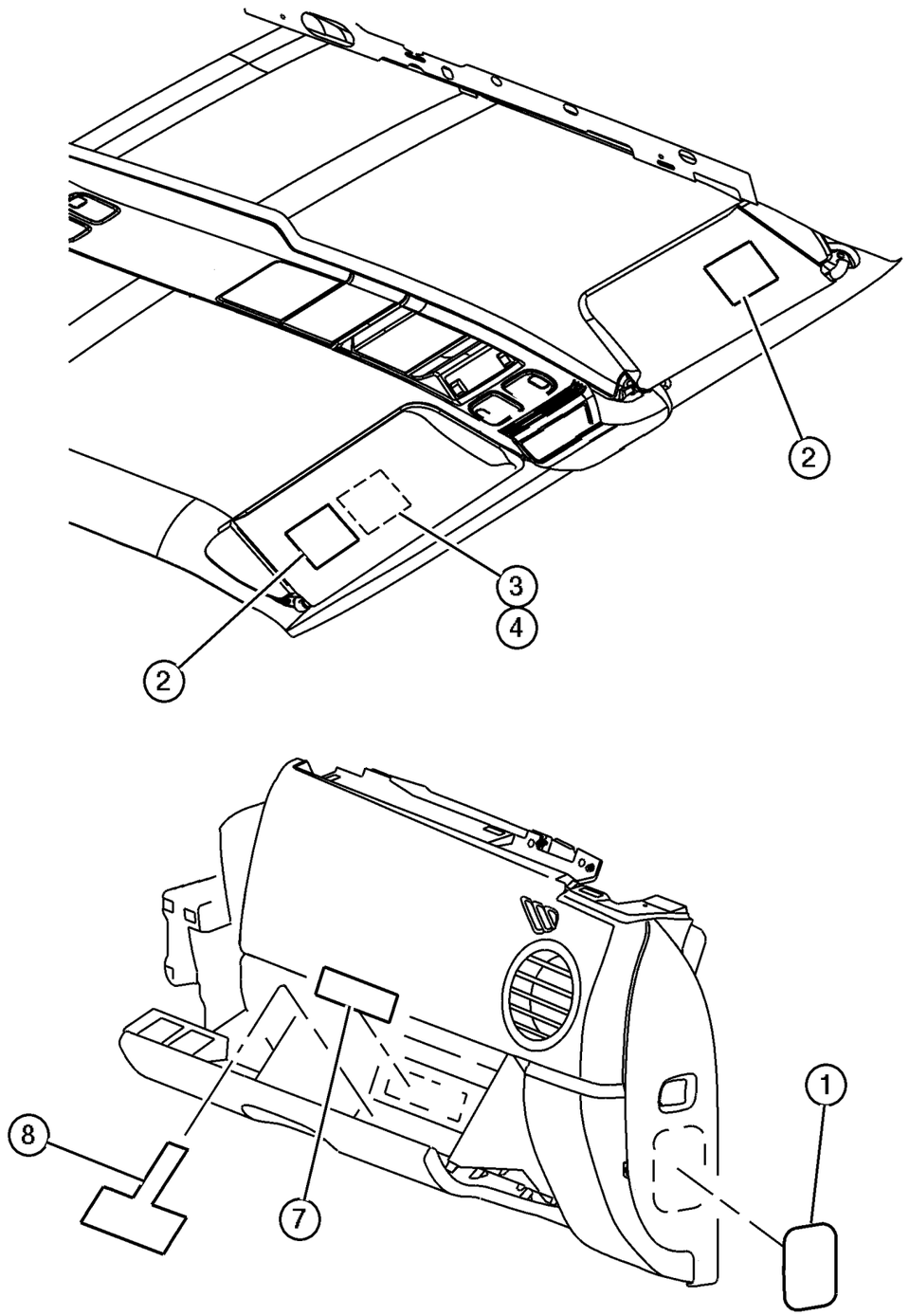

ITEM	PART NUMBER	QTY	LINE	SERIES	BODY	ENGINE	TRANS	TRIM	DESCRIPTION
1	4595 746AA	1							LABEL, Air Bag Warning, Child Seat Use
2									LABEL, Air Bag Warning
	4787 437AA	2							English-French
	5023 548AA	2							English-Arabic
3	#53015 958AA	1							LABEL, Rollover Risk, English-Arabic
4	55352 825AA	1							LABEL, Visor Warning, Rollover Risk, English-French
-5									LABEL, Air Bag Warning, Spanish
	4851 415AA	2							Visor Down
	4851 416AA	1							
-6	4897 875AA	2							LABEL, Airbag, Visor Down, Domestic
7									LABEL, Tire Pressure
	#5271 243AA	1							Mexico
	#52088 962AB	1							United Kingdom
	52088 963AB	1							United Kingdom
	#52128 593AB	1							English-French
8									LABEL, Limited Warranty, (NOT SERVICED) (Not Serviced)
-9	56042 844AD	1							LABEL, General Information, Sticker Sheet, Key Fob Application

JEEP LIBERTY (KJ)

SERIES	LINE	BODY	ENGINE	TRANSMISSION
P = Limited	J = LHD (4WD)	74 = 4 Dr. (104.3 WB)	ED1, ED0 = 2.4L Power Tech	DDK = 5 Speed HDManual
H = Sport	U = RHD (4WD)		EKG, EK0 = 3.7L Power Tech	DDD = 5 Speed HD Manual
M = Renegade	T = LHD (2WD)		ENJ = 2.5L 4Cyl Turbo Diesel	DG4,DGQ = Multi-Speed Auto
			ENR = 2.8L 4Cyl Turbo Diesel	DG6 = 4 Speed Auto Transm
			EN0 = 4Cyl Turbo Diesel	DG0 = All Automatic Transm
				DBB = All Manual Transm

AR = Use as required - = Non illustrated part # = New this model year **June 3, 2003**

« RETURN TO GROUP INDEX

Engine Compartment
Figure LBLS-210

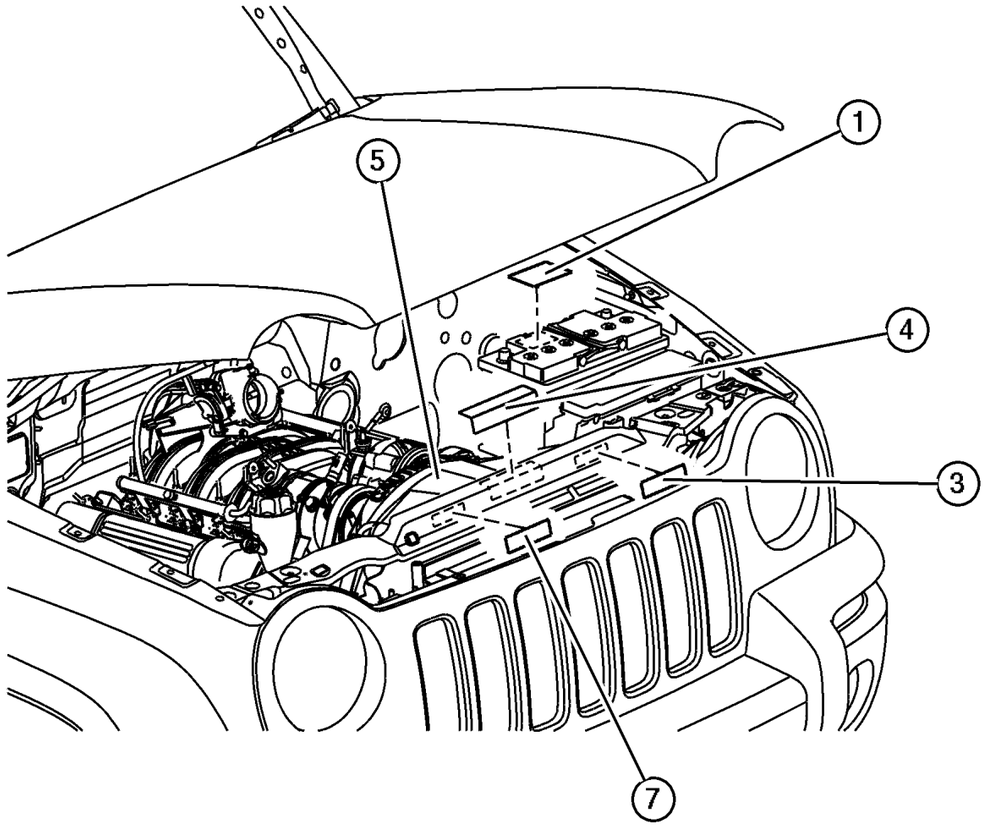

ITEM	PART NUMBER	QTY	LINE	SERIES	BODY	ENGINE	TRANS	TRIM	DESCRIPTION
1									LABEL, Battery
	4793 062	1				ED0, EK0			Warning, European Equipment
	5604 1046	1							French
-2	5604 1047	1							LABEL, Battery Jump Start, French
3									LABEL, Belt Routing
	53014 005AA	1				EN0			Diesel
	5303 0960	1				EK0			Six Cylinder Gas
	53031 758AA	1				ED0			Four Cylinder Gas
4									LABEL, Emission
	#52128 776AB	1				EK0			Six Cylinder Gas, 50 State
	53013 388AA	1				EK0			Six Cylinder Gas, Export
	5271 267AA	1				EK0			Six Cylinder Gas, Mexico
	#52128 775AA	1				ED0			Four Cylinder Gas, 50 State
	53013 385AA	1				ED0			Four Cylinder Gas, Export
	53014 004AB	1				EN0			Diesel
5	5031 287AA	1							LABEL, Fan Caution, Mexico
-6	5202 8399	1				EK0			LABEL, Coolant Warning
7									LABEL, Refrigerant
	5032 796AA	1							Mexico
	#55037 464AD	1							
	#55037 708AA	1							French

JEEP LIBERTY (KJ)

SERIES	LINE	BODY	ENGINE	TRANSMISSION
P = Limited	J = LHD (4WD)	74 = 4 Dr. (104.3 WB)	ED1, ED0 = 2.4L Power Tech	DDK = 5 Speed HDManual
H = Sport	U = RHD (4WD)		EKG, EK0 = 3.7L Power Tech	DDD = 5 Speed HD Manual
M = Renegade	T = LHD (2WD)		ENJ = 2.5L 4Cyl Turbo Diesel	DG4,DGQ = Multi-Speed Auto
			ENR = 2.8L 4Cyl Turbo Diesel	DG6 = 4 Speed Auto Transm
			EN0 = 4Cyl Turbo Diesel	DG0 = All Automatic Transm
				DBB = All Manual Transm

AR = Use as required - = Non illustrated part # = New this model year

June 3, 2003

« RETURN TO GROUP INDEX

Door and Pillars
Figure LBLS-310

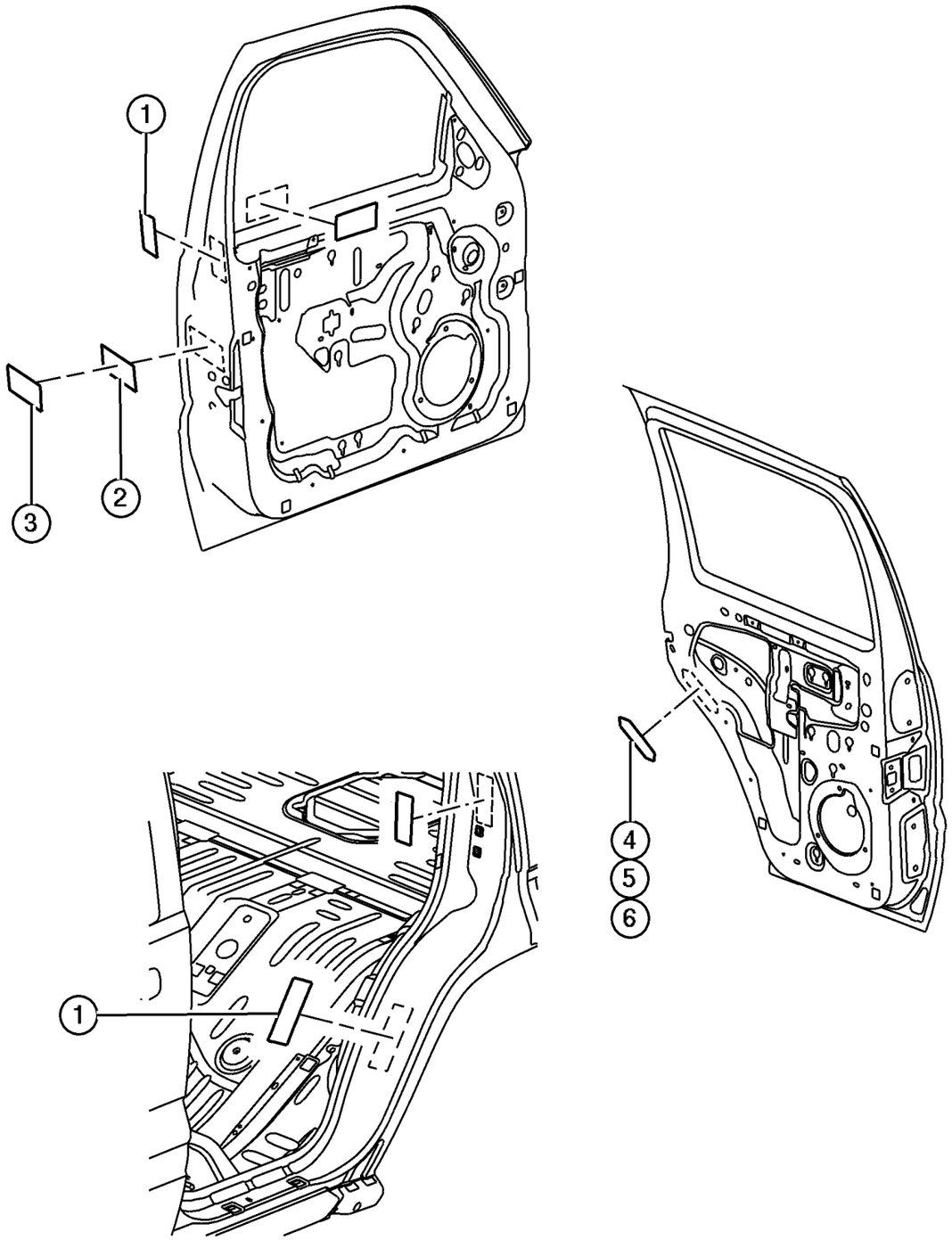

ITEM	PART NUMBER	QTY	LINE	SERIES	BODY	ENGINE	TRANS	TRIM	DESCRIPTION
1	4649 282AA	4							LABEL, Air Bag Warning
2									LABEL, Certification, (NOT SERVICED) (Not Serviced)
3	4040 858	1							OVERLAY, Vehicle Certification
4									LABEL, Child Protection Lock
	4852 524AA	1							Spanish, Right
	4852 525AA	1							Spanish, Left
5									LABEL, Child Protection Lock, English
	4780 544AA	1							Right
	4780 545AA	1							Left
6									LABEL, Child Protection Lock, French
	4780 546AC	1							Right
	4780 547AC	1							Left

JEEP LIBERTY (KJ)

SERIES	LINE	BODY	ENGINE	TRANSMISSION
P = Limited	J = LHD (4WD)	74 = 4 Dr. (104.3 WB)	ED1, ED0 = 2.4L Power Tech	DDK = 5 Speed HDManual
H = Sport	U = RHD (4WD)		EKG, EK0 = 3.7L Power Tech	DDD = 5 Speed HD Manual
M = Renegade	T = LHD (2WD)		ENJ = 2.5L 4Cyl Turbo Diesel	DG4,DGQ = Multi-Speed Auto
			ENR = 2.8L 4Cyl Turbo Diesel	DG6 = 4 Speed Auto Transm
			EN0 = 4Cyl Turbo Diesel	DG0 = All Automatic Transm
				DBB = All Manual Transm

Rear Glass
Figure LBLS-320

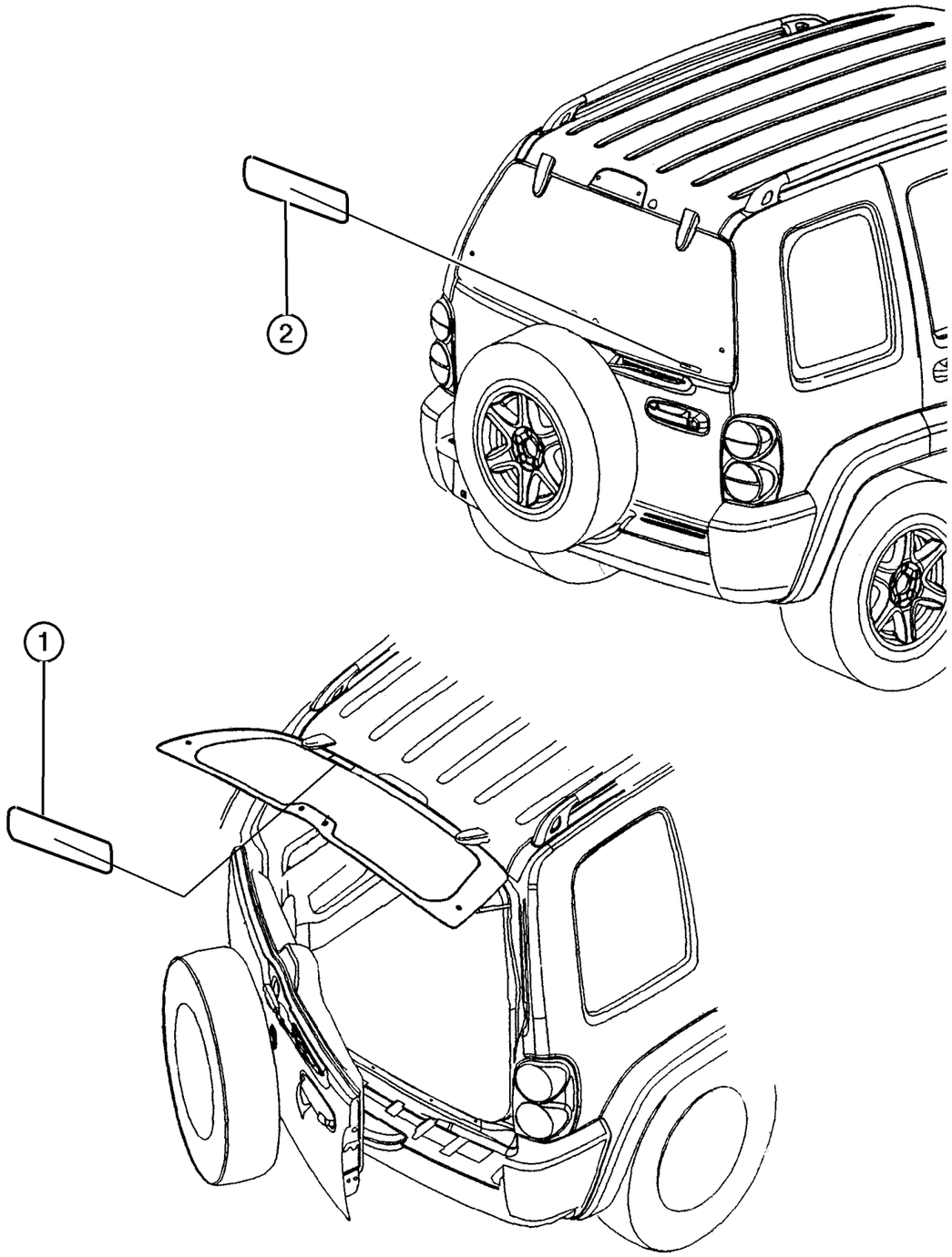

ITEM	PART NUMBER	QTY	LINE	SERIES	BODY	ENGINE	TRANS	TRIM	DESCRIPTION
1									LABEL, Flipper Glass, Warning
	55360 557AA	1							Tinted Glass, , Defroster
	55360 559AA	1							Privacy Glass, Defroster
	55360 573AA	1							Tinted Glass, French
	55360 582AA	1							Privacy Glass, French
	#55360 583AA	1							Privacy Glass, Mideast Equipment
2	5032 387AA	1							LABEL, Warning, Exhaust Gas

JEEP LIBERTY (KJ)

SERIES	LINE	BODY	ENGINE	TRANSMISSION
P = Limited	J = LHD (4WD)	74 = 4 Dr. (104.3 WB)	ED1, ED0 = 2.4L Power Tech	DDK = 5 Speed HDManual
H = Sport	U = RHD (4WD)		EKG, EK0 = 3.7L Power Tech	DDD = 5 Speed HD Manual
M = Renegade	T = LHD (2WD)		ENJ = 2.5L 4Cyl Turbo Diesel	DG4,DGQ = Multi-Speed Auto
			ENR = 2.8L 4Cyl Turbo Diesel	DG6 = 4 Speed Auto Transm
			EN0 = 4Cyl Turbo Diesel	DG0 = All Automatic Transm
				DBB = All Manual Transm

AR = Use as required - = Non illustrated part # = New this model year

June 3, 2003

« RETURN TO GROUP INDEX

Fuel Door/Filler
Figure LBLS-410

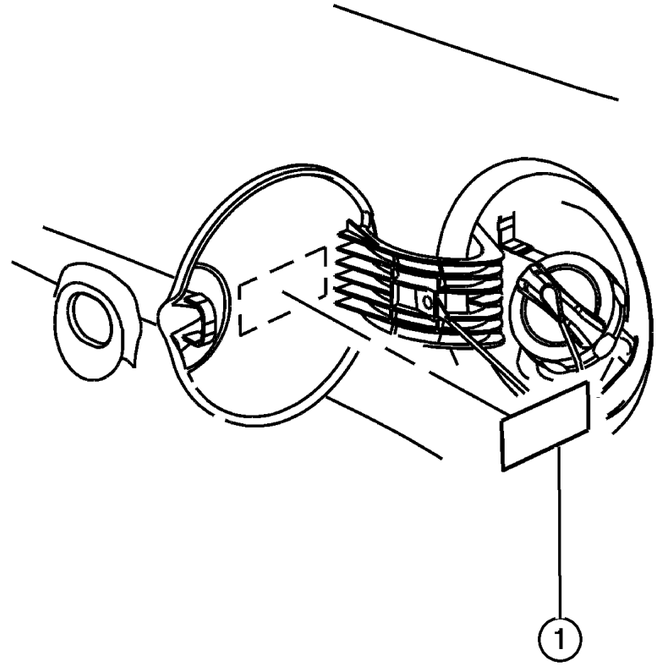

ITEM	PART NUMBER	QTY	LINE	SERIES	BODY	ENGINE	TRANS	TRIM	DESCRIPTION
1									LABEL, Fuel
	5529 5856	1				ED0, EK0			Gas Only
	J546 4900	1				EN0			Diesel

JEEP LIBERTY (KJ)

SERIES	LINE	BODY	ENGINE	TRANSMISSION
P = Limited	J = LHD (4WD)	74 = 4 Dr. (104.3 WB)	ED1, ED0 = 2.4L Power Tech	DDK = 5 Speed HDManual
H = Sport	U = RHD (4WD)		EKG, EK0 = 3.7L Power Tech	DDD = 5 Speed HD Manual
M = Renegade	T = LHD (2WD)		ENJ = 2.5L 4Cyl Turbo Diesel	DG4,DGQ = Multi-Speed Auto
			ENR = 2.8L 4Cyl Turbo Diesel	DG6 = 4 Speed Auto Transm
			EN0 = 4Cyl Turbo Diesel	DG0 = All Automatic Transm
				DBB = All Manual Transm

Jack Assembly
Figure LBLS-510

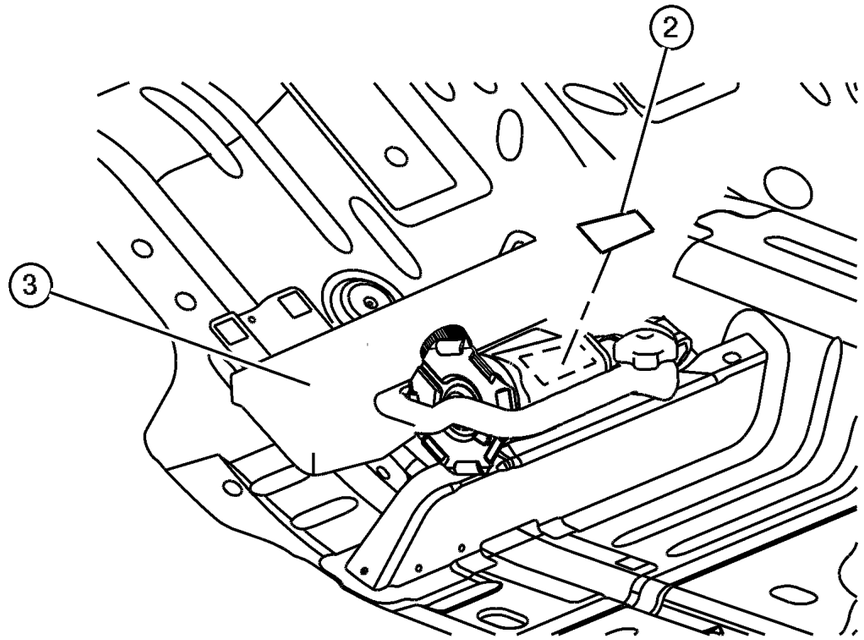

ITEM	PART NUMBER	QTY	LINE	SERIES	BODY	ENGINE	TRANS	TRIM	DESCRIPTION
-1									LABEL, Jack Instructions
	52059 413AA	1							French, Owners Manual Insert
		1							French, Owners Manual Insert
2	52110 391AA	1							LABEL, Australia Group, Jack Carrier
3									LABEL, Jack Caution
	52110 392AA	1							French
		1							French
	52110 400AA	1							Arabic
	5032 783AA	1							Spanish

JEEP LIBERTY (KJ)

SERIES	LINE	BODY	ENGINE	TRANSMISSION
P = Limited	J = LHD (4WD)	74 = 4 Dr. (104.3 WB)	ED1, ED0 = 2.4L Power Tech	DDK = 5 Speed HDManual
H = Sport	U = RHD (4WD)		EKG, EK0 = 3.7L Power Tech	DDD = 5 Speed HD Manual
M = Renegade	T = LHD (2WD)		ENJ = 2.5L 4Cyl Turbo Diesel	DG4,DGQ = Multi-Speed Auto
			ENR = 2.8L 4Cyl Turbo Diesel	DG6 = 4 Speed Auto Transm
			EN0 = 4Cyl Turbo Diesel	DG0 = All Automatic Transm
				DBB = All Manual Transm