AUTOMATIC TRANSAXLE

SECTION AT

CONTENTS

EURO-OBD

TROUBLE DIAGNOSIS - INDEX 5
Alphabetical & P No. Index for DTC 5

PRECAUTIONS 7
Supplemental Restraint System (SRS) "AIR BAG" and "SEAT BELT PRE-TENSIONER".....7
Precautions for On Board Diagnostic (EURO-OBD) System of A/T and Engine - Euro-OBD -.....7
Precautions.....7
Service Notice or Precautions.....9
Wiring Diagrams and Trouble Diagnosis.....10
PREPARATION 11
Special Service Tools 11
Commercial Service Tools.....13
A/T FLUID.....15
Checking A/T Fluid 15
Changing A/T Fluid.....15
OVERALL SYSTEM 16
A/T Electrical Parts Location 16
Circuit Diagram.....17
Cross-sectional View - 3AX00, 3AX01, 3AX19, 3AX63 and 3AX64 models 19
Cross-sectional View - 3AX10 and 3AX18 models 20
Hydraulic Control Circuit.....21
Shift Mechanism 22
Control System 31
Control Mechanism.....32
Control Valve 37

EXCEPT FOR EURO-OBD

ON BOARD DIAGNOSTIC.....39
CONSULT-II 39
Diagnostic Procedure Without CONSULT-II.....44

EURO-OBD

ON BOARD DIAGNOSTIC SYSTEM.....50
Introduction 50
EURO-OBD Function for A/T System 50
One or Two Trip Detection Logic of EURO-OBD.....50
EURO-OBD Diagnostic Trouble Code (DTC).....50
Malfunction Indicator (MI).....54
CONSULT-II 54
Diagnostic Procedure Without CONSULT-II.....63

EXCEPT FOR EURO-OBD

TROUBLE DIAGNOSIS -.....69
Introduction 69
Work Flow.....73

EURO-OBD

TROUBLE DIAGNOSIS - INTRODUCTION.....74
Introduction 74
Work Flow.....78

TROUBLE DIAGNOSIS - BASIC INSPECTION.....80
A/T Fluid Check.....80
Stall Test 80
Line Pressure Test.....84
Road Test.....85
TROUBLE DIAGNOSIS - GENERAL DESCRIPTION.....105
Symptom Chart.....105
TCM Terminals and Reference Value.....118
TROUBLE DIAGNOSIS FOR POWER SUPPLY.....123
Wiring Diagram - AT - MAIN.....123
Diagnostic Procedure 124

EXCEPT FOR EURO-OBD

VEHICLE SPEED SENSOR.A/T.....126

CONTENTS (Cont'd)

Description 126
Wiring Diagram - AT - VSSA/T 128
Diagnostic Procedure 129
VHCL SPEED SEN.MTR VEHICLE 131
Description 131
Wiring Diagram - AT - VSSMTR 132
Diagnostic Procedure 133
THROTTLE POSITION 134
Description 134
Wiring Diagram - AT - TPS 136
Diagnostic Procedure 137
Component Inspection 141
SHIFT SOLENOID VALVE A 142
Description 142
Wiring Diagram - AT - SSV/A 144
Diagnostic Procedure 145
Component Inspection 147
SHIFT SOLENOID VALVE B 148
Description 148
Wiring Diagram - AT - SSV/B 150
Diagnostic Procedure 151
Component Inspection 153
OVERRUN CLUTCH SOLENOID 154
Description 154
Wiring Diagram - AT - OVRCSV 155
Diagnostic Procedure 156
Component Inspection 158
TORQUE CONVERTER CLUTCH 159
Description 159
Wiring Diagram - AT - TCV 161
Diagnostic Procedure 162
Component Inspection 164
BATT/FLUID TEMP SEN (A/T FLUID TEMP SENSOR CIRCUIT AND TCM POWER SOURCE) 165
Description 165
Wiring Diagram - AT - BA/FTS 167
Diagnostic Procedure 168
Component Inspection 171
ENGINE SPEED SIGNAL 172
Description 172
Wiring Diagram - AT - ENGSS 173
Diagnostic Procedure 174
LINE PRESSURE SOLENOID 176
Description 176
Wiring Diagram - AT - LPSV 178
Diagnostic Procedure 179
Component Inspection 182

EURO-OBD

DTC P0705 PARK/NEUTRAL POSITION (PNP) SWITCH 183
Description 183
Wiring Diagram - AT - PNP/SW 185
Diagnostic Procedure 186
Component Inspection 188
DTC P0710 A/T FLUID TEMPERATURE SENSOR CIRCUIT 189
Description 189
Wiring Diagram - AT - FTS 191
Diagnostic Procedure 192
Component Inspection 194
DTC P0720 VEHICLE SPEED SENSOR.A/T 195
Description 195
Wiring Diagram - AT - VSSA/T 197
Diagnostic Procedure 198
DTC P0725 ENGINE SPEED SIGNAL 200
Description 200
Wiring Diagram - AT - ENGSS 201
Diagnostic Procedure 202
DTC P0731 A/T 1ST GEAR FUNCTION 204
Description 204
Wiring Diagram - AT - 1ST 207
Diagnostic Procedure 208
Component Inspection 209
DTC P0732 A/T 2ND GEAR FUNCTION 211
Description 211
Wiring Diagram - AT - 2ND 214
Diagnostic Procedure 215
Component Inspection 216
DTC P0733 A/T 3RD GEAR FUNCTION 217
Description 217
Wiring Diagram - AT - 3RD 220
Diagnostic Procedure 221
Component Inspection 222
DTC P0734 A/T 4TH GEAR FUNCTION 223
Description 223
Wiring Diagram - AT - 4TH 227
Diagnostic Procedure 228
Component Inspection 232
DTC P0740 TORQUE CONVERTER CLUTCH SOLENOID VALVE 233
Description 233
Wiring Diagram - AT - TCV 235
Diagnostic Procedure 236
Component Inspection 238
DTC P0745 LINE PRESSURE SOLENOID VALVE 239
Description 239
Wiring Diagram - AT - LPSV 241
Diagnostic Procedure 242
Component Inspection 245
DTC P0750 SHIFT SOLENOID VALVE A 246
Description 246
Wiring Diagram - AT - SSV/A 248
Diagnostic Procedure 249

CONTENTS (Cont'd)

Component Inspection....251
DTC P0755 SHIFT SOLENOID VALVE B....252
Description....252
Wiring Diagram - AT - SSV/B....254
Diagnostic Procedure....255
Component Inspection....257
DTC P1705 THROTTLE POSITION SENSOR....258
Description....258
Wiring Diagram - AT - TPS....261
Diagnostic Procedure....263
Component Inspection....267
DTC P1760 OVERRUN CLUTCH SOLENOID VALVE....268
Description....268
Wiring Diagram - AT - OVRCSV....270
Diagnostic Procedure....271
Component Inspection....273
DTC BATT/FLUID TEMP SEN (A/T FLUID TEMP SENSOR CIRCUIT AND TCM POWER SOURCE)....274
Description....274
Wiring Diagram - AT - BA/FTS....276
Diagnostic Procedure....277
Component Inspection....280
DTC VHCL SPEED SEN.MTR VEHICLE SPEED SENSOR.MTR....281
Description....281
Wiring Diagram - AT - VSSMTR....283
Diagnostic Procedure....285

DTC CONTROL UNIT (RAM), CONTROL UNIT (ROM)....286
Description....286
Diagnostic Procedure....286
DTC CONTROL UNIT (EEP ROM)....288
Description....288
Diagnostic Procedure....289
TROUBLE DIAGNOSES FOR SYMPTOMS....290
Wiring Diagram - AT - NONDTC/General and Except for Euro-OBD....290
Wiring Diagram - AT - NONDTC/EURO-OBD....292
1. O/D OFF Indicator Lamp Does Not Come On....296
2. Engine Cannot Be Started In ″P″ and ″N″ Position....299
3. In ″P″ Position, Vehicle Moves Forward Or Backward When Pushed....300
4. In ″N″ Position, Vehicle Moves....301
5. Large Shock. ″N″ -> ″R″ Position....303
6. Vehicle Does Not Creep Backward In ″R″ Position....305
7. Vehicle Does Not Creep Forward In ″D″, ″2″ Or ″1″ Position....308
8. Vehicle Cannot Be Started From D_1....311
9. A/T Does Not Shift: D_1 -> D_2 Or Does Not Kickdown: D_4 -> D_2....314
10. A/T Does Not Shift: D_2 -> D_3....317
11. A/T Does Not Shift: D_3 -> D_4....320
12. A/T Does Not Perform Lock-up....323
13. A/T Does Not Hold Lock-up Condition....325
14. Lock-up Is Not Released....327
15. Engine Speed Does Not Return To Idle (Light Braking D_4 -> D_3)....328
16. Vehicle Does Not Start From D_1....330
17. A/T Does Not Shift: D_4 -> D_3, When Overdrive Control Switch ″ON″ -> ″OFF″....331
18. A/T Does Not Shift: D_3 -> 2_2, When Selector Lever ″D″ -> ″2″ Position....332
19. A/T Does Not Shift: 2_2 -> 1_1, When Selector Lever ″2″ -> ″1″ Position....333
20. Vehicle Does Not Decelerate By Engine Brake....334
21. TCM Self-diagnosis Does Not Activate (PNP, Overdrive Control and Throttle Position Switches Circuit Checks)....334
A/T SHIFT LOCK SYSTEM....343
Description....343
Shift Lock System Electrical Parts Location....343
Wiring Diagram - SHIFT -....344
Diagnostic Procedure....345
KEY INTERLOCK CABLE....349
Components....349
Removal....349
Installation....350
ON-VEHICLE SERVICE....351
Control Valve Assembly and Accumulators....351
Control Cable Adjustment....352
Park/Neutral Position (PNP) Switch Adjustment....352
Differential Side Oil Seal Replacement....353
Revolution Sensor Replacement....353
REMOVAL AND INSTALLATION....354
Removal....354
Installation....355
OVERHAUL....357
Components-1 3AX00, 3AX01, 3AX19, 3AX63 and 3AX64 models....357
Components-1 3AX10 and 3AX18 models....358
Components-2 3AX00, 3AX01, 3AX19, 3AX63 and 3AX64 models....359
Components-2 3AX10 and 3AX18 models....360
Components-3 3AX00, 3AX01, 3AX19, 3AX63 and 3AX64 models....361
Components-3 3AX10 and 3AX18 models....362
Oil Channel....363

CONTENTS (Cont'd)

Locations of Adjusting Shims, Needle Bearings, Thrust Washers and Snap Rings - 3AX00, 01, 19, 63 and 64 models....364
Locations of Adjusting Shims, Needle Bearings, Thrust Washers and Snap Rings - 3AX10 and 3AX18 models....365
DISASSEMBLY....366
REPAIR FOR COMPONENT PARTS....381
Manual Shaft....381
Oil Pump....384
Control Valve Assembly....388
Control Valve Upper Body....397
Control Valve Lower Body....401
Reverse Clutch....403
High Clutch....407
Forward Clutch and Overrun Clutch....412
Low & Reverse Brake....419
Rear Internal Gear, Forward Clutch Hub and Overrun Clutch Hub....423
O/Shaft, O/Gear, I/Gear, R/Pinion Gear and B/Retainer - 3AX00, 01, 19, 63 and 64 models....427
Output Shaft, Idler Gear, Reduction Pinion Gear and Bearing Retainer - 3AX10 and 3AX18 models....432
Band Servo Piston Assembly....437
Final Drive....442
ASSEMBLY....446
Assembly (1)....446
Adjustment (1)....447
Assembly (2)....455
Adjustment (2)....459
Assembly (3)....462
Assembly (4)....465
SERVICE DATA AND SPECIFICATIONS (SDS)....470
General Specifications....470
Shift Schedule....470
Stall Revolution....473
Line Pressure....473
Control Valves....474
Clutch and Brakes....474
Clutch and Brake Return Springs....477
Oil Pump....477
Input Shaft....478
Planetary Carrier....478
Final Drive....478
Reduction Pinion Gear....480
Output Shaft - 3AX00, 3AX01, 3AX19, 3AX63 and 3AX64 models....481
Output Shaft - 3AX10 and 3AX18 models....483
Bearing Retainer....484
Total End Play....484
Reverse Clutch End Play....484
Accumulator....484
Band Servo....485
Removal and Installation....485
Shift Solenoid Valves....485
Resistance....485
ATF Temp. Sensor....485
Revolution Sensor....485
Dropping Resistor....485

Alphabetical & P No. Index for DTC

NJAT0243

ALPHABETICAL INDEX FOR DTC

NJAT0243S01

Check if the vehicle is a model with Euro-OBD system or not by the "Type approval number" on the identification plate. Refer to GI-40, "IDENTIFICATION PLATE".

Type approval number	Model
Available	With Euro-OBD system
Not available (blank)	Without Euro-OBD system

Items (CONSULT-II screen terms)	DTC	Reference page
	CONSULT-II GST*1	
A/T 1ST GR FNCTN	P0731	AT-204
A/T 2ND GR FNCTN	P0732	AT-211
A/T 3RD GR FNCTN	P0733	AT-217
A/T 4TH GR FNCTN	P0734	AT-223
ATF TEMP SEN/CIRC	P0710	AT-189
ENGINE SPEED SIG	P0725	AT-200
L/PRESS SOL/CIRC	P0745	AT-239
O/R CLTCH SOL/CIRC	P1760	AT-268
PNP SW/CIRC	P0705	AT-183
SFT SOL A/CIRC*2	P0750	AT-246
SFT SOL B/CIRC*2	P0755	AT-252
TCC SOLENOID/CIRC	P0740	AT-233
TP SEN/CIRC A/T*2	P1705	AT-258
VEH SPD SEN/CIR AT*3	P0720	AT-195

*1: These numbers are prescribed by SAE J2012.

*2: When the fail-safe operation occurs, the MIL illuminates.

*3: The MIL illuminates when both the "Revolution sensor signal" and the "Vehicle speed sensor signal" meet the fail-safe condition at the same time.

P NO. INDEX FOR DTC

=NJAT0243S02

Check if the vehicle is a model with Euro-OBD system or not by the "Type approval number" on the identification plate. Refer to GI-40, "IDENTIFICATION PLATE".

Type approval number	Model
Available	With Euro-OBD system
Not available (blank)	Without Euro-OBD system

DTC CONSULT-II GST*1	Items (CONSULT-II screen terms)	Reference page
P0705	PNP SW/CIRC	AT-183
P0710	ATF TEMP SEN/CIRC	AT-189
P0720	VEH SPD SEN/CIR AT*3	AT-195
P0725	ENGINE SPEED SIG	AT-200
P0731	A/T 1ST GR FNCTN	AT-204
P0732	A/T 2ND GR FNCTN	AT-211
P0733	A/T 3RD GR FNCTN	AT-217
P0734	A/T 4TH GR FNCTN	AT-223
P0740	TCC SOLENOID/CIRC	AT-233
P0745	L/PRESS SOL/CIRC	AT-239
P0750	SFT SOL A/CIRC*2	AT-246
P0755	SFT SOL B/CIRC*2	AT-252
P1705	TP SEN/CIRC A/T*2	AT-258
P1760	O/R CLTCH SOL/CIRC	AT-268

*1: These numbers are prescribed by SAE J2012.

*2: When the fail-safe operation occurs, the MIL illuminates.

*3: The MIL illuminates when both the "Revolution sensor signal" and the "Vehicle speed sensor signal" meet the fail-safe condition at the same time.

Supplemental Restraint System (SRS) "AIR BAG" and "SEAT BELT PRE-TENSIONER"

NJAT0249

The Supplemental Restraint System such as "AIR BAG" and "SEAT BELT PRE-TENSIONER" used along with a seat belt, helps to reduce the risk or severity of injury to the driver and front passenger for certain types of collision. The SRS system composition which is available to NISSAN MODEL N16 is as follows (The composition varies according to the destination and optional equipment.):

- For a frontal collision
  The Supplemental Restraint System consists of driver air bag module (located in the center of the steering wheel), front passenger air bag module (located on the instrument panel on passenger side), front seat belt pre-tensioners, a diagnosis sensor unit, warning lamp, wiring harness and spiral cable.
- For a side collision
  The Supplemental Restraint System consists of front side air bag module (located in the outer side of front seat), side air bag (satellite) sensor, diagnosis sensor unit (one of components of air bags for a frontal collision), wiring harness, warning lamp (one of components of air bags for a frontal collision).

Information necessary to service the system safely is included in the **RS section** of this Service Manual.

WARNING:

- **To avoid rendering the SRS inoperative, which could increase the risk of personal injury or death in the event of a collision which would result in air bag inflation, all maintenance should be performed by an authorized NISSAN dealer.**
- **Improper maintenance, including incorrect removal and installation of the SRS, can lead to personal injury caused by unintentional activation of the system. For removal of Spiral Cable and Air Bag Module, see the RS section.**
- **Do not use electrical test equipment on any circuit related to the SRS unless instructed to in this Service Manual. Spiral cable and wiring harnesses covered with yellow insulation tape either just before the harness connectors or for the complete harness are related to the SRS.**

Precautions for On Board Diagnostic (EURO-OBD) System of A/T and Engine — Euro-OBD —

NJAT0245

The ECM has an on board diagnostic system. It will light up the malfunction indicator lamp (MIL) to warn the driver of a malfunction causing emission deterioration.

CAUTION:

- **Be sure to turn the ignition switch "OFF" and disconnect the negative battery terminal before any repair or inspection work. The open/short circuit of related switches, sensors, solenoid valves, etc. will cause the MIL to light up.**
- **Be sure to connect and lock the connectors securely after work. A loose (unlocked) connector will cause the MIL to light up due to an open circuit. (Be sure the connector is free from water, grease, dirt, bent terminals, etc.)**
- **Be sure to route and secure the harnesses properly after work. Interference of the harness with a bracket, etc. may cause the MIL to light up due to a short circuit.**
- **Be sure to connect rubber tubes properly after work. A misconnected or disconnected rubber tube may cause the MIL to light up due to a malfunction of the EGR system or fuel injection system, etc.**
- **Be sure to erase the unnecessary malfunction information (repairs completed) from the TCM and ECM before returning the vehicle to the customer.**

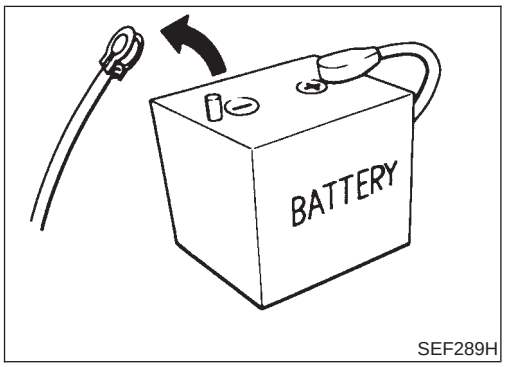

SEF289H

Precautions

NJAT0246

- **Before connecting or disconnecting the TCM harness connector, turn ignition switch OFF and disconnect negative battery terminal. Failure to do so may damage the TCM. Because battery voltage is applied to TCM even if ignition switch is turned off.**

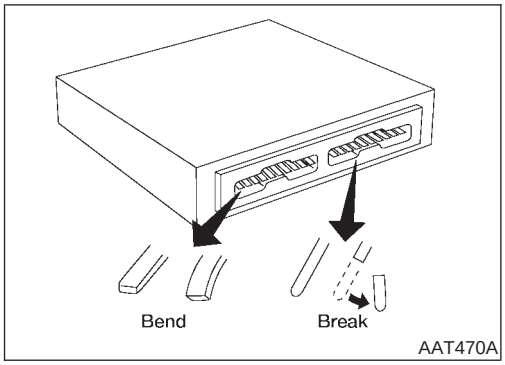

AAT470A

- **When connecting or disconnecting pin connectors into or from TCM, take care not to damage pin terminals (bend or break).**
  Make sure that there are not any bends or breaks on TCM pin terminal, when connecting pin connectors.

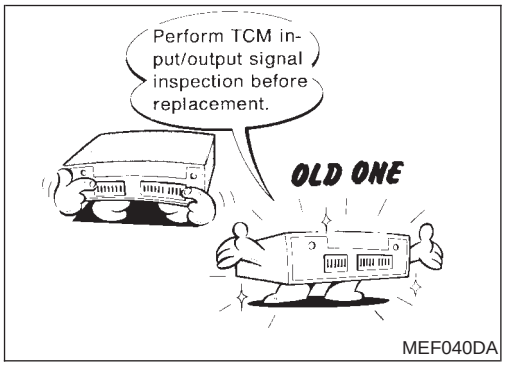

MEF040DA

- **Before replacing TCM, perform TCM input/output signal inspection and make sure whether TCM functions properly or not. (See page AT-118.)**

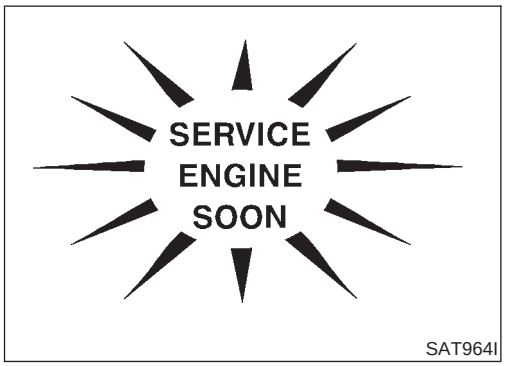

SAT964I

- **After performing each TROUBLE DIAGNOSIS, perform "DTC (Diagnostic Trouble Code) CONFIRMATION PROCEDURE".**
  The DTC should not be displayed in the "DTC CONFIRMATION PROCEDURE" if the repair is completed.

- Before proceeding with disassembly, thoroughly clean the outside of the transaxle. It is important to prevent the internal parts from becoming contaminated by dirt or other foreign matter.
- Disassembly should be done in a clean work area.
- Use lint-free cloth or towels for wiping parts clean. Common shop rags can leave fibers that could interfere with the operation of the transaxle.
- Place disassembled parts in order for easier and proper assembly.
- All parts should be carefully cleaned with a general purpose, non-flammable solvent before inspection or reassembly.
- Gaskets, seals and O-rings should be replaced any time the transaxle is disassembled.
- It is very important to perform functional tests whenever they are indicated.
- The valve body contains precision parts and requires extreme care when parts are removed and serviced. Place disassembled valve body parts in order for easier and proper assembly. Care will also prevent springs and small parts from becoming scattered or lost.
- Properly installed valves, sleeves, plugs, etc. will slide along bores in valve body under their own weight.
- Before assembly, apply a coat of recommended ATF to all

parts. Apply petroleum jelly to protect O-rings and seals, or hold bearings and washers in place during assembly. Do not use grease.

- Extreme care should be taken to avoid damage to O-rings, seals and gaskets when assembling.
- After overhaul, refill the transaxle with new ATF.
- When the A/T drain plug is removed, only some of the fluid is drained. Old A/T fluid will remain in torque converter and ATF cooling system.
  Always follow the procedures under "Changing A/T Fluid" in the AT section when changing A/T fluid. Refer to "Changing A/T Fluid", AT-15.

Service Notice or Precautions

NJAT0247

FAIL-SAFE

NJAT0247S01

The TCM has an electronic Fail-Safe (limp home mode). This allows the vehicle to be driven even if a major electrical input/output device circuit is damaged.
Under Fail-Safe, the vehicle always runs in third gear, even with a shift lever position of "1", "2" or "D". The customer may complain of sluggish or poor acceleration.
When the ignition key is turned "ON" following Fail-Safe operation, O/D OFF indicator lamp blinks for about 8 seconds. (For GENERAL AND EXCEPT FOR EURO-OBD; "SELF-DIAGNOSTIC PROCEDURE (WITHOUT CONSULT-II)", refer to AT-44 and for EURO-OBD; "TCM SELF-DIAGNOSTIC PROCEDURE (No Tools)", refer to AT-63.)
Fail-Safe may occur without electrical circuit damage if the vehicle is driven under extreme conditions (such as excessive wheel spin followed by sudden braking). To recover normal shift pattern, turn the ignition key "OFF" for 5 seconds, then "ON".
The blinking of the O/D OFF indicator lamp for about 8 seconds will appear only once and be cleared. The customer may resume normal driving conditions.
Always follow the "WORK FLOW" [Refer to AT-73 (General and except for Euro-OBD), AT-78 (EURO-OBD).]
The SELF-DIAGNOSIS results will be as follows:

The first SELF-DIAGNOSIS will indicate damage to the vehicle speed sensor or the revolution sensor.

During the next SELF-DIAGNOSIS, performed after checking the sensor, no damages will be indicated.

TORQUE CONVERTER SERVICE

NJAT0247S02

The torque converter should be replaced under any of the following conditions:

- External leaks in the hub weld area.
- Converter hub is scored or damaged.
- Converter pilot is broken, damaged or fits poorly into crankshaft.
- Steel particles are found after flushing the cooler and cooler lines.
- Pump is damaged or steel particles are found in the converter.
- Vehicle has TCC shudder and/or no TCC apply. Replace only after all hydraulic and electrical diagnoses have been made. (Converter clutch material may be glazed.)
- Converter is contaminated with engine coolant containing antifreeze.
- Internal failure of stator roller clutch.
- Heavy clutch debris due to overheating (blue converter).
- Steel particles or clutch lining material found in fluid filter or on magnet when no internal parts in unit are worn or damaged — indicates that lining material came from converter.

The torque converter should not be replaced if:

- The fluid has an odor, is discolored, and there is no evidence of metal or clutch facing particles.
- The threads in one or more of the converter bolt holes are damaged.
- Transaxle failure did not display evidence of damaged or worn internal parts, steel particles or clutch plate lining material in unit and inside the fluid filter.
- Vehicle has been exposed to high mileage (only). The exception may be where the torque converter clutch dampener plate lining has seen excess wear by vehicles operated in heavy and/or constant traffic, such as taxi, delivery or police use.

EURO-OBD SELF-DIAGNOSIS — EURO-OBD —

NJAT0247S04

- A/T self-diagnosis is performed by the TCM in combination with the ECM. The results can be read through the blinking pattern of the O/D OFF indicator or the malfunction indicator (MI). Refer to the table on AT-55 for the indicator used to display each self-diagnostic result.
- The self-diagnostic results indicated by the MI are automatically stored in both the ECM and TCM memories.
  Always perform the procedure "HOW TO ERASE DTC" on AT-52 to complete the repair and avoid unnecessary blinking of the MI.
- The following self-diagnostic items can be detected using ECM self-diagnostic results mode* only when the O/D OFF indicator lamp does not indicate any malfunctions.

− PNP switch

− A/T 1st, 2nd, 3rd, or 4th gear function

*: For details of EURO-OBD, refer to EC-59, "ON BOARD DIAGNOSTIC SYSTEM DESCRIPTION".

- **Certain systems and components, especially those related to EURO-OBD, may use a new style slide-locking type harness connector.**
  For description and how to disconnect, refer to EL-6, "HARNESS CONNECTOR".

Wiring Diagrams and Trouble Diagnosis

NJAT0248

When you read wiring diagrams, refer to the following:

- GI-11, "HOW TO READ WIRING DIAGRAMS"
- EL-10, "POWER SUPPLY ROUTING"

When you perform trouble diagnosis, refer to the following:

- GI-32, "HOW TO FOLLOW TEST GROUP IN TROUBLE DIAGNOSIS"
- GI-21, "HOW TO PERFORM EFFICIENT DIAGNOSIS FOR AN ELECTRICAL INCIDENT"

Special Service Tools

NJAT0006

Tool number Tool name	Description	
ST2505S001 Oil pressure gauge set 1 ST25051001 Oil pressure gauge 2 ST25052000 Hose 3 ST25053000 Joint pipe 4 ST25054000 Adapter 5 ST25055000 Adapter	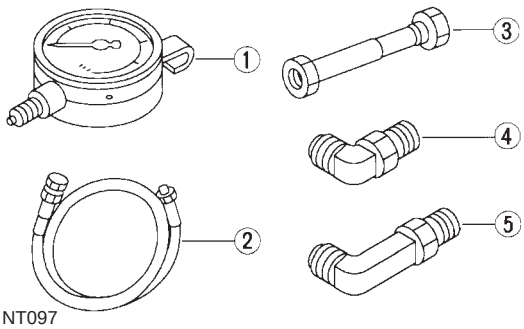 NT097	Measuring line pressure
KV31103000 Drift	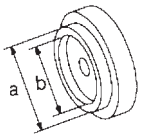 NT105	Installing differential oil seal (Use with ST35325000.) **a: 59 mm (2.32 in) dia.** **b: 49 mm (1.93 in) dia.**
ST35325000 Drift	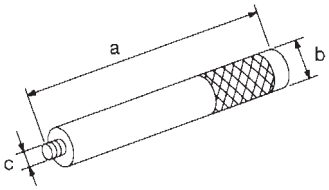 NT417	Installing differential oil seal (Use with KV31103000.) **a: 215 mm (8.46 in)** **b: 25 mm (0.98 in) dia.** **c: M12 x 1.5P**
KV31103200 Clutch spring compres-sor	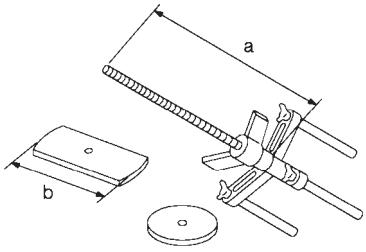 NT423	Removing and installing clutch return spring **a: 320 mm (12.60 in)** **b: 174 mm (6.85 in)**
ST23540000 Pin punch	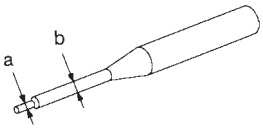 NT442	Removing and installing parking rod plate, manual plate and differential pinion mate shaft retaining pins **a: 2.3 mm (0.091 in) dia.** **b: 4 mm (0.16 in) dia.**
KV32101000 Pin punch	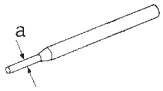 NT410	Installing throttle lever and manual shaft retaining pins **a: 4 mm (0.16 in) dia.**
ST25710000 Pin punch	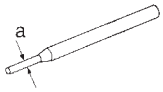 NT410	Aligning groove of manual shaft and hole of trans-mission case **a: 2 mm (0.08 in) dia.**

Special Service Tools (Cont'd)

Tool number Tool name	Description	
ST3306S001 Differential side bearing puller set 1 ST33051001 Puller 2 ST33061000 Adapter	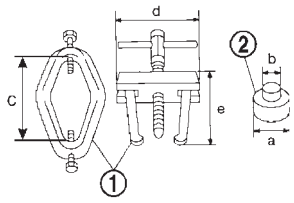 NT745	Removing differential side bearing inner race **a: 39 mm (1.54 in) dia.** **b: 29.5 mm (1.161 in) dia.** **c: 130 mm (5.12 in)** **d: 135 mm (5.31 in)** **e: 120 mm (4.72 in)**
KV381054S0 Puller	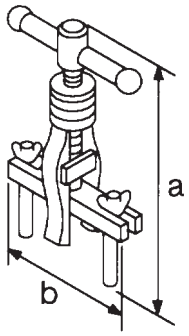 NT414	● Removing idler gear bearing outer race ● Removing differential side oil seals ● Removing differential side bearing outer race ● Removing needle bearing from bearing retainer **a: 250 mm (9.84 in)** **b: 160 mm (6.30 in)**
ST27180001 Puller	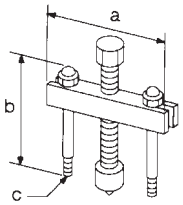 NT424	● Removing idler gear **a: 100 mm (3.94 in)** **b: 110 mm (4.33 in)** **c: M8 x 1.25P**
ST30031000 Puller	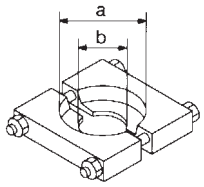 NT411	Removing reduction gear bearing inner race **a: 90 mm (3.54 in) dia.** **b: 50 mm (1.97 in) dia.**
ST35272000 Drift	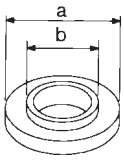 NT426	● Installing reduction gear bearing inner race ● Installing idler gear bearing inner race **a: 72 mm (2.83 in) dia.** **b: 35.5 mm (1.398 in) dia.**
ST37830000 Drift	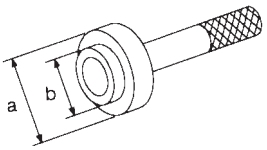 NT427	Installing idler gear bearing outer race **a: 62 mm (2.44 in) dia.** **b: 39 mm (1.54 in) dia.**

Tool number Tool name	Description	
ST35321000 Drift	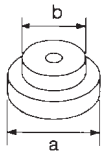 NT073	Installing output shaft bearing **a: 49 mm (1.93 in) dia.** **b: 41 mm (1.61 in) dia.**
ST30633000 Drift	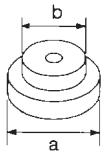 NT073	Installing differential side bearing outer race **a: 67 mm (2.64 in) dia.** **b: 49 mm (1.93 in) dia.**
ST35271000 Drift	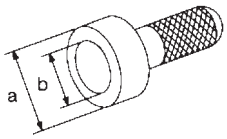 NT115	● Installing idler gear **a: 72 mm (2.83 in) dia.** **b: 63 mm (2.48 in) dia.**
ST33400001 Drift	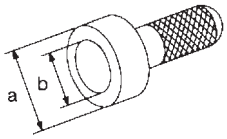 NT115	● Installing oil pump housing oil seal **a: 60 mm (2.36 in) dia.** **b: 47 mm (1.85 in) dia.**
KV38105710 Preload adapter	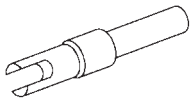 NT087	● Measuring clearance between side gear and differential case
KV40104840 Drift	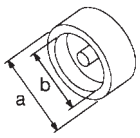 NT108	● Installing output shaft bearing outer race onto bearing retainer **a: 49 mm (1.93 in) dia.** **b: 42 mm (1.65 in) dia.**

Commercial Service Tools

NJAT0007

Tool name	Description	
Puller	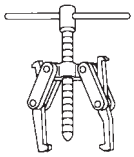 NT077	● Removing idler gear bearing inner race ● Removing and installing band servo piston snap ring

Commercial Service Tools (Cont'd)

Tool name	Description	
Drift	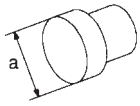 NT109	Removing idler gear bearing inner race **a: 34 mm (1.34 in) dia.**
Drift	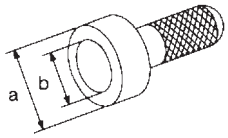 NT115	Installing differential left side bearing **a: 86 mm (3.39 in) dia.** **b: 80 mm (3.15 in) dia.**
Drift	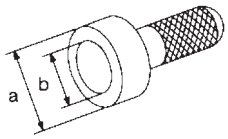 NT115	Installing differential right side bearing **a: 46 mm (1.81 in) dia.** **b: 40 mm (1.57 in) dia.**

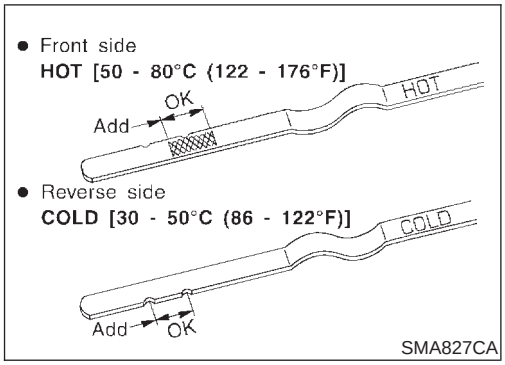

SMA827CA

Checking A/T Fluid

NJAT0228

1. Warm up engine.
2. Check for fluid leakage.
3. Before driving, fluid level can be checked at fluid temperatures of 30 to 50°C (86 to 122°F) using “COLD” range on dipstick.

a. Park vehicle on level surface and set parking brake.
b. Start engine and move selector lever through each gear position. Leave selector lever in “P” position.
c. Check fluid level with engine idling.
d. Remove dipstick and note reading. If level is at low side of either range, and fluid to the charging pipe.
e. Re-insert dipstick into charging pipe as far as it will go.
f. Remove dipstick and note reading. If reading is at low side of range, add fluid to the charging pipe.

Do not overfill.

4. Drive vehicle for approximately 5 minutes in urban areas.
5. Re-check fluid level at fluid temperatures of 50 to 80°C (122 to 176°F) using “HOT” range on dipstick.

Check fluid for contamination.
SMA853B

6. Check fluid condition.

- If fluid is very dark or smells burned, refer to AT section for checking operation of A/T. Flush cooling system after repair of A/T.
- If A/T fluid contains frictional material (clutches, bands, etc.), replace radiator and flush cooler line using cleaning solvent and compressed air after repair of A/T. Refer to LC-16, “Radiator”.

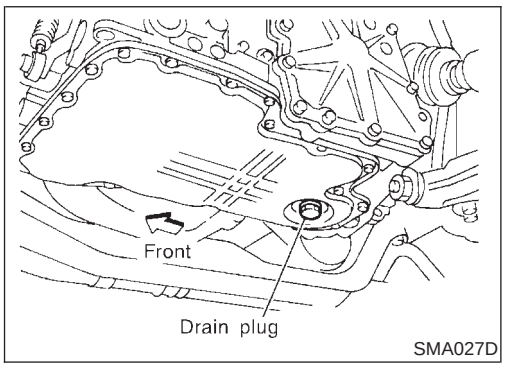

SMA027D

Changing A/T Fluid

NJAT0229

1. Warm up A/T fluid.
2. Stop engine.
3. Drain A/T fluid from drain plug and refill with new A/T fluid. Always refill same volume with drained fluid.

Fluid grade:

Nissan Matic “D” or Genuine Nissan Automatic Transmission Fluid. Refer to “RECOMMENDED FLUIDS AND LUBRICANTS”, MA-16.

Fluid capacity (With torque converter):

7.0 ℓ (6-1/8 Imp qt)

Drain plug:

: 29 - 39 N·m (3.0 - 4.0 kg-m, 22 - 29 ft-lb)

4. Run engine at idle speed for five minutes.
5. Check fluid level and condition. Refer to “Checking A/T Fluid”. If fluid is still dirty, repeat steps 2 through 5.

A/T Electrical Parts Location

NJAT0008

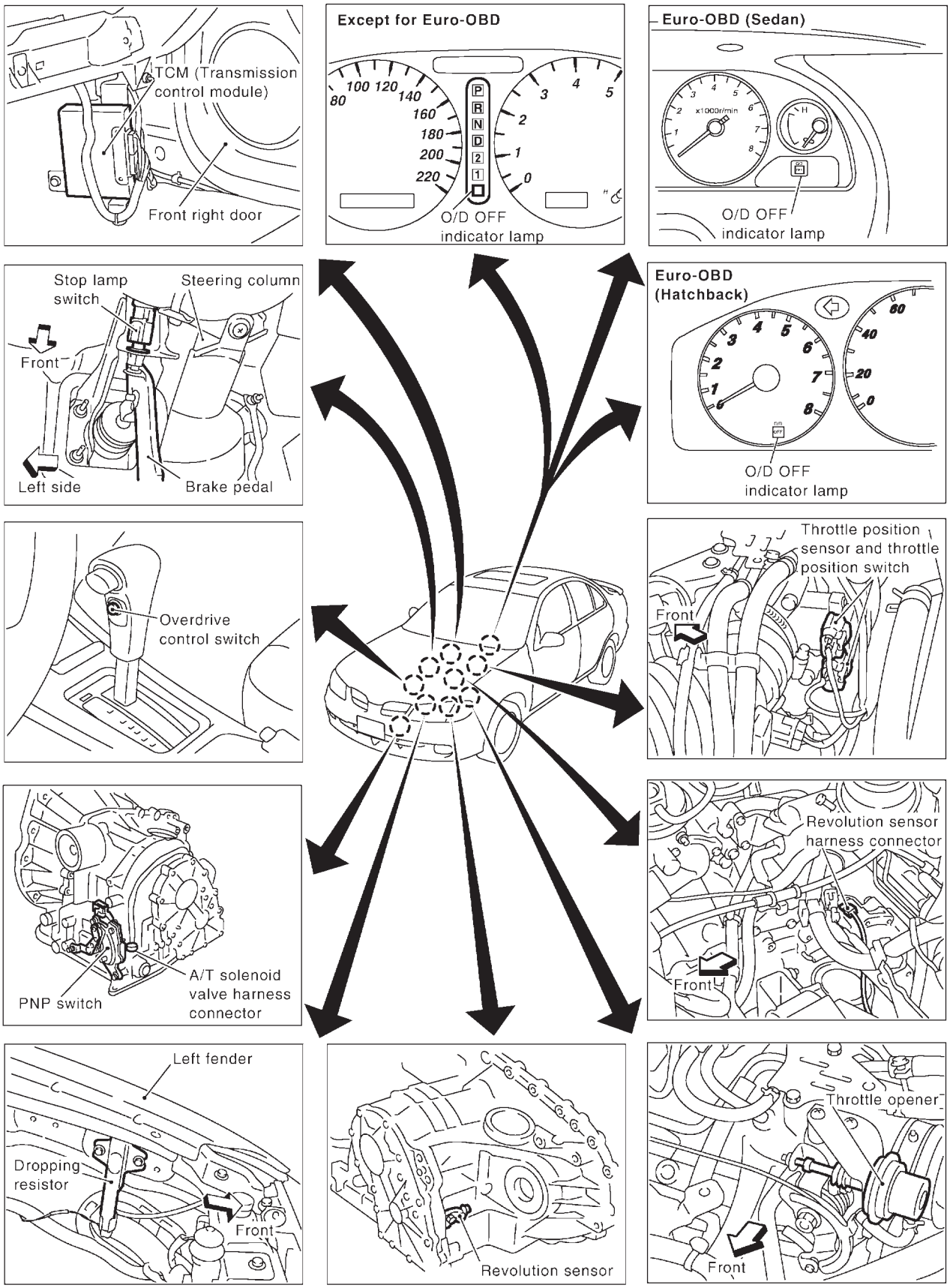

SAT069K

Circuit Diagram

GENERAL AND EXCEPT FOR EURO-OBD

NJAT0009

NJAT0009S01

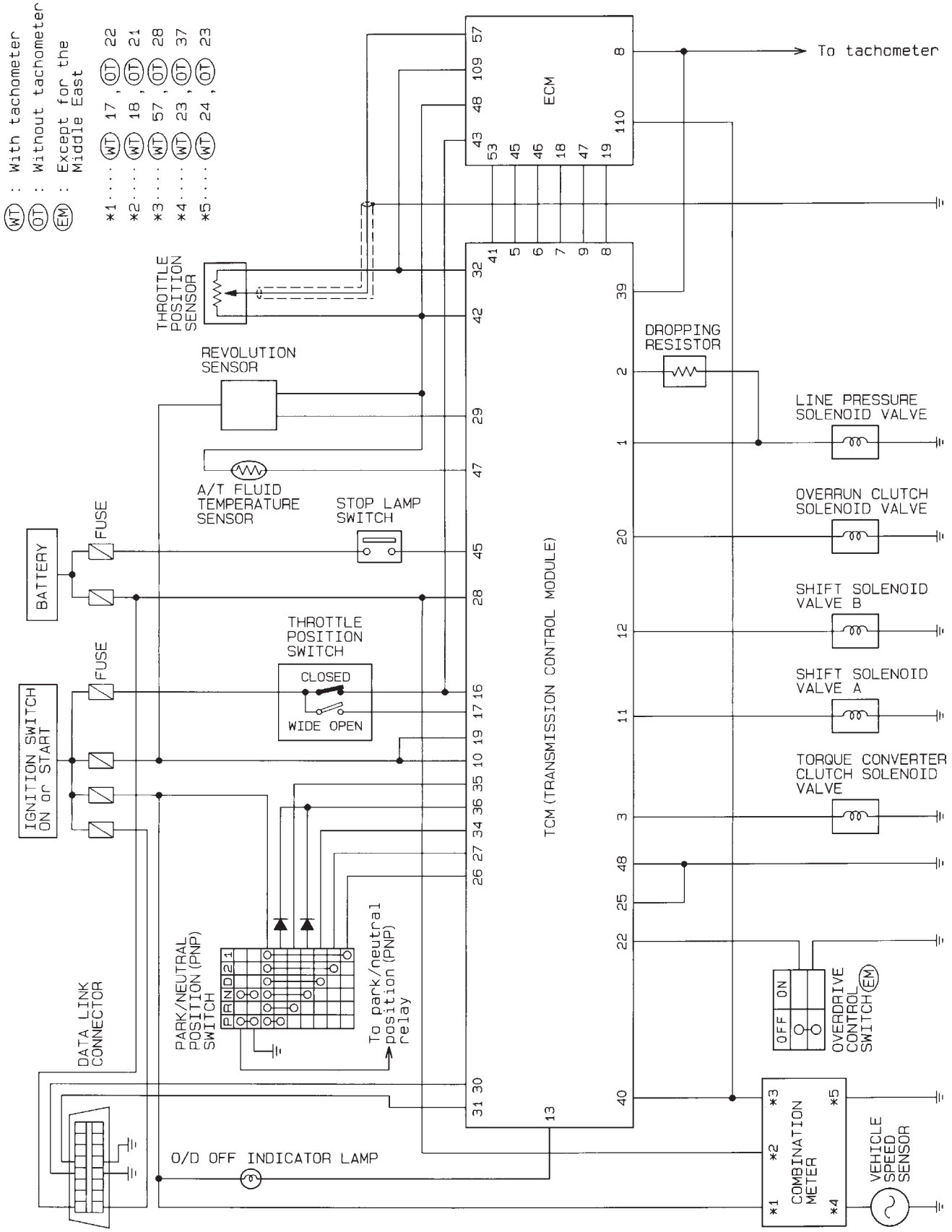

HAT073

Circuit Diagram (Cont'd)

EURO-OBD

NJAT0009S02

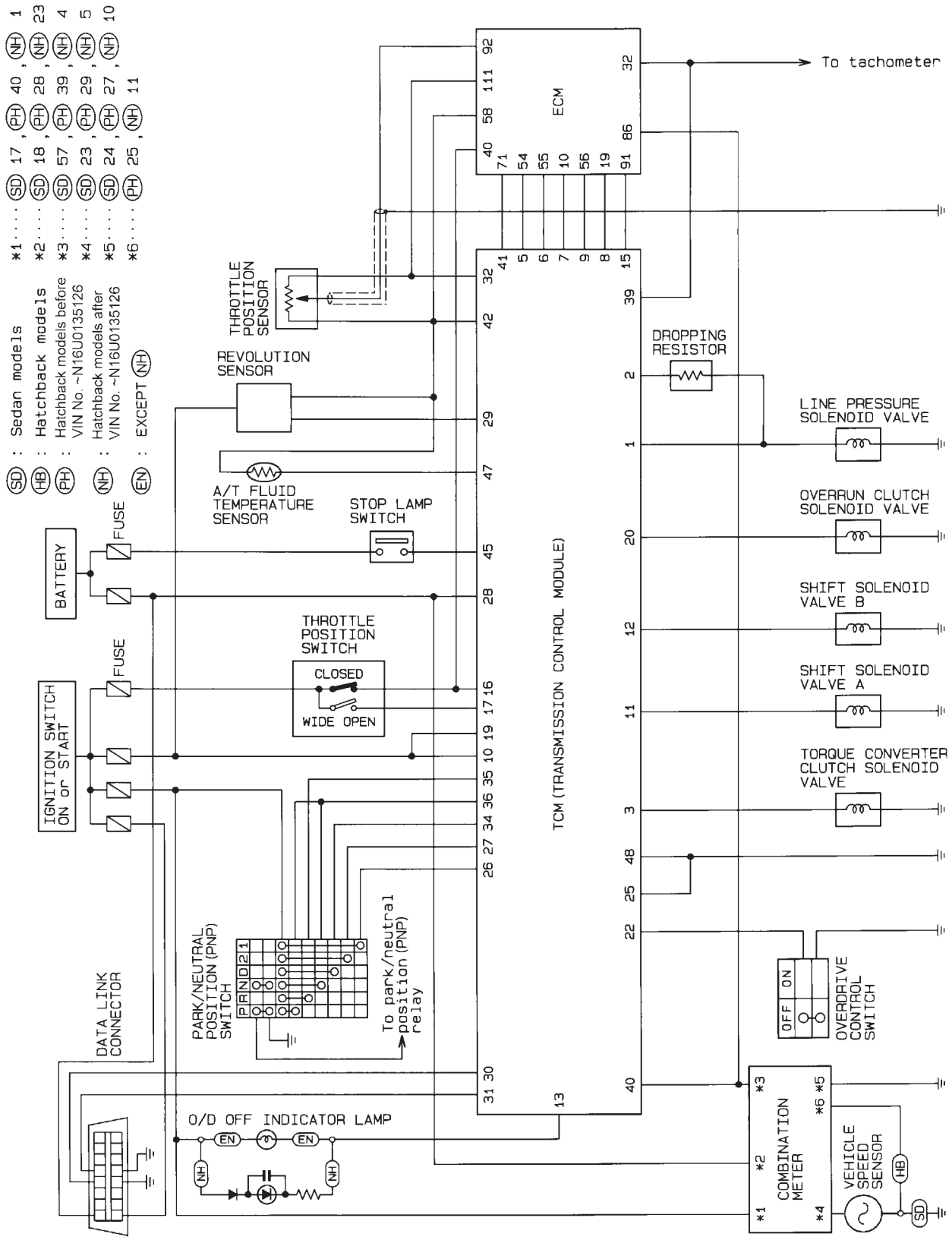

NAT353

Cross-sectional View — 3AX00, 3AX01, 3AX19, 3AX63 and 3AX64 models

NJAT0011

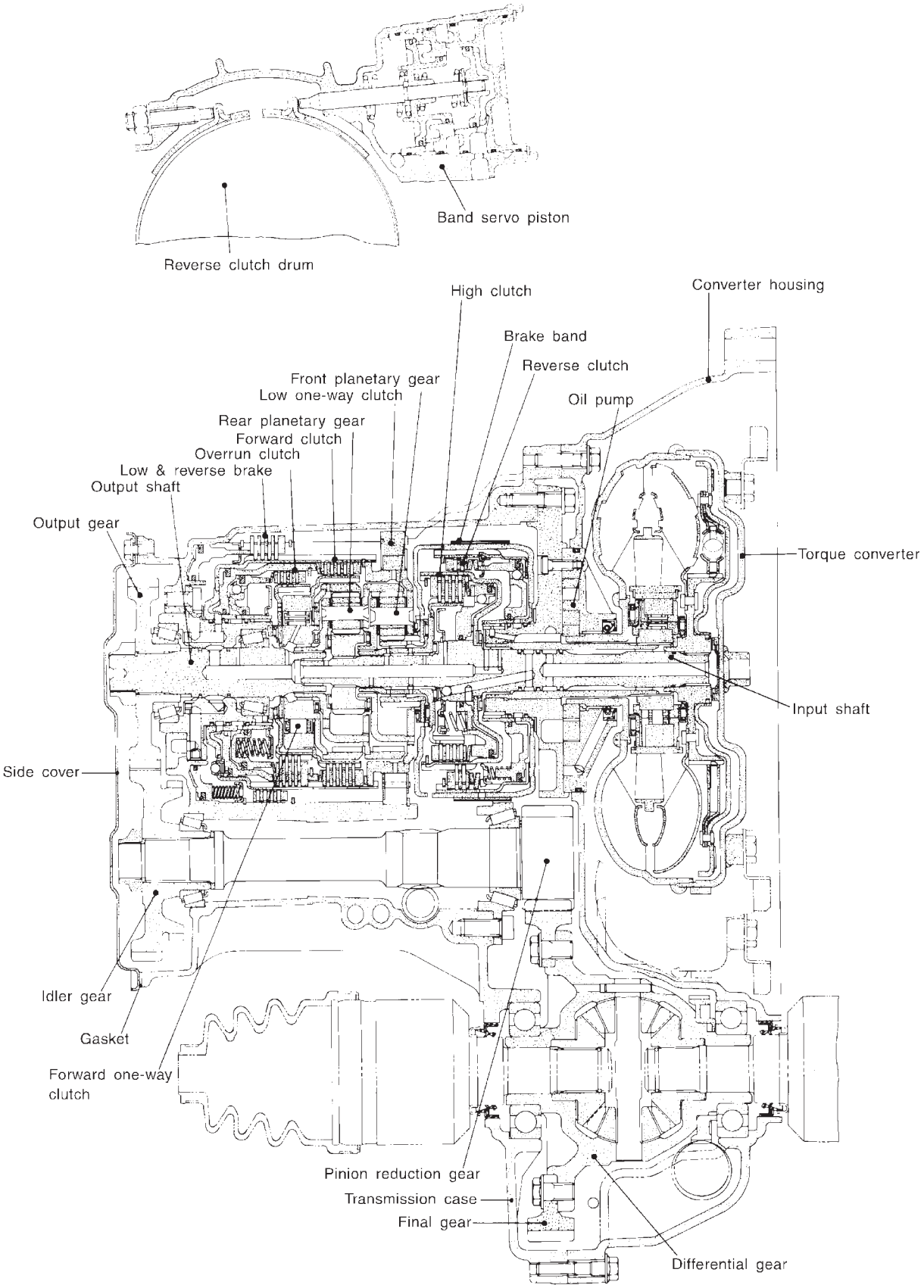

SAT042K

Cross-sectional View — 3AX10 and 3AX18 models

NJAT0217

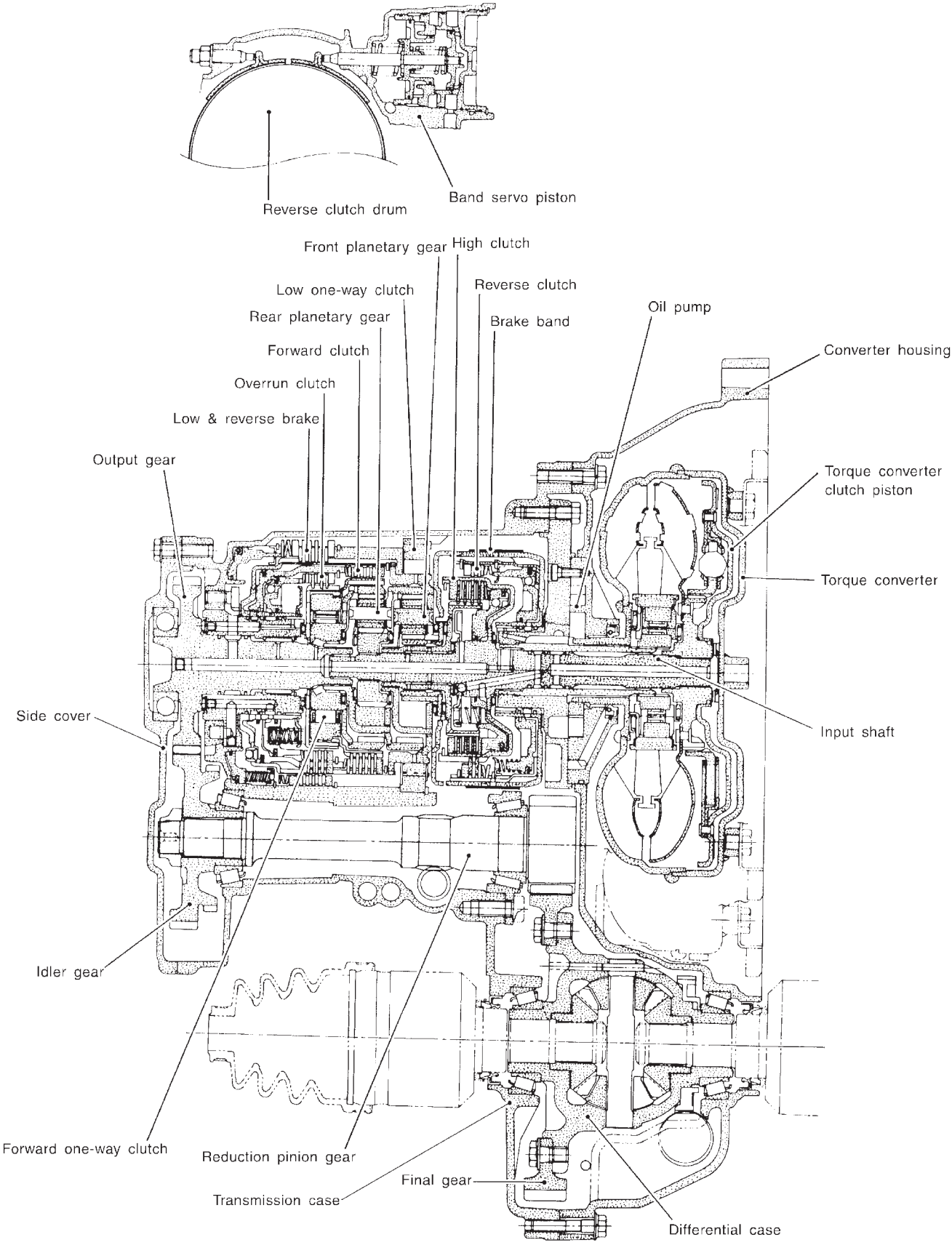

SAT842J

Hydraulic Control Circuit

NJAT0012

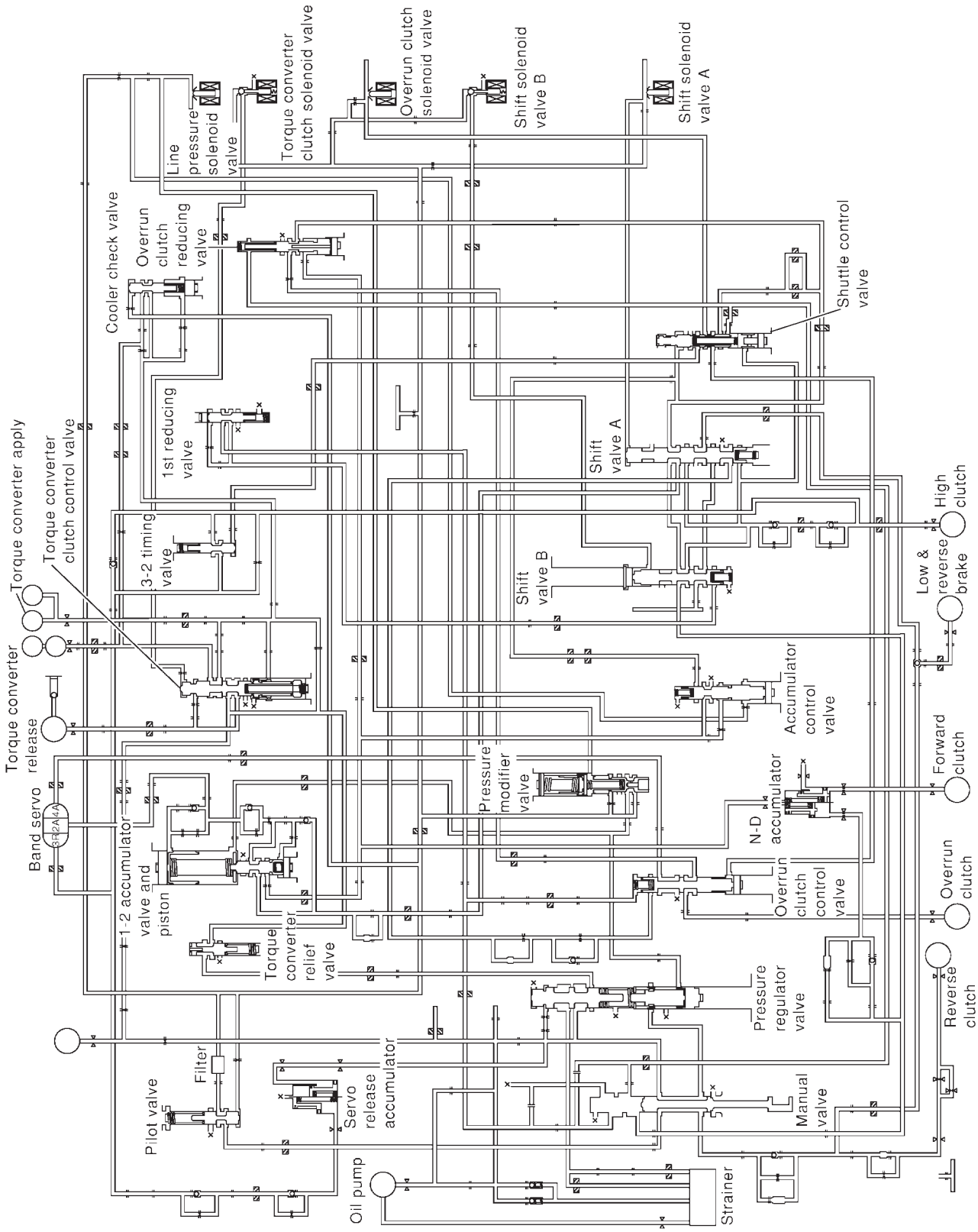

SAT844J

Shift Mechanism

NJAT0013

CONSTRUCTION

NJAT0013S01

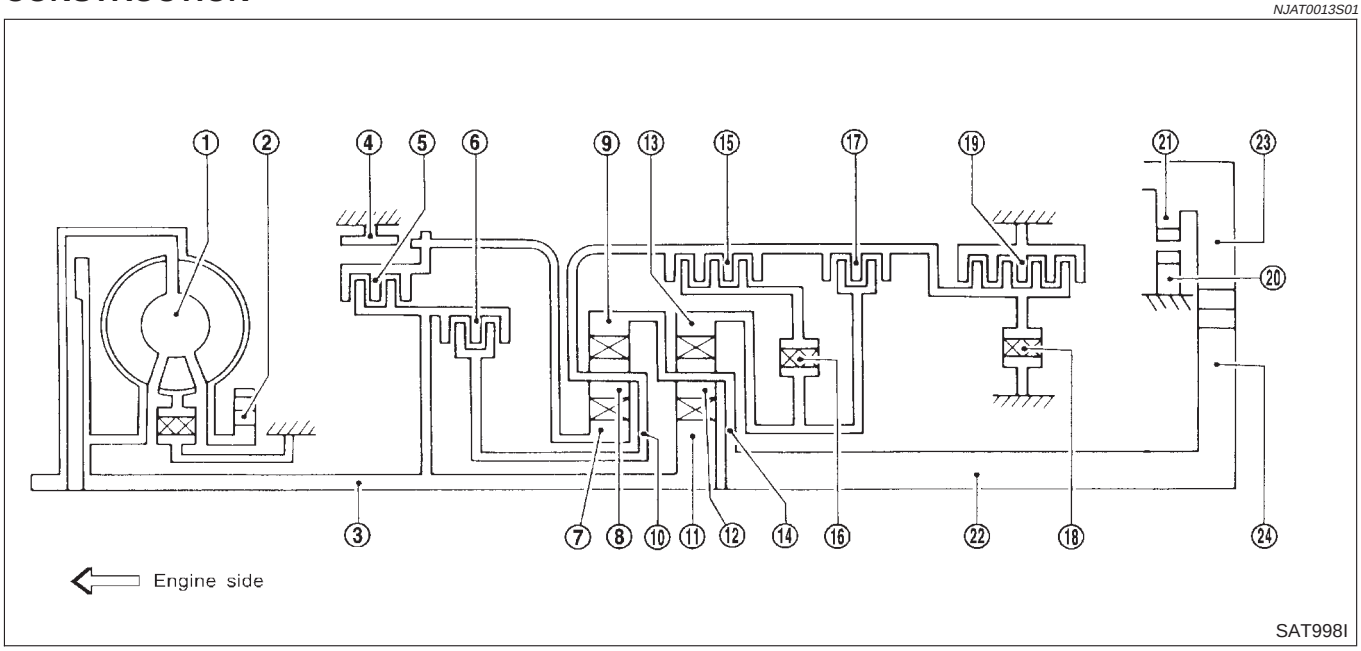

1. Torque converter
2. Oil pump
3. Input shaft
4. Brake band
5. Reverse clutch
6. High clutch
7. Front sun gear
8. Front pinion gear
9. Front internal gear
10. Front planetary carrier
11. Rear sun gear
12. Rear pinion gear
13. Rear internal gear
14. Rear planetary carrier
15. Forward clutch
16. Forward one-way clutch
17. Overrun clutch
18. Low one-way clutch
19. Low & reverse brake
20. Parking pawl
21. Parking gear
22. Output shaft
23. Idle gear
24. Output gear

FUNCTION OF CLUTCH AND BRAKE

NJAT0013S03

Clutch and brake components	Abbr.	Function
5 Reverse clutch	R/C	To transmit input power to front sun gear **7**.
6 High clutch	H/C	To transmit input power to front planetary carrier **10**.
15 Forward clutch	F/C	To connect front planetary carrier **10** with forward one-way clutch **16**.
17 Overrun clutch	O/C	To connect front planetary carrier **10** with rear internal gear **13**.
4 Brake band	B/B	To lock front sun gear **7**.
16 Forward one-way clutch	F/O.C	When forward clutch **15** is engaged, to stop rear internal gear **13** from rotating in opposite direction against engine revolution.
18 Low one-way clutch	L/O.C	To stop front planetary carrier **10** from rotating in opposite direction against engine revolution.
19 Low & reverse brake	L & R/B	To lock front planetary carrier **10**.

CLUTCH AND BAND CHART

NJAT0013S04

Shift position		Reverse clutch **5**	High clutch **6**	For-ward clutch **15**	Over-run clutch **17**	Band servo			Forward one-way clutch **16**	Low one-way clutch **18**	Low & reverse brake **19**	Lock-up	Remarks
						2nd apply	3rd release	4th apply					
P													PARK POSITION
R		○									○		REVERSE POSITION
N													NEUTRAL POSITION
D*4	1st			○	*1D				B	B			Automatic shift 1 ⇔ 2 ⇔ 3 ⇔ 4
	2nd			○	*1A	○			B				
	3rd		○	○	*1A	*2C	C		B			*5○	
	4th		○	C		*3C	C	○				○	
2	1st			○	D				B	B			Automatic shift 1 ⇔ 2
	2nd			○	A	○			B				
1	1st			○	○				B		○		Locks (held stationary) in 1st speed 1 ⇐ 2
	2nd			○	○	○			B				

*1: Operates when overdrive control switch is set in "OFF" position.

*2: Oil pressure is applied to both 2nd "apply" side and 3rd "release" side of band servo piston. However, brake band does not contract because oil pressure area on the "release" side is greater than that on the "apply" side.

*3: Oil pressure is applied to 4th "apply" side in condition *2 above, and brake band contracts.

*4: A/T will not shift to 4th when overdrive control switch is set in "OFF" position.

*5: Operates when overdrive control switch is "OFF".

○ : Operates.

A: Operates when throttle opening is less than 3/16, activating engine brake.

B: Operates during "progressive" acceleration.

C: Operates but does not affect power transmission.

D: Operates when throttle opening is less than 3/16, but does not affect engine brake.

POWER TRANSMISSION

=NJAT0013S02

"N" and "P" Positions

NJAT0013S0201

- "N" position
  Power from the input shaft is not transmitted to the output shaft because the clutches do not operate.
- "P" position
  Similar to the "N" position, the clutches do not operate. The parking pawl engages with the parking gear to mechanically hold the output shaft so that the power train is locked.

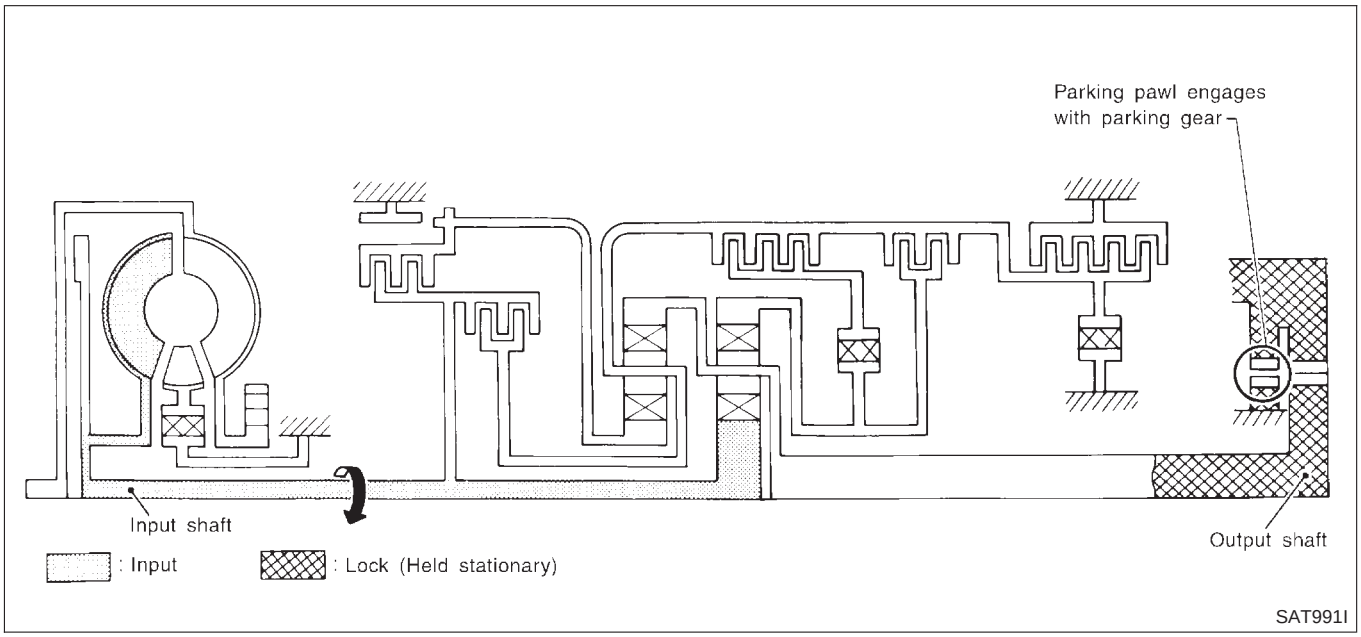

"1_1" Position

=NJAT0013S0202

• **Forward clutch** • **Forward one-way clutch** • **Overrun clutch** • **Low and reverse brake**	As overrun clutch engages, rear internal gear is locked by the operation of low and reverse brake. This is different from that of D_1 and 2_1.
Engine brake	Overrun clutch always engages, therefore engine brake can be obtained when decelerating.

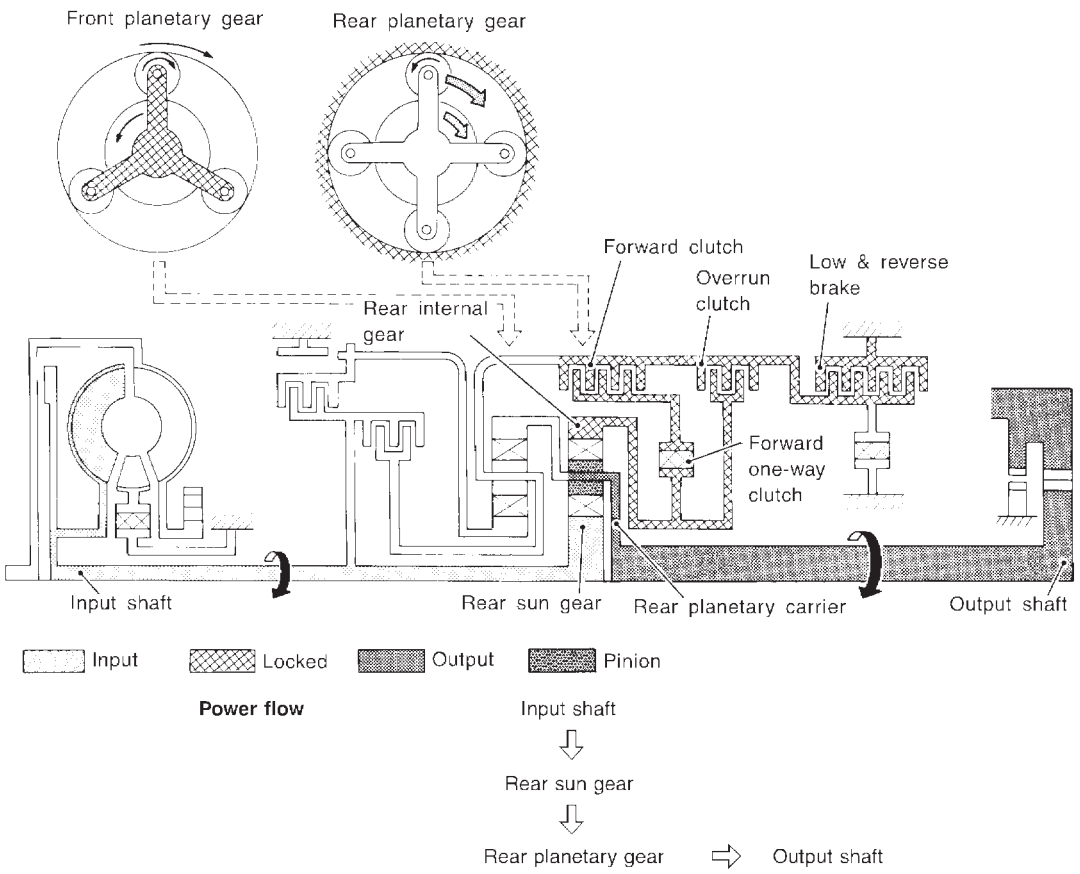

SAT374J

"D_1" and "2_1" Positions

=NJAT0013S0203

• **Forward one-way clutch** • **Forward clutch** • **Low one-way clutch**	Rear internal gear is locked to rotate counterclockwise because of the functioning of these three clutches.
Overrun clutch engagement conditions (Engine brake)	D_1: Overdrive control switch "OFF" and throttle opening is less than 3/16 2_1: Always engaged At D_1 and 2_1 positions, engine brake is not activated due to free turning of low one-way clutch.

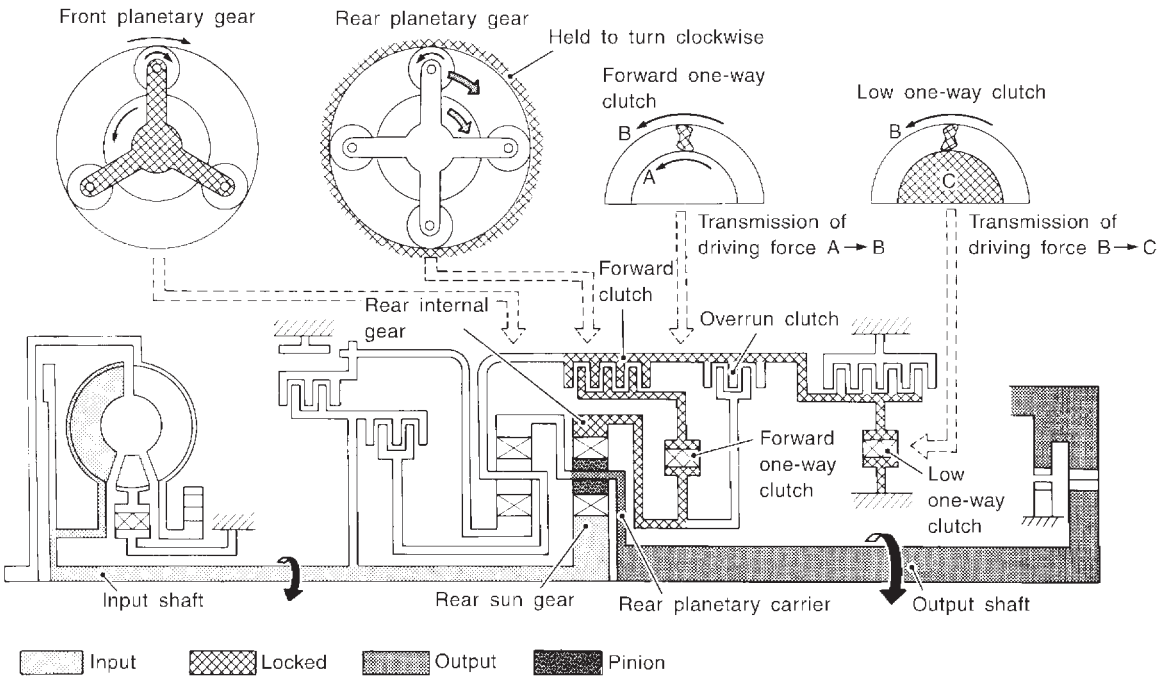

Power flow

Input shaft
⇩
Rear sun gear
⇩
Rear pinion gear
⇩
Rear planetary carrier → Output shaft

SAT377J

"D_2", "2_2" and "1_2" Positions

=NJAT0013S0204

• **Forward clutch** • **Forward one-way clutch** • **Brake band**	Rear sun gear drives rear planetary carrier and combined front internal gear. Front internal gear now rotates around front sun gear accompanying front planetary carrier. As front planetary carrier transfers the power to rear internal gear through forward clutch and forward one-way clutch, this rotation of rear internal gear increases the speed of rear planetary carrier compared with that of the 1st speed.
Overrun clutch engagement conditions	D_2: Overdrive control switch "OFF" and throttle opening is less than 3/16 2_2 and 1_2: Always engaged

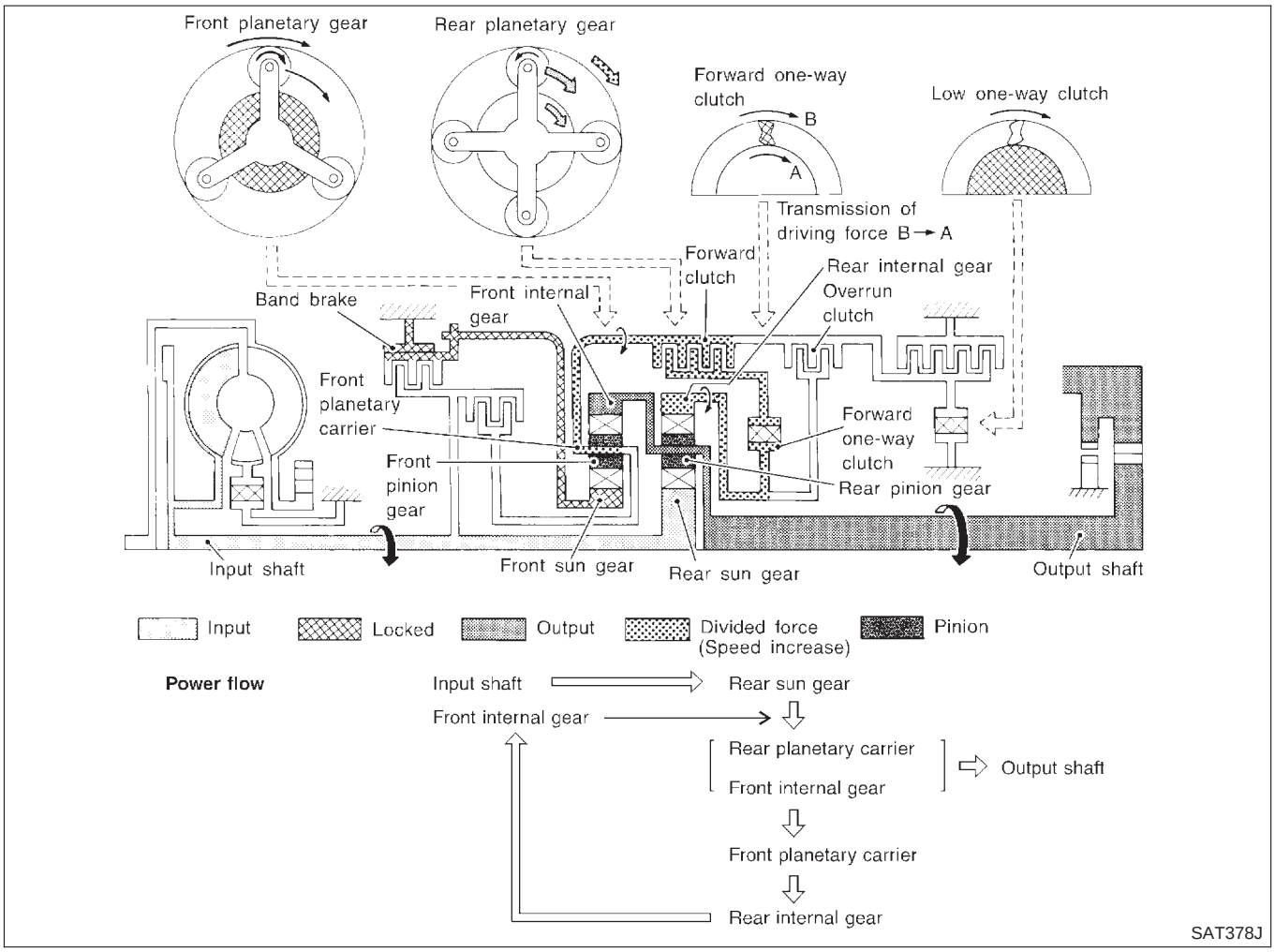

"D_3" Position

=NJAT0013S0205

• **High clutch** • **Forward clutch** • **Forward one-way clutch**	Input power is transmitted to front planetary carrier through high clutch. And front planetary carrier is connected to rear internal gear by operation of forward clutch and forward one-way clutch. This rear internal gear rotation and another input (the rear sun gear) accompany rear planetary carrier to turn at the same speed.
Overrun clutch engagement conditions	D_3: Overdrive control switch "OFF" and throttle opening is less than 3/16

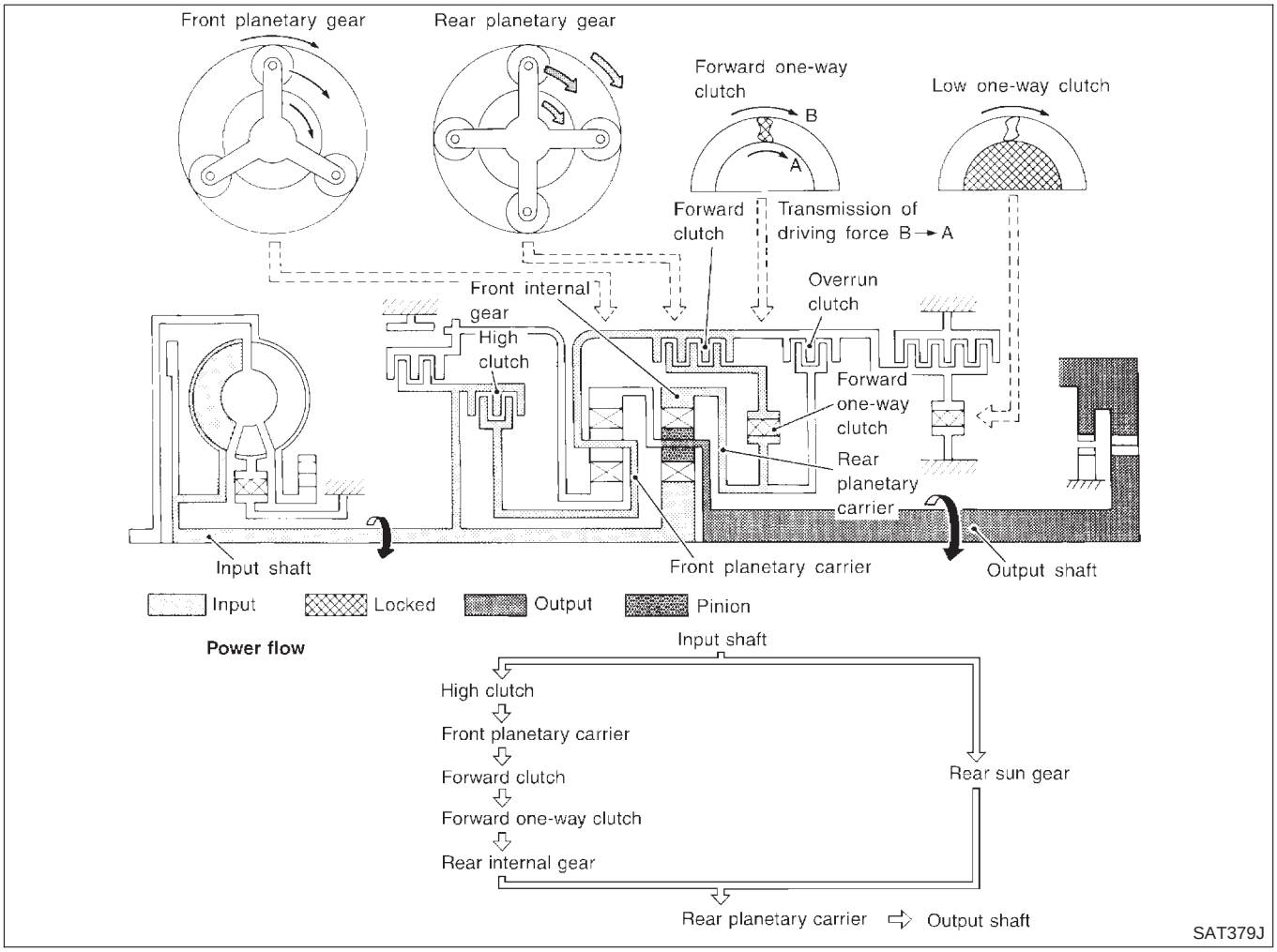

"D_4" (OD) Position

=NJAT0013S0206

• **High clutch** • **Brake band** • **Forward clutch** (Does not affect power transmission)	Input power is transmitted to front carrier through high clutch. This front carrier turns around the sun gear which is fixed by brake band and makes front internal gear (output) turn faster.
Engine brake	At D_4 position, there is no one-way clutch in the power transmission line and engine brake can be obtained when decelerating.

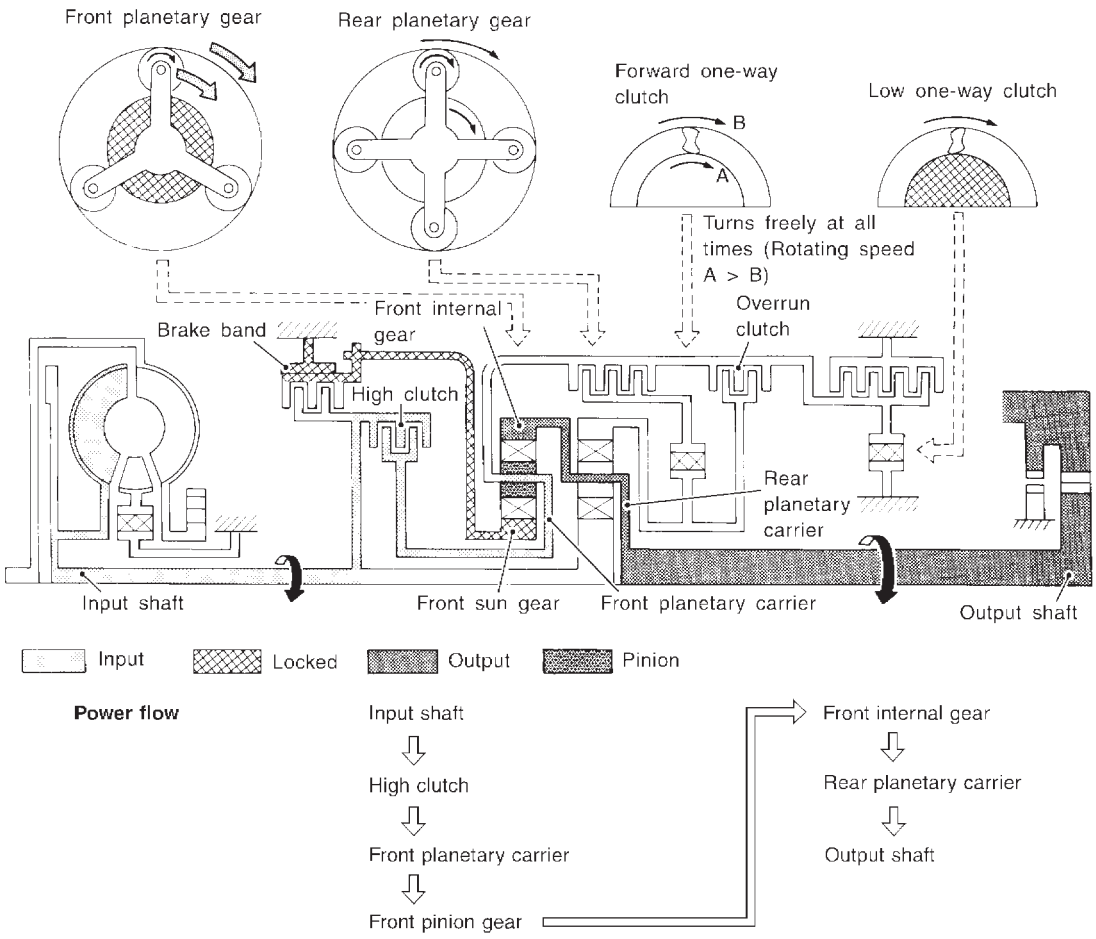

Power flow

Input shaft
⇩
High clutch
⇩
Front planetary carrier
⇩
Front pinion gear
⇨
Front internal gear
⇩
Rear planetary carrier
⇩
Output shaft

SAT380J

"R" Position

=NJAT0013S0207

• **Reverse clutch** • **Low and reverse brake**	Front planetary carrier is stationary because of the operation of low and reverse brake. Input power is transmitted to front sun gear through reverse clutch, which drives front internal gear in the opposite direction.
Engine brake	As there is no one-way clutch in the power transmission line, engine brake can be obtained when decelerating.

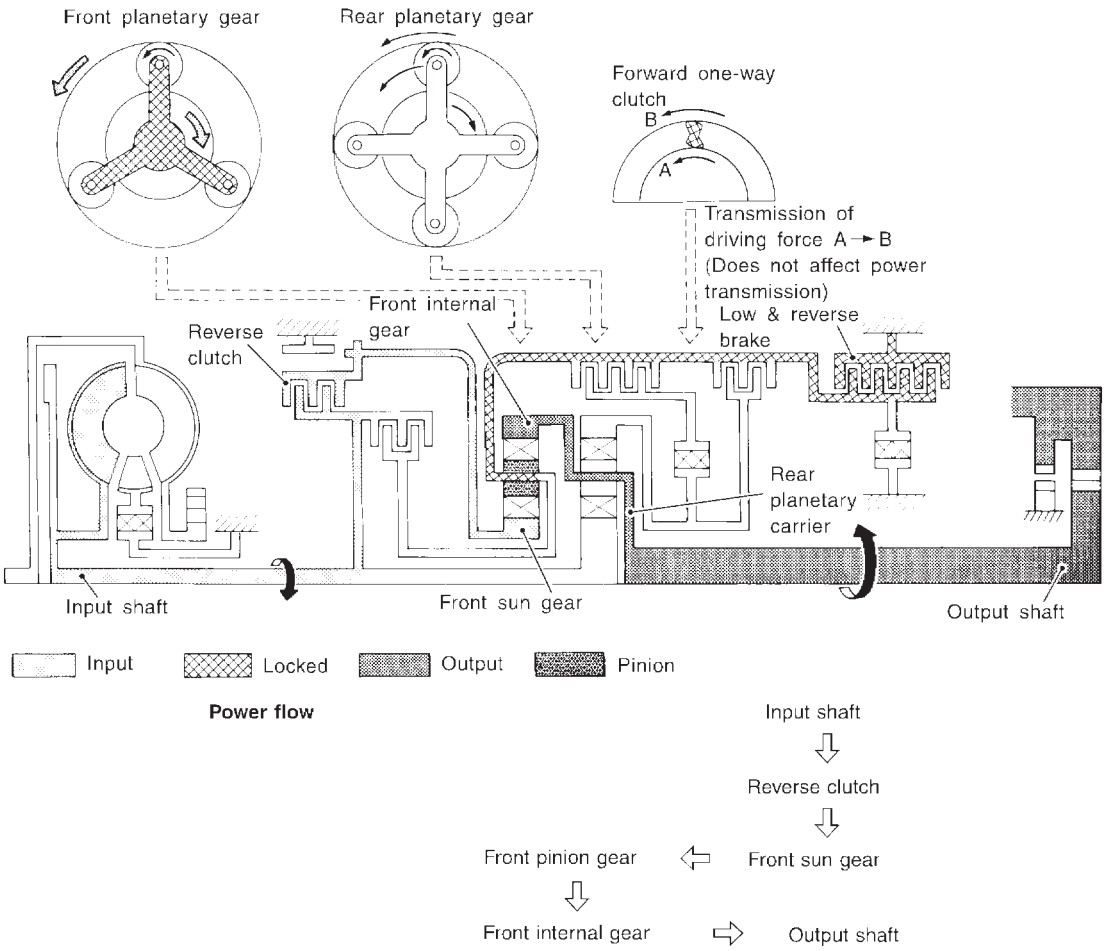

Power flow

Input shaft
⇩
Reverse clutch
⇩
Front pinion gear ⇦ Front sun gear
⇩
Front internal gear ⇨ Output shaft

SAT381J

Control System

=NJAT0014

OUTLINE

NJAT0014S01

The automatic transaxle senses vehicle operating conditions through various switches and sensors. It always controls the optimum shift position and reduces shifting and lock-up shocks.

SWITCHES & SENSORS		TCM		ACTUATORS
PNP switch Throttle position sensor Closed throttle position switch Wide open throttle position switch Engine speed signal A/T fluid temperature sensor Revolution sensor Vehicle speed sensor Overdrive control switch Stop lamp switch	►	Shift control Line pressure control Lock-up control Overrun clutch control Timing control Fail-safe control Self-diagnosis CONSULT-II communication line control Duet-EA control	►	Shift solenoid valve A Shift solenoid valve B Overrun clutch solenoid valve Torque converter clutch solenoid valve Line pressure solenoid valve O/D OFF indicator lamp

CONTROL SYSTEM

NJAT0014S02

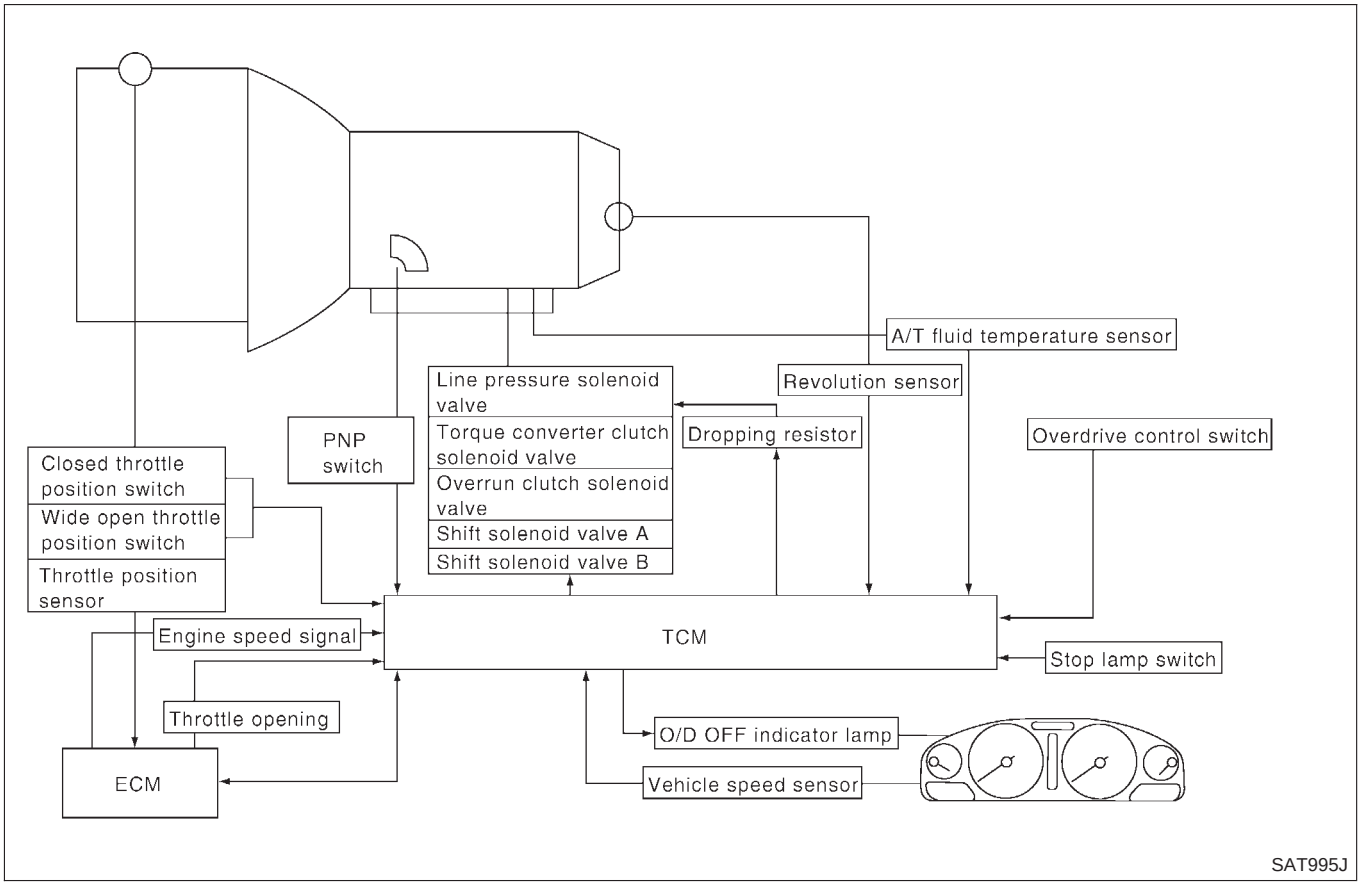

TCM FUNCTION

=NJAT0014S03

The function of the TCM is to:

- Receive input signals sent from various switches and sensors.
- Determine required line pressure, shifting point, lock-up operation, and engine brake operation.
- Send required output signals to the respective solenoids.

INPUT/OUTPUT SIGNAL OF TCM

NJAT0014S04

	Sensors, switches and solenoid valves	Function
Input	PNP switch	Detects select lever position and sends a signal to TCM.
	Throttle position sensor	Detects throttle valve position and sends a signal to TCM.
	Closed throttle position switch	Detects throttle valve's fully-closed position and sends a signal to TCM.
	Wide open throttle position switch	Detects a throttle valve position of greater than 1/2 of full throttle and sends a signal to TCM.
	Engine speed signal	From ECM.
	A/T fluid temperature sensor	Detects transmission fluid temperature and sends a signal to TCM.
	Revolution sensor	Detects output shaft rpm and sends a signal to TCM.
	Vehicle speed sensor	Used as an auxiliary vehicle speed sensor. Sends a signal when revolution sensor (installed on transmission) malfunctions.
	Overdrive control switch	Sends a signal, which prohibits a shift to "D_4" (overdrive) position, to the TCM.
	Stop lamp switch	Releases lock-up system when depressing pedal in lock-up condition.
Output	Shift solenoid valve A/B	Selects shifting point suited to driving conditions in relation to a signal sent from TCM.
	Line pressure solenoid valve	Regulates (or decreases) line pressure suited to driving conditions in relation to a signal sent from TCM.
	Torque converter clutch solenoid valve	Regulates (or decreases) lock-up pressure suited to driving conditions in relation to a signal sent from TCM.
	Overrun clutch solenoid valve	Controls an "engine brake" effect suited to driving conditions in relation to a signal sent from TCM.
	O/D OFF indicator lamp	Shows TCM faults, when A/T control components malfunction.

Control Mechanism

NJAT0015

LINE PRESSURE CONTROL

NJAT0015S01

TCM has various line pressure control characteristics to match the driving conditions.

An ON-OFF duty signal is sent to the line pressure solenoid valve based on TCM characteristics.

Hydraulic pressure on the clutch and brake is electronically controlled through the line pressure solenoid valve to accommodate engine torque. This results in smooth shift operation.

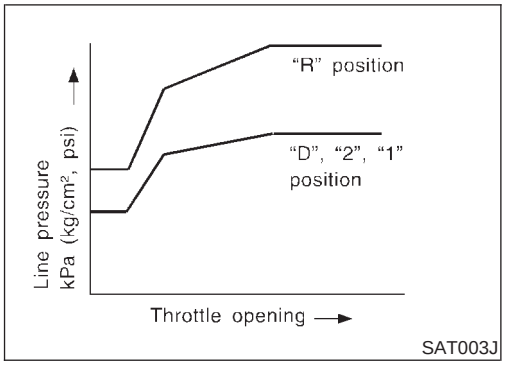

Normal Control

NJAT0015S0101

The line pressure to throttle opening characteristics is set for suitable clutch operation.

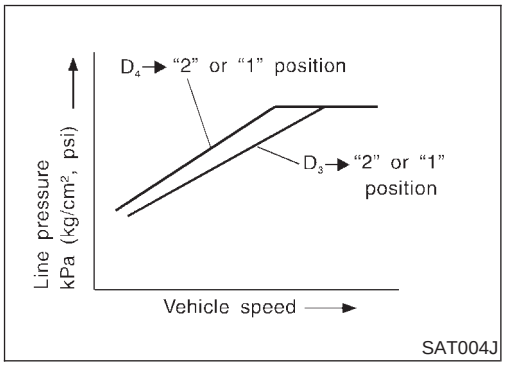

Back-up Control (Engine brake)

NJAT0015S0102

If the selector lever is shifted to "2" position while driving in D_4 (OD) or D_3, great driving force is applied to the clutch inside the transmission. Clutch operating pressure (line pressure) must be increased to deal with this driving force.

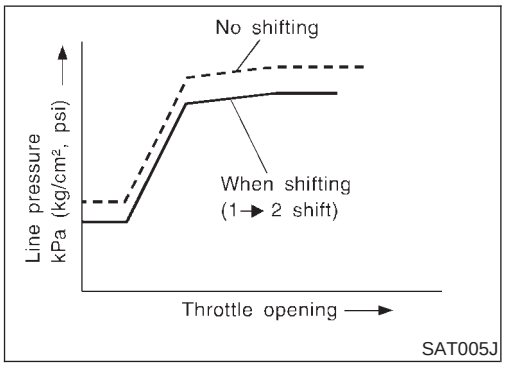

During Shift Change

NJAT0015S0103

The line pressure is temporarily reduced corresponding to a change in engine torque when shifting gears (that is, when the shift solenoid valve is switched for clutch operation) to reduce shifting shock.

At Low Fluid Temperature

NJAT0015S0104

- Fluid viscosity and frictional characteristics of the clutch facing change with fluid temperature. Clutch engaging or band-contacting pressure is compensated for, according to fluid temperature, to stabilize shifting quality.

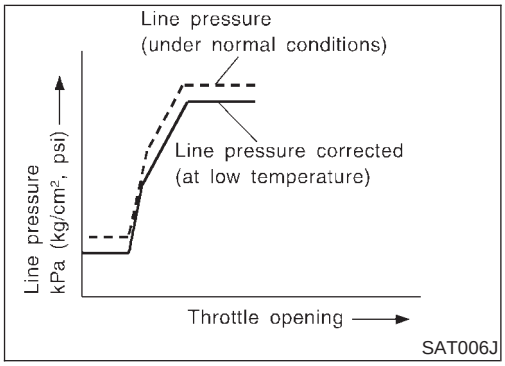

- The line pressure is reduced below 60°C (140°F) to prevent shifting shock due to low viscosity of automatic transmission fluid when temperature is low.

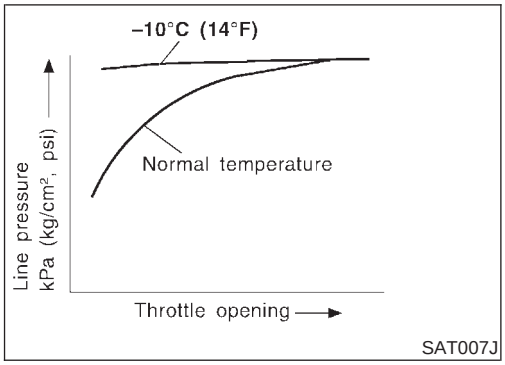

- Line pressure is increased to a maximum irrespective of the throttle opening when fluid temperature drops to −10°C (14°F). This pressure rise is adopted to prevent a delay in clutch and brake operation due to extreme drop of fluid viscosity at low temperature.

SHIFT CONTROL

NJAT0015S02

The shift is regulated entirely by electronic control to accommodate vehicle speed and varying engine operations. This is accomplished by electrical signals transmitted by the revolution sensor and throttle position sensor. This results in improved acceleration performance and fuel economy.

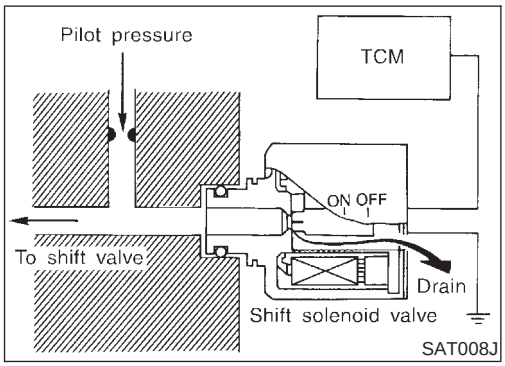

Control of Shift Solenoid Valves A and B

NJAT0015S0201

The TCM activates shift solenoid valves A and B according to signals from the throttle position sensor and revolution sensor to select the optimum gear position on the basis of the shift schedule memorized in the TCM.
The shift solenoid valve performs simple ON-OFF operation. When set to "ON", the drain circuit closes and pilot pressure is applied to the shift valve.

Relation Between Shift Solenoid Valves A and B and Gear Positions

NJAT0015S0203

Shift solenoid valve	Gear position				
	D_1, 2_1, 1_1	D_2, 2_2, 1_2	D_3	D_4 (OD)	N-P
A	ON (Closed)	OFF (Open)	OFF (Open)	ON (Closed)	ON (Closed)
B	ON (Closed)	ON (Closed)	OFF (Open)	OFF (Open)	ON (Closed)

Control of Shift Valves A and B

NJAT0015S0202

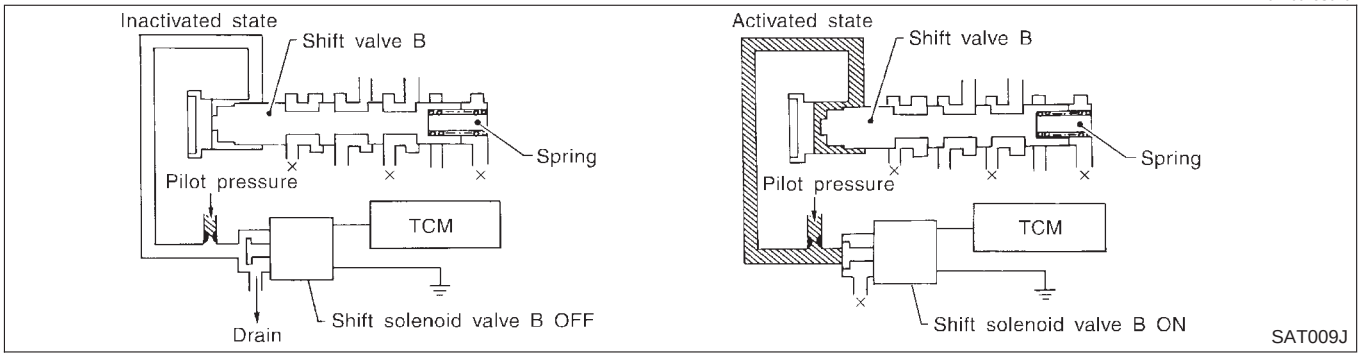

Pilot pressure generated by the operation of shift solenoid valves A and B is applied to the end face of shift valves A and B.
The drawing above shows the operation of shift valve B. When the shift solenoid valve is "ON", pilot pressure applied to the end face of the shift valve overcomes spring force, moving the valve upward.

LOCK-UP CONTROL

NJAT0015S03

The torque converter clutch piston in the torque converter is locked to eliminate torque converter slip to increase power transmission efficiency. The solenoid valve is controlled by an ON-OFF duty signal sent from the TCM. The signal is converted to an oil pressure signal which controls the torque converter clutch piston.

Conditions for Lock-up Operation

NJAT0015S0301

When vehicle is driven in 4th gear position, vehicle speed and throttle opening are detected. If the detected values fall within the lock-up zone memorized in the TCM, lock-up is performed.

Overdrive control switch	ON	OFF
Selector lever	"D" position	
Gear position	D_4	D_3
Vehicle speed sensor	More than set value	
Throttle position sensor	Less than set opening	
Closed throttle position switch	OFF	
A/T fluid temperature sensor	More than 40°C (104°F)	

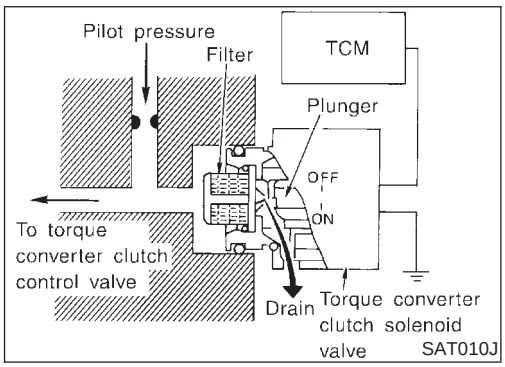

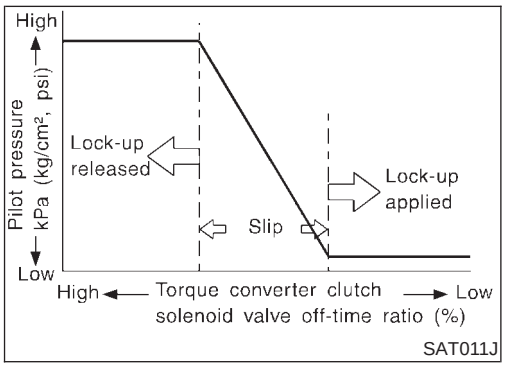

Torque Converter Clutch Solenoid Valve Control

NJAT0015S0302

The torque converter clutch solenoid valve is controlled by the TCM. The plunger closes the drain circuit during the "OFF" period, and opens the circuit during the "ON" period. If the percentage of OFF-time increases in one cycle, the pilot pressure drain time is reduced and pilot pressure remains high.
The torque converter clutch piston is designed to slip to adjust the ratio of ON-OFF, thereby reducing lock-up shock.

OFF-time INCREASING
↓
Amount of drain DECREASING
↓
Pilot pressure HIGH
↓
Lock-up RELEASING

Torque Converter Clutch Control Valve Operation

NJAT0015S0303

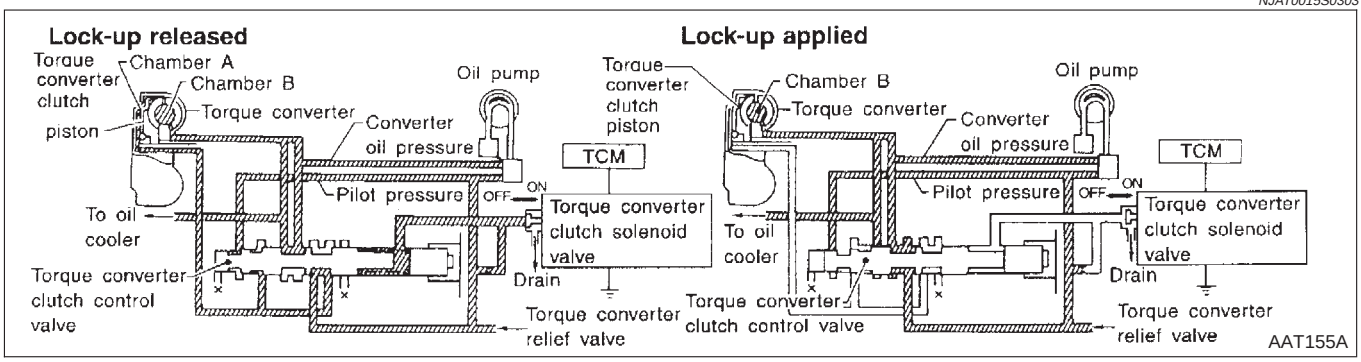

Lock-up released

The OFF-duration of the torque converter clutch solenoid valve is long, and pilot pressure is high. The pilot pressure pushes the end face of the torque converter clutch control valve in combination with spring force to move the valve to the left. As a result, converter pressure is applied to chamber A (torque converter clutch piston release side). Accordingly, the torque converter clutch piston remains unlocked.

Lock-up applied

When the OFF-duration of the torque converter clutch solenoid valve is short, pilot pressure drains and becomes low. Accordingly, the control valve moves to the right by the pilot pressure of the other circuit and converter pressure. As a result, converter pressure is applied to chamber B, keeping the torque converter clutch piston applied.

Also smooth lock-up is provided by transient application and release of the lock-up.

OVERRUN CLUTCH CONTROL (ENGINE BRAKE CONTROL)

NJAT0015S04

Forward one-way clutch is used to reduce shifting shocks in down-shifting operations. This clutch transmits engine torque to the wheels. However, drive force from the wheels is not transmitted to the engine because the one-way clutch rotates idle. This means the engine brake is not effective.

The overrun clutch operates when the engine brake is needed.

Overrun Clutch Operating Conditions

NJAT0015S0401

Selector lever position	Gear position	Throttle opening
"D" position	D_1, D_2, D_3 gear position	Less than 3/16
"2" position	2_1, 2_2 gear position	
"1" position	1_1, 1_2 gear position	At any position

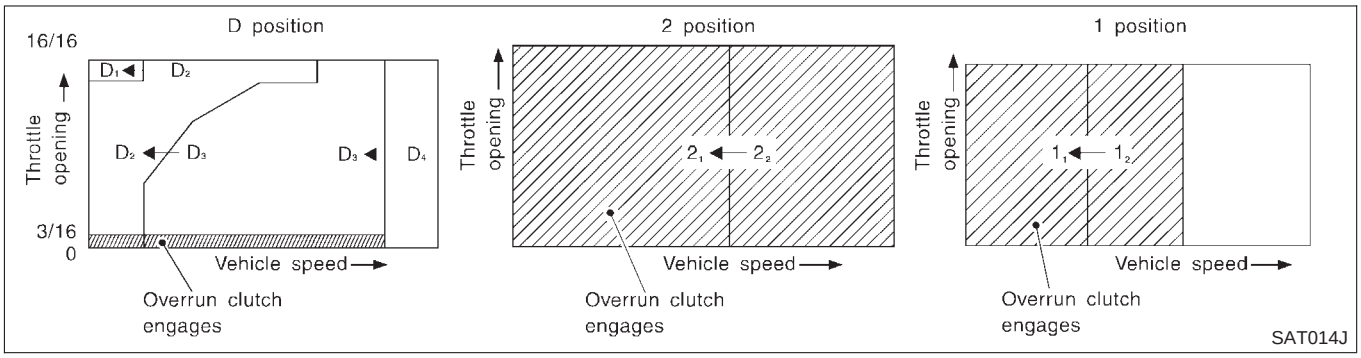

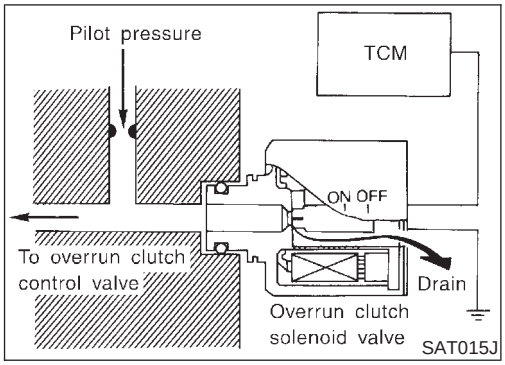

Overrun Clutch Solenoid Valve Control

NJAT0015S0402

The overrun clutch solenoid valve is operated by an ON-OFF signal transmitted by the TCM to provide overrun clutch control (engine brake control).
When this solenoid valve is "ON", the pilot pressure drain port closes. When it is "OFF", the drain port opens.
During the solenoid valve "ON" pilot pressure is applied to the end face of the overrun clutch control valve.

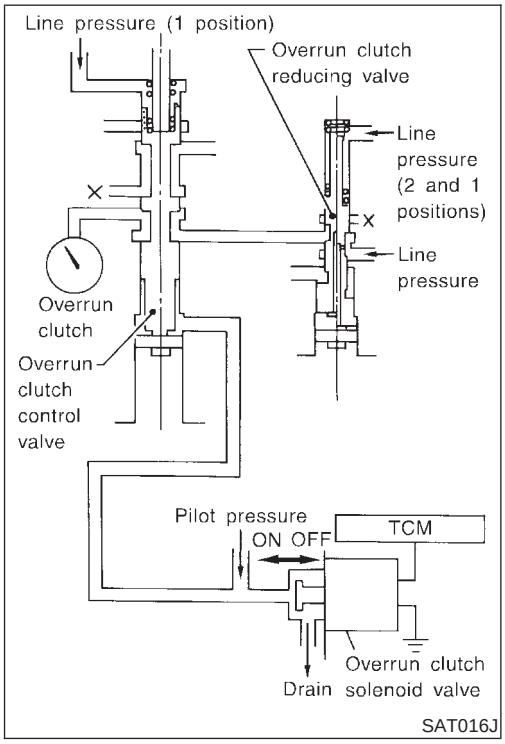

Overrun Clutch Control Valve Operation

NJAT0015S0403

When the solenoid valve is "ON", pilot pressure is applied to the overrun clutch control valve. This pushes up the overrun clutch control valve. The line pressure is then shut off so that the clutch does not engage.
When the solenoid valve is "OFF", pilot pressure is not generated. At this point, the overrun clutch control valve moves downward by spring force. As a result, overrun clutch operation pressure is provided by the overrun clutch reducing valve. This causes the overrun clutch to engage.
In the 1 position, the overrun clutch control valve remains pushed down so that the overrun clutch is engaged at all times.

Control Valve

NJAT0016

FUNCTION OF CONTROL VALVES

NJAT0016S01

Valve name	Function
Pressure regulator valve, plug and sleeve	Regulates oil discharged from the oil pump to provide optimum line pressure for all driving conditions.
Pressure modifier valve and sleeve	Used as a signal supplementary valve to the pressure regulator valve. Regulates pressure-modifier pressure (signal pressure) which controls optimum line pressure for all driving conditions.
Pilot valve	Regulates line pressure to maintain a constant pilot pressure level which controls lock-up mechanism, overrun clutch, shift timing.
Accumulator control valve	Regulates accumulator back-pressure to pressure suited to driving conditions.
Manual valve	Directs line pressure to oil circuits corresponding to select positions. Hydraulic pressure drains when the shift lever is in Neutral.
Shift valve A	Simultaneously switches four oil circuits using output pressure of shift solenoid valve A to meet driving conditions (vehicle speed, throttle opening, etc.). Provides automatic downshifting and up-shifting (1st → 2nd → 3rd → 4th gears/4th → 3rd → 2nd → 1st gears) in combination with shift valve B.

Control Valve (Cont'd)

Valve name	Function
Shift valve B	Simultaneously switches three oil circuits using output pressure of shift solenoid valve B in relation to driving conditions (vehicle speed, throttle opening, etc.). Provides automatic downshifting and up-shifting (1st → 2nd → 3rd → 4th gears/4th → 3rd → 2nd → 1st gears) in combination with shift valve A.
Overrun clutch control valve	Switches hydraulic circuits to prevent engagement of the overrun clutch simultaneously with application of the brake band in D_4. (Interlocking occurs if the overrun clutch engages during D_4.)
1st reducing valve	Reduces low & reverse brake pressure to dampen engine-brake shock when down-shifting from the "1" position 1_2 to 1_1.
Overrun clutch reducing valve	Reduces oil pressure directed to the overrun clutch and prevents engine-brake shock. In "1" and "2" positions, line pressure acts on the overrun clutch reducing valve to increase the pressure-regulating point, with resultant engine brake capability.
Torque converter relief valve	Prevents an excessive rise in torque converter pressure.
Torque converter clutch control valve, plug and sleeve	Activates or inactivates the lock-up function. Also provides smooth lock-up through transient application and release of the lock-up system.
1-2 accumulator valve and piston	Dampens the shock encountered when 2nd gear band servo contracts, and provides smooth shifting.
3-2 timing valve	Switches oil pressure with 3-2 timing valve according to throttle opening.
Shuttle control valve	Reduces shock when down-shifting from 3rd to 2nd and regulates overrun clutch.
Cooler check valve	Regulates oil pressure which causes lock-up when driving at low speeds.

CONSULT-II

NJAT0022

After performing “SELF-DIAGNOSTIC PROCEDURE (WITH CONSULT-II)” (AT-39), place check marks for results on the “DIAGNOSTIC WORKSHEET”, AT-71. Reference pages are provided following the items.

NOTICE:

1) The CONSULT-II electrically displays shift timing and lock-up timing (that is, operation timing of each solenoid).
   Check for time difference between actual shift timing and the CONSULT-II display. If the difference is noticeable, mechanical parts (except solenoids, sensors, etc.) may be malfunctioning. Check mechanical parts using applicable diagnostic procedures.
2) Shift schedule (which implies gear position) displayed on CONSULT-II and that indicated in Service Manual may differ slightly. This occurs because of the following reasons:

- Actual shift schedule has more or less tolerance or allowance,
- Shift schedule indicated in Service Manual refers to the point where shifts start, and
- Gear position displayed on CONSULT-II indicates the point where shifts are completed.

3) Shift solenoid valve “A” or “B” is displayed on CONSULT-II at the start of shifting. Gear position is displayed upon completion of shifting (which is computed by TCM).
4) Additional CONSULT-II information can be found in the Operation Manual supplied with the CONSULT-II unit.

SELF-DIAGNOSTIC PROCEDURE (WITH CONSULT-II)

NJAT0022S02

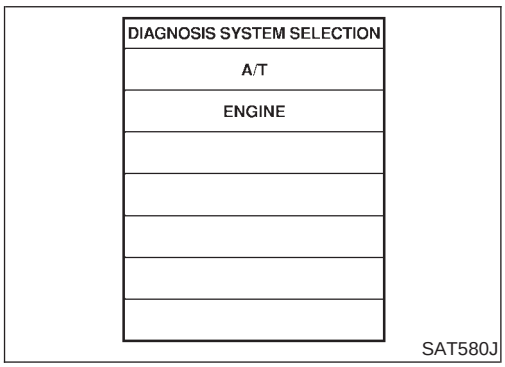

1. Turn on CONSULT-II and touch “A/T” for TCM self-diagnosis.
   If A/T is not displayed, check TCM power supply and ground circuit. Refer to AT-118. If result is NG, refer to EL-10, “POWER SUPPLY ROUTING”.

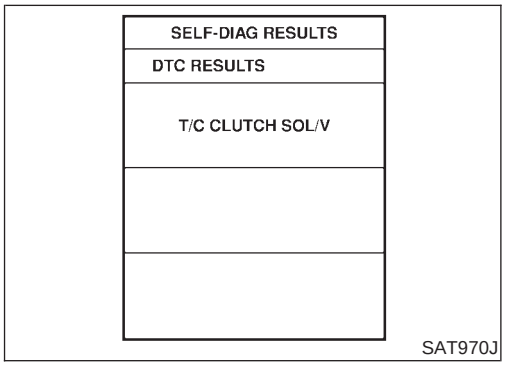

2. Touch “SELF-DIAG RESULTS”.
   Display shows malfunction experienced since the last erasing operation.
   CONSULT-II performs “REAL TIME DIAG”.
   Also, any malfunction detected while in this mode will be displayed at real time.

SELF-DIAGNOSTIC RESULT TEST MODE

NJAT0022S03

Detected items (Screen terms for CONSULT-II, "SELF-DIAG RESULTS" test mode)		Malfunction is detected when ...	Remarks
Item	Display		
No failure (NO SELF DIAGNOSTIC FAILURE INDICATED FURTHER TESTING MAY BE REQUIRED**)		● No failure has been detected.	
Initial start		● This is not a malfunction message (Whenever shutting off a power supply to the TCM, this message appears on the screen.)	
INITIAL START	—		
Revolution sensor	VHCL SPEED SEN·A/T	● TCM does not receive the proper voltage signal from the sensor.	
Vehicle speed sensor (Meter)	VHCL SPEED SEN·MTR	● TCM does not receive the proper voltage signal from the sensor.	
Throttle position sensor Throttle position switch	THROTTLE POSI SEN	● TCM receives an excessively low or high voltage from the sensor.	
Shift solenoid valve A	SHIFT SOLENOID/V A	● TCM detects an improper voltage drop when it tries to operate the solenoid valve.	
Shift solenoid valve B	SHIFT SOLENOID/V B	● TCM detects an improper voltage drop when it tries to operate the solenoid valve.	
Overrun clutch solenoid valve	OVERRUN CLUTCH S/V	● TCM detects an improper voltage drop when it tries to operate the solenoid valve.	
T/C clutch solenoid valve	T/C CLUTCH SOL/V	● TCM detects an improper voltage drop when it tries to operate the solenoid valve.	
A/T fluid temperature sensor	BATT/FLUID TEMP SEN	● TCM receives an excessively low or high voltage from the sensor.	To be displayed in case of abnormality and when no recording is made.
Engine speed signal	ENGINE SPEED SIG	● TCM does not receive the proper voltage signal from the ECM.	
Line pressure solenoid valve	LINE PRESSURE S/V	● TCM detects an improper voltage drop when it tries to operate the solenoid valve.	
TCM (RAM)	CONTROL UNIT (RAM)	● TCM memory (RAM) is malfunctioning.	
TCM (ROM)	CONTROL UNIT (ROM)	● TCM memory (ROM) is malfunctioning.	
TCM (EEP ROM)	CONT UNIT (EEP ROM)	● TCM memory (EEP ROM) is malfunctioning.	

DATA MONITOR MODE (A/T)

NJAT0022S04

Item	Display	Monitor item		Description	Remarks
		ECU input signals	Main signals		
Vehicle speed sensor 1 (A/T) (Revolution sensor)	VHCL/S SE·A/T [km/h] or [mph]	X	—	● Vehicle speed computed from signal of revolution sensor is displayed.	When racing engine in "N" or "P" position with vehicle stationary, CONSULT-II data may not indicate 0 km/h (0 mph).

Item	Display	Monitor item		Description	Remarks
		ECU input signals	Main signals		
Vehicle speed sensor 2 (Meter)	VHCL/S SE·MTR [km/h] or [mph]	X	—	● Vehicle speed computed from signal of vehicle speed sensor is displayed.	Vehicle speed display may not be accurate under approx. 10 km/h (6 mph). It may not indicate 0 km/h (0 mph) when vehicle is stationary.
Throttle position sensor	THRTL POS SEN [V]	X	—	● Throttle position sensor signal voltage is displayed.	
A/T fluid temperature sensor	FLUID TEMP SE [V]	X	—	● A/T fluid temperature sensor signal voltage is displayed. ● Signal voltage lowers as fluid temperature rises.	
Battery voltage	BATTERY VOLT [V]	X	—	● Source voltage of TCM is displayed.	
Engine speed	ENGINE SPEED [rpm]	X	X	● Engine speed, computed from engine speed signal, is displayed.	Engine speed display may not be accurate under approx. 800 rpm. It may not indicate 0 rpm even when engine is not running.
Overdrive control switch	OVERDRIVE SW [ON/OFF]	X	—	● ON/OFF state computed from signal of overdrive control SW is displayed.	
P/N position switch	PN POSI SW [ON/OFF]	X	—	● ON/OFF state computed from signal of P/N position SW is displayed.	
R position switch	R POSITION SW [ON/OFF]	X	—	● ON/OFF state computed from signal of R position SW is displayed.	
D position switch	D POSITION SW [ON/OFF]	X	—	● ON/OFF state computed from signal of D position SW is displayed.	
2 position switch	2 POSITION SW [ON/OFF]	X	—	● ON/OFF status, computed from signal of 2 position SW, is displayed.	
1 position switch	1 POSITION SW [ON/OFF]	X	—	● ON/OFF status, computed from signal of 1 position SW, is displayed.	
ASCD cruise signal	ASCD-CRUISE [ON/OFF]	X	—	● Status of ASCD cruise signal is displayed. ON ... Cruising state OFF ... Normal running state	● This is displayed even when no ASCD is mounted.

Item	Display	Monitor item		Description	Remarks
		ECU input signals	Main signals		
ASCD OD cut signal	ASCD-OD CUT [ON/OFF]	X	—	● Status of ASCD OD release signal is displayed. ON ... OD released OFF ... OD not released	● This is displayed even when no ASCD is mounted.
Kickdown switch	KICKDOWN SW [ON/OFF]	X	—	● ON/OFF status, computed from signal of kickdown SW, is displayed.	● This is displayed even when no kickdown switch is equipped.
Closed throttle position switch	CLOSED THL/SW [ON/OFF]	X	—	● ON/OFF status, computed from signal of closed throttle position SW, is displayed.	
Wide open throttle position switch	W/O THRL/P-SW [ON/OFF]	X	—	● ON/OFF status, computed from signal of wide open throttle position SW, is displayed.	
Gear position	GEAR	—	X	● Gear position data used for computation by TCM, is displayed.	
Selector lever position	SLCT LVR POSI	—	X	● Selector lever position data, used for computation by TCM, is displayed.	● A specific value used for control is displayed if fail-safe is activated due to error.
Vehicle speed	VEHICLE SPEED [km/h] or [mph]	—	X	● Vehicle speed data, used for computation by TCM, is displayed.	
Stop lamp switch	BRAKE SW [ON/OFF]	X	—	● ON/OFF status are displayed. ON: Brake pedal is depressed. OFF: Brake pedal is released.	
Throttle position	THROTTLE POSI [/8]	—	X	● Throttle position data, used for computation by TCM, is displayed.	● A specific value used for control is displayed if fail-safe is activated due to error.
Line pressure duty	LINE PRES DTY [%]	—	X	● Control value of line pressure solenoid valve, computed by TCM from each input signal, is displayed.	
Torque converter clutch solenoid valve duty	TCC S/V DUTY [%]	—	X	● Control value of torque converter clutch solenoid valve, computed by TCM from each input signal, is displayed.	

Item	Display	Monitor item		Description	Remarks
		ECU input signals	Main signals		
Shift solenoid valve A	SHIFT S/V A [ON/OFF]	—	X	● Control value of shift solenoid valve A, computed by TCM from each input signal, is displayed.	Control value of solenoid is displayed even if solenoid circuit is disconnected. The "OFF" signal is displayed if solenoid circuit is shorted.
Shift solenoid valve B	SHIFT S/V B [ON/OFF]	—	X	● Control value of shift solenoid valve B, computed by TCM from each input signal, is displayed.	
Overrun clutch solenoid valve	OVERRUN/C S/V [ON/OFF]	—	X	● Control value of overrun clutch solenoid valve computed by TCM from each input signal is displayed.	
Self-diagnosis display lamp (O/D OFF indicator lamp)	SELF-D DP LMP [ON/OFF]	—	X	● Control status of O/D OFF indicator lamp is displayed.	

X: Applicable

—: Not applicable

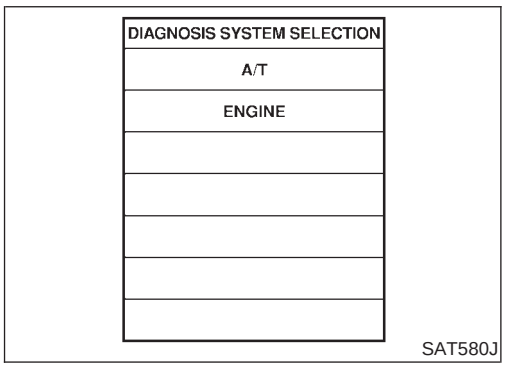

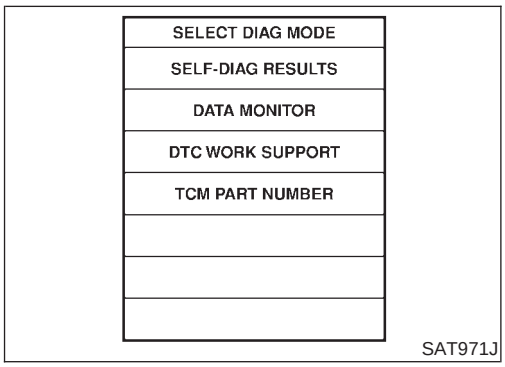

HOW TO ERASE SELF-DIAGNOSTIC RESULTS (WITH CONSULT-II)

NJAT0022S08

1. If the ignition switch stays "ON" after repair work, be sure to turn ignition switch "OFF" once. Wait for at least 3 seconds and then turn it "ON" again.
2. Turn CONSULT-II "ON", and touch "A/T".
3. Touch "SELF-DIAG RESULTS".

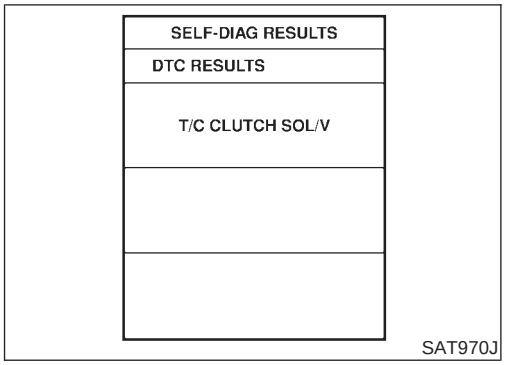

4. Touch "ERASE". (The self-diagnostic results will be erased.)

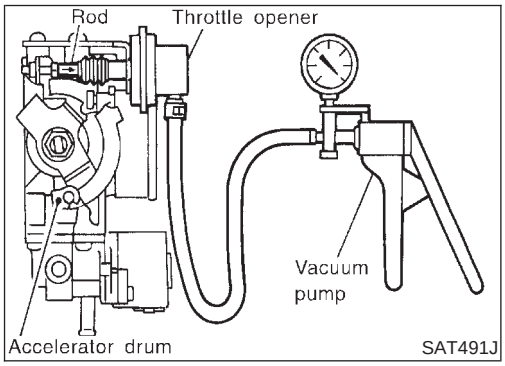

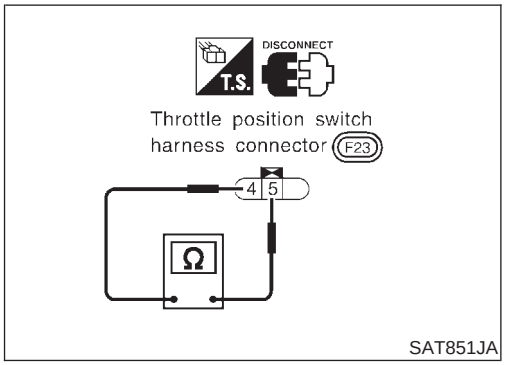

Diagnostic Procedure Without CONSULT-II

NJAT0230

SELF-DIAGNOSTIC PROCEDURE (WITHOUT CONSULT-II)

NJAT0230S01

Preparation

NJAT0230S0101

1. Turn ignition switch to "OFF" position.
2. Connect the handy type vacuum pump to the throttle opener and apply vacuum −25.3 kPa (−253 mbar, −190 mmHg, −7.48 inHg). (If throttle opener is equipped)
3. Disconnect the throttle position switch harness connector.
4. Turn ignition switch to "ON" position.
5. Check continuity of the closed throttle position switch.

   Continuity should exist.

   (If continuity does not exist, check throttle opener and closed throttle position switch. Then increase vacuum until closed throttle position switch shows continuity.)
6. Go to "Self-diagnostic procedure (Without CONSULT-II)".

1	CHECK O/D OFF INDICATOR LAMP

1. Start engine and warm it up to normal operating temperature.
2. Turn ignition switch to "OFF" position.
   Wait 5 seconds.
3. Turn ignition switch to "ACC" position.

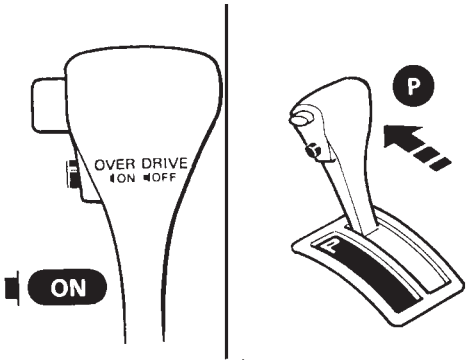

SAT774B

4. Set overdrive control switch to "ON" position.
5. Move selector lever to "P" position.
6. Turn ignition switch to "ON" position. (Do not start engine.)
7. Does O/D OFF indicator lamp come on for about 2 seconds?

Except for Euro-OBD

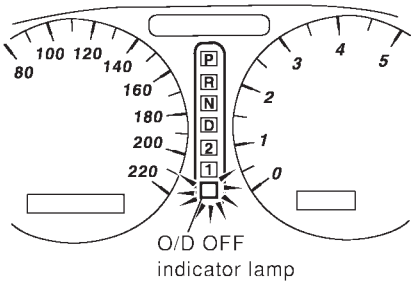

SAT123KA

Yes or No

Yes	▶	GO TO 2.
No	▶	Go to "1. O/D OFF Indicator Lamp Does Not Come On", AT-296.

2	JUDGEMENT PROCEDURE STEP 1

1. Turn ignition switch to "OFF" position.
2. Turn ignition switch to "ACC" position.
3. Move selector lever to "D" position.
4. Set overdrive control switch to "OFF" position.
5. Turn ignition switch to "ON" position. (Do not start engine.)

● Wait more than 2 seconds after turning ignition switch "ON".

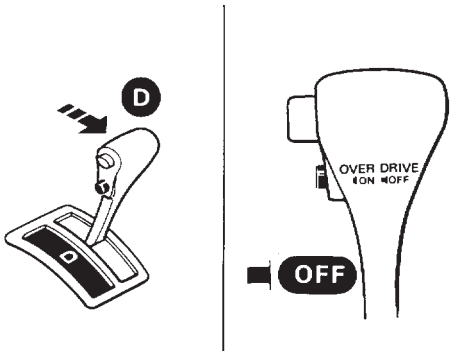

SAT653E

	▶	GO TO 3.

3	JUDGEMENT PROCEDURE STEP 2

1. Move selector lever to "2" position.
2. Set overdrive control switch to "ON" position.

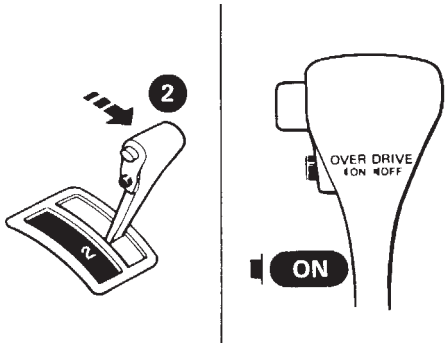

SAT780B

▶	GO TO 4.

4	JUDGEMENT PROCEDURE STEP 3

1. Move selector lever to "1" position.
2. Set overdrive control switch to "OFF" position.

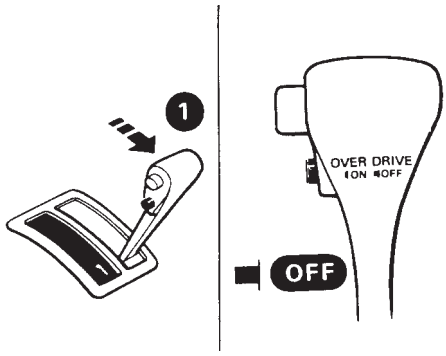

SAT781B

▶	GO TO 5.

5	JUDGEMENT PROCEDURE STEP 4

1. Depress accelerator pedal fully and release it.

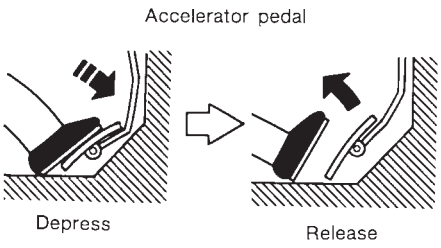

SAT981F

▶	GO TO 6.

6	CHECK SELF-DIAGNOSIS CODE

Check O/D OFF indicator lamp. Refer to JUDGEMENT OF SELF-DIAGNOSIS CODE, AT-47.

Except for Euro-OBD

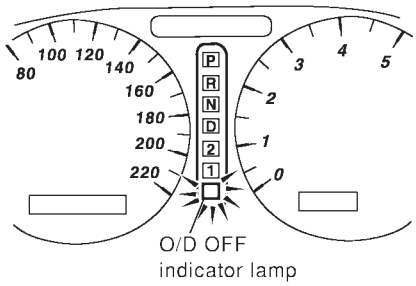

SAT123KA

▶	DIAGNOSIS END

JUDGEMENT OF SELF-DIAGNOSIS CODE

NJAT0230S02

O/D OFF indicator lamp:

All judgement flickers are the same.

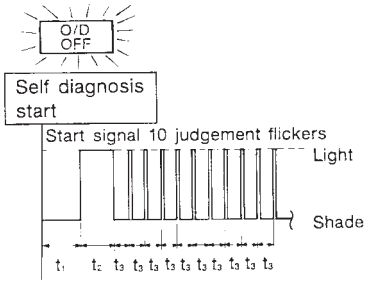

SAT436F

All circuits that can be confirmed by self-diagnosis are OK.

1st judgement flicker is longer than others.

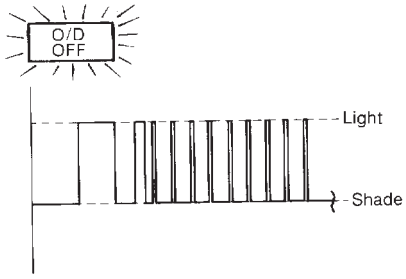

SAT437F

Revolution sensor circuit is short-circuited or disconnected.
⇒ **Go to VEHICLE SPEED SENSOR·A/T (REVOLUTION SENSOR).**
General: AT-126

2nd judgement flicker is longer than others.

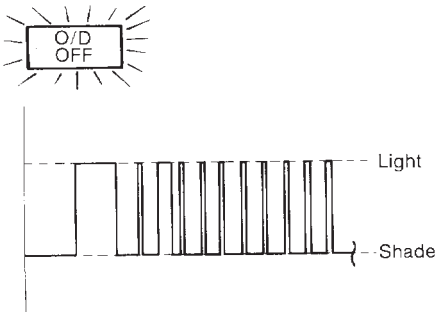

SAT439F

Vehicle speed sensor circuit is short-circuited or disconnected.
⇒ **Go to VEHICLE SPEED SENSOR·MTR.**
General: AT-131

3rd judgement flicker is longer than others.

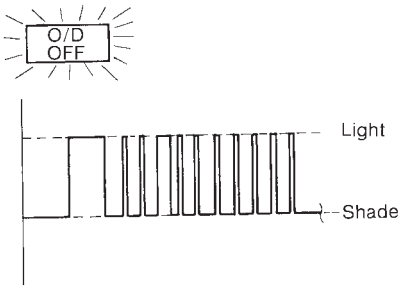

SAT441F

Throttle position sensor circuit is short-circuited or disconnected.
⇒ **Go to THROTTLE POSITION SENSOR.**
General: AT-134

O/D OFF indicator lamp:

4th judgement flicker is longer than others.

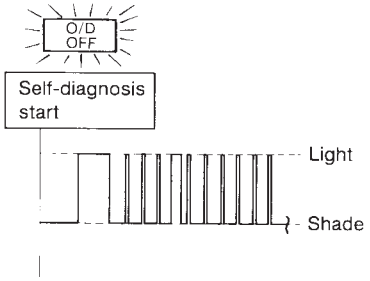

SAT443F

Shift solenoid valve A circuit is short-circuited or disconnected.
⇒ **Go to SHIFT SOLENOID VALVE A.**
General: AT-142

5th judgement flicker is longer than others.

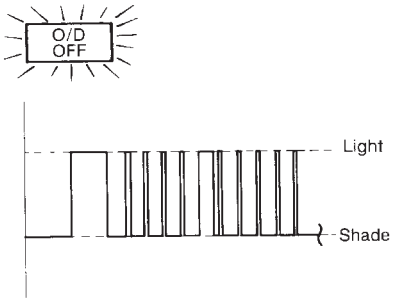

SAT445F

Shift solenoid valve B circuit is short-circuited or disconnected.
⇒ **Go to SHIFT SOLENOID VALVE B.**
General: AT-148

6th judgement flicker is longer than others.

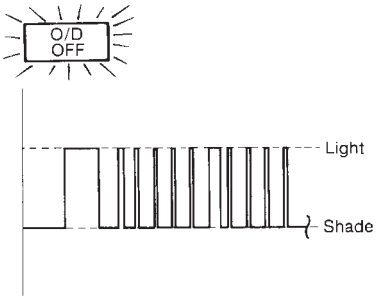

SAT447F

Overrun clutch solenoid valve circuit is short-circuited or disconnected.
⇒ **Go to OVERRUN CLUTCH SOLENOID VALVE.**
General: AT-154

7th judgement flicker is longer than others.

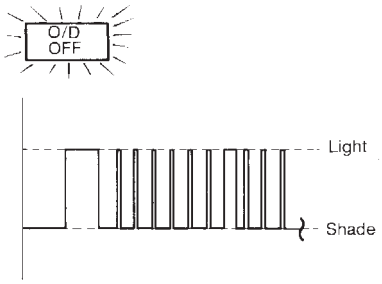

SAT449F

Torque converter clutch solenoid valve circuit is short-circuited or disconnected.
⇒ **Go to TORQUE CONVERTER CLUTCH SOLENOID VALVE.**
General: AT-159

8th judgement flicker is longer than others.

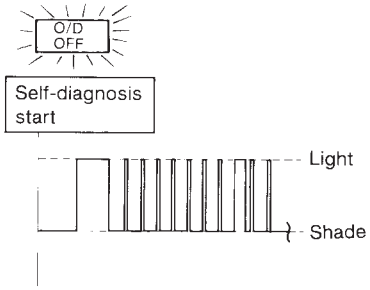

SAT451F

A/T fluid temperature sensor is disconnected or TCM power source circuit is damaged.
⇒ **Go to A/T FLUID TEMPERATURE SENSOR AND TCM POWER SOURCE.**
General: AT-165

9th judgement flicker is longer than others.

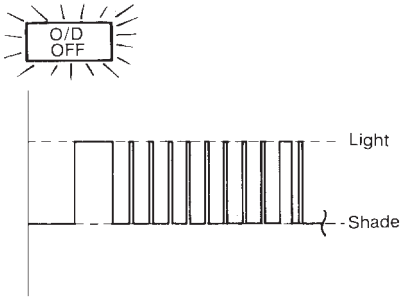

SAT453F

Engine speed signal circuit is short-circuited or disconnected.
⇒ **Go to ENGINE SPEED SIGNAL.**
General: AT-172

O/D OFF indicator lamp:	
10th judgement flicker is longer than others. 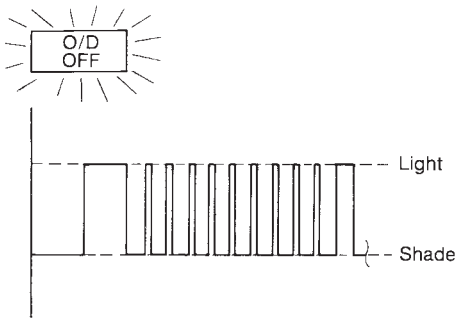 SAT455F Line pressure solenoid valve circuit is short-circuited or disconnected. ⇒ **Go to LINE PRESSURE SOLENOID VALVE.** General: AT-176	Flickers as shown below. 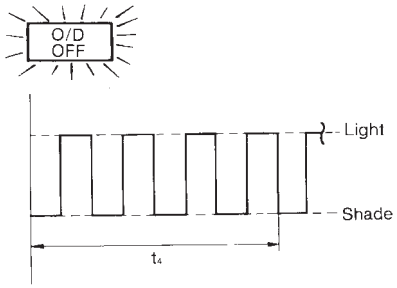 SAT457F Battery power is low. Battery has been disconnected for a long time. Battery is connected conversely. (When reconnecting TCM connectors. — This is not a problem.)
Lamp comes on. 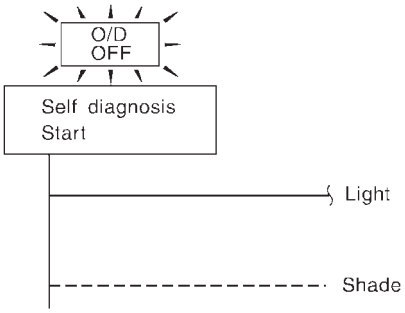 SAT367J PNP switch, overdrive control switch or throttle position switch circuit is disconnected or TCM is damaged. ⇒ **Go to 21. TCM Self-diagnosis Does Not Activate (PNP, OVERDRIVE CONTROL AND THROTTLE POSITION SWITCHES).** General: AT-334	

t_1 = 2.5 seconds t_2 = 2.0 seconds t_3 = 1.0 second t_4 = 1.0 second

HOW TO ERASE SELF-DIAGNOSTIC RESULTS (⊗ WITHOUT CONSULT-II)

NJAT0230S03

1. If the ignition switch stays "ON" after repair work, be sure to turn ignition switch "OFF" once. Wait for at least 3 seconds and then turn it "ON" again.
2. Perform "SELF-DIAGNOSTIC PROCEDURE (Without CONSULT-II)". Refer to AT-44.
3. Turn ignition switch "OFF". (The self-diagnostic results will be erased.)

Introduction

NJAT0251

The A/T system has two self-diagnostic systems.
The first is the emission-related on board diagnostic system (EURO-OBD) performed by the TCM in combination with the ECM. The malfunction is indicated by the MI (malfunction indicator) and is stored as a DTC in the ECM memory but not the TCM memory.
The second is the TCM original self-diagnosis indicated by the O/D OFF indicator lamp. The malfunction is stored in the TCM memory. The detected items are overlapped with EURO-OBD self-diagnostic items. For detail, refer to AT-55.

EURO-OBD Function for A/T System

NJAT0252

The ECM provides emission-related on board diagnostic (EURO-OBD) functions for the A/T system. One function is to receive a signal from the TCM used with EURO-OBD-related parts of the A/T system. The signal is sent to the ECM when a malfunction occurs in the corresponding EURO-OBD-related part. The other function is to indicate a diagnostic result by means of the MI (malfunction indicator) on the instrument panel. Sensors, switches and solenoid valves are used as sensing elements.
The MI automatically illuminates in One or Two Trip Detection Logic when a malfunction is sensed in relation to A/T system parts.

One or Two Trip Detection Logic of EURO-OBD

NJAT0253

ONE TRIP DETECTION LOGIC

NJAT0253S01

If a malfunction is sensed during the first test drive, the MI will illuminate and the malfunction will be stored in the ECM memory as a DTC. The TCM is not provided with such a memory function.

TWO TRIP DETECTION LOGIC

NJAT0253S02

When a malfunction is sensed during the first test drive, it is stored in the ECM memory as a 1st trip DTC (diagnostic trouble code) or 1st trip freeze frame data. At this point, the MI will not illuminate. — First Trip
If the same malfunction as that experienced during the first test drive is sensed during the second test drive, the MI will illuminate. — Second Trip
A/T-related parts for which the MI illuminates during the first or second test drive are listed below.

Items	MI	
	One trip detection	Two trip detection
Shift solenoid valve A — DTC: P0750	X	
Shift solenoid valve B — DTC: P0755	X	
Throttle position sensor or switch — DTC: P1705	X	
Except above		X

The “trip” in the “One or Two Trip Detection Logic” means a driving mode in which self-diagnosis is performed during vehicle operation.

EURO-OBD Diagnostic Trouble Code (DTC)

NJAT0254

HOW TO READ DTC AND 1ST TRIP DTC

NJAT0254S01

DTC and 1st trip DTC can be read by the following methods.
(with CONSULT-II or GST) CONSULT-II or GST (Generic Scan Tool) Examples: P0705, P0710, P0720, P0725, etc.
These DTCs are prescribed by SAE J2012.
(CONSULT-II also displays the malfunctioning component or system.)

- **1st trip DTC No. is the same as DTC No.**
- **Output of the diagnostic trouble code indicates that the indicated circuit has a malfunction. However, in case of the Mode II and GST they do not indicate whether the malfunction is still occurring or occurred in the past and returned to normal.**
  CONSULT-II can identify them as shown below. Therefore, using CONSULT-II (if available) is recommended.

A sample of CONSULT-II display for DTC is shown in the following page. DTC or 1st trip DTC of a malfunction is displayed in SELF DIAGNOSIS mode for “ENGINE” with CONSULT-II. Time data indicates how many times the vehicle was driven after the last detection of a DTC.

SELECT SYSTEM
A/T
ENGINE

SAT014K

If the DTC is being detected currently, the time data will be "0".

SELF-DIAG RESULTS	
DTC RESULTS	TIME
PNP SW/CIRC [P0705]	0

SAT015K

If a 1st trip DTC is stored in the ECM, the time data will be "1t".

SELF-DIAG RESULTS	
DTC RESULTS	TIME
PNP SW/CIRC [P0705]	1 t

SAT016K

Freeze Frame Data and 1st Trip Freeze Frame Data

NJAT0254S0101

The ECM has a memory function, which stores the driving condition such as fuel system status, calculated load value, engine coolant temperature, short term fuel trim, long term fuel trim, engine speed and vehicle speed at the moment the ECM detects a malfunction.

Data which are stored in the ECM memory, along with the 1st trip DTC, are called 1st trip freeze frame data, and the data, stored together with the DTC data, are called freeze frame data and displayed on CONSULT-II or GST. The 1st trip freeze frame data can only be displayed on the CONSULT-II screen, not on the GST. For detail, refer to EC-83, "CONSULT-II".

Only one set of freeze frame data (either 1st trip freeze frame data of freeze frame data) can be stored in the ECM. 1st trip freeze frame data is stored in the ECM memory along with the 1st trip DTC. There is no priority for 1st trip freeze frame data and it is updated each time a different 1st trip DTC is detected. However, once freeze frame data (2nd trip detection/MI on) is stored in the ECM memory, 1st trip freeze frame data is no longer stored. Remember, only one set of freeze frame data can be stored in the ECM.

The ECM has the following priorities to update the data.

Priority	Items	
1	Freeze frame data	Misfire — DTC: P0300 - P0306 Fuel Injection System Function — DTC: P0171, P0172, P0174, P0175
2		Except the above items (Includes A/T related items)
3	1st trip freeze frame data	

Both 1st trip freeze frame data and freeze frame data (along with the DTCs) are cleared when the ECM memory is erased.

HOW TO ERASE DTC

NJAT0254S02

The diagnostic trouble code can be erased by CONSULT-II, GST or ECM DIAGNOSTIC TEST MODE as described following.

- **If the battery terminal is disconnected, the diagnostic trouble code will be lost within 24 hours.**
- **When you erase the DTC, using CONSULT-II or GST is easier and quicker than switching the mode selector on the ECM.**

The following emission-related diagnostic information is cleared from the ECM memory when erasing DTC related to EURO-OBD. For details, refer to EC-70, "How to Erase Emission-related Diagnostic Information".

- **Diagnostic trouble codes (DTC)**
- **1st trip diagnostic trouble codes (1st trip DTC)**
- **Freeze frame data**
- **1st trip freeze frame data**
- **System readiness test (SRT) codes**
- **Test values**

HOW TO ERASE DTC (WITH CONSULT-II)

NJAT0254S03

- **If a DTC is displayed for both ECM and TCM, it needs to be erased for both ECM and TCM.**

1. If the ignition switch stays "ON" after repair work, be sure to turn ignition switch "OFF" once. Wait at least 5 seconds and then turn it "ON" (engine stopped) again.
2. Turn CONSULT-II "ON" and touch "A/T".
3. Touch "SELF DIAGNOSIS".
4. Touch "ERASE". (The DTC in the TCM will be erased.) Then touch "BACK" twice.
5. Touch "ENGINE".
6. Touch "SELF DIAGNOSIS".
7. Touch "ERASE". (The DTC in the ECM will be erased.)

How to erase DTC (With CONSULT-II)

1. If the ignition switch stays "ON" after repair work, be sure to turn ignition switch "OFF" once. Wait at least 5 seconds and then turn it "ON" (engine stopped) again.

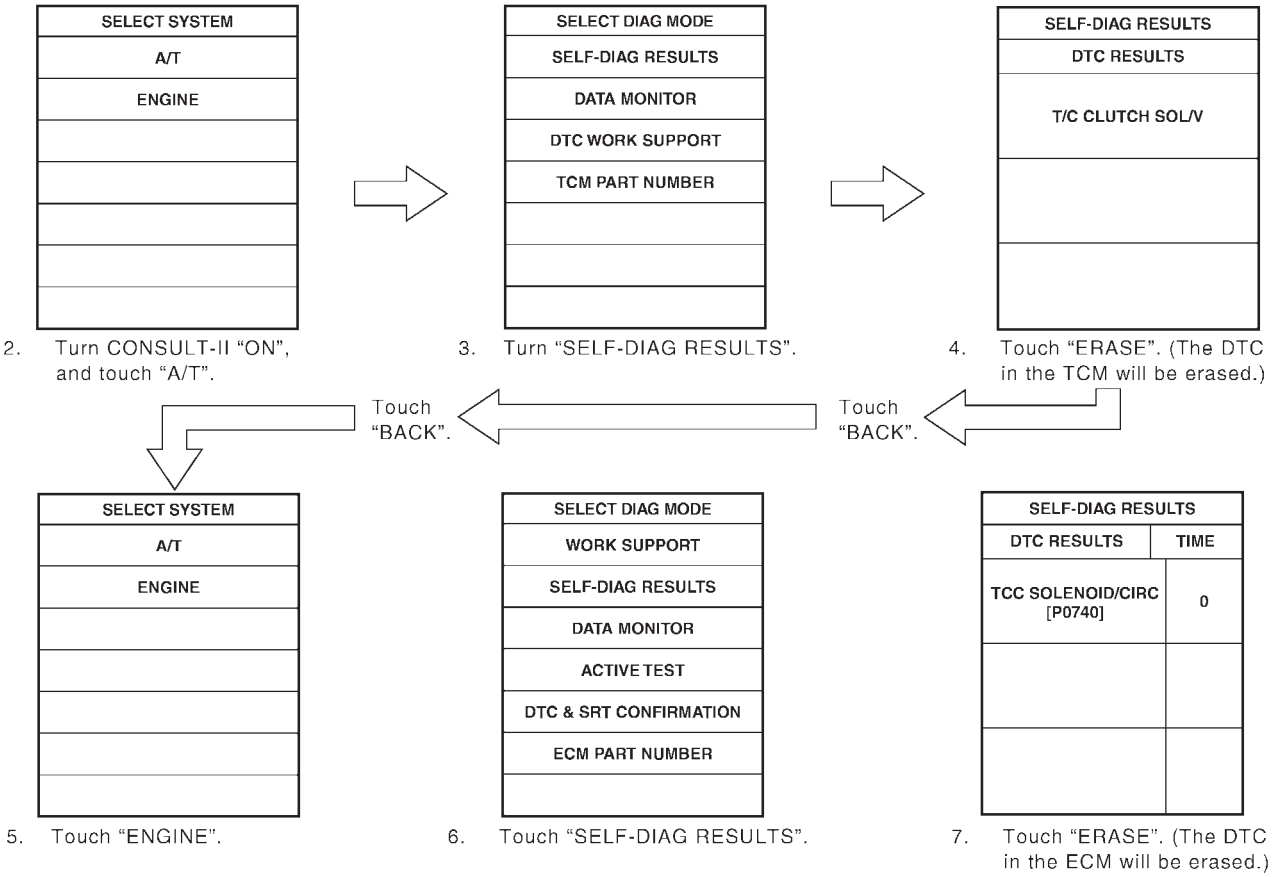

SAT017K

HOW TO ERASE DTC (WITH GST)

NJAT0254S04

1. If the ignition switch stays "ON" after repair work, be sure to turn ignition switch "OFF" once. Wait at least 5 seconds and then turn it "ON" (engine stopped) again.
2. Perform "EURO-OBD SELF-DIAGNOSTIC PROCEDURE (No Tools)". Refer to AT-63. (The engine warm-up step can be skipped when performing the diagnosis only to erase the DTC.)
3. Select Mode 4 with Generic Scan Tool (GST). For details, refer to EC-94, "Generic Scan Tool (GST)".

HOW TO ERASE DTC (NO TOOLS)

NJAT0254S05

1. If the ignition switch stays "ON" after repair work, be sure to turn ignition switch "OFF" once. Wait at least 5 seconds and then turn it "ON" (engine stopped) again.
2. Perform "TCM SELF-DIAGNOSTIC PROCEDURE (No Tools)". Refer to AT-63. (The engine warm-up step can be skipped when performing the diagnosis only to erase the DTC.)

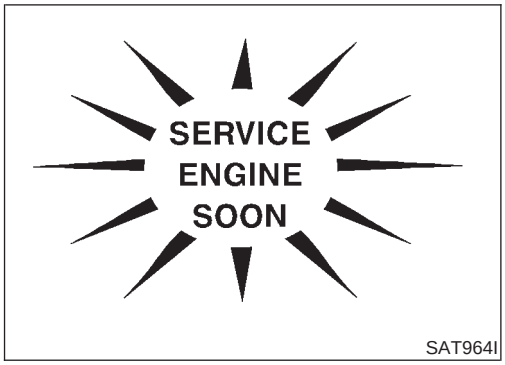

Malfunction Indicator (MI)

=NJAT0255

1. The malfunction indicator will light up when the ignition switch is turned ON without the engine running. This is for checking the lamp.

- If the malfunction indicator does not light up, refer to EL-185, “Warning Lamps”.
  (Or see MI & CONSULT-II in EC section. Refer to EC-74, “Description”, “Malfunction Indicator (MI)” and EC-83, “CONSULT-II”.)

2. When the engine is started, the malfunction indicator should go off.
   If the lamp remains on, the on board diagnostic system has detected an emission-related (EURO-OBD) malfunction. For detail, refer to EC-59, “ON BOARD DIAGNOSTIC SYSTEM DESCRIPTION”.

CONSULT-II

NJAT0256

After performing “SELF-DIAGNOSTIC PROCEDURE (WITH CONSULT-II)” (AT-55), place check marks for results on the “DIAGNOSTIC WORKSHEET”, AT-76. Reference pages are provided following the items.

NOTICE:

1) The CONSULT-II electrically displays shift timing and lock-up timing (that is, operation timing of each solenoid).
   Check for time difference between actual shift timing and the CONSULT-II display. If the difference is noticeable, mechanical parts (except solenoids, sensors, etc.) may be malfunctioning. Check mechanical parts using applicable diagnostic procedures.
2) Shift schedule (which implies gear position) displayed on CONSULT-II and that indicated in Service Manual may differ slightly. This occurs because of the following reasons:

- Actual shift schedule has more or less tolerance or allowance,
- Shift schedule indicated in Service Manual refers to the point where shifts start, and
- Gear position displayed on CONSULT-II indicates the point where shifts are completed.

3) Shift solenoid valve “A” or “B” is displayed on CONSULT-II at the start of shifting. Gear position is displayed upon completion of shifting (which is computed by TCM).
4) Additional CONSULT-II information can be found in the Operation Manual supplied with the CONSULT-II unit.

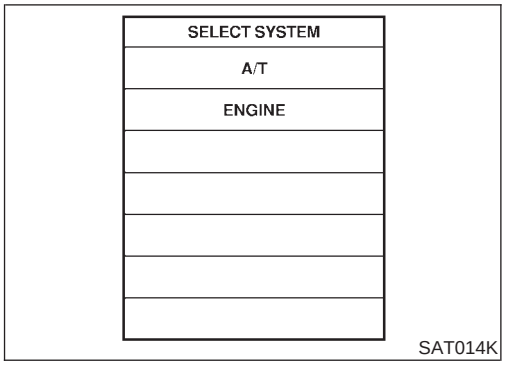

SELF-DIAGNOSTIC PROCEDURE (WITH CONSULT-II)

NJAT0256S01

1. Turn on CONSULT-II and touch "ENGINE" for EURO-OBD detected items or touch "A/T" for TCM self-diagnosis.
   If A/T is not displayed, check TCM power supply and ground circuit. Refer to AT-118. If result is NG, refer to EL-10, "POWER SUPPLY ROUTING".

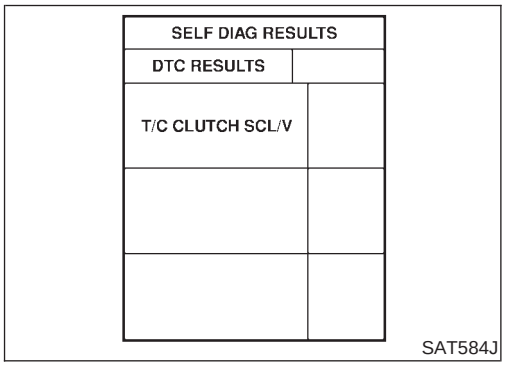

2. Touch "SELF DIAGNOSIS".
   Display shows malfunction experienced since the last erasing operation.
   CONSULT-II performs "real time diagnosis".
   Also, any malfunction detected while in this mode will be displayed at real time.

SELF-DIAGNOSTIC RESULT TEST MODE

NJAT0256S02

Detected items (Screen terms for CONSULT-II, "SELF DIAGNOSIS" test mode)		Malfunction is detected when ...	TCM self-diagnosis	EURO-OBD (DTC)
"A/T"	"ENGINE"		O/D OFF Available by O/D OFF indicator lamp or "A/T" on CONSULT-II	SERVICE ENGINE SOON Available by malfunction indicator*2, "ENGINE" on CONSULT-II or GST
PNP switch circuit		● TCM does not receive the correct voltage signal (based on the gear position) from the switch.	—	P0705
—	PNP SW/CIRC			
Revolution sensor		● TCM does not receive the proper voltage signal from the sensor.	X	P0720
VHCL SPEED SEN·A/T	VEH SPD SEN/CIR AT			
Vehicle speed sensor (Meter)		● TCM does not receive the proper voltage signal from the sensor.	X	—
VHCL SPEED SEN·MTR	—			
A/T 1st gear function		● A/T cannot be shifted to the 1st gear position even if electrical circuit is good.	—	P0731*1
—	A/T 1ST GR FNCTN			
A/T 2nd gear function		● A/T cannot be shifted to the 2nd gear position even if electrical circuit is good.	—	P0732*1
—	A/T 2ND GR FNCTN			
A/T 3rd gear function		● A/T cannot be shifted to the 3rd gear position even if electrical circuit is good.	—	P0733*1
—	A/T 3RD GR FNCTN			
A/T 4th gear function		● A/T cannot be shifted to the 4th gear position even if electrical circuit is good.	—	P0734*1
—	A/T 4TH GR FNCTN			

Detected items (Screen terms for CONSULT-II, "SELF DIAGNOSIS" test mode)		Malfunction is detected when ...	TCM self-diagnosis	EURO-OBD (DTC)
"A/T"	"ENGINE"		O/D OFF Available by O/D OFF indicator lamp or "A/T" on CONSULT-II	SERVICE ENGINE SOON Available by malfunction indicator*2, "ENGINE" on CONSULT-II or GST
Shift solenoid valve A		● TCM detects an improper voltage drop when it tries to operate the solenoid valve.	X	P0750
SHIFT SOLENOID/V A	SFT SOL A/CIRC			
Shift solenoid valve B		● TCM detects an improper voltage drop when it tries to operate the solenoid valve.	X	P0755
SHIFT SOLENOID/V B	SFT SOL B/CIRC			
Overrun clutch solenoid valve		● TCM detects an improper voltage drop when it tries to operate the solenoid valve.	X	P1760
OVERRUN CLUTCH S/V	O/R CLUCH SOL/ CIRC			
T/C clutch solenoid valve		● TCM detects an improper voltage drop when it tries to operate the solenoid valve.	X	P0740
T/C CLUTCH SOL/V	TCC SOLENOID/ CIRC			
Line pressure solenoid valve		● TCM detects an improper voltage drop when it tries to operate the solenoid valve.	X	P0745
LINE PRESSURE S/V	L/PRESS SOL/CIRC			
Throttle position sensor, Throttle position switch		● TCM receives an excessively low or high voltage from the sensor.	X	P1705
THROTTLE POSI SEN	TP SEN/CIRC A/T			
Engine speed signal		● TCM does not receive the proper voltage signal from the ECM.	X	P0725
ENGINE SPEED SIG				
A/T fluid temperature sensor		● TCM receives an excessively low or high voltage from the sensor.	X	P0710
BATT/FLUID TEMP SEN	ATF TEMP SEN/ CIRC			
TCM (RAM)		● TCM memory (RAM) is malfunctioning.	—	—
CONTROL UNIT (RAM)	—			
TCM (ROM)		● TCM memory (ROM) is malfunctioning.	—	—
CONTROL UNIT (ROM)	—			
TCM (EEP ROM)		● TCM memory (EEP ROM) is malfunctioning.	—	—
CONT UNIT (EEP ROM)	—			
Initial start		● This is not a malfunction message (Whenever shutting off a power supply to the TCM, this message appears on the screen.)	X	—
INITIAL START	—			

Detected items (Screen terms for CONSULT-II, "SELF DIAGNOSIS" test mode)		Malfunction is detected when ...	TCM self-diagnosis	EURO-OBD (DTC)
"A/T"	"ENGINE"		O/D OFF Available by O/D OFF indicator lamp or "A/T" on CONSULT-II	SERVICE ENGINE SOON Available by malfunction indicator*2, "ENGINE" on CONSULT-II or GST
No failure (NO SELF DIAGNOSTIC FAILURE INDICATED FURTHER TESTING MAY BE REQUIRED**)		● No failure has been detected.	X	X

X: Applicable
—: Not applicable
*1: These malfunctions cannot be displayed by MI (SERVICE ENGINE SOON) if another malfunction is assigned to MI.
*2: Refer to EC-74, "Malfunction Indicator (MI)".

DATA MONITOR MODE (A/T)

NJAT0256S03

Item	Display	Monitor item		Description	Remarks
		ECU input signals	Main signals		
Vehicle speed sensor 1 (A/T) (Revolution sensor)	VHCL/S SE·A/T [km/h] or [mph]	X	—	● Vehicle speed computed from signal of revolution sensor is displayed.	When racing engine in "N" or "P" position with vehicle stationary, CONSULT-II data may not indicate 0 km/h (0 mph).
Vehicle speed sensor 2 (Meter)	VHCL/S SE·MTR [km/h] or [mph]	X	—	● Vehicle speed computed from signal of vehicle speed sensor is displayed.	Vehicle speed display may not be accurate under approx. 10 km/h (6 mph). It may not indicate 0 km/h (0 mph) when vehicle is stationary.
Throttle position sensor	THRTL POS SEN [V]	X	—	● Throttle position sensor signal voltage is displayed.	
A/T fluid temperature sensor	FLUID TEMP SE [V]	X	—	● A/T fluid temperature sensor signal voltage is displayed. ● Signal voltage lowers as fluid temperature rises.	
Battery voltage	BATTERY VOLT [V]	X	—	● Source voltage of TCM is displayed.	
Engine speed	ENGINE SPEED [rpm]	X	X	● Engine speed, computed from engine speed signal, is displayed.	Engine speed display may not be accurate under approx. 800 rpm. It may not indicate 0 rpm even when engine is not running.
Overdrive control switch	OVERDRIVE SW [ON/OFF]	X	—	● ON/OFF state computed from signal of overdrive control SW is displayed.	
P/N position switch	PN POSI SW [ON/OFF]	X	—	● ON/OFF state computed from signal of P/N position SW is displayed.	

Item	Display	Monitor item		Description	Remarks
		ECU input signals	Main signals		
R position switch	R POSITION SW [ON/OFF]	X	—	● ON/OFF state computed from signal of R position SW is displayed.	
D position switch	D POSITION SW [ON/OFF]	X	—	● ON/OFF state computed from signal of D position SW is displayed.	
2 position switch	2 POSITION SW [ON/OFF]	X	—	● ON/OFF status, computed from signal of 2 position SW, is displayed.	
1 position switch	1 POSITION SW [ON/OFF]	X	—	● ON/OFF status, computed from signal of 1 position SW, is displayed.	
ASCD cruise signal	ASCD-CRUISE [ON/OFF]	X	—	● Status of ASCD cruise signal is displayed. ON ... Cruising state OFF ... Normal running state	● This is displayed even when no ASCD is mounted.
ASCD OD cut signal	ASCD-OD CUT [ON/OFF]	X	—	● Status of ASCD OD release signal is displayed. ON ... OD released OFF ... OD not released	● This is displayed even when no ASCD is mounted.
Kickdown switch	KICKDOWN SW [ON/OFF]	X	—	● ON/OFF status, computed from signal of kickdown SW, is displayed.	● This is displayed even when no kickdown switch is equipped.
Closed throttle position switch	CLOSED THL/SW [ON/OFF]	X	—	● ON/OFF status, computed from signal of closed throttle position SW, is displayed.	
Wide open throttle position switch	W/O THRL/P-SW [ON/OFF]	X	—	● ON/OFF status, computed from signal of wide open throttle position SW, is displayed.	
Gear position	GEAR	—	X	● Gear position data used for computation by TCM, is displayed.	
Selector lever position	SLCT LVR POSI	—	X	● Selector lever position data, used for computation by TCM, is displayed.	● A specific value used for control is displayed if fail-safe is activated due to error.
Vehicle speed	VEHICLE SPEED [km/h] or [mph]	—	X	● Vehicle speed data, used for computation by TCM, is displayed.	
Stop lamp switch	BRAKE SW [ON/OFF]	X	—	● ON/OFF status are displayed. ON: Brake pedal is depressed. OFF: Brake pedal is released.	

Item	Display	Monitor item		Description	Remarks
		ECU input signals	Main signals		
Throttle position	THROTTLE POSI [/8]	—	X	● Throttle position data, used for computation by TCM, is displayed.	● A specific value used for control is displayed if fail-safe is activated due to error.
Line pressure duty	LINE PRES DTY [%]	—	X	● Control value of line pressure solenoid valve, computed by TCM from each input signal, is displayed.	
Torque converter clutch solenoid valve duty	TCC S/V DUTY [%]	—	X	● Control value of torque converter clutch solenoid valve, computed by TCM from each input signal, is displayed.	
Shift solenoid valve A	SHIFT S/V A [ON/OFF]	—	X	● Control value of shift solenoid valve A, computed by TCM from each input signal, is displayed.	Control value of solenoid is displayed even if solenoid circuit is disconnected. The "OFF" signal is displayed if solenoid circuit is shorted.
Shift solenoid valve B	SHIFT S/V B [ON/OFF]	—	X	● Control value of shift solenoid valve B, computed by TCM from each input signal, is displayed.	
Overrun clutch solenoid valve	OVERRUN/C S/V [ON/OFF]	—	X	● Control value of overrun clutch solenoid valve computed by TCM from each input signal is displayed.	
Self-diagnosis display lamp (O/D OFF indicator lamp)	SELF-D DP LMP [ON/OFF]	—	X	● Control status of O/D OFF indicator lamp is displayed.	

X: Applicable
—: Not applicable

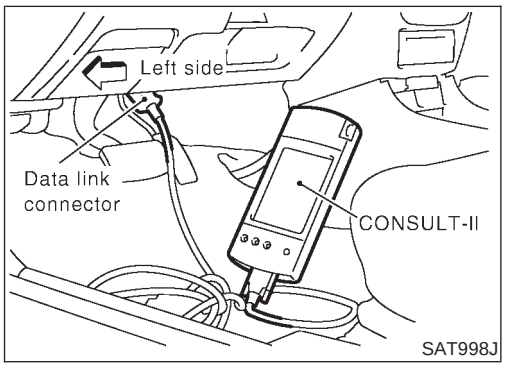

DTC WORK SUPPORT MODE WITH CONSULT-II

NJAT0256S04

CONSULT-II Setting Procedure

NJAT0256S0401

1. Turn ignition switch "OFF".
2. Connect CONSULT-II to data link connector which is located in left side lower dash panel.

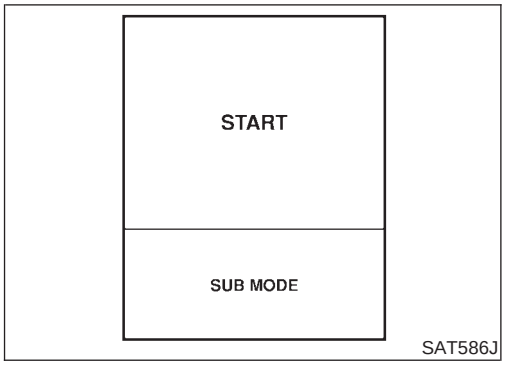

SAT586J

3. Turn ignition switch "ON".
4. Touch "START".

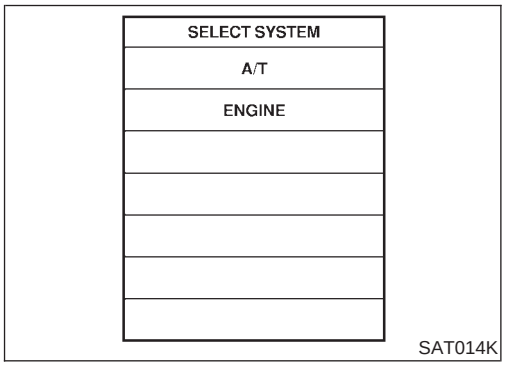

SAT014K

5. Touch "A/T".

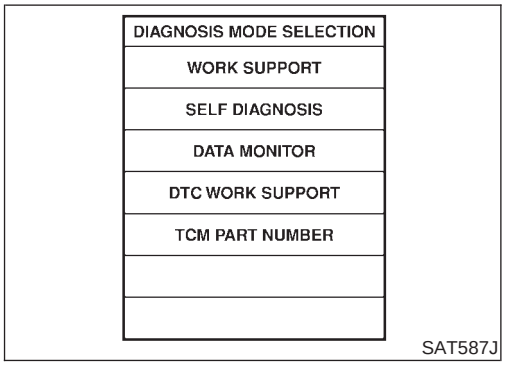

SAT587J

6. Touch "DTC WORK SUPPORT".

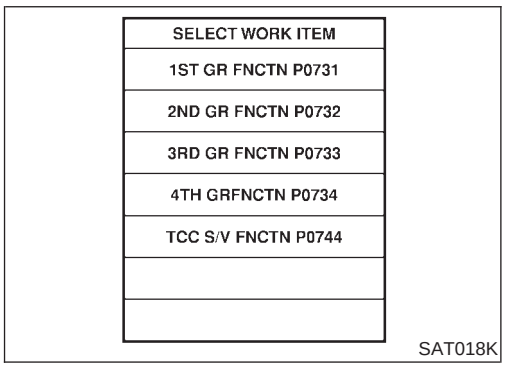

SAT018K

7. Touch select item menu (1ST, 2ND, etc.).

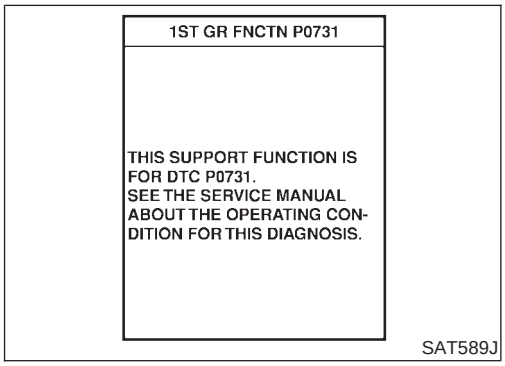

SAT589J

8. Touch "START".

1ST GR FNCTN P0731	
OUT OF CONDTION	
MONITOR	
GEAR	XXX
VEHICLE SPEED	XXXkm/h
THROTTLE POSI	XXX
TCC S/V DUTY	XXX %

SAT590JA

9. Perform driving test according to "DTC CONFIRMATION PROCEDURE" in "TROUBLE DIAGNOSIS FOR DTC".

1ST GR FNCTN P0731	
TESTING	
MONITOR	
GEAR	XXX
VEHICLE SPEED	XXXkm/h
THROTTLE POSI	XXX
TCC S/V DUTY	XXX %

SAT591J

- **When testing conditions are satisfied, CONSULT-II screen changes from "OUT OF CONDITION" to "TESTING".**

1ST GR FNCTN P0731
STOP VEHICLE

SAT592J

10. Stop vehicle. If "NG" appears on the screen, malfunction may exist. Go to "DIAGNOSTIC PROCEDURE".

1ST GR FNCTN P0731
NG

SAT593J

1ST GR FNCTN P0731
DRIVE VHCL IN D RANGE SHIFTING 1→2→3→4 UNDER NORMAL ACCELERATION. DOES A/T SHFT NORMAL CHECK FOR PROPER SHF TIMING AND SHFT SHOCK

SAT594J

11. Perform test drive to check gear shift feeling in accordance with instructions displayed.

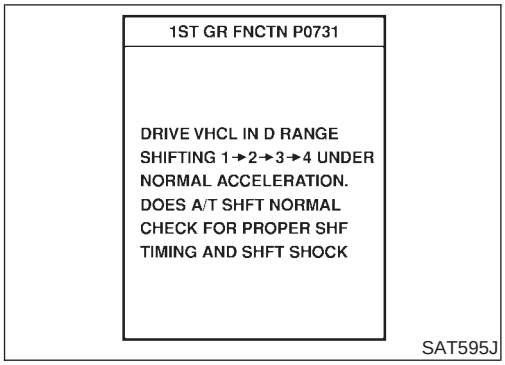

12. Touch "YES" or "NO".

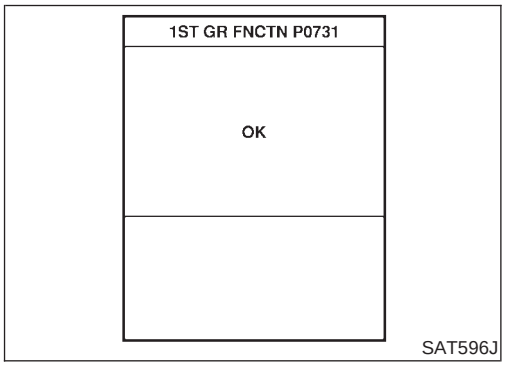

13. CONSULT-II procedure ended.
    If "NG" appears on the screen, a malfunction may exist. Go to "DIAGNOSTIC PROCEDURE".

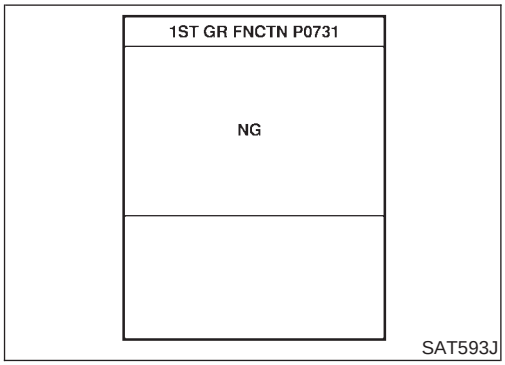

DTC WORK SUPPORT MODE

NJAT0256S05

DTC work support item	Description	Check items (Possible cause)
1ST GR FNCTN P0731	Following items for "A/T 1st gear function (P0731)" can be confirmed. ● Self-diagnosis status (whether the diagnosis is being conducted or not) ● Self-diagnosis result (OK or NG)	● Shift solenoid valve A ● Shift solenoid valve B ● Each clutch ● Hydraulic control circuit
2ND GR FNCTN P0732	Following items for "A/T 2nd gear function (P0732)" can be confirmed. ● Self-diagnosis status (whether the diagnosis is being conducted or not) ● Self-diagnosis result (OK or NG)	● Shift solenoid valve B ● Each clutch ● Hydraulic control circuit
3RD GR FNCTN P0733	Following items for "A/T 3rd gear function (P0733)" can be confirmed. ● Self-diagnosis status (whether the diagnosis is being conducted or not) ● Self-diagnosis result (OK or NG)	● Shift solenoid valve A ● Each clutch ● Hydraulic control circuit

DTC work support item	Description	Check items (Possible cause)
4TH GR FNCTN P0734	Following items for "A/T 4th gear function (P0734)" can be confirmed. ● Self-diagnosis status (whether the diagnosis is being conducted or not) ● Self-diagnosis result (OK or NG)	● Shift solenoid valve A ● Shift solenoid valve B ● Overrun clutch solenoid valve ● Line pressure solenoid valve ● Each clutch ● Hydraulic control circuit

Diagnostic Procedure Without CONSULT-II

NJAT0352

EURO-OBD SELF-DIAGNOSTIC PROCEDURE (WITH GST)

NJAT0352S04

Refer to EC-94, section "Generic Scan Tool (GST)".

EURO-OBD SELF-DIAGNOSTIC PROCEDURE (NO TOOLS)

NJAT0352S05

Refer to EC-74, "Malfunction Indicator (MI)".

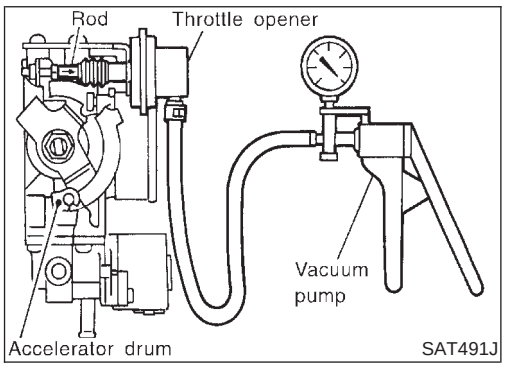

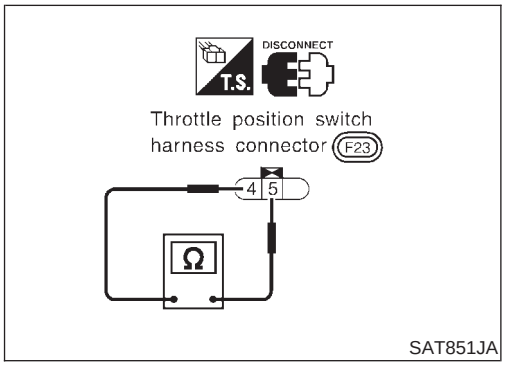

TCM SELF-DIAGNOSTIC PROCEDURE (NO TOOLS)

NJAT0352S06

Preparation

NJAT0352S0601

1. Turn ignition switch to "OFF" position.
2. Connect the handy type vacuum pump to the throttle opener and apply vacuum −25.3 kPa (−253 mbar, −190 mmHg, −7.48 inHg). (If throttle opener is equipped)
3. Disconnect the throttle position switch harness connector.
4. Turn ignition switch to "ON" position.
5. Check continuity of the closed throttle position switch.

   Continuity should exist.

   (If continuity does not exist, check throttle opener and closed throttle position switch. Then increase vacuum until closed throttle position switch shows continuity.)
6. Go to "Self-diagnostic procedure (Without CONSULT-II)".

1	CHECK O/D OFF INDICATOR LAMP

1. Start engine and warm it up to normal operating temperature.
2. Turn ignition switch to "OFF" position.
   Wait 5 seconds.
3. Turn ignition switch to "ACC" position.

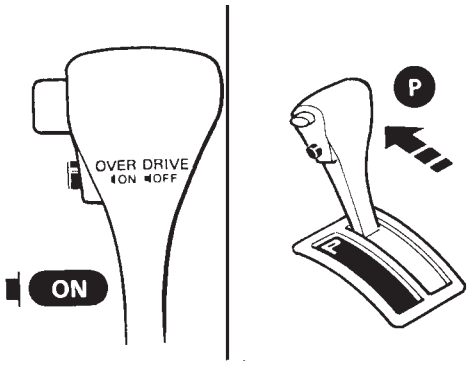

SAT774B

4. Set overdrive control switch to "ON" position.
5. Move selector lever to "P" position.
6. Turn ignition switch to "ON" position. (Do not start engine.)
7. Does O/D OFF indicator lamp come on for about 2 seconds?

Euro-OBD

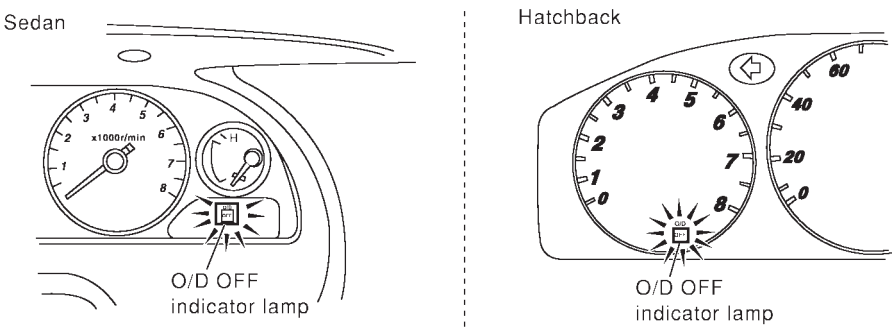

SAT138K

Yes or No

Yes	▶	GO TO 2.
No	▶	Go to "1. O/D OFF Indicator Lamp Does Not Come On", AT-296.

2	JUDGEMENT PROCEDURE STEP 1

1. Turn ignition switch to "OFF" position.
2. Turn ignition switch to "ACC" position.
3. Move selector lever to "D" position.
4. Set overdrive control switch to "OFF" position.
5. Turn ignition switch to "ON" position. (Do not start engine.)

● Wait more than 2 seconds after turning ignition switch "ON".

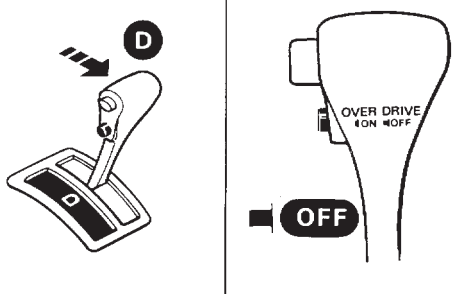

SAT653E

	▶	GO TO 3.

3	JUDGEMENT PROCEDURE STEP 2

1. Move selector lever to "2" position.
2. Set overdrive control switch to "ON" position.

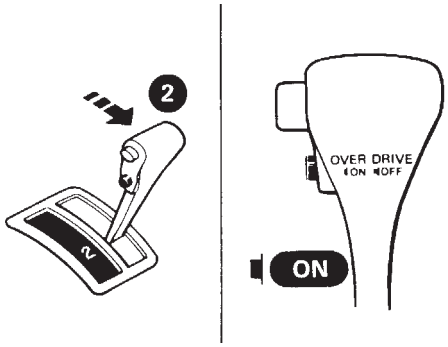

SAT780B

▶	GO TO 4.

4	JUDGEMENT PROCEDURE STEP 3

1. Move selector lever to "1" position.
2. Set overdrive control switch to "OFF" position.

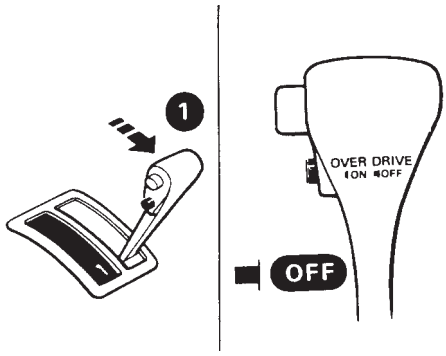

SAT781B

▶	GO TO 5.

5	JUDGEMENT PROCEDURE STEP 4

1. Depress accelerator pedal fully and release it.

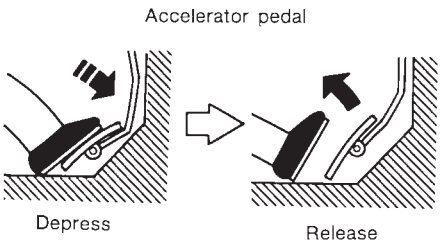

SAT981F

▶	GO TO 6.

6	CHECK SELF-DIAGNOSIS CODE

Check O/D OFF indicator lamp. Refer to JUDGEMENT OF SELF-DIAGNOSIS CODE, AT-66.

Euro-OBD

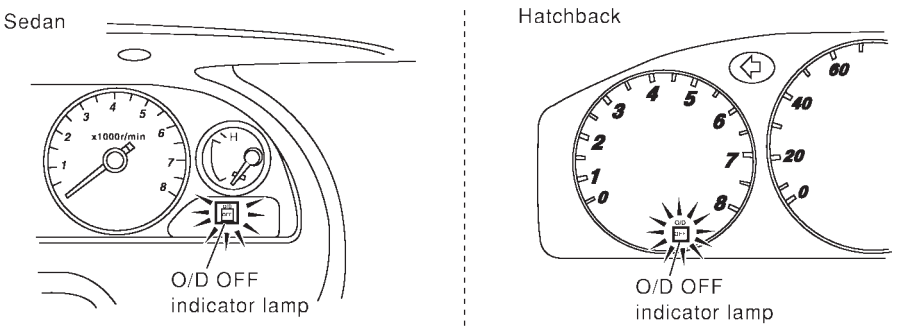

SAT138K

▶	DIAGNOSIS END

JUDGEMENT OF SELF-DIAGNOSIS CODE

NJAT0352S02

O/D OFF indicator lamp:

All judgement flickers are the same.

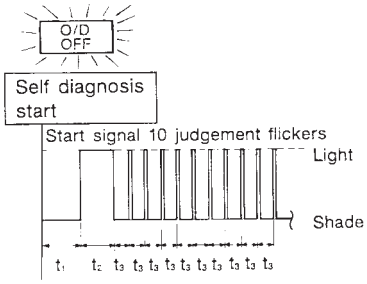

SAT436F

All circuits that can be confirmed by self-diagnosis are OK.

1st judgement flicker is longer than others.

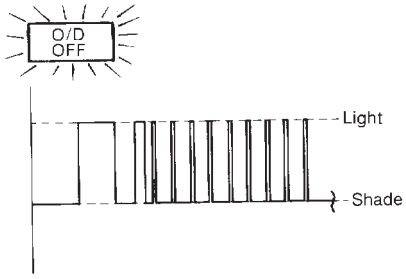

SAT437F

Revolution sensor circuit is short-circuited or disconnected.
⇒ **Go to VEHICLE SPEED SENSOR·A/T (REVOLUTION SENSOR).**
EURO-OBD: AT-195

2nd judgement flicker is longer than others.

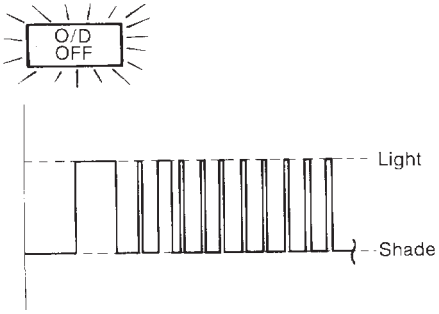

SAT439F

Vehicle speed sensor circuit is short-circuited or disconnected.
⇒ **Go to VEHICLE SPEED SENSOR·MTR.**
EURO-OBD: AT-281

3rd judgement flicker is longer than others.

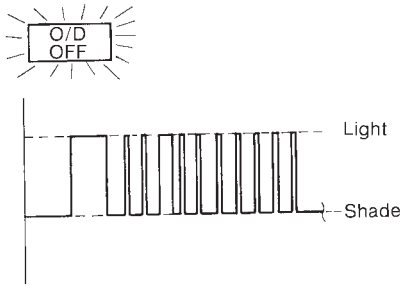

SAT441F

Throttle position sensor circuit is short-circuited or disconnected.
⇒ **Go to THROTTLE POSITION SENSOR.**
EURO-OBD: AT-258

O/D OFF indicator lamp:

4th judgement flicker is longer than others.

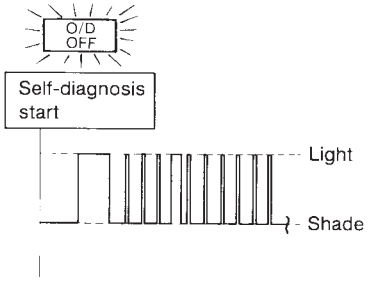

SAT443F

Shift solenoid valve A circuit is short-circuited or disconnected.
⇒ **Go to SHIFT SOLENOID VALVE A.**
EURO-OBD: AT-246

5th judgement flicker is longer than others.

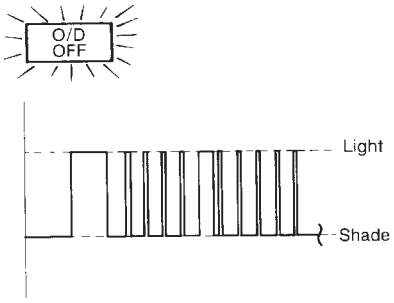

SAT445F

Shift solenoid valve B circuit is short-circuited or disconnected.
⇒ **Go to SHIFT SOLENOID VALVE B.**
EURO-OBD: AT-252

6th judgement flicker is longer than others.

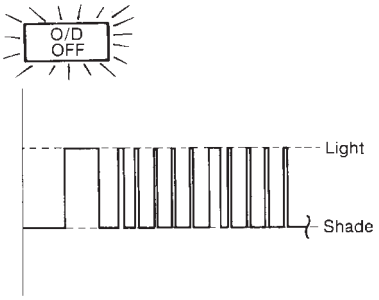

SAT447F

Overrun clutch solenoid valve circuit is short-circuited or disconnected.
⇒ **Go to OVERRUN CLUTCH SOLENOID VALVE.**
EURO-OBD: AT-268

7th judgement flicker is longer than others.

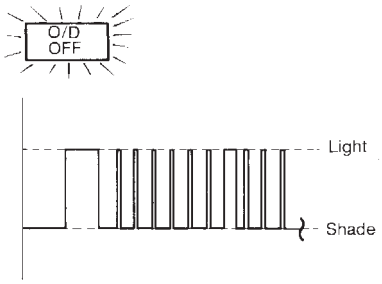

SAT449F

Torque converter clutch solenoid valve circuit is short-circuited or disconnected.
⇒ **Go to TORQUE CONVERTER CLUTCH SOLENOID VALVE.**
EURO-OBD: AT-233

8th judgement flicker is longer than others.

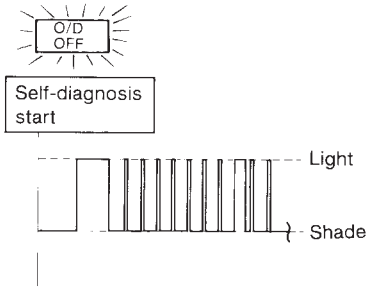

SAT451F

A/T fluid temperature sensor is disconnected or TCM power source circuit is damaged.
⇒ **Go to A/T FLUID TEMPERATURE SENSOR AND TCM POWER SOURCE.**
EURO-OBD: AT-274

9th judgement flicker is longer than others.

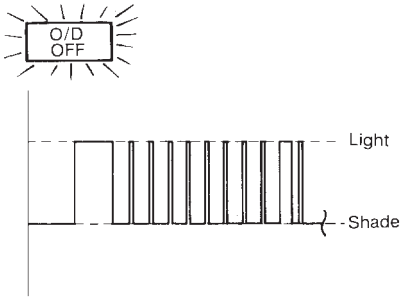

SAT453F

Engine speed signal circuit is short-circuited or disconnected.
⇒ **Go to ENGINE SPEED SIGNAL.**
EURO-OBD: AT-200

O/D OFF indicator lamp:	
10th judgement flicker is longer than others. 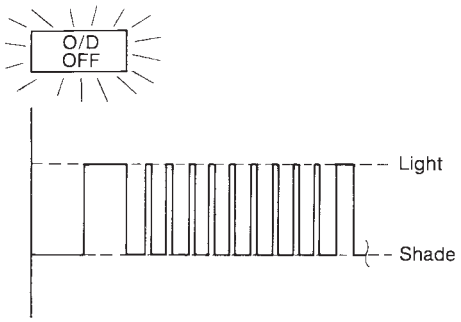 SAT455F Line pressure solenoid valve circuit is short-circuited or disconnected. ⇒ **Go to LINE PRESSURE SOLENOID VALVE.** EURO-OBD: AT-239	Flickers as shown below. 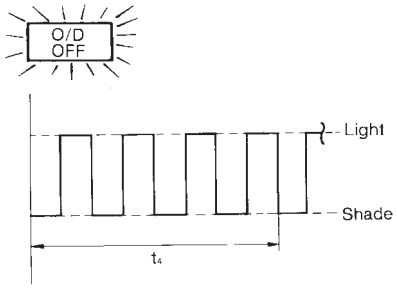 SAT457F Battery power is low. Battery has been disconnected for a long time. Battery is connected conversely. (When reconnecting TCM connectors. — This is not a problem.)
Lamp comes on. 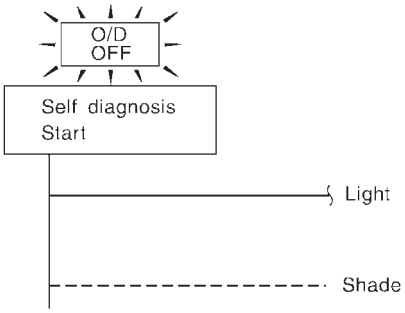 SAT367J PNP switch, overdrive control switch or throttle position switch circuit is disconnected or TCM is damaged. ⇒ **Go to 21. TCM Self-diagnosis Does Not Activate (PNP, OVERDRIVE CONTROL AND THROTTLE POSITION SWITCHES).** EURO-OBD: AT-334	

t_1 = 2.5 seconds t_2 = 2.0 seconds t_3 = 1.0 second t_4 = 1.0 second

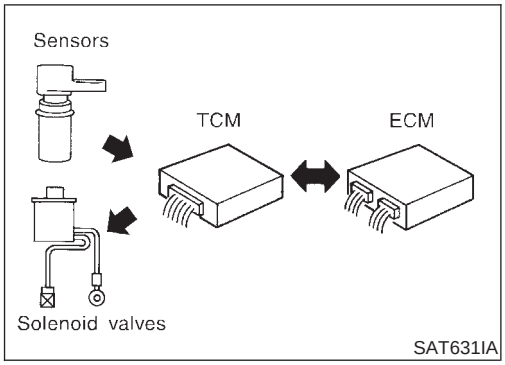

SAT631IA

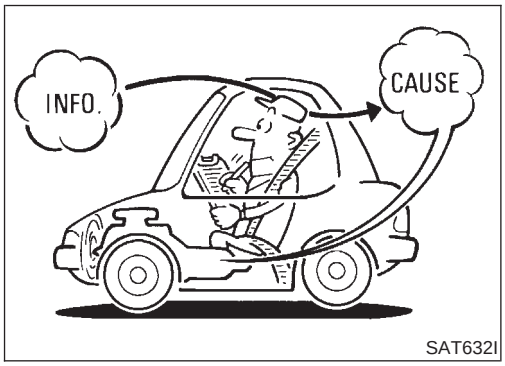

SAT632I

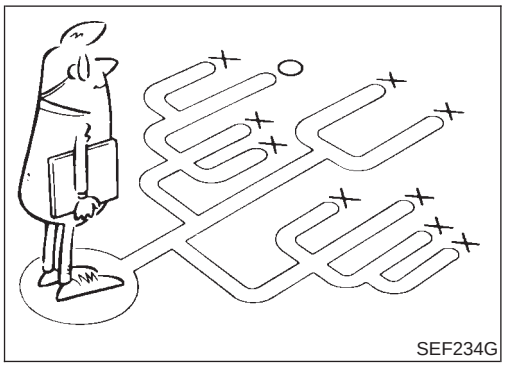
SEF234G

Introduction

NJAT0023

The TCM receives a signal from the vehicle speed sensor, throttle position sensor or PNP switch and provides shift control or lock-up control via A/T solenoid valves.

Input and output signals must always be correct and stable in the operation of the A/T system. The A/T system must be in good operating condition and be free of valve seizure, solenoid valve malfunction, etc.

It is much more difficult to diagnose a problem that occurs intermittently rather than continuously. Most intermittent problems are caused by poor electric connections or improper wiring. In this case, careful checking of suspected circuits may help prevent the replacement of good parts.

A visual check only, may not find the cause of the problems. A road test with CONSULT-II or a circuit tester connected should be performed. Follow the “Work Flow”. Refer to AT-73.

Before undertaking actual checks, take a few minutes to talk with a customer who approaches with a driveability complaint. The customer can supply good information about such problems, especially intermittent ones. Find out what symptoms are present and under what conditions they occur. A “Diagnostic Worksheet” like the example (AT-70) should be used.

Start your diagnosis by looking for “conventional” problems first. This will help troubleshoot driveability problems on an electronically controlled engine vehicle.

Also check related Service bulletins for information.

DIAGNOSTIC WORKSHEET

=NJAT0023S01

Information from Customer

NJAT0023S0101

KEY POINTS

WHAT ..... Vehicle & A/T model
WHEN..... Date, Frequencies
WHERE..... Road conditions
HOW..... Operating conditions, Symptoms

Customer name MR/MS	Model & Year	VIN
Trans. model	Engine	Mileage
Incident Date	Manuf. Date	In Service Date
Frequency	□ Continuous □ Intermittent (times a day)	
Symptoms	□ Vehicle does not move. (□ Any position □ Particular position)	
	□ No up-shift (□ 1st → 2nd □ 2nd → 3rd □ 3rd → O/D)	
	□ No down-shift (□ O/D → 3rd □ 3rd → 2nd □ 2nd → 1st)	
	□ Lockup malfunction	
	□ Shift point too high or too low.	
	□ Shift shock or slip (□ N → D □ Lockup □ Any drive position)	
	□ Noise or vibration	
	□ No kickdown	
	□ No pattern select	
	□ Others ( )	
O/D OFF indicator lamp	Blinks for about 8 seconds.	
	□ Continuously lit	□ Not lit
Malfunction indicator (MI)	□ Continuously lit	□ Not lit

Diagnostic Worksheet

=NJAT0023S0102

1.	□ Read the Fail-safe and listen to customer complaints.			AT-9
2.	□ CHECK A/T FLUID			AT-80
		□ Leakage (Follow specified procedure) □ Fluid condition □ Fluid level		
3.	□ Perform STALL TEST and LINE PRESSURE TEST.			AT-80, 84
		□ Stall test — Mark possible damaged components/others.		
			□ Torque converter one-way clutch □ Reverse clutch □ Forward clutch □ Overrun clutch □ Forward one-way clutch	□ Low & reverse brake □ Low one-way clutch □ Engine □ Line pressure is low □ Clutches and brakes except high clutch and brake band are OK
		□ Line Pressure test — Suspected parts:		
4.	□ Perform all ROAD TEST and mark required procedures.			AT-85
	4-1.	Check before engine is started.		AT-87
		□ SELF-DIAGNOSTIC PROCEDURE — Mark detected items.		
			□ Vehicle speed sensor·A/T (Revolution sensor), AT-126. □ Vehicle speed sensor·MTR, AT-131. □ Throttle position sensor, AT-134. □ Shift solenoid valve A, AT-142. □ Shift solenoid valve B, AT-148. □ Overrun clutch solenoid valve, AT-154. □ Torque converter clutch solenoid valve, AT-159. □ A/T fluid temperature sensor and TCM power source, AT-165. □ Engine speed signal, AT-172. □ Line pressure solenoid valve, AT-176. □ Control unit (RAM), control unit (ROM), AT-286. □ Control unit (EEP ROM), AT-288. □ PNP, overdrive control and throttle position switches, AT-334. □ Battery □ Others	
	4-2.	Check at idle		AT-89
		□ 1. O/D OFF Indicator Lamp Does Not Come On, AT-296. □ 2. Engine Cannot Be Started In "P" And "N" Position, AT-299. □ 3. In "P" Position, Vehicle Moves Forward Or Backward When Pushed, AT-300. □ 4. In "N" Position, Vehicle Moves, AT-301. □ 5. Large Shock. "N" → "R" Position, AT-303. □ 6. Vehicle Does Not Creep Backward In "R" Position, AT-305. □ 7. Vehicle Does Not Creep Forward In "D", "2" Or "1" Position, AT-308.		

4.	4-3.	Cruise test		AT-92 AT-95
		Part-1		
		□ 8. Vehicle Cannot Be Started From D_1, AT-311. □ 9. A/T Does Not Shift: $D_1 \rightarrow D_2$ Or Does Not Kickdown: $D_4 \rightarrow D_2$, AT-314. □ 10. A/T Does Not Shift: $D_2 \rightarrow D_3$, AT-317. □ 11. A/T Does Not Shift: $D_3 \rightarrow D_4$, AT-320. □ 12. A/T Does Not Perform Lock-up, AT-323. □ 13. A/T Does Not Hold Lock-up Condition, AT-325. □ 14. Lock-up Is Not Released, AT-327. □ 15. Engine Speed Does Not Return To Idle (Light Braking $D_4 \rightarrow D_3$), AT-328.		
		Part-2		AT-99
		□ 16. Vehicle Does Not Start From D_1, AT-330. □ 9. A/T Does Not Shift: $D_1 \rightarrow D_2$ Or Does Not Kickdown: $D_4 \rightarrow D_2$, AT-314. □ 10. A/T Does Not Shift: $D_2 \rightarrow D_3$, AT-317. □ 11. A/T Does Not Shift: $D_3 \rightarrow D_4$, AT-320.		
		Part-3		AT-101
		□ 17. A/T Does Not Shift: $D_4 \rightarrow D_3$ When Overdrive Control Switch "ON" → "OFF", AT-331 □ 15. Engine Speed Does Not Return To Idle (Engine Brake In D_3), AT-328. □ 18. A/T Does Not Shift: $D_3 \rightarrow 2_2$, When Selector Lever "D" → "2" Position, AT-332. □ 15. Engine Speed Does Not Return To Idle (Engine Brake In 2_2), AT-328. □ 19. A/T Does Not Shift: $2_2 \rightarrow 1_1$, When Selector Lever "2" → "1" Position, AT-333. □ 20. Vehicle Does Not Decelerate By Engine Brake, AT-334. □ 21. TCM Self-diagnosis Does Not Activate (PNP, Overdrive Control and Throttle Position Switches Circuit Checks), AT-334. □ SELF-DIAGNOSTIC PROCEDURE — Mark detected items.		
			□ Vehicle speed sensor·A/T (Revolution sensor), AT-126. □ Vehicle speed sensor·MTR, AT-131. □ Throttle position sensor, AT-134. □ Shift solenoid valve A, AT-142. □ Shift solenoid valve B, AT-148. □ Overrun clutch solenoid valve, AT-154. □ Torque converter clutch solenoid valve, AT-159. □ A/T fluid temperature sensor and TCM power source, AT-165. □ Engine speed signal, AT-172. □ Line pressure solenoid valve, AT-176. □ Control unit (RAM), control unit (ROM), AT-286. □ Control unit (EEP ROM), AT-288. □ PNP, overdrive control and throttle position switches, AT-334. □ Battery □ Others	
5.	□ For self-diagnosis NG items, inspect each component. Repair or replace the damaged parts.			AT-40
6.	□ Perform all ROAD TEST and re-mark required procedures.			AT-85
7.	□ Perform the Diagnostic Procedures for all remaining items marked NG. Repair or replace the damaged parts. Refer to the Symptom Chart when you perform the procedures. (The chart also shows some other possible symptoms and the component inspection orders.)			AT-118 AT-105
8.	□ Erase self-diagnosis code from TCM memories.			AT-43 AT-49

Work Flow

NJAT0024

HOW TO PERFORM TROUBLE DIAGNOSES FOR QUICK AND ACCURATE REPAIR

NJAT0024S01

A good understanding of the malfunction conditions can make troubleshooting faster and more accurate. In general, each customer feels differently about a problem. It is important to fully understand the symptoms or conditions for a customer complaint.

Make good use of the two sheets provided, “INFORMATION FROM CUSTOMER” (AT-70) and “DIAGNOSTIC WORKSHEET” (AT-71), to perform the best troubleshooting possible.

WORK FLOW CHART

NJAT0024S02

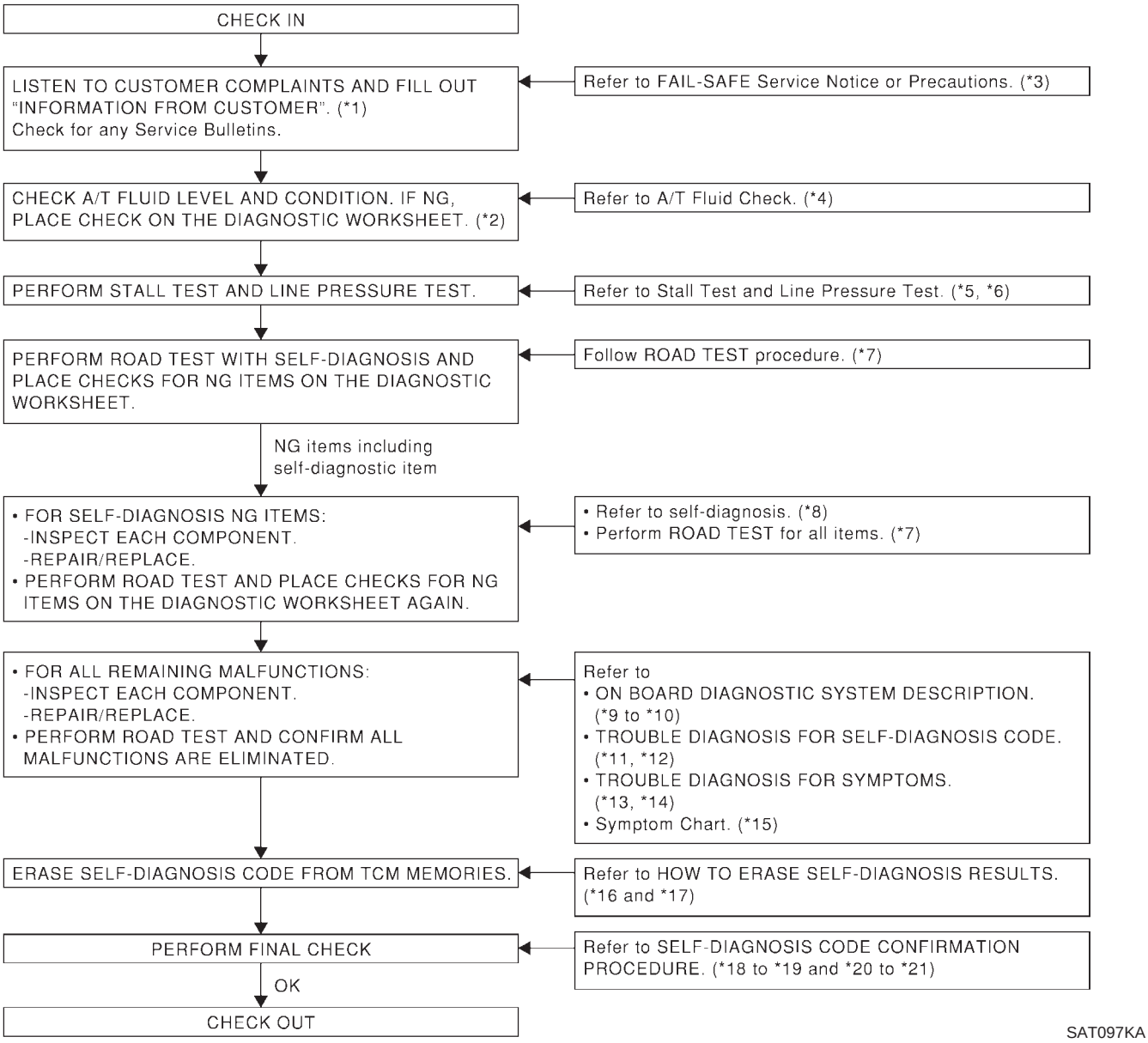

SAT097KA

*1: AT-70	*8: AT-39	*15: AT-105
*2: AT-71	*9: AT-39	*16: AT-43
*3: AT-9	*10: AT-49	*17: AT-49
*4: AT-80	*11: AT-123	*18: AT-127
*5: AT-80	*12: AT-126 to AT-176	*19: AT-177
*6: AT-84	*13: AT-290	*20: AT-286
*7: AT-85	*14: AT-296 to AT-334	*21: AT-288

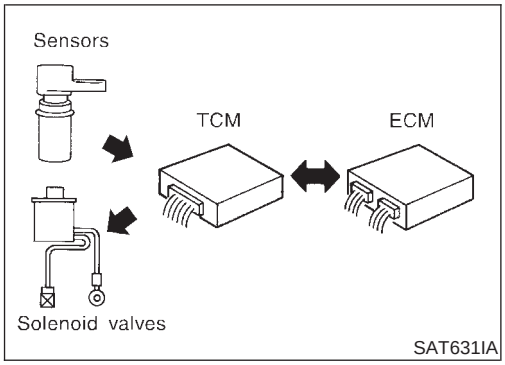

SAT631IA

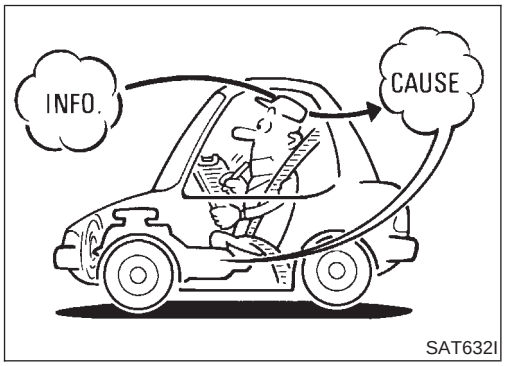

SAT632I

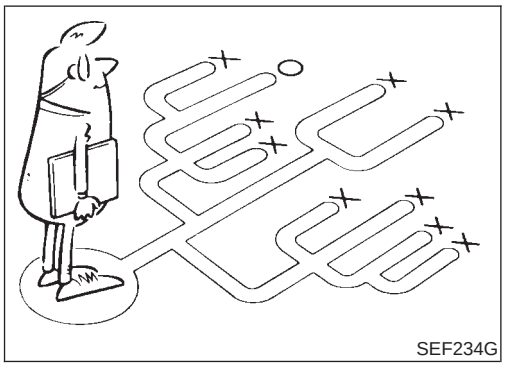
SEF234G

Introduction

NJAT0257

The TCM receives a signal from the vehicle speed sensor, throttle position sensor or PNP switch and provides shift control or lock-up control via A/T solenoid valves.

The TCM also communicates with the ECM by means of a signal sent from sensing elements used with the EURO-OBD related parts of the A/T system for malfunction-diagnostic purposes. The TCM is capable of diagnosing malfunctioning parts while the ECM can store malfunctions in its memory.

Input and output signals must always be correct and stable in the operation of the A/T system. The A/T system must be in good operating condition and be free of valve seizure, solenoid valve malfunction, etc.

It is much more difficult to diagnose a problem that occurs intermittently rather than continuously. Most intermittent problems are caused by poor electric connections or improper wiring. In this case, careful checking of suspected circuits may help prevent the replacement of good parts.

A visual check only, may not find the cause of the problems. A road test with CONSULT-II (or GST) or a circuit tester connected should be performed. Follow the “Work Flow”. Refer to AT-78.

Before undertaking actual checks, take a few minutes to talk with a customer who approaches with a driveability complaint. The customer can supply good information about such problems, especially intermittent ones. Find out what symptoms are present and under what conditions they occur. A “Diagnostic Worksheet” like the example (AT-75) should be used.

Start your diagnosis by looking for “conventional” problems first. This will help troubleshoot driveability problems on an electronically controlled engine vehicle.

Also check related Service bulletins for information.

DIAGNOSTIC WORKSHEET

=NJAT0257S01

Information from Customer

NJAT0257S0101

KEY POINTS

WHAT ..... Vehicle & A/T model

WHEN..... Date, Frequencies

WHERE..... Road conditions

HOW..... Operating conditions, Symptoms

Customer name MR/MS	Model & Year	VIN
Trans. model	Engine	Mileage
Incident Date	Manuf. Date	In Service Date
Frequency	□ Continuous □ Intermittent (times a day)	
Symptoms	□ Vehicle does not move. (□ Any position □ Particular position)	
	□ No up-shift (□ 1st → 2nd □ 2nd → 3rd □ 3rd → O/D)	
	□ No down-shift (□ O/D → 3rd □ 3rd → 2nd □ 2nd → 1st)	
	□ Lockup malfunction	
	□ Shift point too high or too low.	
	□ Shift shock or slip (□ N → D □ Lockup □ Any drive position)	
	□ Noise or vibration	
	□ No kickdown	
	□ No pattern select	
	□ Others ( )	
O/D OFF indicator lamp	Blinks for about 8 seconds.	
	□ Continuously lit	□ Not lit
Malfunction indicator (MI)	□ Continuously lit	□ Not lit

Diagnostic Worksheet

=NJAT0257S0102

1.	□ Read the Fail-safe and listen to customer complaints.			AT-9
2.	□ CHECK A/T FLUID			AT-80
		□ Leakage (Follow specified procedure) □ Fluid condition □ Fluid level		
3.	□ Perform STALL TEST and LINE PRESSURE TEST.			AT-80, 84
		□ Stall test — Mark possible damaged components/others.		
			□ Torque converter one-way clutch □ Reverse clutch □ Forward clutch □ Overrun clutch □ Forward one-way clutch	□ Low & reverse brake □ Low one-way clutch □ Engine □ Line pressure is low □ Clutches and brakes except high clutch and brake band are OK
		□ Line Pressure test — Suspected parts:		
4.	□ Perform all ROAD TEST and mark required procedures.			AT-85
	4-1.	Check before engine is started.		AT-87
		□ SELF-DIAGNOSTIC PROCEDURE — Mark detected items.		
			□ PNP switch, AT-183. □ A/T fluid temperature sensor, AT-189. □ Vehicle speed sensor·A/T (Revolution sensor), AT-195. □ Engine speed signal, AT-200. □ Torque converter clutch solenoid valve, AT-233. □ Line pressure solenoid valve, AT-239. □ Shift solenoid valve A, AT-246. □ Shift solenoid valve B, AT-252. □ Throttle position sensor, AT-258. □ Overrun clutch solenoid valve, AT-268. □ PNP, overdrive control and throttle position switches, AT-334. □ A/T fluid temperature sensor and TCM power source, AT-274. □ Vehicle speed sensor·MTR, AT-281. □ Control unit (RAM), control unit (ROM), AT-286. □ Control unit (EEP ROM), AT-288. □ Battery □ Others	
	4-2.	Check at idle		AT-89
		□ 1. O/D OFF Indicator Lamp Does Not Come On, AT-296. □ 2. Engine Cannot Be Started In "P" And "N" Position, AT-299. □ 3. In "P" Position, Vehicle Moves Forward Or Backward When Pushed, AT-300. □ 4. In "N" Position, Vehicle Moves, AT-301. □ 5. Large Shock. "N" → "R" Position, AT-303. □ 6. Vehicle Does Not Creep Backward In "R" Position, AT-305. □ 7. Vehicle Does Not Creep Forward In "D", "2" Or "1" Position, AT-308.		

4.	4-3.	Cruise test	AT-92 AT-95
		Part-1	
		□ 8. Vehicle Cannot Be Started From D_1, AT-311. □ 9. A/T Does Not Shift: $D_1 \rightarrow D_2$ Or Does Not Kickdown: $D_4 \rightarrow D_2$, AT-314. □ 10. A/T Does Not Shift: $D_2 \rightarrow D_3$, AT-317. □ 11. A/T Does Not Shift: $D_3 \rightarrow D_4$, AT-320. □ 12. A/T Does Not Perform Lock-up, AT-323. □ 13. A/T Does Not Hold Lock-up Condition, AT-325. □ 14. Lock-up Is Not Released, AT-327. □ 15. Engine Speed Does Not Return To Idle (Light Braking $D_4 \rightarrow D_3$), AT-328.	
		Part-2	AT-99
		□ 16. Vehicle Does Not Start From D_1, AT-330. □ 9. A/T Does Not Shift: $D_1 \rightarrow D_2$ Or Does Not Kickdown: $D_4 \rightarrow D_2$, AT-314. □ 10. A/T Does Not Shift: $D_2 \rightarrow D_3$, AT-317. □ 11. A/T Does Not Shift: $D_3 \rightarrow D_4$, AT-320.	
		Part-3	AT-101
		□ 17. A/T Does Not Shift: $D_4 \rightarrow D_3$ When Overdrive Control Switch "ON" → "OFF", AT-331 □ 15. Engine Speed Does Not Return To Idle (Engine Brake In D_3), AT-328. □ 18. A/T Does Not Shift: $D_3 \rightarrow 2_2$, When Selector Lever "D" → "2" Position, AT-332. □ 15. Engine Speed Does Not Return To Idle (Engine Brake In 2_2), AT-328. □ 19. A/T Does Not Shift: $2_2 \rightarrow 1_1$, When Selector Lever "2" → "1" Position, AT-333. □ 20. Vehicle Does Not Decelerate By Engine Brake, AT-334. □ SELF-DIAGNOSTIC PROCEDURE — Mark detected items.	
		□ PNP switch, AT-183. □ A/T fluid temperature sensor, AT-189. □ Vehicle speed sensor·A/T (Revolution sensor), AT-195. □ Engine speed signal, AT-200. □ Torque converter clutch solenoid valve, AT-233. □ Line pressure solenoid valve, AT-239. □ Shift solenoid valve A, AT-246. □ Shift solenoid valve B, AT-252. □ Throttle position sensor, AT-258. □ Overrun clutch solenoid valve, AT-268. □ PNP, overdrive control and throttle position switches, AT-334. □ A/T fluid temperature sensor and TCM power source, AT-274. □ Vehicle speed sensor·MTR, AT-281. □ Control unit (RAM), control unit (ROM), AT-286. □ Control unit (EEP ROM), AT-288. □ Battery □ Others	
5.	□ For self-diagnosis NG items, inspect each component. Repair or replace the damaged parts.		AT-55
6.	□ Perform all ROAD TEST and re-mark required procedures.		AT-85
7.	□ Perform DTC CONFIRMATION PROCEDURE for following MIL indicating items and check out NG items. Refer to EC-60, "Emission-related Diagnostic Information".		EC section
		□ DTC (P0731) A/T 1st gear function, AT-204. □ DTC (P0732) A/T 2nd gear function, AT-211. □ DTC (P0733) A/T 3rd gear function, AT-217. □ DTC (P0734) A/T 4th gear function, AT-223.	
8.	□ Perform the Diagnostic Procedures for all remaining items marked NG. Repair or replace the damaged parts. Refer to the Symptom Chart when you perform the procedures. (The chart also shows some other possible symptoms and the component inspection orders.)		AT-105 AT-118
9.	□ Erase DTC from TCM and ECM memories.		AT-52

Work Flow

NJAT0258

HOW TO PERFORM TROUBLE DIAGNOSES FOR QUICK AND ACCURATE REPAIR

NJAT0258S01

A good understanding of the malfunction conditions can make troubleshooting faster and more accurate. In general, each customer feels differently about a problem. It is important to fully understand the symptoms or conditions for a customer complaint.

Make good use of the two sheets provided, “INFORMATION FROM CUSTOMER” (AT-75) and “DIAGNOSTIC WORKSHEET” (AT-76), to perform the best troubleshooting possible.

WORK FLOW CHART

NJAT0258S02

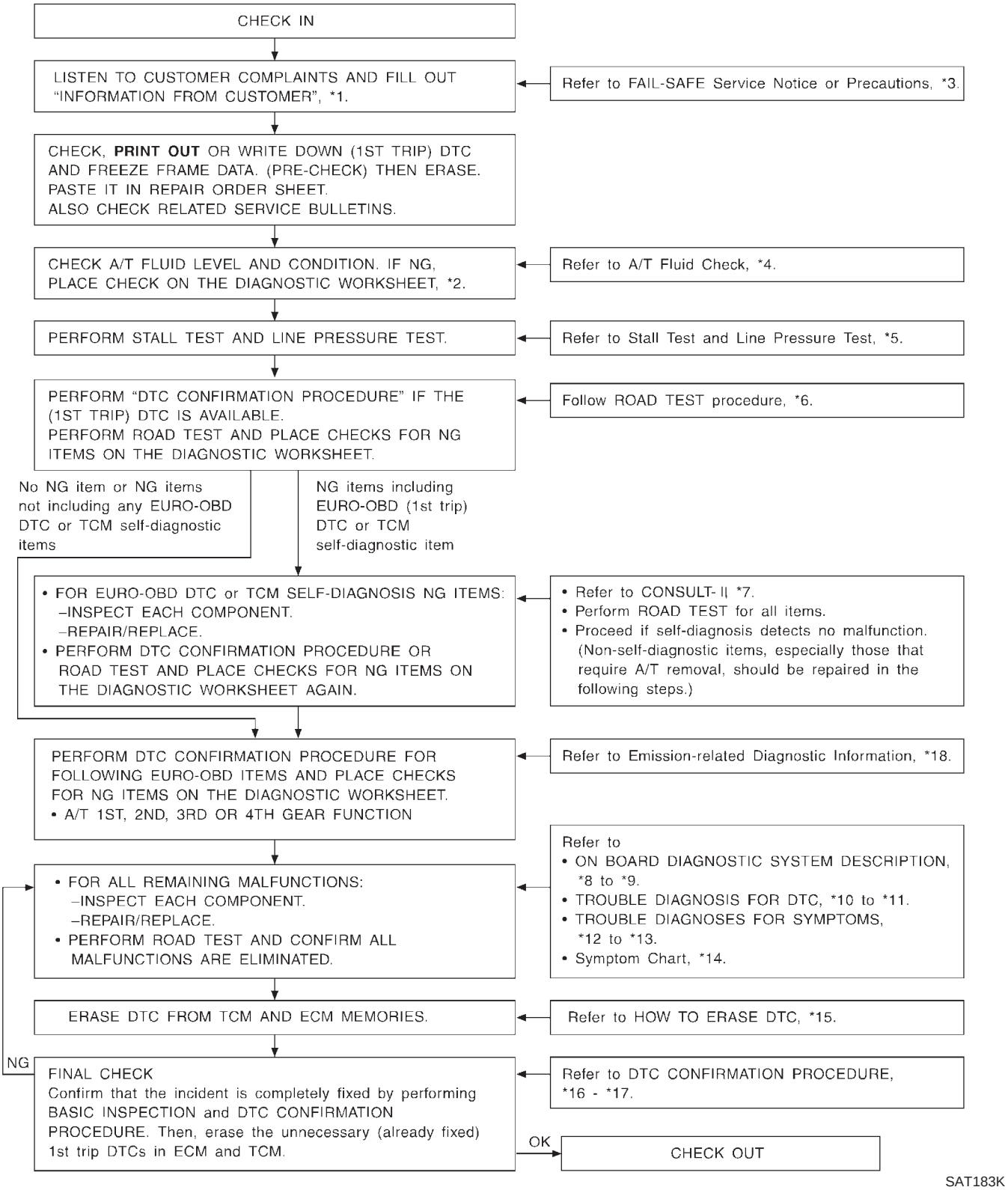

SAT183K

*1: AT-75
*2: AT-76
*3: AT-9
*4: AT-80
*5: AT-80 and AT-84
*6: AT-85
*7: AT-54
*8: AT-50
*9: AT-66
*10: AT-183
*11: AT-281 and AT-286 to AT-288
*12: AT-292 and AT-296
*13: AT-334
*14: AT-105
*15: AT-52
*16: AT-183
*17: AT-281 and AT-286 to AT-288
*18: EC-60

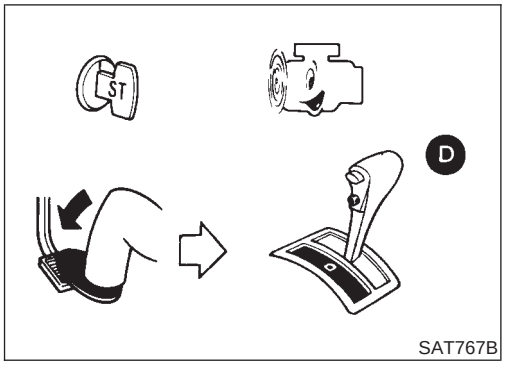

SAT767B

A/T Fluid Check

NJAT0025

FLUID LEAKAGE CHECK

NJAT0025S01

1. Clean area suspected of leaking. — for example, mating surface of converter housing and transmission case.
2. Start engine, apply foot brake, place selector lever in “D” position and wait a few minutes.
3. Stop engine.

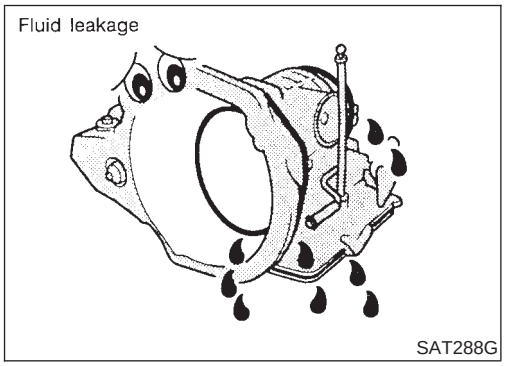

SAT288G

4. Check for fresh leakage.

SAT638A

FLUID CONDITION CHECK

NJAT0025S02

Fluid color	Suspected problem
Dark or black with burned odor	Wear of frictional material
Milky pink	Water contamination — Road water entering through filler tube or breather
Varnished fluid, light to dark brown and tacky	Oxidation — Over or under filling, — Overheating

FLUID LEVEL CHECK

NJAT0025S03

Refer to “Checking A/T Fluid”, AT-15.

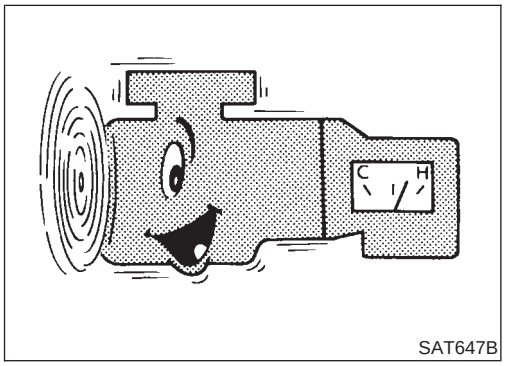

SAT647B

Stall Test

NJAT0026

STALL TEST PROCEDURE

NJAT0026S01

1. Check A/T fluid and engine oil levels. If necessary, add.
2. Drive vehicle for approx. 10 minutes or until fluid and oil reach operating temperature.

   ATF operating temperature:
   50 - 80°C (122 - 176°F)

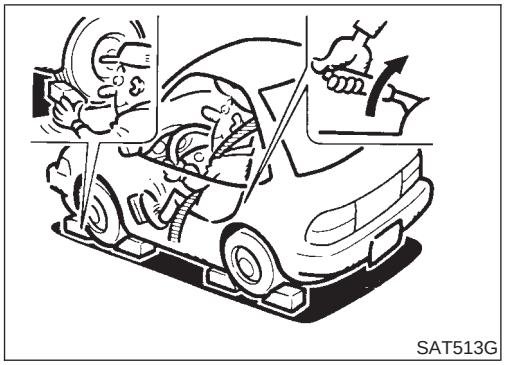
SAT513G

3. Set parking brake and block wheels.
4. Install a tachometer where it can be seen by driver during test.

- **It is good practice to mark the point of specified engine rpm on indicator.**

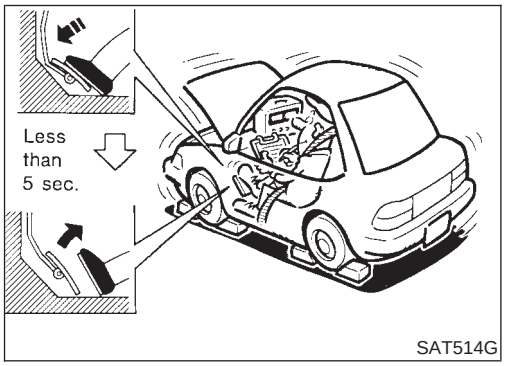

SAT514G

5. Start engine, apply foot brake, and place selector lever in D position.
6. Accelerate to wide open throttle gradually while applying foot brake.
7. Quickly note the engine stall revolution and immediately release throttle.

- **During test, never hold throttle wide open for more than 5 seconds.**

Stall revolution:

QG13DE	2,000 - 2,300 rpm
QG15DE	2,000 - 2,300 rpm
QG16DE	2,200 - 2,700 rpm
QG18DE	2,050 - 2,500 rpm

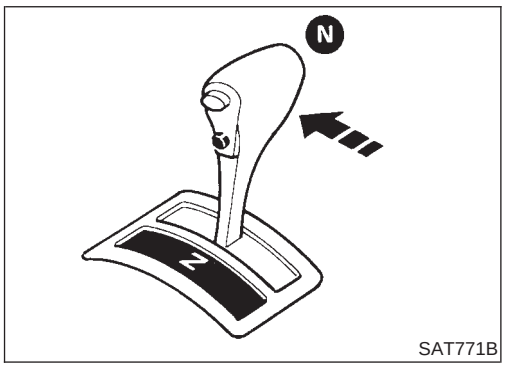

SAT771B

8. Move selector lever to "N" position.
9. Cool off ATF.

- **Run engine at idle for at least one minute.**

10. Repeat steps 5 through 9 with selector lever in "2", "1" and "R" positions.

JUDGEMENT OF STALL TEST

NJAT0026S02

The test result and possible damaged components relating to each result are shown in the illustrations on next page.
In order to pinpoint the possible damaged components, follow the WORK FLOW shown in AT-73 (Except for Euro-OBD) or AT-78 (EURO-OBD).

NOTE:
Stall revolution is too high in "D", "2" or "1" position:

- Slippage occurs in 1st gear but not in 2nd and 3rd gears. ..... Low one-way clutch slippage
- Slippage occurs in the following gears:

1st through 3rd gears in "D" position and engine brake functions with overdrive control switch set to "OFF".
1st and 2nd gears in "2" position and engine brake functions with accelerator pedal released (fully closed throttle). ..... Forward clutch or forward one-way clutch slippage

Stall revolution is too high in R position:

- Engine brake does not function in "1" position. ..... Low & reverse brake slippage
- Engine brake functions in "1" position. ..... Reverse clutch slippage

Stall revolution within specifications:

- Vehicle does not achieve speed of more than 80 km/h (50 MPH). ..... One-way clutch seizure in torque converter housing

CAUTION:
Be careful since automatic fluid temperature increases abnormally.

- Slippage occurs in 3rd and 4th gears in "D" position. ..... High clutch slippage
- Slippage occurs in 2nd and 4th gear in "D" position. ..... Brake band slippage
- Engine brake does not function in 2nd and 3rd gears in "D" position, 2nd gear in "2" position, and 1st gear in "1" position with overdrive control switch set to "OFF".

Stall revolution less than specifications:

- Poor acceleration during starts. ..... One-way clutch seizure in torque converter

Selector lever position	Judgement		
D	H	O	L
2	H	O	L
1	H	O	L
R	O	H	L

O : Stall revolution is normal.
H : Stall revolution is higher than specified.
L : Stall revolution is lower than specified.

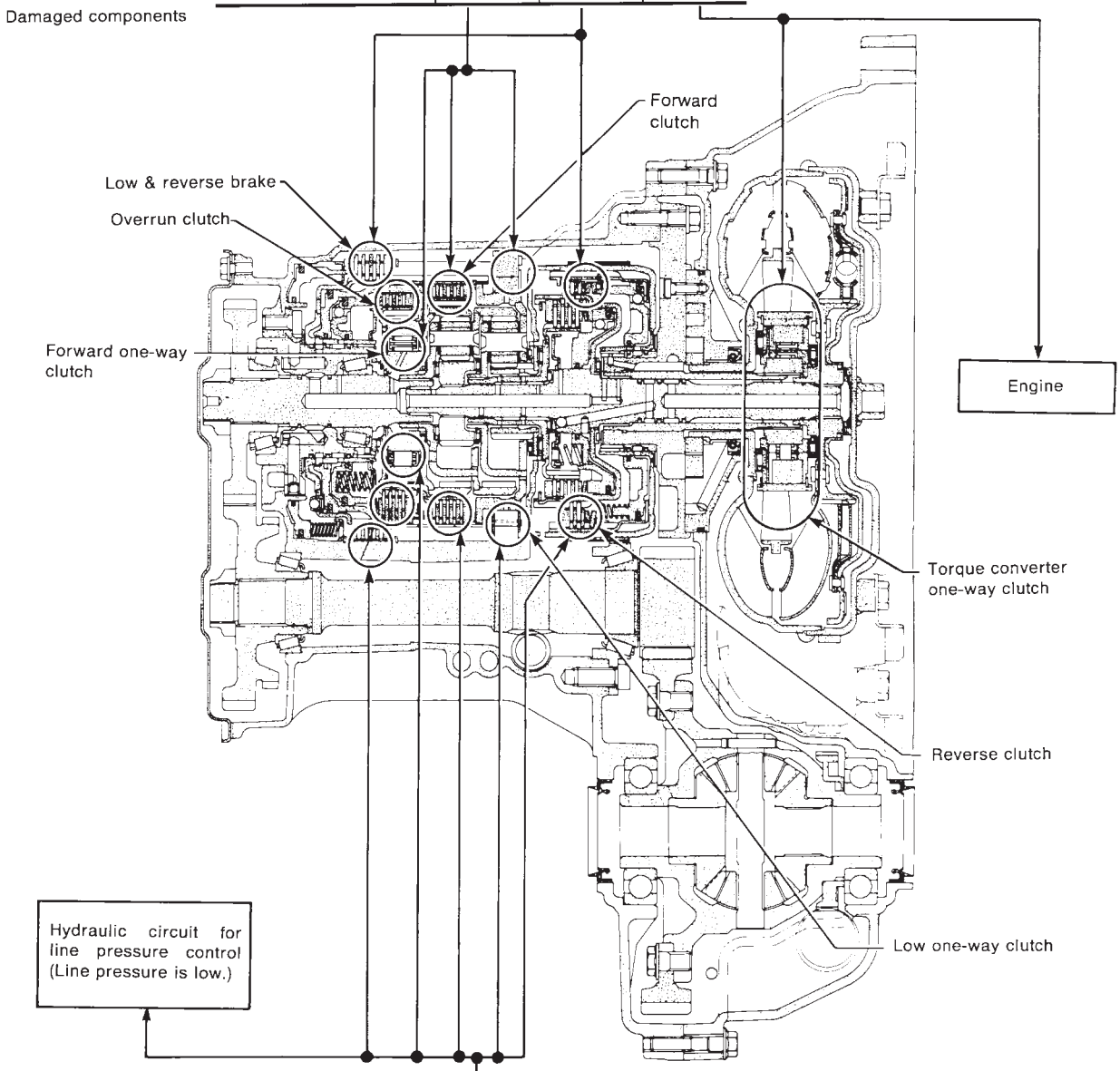

D	H	O
2	H	O
1	H	O
R	H	O
Selector lever position	Judgement	

Clutches and brakes except high clutch and brake band are OK. (Condition of high clutch and brake band cannot be confirmed by stall test.)

SAT871HA

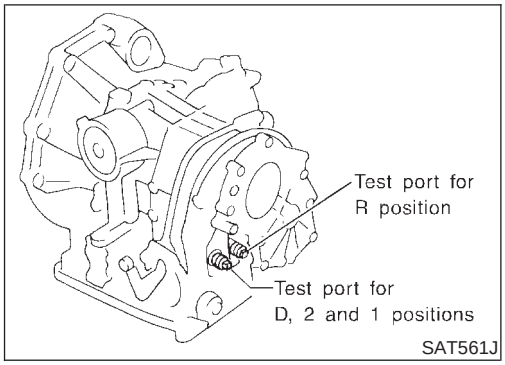

SAT561J

Line Pressure Test

NJAT0027

LINE PRESSURE TEST PORTS

NJAT0027S01

Location of line pressure test ports are shown in the illustration.

- **Always replace pressure plugs as they are self-sealing bolts.**

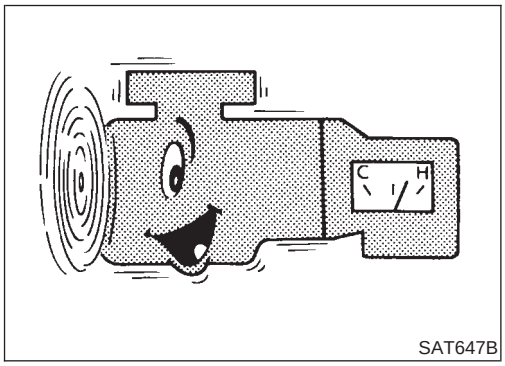

SAT647B

LINE PRESSURE TEST PROCEDURE

NJAT0027S02

1. Check A/T fluid and engine oil levels. If necessary, add fluid or oil.
2. Drive vehicle for approx. 10 minutes or until engine oil and ATF reach operating temperature.

   ATF operating temperature:
   50 - 80°C (122 - 176°F)

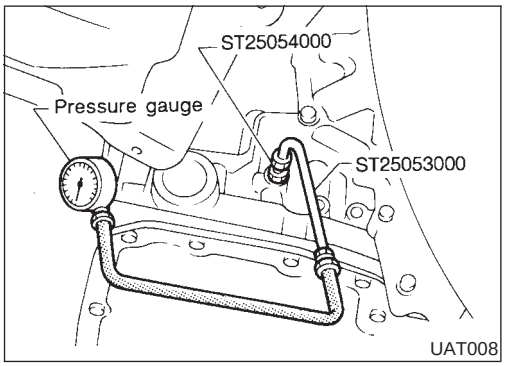

UAT008

3. Install pressure gauge to corresponding line pressure port.

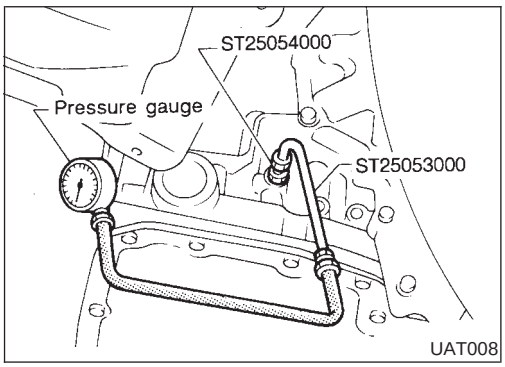

UAT008

4. Set parking brake and block wheels.
   - **Continue to depress brake pedal fully while line pressure test is being performed at stall speed.**

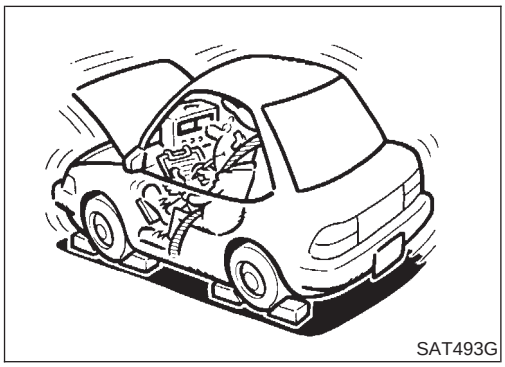
SAT493G

5. Start engine and measure line pressure at idle and stall speed.
   - **When measuring line pressure at stall speed, follow the stall test procedure.**

Line pressure: Refer to SDS, AT-473.

JUDGEMENT OF LINE PRESSURE TEST

NJAT0027S03

Judgement		Suspected parts
At idle	Line pressure is low in all positions.	● Oil pump wear ● Control piston damage ● Pressure regulator valve or plug sticking ● Spring for pressure regulator valve damaged ● Fluid pressure leakage between oil strainer and pressure regulator valve ● Clogged strainer
	Line pressure is low in particular position.	● Fluid pressure leakage between manual valve and particular clutch ● For example, line pressure is: − Low in "R" and "1" positions, but − Normal in "D" and "2" positions. Therefore, fluid leakage exists at or around low and reverse brake circuit. Refer to "CLUTCH AND BAND CHART", AT-23.
	Line pressure is high.	● Maladjustment of throttle position sensor ● A/T fluid temperature sensor damaged ● Line pressure solenoid valve sticking ● Short circuit of line pressure solenoid valve circuit ● Pressure modifier valve sticking ● Pressure regulator valve or plug sticking ● Open in dropping resistor circuit
At stall speed	Line pressure is low.	● Maladjustment of throttle position sensor ● Line pressure solenoid valve sticking ● Short circuit of line pressure solenoid valve circuit ● Pressure regulator valve or plug sticking ● Pressure modifier valve sticking ● Pilot valve sticking

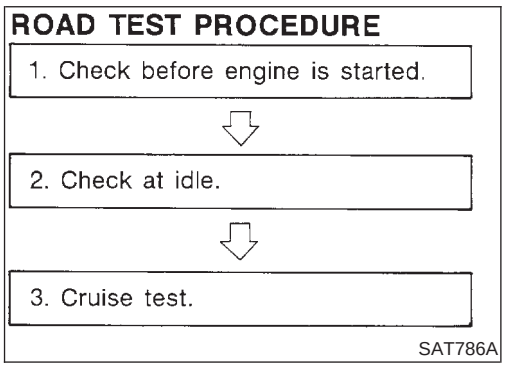

SAT786A

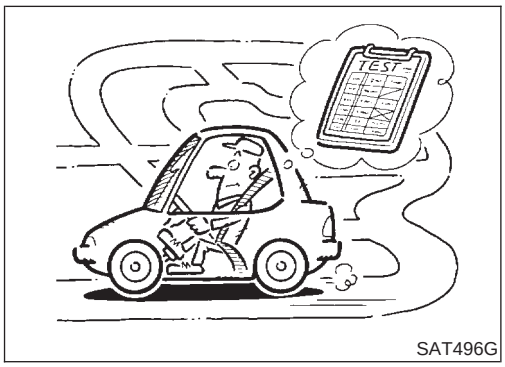

SAT496G

Road Test

NJAT0028

DESCRIPTION

NJAT0028S01

- The purpose of the test is to determine overall performance of A/T and analyze causes of problems.
- The road test consists of the following three parts:

1. Check before engine is started
2. Check at idle
3. Cruise test

- Before road test, familiarize yourself with all test procedures and items to check.
- Conduct tests on all items until specified symptom is found. Troubleshoot items which check out No Good after road test. Refer to the following items.

	ON BOARD DIAGNOSITC SYSTEM DESCRIPTION	TROUBLE DIAGNOSES FOR SYMPTOMS
General and Except for Euro-OBD	AT-39 - AT-49	AT-290 and AT-296 - AT-334

	ON BOARD DIAGNOSITC SYSTEM DESCRIPTION	TROUBLE DIAGNOSES FOR SYMPTOMS
EURO-OBD	AT-50 - AT-66	AT-292 and AT-296 - AT-334

1. CHECK BEFORE ENGINE IS STARTED

=NJAT0028S02

1	CHECK O/D OFF INDICATOR LAMP

1. Park vehicle on flat surface.
2. Turn ignition switch to "OFF" position.
3. Move selector lever to "P" position.
4. Set overdrive control switch to "ON" position.

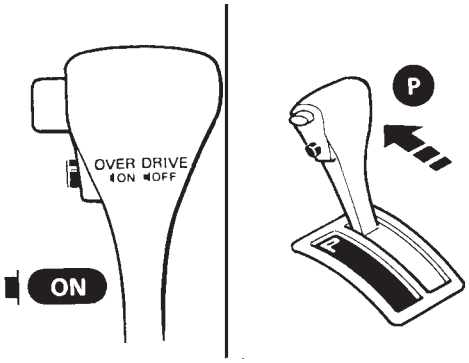

SAT774B

5. Turn ignition switch to "ON" position. (Do not start engine.)
6. Does O/D OFF indicator lamp come on for about 2 seconds?

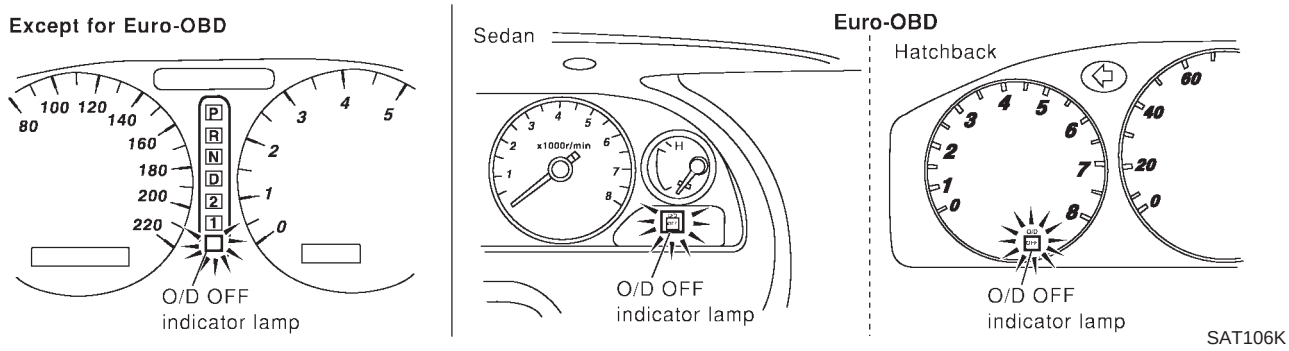

SAT106K

Yes or No

Yes	▶	GO TO 2.
No	▶	Stop ROAD TEST. Go to "1. O/D OFF Indicator Lamp Does Not Come On", AT-296.

2	CHECK O/D OFF INDICATOR LAMP

Does O/D OFF indicator lamp flicker for about 8 seconds?

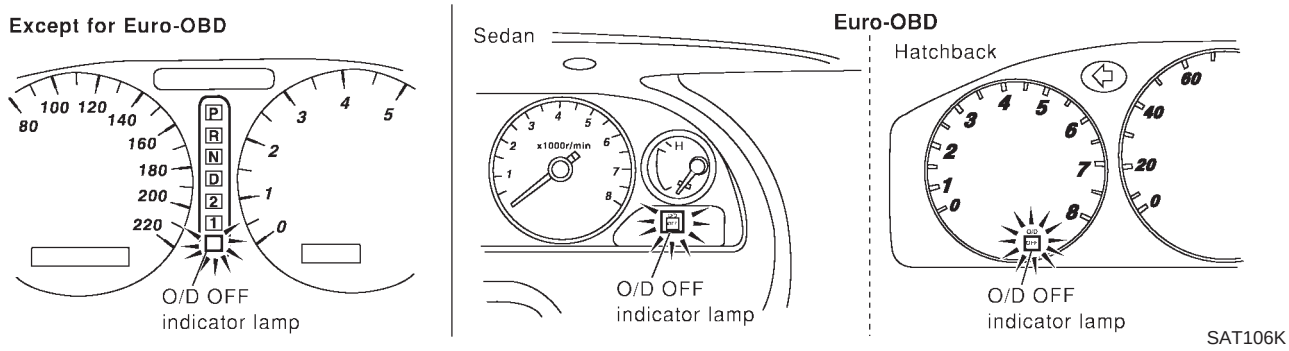

Yes or No

Yes (General and except for Euro-OBD) ▶	Perform self-diagnosis and check NG items on the DIAGNOSTIC WORKSHEET, AT-70. Refer to SELF-DIAGNOSIS PROCEDURE (Without CONSULT-II), AT-44.
No (General and except for Euro-OBD) ▶	1. Turn ignition switch to "OFF" position. 2. Perform self-diagnosis and note NG items. Refer to SELF-DIAGNOSIS PROCEDURE (Without CONSULT-II), AT-44. 3. Go to "2. CHECK AT IDLE", AT-89.
Yes (EURO-OBD) ▶	Perform self-diagnosis and check NG items on the DIAGNOSTIC WORKSHEET, AT-75. Refer to TCM SELF-DIAGNOSIS PROCEDURE (NO TOOLS), AT-63.
No (EURO-OBD) ▶	1. Turn ignition switch to "OFF" position. 2. Perform self-diagnosis and note NG items. Refer to TCM SELF-DIAGNOSIS PROCEDURE (NO TOOLS), AT-63. 3. Go to "2. CHECK AT IDLE", AT-89.

2. CHECK AT IDLE

=NJAT0028S03

1	CHECK ENGINE START

1. Park vehicle on flat surface.
2. Turn ignition switch to "OFF" position.
3. Move selector lever to "P" or "N" position.

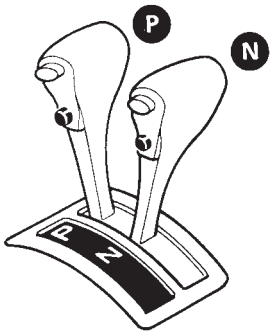

SAT769B

4. Turn ignition switch to "START" position.
5. Is engine started?

Yes or No

Yes	▶	GO TO 2.
No	▶	Mark the box on the DIAGNOSTIC WORKSHEET. Go to "2. Engine Cannot Be Started In "P" and "N" Position", AT-299. Continue ROAD TEST.

2	CHECK ENGINE START

1. Turn ignition switch to "OFF" position.
2. Move selector lever to "D", "1", "2" or "R" position.

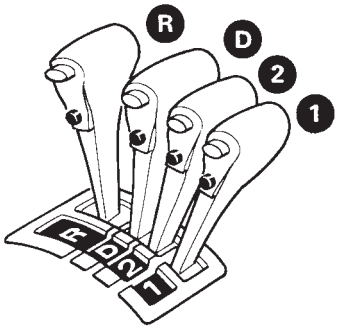

SAT770B

3. Turn ignition switch to "START" position.
4. Is engine started?

Yes or No

Yes	▶	Mark the box on the DIAGNOSTIC WORKSHEET. Go to "2. Engine Cannot Be Started In "P" and "N" Position", AT-299. Continue ROAD TEST.
No	▶	GO TO 3.

3	CHECK VEHICLE MOVE

1. Turn ignition switch to "OFF" position.
2. Move selector lever to "P" position.

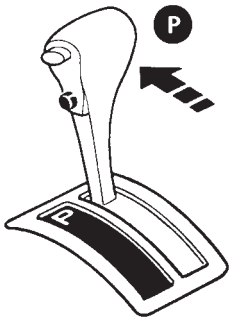

SAT768B

3. Release parking brake.
4. Push vehicle forward or backward.
5. Does vehicle move when it is pushed forward or backward?

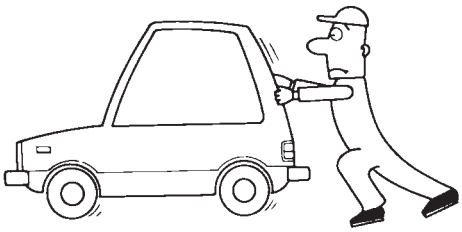

SAT796A

Yes or No

Yes	▶	Mark the box on the DIAGNOSTIC WORKSHEET. Go to "3. In "P" Position, Vehicle Moves Forward Or Backward When Pushed", AT-300. Continue ROAD TEST.
No	▶	GO TO 4.

4	CHECK VEHICLE MOVE

1. Apply parking brake.
2. Move selector lever to "N" position.
3. Turn ignition switch to "START" position and start engine.

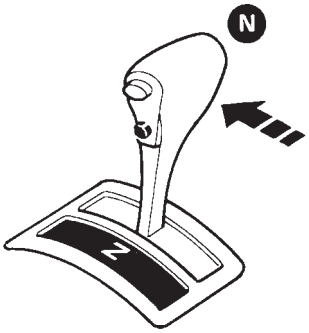

SAT771B

4. Release parking brake.
5. Does vehicle move forward or backward?

Yes or No

Yes	▶	Mark the box on the DIAGNOSTIC WORKSHEET. Go to "4. In "N" Position, Vehicle Moves", AT-301. Continue ROAD TEST.
No	▶	GO TO 5.

5	CHECK SHIFT SHOCK

1. Apply foot brake.

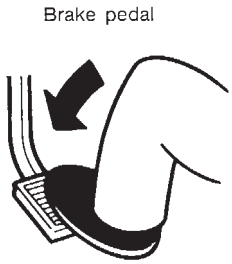

SAT797A

2. Move selector lever to "R" position.

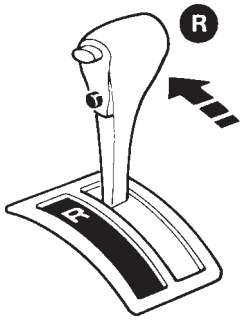

SAT772B

3. Is there large shock when changing from "N" to "R" position?

Yes or No

Yes	▶	Mark the box on the DIAGNOSTIC WORKSHEET. Go to "5. Large Shock "N" → "R" Position", AT-303. Continue ROAD TEST.
No	▶	GO TO 6.

6	CHECK VEHICLE MOVE

1. Release foot brake for several seconds.

SAT799A

2. Does vehicle creep backward when foot brake is released?

Yes or No

Yes	▶	GO TO 7.
No	▶	Mark the box on the DIAGNOSTIC WORKSHEET. Go to "6. Vehicle Does Not Creep Backward In "R" Position", AT-305. Continue ROAD TEST.

7	CHECK VEHICLE MOVE

1. Move selector lever to "D", "2" and "1" positions and check if vehicle creeps forward.

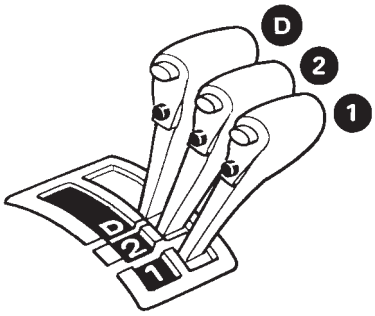

SAT773B

2. Does vehicle creep forward in all three positions?

Yes or No

Yes	▶	Go to 3. CRUISE TEST, AT-92.
No	▶	Mark the box on the DIAGNOSTIC WORKSHEET. Go to "7. Vehicle Does Not Creep Forward In "D", "2" Or "1" Position", AT-308. Continue ROAD TEST.

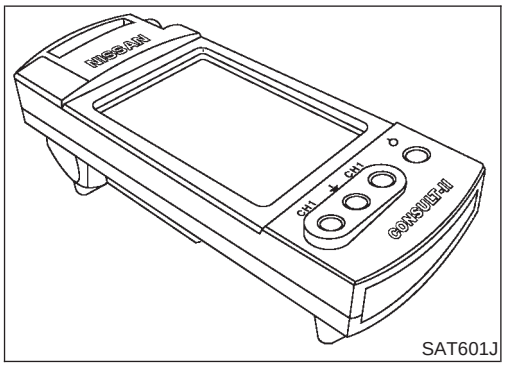

SAT601J

3. CRUISE TEST

NJAT0028S04

- Check all items listed in Parts 1 through 3.

With CONSULT-II

NJAT0028S0401

- Using CONSULT-II, conduct a cruise test and record the result.
- Print the result and ensure that shifts and lock-ups take place as per Shift Schedule.

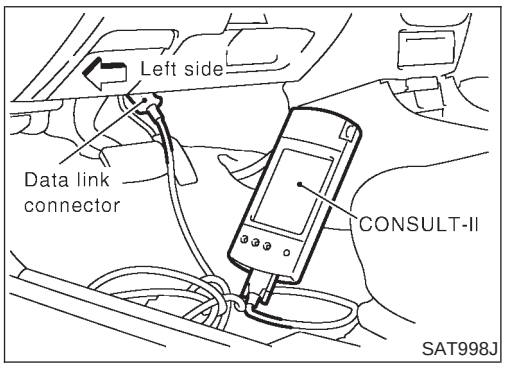

SAT998J

CONSULT-II Setting Procedure

NJAT0028S0402

1. Turn ignition switch "OFF".
2. Connect CONSULT-II to data link connector, which is located in left side lower dash panel.

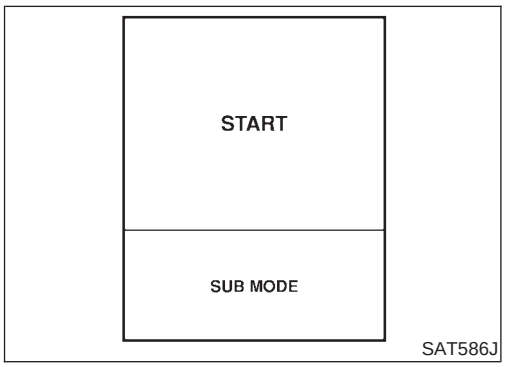

SAT586J

3. Turn ignition switch "ON".
4. Touch "START".

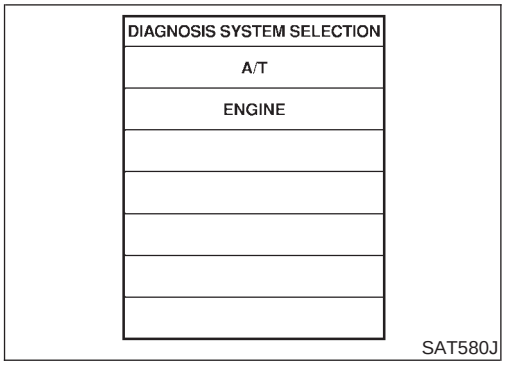

5. Touch "A/T".

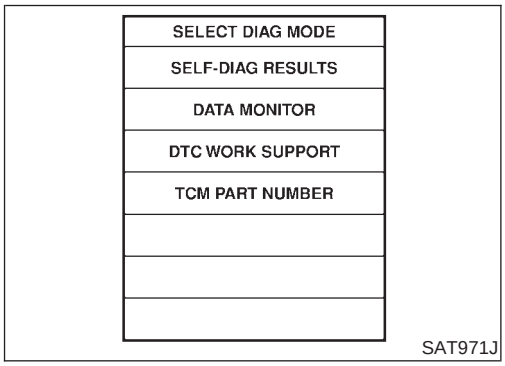

6. Touch "DATA MONITOR".

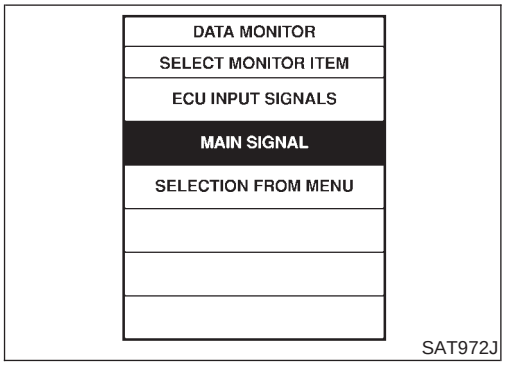

7. Touch "MAIN SIGNALS" or "ECU INPUT SIGNALS".
8. Select "Numerical Display", "Barchart Display" or "Line Graph Display".

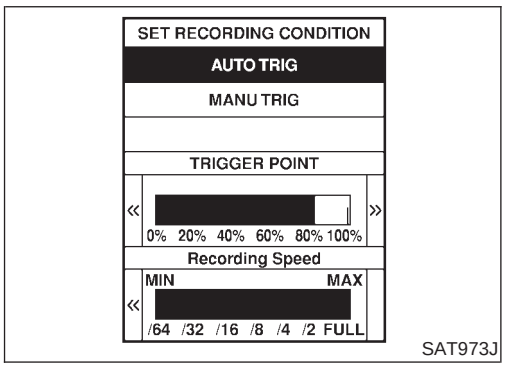

9. Touch "SETTING" to recording condition ("AUTO TRIG" or "MANU TRIG") and touch "BACK".
10. Touch "Start".

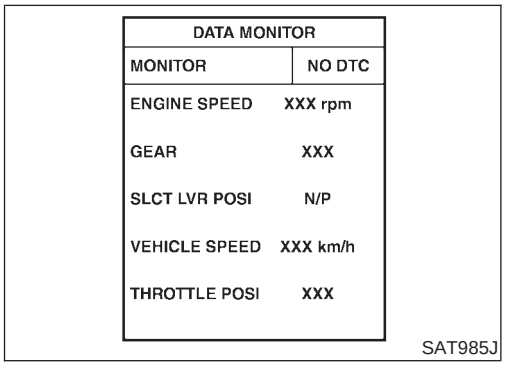

11. When performing cruise test, touch "RECORD".

DATA MONITOR		
Recording Data	X%	DTC DETECTED
ENGINE SPEED	XXX rpm	
GEAR	XXX	
SLCT LVR POSI	P/N	
VEHICLE SPEED	XXX km/h	
THROTTLE POSI	XXX	

SAT986J

12. After finishing cruise test part 1, touch "STOP".

REAL-TIME DIAG
ENG SPEED SIG

SAT987J

13. Touch "STORE" and touch "BACK".

STORE	
SYSTEM	SAVE REC DATA

SAT974J

Trigger	VHCL S/SEN A/T	VHCL S/SEN MTR	THRTL POSI SEN
	km/h	km/h	V

SAT975J

14. Touch "DISPLAY".
15. Touch "PRINT".
16. Check the monitor data printed out.
17. Continue cruise test part 2 and 3.

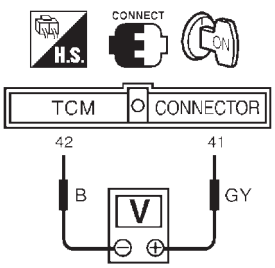

SAT417J

Without CONSULT-II

NJAT0028S0403

- Throttle position sensor can be checked by voltage across terminals 41 and 42 of TCM.

Cruise Test — Part 1

=NJAT0028S0404

1	CHECK STARTING GEAR (D_1) POSITION

1. Drive vehicle for approx. 10 minutes to warm engine oil and ATF up to operating temperature.
   ATF operating temperature:
   50 - 80°C (122 - 176°F)
2. Park vehicle on flat surface.
3. Set overdrive control switch to "ON" position.
4. Move selector lever to "P" position.

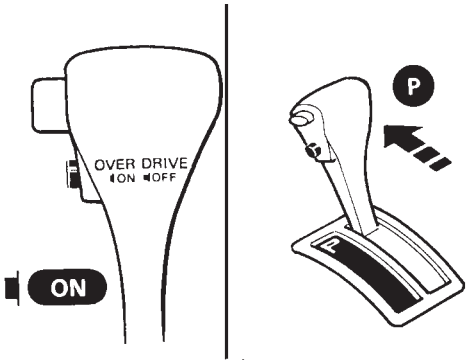

SAT774B

5. Start engine.
6. Move selector lever to "D" position.

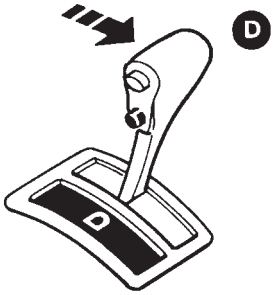

SAT775B

7. Accelerate vehicle by constantly depressing accelerator pedal halfway.

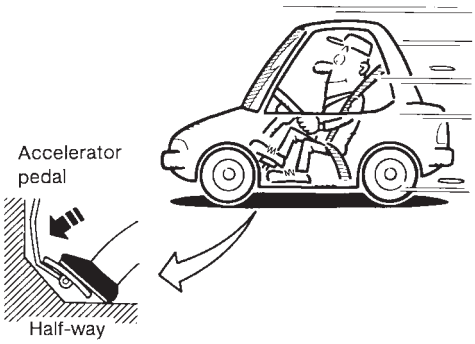

SAT495G

8. Does vehicle start from D_1?
   Read gear position.

Yes or No

Yes	▶	GO TO 2.
No	▶	Go to "8. Vehicle Cannot Be Started From D_1", AT-311. Continue ROAD TEST.

2	CHECK SHIFT UP (D_1 TO D_2)

Does A/T shift from D_1 to D_2 at the specified speed?

Read gear position, throttle opening and vehicle speed.

Specified speed when shifting from D_1 to D_2:

Refer to Shift schedule, AT-470.

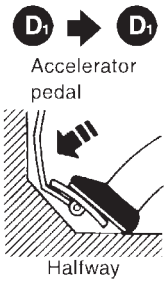

SAT954I

Yes or No

Yes	▶	GO TO 3.
No	▶	Go to "9. A/T Does Not Shift: $D_1 \rightarrow D_2$ Or Does Not Kickdown: $D_4 \rightarrow D_2$", AT-314. Continue ROAD TEST.

3	CHECK SHIFT UP (D_2 TO D_3)

Does A/T shift from D_2 to D_3 at the specified speed?

Read gear position, throttle position and vehicle speed.

Specified speed when shifting from D_2 to D_3:

Refer to Shift schedule, AT-470.

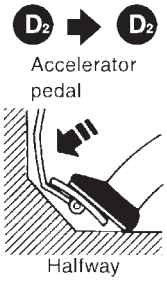

SAT955I

Yes or No

Yes	▶	GO TO 4.
No	▶	Go to "10. A/T Does Not Shift: $D_2 \rightarrow D_3$", AT-317. Continue ROAD TEST.

4	CHECK SHIFT UP (D_3 TO D_4)

Does A/T shift from D_3 to D_4 at the specified speed?

Read gear position, throttle position and vehicle speed.

Specified speed when shifting from D_3 to D_4:

Refer to Shift schedule, AT-470.

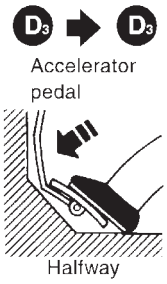

SAT956I

Yes or No

Yes	▶	GO TO 5.
No	▶	Go to "11. A/T Does Not Shift: $D_3 \rightarrow D_4$", AT-320. Continue ROAD TEST.

5	CHECK LOCK-UP (D_4 TO D_4 L/U)

Does A/T perform lock-up at the specified speed?

Read vehicle speed, throttle position when lock-up duty becomes 94%.

Specified speed when lock-up occurs:

Refer to Shift schedule, AT-470.

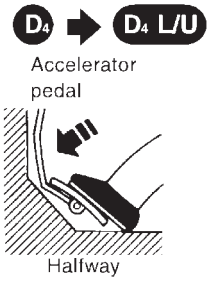

SAT957I

Yes or No

Yes	▶	GO TO 6.
No	▶	Go to "12. A/T Does Not Perform Lock-up", AT-323. Continue ROAD TEST.

6	CHECK HOLD LOCK-UP

Does A/T hold lock-up condition for more than 30 seconds?

Yes or No

Yes	▶	GO TO 7.
No	▶	Go to "13. A/T Does Not Hold Lock-up Condition", AT-325.

7	CHECK SHIFT DOWN (D_4 L/U TO D_4)

1. Release accelerator pedal.
2. Is lock-up released when accelerator pedal is released?

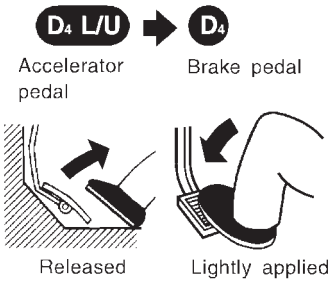

SAT958I

Yes or No

Yes	▶	GO TO 8.
No	▶	Go to "14. Lock-up Is Not Released", AT-327. Continue ROAD TEST.

8	CHECK SHIFT DOWN (D_4 TO D_3)

1. Decelerate vehicle by applying foot brake lightly.
2. Does engine speed return to idle smoothly when A/T is shifted from D_4 to D_3?

Read gear position and engine speed.

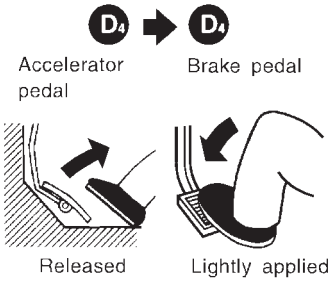

SAT959I

Yes or No

Yes	▶	1. Stop vehicle. 2. Go to "Cruise test — Part 2", AT-99.
No	▶	Go to "15. Engine Speed Does Not Return To Idle (Light Braking $D_4 \rightarrow D_3$)", AT-328. Continue ROAD TEST.

Cruise Test — Part 2

=NJAT0028S0405

1	CHECK STARTING GEAR (D_1) POSITION

1. Confirm overdrive control switch is in "ON" position.
2. Confirm selector lever is in "D" position.
3. Accelerate vehicle by half throttle again.
4. Does vehicle start from D_1?

Read gear position.

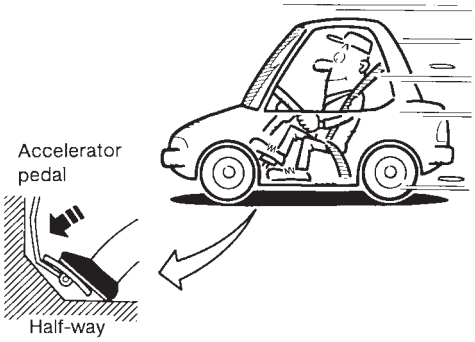

SAT495G

Yes or No

Yes	▶	GO TO 2.
No	▶	Go to "16. Vehicle Does Not Start From D_1", AT-330. Continue ROAD TEST.

2	CHECK SHIFT UP AND SHIFT DOWN (D_3 TO D_4 TO D_2)

1. Accelerate vehicle to 80 km/h (50 MPH) as shown in illustration.
2. Release accelerator pedal and then quickly depress it fully.
3. Does A/T shift from D_4 to D_2 as soon as accelerator pedal is depressed fully?

Read gear position and throttle position.

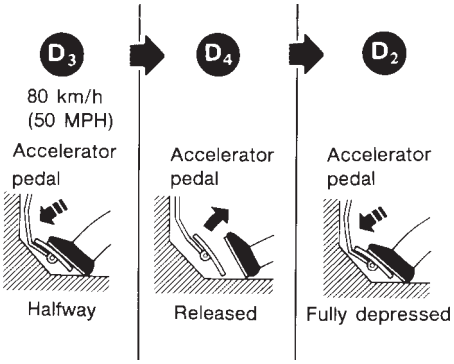

SAT404H

Yes or No

Yes	▶	GO TO 3.
No	▶	Go to "9. A/T Does Not Shift: $D_1 \rightarrow D_2$ Or Does Not Kickdown: $D_4 \rightarrow D_2$", AT-314. Continue ROAD TEST.

3	CHECK SHIFT UP (D_2 TO D_3)

Does A/T shift from D_2 to D_3 at the specified speed?

Read gear position, throttle position and vehicle speed.

Specified speed when shifting from D_2 to D_3:

Refer to Shift schedule, AT-470.

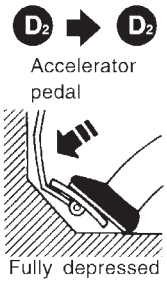

SAT960I

Yes or No

Yes	▶	GO TO 4.
No	▶	Go to "10. A/T Does Not Shift: $D_2 \rightarrow D_3$", AT-317. Continue ROAD TEST.

4	CHECK SHIFT UP (D_3 TO D_4) AND ENGINE BRAKE

Release accelerator pedal after shifting from D_2 to D_3.

Does A/T shift from D_3 to D_4 and does vehicle decelerate by engine brake?

Read gear position, throttle position and vehicle speed.

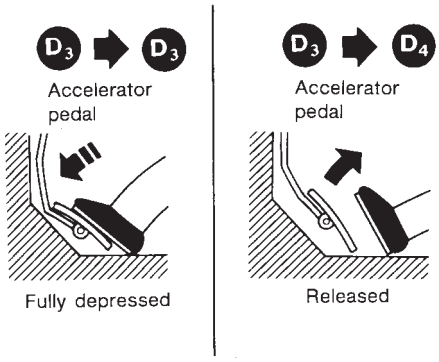

SAT405H

Yes or No

Yes	▶	1. Stop vehicle. 2. Go to "Cruise test — Part 3", AT-101.
No	▶	Go to "11. A/T Does Not Shift: $D_3 \rightarrow D_4$", AT-320. Continue ROAD TEST.

Cruise Test — Part 3

=NJAT0028S0406

1	CHECK SHIFT DOWN (D_4 TO D_3)

1. Confirm overdrive control switch is in "ON" position.
2. Confirm selector lever is in "D" position.
3. Accelerate vehicle using half-throttle to D_4.

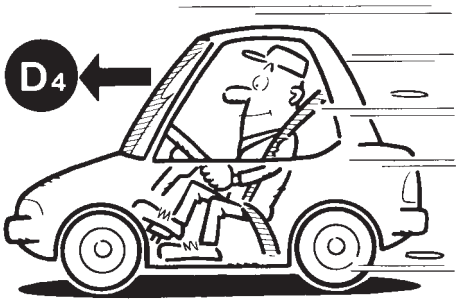

SAT812A

4. Release accelerator pedal.

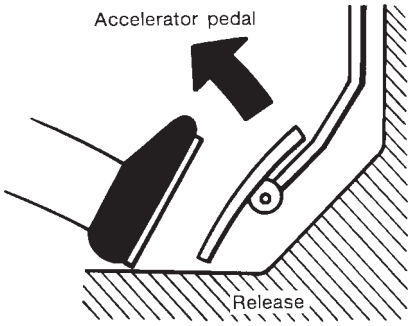

SAT813A

5. Set overdrive control switch to "OFF" position while driving in D_4.
6. Does A/T shift from D_4 to D_3 (O/D OFF)?

Read gear position and vehicle speed.

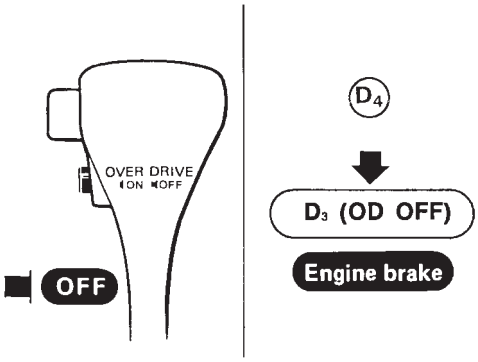

SAT776BA

Yes or No

Yes	▶	GO TO 2.
No	▶	Go to "17. A/T Does Not Shift: $D_4 \rightarrow D_3$, When Overdrive Control Switch "ON" → "OFF", AT-331. Continue ROAD TEST.

2	CHECK ENGINE BRAKE

Does vehicle decelerate by engine brake?

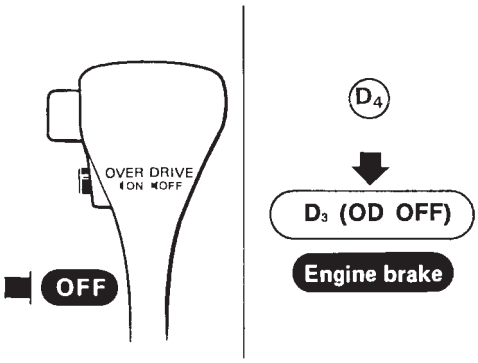

SAT776BA

Yes or No

Yes	▶	GO TO 3.
No	▶	Go to "15. Engine Speed Does Not Return To Idle (Light Braking $D_4 \rightarrow D_3$)", AT-328. Continue ROAD TEST.

3	CHECK SHIFT DOWN (D_3 TO D_2)

1. Move selector lever from "D" to "2" position while driving in D_3 (O/D OFF).
2. Does A/T shift from D_3 (O/D OFF) to 2_2?

Read gear position.

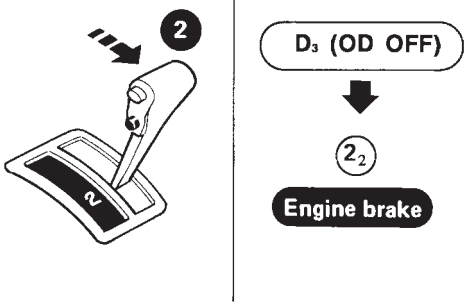

SAT791GA

Yes or No

Yes	▶	GO TO 4.
No	▶	Go to "18. A/T Does Not Shift: $D_3 \rightarrow D_2$, When Selector Lever "D" $\rightarrow$ "2" Position", AT-332. Continue ROAD TEST.

4	CHECK ENGINE BRAKE

Does vehicle decelerate by engine brake?

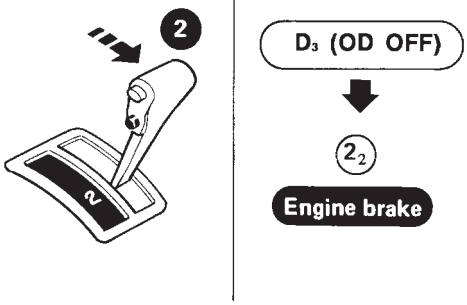

SAT791GA

Yes or No

Yes	▶	GO TO 5.
No	▶	Go to "15. Engine Speed Does Not Return To Idle (Light Braking $D_4 \rightarrow D_3$)", AT-328. Continue ROAD TEST.

5	CHECK SHIFT DOWN

1. Move selector lever from "2" to "1" position while driving in 2_2.
2. Does A/T shift from 2_2 to 1_1 position?

Read gear position.

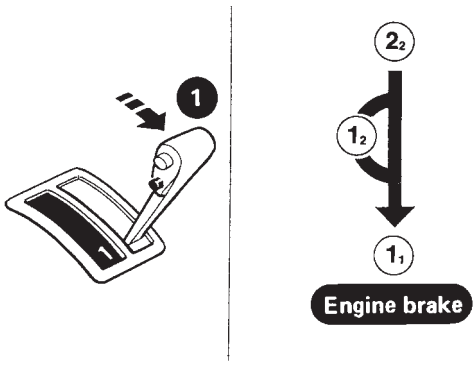

SAT778B

Yes or No

Yes	▶	GO TO 6.
No	▶	Go to "19. A/T Does Not Shift: $2_2 \rightarrow 1_1$, When Selector lever "2" → "1" Position", AT-333. Continue ROAD TEST.

6	CHECK ENGINE BRAKE
Does vehicle decelerate by engine brake?	

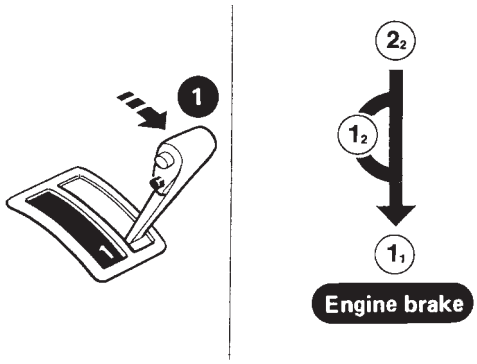

SAT778B

Yes or No

Yes ▶	1. Stop vehicle. 2. Perform self-diagnosis. General and except for Euro-OBD: Refer to "SELF-DIAGNOSTIC PROCEDURE (Without CONSULT-II)", AT-44/EURO-OBD: Refer to "TCM SELF-DIAGNOSTIC PROCEDURE (NO TOOLS)", AT-63.
No ▶	Go to "20. Vehicle Does Not Decelerate By Engine Brake", AT-334. Continue ROAD TEST.

Symptom Chart

NJAT0029

Numbers are arranged in order of inspection.
Perform inspections starting with number one and work up.

Symptom	Condition	Diagnostic Item	Reference Page	
			General and except for Euro-OBD	EURO-OBD
Engine cannot start in “P” and “N” positions. AT-299	ON vehicle	1. Ignition switch and starter	EL-10, “POWER SUPPLY ROUTING” and SC-13, “STARTING SYSTEM”	
		2. Control cable adjustment	AT-352	←
		3. PNP switch adjustment	AT-352	←
Engine starts in position other than “N” and “P” positions. AT-299	ON vehicle	1. Control cable adjustment	AT-352	←
		2. PNP switch adjustment	AT-352	←
Transaxle noise in “P” and “N” positions.	ON vehicle	1. Fluid level	AT-80	←
		2. Line pressure test	AT-84	←
		3. Throttle position sensor (Adjustment)	EC-207, “DTC P0120 THROTTLE POSITION SENSOR”	EC-207, “DTC P0120 THROTTLE POSITION SENSOR”
		4. Vehicle speed sensor·A/T (Revolution sensor) and vehicle speed sensor·MTR	AT-126, AT-131	AT-195, AT-281
		5. Engine speed signal	AT-172	AT-200
	OFF vehicle	6. Oil pump	AT-384	←
		7. Torque converter	AT-366	←
Vehicle moves when changing into “P” position, or parking gear does not disengage when shifted out of “P” position. AT-300	ON vehicle	1. Control cable adjustment	AT-352	←
	OFF vehicle	2. Parking components	AT-361, AT-362	AT-362
Vehicle runs in “N” position. AT-301	ON vehicle	1. Control cable adjustment	AT-352	←
	OFF vehicle	2. Forward clutch	AT-412	←
		3. Reverse clutch	AT-403	←
		4. Overrun clutch	AT-412	←
Vehicle will not run in “R” position (but runs in “D”, “2” and “1” positions). Clutch slips. Very poor acceleration. AT-305	ON vehicle	1. Control cable adjustment	AT-352	←
		2. Line pressure test	AT-84	←
		3. Line pressure solenoid valve	AT-176	AT-239
		4. Control valve assembly	AT-351	←
	OFF vehicle	5. Reverse clutch	AT-403	←
		6. High clutch	AT-407	←
		7. Forward clutch	AT-412	←
		8. Overrun clutch	AT-412	←
		9. Low & reverse brake	AT-419	←

Symptom Chart (Cont'd)

Symptom	Condition	Diagnostic Item	Reference Page	
			General and except for Euro-OBD	EURO-OBD
Vehicle braked when shifting into "R" position.	ON vehicle	1. Fluid level	AT-80	←
		2. Control cable adjustment	AT-352	←
		3. Line pressure test	AT-84	←
		4. Line pressure solenoid valve	AT-176	AT-239
		5. Control valve assembly	AT-351	←
	OFF vehicle	6. High clutch	AT-407	←
		7. Brake band	AT-437	←
		8. Forward clutch	AT-412	←
		9. Overrun clutch	AT-412	←
Sharp shock in shifting from "N" to "D" position.	ON vehicle	1. Engine idling rpm	EC-43, "Idle Speed and Ignition Timing"	EC-43, "Idle Speed and Ignition Timing"
		2. Throttle position sensor (Adjustment)	EC-207, "DTC P0120 THROTTLE POSITION SENSOR"	EC-207, "DTC P0120 THROTTLE POSITION SENSOR"
		3. Line pressure test	AT-84	←
		4. A/T fluid temperature sensor	AT-165	AT-189
		5. Engine speed signal	AT-172	AT-200
		6. Line pressure solenoid valve	AT-176	AT-239
		7. Control valve assembly	AT-351	←
		8. Accumulator N-D	AT-351	←
	OFF vehicle	9. Forward clutch	AT-412	←
Vehicle will not run in "D" and "2" positions (but runs in "1" and "R" positions).	ON vehicle	1. Control cable adjustment	AT-352	←
	OFF vehicle	2. Low one-way clutch	AT-359, AT-360	AT-360
Vehicle will not run in "D", "1", "2" positions (but runs in "R" position). Clutch slips. Very poor acceleration. AT-308	ON vehicle	1. Fluid level	AT-80	←
		2. Line pressure test	AT-84	←
		3. Line pressure solenoid valve	AT-176	AT-239
		4. Control valve assembly	AT-351	←
		5. Accumulator N-D	AT-351	←
	OFF vehicle	6. Reverse clutch	AT-403	←
		7. High clutch	AT-407	←
		8. Forward clutch	AT-412	←
		9. Forward one-way clutch	AT-423	←
		10. Low one-way clutch	AT-359, AT-360	AT-360

Symptom Chart (Cont'd)

Symptom	Condition	Diagnostic Item	Reference Page	
			General and except for Euro-OBD	EURO-OBD
Clutches or brakes slip somewhat in starting.	ON vehicle	1. Fluid level	AT-80	←
		2. Control cable adjustment	AT-352	←
		3. Throttle position sensor (Adjustment)	EC-207, "DTC P0120 THROTTLE POSITION SENSOR"	EC-207, "DTC P0120 THROTTLE POSITION SENSOR"
		4. Line pressure test	AT-84	←
		5. Line pressure solenoid valve	AT-176	AT-239
		6. Control valve assembly	AT-351	←
		7. Accumulator N-D	AT-351	←
	OFF vehicle	8. Forward clutch	AT-412	←
		9. Reverse clutch	AT-403	←
		10. Low & reverse brake	AT-419	←
		11. Oil pump	AT-384	←
		12. Torque converter	AT-366	←
Excessive creep.	ON vehicle	1. Engine idling rpm	EC-43, "Idle Speed and Ignition Timing"	EC-43, "Idle Speed and Ignition Timing"
No creep at all. AT-305 and AT-308	ON vehicle	1. Fluid level	AT-80	←
		2. Line pressure test	AT-84	←
		3. Control valve assembly	AT-351	←
	OFF vehicle	4. Forward clutch	AT-412	←
		5. Oil pump	AT-384	←
		6. Torque converter	AT-366	←
Failure to change gear from "D_1" to "D_2".	ON vehicle	1. PNP switch adjustment	AT-352	←
		2. Control cable adjustment	AT-352	←
		3. Shift solenoid valve A	AT-142	AT-246
		4. Control valve assembly	AT-351	←
		5. Vehicle speed sensor·A/T (Revolution sensor) and vehicle speed sensor·MTR	AT-126, AT-131	AT-195, AT-281
	OFF vehicle	6. Brake band	AT-437	←

Symptom Chart (Cont'd)

Symptom	Condition	Diagnostic Item	Reference Page	
			General and except for Euro-OBD	EURO-OBD
Failure to change gear from "D_2" to "D_3".	ON vehicle	1. PNP switch adjustment	AT-352	←
		2. Control cable adjustment	AT-352	←
		3. Shift solenoid valve B	AT-148	AT-252
		4. Control valve assembly	AT-351	←
		5. Vehicle speed sensor·A/T (Revolution sensor) and vehicle speed sensor·MTR	AT-126, AT-131	AT-195, AT-281
	OFF vehicle	6. High clutch	AT-407	←
		7. Brake band	AT-437	←
Failure to change gear from "D_3" to "D_4".	ON vehicle	1. PNP switch adjustment	AT-352	←
		2. Control cable adjustment	AT-352	←
		3. Shift solenoid valve A	AT-142	AT-246
		4. Vehicle speed sensor·A/T (Revolution sensor) and vehicle speed sensor·MTR	AT-126, AT-131	AT-195, AT-281
		5. A/T fluid temperature sensor	AT-165	AT-189
	OFF vehicle	6. Brake band	AT-437	←
Too high a gear change point from "D_1" to "D_2", from "D_2" to "D_3", from "D_3" to "D_4". AT-314, AT-317 and AT-320	ON vehicle	1. Throttle position sensor (Adjustment)	EC-207, "DTC P0120 THROTTLE POSITION SENSOR"	EC-207, "DTC P0120 THROTTLE POSITION SENSOR"
		2. Vehicle speed sensor·A/T (Revolution sensor) and vehicle speed sensor·MTR	AT-126, AT-131	AT-195, AT-281
		3. Shift solenoid valve A	AT-142	AT-246
		4. Shift solenoid valve B	AT-148	AT-252
Gear change directly from "D_1" to "D_3" occurs.	ON vehicle	1. Fluid level	AT-80	←
		2. Accumulator servo release	AT-351	←
	OFF vehicle	3. Brake band	AT-437	←
Engine stops when shifting lever into "R", "D", "2" and "1".	ON vehicle	1. Engine idling rpm	EC-43, "Idle Speed and Ignition Timing"	EC-43, "Idle Speed and Ignition Timing"
		2. Torque converter clutch solenoid valve	AT-159	AT-233
		3. Control valve assembly	AT-351	←
	OFF vehicle	4. Torque converter	AT-366	←

Symptom Chart (Cont'd)

Symptom	Condition	Diagnostic Item	Reference Page	
			General and except for Euro-OBD	EURO-OBD
Too sharp a shock in change from "D_1" to "D_2".	ON vehicle	1. Throttle position sensor (Adjustment)	EC-207, "DTC P0120 THROTTLE POSITION SENSOR"	EC-207, "DTC P0120 THROTTLE POSITION SENSOR"
		2. Line pressure test	AT-84	←
		3. Accumulator servo release	AT-351	←
		4. Control valve assembly	AT-351	←
		5. A/T fluid temperature sensor	AT-165	AT-189
	OFF vehicle	6. Brake band	AT-437	←
Too sharp a shock in change from "D_2" to "D_3".	ON vehicle	1. Throttle position sensor (Adjustment)	EC-207, "DTC P0120 THROTTLE POSITION SENSOR"	EC-207, "DTC P0120 THROTTLE POSITION SENSOR"
		2. Line pressure test	AT-84	←
		3. Control valve assembly	AT-351	←
	OFF vehicle	4. High clutch	AT-407	←
		5. Brake band	AT-437	←
Too sharp a shock in change from "D_3" to "D_4".	ON vehicle	1. Throttle position sensor (Adjustment)	EC-207, "DTC P0120 THROTTLE POSITION SENSOR"	EC-207, "DTC P0120 THROTTLE POSITION SENSOR"
		2. Line pressure test	AT-84	←
		3. Control valve assembly	AT-351	←
	OFF vehicle	4. Brake band	AT-437	←
		5. Overrun clutch	AT-412	←
Almost no shock or clutches slipping in change from "D_1" to "D_2".	ON vehicle	1. Fluid level	AT-80	←
		2. Throttle position sensor (Adjustment)	EC-207, "DTC P0120 THROTTLE POSITION SENSOR"	EC-207, "DTC P0120 THROTTLE POSITION SENSOR"
		3. Line pressure test	AT-84	←
		4. Accumulator servo release	AT-351	←
		5. Control valve assembly	AT-351	←
	OFF vehicle	6. Brake band	AT-437	←

Symptom Chart (Cont'd)

Symptom	Condition	Diagnostic Item	Reference Page	
			General and except for Euro-OBD	EURO-OBD
Almost no shock or slipping in change from "D_2" to "D_3".	ON vehicle	1. Fluid level	AT-80	←
		2. Throttle position sensor (Adjustment)	EC-207, "DTC P0120 THROTTLE POSITION SENSOR"	EC-207, "DTC P0120 THROTTLE POSITION SENSOR"
		3. Line pressure test	AT-84	←
		4. Control valve assembly	AT-351	←
	OFF vehicle	5. High clutch	AT-407	←
		6. Brake band	AT-437	←
Almost no shock or slipping in change from "D_3" to "D_4".	ON vehicle	1. Fluid level	AT-80	←
		2. Throttle position sensor (Adjustment)	EC-207, "DTC P0120 THROTTLE POSITION SENSOR"	EC-207, "DTC P0120 THROTTLE POSITION SENSOR"
		3. Line pressure test	AT-84	←
		4. Control valve assembly	AT-351	←
	OFF vehicle	5. High clutch	AT-407	←
		6. Brake band	AT-437	←
Vehicle braked by gear change from "D_1" to "D_2".	ON vehicle	1. Fluid level	AT-80	←
	OFF vehicle	2. Reverse clutch	AT-403	←
		3. Low & reverse brake	AT-419	←
		4. High clutch	AT-407	←
		5. Low one-way clutch	AT-359, AT-360	AT-360
Vehicle braked by gear change from "D_2" to "D_3".	ON vehicle	1. Fluid level	AT-80	←
	OFF vehicle	2. Brake band	AT-437	←
Vehicle braked by gear change from "D_3" to "D_4".	ON vehicle	1. Fluid level	AT-80	←
	OFF vehicle	2. Overrun clutch	AT-412	←
		3. Forward one-way clutch	AT-423	←
		4. Reverse clutch	AT-403	←

Symptom Chart (Cont'd)

Symptom	Condition	Diagnostic Item	Reference Page	
			General and except for Euro-OBD	EURO-OBD
Maximum speed not attained. Acceleration poor.	ON vehicle	1. Fluid level	AT-80	←
		2. PNP switch adjustment	AT-352	←
		3. Shift solenoid valve A	AT-142	AT-246
		4. Shift solenoid valve B	AT-148	AT-252
		5. Control valve assembly	AT-351	←
	OFF vehicle	6. Reverse clutch	AT-403	←
		7. High clutch	AT-407	←
		8. Brake band	AT-437	←
		9. Low & reverse brake	AT-419	←
		10. Oil pump	AT-384	←
		11. Torque converter	AT-366	←
Failure to change gear from "D_4" to "D_3".	ON vehicle	1. Fluid level	AT-80	←
		2. Throttle position sensor (Adjustment)	EC-207, "DTC P0120 THROTTLE POSITION SENSOR"	EC-207, "DTC P0120 THROTTLE POSITION SENSOR"
		3. Overrun clutch solenoid valve	AT-154	AT-268
		4. Shift solenoid valve A	AT-142	AT-246
		5. Line pressure solenoid valve	AT-176	AT-239
		6. Control valve assembly	AT-351	←
	OFF vehicle	7. Low & reverse brake	AT-419	←
		8. Overrun clutch	AT-412	←
Failure to change gear from "D_3" to "D_2" or from "D_4" to "D_2".	ON vehicle	1. Fluid level	AT-80	←
		2. Throttle position sensor (Adjustment)	EC-207, "DTC P0120 THROTTLE POSITION SENSOR"	EC-207, "DTC P0120 THROTTLE POSITION SENSOR"
		3. Shift solenoid valve A	AT-142	AT-246
		4. Shift solenoid valve B	AT-148	AT-252
		5. Control valve assembly	AT-351	←
	OFF vehicle	6. High clutch	AT-407	←
		7. Brake band	AT-437	←

Symptom Chart (Cont'd)

Symptom	Condition	Diagnostic Item	Reference Page	
			General and except for Euro-OBD	EURO-OBD
Failure to change gear from "D_2" to "D_1" or from "D_3" to "D_1".	ON vehicle	1. Fluid level	AT-80	←
		2. Throttle position sensor (Adjustment)	EC-207, "DTC P0120 THROTTLE POSITION SENSOR"	EC-207, "DTC P0120 THROTTLE POSITION SENSOR"
		3. Shift solenoid valve A	AT-142	AT-246
		4. Shift solenoid valve B	AT-148	AT-252
		5. Control valve assembly	AT-351	←
	OFF vehicle	6. Low one-way clutch	AT-359, AT-360	AT-360
		7. High clutch	AT-407	←
		8. Brake band	AT-437	←
Gear change shock felt during deceleration by releasing accelerator pedal.	ON vehicle	1. Throttle position sensor (Adjustment)	EC-207, "DTC P0120 THROTTLE POSITION SENSOR"	EC-207, "DTC P0120 THROTTLE POSITION SENSOR"
		2. Line pressure test	AT-84	←
		3. Overrun clutch solenoid valve	AT-154	AT-268
		4. Control valve assembly	AT-351	←
Too high a change point from "D_4" to "D_3", from "D_3" to "D_2", from "D_2" to "D_1".	ON vehicle	1. Throttle position sensor (Adjustment)	EC-207, "DTC P0120 THROTTLE POSITION SENSOR"	EC-207, "DTC P0120 THROTTLE POSITION SENSOR"
		2. Vehicle speed sensor·A/T (Revolution sensor) and vehicle speed sensor·MTR	AT-126, AT-131	AT-195, AT-281
Kickdown does not operate when depressing pedal in "D_4" within kickdown vehicle speed.	ON vehicle	1. Throttle position sensor (Adjustment)	EC-207, "DTC P0120 THROTTLE POSITION SENSOR"	EC-207, "DTC P0120 THROTTLE POSITION SENSOR"
		2. Vehicle speed sensor·A/T (Revolution sensor) and vehicle speed sensor·MTR	AT-126, AT-131	AT-195, AT-281
		3. Shift solenoid valve A	AT-142	AT-246
		4. Shift solenoid valve B	AT-148	AT-252

Symptom Chart (Cont'd)

Symptom	Condition	Diagnostic Item	Reference Page	
			General and except for Euro-OBD	EURO-OBD
Kickdown operates or engine over-runs when depressing pedal in "D_4" beyond kickdown vehicle speed limit.	ON vehicle	1. Vehicle speed sensor·A/T (Revolution sensor) and vehicle speed sensor·MTR	AT-126, AT-131	AT-195, AT-281
		2. Throttle position sensor (Adjustment)	EC-207, "DTC P0120 THROTTLE POSITION SENSOR"	EC-207, "DTC P0120 THROTTLE POSITION SENSOR"
		3. Shift solenoid valve A	AT-142	AT-246
		4. Shift solenoid valve B	AT-148	AT-252
Races extremely fast or slips in changing from "D_4" to "D_3" when depressing pedal.	ON vehicle	1. Fluid level	AT-80	←
		2. Throttle position sensor (Adjustment)	EC-207, "DTC P0120 THROTTLE POSITION SENSOR"	EC-207, "DTC P0120 THROTTLE POSITION SENSOR"
		3. Line pressure test	AT-84	←
		4. Line pressure solenoid valve	AT-176	AT-239
		5. Control valve assembly	AT-351	←
	OFF vehicle	6. High clutch	AT-407	←
		7. Forward clutch	AT-412	←
Races extremely fast or slips in changing from "D_4" to "D_2" when depressing pedal.	ON vehicle	1. Fluid level	AT-80	←
		2. Throttle position sensor (Adjustment)	EC-207, "DTC P0120 THROTTLE POSITION SENSOR"	EC-207, "DTC P0120 THROTTLE POSITION SENSOR"
		3. Line pressure test	AT-84	←
		4. Line pressure solenoid valve	AT-176	AT-239
		5. Shift solenoid valve A	AT-142	AT-246
		6. Control valve assembly	AT-351	←
	OFF vehicle	7. Brake band	AT-437	←
		8. Forward clutch	AT-412	←

Symptom Chart (Cont'd)

Symptom	Condition	Diagnostic Item	Reference Page	
			General and except for Euro-OBD	EURO-OBD
Races extremely fast or slips in changing from "D_3" to "D_2" when depressing pedal.	ON vehicle	1. Fluid level	AT-80	←
		2. Throttle position sensor (Adjustment)	EC-207, "DTC P0120 THROTTLE POSITION SENSOR"	EC-207, "DTC P0120 THROTTLE POSITION SENSOR"
		3. Line pressure test	AT-84	←
		4. Line pressure solenoid valve	AT-176	AT-239
		5. Control valve assembly	AT-351	←
		6. A/T fluid temperature sensor	AT-165	AT-189
	OFF vehicle	7. Brake band	AT-437	←
		8. Forward clutch	AT-412	←
		9. High clutch	AT-407	←
Races extremely fast or slips in changing from "D_4" or "D_3" to "D_1" when depressing pedal.	ON vehicle	1. Fluid level	AT-80	←
		2. Throttle position sensor (Adjustment)	EC-207, "DTC P0120 THROTTLE POSITION SENSOR"	EC-207, "DTC P0120 THROTTLE POSITION SENSOR"
		3. Line pressure test	AT-84	←
		4. Line pressure solenoid valve	AT-176	AT-239
		5. Control valve assembly	AT-351	←
	OFF vehicle	6. Forward clutch	AT-412	←
		7. Forward one-way clutch	AT-423	←
		8. Low one-way clutch	AT-359, AT-360	AT-360
Vehicle will not run in any position.	ON vehicle	1. Fluid level	AT-80	←
		2. Control cable adjustment	AT-352	←
		3. Line pressure test	AT-84	←
		4. Line pressure solenoid valve	AT-176	AT-239
	OFF vehicle	5. Oil pump	AT-384	←
		6. High clutch	AT-407	←
		7. Brake band	AT-437	←
		8. Low & reverse brake	AT-419	←
		9. Torque converter	AT-366	←
		10. Parking components	AT-446	←
Transmission noise in "D", "2", "1" and "R" positions.	ON vehicle	1. Fluid level	AT-80	←
	OFF vehicle	2. Torque converter	AT-366	←

Symptom Chart (Cont'd)

Symptom	Condition	Diagnostic Item	Reference Page	
			General and except for Euro-OBD	EURO-OBD
Failure to change from "D_3" to "2_2" when changing lever into "2" position. AT-328	ON vehicle	1. PNP switch adjustment	AT-352	←
		2. Throttle position sensor (Adjustment)	EC-207, "DTC P0120 THROTTLE POSITION SENSOR"	EC-207, "DTC P0120 THROTTLE POSITION SENSOR"
		3. Overrun clutch solenoid valve	AT-154	AT-268
		4. Shift solenoid valve A	AT-142	AT-246
		5. Shift solenoid valve B	AT-148	AT-252
		6. Control valve assembly	AT-351	←
		7. Control cable adjustment	AT-352	←
	OFF vehicle	8. Brake band	AT-437	←
		9. Overrun clutch	AT-412	←
Gear change from "2_2" to "2_3" in "2" position.	ON vehicle	1. PNP switch adjustment	AT-352	←
Engine brake does not operate in "1" position. AT-330	ON vehicle	1. PNP switch adjustment	AT-352	←
		2. Control cable adjustment	AT-352	←
		3. Throttle position sensor (Adjustment)	EC-207, "DTC P0120 THROTTLE POSITION SENSOR"	EC-207, "DTC P0120 THROTTLE POSITION SENSOR"
		4. Vehicle speed sensor·A/T (Revolution sensor) and vehicle speed sensor·MTR	AT-126, AT-131	AT-195, AT-281
		5. Shift solenoid valve A	AT-142	AT-246
		6. Control valve assembly	AT-351	←
		7. Overrun clutch solenoid valve	AT-154	AT-268
	OFF vehicle	8. Overrun clutch	AT-412	←
		9. Low & reverse brake	AT-419	←
Gear change from "1_1" to "1_2" in "1" position.	ON vehicle	1. PNP switch adjustment	AT-352	←
		2. Control cable adjustment	AT-352	←
Does not change from "1_2" to "1_1" in "1" position.	ON vehicle	1. PNP switch adjustment	AT-352	←
		2. Vehicle speed sensor·A/T (Revolution sensor) and vehicle speed sensor·MTR	AT-126, AT-131	AT-195, AT-281
		3. Shift solenoid valve A	AT-142	AT-246
		4. Control valve assembly	AT-351	←
		5. Overrun clutch solenoid valve	AT-154	AT-268
	OFF vehicle	6. Overrun clutch	AT-412	←
		7. Low & reverse brake	AT-419	←

Symptom Chart (Cont'd)

Symptom	Condition	Diagnostic Item	Reference Page	
			General and except for Euro-OBD	EURO-OBD
Large shock changing from "1_2" to "1_1" in "1" position.	ON vehicle	1. Control valve assembly	AT-351	←
	OFF vehicle	2. Low & reverse brake	AT-419	←
Transmission overheats.	ON vehicle	1. Fluid level	AT-80	←
		2. Engine idling rpm	EC-43, "Idle Speed and Ignition Timing"	EC-43, "Idle Speed and Ignition Timing"
		3. Throttle position sensor (Adjustment)	EC-207, "DTC P0120 THROTTLE POSITION SENSOR"	EC-207, "DTC P0120 THROTTLE POSITION SENSOR"
		4. Line pressure test	AT-84	←
		5. Line pressure solenoid valve	AT-176	AT-239
		6. Control valve assembly	AT-351	←
	OFF vehicle	7. Oil pump	AT-384	←
		8. Reverse clutch	AT-403	←
		9. High clutch	AT-407	←
		10. Brake band	AT-437	←
		11. Forward clutch	AT-412	←
		12. Overrun clutch	AT-412	←
		13. Low & reverse brake	AT-419	←
		14. Torque converter	AT-366	←
ATF shoots out during operation. White smoke emitted from exhaust pipe during operation.	ON vehicle	1. Fluid level	AT-80	←
	OFF vehicle	2. Reverse clutch	AT-403	←
		3. High clutch	AT-407	←
		4. Brake band	AT-437	←
		5. Forward clutch	AT-412	←
		6. Overrun clutch	AT-412	←
		7. Low & reverse brake	AT-419	←
Offensive smell at fluid charging pipe.	ON vehicle	1. Fluid level	AT-80	←
	OFF vehicle	2. Torque converter	AT-366	←
		3. Oil pump	AT-384	←
		4. Reverse clutch	AT-403	←
		5. High clutch	AT-407	←
		6. Brake band	AT-437	←
		7. Forward clutch	AT-412	←
		8. Overrun clutch	AT-412	←
		9. Low & reverse brake	AT-419	←

Symptom Chart (Cont'd)

Symptom	Condition	Diagnostic Item	Reference Page	
			General and except for Euro-OBD	EURO-OBD
Torque converter is not locked up.	ON vehicle	1. Throttle position sensor (Adjustment)	EC-207, "DTC P0120 THROTTLE POSITION SENSOR"	EC-207, "DTC P0120 THROTTLE POSITION SENSOR"
		2. Vehicle speed sensor·A/T (Revolution sensor) and vehicle speed sensor·MTR	AT-126, AT-131	AT-195, AT-281
		3. PNP switch adjustment	AT-352	←
		4. Engine speed signal	AT-172	AT-200
		5. A/T fluid temperature sensor	AT-165	AT-189
		6. Line pressure test	AT-84	←
		7. Torque converter clutch solenoid valve	AT-159	AT-233
		8. Control valve assembly	AT-351	←
	OFF vehicle	9. Torque converter	AT-366	←
Torque converter clutch piston slip.	ON vehicle	1. Fluid level	AT-80	←
		2. Throttle position sensor (Adjustment)	EC-207, "DTC P0120 THROTTLE POSITION SENSOR"	EC-207, "DTC P0120 THROTTLE POSITION SENSOR"
		3. Line pressure test	AT-84	←
		4. Torque converter clutch solenoid valve	AT-159	AT-233
		5. Line pressure solenoid valve	AT-176	AT-239
		6. Control valve assembly	AT-351	←
	OFF vehicle	7. Torque converter	AT-366	←
Lock-up point is extremely high or low. AT-323	ON vehicle	1. Throttle position sensor (Adjustment)	EC-207, "DTC P0120 THROTTLE POSITION SENSOR"	EC-207, "DTC P0120 THROTTLE POSITION SENSOR"
		2. Vehicle speed sensor·A/T (Revolution sensor) and vehicle speed sensor·MTR	AT-126, AT-131	AT-195, AT-281
		3. Torque converter clutch solenoid valve	AT-159	AT-233
		4. Control valve assembly	AT-351	←

Symptom Chart (Cont'd)

Symptom	Condition	Diagnostic Item	Reference Page	
			General and except for Euro-OBD	EURO-OBD
A/T does not shift to "D_4" when driving with overdrive control switch "ON".	ON vehicle	1. Throttle position sensor (Adjustment)	EC-207, "DTC P0120 THROTTLE POSITION SENSOR"	EC-207, "DTC P0120 THROTTLE POSITION SENSOR"
		2. PNP switch adjustment	AT-352	←
		3. Vehicle speed sensor·A/T (Revolution sensor) and vehicle speed sensor·MTR	AT-126, AT-131	AT-195, AT-281
		4. Shift solenoid valve A	AT-142	AT-246
		5. Overrun clutch solenoid valve	AT-154	AT-268
		6. Control valve assembly	AT-351	←
		7. A/T fluid temperature sensor	AT-165	AT-189
		8. Line pressure test	AT-84	←
	OFF vehicle	9. Brake band	AT-437	←
		10. Overrun clutch	AT-412	←
Engine is stopped at "R", "D", "2" and "1" positions.	ON vehicle	1. Fluid level	AT-80	←
		2. Torque converter clutch solenoid valve	AT-159	AT-233
		3. Shift solenoid valve A	AT-142	AT-246
		4. Shift solenoid valve B	AT-148	AT-252
		5. Control valve assembly	AT-351	←

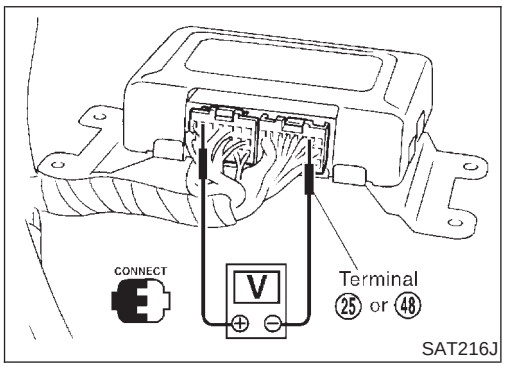

TCM Terminals and Reference Value

NJAT0030

PREPARATION

NJAT0030S01

- Measure voltage between each terminal and terminal 25 or 48 by following "TCM INSPECTION TABLE".

TCM HARNESS CONNECTOR TERMINAL LAYOUT

NJAT0030S02

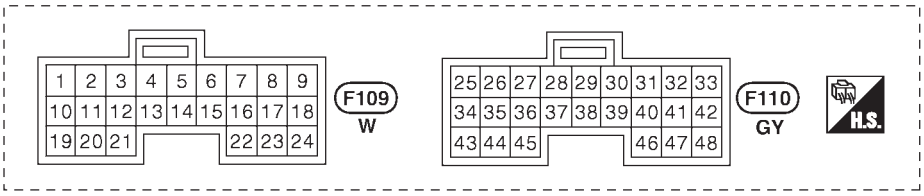

SAT999J

TCM INSPECTION TABLE
(Data are reference values.)

NJAT0030S03

Terminal No.	Wire color	Item	Condition		Judgement standard
1	R/W	Line pressure solenoid valve	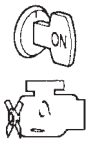	When releasing accelerator pedal after warming up engine.	1.5 - 2.5V
				When depressing accelerator pedal fully after warming up engine.	0.5V or less
2	P/B	Line pressure solenoid valve (with dropping resistor)		When releasing accelerator pedal after warming up engine.	5 - 14V
				When depressing accelerator pedal fully after warming up engine.	0.5V or less
3	GY/R	Torque converter clutch solenoid valve		When A/T performs lock-up.	8 - 15V
				When A/T does not perform lock-up.	1V or less
5 *2	Y/R	—	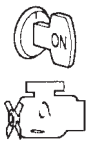	—	—
6 *2	Y/G	—		—	—
7 *2	Y/B	—		—	—
8*2	BR/W	—		—	—
9*2	G/Y	—		—	—
10	BR/R	Power source		When turning ignition switch to "ON".	Battery voltage
				When turning ignition switch to "OFF".	1V or less
11	L/W	Shift solenoid valve A		When shift solenoid valve A operates. (When driving in "D_1" or "D_4".)	Battery voltage
				When shift solenoid valve A does not operate. (When driving in "D_2" or "D_3".)	1V or less
12	L/Y	Shift solenoid valve B		When shift solenoid valve B operates. (When driving in "D_1" or "D_2".)	Battery voltage
				When shift solenoid valve B does not operate. (When driving in "D_3" or "D_4".)	1V or less

TCM Terminals and Reference Value (Cont'd)

Terminal No.	Wire color	Item	Condition		Judgement standard
13	G/R	O/D OFF indicator lamp		When setting overdrive control switch in "OFF" position.	1V or less
				When setting overdrive control switch in "ON" position.	Battery voltage
15 *2	PU	—		—	—
16	Y/PU	Closed throttle position switch (in throttle position switch)	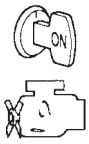	When releasing accelerator pedal after warming up engine. ● Refer to "SELF-DIAGNOSTIC PROCEDURE (Without CONSULT-II)", AT-44 — General and except for Euro-OBD. ● Refer to "TCM SELF-DIAGNOSTIC PROCEDURE (NO TOOLS)", AT-63 — EURO-OBD.	Battery voltage
				When depressing accelerator pedal after warming up engine. ● Refer to "SELF-DIAGNOSTIC PROCEDURE (Without CONSULT-II)", AT-44 — General and except for Euro-OBD. ● Refer to "TCM SELF-DIAGNOSTIC PROCEDURE (NO TOOLS)", AT-63 — EURO-OBD.	1V or less
17	LG	Wide open throttle position switch (in throttle position switch)		When depressing accelerator pedal more than half-way after warming up engine.	Battery voltage
				When releasing accelerator pedal after warming up engine.	1V or less
19	BR/R	Power source	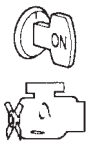	Same as No. 10	
20	L/B	Overrun clutch solenoid valve		When overrun clutch solenoid valve operates.	Battery voltage
				When overrun clutch solenoid valve does not operate.	1V or less
22	OR/B	Overdrive control switch	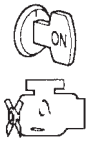	When setting overdrive control switch in "ON" position	Battery voltage
				When setting overdrive control switch in "OFF" position	1V or less
25	B	Ground		—	—
26	BR/Y	PNP switch "1" position	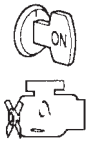	When setting selector lever to "1" position.	Battery voltage
				When setting selector lever to other positions.	1V or less
27	L	PNP switch "2" position		When setting selector lever to "2" position.	Battery voltage
				When setting selector lever to other positions.	1V or less

Terminal No.	Wire color	Item	Condition		Judgement standard
28	R/B	Power source (Memory back-up)	or	When turning ignition switch to "OFF".	Battery voltage
				When turning ignition switch to "ON".	Battery voltage
29	W	Revolution sensor		When moving at 20 km/h (12 MPH), use the CONSULT-II pulse frequency measuring function.*1 **CAUTION: Connect the diagnosis data link cable to the vehicle diagnosis connector.** *1: A circuit tester cannot be used to test this item.	Approximately 150 Hz
				When vehicle parks.	Under 1.3V or over 4.5V
30 *3	G/B	—	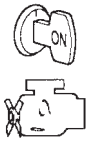	—	—
31 *3	GY/L	—		—	—
32	R	Throttle position sensor (Power source)		—	4.5 - 5.5V
34	W/G	PNP switch "D" position		When setting selector lever to "D" position.	Battery voltage
				When setting selector lever to other positions.	1V or less
35	G/W	PNP switch "R" position		When setting selector lever to "R" position.	Battery voltage
				When setting selector lever to other positions.	1V or less
36	G	PNP switch "N" or "P" position		When setting selector lever to "N" or "P" position.	Battery voltage
				When setting selector lever to other positions.	1V or less
39	L/OR	Engine speed signal	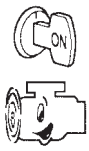	● Refer to EC-43, "Idle Speed and Ignition Timing". — General and except for Euro-OBD ● Refer to EC-43, "Idle Speed and Ignition Timing". — EURO-OBD	—
40	PU/R	Vehicle speed sensor		When moving vehicle at 2 to 3 km/h (1 to 2 MPH) for 1 m (3 ft) or more.	Voltage varies between less than 1V and more than 4.5V

TCM Terminals and Reference Value (Cont'd)

Terminal No.	Wire color	Item	Condition		Judgement standard
41	GY	Throttle position sensor		When depressing accelerator pedal slowly after warming up engine. (Voltage rises gradually in response to throttle position.)	Fully-closed throttle: Approximately 0.5V Fully-open throttle: Approximately 4V
42	B	Throttle position sensor (Ground)		—	—
45	R/Y	Stop lamp switch		When depressing brake pedal.	Battery voltage
				When releasing brake pedal.	1V or less
47	BR	A/T fluid temperature sensor		When ATF temperature is 20°C (68°F).	Approximately 1.5V
				When ATF temperature is 80°C (176°F).	Approximately 0.5V
48	B	Ground		—	—

*2: This terminal is connected to the ECM. (Terminal No. 15 is for EURO-OBD only.)
*3: These terminals are connected to the data link connector.

Wiring Diagram — AT — MAIN

NJAT0031

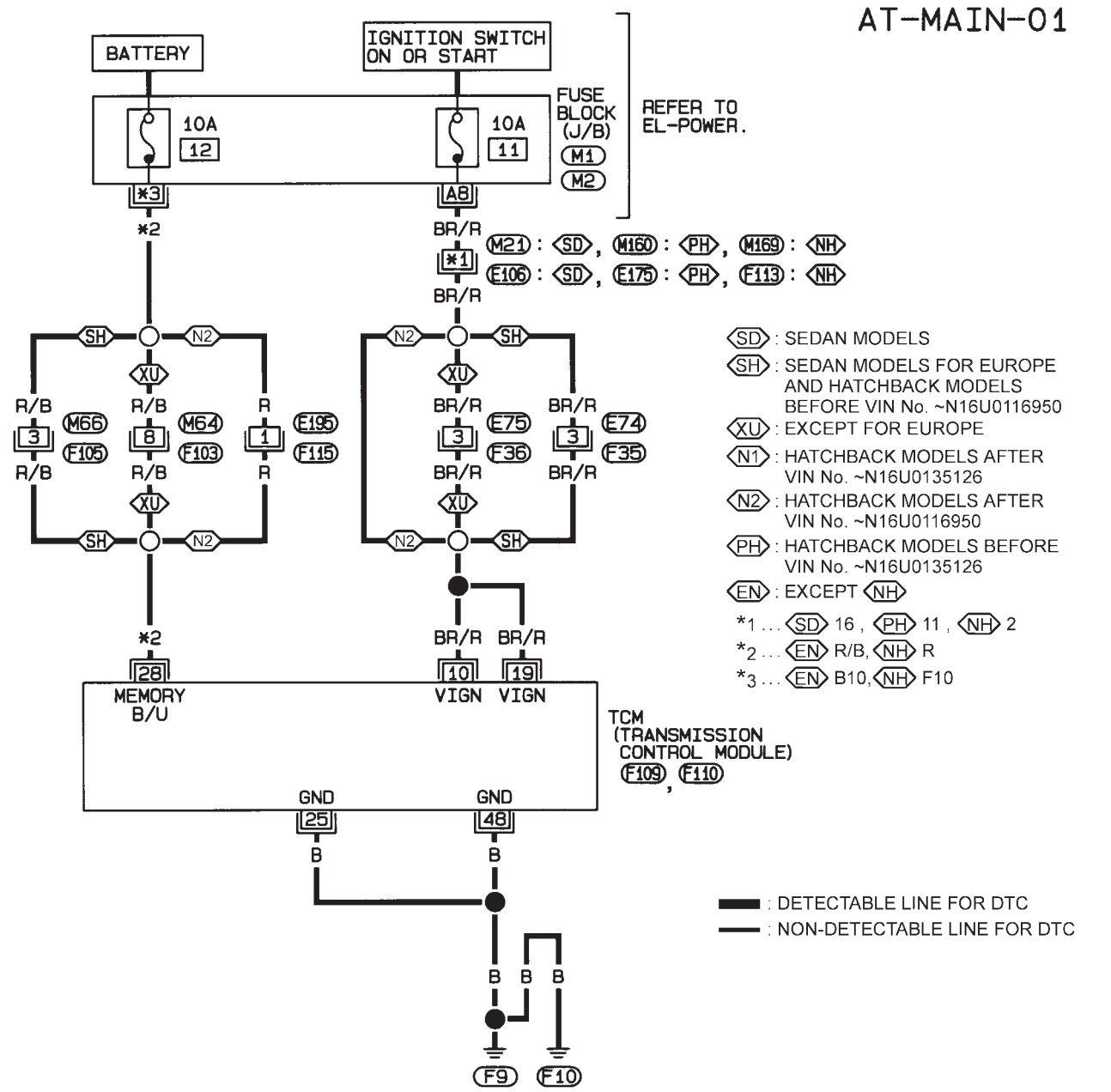

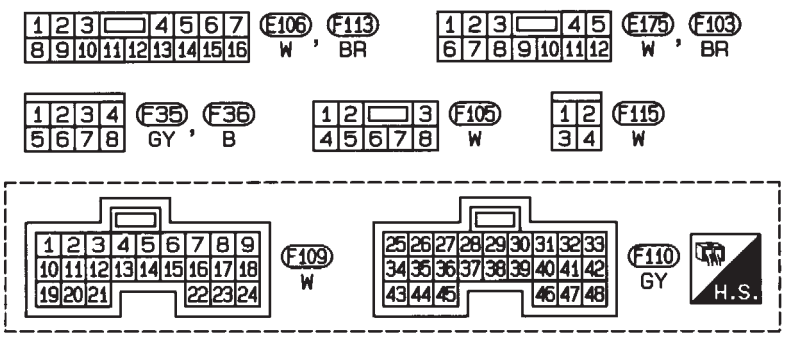

REFER TO THE FOLLOWING.
M1, M2 -FUSE BLOCK-JUNCTION BOX (J/B)

NAT343

TCM TERMINALS AND REFERENCE VALUE

NJAT0031S01

Remarks: Specification data are reference values.

Terminal No.	Wire color	Item	Condition		Judgement standard
10	BR/R	Power source	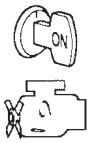	When turning ignition switch to "ON".	Battery voltage
				When turning ignition switch to "OFF".	1V or less
19	BR/R	Power source		Same as No. 10	
25	B	Ground		—	—
28	R/B	Power source (Memory back-up)	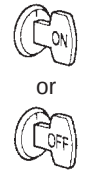	When turning ignition switch to "OFF".	Battery voltage
				When turning ignition switch to "ON".	Battery voltage
48	B	Ground	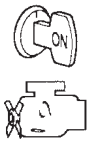	—	—

Diagnostic Procedure

NJAT0231

1	CHECK TCM POWER SOURCE STEP 1

1. Turn ignition switch to ON position.
   (Do not start engine.)
2. Check voltage between TCM terminals 10, 19, 28 and ground.

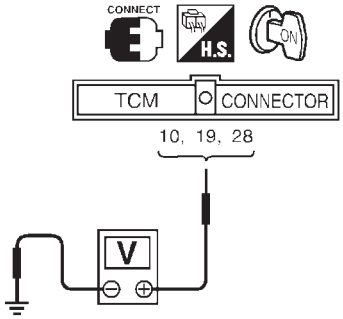

Voltage:
Battery voltage

SAT611J

OK or NG

OK	▶	GO TO 2.
NG	▶	GO TO 3.

2	CHECK TCM POWER SOURCE STEP 2

1. Turn ignition switch to OFF position.
2. Check voltage between TCM terminal 28 and ground.

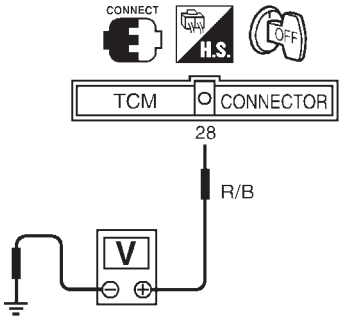

Voltage:
Battery voltage

SAT612JA

OK or NG

OK	▶	GO TO 4.
NG	▶	GO TO 3.

3	DETECT MALFUNCTIONING ITEM

Check the following items:
- Harness for short or open between ignition switch and TCM terminals 10, 19 and 28 (Main harness)
- Fuse
- Ignition switch
  Refer to EL-10, "POWER SUPPLY ROUTING".

OK or NG

OK	▶	GO TO 4.
NG	▶	Repair or replace damaged parts.

4	CHECK TCM GROUND CIRCUIT

1. Turn ignition switch to OFF position.
2. Disconnect TCM harness connector.
3. Check continuity between TCM terminals 25, 48 and ground. Refer to wiring diagram — AT — MAIN.
   Continuity should exist.
   If OK, check harness for short to ground and short to power.

OK or NG

OK	▶	**INSPECTION END**
NG	▶	Repair open circuit or short to ground or short to power in harness or connectors.

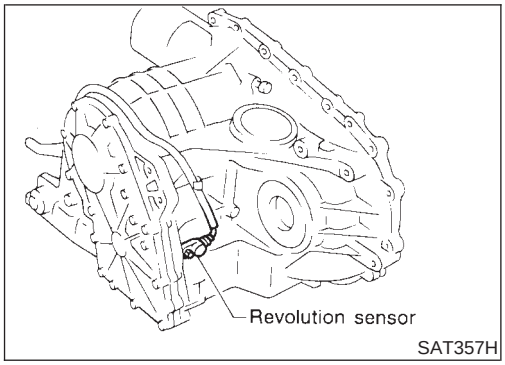

Description

NJAT0038

The revolution sensor detects the revolution of the idler gear parking pawl lock gear and emits a pulse signal. The pulse signal is sent to the TCM which converts it into vehicle speed.

TCM TERMINALS AND REFERENCE VALUE

NJAT0038S01

Remarks: Specification data are reference values.

Terminal No.	Wire color	Item	Condition		Judgement standard
29	W	Revolution sensor		When moving at 20 km/h (12 MPH), use the CONSULT-II pulse frequency measuring function.*1 **CAUTION:** **Connect the diagnosis data link cable to the vehicle diagnosis connector.** *1: A circuit tester cannot be used to test this item.	Approximately 150 Hz
				When vehicle parks.	Under 1.3V or over 4.5V
42	B	Throttle position sensor (Ground)	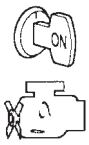	—	—

ON BOARD DIAGNOSIS LOGIC

NJAT0038S02

Diagnostic trouble code	Malfunction is detected when ...	Check items (Possible cause)
: VHCL SPEED SEN·AT : 1st judgement flicker	TCM does not receive the proper voltage signal from the sensor.	● Harness or connectors (The sensor circuit is open or shorted.) ● Revolution sensor

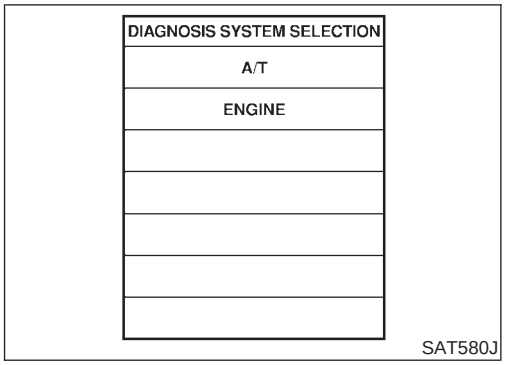

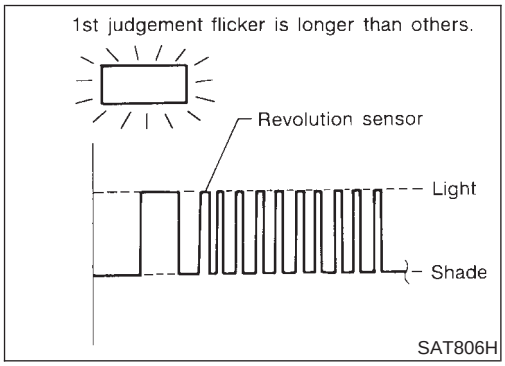

SELF-DIAGNOSIS CODE CONFIRMATION PROCEDURE

NJAT0038S04

After the repair, perform the following procedure to confirm the malfunction is eliminated.

With CONSULT-II

NJAT0038S0401

1) Start engine.
2) Select "SELF-DIAG RESULTS" mode for A/T with CONSULT-II.
3) Drive vehicle under the following conditions:
   Selector lever in "D" position, vehicle speed higher than 30 km/h (19 MPH), throttle opening greater than 1/8 of the full throttle position and driving for more than 5 seconds.

Without CONSULT-II

NJAT0038S0402

1) Start engine.
2) Drive vehicle under the following conditions:
   Selector lever in "D" position, vehicle speed higher than 30 km/h (19 MPH), throttle opening greater than 1/8 of the full throttle position and driving for more than 5 seconds.
3) Perform self-diagnosis.
   Refer to "SELF-DIAGNOSTIC PROCEDURE (Without CONSULT-II)", AT-44.

Wiring Diagram — AT — VSSA/T

NJAT0201

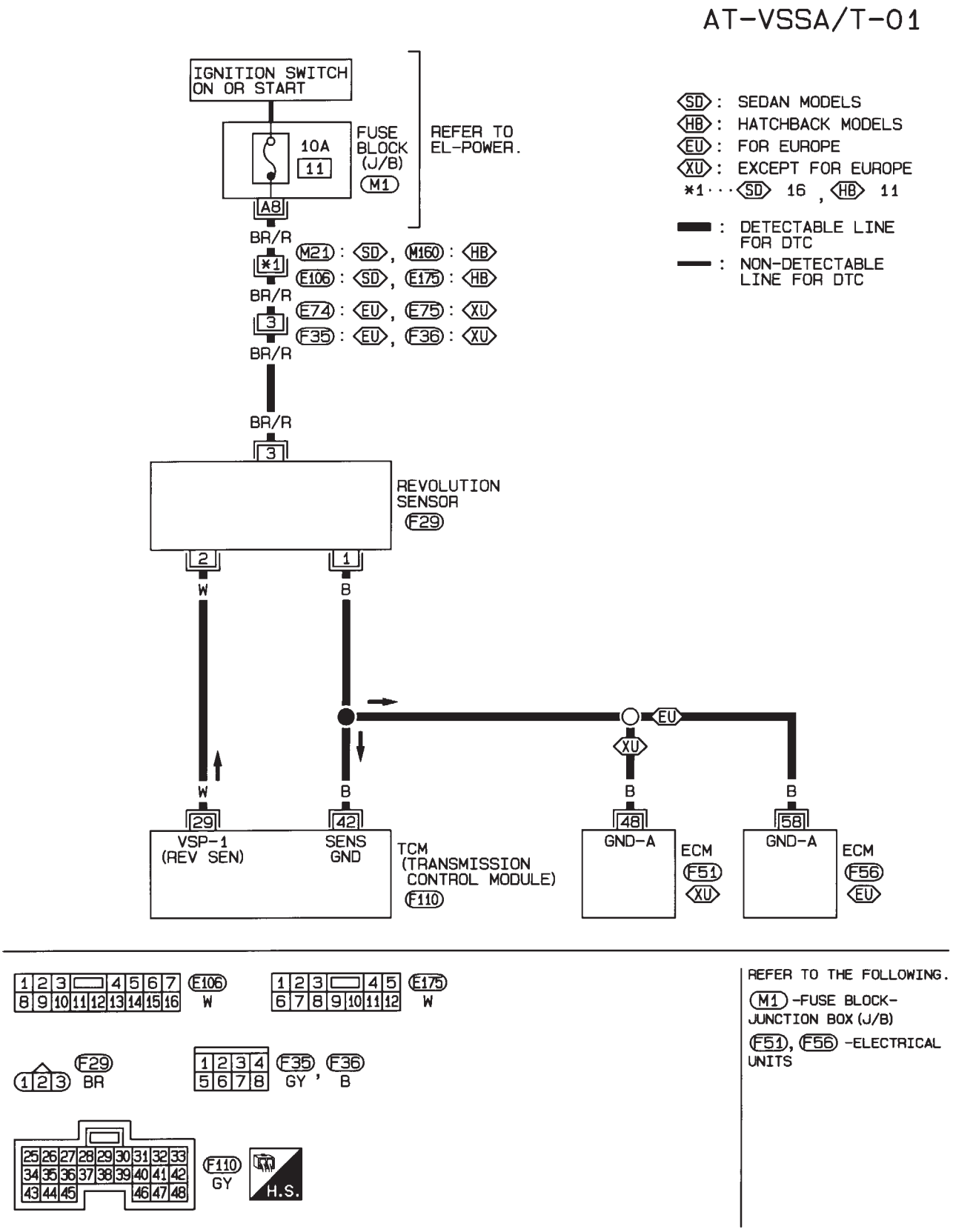

Diagnostic Procedure

NJAT0039

1	CHECK INPUT SIGNAL (With CONSULT-II)

With CONSULT-II

1. Start engine.
2. Select “ECU INPUT SIGNALS” in “DATA MONITOR” mode for “A/T” with CONSULT-II.

DIAGNOSIS SYSTEM SELECTION
A/T
ENGINE

SAT580J

3. Read out the value of “VHCL/S SE·A/T” while driving.
   Check the value changes according to driving speed.

DATA MONITOR	
MONITORING	
VHCL/S SE-A/T	XXX km/h
VHCL/S SE-MTR	XXX km/h
THRTL POS SEN	XXX V
FLUID TEMP SE	XXX V
BATTERY VOLT	XXX V

SAT614J

OK or NG

OK	▶	GO TO 3.
NG	▶	GO TO 2.

2	CHECK REVOLUTION SENSOR (With CONSULT-II)

With CONSULT-II

1. Start engine.

Condition	Judgement standard
When moving at 20 km/h (12 MPH), use the CONSULT-II pulse frequency measuring function. *1 **CAUTION:** **Connect the diagnosis data link cable to the vehicle diagnosis connector.** *1: A circuit tester cannot be used to test this item.	Approximately 150 Hz
When vehicle parks.	Under 1.3V or over 4.5V

MTBL0452

- Harness for short or open between TCM, ECM and revolution sensor (Main harness)

OK or NG

OK	▶	GO TO 3.
NG	▶	Repair or replace damaged parts.

3	CHECK DTC	
Perform Self-diagnosis Code confirmation procedure, AT-127.		
	OK or NG	
OK	▶	**INSPECTION END**
NG	▶	GO TO 4.

4	CHECK TCM INSPECTION	
1. Perform TCM input/output signal inspection. 2. If NG, recheck TCM pin terminals for damage or loose connection with harness connector.		
	OK or NG	
OK	▶	**INSPECTION END**
NG	▶	Repair or replace damaged parts.

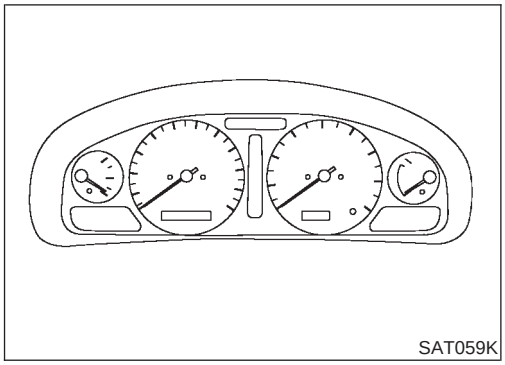
SAT059K

Description

NJAT0079

The vehicle speed sensor·MTR is built into the speedometer assembly. The sensor functions as an auxiliary device to the revolution sensor when it is malfunctioning. The TCM will then use a signal sent from the vehicle speed sensor·MTR.

TCM TERMINALS AND REFERENCE VALUE

NJAT0079S01

Remarks: Specification data are reference values.

Terminal No.	Wire color	Item	Condition		Judgement standard
40	PU/R	Vehicle speed sensor		When moving vehicle at 2 to 3 km/h (1 to 2 MPH) for 1 m (3 ft) or more.	Voltage varies between less than 1V and more than 4.5V

ON BOARD DIAGNOSIS LOGIC

NJAT0079S02

Diagnostic trouble code	Malfunction is detected when ...	Check items (Possible cause)
: VHCL SPEED SEN·MTR	TCM does not receive the proper voltage signal from the sensor.	• Harness or connectors (The sensor circuit is open or shorted.) • Vehicle speed sensor
: 2nd judgement flicker		

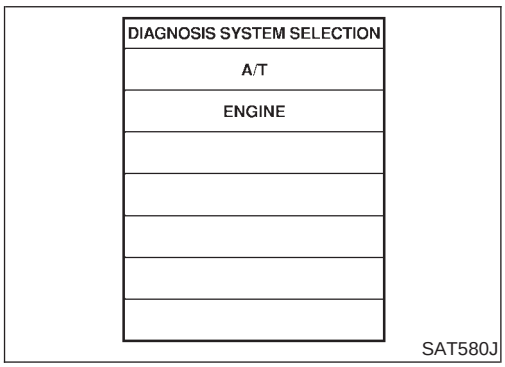

SAT580J

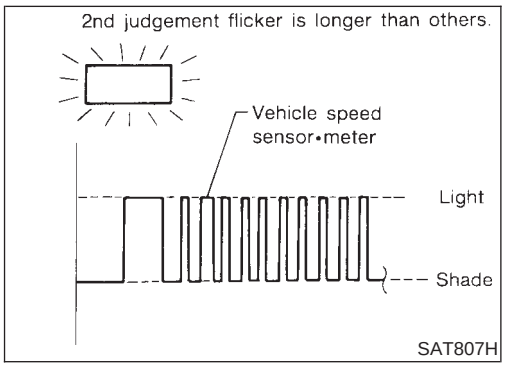

SAT807H

SELF-DIAGNOSIS CODE CONFIRMATION PROCEDURE

NJAT0079S04

After the repair, perform the following procedure to confirm the malfunction is eliminated.

With CONSULT-II

NJAT0079S0401

1) Start engine.
2) Select “SELF-DIAG RESULTS” mode for A/T with CONSULT-II.
3) Drive vehicle under the following conditions:
   Selector lever in “D” position and vehicle speed higher than 20 km/h (12 MPH).

Without CONSULT-II

NJAT0079S0402

1) Start engine.
2) Drive vehicle under the following conditions:
   Selector lever in “D” position and vehicle speed higher than 20 km/h (12 MPH).
3) Perform self-diagnosis.
   Refer to “SELF-DIAGNOSTIC PROCEDURE (Without CONSULT-II)”, AT-44.

Wiring Diagram — AT — VSSMTR

NJAT0215

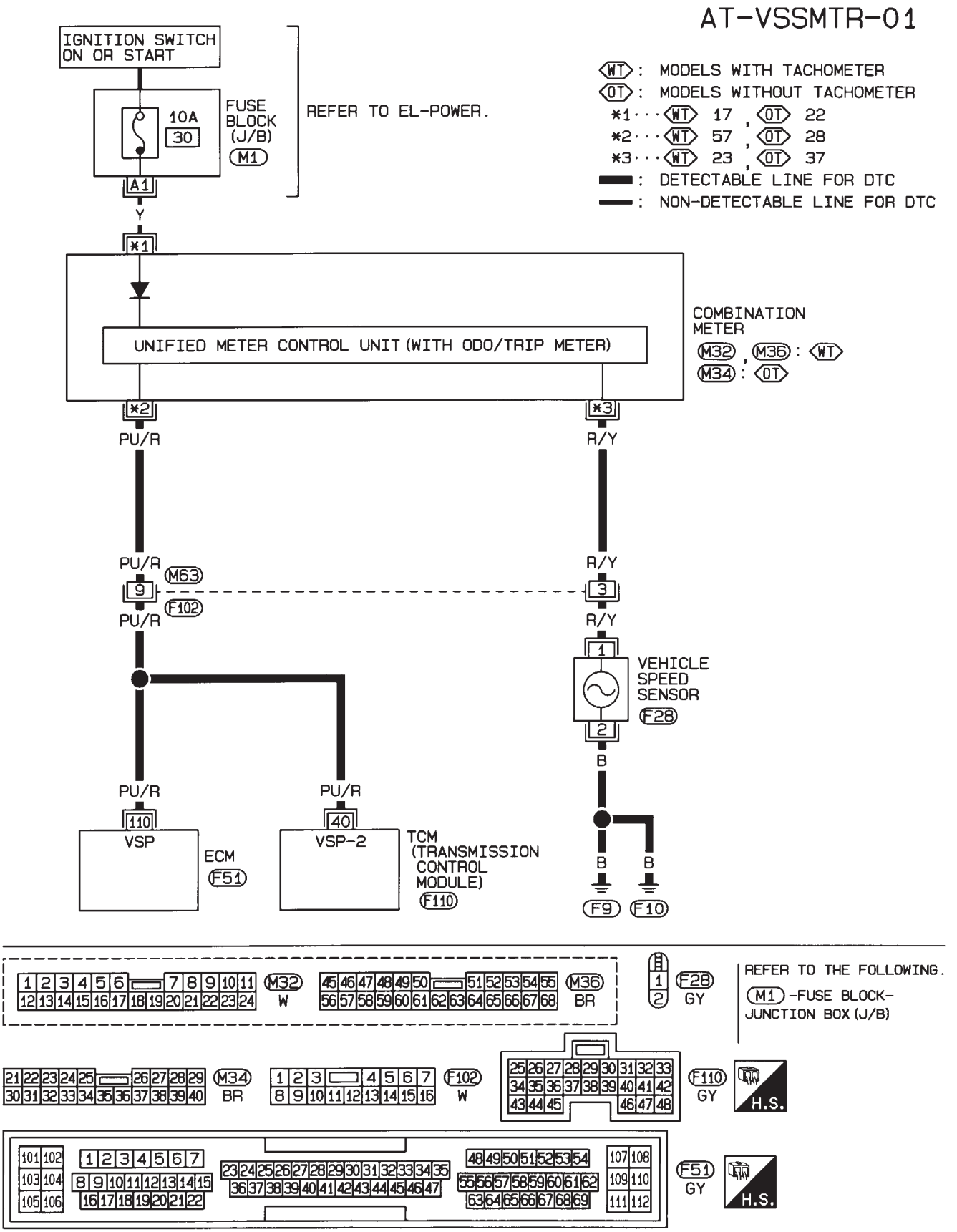

Diagnostic Procedure

NJAT0080

1	CHECK INPUT SIGNAL

With CONSULT-II

1. Start engine.
2. Select “ECU INPUT SIGNALS” in “DATA MONITOR” mode for “A/T” with CONSULT-II.
3. Read out the value of “VHCL/S SE·MTR” while driving.
   Check the value changes according to driving speed.

DATA MONITOR	
MONITORING	
VHCL/S SE-A/T	XXX km/h
VHCL/S SE-MTR	XXX km/h
THRTL POS SEN	XXX V
FLUID TEMP SE	XXX V
BATTERY VOLT	XXX V

SAT614J

Without CONSULT-II

1. Start engine.
2. Check voltage between TCM terminal 40 and ground while driving at 2 to 3 km/h (1 to 2 MPH) for 1 m (3 ft) or more.

Voltage:

Voltage varies between less than 1V and more than 4.5V.

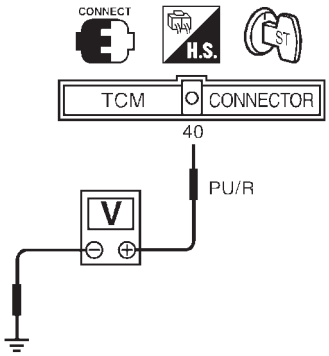

SAT465JA

OK or NG

OK	▶	GO TO 2.
NG	▶	**Check the following items:** ● Vehicle speed sensor and ground circuit for vehicle speed sensor Refer to EL-144, “METERS AND GAUGES”. ● Harness for short or open between TCM and vehicle speed sensor (Main harness)

2	CHECK DTC

Perform Self-diagnosis Code confirmation procedure, AT-131.

OK or NG

OK	▶	**INSPECTION END**
NG	▶	1. Perform TCM input/output signal inspection. 2. If NG, recheck TCM pin terminals for damage or loose connection with harness connector.

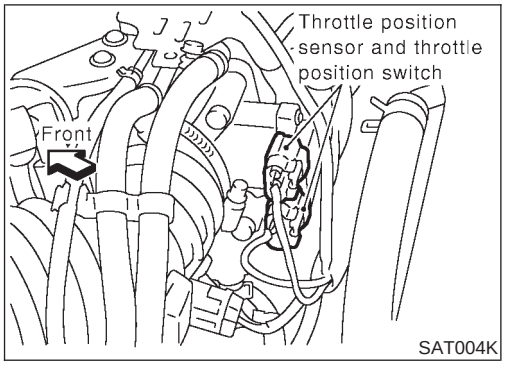

Description

NJAT0070

- Throttle position sensor
  The throttle position sensor detects the throttle valve position and sends a signal to the TCM.
- Throttle position switch
  Consists of a wide open throttle position switch and a closed throttle position switch.
  The wide open throttle position switch sends a signal to the TCM when the throttle valve is open at least 1/2 of the full throttle position. The closed throttle position switch sends a signal to the TCM when the throttle valve is fully closed.

CONSULT-II REFERENCE VALUE IN DATA MONITOR MODE

NJAT0070S01

Remarks: Specification data are reference values.

Monitor item	Condition	Specification
Throttle position sensor	Fully-closed throttle	Approximately 0.5V
	Fully-open throttle	Approximately 4V

TCM TERMINALS AND REFERENCE VALUE

NJAT0070S02

Remarks: Specification data are reference values.

Terminal No.	Wire color	Item	Condition		Judgement standard
16	Y/PU	Closed throttle position switch (in throttle position switch)	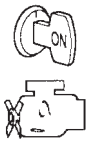	When releasing accelerator pedal after warming up engine. Refer to “Preparation”, “SELF-DIAGNOSTIC PROCEDURE (Without CONSULT-II)”, AT-44.	Battery voltage
				When depressing accelerator pedal after warming up engine. Refer to “Preparation”, “SELF-DIAGNOSTIC PROCEDURE (Without CONSULT-II)”, AT-44.	1V or less
17	LG	Wide open throttle position switch (in throttle position switch)		When depressing accelerator pedal more than half-way after warming up engine.	Battery voltage
				When releasing accelerator pedal after warming up engine.	1V or less
32	R	Throttle position sensor (Power source)		—	4.5 - 5.5V
41	GY	Throttle position sensor		When depressing accelerator pedal slowly after warming up engine. (Voltage rises gradually in response to throttle position.)	Fully-closed throttle: Approximately 0.5V Fully-open throttle: Approximately 4V
42	B	Ground (Throttle position sensor)		—	—

ON BOARD DIAGNOSIS LOGIC

NJAT0070S03

Diagnostic trouble code	Malfunction is detected when ...	Check items (Possible cause)
: THROTTLE POSI SEN	TCM receives an excessively low or high voltage from the sensor.	● Harness or connectors (The sensor circuit is open or shorted.) ● Throttle position sensor ● Throttle position switch
: 3rd judgement flicker		

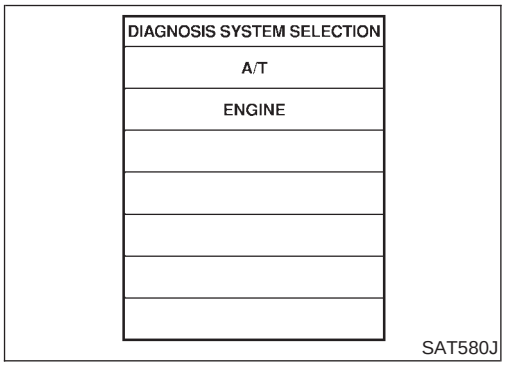

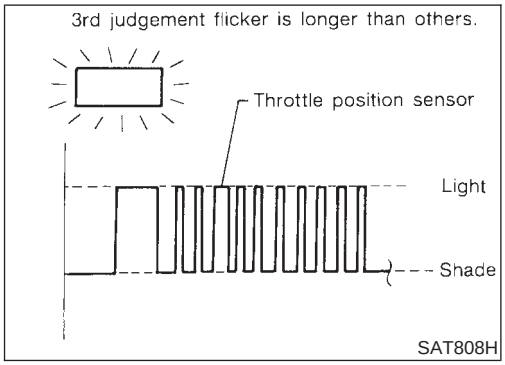

SELF-DIAGNOSIS CODE CONFIRMATION PROCEDURE

NJAT0070S05

After the repair, perform the following procedure to confirm the malfunction is eliminated.

With CONSULT-II

NJAT0070S0501

1) Start engine.
2) Select "SELF-DIAG RESULTS" mode for A/T with CONSULT-II.
3) Drive vehicle under the following conditions:
   Selector lever in "D" position, vehicle speed higher than 10 km/h (6 MPH), throttle opening greater than 1/2 of the full throttle position and driving for more than 3 seconds.

Without CONSULT-II

NJAT0070S0502

1) Start engine.
2) Drive vehicle under the following conditions:
   Selector lever in "D" position, vehicle speed higher than 10 km/h (6 MPH), throttle opening greater than 1/2 of the full throttle position and driving for more than 3 seconds.
3) Perform self-diagnosis.
   Refer to "SELF-DIAGNOSTIC PROCEDURE (Without CONSULT-II)", AT-44.

Wiring Diagram — AT — TPS

NJAT0212

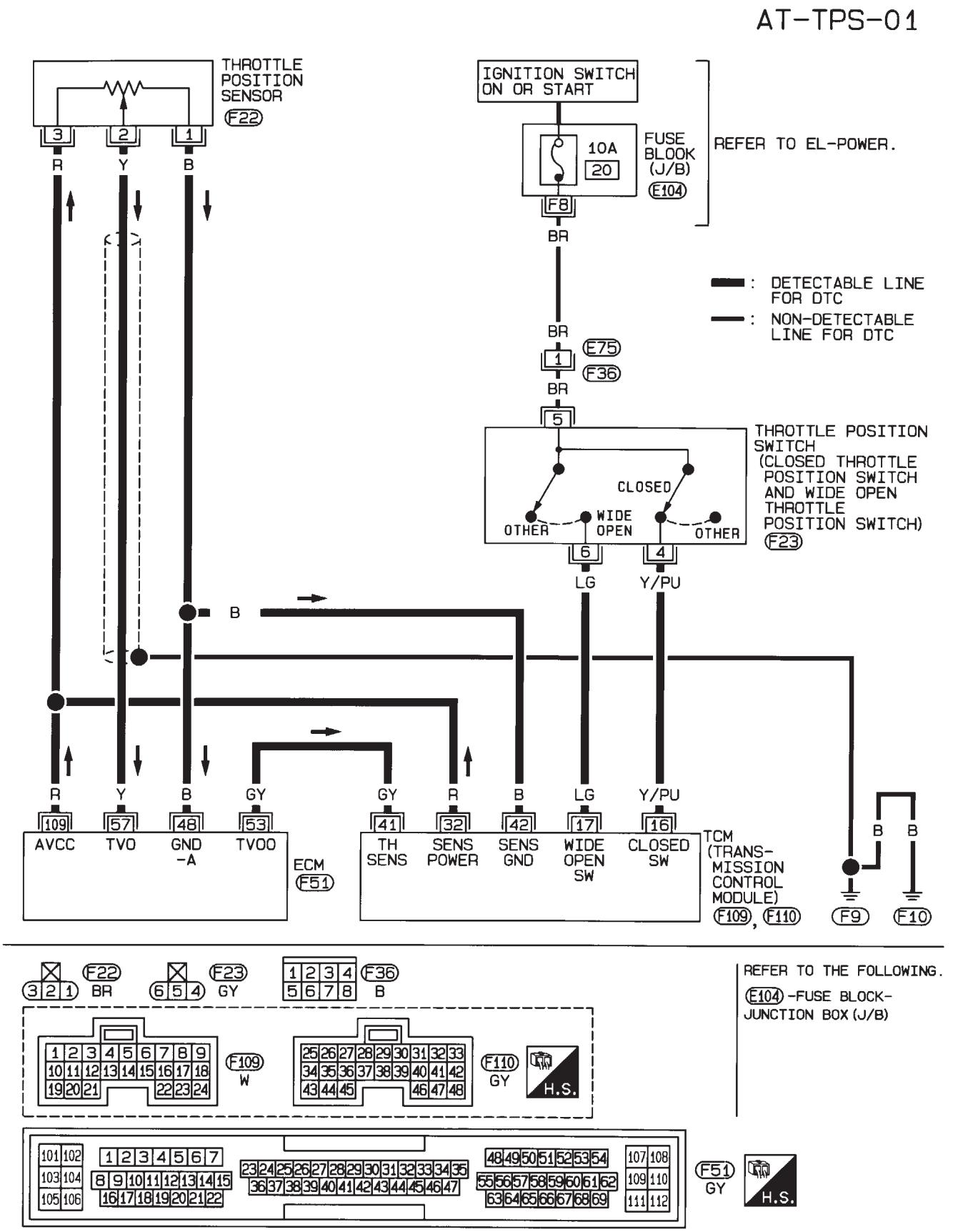

HAT078

Diagnostic Procedure

NJAT0071

1	CHECK DTC WITH ECM
Perform diagnostic test mode II (self-diagnostic results) for engine control. Refer to EC-74, “Malfunction Indicator Lamp (MIL)”.	
OK or NG	
OK (With CONSULT-II) ▶	GO TO 2.
OK (Without CONSULT-II) ▶	GO TO 3.
NG ▶	Check throttle position sensor circuit for engine control. Refer to EC-207, “DTC P0120 THROTTLE POSITION SENSOR”.

2	CHECK INPUT SIGNAL (WITH CONSULT-II)

With CONSULT-II

1. Apply vacuum to the throttle opener then check the following. Refer from step 1 to 5 of “Preparation”, “SELF-DIAGNOSTIC PROCEDURE (Without CONSULT-II)”, AT-44.
2. Turn ignition switch to “ON” position.
   (Do not start engine.)
3. Select “ECU INPUT SIGNALS” in “DATA MONITOR” mode for “A/T” with CONSULT-II.

DIAGNOSIS SYSTEM SELECTION
A/T
ENGINE

SAT580J

4. Read out the value of “THRTL POS SEN”.
   Voltage:
   Fully-closed throttle:
   Approximately 0.5V
   Fully-open throttle:
   Approximately 4V

DATA MONITOR	
MONITORING	
VHCL/S SE-A/T	XXX km/h
VHCL/S SE-MTR	XXX km/h
THRTL POS SEN	XXX V
FLUID TEMP SE	XXX V
BATTERY VOLT	XXX V

SAT614J

OK or NG

OK ▶	GO TO 4.
NG ▶	Check harness for short or open between ECM and TCM regarding throttle position sensor circuit. (Main harness)

3	CHECK INPUT SIGNAL (WITHOUT CONSULT-II)

Without CONSULT-II

1. Apply vacuum to the throttle opener then check the following. Refer to steps 1 to 5 of "Preparation", "SELF-DIAGNOSTIC PROCEDURE (Without CONSULT-II)", AT-44.
2. Turn ignition switch to "ON" position.
   (Do not start engine.)
3. Check voltage between TCM terminals 41 and 42 while accelerator pedal is depressed slowly.
   Voltage:
   Fully-closed throttle valve:
   Approximately 0.5V
   Fully-open throttle valve:
   Approximately 4V
   (Voltage rises gradually in response to throttle position)

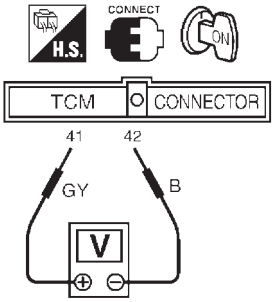

SAT453J

OK or NG

OK	▶	GO TO 5.
NG	▶	Check harness for short or open between ECM and TCM regarding throttle position sensor circuit. (Main harness)

4	CHECK THROTTLE POSITION SWITCH CIRCUIT (WITH CONSULT-II)

With CONSULT-II

1. Apply vacuum to the throttle opener, then check the following. Refer to steps 1 to 5 of "Preparation", "SELF-DIAGNOSTIC PROCEDURE (Without CONSULT-II)", AT-44.
2. Turn ignition switch to "ON" position.
   (Do not start engine.)
3. Select "ECU INPUT SIGNALS" in "DATA MONITOR" mode for "A/T" with CONSULT-II.
4. Read out "CLOSED THL/SW" and "W/O THRL/P-SW" depressing and releasing accelerator pedal.
   Check the signal of throttle position switch is indicated properly.

Accelerator pedal condition	Data monitor	
	CLOSED THL/SW	W/O THRL/P-SW
Released	ON	OFF
Fully depressed	OFF	ON

MTBL0011

DATA MONITOR	
MONITORING	
POWERSHIFT SW	OFF
CLOSED THL/SW	OFF
W/O THRL/P-SW	OFF
HOLD SW	OFF
BRAKE SW	ON

SAT702J

OK or NG

OK	▶	GO TO 6.
NG	▶	**Check the following items:** ● Throttle position switch — Refer to "Components Inspection", AT-141. ● Harness for short or open between ignition switch and throttle position switch (Main harness) ● Harness for short or open between throttle position switch and TCM (Main harness)

5	CHECK THROTTLE POSITION SWITCH CIRCUIT (WITHOUT CONSULT-II)

Without CONSULT-II

1. Apply vacuum to the throttle opener, then check the following. Refer to steps 1 to 5 of "Preparation", "SELF-DIAGNOSTIC PROCEDURE (Without CONSULT-II)", AT-44.
2. Turn ignition switch to "ON" position.
   (Do not start engine.)
3. Check voltage between TCM terminals 16, 17 and ground while depressing, and releasing accelerator pedal slowly.
   (After warming up engine)

Accelerator pedal condition	Voltage	
	Terminal No. 16	Terminal No. 17
Released	Battery voltage	1V or less
Fully depressed	1V or less	Battery voltage

MTBL0137

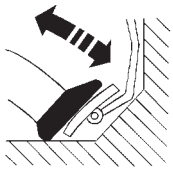

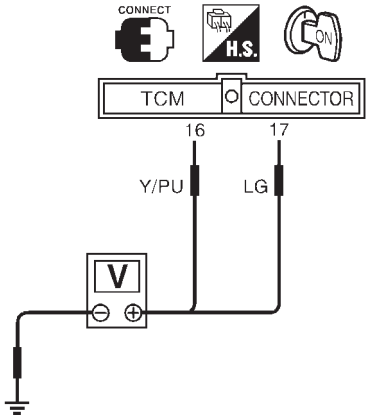

SAT454JA

OK or NG

OK	▶	GO TO 6.
NG	▶	**Check the following items:** ● Throttle position switch — Refer to "Components Inspection", AT-141. ● Harness for short or open between ignition switch and throttle position switch (Main harness) ● Harness for short or open between throttle position switch and TCM (Main harness)

6	CHECK DTC

Perform Self-diagnosis Code confirmation procedure, AT-135.

OK or NG

OK	▶	**INSPECTION END**
NG	▶	1. Perform TCM input/output signal inspection. 2. If NG, recheck TCM pin terminals for damage or loose connection with harness connector.

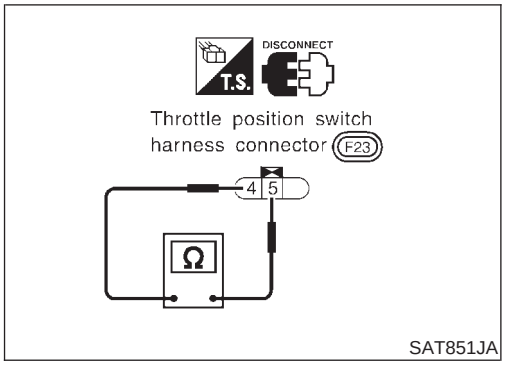

SAT851JA

Component Inspection

=NJAT0072

THROTTLE POSITION SWITCH

NJAT0072S01

Closed Throttle Position Switch (Idle position)

NJAT0072S0101

- Check continuity between terminals 4 and 5.
  [Refer to “Preparation”, “SELF-DIAGNOSTIC PROCEDURE (Without CONSULT-II)”, AT-44.]

Accelerator pedal condition	Continuity
Released	Yes
Depressed	No

- To adjust closed throttle position switch, refer to EC-100, “Basic Inspection”.

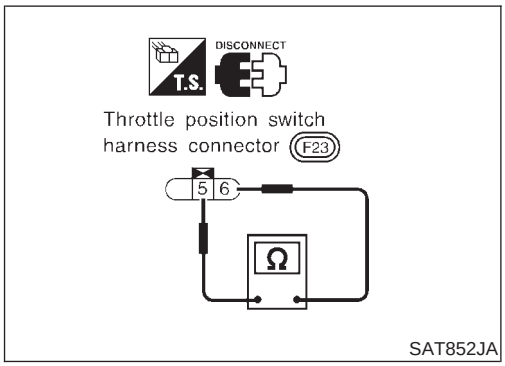

SAT852JA

Wide Open Throttle Position Switch

NJAT0072S0102

- Check continuity between terminals 5 and 6.

Accelerator pedal condition	Continuity
Released	No
Depressed	Yes

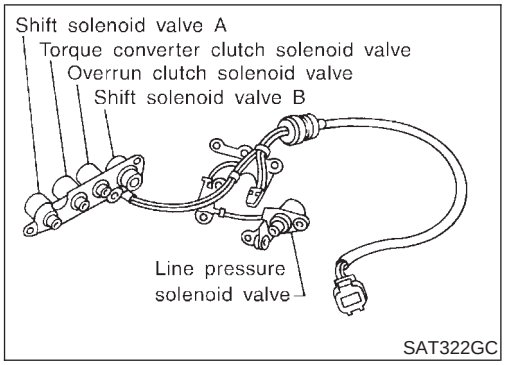

Description

NJAT0064

Shift solenoid valves A and B are turned “ON” or “OFF” by the TCM in response to signals sent from the PNP switch, vehicle speed and throttle position sensors. Gears will then be shifted to the optimum position.

Gear position	1	2	3	4
Shift solenoid valve A	ON (Closed)	OFF (Open)	OFF (Open)	ON (Closed)
Shift solenoid valve B	ON (Closed)	ON (Closed)	OFF (Open)	OFF (Open)

TCM TERMINALS AND REFERENCE VALUE

NJAT0064S01

Remarks: Specification data are reference values.

Terminal No.	Wire color	Item	Condition		Judgement standard
11	L/W	Shift solenoid valve A		When shift solenoid valve A operates. (When driving in “D_1” or “D_4”.)	Battery voltage
				When shift solenoid valve A does not operate. (When driving in “D_2” or “D_3”.)	1V or less

ON BOARD DIAGNOSIS LOGIC

NJAT0064S02

Diagnostic trouble code	Malfunction is detected when ...	Check items (Possible cause)
: SHIFT SOLENOID/VA	TCM detects an improper voltage drop when it tries to operate the solenoid valve.	● Harness or connectors (The solenoid circuit is open or shorted.) ● Shift solenoid valve A
: 4th judgement flicker		

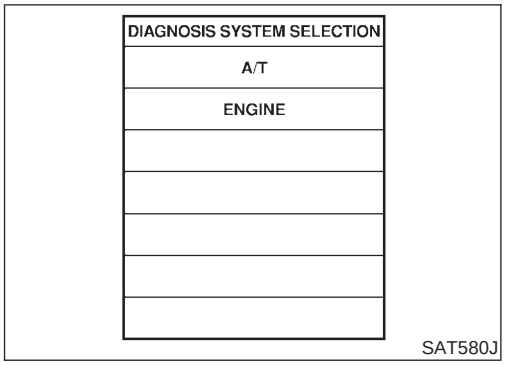

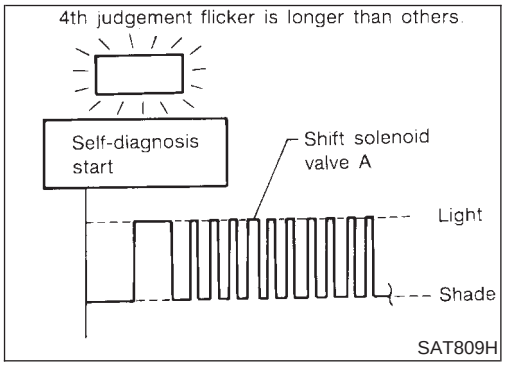

SELF-DIAGNOSIS CODE CONFIRMATION PROCEDURE

NJAT0064S04

After the repair, perform the following procedure to confirm the malfunction is eliminated.

With CONSULT-II

NJAT0064S0401

1) Start engine.
2) Select "SELF-DIAG RESULTS" mode for A/T with CONSULT-II.
3) Drive vehicle in $D_1 \rightarrow D_2$ position.

Without CONSULT-II

NJAT0064S0402

1) Start engine.
2) Drive vehicle in $D_1 \rightarrow D_2$ position.
3) Perform self-diagnosis.
   Refer to "SELF-DIAGNOSTIC PROCEDURE (Without CONSULT-II)", AT-44.

Wiring Diagram — AT — SSV/A

NJAT0210

AT-SSV/A-01

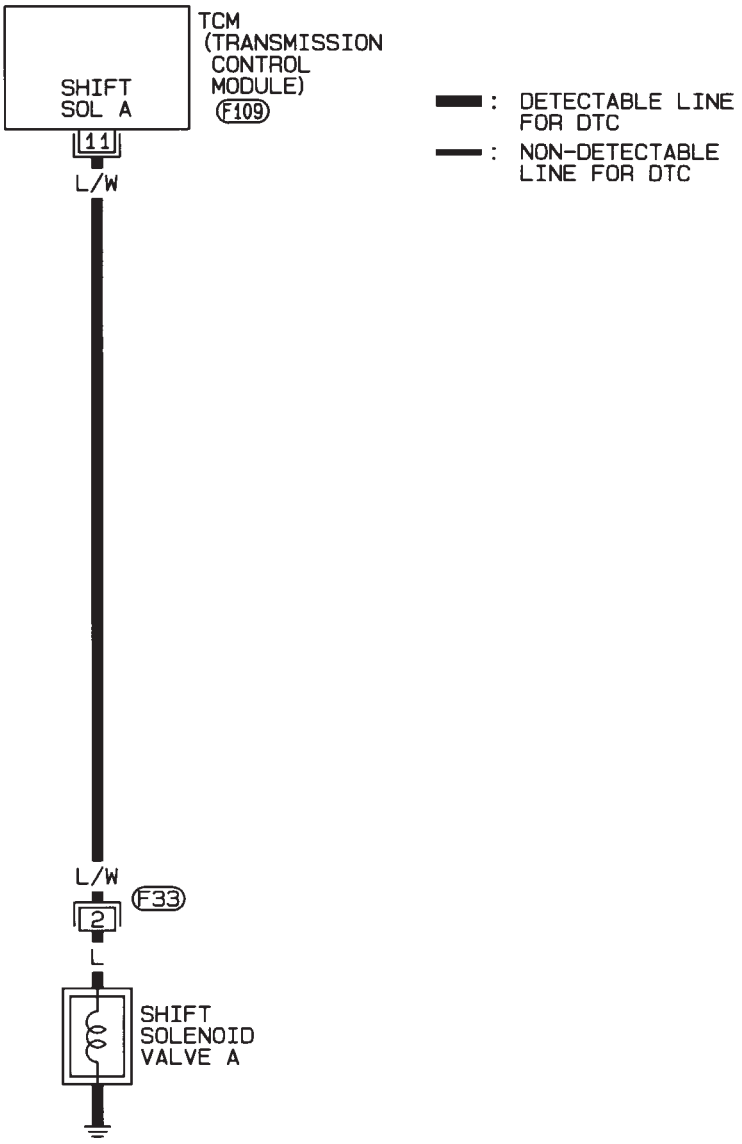

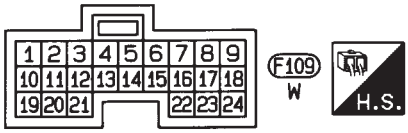

HAT079

Diagnostic Procedure

NJAT0065

1	CHECK VALVE RESISTANCE

1. Turn ignition switch to “OFF” position.
2. Disconnect terminal cord assembly connector in engine compartment.
3. Check resistance between terminal 2 and ground.

Resistance:
20 - 30Ω

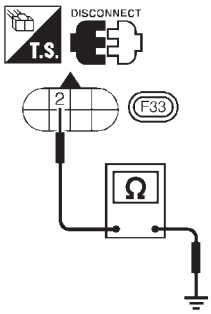

SAT900JA

OK or NG

OK	▶	GO TO 2.
NG	▶	1. Remove control valve assembly. Refer to AT-351. 2. Check the following items: ● Shift solenoid valve A Refer to “Component Inspection”, AT-147. ● Harness of terminal cord assembly for short or open

2	CHECK POWER SOURCE CIRCUIT

1. Turn ignition switch to "OFF" position.
2. Disconnect TCM harness connector.
3. Check continuity between terminal 2 and TCM harness connector terminal 11.
   Continuity should exist.

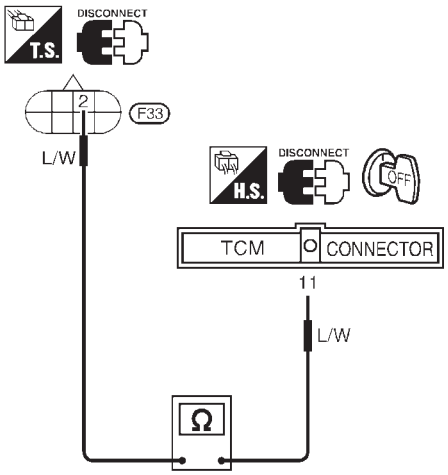

SAT901JB

If OK, check harness for short to ground and short to power.

4. Reinstall any part removed.

OK or NG

OK	▶	GO TO 3.
NG	▶	Repair open circuit or short to ground or short to power in harness or connectors.

3	CHECK DTC

Perform Self-diagnosis Code confirmation procedure, AT-143.

OK or NG

OK	▶	**INSPECTION END**
NG	▶	1. Perform TCM input/output signal inspection. 2. If NG, recheck TCM pin terminals for damage or loose connection with harness connector.

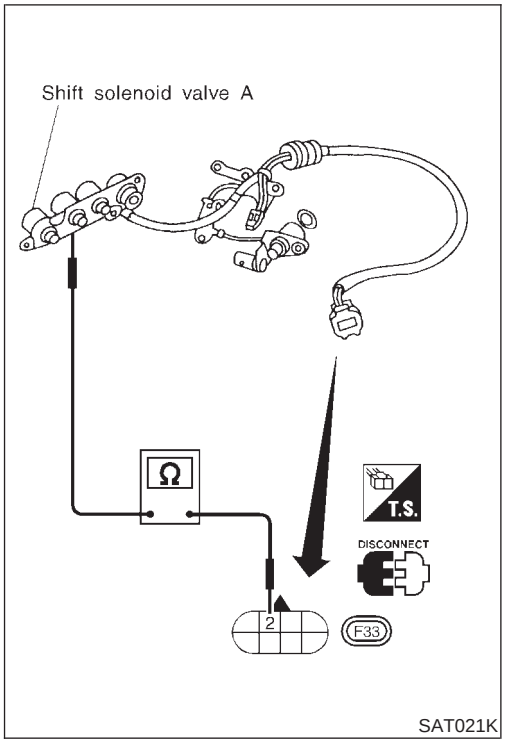

SAT021K

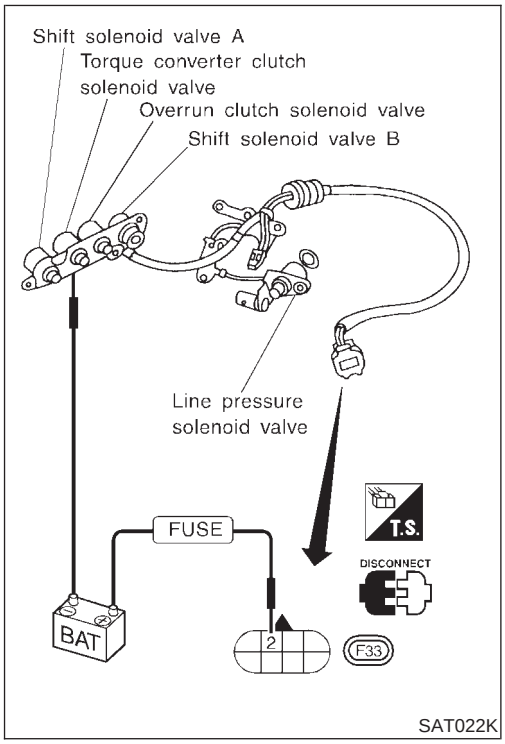

SAT022K

Component Inspection

NJAT0066

SHIFT SOLENOID VALVE A

NJAT0066S01

- For removal, refer to AT-351.

Resistance Check

NJAT0066S0101

- Check resistance between two terminals.

Solenoid valve	Terminal No.		Resistance (Approx.)
Shift solenoid valve A	2	Ground	20 - 30Ω

Operation Check

NJAT0066S0102

- Check solenoid valve by listening for its operating sound while applying battery voltage to the terminal and ground.

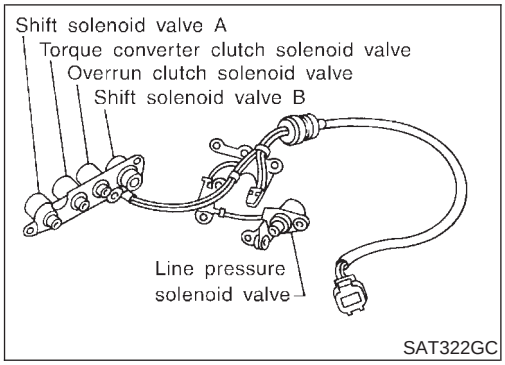

Description

NJAT0067

Shift solenoid valves A and B are turned “ON” or “OFF” by the TCM in response to signals sent from the PNP switch, vehicle speed and throttle position sensors. Gears will then be shifted to the optimum position.

Gear position	1	2	3	4
Shift solenoid valve A	ON (Closed)	OFF (Open)	OFF (Open)	ON (Closed)
Shift solenoid valve B	ON (Closed)	ON (Closed)	OFF (Open)	OFF (Open)

TCM TERMINALS AND REFERENCE VALUE

NJAT0067S01

Remarks: Specification data are reference values.

Terminal No.	Wire color	Item	Condition		Judgement standard
12	L/Y	Shift solenoid valve B		When shift solenoid valve B operates. (When driving in “D_1” or “D_2”.)	Battery voltage
				When shift solenoid valve B does not operate. (When driving in “D_3” or “D_4”.)	1V or less

ON BOARD DIAGNOSIS LOGIC

NJAT0067S02

Diagnostic trouble code	Malfunction is detected when ...	Check items (Possible cause)
: SHIFT SOLENOID/VB : 5th judgement flicker	TCM detects an improper voltage drop when it tries to operate the solenoid valve.	● Harness or connectors (The solenoid circuit is open or shorted.) ● Shift solenoid valve B

DIAGNOSIS SYSTEM SELECTION
A/T
ENGINE

SAT580J

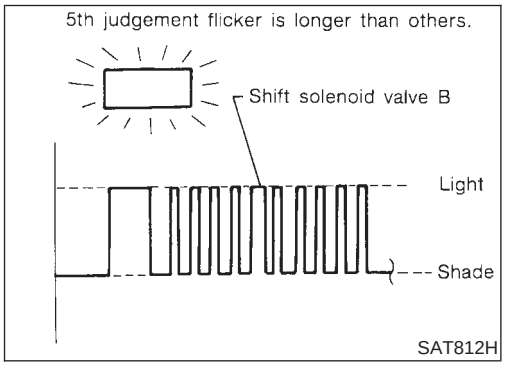

SAT812H

SELF-DIAGNOSIS CODE CONFIRMATION PROCEDURE

NJAT0067S04

After the repair, perform the following procedure to confirm the malfunction is eliminated.

With CONSULT-II

NJAT0067S0401

1) Start engine.
2) Select "SELF-DIAG RESULTS" mode for A/T with CONSULT-II.
3) Drive vehicle in $D_1 \rightarrow D_2 \rightarrow D_3$ position.

Without CONSULT-II

NJAT0067S0402

1) Start engine.
2) Drive vehicle in $D_1 \rightarrow D_2 \rightarrow D_3$ position.
3) Perform self-diagnosis.
   Refer to "SELF-DIAGNOSTIC PROCEDURE (Without CONSULT-II)", AT-44.

Wiring Diagram — AT — SSV/B

NJAT0211

AT-SSV/B-01

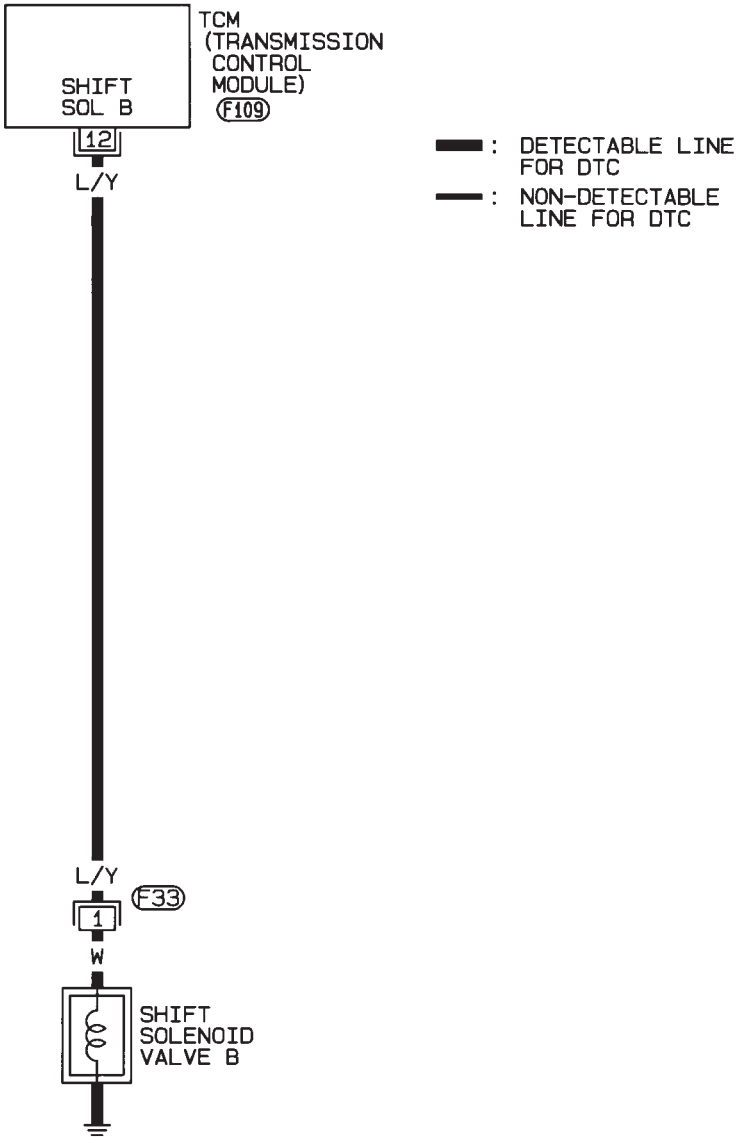

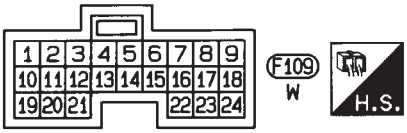

HAT080

Diagnostic Procedure

NJAT0068

1	CHECK VALVE RESISTANCE

1. Turn ignition switch to “OFF” position.
2. Disconnect terminal cord assembly connector in engine compartment.
3. Check resistance between terminal 1 and ground.

Resistance:
5 - 20Ω

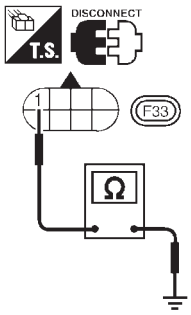

SAT904JA

OK or NG

OK	▶	GO TO 2.
NG	▶	1. Remove control valve assembly. Refer to AT-351. 2. Check the following items: ● Shift solenoid valve B Refer to “Component Inspection”, AT-153. ● Harness of terminal cord assembly for short or open

2	CHECK POWER SOURCE CIRCUIT

1. Turn ignition switch to "OFF" position.
2. Disconnect TCM harness connector.
3. Check continuity between terminal 12 and TCM harness connector terminal 1.
   Continuity should exist.

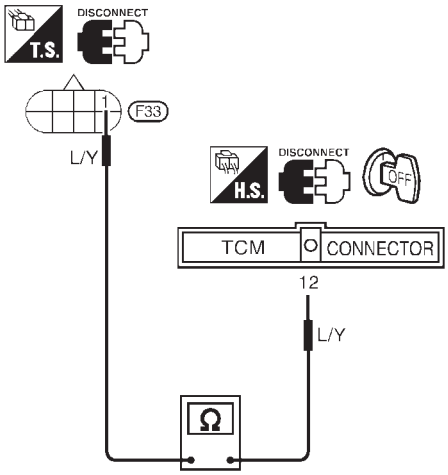

SAT905JA

If OK, check harness for short to ground and short to power.

4. Reinstall any part removed.

OK or NG

OK	▶	GO TO 3.
NG	▶	Repair open circuit or short to ground or short to power in harness or connectors.

3	CHECK DTC

Perform Self-diagnosis Code confirmation procedure, AT-149.

OK or NG

OK	▶	**INSPECTION END**
NG	▶	1. Perform TCM input/output signal inspection. 2. If NG, recheck TCM pin terminals for damage or loose connection with harness connector.

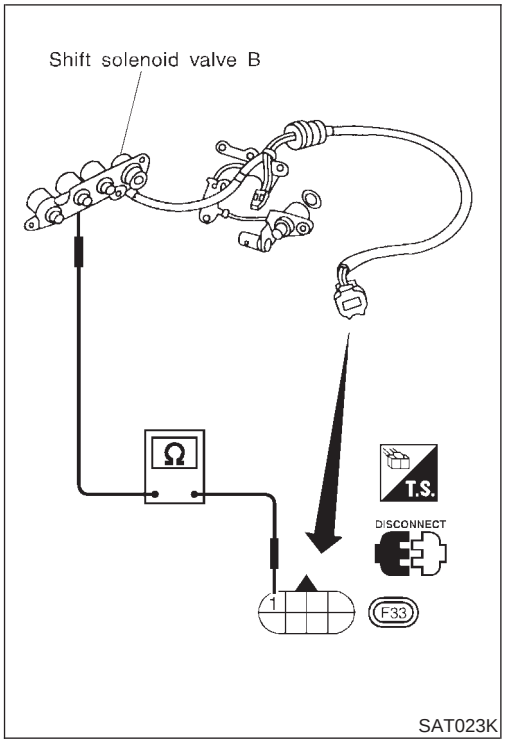

SAT023K

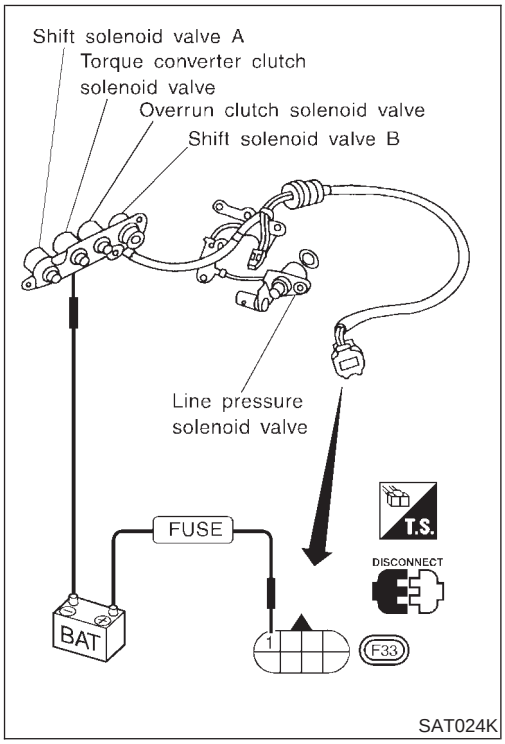

SAT024K

Component Inspection

NJAT0069

SHIFT SOLENOID VALVE B

NJAT0069S01

- For removal, refer to AT-351.

Resistance Check

NJAT0069S0101

- Check resistance between two terminals.

Solenoid valve	Terminal No.		Resistance (Approx.)
Shift solenoid valve B	1	Ground	5 - 20Ω

Operation Check

NJAT0069S0102

- Check solenoid valve by listening for its operating sound while applying battery voltage to the terminal and ground.

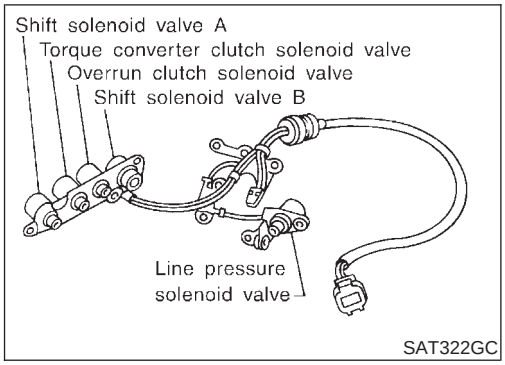

Description

NJAT0073

The overrun clutch solenoid valve is activated by the TCM in response to signals sent from the inhibitor switch, overdrive control switch, vehicle speed and throttle position sensors. The overrun clutch operation will then be controlled.

TCM TERMINALS AND REFERENCE VALUE

NJAT0073S01

Remarks: Specification data are reference values.

Terminal No.	Wire color	Item	Condition		Judgement standard
20	L/B	Overrun clutch solenoid valve		When overrun clutch solenoid valve operates.	Battery voltage
				When overrun clutch solenoid valve does not operate.	1V or less

ON BOARD DIAGNOSIS LOGIC

NJAT0073S02

Diagnostic trouble code	Malfunction is detected when ...	Check items (Possible cause)
: OVERRUN CLUTCH S/V	TCM detects an improper voltage drop when it tries to operate the solenoid valve.	• Harness or connectors (The solenoid circuit is open or shorted.) • Overrun clutch solenoid valve
: 6th judgement flicker		

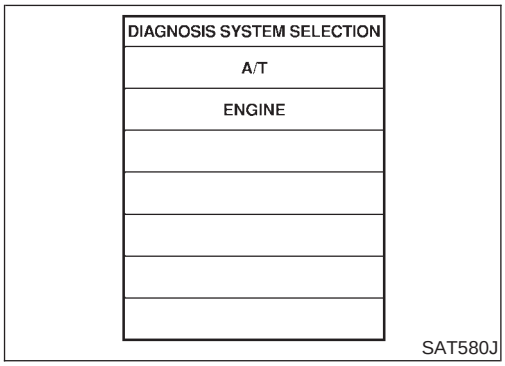

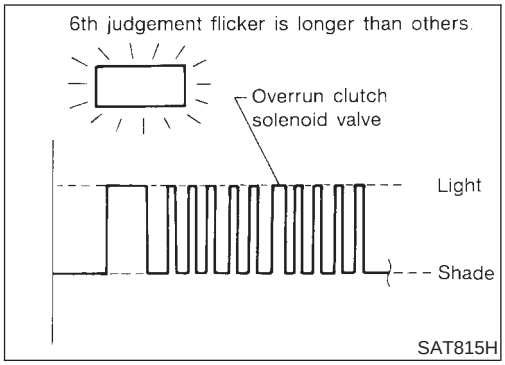

SELF-DIAGNOSIS CODE CONFIRMATION PROCEDURE

NJAT0073S04

After the repair, perform the following procedure to confirm the malfunction is eliminated.

With CONSULT-II

NJAT0073S0401

1) Start engine.
2) Select “SELF-DIAG RESULTS” mode for A/T with CONSULT-II.
3) Drive vehicle under the following conditions:
   Selector lever in “D” position, overdrive control switch in “OFF” position and vehicle speed higher than 10 km/h (6 MPH).

Without CONSULT-II

NJAT0073S0402

1) Start engine.
2) Drive vehicle under the following conditions:
   Selector lever in “D” position, overdrive control switch in “OFF” position and vehicle speed higher than 10 km/h (6 MPH).
3) Perform self-diagnosis.
   Refer to “SELF-DIAGNOSTIC PROCEDURE (Without CONSULT-II)”, AT-44.

Wiring Diagram — AT — OVRCSV

NJAT0213

AT-OVRCSV-01

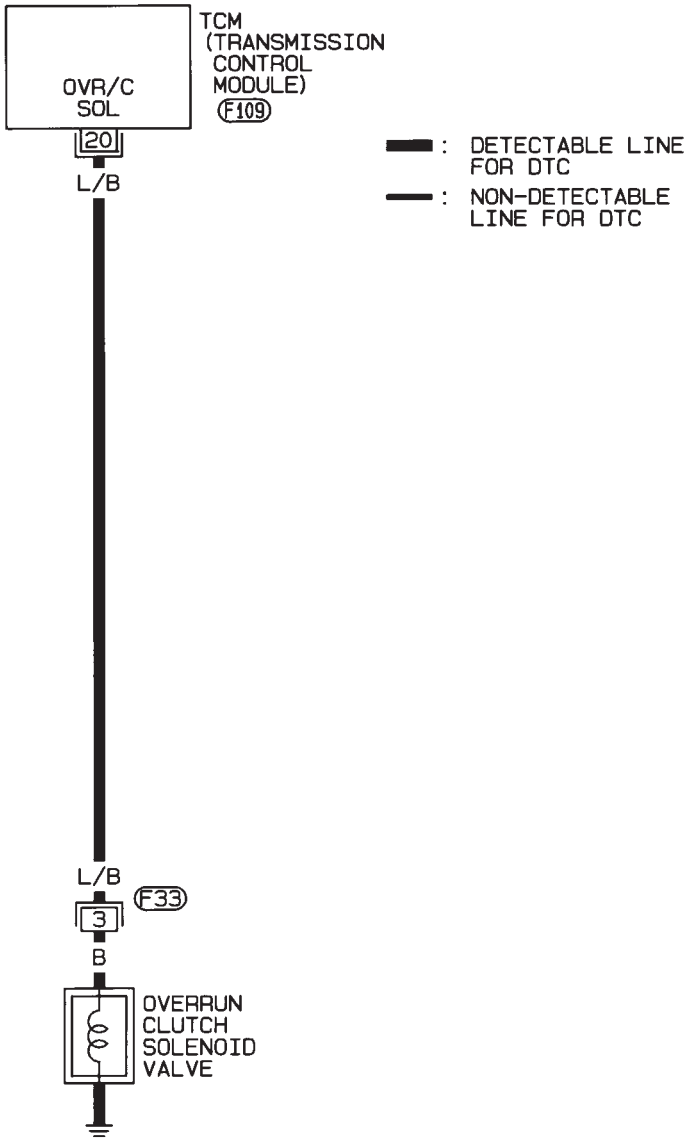

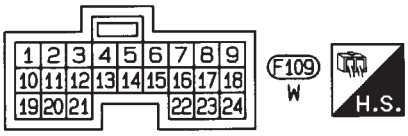

HAT081

Diagnostic Procedure

NJAT0074

1	CHECK VALVE RESISTANCE

1. Turn ignition switch to “OFF” position.
2. Disconnect terminal cord assembly connector in engine compartment.
3. Check resistance between terminal 3 and ground.

Resistance:
20 - 30Ω

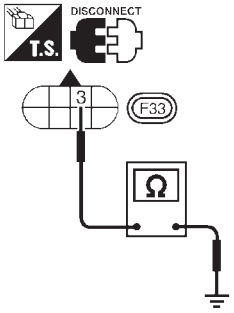

SAT908JA

OK or NG

OK	▶	GO TO 2.
NG	▶	1. Remove control valve assembly. Refer to AT-351. 2. Check the following items: ● Overrun clutch solenoid valve Refer to “Component Inspection”, AT-158. ● Harness of terminal cord assembly for short or open

2	CHECK POWER SOURCE CIRCUIT

1. Turn ignition switch to "OFF" position.
2. Disconnect TCM harness connector.
3. Check continuity between terminal 3 and TCM harness connector terminal 20.
   Continuity should exist.

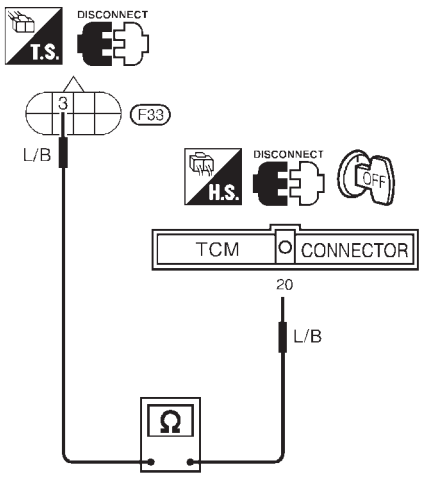

SAT909JA

If OK, check harness for short to ground and short to power.

4. Reinstall any part removed.

OK or NG

OK	▶	GO TO 3.
NG	▶	Repair open circuit or short to ground or short to power in harness or connectors.

3	CHECK DTC

Perform Self-diagnosis Code confirmation procedure, AT-154.

OK or NG

OK	▶	**INSPECTION END**
NG	▶	1. Perform TCM input/output signal inspection. 2. If NG, recheck TCM pin terminals for damage or loose connection with harness connector.

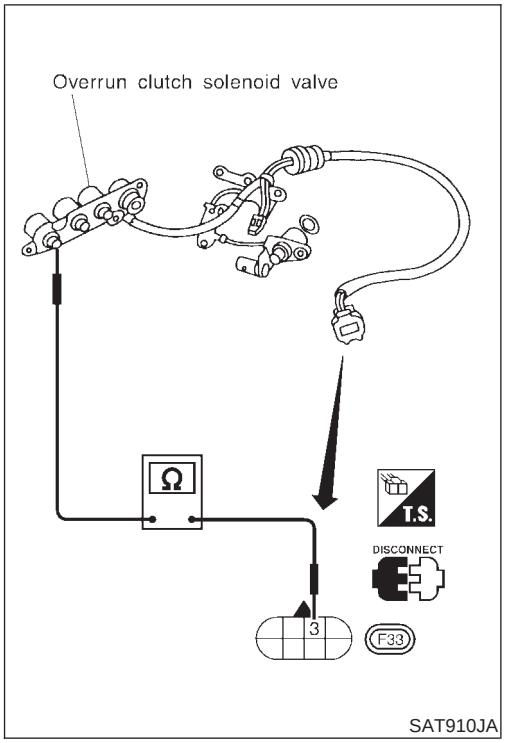

SAT910JA

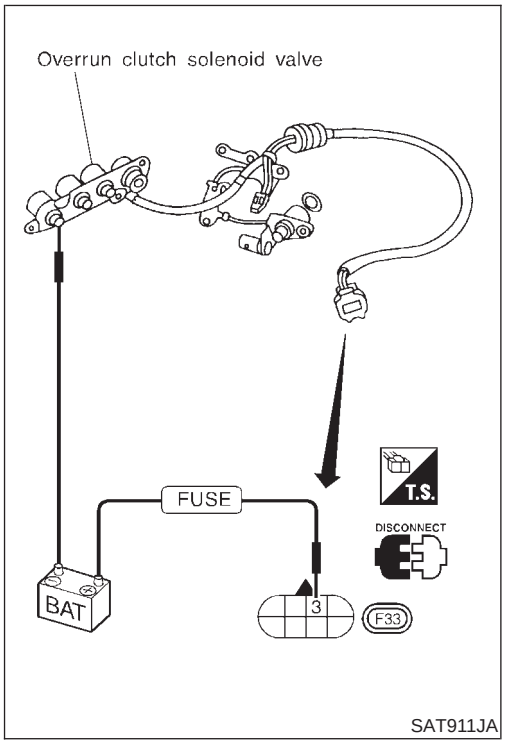

SAT911JA

Component Inspection

NJAT0075

OVERRUN CLUTCH SOLENOID VALVE

NJAT0075S01

- For removal, refer to AT-351.

Resistance Check

NJAT0075S0101

- Check resistance between two terminals.

Solenoid valve	Terminal No.		Resistance (Approx.)
Overrun clutch solenoid valve	3	Ground	20 - 30Ω

Operation Check

NJAT0075S0102

- Check solenoid valve by listening for its operating sound while applying battery voltage to the terminal and ground.

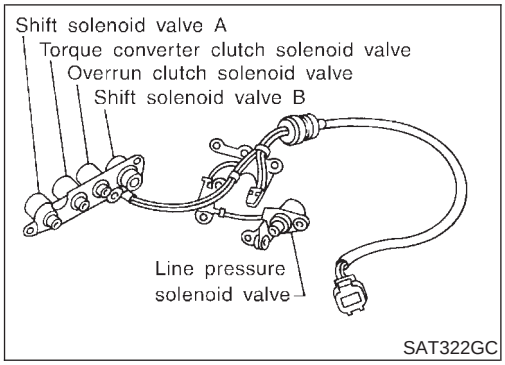

Description

NJAT0055

The torque converter clutch solenoid valve is activated, with the gear in "D_4", by the TCM in response to signals sent from the vehicle speed and throttle position sensors. Lock-up piston operation will then be controlled.
Lock-up operation, however, is prohibited when A/T fluid temperature is too low.
When the accelerator pedal is depressed (less than 2/8) in lock-up condition, the engine speed should not change abruptly. If there is a big jump in engine speed, there is no lock-up.

CONSULT-II REFERENCE VALUE IN DATA MONITOR MODE

NJAT0055S01

Remarks: Specification data are reference values.

Monitor item	Condition	Specification
Torque converter clutch solenoid valve duty	Lock-up "OFF" ↓ Lock-up "ON"	Approximately 4% ↓ Approximately 94%

TCM TERMINALS AND REFERENCE VALUE

NJAT0055S02

Remarks: Specification data are reference values.

Terminal No.	Wire color	Item	Condition		Judgement standard
3	GY/R	Torque converter clutch solenoid valve		When A/T performs lock-up.	8 - 15V
				When A/T does not perform lock-up.	1V or less

ON BOARD DIAGNOSIS LOGIC

NJAT0055S03

Diagnostic trouble code	Malfunction is detected when ...	Check items (Possible cause)
: T/C CLUTCH SOL/V	TCM detects an improper voltage drop when it tries to operate the solenoid valve.	• Harness or connectors (The solenoid circuit is open or shorted.) • T/C clutch solenoid valve
: 7th judgement flicker		

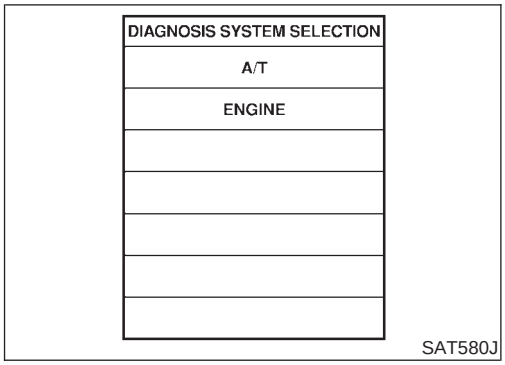

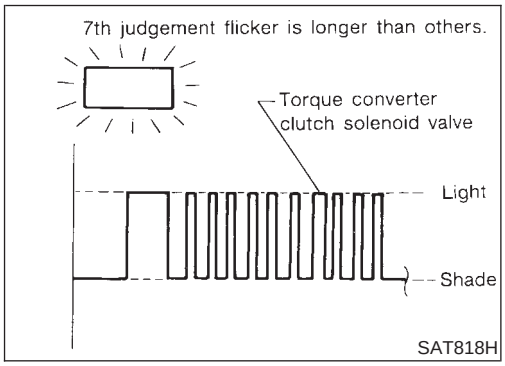

SELF-DIAGNOSIS CODE CONFIRMATION PROCEDURE

NJAT0055S05

After the repair, perform the following procedure to confirm the malfunction is eliminated.

With CONSULT-II

NJAT0055S0501

1) Start engine.
2) Select "SELF-DIAG RESULTS" mode for A/T with CONSULT-II.
3) Drive vehicle in $D_1 \rightarrow D_2 \rightarrow D_3 \rightarrow D_4 \rightarrow D_4$ lock-up position.

Without CONSULT-II

NJAT0055S0502

1) Start engine.
2) Drive vehicle in $D_1 \rightarrow D_2 \rightarrow D_3 \rightarrow D_4 \rightarrow D_4$ lock-up position.
3) Perform self-diagnosis.
   Refer to "SELF-DIAGNOSTIC PROCEDURE (Without CONSULT-II)", AT-44.

Wiring Diagram — AT — TCV

NJAT0207

AT-TCV-01

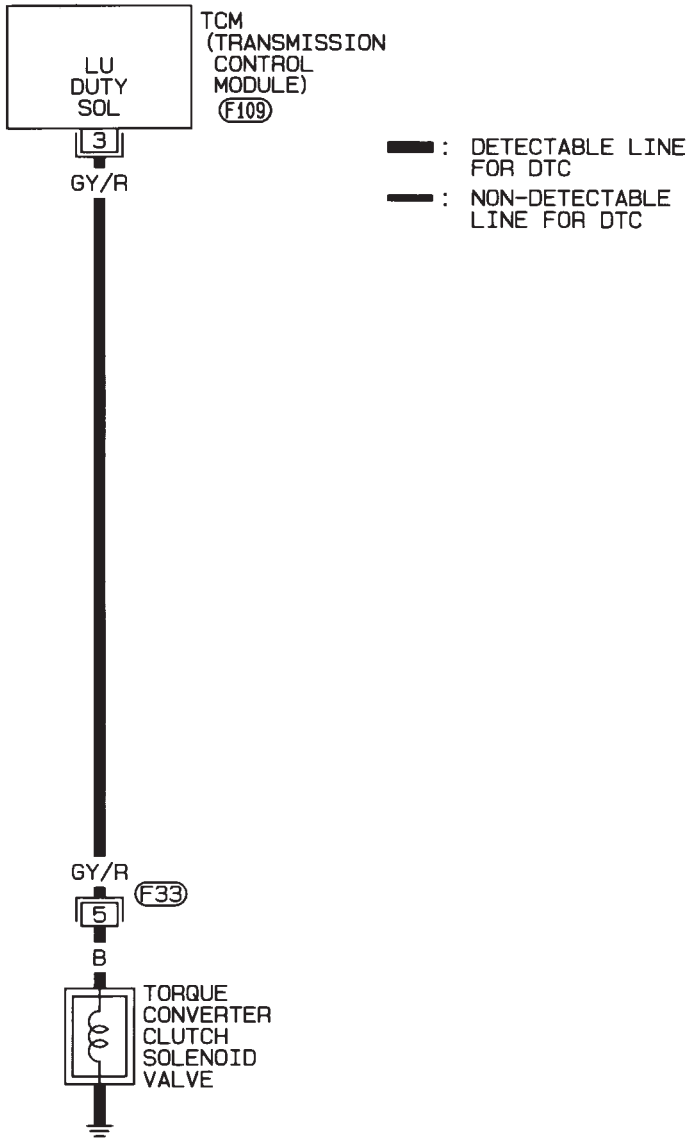

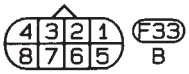

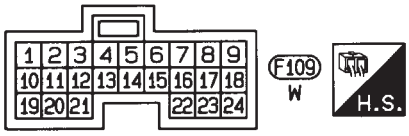

HAT082

Diagnostic Procedure

NJAT0056

1	CHECK VALVE RESISTANCE

1. Turn ignition switch to “OFF” position.
2. Disconnect terminal cord assembly connector in engine compartment.
3. Check resistance between terminal 5 and ground.

Resistance:
5 - 20Ω

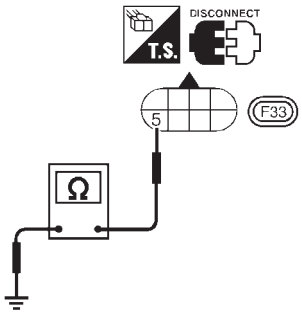

SAT889JA

OK or NG

OK	▶	GO TO 2.
NG	▶	1. Remove oil pan. Refer to AT-351. 2. Check the following items: ● Torque converter clutch solenoid valve Refer to “Component Inspection”, AT-164. ● Harness of terminal cord assembly for short or open

2	CHECK POWER SOURCE CIRCUIT

1. Turn ignition switch to "OFF" position.
2. Disconnect TCM harness connector.
3. Check continuity between terminal 5 and TCM harness connector terminal 3.
   Continuity should exist.

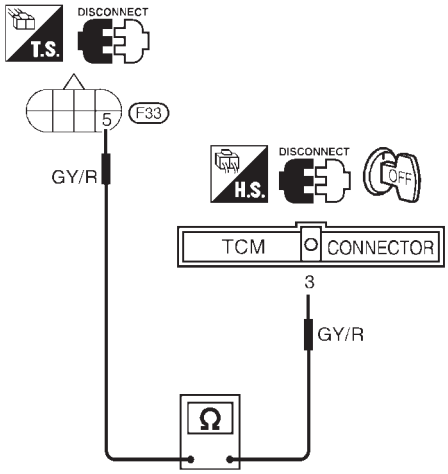

SAT890JA

If OK, check harness for short to ground and short to power.

4. Reinstall any part removed.

OK or NG

OK	▶	GO TO 3.
NG	▶	Repair open circuit or short to ground or short to power in harness or connectors.

3	CHECK DTC

Perform Self-diagnosis Code confirmation procedure, AT-160.

OK or NG

OK	▶	**INSPECTION END**
NG	▶	1. Perform TCM input/output signal inspection. 2. If NG, recheck TCM pin terminals for damage or loose connection with harness connector.

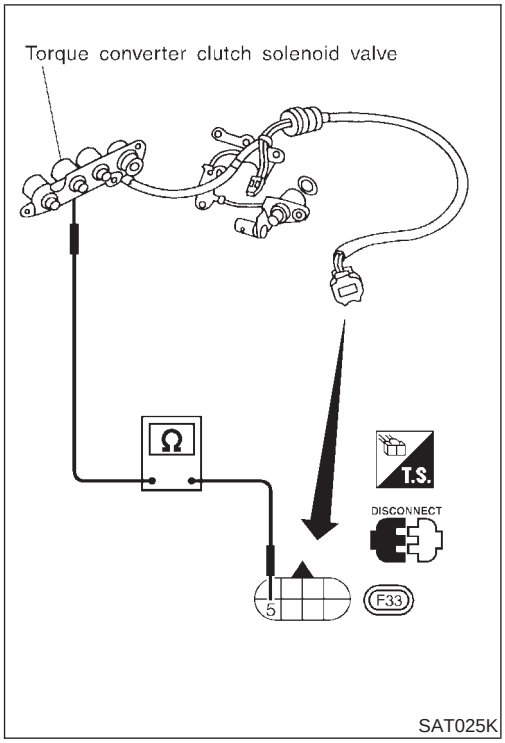

SAT025K

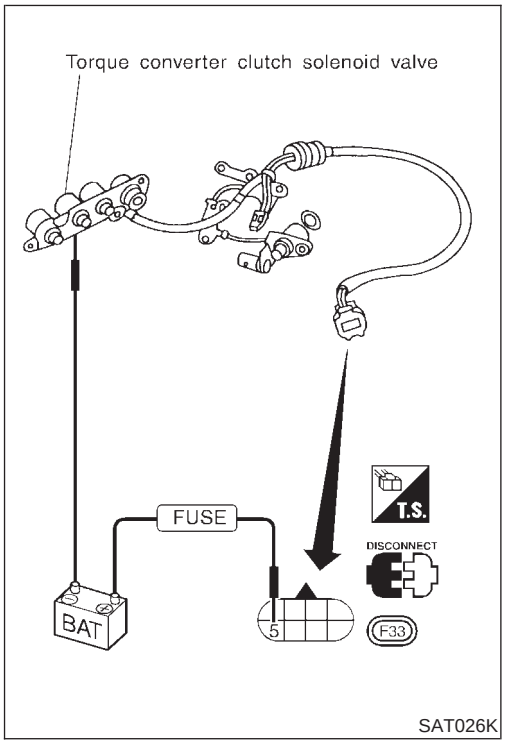

SAT026K

Component Inspection

NJAT0057

TORQUE CONVERTER CLUTCH SOLENOID VALVE

NJAT0057S01

- For removal, refer to AT-351.

Resistance Check

NJAT0057S0101

- Check resistance between two terminals.

Solenoid valve	Terminal No.		Resistance (Approx.)
Torque converter clutch solenoid valve	5	Ground	5 - 20Ω

Operation Check

NJAT0057S0102

- Check solenoid valve by listening for its operating sound while applying battery voltage to the terminal and ground.

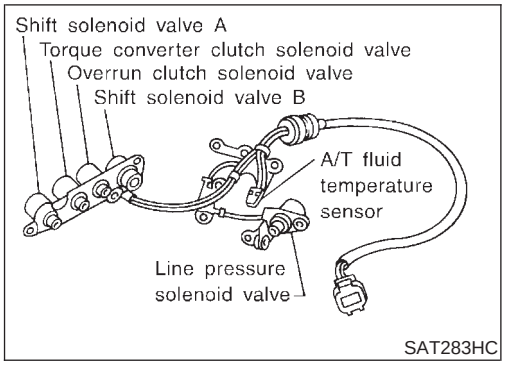

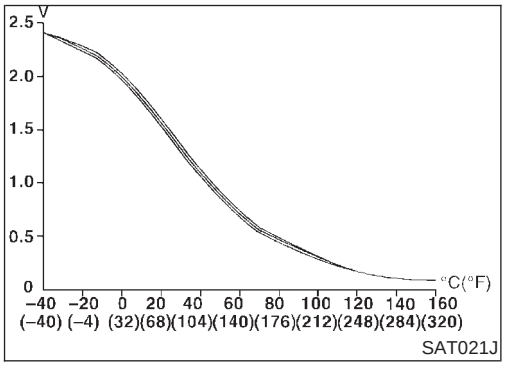

Description

NJAT0076

The A/T fluid temperature sensor detects the A/T fluid temperature and sends a signal to the TCM.

CONSULT-II REFERENCE VALUE IN DATA MONITOR MODE

NJAT0076S01

Remarks: Specification data are reference values.

Monitor item	Condition	Specification	
A/T fluid temperature sensor	Cold [20°C (68°F)] ↓ Hot [80°C (176°F)]	Approximately 1.5V ↓ Approximately 0.5V	Approximately 2.5 kΩ ↓ Approximately 0.3 kΩ

TCM TERMINALS AND REFERENCE VALUE

NJAT0076S02

Remarks: Specification data are reference values.

Terminal No.	Wire color	Item	Condition		Judgement standard
10	BR/R	Power source	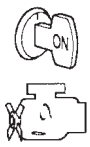	When turning ignition switch to “ON”.	Battery voltage
				When turning ignition switch to “OFF”.	1V or less
19	BR/R	Power source		Same as No. 10	
28	R/B	Power source (Memory back-up)	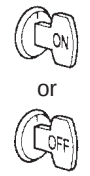	When turning ignition switch to “OFF”.	Battery voltage
				When turning ignition switch to “ON”.	Battery voltage
42	B	Ground (A/T fluid temperature sensor)		—	—
47	BR	A/T fluid temperature sensor		When ATF temperature is 20°C (68°F).	Approximately 1.5V
				When ATF temperature is 80°C (176°F).	Approximately 0.5V

Description (Cont'd)

ON BOARD DIAGNOSIS LOGIC

NJAT0076S03

Diagnostic trouble code	Malfunction is detected when ...	Check items (Possible cause)
: BATT/FLUID TEMP SEN	TCM receives an excessively low or high voltage from the sensor.	• Harness or connectors (The sensor circuit is open or shorted.) • A/T fluid temperature sensor
: 8th judgement flicker		

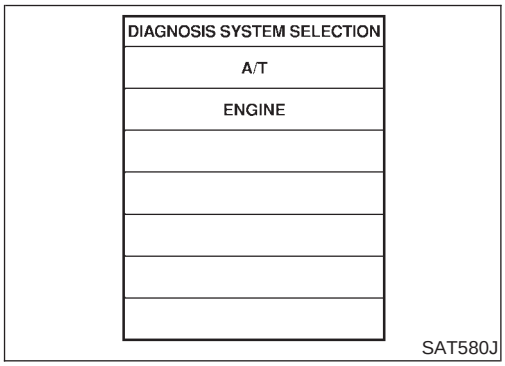

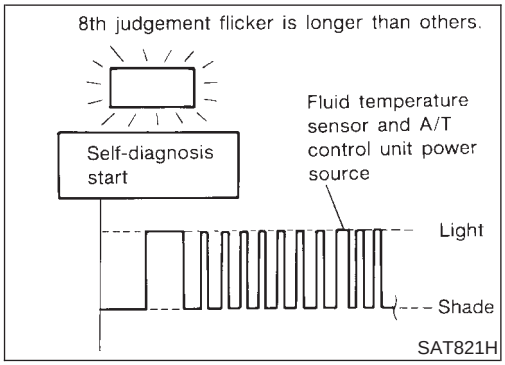

SELF-DIAGNOSIS CODE CONFIRMATION PROCEDURE

NJAT0076S05

After the repair, perform the following procedure to confirm the malfunction is eliminated.

With CONSULT-II

NJAT0076S0501

1) Start engine.
2) Select "SELF-DIAG RESULTS" mode for A/T with CONSULT-II.
3) Drive vehicle under the following conditions:
   Selector lever in "D" position, vehicle speed higher than 10 km/h (6 MPH), throttle opening greater than 1/8 of the full open position, engine speed higher than 450 rpm and driving for more than 10 minutes.

Without CONSULT-II

NJAT0076S0502

1) Start engine.
2) Drive vehicle under the following conditions:
   Selector lever in "D" position, vehicle speed higher than 10 km/h (6 MPH), throttle opening greater than 1/8 of the full open position, engine speed higher than 450 rpm and driving for more than 10 minutes.
3) Perform self-diagnosis.
   Refer to "SELF-DIAGNOSTIC PROCEDURE (Without CONSULT-II)", AT-44.

Wiring Diagram — AT — BA/FTS

NJAT0214

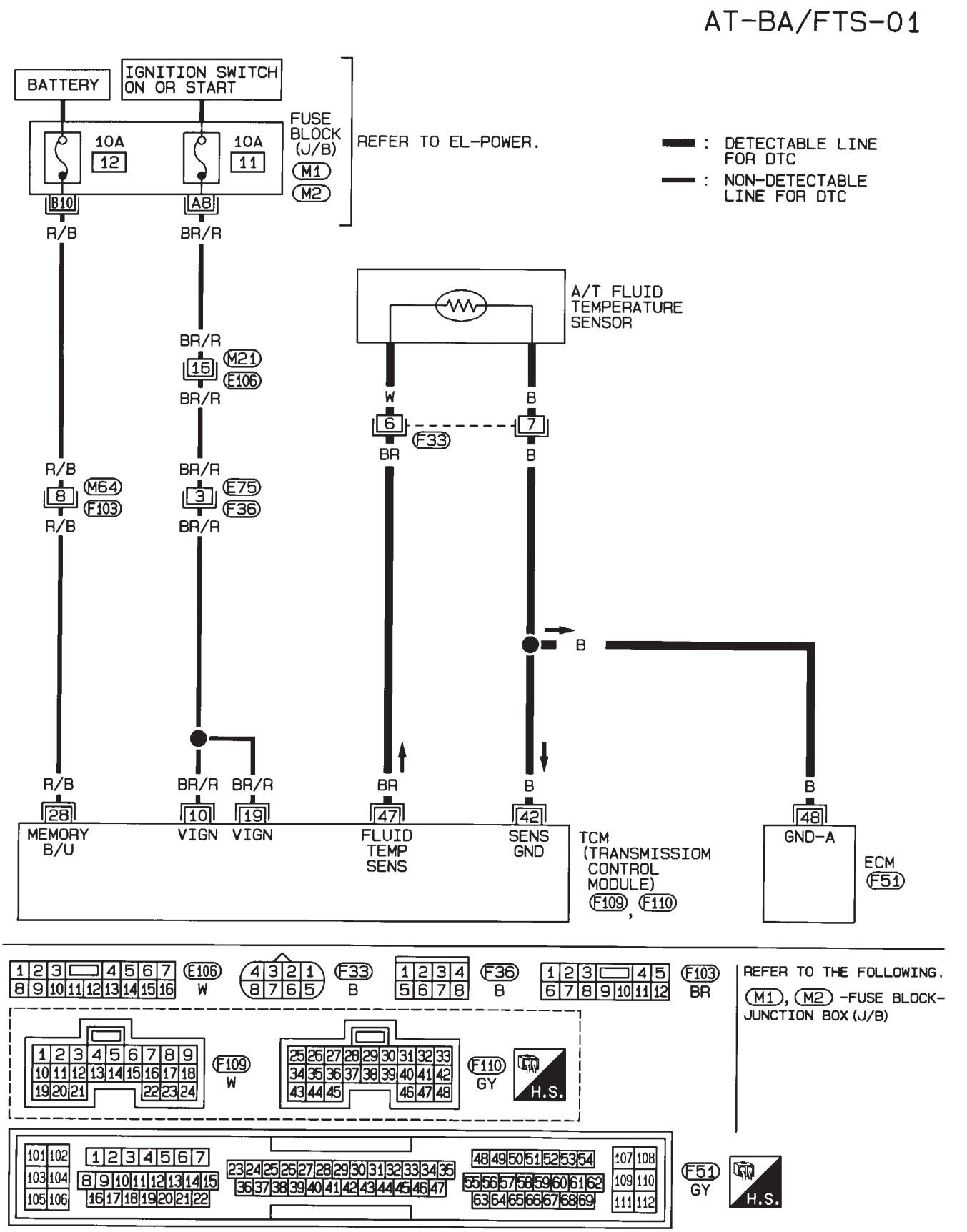

Diagnostic Procedure

NJAT0077

1	CHECK TCM POWER SOURCE

1. Turn ignition switch to “ON” position.
   (Do not start engine.)
2. Check voltage between TCM terminals 10, 19, 28 and ground.
   Voltage:
   Battery voltage
3. Turn ignition switch to “OFF” position.
4. Check voltage between TCM terminal 28 and ground.
   Voltage:
   Battery voltage

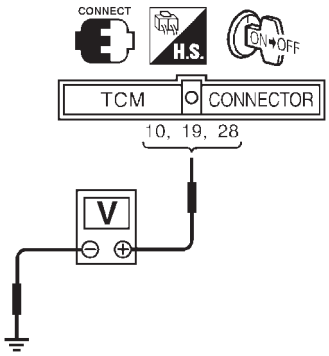

SAT461J

OK or NG

OK	▶	GO TO 2.
NG	▶	**Check the following items:** ● Harness for short or open between ignition switch and TCM (Main harness) ● Ignition switch and fuse Refer to EL-10, “POWER SUPPLY ROUTING”.

2	CHECK A/T FLUID TEMPERATURE SENSOR WITH TERMINAL CORD ASSEMBLY

1. Turn ignition switch to "OFF" position.
2. Disconnect terminal cord assembly connector in engine compartment.
3. Check resistance between terminals 6 and 7 when A/T is cold.
   Resistance:
   Cold [20°C (68°F)]
   Approximately 2.5 kΩ

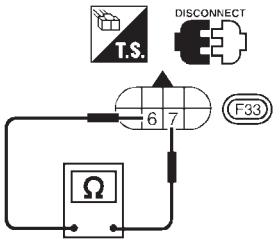

SAT912JA

4. Reinstall any part removed.

OK or NG

OK (With CONSULT-II) ▶	GO TO 3.
OK (Without CONSULT-II) ▶	GO TO 4.
NG ▶	1. Remove oil pan. 2. Check the following items: ● A/T fluid temperature sensor Refer to "Component Inspection", AT-171. ● Harness of terminal cord assembly for short or open

3	CHECK INPUT SIGNAL OF A/T FLUID TEMPERATURE SENSOR (WITH CONSULT-II)

With CONSULT-II

1. Start engine.
2. Select "ECU INPUT SIGNALS" in "DATA MONITOR" mode for "A/T" with CONSULT-II.
3. Read out the value of "FLUID TEMP SE".
   Voltage:
   Cold [20°C (68°F)] → Hot [80°C (176°F)]:
   Approximately 1.5V → 0.5V

DATA MONITOR	
MONITORING	
VHCL/S SE-A/T	XXX km/h
VHCL/S SE-MTR	XXX km/h
THRTL POS SEN	XXX V
FLUID TEMP SE	XXX V
BATTERY VOLT	XXX V

SAT614J

OK or NG

OK ▶	GO TO 5.
NG ▶	**Check the following item:** ● Harness for short or open between TCM, ECM and terminal cord assembly (Main harness) ● Ground circuit for ECM Refer to EC-178, "TROUBLE DIAGNOSIS FOR POWER SUPPLY".

4	CHECK INPUT SIGNAL OF A/T FLUID TEMPERATURE SENSOR (WITHOUT CONSULT-II)

Without CONSULT-II

1. Start engine.
2. Check voltage between TCM terminal 47 and ground while warming up A/T.

Voltage:

Cold [20°C (68°F)] → Hot [80°C (176°F)]:

Approximately 1.5V → 0.5V

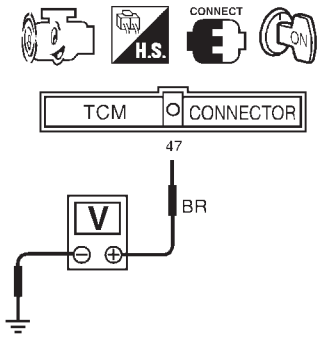

SAT463J

3. Turn ignition switch to "OFF" position.
4. Disconnect TCM harness connector.
5. Check resistance between terminal 42 and ground.

Continuity should exist.

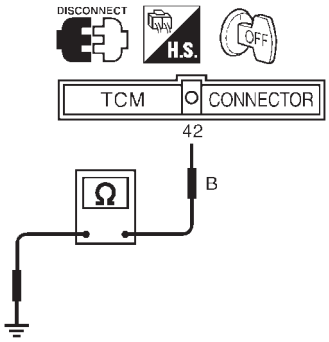

SAT464J

OK or NG

OK	▶	GO TO 5.
NG	▶	**Check the following item:** ● Harness for short or open between TCM, ECM and terminal cord assembly (Main harness) ● Ground circuit for ECM Refer to EC-178, "TROUBLE DIAGNOSIS FOR POWER SUPPLY".

5	CHECK DTC

Perform Self-diagnosis Code confirmation procedure, AT-166.

OK or NG

OK	▶	**INSPECTION END**
NG	▶	1. Perform TCM input/output signal inspection. 2. If NG, recheck TCM pin terminals for damage or loose connection with harness connector.

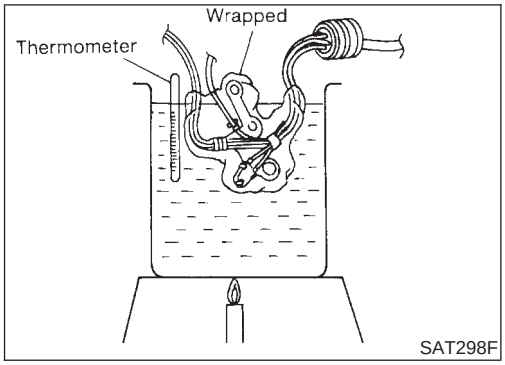

Component Inspection

NJAT0078

A/T FLUID TEMPERATURE SENSOR

NJAT0078S01

- For removal, refer to AT-351.
- Check resistance between two terminals while changing temperature as shown at left.

Temperature °C (°F)	Resistance
20 (68)	Approximately 2.5 kΩ
80 (176)	Approximately 0.3 kΩ

Description

NJAT0041

The engine speed signal is sent from the ECM to the TCM.

TCM TERMINALS AND REFERENCE VALUE

NJAT0041S01

Remarks: Specification data are reference values.

Terminal No.	Wire color	Item	Condition		Judgement standard
39	L/OR	Engine speed signal	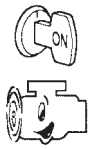	Refer to EC-32, “ECM INSPECTION TABLE”.	—

ON BOARD DIAGNOSIS LOGIC

NJAT0041S02

Diagnostic trouble code	Malfunction is detected when ...	Check item (Possible cause)
: ENGINE SPEED SIG	TCM does not receive the proper voltage signal from ECM.	● Harness or connectors (The sensor circuit is open or shorted.)
: 9th judgement flicker		

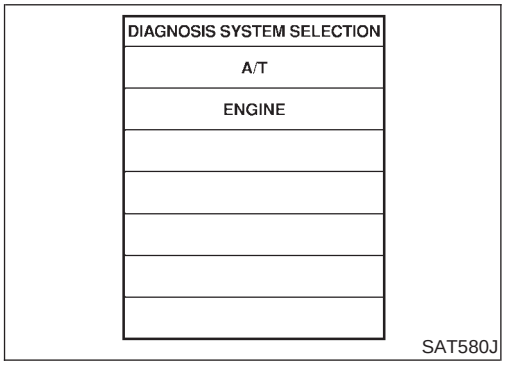

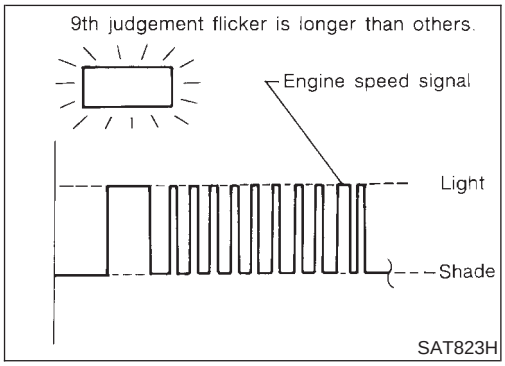

SELF-DIAGNOSIS CODE CONFIRMATION PROCEDURE

NJAT0041S04

After the repair, perform the following procedure to confirm the malfunction is eliminated.

With CONSULT-II

NJAT0041S0401

1) Start engine.
2) Select “SELF-DIAG RESULTS” mode for A/T with CONSULT-II.
3) Drive vehicle under the following conditions:
   Selector lever in “D” position, vehicle speed higher than 10 km/h (6 MPH), throttle opening greater than 1/8 of the full throttle position and driving for more than 10 seconds.

Without CONSULT-II

NJAT0041S0402

1) Start engine.
2) Drive vehicle under the following conditions:
   Selector lever in “D” position, vehicle speed higher than 10 km/h (6 MPH), throttle opening greater than 1/8 of the full throttle position and driving for more than 10 seconds.
3) Perform self-diagnosis.
   Refer to “SELF-DIAGNOSTIC PROCEDURE (Without CONSULT-II)”, AT-44.

Wiring Diagram — AT — ENGSS

NJAT0202

AT-ENGSS-01

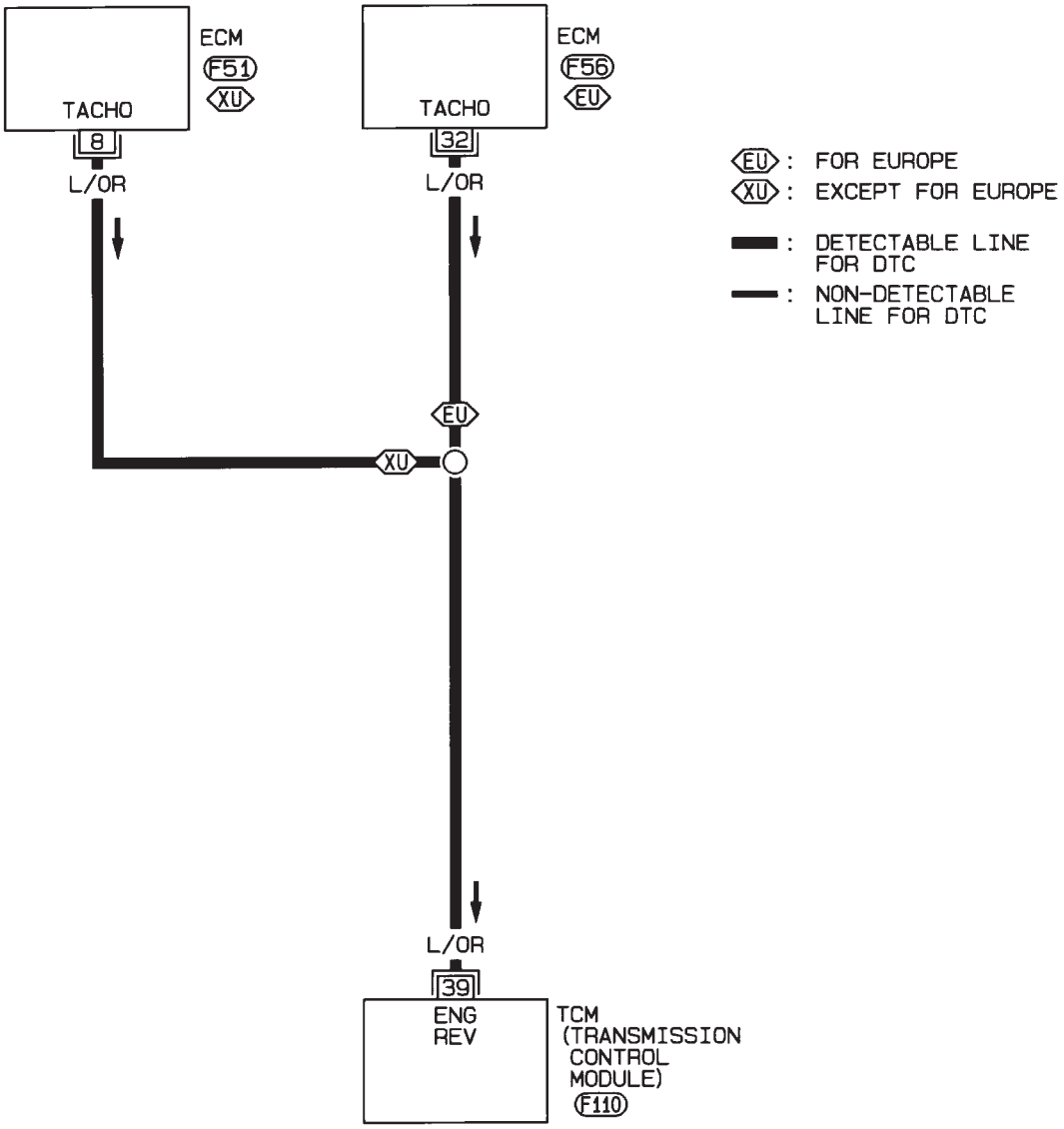

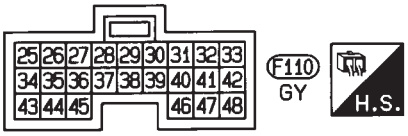

REFER TO THE FOLLOWING.
F51, F56 -ELECTRICAL UNITS

HAT095

Diagnostic Procedure

NJAT0042

1	CHECK DTC WITH ECM
Perform diagnostic test mode II (self-diagnostic results) for engine control. Check ignition signal circuit condition.	
OK or NG	
OK (With CONSULT-II) ▶	GO TO 2.
OK (Without CONSULT-II) ▶	GO TO 3.
NG ▶	Check ignition signal circuit for engine control. Refer to EC-547, “IGNITION SIGNAL”.

2	CHECK INPUT SIGNAL (With CONSULT-II)

With CONSULT-II

1. Start engine.
2. Select “ECU INPUT SIGNALS” in “DATA MONITOR” mode for “A/T” with CONSULT-II.

DIAGNOSIS SYSTEM SELECTION
A/T
ENGINE

SAT580J

3. Read out the value of “ENGINE SPEED”.
   Check engine speed changes according to throttle position.

DATA MONITOR	
MONITORING	
ENGINE SPEED	XXX rpm
TURBINE REV	XXX rpm
OVERDRIVE SW	ON
PN POSI SW	OFF
R POSITION SW	OFF

SAT645J

OK or NG

OK ▶	GO TO 4.
NG ▶	**Check the following items:** ● Harness for short or open between TCM and ECM ● Resistor and ignition coil Refer to EC-547, “IGNITION SIGNAL”.

3	CHECK INPUT SIGNAL (Without CONSULT-II)

Without CONSULT-II

1. Start engine.
2. Check voltage between TCM terminal 39 and ground.

Voltage (Idle speed):

Refer to EC-593, "Idle Speed and Ignition Timing".

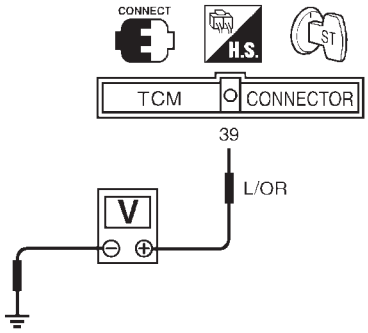

SAT424JA

OK or NG

OK	▶	GO TO 4.
NG	▶	**Check the following items:** ● Harness for short or open between TCM and ECM ● Resistor and ignition coil Refer to EC-547, "IGNITION SIGNAL".

4	CHECK DTC

Perform Self-diagnosis Code confirmation procedure, AT-172.

OK or NG

OK	▶	**INSPECTION END**
NG	▶	1. Perform TCM input/output signal inspection. 2. If NG, recheck TCM pin terminals for damage or loose connection with harness connector.

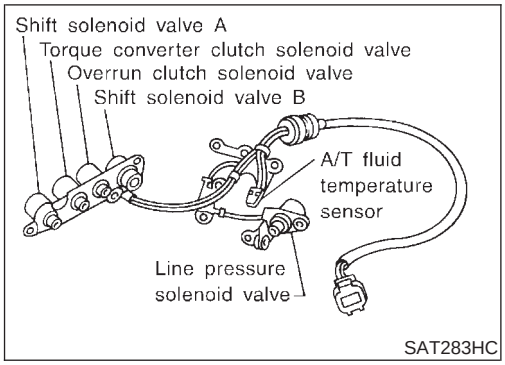

Description

NJAT0061

The line pressure solenoid valve regulates the oil pump discharge pressure to suit the driving condition in response to a signal sent from the TCM.

The line pressure duty cycle value is not consistent when the closed throttle position switch is "ON". To confirm the line pressure duty cycle at low pressure, the accelerator (throttle) should be open until the closed throttle position switch is "OFF".

CONSULT-II REFERENCE VALUE IN DATA MONITOR MODE

NJAT0061S01

Remarks: Specification data are reference values.

Monitor item	Condition	Specification
Line pressure solenoid valve duty	Small throttle opening (Low line pressure) ↓ Large throttle opening (High line pressure)	Approximately 24% ↓ Approximately 95%

NOTE:

The line pressure duty cycle value is not consistent when the closed throttle position switch is "ON". To confirm the line pressure duty cycle at low pressure, the accelerator (throttle) should be open until the closed throttle position switch is "OFF".

TCM TERMINALS AND REFERENCE VALUE

NJAT0061S02

Remarks: Specification data are reference values.

Terminal No.	Wire color	Item	Condition		Judgement standard
1	R/W	Line pressure solenoid valve		When releasing accelerator pedal after warming up engine.	1.5 - 2.5V
				When depressing accelerator pedal fully after warming up engine.	0.5V or less
2	P/B	Line pressure solenoid valve (with dropping resistor)		When releasing accelerator pedal after warming up engine.	5 - 14V
				When depressing accelerator pedal fully after warming up engine.	0.5V or less

ON BOARD DIAGNOSIS LOGIC

NJAT0061S03

Diagnostic trouble code	Malfunction is detected when ...	Check items (Possible cause)
: LINE PRESSURE S/V	TCM detects an improper voltage drop when it tries to operate the solenoid valve.	• Harness or connectors (The solenoid circuit is open or shorted.) • Line pressure solenoid valve
: 10th judgement flicker		

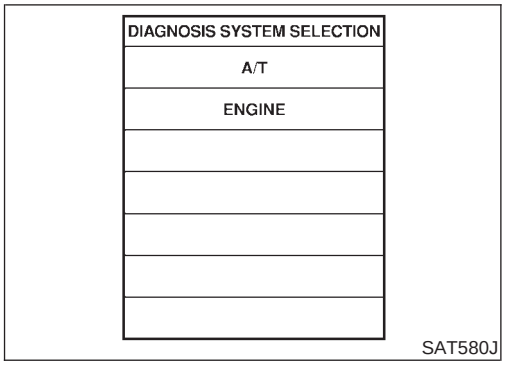

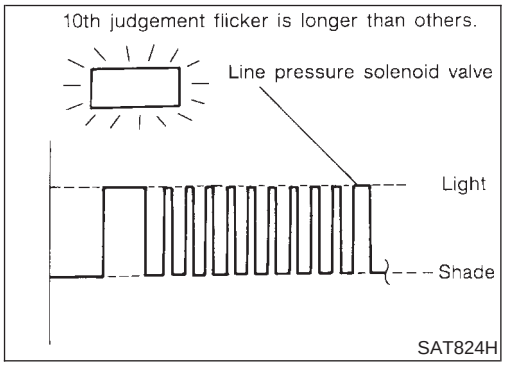

SELF-DIAGNOSIS CODE CONFIRMATION PROCEDURE

NJAT0061S05

After the repair, perform the following procedure to confirm the malfunction is eliminated.

With CONSULT-II

NJAT0061S0501

1) Start engine.
2) Select "SELF-DIAG RESULTS" mode for A/T with CONSULT-II.
3) With brake pedal depressed, shift the lever from "P" → "N" → "D" → "N" → "P" positions.

Without CONSULT-II

NJAT0061S0502

1) Start engine.
2) With brake pedal depressed, shift the lever from "P" → "N" → "D" → "N" → "P" positions.
3) Perform self-diagnosis.
   Refer to "SELF-DIAGNOSTIC PROCEDURE (Without CONSULT-II)", AT-44.

Wiring Diagram — AT — LPSV

NJAT0209

AT-LPSV-01

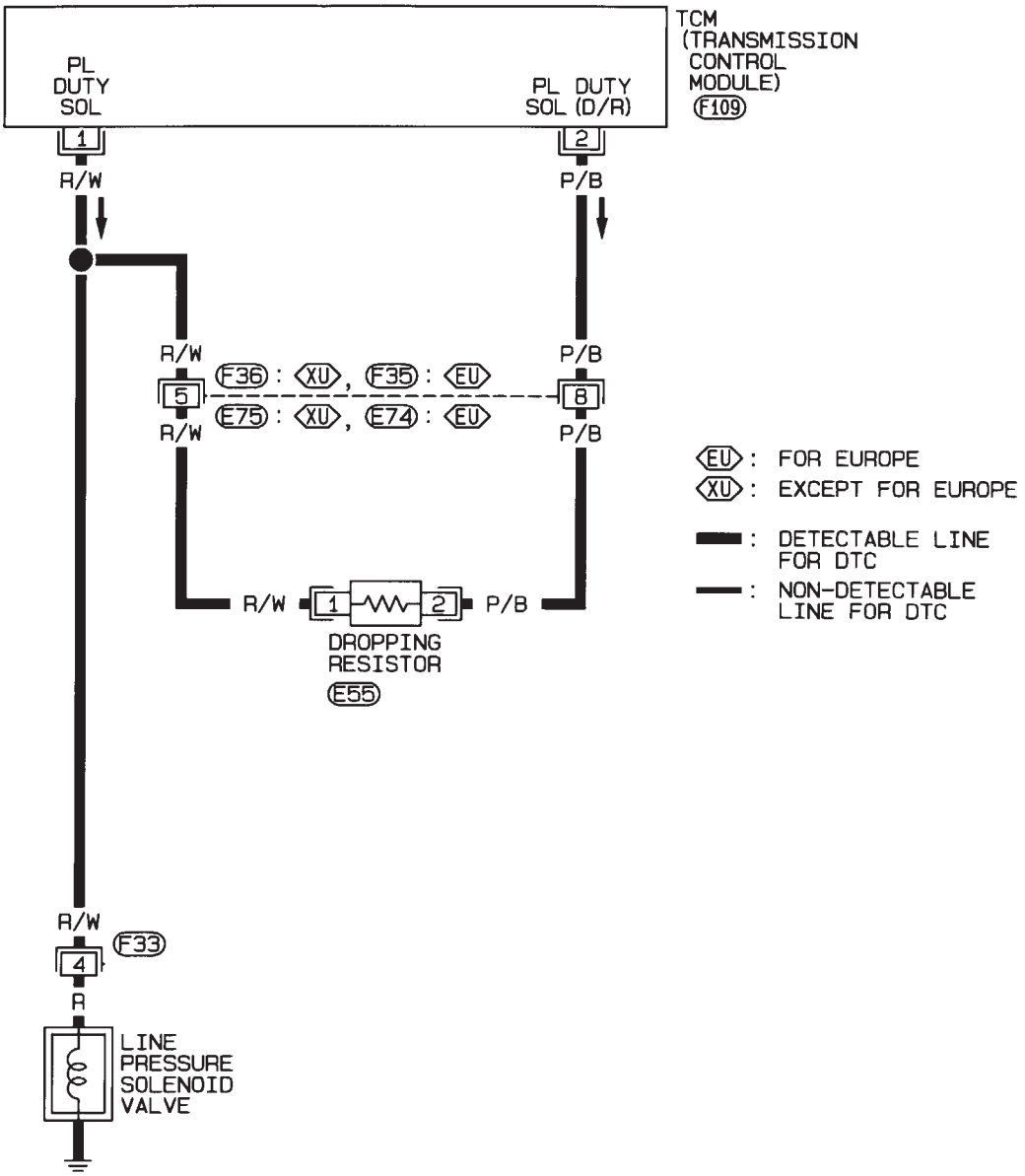

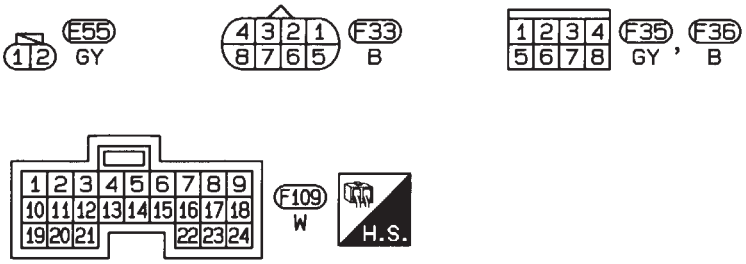

HAT096

Diagnostic Procedure

NJAT0062

1	CHECK VALVE RESISTANCE

1. Turn ignition switch to “OFF” position.
2. Disconnect terminal cord assembly connector in engine compartment.
3. Check resistance between terminal 4 and ground.

Resistance:

2.5 - 5Ω

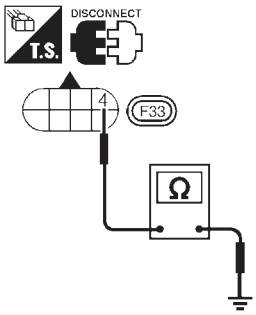

SAT895JA

OK or NG

OK	▶	GO TO 2.
NG	▶	1. Remove control valve assembly. Refer to AT-351. 2. Check the following items: ● Line pressure solenoid valve Refer to “Component Inspection”, AT-182. ● Harness of terminal cord assembly for short or open

2	CHECK POWER SOURCE CIRCUIT

1. Turn ignition switch to "OFF" position.
2. Disconnect TCM harness connector.
3. Check resistance between terminal 4 and TCM harness connector terminal 2.

Resistance:
10 - 15Ω

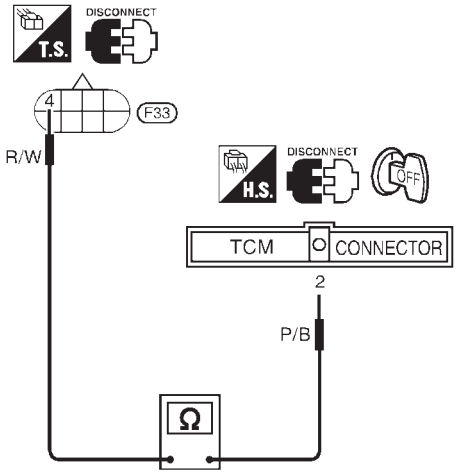

SAT896JA

OK or NG

OK	▶	GO TO 3.
NG	▶	**Check the following items:** ● Dropping resistor Refer to "Component Inspection", AT-182. ● Harness for short or open between TCM terminal 2 and terminal cord assembly (Main harness)

3	CHECK POWER SOURCE CIRCUIT

1. Turn ignition switch to "OFF" position.
2. Check resistance between terminal 4 and TCM harness connector terminal 1.

Resistance:

Approx. 0Ω

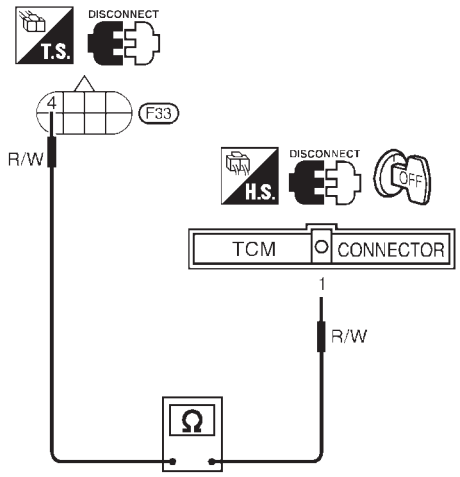

SAT897JA

If OK, check harness for short to ground and short to power.

3. Reinstall any part removed.

OK or NG

OK	▶	GO TO 4.
NG	▶	Repair open circuit or short to ground or short to power in harness or connectors.

4	CHECK DTC

Perform Self-diagnosis Code confirmation procedure, AT-177.

OK or NG

OK	▶	**INSPECTION END**
NG	▶	1. Perform TCM input/output signal inspection. 2. If NG, recheck TCM pin terminals for damage or loose connection with harness connector.

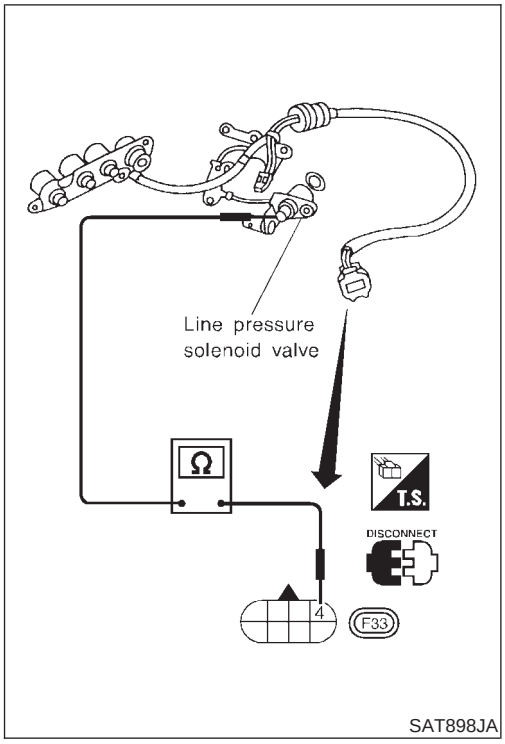

SAT898JA

Component Inspection

=NJAT0063

LINE PRESSURE SOLENOID VALVE

NJAT0063S01

- For removal, refer to AT-351.

Resistance Check

NJAT0063S0101

- Check resistance between two terminals.

Solenoid valve	Terminal No.		Resistance (Approx.)
Line pressure solenoid valve	4	Ground	2.5 - 5Ω

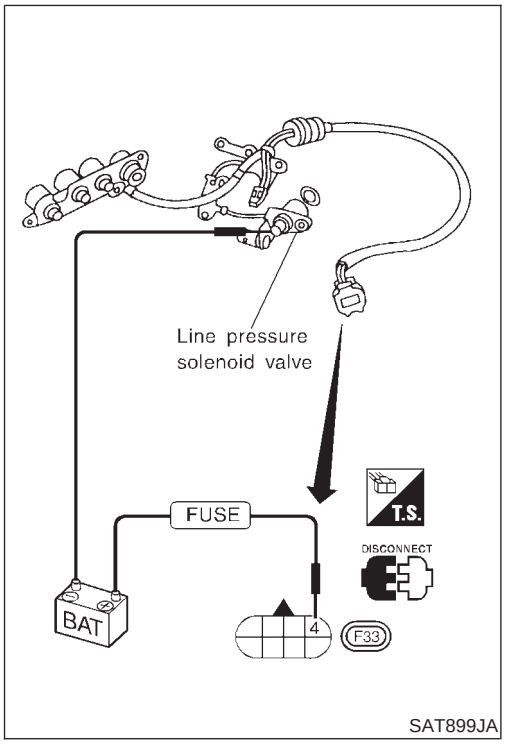

SAT899JA

Operation Check

NJAT0063S0102

- Check solenoid valve by listening for its operating sound while applying battery voltage to the terminal and ground.

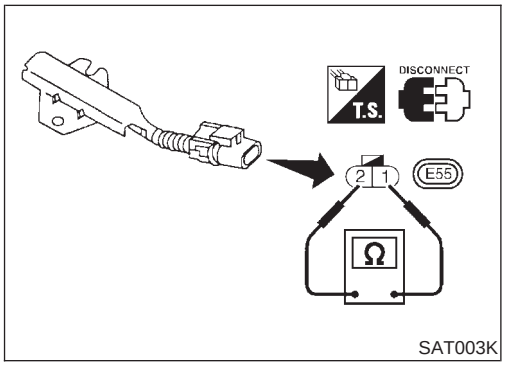

SAT003K

DROPPING RESISTOR

NJAT0063S02

- Check resistance between two terminals.

Resistance:
10 - 15Ω

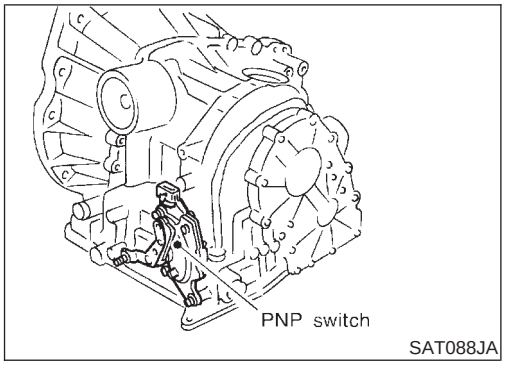

Description

NJAT0264

- The PNP switch assembly includes a transmission range switch.
- The transmission range switch detects the selector lever position and sends a signal to the TCM.

TCM TERMINALS AND REFERENCE VALUE

NJAT0264S01

Remarks: Specification data are reference values.

Terminal No.	Wire color	Item	Condition		Judgement standard
26	BR/Y	PNP switch “1” position	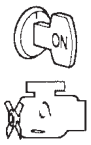	When setting selector lever to “1” position.	Battery voltage
				When setting selector lever to other positions.	1V or less
27	L	PNP switch “2” position		When setting selector lever to “2” position.	Battery voltage
				When setting selector lever to other positions.	1V or less
34	W/G	PNP switch “D” position		When setting selector lever to “D” position.	Battery voltage
				When setting selector lever to other positions.	1V or less
35	G/W	PNP switch “R” position		When setting selector lever to “R” position.	Battery voltage
				When setting selector lever to other positions.	1V or less
36	G	PNP switch “N” or “P” position		When setting selector lever to “N” or “P” position.	Battery voltage
				When setting selector lever to other positions.	1V or less

ON BOARD DIAGNOSIS LOGIC

NJAT0264S02

Diagnostic trouble code	Malfunction is detected when ...	Check items (Possible cause)
: PNP SW/CIRC	TCM does not receive the correct voltage signal from the switch based on the gear position.	• Harness or connectors (The PNP switch circuit is open or shorted.) • PNP switch
GST : P0705		

Description (Cont'd)

SELECT SYSTEM
A/T
ENGINE

SAT014K

SELECT DIAG MODE
WORK SUPPORT
SELF-DIAG RESULTS
DATA MONITOR
ACTIVE TEST
DTC & SRT CONFIRMATION
ECM PART NUMBER

SAT020K

DIAGNOSTIC TROUBLE CODE (DTC) CONFIRMATION PROCEDURE

NJAT0264S03

CAUTION:

Always drive vehicle at a safe speed.

NOTE:

If "DIAGNOSTIC TROUBLE CODE CONFIRMATION PROCEDURE" has been previously conducted, always turn ignition switch "OFF" and wait at least 5 seconds before conducting the next test.

After the repair, perform the following procedure to confirm the malfunction is eliminated.

With CONSULT-II

1) Turn ignition switch "ON".
2) Select "DATA MONITOR" mode for "ENGINE" with CONSULT-II.
3) Start engine and maintain the following conditions for at least 5 consecutive seconds.
   VHCL SPEED SE: 10 km/h (6 MPH) or more
   THRTL POS SEN: More than 1.3V
   Selector lever: D position (OD "ON" or "OFF")

With GST

Follow the procedure "With CONSULT-II".

Wiring Diagram — AT — PNP/SW

NJAT0265

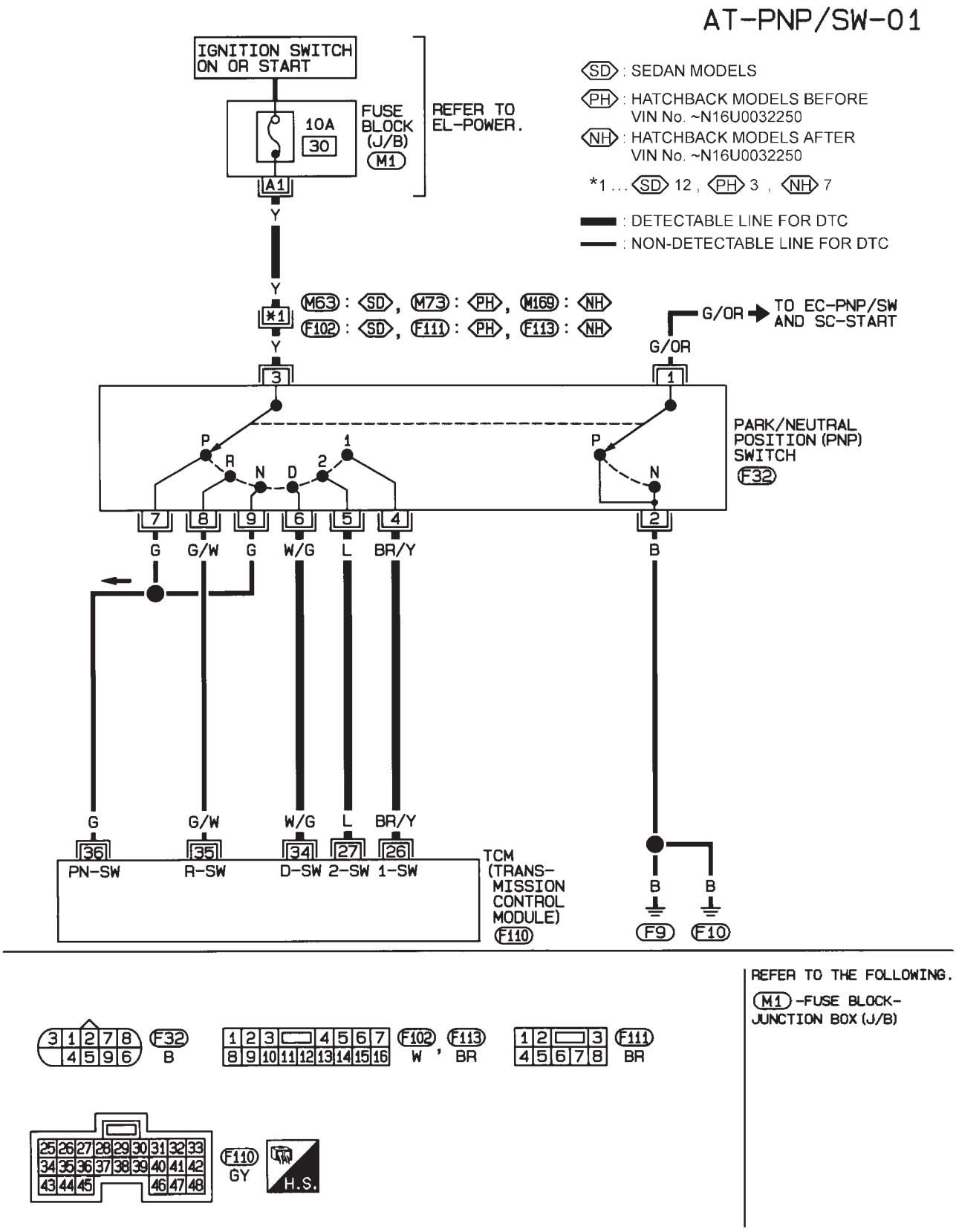

NAT344

Diagnostic Procedure

NJAT0266

1	CHECK PNP SWITCH CIRCUIT (With CONSULT-II)

With CONSULT-II

1. Turn ignition switch to “ON” position.
   (Do not start engine.)
2. Select “ECU INPUT SIGNALS” in “DATA MONITOR” mode for “A/T” with CONSULT-II.

SELECT SYSTEM
A/T
ENGINE

SAT014K

3. Read out “P/N”, “R”, “D”, “2” and “1” position switches moving selector lever to each position.
   Check the signal of the selector lever position is indicated properly.

DATA MONITOR	
MONITORING	
PN POSI SW	OFF
R POSITION SW	OFF
D POSITION SW	OFF
2 POSITION SW	ON
1 POSITION SW	OFF

SAT701J

OK or NG

OK ▶	GO TO 3.
NG ▶	**Check the following items:** ● PNP switch Refer to “Component Inspection”, AT-188. ● Harness for short or open between ignition switch and PNP switch (Main harness) ● Harness for short or open between PNP switch and TCM (Main harness) ● Ignition switch and fuse Refer to EL-10, “POWER SUPPLY ROUTING”. ● Diode (P, N positions)

2 CHECK PNP SWITCH CIRCUIT (Without CONSULT-II)

Without CONSULT-II

1. Turn ignition switch to "ON" position.
   (Do not start engine.)
2. Check voltage between TCM terminals 26, 27, 34, 35, 36 and ground while moving selector lever through each position.

   Voltage:
   B: Battery voltage
   0: 0V

Lever position	Terminal No.				
	36	35	34	27	26
P, N	**B**	0	0	0	0
R	0	**B**	0	0	0
D	0	0	**B**	0	0
2	0	0	0	**B**	0
1	0	0	0	0	**B**

MTBL0136

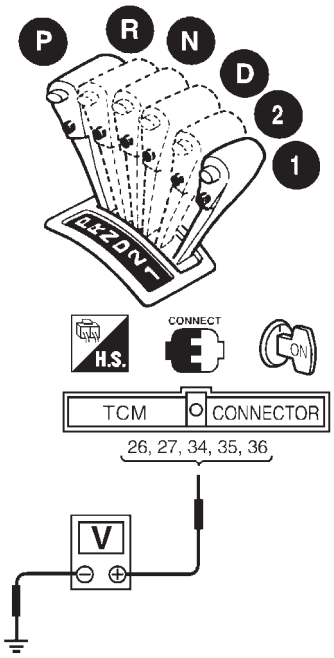

SAT425J

OK or NG

OK	▶	GO TO 3.
NG	▶	**Check the following items:** ● PNP switch Refer to "Component Inspection", AT-188. ● Harness for short or open between ignition switch and PNP switch (Main harness) ● Harness for short or open between PNP switch and TCM (Main harness) ● Ignition switch and fuse Refer to EL-10, "POWER SUPPLY ROUTING". ● Diode (P, N positions)

3	CHECK DTC	
Perform Diagnostic Trouble Code (DTC) confirmation procedure, AT-184.		
	OK or NG	
OK	▶	**INSPECTION END**
NG	▶	1. Perform TCM input/output signal inspection. 2. If NG, recheck TCM pin terminals for damage or loose connection with harness connector.

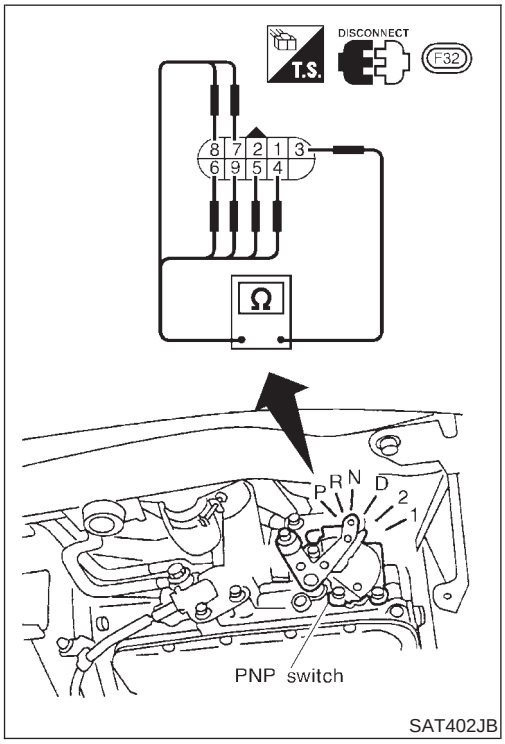

SAT402JB

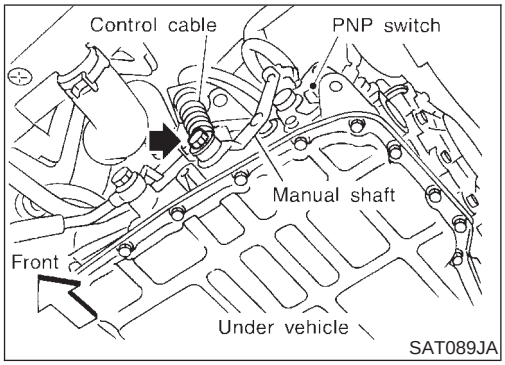

SAT089JA

Component Inspection

NJAT0267

PARK/NEUTRAL POSITION SWITCH

NJAT0267S01

1. Check continuity between terminals 1 and 3 and between terminals 2 and 4, 5, 6, 7, 8, 9 while moving manual shaft through each position.

Lever position	Terminal No.	
P	3 — 7	1 — 2
R	3 — 8	
N	3 — 9	1 — 2
D	3 — 6	
2	3 — 5	
1	3 — 4	

2. If NG, check again with control cable disconnected from manual shaft of A/T assembly. Refer to step 1.
3. If OK on step 2, adjust control cable. Refer to Refer to "TCM SELF-DIAGNOSITIC PROCEDURE (NO TOOLS)", AT-63.
4. If NG on step 2, remove PNP switch from A/T and check continuity of PNP switch terminals. Refer to step 1.
5. If OK on step 4, adjust PNP switch. Refer to AT-352.
6. If NG on step 4, replace PNP switch.

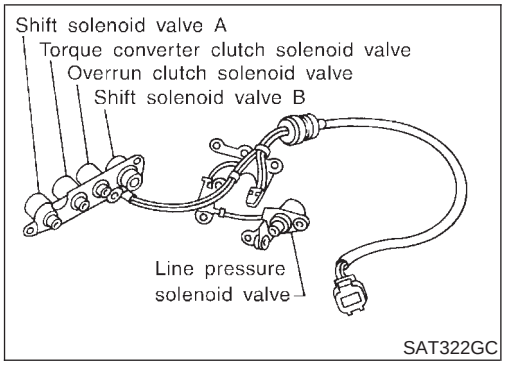

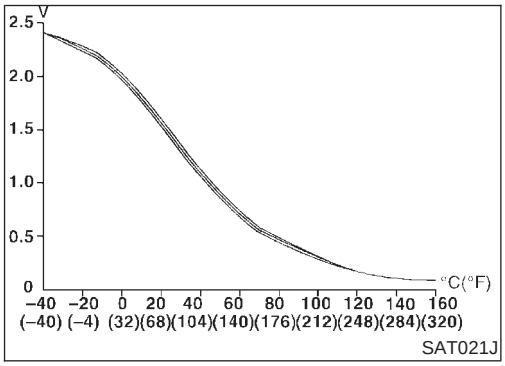

Description

NJAT0268

The A/T fluid temperature sensor detects the A/T fluid temperature and sends a signal to the TCM.

CONSULT-II REFERENCE VALUE IN DATA MONITOR MODE

NJAT0268S01

Remarks: Specification data are reference values.

Monitor item	Condition	Specification	
A/T fluid temperature sensor	Cold [20°C (68°F)] ↓ Hot [80°C (176°F)]	Approximately 1.5V ↓ Approximately 0.5V	Approximately 2.5 kΩ ↓ Approximately 0.3 kΩ

TCM TERMINALS AND REFERENCE VALUE

NJAT0268S02

Remarks: Specification data are reference values.

Terminal No.	Wire color	Item	Condition		Judgement standard
42	B	Throttle position sensor (Ground)	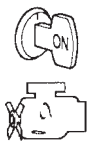	—	—
47	BR	A/T fluid temperature sensor		When ATF temperature is 20°C (68°F).	Approximately 1.5V
				When ATF temperature is 80°C (176°F).	Approximately 0.5V

ON BOARD DIAGNOSIS LOGIC

NJAT0268S03

Diagnostic trouble code	Malfunction is detected when ...	Check items (Possible cause)
: ATF TEMP SEN/CIRC	TCM receives an excessively low or high voltage from the sensor.	• Harness or connectors (The sensor circuit is open or shorted.) • A/T fluid temperature sensor
: P0710		

SELECT SYSTEM
A/T
ENGINE

SAT014K

SELECT DIAG MODE
WORK SUPPORT
SELF-DIAG RESULTS
DATA MONITOR
ACTIVE TEST
DTC & SRT CONFIRMATION
ECM PART NUMBER

SAT020K

DIAGNOSTIC TROUBLE CODE (DTC) CONFIRMATION PROCEDURE

NJAT0268S04

CAUTION:

Always drive vehicle at a safe speed.

NOTE:

If "DIAGNOSTIC TROUBLE CODE CONFIRMATION PROCEDURE" has been previously conducted, always turn ignition switch "OFF" and wait at least 5 seconds before conducting the next test.

After the repair, perform the following procedure to confirm the malfunction is eliminated.

With CONSULT-II

1) Turn ignition switch "ON" and select "DATA MONITOR" mode for "ENGINE" with CONSULT-II.
2) Start engine and maintain the following conditions for at least 10 minutes (Total). (It is not necessary to maintain continuously.)
   CMPS·RPM (REF): 450 rpm or more
   VHCL SPEED SE: 10 km/h (6 MPH) or more
   THRTL POS SEN: More than 1.2V
   Selector lever: D position (OD "ON")

With GST

Follow the procedure "With CONSULT-II".

Wiring Diagram — AT — FTS

NJAT0269

AT-FTS-01

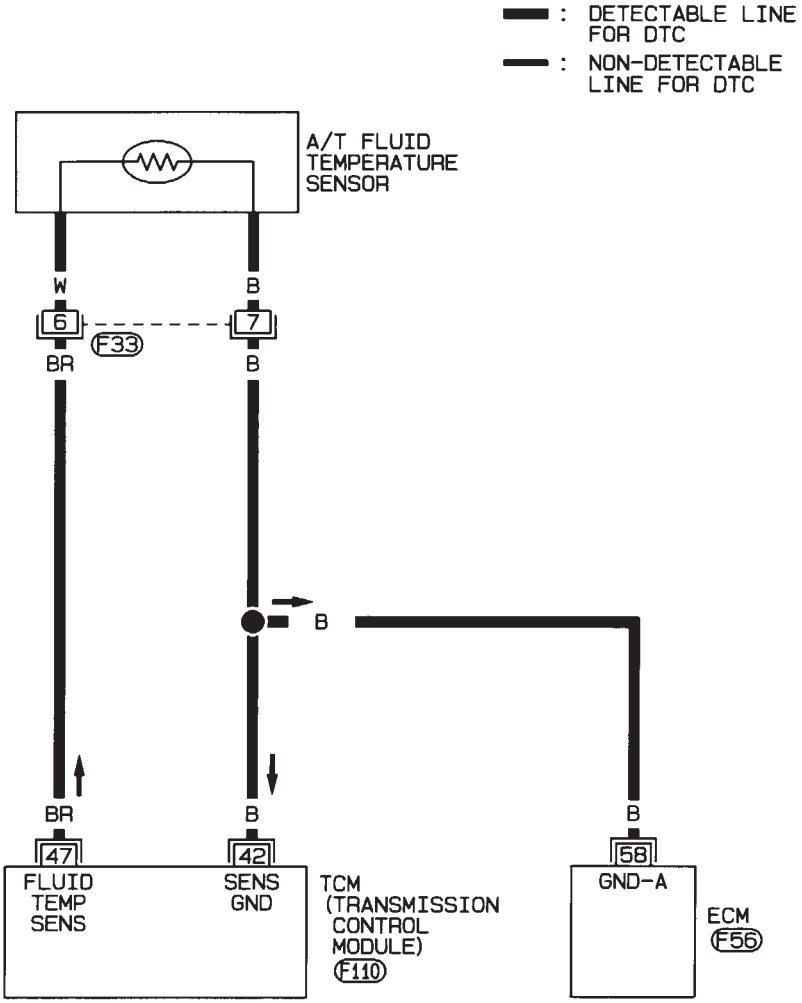

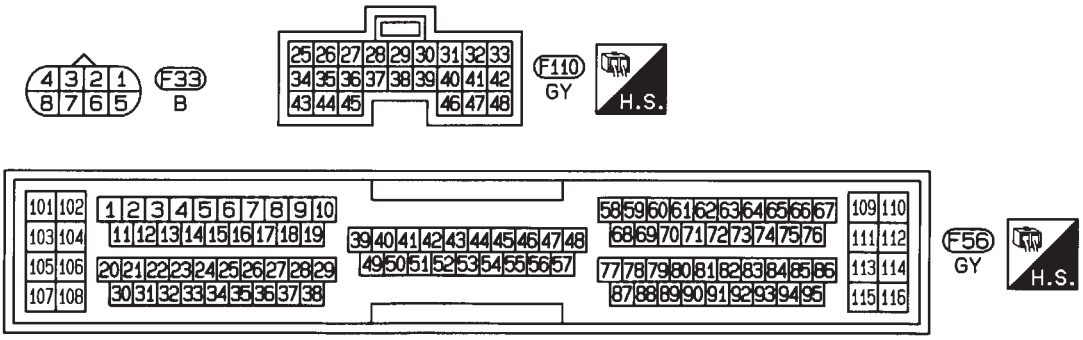

HAT100

Diagnostic Procedure

NJAT0270

1	INSPECTION START	
Do you have CONSULT-II?		
	Yes or No	
Yes	▶	GO TO 2.
No	▶	GO TO 3.

2	CHECK INPUT SIGNAL OF A/T FLUID TEMPERATURE SENSOR (With CONSULT-II)

With CONSULT-II

1. Start engine.
2. Select “ECU INPUT SIGNALS” in “DATA MONITOR” mode for “A/T” with CONSULT-II.

SELECT SYSTEM
A/T
ENGINE

SAT014K

3. Read out the value of “FLUID TEMP SE”.
   Voltage:
   Cold [20°C (68°F)] → Hot [80°C (176°F)]:
   Approximately 1.5V → 0.5V

DATA MONITOR	
MONITORING	
VHCL/S SE-A/T	XXX km/h
VHCL/S SE-MTR	XXX km/h
THRTL POS SEN	XXX V
FLUID TEMP SE	XXX V
BATTERY VOLT	XXX V

SAT614J

	OK or NG	
OK	▶	GO TO 4.
NG	▶	GO TO 5.

3	CHECK INPUT SIGNAL OF A/T FLUID TEMPERATURE SENSOR (Without CONSULT-II)

Without CONSULT-II

1. Start engine.
2. Check voltage between TCM terminal 47 and ground while warming up A/T.

   Voltage:

   Cold [20°C (68°F)] → Hot [80°C (176°F)]:

   Approximately 1.5V → 0.5V

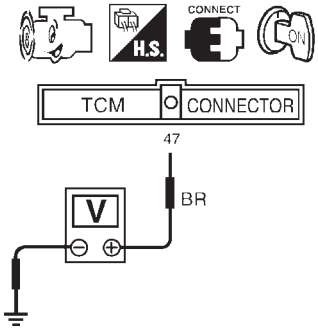

SAT937J

3. Turn ignition switch to "OFF" position.
4. Disconnect TCM harness connector.
5. Check continuity between terminal 42 and ground.

   Continuity should exist.

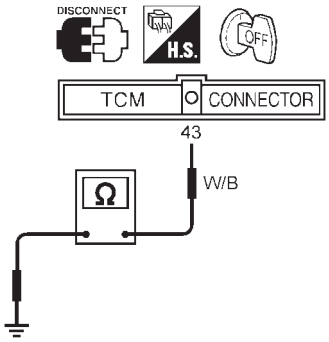

SAT421J

If OK, check harness for short to ground and short to power.

OK or NG

OK	▶	GO TO 4.
NG	▶	GO TO 5.

4	CHECK DTC

Perform Diagnostic Trouble Code (DTC) confirmation procedure, AT-190.

OK or NG

OK	▶	**INSPECTION END**
NG	▶	1. Perform TCM input/output signal inspection. 2. If NG, recheck TCM pin terminals for damage or loose connection with harness connector.

5	CHECK A/T FLUID TEMPERATURE SENSOR WITH TERMINAL CORD ASSEMBLY

1. Turn ignition switch to "OFF" position.
2. Disconnect terminal cord assembly connector in engine compartment.
3. Check resistance between terminals 6 and 7 when A/T is cold.

Resistance:
Cold [20°C (68°F)]
Approximately 2.5 kΩ

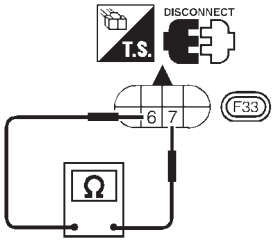

SAT880JA

4. Reinstall any part removed.

OK or NG

OK (With CONSULT-II) ▶	GO TO 2.
OK (Without CONSULT-II) ▶	GO TO 3.
NG ▶	1. Remove oil pan. 2. Check the following items: ● A/T fluid temperature sensor Refer to "Component Inspection", AT-194. ● Harness of terminal cord assembly for short or open

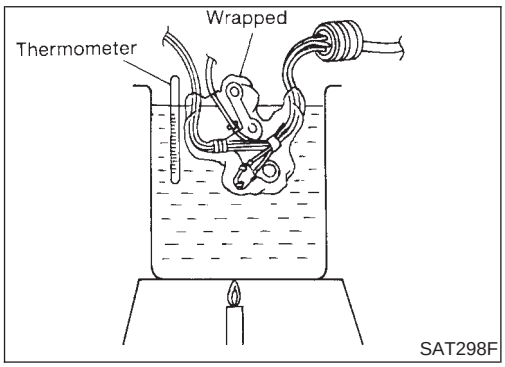

Component Inspection

NJAT0271

A/T FLUID TEMPERATURE SENSOR

NJAT0271S01

- For removal, refer to AT-351.
- Check resistance between two terminals while changing temperature as shown at left.

Temperature °C (°F)	Resistance
20 (68)	Approximately 2.5 kΩ
80 (176)	Approximately 0.3 kΩ

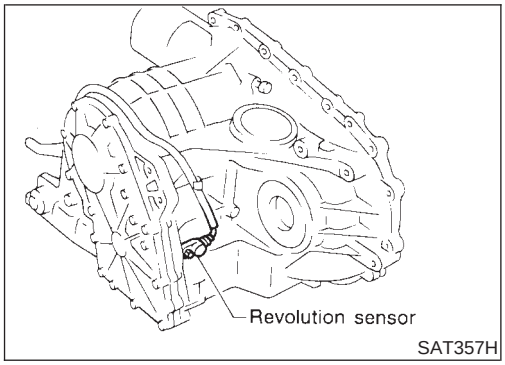

Description

NJAT0272

The revolution sensor detects the revolution of the idler gear parking pawl lock gear and emits a pulse signal. The pulse signal is sent to the TCM which converts it into vehicle speed.

TCM TERMINALS AND REFERENCE VALUE

NJAT0272S01

Remarks: Specification data are reference values.

Terminal No.	Wire color	Item	Condition		Judgement standard
29	W	Revolution sensor		When moving at 20 km/h (12 MPH), use the CONSULT-II pulse frequency measuring function.*1 **CAUTION:** **Connect the diagnosis data link cable to the vehicle diagnosis connector.** *1: A circuit tester cannot be used to test this item.	Approximately 150 Hz
				When vehicle parks.	Under 1.3V or over 4.5V
42	B	Throttle position sensor (Ground)	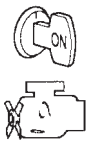	—	—

ON BOARD DIAGNOSIS LOGIC

NJAT0272S02

Diagnostic trouble code	Malfunction is detected when ...	Check items (Possible cause)
: VEH SPD SEN/CIR AT	TCM does not receive the proper voltage signal from the sensor.	● Harness or connectors (The sensor circuit is open or shorted.) ● Revolution sensor
GST : P0720		

SELECT SYSTEM
A/T
ENGINE

SAT014K

SELECT DIAG MODE
SELF-DIAG RESULTS
DATA MONITOR
DTC WORK SUPPORT
TCM PART NUMBER

SAT971J

SELECT SYSTEM
A/T
ENGINE

SAT014K

SELECT DIAG MODE
WORK SUPPORT
SELF-DIAG RESULTS
DATA MONITOR
ACTIVE TEST
DTC & SRT CONFIRMATION
ECM PART NUMBER

SAT020K

DIAGNOSTIC TROUBLE CODE (DTC) CONFIRMATION PROCEDURE

NJAT0272S03

CAUTION:

- **Always drive vehicle at a safe speed.**
- **Be careful not to rev engine into the red zone on the tachometer.**

NOTE:

If "DIAGNOSTIC TROUBLE CODE CONFIRMATION PROCEDURE" has been previously conducted, always turn ignition switch "OFF" and wait at least 5 seconds before conducting the next test.

After the repair, perform the following procedure to confirm the malfunction is eliminated.

With CONSULT-II

1) Turn ignition switch "ON" and select "DATA MONITOR" mode for "A/T" with CONSULT-II.
2) Drive vehicle and check for an increase of "VHCL/S SE·MTR" value increase.
   If the check result is NG, go to "DIAGNOSTIC PROCEDURE", AT-282.
   If the check result is OK, go to following step.
3) Select "DATA MONITOR" mode for "ENGINE" with CONSULT-II.
4) Start engine and maintain the following conditions for at least 5 consecutive seconds.
   VHCL SPEED SE: 30 km/h (19 MPH) or more
   THRTL POS SEN: More than 1.2V
   Selector lever: D position (OD "ON")
   Driving location: Driving the vehicle uphill (increased engine load) will help maintain the driving conditions required for this test.
   If the check result is NG, go to "DIAGNOSTIC PROCEDURE", AT-198.
   If the check result is OK, go to following step.
5) Maintain the following conditions for at least 5 consecutive seconds.
   CMPS·RPM (REF): 3,500 rpm or more
   THRTL POS SEN: More than 1.2V
   Selector lever: D position (OD "ON")
   Driving location: Driving the vehicle uphill (increased engine load) will help maintain the driving conditions required for this test.

With GST

Follow the procedure "With CONSULT-II".

Wiring Diagram — AT — VSSA/T

NJAT0273

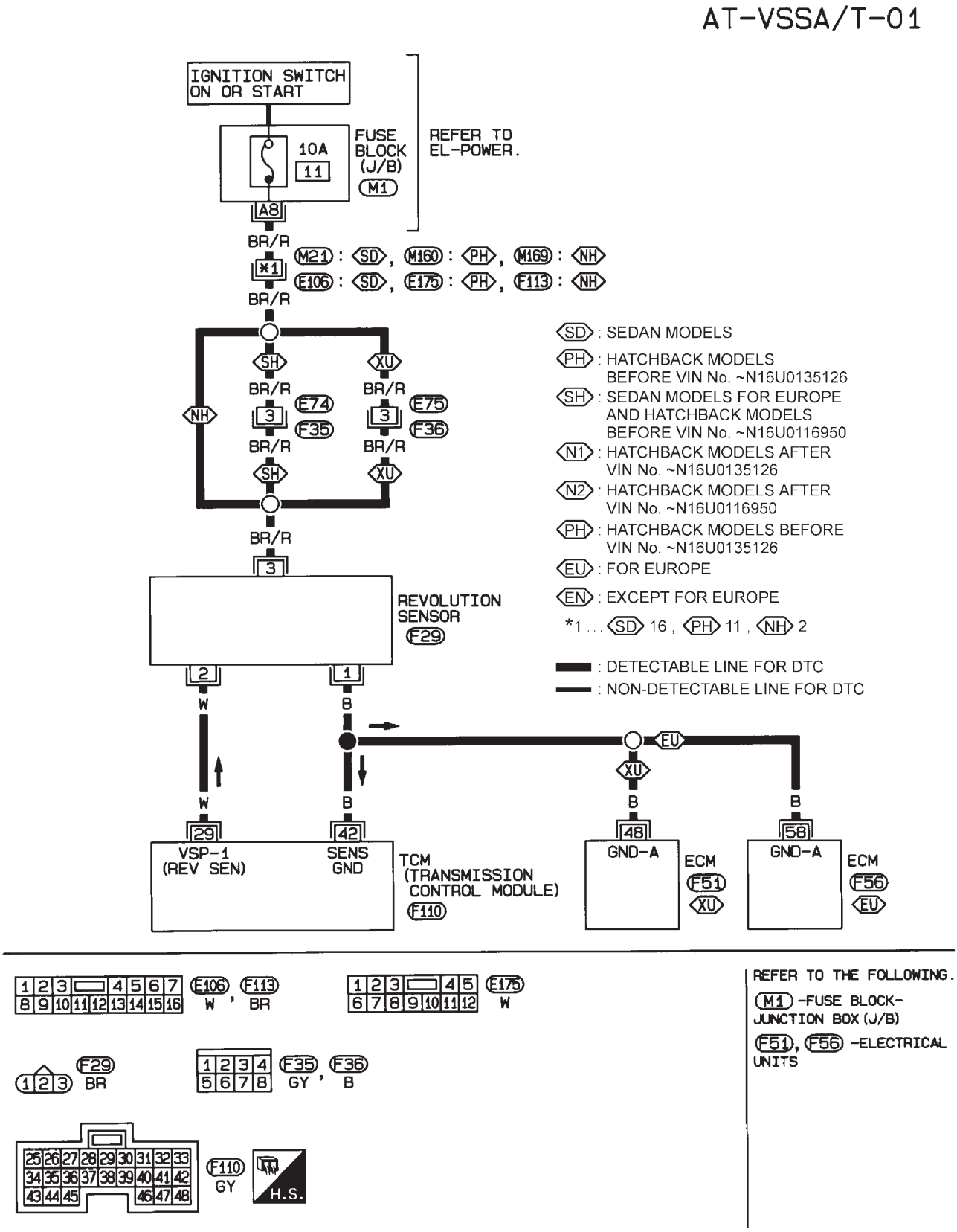

NAT345

Diagnostic Procedure

NJAT0274

1	CHECK INPUT SIGNAL (With CONSULT-II)

With CONSULT-II

1. Start engine.
2. Select “ECU INPUT SIGNALS” in “DATA MONITOR” mode for “A/T” with CONSULT-II.

SELECT SYSTEM
A/T
ENGINE

SAT014K

3. Read out the value of “VHCL/S SE·A/T” while driving.
   Check the value changes according to driving speed.

DATA MONITOR	
MONITORING	
VHCL/S SE-A/T	XXX km/h
VHCL/S SE-MTR	XXX km/h
THRTL POS SEN	XXX V
FLUID TEMP SE	XXX V
BATTERY VOLT	XXX V

SAT614J

OK or NG

OK	▶	GO TO 3.
NG	▶	GO TO 2.

2	CHECK REVOLUTION SENSOR (With CONSULT-II)

With CONSULT-II

1. Start engine.

Condition	Judgement standard
When moving at 20 km/h (12 MPH), use the CONSULT-II pulse frequency measuring function. *1 **CAUTION:** **Connect the diagnosis data link cable to the vehicle diagnosis connector.** *1: A circuit tester cannot be used to test this item.	Approximately 150 Hz
When vehicle parks.	Under 1.3V or 4.5V

MTBL0455

- Harness for short or open between TCM, ECM and revolution sensor (Main harness)

OK or NG

OK	▶	GO TO 3.
NG	▶	Repair or replace damaged parts.

3	CHECK DTC	
Perform Diagnostic Trouble Code (DTC) confirmation procedure, AT-196.		
	OK or NG	
OK	▶	**INSPECTION END**
NG	▶	GO TO 4.

4	CHECK TCM INSPECTION	
1. Perform TCM input/output signal inspection. 2. If NG, recheck TCM pin terminals for damage or loose connection with harness connector.		
	OK or NG	
OK	▶	**INSPECTION END**
NG	▶	Repair or replace damaged parts.

Description

NJAT0276

The engine speed signal is sent from the ECM to the TCM.

TCM TERMINALS AND REFERENCE VALUE

NJAT0276S01

Remarks: Specification data are reference values.

Terminal No.	Wire color	Item	Condition		Judgement standard
39	L/OR	Engine speed signal	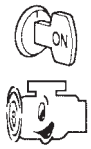	Refer to EC-166, “ECM INSPECTION TABLE”.	—

ON BOARD DIAGNOSIS LOGIC

NJAT0276S02

Diagnostic trouble code	Malfunction is detected when ...	Check item (Possible cause)
: ENGINE SPEED SIG : P0725	TCM does not receive the proper voltage signal from ECM.	● Harness or connectors (The sensor circuit is open or shorted.)

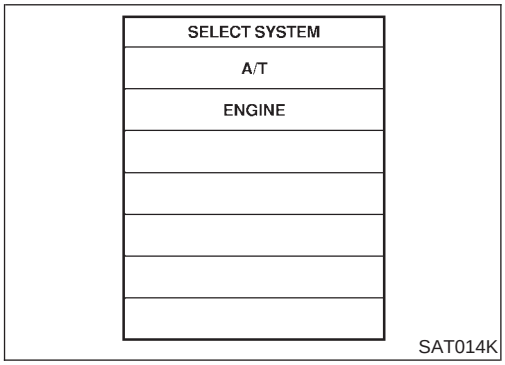

SAT014K

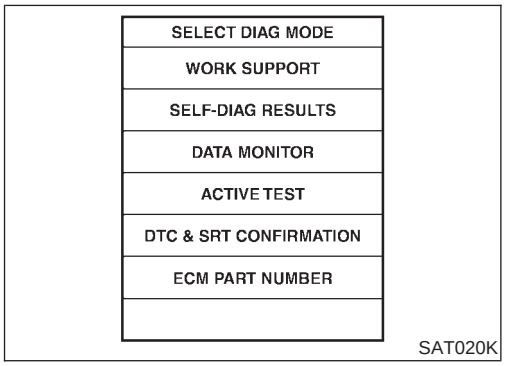

SAT020K

DIAGNOSTIC TROUBLE CODE (DTC) CONFIRMATION PROCEDURE

NJAT0276S03

CAUTION:

Always drive vehicle at a safe speed.

NOTE:

If “DIAGNOSTIC TROUBLE CODE CONFIRMATION PROCEDURE” has been previously conducted, always turn ignition switch “OFF” and wait at least 5 seconds before conducting the next test.

After the repair, perform the following procedure to confirm the malfunction is eliminated.

With CONSULT-II

1) Turn ignition switch “ON” and select “DATA MONITOR” mode for “ENGINE” with CONSULT-II.
2) Start engine and maintain the following conditions for at least 10 consecutive seconds.
   VHCL SPEED SE: 10 km/h (6 MPH) or more
   THRTL POS SEN: More than 1.2V
   Selector lever: D position (OD “ON”)

With GST

Follow the procedure “With CONSULT-II”.

Wiring Diagram — AT — ENGSS

NJAT0277

AT-ENGSS-01

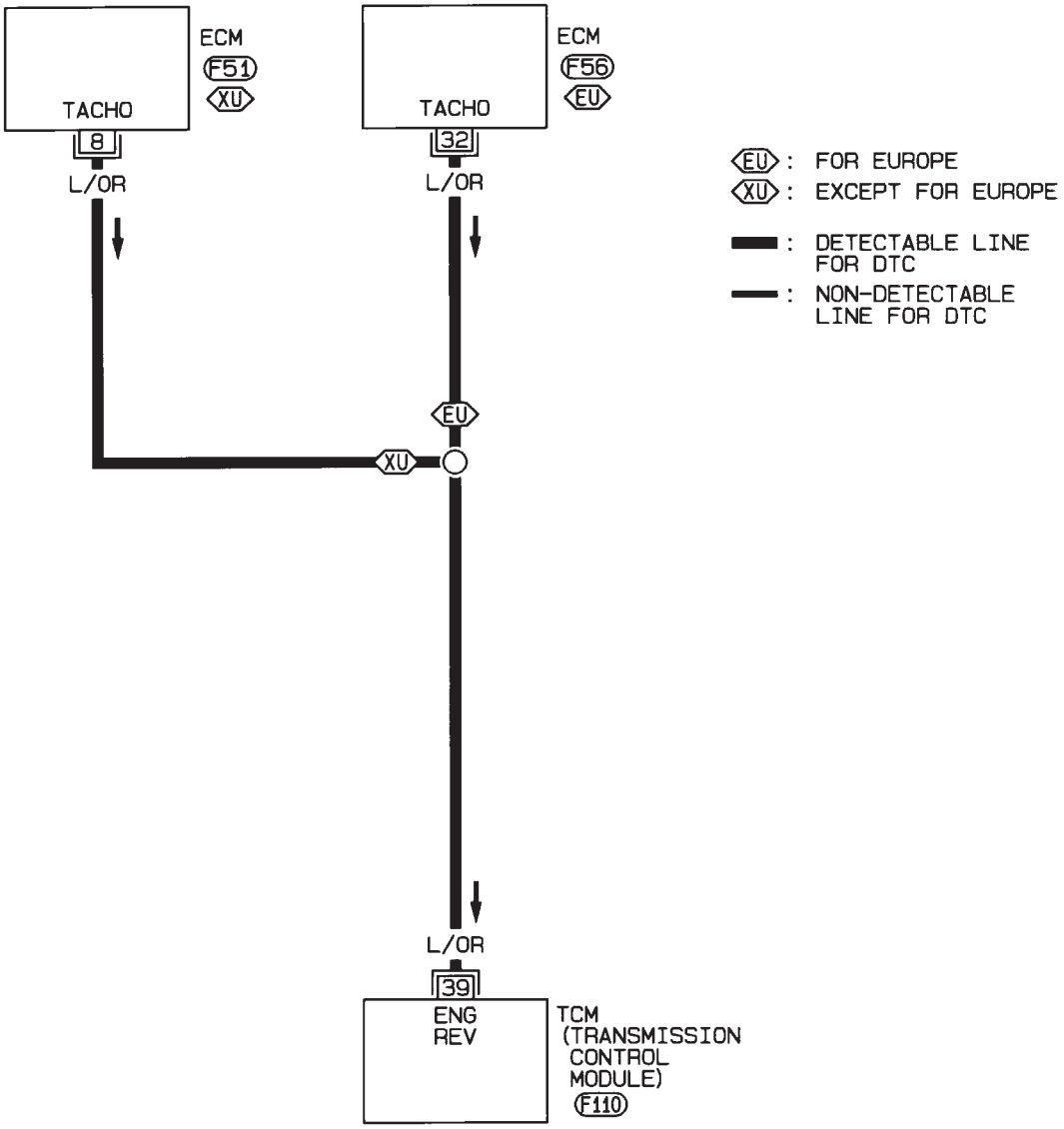

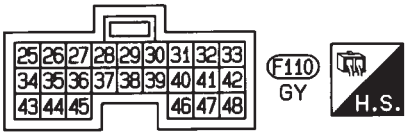

REFER TO THE FOLLOWING.
F51, F56 -ELECTRICAL UNITS

HAT095

Diagnostic Procedure

NJAT0278

1	CHECK DTC WITH ECM
Perform diagnostic test mode II (self- diagnostic results) for engine control. Check ignition signal circuit condition.	
OK or NG	
OK (With CONSULT-II) ▶	GO TO 2.
OK (Without CONSULT-II) ▶	GO TO 3.
NG ▶	Check ignition signal circuit for engine control. Refer to EC-547, “IGNITION SIGNAL”.

2	CHECK INPUT SIGNAL (With CONSULT-II)

With CONSULT-II

1. Start engine.
2. Select “ECU INPUT SIGNALS” in “DATA MONITOR” mode for “A/T” with CONSULT-II.

SELECT SYSTEM
A/T
ENGINE

SAT014K

3. Read out the value of “ENGINE SPEED”.
   Check engine speed changes according to throttle position.

DATA MONITOR	
MONITORING	
ENGINE SPEED	XXX rpm
TURBINE REV	XXX rpm
OVERDRIVE SW	ON
PN POSI SW	OFF
R POSITION SW	OFF

SAT645J

OK or NG

OK ▶	GO TO 4.
NG ▶	**Check the following items:** ● Harness for short or open between TCM and ECM ● Resistor and ignition coil Refer to EC-547, “IGNITION SIGNAL”.

3	CHECK INPUT SIGNAL (Without CONSULT-II)

Without CONSULT-II

1. Start engine.
2. Check voltage between TCM terminal 39 and ground.

Voltage (Idle speed):

Refer to EC-593, "Idle Speed and Ignition Timing".

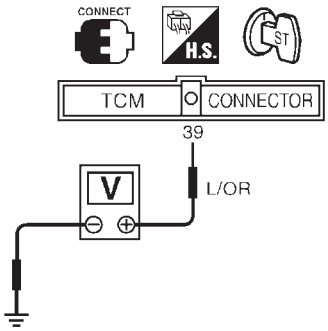

SAT424JC

OK or NG

OK	▶	GO TO 4.
NG	▶	**Check the following items:** ● Harness for short or open between TCM and ECM ● Resistor and ignition coil Refer to EC-547, "IGNITION SIGNAL".

4	CHECK DTC

Perform Diagnostic Trouble Code (DTC) confirmation procedure, AT-200.

OK or NG

OK	▶	**INSPECTION END**
NG	▶	1. Perform TCM input/output signal inspection. 2. If NG, recheck TCM pin terminals for damage or loose connection with harness connector.

Description

NJAT0279

- This is an OBD-II self-diagnostic item and not available in TCM self-diagnosis.
- This malfunction will not be detected while the O/D OFF indicator lamp is indicating another self-diagnosis malfunction.
- This malfunction is detected when the A/T does not shift into first gear position as instructed by the TCM. This is not caused by electrical malfunction (circuits open or shorted) but by mechanical malfunction such as control valve sticking, improper solenoid valve operation, etc.

Gear position	1	2	3	4
Shift solenoid valve A	ON (Closed)	OFF (Open)	OFF (Open)	ON (Closed)
Shift solenoid valve B	ON (Closed)	ON (Closed)	OFF (Open)	OFF (Open)

TCM TERMINALS AND REFERENCE VALUE

NJAT0279S01

Remarks: Specification data are reference values.

Terminal No.	Wire color	Item	Condition		Judgement standard
11	L/W	Shift solenoid valve A		When shift solenoid valve A operates. (When driving in “D_1” or “D_4”.)	Battery voltage
				When shift solenoid valve A does not operate. (When driving in “D_2” or “D_3”.)	1V or less
12	L/Y	Shift solenoid valve B		When shift solenoid valve B operates. (When driving in “D_1” or “D_2”.)	Battery voltage
				When shift solenoid valve B does not operate. (When driving in “D_3” or “D_4”.)	1V or less

ON BOARD DIAGNOSTIC LOGIC

NJAT0279S02

This diagnosis monitors actual gear position by checking the torque converter slip ratio calculated by TCM as follows:
Torque converter slip ratio = A x C/B
A: Output shaft revolution signal from revolution sensor
B: Engine speed signal from ECM
C: Gear ratio determined as gear position which TCM supposes
If the actual gear position is higher than the position (1st) supposed by TCM, the slip ratio will be more than normal. In case the ratio exceeds the specified value, TCM judges this diagnosis malfunction.
This malfunction will be caused when either shift solenoid valve A is stuck open or shift solenoid valve B is stuck open.

Gear position supposed by TCM	1	2	3	4
In case of gear position with no malfunctions	1	2	3	4
In case of gear position with shift solenoid valve A stuck open	2*	2	3	3
In case of gear position with shift solenoid valve B stuck open	4*	3	3	4

*: P0731 is detected.

Diagnostic trouble code	Malfunction is detected when ...	Check items (Possible cause)
: A/T 1ST GR FNCTN	A/T cannot be shifted to the 1st gear position even if electrical circuit is good.	● Shift solenoid valve A ● Shift solenoid valve B ● Each clutch ● Hydraulic control circuit
: P0731		

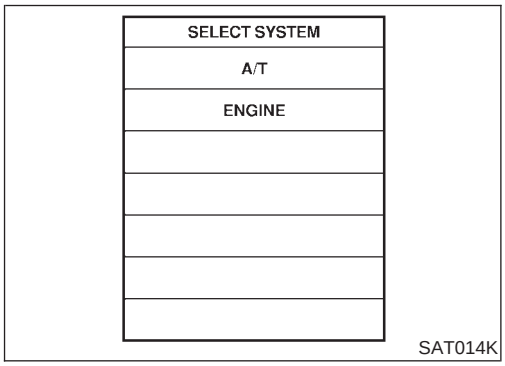

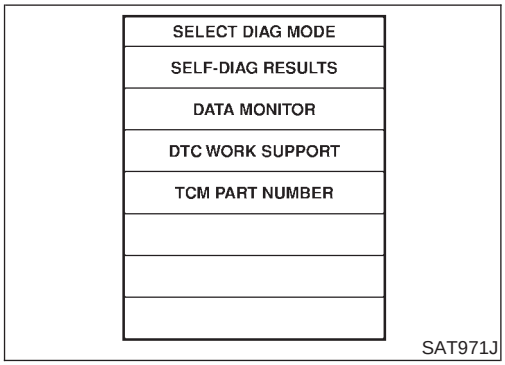

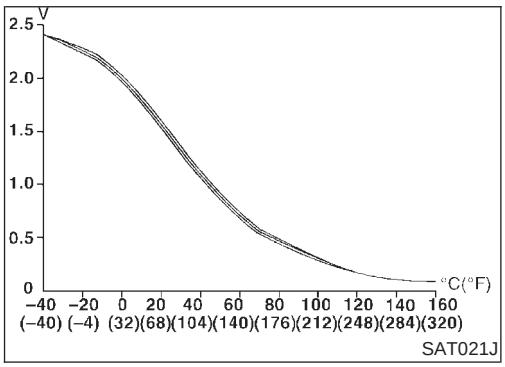

DIAGNOSTIC TROUBLE CODE (DTC) CONFIRMATION PROCEDURE

NJAT0279S03

CAUTION:

- **Always drive vehicle at a safe speed.**
- **Be careful not to rev engine into the red zone on the tachometer.**

NOTE:

If "DIAGNOSTIC TROUBLE CODE CONFIRMATION PROCEDURE" has been previously conducted, always turn ignition switch "OFF" and wait at least 5 seconds before conducting the next test.

TESTING CONDITION:

Always drive vehicle on a level road to improve the accuracy of test.

After the repair, perform the following procedure to confirm the malfunction is eliminated.

With CONSULT-II

1) Start engine and select "DATA MONITOR" mode for "A/T" with CONSULT-II.
2) Make sure that output voltage of A/T fluid temperature sensor is within the range below.
   FLUID TEMP SEN: 0.4 - 1.5V
   If out of range, drive the vehicle to decrease the voltage (warm up the fluid) or stop engine to increase the voltage (cool down the fluid).
3) Select "1ST GR FNCTN P0731" of "DTC WORK SUPPORT" mode for "A/T" with CONSULT-II and touch "START".
4) Accelerate vehicle to 20 to 25 km/h (12 to 16 MPH) under the following condition and release the accelerator pedal completely.
   THROTTLE POSI: Less than 1.0/8 (at all times during step 4)
   Selector lever: D position (OD "ON")
   - **Check that "GEAR" shows "2" after releasing pedal.**
5) Depress accelerator pedal to WOT (more than 7.0/8 of "THROTTLE POSI") quickly from a speed of 20 to 25 km/h (12 to 16 MPH) until "TESTING" changes to "STOP VEHICLE" or "COMPLETED". (It will take approximately 3 seconds.)
   If the check result NG appears on CONSULT-II screen, go to "DIAGNOSTIC PROCEDURE", AT-208.
   If "STOP VEHICLE" appears on CONSULT-II screen, go to the following step.
   - **Check that "GEAR" shows "1" when depressing accelerator pedal to WOT.**
   - **If "TESTING" does not appear on CONSULT-II for a long time, select "SELF-DIAGNOSIS" for "ENGINE". In case a**

1st trip DTC other than P0731 is shown, refer to applicable "TROUBLE DIAGNOSIS FOR DTC".

6) Stop vehicle.
7) Follow the instruction displayed. (Check for normal shifting referring to the table below.)

Vehicle condition	Gear on actual transmission shift pattern when screen is changed to 1 → 2 → 3 → 4
No malfunction exists	1 → 2 → 3 → 4
Malfunction for P0731 exists.	2 → 2 → 3 → 3
	4 → 3 → 3 → 4

8) Make sure that "OK" is displayed. (If "NG" is displayed, refer to "DIAGNOSTIC PROCEDURE".)
   Refer to "DIAGNOSTIC PROCEDURE", AT-208.
   Refer to shift schedule, AT-470.

With GST

Follow the procedure "With CONSULT-II".

Wiring Diagram — AT — 1ST

NJAT0280

AT-1STSIG-01

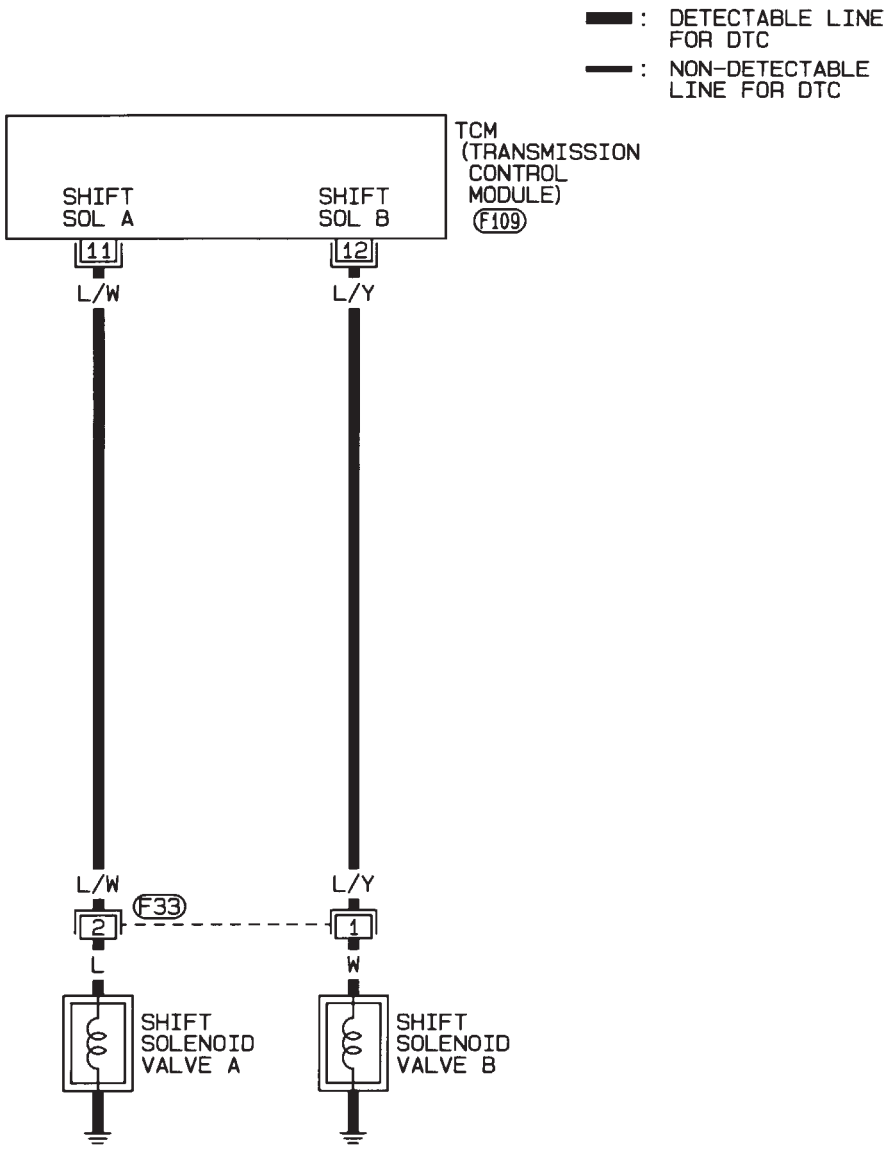

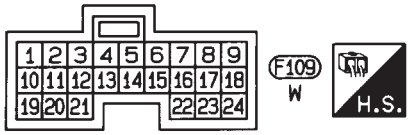

HAT101

Diagnostic Procedure

NJAT0281

1	CHECK SHIFT SOLENOID VALVE

1. Remove control valve assembly. Refer to AT-351.
2. Check shift solenoid valve operation.
- Shift solenoid valve A
- Shift solenoid valve B

Refer to “Component Inspection”, AT-209.

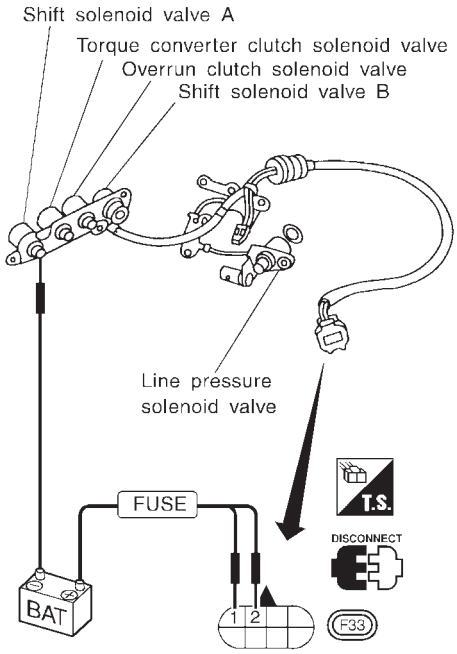

SAT881JB

OK or NG

OK	▶	GO TO 2.
NG	▶	Repair or replace shift solenoid valve assembly.

2	CHECK CONTROL VALVE

1. Disassemble control valve assembly. Refer to "Control Valve Assembly", AT-388.
2. Check to ensure that:
- Valve, sleeve and plug slide along valve bore under their own weight.
- Valve, sleeve and plug are free from burrs, dents and scratches.
- Control valve springs are free from damage, deformation and fatigue.
- Hydraulic line is free from obstacles.

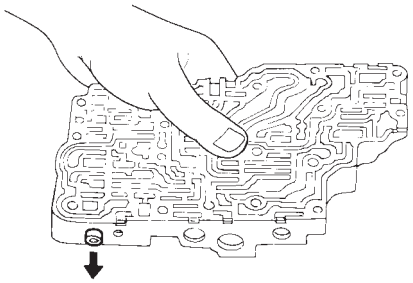

SAT367H

OK or NG

OK	▶	GO TO 3.
NG	▶	Repair control valve assembly.

3	CHECK DTC

Perform Diagnostic Trouble Code (DTC) confirmation procedure, AT-205.

OK or NG

OK	▶	**INSPECTION END**
NG	▶	Check control valve again. Repair or replace control valve assembly.

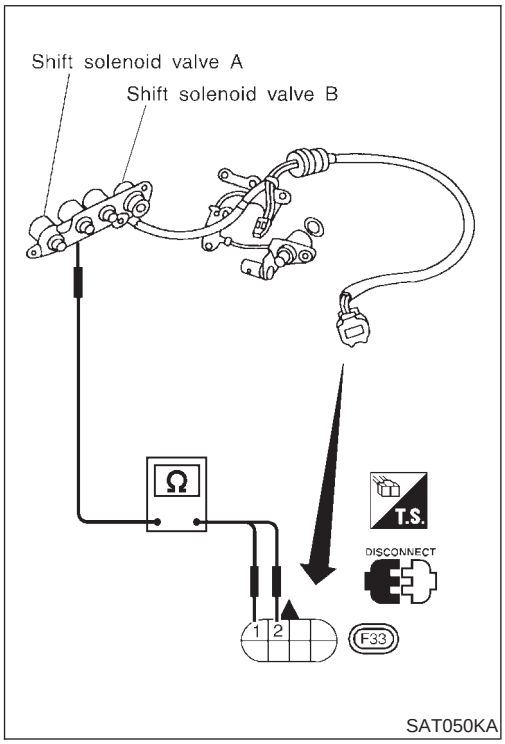

SAT050KA

Component Inspection

SHIFT SOLENOID VALVE A AND B

NJAT0282

NJAT0282S01

- For removal, refer to AT-351.

Resistance Check

NJAT0282S0101

- Check resistance between two terminals.

Solenoid valve	Terminal No.		Resistance (Approx.)
Shift solenoid valve A	2	Ground	20 - 30Ω
Shift solenoid valve B	1		5 - 20Ω

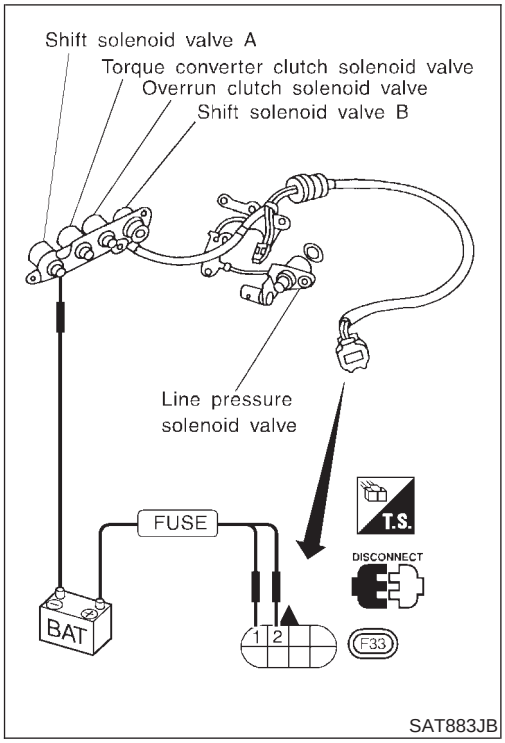

Operation Check

NJAT0282S0102

- Check solenoid valve by listening for its operating sound while applying battery voltage to the terminal and ground.

Description

NJAT0283

- This is an OBD-II self-diagnostic item and not available in TCM self-diagnosis.
- This malfunction will not be detected while the O/D OFF indicator lamp is indicating another self-diagnosis malfunction.
- This malfunction is detected when the A/T does not shift into second gear position as instructed by the TCM. This is not caused by electrical malfunction (circuits open or shorted) but by mechanical malfunction such as control valve sticking, improper solenoid valve operation, etc.

Gear position	1	2	3	4
Shift solenoid valve A	ON (Closed)	OFF (Open)	OFF (Open)	ON (Closed)
Shift solenoid valve B	ON (Closed)	ON (Closed)	OFF (Open)	OFF (Open)

TCM TERMINALS AND REFERENCE VALUE

NJAT0283S01

Remarks: Specification data are reference values.

Terminal No.	Wire color	Item	Condition		Judgement standard
12	L/Y	Shift solenoid valve B		When shift solenoid valve B operates. (When driving in “D_1” or “D_2”.)	Battery voltage
				When shift solenoid valve B does not operate. (When driving in “D_3” or “D_4”.)	1V or less

ON BOARD DIAGNOSTIC LOGIC

NJAT0283S02

This diagnosis monitors actual gear position by checking the torque converter slip ratio calculated by TCM as follows:
Torque converter slip ratio = A x C/B
A: Output shaft revolution signal from revolution sensor
B: Engine speed signal from ECM
C: Gear ratio determined as gear position which TCM supposes
If the actual gear position is higher than the position (2nd) supposed by TCM, the slip ratio will be more than normal. In case the ratio exceeds the specified value, TCM judges this diagnosis malfunction.
This malfunction will be caused when shift solenoid valve B is stuck open.

Gear position supposed by TCM	1	2	3	4
In case of gear position with no malfunctions	1	2	3	4
In case of gear position with shift solenoid valve B stuck open	4	3*	3	4

*: P0732 is detected.

Diagnostic trouble code	Malfunction is detected when ...	Check items (Possible cause)
: A/T 2ND GR FNCTN	A/T cannot be shifted to the 2nd gear position even if electrical circuit is good.	• Shift solenoid valve B • Each clutch • Hydraulic control circuit
GST : P0732		

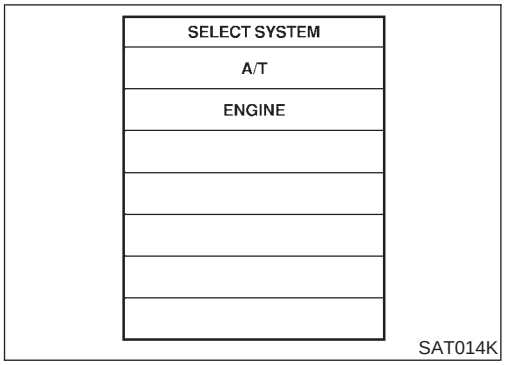

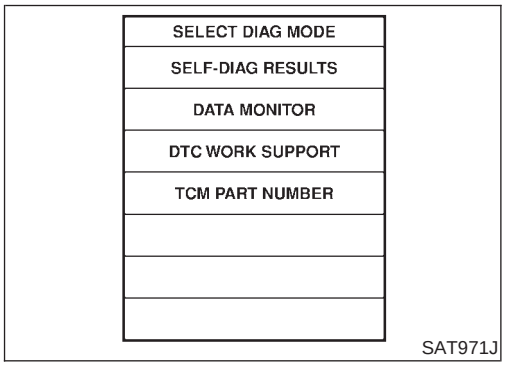

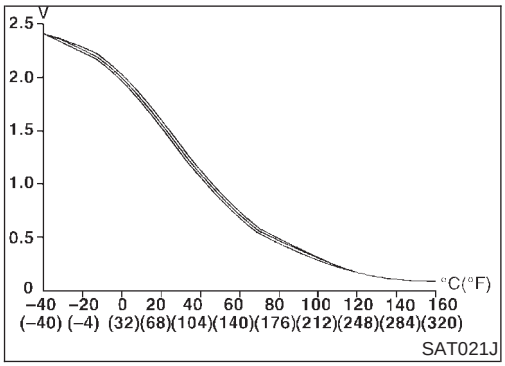

DIAGNOSTIC TROUBLE CODE (DTC) CONFIRMATION PROCEDURE

NJAT0283S03

CAUTION:

- **Always drive vehicle at a safe speed.**
- **Be careful not to rev engine into the red zone on the tachometer.**

NOTE:

If "DIAGNOSTIC TROUBLE CODE CONFIRMATION PROCEDURE" has been previously conducted, always turn ignition switch "OFF" and wait at least 5 seconds before conducting the next test.

TESTING CONDITION:

Always drive vehicle on a level road to improve the accuracy of test.

After the repair, perform the following procedure to confirm the malfunction is eliminated.

With CONSULT-II

1) Start engine and select "DATA MONITOR" mode for "A/T" with CONSULT-II.
2) Make sure that output voltage of A/T fluid temperature sensor is within the range below.
   FLUID TEMP SEN: 0.4 - 1.5V
   If out of range, drive the vehicle to decrease the voltage (warm up the fluid) or stop engine to increase the voltage (cool down the fluid).
3) Select "2ND GR FNCTN P0732" of "DTC WORK SUPPORT" mode for "A/T" with CONSULT-II and touch "START".
4) Accelerate vehicle to 50 to 55 km/h (31 to 34 MPH) under the following condition and release the accelerator pedal completely.
   THROTTLE POSI: Less than 1.0/8 (at all times during step 4)
   Selector lever: D position (OD "ON")

- **Check that "GEAR" shows "3" or "4" after releasing pedal.**

5) Depress accelerator pedal to WOT (more than 7.0/8 of "THROTTLE POSI") quickly from a speed of 50 to 55 km/h (31 to 34 MPH) until "TESTING" changes to "STOP VEHICLE" or "COMPLETED". (It will take approximately 3 seconds.)
   If the check result NG appears on CONSULT-II screen, go to "DIAGNOSTIC PROCEDURE", AT-215.
   If "STOP VEHICLE" appears on CONSULT-II screen, go to following step.

- **Check that "GEAR" shows "2" when depressing accelerator pedal to WOT.**
- **If "TESTING" does not appear on CONSULT-II for a long time, select "SELF-DIAGNOSIS" for "ENGINE". In case a 1st trip DTC other than P0732 is shown, refer to applicable "TROUBLE DIAGNOSIS FOR DTC".**

6) Stop vehicle.
7) Follow the instruction displayed. (Check for normal shifting referring to the table below.)

Vehicle condition	Gear on actual transmission shift pattern when screen is changed to 1 → 2 → 3 → 4
No malfunction exists	1 → 2 → 3 → 4
Malfunction for P0732 exists.	4 → 3 → 3 → 4

8) Make sure that "OK" is displayed. (If "NG" is displayed, refer to "DIAGNOSTIC PROCEDURE".)
   Refer to "DIAGNOSTIC PROCEDURE", AT-215.
   Refer to shift schedule, AT-470.

With GST

Follow the procedure "With CONSULT-II".

Wiring Diagram — AT — 2ND

NJAT0284

AT-2NDSIG-01

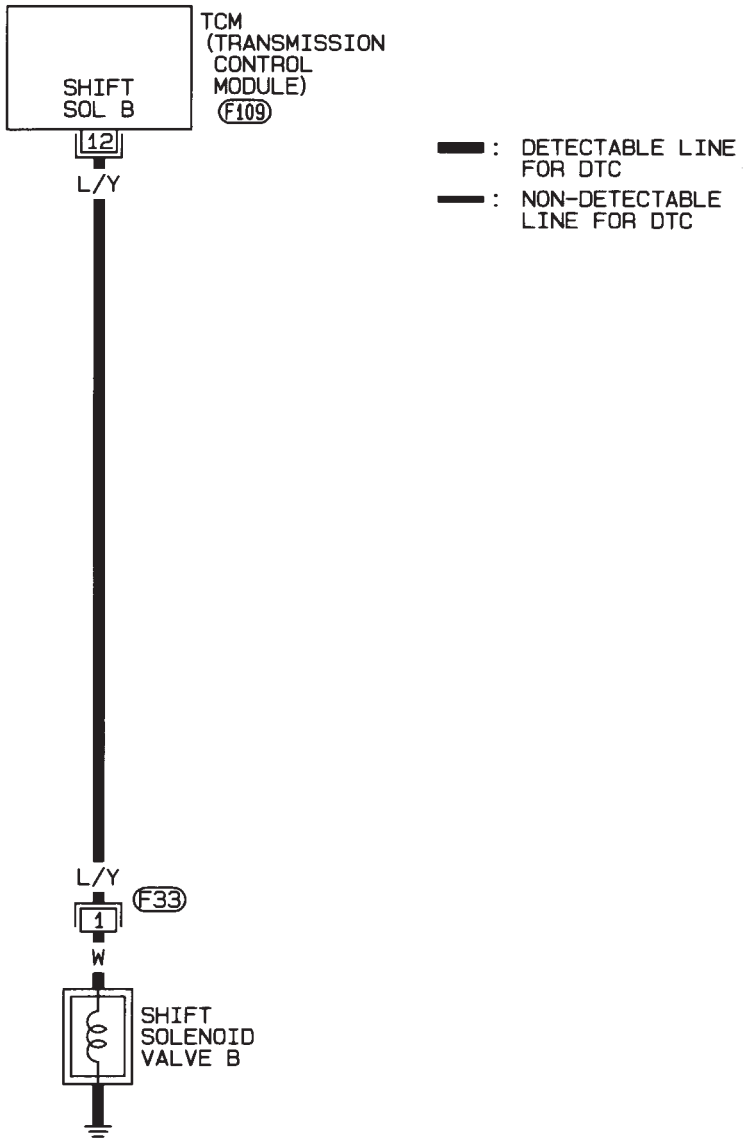

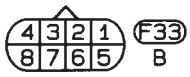

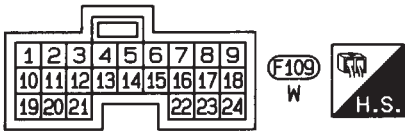

HAT102

Diagnostic Procedure

NJAT0285

1	CHECK SHIFT SOLENOID VALVE

1. Remove control valve assembly. Refer to AT-351.
2. Check shift solenoid valve operation.
- Shift solenoid valve B

Refer to “Component Inspection”, AT-216.

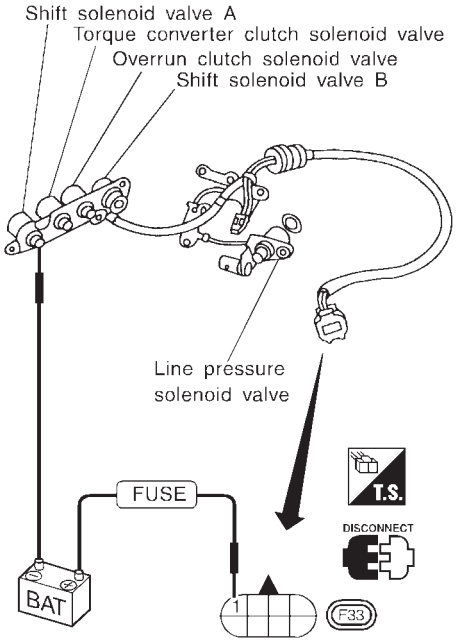

SAT884JB

OK or NG

OK	▶	GO TO 2.
NG	▶	Repair or replace shift solenoid valve assembly.

2	CHECK CONTROL VALVE

1. Disassemble control valve assembly. Refer to “Control Valve Assembly”, AT-388.
2. Check to ensure that:
- Valve, sleeve and plug slide along valve bore under their own weight.
- Valve, sleeve and plug are free from burrs, dents and scratches.
- Control valve springs are free from damage, deformation and fatigue.
- Hydraulic line is free from obstacles.

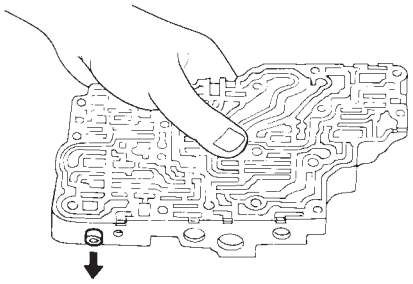

SAT367H

OK or NG

OK	▶	GO TO 3.
NG	▶	Repair control valve assembly.

3	CHECK DTC	
Perform Diagnostic Trouble Code (DTC) confirmation procedure, AT-212.		
	OK or NG	
OK	▶	**INSPECTION END**
NG	▶	Check control valve again. Repair or replace control valve assembly.

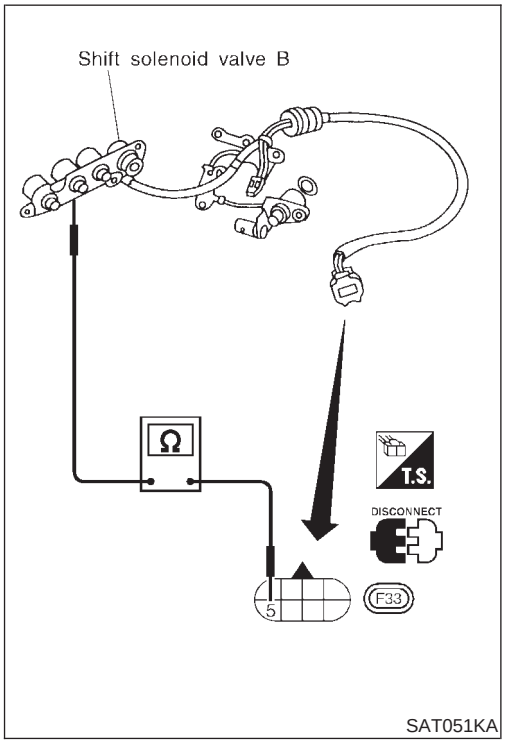

SAT051KA

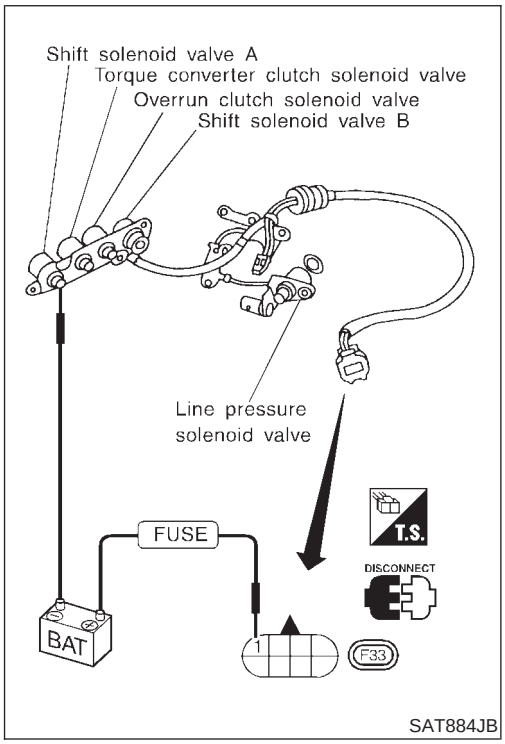

SAT884JB

Component Inspection

NJAT0286

SHIFT SOLENOID VALVE B

NJAT0286S01

- For removal, refer to AT-351.

Resistance Check

NJAT0286S0101

- Check resistance between two terminals.

Solenoid valve	Terminal No.		Resistance (Approx.)
Shift solenoid valve B	1	Ground	5 - 20Ω

Operation Check

NJAT0286S0102

- Check solenoid valve by listening for its operating sound while applying battery voltage to the terminal and ground.

Description

NJAT0287

- This is an OBD-II self-diagnostic item and not available in TCM self-diagnosis.
- This malfunction will not be detected while the O/D OFF indicator lamp is indicating another self-diagnosis malfunction.
- This malfunction is detected when the A/T does not shift into third gear position as instructed by the TCM. This is not caused by electrical malfunction (circuits open or shorted) but by mechanical malfunction such as control valve sticking, improper solenoid valve operation, malfunctioning servo piston or brake band, etc.

Gear position	1	2	3	4
Shift solenoid valve A	ON (Closed)	OFF (Open)	OFF (Open)	ON (Closed)
Shift solenoid valve B	ON (Closed)	ON (Closed)	OFF (Open)	OFF (Open)

TCM TERMINALS AND REFERENCE VALUE

NJAT0287S01

Remarks: Specification data are reference values.

Terminal No.	Wire color	Item	Condition		Judgement standard
11	L/W	Shift solenoid valve A		When shift solenoid valve A operates. (When driving in “D_1” or “D_4”.)	Battery voltage
				When shift solenoid valve A does not operate. (When driving in “D_2” or “D_3”.)	1V or less

ON BOARD DIAGNOSTIC LOGIC

NJAT0287S02

This diagnosis monitors actual gear position by checking the torque converter slip ratio calculated by TCM as follows:
Torque converter slip ratio = A x C/B
A: Output shaft revolution signal from revolution sensor
B: Engine speed signal from ECM
C: Gear ratio determined as gear position which TCM supposes
If the actual gear position is higher than the position (3rd) supposed by TCM, the slip ratio will be more than normal. In case the ratio exceeds the specified value, TCM judges this diagnosis malfunction.
This malfunction will be caused when shift solenoid valve A is stuck closed.

Gear position supposed by TCM	1	2	3	4
In case of gear position with no malfunctions	1	2	3	4
In case of gear position with shift solenoid valve A stuck closed	1	1	4*	4

*: P0733 is detected.

Diagnostic trouble code	Malfunction is detected when ...	Check items (Possible cause)
: A/T 3RD GR FNCTN	A/T cannot be shifted to the 3rd gear position even if electrical circuit is good.	• Shift solenoid valve A • Each clutch • Hydraulic control circuit
GST : P0733		

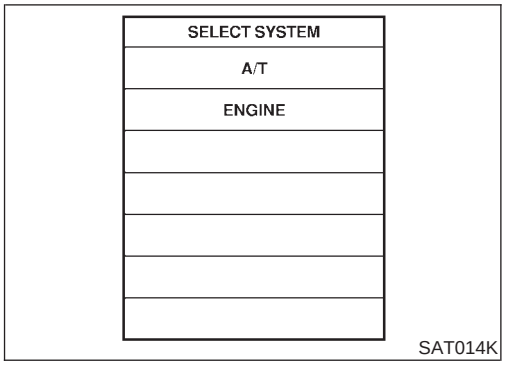

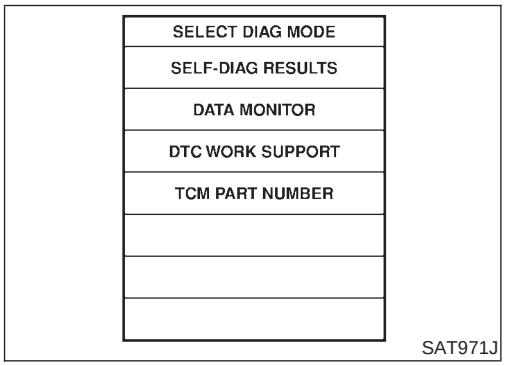

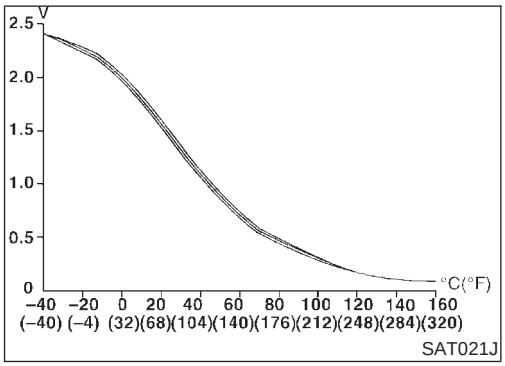

DIAGNOSTIC TROUBLE CODE (DTC) CONFIRMATION PROCEDURE

NJAT0287S03

CAUTION:

- **Always drive vehicle at a safe speed.**
- **Be careful not to rev engine into the red zone on the tachometer.**

NOTE:

If "DIAGNOSTIC TROUBLE CODE CONFIRMATION PROCEDURE" has been previously conducted, always turn ignition switch "OFF" and wait at least 5 seconds before conducting the next test.

TESTING CONDITION:

Always drive vehicle on a level road to improve the accuracy of test.

After the repair, perform the following procedure to confirm the malfunction is eliminated.

With CONSULT-II

1) Start engine and select "DATA MONITOR" mode for "A/T" with CONSULT-II.
2) Make sure that output voltage of A/T fluid temperature sensor is within the range below.
   FLUID TEMP SEN: 0.4 - 1.5V
   If out of range, drive the vehicle to decrease the voltage (warm up the fluid) or stop engine to increase the voltage (cool down the fluid).
3) Select "3RD GR FNCTN P0733" of "DTC WORK SUPPORT" mode for "A/T" with CONSULT-II and touch "START".
4) Accelerate vehicle to 70 to 85 km/h (43 to 53 MPH) under the following condition and release the accelerator pedal completely.
   THROTTLE POSI: Less than 1.0/8 (at all times during step 4)
   Selector lever: D position (OD "ON")

- **Check that "GEAR" shows "4" after releasing pedal.**

5) Depress accelerator pedal steadily with 3.5/8 - 4.5/8 of "THROTTLE POSI" from a speed of 70 to 85 km/h (43 to 53 MPH) until "TESTING" changes to "STOP VEHICLE" or "COMPLETED". (It will take approximately 3 seconds.)
   If the check result NG appears on CONSULT-II screen, go to "DIAGNOSTIC PROCEDURE", AT-221.
   If "STOP VEHICLE" appears on CONSULT-II screen, go to following step.

- **Check that "GEAR" shows "3" when depressing accelerator pedal with 3.5/8 - 4.5/8 of "THROTTLE POSI".**
- **If "TESTING" does not appear on CONSULT-II for a long time, select "SELF-DIAGNOSIS" for "ENGINE". In case a 1st trip DTC other than P0733 is shown, refer to applicable "TROUBLE DIAGNOSIS FOR DTC".**

6) Stop vehicle.
7) Follow the instruction displayed. (Check for normal shifting referring to the table below.)

Vehicle condition	Gear on actual transmission shift pattern when screen is changed to 1 → 2 → 3 → 4
No malfunction exists.	1 → 2 → 3 → 4
Malfunction for P0733 exists.	1 → 1 → 4 → 4

8) Make sure that "OK" is displayed. (If "NG" is displayed, refer to "DIAGNOSTIC PROCEDURE".)
   Refer to "DIAGNOSTIC PROCEDURE", AT-221.
   Refer to shift schedule, AT-470.

With GST

Follow the procedure "With CONSULT-II".

Wiring Diagram — AT — 3RD

NJAT0288

AT-3RDSIG-01

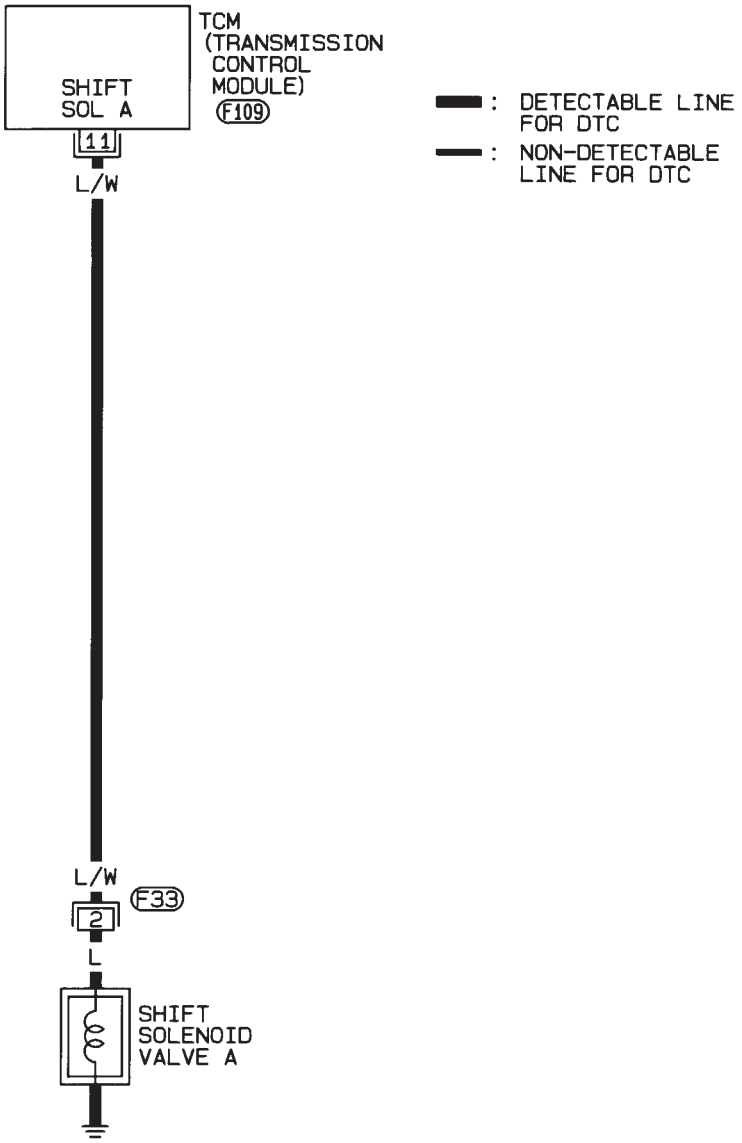

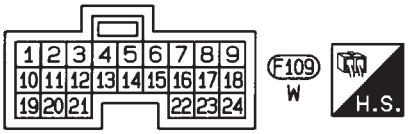

HAT103

Diagnostic Procedure

NJAT0289

1	CHECK SHIFT SOLENOID VALVE

1. Remove control valve assembly. Refer to AT-351.
2. Check shift solenoid valve operation.

- Shift solenoid valve A
  Refer to “Component Inspection” below.

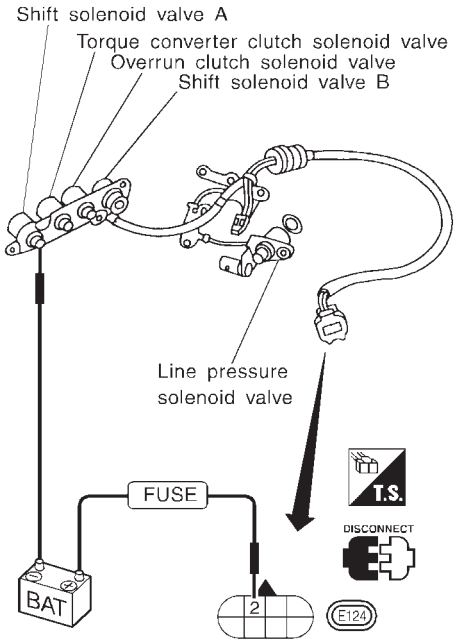

SAT886JA

OK or NG

OK	▶	GO TO 2.
NG	▶	Repair or replace shift solenoid valve assembly.

2	CHECK CONTROL VALVE

1. Disassemble control valve assembly. Refer to “Control Valve Assembly”, AT-388.
2. Check to ensure that:

- Valve, sleeve and plug slide along valve bore under their own weight.
- Valve, sleeve and plug are free from burrs, dents and scratches.
- Control valve springs are free from damage, deformation and fatigue.
- Hydraulic line is free from obstacles.

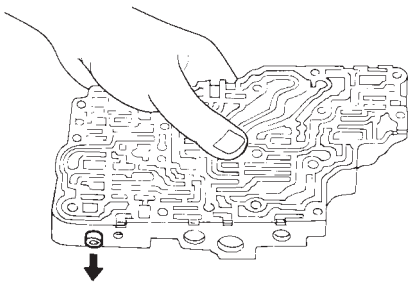

SAT367H

OK or NG

OK	▶	GO TO 3.
NG	▶	Repair control valve assembly.

3	CHECK DTC	
Perform Diagnostic Trouble Code (DTC) confirmation procedure, AT-218.		
	OK or NG	
OK	▶	**INSPECTION END**
NG	▶	Check control valve again. Repair or replace control valve assembly.

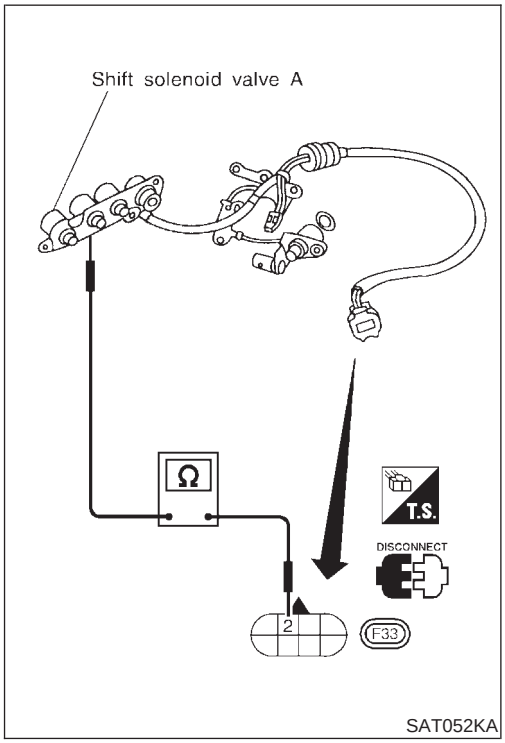

SAT052KA

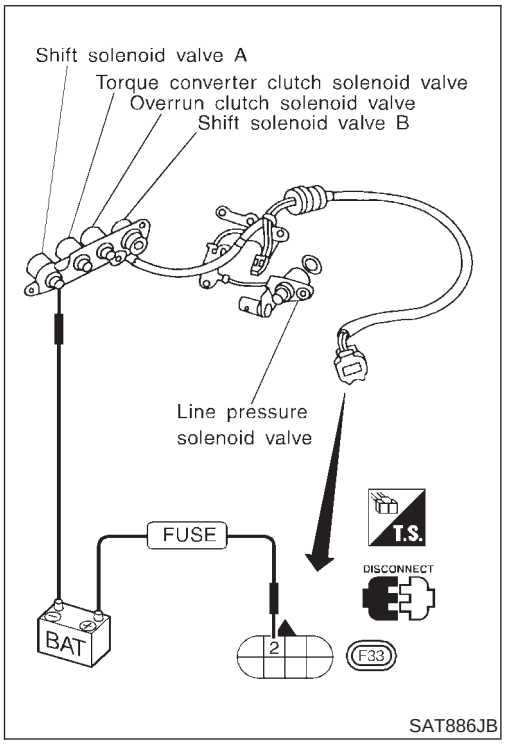

SAT886JB

Component Inspection

NJAT0290

SHIFT SOLENOID VALVE A

NJAT0290S01

- For removal, refer to AT-351.

Resistance Check

NJAT0290S0101

- Check resistance between two terminals.

Solenoid valve	Terminal No.		Resistance (Approx.)
Shift solenoid valve A	2	Ground	20 - 30Ω

Operation Check

NJAT0290S0102

- Check solenoid valve by listening for its operating sound while applying battery voltage to the terminal and ground.

Description

NJAT0291

- This is an OBD-II self-diagnostic item and not available in TCM self-diagnosis.
- This malfunction will not be detected while the O/D OFF indicator lamp is indicating another self-diagnosis malfunction.
- This malfunction is detected when the A/T does not shift into fourth gear position or the torque converter clutch does not lock up as instructed by the TCM. This is not caused by electrical malfunction (circuits open or shorted) but by mechanical malfunction such as control valve sticking, improper solenoid valve operation, malfunctioning oil pump or torque converter clutch, etc.

Gear position	1	2	3	4
Shift solenoid valve A	ON (Closed)	OFF (Open)	OFF (Open)	ON (Closed)
Shift solenoid valve B	ON (Closed)	ON (Closed)	OFF (Open)	OFF (Open)

CONSULT-II REFERENCE VALUE IN DATA MONITOR MODE

NJAT0291S01

Remarks: Specification data are reference values.

Monitor item	Condition	Specification
Line pressure solenoid valve duty	Small throttle opening (Low line pressure) ↓ Large throttle opening (High line pressure)	Approximately 24% ↓ Approximately 95%

TCM TERMINALS AND REFERENCE VALUE

NJAT0291S02

Remarks: Specification data are reference values.

Terminal No.	Wire color	Item	Condition		Judgement standard
1	R/W	Line pressure solenoid valve	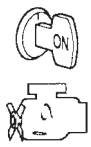	When releasing accelerator pedal after warming up engine.	1.5 - 2.5V
				When depressing accelerator pedal fully after warming up engine.	0.5V or less
2	P/B	Line pressure solenoid valve (with dropping resistor)		When releasing accelerator pedal after warming up engine.	5 - 14V
				When depressing accelerator pedal fully after warming up engine.	0.5V or less
11	L/W	Shift solenoid valve A		When shift solenoid valve A operates. (When driving in “D_1” or “D_4”.)	Battery voltage
				When shift solenoid valve A does not operate. (When driving in “D_2” or “D_3”.)	1V or less
12	L/Y	Shift solenoid valve B		When shift solenoid valve B operates. (When driving in “D_1” or “D_2”.)	Battery voltage
				When shift solenoid valve B does not operate. (When driving in “D_3” or “D_4”.)	1V or less

ON BOARD DIAGNOSTIC LOGIC

NJAT0291S03

This diagnosis monitors actual gear position by checking the torque converter slip ratio calculated by TCM as follows:
Torque converter slip ratio = A x C/B
A: Output shaft revolution signal from revolution sensor
B: Engine speed signal from ECM
C: Gear ratio determined as gear position which TCM supposes
If the actual gear position is much lower than the position (4th) supposed by TCM, the slip ratio will be much less than normal. In case the ratio does not reach the specified value, TCM judges this diagnosis malfunction.
This malfunction will be caused when shift solenoid valve B is stuck closed.

Gear position supposed by TCM	1	2	3	4
In case of gear position with no malfunctions	1	2	3	4
In case of gear position with shift solenoid valve B stuck closed	1	2	2	1*

*: P0734 is detected.

Diagnostic trouble code	Malfunction is detected when ...	Check items (Possible cause)
: A/T 4TH GR FNCTN	A/T cannot be shifted to the 4th gear position even if electrical circuit is good.	● Shift solenoid valve A ● Shift solenoid valve B ● Line pressure solenoid valve ● Each clutch ● Hydraulic control circuit
GST : P0734		

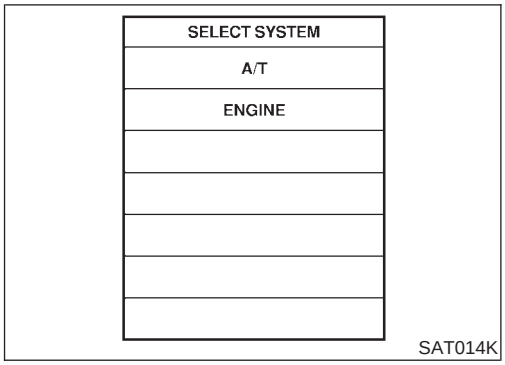

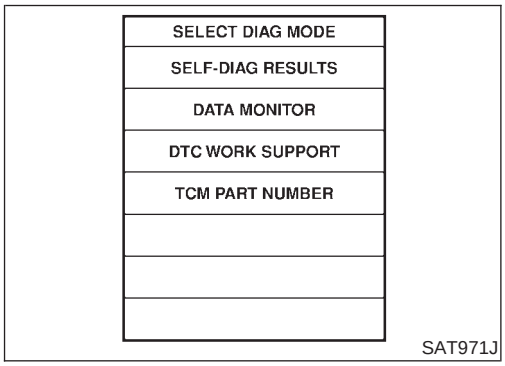

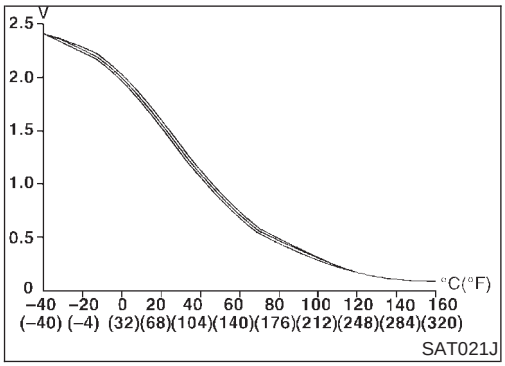

DIAGNOSTIC TROUBLE CODE (DTC) CONFIRMATION PROCEDURE

NJAT0291S04

CAUTION:

- **Always drive vehicle at a safe speed.**
- **If conducting this "DTC CONFIRMATION PROCEDURE" again, always turn ignition switch "OFF" and wait at least 5 seconds before continuing.**
- **Be careful not to rev engine into the red zone on the tachometer.**

NOTE:

If "DIAGNOSTIC TROUBLE CODE CONFIRMATION PROCEDURE" has been previously conducted, always turn ignition switch "OFF" and wait at least 5 seconds before conducting the next test.

TESTING CONDITION:

Always drive vehicle on a level road to improve the accuracy of test.

After the repair, perform the following procedure to confirm the malfunction is eliminated.

With CONSULT-II

1) Start engine and select "DATA MONITOR" mode for "A/T" with CONSULT-II.
2) Make sure that output voltage of A/T fluid temperature sensor is within the range below.
   FLUID TEMP SEN: 0.4 - 1.5V
   If out of range, drive the vehicle to decrease the voltage (warm up the fluid) or stop engine to increase the voltage (cool down the fluid).
3) Select "4TH GR FNCTN P0734" of "DTC WORK SUPPORT" mode for "A/T" with CONSULT-II and touch "START".
4) Accelerate vehicle to 45 to 55 km/h (28 to 34 MPH) under the following condition and release the accelerator pedal completely.
   THROTTLE POSI: Less than 5.5/8 (at all times during step 4)
   Selector lever: D position (OD "ON")
   - **Check that "GEAR" shows "3" after releasing pedal.**
5) Depress accelerator pedal steadily with 1.0/8 - 2.0/8 of "THROTTLE POSI" from a speed of 45 to 55 km/h (28 to 34 MPH) until "TESTING" has turned to "STOP VEHICLE" or "COMPLETED". (It will take approximately 3 seconds.)
   If the check result NG appears on CONSULT-II screen, go to "DIAGNOSTIC PROCEDURE", AT-228.
   If "STOP VEHICLE" appears on CONSULT-II screen, go to following step.
   - **Check that "GEAR" shows "4" when depressing accelerator pedal with 1.0/8 - 2.0/8 of "THROTTLE POSI".**
   - **If "TESTING" does not appear on CONSULT-II for a long time, select "SELF-DIAGNOSIS" for "ENGINE". In case a 1st trip DTC other than P0734 is shown, refer to applicable "TROUBLE DIAGNOSIS FOR DTC".**
6) Stop vehicle.
7) Follow the instruction displayed. (Check for normal shifting referring to the table below.)

Vehicle condition	Gear on actual transmission shift pattern when screen is changed to 1 → 2 → 3 → 4
No malfunction exists	1 → 2 → 3 → 4
Malfunction for P0734 exists.	1 → 2 → 2 → 1

8) Make sure that "OK" is displayed. (If "NG" is displayed, refer to "DIAGNOSTIC PROCEDURE".)
   Refer to "DIAGNOSTIC PROCEDURE", AT-228.
   Refer to shift schedule, AT-470.

With GST

Follow the procedure "With CONSULT-II".

Wiring Diagram — AT — 4TH

NJAT0292

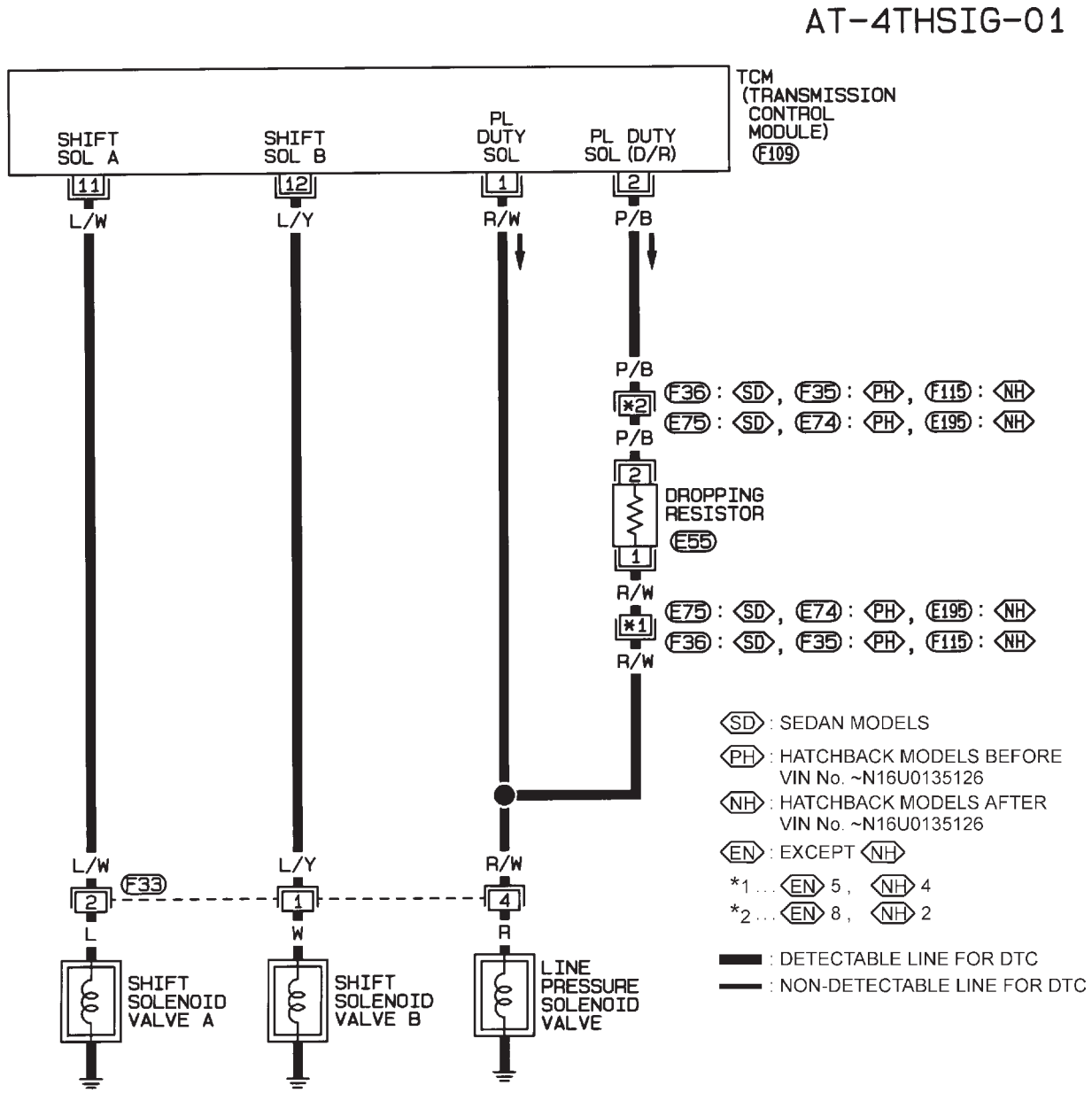

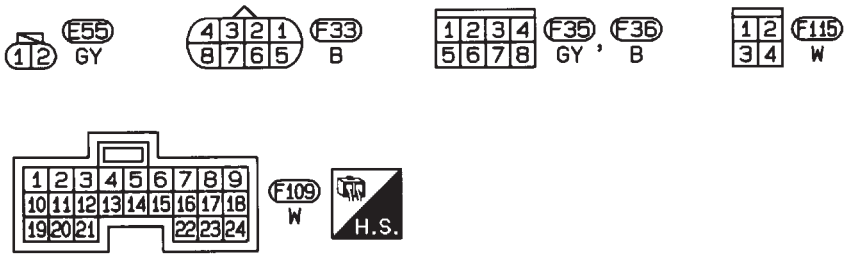

NAT346

Diagnostic Procedure

NJAT0293

1	CHECK SHIFT UP (D_3 TO D_4)

During “Cruise test — Part 1” (AT-95), does A/T shift from D_3 to D_4 at the specified speed?

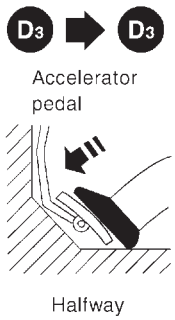

SAT988H

Yes or No

Yes	▶	GO TO 9.
No	▶	GO TO 2.

2	CHECK LINE PRESSURE

Perform line pressure test.
Refer to AT-84.

Engine speed rpm	Line pressure kPa (bar, kg/cm², psi)	
	D, 2 and 1 positions	R position
Idle	500 (5.00, 5.1, 73)	778 (7.75, 7.9, 112)
Stall	1,170 (11.70, 11.9, 170)	1,820 (18.20, 18.5, 264)

MTBL0507

OK or NG

OK	▶	GO TO 3.
NG	▶	GO TO 6.

3	CHECK SOLENOID VALVES

1. Remove control valve assembly.
   Refer to AT-351.
2. Refer to "Component Inspection", AT-232.

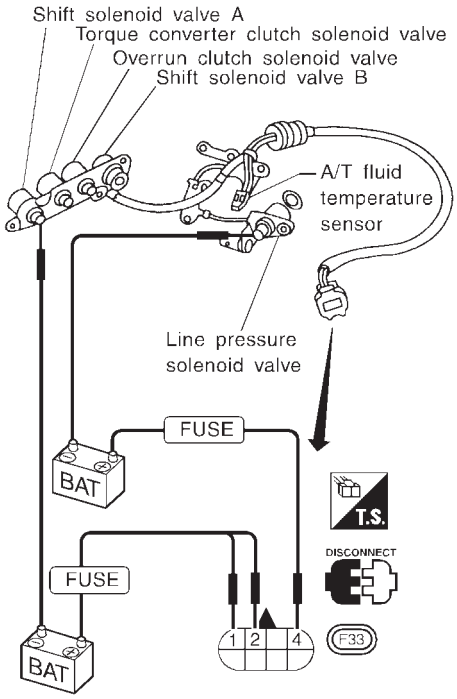

SAT847JB

OK or NG

OK	▶	GO TO 4.
NG	▶	Replace solenoid valve assembly.

4	CHECK CONTROL VALVE

1. Disassemble control valve assembly.
   Refer to AT-388.
2. Check to ensure that:

- Valve, sleeve and plug slide along valve bore under their own weight.
- Valve, sleeve and plug are free from burrs, dents and scratches.
- Control valve springs are free from damage, deformation and fatigue.
- Hydraulic line is free from obstacles.

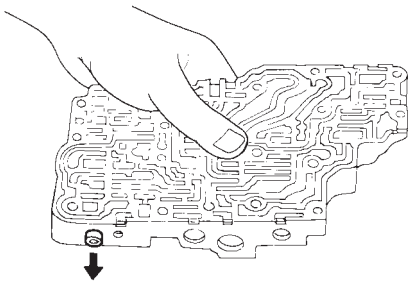

SAT367H

OK or NG

OK	▶	GO TO 5.
NG	▶	Repair control valve.

5	CHECK SHIFT UP (D_3 TO D_4)	
Does A/T shift from D_3 to D_4 at the specified speed?		
	OK or NG	
OK	▶	GO TO 9.
NG	▶	Check control valve again. Repair or replace control valve assembly.

6	CHECK LINE PRESSURE SOLENOID VALVE	

1. Remove control valve assembly.
   Refer to AT-351.
2. Refer to "Component Inspection", AT-232.

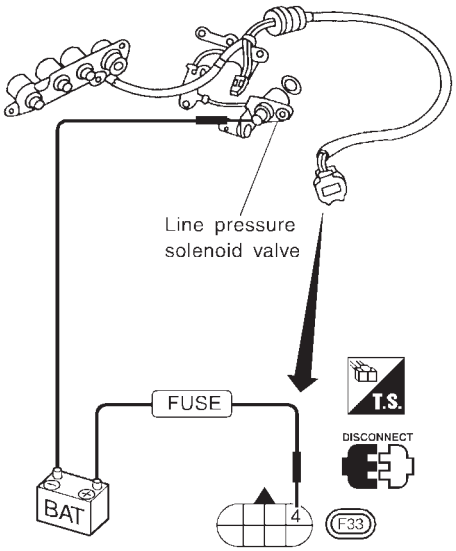

SAT888JA

	OK or NG	
OK	▶	GO TO 7.
NG	▶	Replace solenoid valve assembly.

7	CHECK CONTROL VALVE

1. Disassemble control valve assembly.
   Refer to AT-388.
2. Check line pressure circuit valves for sticking.

- Pressure regulator valve
- Pilot valve
- Pressure modifier valve

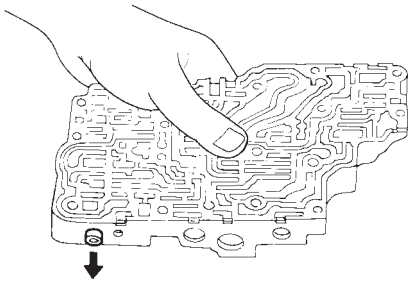

SAT367H

OK or NG

OK	▶	GO TO 8.
NG	▶	Repair control valve.

8	CHECK SHIFT UP (D_3 TO D_4)

Does A/T shift from D_3 to D_4 at the specified speed?

Yes or No

Yes	▶	GO TO 9.
No	▶	Check control valve again. Repair or replace control valve assembly.

9	CHECK DTC

Perform Diagnostic Trouble Code (DTC) confirmation procedure, AT-225.

OK or NG

OK	▶	**INSPECTION END**
NG	▶	Perform "Cruise test — Part 1" again and return to the start point of this test group.

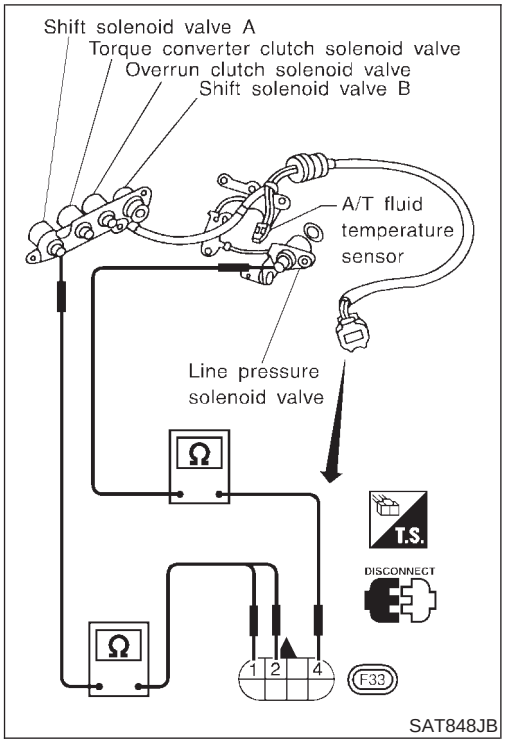

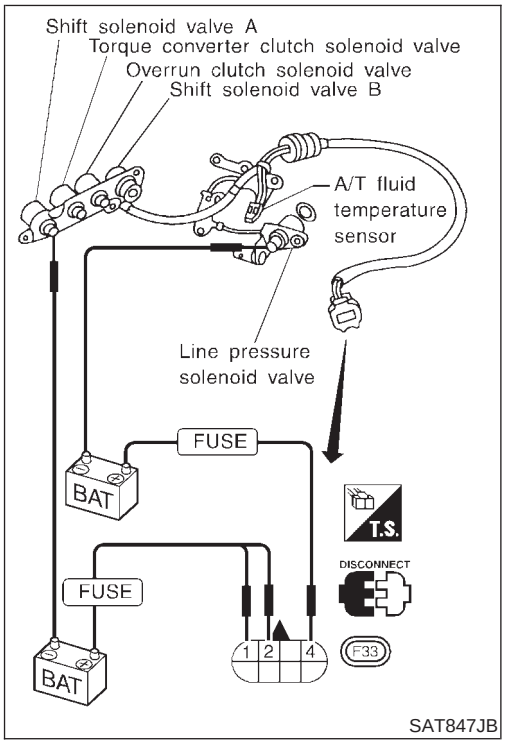

Component Inspection

=NJAT0294

SOLENOID VALVES

NJAT0294S01

- For removal, refer to AT-351.

Resistance Check

NJAT0294S0101

- Check resistance between two terminals.

Solenoid valve	Terminal No.		Resistance (Approx.)
Shift solenoid valve A	2	Ground	20 - 30Ω
Shift solenoid valve B	1		5 - 20Ω
Line pressure solenoid valve	4		2.5 - 5Ω

Operation Check

NJAT0294S0102

- Check solenoid valve by listening for its operating sound while applying battery voltage to the terminal and ground.

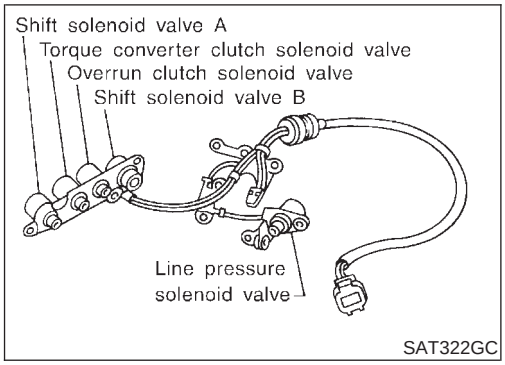

Description

NJAT0295

The torque converter clutch solenoid valve is activated, with the gear in "D_4", by the TCM in response to signals sent from the vehicle speed and throttle position sensors. Lock-up piston operation will then be controlled.

Lock-up operation, however, is prohibited when A/T fluid temperature is too low.

When the accelerator pedal is depressed (less than 2/8) in lock-up condition, the engine speed should not change abruptly. If there is a big jump in engine speed, there is no lock-up.

CONSULT-II REFERENCE VALUE IN DATA MONITOR MODE

NJAT0295S01

Remarks: Specification data are reference values.

Monitor item	Condition	Specification
Torque converter clutch solenoid valve duty	Lock-up "OFF" ↓ Lock-up "ON"	Approximately 4% ↓ Approximately 94%

TCM TERMINALS AND REFERENCE VALUE

NJAT0295S02

Remarks: Specification data are reference values.

Terminal No.	Wire color	Item	Condition		Judgement standard
3	GY/R	Torque converter clutch solenoid valve		When A/T performs lock-up.	8 - 15V
				When A/T does not perform lock-up.	1V or less

ON BOARD DIAGNOSIS LOGIC

NJAT0295S03

Diagnostic trouble code	Malfunction is detected when ...	Check items (Possible cause)
: TCC SOLENOID/CIRC : P0740	TCM detects an improper voltage drop when it tries to operate the solenoid valve.	● Harness or connectors (The solenoid circuit is open or shorted.) ● T/C clutch solenoid valve

SELECT SYSTEM
A/T
ENGINE

SAT014K

SELECT DIAG MODE
WORK SUPPORT
SELF-DIAG RESULTS
DATA MONITOR
ACTIVE TEST
DTC & SRT CONFIRMATION
ECM PART NUMBER

SAT020K

DIAGNOSTIC TROUBLE CODE (DTC) CONFIRMATION PROCEDURE

NJAT0295S04

NOTE:

If "DIAGNOSTIC TROUBLE CODE CONFIRMATION PROCEDURE" has been previously conducted, always turn ignition switch "OFF" and wait at least 5 seconds before conducting the next test.

After the repair, perform the following procedure to confirm the malfunction is eliminated.

With CONSULT-II

1) Turn ignition switch "ON".
2) Select "DATA MONITOR" mode for "ENGINE" with CONSULT-II and wait at least 1 second.

With GST

Follow the procedure "With CONSULT-II".

Wiring Diagram — AT — TCV

NJAT0296

AT-TCV-01

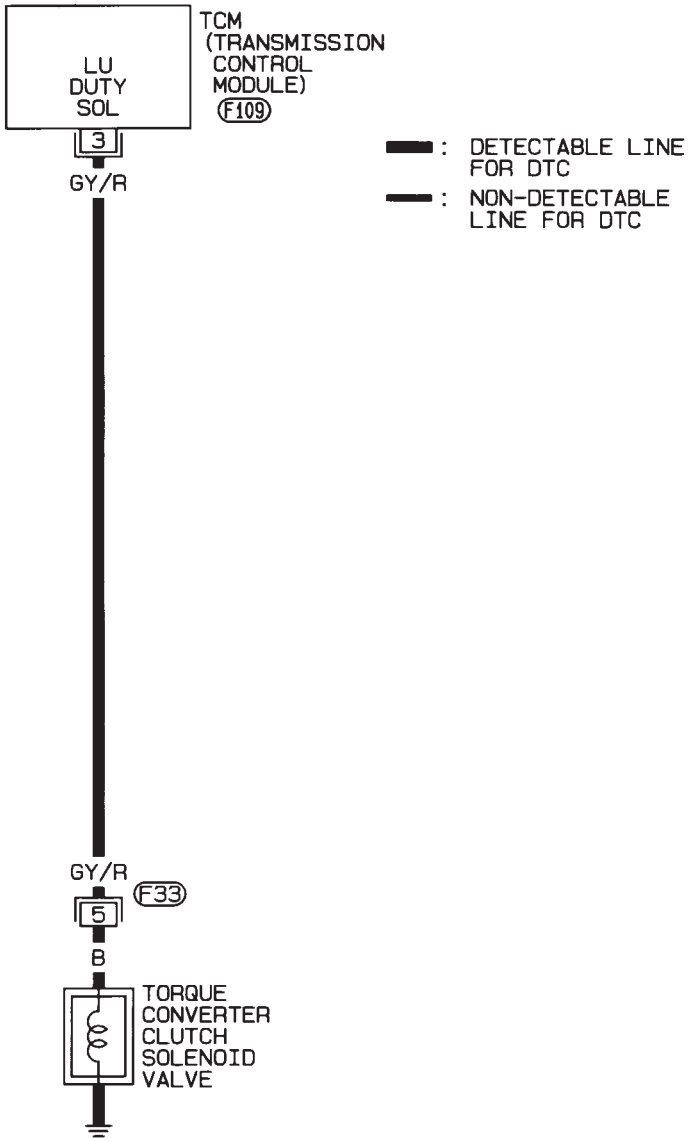

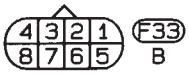

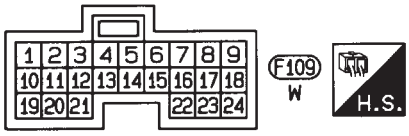

HAT082

Diagnostic Procedure

NJAT0297

1	CHECK VALVE RESISTANCE

1. Turn ignition switch to “OFF” position.
2. Disconnect terminal cord assembly connector in engine compartment.
3. Check resistance between terminal 5 and ground.

Resistance:
5 - 20Ω

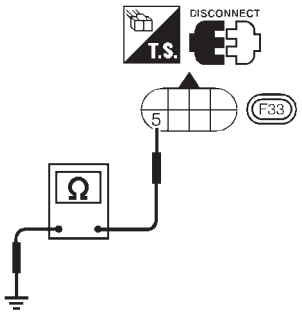

SAT889JB

OK or NG

OK	▶	GO TO 2.
NG	▶	1. Remove oil pan. Refer to AT-351. 2. Check the following items: ● Torque converter clutch solenoid valve Refer to “Component Inspection”, AT-238. ● Harness of terminal cord assembly for short or open

2	CHECK POWER SOURCE CIRCUIT

1. Turn ignition switch to "OFF" position.
2. Disconnect TCM harness connector.
3. Check continuity between terminal 5 and TCM harness connector terminal 3.
   Continuity should exist.

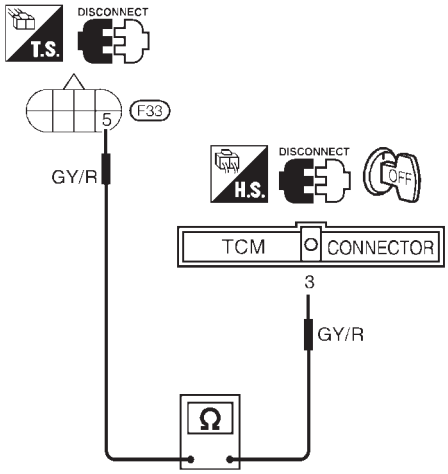

SAT890JB

If OK, check harness for short to ground and short to power.

4. Reinstall any part removed.

OK or NG

OK	▶	GO TO 3.
NG	▶	Repair open circuit or short to ground or short to power in harness or connectors.

3	CHECK DTC

Perform Diagnostic Trouble Code (DTC) confirmation procedure, AT-234.

OK or NG

OK	▶	**INSPECTION END**
NG	▶	1. Perform TCM input/output signal inspection. 2. If NG, recheck TCM pin terminals for damage or loose connection with harness connector.

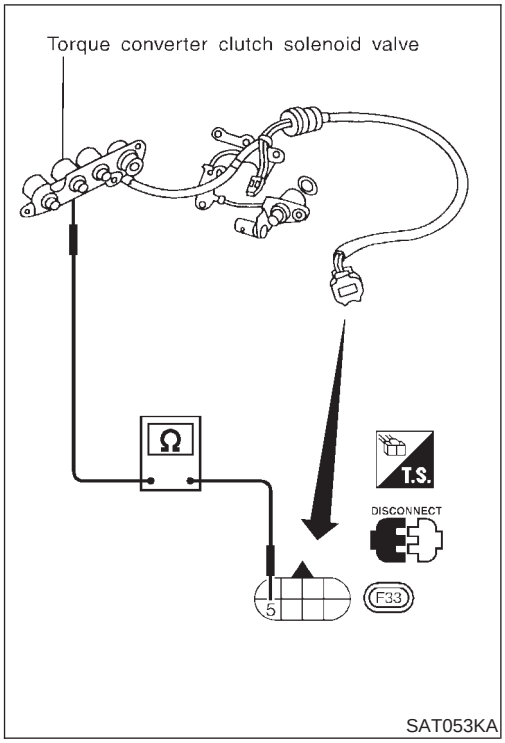

SAT053KA

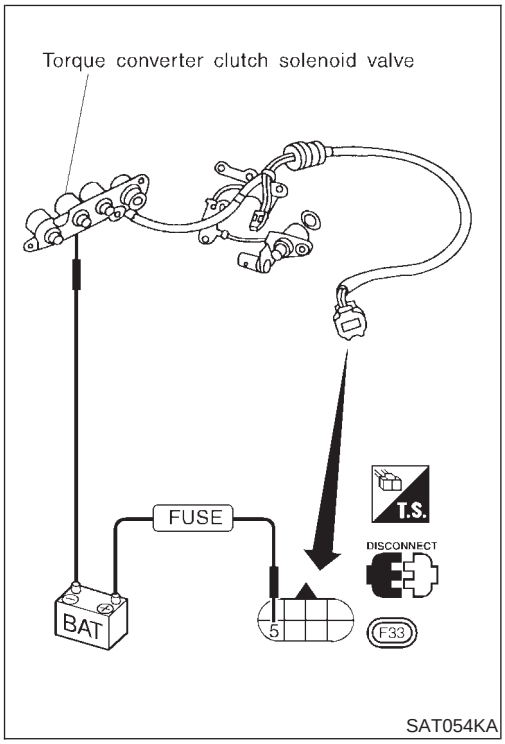

SAT054KA

Component Inspection

NJAT0298

TORQUE CONVERTER CLUTCH SOLENOID VALVE

NJAT0298S01

- For removal, refer to AT-351.

Resistance Check

NJAT0298S0101

- Check resistance between two terminals.

Solenoid valve	Terminal No.		Resistance (Approx.)
Torque converter clutch solenoid valve	5	Ground	5 - 20Ω

Operation Check

NJAT0298S0102

- Check solenoid valve by listening for its operating sound while applying battery voltage to the terminal and ground.

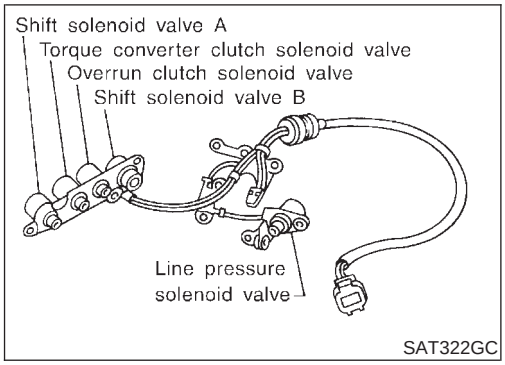

Description

NJAT0299

The line pressure solenoid valve regulates the oil pump discharge pressure to suit the driving condition in response to a signal sent from the TCM.

The line pressure duty cycle value is not consistent when the closed throttle position switch is "ON". To confirm the line pressure duty cycle at low pressure, the accelerator (throttle) should be open until the closed throttle position switch is "OFF".

CONSULT-II REFERENCE VALUE IN DATA MONITOR MODE

NJAT0299S01

Remarks: Specification data are reference values.

Monitor item	Condition	Specification
Line pressure solenoid valve duty	Small throttle opening (Low line pressure) ↓ Large throttle opening (High line pressure)	Approximately 24% ↓ Approximately 95%

NOTE:

The line pressure duty cycle value is not consistent when the closed throttle position switch is "ON". To confirm the line pressure duty cycle at low pressure, the accelerator (throttle) should be open until the closed throttle position switch is "OFF".

TCM TERMINALS AND REFERENCE VALUE

NJAT0299S02

Remarks: Specification data are reference values.

Terminal No.	Wire color	Item	Condition		Judgement standard
1	R/W	Line pressure solenoid valve	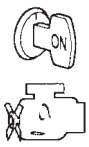	When releasing accelerator pedal after warming up engine.	1.5 - 2.5V
				When depressing accelerator pedal fully after warming up engine.	0.5V or less
2	P/B	Line pressure solenoid valve (with dropping resistor)		When releasing accelerator pedal after warming up engine.	5 - 14V
				When depressing accelerator pedal fully after warming up engine.	0.5V or less

ON BOARD DIAGNOSIS LOGIC

NJAT0299S03

Diagnostic trouble code	Malfunction is detected when ...	Check items (Possible cause)
: L/PRESS SOL/CIRC : P0745	TCM detects an improper voltage drop when it tries to operate the solenoid valve.	● Harness or connectors (The solenoid circuit is open or shorted.) ● Line pressure solenoid valve

SELECT SYSTEM
A/T
ENGINE

SAT014K

SELECT DIAG MODE
WORK SUPPORT
SELF-DIAG RESULTS
DATA MONITOR
ACTIVE TEST
DTC & SRT CONFIRMATION
ECM PART NUMBER

SAT020K

DIAGNOSTIC TROUBLE CODE (DTC) CONFIRMATION PROCEDURE

NJAT0299S04

NOTE:

If "DIAGNOSTIC TROUBLE CODE CONFIRMATION PROCEDURE" has been previously conducted, always turn ignition switch "OFF" and wait at least 5 seconds before conducting the next test.

After the repair, perform the following procedure to confirm the malfunction is eliminated.

With CONSULT-II

1) Turn ignition switch "ON" and select "DATA MONITOR" mode for "ENGINE" with CONSULT-II.
2) Depress accelerator pedal completely and wait at least 1 second.

With GST

Follow the procedure "With CONSULT-II".

Wiring Diagram — AT — LPSV

NJAT0300

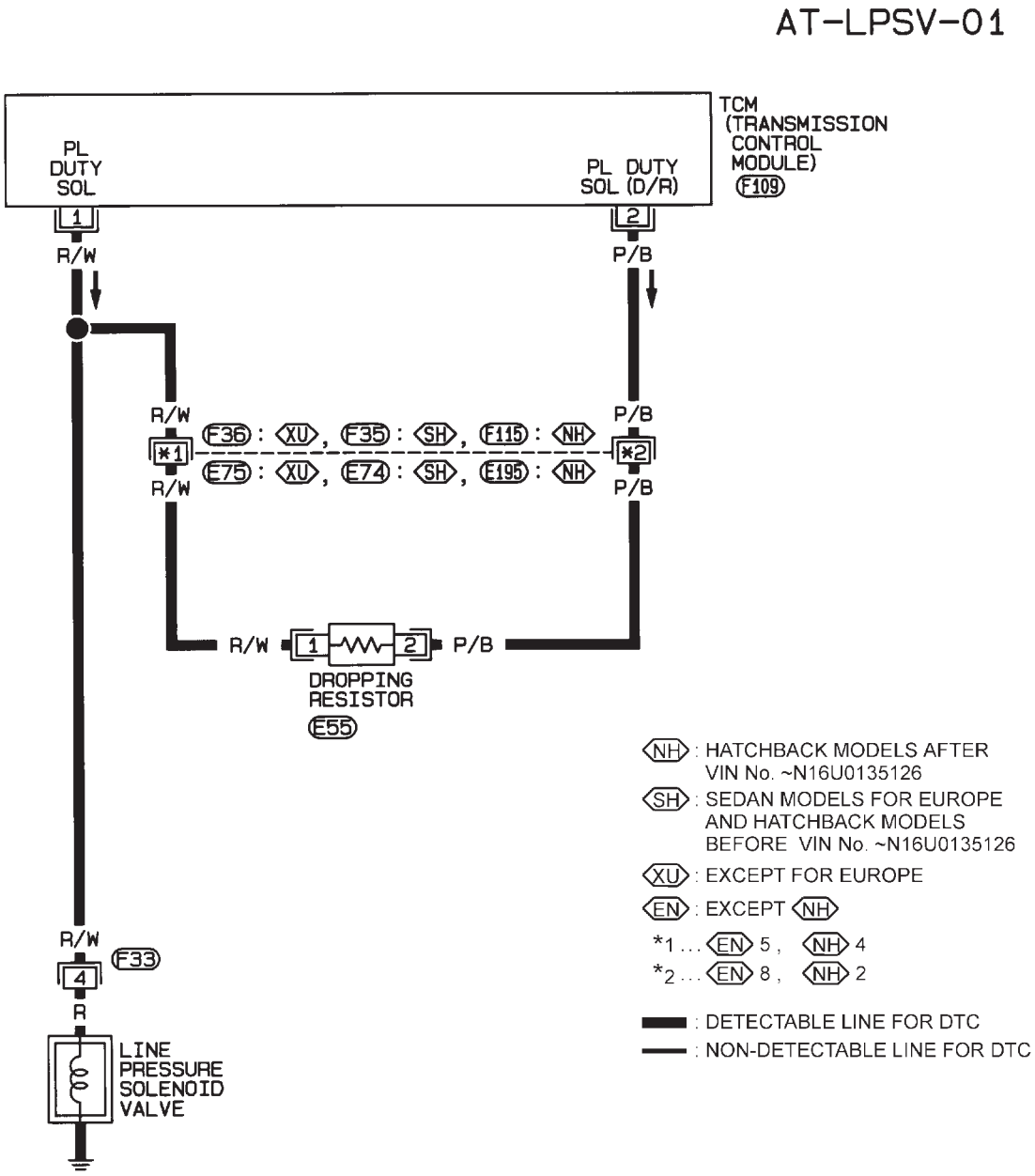

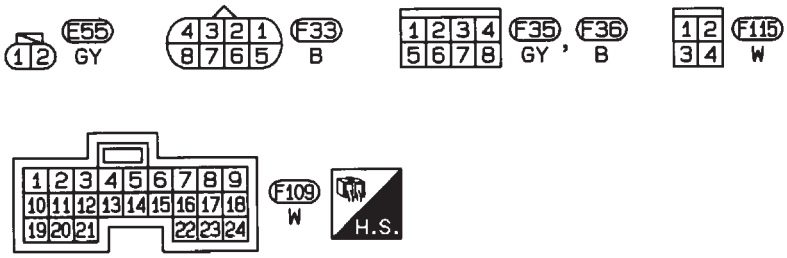

NAT347

Diagnostic Procedure

NJAT0301

1	CHECK VALVE RESISTANCE

1. Turn ignition switch to “OFF” position.
2. Disconnect terminal cord assembly connector in engine compartment.
3. Check resistance between terminal 4 and ground.

Resistance:
2.5 - 5Ω

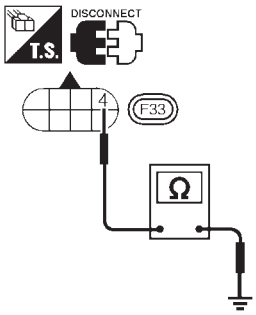

SAT895JB

OK or NG

OK	▶	GO TO 2.
NG	▶	1. Remove control valve assembly. Refer to AT-351. 2. Check the following items: ● Line pressure solenoid valve Refer to “Component Inspection”, AT-245. ● Harness of terminal cord assembly for short or open

2	CHECK POWER SOURCE CIRCUIT

1. Turn ignition switch to "OFF" position.
2. Disconnect TCM harness connector.
3. Check resistance between terminal 4 and TCM harness connector terminal 2.

Resistance:
10 - 15Ω

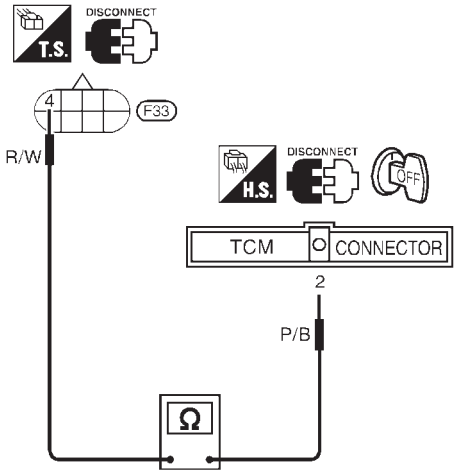

SAT896JB

OK or NG

OK	▶	GO TO 3.
NG	▶	**Check the following items:** ● Dropping resistor Refer to "Component Inspection", AT-245. ● Harness for short or open between TCM terminal 2 and terminal cord assembly (Main harness)

3	CHECK POWER SOURCE CIRCUIT

1. Turn ignition switch to "OFF" position.
2. Check resistance between terminal 4 and TCM harness connector terminal 1.

Resistance:
Approx. 0Ω

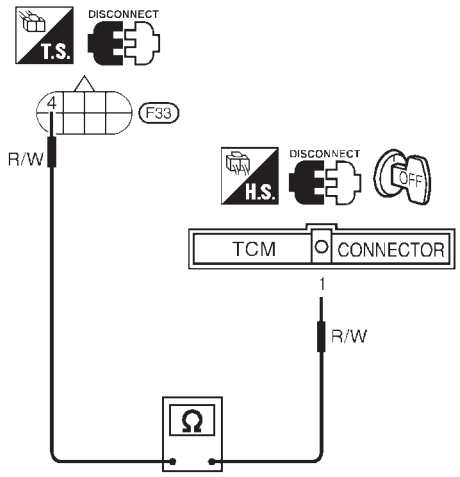

SAT897JB

If OK, check harness for short to ground and short to power.

3. Reinstall any part removed.

OK or NG

OK	▶	GO TO 4.
NG	▶	Repair open circuit or short to ground or short to power in harness or connectors.

4	CHECK DTC

Perform Diagnostic Trouble Code (DTC) confirmation procedure, AT-240.

OK or NG

OK	▶	**INSPECTION END**
NG	▶	1. Perform TCM input/output signal inspection. 2. If NG, recheck TCM pin terminals for damage or loose connection with harness connector.

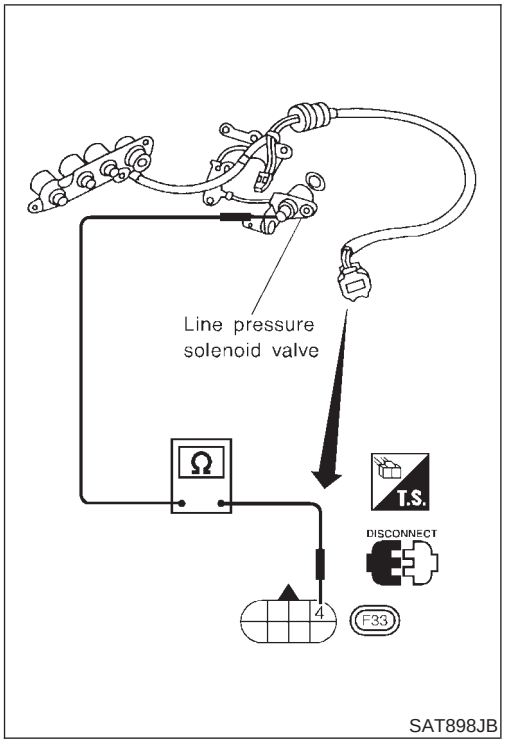

SAT898JB

Component Inspection

=NJAT0302

LINE PRESSURE SOLENOID VALVE

NJAT0302S01

- For removal, refer to AT-351.

Resistance Check

NJAT0302S0101

- Check resistance between two terminals.

Solenoid valve	Terminal No.		Resistance (Approx.)
Line pressure solenoid valve	4	Ground	2.5 - 5Ω

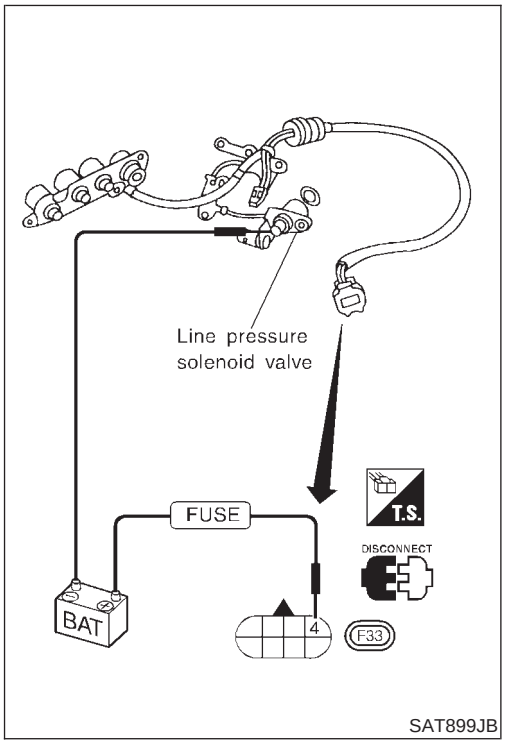

SAT899JB

Operation Check

NJAT0302S0102

- Check solenoid valve by listening for its operating sound while applying battery voltage to the terminal and ground.

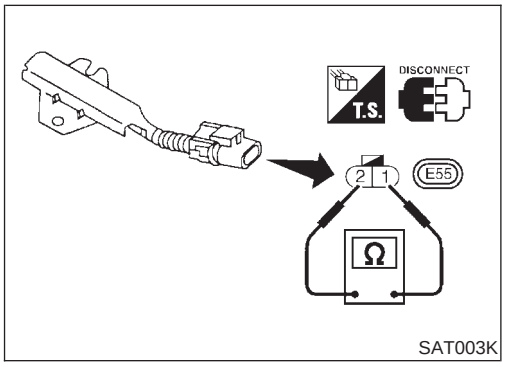

SAT003K

DROPPING RESISTOR

NJAT0302S02

- Check resistance between two terminals.

Resistance:
10 - 15Ω

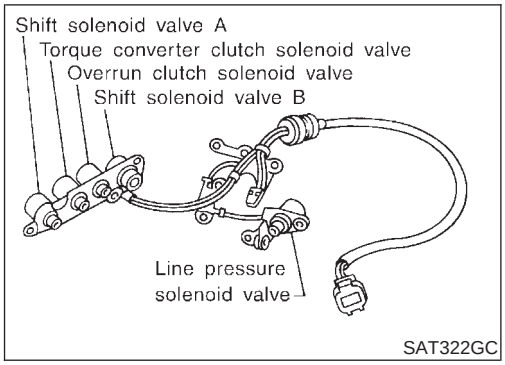

Description

NJAT0303

Shift solenoid valves A and B are turned “ON” or “OFF” by the TCM in response to signals sent from the PNP switch, vehicle speed and throttle position sensors. Gears will then be shifted to the optimum position.

Gear position	1	2	3	4
Shift solenoid valve A	ON (Closed)	OFF (Open)	OFF (Open)	ON (Closed)
Shift solenoid valve B	ON (Closed)	ON (Closed)	OFF (Open)	OFF (Open)

TCM TERMINALS AND REFERENCE VALUE

NJAT0303S01

Remarks: Specification data are reference values.

Terminal No.	Wire color	Item	Condition		Judgement standard
11	L/W	Shift solenoid valve A		When shift solenoid valve A operates. (When driving in “D_1” or “D_4”.)	Battery voltage
				When shift solenoid valve A does not operate. (When driving in “D_2” or “D_3”.)	1V or less

ON BOARD DIAGNOSIS LOGIC

NJAT0303S02

Diagnostic trouble code	Malfunction is detected when ...	Check items (Possible cause)
: SFT SOL A/CIRC	TCM detects an improper voltage drop when it tries to operate the solenoid valve.	● Harness or connectors (The solenoid circuit is open or shorted.) ● Shift solenoid valve A
GST : P0750		

SELECT SYSTEM
A/T
ENGINE

SAT014K

SELECT DIAG MODE
WORK SUPPORT
SELF-DIAG RESULTS
DATA MONITOR
ACTIVE TEST
DTC & SRT CONFIRMATION
ECM PART NUMBER

SAT020K

DIAGNOSTIC TROUBLE CODE (DTC) CONFIRMATION PROCEDURE

NJAT0303S03

CAUTION:

Always drive vehicle at a safe speed.

NOTE:

If "DIAGNOSTIC TROUBLE CODE CONFIRMATION PROCEDURE" has been previously conducted, always turn ignition switch "OFF" and wait at least 5 seconds before conducting the next test.

After the repair, perform the following procedure to confirm the malfunction is eliminated.

With CONSULT-II

1) Turn ignition switch "ON" and select "DATA MONITOR" mode for "ENGINE" with CONSULT-II.
2) Start engine.
3) Drive vehicle in D position and allow the transmission to shift "1" → "2" ("GEAR").

With GST

Follow the procedure "With CONSULT-II".

Wiring Diagram — AT — SSV/A

NJAT0304

AT-SSV/A-01

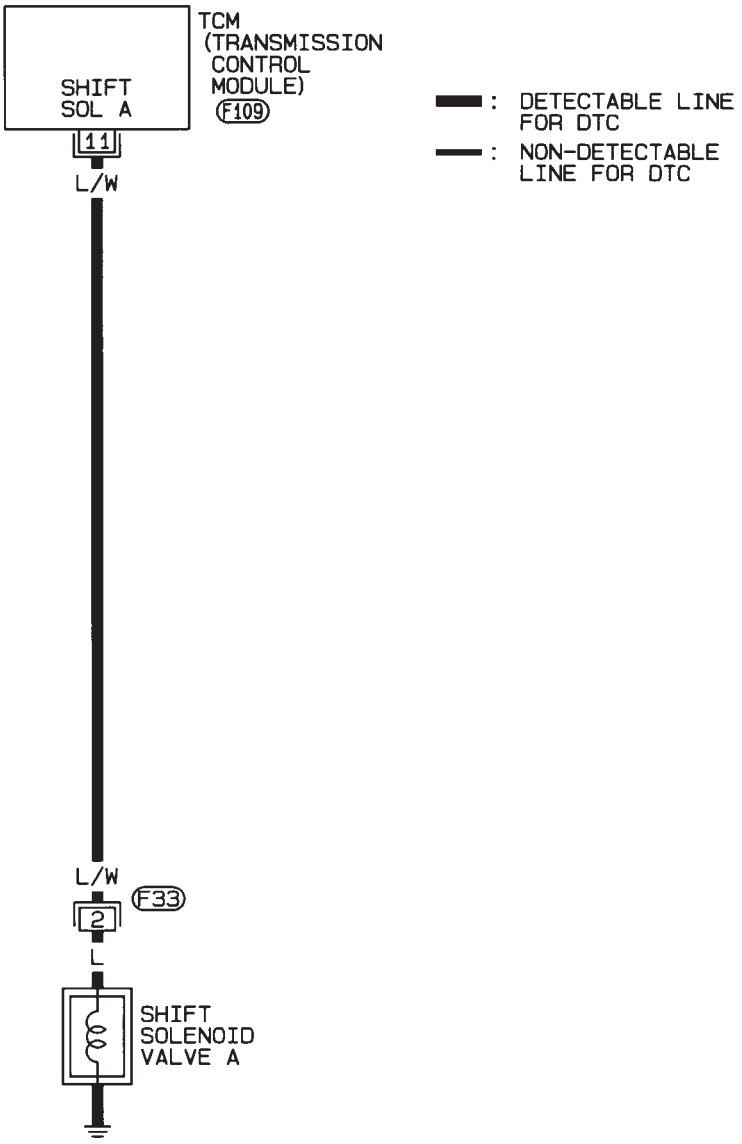

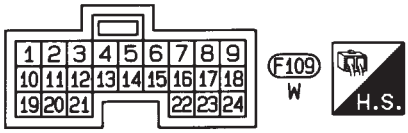

HAT079

Diagnostic Procedure

NJAT0305

1	CHECK VALVE RESISTANCE

1. Turn ignition switch to “OFF” position.
2. Disconnect terminal cord assembly connector in engine compartment.
3. Check resistance between terminal 2 and ground.

Resistance:

20 - 30Ω

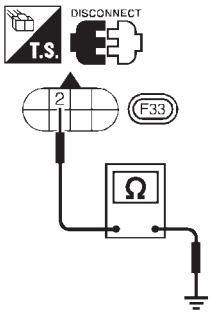

SAT900JB

OK or NG

OK	▶	GO TO 2.
NG	▶	1. Remove control valve assembly. Refer to AT-351. 2. Check the following items: ● Shift solenoid valve A Refer to “Component Inspection”, AT-251. ● Harness of terminal cord assembly for short or open

2	CHECK POWER SOURCE CIRCUIT

1. Turn ignition switch to "OFF" position.
2. Disconnect TCM harness connector.
3. Check continuity between terminal 2 and TCM harness connector terminal 11.
   Continuity should exist.

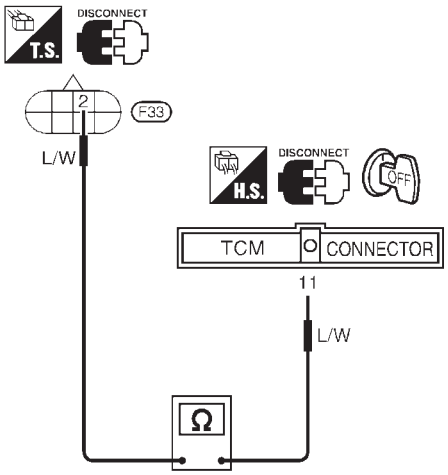

SAT901JC

If OK, check harness for short to ground and short to power.

4. Reinstall any part removed.

OK or NG

OK	▶	GO TO 3.
NG	▶	Repair open circuit or short to ground or short to power in harness or connectors.

3	CHECK DTC

Perform Diagnostic Trouble Code (DTC) confirmation procedure, AT-247.

OK or NG

OK	▶	**INSPECTION END**
NG	▶	1. Perform TCM input/output signal inspection. 2. If NG, recheck TCM pin terminals for damage or loose connection with harness connector.

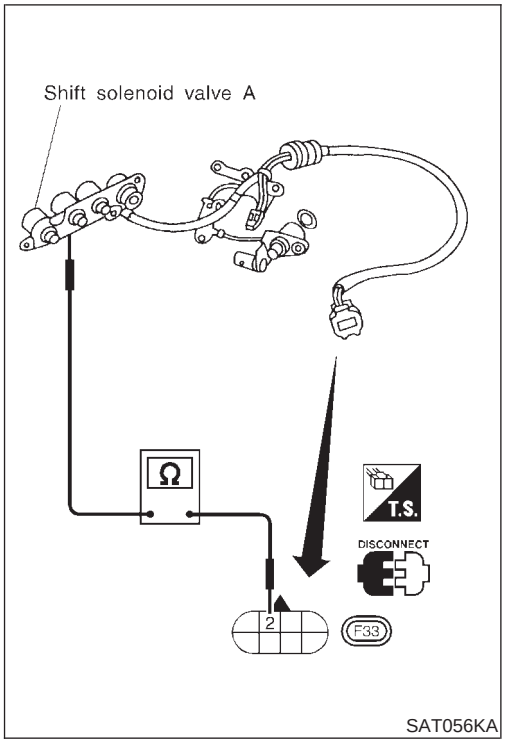

SAT056KA

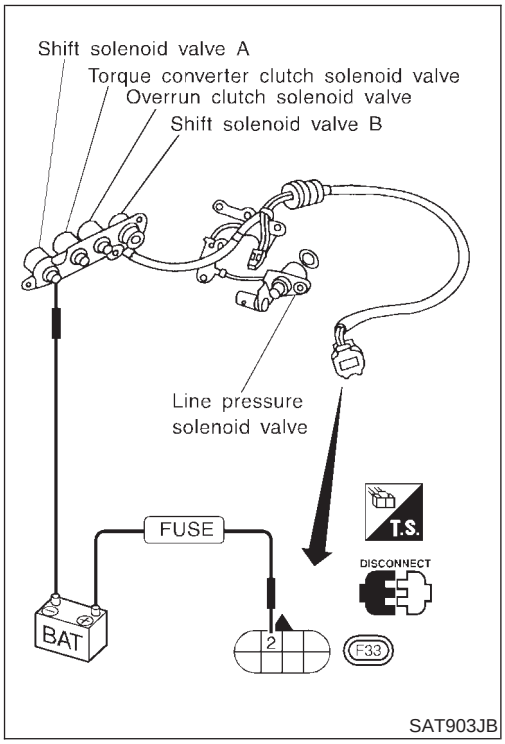

SAT903JB

Component Inspection

NJAT0306

SHIFT SOLENOID VALVE A

NJAT0306S01

- For removal, refer to AT-351.

Resistance Check

NJAT0306S0101

- Check resistance between two terminals.

Solenoid valve	Terminal No.		Resistance (Approx.)
Shift solenoid valve A	2	Ground	20 - 30Ω

Operation Check

NJAT0306S0102

- Check solenoid valve by listening for its operating sound while applying battery voltage to the terminal and ground.

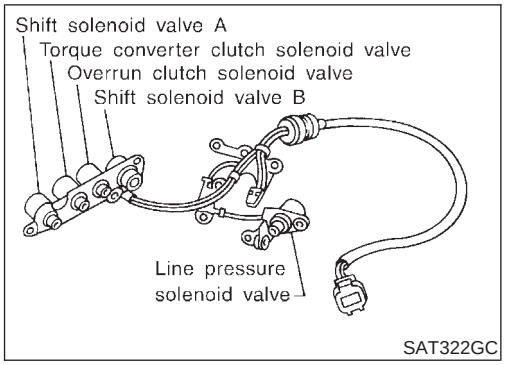

Description

NJAT0307

Shift solenoid valves A and B are turned “ON” or “OFF” by the TCM in response to signals sent from the PNP switch, vehicle speed and throttle position sensors. Gears will then be shifted to the optimum position.

Gear position	1	2	3	4
Shift solenoid valve A	ON (Closed)	OFF (Open)	OFF (Open)	ON (Closed)
Shift solenoid valve B	ON (Closed)	ON (Closed)	OFF (Open)	OFF (Open)

TCM TERMINALS AND REFERENCE VALUE

NJAT0307S01

Remarks: Specification data are reference values.

Terminal No.	Wire color	Item	Condition		Judgement standard
12	L/Y	Shift solenoid valve B		When shift solenoid valve B operates. (When driving in “D_1” or “D_2”.)	Battery voltage
				When shift solenoid valve B does not operate. (When driving in “D_3” or “D_4”.)	1V or less

ON BOARD DIAGNOSIS LOGIC

NJAT0307S02

Diagnostic trouble code	Malfunction is detected when ...	Check items (Possible cause)
: SFT SOL B/CIRC	TCM detects an improper voltage drop when it tries to operate the solenoid valve.	● Harness or connectors (The solenoid circuit is open or shorted.) ● Shift solenoid valve B
GST : P0755		

SELECT SYSTEM
A/T
ENGINE

SAT014K

SELECT DIAG MODE
WORK SUPPORT
SELF-DIAG RESULTS
DATA MONITOR
ACTIVE TEST
DTC & SRT CONFIRMATION
ECM PART NUMBER

SAT020K

DIAGNOSTIC TROUBLE CODE (DTC) CONFIRMATION PROCEDURE

NJAT0307S03

CAUTION:

Always drive vehicle at a safe speed.

NOTE:

If "DIAGNOSTIC TROUBLE CODE CONFIRMATION PROCEDURE" has been previously conducted, always turn ignition switch "OFF" and wait at least 5 seconds before conducting the next test.

After the repair, perform the following procedure to confirm the malfunction is eliminated.

With CONSULT-II

1) Turn ignition switch "ON" and select "DATA MONITOR" mode for "ENGINE" with CONSULT-II.
2) Start engine.
3) Drive vehicle in D position and allow the transmission to shift 1 → 2 → 3 ("GEAR").

With GST

Follow the procedure "With CONSULT-II".

Wiring Diagram — AT — SSV/B

NJAT0308

AT-SSV/B-01

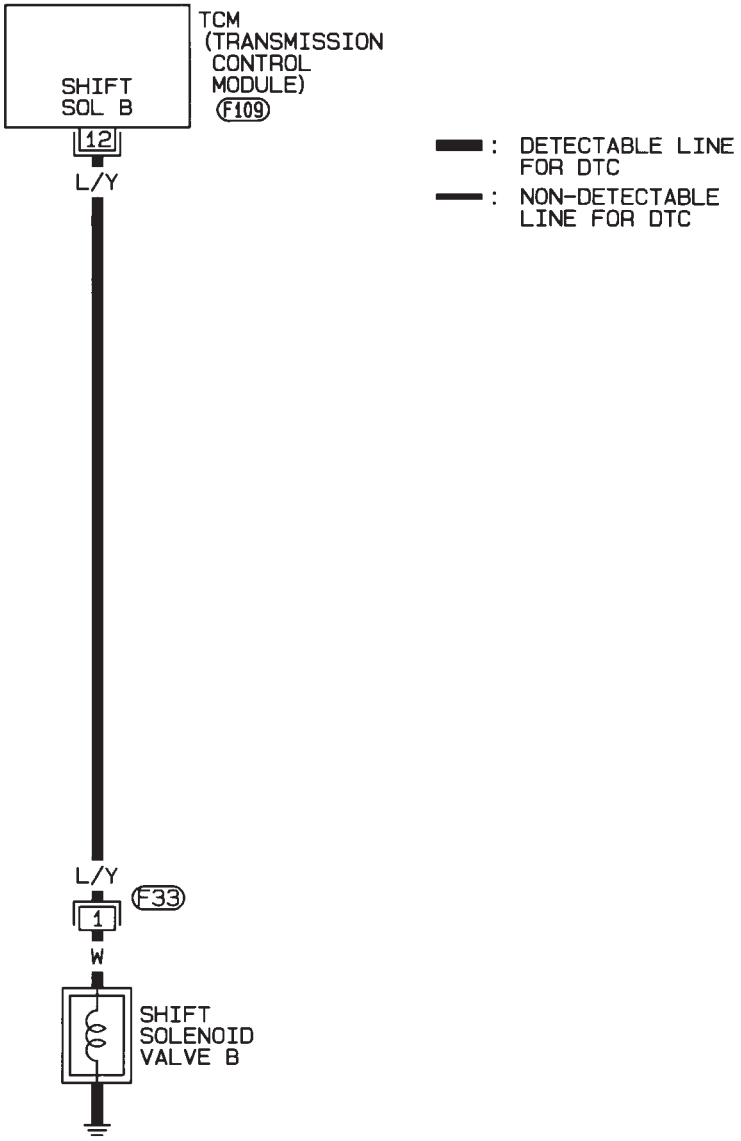

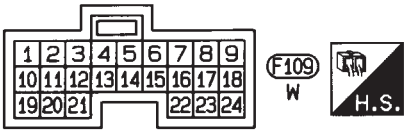

HAT080

Diagnostic Procedure

NJAT0309

1	CHECK VALVE RESISTANCE

1. Turn ignition switch to “OFF” position.
2. Disconnect terminal cord assembly connector in engine compartment.
3. Check resistance between terminal 1 and ground.

Resistance:

5 - 20Ω

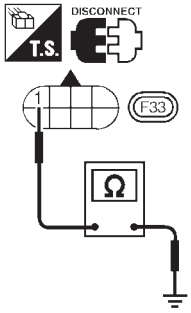

SAT904JB

OK or NG

OK	▶	GO TO 2.
NG	▶	1. Remove control valve assembly. Refer to AT-351. 2. Check the following items: ● Shift solenoid valve B Refer to “Component Inspection”, AT-257. ● Harness of terminal cord assembly for short or open

2	CHECK POWER SOURCE CIRCUIT

1. Turn ignition switch to "OFF" position.
2. Disconnect TCM harness connector.
3. Check continuity between terminal 12 and TCM harness connector terminal 1.
   Continuity should exist.

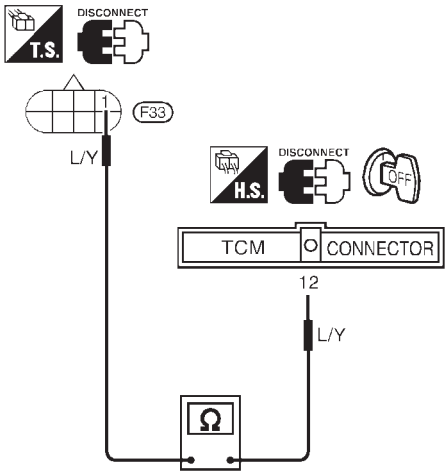

SAT905JD

If OK, check harness for short to ground and short to power.

4. Reinstall any part removed.

OK or NG

OK	▶	GO TO 3.
NG	▶	Repair open circuit or short to ground or short to power in harness or connectors.

3	CHECK DTC

Perform Diagnostic Trouble Code (DTC) confirmation procedure, AT-253.

OK or NG

OK	▶	**INSPECTION END**
NG	▶	1. Perform TCM input/output signal inspection. 2. If NG, recheck TCM pin terminals for damage or loose connection with harness connector.

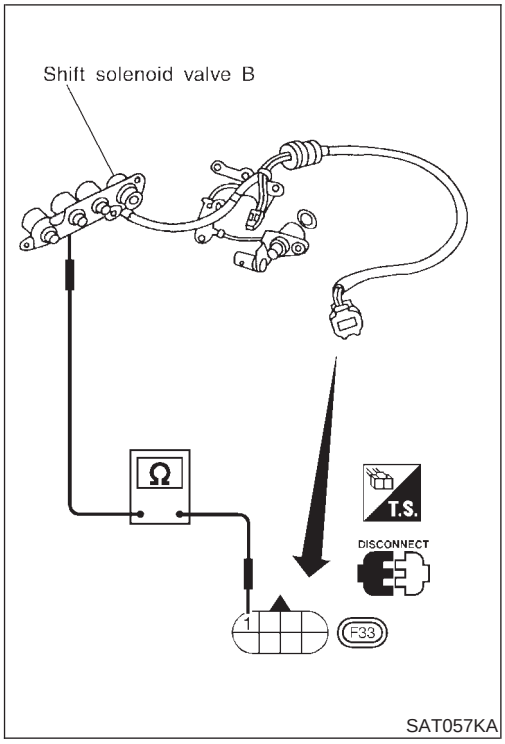

SAT057KA

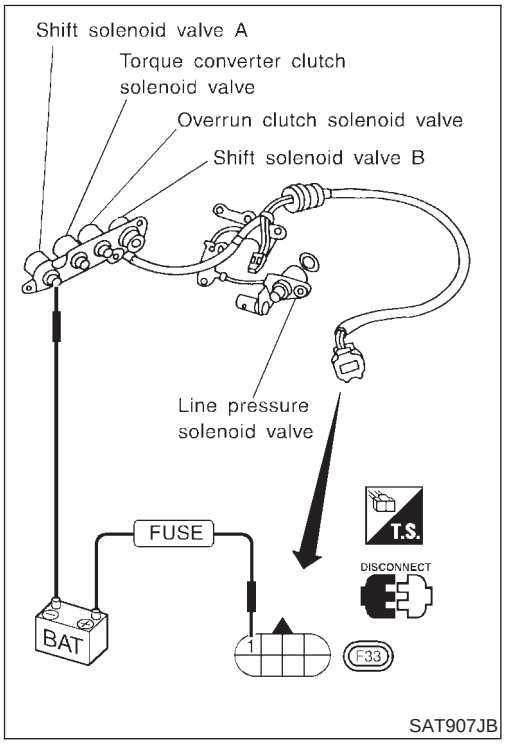

SAT907JB

Component Inspection

NJAT0310

SHIFT SOLENOID VALVE B

NJAT0310S01

- For removal, refer to AT-351.

Resistance Check

NJAT0310S0101

- Check resistance between two terminals.

Solenoid valve	Terminal No.		Resistance (Approx.)
Shift solenoid valve B	1	Ground	5 - 20Ω

Operation Check

NJAT0310S0102

- Check solenoid valve by listening for its operating sound while applying battery voltage to the terminal and ground.

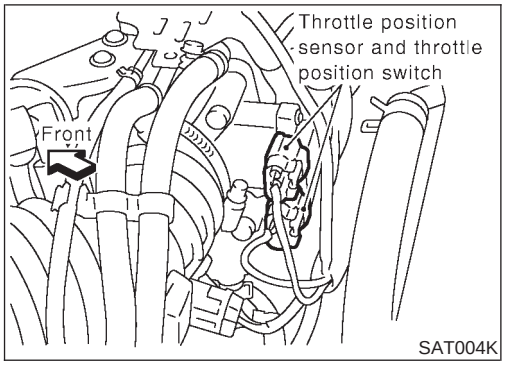

Description

NJAT0311

- Throttle position sensor
  The throttle position sensor detects the throttle valve position and sends a signal to the TCM.
- Throttle position switch
  Consists of a wide open throttle position switch and a closed throttle position switch.
  The wide open throttle position switch sends a signal to the TCM when the throttle valve is open at least 1/2 of the full throttle position. The closed throttle position switch sends a signal to the TCM when the throttle valve is fully closed.

CONSULT-II REFERENCE VALUE IN DATA MONITOR MODE

NJAT0311S01

Remarks: Specification data are reference values.

Monitor item	Condition	Specification
Throttle position sensor	Fully-closed throttle	Approximately 0.5V
	Fully-open throttle	Approximately 4V

TCM TERMINALS AND REFERENCE VALUE

NJAT0311S02

Remarks: Specification data are reference values.

Terminal No.	Wire color	Item	Condition		Judgement standard
16	Y/PU	Closed throttle position switch (in throttle position switch)		When releasing accelerator pedal after warming up engine. Refer to “Preparation”, “TCM SELF-DIAGNOSTIC PROCEDURE (No Tools)”, AT-63.	Battery voltage
				When depressing accelerator pedal after warming up engine. Refer to “Preparation”, “TCM SELF-DIAGNOSTIC PROCEDURE (No Tools)”, AT-63.	1V or less
17	LG	Wide open throttle position switch (in throttle position switch)		When depressing accelerator pedal more than half-way after warming up engine.	Battery voltage
				When releasing accelerator pedal after warming up engine.	1V or less
32	R	Throttle position sensor (Power source)		—	4.5 - 5.5V
41	GY	Throttle position sensor		When depressing accelerator pedal slowly after warming up engine. (Voltage rises gradually in response to throttle position.)	Fully-closed throttle: Approximately 0.5V Fully-open throttle: Approximately 4V
42	B	Ground (Throttle position sensor)		—	—

ON BOARD DIAGNOSIS LOGIC

NJAT0311S03

Diagnostic trouble code	Malfunction is detected when ...	Check items (Possible cause)
: TP SEN/CIRC A/T	TCM receives an excessively low or high voltage from the sensor.	● Harness or connectors (The sensor circuit is open or shorted.) ● Throttle position sensor ● Throttle position switch
: P1705		

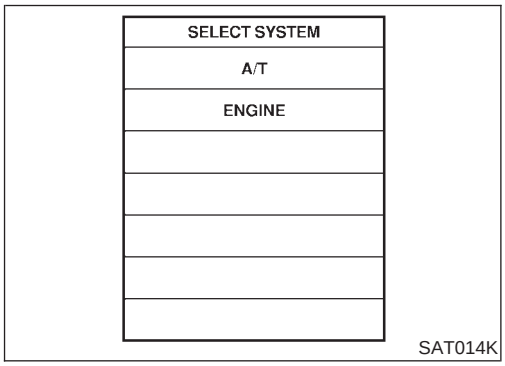

SAT014K

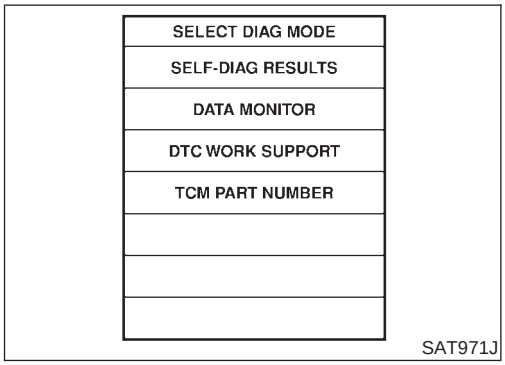

SAT971J

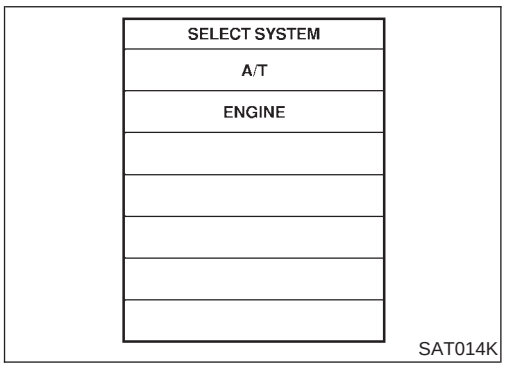

SAT014K

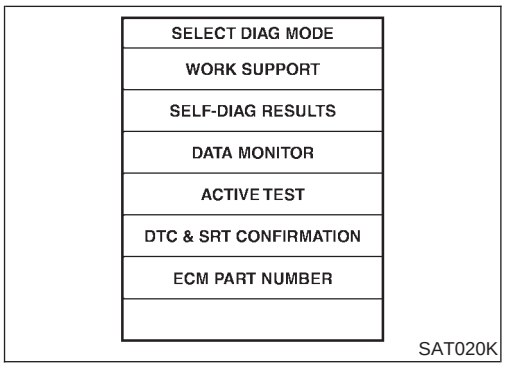

SAT020K

DIAGNOSTIC TROUBLE CODE (DTC) CONFIRMATION PROCEDURE

NJAT0311S04

CAUTION:

Always drive vehicle at a safe speed.

NOTE:

If "DIAGNOSTIC TROUBLE CODE CONFIRMATION PROCEDURE" has been previously conducted, always turn ignition switch "OFF" and wait at least 5 seconds before conducting the next test.

After the repair, perform the following procedure to confirm the malfunction is eliminated.

With CONSULT-II

1) Apply vacuum to the throttle opener, then check the following. Refer to steps from 1 to 5 of "Preparation", "TCM SELF-DIAGNOSTIC PROCEDURE (No Tools)", AT-63.
2) Turn ignition switch "ON" and select "DATA MONITOR" mode for "A/T" with CONSULT-II.
3) Check the following.

Accelerator pedal condition	THRTL POS SEN	CLOSED THL/SW	W/O THRL/P·SW
Fully released	Less than 4.7V	ON	OFF
Partially depressed	0.1 - 4.6V	OFF	OFF
Fully depressed	1.9 - 4.6V	OFF	ON

If the check result is NG, go to "DIAGNOSTIC PROCEDURE", AT-263.
If the check result is OK, go to following step.

4) Turn ignition switch "ON" and select "DATA MONITOR" mode for "ENGINE" with CONSULT-II.
5) Start engine and maintain the following conditions for at least 3 consecutive seconds. Then release accelerator pedal completely.
VHCL SPEED SE: 10 km/h (6 MPH) or more
THRTL POS SEN: Approximately 3V or less
Selector lever: D position (OD "ON")
If the check result is NG, go to "DIAGNOSTIC PROCEDURE", AT-263.
If the check result is OK, go to following step.
6) Maintain the following conditions for at least 3 consecutive seconds. Then release accelerator pedal completely.
VHCL SPEED SE: 10 km/h (6 MPH) or more
Accelerator pedal: Wide open throttle
Selector lever: D position (OD "ON")

With GST

Follow the procedure "With CONSULT-II".

Wiring Diagram — AT — TPS

MODELS WITH JOINT CONNECTOR-6

NJAT0312

NJAT0312S01

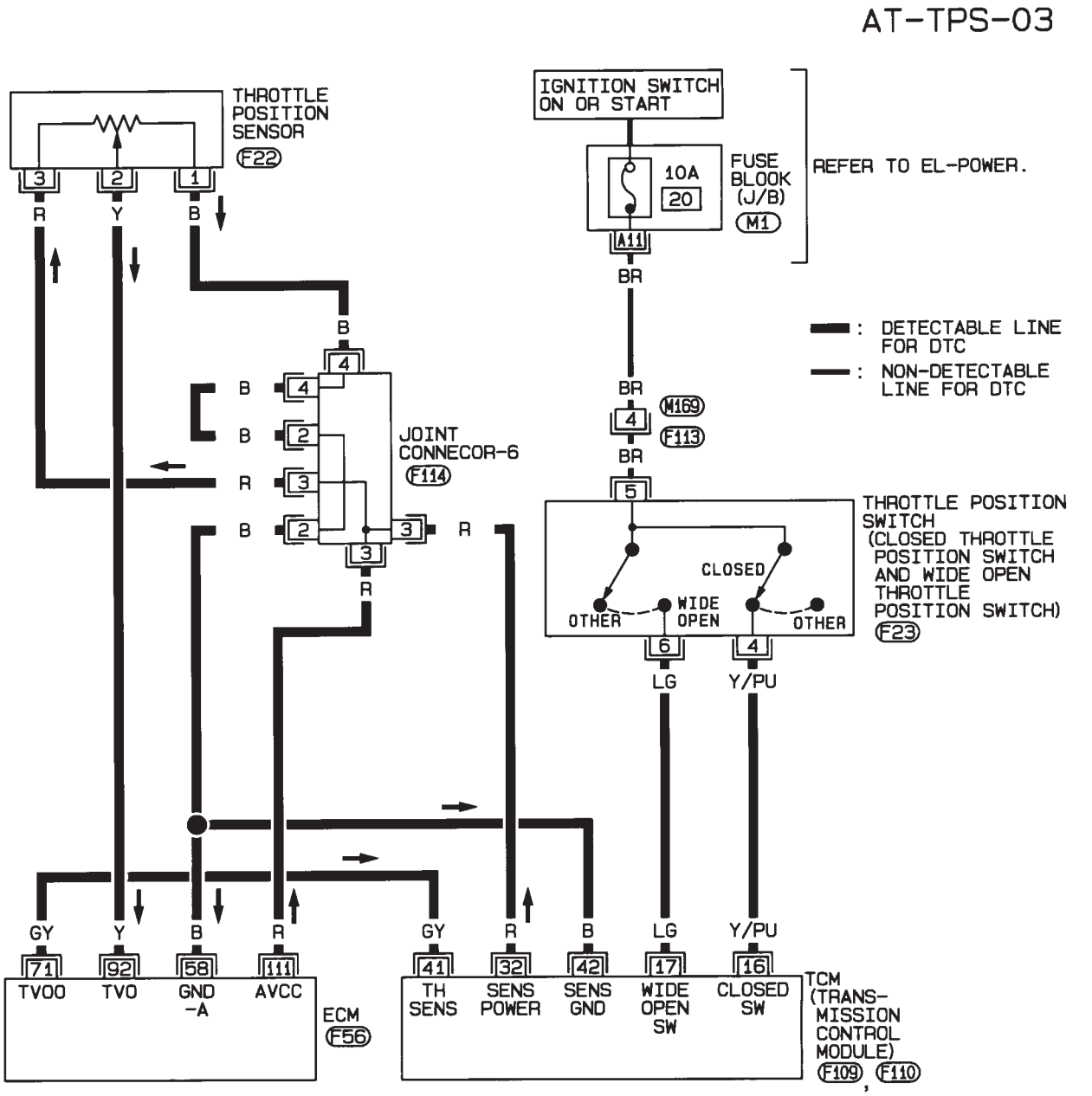

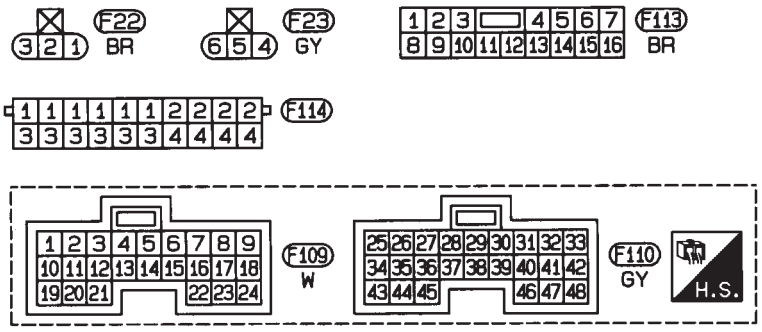

REFER TO THE FOLLOWING.

M1 -FUSE BLOCK-JUNCTION BOX (J/B)

F56 -ELECTRICAL UNITS

HAT142

MODELS WITH JOINT CONNECTOR-3 AND 4

NJAT0312S02

AT-TPS-02

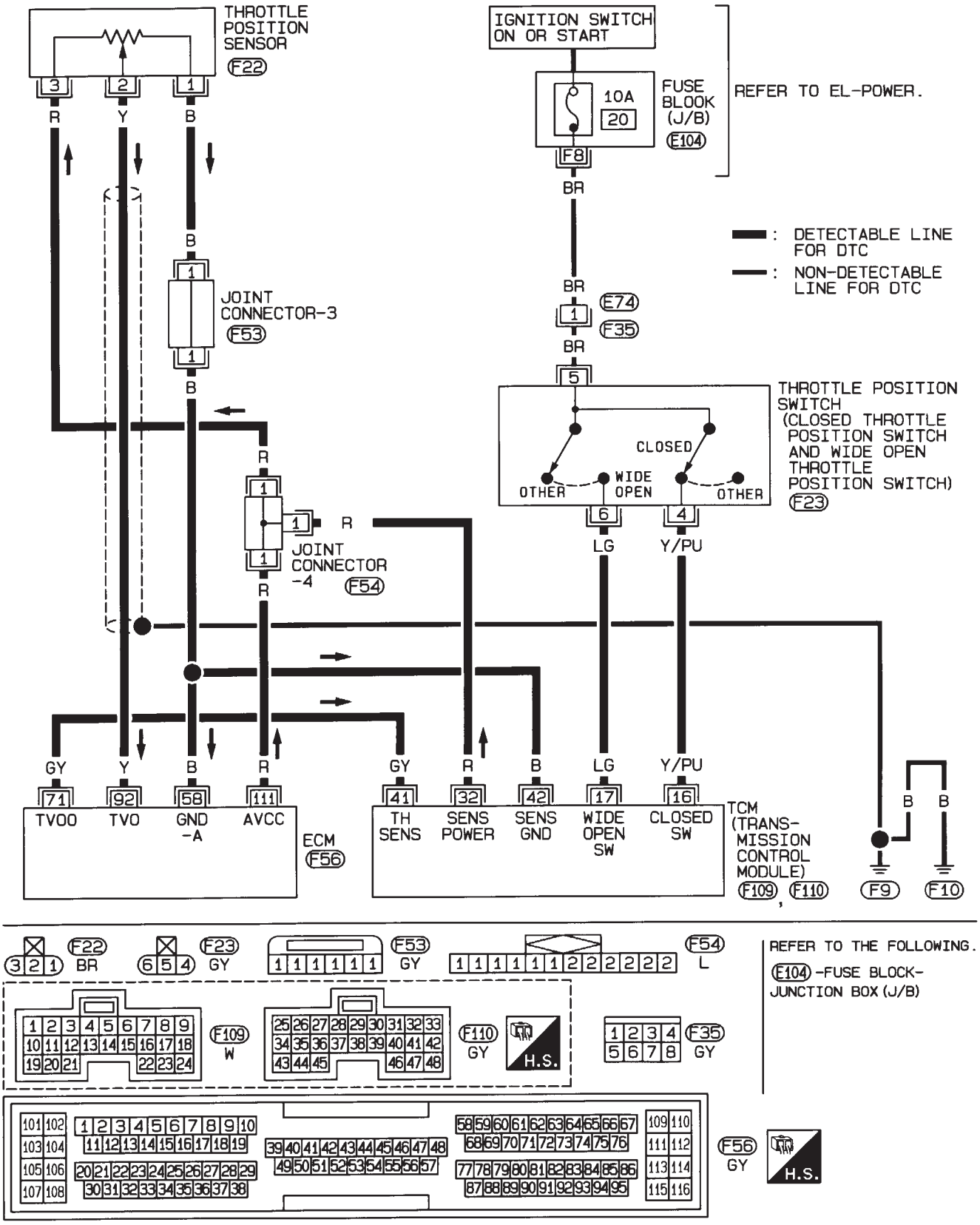

HAT093

Diagnostic Procedure

NJAT0313

1	CHECK DTC WITH ECM
Perform diagnostic test mode II (self-diagnostic results) for engine control. Refer to EC-74, “Malfunction Indicator Lamp (MIL)”.	
OK or NG	
OK (With CONSULT-II) ▶	GO TO 2.
OK (Without CONSULT-II) ▶	GO TO 3.
NG ▶	Check throttle position sensor circuit for engine control. Refer to EC-207, “DTC P0120 THROTTLE POSITION SENSOR”.

2	CHECK INPUT SIGNAL (WITH CONSULT-II)

With CONSULT-II

1. Apply vacuum to the throttle opener then check the following. Refer from step 1 to 5 of “Preparation”, “TCM SELF-DIAGNOSTIC PROCEDURE (No Tools)”, AT-63.
2. Turn ignition switch to “ON” position.
   (Do not start engine.)
3. Select “ECU INPUT SIGNALS” in “DATA MONITOR” mode for “A/T” with CONSULT-II.

SELECT SYSTEM
A/T
ENGINE

SAT014K

4. Read out the value of “THRTL POS SEN”.
   Voltage:
   Fully-closed throttle:
   Approximately 0.5V
   Fully-open throttle:
   Approximately 4V

DATA MONITOR	
MONITORING	
VHCL/S SE-A/T	XXX km/h
VHCL/S SE-MTR	XXX km/h
THRTL POS SEN	XXX V
FLUID TEMP SE	XXX V
BATTERY VOLT	XXX V

SAT614J

OK or NG	
OK ▶	GO TO 4.
NG ▶	Check harness for short or open between ECM and TCM regarding throttle position sensor circuit. (Main harness)

3	CHECK INPUT SIGNAL (WITHOUT CONSULT-II)

Without CONSULT-II

1. Apply vacuum to the throttle opener then check the following. Refer to steps 1 to 5 of "Preparation", "TCM SELF-DIAGNOSTIC PROCEDURE (No Tools)", AT-63.
2. Turn ignition switch to "ON" position.
   (Do not start engine.)
3. Check voltage between TCM terminals 41 and 42 while accelerator pedal is depressed slowly.
   Voltage:
   Fully-closed throttle valve:
   Approximately 0.5V
   Fully-open throttle valve:
   Approximately 4V
   (Voltage rises gradually in response to throttle position)

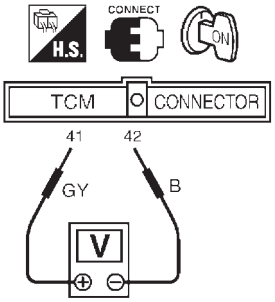

SAT453J

OK or NG

OK	▶	GO TO 5.
NG	▶	Check harness for short or open between ECM and TCM regarding throttle position sensor circuit. (Main harness)

4	CHECK THROTTLE POSITION SWITCH CIRCUIT (WITH CONSULT-II)

With CONSULT-II

1. Apply vacuum to the throttle opener, then check the following. Refer to steps 1 to 5 of "Preparation", "TCM SELF-DIAGNOSTIC PROCEDURE (No Tools)", AT-63.
2. Turn ignition switch to "ON" position.
   (Do not start engine.)
3. Select "ECU INPUT SIGNALS" in "DATA MONITOR" mode for "A/T" with CONSULT-II.
4. Read out "CLOSED THL/SW" and "W/O THRL/P-SW" depressing and releasing accelerator pedal.
   Check the signal of throttle position switch is indicated properly.

Accelerator pedal condition	Data monitor	
	CLOSED THL/SW	W/O THRL/P-SW
Released	ON	OFF
Fully depressed	OFF	ON

MTBL0011

DATA MONITOR	
MONITORING	
POWERSHIFT SW	OFF
CLOSED THL/SW	OFF
W/O THRL/P-SW	OFF
HOLD SW	OFF
BRAKE SW	ON

SAT702J

OK or NG

OK	▶	GO TO 6.
NG	▶	**Check the following items:** ● Throttle position switch — Refer to "Components Inspection", AT-267. ● Harness for short or open between ignition switch and throttle position switch (Main harness) ● Harness for short or open between throttle position switch and TCM (Main harness)

5	CHECK THROTTLE POSITION SWITCH CIRCUIT (WITHOUT CONSULT-II)

Without CONSULT-II

1. Apply vacuum to the throttle opener, then check the following. Refer to steps 1 to 5 of "Preparation", "TCM SELF-DIAGNOSTIC PROCEDURE (No Tools)", AT-63.
2. Turn ignition switch to "ON" position.
   (Do not start engine.)
3. Check voltage between TCM terminals 16, 17 and ground while depressing, and releasing accelerator pedal slowly.
   (After warming up engine)

Accelerator pedal condition	Voltage	
	Terminal No. 16	Terminal No. 17
Released	Battery voltage	1V or less
Fully depressed	1V or less	Battery voltage

MTBL0137

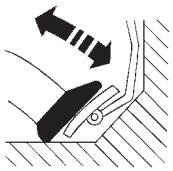

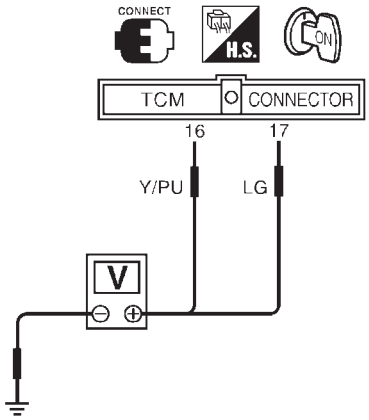

SAT454JB

OK or NG

OK	▶	GO TO 6.
NG	▶	**Check the following items:** ● Throttle position switch — Refer to "Components Inspection", AT-267. ● Harness for short or open between ignition switch and throttle position switch (Main harness) ● Harness for short or open between throttle position switch and TCM (Main harness)

6	CHECK DTC

Perform Diagnostic Trouble Code (DTC) confirmation procedure, AT-259.

OK or NG

OK	▶	**INSPECTION END**
NG	▶	1. Perform TCM input/output signal inspection. 2. If NG, recheck TCM pin terminals for damage or loose connection with harness connector.

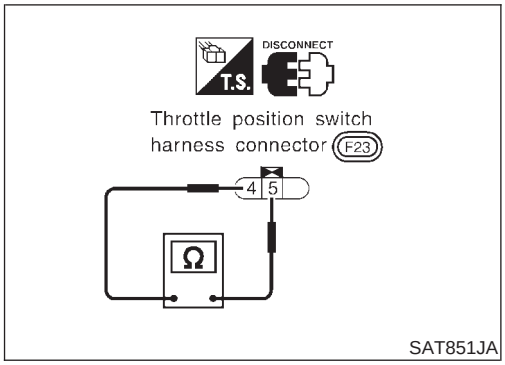

SAT851JA

Component Inspection

=NJAT0314

THROTTLE POSITION SWITCH

NJAT0314S01

Closed Throttle Position Switch (Idle position)

NJAT0314S0101

- Check continuity between terminals 4 and 5.
  [Refer to “Preparation”, “TCM SELF-DIAGNOSTIC PROCEDURE (No Tools)”, AT-63.]

Accelerator pedal condition	Continuity
Released	Yes
Depressed	No

- To adjust closed throttle position switch, refer to EC-385, “DTC P0510 CLOSED THROTTLE POSITION SWITCH”.

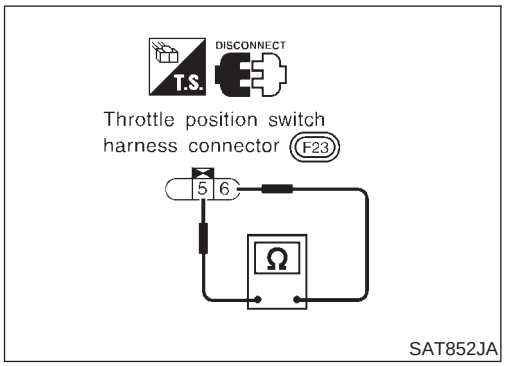

SAT852JA

Wide Open Throttle Position Switch

NJAT0314S0102

- Check continuity between terminals 5 and 6.

Accelerator pedal condition	Continuity
Released	No
Depressed	Yes

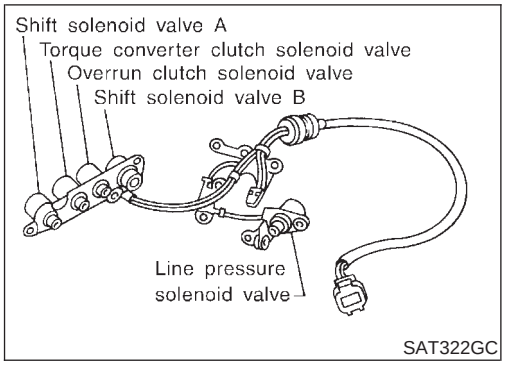

Description

NJAT0315

The overrun clutch solenoid valve is activated by the TCM in response to signals sent from the inhibitor switch, overdrive control switch, vehicle speed and throttle position sensors. The overrun clutch operation will then be controlled.

TCM TERMINALS AND REFERENCE VALUE

NJAT0315S01

Remarks: Specification data are reference values.

Terminal No.	Wire color	Item	Condition		Judgement standard
20	L/B	Overrun clutch solenoid valve		When overrun clutch solenoid valve operates.	Battery voltage
				When overrun clutch solenoid valve does not operate.	1V or less

ON BOARD DIAGNOSIS LOGIC

NJAT0315S02

Diagnostic trouble code	Malfunction is detected when ...	Check items (Possible cause)
: O/R CLTCH SOL/CIRC : P1760	TCM detects an improper voltage drop when it tries to operate the solenoid valve.	• Harness or connectors (The solenoid circuit is open or shorted.) • Overrun clutch solenoid valve

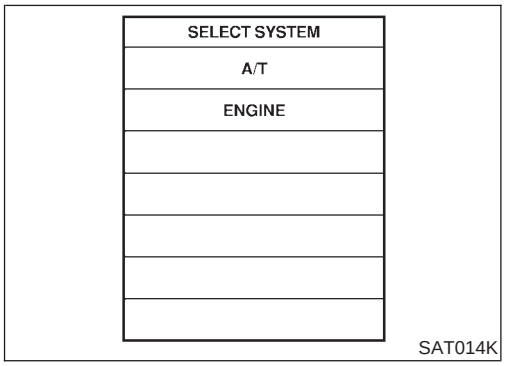

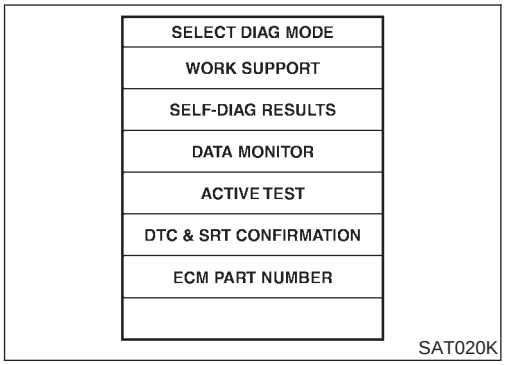

DIAGNOSTIC TROUBLE CODE (DTC) CONFIRMATION PROCEDURE

NJAT0315S03

CAUTION:

Always drive vehicle at a safe speed.

NOTE:

If "DIAGNOSTIC TROUBLE CODE CONFIRMATION PROCEDURE" has been previously conducted, always turn ignition switch "OFF" and wait at least 5 seconds before conducting the next test.

TESTING CONDITION:

Always drive vehicle on a level road to improve accuracy of test.

After the repair, perform the following procedure to confirm the malfunction is eliminated.

With CONSULT-II

1) Turn ignition switch "ON" and select "DATA MONITOR" mode for "ENGINE" with CONSULT-II.
2) Start engine.
3) Accelerate vehicle to a speed of more than 10 km/h (6 MPH) with "D" position (OD "ON").
4) Release accelerator pedal completely with "D" position (OD "OFF").

With GST

Follow the procedure "With CONSULT-II".

Wiring Diagram — AT — OVRCSV

NJAT0316

AT-OVRCSV-01

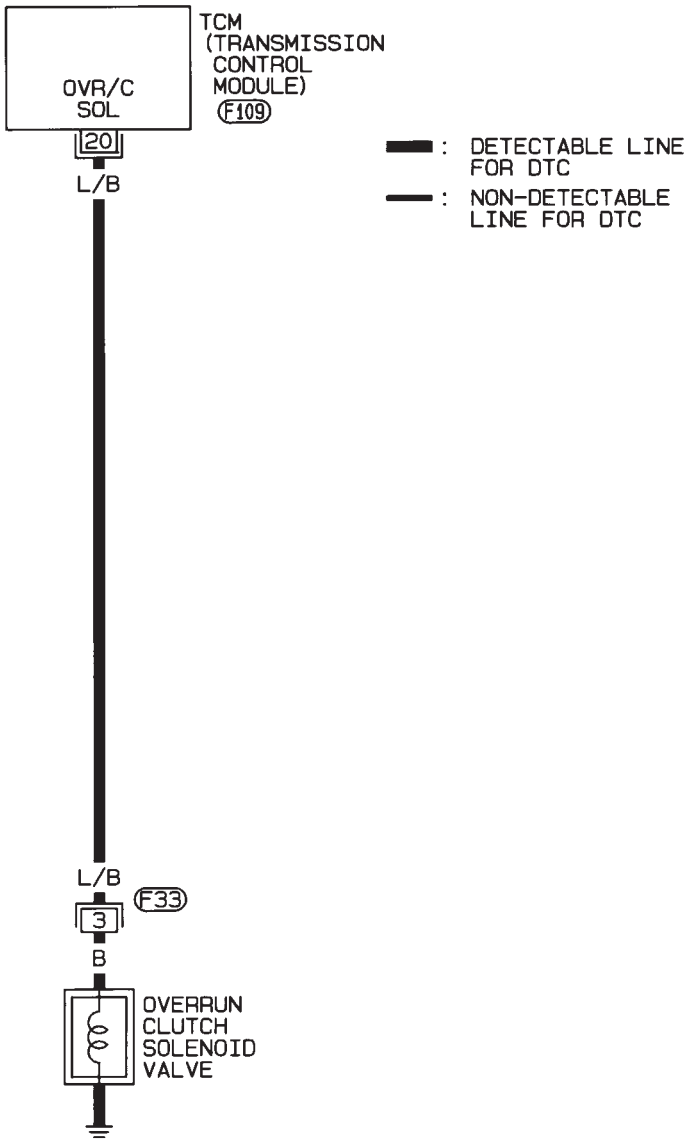

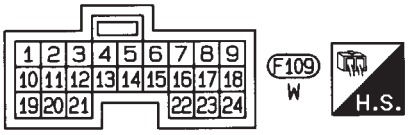

HAT081

Diagnostic Procedure

NJAT0317

1	CHECK VALVE RESISTANCE

1. Turn ignition switch to “OFF” position.
2. Disconnect terminal cord assembly connector in engine compartment.
3. Check resistance between terminal 3 and ground.

Resistance:
20 - 30Ω

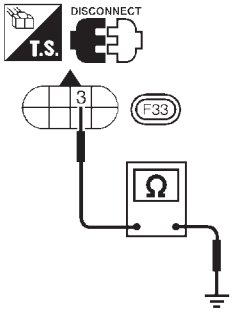

SAT908JB

OK or NG

OK	▶	GO TO 2.
NG	▶	1. Remove control valve assembly. Refer to AT-351. 2. Check the following items: ● Overrun clutch solenoid valve Refer to “Component Inspection”, AT-273. ● Harness of terminal cord assembly for short or open

2	CHECK POWER SOURCE CIRCUIT

1. Turn ignition switch to "OFF" position.
2. Disconnect TCM harness connector.
3. Check continuity between terminal 3 and TCM harness connector terminal 20.
   Continuity should exist.

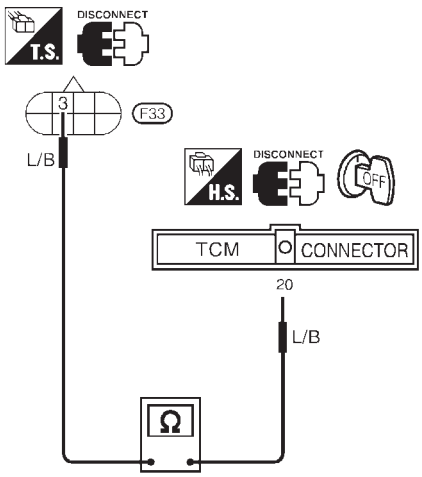

SAT909JB

If OK, check harness for short to ground and short to power.

4. Reinstall any part removed.

OK or NG

OK	▶	GO TO 3.
NG	▶	Repair open circuit or short to ground or short to power in harness or connectors.

3	CHECK DTC

Perform Diagnostic Trouble Code (DTC) confirmation procedure, AT-268.

OK or NG

OK	▶	**INSPECTION END**
NG	▶	1. Perform TCM input/output signal inspection. 2. If NG, recheck TCM pin terminals for damage or loose connection with harness connector.

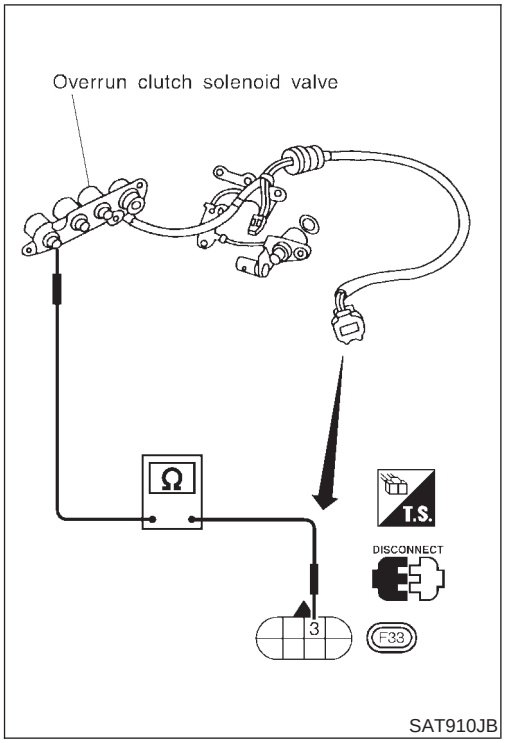

SAT910JB

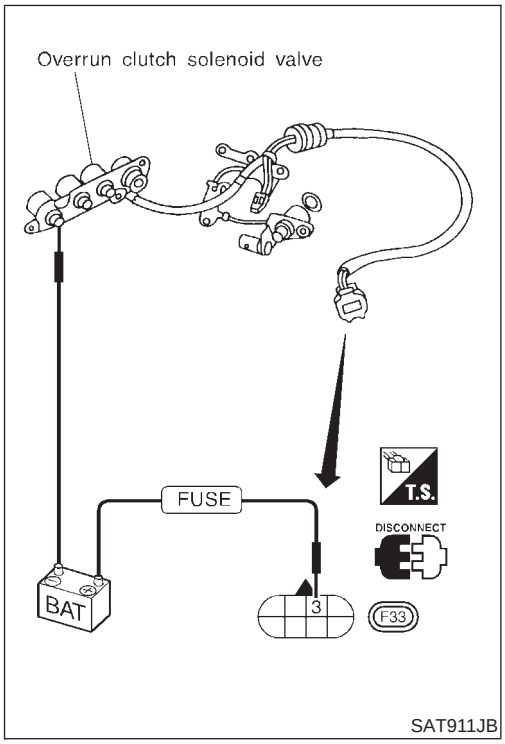

SAT911JB

Component Inspection

NJAT0318

OVERRUN CLUTCH SOLENOID VALVE

NJAT0318S01

- For removal, refer to AT-351.

Resistance Check

NJAT0318S0101

- Check resistance between two terminals.

Solenoid valve	Terminal No.		Resistance (Approx.)
Overrun clutch solenoid valve	3	Ground	20 - 30Ω

Operation Check

NJAT0318S0102

- Check solenoid valve by listening for its operating sound while applying battery voltage to the terminal and ground.

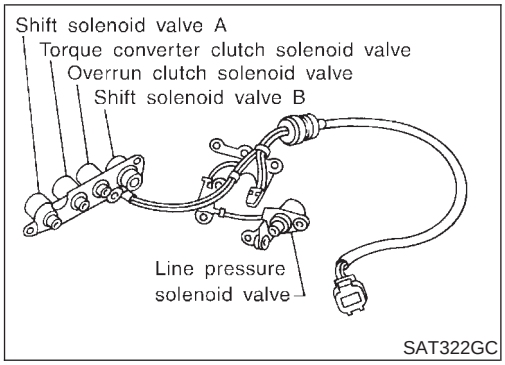

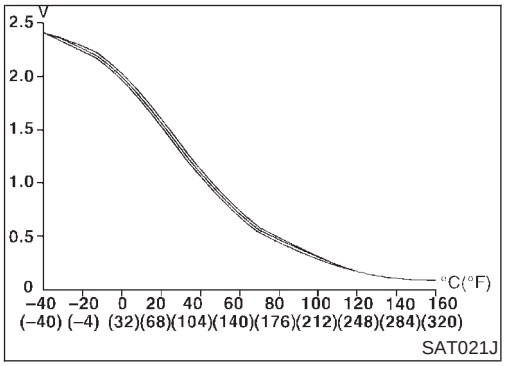

Description

NJAT0319

The A/T fluid temperature sensor detects the A/T fluid temperature and sends a signal to the TCM.

CONSULT-II REFERENCE VALUE IN DATA MONITOR MODE

NJAT0319S01

Remarks: Specification data are reference values.

Monitor item	Condition	Specification	
A/T fluid temperature sensor	Cold [20°C (68°F)] ↓ Hot [80°C (176°F)]	Approximately 1.5V ↓ Approximately 0.5V	Approximately 2.5 kΩ ↓ Approximately 0.3 kΩ

TCM TERMINALS AND REFERENCE VALUE

NJAT0319S02

Remarks: Specification data are reference values.

Terminal No.	Wire color	Item	Condition		Judgement standard
10	BR/R	Power source	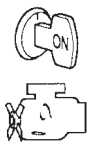	When turning ignition switch to “ON”.	Battery voltage
				When turning ignition switch to “OFF”.	1V or less
19	BR/R	Power source		Same as No. 10	
28	R/B	Power source (Memory back-up)	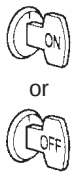	When turning ignition switch to “OFF”.	Battery voltage
				When turning ignition switch to “ON”.	Battery voltage
42	B	Ground (A/T fluid temperature sensor)	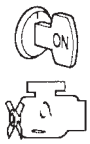	—	—
47	BR	A/T fluid temperature sensor		When ATF temperature is 20°C (68°F).	Approximately 1.5V
				When ATF temperature is 80°C (176°F).	Approximately 0.5V

ON BOARD DIAGNOSIS LOGIC

NJAT0319S03

Diagnostic trouble code	Malfunction is detected when ...	Check items (Possible cause)
: BATT/FLUID TEMP SEN	TCM receives an excessively low or high voltage from the sensor.	• Harness or connectors (The sensor circuit is open or shorted.) • A/T fluid temperature sensor
: 8th judgement flicker		

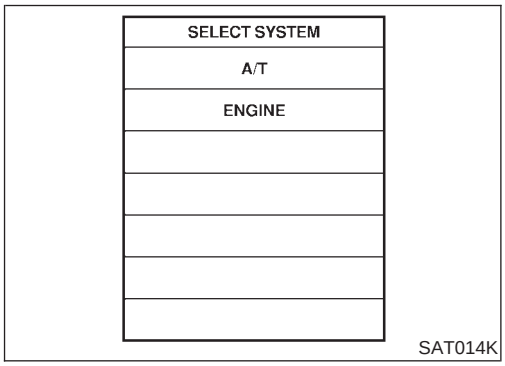

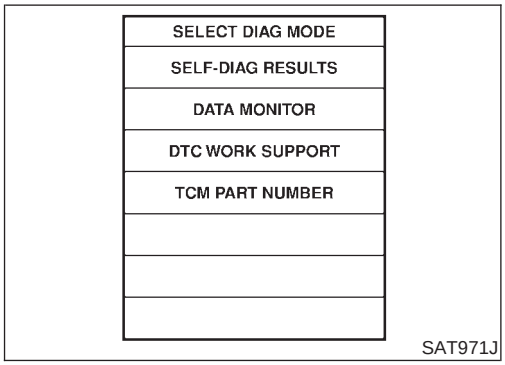

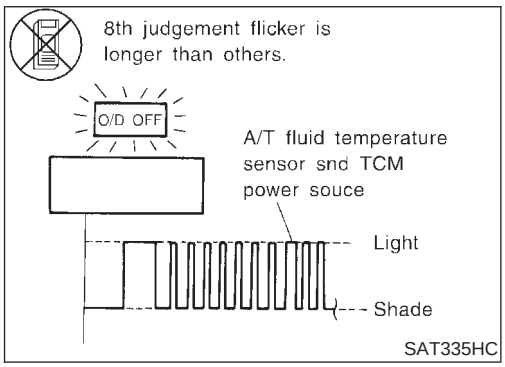

DIAGNOSTIC TROUBLE CODE (DTC) CONFIRMATION PROCEDURE

NJAT0319S04

After the repair, perform the following procedure to confirm the malfunction is eliminated.

With CONSULT-II

1) Start engine.
2) Select "DATA MONITOR" mode for "A/T" with CONSULT-II.
3) Drive vehicle under the following conditions:
   Selector lever in "D", vehicle speed higher than 20 km/h (12 MPH).

Without CONSULT-II

1) Start engine.
2) Drive vehicle under the following conditions:
   Selector lever in "D", vehicle speed higher than 20 km/h (12 MPH).
3) Perform self-diagnosis.
   Refer to TCM SELF-DIAGNOSTIC PROCEDURE (No Tools), AT-63.

Wiring Diagram — AT — BA/FTS

NJAT0320

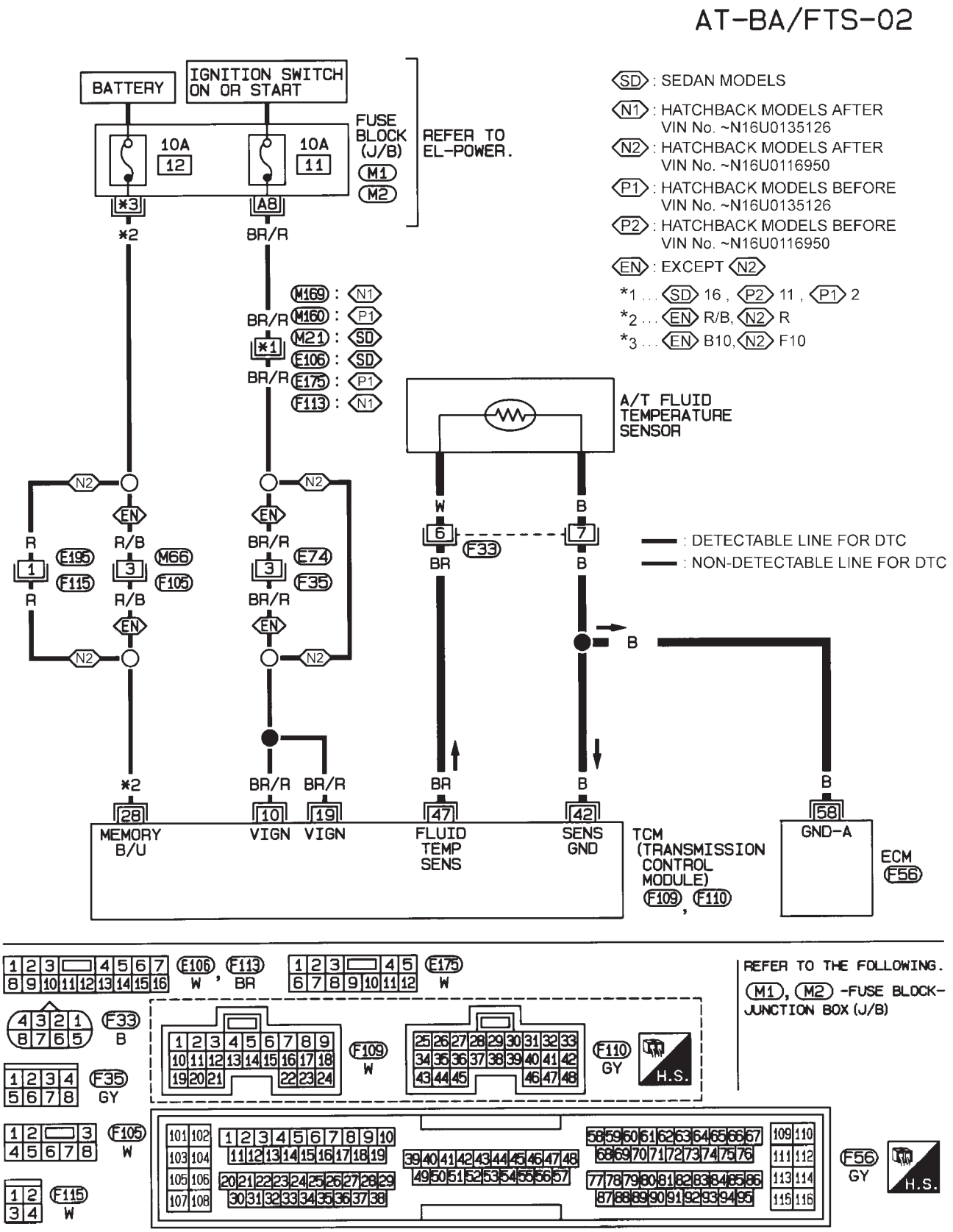

Diagnostic Procedure

NJAT0321

1	CHECK TCM POWER SOURCE

1. Turn ignition switch to “ON” position.
   (Do not start engine.)
2. Check voltage between TCM terminals 10, 19, 28 and ground.
   Voltage:
   Battery voltage
3. Turn ignition switch to “OFF” position.
4. Check voltage between TCM terminal 28 and ground.
   Voltage:
   Battery voltage

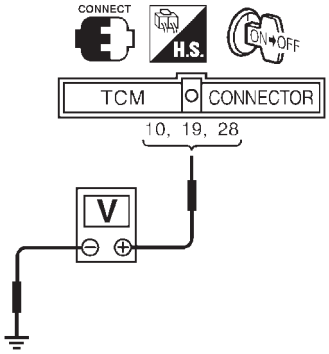

SAT461J

OK or NG

OK	▶	GO TO 2.
NG	▶	**Check the following items:** ● Harness for short or open between ignition switch and TCM (Main harness) ● Ignition switch and fuse Refer to EL-10, “POWER SUPPLY ROUTING”.

2	CHECK A/T FLUID TEMPERATURE SENSOR WITH TERMINAL CORD ASSEMBLY

1. Turn ignition switch to "OFF" position.
2. Disconnect terminal cord assembly connector in engine compartment.
3. Check resistance between terminals 6 and 7 when A/T is cold.

Resistance:
Cold [20°C (68°F)]
Approximately 2.5 kΩ

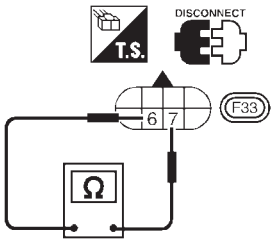

SAT912JB

4. Reinstall any part removed.

OK or NG

OK (With CONSULT-II) ▶	GO TO 3.
OK (Without CONSULT-II) ▶	GO TO 4.
NG ▶	1. Remove oil pan. 2. Check the following items: ● A/T fluid temperature sensor Refer to "Component Inspection", AT-280. ● Harness of terminal cord assembly for short or open

3	CHECK INPUT SIGNAL OF A/T FLUID TEMPERATURE SENSOR (WITH CONSULT-II)

With CONSULT-II

1. Start engine.
2. Select "ECU INPUT SIGNALS" in "DATA MONITOR" mode for "A/T" with CONSULT-II.
3. Read out the value of "FLUID TEMP SE".

Voltage:
Cold [20°C (68°F)] → Hot [80°C (176°F)]:
Approximately 1.5V → 0.5V

DATA MONITOR	
MONITORING	
VHCL/S SE-A/T	XXX km/h
VHCL/S SE-MTR	XXX km/h
THRTL POS SEN	XXX V
FLUID TEMP SE	XXX V
BATTERY VOLT	XXX V

SAT614J

OK or NG

OK ▶	GO TO 5.
NG ▶	**Check the following item:** ● Harness for short or open between TCM, ECM and terminal cord assembly (Main harness) ● Ground circuit for ECM Refer to EC-178, "TROUBLE DIAGNOSIS FOR POWER SUPPLY".

4	CHECK INPUT SIGNAL OF A/T FLUID TEMPERATURE SENSOR (WITHOUT CONSULT-II)

Without CONSULT-II

1. Start engine.
2. Check voltage between TCM terminal 47 and ground while warming up A/T.

   Voltage:

   Cold [20°C (68°F)] → Hot [80°C (176°F)]:

   Approximately 1.5V → 0.5V

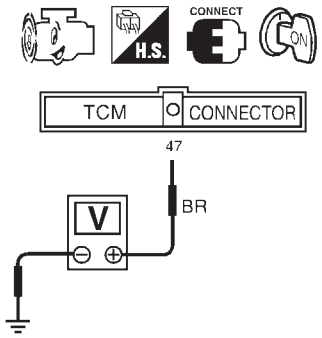

SAT463J

3. Turn ignition switch to "OFF" position.
4. Disconnect TCM harness connector.
5. Check resistance between terminal 42 and ground.

   Continuity should exist.

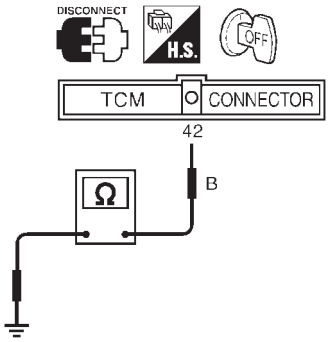

SAT464J

OK or NG

OK	▶	GO TO 5.
NG	▶	**Check the following item:** ● Harness for short or open between TCM, ECM and terminal cord assembly (Main harness) ● Ground circuit for ECM Refer to EC-178, "TROUBLE DIAGNOSIS FOR POWER SUPPLY".

5	CHECK DTC

Perform Diagnostic Trouble Code (DTC) confirmation procedure, AT-275.

OK or NG

OK	▶	**INSPECTION END**
NG	▶	1. Perform TCM input/output signal inspection. 2. If NG, recheck TCM pin terminals for damage or loose connection with harness connector.

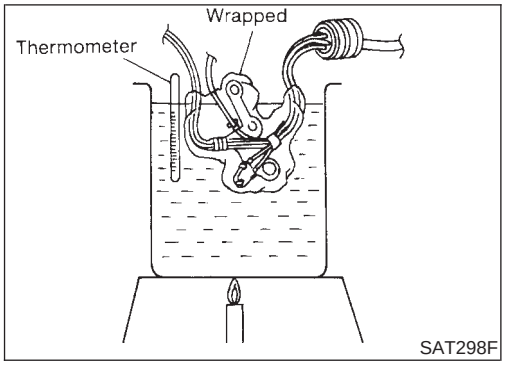

Component Inspection

NJAT0322

A/T FLUID TEMPERATURE SENSOR

NJAT0322S01

- For removal, refer to AT-351.
- Check resistance between two terminals while changing temperature as shown at left.

Temperature °C (°F)	Resistance
20 (68)	Approximately 2.5 kΩ
80 (176)	Approximately 0.3 kΩ

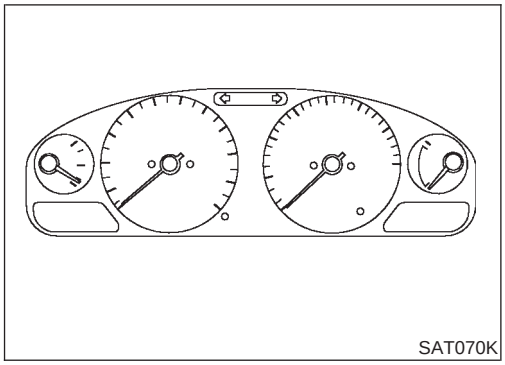

Description

NJAT0323

The vehicle speed sensor·MTR is built into the speedometer assembly. The sensor functions as an auxiliary device to the revolution sensor when it is malfunctioning. The TCM will then use a signal sent from the vehicle speed sensor·MTR.

TCM TERMINALS AND REFERENCE VALUE

NJAT0323S01

Remarks: Specification data are reference values.

Terminal No.	Wire color	Item	Condition		Judgement standard
40	PU/R	Vehicle speed sensor		When moving vehicle at 2 to 3 km/h (1 to 2 MPH) for 1 m (3 ft) or more.	Voltage varies between less than 1V and more than 4.5V

ON BOARD DIAGNOSIS LOGIC

NJAT0323S02

Diagnostic trouble code	Malfunction is detected when ...	Check items (Possible cause)
: VHCL SPEED SEN·MTR	TCM does not receive the proper voltage signal from the sensor.	● Harness or connectors (The sensor circuit is open or shorted.) ● Vehicle speed sensor
: 2nd judgement flicker		

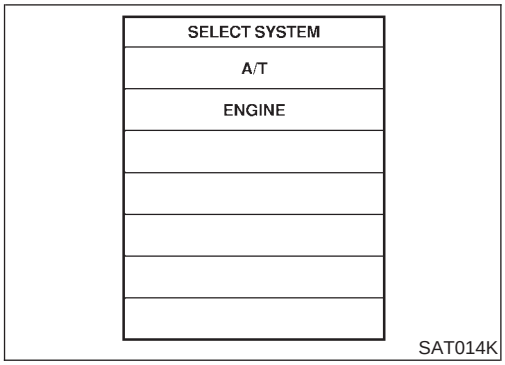

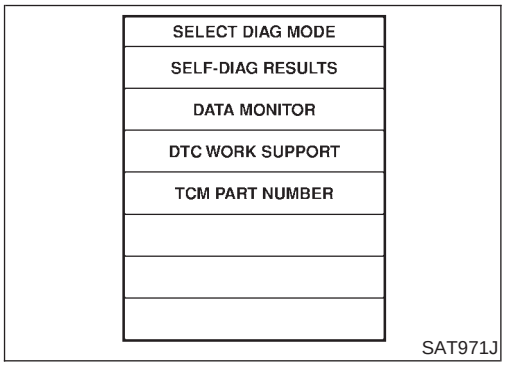

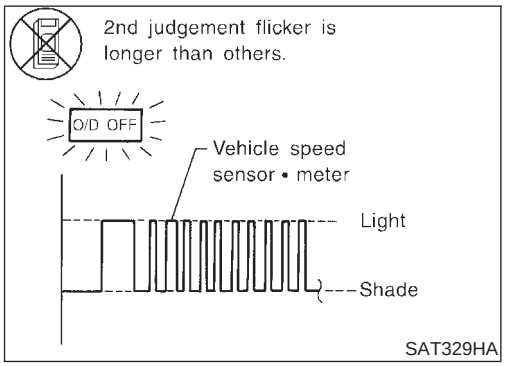

DIAGNOSTIC TROUBLE CODE (DTC) CONFIRMATION PROCEDURE

NJAT0323S03

CAUTION:

- **Always drive vehicle at a safe speed.**
- **If conducting this "DTC CONFIRMATION PROCEDURE" again, always turn ignition switch "OFF" and wait at least 5 seconds before continuing.**

After the repair, perform the following procedure to confirm the malfunction is eliminated.

With CONSULT-II

1) Turn ignition switch "ON" and select "DATA MONITOR" mode for "A/T" with CONSULT-II.
2) Start engine and accelerate vehicle from 0 to 25 km/h (0 to 16 MPH).

Without CONSULT-II

1) Start engine.
2) Drive vehicle under the following conditions:
   Selector lever in "D" and vehicle speed higher than 25 km/h (16 MPH).
3) Perform self-diagnosis.
   Refer to TCM SELF-DIAGNOSTIC PROCEDURE (No Tools), AT-63.

Wiring Diagram — AT — VSSMTR

NJAT0324

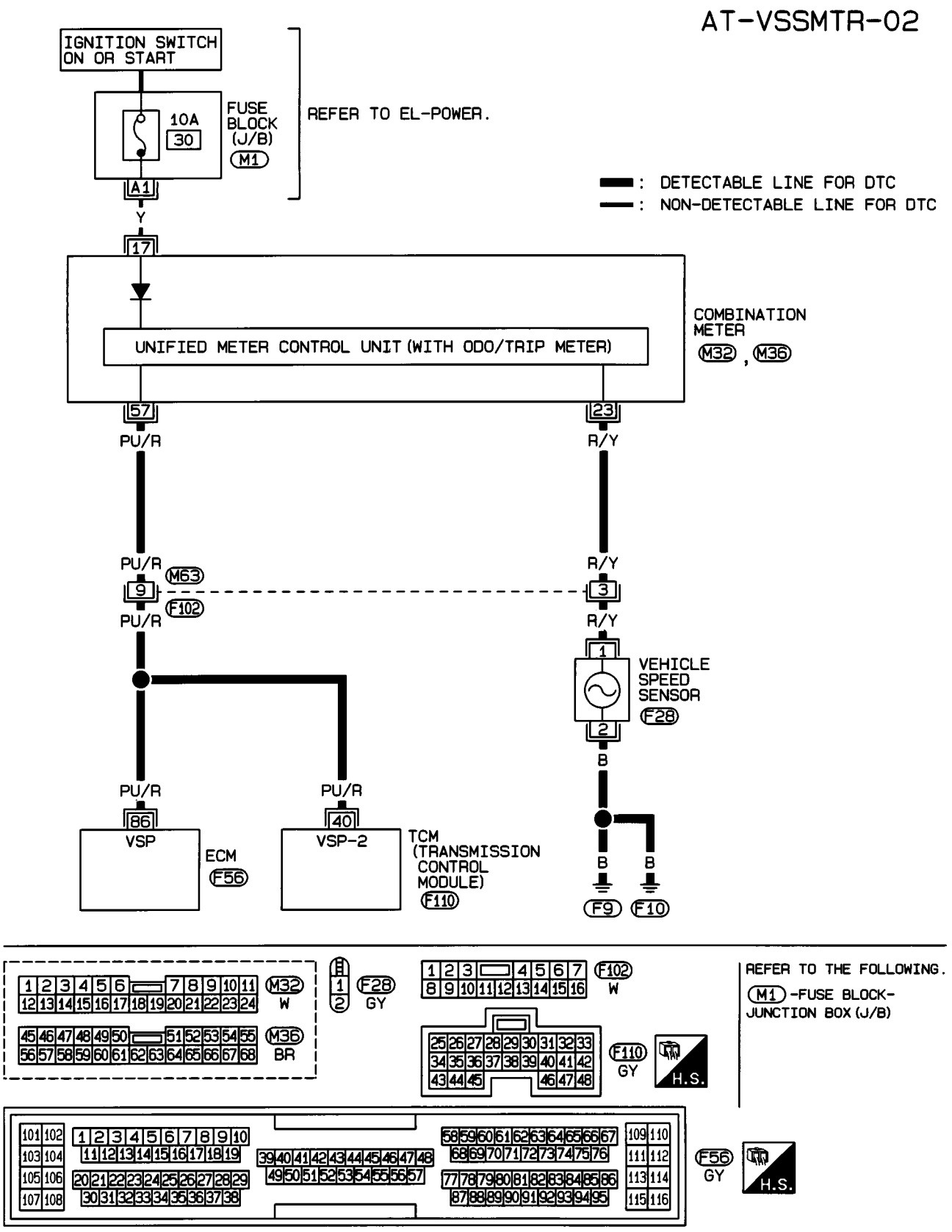

HAT129

HATCHBACK MODELS

NJAT0324S01

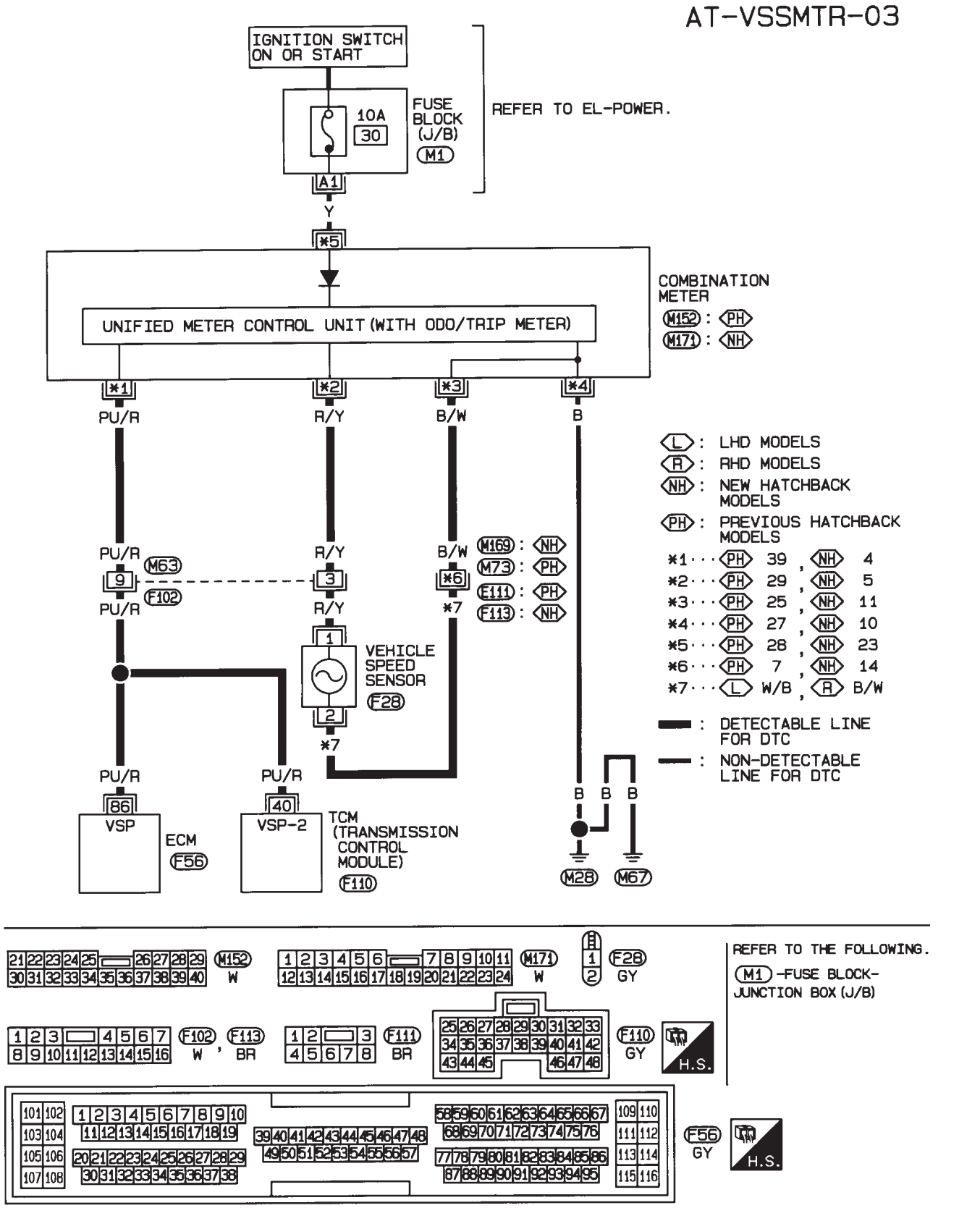

Diagnostic Procedure

NJAT0325

1	CHECK INPUT SIGNAL

With CONSULT-II

1. Start engine.
2. Select “ECU INPUT SIGNALS” in “DATA MONITOR” mode for “A/T” with CONSULT-II.
3. Read out the value of “VHCL/S SE·MTR” while driving.
   Check the value changes according to driving speed.

DATA MONITOR	
MONITORING	
VHCL/S SE-A/T	XXX km/h
VHCL/S SE-MTR	XXX km/h
THRTL POS SEN	XXX V
FLUID TEMP SE	XXX V
BATTERY VOLT	XXX V

SAT614J

Without CONSULT-II

1. Start engine.
2. Check voltage between TCM terminal 40 and ground while driving at 2 to 3 km/h (1 to 2 MPH) for 1 m (3 ft) or more.
   Voltage:
   Voltage varies between less than 1V and more than 4.5V.

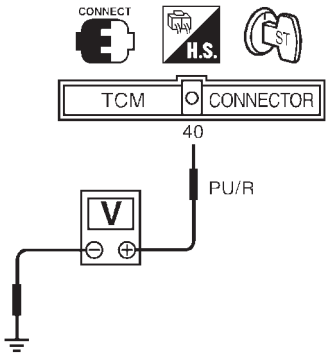

SAT465JB

OK or NG

OK	▶	GO TO 2.
NG	▶	**Check the following items:** ● Vehicle speed sensor and ground circuit for vehicle speed sensor Refer to EL-144, “METERS AND GAUGES”. ● Harness for short or open between TCM and vehicle speed sensor (Main harness)

2	CHECK DTC

Perform Diagnostic Trouble Code (DTC) confirmation procedure, AT-282.

OK or NG

OK	▶	**INSPECTION END**
NG	▶	1. Perform TCM input/output signal inspection. 2. If NG, recheck TCM pin terminals for damage or loose connection with harness connector.

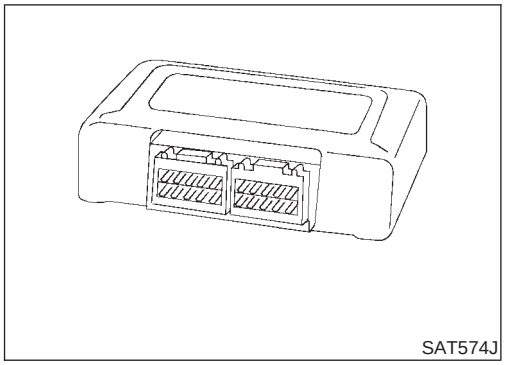
SAT574J

Description

NJAT0326

The TCM consists of a microcomputer and connectors for signal input and output and for power supply. The unit controls the A/T.

ON BOARD DIAGNOSIS LOGIC

NJAT0326S01

Diagnostic Trouble Code No.	Malfunction is detected when	Check Item (Possible Cause)
: CONTROL UNIT (RAM), CONTROL UNIT (ROM)	TCM memory (RAM) or (ROM) is malfunctioning.	● TCM

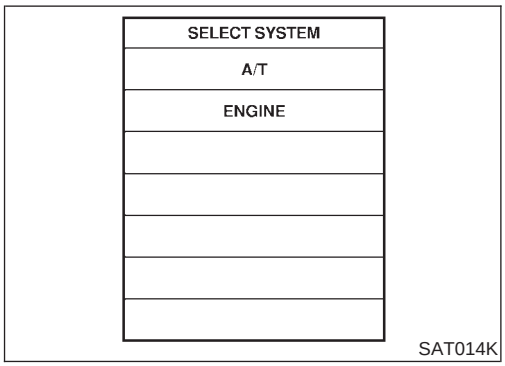

SAT014K

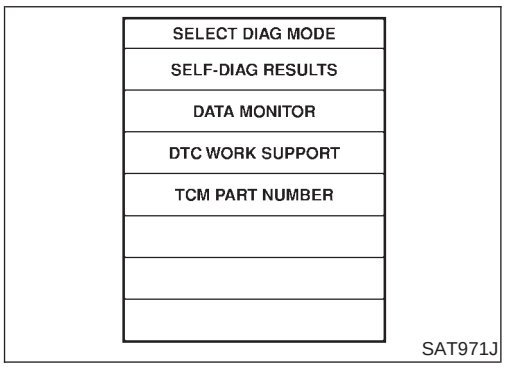

SAT971J

DIAGNOSTIC TROUBLE CODE (DTC) CONFIRMATION PROCEDURE

NJAT0326S02

NOTE:
If "DIAGNOSTIC TROUBLE CODE CONFIRMATION PROCEDURE" has been previously conducted, always turn ignition switch "OFF" and wait at least 5 seconds before conducting the next test.

With CONSULT-II

1) Turn ignition switch "ON" and select "DATA MONITOR" mode for A/T with CONSULT-II.
2) Start engine.
3) Run engine for at least 2 seconds at idle speed.

Diagnostic Procedure

NJAT0327

1	INSPECTION START (WITH CONSULT-II)
With CONSULT-II 1. Turn ignition switch "ON" and select "SELF DIAGNOSIS" mode for A/T with CONSULT-II. 2. Touch "ERASE".	
▶	GO TO 2.

2	CHECK DTC	
PERFORM DIAGNOSTIC TROUBLE CODE (DTC) CONFIRMATION PROCEDURE. See above.		
	▶	GO TO 3.

3	CHECK DTC AGAIN	
Is the "CONTROL UNIT (RAM) or CONTROL UNIT (ROM)" displayed again? **Yes or No**		
Yes	▶	Replace TCM.
No	▶	**INSPECTION END**

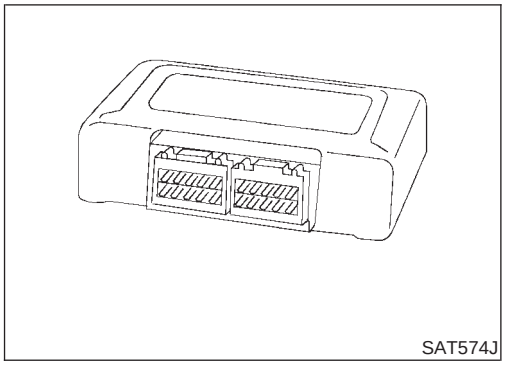

SAT574J

Description

NJAT0328

The TCM consists of a microcomputer and connectors for signal input and output and for power supply. The unit controls the A/T.

ON BOARD DIAGNOSIS LOGIC

NJAT0328S01

Diagnostic trouble code	Malfunction is detected when ...	Check item (Possible cause)
: CONT UNIT (EEP ROM)	TCM memory (EEP ROM) is malfunctioning.	● TCM

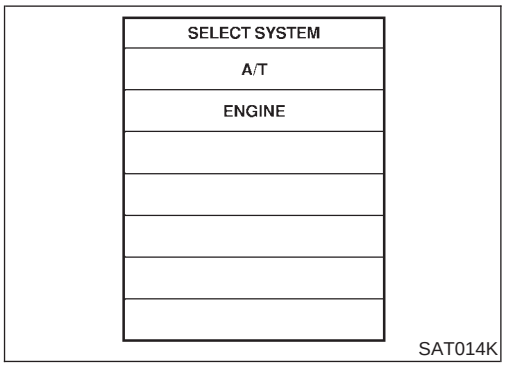

SAT014K

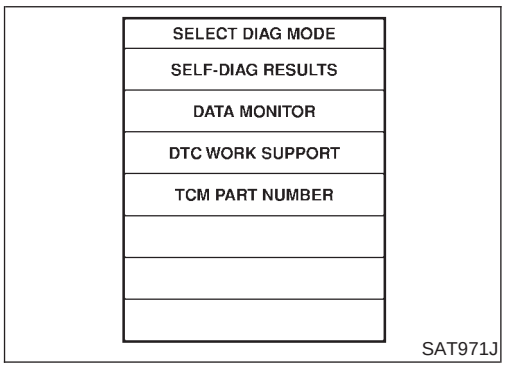

SAT971J

DIAGNOSTIC TROUBLE CODE (DTC) CONFIRMATION PROCEDURE

NJAT0328S02

NOTE:

If "DIAGNOSTIC TROUBLE CODE CONFIRMATION PROCEDURE" has been previously conducted, always turn ignition switch "OFF" and wait at least 5 seconds before conducting the next test.

With CONSULT-II

1) Turn ignition switch "ON" and select "DATA MONITOR" mode for A/T with CONSULT-II.
2) Start engine.
3) Run engine for at least 2 seconds at idle speed.

Diagnostic Procedure

NJAT0329

1	CHECK DTC
With CONSULT-II 1. Turn ignition switch “ON” and select “SELF DIAGNOSIS” mode for A/T with CONSULT-II. 2. Move selector lever to “R” position. 3. Depress accelerator pedal (Full throttle position). 4. Touch “ERASE”. 5. Turn ignition switch “OFF” position for 10 seconds. PERFORM DIAGNOSTIC TROUBLE CODE (DTC) CONFIRMATION PROCEDURE. See previous page. **Is the “CONT UNIT (EEP ROM)” displayed again?**	
Yes ▶	Replace TCM.
No ▶	**INSPECTION END**

Wiring Diagram — AT — NONDTC/General and Except for Euro-OBD

NJAT0353

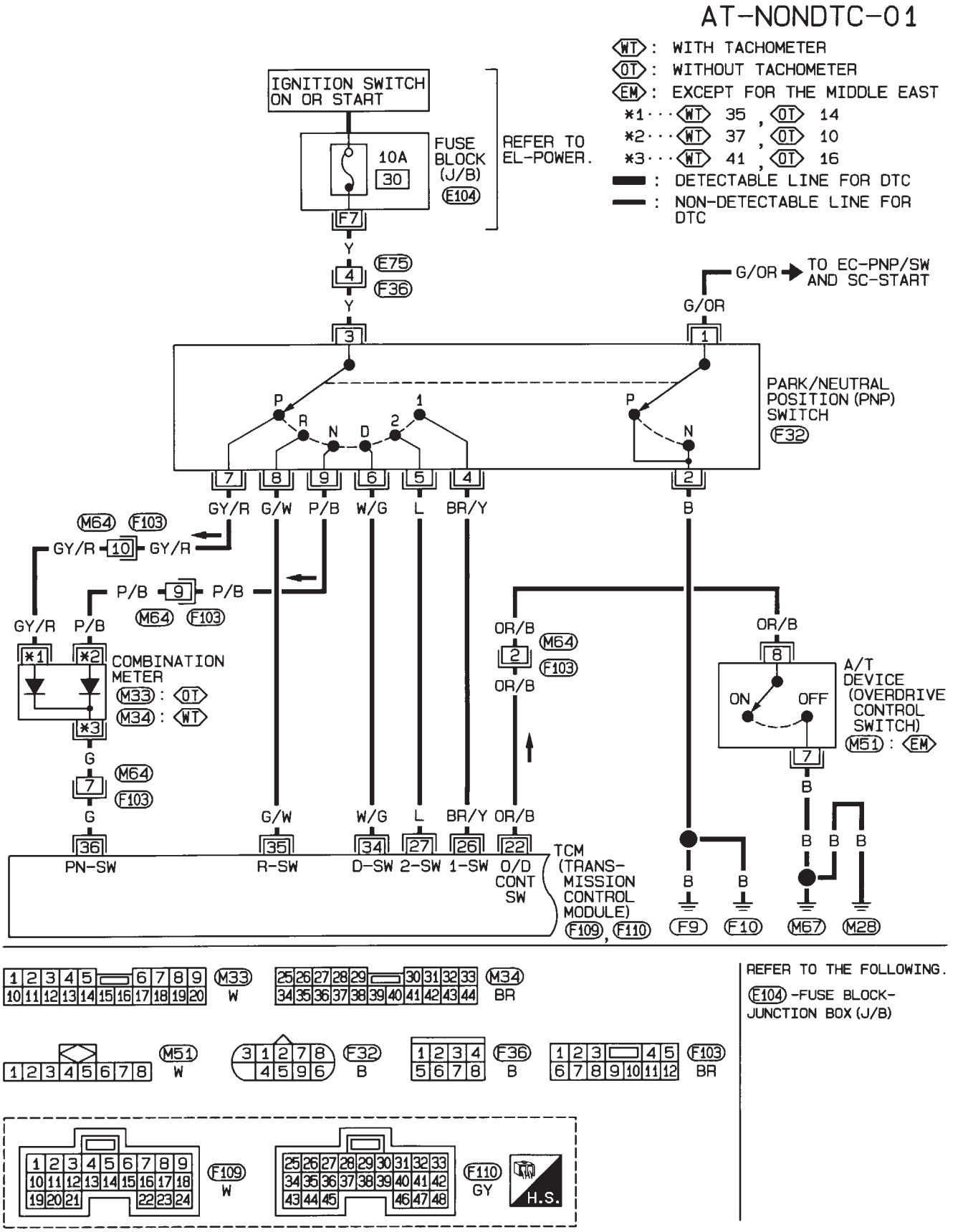

HAT086

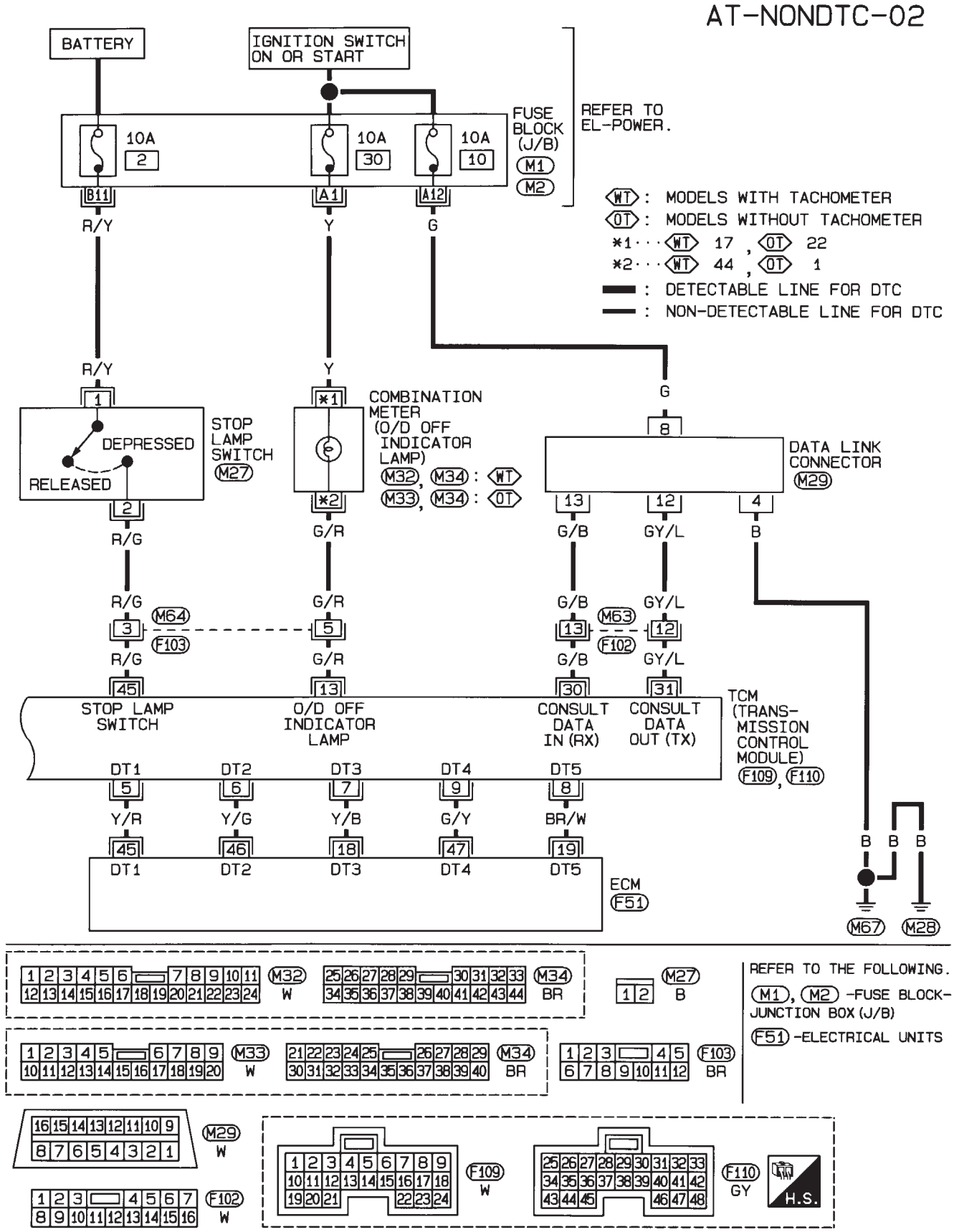
AT-NONDTC-02
BATTERY
IGNITION SWITCH ON OR START
FUSE BLOCK (J/B)
M1
M2
REFER TO EL-POWER.
10A 2
10A 30
10A 10
B11
A1
A12
R/Y
Y
G
WT : MODELS WITH TACHOMETER
OT : MODELS WITHOUT TACHOMETER
*1 WT 17 , OT 22
*2 WT 44 , OT 1
: DETECTABLE LINE FOR DTC
: NON-DETECTABLE LINE FOR DTC
STOP LAMP SWITCH
M27
DEPRESSED
RELEASED
COMBINATION METER (O/D OFF INDICATOR LAMP)
M32, M34 : WT
M33, M34 : OT
DATA LINK CONNECTOR
M29
R/G
G/R
G/B
GY/L
B
M64
F103
M63
F102
STOP LAMP SWITCH
O/D OFF INDICATOR LAMP
CONSULT DATA IN (RX)
CONSULT DATA OUT (TX)
TCM (TRANS-MISSION CONTROL MODULE)
F109, F110
DT1
DT2
DT3
DT4
DT5
Y/R
Y/G
Y/B
G/Y
BR/W
ECM
F51
M67
M28
M32 W
M34 BR
M27 B
M33 W
F103 BR
REFER TO THE FOLLOWING.
M1, M2 -FUSE BLOCK-JUNCTION BOX (J/B)
F51 -ELECTRICAL UNITS
M29 W
F102 W
F109 W
F110 GY
H.S.
HAT087

Wiring Diagram — AT — NONDTC/EURO-OBD

NJAT0330

SEDAN MODELS AND HATCHBACK MODELS BEFORE VIN NO. — N16U0135126

NJAT0330S01

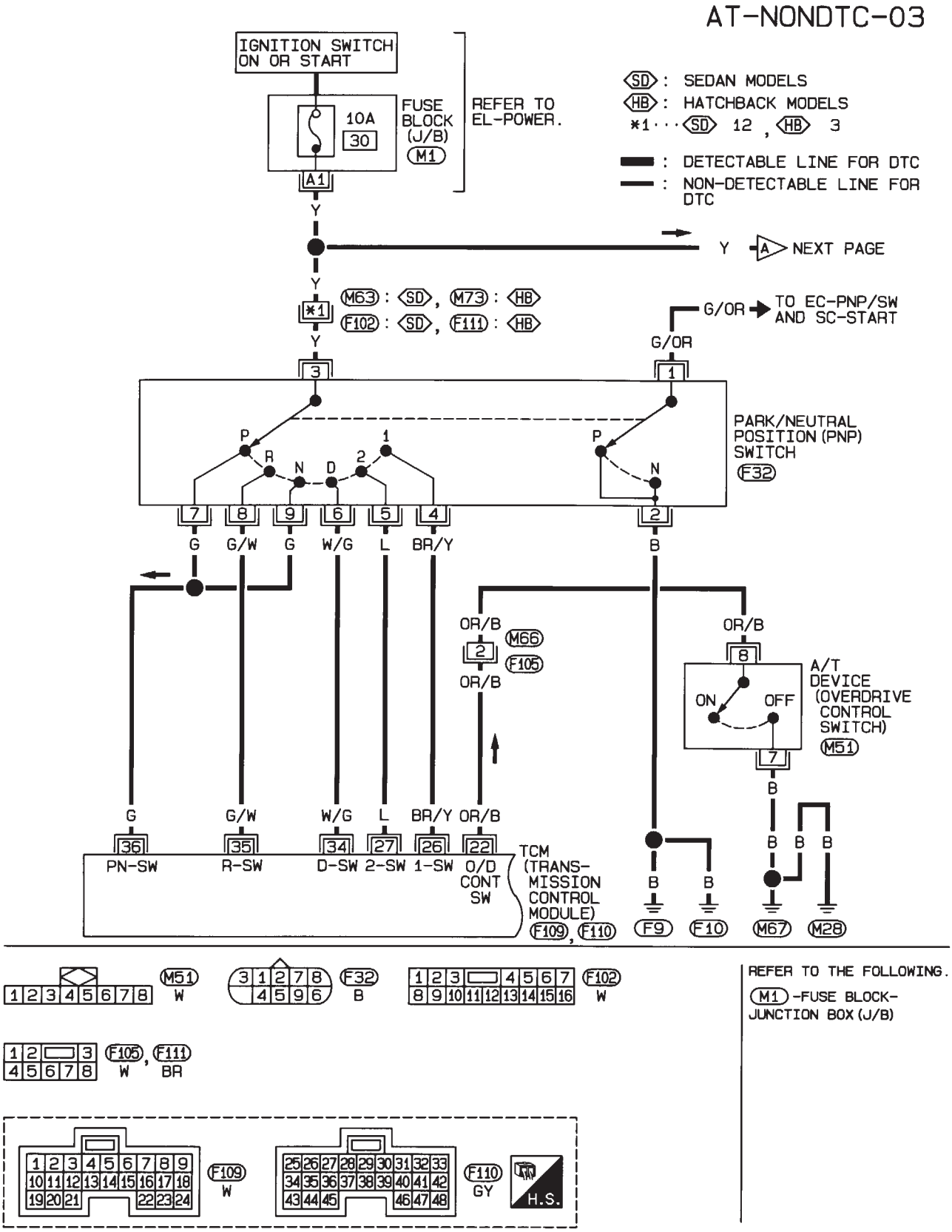

HAT097

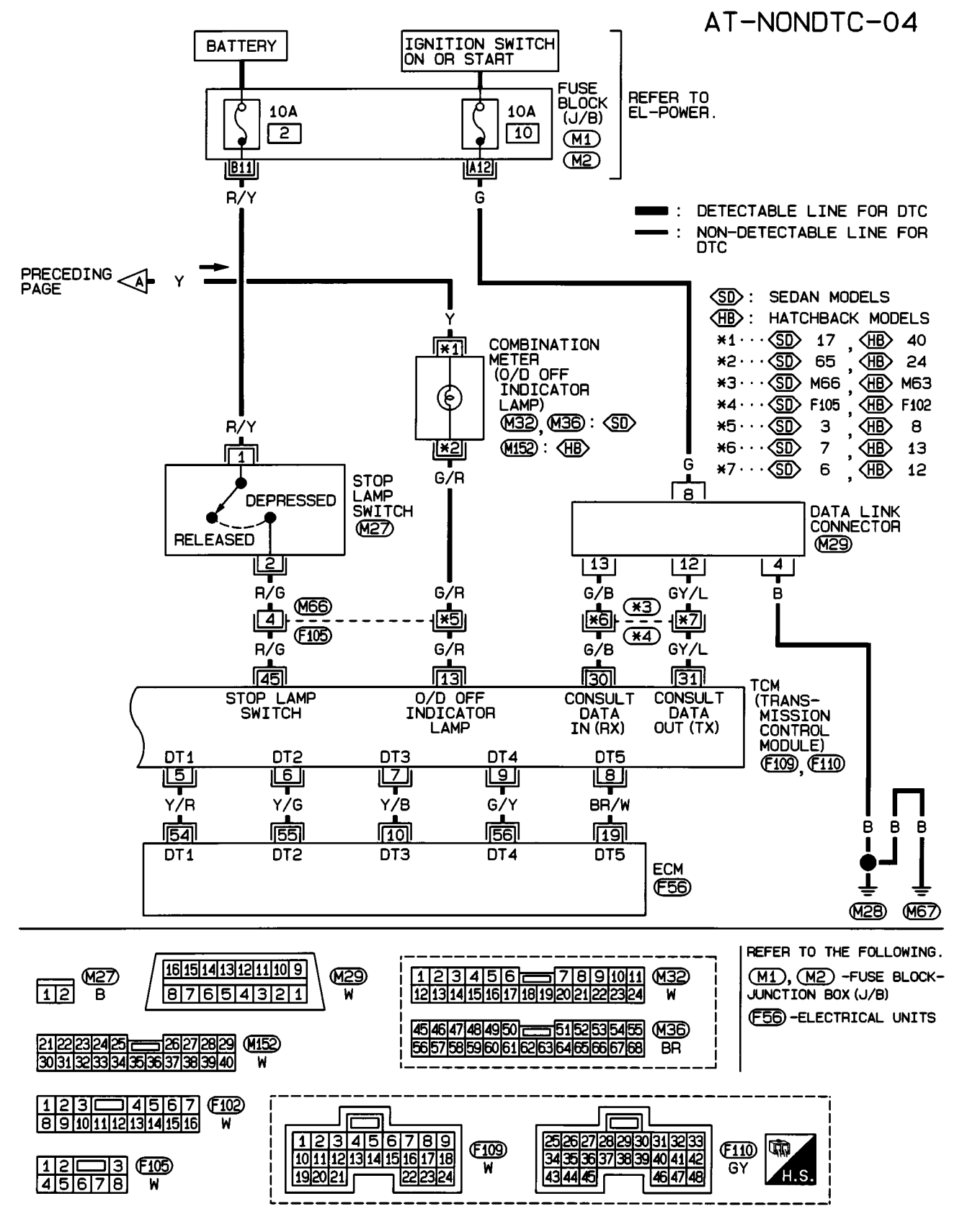
AT-NONDTC-04
BATTERY
IGNITION SWITCH ON OR START
FUSE BLOCK (J/B)
M1
M2
REFER TO EL-POWER.
10A
2
10A
10
B11
A12
R/Y
G
: DETECTABLE LINE FOR DTC
: NON-DETECTABLE LINE FOR DTC
PRECEDING PAGE
A
Y
SD : SEDAN MODELS
HB : HATCHBACK MODELS
*1 ··· SD 17 , HB 40
*2 ··· SD 65 , HB 24
*3 ··· SD M66 , HB M63
*4 ··· SD F105 , HB F102
*5 ··· SD 3 , HB 8
*6 ··· SD 7 , HB 13
*7 ··· SD 6 , HB 12
COMBINATION METER (O/D OFF INDICATOR LAMP)
M32, M36 : SD
M152 : HB
*1
*2
G/R
R/Y
1
DEPRESSED
RELEASED
STOP LAMP SWITCH
M27
2
G
8
DATA LINK CONNECTOR
M29
13
12
4
R/G
G/R
G/B
GY/L
B
M66
F105
*3
*4
*5
*6
*7
45
13
30
31
STOP LAMP SWITCH
O/D OFF INDICATOR LAMP
CONSULT DATA IN (RX)
CONSULT DATA OUT (TX)
TCM (TRANS-MISSION CONTROL MODULE)
F109, F110
DT1
DT2
DT3
DT4
DT5
5
6
7
9
8
Y/R
Y/G
Y/B
G/Y
BR/W
54
55
10
56
19
ECM
F56
M28
M67
M27
B
M29
W
M32
W
M36
BR
M152
W
F102
W
F105
W
F109
W
F110
GY
H.S.
REFER TO THE FOLLOWING.
M1, M2 -FUSE BLOCK-JUNCTION BOX (J/B)
F56 -ELECTRICAL UNITS

HAT130

HATCHBACK MODELS AFTER VIN NO. — N16U0135126

NJAT0330S02

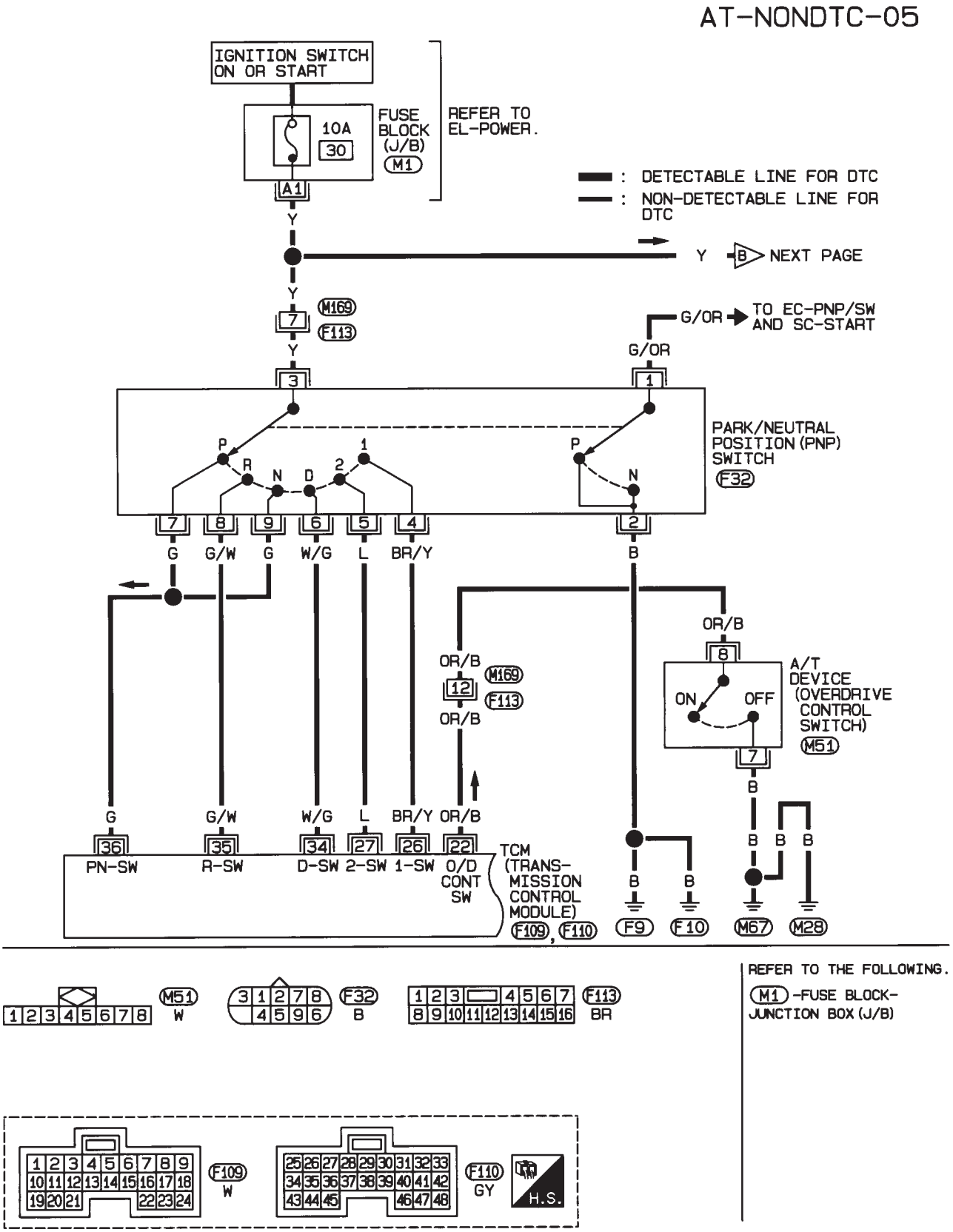

HAT145

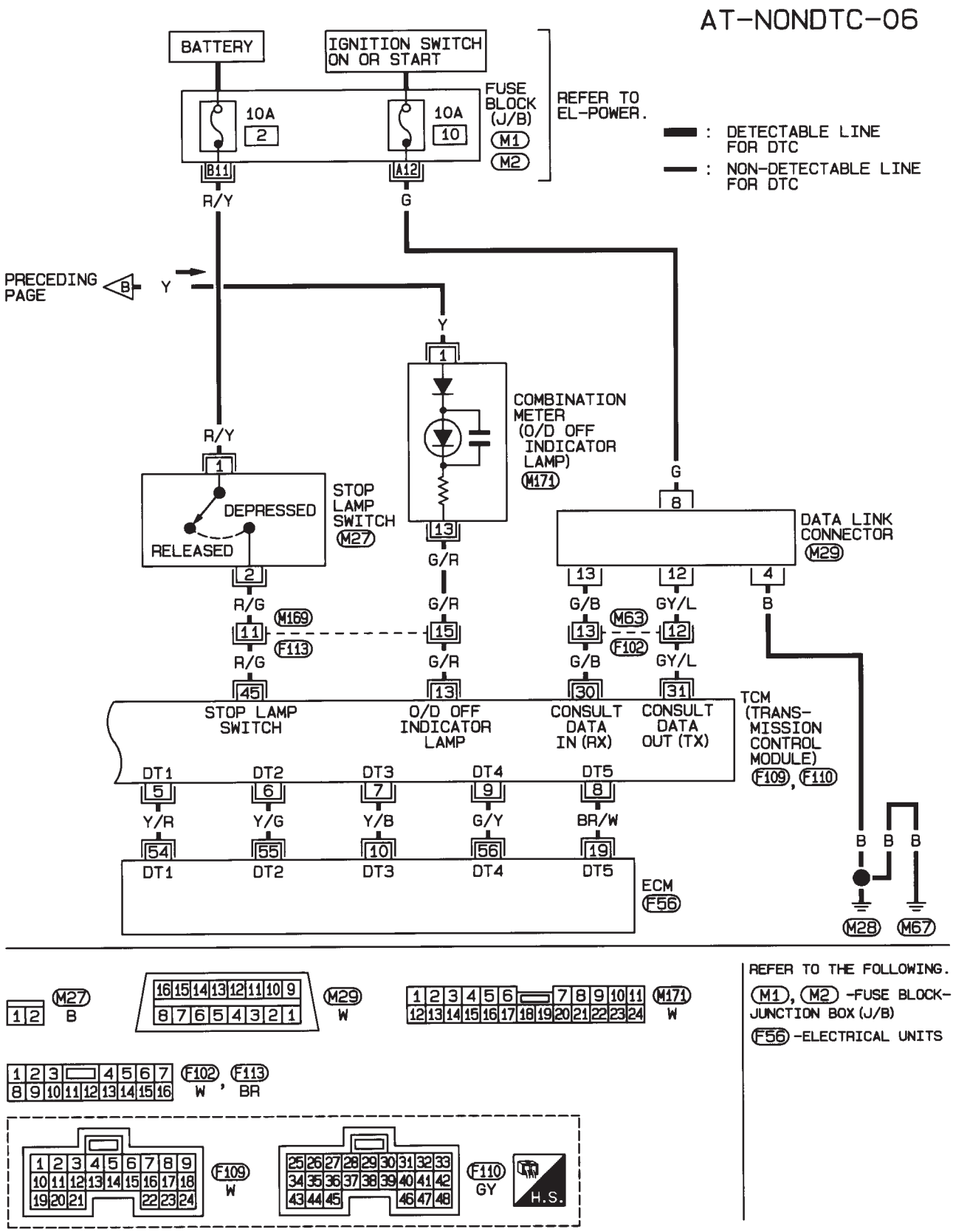
AT-NONDTC-06
BATTERY
IGNITION SWITCH ON OR START
FUSE BLOCK (J/B)
M1
M2
10A
2
10A
10
B11
A12
R/Y
G
REFER TO EL-POWER.
: DETECTABLE LINE FOR DTC
: NON-DETECTABLE LINE FOR DTC
PRECEDING PAGE
B
Y
COMBINATION METER (O/D OFF INDICATOR LAMP)
M171
STOP LAMP SWITCH
M27
DEPRESSED
RELEASED
DATA LINK CONNECTOR
M29
R/G
M169
F113
G/R
G/B
GY/L
M63
F102
B
STOP LAMP SWITCH
O/D OFF INDICATOR LAMP
CONSULT DATA IN (RX)
CONSULT DATA OUT (TX)
TCM (TRANS-MISSION CONTROL MODULE)
F109, F110
DT1
DT2
DT3
DT4
DT5
Y/R
Y/G
Y/B
G/Y
BR/W
ECM
F56
M28
M67
M27
B
M29
W
M171
W
F102, F113
W, BR
F109
W
F110
GY
H.S.
REFER TO THE FOLLOWING.
M1, M2 -FUSE BLOCK-JUNCTION BOX (J/B)
F56 -ELECTRICAL UNITS

HAT146

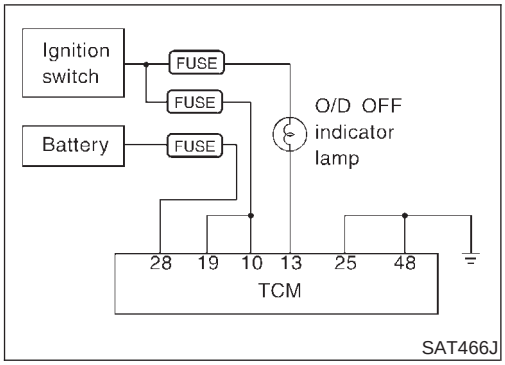

1. O/D OFF Indicator Lamp Does Not Come On

=NJAT0331

SYMPTOM:

O/D OFF indicator lamp does not come on for about 2 seconds when turning ignition switch to "ON".

1	CHECK TCM POWER SOURCE

1. Turn ignition switch to "ON" position.
   (Do not start engine.)
2. Check voltage between TCM terminals 10, 19, 28 and ground.
   Voltage: Battery voltage

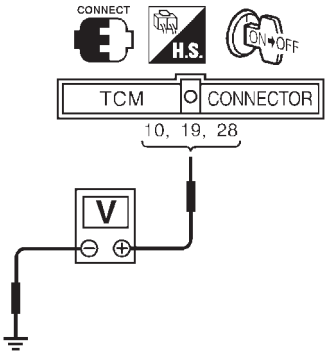

3. Turn ignition switch to "OFF" position.
4. Check voltage between TCM terminal 28 and ground.
   Voltage: Battery voltage

OK or NG

OK	▶	GO TO 2.
NG	▶	**Check the following items:** ● Harness for short or open between ignition switch and TCM terminals 10, 19 and 28 (Main harness). ● Refer to "Wiring Diagram — AT — MAIN", AT-123. ● Ignition switch and fuse Refer to EL-10, "POWER SUPPLY ROUTING".

2	CHECK TCM GROUND CIRCUIT

1. Turn ignition switch to "OFF" position.
2. Disconnect TCM harness connector.
3. Check continuity between TCM terminals 25, 48 and ground.

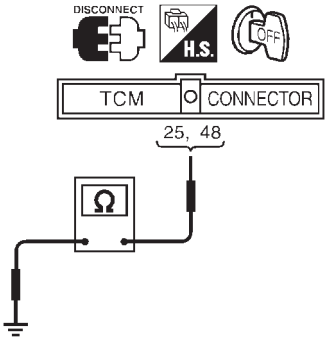

SAT468J

Continuity should exist.

If OK, check harness for short to ground and short to power.

OK or NG

OK	▶	GO TO 3.
NG	▶	Repair open circuit or short to ground or short to power in harness or connectors. Refer to "Wiring Diagram — AT — MAIN", AT-123.

3	CHECK LAMP CIRCUIT

1. Turn ignition switch to "OFF" position.
2. Check resistance between TCM terminals 13 and 10.

   Resistance: 50 - 100Ω

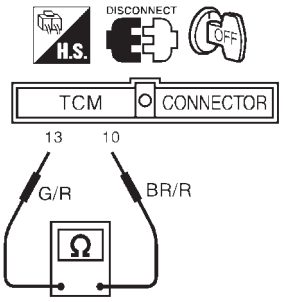

SAT469JB

3. Reinstall any part removed.

OK or NG

OK	▶	GO TO 4.
NG	▶	**Check the following items:** ● O/D OFF indicator lamp. Refer to EL-144, "METERS AND GAUGES". ● Harness and fuse for short or open between ignition switch and O/D OFF indicator lamp (Main harness) Refer to EL-10, "POWER SUPPLY ROUTING". ● Harness for short or open between O/D OFF indicator lamp and TCM.

4	CHECK SYMPTOM
Check again. **OK or NG**	
OK ▶	**INSPECTION END**
NG ▶	1. Perform TCM input/output signal inspection. 2. If NG, recheck TCM pin terminals for damage or loose connection with harness connector.

2. Engine Cannot Be Started In “P” and “N” Position

=NJAT0332

SYMPTOM:

- **Engine cannot be started with selector lever in “P” or “N” position.**
- **Engine can be started with selector lever in “D”, “2”, “1” or “R” position.**

1	CHECK PNP SWITCH CIRCUIT
With CONSULT-II Does “ECU INPUT SIGNALS” in “DATA MONITOR” show damage to PNP switch circuit?	
Without CONSULT-II Does self-diagnosis show damage to PNP switch circuit? 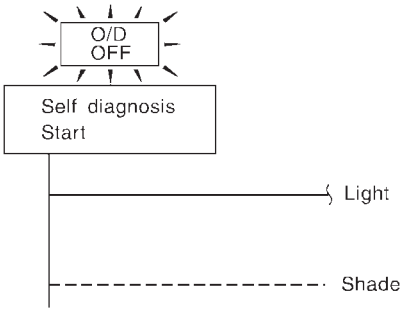 SAT367J	
Yes or No	
Yes ▶	Check PNP switch circuit. Refer to “21. TCM Self-diagnosis Does Not Activate (PNP, Overdrive Control and Throttle Position Switches Circuit Checks)”, AT-334.
No ▶	GO TO 2.

2	CHECK PNP SWITCH INSPECTION
Check for short or open of PNP switch harness connector terminals 1 and 2. Refer to “21. TCM Self-diagnosis Does Not Activate (PNP, Overdrive Control and Throttle Position Switches Circuit Checks)”, AT-334. 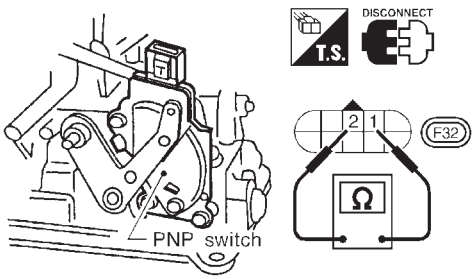 SAT408JA	
OK or NG	
OK ▶	GO TO 3.
NG ▶	Repair or replace PNP switch.

3	CHECK STARTING SYSTEM	
Check starting system. Refer to SC-13, “STARTING SYSTEM”.		
	OK or NG	
OK	▶	**INSPECTION END**
NG	▶	Repair or replace damaged parts.

3. In “P” Position, Vehicle Moves Forward Or Backward When Pushed

NJAT0333

SYMPTOM:
Vehicle moves when it is pushed forward or backward with selector lever in “P” position.

1	CHECK PARKING COMPONENTS	
Check parking components. Refer to “Parking Pawl Components”, AT-361, 362.		
	OK or NG	
OK	▶	**INSPECTION END**
NG	▶	Repair or replace damaged parts.

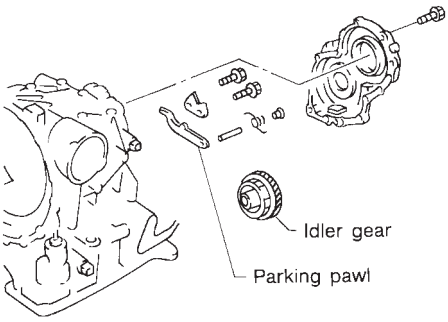

SAT282F

4. In “N” Position, Vehicle Moves

=NJAT0334

SYMPTOM:
Vehicle moves forward or backward when selecting “N” position.

1	CHECK PNP SWITCH CIRCUIT
With CONSULT-II Does “ECU INPUT SIGNALS” in “DATA MONITOR” show damage to PNP switch circuit?	
Without CONSULT-II Does self-diagnosis show damage to PNP switch circuit? 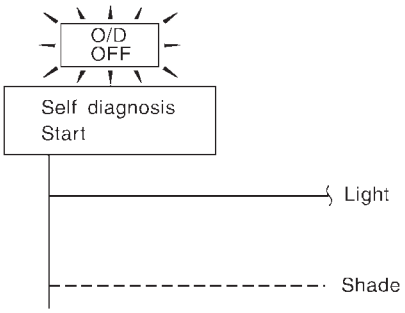 SAT367J	
Yes or No	
Yes ▶	Check PNP switch circuit. Refer to “21. TCM Self-diagnosis Does Not Activate (PNP, Overdrive Control and Throttle Position Switches Circuit Checks)”, AT-334.
No ▶	GO TO 2.

2	CHECK CONTROL CABLE
Check control cable. Refer to AT-352. 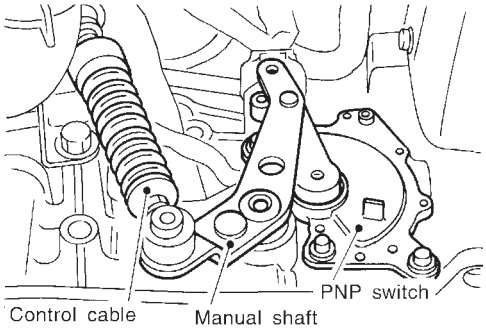 SAT023JB	
OK or NG	
OK ▶	GO TO 3.
NG ▶	Adjust control cable. Refer to AT-352.

3	CHECK A/T FLUID LEVEL

Check A/T fluid level again.

SAT638A

OK or NG

OK	▶	GO TO 4.
NG	▶	Refill ATF.

4	CHECK A/T FLUID CONDITION

1. Remove oil pan.
2. Check A/T fluid condition.

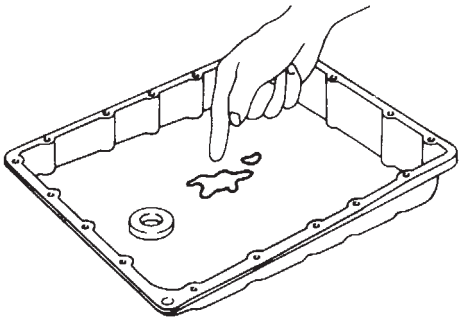

SAT171B

OK or NG

OK	▶	GO TO 5.
NG	▶	1. Disassemble A/T. 2. Check the following items: ● Forward clutch assembly ● Overrun clutch assembly ● Reverse clutch assembly

5	CHECK SYMPTOM

Check again.

OK or NG

OK	▶	**INSPECTION END**
NG	▶	1. Perform TCM input/output signal inspection. 2. If NG, recheck TCM pin terminals for damage or loose connection with harness connector.

5. Large Shock. “N” → “R” Position

=NJAT0335

SYMPTOM:
There is large shock when changing from “N” to “R” position.

1	CHECK SELF-DIAGNOSTIC RESULTS
Does self-diagnosis show damage to A/T fluid temperature sensor, line pressure solenoid valve or throttle position sensor circuit?	

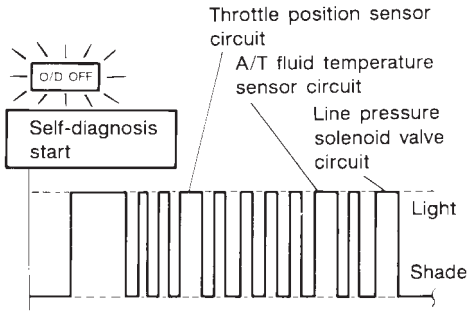

SAT345HA

Yes or No

Yes ▶	● Check damaged circuit. Refer to the following items. **General and except for Euro-OBD** ● LINE PRESSURE SOLENOID VALVE: AT-176 ● THROTTLE POSITION SENSOR: AT-134 ● BATT/FLUID TEMP SEN (A/T FLUID TEMP SENSOR CIRCUIT AND TCM POWER SOURCE: AT-165 **Euro-OBD** ● LINE PRESSURE SOLENOID VALVE: AT-239 ● THROTTLE POSITION SENSOR: AT-258 ● BATT/FLUID TEMP SEN (A/T FLUID TEMP SENSOR CIRCUIT AND TCM POWER SOURCE: AT-274
No ▶	GO TO 2.

2	CHECK THROTTLE POSITION SENSOR
Check throttle position sensor. Refer to EC-207, “DTC P0120 THROTTLE POSITION SENSOR”.	

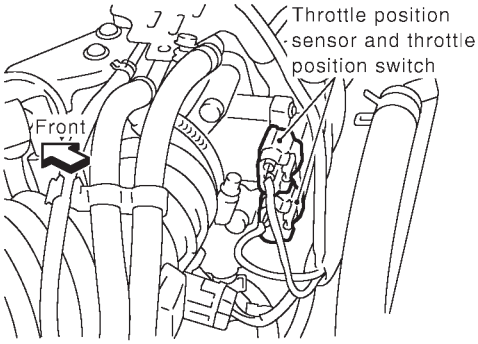

SAT004K

OK or NG

OK ▶	GO TO 3.
NG ▶	Repair or replace throttle position sensor.

3	CHECK LINE PRESSURE
Check line pressure at idle with selector lever in “D” position. Refer to “Line Pressure Test”, AT-84.	

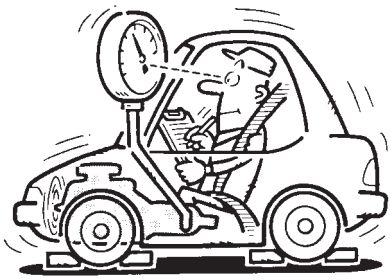

SAT494G

OK or NG

OK	▶	GO TO 4.
NG	▶	1. Remove control valve assembly. Refer to AT-351. 2. Check the following items: ● Valves to control line pressure (Pressure regulator valve, pressure modifier valve, pilot valve and pilot filter) ● Line pressure solenoid valve

4	CHECK SYMPTOM
Check again.	

OK or NG

OK	▶	**INSPECTION END**
NG	▶	1. Perform TCM input/output signal inspection. 2. If NG, recheck TCM pin terminals for damage or loose connection with harness connector.

6. Vehicle Does Not Creep Backward In “R” Position

=NJAT0336

SYMPTOM:
Vehicle does not creep backward when selecting “R” position.

1	CHECK A/T FLUID LEVEL
Check A/T fluid level again.	

SAT638A

OK or NG

OK	▶	GO TO 2.
NG	▶	Refill ATF.

2	CHECK STALL TEST
Check stall revolution with selector lever in “1” and “R” positions. Refer to “STALL TEST”, AT-80.	

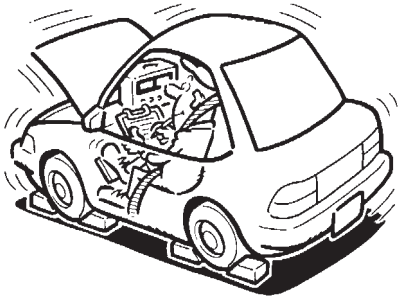

SAT493G

OK or NG

OK	▶	GO TO 3.
OK in “1” position, NG in “R” position	▶	1. Remove control valve assembly. Refer to “ON-VEHICLE SERVICE”, AT-351. 2. Check the following items: ● Valves to control line pressure (Pressure regulator valve, pressure modifier valve, pilot valve and pilot filter) ● Line pressure solenoid valve (AT-176: General and except for Euro-OBD/AT-239: Euro-OBD) 3. Disassemble A/T. 4. Check the following items: ● Oil pump assembly ● Torque converter ● Reverse clutch assembly ● High clutch assembly ● Low & reverse brake assembly ● Low one-way clutch
NG in both “1” and “R” positions	▶	GO TO 6.

3	CHECK LINE PRESSURE
Check line pressure at idle with selector lever in "R" position. Refer to "Line Pressure Test", AT-84.	

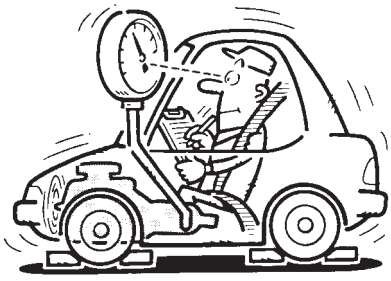

SAT494G

OK or NG

OK	▶	GO TO 4.
NG	▶	1. Remove control valve assembly. Refer to "ON-VEHICLE SERVICE", AT-351. 2. Check the following items: ● Valves to control line pressure (Pressure regulator valve, pressure modifier valve, pilot valve and pilot filter) ● Line pressure solenoid valve (AT-176: General and except for Euro-OBD/AT-239: Euro-OBD) 3. Disassemble A/T. 4. Check the following item: ● Oil pump assembly

4	CHECK A/T FLUID CONDITION
1. Remove oil pan. 2. Check A/T fluid condition.	

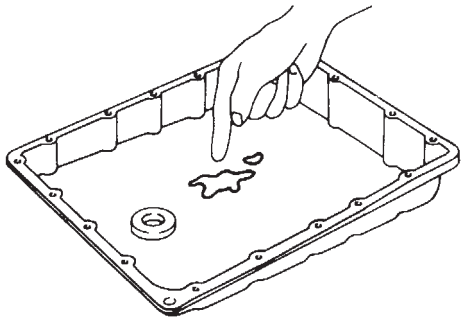

SAT171B

OK or NG

OK	▶	GO TO 5.
NG	▶	GO TO 6.

5	CHECK SYMPTOM
Check again.	

OK or NG

OK	▶	**INSPECTION END**
NG	▶	1. Perform TCM input/output signal inspection. 2. If NG, recheck TCM pin terminals for damage or loose connection with harness connector.

6	DETECT MALFUNCTIONING ITEM

1. Remove control valve assembly. Refer to “ON-VEHICLE SERVICE”, AT-351.
2. Check the following items:
- Valves to control line pressure (Pressure regulator valve, pressure modifier valve, pilot valve and pilot filter)
- Line pressure solenoid valve (AT-176: General and except for Euro-OBD/AT-239: Euro-OBD)
3. Disassemble A/T.
4. Check the following items:
- Oil pump assembly
- Torque converter
- Reverse clutch assembly
- High clutch assembly
- Low & reverse brake assembly
- Low one-way clutch

OK or NG

OK	▶	GO TO 5.
NG	▶	Repair or replace damaged parts.

7. Vehicle Does Not Creep Forward In “D”, “2” Or “1” Position

=NJAT0337

SYMPTOM:
Vehicle does not creep forward when selecting “D”, “2” or “1” position.

1	CHECK A/T FLUID LEVEL
Check A/T fluid level again.	

SAT638A

OK or NG

OK	▶	GO TO 2.
NG	▶	Refill ATF.

2	CHECK STALL TEST
Check stall revolution with selector lever in “D” position. Refer to “Stall Test”, AT-80.	

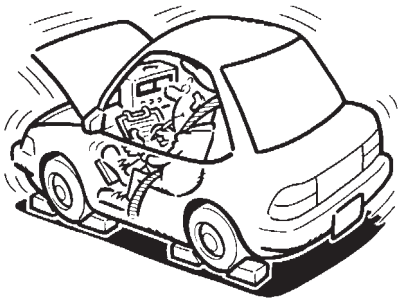

SAT493G

OK or NG

OK	▶	GO TO 3.
NG	▶	GO TO 6.

3	CHECK LINE PRESSURE

Check line pressure at idle with selector lever in “D” position. Refer to “Line Pressure Test ”, AT-84.

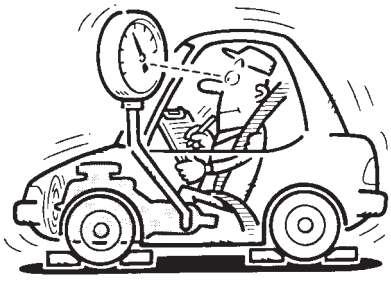

SAT494G

OK or NG

OK	▶	GO TO 4.
NG	▶	1. Remove control valve assembly. Refer to AT-351. 2. Check the following items: ● Valves to control line pressure (Pressure regulator valve, pressure modifier valve, pilot valve and pilot filter) ● Line pressure solenoid valve (AT-176: General and except for Euro-OBD/AT-239: Euro-OBD) 3. Disassemble A/T. 4. Check the following item: ● Oil pump assembly

4	CHECK A/T FLUID CONDITION

1. Remove oil pan.
2. Check A/T fluid condition.

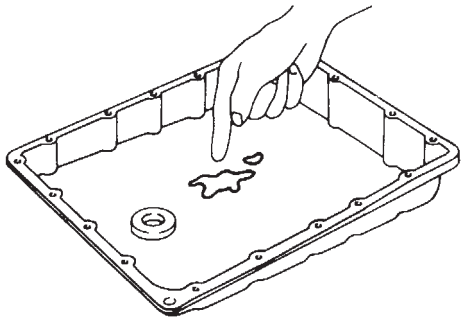

SAT171B

OK or NG

OK	▶	GO TO 5.
NG	▶	GO TO 6.

5	CHECK SYMPTOM

Check again.

OK or NG

OK	▶	**INSPECTION END**
NG	▶	1. Perform TCM input/output signal inspection. 2. If NG, recheck TCM pin terminals for damage or loose connection with harness connector.

6	DETECT MALFUNCTIONING ITEM
1. Remove control valve assembly. Refer to AT-351. 2. Check the following items: ● Valves to control line pressure (Pressure regulator valve, pressure modifier valve, pilot valve and pilot filter) ● Line pressure solenoid valve (AT-176: General and except for Euro-OBD/AT-239: Euro-OBD) 3. Disassemble A/T. 4. Check the following items: ● Oil pump assembly ● Forward clutch assembly ● Forward one-way clutch ● Low one-way clutch ● Low & reverse brake assembly ● Torque converter	
OK or NG	
OK ▶	GO TO 5.
NG ▶	Repair or replace damaged parts.

8. Vehicle Cannot Be Started From D_1

=NJAT0338

SYMPTOM:
Vehicle cannot be started from D_1 on Cruise test — Part 1.

1	CHECK SYMPTOM
Is 6. Vehicle Does Not Creep Backward In “R” Position OK?	
Yes or No	
Yes ▶	GO TO 2.
No ▶	Go to 6. Vehicle Does Not Creep Backward In “R” Position, AT-305.

2	CHECK SELF-DIAGNOSTIC RESULTS
Does self-diagnosis show damage to vehicle speed sensor·A/T (revolution sensor), shift solenoid valve A, B or vehicle speed sensor·MTR after cruise test?	
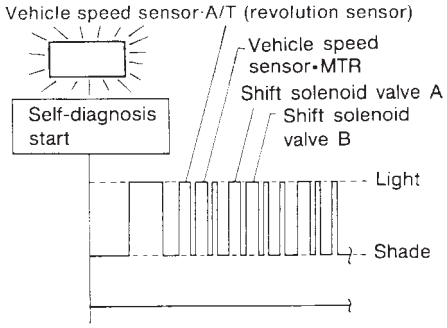 SAT934FB	
Yes or No	
Yes ▶	● Check damaged circuit. Refer to the following items. **General and except for Euro-OBD** ● VEHICLE SPEED SENSOR A/T (REVOLUTION SENSOR): AT-126 ● SHIFT SOLENOID VALVE A: AT-142 ● SHIFT SOLENOID VALVE B: AT-148 ● VHCL SPEED SEN·MTR VEHICLE SPEED SENSOR·MTR: AT-131 **Euro-OBD** ● VEHICLE SPEED SENSOR A/T (REVOLUTION SENSOR): AT-195 ● SHIFT SOLENOID VALVE A: AT-246 ● SHIFT SOLENOID VALVE B: AT-252 ● VHCL SPEED SEN·MTR VEHICLE SPEED SENSOR·MTR: AT-281
No ▶	GO TO 3.

3	CHECK THROTTLE POSITION SENSOR

Check throttle position sensor. Refer to EC-207, "DTC P0120 THROTTLE POSITION SENSOR".

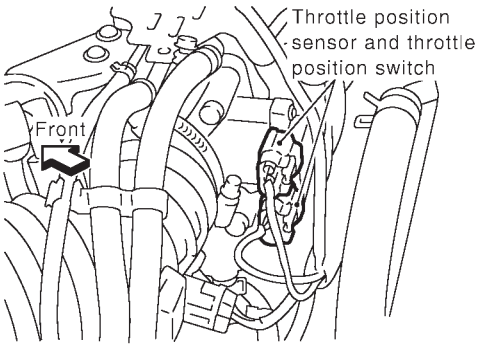

SAT004K

OK or NG

OK	▶	GO TO 4.
NG	▶	Repair or replace throttle position sensor.

4	CHECK LINE PRESSURE

Check line pressure at stall point with selector lever in "D" position. Refer to "Line Pressure Test", AT-84.

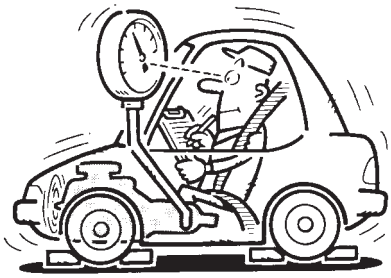

SAT494G

OK or NG

OK	▶	GO TO 5.
NG	▶	GO TO 8.

5	CHECK A/T FLUID CONDITION

1. Remove oil pan.
2. Check A/T fluid condition.

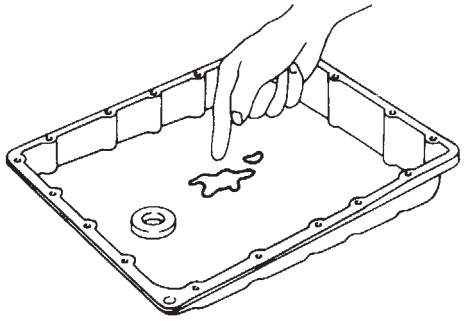

SAT171B

OK or NG

OK	▶	GO TO 6.
NG	▶	GO TO 8.

6	DETECT MALFUNCTIONING ITEM	
1. Remove control valve assembly. Refer to AT-351. 2. Check the following items: ● Shift valve A ● Shift valve B ● Shift solenoid valve A ● Shift solenoid valve B ● Pilot valve ● Pilot filter		
	OK or NG	
OK	▶	GO TO 7.
NG	▶	Repair or replace damaged parts.

7	CHECK SYMPTOM	
Check again.		
	OK or NG	
OK	▶	**INSPECTION END**
NG	▶	1. Perform TCM input/output signal inspection. 2. If NG, recheck TCM pin terminals for damage or loose connection with harness connector.

8	DETECT MALFUNCTIONING ITEM	
1. Remove control valve assembly. Refer to AT-351. 2. Check the following items: ● Shift valve A ● Shift valve B ● Shift solenoid valve A ● Shift solenoid valve B ● Pilot valve ● Pilot filter 3. Disassemble A/T. 4. Check the following items: ● Forward clutch assembly ● Forward one-way clutch ● Low one-way clutch ● High clutch assembly ● Torque converter ● Oil pump assembly		
	OK or NG	
OK	▶	GO TO 7.
NG	▶	Repair or replace damaged parts.

9. A/T Does Not Shift: $D_1 \rightarrow D_2$ Or Does Not Kickdown: $D_4 \rightarrow D_2$

=NJAT0339

SYMPTOM:
A/T does not shift from D_1 to D_2 at the specified speed.
A/T does not shift from D_4 to D_2 when depressing accelerator pedal fully at the specified speed.

1	CHECK SYMPTOM	
Are 7. Vehicle Does Not Creep Forward In “D”, “2” Or “1” Position and 8. Vehicle Cannot Be Started From D_1 OK?		
Yes or No		
Yes	▶	GO TO 2.
No	▶	Go to 7. Vehicle Does Not Creep Forward In “D”, “2” Or “1” Position and 8. Vehicle Cannot Be Started From D_1, AT-308, 311.

2	CHECK PNP SWITCH CIRCUIT	
With CONSULT-II Does “ECU INPUT SIGNALS” in “DATA MONITOR” show damage to PNP switch circuit?		
Without CONSULT-II Does self-diagnosis show damage to PNP switch circuit?		
Yes or No		
Yes	▶	Check PNP switch circuit. Refer to “21. TCM Self-diagnosis Does Not Activate (PNP, Overdrive Control and Throttle Position Switches Circuit Checks)”, AT-334.
No	▶	GO TO 3.

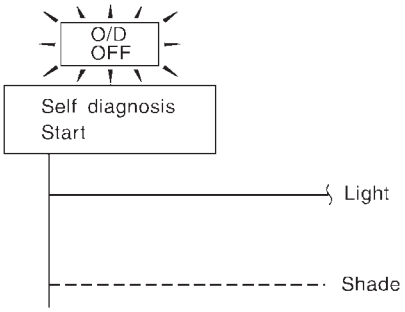

SAT367J

3	CHECK VEHICLE SPEED SENSOR·A/T (REVOLUTION SENSOR) AND CHECK VEHICLE SPEED SENSOR·MTR CIRCUIT	
Check vehicle speed sensor·A/T (revolution sensor) and vehicle speed sensor·MTR circuit. Refer to AT-126 (General and except for Euro-OBD), AT-195 (EURO-OBD) and AT-131 (General and except for Euro-OBD), AT-281 (EURO-OBD).		
OK or NG		
OK	▶	GO TO 4.
NG	▶	Repair or replace vehicle speed sensor·A/T (revolution sensor) and vehicle speed sensor·MTR circuits.

4	CHECK THROTTLE POSITION SENSOR

Check throttle position sensor. Refer to EC-207, "DTC P0120 THROTTLE POSITION SENSOR".

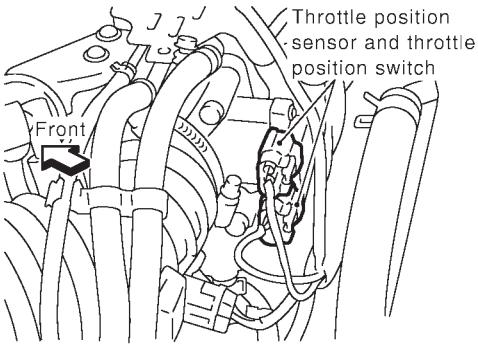

SAT004K

OK or NG

OK	▶	GO TO 5.
NG	▶	Repair or replace throttle position sensor.

5	CHECK A/T FLUID CONIDITION

1. Remove oil pan.
2. Check A/T fluid condition.

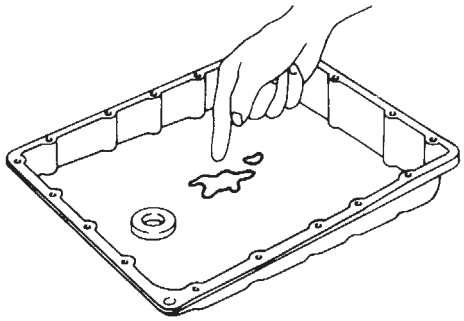

SAT171B

OK or NG

OK	▶	GO TO 6.
NG	▶	GO TO 8.

6	DETECT MALFUNCTIONING ITEM

1. Remove control valve. Refer to AT-351.
2. Check the following items:
- Shift valve A
- Shift solenoid valve A (AT-142: General and except for Euro-OBD/AT-246: Euro-OBD)
- Pilot valve
- Pilot filter

OK or NG

OK	▶	GO TO 7.
NG	▶	Repair or replace damaged parts.

7	CHECK SYMPTOM	
Check again.		
	OK or NG	
OK	▶	**INSPECTION END**
NG	▶	1. Perform TCM input/output signal inspection. 2. If NG, recheck TCM pin terminals for damage or loose connection with harness connector.

8	DETECT MALFUNCTIONING ITEM	
1. Remove control valve. Refer to AT-351. 2. Check the following items: ● Shift valve A ● Shift solenoid valve A (AT-142: General and except for Euro-OBD/AT-246: Euro-OBD) ● Pilot valve ● Pilot filter 3. Disassemble A/T. 4. Check the following items: ● Servo piston assembly ● Brake band ● Oil pump assembly		
	OK or NG	
OK	▶	GO TO 7.
NG	▶	Repair or replace damaged parts.

10. A/T Does Not Shift: $D_2 \rightarrow D_3$

=NJAT0340

SYMPTOM:
A/T does not shift from D_2 to D_3 at the specified speed.

1	CHECK SYMPTOM	
Are 7. Vehicle Does Not Creep Forward In “D”, “2” Or “1” Position and 8. Vehicle Cannot Be Started From D_1 OK?		
Yes or No		
Yes	▶	GO TO 2.
No	▶	Go to 7. Vehicle Does Not Creep Forward In “D”, “2” Or “1” Position and 8. Vehicle Cannot Be Started From D_1, AT-308, 311.

2	CHECK PNP SWITCH CIRCUIT	
With CONSULT-II Does “ECU INPUT SIGNALS” in “DATA MONITOR” show damage to PNP switch circuit?		
Without CONSULT-II Does self-diagnosis show damage to PNP switch circuit?		

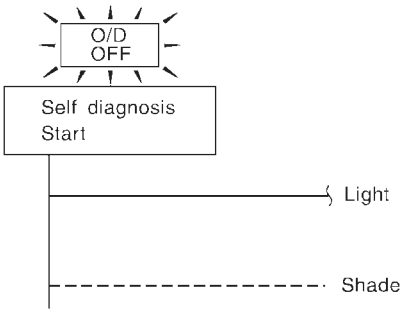

SAT367J

Yes or No		
Yes	▶	Check PNP switch circuit. Refer to “21. TCM Self-diagnosis Does Not Activate (PNP, Overdrive Control and Throttle Position Switches Circuit Checks)”, AT-334.
No	▶	GO TO 3.

3	CHECK THROTTLE POSITION SENSOR	
Check throttle position sensor. Refer to EC-207, “DTC P0120 THROTTLE POSITION SENSOR”.		

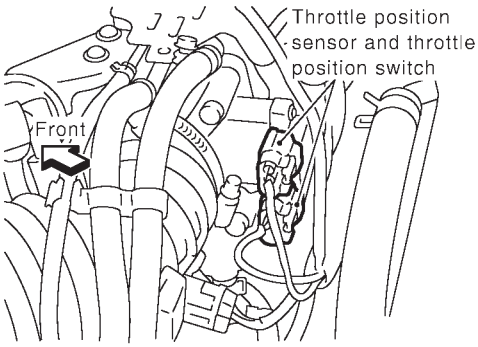

SAT004K

OK or NG		
OK	▶	GO TO 4.
NG	▶	Repair or replace throttle position sensor.

4	CHECK A/T FLUID CONDITION

1. Remove oil pan.
2. Check A/T fluid condition.

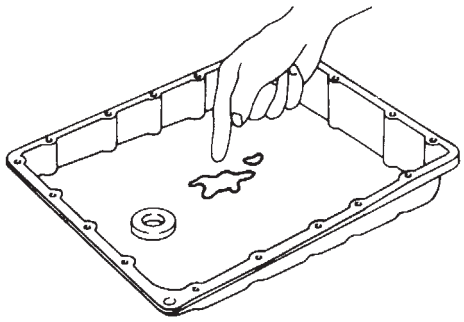

SAT171B

OK or NG

OK	▶	GO TO 5.
NG	▶	GO TO 7.

5	DETECT MALFUNCTIONING ITEM

1. Remove control valve assembly. Refer to AT-351.
2. Check the following items:
- Shift valve B
- Shift solenoid valve B (AT-148: General and except for Euro-OBD/AT-252: Euro-OBD)
- Pilot valve
- Pilot filter

OK or NG

OK	▶	GO TO 6.
NG	▶	Repair or replace damaged parts.

6	CHECK SYMPTOM

Check again.

OK or NG

OK	▶	**INSPECTION END**
NG	▶	1. Perform TCM input/output signal inspection. 2. If NG, recheck TCM pin terminals for damage or loose connection with harness connector.

7	DETECT MALFUNCTIONING ITEM	
1. Remove control valve assembly. Refer to AT-351. 2. Check the following items: ● Shift valve B ● Shift solenoid valve B (AT-148: General and except for Euro-OBD/AT-252: Euro-OBD) ● Pilot valve ● Pilot filter 3. Disassemble A/T. 4. Check the following items: ● Servo piston assembly ● High clutch assembly ● Oil pump assembly		
OK or NG		
OK	▶	GO TO 6.
NG	▶	Repair or replace damaged parts.

11. A/T Does Not Shift: $D_3 \rightarrow D_4$

=NJAT0341

SYMPTOM:

- **A/T does not shift from D_3 to D_4 at the specified speed.**
- **A/T must be warm before D_3 to D_4 shift will occur.**

1	CHECK SYMPTOM
Are 7. Vehicle Does Not Creep Forward In “D”, “2” Or “1” Position and 8. Vehicle Cannot Be Started From D_1 OK?	
Yes or No	
Yes ▶	GO TO 2.
No ▶	Go to 7. Vehicle Does Not Creep Forward In “D”, “2” Or “1” Position and 8. Vehicle Cannot Be Started From D_1, AT-308, 311.

2	CHECK SELF-DIAGNOSTIC RESULTS
With CONSULT-II Does self-diagnosis, after cruise test, show damage to any of the following circuits? ● PNP switch ● Overdrive control switch ● A/T fluid temperature sensor ● Vehicle speed sensor·A/T (revolution sensor) ● Shift solenoid valve A or B ● Vehicle speed sensor·MTR 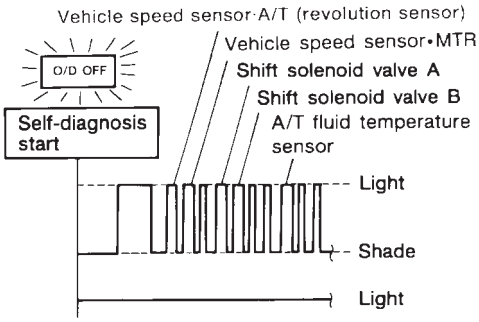 SAT363HC	
Yes or No	
Yes ▶	● Check damaged circuit. Refer to the following items. **General and except for Euro-OBD** ● VEHICLE SPEED SENSOR·A/T (REVOLUTION SENSOR): AT-126 ● SHIFT SOLENOID VALVE A: AT-142 ● SHIFT SOLENOID VALVE B: AT-148 ● BATT/FLUID TEMP SEN (A/T FLUID TEMP SENSOR CIRCUIT AND TCM POWER SOURCE): AT-165 ● VHCL SPEED SEN·MTR VEHICLE SPEED SENSOR·MTR: AT-131 ● 21. TCM Self-diagnosis Does Not Activate (PNP, Overdrive Control and Throttle Position Switches Circuit Checks): AT-334 **Euro-OBD** ● VEHICLE SPEED SENSOR·A/T (REVOLUTION SENSOR): AT-195 ● SHIFT SOLENOID VALVE A: AT-246 ● SHIFT SOLENOID VALVE B: AT-252 ● BATT/FLUID TEMP SEN (A/T FLUID TEMP SENSOR CIRCUIT AND TCM POWER SOURCE): AT-274 ● VHCL SPEED SEN·MTR VEHICLE SPEED SENSOR·MTR: AT-281 ● 21. TCM Self-diagnosis Does Not Activate (PNP, Overdrive Control and Throttle Position Switches Circuit Checks): AT-334
No ▶	GO TO 3.

3	CHECK THROTTLE POSITION SENSOR

Check throttle position sensor. Refer to EC-207, "DTC P0120 THROTTLE POSITION SENSOR".

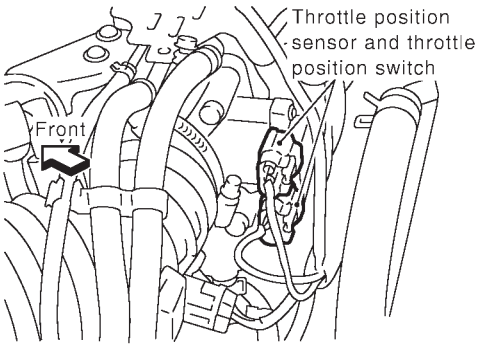

SAT004K

OK or NG

OK	▶	GO TO 4.
NG	▶	Repair or replace throttle position sensor.

4	CHECK A/T FLUID CONDITION

1. Remove oil pan.
2. Check A/T fluid condition.

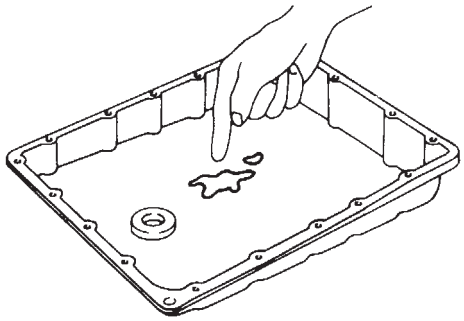

SAT171B

OK or NG

OK	▶	GO TO 5.
NG	▶	GO TO 7.

5	DETECT MALFUNCTIONING ITEM

1. Remove control valve assembly. Refer to AT-351.
2. Check the following items:
- Shift valve B
- Overrun clutch control valve
- Shift solenoid valve B
- Pilot valve
- Pilot filter

OK or NG

OK	▶	GO TO 6.
NG	▶	Repair or replace damaged parts.

6	CHECK SYMPTOM	
Check again.		
	OK or NG	
OK	▶	**INSPECTION END**
NG	▶	1. Perform TCM input/output signal inspection. 2. If NG, recheck TCM pin terminals for damage or loose connection with harness connector.

7	DETECT MALFUNCTIONING ITEM	
1. Remove control valve assembly. Refer to AT-351. 2. Check the following items: ● Shift valve B ● Overrun clutch control valve ● Shift solenoid valve B ● Pilot valve ● Pilot filter 3. Disassemble A/T. 4. Check the following items: ● Servo piston assembly ● Brake band ● Torque converter ● Oil pump assembly		
	OK or NG	
OK	▶	GO TO 6.
NG	▶	Repair or replace damaged parts.

12. A/T Does Not Perform Lock-up

=NJAT0342

SYMPTOM:
A/T does not perform lock-up at the specified speed.

1	CHECK SELF-DIAGNOSTIC RESULTS
Does self-diagnosis show damage to torque converter clutch solenoid valve circuit after cruise test?	

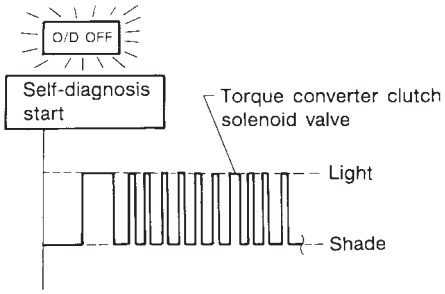

SAT346H

Yes or No

Yes	▶	Check torque converter clutch solenoid valve circuit. Refer to AT-159 (General and except for Euro-OBD)/AT-233 (Euro-OBD).
No	▶	GO TO 2.

2	CHECK THROTTLE POSITION SENSOR
Check throttle position sensor. Refer to EC-207, “DTC P0120 THROTTLE POSITION SENSOR”.	

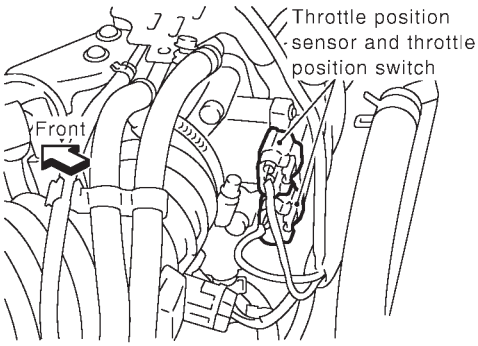

SAT004K

OK or NG

OK	▶	GO TO 3.
NG	▶	Repair or replace throttle position sensor.

3	DETECT MALFUNCTIONING ITEM

1. Remove control valve. Refer to AT-351.
2. Check following items:
   - Torque converter clutch control valve
   - Torque converter relief valve
   - Torque converter clutch solenoid valve
   - Pilot valve
   - Pilot filter

OK or NG

OK	▶	GO TO 4.
NG	▶	Repair or replace damaged parts.

4	CHECK SYMPTOM	
Check again.		
	OK or NG	
OK	▶	**INSPECTION END**
NG	▶	1. Perform TCM input/output signal inspection. 2. If NG, recheck TCM pin terminals for damage or loose connection with harness connector.

13. A/T Does Not Hold Lock-up Condition

=NJAT0343

SYMPTOM:
A/T does not hold lock-up condition for more than 30 seconds.

1	CHECK DIAGNOSTIC RESULTS
Does self-diagnosis show damage to engine speed signal circuit after cruise test?	

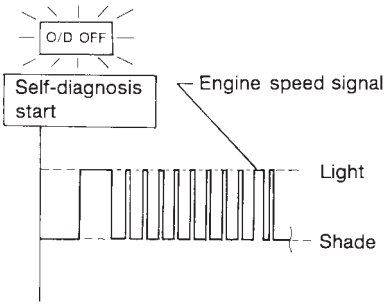

SAT347H

Yes or No

Yes	▶	Check engine speed signal circuit. Refer to AT-172 (General and except for Euro-OBD)/ AT-200 (Euro-OBD).
No	▶	GO TO 2.

2	CHECK A/T FLUID CONDITION

1. Remove oil pan.
2. Check A/T fluid condition.

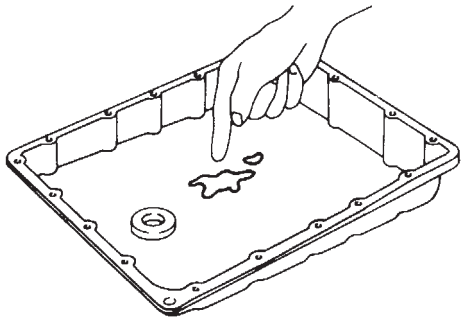

SAT171B

OK or NG

OK	▶	GO TO 3.
NG	▶	GO TO 5.

3	DETECT MALFUNCTIONING ITEM

1. Remove control valve assembly. Refer to AT-351.
2. Check the following items:

- Torque converter clutch control valve
- Pilot valve
- Pilot filter

OK or NG

OK	▶	GO TO 4.
NG	▶	Repair or replace damaged parts.

4	CHECK SYMPTOM	
Check again.		
	OK or NG	
OK	▶	**INSPECTION END**
NG	▶	1. Perform TCM input/output signal inspection. 2. If NG, recheck TCM pin terminals for damage or loose connection with harness connector.

5	DETECT MALFUNCTIONING ITEM	
1. Remove control valve assembly. Refer to AT-351. 2. Check the following items: ● Torque converter clutch control valve ● Pilot valve ● Pilot filter 3. Disassemble A/T. 4. Check torque converter and oil pump assembly.		
	OK or NG	
OK	▶	GO TO 4.
NG	▶	Repair or replace damaged parts.

14. Lock-up Is Not Released

=NJAT0344

SYMPTOM:
Lock-up is not released when accelerator pedal is released.

1	CHECK THROTTLE POSITION SWITCH CIRCUIT
With CONSULT-II Does “ECU INPUT SIGNALS” in “DATA MONITOR” show damage to closed throttle position switch circuit?	
Without CONSULT-II Does self-diagnosis show damage to closed throttle position switch circuit? 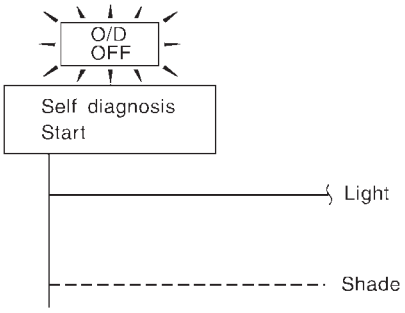 SAT367J	
Yes or No	
Yes ▶	Check closed throttle position switch circuit. Refer to “21. TCM Self-diagnosis Does Not Activate (PNP, Overdrive Control and Throttle Position Switches Circuit Checks)”, AT-334.
No ▶	GO TO 2.

2	CHECK SYMPTOM
Check again.	
OK or NG	
OK ▶	**INSPECTION END**
NG ▶	1. Perform TCM input/output signal inspection. 2. If NG, recheck TCM pin terminals for damage or loose connection with harness connector.

15. Engine Speed Does Not Return To Idle (Light Braking $D_4 \rightarrow D_3$)

=NJAT0345

SYMPTOM:

- **Engine speed does not smoothly return to idle when A/T shifts from D_4 to D_3.**
- **Vehicle does not decelerate by engine brake when turning overdrive control switch OFF.**
- **Vehicle does not decelerate by engine brake when shifting A/T from "D" to "2" position.**

1	CHECK SELF-DIAGNOSTIC RESULTS
Does self-diagnosis show damage to overrun clutch solenoid valve circuit after cruise test?	

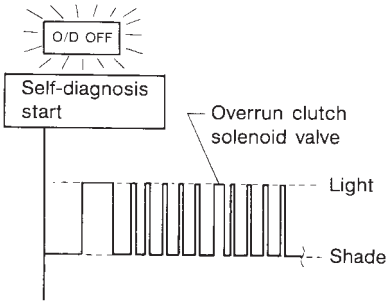

SAT348H

Yes or NO

Yes	▶	Check overrun clutch solenoid valve circuit. Refer to AT-154 (General and except for Euro-OBD)/AT-268 (Euro-OBD).
No	▶	GO TO 2.

2	CHECK THROTTLE POSITION SENSOR
Check throttle position sensor. Refer to EC-207, "DTC P0120 THROTTLE POSITION SENSOR".	

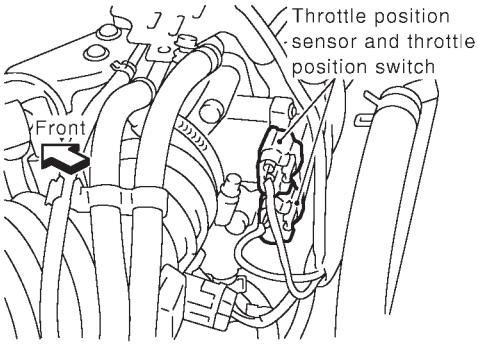

SAT004K

OK or NG

OK	▶	GO TO 3.
NG	▶	Repair or replace throttle position sensor. (AT-134: General and except for Euro-OBD/AT-258: Euro-OBD)

3	CHECK A/T FLUID CONDITION

1. Remove oil pan.
2. Check A/T fluid condition.

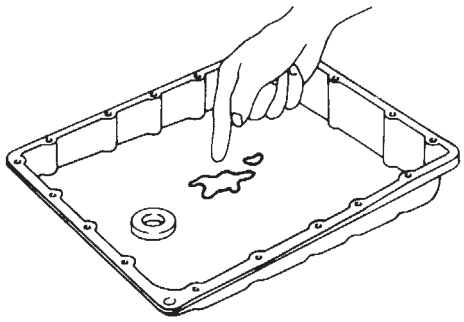

SAT171B

OK or NG

OK	▶	GO TO 4.
NG	▶	GO TO 6.

4	DETECT MALFUNCTIONING ITEM

1. Remove control valve assembly. Refer to AT-351.
2. Check the following items:
- Overrun clutch control valve
- Overrun clutch reducing valve
- Overrun clutch solenoid valve (AT-154: General and except for Euro-OBD/AT-268: Euro-OBD)

OK or NG

OK	▶	GO TO 5.
NG	▶	Repair or replace damaged parts.

5	CHECK SYMPTOM

Check again.

OK or NG

OK	▶	**INSPECTION END**
NG	▶	1. Perform TCM input/output signal inspection. 2. If NG, recheck TCM pin terminals for damage or loose connection with harness connector.

6	DETECT MALFUNCTIONING ITEM

1. Remove control valve assembly. Refer to AT-351.
2. Check the following items:
- Overrun clutch control valve
- Overrun clutch reducing valve
- Overrun clutch solenoid valve (AT-154: General and except for Euro-OBD/AT-268: Euro-OBD)
3. Disassemble A/T.
4. Check the following items:
- Overrun clutch assembly
- Oil pump assembly

OK or NG

OK	▶	GO TO 5.
NG	▶	Repair or replace damaged parts.

16. Vehicle Does Not Start From D_1

NJAT0346

SYMPTOM:
Vehicle does not start from D_1 on Cruise test — Part 2.

1	CHECK SELF-DIAGNOSTIC RESULTS
Does self-diagnosis show damage to vehicle speed sensor·A/T (revolution sensor), shift solenoid valve A, B or vehicle speed sensor·MTR after cruise test?	

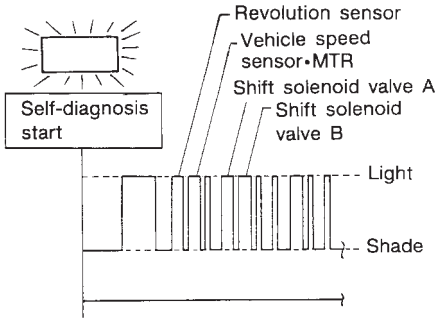

SAT934FA

Yes or No

Yes ▶	● Check damaged circuit. Refer to the following items. **General and except for Euro-OBD** ● VEHICLE SPEED SENSOR·A/T (REVOLUTION SENSOR): AT-126 ● SHIFT SOLENOID VALVE A: AT-142 ● SHIFT SOLENOID VALVE B: AT-148 ● VHCL SPEED SEN·MTR VEHICLE SPEED SENSOR·MTR: AT-131 **Euro-OBD** ● VEHICLE SPEED SENSOR·A/T (REVOLUTION SENSOR): AT-195 ● SHIFT SOLENOID VALVE A: AT-246 ● SHIFT SOLENOID VALVE B: AT-252 ● VHCL SPEED SEN·MTR VEHICLE SPEED SENSOR·MTR: AT-281
No ▶	GO TO 2.

2	CHECK SYMPTOM
Check again.	

OK or NG

OK ▶	Go to 8. Vehicle Cannot Be Started From D_1, AT-311.
NG ▶	1. Perform TCM input/output signal inspection. 2. If NG, recheck TCM pin terminals for damage or loose connection with harness connector.

17. A/T Does Not Shift: $D_4 \rightarrow D_3$, When Overdrive Control Switch "ON" → "OFF"

=NJAT0347

SYMPTOM:

A/T does not shift from D_4 to D_3 when changing overdrive control switch to "OFF" position.

1	CHECK OVERDRIVE CONTROL SWITCH CIRCUIT
With CONSULT-II Does "ECU INPUT SIGNALS" in "DATA MONITOR" show damage to overdrive control switch circuit?	
Without CONSULT-II Does self-diagnosis show damage to overdrive control switch circuit?	

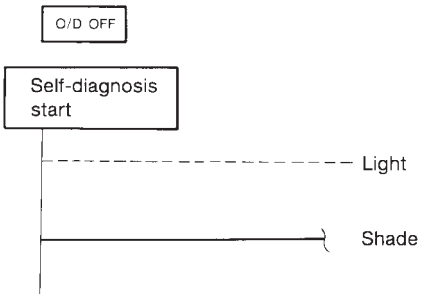

SAT344H

Yes or No

Yes	▶	Check overdrive control switch circuit. Refer to AT-331.
No	▶	Go to 10. A/T Does Not Shift: $D_2 \rightarrow D_3$, AT-317.

18. A/T Does Not Shift: $D_3 \rightarrow 2_2$, When Selector Lever "D" → "2" Position

=NJAT0348

SYMPTOM:
A/T does not shift from D_3 to 2_2 when changing selector lever from "D" to "2" position.

1	CHECK PNP SWITCH CIRCUIT
With CONSULT-II Does "ECU INPUT SIGNALS" in "DATA MONITOR" show damage to PNP switch circuit?	
Without CONSULT-II Does self-diagnosis show damage to PNP switch circuit? 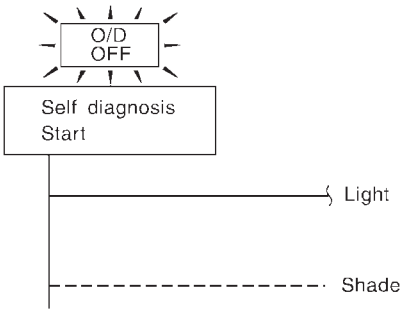 SAT367J	
Yes or No	
Yes ▶	Check PNP switch circuit. Refer to AT-334.
No ▶	Go to 9. A/T Does Not Shift: $D_1 \rightarrow D_2$ or Does Not Kickdown: $D_4 \rightarrow D_2$, AT-314.

19. A/T Does Not Shift: $2_2 \rightarrow 1_1$, When Selector Lever "2" → "1" Position

=NJAT0349

SYMPTOM:
A/T does not shift from 2_2 to 1_1 when changing selector lever from "2" to "1" position.

1	CHECK PNP SWITCH CIRCUIT
With CONSULT-II Does "ECU INPUT SIGNALS" in "DATA MONITOR" show damage to PNP switch circuit?	
Without CONSULT-II Does self-diagnosis show damage to PNP switch circuit?	

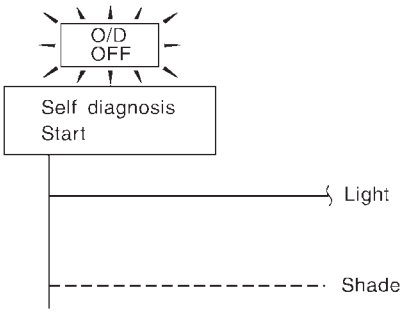

SAT367J

Yes or No

Yes	▶	Check PNP switch circuit. Refer to "21. TCM Self-diagnosis Does Not Activate (PNP, Overdrive Control and Throttle Position Switches Circuit Checks)", AT-334.
No	▶	GO TO 2.

2	CHECK SYMPTOM
Check again.	

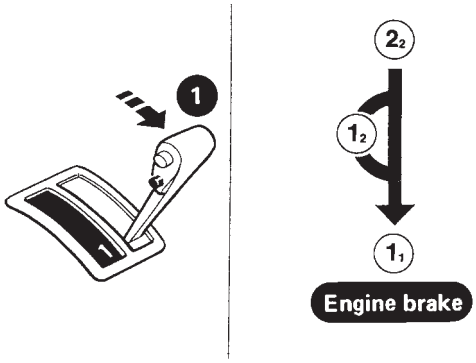

SAT778B

OK or NG

OK	▶	**INSPECTION END**
NG	▶	1. Perform TCM input/output signal inspection. 2. If NG, recheck TCM pin terminals for damage or loose connection with harness connector.

20. Vehicle Does Not Decelerate By Engine Brake

=NJAT0350

SYMPTOM:
Vehicle does not decelerate by engine brake when shifting from 2_2 (1_2) to 1_1.

1	CHECK SYMPTOM	
Is 6. Vehicle Does Not Creep Backward In “R” Position OK?		
	Yes or No	
Yes	▶	Go to 15. Engine Speed Does Not Return To Idle (Light Braking $D_4 \rightarrow D_3$), AT-328.
No	▶	Go to 6. Vehicle Does Not Creep Backward In “R” Position, AT-305.

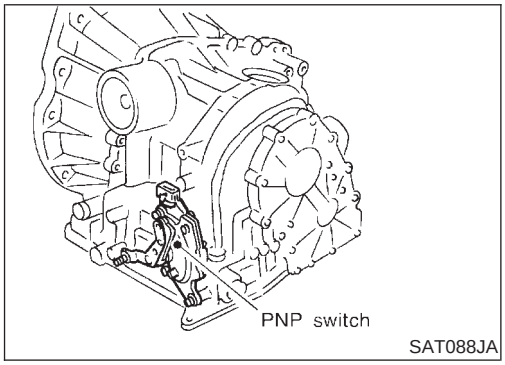

SAT088JA

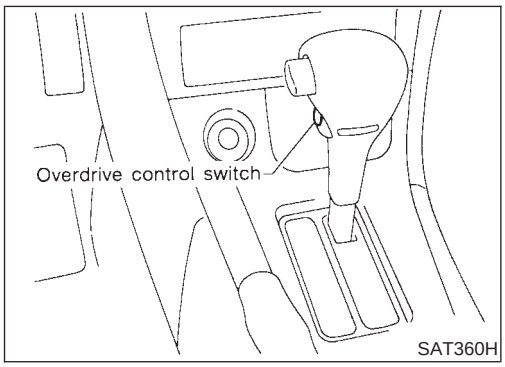

SAT360H

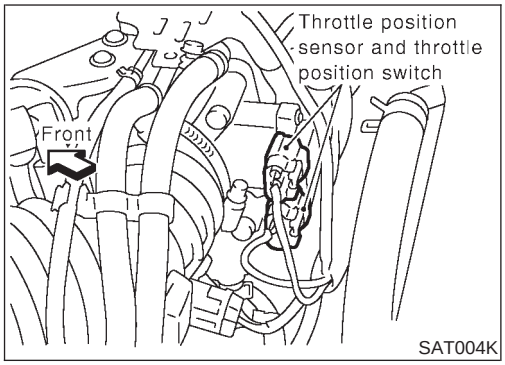

SAT004K

21. TCM Self-diagnosis Does Not Activate (PNP, Overdrive Control and Throttle Position Switches Circuit Checks)

NJAT0351

SYMPTOM:
O/D OFF indicator lamp does not come on in TCM self-diagnostic procedure even if the lamp circuit is good.

DESCRIPTION

NJAT0351S01

- PNP switch
  The PNP switch assembly includes a transmission range switch. The transmission range switch detects the selector lever position and sends a signal to the TCM.
- Overdrive control switch
  Detects the overdrive control switch position (ON or OFF) and sends a signal to the TCM.
- Throttle position switch
  Consists of a wide open throttle position switch and a closed throttle position switch.
  The wide open throttle position switch sends a signal to the TCM when the throttle valve is open at least 1/2 of the full throttle position. The closed throttle position switch sends a signal to the TCM when the throttle valve is fully closed.

DIAGNOSTIC PROCEDURE

NJAT0351S02

1	CHECK PNP SWITCH CIRCUIT (With CONSULT-II)

With CONSULT-II

1. Turn ignition switch to "ON" position.
   (Do not start engine.)
2. Select "ECU INPUT SIGNALS" in "DATA MONITOR" mode for "A/T" with CONSULT-II.
3. Read out "P/N", "R", "D", "2" and "1" position switches moving selector lever to each position.
   Check that the signal of the selector lever position is indicated properly.

DATA MONITOR	
MONITORING	
PN POSI SW	OFF
R POSITION SW	OFF
D POSITION SW	OFF
2 POSITION SW	ON
1 POSITION SW	OFF

SAT701J

OK or NG

OK	▶	GO TO 3.
NG	▶	**Check the following items:** ● PNP switch (Refer to "Component Inspection", AT-341.) ● Harness for short or open between ignition switch and PNP switch (Main harness) ● Harness for short or open between PNP switch and TCM (Main harness) ● Diode (P, N positions)

2	CHECK PNP SWITCH CIRCUIT (Without CONSULT-II)

Without CONSULT-II

1. Turn ignition switch to "ON" position. (Do not start engine.)
2. Check voltage between TCM terminals 26, 27, 34, 35, 36 and ground while moving selector lever through each position.

Voltage:

B: Battery voltage

0: 0V

Lever position	Terminals				
	36	35	34	27	26
P, N	B	0	0	0	0
R	0	B	0	0	0
D	0	0	B	0	0
2	0	0	0	B	0
1	0	0	0	0	B

MTBL0138

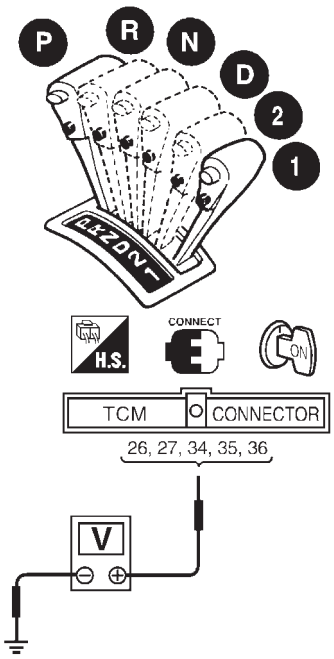

SAT470J

OK or NG

OK	▶	GO TO 4.
NG	▶	**Check the following items:** ● PNP switch (Refer to "Component Inspection", AT-341.) ● Harness for short or open between ignition switch and PNP switch (Main harness) ● Harness for short or open between PNP switch and TCM (Main harness) ● Diode (P, N positions)

3	CHECK OVERDRIVE CONTROL SWITCH CIRCUIT (With CONSULT-II)

With CONSULT-II

1. Turn ignition switch to "ON" position.
   (Do not start engine.)
2. Select "ECU INPUT SIGNALS" in "DATA MONITOR" mode for "A/T" with CONSULT-II.
3. Read out "OVERDRIVE SWITCH".
   Check the signal of the overdrive control switch is indicated properly.
   (Overdrive control switch "ON" displayed on CONSULT-II means overdrive "OFF".)

DATA MONITOR	
MONITORING	
ENGINE SPEED	XXX rpm
TURBINE REV	XXX rpm
OVERDRIVE SW	ON
PN POSI SW	OFF
R POSITION SW	OFF

SAT645J

OK or NG

OK ▶	GO TO 5.
NG ▶	**Check the following items:** ● Overdrive control switch (Refer to "Component Inspection", AT-341.) ● Harness for short or open between TCM and overdrive control switch (Main harness) ● Harness of ground circuit for overdrive control switch (Main harness) for short or open

4	CHECK OVERDRIVE CONTROL SWITCH CIRCUIT (Without CONSULT-II)

Without CONSULT-II

1. Turn ignition switch to "ON" position.
   (Do not start engine.)
2. Check voltage between TCM terminal 22 and ground when overdrive control switch is "ON" and "OFF".

Voltage:

Switch position "ON":

Battery voltage

Switch position "OFF":

1V or less

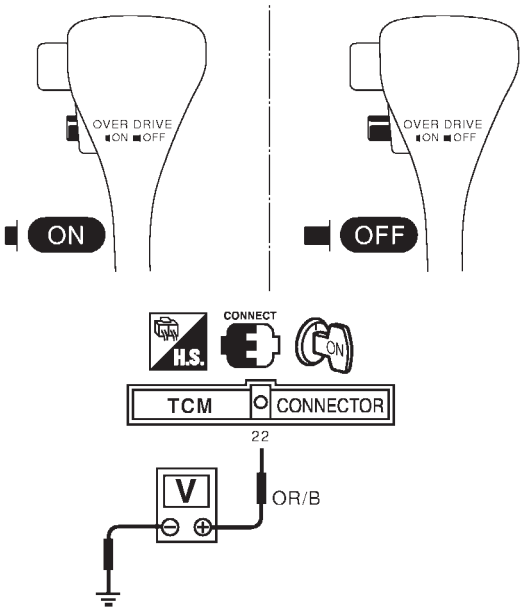

SAT048K

OK or NG

OK	▶	GO TO 6.
NG	▶	**Check the following items:** ● Overdrive control switch (Refer to "Component Inspection", AT-341.) ● Harness for short or open between TCM and overdrive control switch (Main harness) ● Harness of ground circuit for overdrive control switch (Main harness) for short or open

5	CHECK THROTTLE POSITION SWITCH CIRCUIT (With CONSULT-II)

With CONSULT-II

1. Apply vacuum to the throttle opener, then check the following. Refer to steps from 1 to 5 of "Preparation", "SELF-DIAGNOSTIC PROCEDURE (Without CONSULT-II)", AT-44. — General and except for Euro-OBD/Refer to steps from 1 to 5 of "Preparation", "TCM SELF-DIAGNOSTIC PROCEDURE (NO TOOLS)", AT-63 — Euro-OBD
2. Turn ignition switch to "ON" position.
   (Do not start engine.)
3. Select "ECU INPUT SIGNALS" in "DATA MONITOR" mode for "A/T" with CONSULT-II.
4. Read out "CLOSED THL/SW" and "W/O THRL/P-SW" depressing and releasing accelerator pedal.
   Check the signal of throttle position switch is indicated properly.

Accelerator pedal condition	Data monitor	
	CLOSED THL/SW	W/O THRL/P-SW
Released	ON	OFF
Fully depressed	OFF	ON

MTBL0011

DATA MONITOR	
MONITORING	
POWERSHIFT SW	OFF
CLOSED THL/SW	OFF
W/O THRL/P-SW	OFF
HOLD SW	OFF
BRAKE SW	ON

SAT702J

OK or NG

OK	▶	GO TO 7.
NG	▶	**Check the following items:** ● Throttle position switch — Refer to "Component Inspection", AT-341. ● Harness for short or open between ignition switch and throttle position switch (Main harness) ● Harness for short or open between throttle position switch and TCM (Main harness)

6	CHECK THROTTLE POSITION SWITCH CIRCUIT (Without CONSULT-II)

Without CONSULT-II

1. Apply vacuum to the throttle opener, then check the following. Refer to steps from 1 to 5 of "Preparation", "SELF-DIAGNOSTIC PROCEDURE (Without CONSULT-II)", AT-44. — General and except for Euro-OBD/Refer to steps from 1 to 5 of "Preparation", "TCM SELF-DIAGNOSTIC PROCEDURE (NO TOOLS)", AT-63 — Euro-OBD
2. Turn ignition switch to "ON" position.
   (Do not start engine.)
3. Check voltage between TCM terminals 16, 17 and ground while depressing, and releasing accelerator pedal slowly.
   (After warming up engine)

Accelerator pedal condition	Voltage	
	Terminal No. 16	Terminal No. 17
Released	Battery voltage	1V or less
Fully depressed	1V or less	Battery voltage

MTBL0137

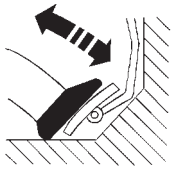

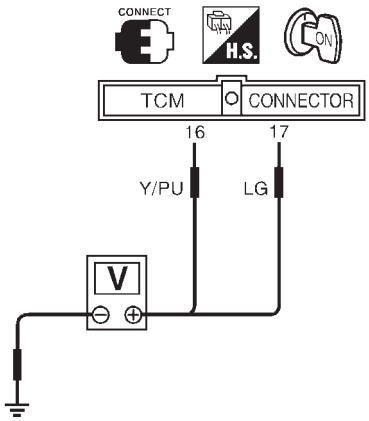

SAT454JA

OK or NG

OK	▶	GO TO 7.
NG	▶	**Check the following items:** ● Throttle position switch — Refer to "Component Inspection", AT-341. ● Harness for short or open between ignition switch and throttle position switch (Main harness) ● Harness for short or open between throttle position switch and TCM (Main harness)

7	CHECK DTC

Perform "DIAGNOSTIC PROCEDURE", AT-335

OK or NG

OK	▶	**INSPECTION END**
NG	▶	● Perform TCM input/output signal inspection. ● If NG, recheck TCM pin terminals for damage or loose connection with harness connector.

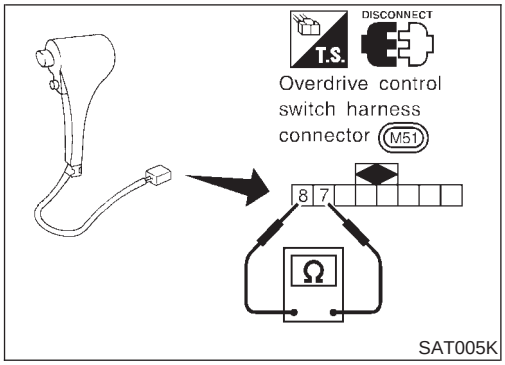

SAT005K

COMPONENT INSPECTION

NJAT0351S03

Overdrive Control Switch

NJAT0351S0301

- Check continuity between two terminals 7 and 8.

Switch position	Continuity
ON	No
OFF	Yes

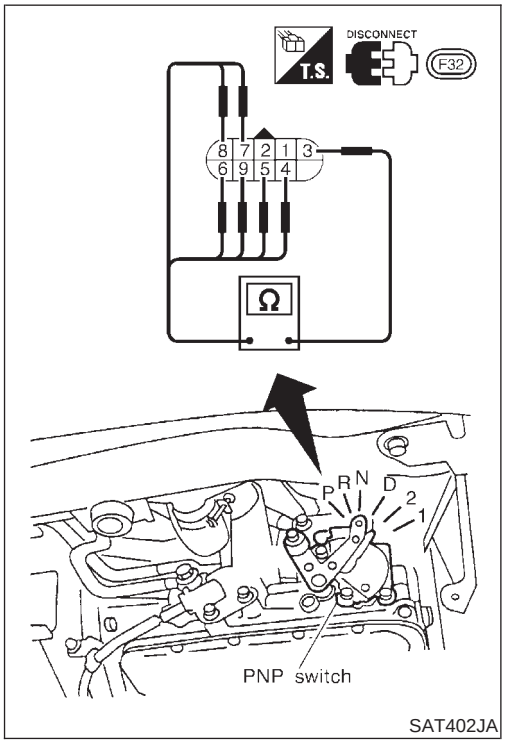

SAT402JA

PNP Switch

NJAT0351S0302

1. Check continuity between terminals 1 and 3 and between terminals 2 and 4, 5, 6, 7, 8, 9 while moving manual shaft through each position.

Lever position	Terminal No.	
P	3 — 7	1 — 2
R	3 — 8	
N	3 — 9	1 — 2
D	3 — 6	
2	3 — 5	
1	3 — 4	

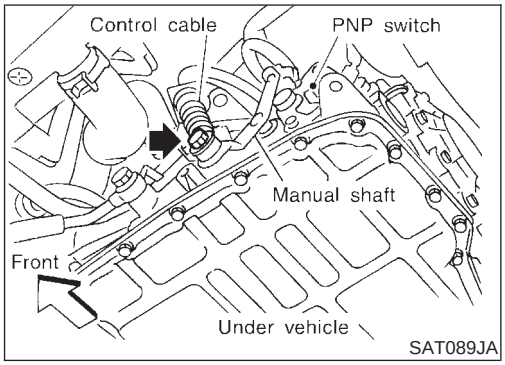

SAT089JA

2. If NG, check again with manual control cable disconnected from manual shaft of A/T assembly. Refer to step 1.
3. If OK on step 2, adjust manual control cable. Refer to AT-352.
4. If NG on step 2, remove PNP switch from A/T and check continuity of PNP switch terminals. Refer to step 1.
5. If OK on step 4, adjust PNP switch. Refer to AT-352.
6. If NG on step 4, replace PNP switch.

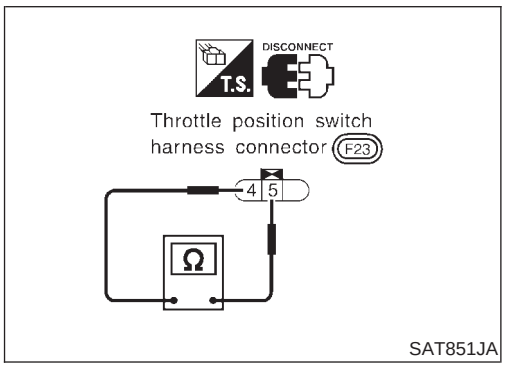

SAT851JA

Throttle Position Switch

NJAT0351S0303

Closed throttle position switch (idle position)

- Check continuity between terminals 4 and 5.
  Refer to "Preparation", "SELF-DIAGNOSTIC PROCEDURE (Without CONSULT-II)", AT-44. — General and except for Euro-OBD/Refer to "Preparation", "TCM SELF-DIAGNOSTIC PROCEDURE (NO TOOLS)", AT-63. — Euro-OBD

Accelerator pedal condition	Continuity
Released	Yes

Accelerator pedal condition	Continuity
Depressed	No

- To adjust closed throttle position switch, refer to EC-100, "Basic Inspection".

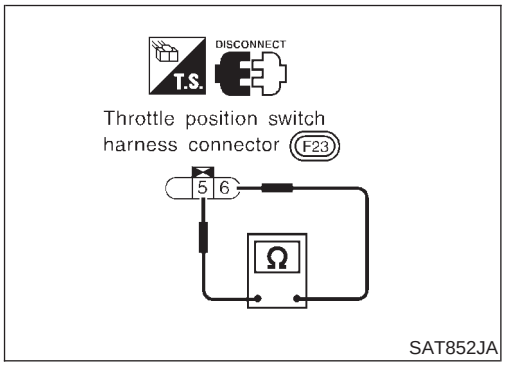

Wide open throttle position switch

- Check continuity between terminals 5 and 6.

Accelerator pedal condition	Continuity
Released	No
Depressed	Yes

Description

NJAT0102

- The mechanical key interlock mechanism also operates as a shift lock:
  With the key switch turned to ON, the selector lever cannot be shifted from “P” (parking) to any other position unless the brake pedal is depressed.
  With the key removed, the selector lever cannot be shifted from “P” to any other position.
  The key cannot be removed unless the selector lever is placed in “P”.
- The shift lock and key interlock mechanisms are controlled by the ON-OFF operation of the shift lock solenoid and by the operation of the rotator and slider located inside the key cylinder.

Shift Lock System Electrical Parts Location

NJAT0103

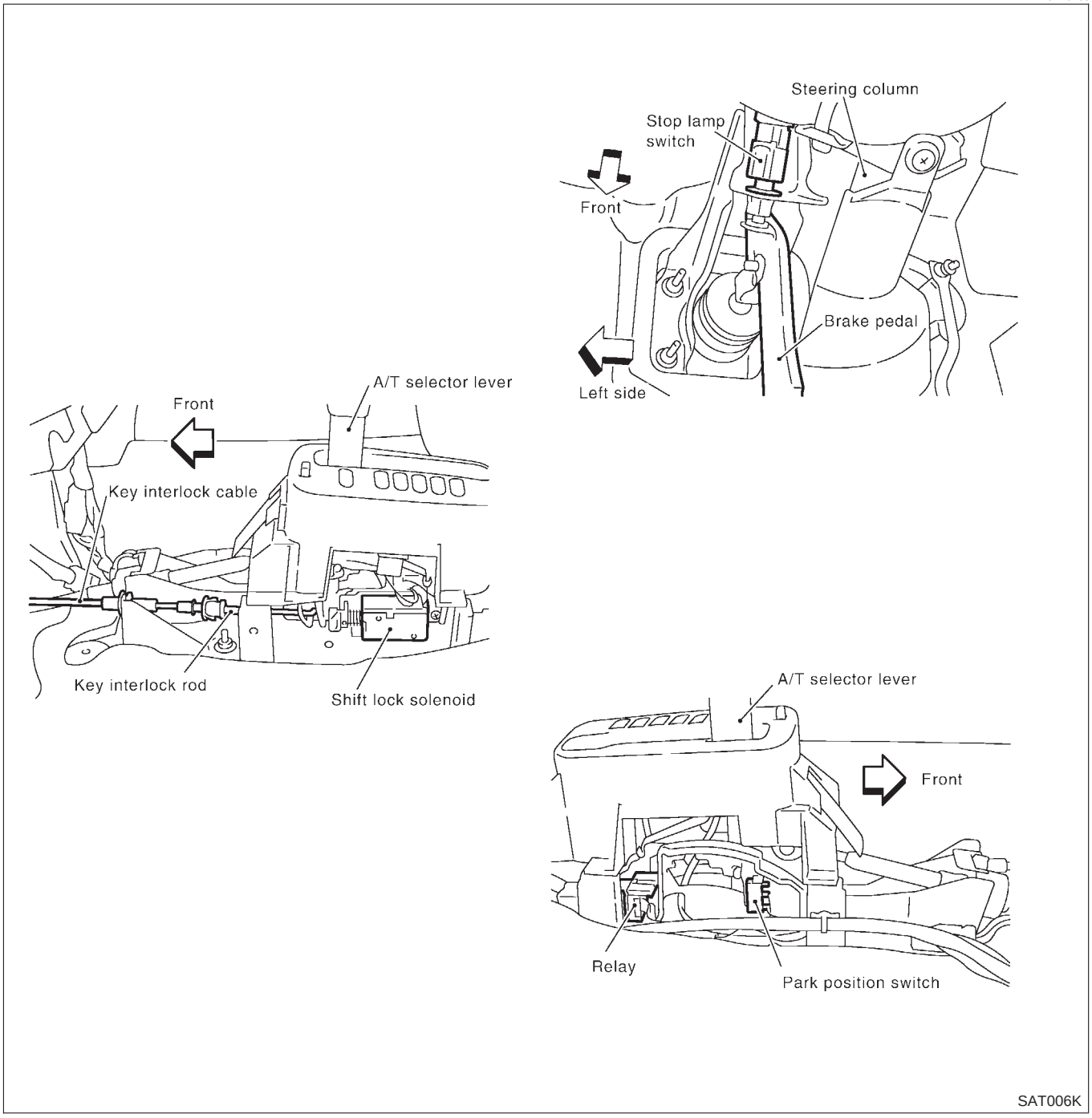

Wiring Diagram — SHIFT —

NJAT0104

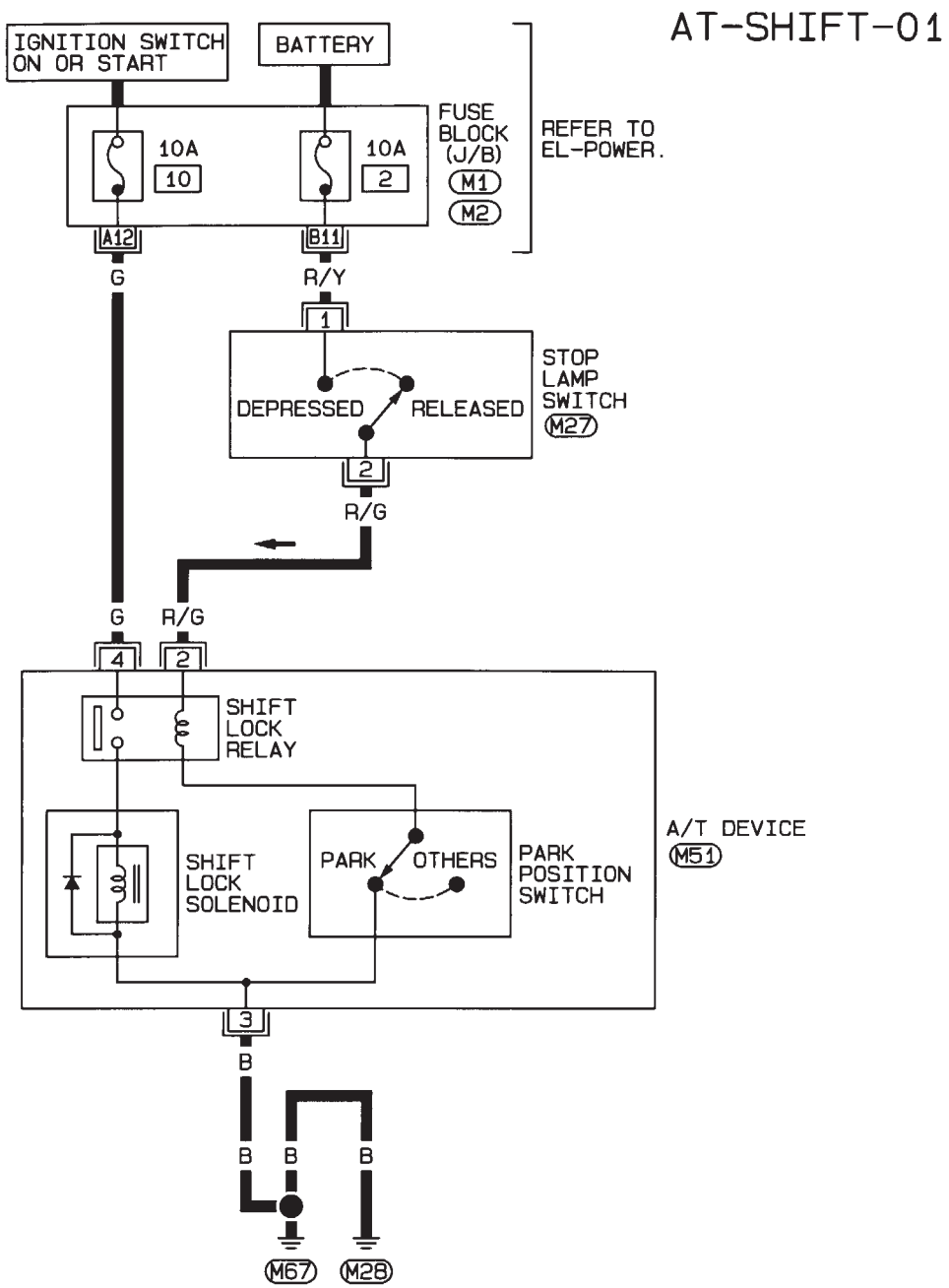

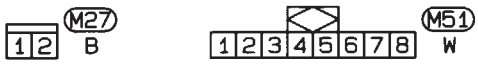

REFER TO THE FOLLOWING.
M1, M2 -FUSE BLOCK-JUNCTION BOX (J/B)

HAT088

Diagnostic Procedure

NJAT0105

SYMPTOM 1:

- **Selector lever cannot be moved from "P" position with key in ON position and brake pedal applied.**
- **Selector lever can be moved from "P" position with key in ON position and brake pedal released.**
- **Selector lever can be moved from "P" position when key is removed from key cylinder.**

SYMPTOM 2:

Ignition key cannot be removed when selector lever is set to "P" position. It can be removed when selector lever is set to any position except "P".

1	CHECK KEY INTERLOCK CABLE
Check key interlock cable for damage. **OK or NG**	
OK ▶	GO TO 2.
NG ▶	Repair key interlock cable. Refer to AT-349.

2	CHECK SELECTOR LEVER POSITION
Check selector lever position for damage. **OK or NG**	
OK ▶	GO TO 3.
NG ▶	Check selector lever. Refer to "ON-VEHICLE SERVICE — PNP Switch and Control Cable Adjustment", AT-352.

3	CHECK POWER SOURCE
1. Turn ignition switch to "ON" position. (Do not start engine.) 2. Check voltage between stop lamp switch harness terminal 1 and ground. **Voltage: Battery voltage** 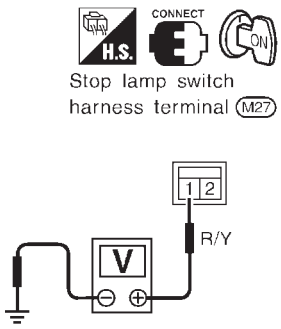 SAT007K **OK or NG**	
OK ▶	GO TO 4.
NG ▶	**Check the following items:** 1. Harness for short or open between battery and stop lamp switch harness terminal 1 2. Fuse 3. Ignition switch (Refer to EL-10, "POWER SUPPLY ROUTING".)

4	CHECK INPUT SIGNAL (A/T DEVICE)

Turn ignition switch to "ON" position.
(Do not start engine.)

- Check voltage between A/T device harness terminal 2 and ground.

Voltage:
Brake pedal depressed:
Battery voltage
Brake pedal released:
0V

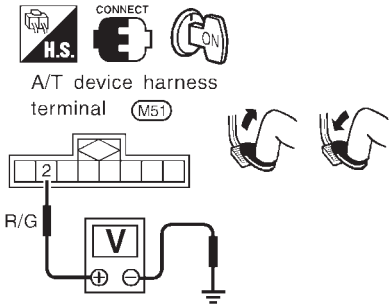

SAT008K

OK or NG

OK	▶	GO TO 5.
NG	▶	**Check the following items:** 1. Harness for short and open between battery and stop lamp switch harness connector 1. 2. Harness for short or open between stop lamp switch harness connector 2 and A/T device harness connector 2. 3. Fuse 4. Stop lamp switch (Refer to "A/T DEVICE CHECK", AT-348.)

5	CHECK GROUND CIRCUIT

1. Turn ignition switch to "OFF" position.
2. Disconnect A/T device harness connector.
3. Check continuity between A/T device harness terminal 3 and ground.

Continuity should exist.

If OK, check harness for short to ground and short to power.

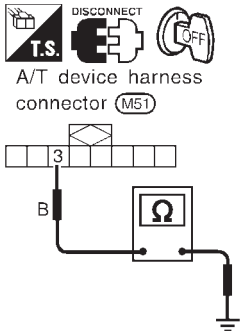

SAT009K

OK or NG

OK	▶	GO TO 6.
NG	▶	Repair open circuit or short to ground or short to power in harness or connectors.

6	CHECK RELAY CIRCUIT

1. Turn ignition switch to ON.
- Check voltage between terminal 4 - 3 and 2 - 3.

A/T device harness terminal (M51)

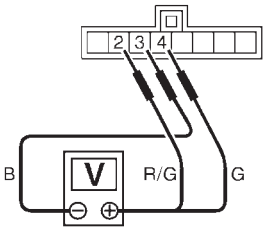

Condition	Ignition switch	Terminal No.	Voltage
When selector lever is set in "P" position and depressed brake pedal.	ON	4 – 3	Battery voltage
		2 – 3	Battery voltage

SAT010K

OK or NG

OK	▶	GO TO 7.
NG	▶	Replace A/T device.

7	CHECK PARK POSITION SWITCH

Refer to "A/T device Check", AT-348.

OK or NG

OK	▶	GO TO 8.
NG	▶	Replace A/T device.

8	CHECK SHIFT LOCK SOLENOID

Refer to "A/T device Check", AT-348.

OK or NG

OK	▶	GO TO 9.
NG	▶	Replace A/T device.

9	SHIFT LOCK OPERATION

1. Reconnect shift lock harness connector.
2. Turn ignition switch from "OFF" to "ON" position. (Do not start engine.)
3. Recheck shift lock operation.

OK or NG

OK	▶	**INSPECTION END**
NG	▶	1. Perform A/T device input/output signal inspection test. 2. If NG, recheck harness connector connection.

A/T DEVICE CHECK

=NJAT0105S01

1. Shift Lock Solenoid

NJAT0105S0101

- Check operation sound.
  When ignition switch is turned to "ON" position and selector lever is set in "P" position.

Brake pedal	Operation sound
Depressed	Yes
Released	No

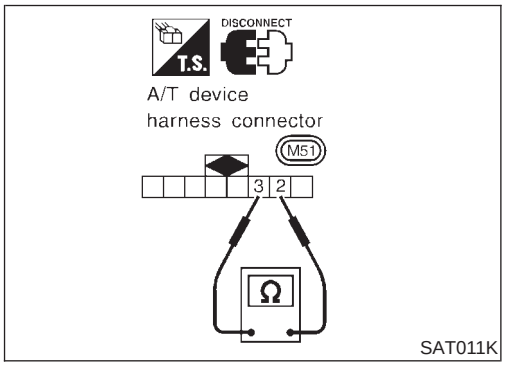

2. Park Position Switch

NJAT0105S0102

- Check resistance between A/T device harness terminal 2 and 3.

Condition	Resistance
When selector lever is set in "P" position and selector lever button is released	111Ω
When selector lever is not set in "P" position and selector lever button is released	0Ω

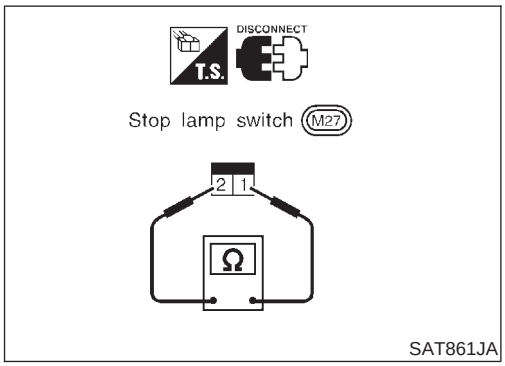

STOP LAMP SWITCH

NJAT0105S02

- Check continuity between terminals 1 and 2.

Condition	Continuity
When brake pedal is depressed	Yes
When brake pedal is released	No

Check stop lamp switch after adjusting brake pedal — refer to BR-12, "BRAKE PEDAL AND BRACKET".

Components

NJAT0107

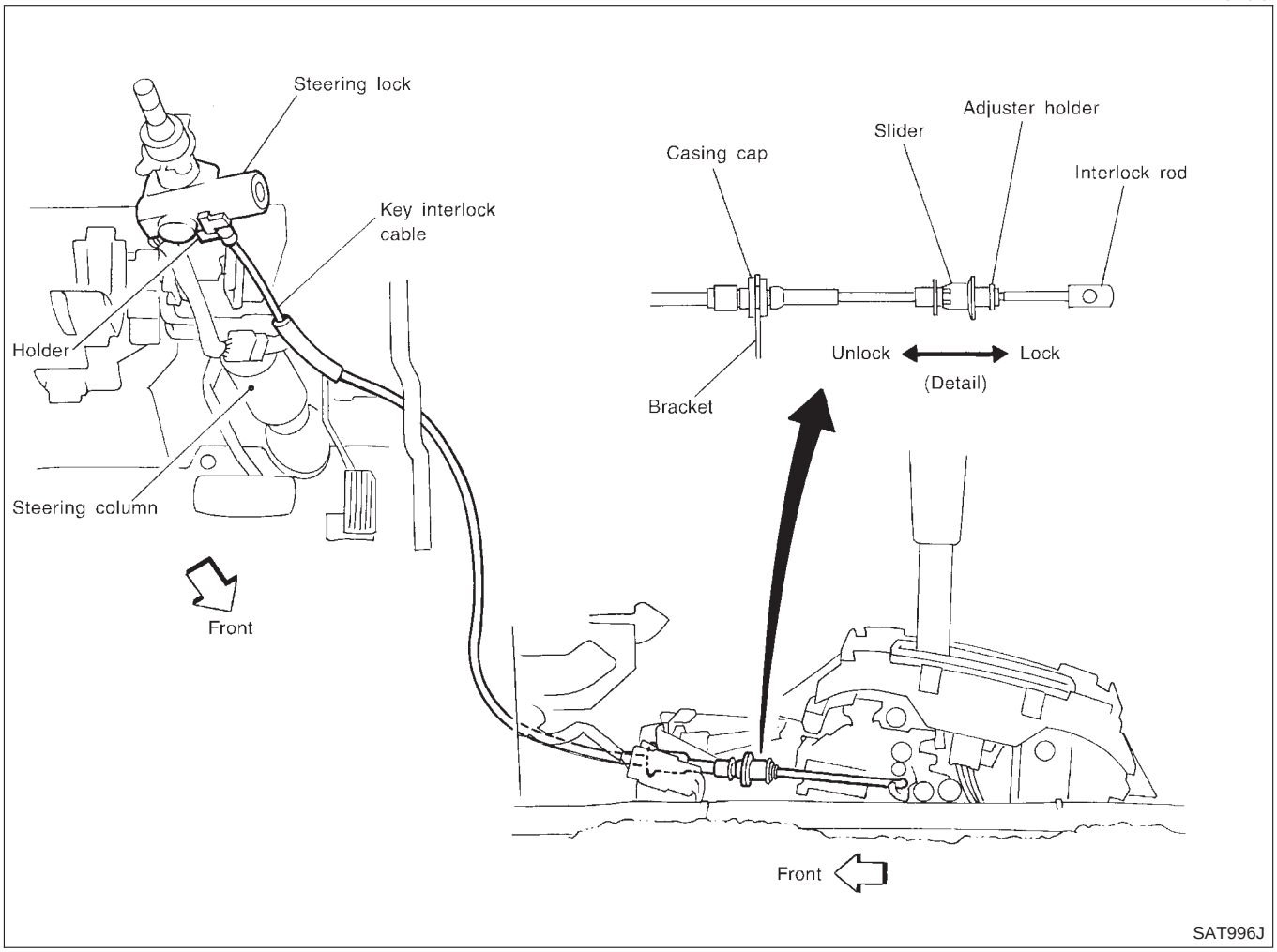

CAUTION:

- **Install key interlock cable in such a way that it will not be damaged by sharp bends, twists or interference with adjacent parts.**
- **After installing key interlock cable to control device, make sure that casing cap and bracket are firmly secured in their positions.**

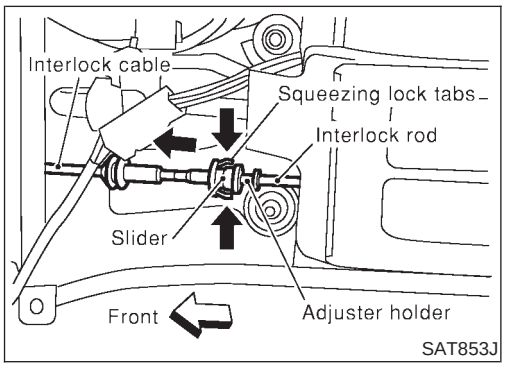

Removal

NJAT0108

1. Unlock slider by squeezing lock tabs on slider from adjuster holder and remove interlock rod from cable.

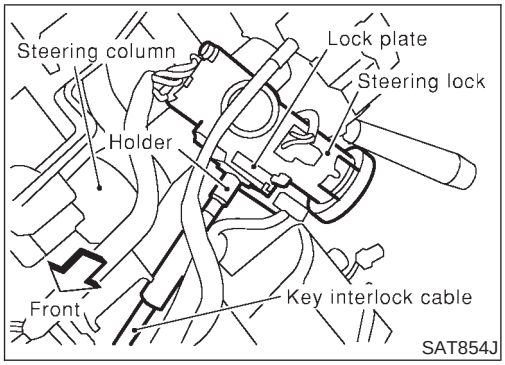

2. Remove lock plate from steering lock assembly and remove key interlock cable.

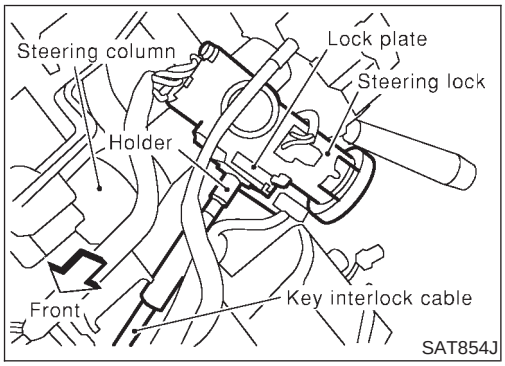

Installation

NJAT0109

1. Turn ignition key to lock position.
2. Set A/T selector lever to P position.
3. Set key interlock cable to steering lock assembly and install lock plate.
4. Clamp cable to steering column and fix to control cable with band.

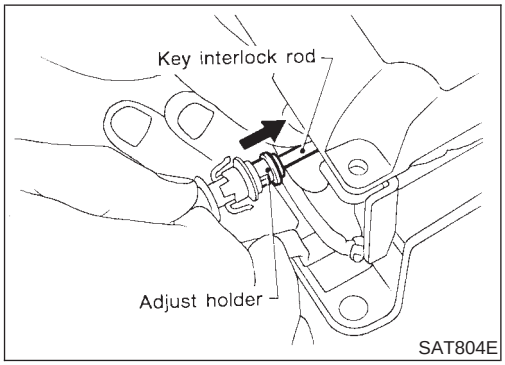

5. Insert interlock rod into adjuster holder.

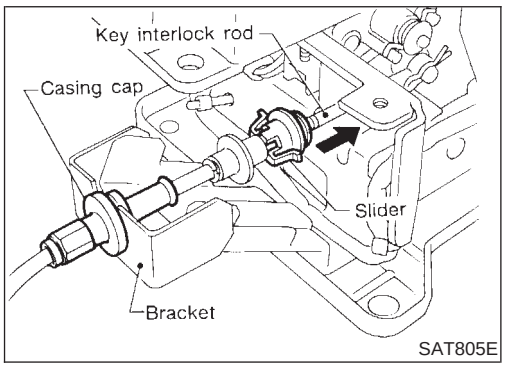

6. Install casing cap to bracket.
7. Move slider in order to fix adjuster holder to interlock rod.

Control Valve Assembly and Accumulators

NJAT0110

REMOVAL

NJAT0110S01

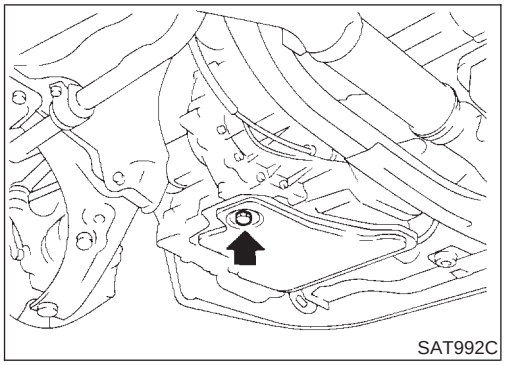
SAT992C

1. Drain ATF from transaxle.
2. Remove oil pan and gasket.

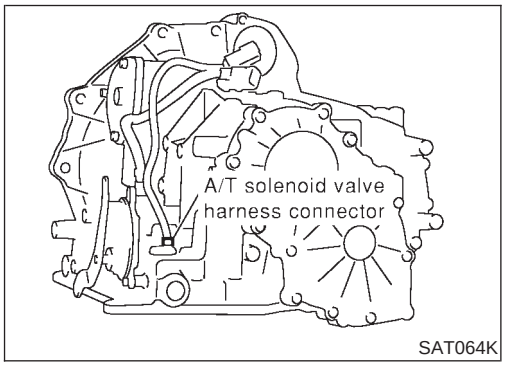

SAT064K

3. Disconnect A/T solenoid valve harness connector.

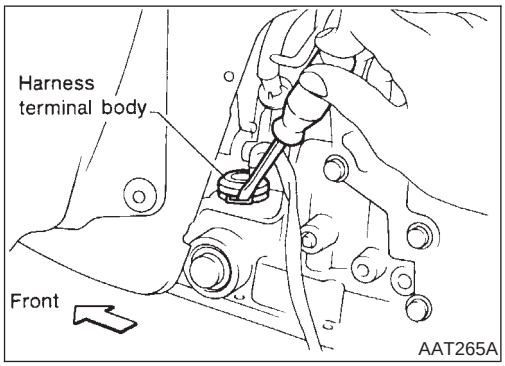

AAT265A

4. Remove stopper ring from A/T solenoid harness terminal body.
5. Remove A/T solenoid harness by pushing terminal body into transmission case.

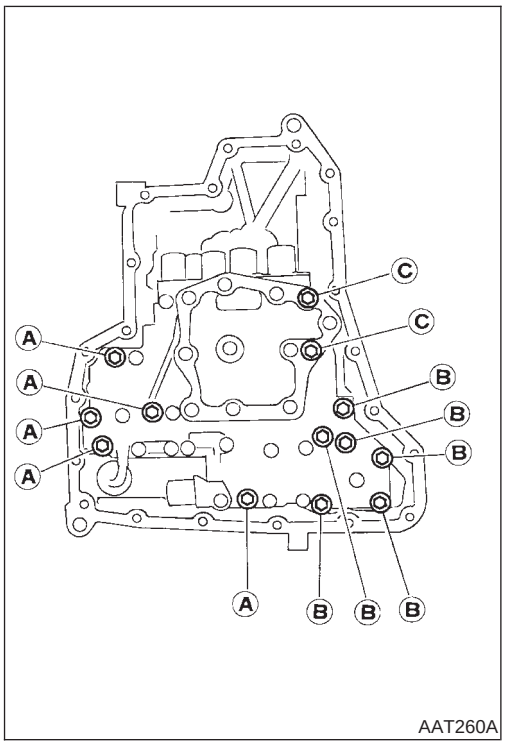

AAT260A

6. Remove control valve assembly by removing fixing bolts.

Bolt length, number and location:

Bolt symbol	A	B	C
Bolt length "ℓ" ℓ	40.0 mm (1.575 in)	33.0 mm (1.299 in)	43.5 mm (1.713 in)
Number of bolts	5	6	2

- **Be careful not to drop manual valve and servo release accumulator return springs.**

7. Disassemble and inspect control valve assembly if necessary. Refer to AT-366.

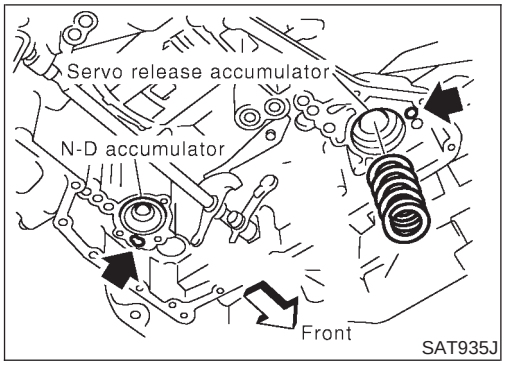

8. Remove servo release and N-D accumulators by applying compressed air if necessary.
- **Hold each piston with a rag.**

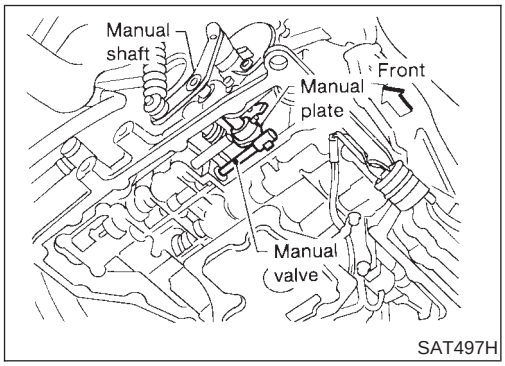

INSTALLATION

NJAT0110S02

- **Tighten fixing bolts to specification.**
  : 7 - 9 N·m (0.7 - 0.9 kg-m, 61 - 78 in-lb)
- **Set manual shaft in Neutral position, then align manual plate with groove in manual valve.**
- **After installing control valve assembly to transmission case, make sure that selector lever can be moved to all positions.**

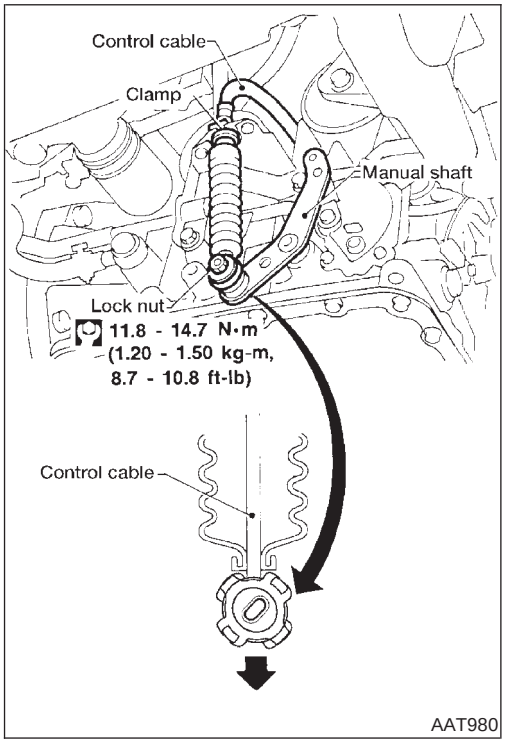

Control Cable Adjustment

NJAT0111

Move selector lever from the "P" position to the "1" position. You should be able to feel the detents in each position. If the detents cannot be felt or if the pointer indicating the position is improperly aligned, the control cable needs adjustment.

1. Place selector lever in "P" position.
2. Loosen control cable lock nut and place manual shaft in "P" position.
3. Pull control cable, by specified force, in the direction of the arrow shown in the illustration.
   Specified force: 6.9 N (0.7 kg, 1.5 lb)
4. Return control cable in the opposite direction of the arrow for 1.0 mm (0.039 in).
5. Tighten control cable lock nut.
6. Move selector lever from "P" to "1" position again. Make sure that selector lever moves smoothly.
7. Apply grease to contacting areas of selector lever and control cable. Install any part removed.

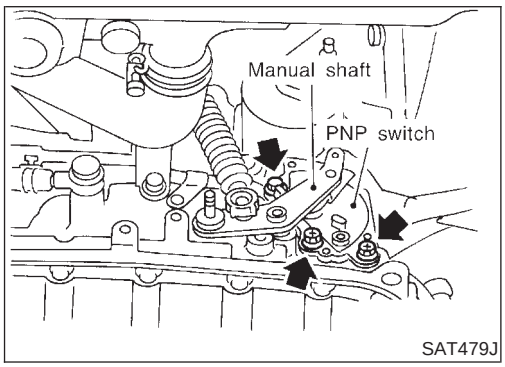

Park/Neutral Position (PNP) Switch Adjustment

NJAT0112

1. Remove control cable end from manual shaft.
2. Set manual shaft in "N" position.
3. Loosen PNP switch fixing bolts.

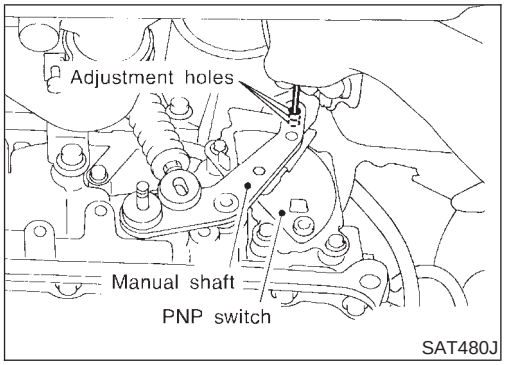

4. Use a 4 mm (0.157 in) pin for this adjustment.
a. Insert the pin straight into the manual shaft adjustment hole.
b. Rotate PNP switch until the pin can also be inserted straight into hole in PNP switch.
5. Tighten PNP switch fixing bolts.
6. Remove pin from adjustment hole after adjusting PNP switch.
7. Reinstall any part removed.
8. Adjust control cable. Refer to "Control Cable Adjustment", AT-352.
9. Check continuity of PNP switch. Refer to AT-334.

Differential Side Oil Seal Replacement

NJAT0113

1. Remove drive shaft assemblies. Refer to AX-10, "Drive Shaft".
2. Remove oil seals.

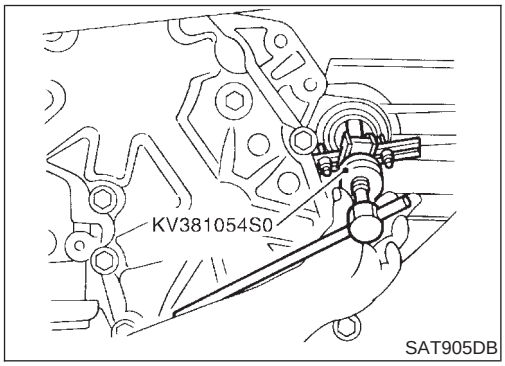

3. Install oil seals.

- **Apply ATF to oil seal surface before installing.**

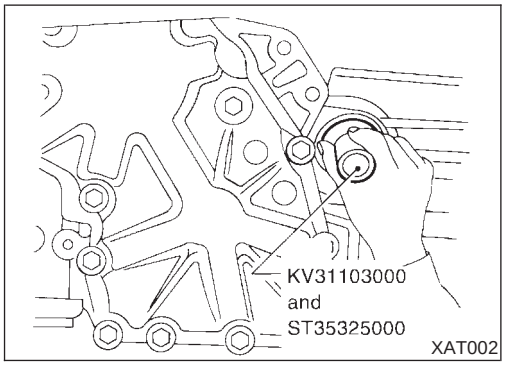

- **Install oil seals so that dimensions "A" and "B" are within specifications.**

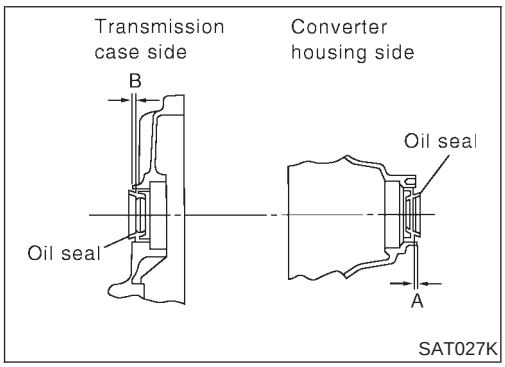

Unit: mm (in)

A	B
5.5 - 6.5 (0.217 - 0.256)	−0.5 to 0.5 (−0.020 to 0.020)

4. Reinstall any part removed.

Revolution Sensor Replacement

NJAT0114

1. Disconnect revolution sensor harness connector.
2. Remove harness bracket from A/T.
3. Remove revolution sensor from A/T.
4. Reinstall any part removed.

Always use new sealing parts.

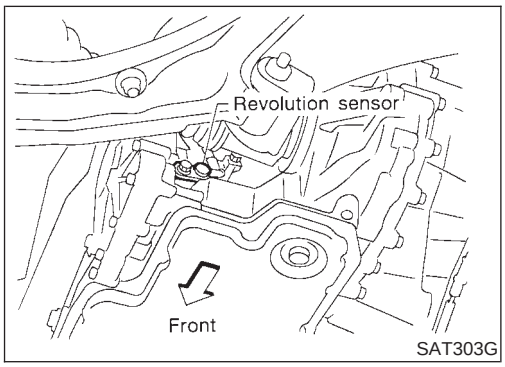

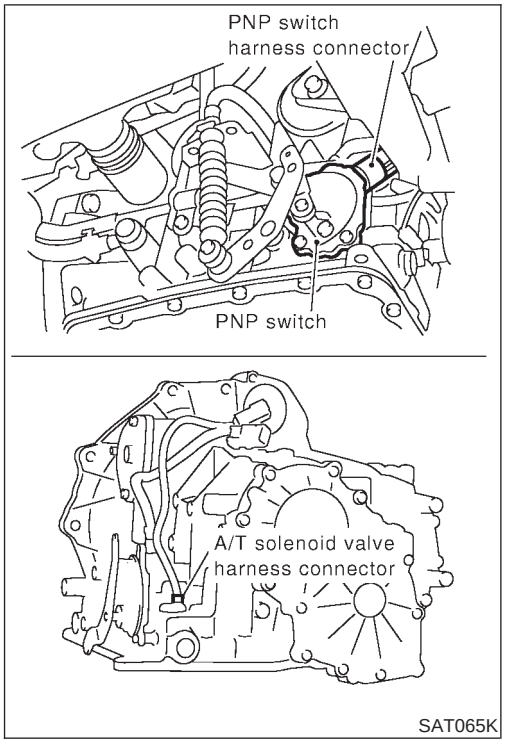

Removal

NJAT0115

CAUTION:

Before separating transaxle from engine, remove the crankshaft position sensor (Euro-OBD) from transaxle. Be careful not to damage sensor.

1. Remove battery and bracket.
2. Remove air duct between throttle body and air cleaner.
3. Disconnect A/T solenoid valve harness connector, PNP switch harness connector and revolution sensor harness connector.
4. Remove crankshaft position sensor (Euro-OBD) from transaxle.

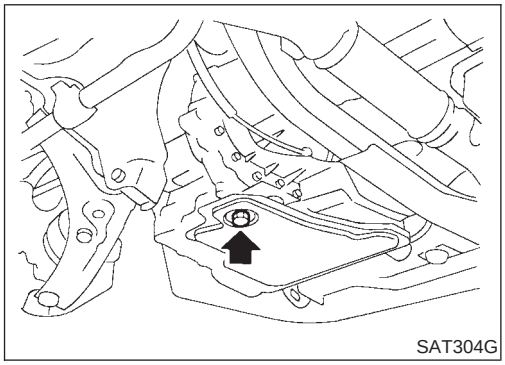

5. Drain ATF from transaxle.
6. Disconnect control cable from transaxle.
7. Disconnect oil cooler hoses.
8. Remove drive shafts. Refer to AX-10, “Drive Shaft”.
9. Remove the intake manifold support bracket. Refer to EM-11, “OUTER COMPONENT PARTS”.
10. Remove starter motor from transaxle.

    Tighten bolts to specified torque.

    : 41 - 52 N·m (4.2 - 5.3 kg-m, 30 - 38 ft-lb)
11. Remove upper bolts fixing transaxle to engine.
12. Support transaxle with a jack.

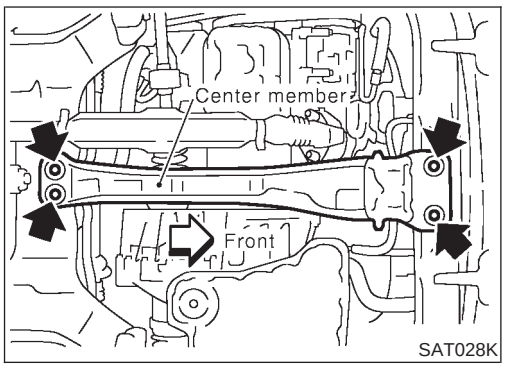

13. Remove center member.

- Tighten center member fixing bolts to specified torque, Refer to EM-51, “REMOVAL AND INSTALLATION”.

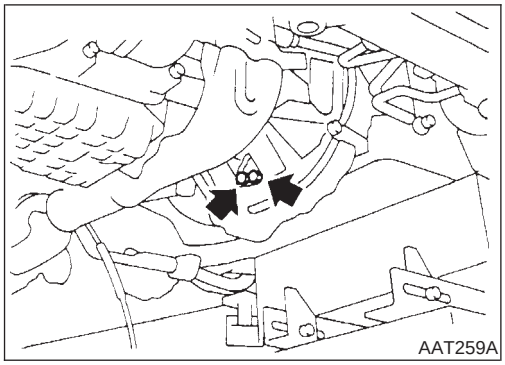
AAT259A

14. Remove rear plate cover.
15. Remove torque converter bolts.
    Rotate crankshaft to gain access to securing bolts.
16. Remove rear transaxle to engine bracket. Refer to EM-51, "REMOVAL AND INSTALLATION".
17. Support engine with a jack.
18. Remove rear transaxle mount. Refer to EM-51, "REMOVAL AND INSTALLATION".
19. Remove lower bolts fixing transaxle to engine.
20. Lower transaxle while supporting it with a jack.

Installation

NJAT0116

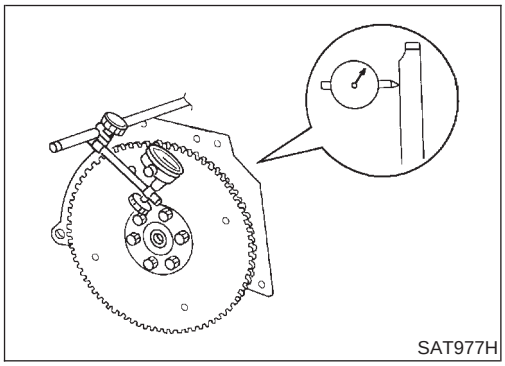
SAT977H

1. Check drive plate runout.

CAUTION:
Do not allow any magnetic materials to contact the ring gear teeth.

Maximum allowable runout:
Refer to EM-62, "FLYWHEEL/DRIVE PLATE RUNOUT".

- If this runout is out of allowance, replace drive plate with ring gear.

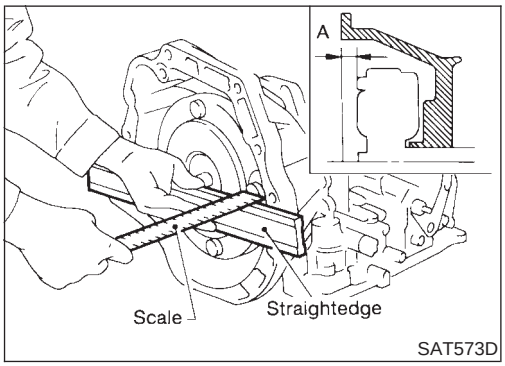

SAT573D

2. When connecting torque converter to transaxle, measure distance "A" to be certain that they are correctly assembled.

Distance "A":
15.9 mm (0.626 in) or more

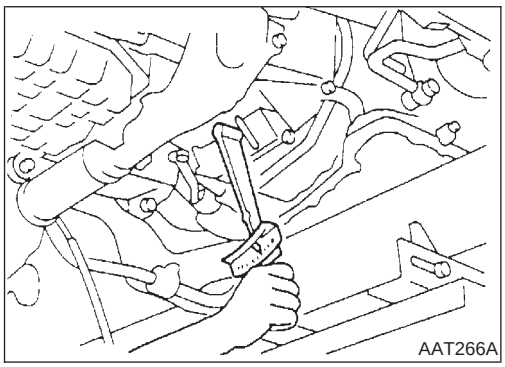
AAT266A

3. Install torque converter to drive plate.
- **With converter installed, rotate crankshaft several turns to check that transaxle rotates freely without binding.**

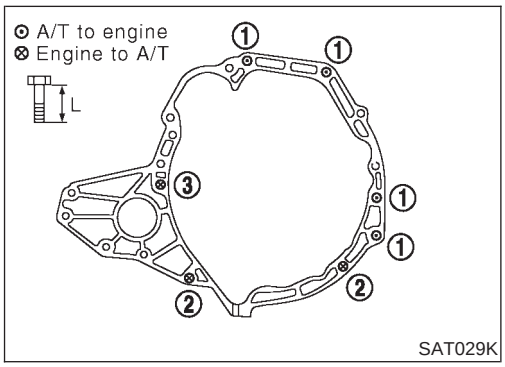

SAT029K

4. Tighten belts fixing transaxle.

Bolt No.	Tightening torque N·m (kg-m, ft-lb)	Bolt length "ℓ" mm (in)
1	30 - 40 (3.1 - 4.1, 23 - 29)	50 (1.97)
2*1	16 - 20 (1.6 - 2.1, 12 - 15)	25 (0.98)
3	31 - 40 (3.1 - 4.1, 23 - 29)	30 (1.18)
4*2	30 - 40 (3.1 - 4.1, 23 - 29)	16 (0.63)
5*2	16 - 20 (1.6 - 2.1, 12 - 15)	20 (0.79)

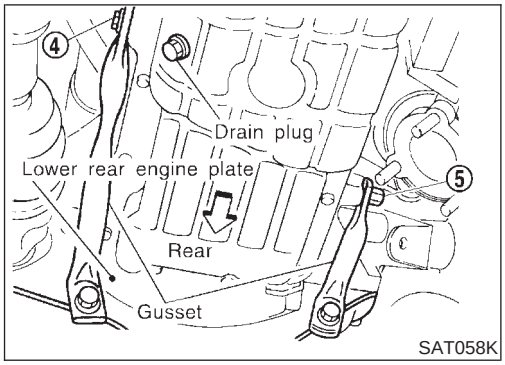

SAT058K

*1: With gusset to A/T
*2: With gusset to cylinder block

SAT638A

5. Reinstall any part removed.
6. Adjust control cable. Refer to AT-352.
7. Check continuity of PNP switch. Refer to AT-334.
8. Refill transaxle with ATF and check fluid level.
9. Move selector lever through all positions to be sure that transaxle operates correctly. With parking brake applied, idle engine. Move selector lever through "N" to "D", to "2", to "1" and "R" positions. A slight shock should be felt through the hand gripping the selector each time the transaxle is shifted.
10. Perform road test. Refer to AT-85.

Components-1 3AX00, 3AX01, 3AX19, 3AX63 and 3AX64 models

NJAT0119

SEC. 311•313•327•381

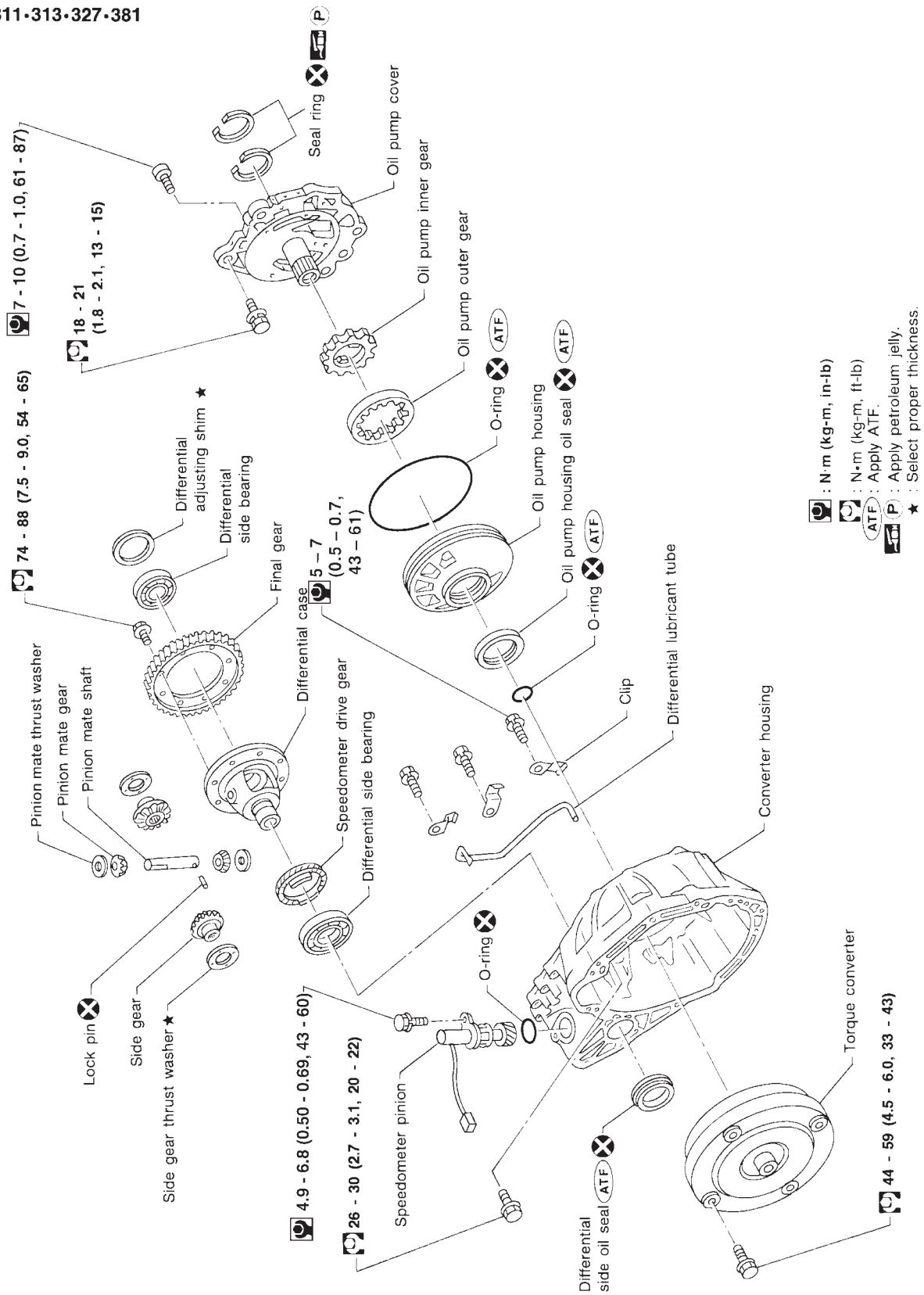

AAT419A

Components-1 3AX10 and 3AX18 models

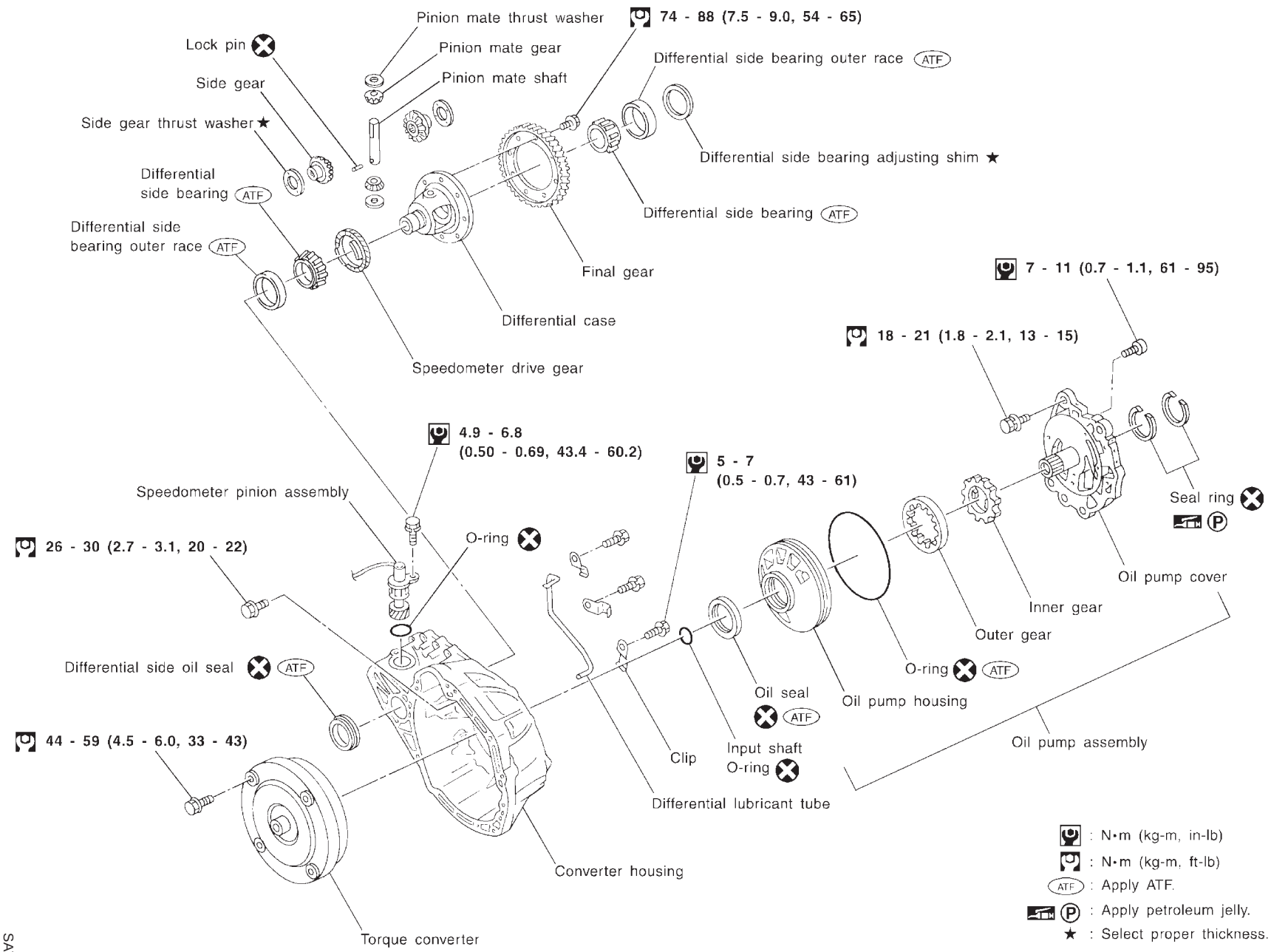

NJAT0232

SAT030K

Components-2 3AX00, 3AX01, 3AX19, 3AX63 and 3AX64 models

NJAT0233

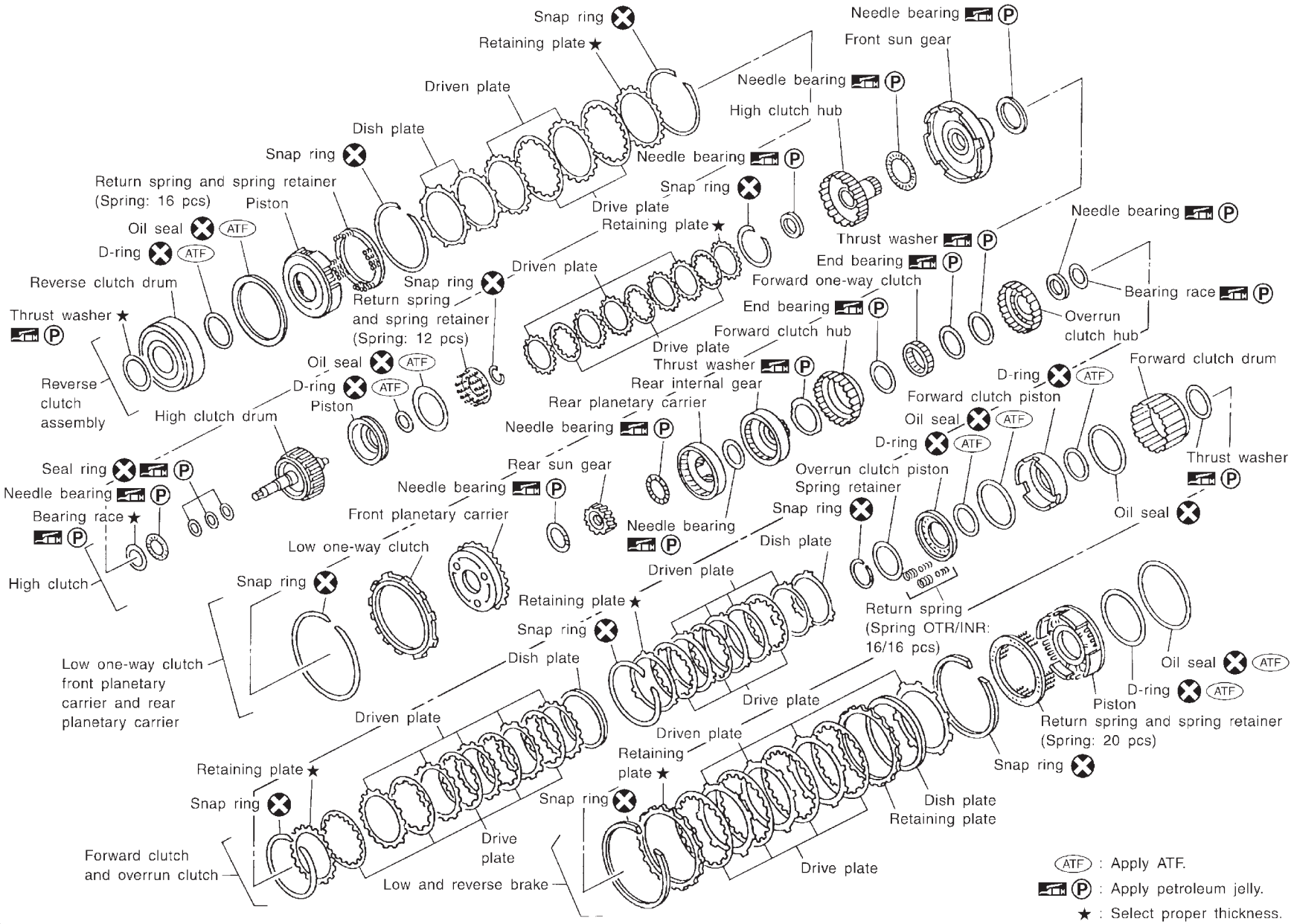

SAT102K

Components-2 3AX10 and 3AX18 models

NJAT0234

SEC. 315

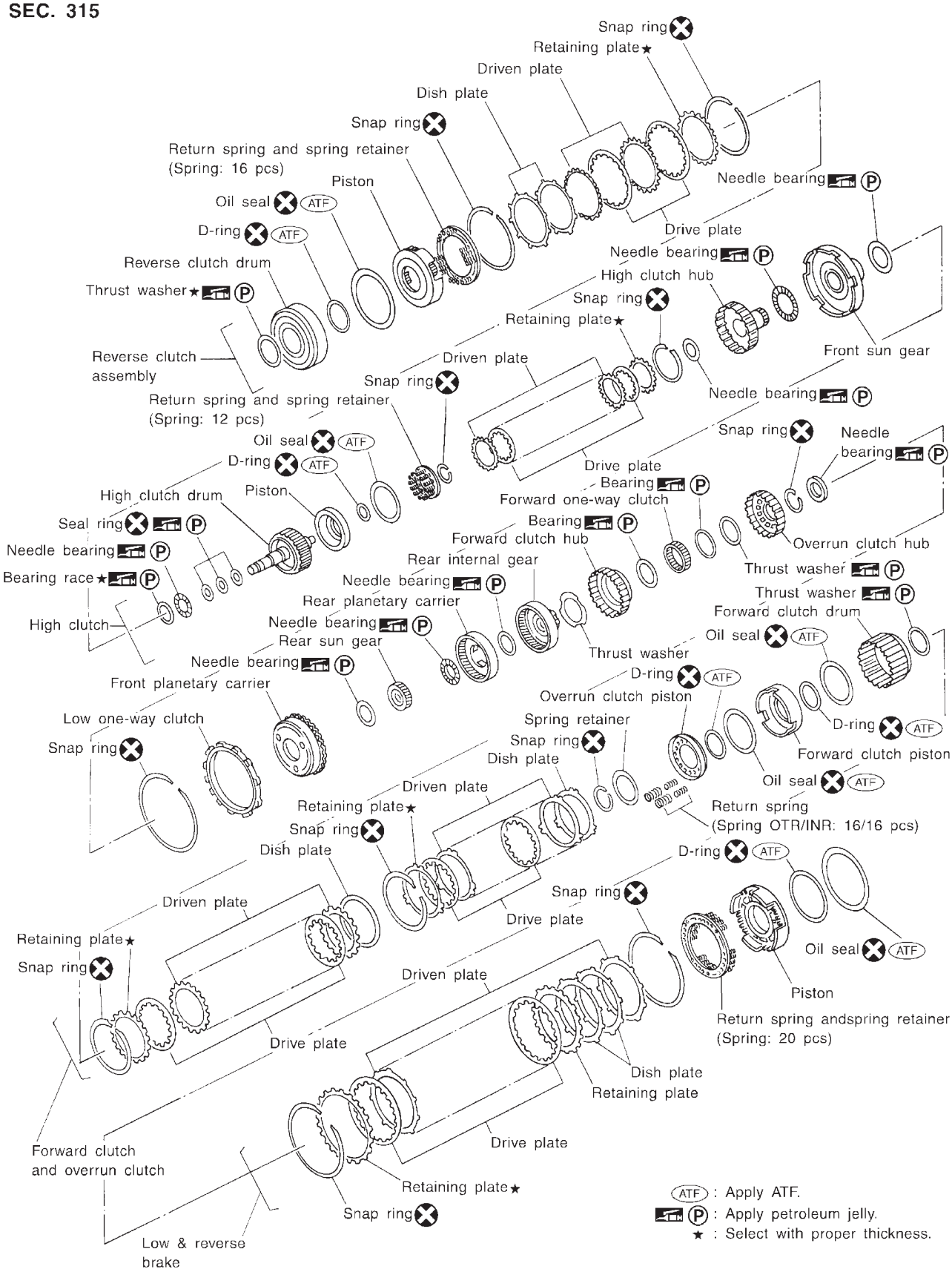

SAT936J

Components-3 3AX00, 3AX01, 3AX19, 3AX63 and 3AX64 models

NJAT0235

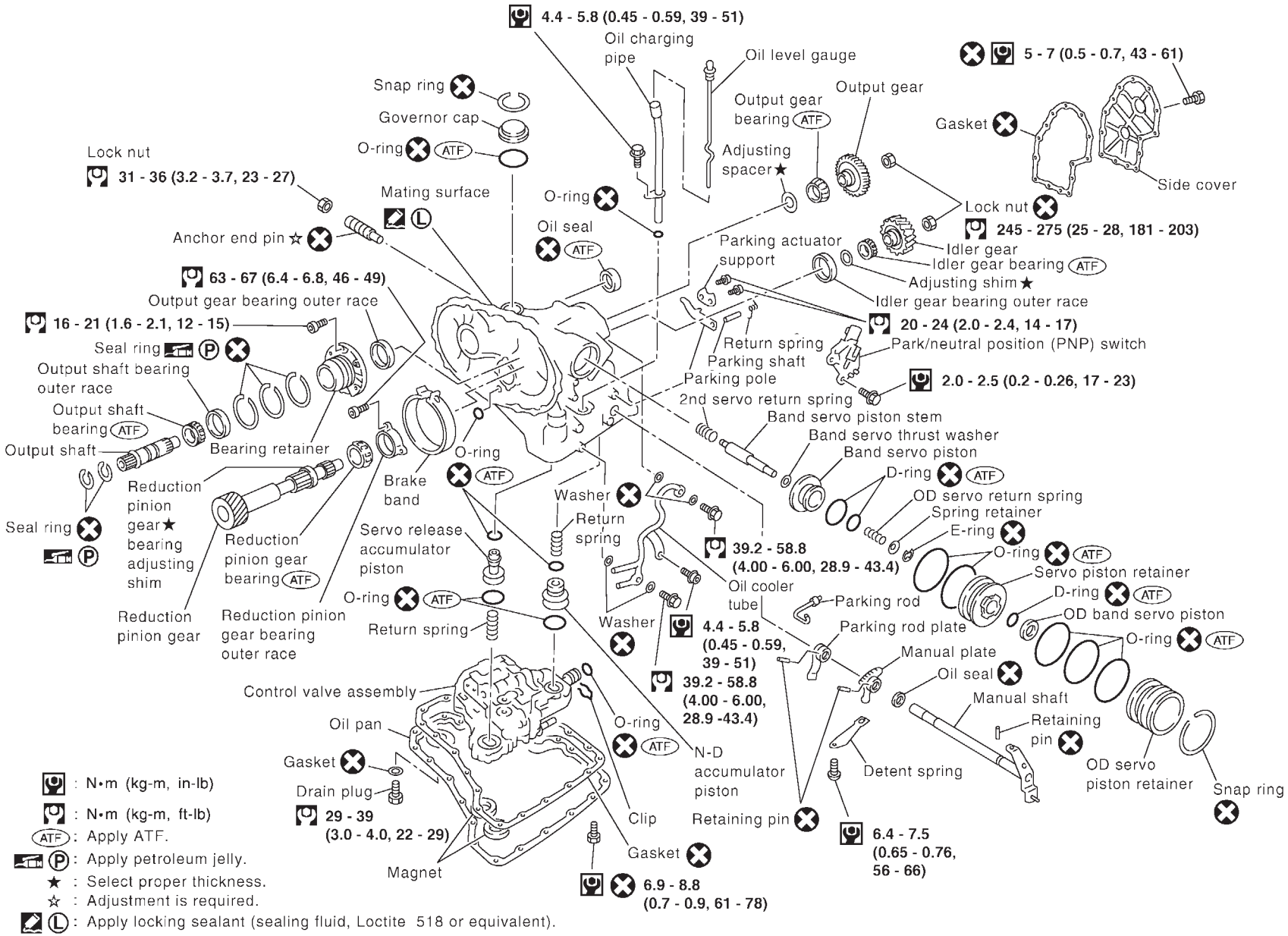

SAT061K

Components-3 3AX10 and 3AX18 models

NJAT0236

SEC. 310•315•317•319

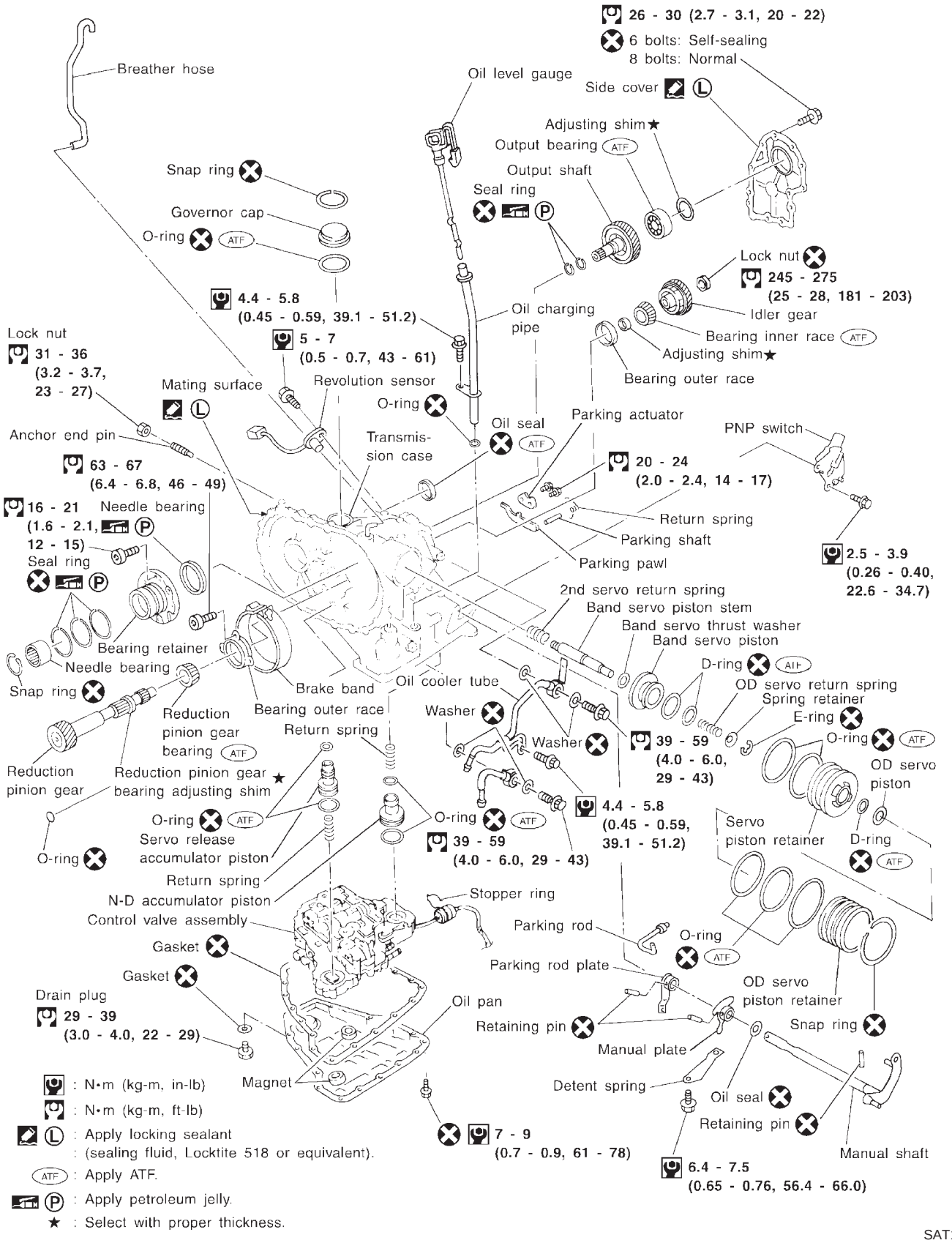

Oil Channel

NJAT0118

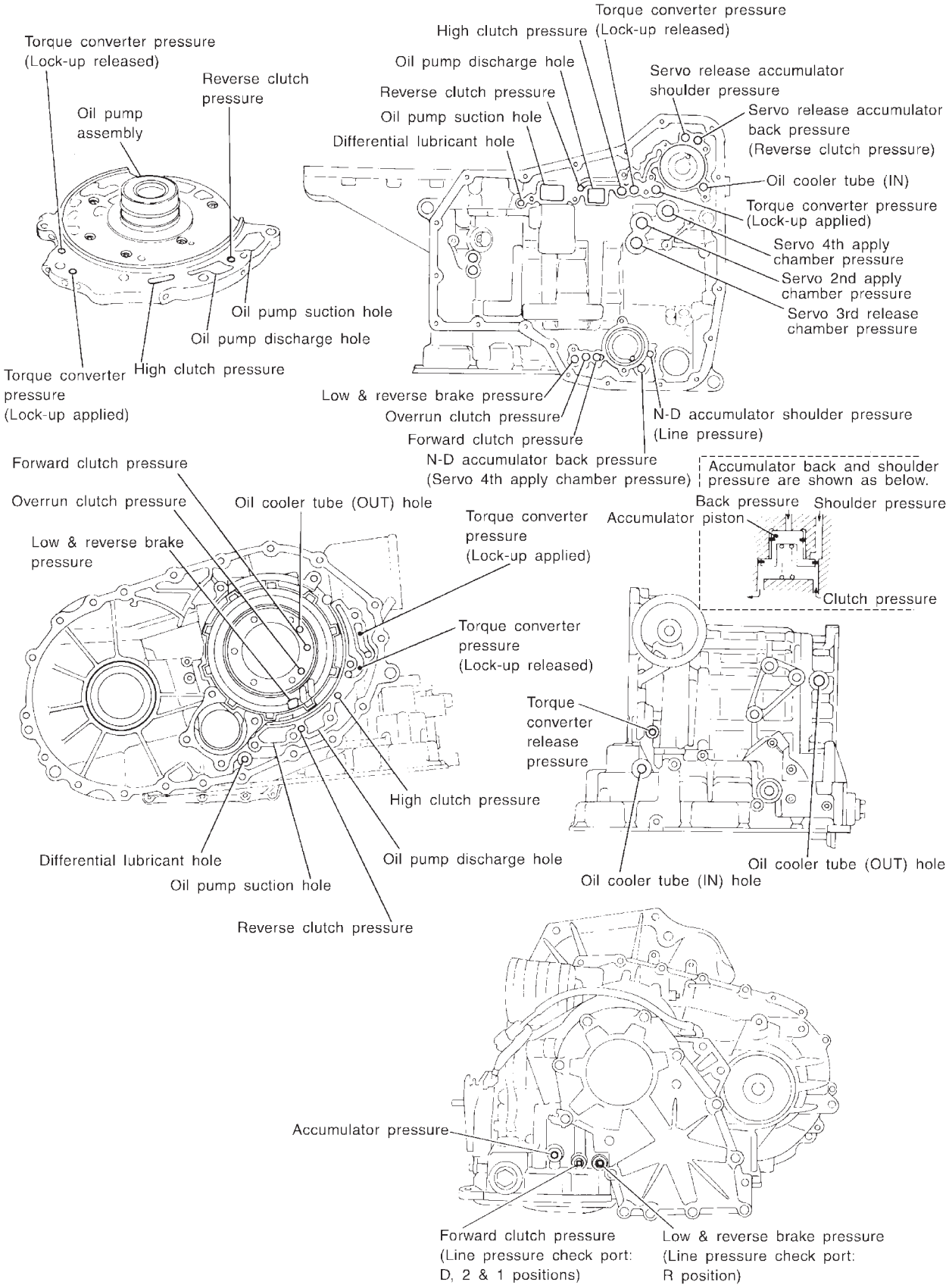

SAT032K

Locations of Adjusting Shims, Needle Bearings, Thrust Washers and Snap Rings — 3AX00, 01, 19, 63 and 64 models

NJAT0117

Outer diameter and color of thrust washers

Item number	Outer diameter mm (in)	Color
⑮	72.0 (2.835)	black
⑯	78.5 (3.091)	

Outer and inner diameter of needle bearings

Item number	Outer diameter mm (in)	Inner diameter mm (in)
⑦	47.0 (1.850)	32.0 (1.260)
⑧	35.0 (1.378)	20.1 (0.791)
⑨	60.0 (2.362)	42.0 (1.654)
⑩	60.0 (2.362)	45.0 (1.772)
⑪	47.0 (1.850)	30.0 (1.181)
⑫	42.6 (1.677)	26.0 (1.024)
⑬	48.0 (1.890)	33.5 (1.319)
⑭	59.0 (2.322)	42.0 (1.654)

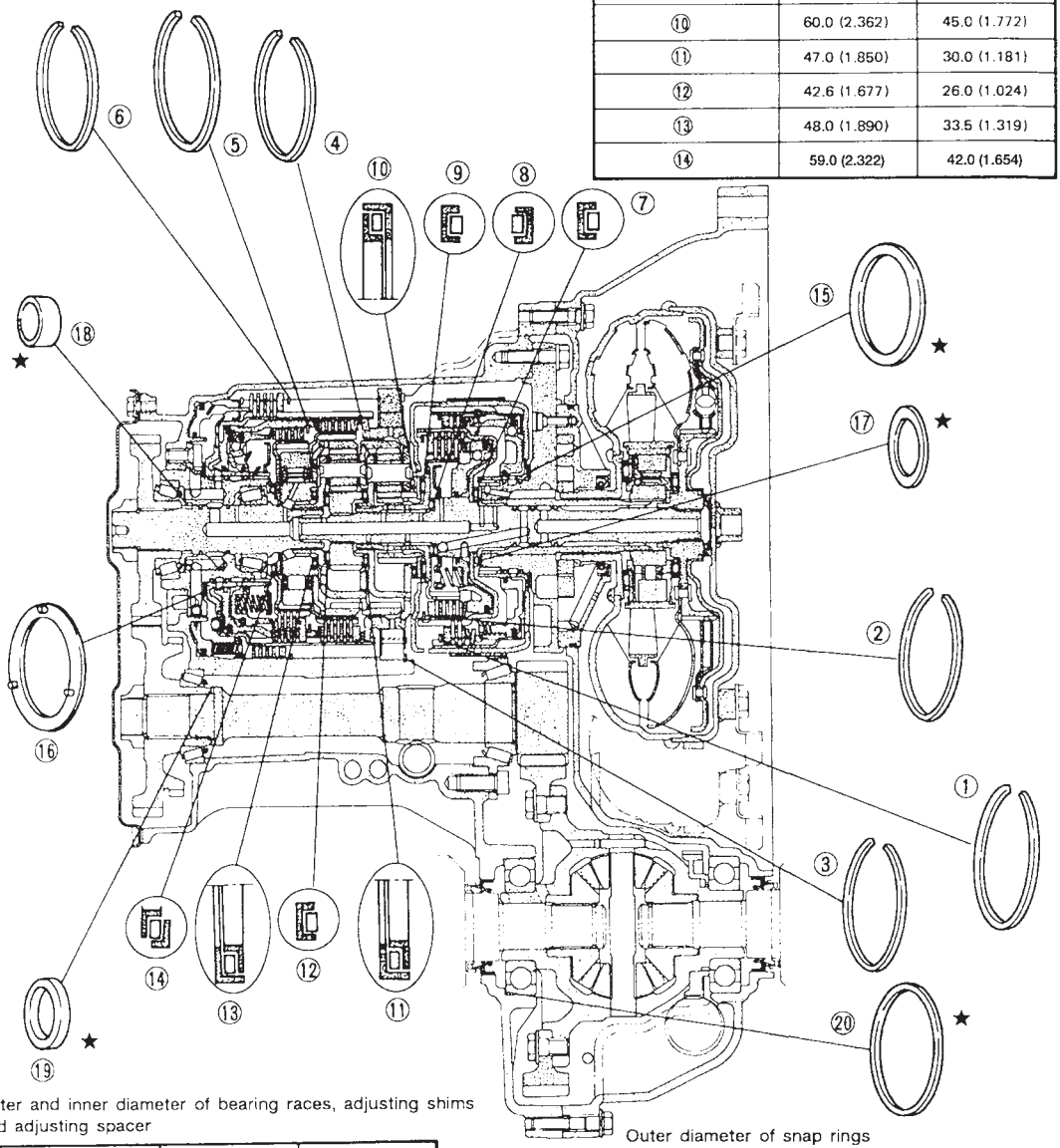

Outer and inner diameter of bearing races, adjusting shims and adjusting spacer

Item number	Outer diameter mm (in)	Inner diameter mm (in)
⑰	48.0 (1.890)	33 (1.30)
⑱	29.0 (1.142)	25.0 (0.984)
⑲	34.5 (1.358)	26.1 (1.028)
⑳	79.5 (3.130)	72.0 (2.835)

★: Select proper thickness

Outer diameter of snap rings

Item number	Outer diameter mm (in)
①	142.0 (5.59)
②	113.0 (4.45)
③	162.4 (6.39)
④	135.4 (5.33)
⑤	126.0 (4.96)
⑥	162.3 (6.39)

AAT416A

Locations of Adjusting Shims, Needle Bearings, Thrust Washers and Snap Rings — 3AX10 and 3AX18 models

NJAT0237

Outer diameter and color of thrust washers

Item number	Outer diameter mm (in)	Color
⑰	72.0 (2.835)	Black
⑱	78.5 (3.091)	

Outer and inner diameter of needle bearings

Item number	Outer diameter mm (in)	Inner diameter mm (in)
⑧	47.0 (1.850)	32.0 (1.260)
⑨	35.0 (1.378)	20.1 (0.791)
⑩	60.0 (2.362)	42.1 (1.657)
⑪	60.0 (2.362)	45.0 (1.772)
⑫	47.0 (1.850)	30.0 (1.181)
⑬	42.6 (1.677)	26.0 (1.024)
⑭	48.0 (1.890)	33.5 (1.319)
⑮	55.0 (2.165)	40.5 (1.594)
⑯	60.0 (2.362)	40.1 (1.579)

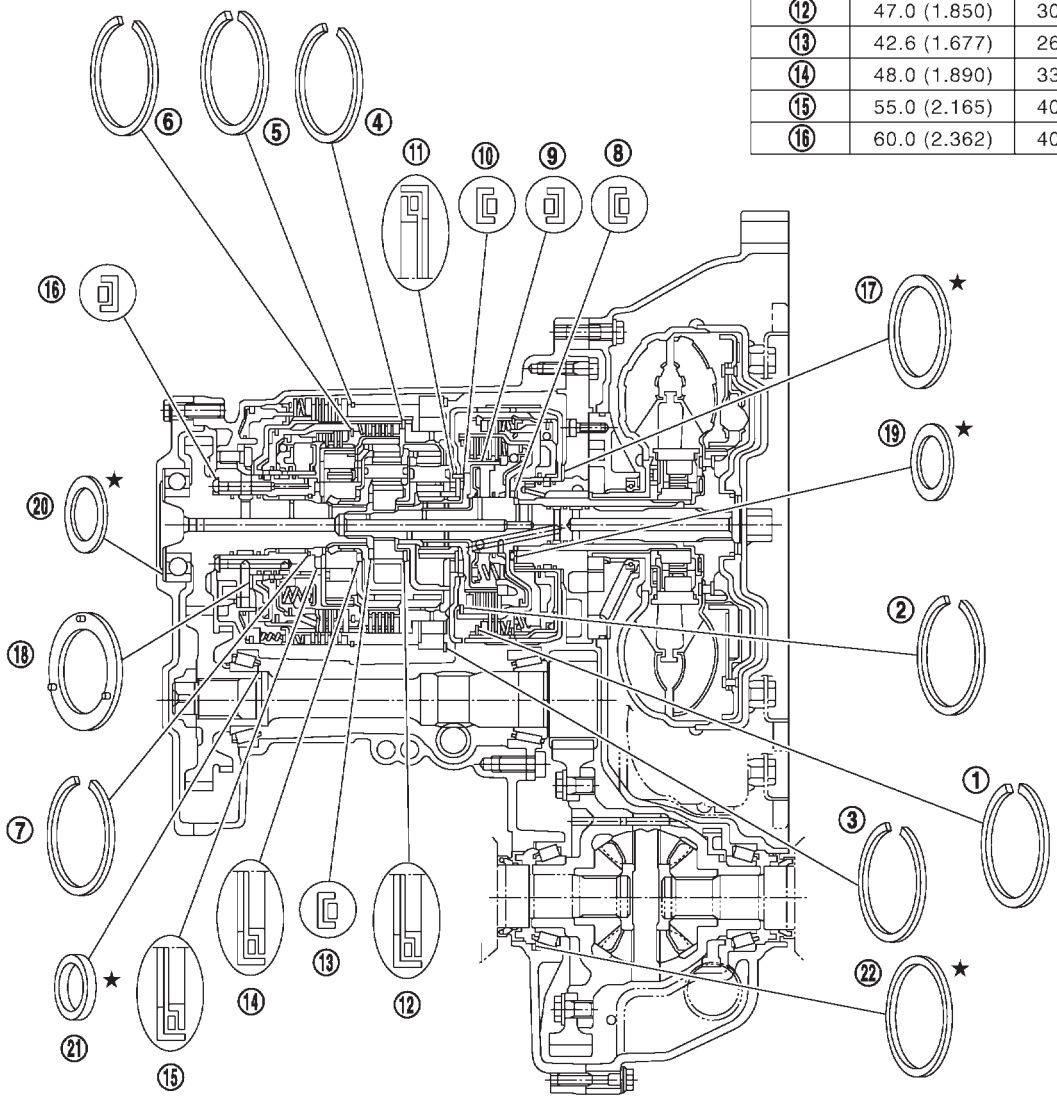

★ : Select proper thickness.

Outer and inner diameter of bearing race and adjusting shims

Item number	Outer diameter mm (in)	Inner diameter mm (in)
⑲	48.0 (1.890)	33.0 (1.299)
⑳	72.0 (2.835)	61.0 (2.402)
㉑	34.5 (1.358)	26.1 (1.028)
㉒	68.0 (2.677)	60.0 (2.362)

Outer diameter of snap rings

Item number	Outer diameter mm (in)
①	142.0 (5.59)
②	113.0 (4.45)
③	162.4 (6.39)
④	135.4 (5.33)
⑤	162.3 (6.39)
⑥	126.0 (4.96)
⑦	40.5 (1.594)

SAT067K

DISASSEMBLY

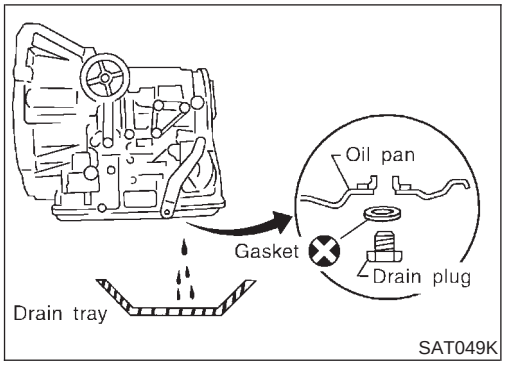

1. Drain ATF through drain plug.

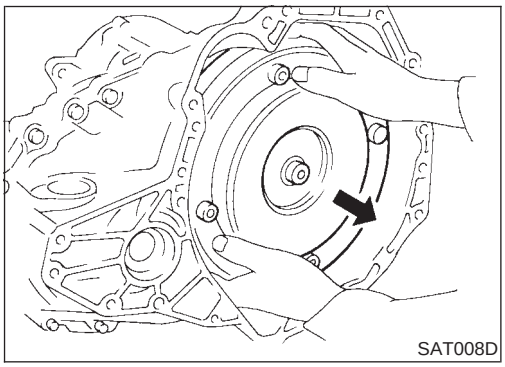

2. Remove torque converter.

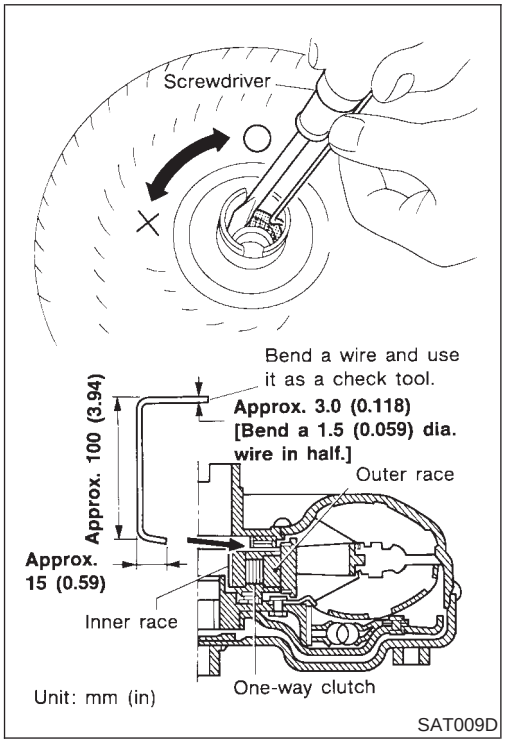

3. Check torque converter one-way clutch using check tool as shown at left.
   a. Insert check tool into the groove of bearing support built into one-way clutch outer race.
   b. While fixing bearing support with check tool, rotate one-way clutch spline using flat-bladed screwdriver.
   c. Check inner race rotates clockwise only. If not, replace torque converter assembly.

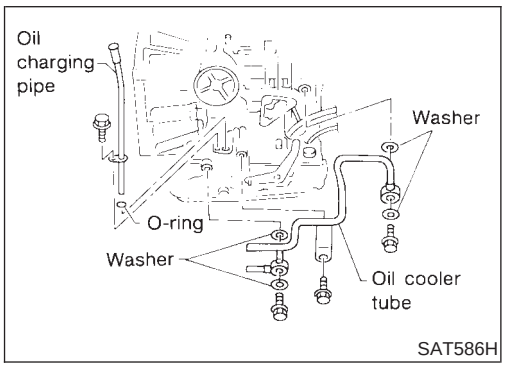

4. Remove oil charging pipe and oil cooler tube.

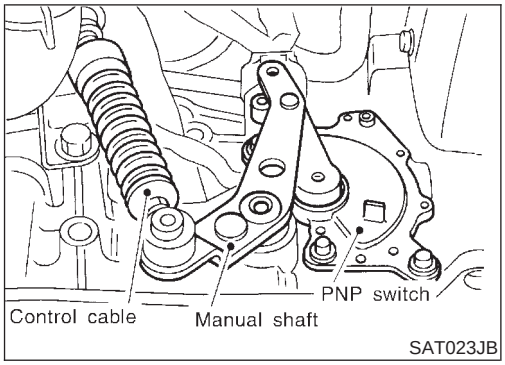

5. Set manual shaft to “P” position.
6. Remove PNP switch.

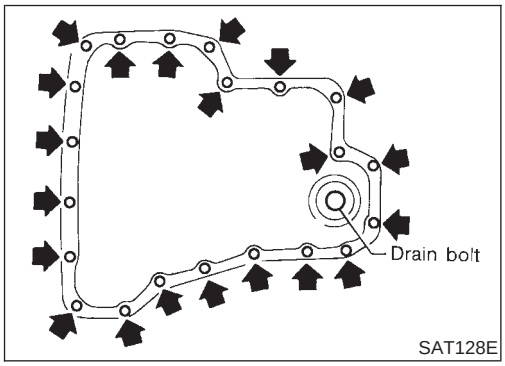

7. Remove oil pan and oil pan gasket.

- **Do not reuse oil pan bolts.**

8. Check foreign materials in oil pan to help determine cause of malfunction. If the fluid is very dark, smells burned, or contains foreign particles, the frictional material (clutches, band) may need replacement. A tacky film that will not wipe clean indicates varnish build up. Varnish can cause valves, servo, and clutches to stick and may inhibit pump pressure.

- **If frictional material is detected, replace radiator after repair of A/T. Refer to LC-16, section “Radiator”.**

9. Remove control valve assembly according to the following procedures.

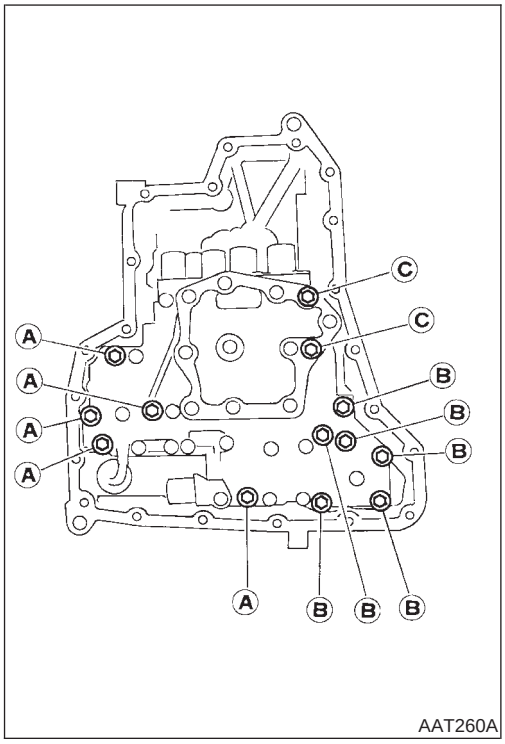

a. Remove control valve assembly mounting bolts A, B and C.

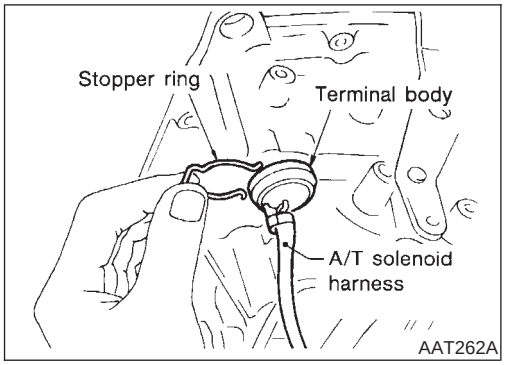

b. Remove stopper ring from terminal body.
c. Push terminal body into transmission case and draw out solenoid harness.

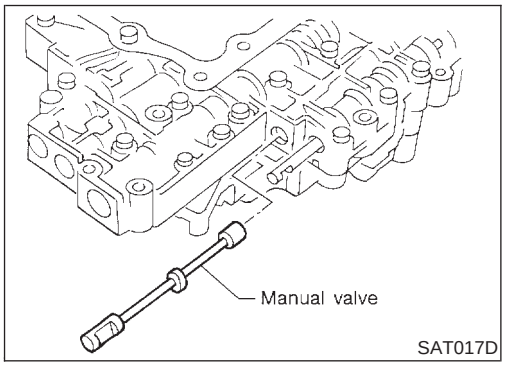

10. Remove manual valve from control valve assembly as a precaution.

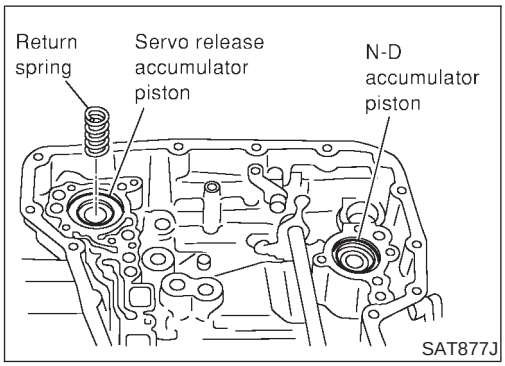

11. Remove return spring from servo release accumulator piston.

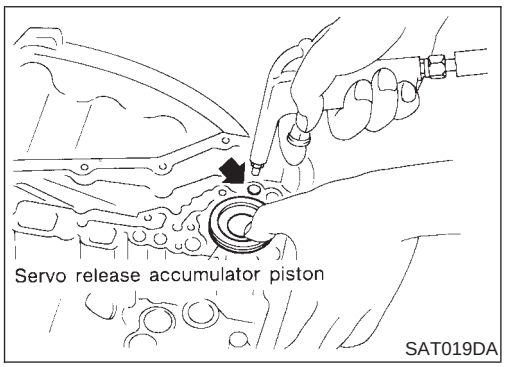

12. Remove servo release accumulator piston with compressed air.
13. Remove O-rings from servo release accumulator piston.

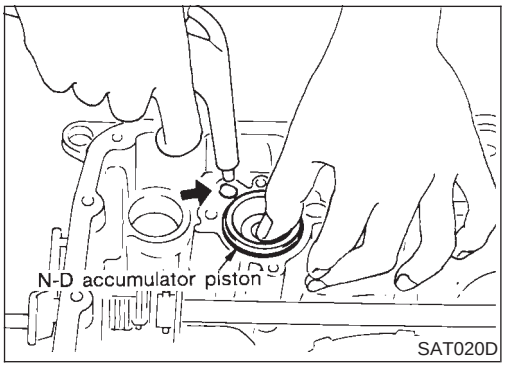

14. Remove N-D accumulator piston and return spring with compressed air.
15. Remove O-rings from N-D accumulator piston.

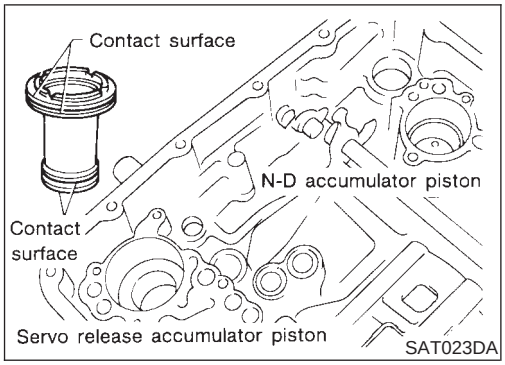

16. Check accumulator pistons and contact surface of transmission case for damage.
17. Check accumulator return springs for damage and free length.

Return springs:

Refer to SDS, AT-484.

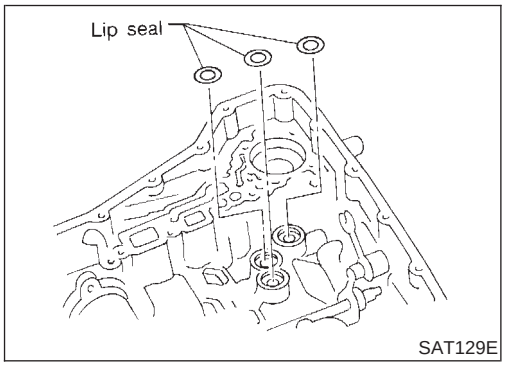

18. Remove lip seals from band servo oil port.

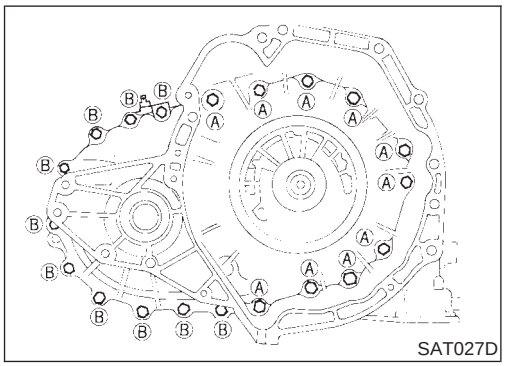

19. Remove converter housing according to the following procedures.

a. Remove converter housing mounting bolts A and B.

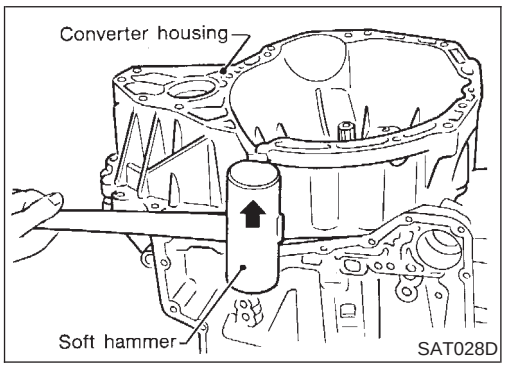

b. Remove converter housing.

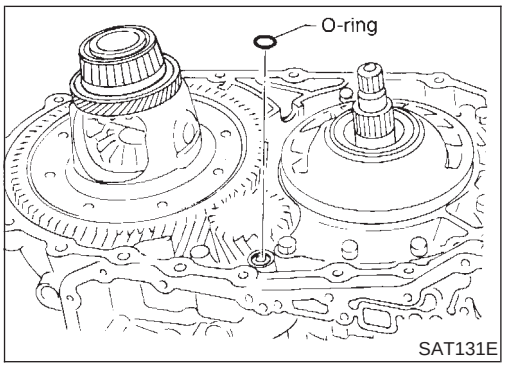

c. Remove O-ring from differential oil port.

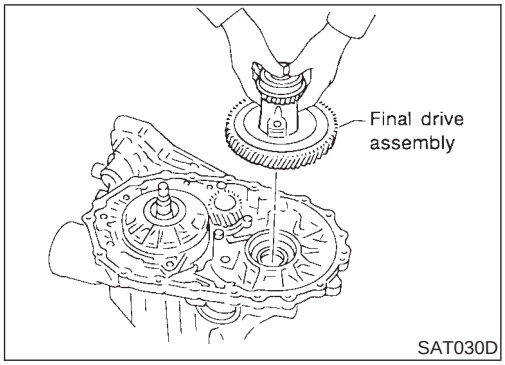

20. Remove final drive assembly from transmission case.

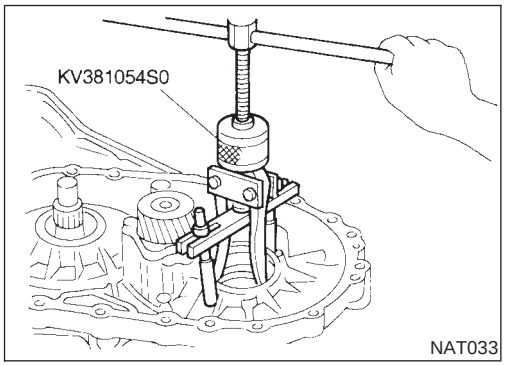

21. Remove differential side bearing outer race from transmission case.

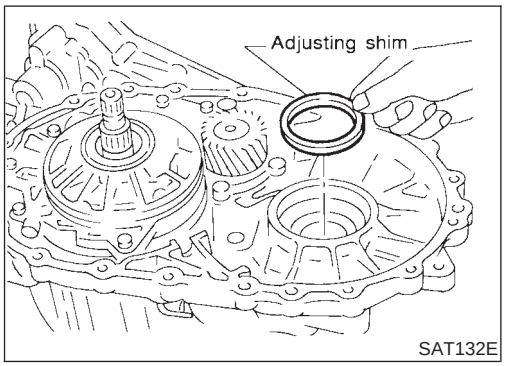

22. Remove differential side bearing adjusting shim from transmission case.

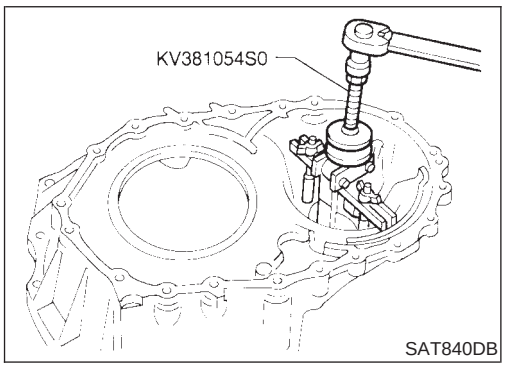

23. Remove differential side bearing outer race from converter housing.

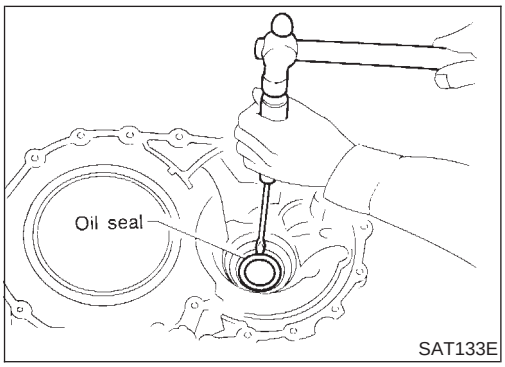

24. Remove oil seal from converter housing using a screwdriver.
- **Be careful not to damage case.**

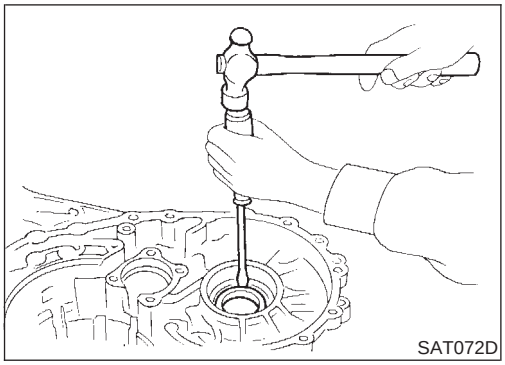

25. Remove side oil seal from transmission case using a screwdriver.

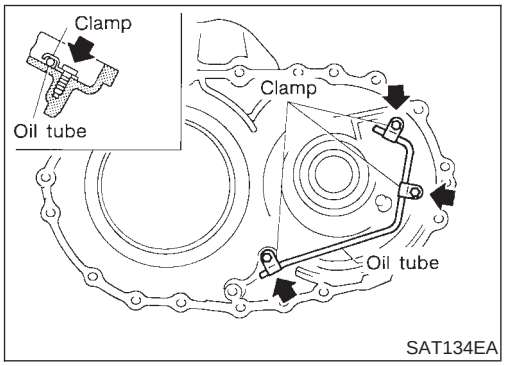

26. Remove oil tube from converter housing.

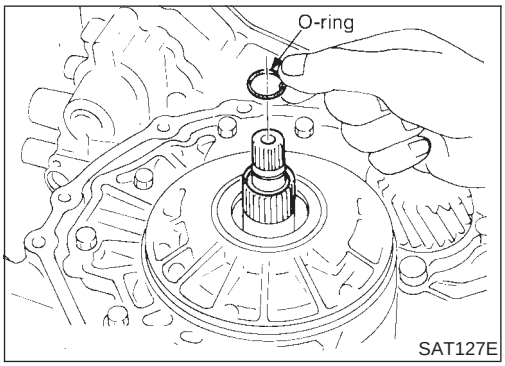

27. Remove oil pump according to the following procedures.

a. Remove O-ring from input shaft.

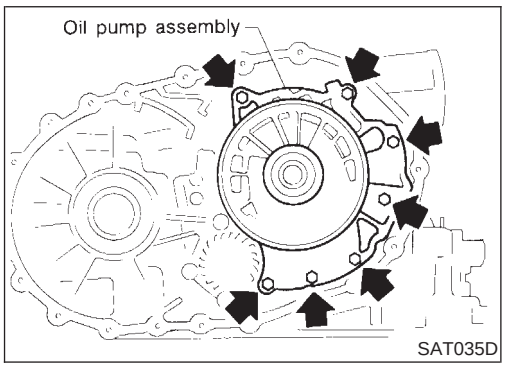

b. Remove oil pump assembly from transmission case.

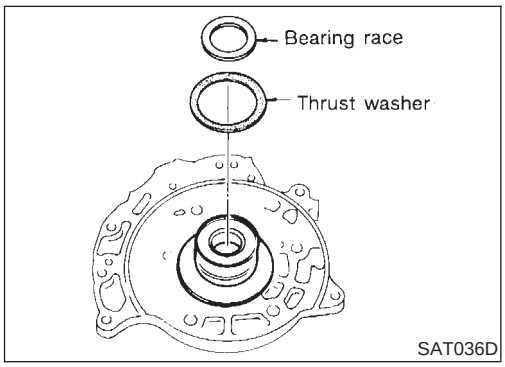

c. Remove thrust washer and bearing race from oil pump assembly.

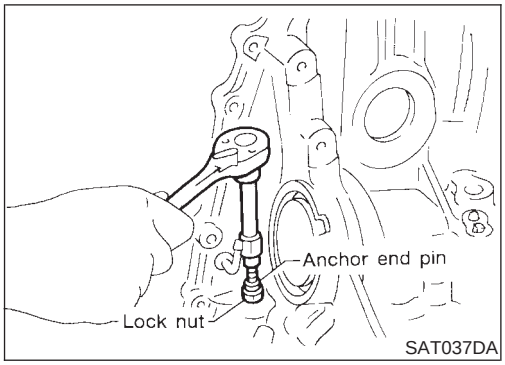

28. Remove brake band according to the following procedures.
a. Loosen lock nut, then back off anchor end pin.
- **Do not reuse anchor end pin.**

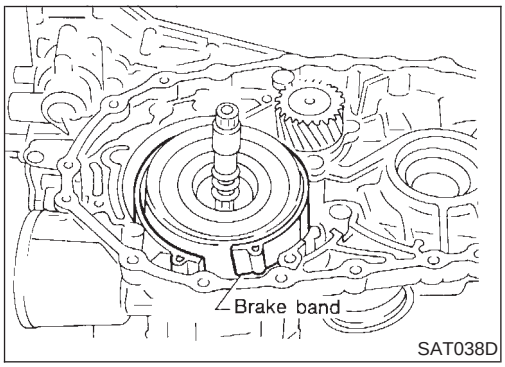

b. Remove brake band from transmission case.

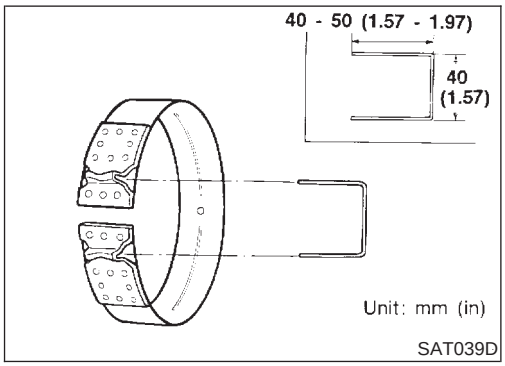

- **To prevent brake linings from cracking or peeling, do not stretch the flexible band unnecessarily. When removing the brake band, always secure it with a clip as shown in the figure at left.**
  Leave the clip in position after removing the brake band.

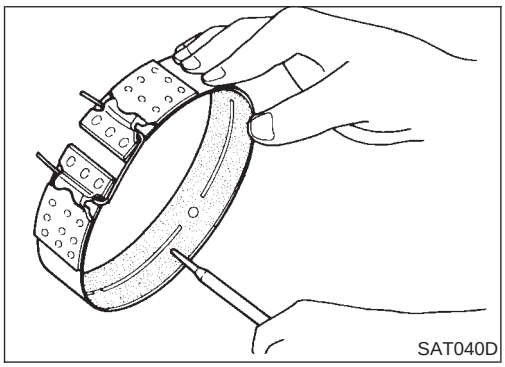

c. Check brake band facing for damage, cracks, wear or burns.

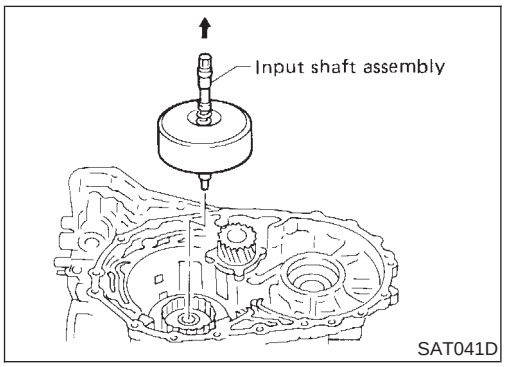

29. Remove input shaft assembly (high clutch) and reverse clutch according to the following procedures.
a. Remove input shaft assembly (high clutch) with reverse clutch.

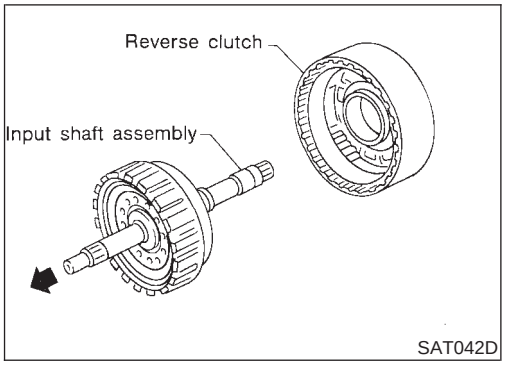

b. Remove input shaft assembly (high clutch) from reverse clutch.

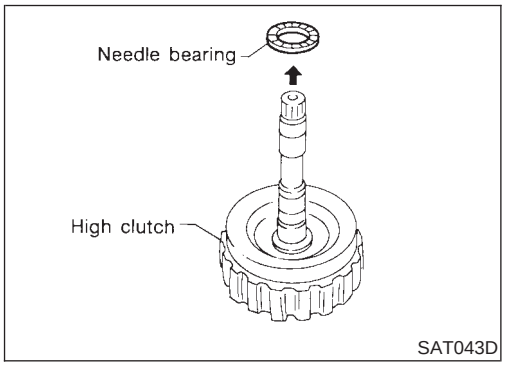

c. Remove needle bearing from high clutch drum.
d. Check input shaft assembly and needle bearing for damage or wear.

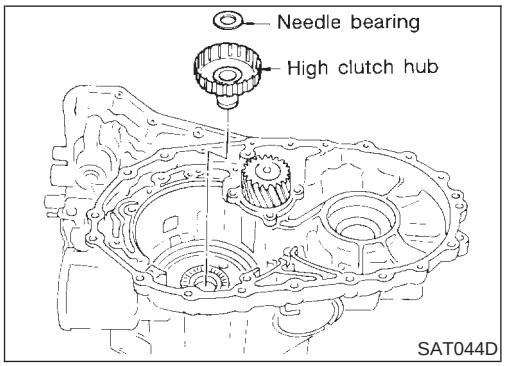

30. Remove high clutch hub and needle bearing from transmission case.
31. Check high clutch hub and needle bearing for damage or wear.

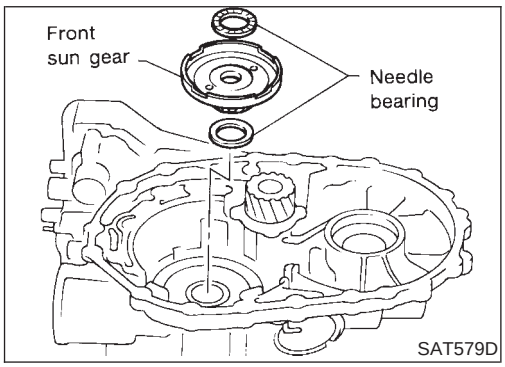

32. Remove front sun gear and needle bearings from transmission case.
33. Check front sun gear and needle bearings for damage or wear.

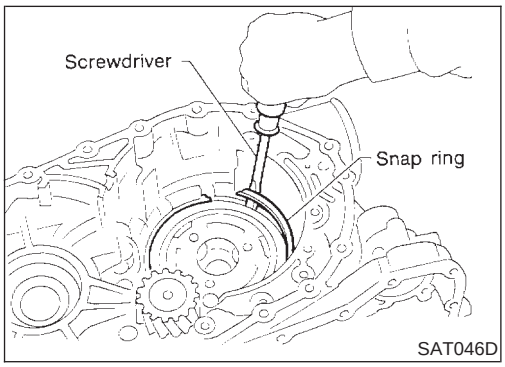

34. Remove front planetary carrier assembly and low one-way clutch according to the following procedures.
a. Remove snap ring using a screwdriver.

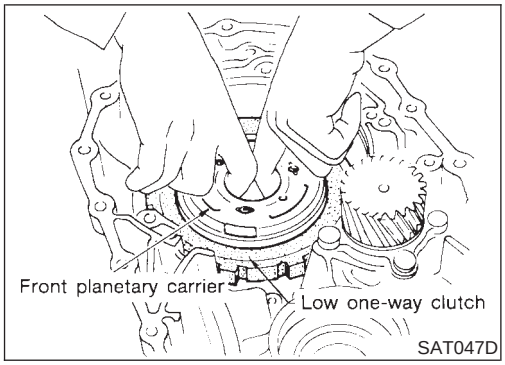

b. Remove front planetary carrier with low one-way clutch.

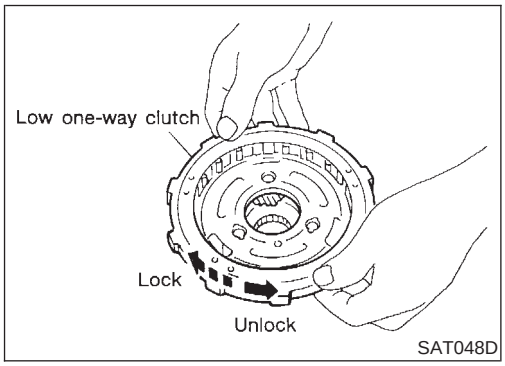

c. Check that low one-way clutch rotates in the direction of the arrow and locks in the opposite direction.

d. Remove low one-way clutch from front planetary carrier by rotating it in the direction of unlock.

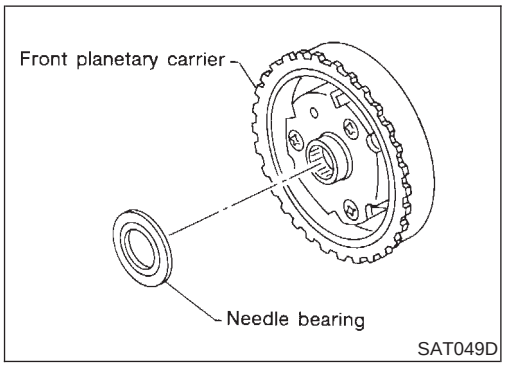

e. Remove needle bearing from front planetary carrier.

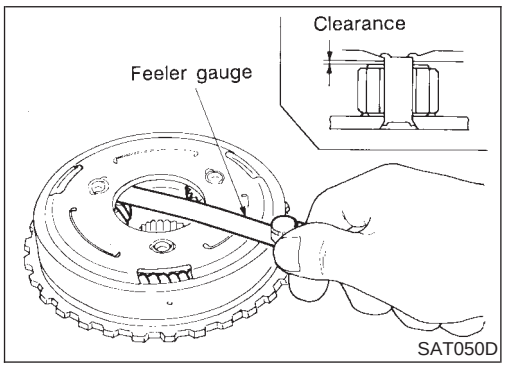

f. Check front planetary carrier, low one-way clutch and needle bearing for damage or wear.

g. Check clearance between pinion washer and planetary carrier using feeler gauge.

Standard clearance:

0.15 - 0.70 mm (0.0059 - 0.0276 in)

Allowable limit:

0.80 mm (0.0315 in)

Replace front planetary carrier if the clearance exceeds allowable limit.

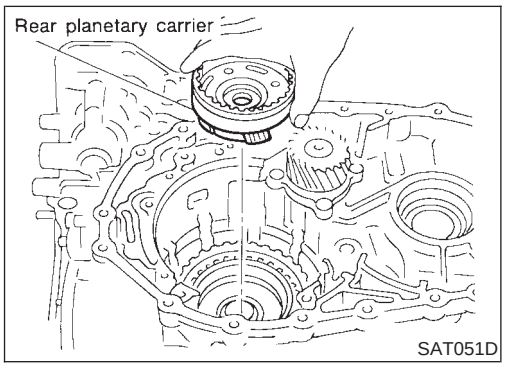

35. Remove rear planetary carrier assembly and rear sun gear according to the following procedures.

a. Remove rear planetary carrier assembly from transmission case.

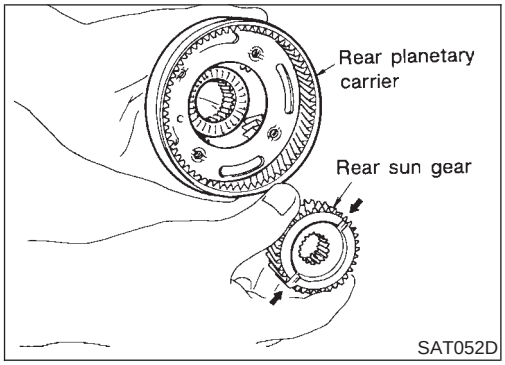

b. Remove rear sun gear from rear planetary carrier.

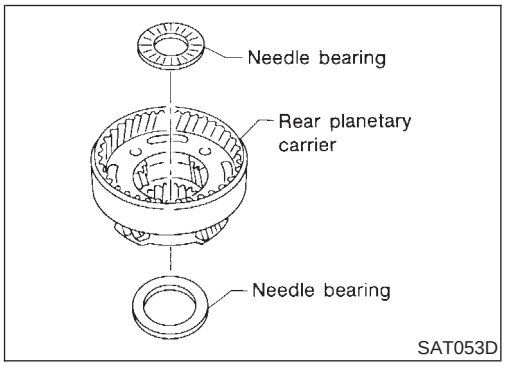

c. Remove needle bearings from rear planetary carrier assembly.

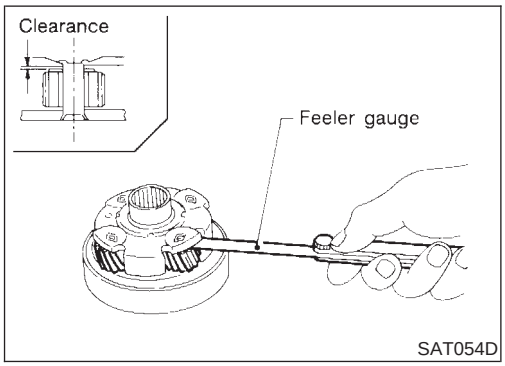

d. Check rear planetary carrier, rear sun gear and needle bearings for damage or wear.

e. Check clearance between pinion washer and rear planetary carrier using feeler gauge.

Standard clearance:

0.15 - 0.70 mm (0.0059 - 0.0276 in)

Allowable limit:

0.80 mm (0.0315 in)

Replace rear planetary carrier if the clearance exceeds allowable limit.

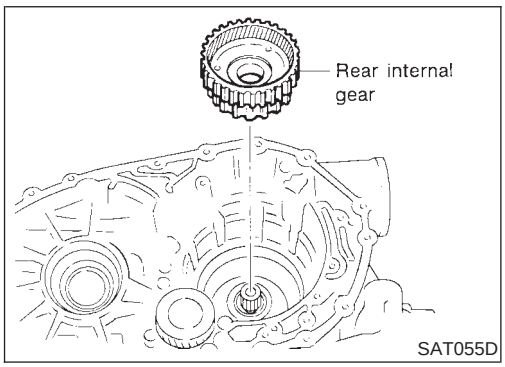

36. Remove rear internal gear from transmission case.

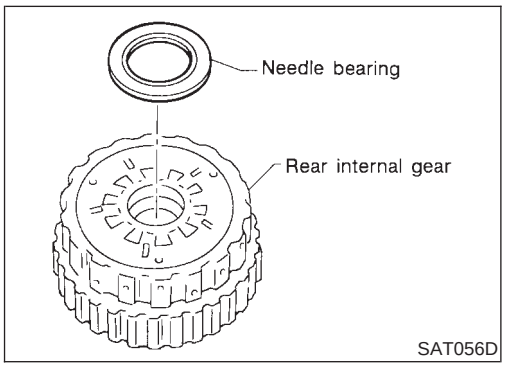

37. Remove needle bearing from rear internal gear.

- Check needle bearing for damage or wear.

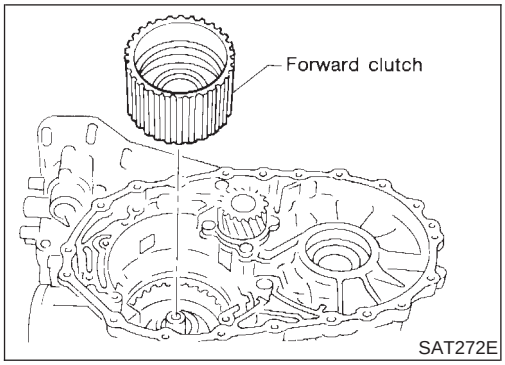

38. Remove forward clutch assembly from transmission case.

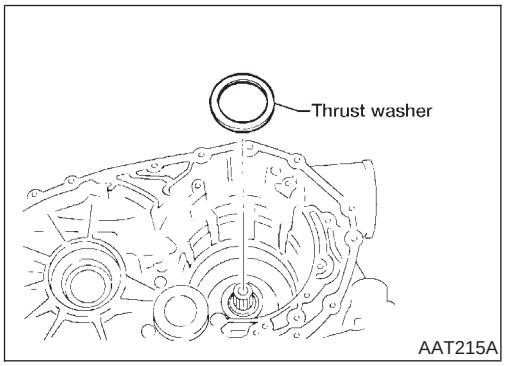

39. Remove thrust washer from transmission case.

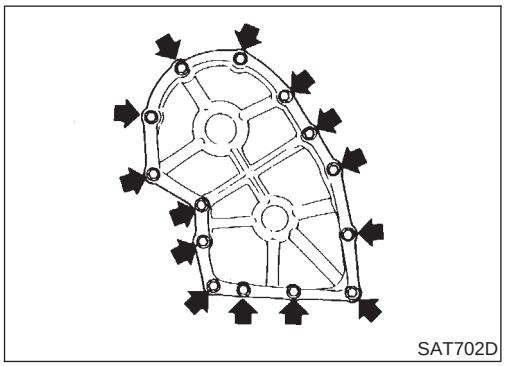

3AX00, 3AX01, 3AX19, 3AX63 and 3AX64 models

40. Remove side cover.

- **Do not reuse side cover bolts.**

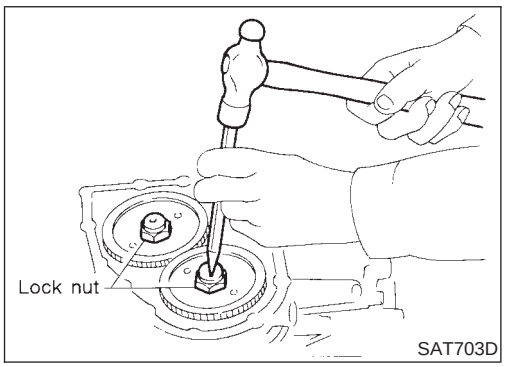

41. Remove output shaft, output gear and reduction gear according to the following procedures.

a. Set manual lever to “P” position to fix idler gear and output gear.

b. Unlock both idler gear and output gear lock nuts using a pin punch.

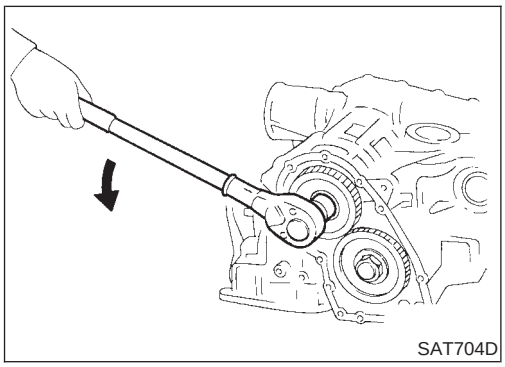

c. Remove idler gear and output gear lock nuts.

- **Do not reuse idler gear and output gear lock nuts.**

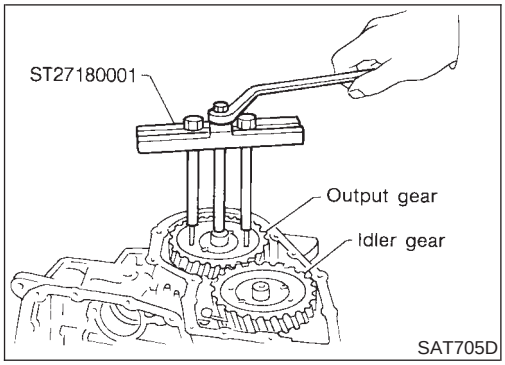

d. Remove idler gear and output gear using a puller.

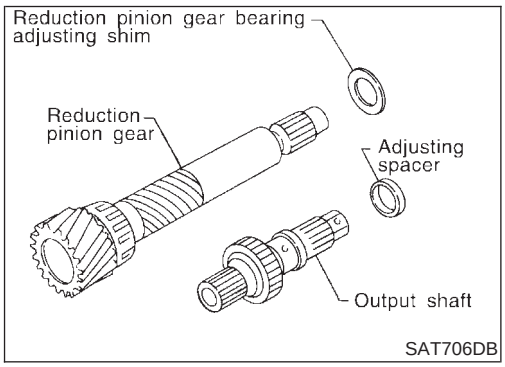

e. Remove reduction pinion gear and output shaft from transmission case.

f. Remove reduction pinion bearing adjusting shim from reduction pinion gear.

g. Remove adjusting spacer from output shaft.

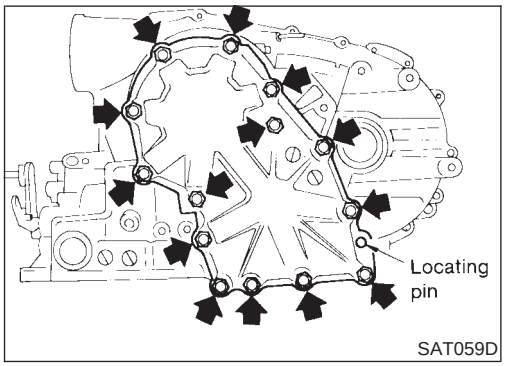

3AX10 and 3AX18 models

42. Remove output shaft assembly according to the following procedures.

a. Remove side cover bolts.

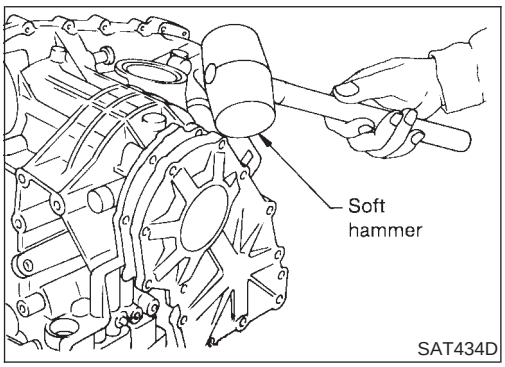

b. Remove side cover by lightly tapping it with a soft hammer.

- **Be careful not to drop output shaft assembly. It might come out when removing side cover.**

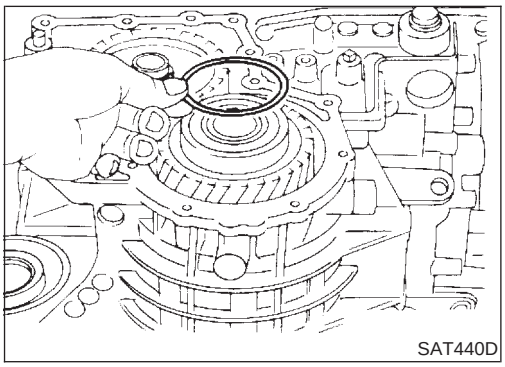

c. Remove adjusting shim.

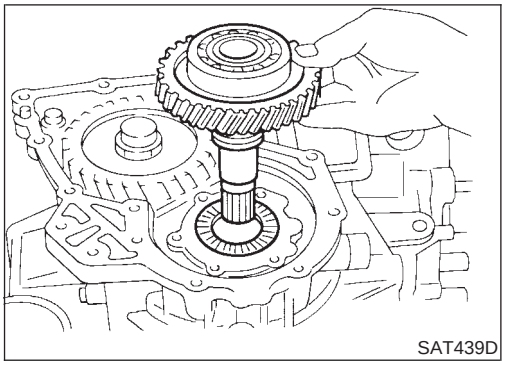
SAT439D

d. Remove output shaft assembly.

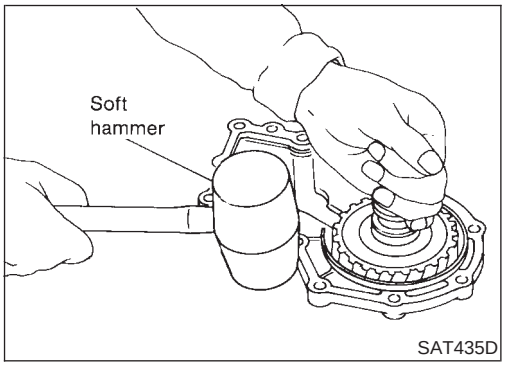

SAT435D

- If output shaft assembly came off with side cover, tap cover with a soft hammer to separate.

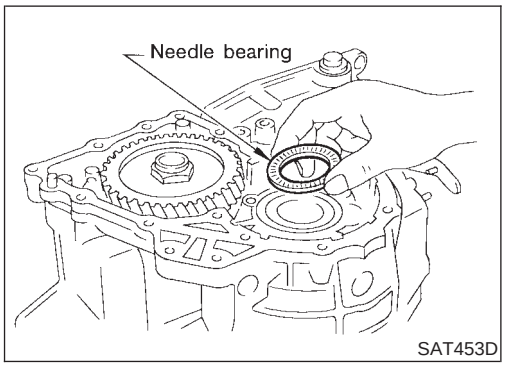

SAT453D

e. Remove needle bearing.

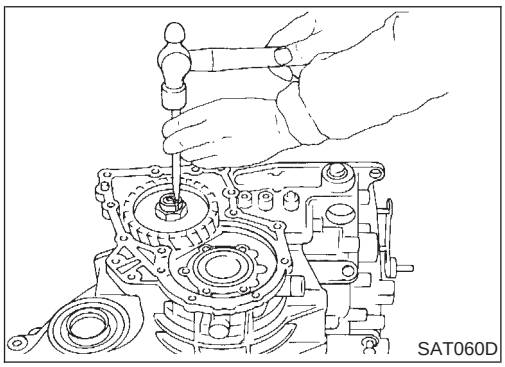
SAT060D

43. Disassemble reduction pinion gear according to the following procedures.
a. Set manual shaft to position “P” to fix idler gear.
b. Unlock idler gear lock nut using a pin punch.

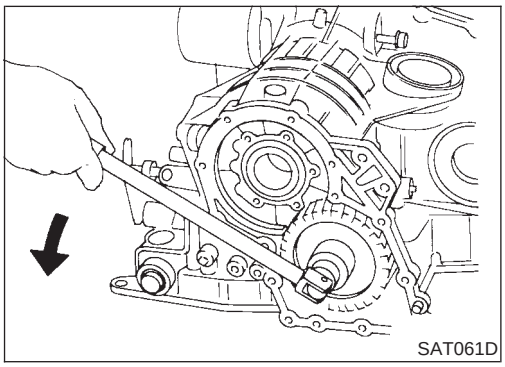
SAT061D

c. Remove idler gear lock nut.
- **Do not reuse idler gear lock nut.**

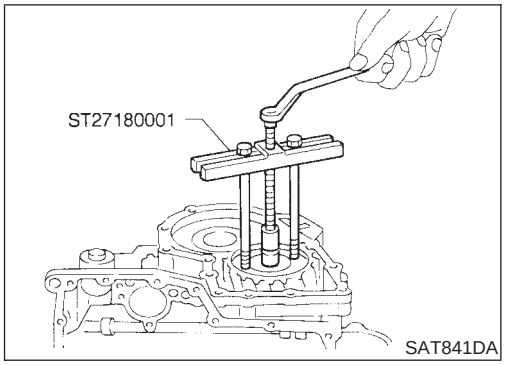

d. Remove idler gear with puller.

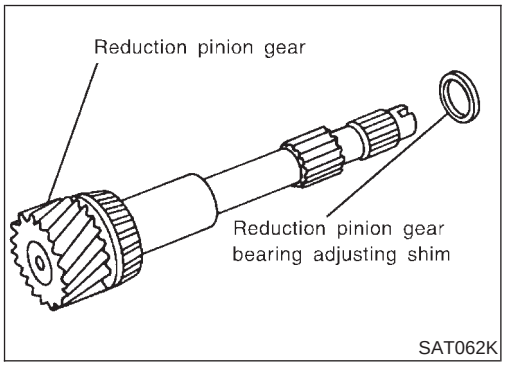

e. Remove reduction pinion gear.
f. Remove reduction pinion gear bearing adjusting shim from reduction pinion gear.

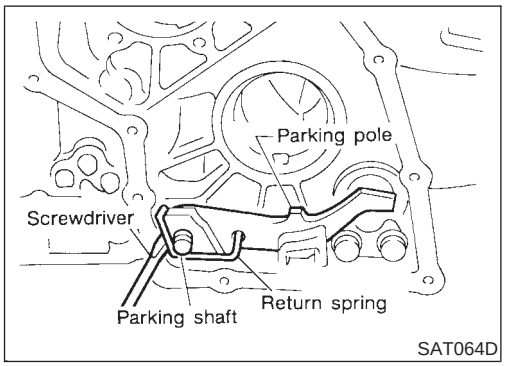

44. Remove return spring from parking shaft using a screwdriver.

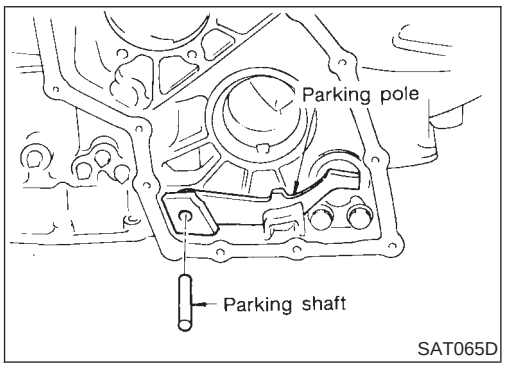

45. Draw out parking shaft and remove parking pole from transmission case.
46. Check parking pole and shaft for damage or wear.

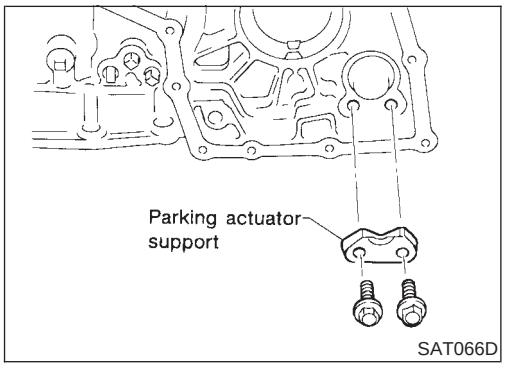

47. Remove parking actuator support from transmission case.
- Check parking actuator support for damage or wear.

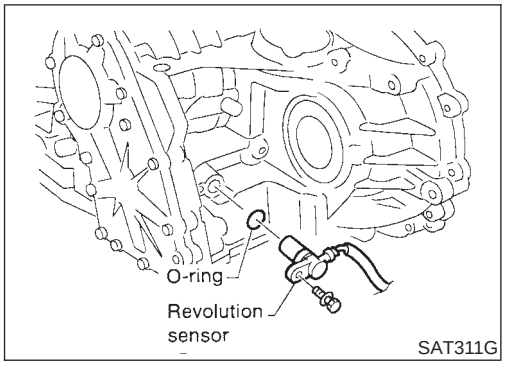

48. Remove revolution sensor from transmission case.

Manual Shaft

COMPONENTS

NJAT0121

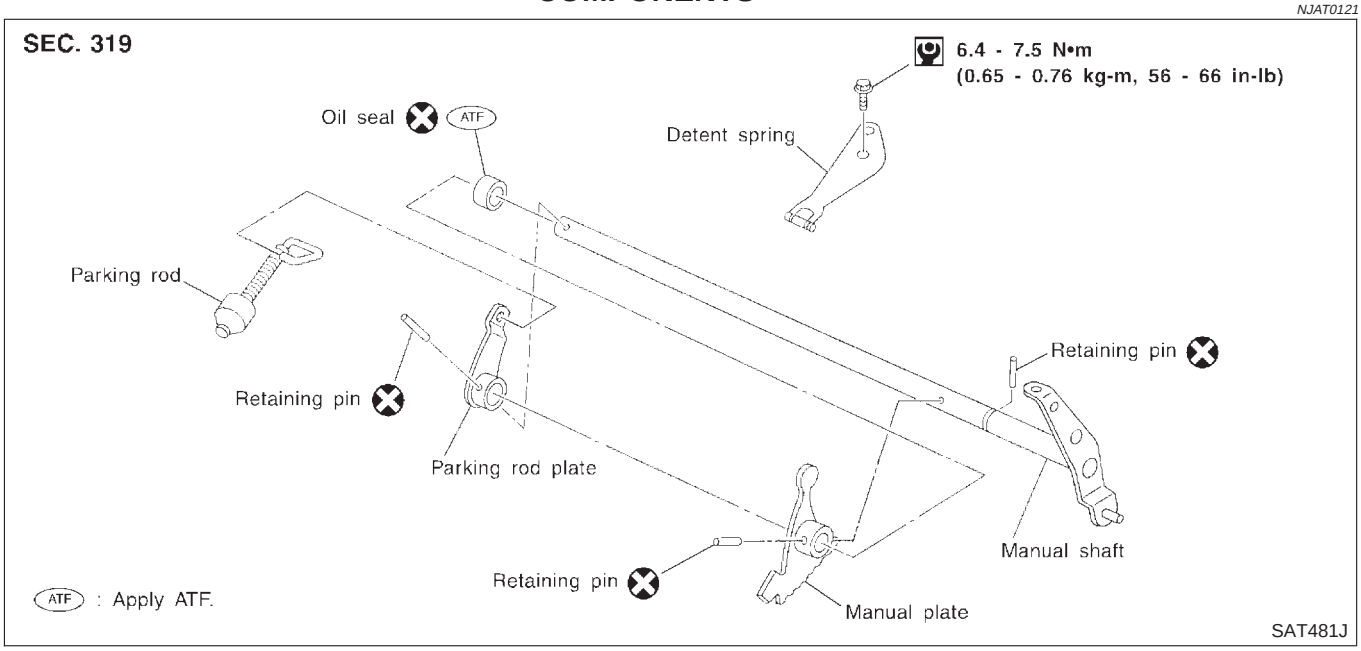

REMOVAL

NJAT0122

1. Remove detent spring from transmission case.

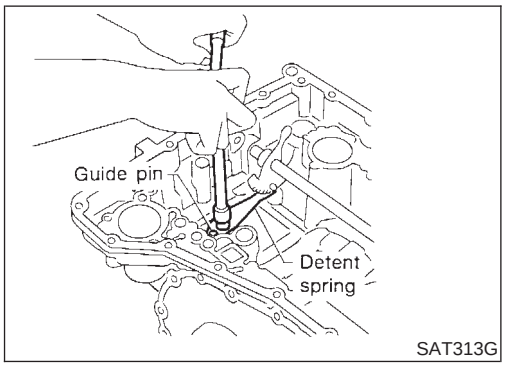

2. Drive out manual plate retaining pin.

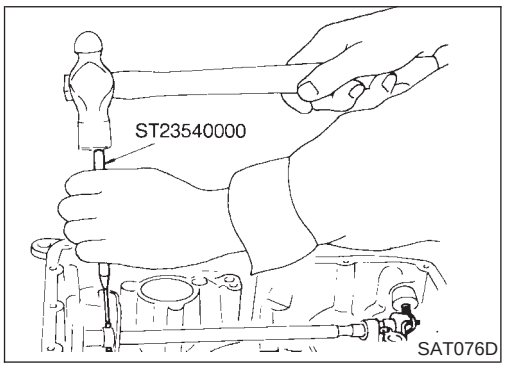

3. Drive and pull out parking rod plate retaining pin.
4. Remove parking rod plate from manual shaft.
5. Draw out parking rod from transmission case.

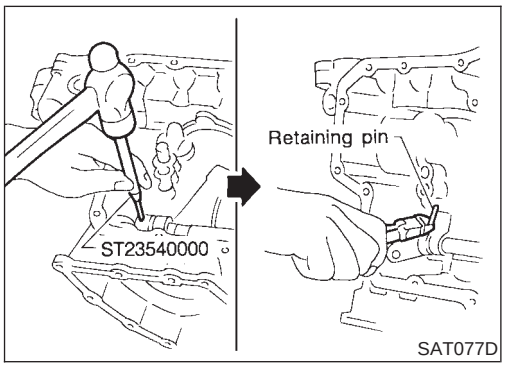

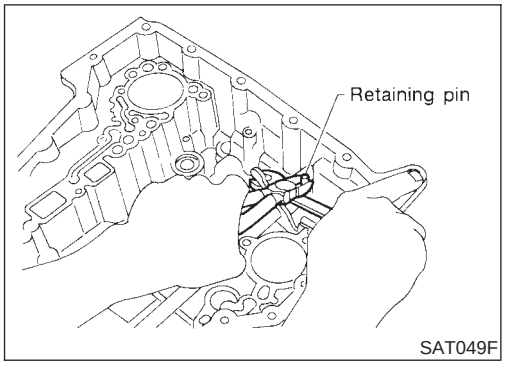

SAT049F

6. Pull out manual shaft retaining pin.
7. Remove manual shaft and manual plate from transmission case.

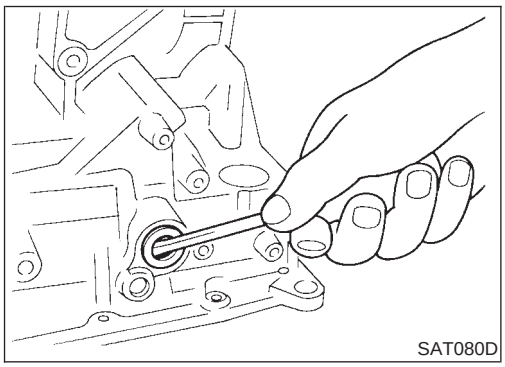
SAT080D

8. Remove manual shaft oil seal.

INSPECTION

NJAT0123

- Check component parts for wear or damage. Replace if necessary.

INSTALLATION

NJAT0124

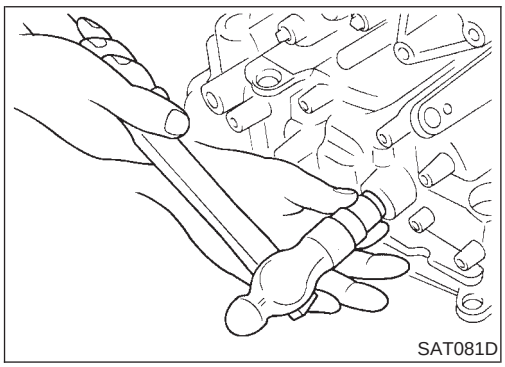
SAT081D

1. Install manual shaft oil seal.
- **Apply ATF to outer surface of oil seal.**

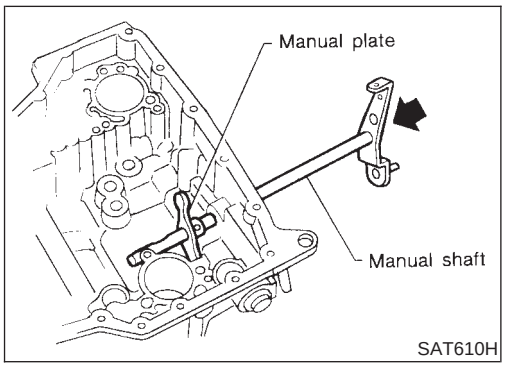

SAT610H

2. Install manual shaft and manual plate.

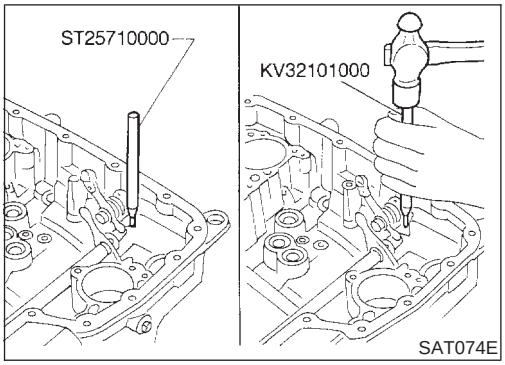

3. Align groove of manual shaft and hole of transmission case.
4. Install manual shaft retaining pin.

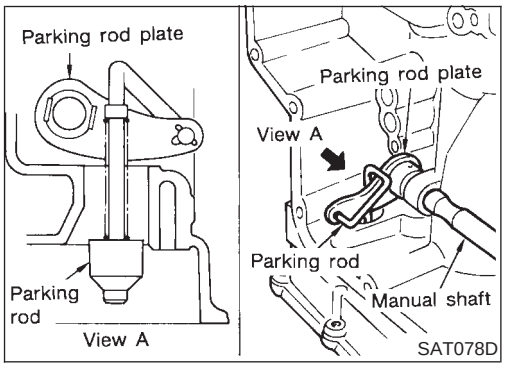

5. Install parking rod to parking rod plate.
6. Set parking rod assembly onto manual shaft.

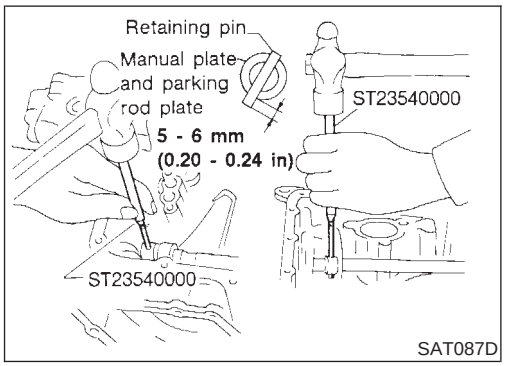

7. Drive in manual plate retaining pin and parking rod plate retaining pin.

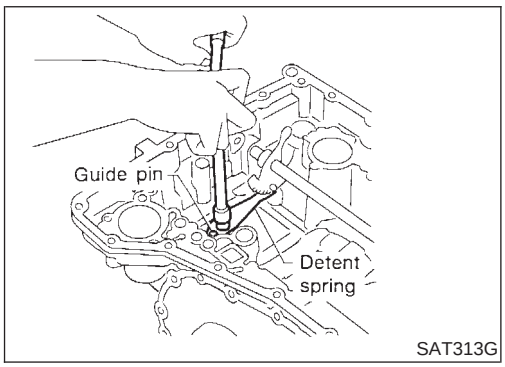

8. Install detent spring.

Oil Pump

COMPONENTS

NJAT0125

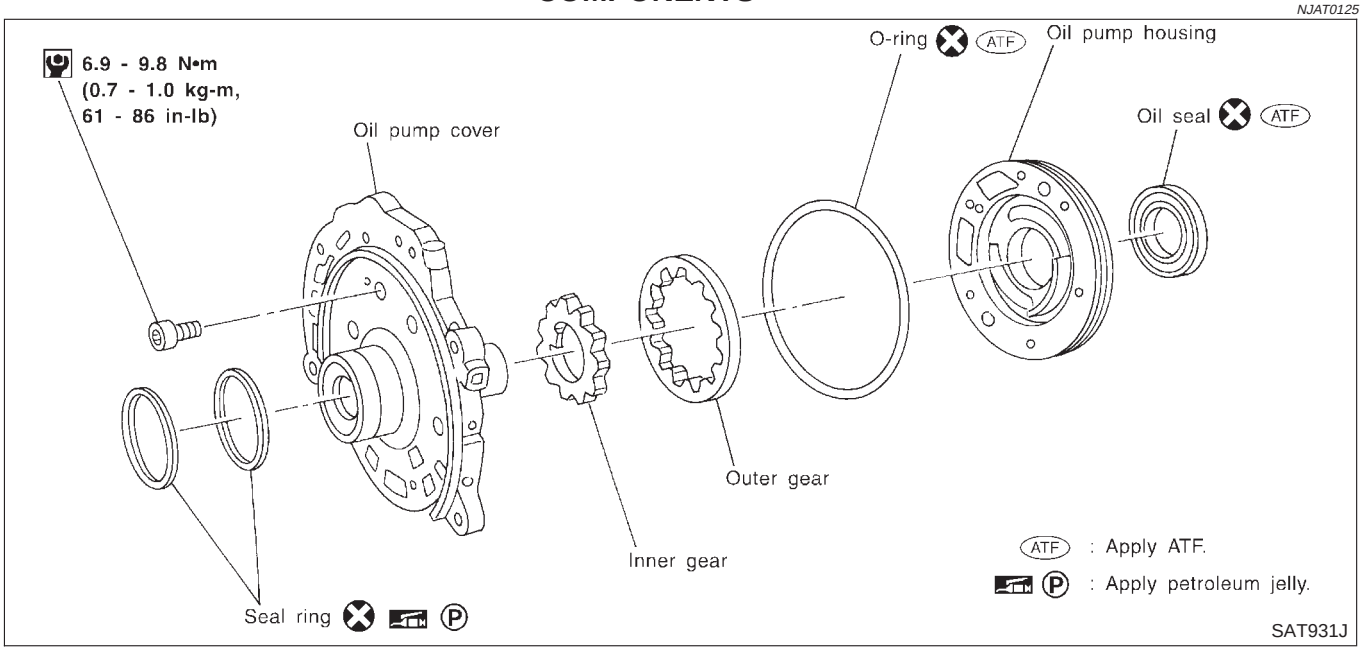

DISASSEMBLY

NJAT0126

1. Remove seal rings.

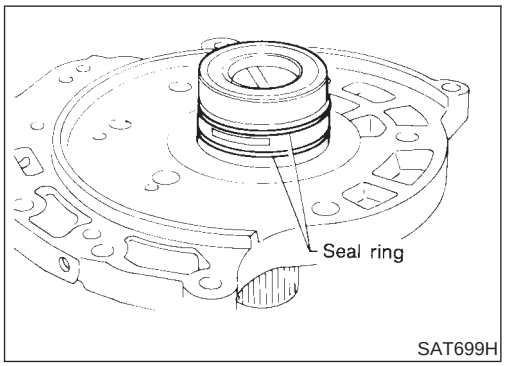

2. Loosen bolts in numerical order and remove oil pump cover.

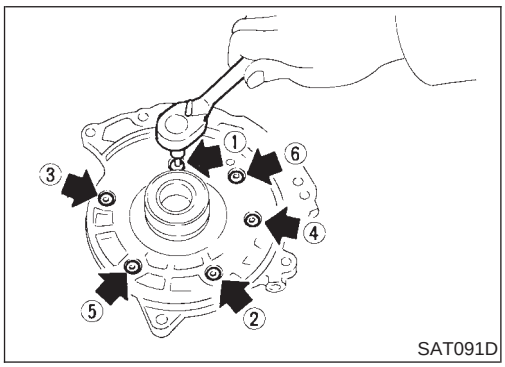

3. Remove inner and outer gear from oil pump housing.

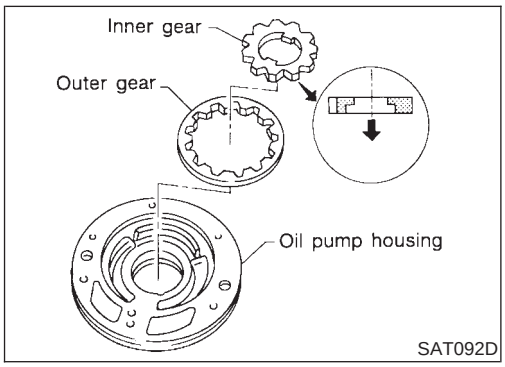

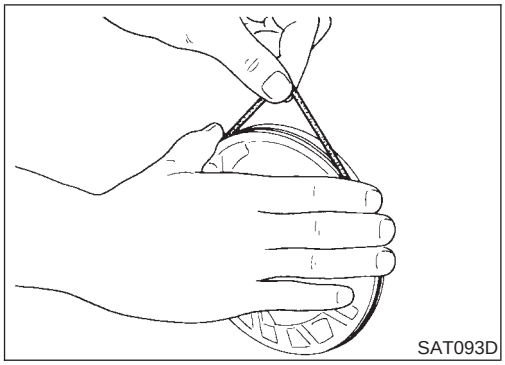
SAT093D

4. Remove O-ring from oil pump housing.

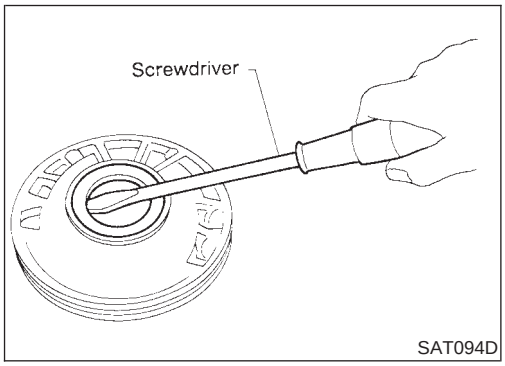

SAT094D

5. Remove oil pump housing oil seal.

INSPECTION

NJAT0127

Oil Pump Housing, Oil Pump Cover, Inner Gear and Outer Gear

NJAT0127S01

- Check for wear or damage.

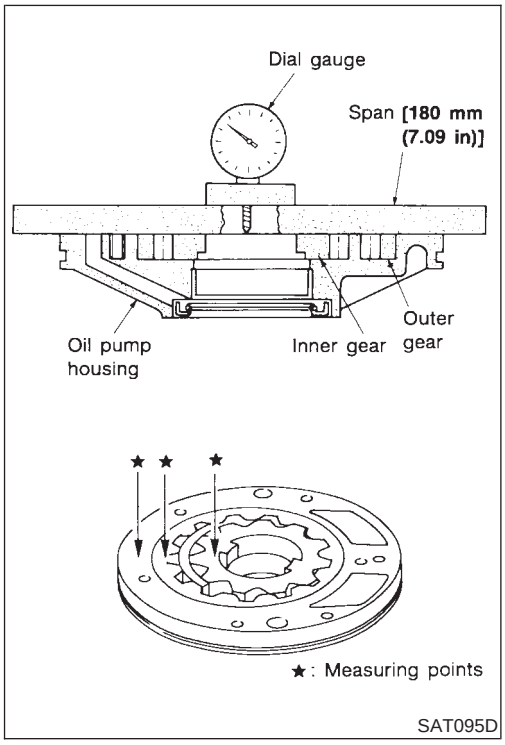

SAT095D

Side Clearances

NJAT0127S02

- Measure side clearance of inner and outer gears in at least four places around each outside edge. Maximum measured values should be within specified range.

  Standard clearance:

  0.02 - 0.04 mm (0.0008 - 0.0016 in)

- If clearance is less than standard, select inner and outer gear as a set so that clearance is within specifications.

  Inner and outer gear:

  Refer to SDS, AT-477.

- If clearance is more than standard, replace whole oil pump assembly except oil pump cover.

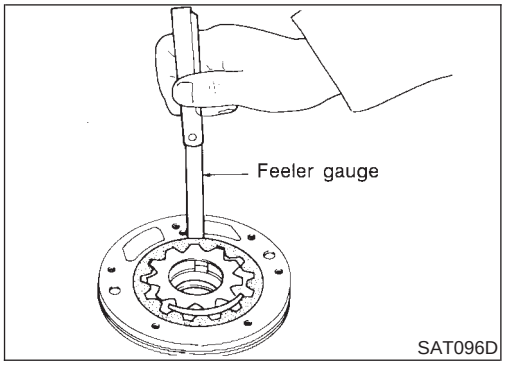

- Measure clearance between outer gear and oil pump housing.
  Standard clearance:
  0.08 - 0.15 mm (0.0031 - 0.0059 in)
  Allowable limit:
  0.15 mm (0.0059 in)
- If not within allowable limit, replace whole oil pump assembly except oil pump cover.

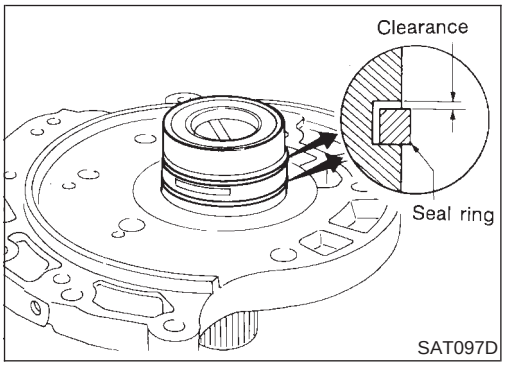

Side Ring Clearance

NJAT0127S03

- Install new seal rings onto oil pump cover.
- Measure clearance between seal ring and ring groove.
  Standard clearance:
  0.1 - 0.25 mm (0.0039 - 0.0098 in)
  Allowable limit:
  0.25 mm (0.0098 in)
- If not within allowable limit, replace oil pump cover assembly.

ASSEMBLY

NJAT0128

1. Install oil seal on oil pump housing.

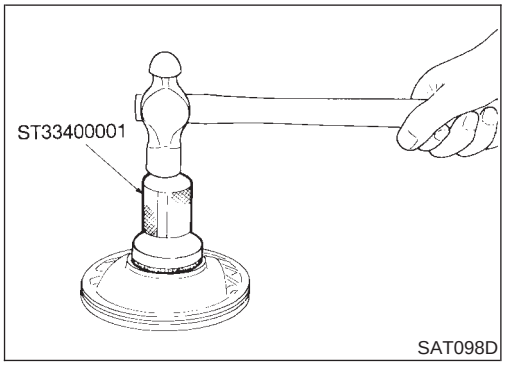

2. Install O-ring on oil pump housing.
- **Apply ATF to O-ring.**

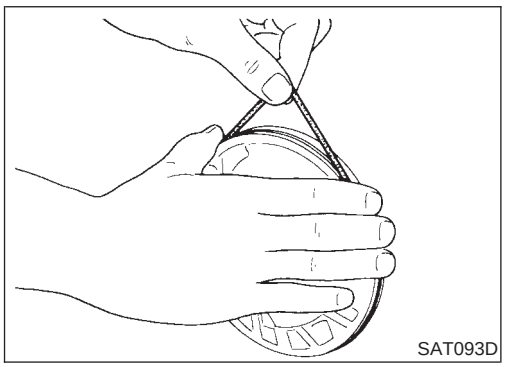

3. Install inner and outer gears on oil pump housing.
- **Take care with the direction of the inner gear.**

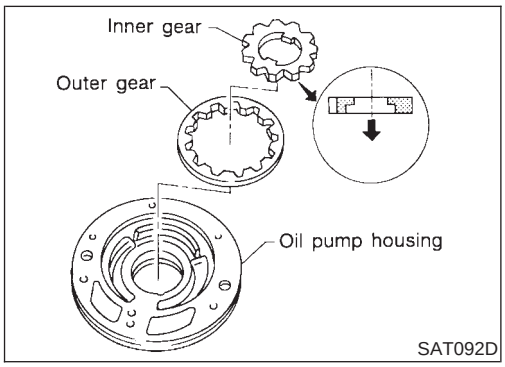

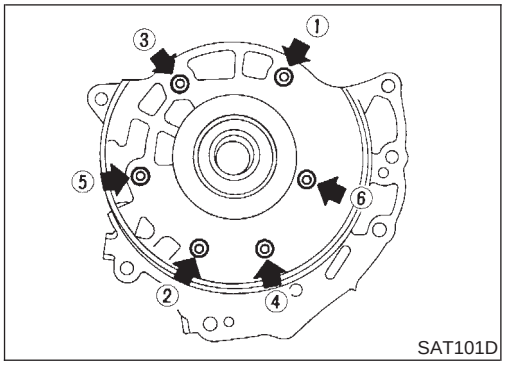

SAT101D

4. Install oil pump cover on oil pump housing.

a. Wrap masking tape around splines of oil pump cover assembly to protect seal. Position oil pump cover assembly on oil pump housing assembly, then remove masking tape.

b. Tighten bolts in numerical order.

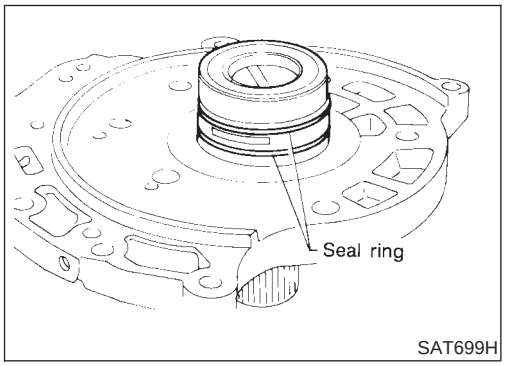

SAT699H

5. Install new seal rings carefully after packing ring groove with petroleum jelly.

- **Do not spread gap of seal ring excessively while installing. It may deform the ring.**

Control Valve Assembly

COMPONENTS

=NJAT0129

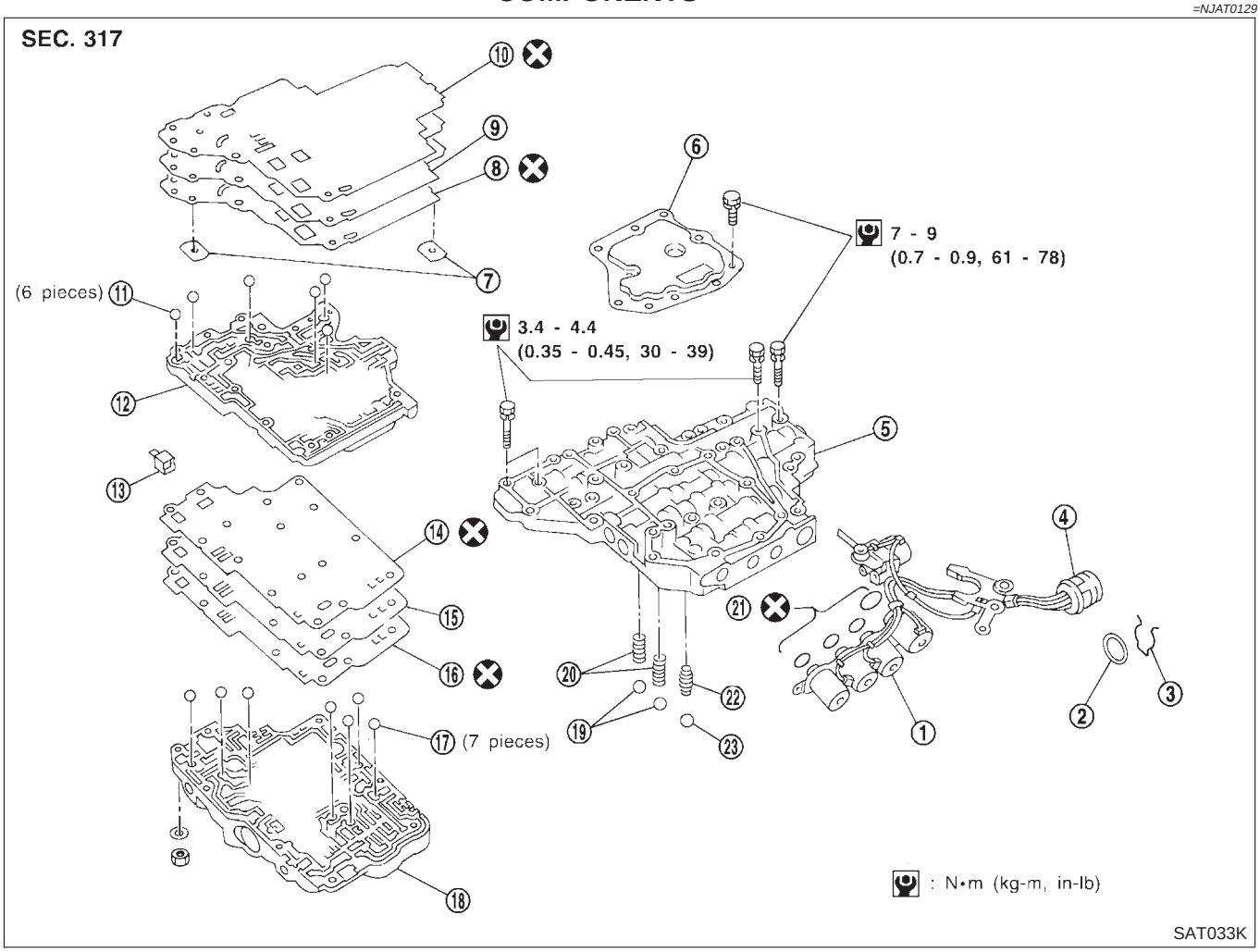

1. Solenoid valve assembly
2. O-ring
3. Clip
4. Terminal body
5. Control valve lower body
6. Oil strainer
7. Support plate
8. Lower inter separating gasket
9. Separating plate
10. Lower separating gasket
11. Steel ball
12. Control valve inter body
13. Pilot filter
14. Upper inter separating gasket
15. Separating plate
16. Upper separating gasket
17. Steel ball
18. Control valve upper body
19. Check ball
20. Oil cooler relief valve spring
21. O-ring
22. T/C pressure holding spring
23. Check ball

DISASSEMBLY

=NJAT0130

- Disassemble upper, inter and lower bodies.

Bolt length, number and location:

Bolt symbol	A	B	C	D	E	F	G
Bolt length "ℓ" ℓ	13.5 mm (0.531 in)	58.0 mm (2.283 in)	40.0 mm (1.575 in)	66.0 mm (2.598 in)	33.0 mm (1.299 in)	78.0 mm (3.071 in)	18.0 mm (0.709 in)
Number of bolts	6	3	6	11	2	2	1

F: Reamer bolt with nut

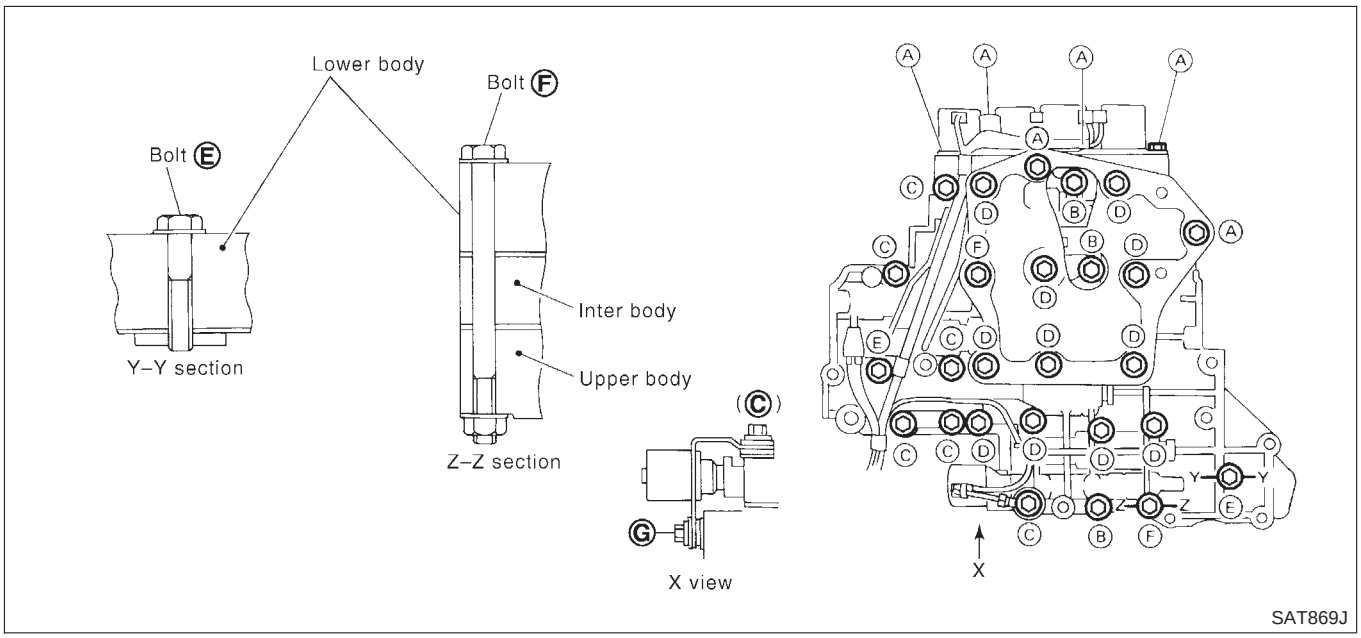

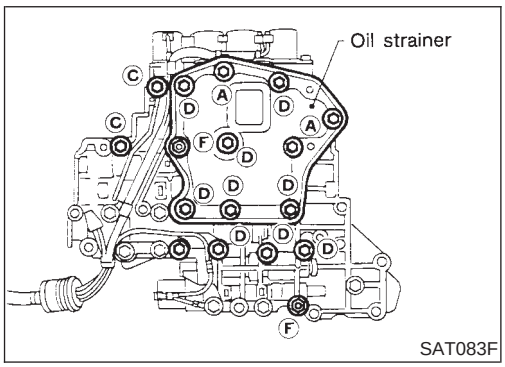

1. Remove bolts A, D and F, and remove oil strainer from control valve assembly.

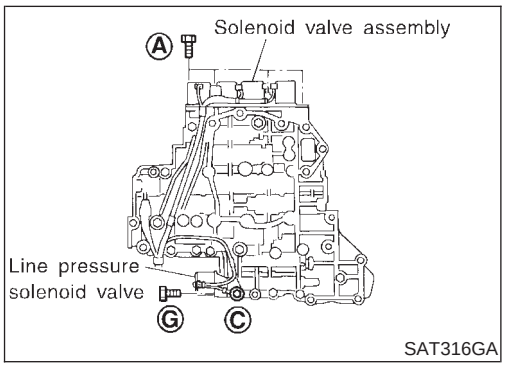

2. Remove solenoid valve assembly and line pressure solenoid valve from control valve assembly.

- **Be careful not to lose the line pressure solenoid valve spring.**

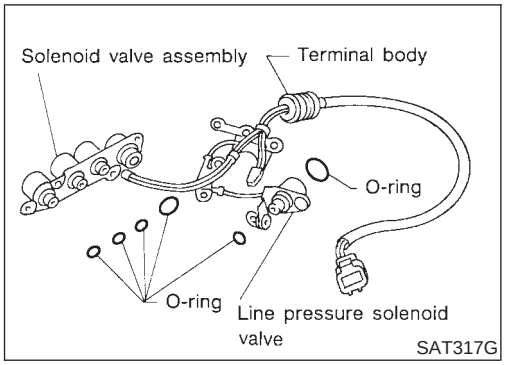

3. Remove O-rings from solenoid valves and terminal body.

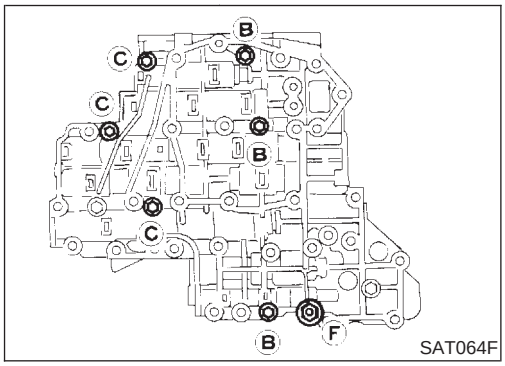

4. Place upper body facedown, and remove bolts B, C and F.

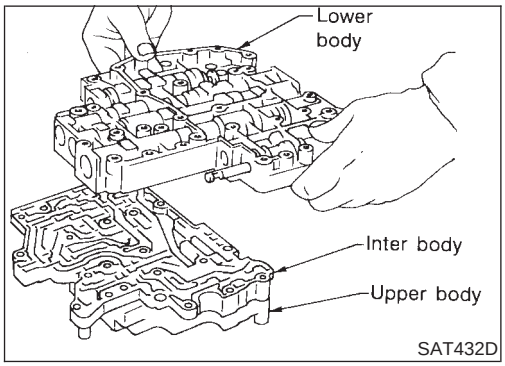

5. Remove lower body from inter body.

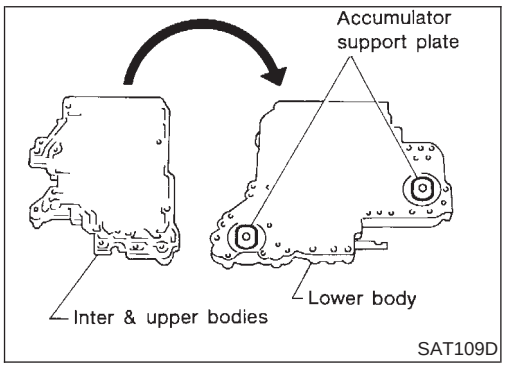

6. Turn over lower body, and accumulator support plates.

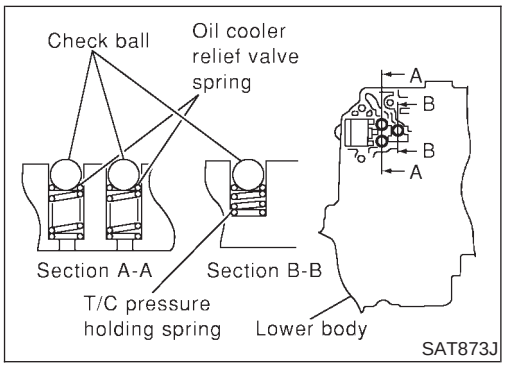

7. Remove bolts E, separating plate and separating gaskets from lower body.
8. Remove check balls, oil cooler relief valve springs and T/C pressure holding spring from lower body.

- **Be careful not to lose steel balls and relief valve springs.**

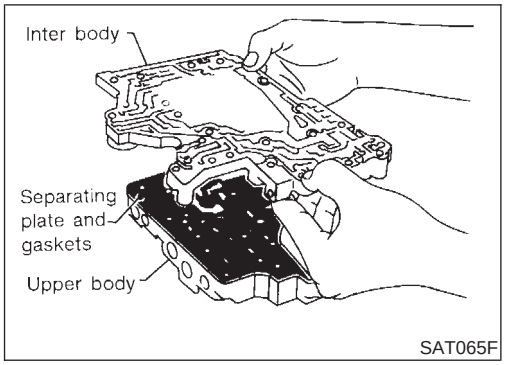

SAT065F

9. Remove inter body from upper body.
10. Remove pilot filter, separating plate and gaskets from upper body.

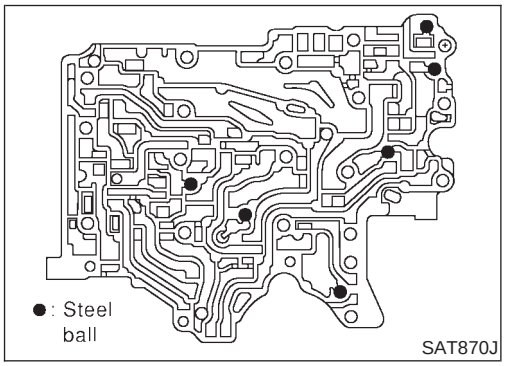

SAT870J

11. Check to see that steel balls are properly positioned in inter body and then remove them.
- **Be careful not to lose steel balls.**

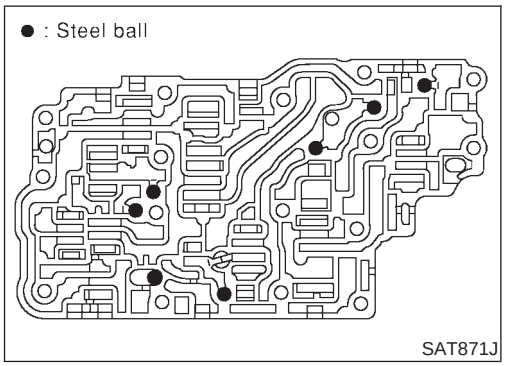

SAT871J

12. Check to see that steel balls are properly positioned in upper body and then remove them.
- **Be careful not to lose steel balls.**

INSPECTION

NJAT0131

Lower and Upper Bodies

NJAT0131S01

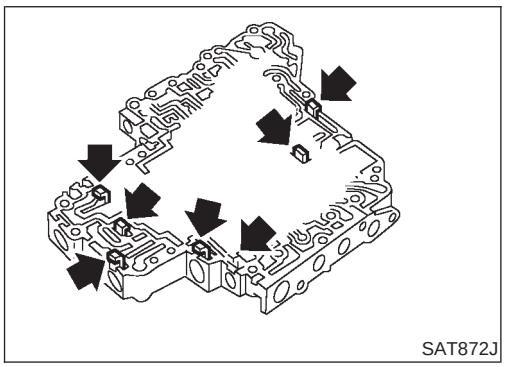
SAT872J

- Check to see that retainer plates are properly positioned in lower body.

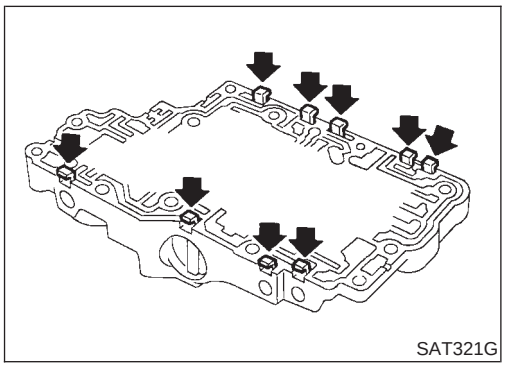
SAT321G

- Check to see that retainer plates are properly positioned in upper body.

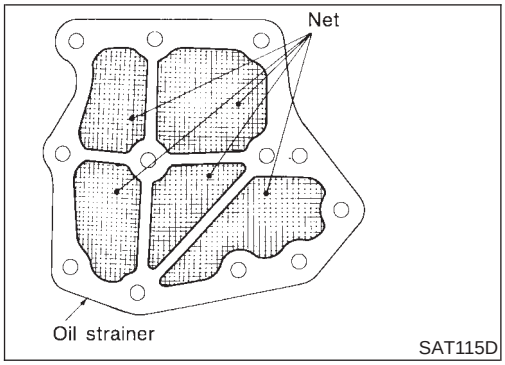

Oil Strainer

NJAT0131S02

- Check wire netting of oil strainer for damage.

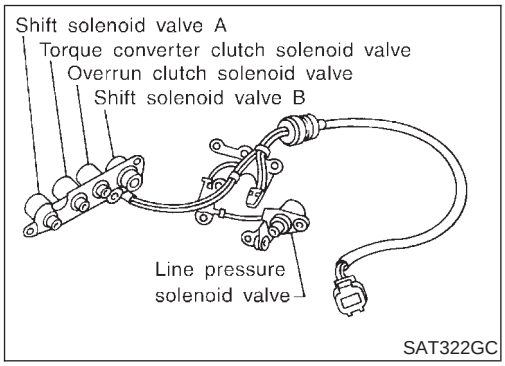

Shift Solenoid Valves A and B, Line Pressure Solenoid Valve, Torque Converter Clutch Solenoid Valve and Overrun Clutch Solenoid Valve

NJAT0131S03

- Refer to "Resistance Check" of each solenoid valve.

Valves	Except for Euro-OBD	Euro-OBD
Shift solenoid valve A	AT-147	AT-251
Shift solenoid vavle B	AT-153	AT-257
Line pressure solenoid valve	AT-182	AT-245
Torque converter clutch solenoid valve	AT-164	AT-238
Overrun clutch solenoid valve	AT-158	AT-273

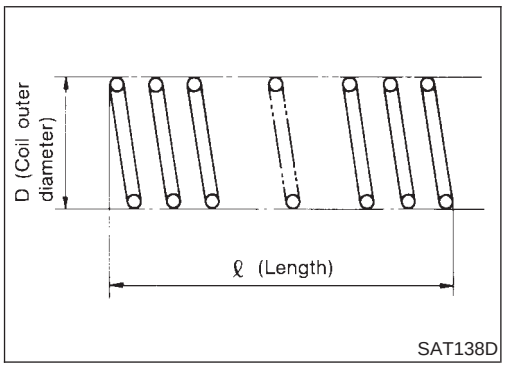

Oil Cooler Relief Valve Spring

NJAT0131S04

- Check springs for damage or deformation.
- Measure free length and outer diameter.

Inspection standard:

Unit: mm (in)

Part No.	ℓ	D
31872 31X00	17.0 (0.669)	8.0 (0.315)

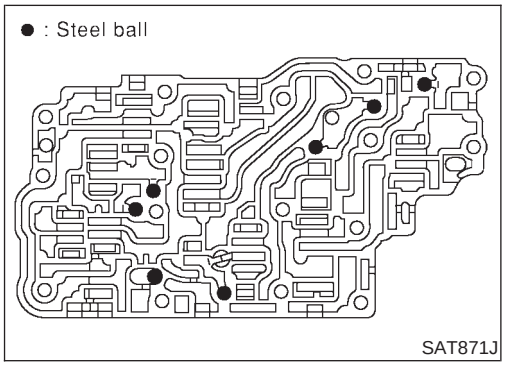

ASSEMBLY

NJAT0132

1. Install upper, inter and lower body.

a. Place oil circuit of upper body face up. Install steel balls in their proper positions.

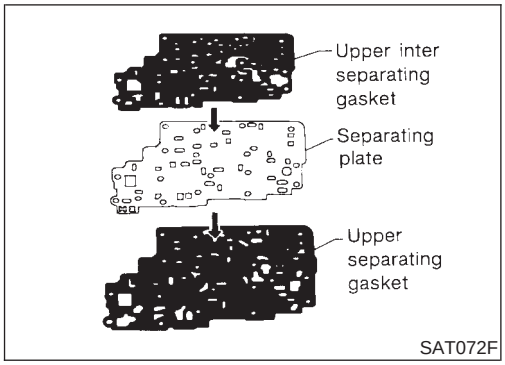

b. Install upper separating gasket, upper inter separating gasket and upper separating plate in order shown in illustration.

- **Always use new gaskets.**

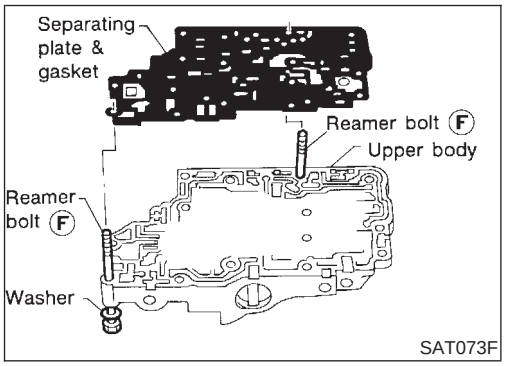

c. Install reamer bolts **F** from bottom of upper body. Using reamer bolts as guides, install separating plate and gaskets as a seat.

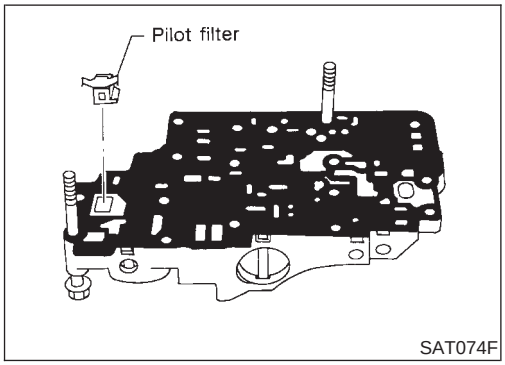

d. Install pilot filter.

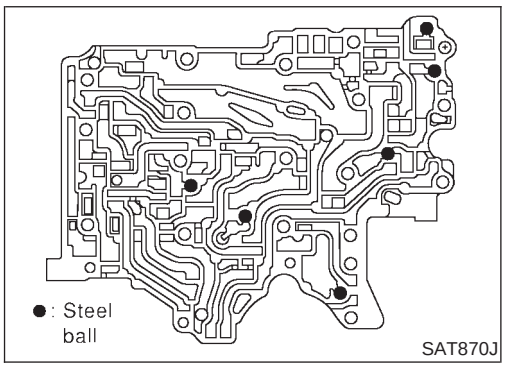

e. Place inter body as shown in the illustration. Install steel balls in their proper positions.

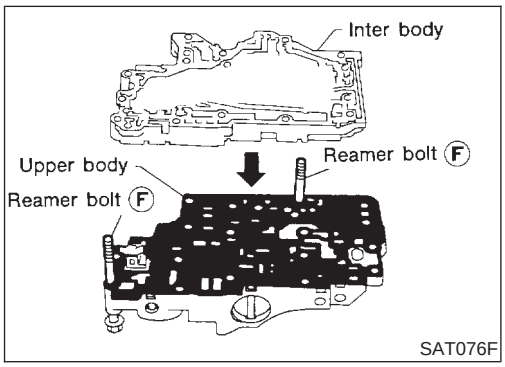

f. Install inter body on upper body using reamer bolts **F** as guides.

- **Be careful not to dislocate or drop steel balls.**

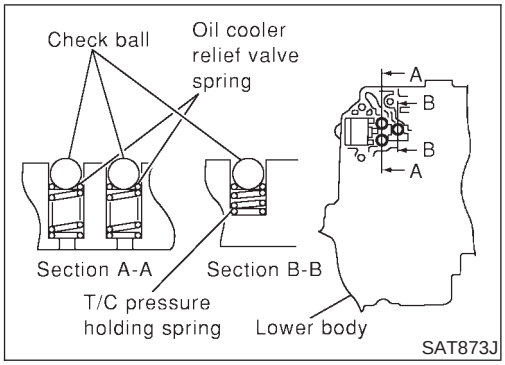

g. Install check balls, oil cooler relief valve springs and T/C pressure holding spring in their proper positions in lower body.

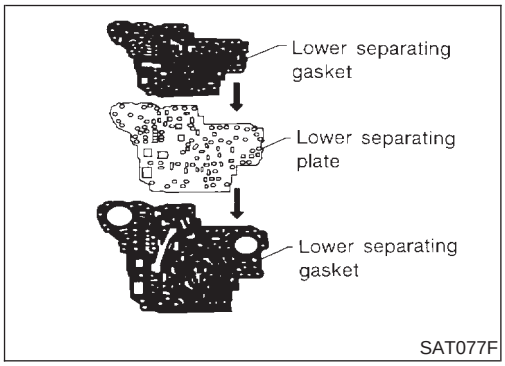

h. Install lower separating gasket, inner separating gasket and lower separating plate in order shown in the illustration.

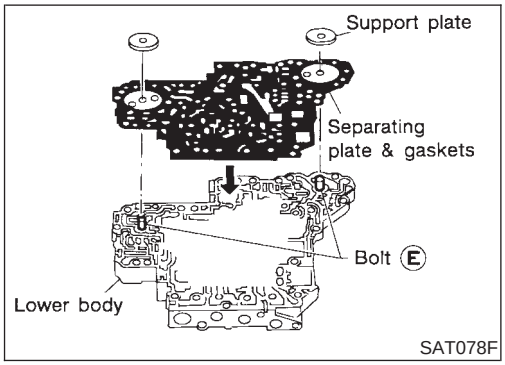

i. Install bolts **E** from bottom of lower body. Using bolt **E** as guides, install separating plate and gaskets as a set.

j. Install support plates on lower body.

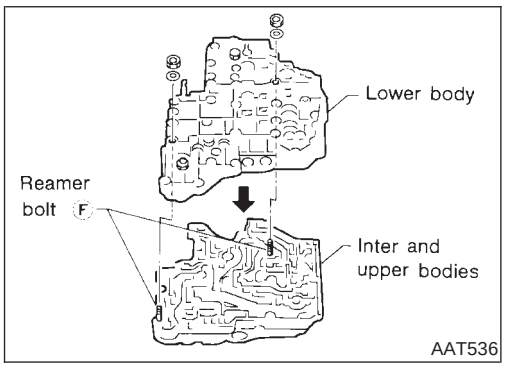

k. Install lower body on inter body using reamer bolts **F** as guides and tighten reamer bolts **F** slightly.

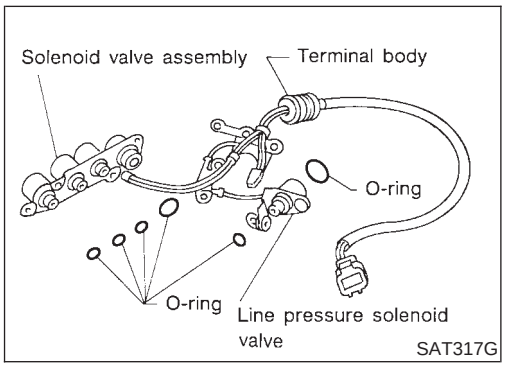

2. Install O-rings to solenoid valves and terminal body.

- **Apply ATF to O-rings.**

3. Install and tighten bolts.

Bolt length, number and location:

Bolt symbol	A	B	C	D	E	F	G
Bolt length "ℓ" ℓ	13.5 mm (0.531 in)	58.0 mm (2.283 in)	44.0 mm (1.732 in)	66.0 mm (2.598 in)	33.0 mm (1.299 in)	78.0 mm (3.071 in)	18.0 mm (0.709 in)
Number of bolts	6	3	6	11	2	2	1

F: Reamer bolt with nut

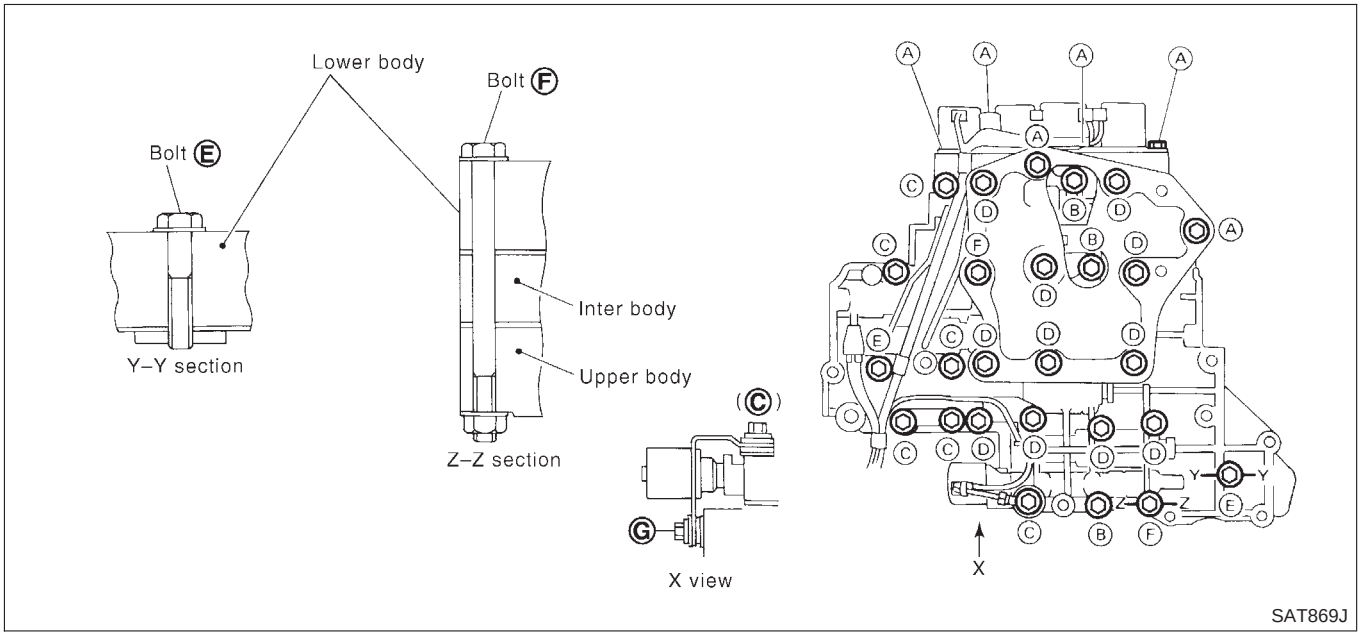

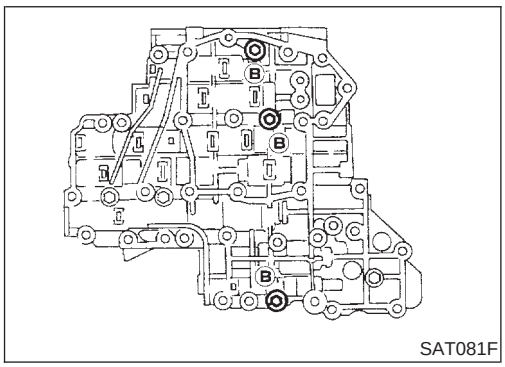

a. Install and tighten bolts **B** to specified torque.
: 7 - 9 N·m (0.7 - 0.9 kg-m, 61 - 78 in-lb)

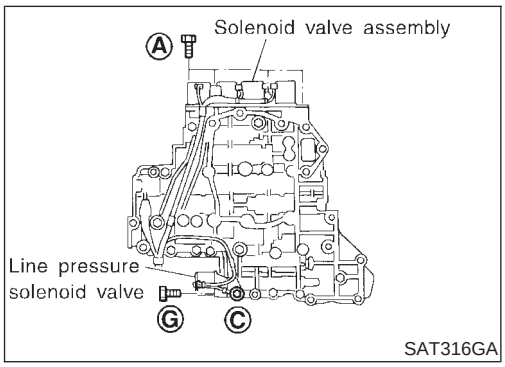

b. Install solenoid valve assembly and line pressure solenoid valve to lower body.

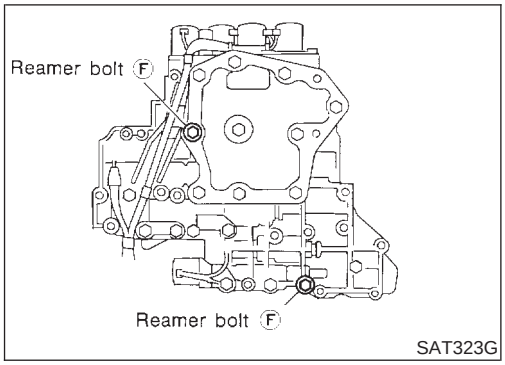

c. Remove reamer bolts **F** and set oil strainer on control valve assembly.

d. Reinstall reamer bolts **F** from lower body side.

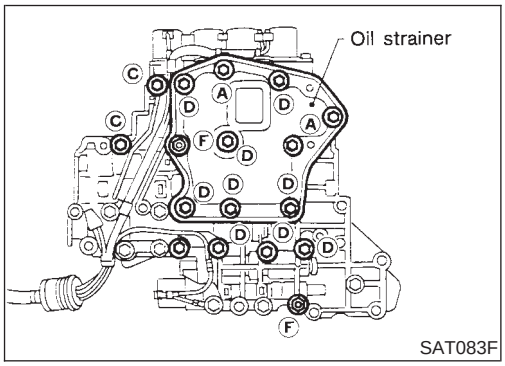

e. Tighten bolts **A**, **C**, **D** and **F** to specified torque.

: 7 - 9 N·m (0.7 - 0.9 kg-m, 61 - 78 in-lb)

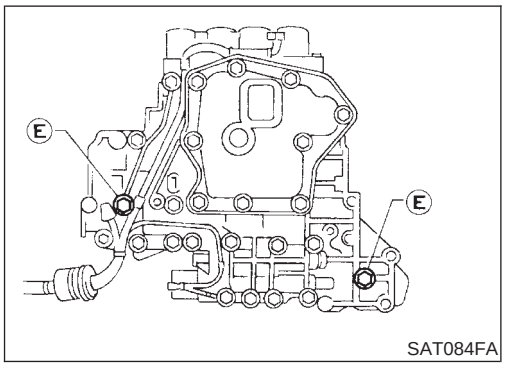

f. Tighten bolts **E** to specified torque.

: 3.4 - 4.4 N·m (0.35 - 0.45 kg-m, 30.4 - 39.1 in-lb)

Control Valve Upper Body

COMPONENTS

=NJAT0133

Numbers preceding valve springs correspond with those shown in SDS table on page AT-474.

SEC. 317

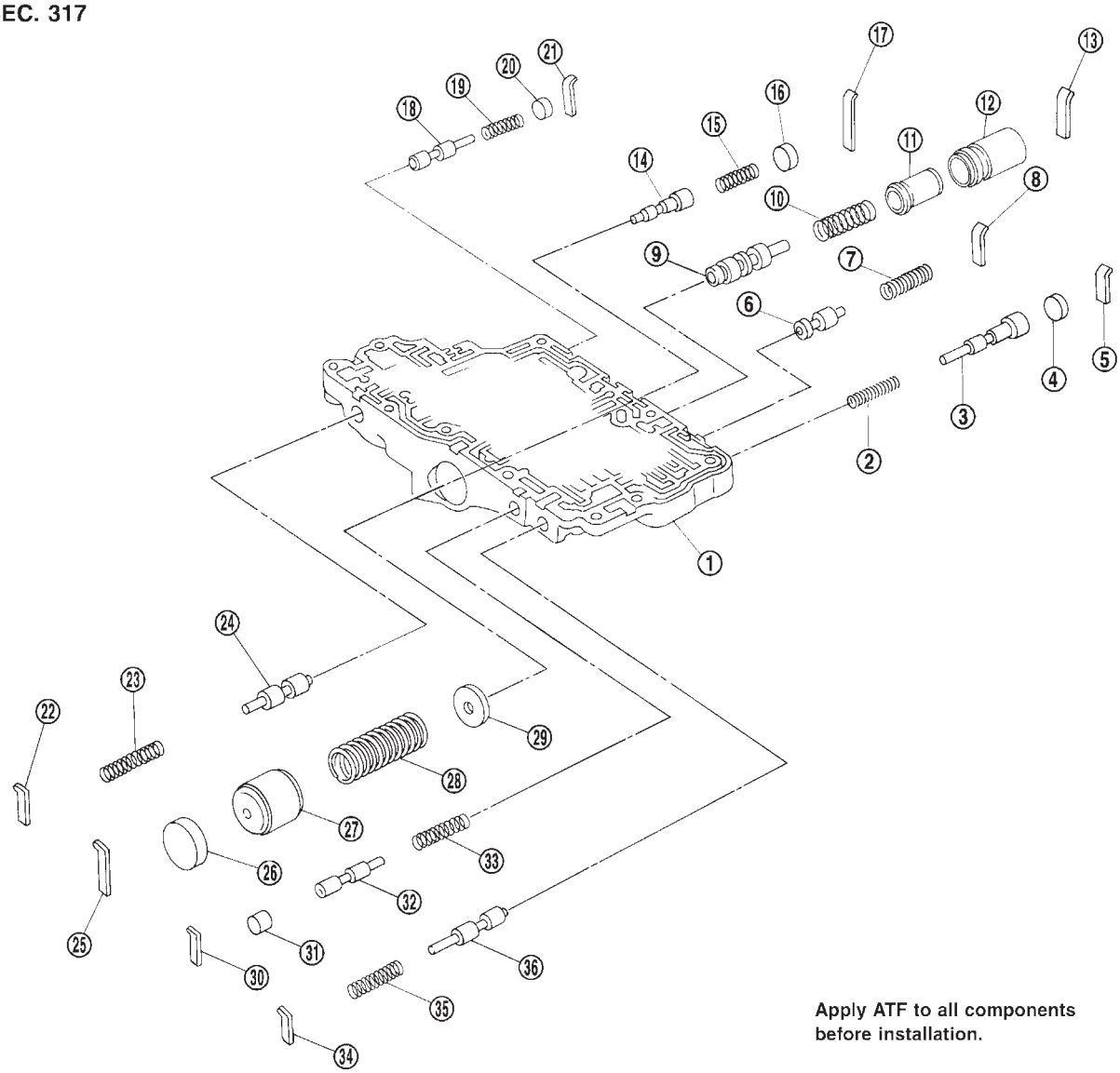

SAT012K

1. Control valve upper body
2. Overrun clutch reducing valve spring
3. Overrun clutch reducing valve
4. Plug
5. Retainer plate
6. Torque converter relief valve
7. Torque converter relief valve spring
8. Retainer plate
9. Torque converter clutch control valve
10. Torque converter clutch control valve spring
11. Plug
12. Sleeve
13. Retainer plate
14. 1-2 accumulator valve
15. 1-2 accumulator valve spring
16. Plug
17. Retainer plate
18. Cooler check valve
19. Cooler check valve spring
20. Plug
21. Retainer plate
22. Retainer plate
23. Pilot valve spring
24. Pilot valve
25. Retainer plate
26. Plug
27. 1-2 accumulator piston
28. 1-2 accumulator piston spring
29. 1-2 accumulator retainer plate
30. Retainer plate
31. Plug
32. 1st reducing valve
33. 1st reducing valve spring
34. Retainer plate
35. 3-2 timing valve spring
36. 3-2 timing valve

DISASSEMBLY

NJAT0134

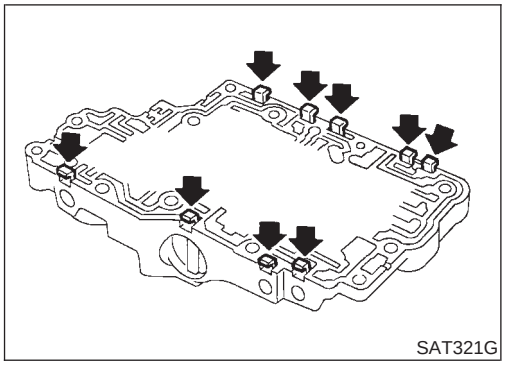
SAT321G

1. Remove valves at retainer plates.
- **Do not use a magnetic "hand".**

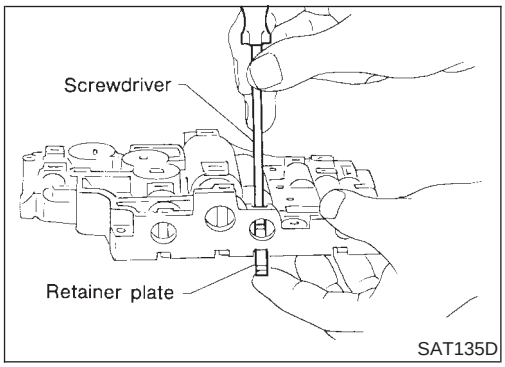

SAT135D

a. Use a screwdriver to remove retainer plates.

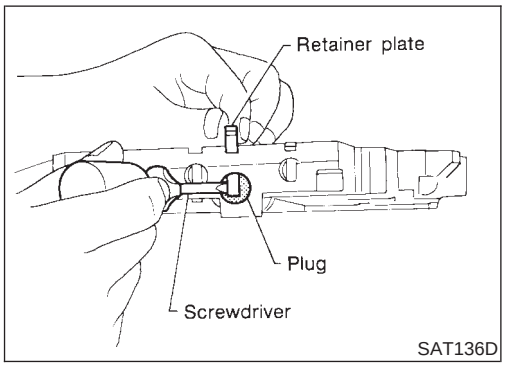

SAT136D

b. Remove retainer plates while holding spring, plugs or sleeves.
- **Remove plugs slowly to prevent internal parts from jumping out.**

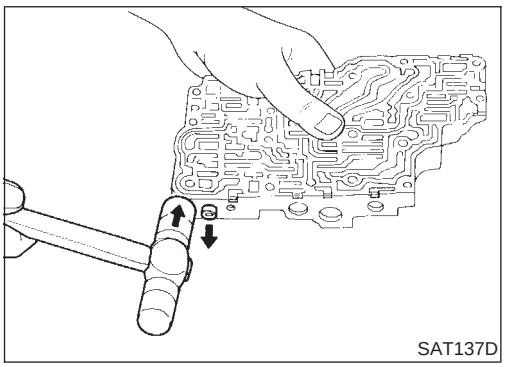
SAT137D

c. Place mating surface of valve body face down, and remove internal parts.
- **If a valve is hard to remove, place valve body face down and lightly tap it with a soft hammer.**
- **Be careful not to drop or damage valves and sleeves.**

INSPECTION

NJAT0135

Valve Spring

NJAT0135S01

- Measure free length and outer diameter of each valve spring. Also check for damage or deformation.

  Inspection standard:

  Refer to SDS, AT-474.
- Replace valve springs if deformed or fatigued.

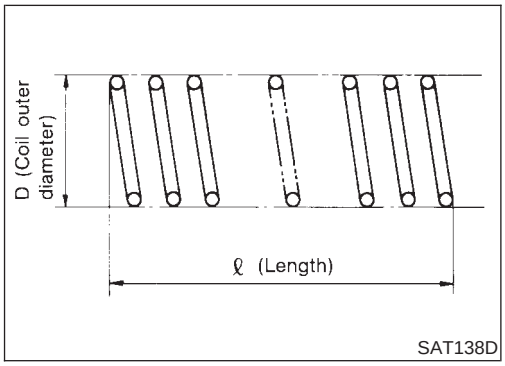

SAT138D

Control Valves

NJAT0135S02

- Check sliding surfaces of valves, sleeves and plugs.

ASSEMBLY

NJAT0136

- **Lay control valve body down when installing valves. Do not stand the control valve body upright.**

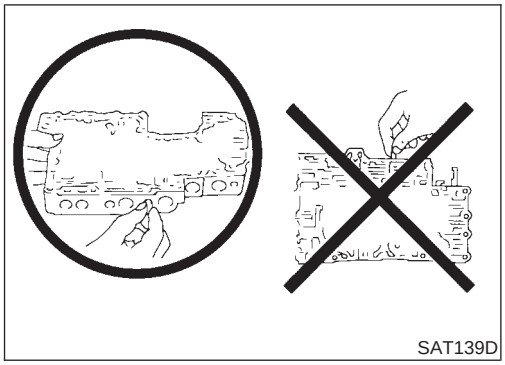
SAT139D

1. Lubricate the control valve body and all valves with ATF. Install control valves by sliding them carefully into their bores.
- **Be careful not to scratch or damage valve body.**

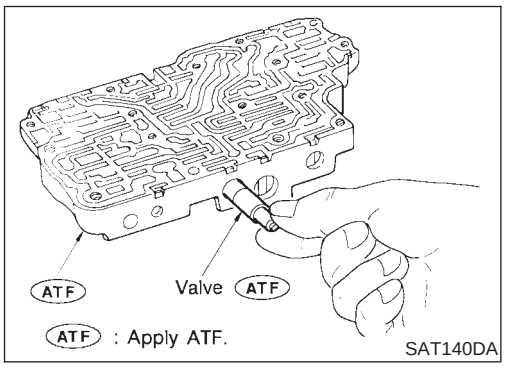

SAT140DA

- Wrap a small screwdriver with vinyl tape and use it to insert the valves into their proper positions.

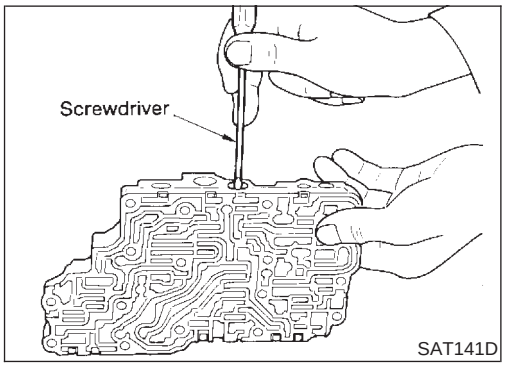

SAT141D

1-2 Accumulator Valve

NJAT0136S01

- Install 1-2 accumulator valve. Align 1-2 accumulator retainer plate from opposite side of control valve body.
- Install return spring, 1-2 accumulator piston and plug.

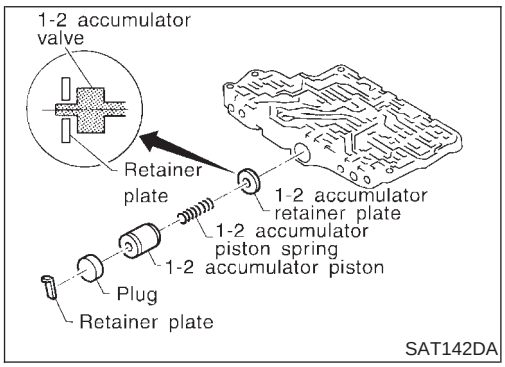

SAT142DA

1. Install retainer plates.
- Install retainer plate while pushing plug or return spring.

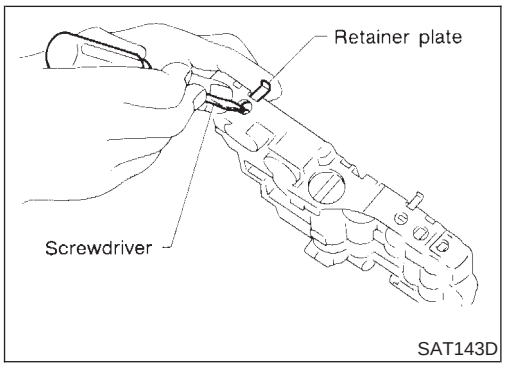

SAT143D

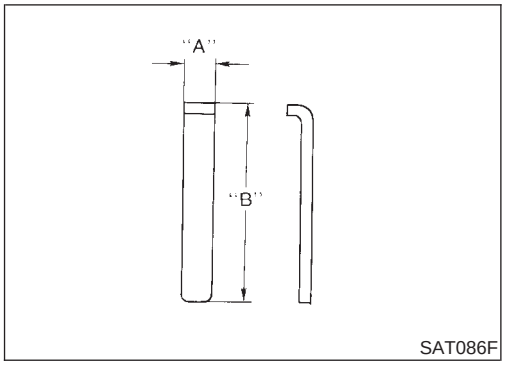

Retainer Plate (for control valve upper body)

NJAT0136S02

Refer to AT-397.

Unit: mm (in)

Name of valve and piston	No.	Length A	Length B
Pilot valve	22	6.0 (0.236)	21.5 (0.846)
1-2 accumulator valve	17		40.5 (1.59)
1-2 accumulator piston	25		
1st reducing valve	30		21.5 (0.846)
Overrun clutch reducing valve	5		24.0 (0.945)
Torque converter relief valve	8		21.5 (0.846)
Torque converter clutch control valve	13		28.0 (1.102)
3-2 timing valve	34		21.5 (0.846)
Cooler check valve	21		24.0 (0.945)

- Install proper retainer plates.

Control Valve Lower Body

COMPONENTS

=NJAT0137

Numbers preceding valve springs correspond with those shown in SDS table on page AT-474.

SEC. 317

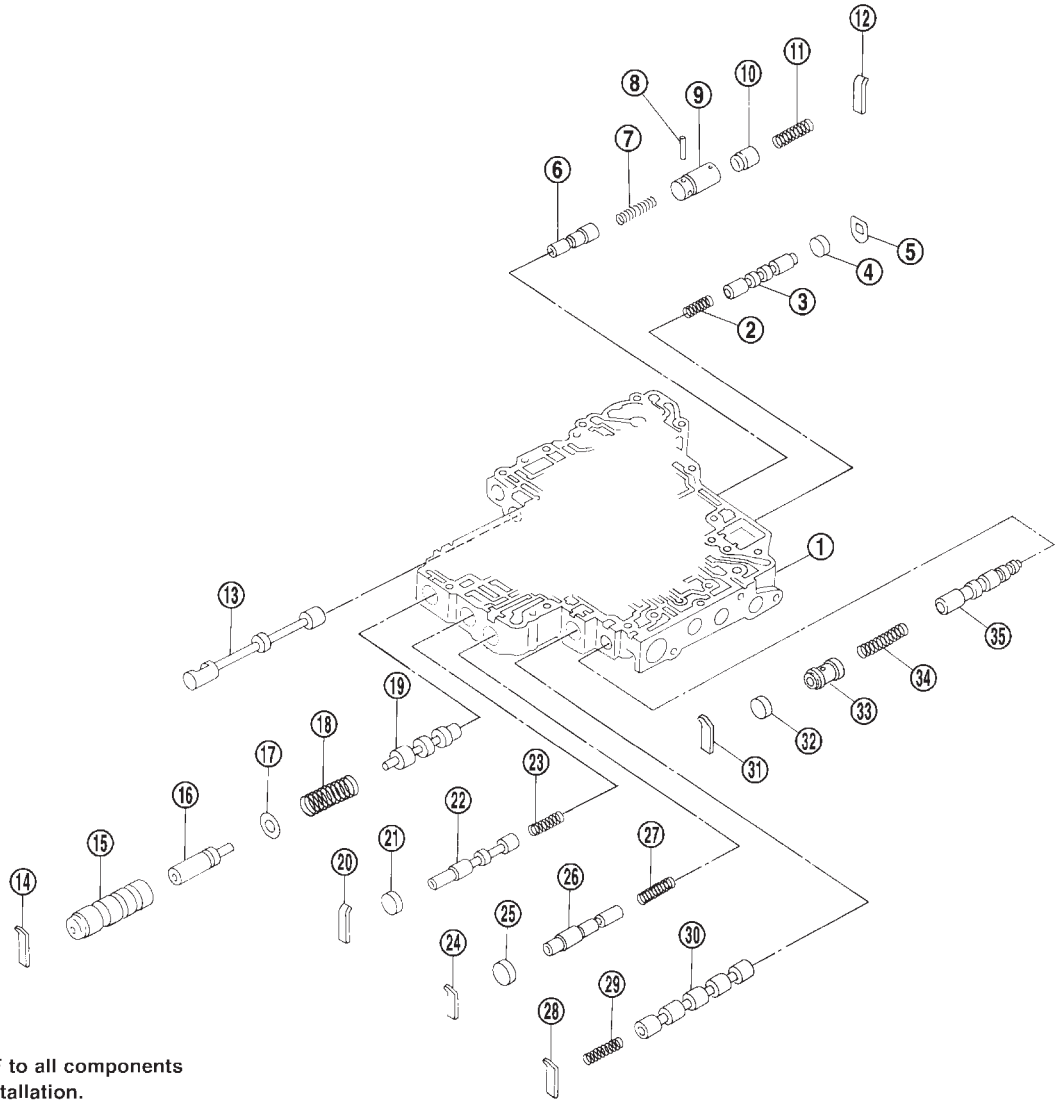

SAT013K

1. Control valve lower body
2. Shift valve B spring
3. Shift valve B
4. Plug
5. Retainer plate
6. Pressure modifier valve
7. Pressure modifier valve spring
8. Parallel pin
9. Sleeve
10. Piston
11. Pressure modifier piston spring
12. Retainer plate
13. Manual valve
14. Retainer plate
15. Sleeve
16. Plug
17. Spring seat
18. Pressure regulator valve spring
19. Pressure regulator valve
20. Retainer plate
21. Plug
22. Overrun clutch control valve
23. Overrun clutch control valve spring
24. Retainer plate
25. Plug
26. Accumulator control valve
27. Accumulator control valve spring
28. Retainer plate
29. Shift valve A spring
30. Shift valve A
31. Retainer plate
32. Plug
33. Plug
34. Shuttle valve spring
35. Shuttle control valve

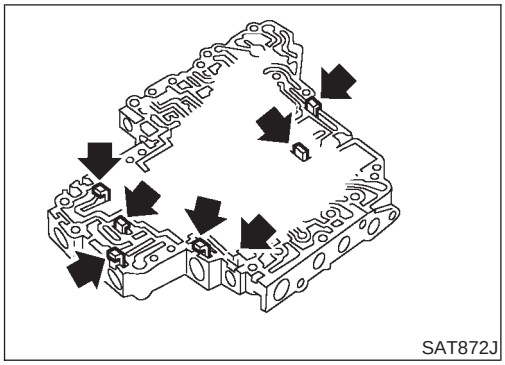
SAT872J

DISASSEMBLY

NJAT0138

Remove valves at retainer plate.
For removal procedures, refer to AT-389.

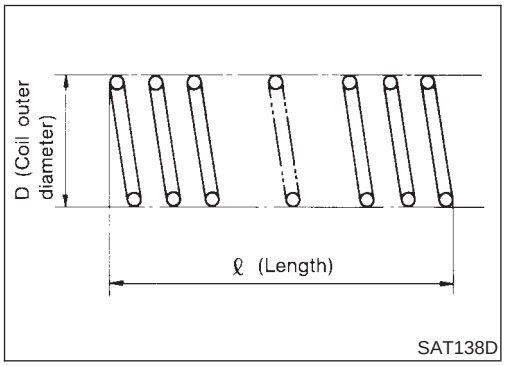

SAT138D

INSPECTION

NJAT0139

Valve Springs

NJAT0139S01

- Check each valve spring for damage or deformation. Also measure free length and outer diameter.

  Inspection standard:

  Refer to SDS, AT-474.

- Replace valve springs if deformed or fatigued.

Control Valves

NJAT0139S02

- Check sliding surfaces of control valves, sleeves and plugs for damage.

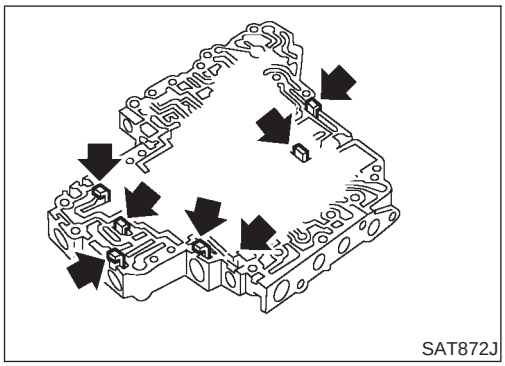
SAT872J

ASSEMBLY

NJAT0140

- Install control valves.
  For installation procedures, refer to AT-399.

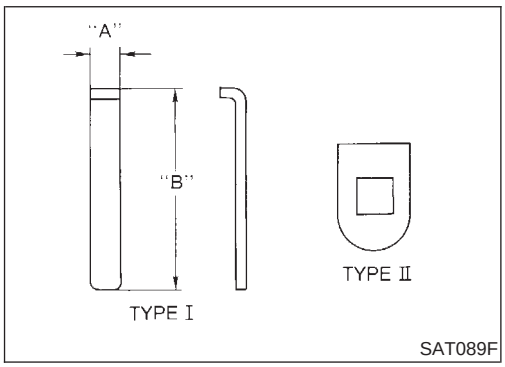

SAT089F

Retainer Plate (for control valve lower body)

NJAT0140S01

Refer to AT-401.

Unit: mm (in)

Name of control valve	No.	Length A	Length B	Type
Pressure regulator valve	14	6.0 (0.236)	28.0 (1.102)	I
Accumulator control valve	24			
Shift valve A	28			
Overrun clutch control valve	20			
Pressure modifier valve	12			
Shuttle control valve	31			
Shift valve B	5	—	—	II

- Install proper retainer plates.

Reverse Clutch

COMPONENTS

=NJAT0141

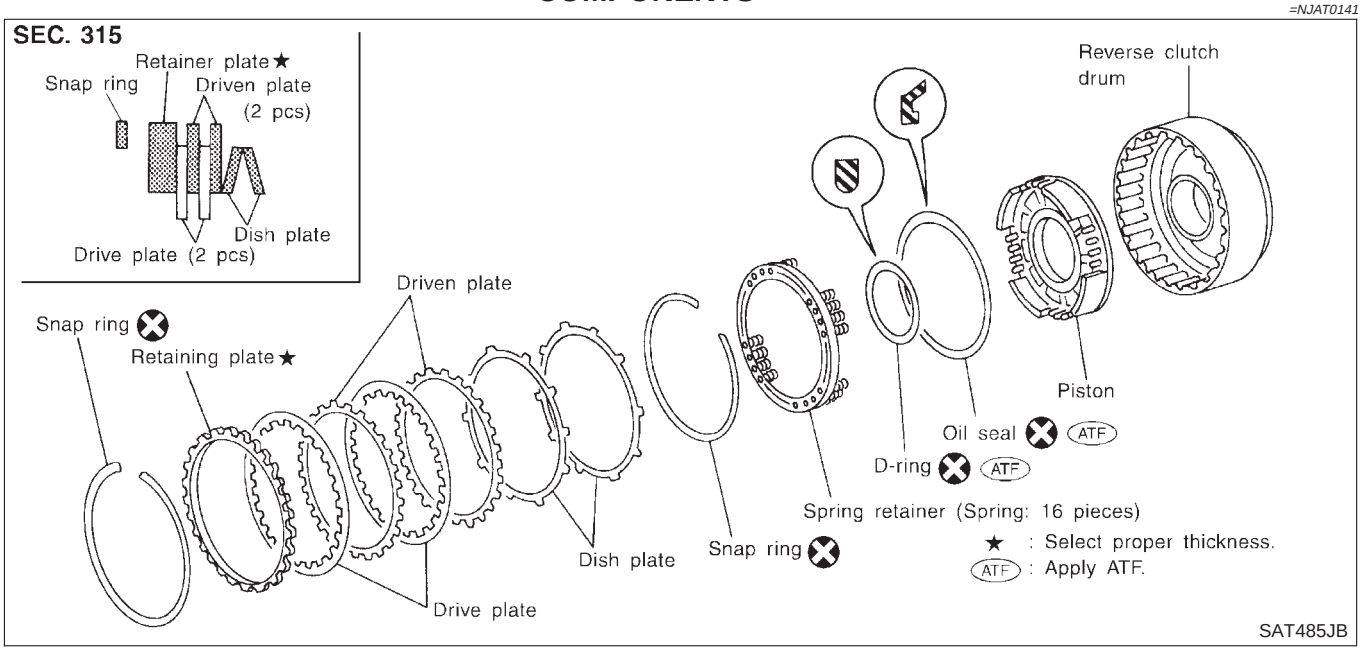

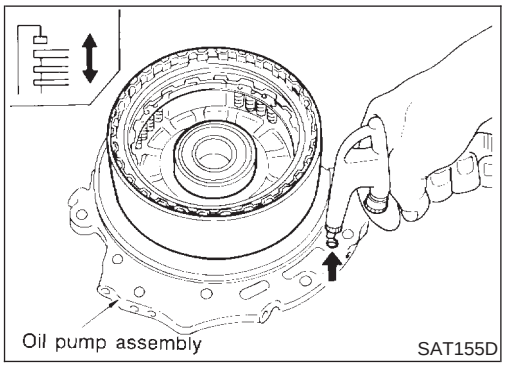

DISASSEMBLY

NJAT0142

1. Check operation of reverse clutch.

a. Install seal ring onto drum support of oil pump cover and install reverse clutch assembly. Apply compressed air to oil hole.

b. Check to see that retaining plate moves to snap ring.

c. If retaining plate does not contact snap ring:

- D-ring might be damaged.
- Oil seal might be damaged.
- Fluid might be leaking past piston check ball.

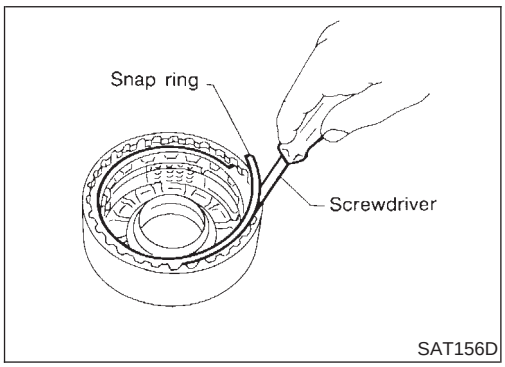

2. Remove snap ring.
3. Remove drive plates, driven plates, retaining plate, and dish plates.

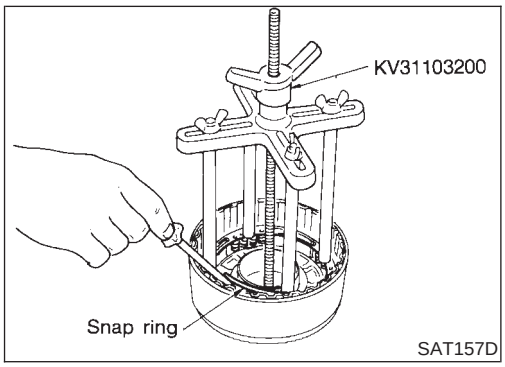

4. Set Tool on spring retainer and remove snap ring from reverse clutch drum while compressing return springs.

- **Set Tool directly above springs.**
- **Do not expand snap ring excessively.**

5. Remove spring retainer and return springs.

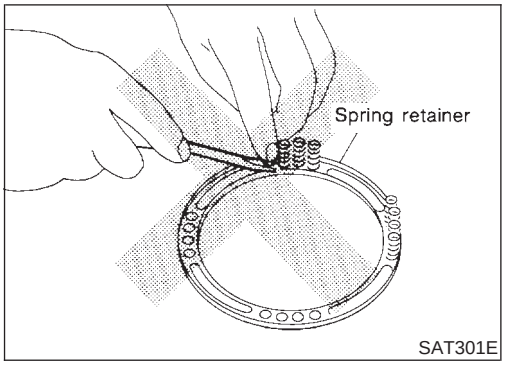

- **Do not remove return springs from spring retainer.**

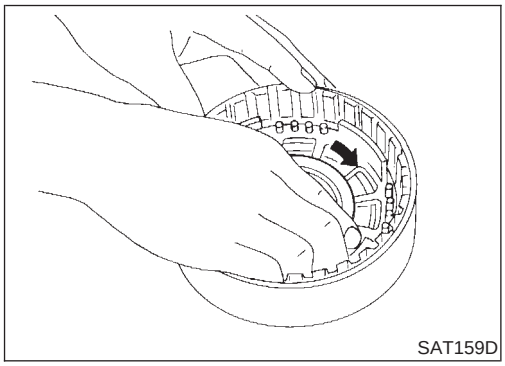

6. Remove piston from reverse clutch drum by turning it.

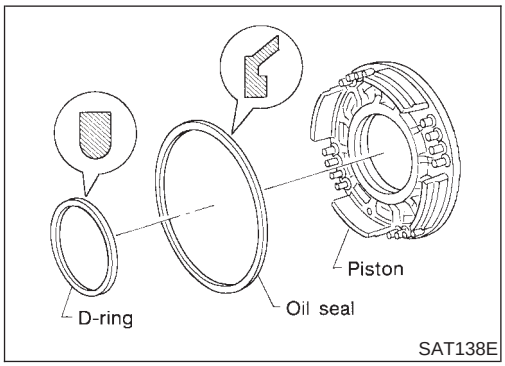

7. Remove D-ring and oil seal from piston.

INSPECTION

NJAT0143

Reverse Clutch Snap Ring, Spring Retainer and Return Springs

NJAT0143S01

- Check for deformation, fatigue or damage.
- Replace if necessary.
- **When replacing spring retainer and return springs, replace them as a set.**

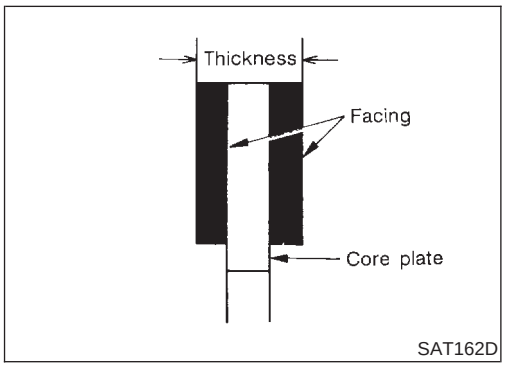

Reverse Clutch Drive Plates

NJAT0143S02

- Check facing for burns, cracks or damage.
- Measure thickness of facing.

  Thickness of drive plate:

  Standard value: 2.0 mm (0.079 in)

  Wear limit: 1.8 mm (0.071 in)
- If not within wear limit, replace.

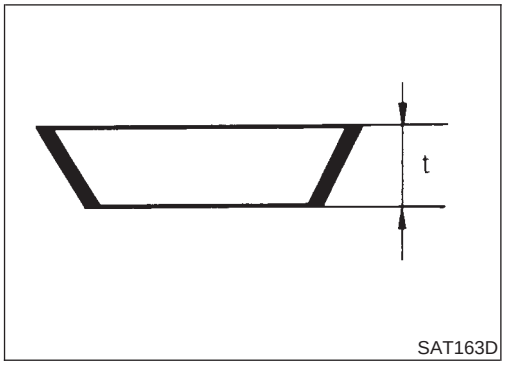

SAT163D

Reverse Clutch Dish Plates

NJAT0143S03

- Check for deformation or damage.
- Measure thickness of dish plate.

  Thickness of dish plate "t": 2.8 mm (0.110 in)
- If deformed or fatigued, replace.

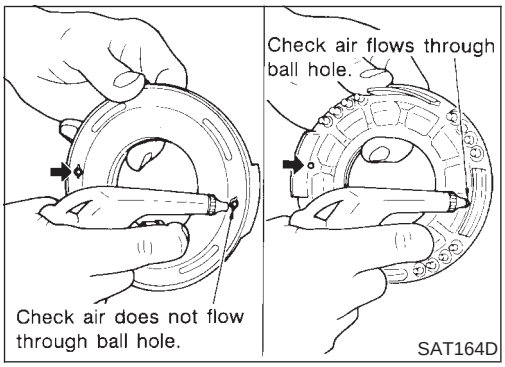

SAT164D

Reverse Clutch Piston

NJAT0143S04

- Make sure check balls are not fixed.
- Apply compressed air to check ball oil hole opposite the return spring. Make sure that there is no air leakage.
- Apply compressed air to oil hole on return spring side to make sure air leaks past ball.

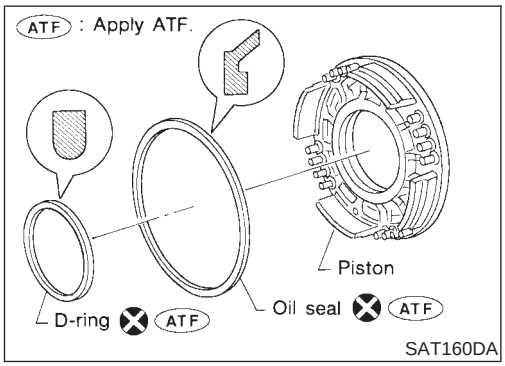

SAT160DA

ASSEMBLY

NJAT0144

1. Install D-ring and oil seal on piston.
- **Take care with the direction of the oil seal.**
- **Apply ATF to both parts.**

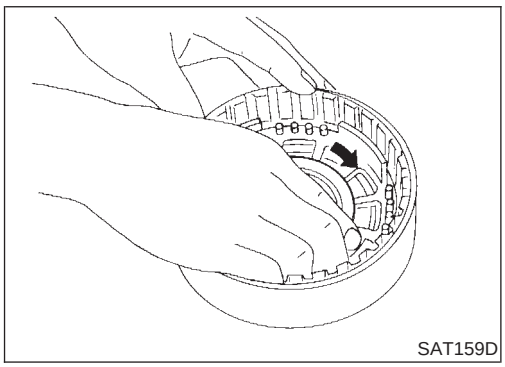

SAT159D

2. Install piston assembly by turning it slowly.
- **Apply ATF to inner surface of drum.**

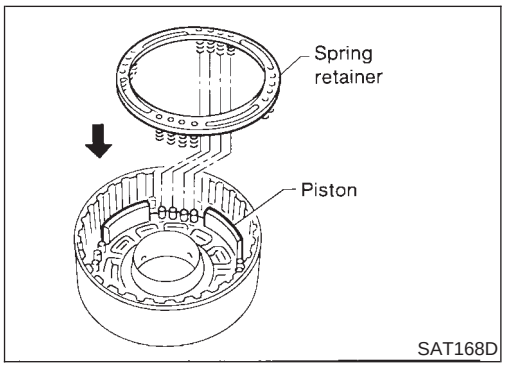

SAT168D

3. Install return springs and spring retainer on piston.
   For return spring, refer to AT-477.

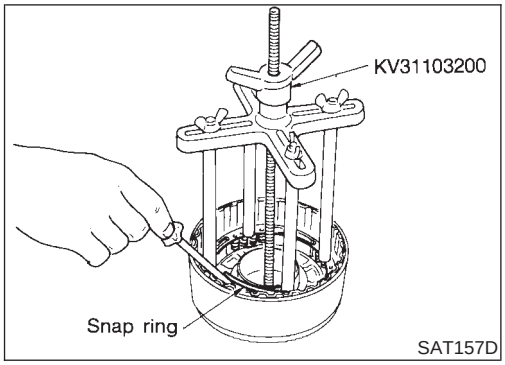

4. Set Tool on spring retainer and install snap ring while compressing return springs.
- **Set Tool directly above return springs.**

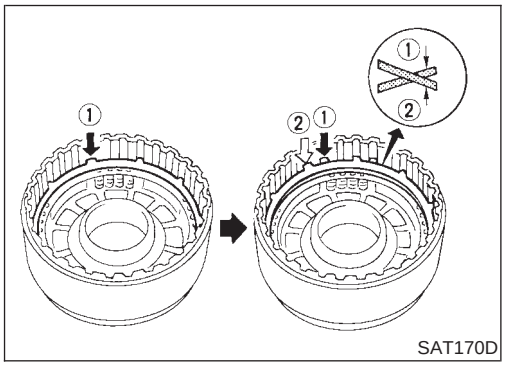

5. Install drive plates, driven plates, retaining plate and dish plates.
- **Do not align the projections of any two dish plates.**
- **Take care with the order and direction of plates.**

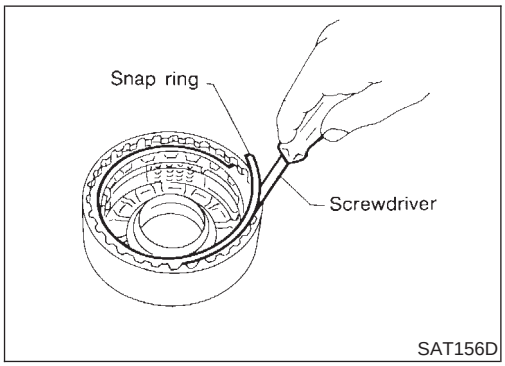

6. Install snap ring.

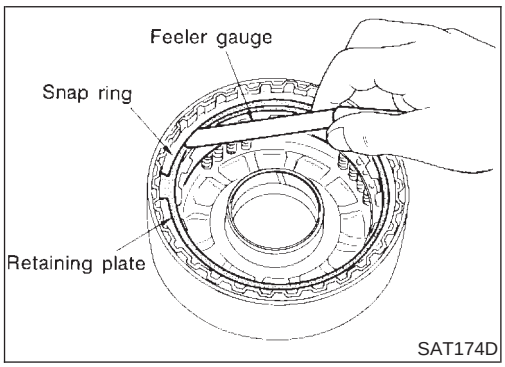

7. Measure clearance between retaining plate and snap ring. If not within allowable limit, select proper retaining plate.

   Specified clearance:

   Standard: 0.5 - 0.8 mm (0.020 - 0.031 in)

   Allowable limit: 1.2 mm (0.047 in)

   Retaining plate: Refer to SDS, AT-474.

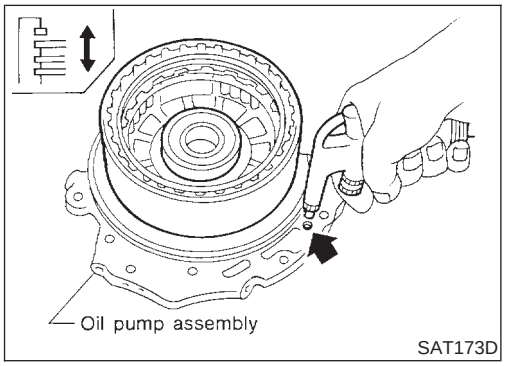

8. Check operation of reverse clutch.
   Refer to "Reverse Clutch", AT-403.

High Clutch

COMPONENTS

=NJAT0145

SEC. 315

For the number of clutch sheets (drive plates and driven plates), refer to the below cross-section.

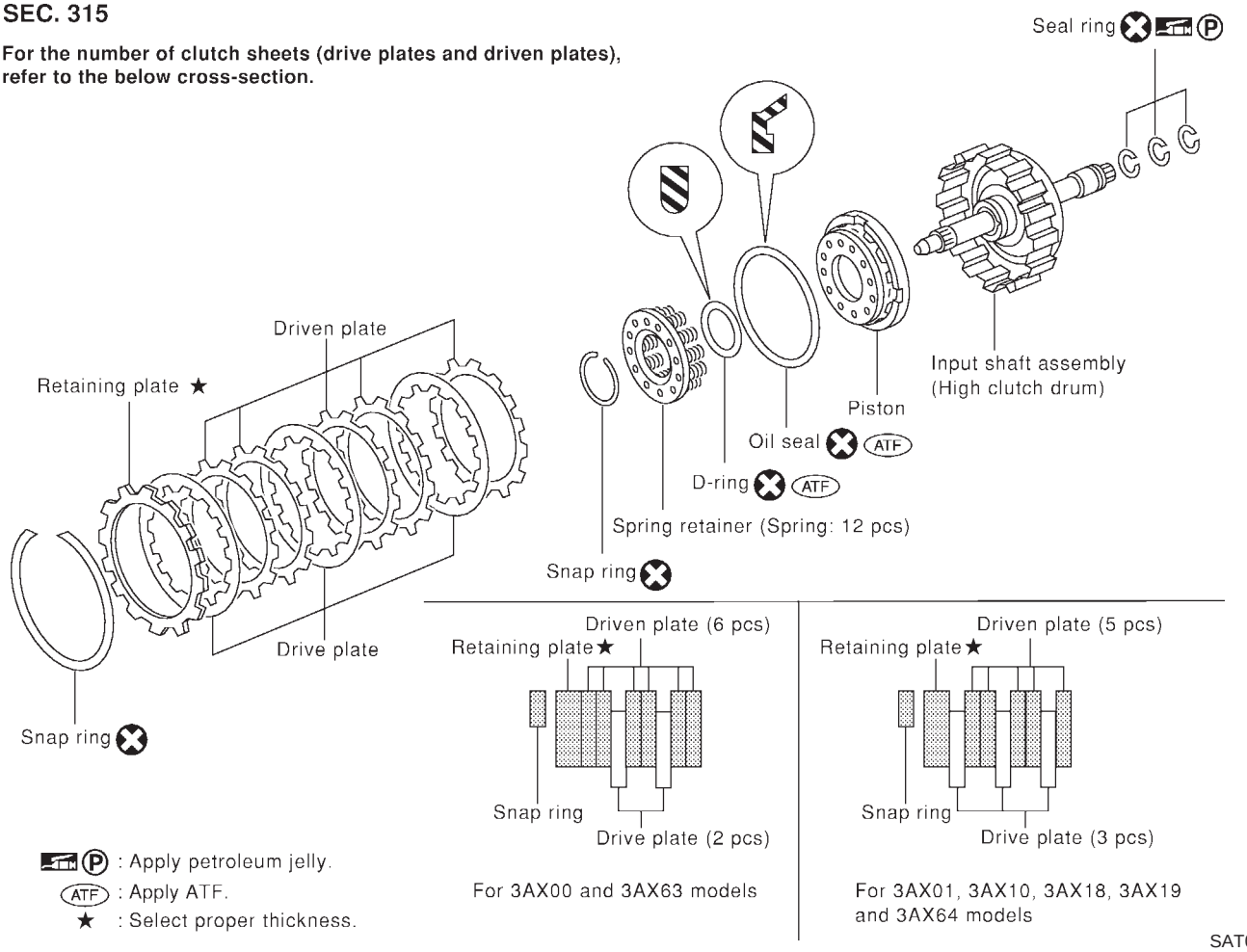

SAT034K

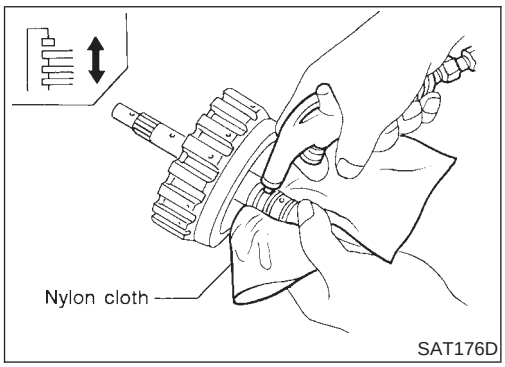

SAT176D

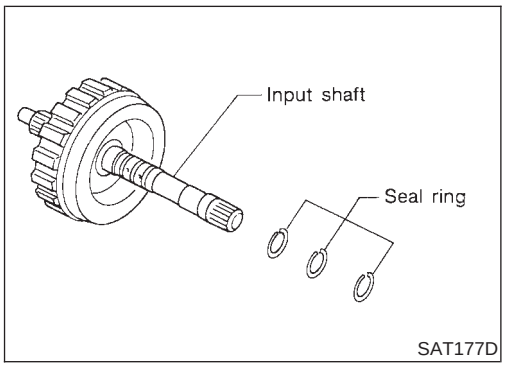

SAT177D

DISASSEMBLY

NJAT0146

1. Check operation of high clutch.

a. Apply compressed air to oil hole of input shaft.

- **Stop up a hole on opposite side of input shaft.**

b. Check to see that retaining plate moves to snap ring.

c. If retaining plate does not contact snap ring:

- D-ring might be damaged.
- Oil seal might be damaged.
- Fluid might be leaking past piston check ball.

2. Remove seal rings from input shaft.

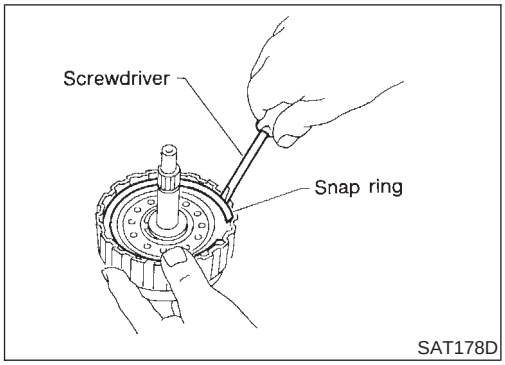

3. Remove snap ring.
4. Remove drive plates, driven plates and retaining plate.

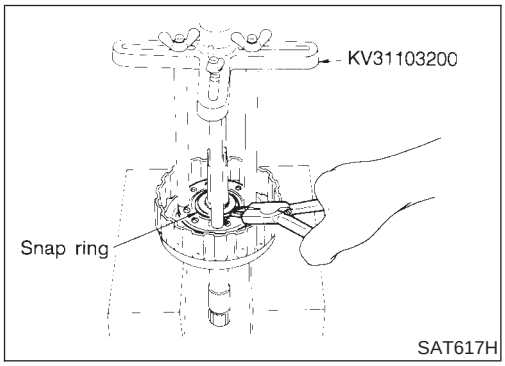

5. Set Tool on spring retainer and remove snap ring from high clutch drum while compressing return springs.
- **Set Tool directly above springs.**
- **Do not expand snap ring excessively.**
6. Remove spring retainer and return springs.

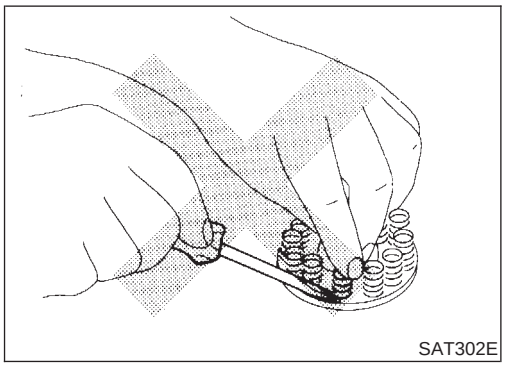

- **Do not remove return spring from spring retainer.**

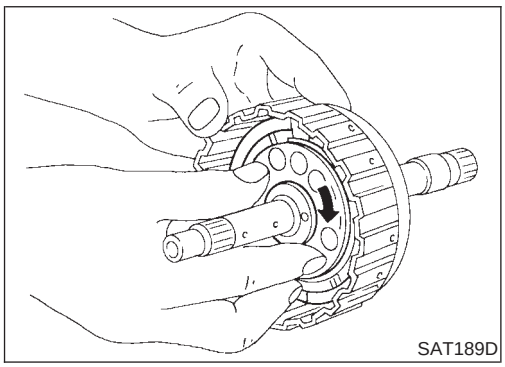

7. Remove piston from high clutch drum by turning it.

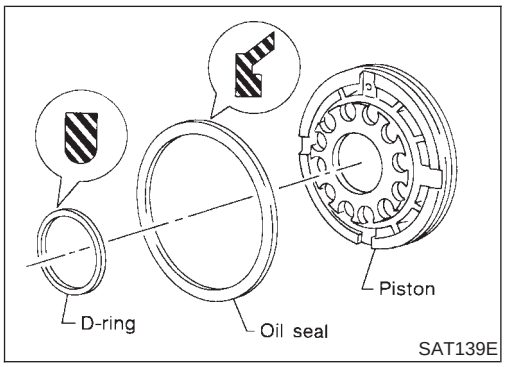

8. Remove D-ring and oil seal from piston.

INSPECTION

NJAT0147

Reverse Clutch Snap Ring, Spring Retainer and Return Springs

NJAT0147S01

- Check for deformation, fatigue or damage.
- Replace if necessary.
- **When replacing spring retainer and return springs, replace them as a set.**

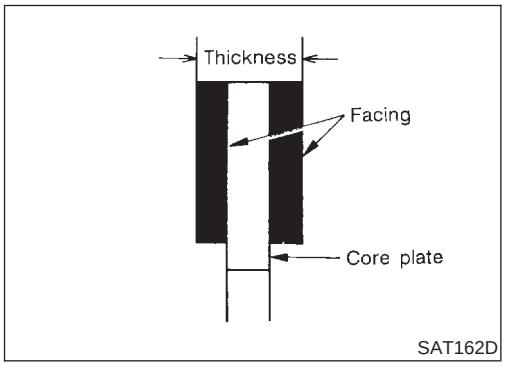

High Clutch Drive Plates

NJAT0147S02

- Check facing for burns, cracks or damage.
- Measure thickness of facing.

  Thickness of drive plate:

  Standard value: Refer to SDS, AT-475.

  Wear limit: Refer to SDS, AT-475.
- If not within wear limit, replace.

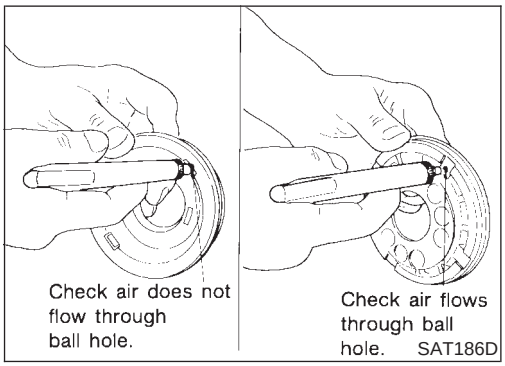

High Clutch Piston

NJAT0147S03

- Make sure check balls are not fixed.
- Apply compressed air to check ball oil hole opposite the return spring. Make sure there is no air leakage.
- Apply compressed air to oil hole on return spring side to make sure air leaks past ball.

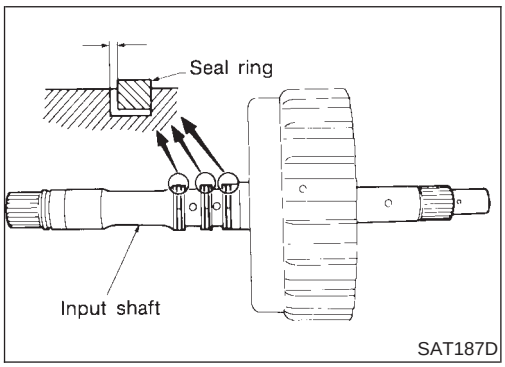

Seal Ring Clearance

NJAT0147S04

- Install new seal rings onto input shaft.
- Measure clearance between seal ring and ring groove.

  Standard clearance:

  0.08 - 0.23 mm (0.0031 - 0.0091 in)

  Allowable limit:

  0.23 mm (0.0091 in)
- If not within wear limit, replace input shaft assembly.

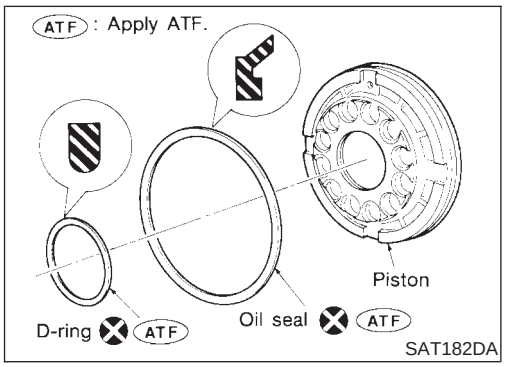

ASSEMBLY

NJAT0148

1. Install D-ring and oil seal on piston.

- **Take care with the direction of the oil seal.**
- **Apply ATF to both parts.**

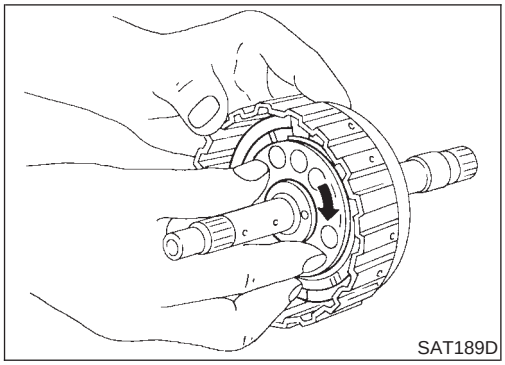

2. Install piston assembly by turning it slowly.
- **Apply ATF to inner surface of drum.**

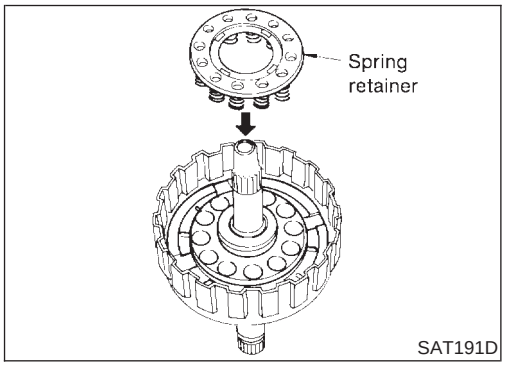

3. Install return springs and spring retainer on piston.
   For return spring, refer to AT-477.

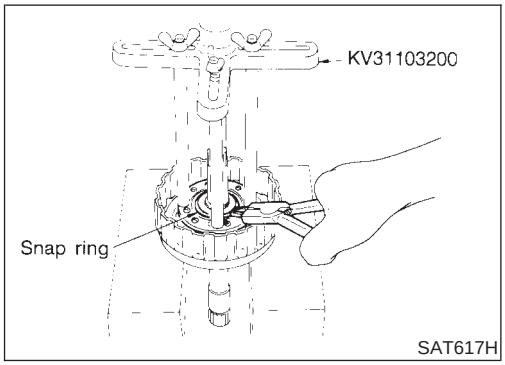

4. Set Tool on spring retainer and install snap ring while compressing return springs.
- **Set Tool directly above return springs.**

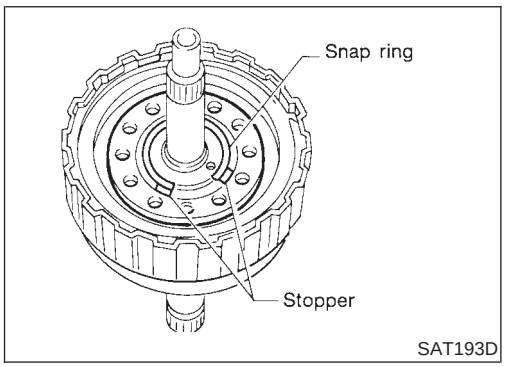

- **Do not align snap ring gap with spring retainer stopper.**

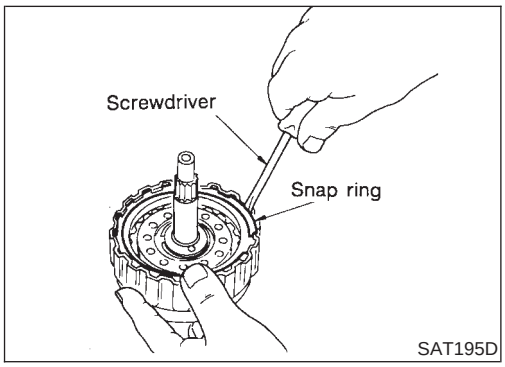

5. Install drive plates, driven plates and retaining plate.

Take care with the order and direction of plates.

6. Install snap ring.

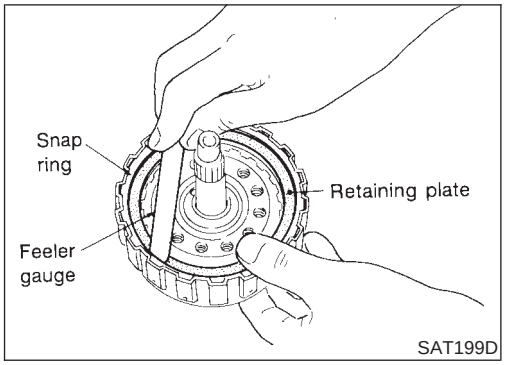

7. Measure clearance between retaining plate and snap ring. If not within allowable limit, select proper retaining plate.

   Specified clearance:

   Standard: 1.4 - 1.8 mm (0.055 - 0.071 in)

   Allowable limit: 2.4 mm (0.094 in)

   Retaining plate:

   Refer to SDS, AT-475.

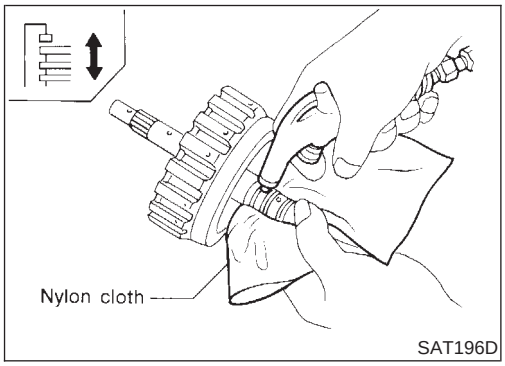

8. Check operation of high clutch.
   Refer to "High Clutch", AT-407.

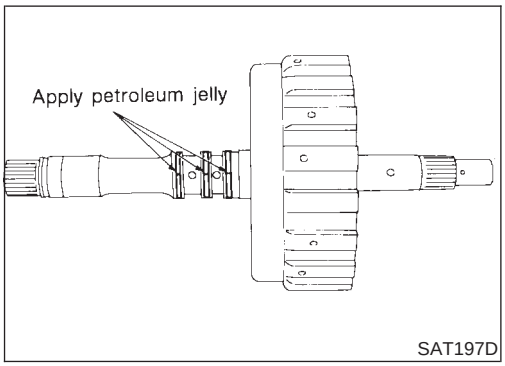

9. Install seal rings to input shaft.

- **Apply petroleum jelly to seal rings.**

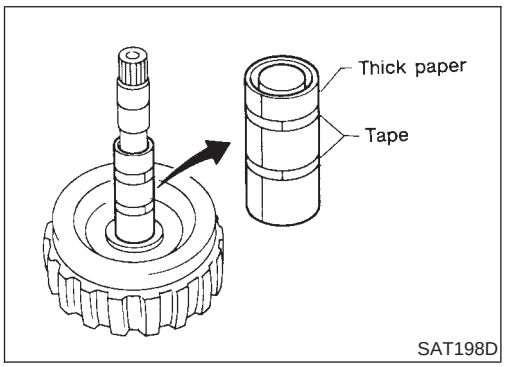

- **Roll paper around seal rings to prevent seal rings from spreading.**

Forward Clutch and Overrun Clutch

COMPONENTS

NJAT0149

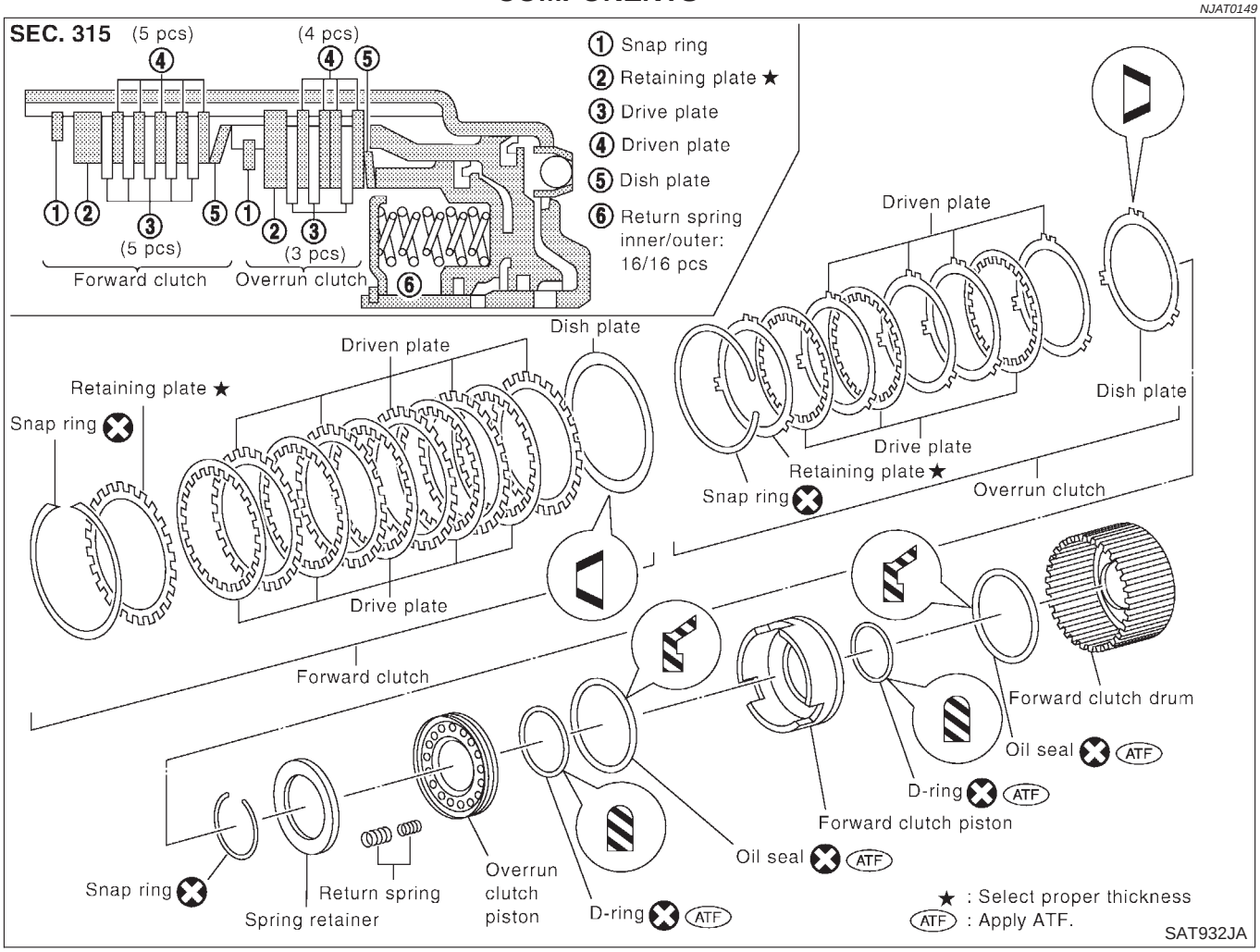

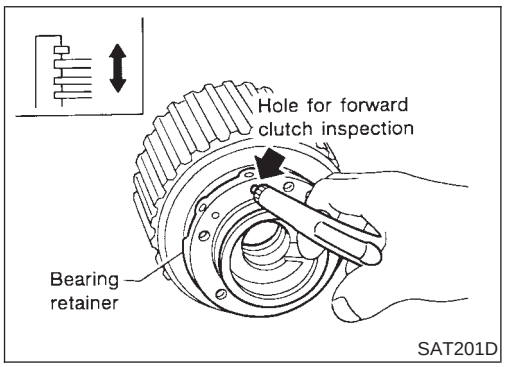

DISASSEMBLY

NJAT0150

1. Check operation of forward clutch and overrun clutch.

a. Install bearing retainer on forward clutch drum.
b. Apply compressed air to oil hole of forward clutch drum.
c. Check to see that retaining plate moves to snap ring.

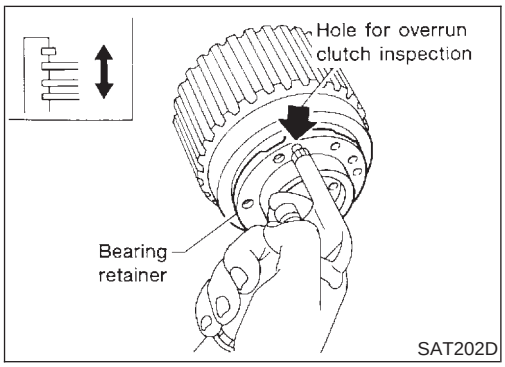

d. If retaining plate does not contact snap ring:

- D-ring might be damaged.
- Oil seal might be damaged.
- Fluid might be leaking past piston check ball.

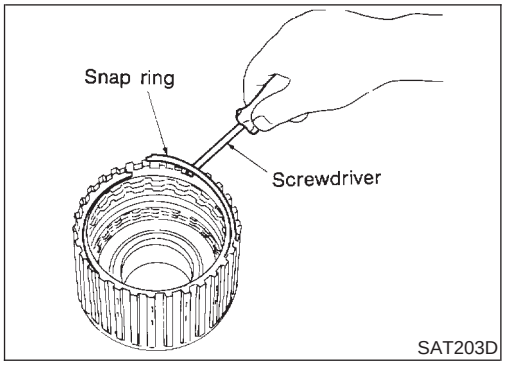

2. Remove snap ring for forward clutch.
3. Remove drive plates, driven plates, retaining plate and dish plate for forward clutch.

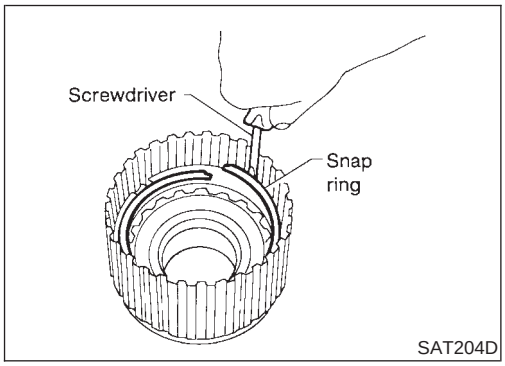

4. Remove snap ring for overrun clutch.
5. Remove drive plates, driven plates, retaining plate and dish plate for overrun clutch.

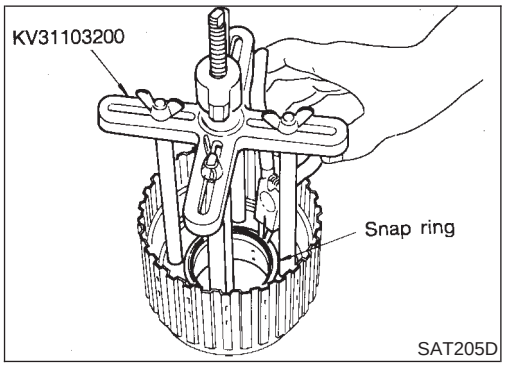

6. Set Tool on spring retainer and remove snap ring from forward clutch drum while compressing return springs.
- **Set Tool directly above return springs.**
- **Do not expand snap ring excessively.**
7. Remove spring retainer and return springs.

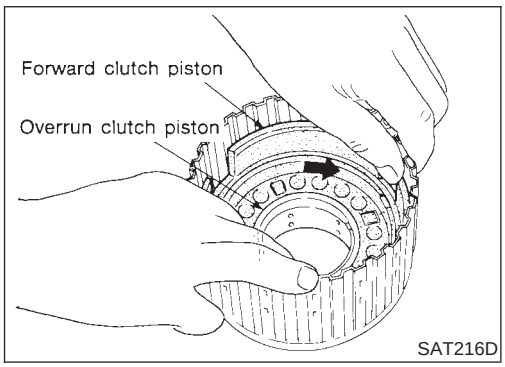

8. Remove forward clutch piston with overrun clutch piston from forward clutch drum by turning it.

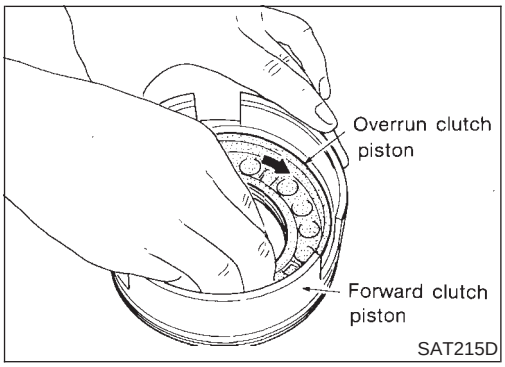

9. Remove overrun clutch piston from forward clutch piston by turning it.

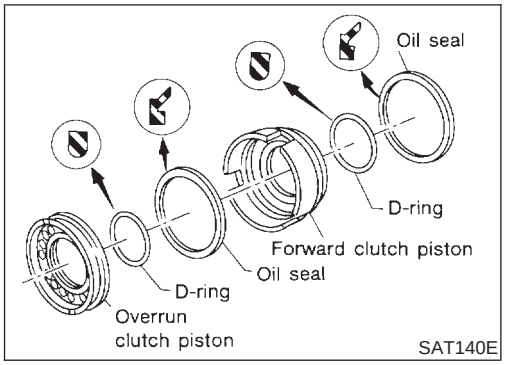

10. Remove D-rings and oil seals from forward clutch piston and overrun clutch piston.

INSPECTION

NJAT0151

Snap Rings and Spring Retainer

NJAT0151S01

- Check for deformation, fatigue or damage.

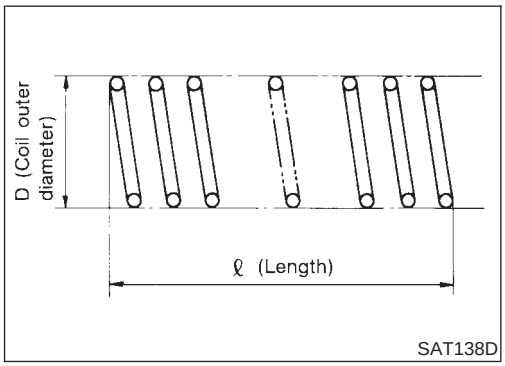

Forward Clutch and Overrun Clutch Return Springs

NJAT0151S02

- Check for deformation or damage.
- Measure free length and outer diameter.

  Inspection standard:

  Refer to SDS, AT-477.
- Replace if deformed or fatigued.

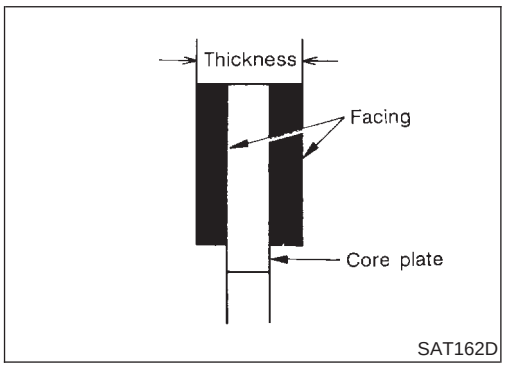

Forward Clutch and Overrun Clutch Drive Plates

NJAT0151S03

- Check facing for burns, cracks or damage.
- Measure thickness of facing.

  Thickness of drive plate:

  Forward clutch

  Standard value: 1.8 mm (0.071 in)

  Wear limit: 1.6 mm (0.063 in)

  Overrun clutch

  Standard value: 1.6 mm (0.063 in)

  Wear limit: 1.4 mm (0.055 in)
- If not within wear limit, replace.

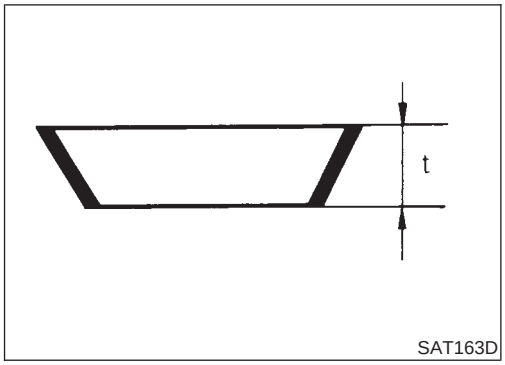

SAT163D

Forward Clutch and Overrun Clutch Dish Plates

NJAT0151S04

- Check for deformation or damage.
- Measure thickness of dish plate.

  Thickness of dish plate "t":

  Forward clutch: 2.5 mm (0.098 in)

  Overrun clutch: 2.15 mm (0.0846 in)
- If deformed or fatigued, replace.

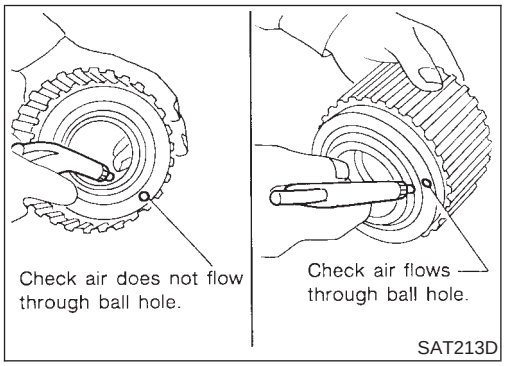

SAT213D

Forward Clutch Drum

NJAT0151S05

- Make sure check balls are not fixed.
- Apply compressed air to check ball oil hole from outside of forward clutch drum. Make sure air leaks past ball.
- Apply compressed air to oil hole from inside of forward clutch drum. Make sure there is no air leakage.

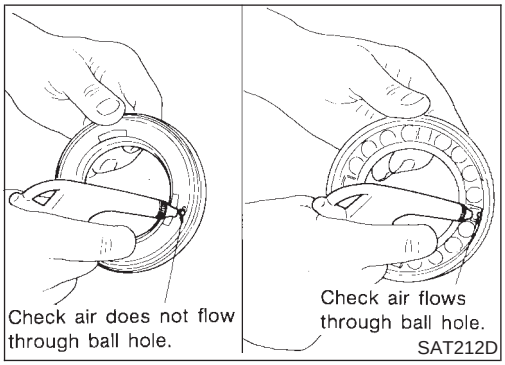

SAT212D

Overrun Clutch Piston

NJAT0151S06

- Make sure check balls are not fixed.
- Apply compressed air to check ball oil hole opposite the return spring. Make sure there is no air leakage.
- Apply compressed air to oil hole on return spring side. Make sure air leaks past ball.

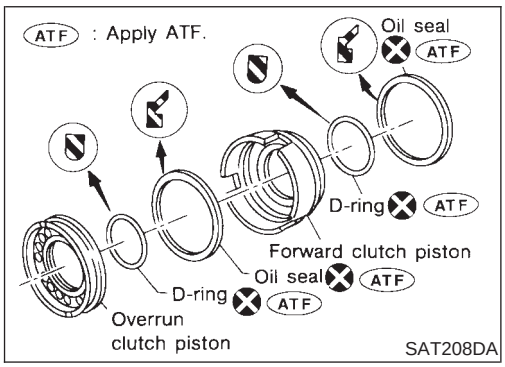

SAT208DA

ASSEMBLY

NJAT0152

1. Install D-rings and oil seals on forward clutch piston and overrun clutch piston.

- **Take care with direction of oil seal.**
- **Apply ATF to both parts.**

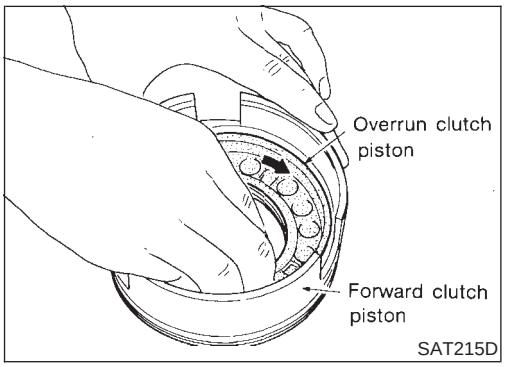

SAT215D

2. Install overrun clutch piston assembly on forward clutch piston while turning it slowly.

- **Apply ATF to inner surface of forward clutch piston.**

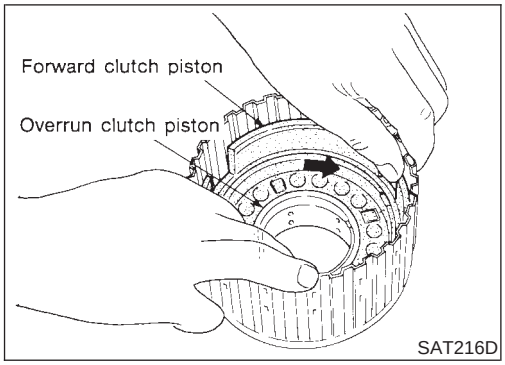

3. Install forward clutch piston assembly on forward clutch drum while turning it slowly.
- **Apply ATF to inner surface of drum.**

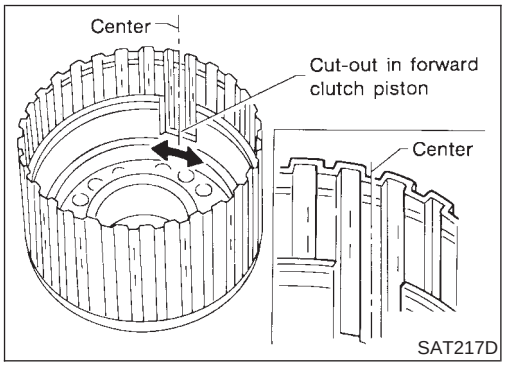

4. Align notch in forward clutch piston with groove in forward clutch drum.

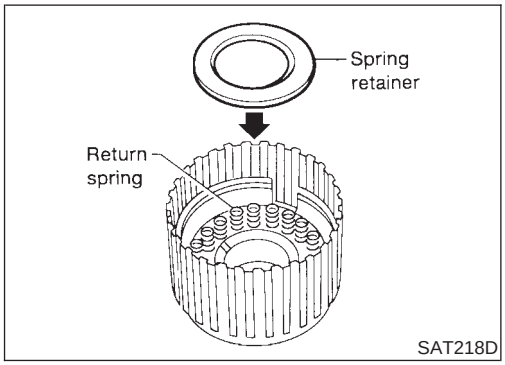

5. Install return spring on piston.
6. Install spring retainer on return springs.
   For return spring, refer to AT-477.

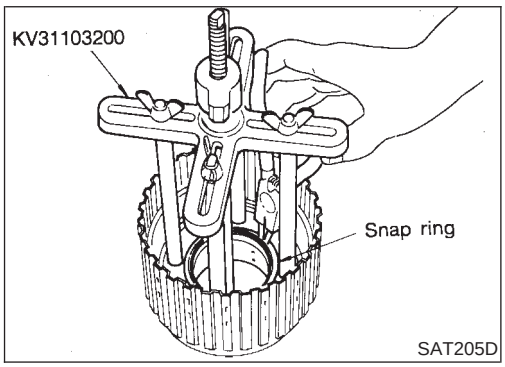

7. Set Tool on spring retainer and install snap ring while compressing return springs.
- **Set Tool directly above return springs.**

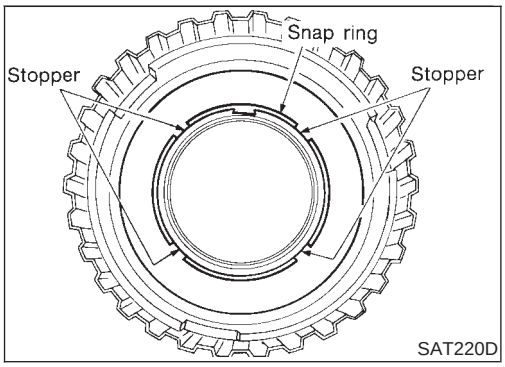

- **Do not align snap ring gap with spring retainer stopper.**

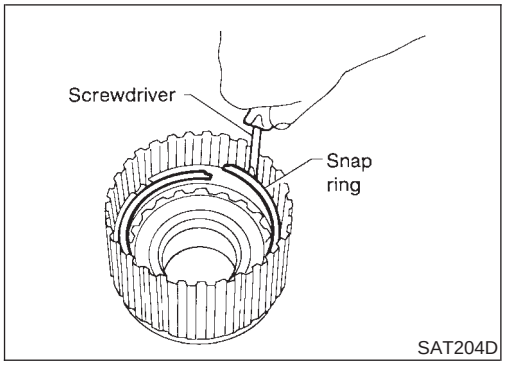

8. Install drive plates, driven plates, retaining plate and dish plate for overrun clutch.
9. Install snap ring for overrun clutch.

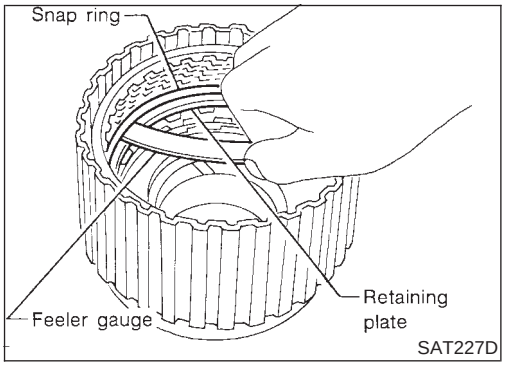

10. Measure clearance between overrun clutch retaining plate and snap ring.
    If not within allowable limit, select proper retaining plate.
    Specified clearance:
    Standard: 1.0 - 1.4 mm (0.039 - 0.055 in)
    Allowable limit: 2.0 mm (0.079 in)
    Overrun clutch retaining plate:
    Refer to SDS, AT-476.

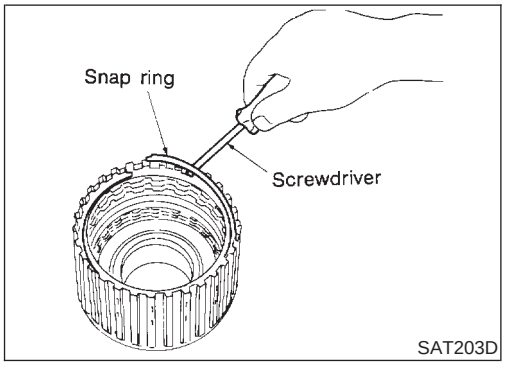

11. Install drive plates, driven plates, retaining plate and dish plate for forward clutch.

Take care with the order and direction of plates.

12. Install snap ring for forward clutch.

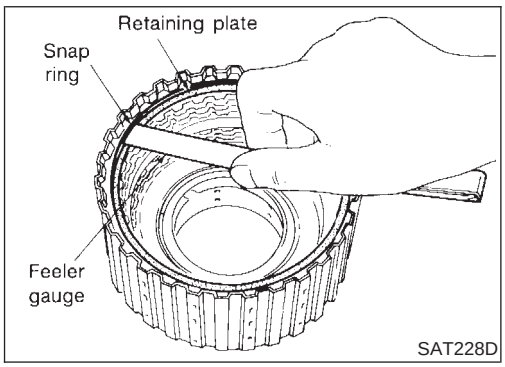

13. Measure clearance between forward clutch retaining plate and snap ring.
    If not within allowable limit, select proper retaining plate.
    Specified clearance:
    Standard: 0.45 - 0.85 mm (0.0177 - 0.0335 in)
    Allowable limit: 1.85 mm (0.0728 in)
    Forward clutch retaining plate:
    Refer to SDS, AT-476.

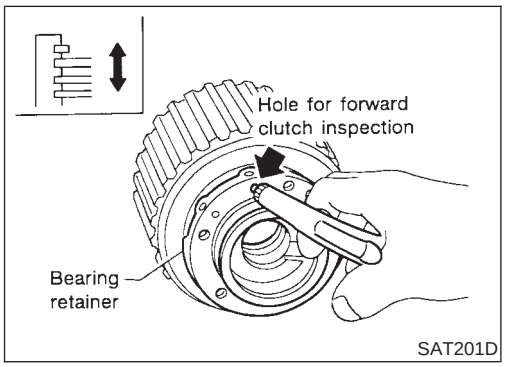

14. Check operation of forward clutch.
    Refer to "Forward Clutch and Overrun Clutch", AT-412.

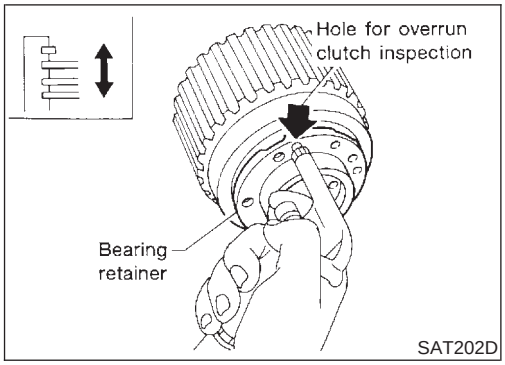

15. Check operation of overrun clutch.
    Refer to "Forward Clutch and Overrun Clutch", AT-412.

Low & Reverse Brake

COMPONENTS

=NJAT0153

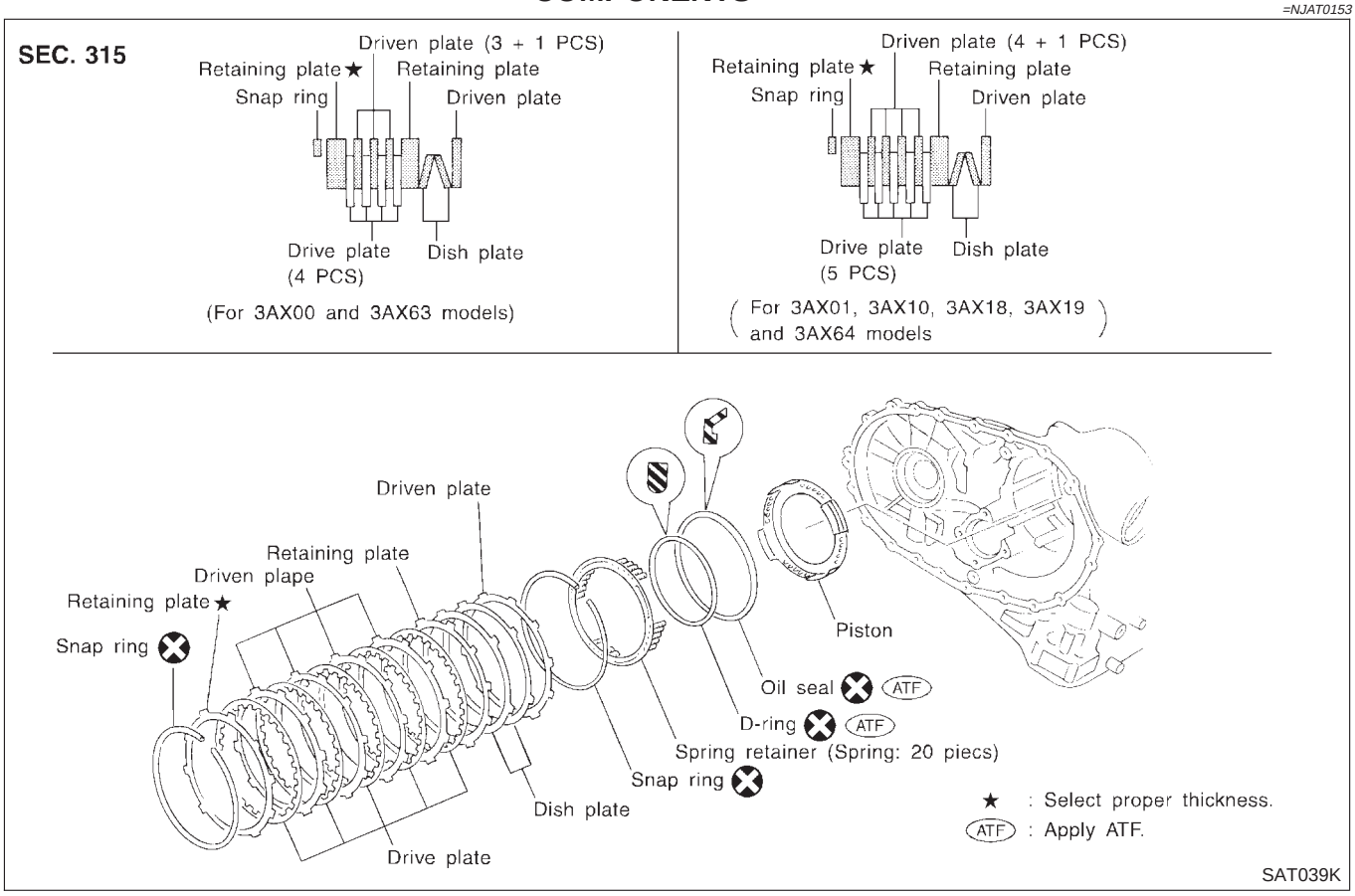

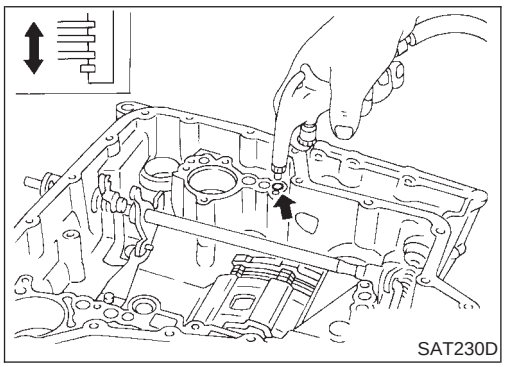

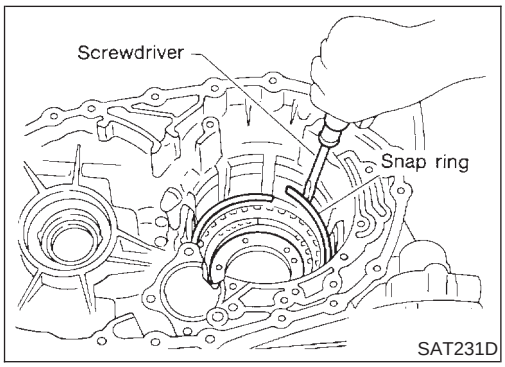

DISASSEMBLY

NJAT0154

1. Check operation of low & reverse brake.

a. Apply compressed air to oil hole of transmission case.

b. Check to see that retaining plate moves to snap ring.

c. If retaining plate does not contact snap ring:

- D-ring might be damaged.
- Oil seal might be damaged.
- Fluid might be leaking past piston check ball.

2. Stand transmission case.
3. Remove snap ring.
4. Remove drive plates, driven plates, retaining plate from transmission case.

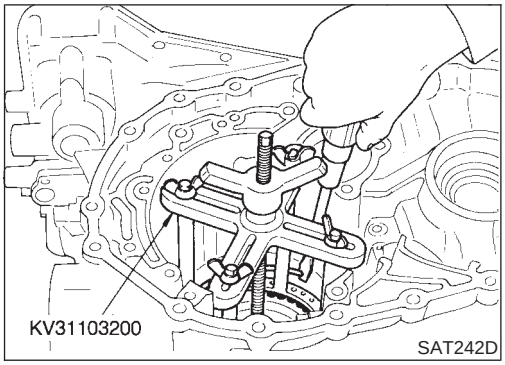

5. Set Tool on spring retainer and remove snap ring while compressing return springs.
- **Set Tool directly above return springs.**
- **Do not expand snap ring excessively.**
6. Remove spring retainer and return springs.

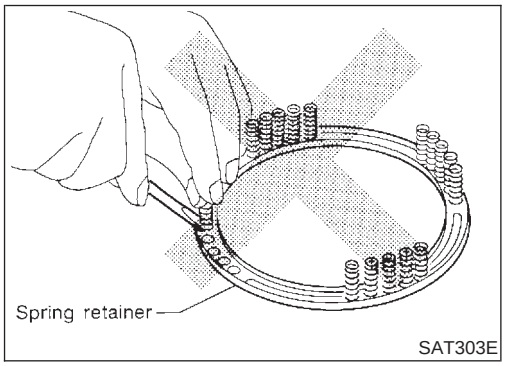

- **Do not remove return springs from spring retainer.**

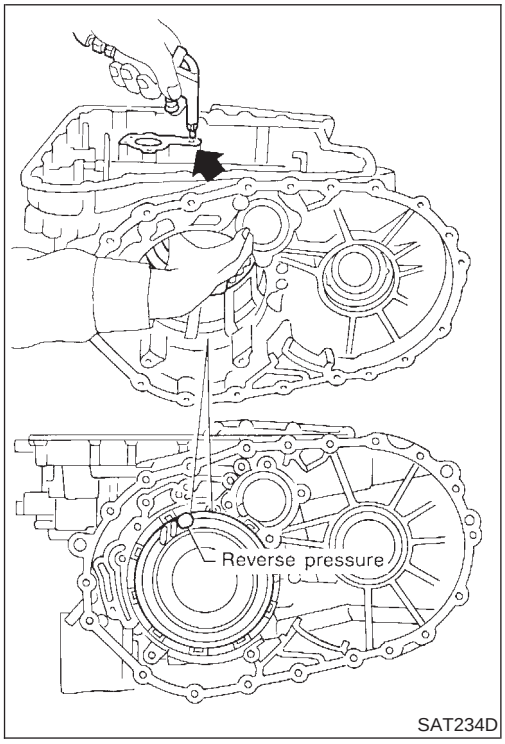

7. Apply compressed air to oil hole of transmission case while holding piston.
8. Remove piston from transmission case by turning it.

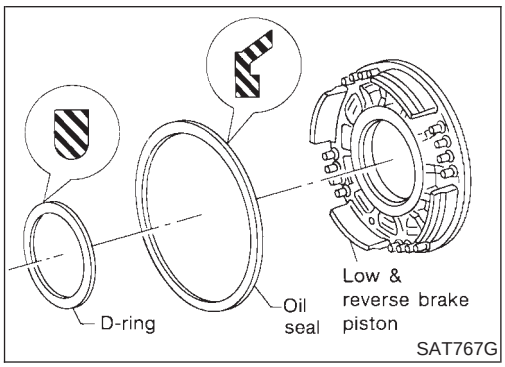

9. Remove D-ring and oil seal from piston.

INSPECTION

NJAT0155

Low & Reverse Clutch Snap Ring, Spring Retainer and Return Springs

NJAT0155S01

- Check for deformation, fatigue or damage.
- Replace if necessary.
- **When replacing spring retainer and return springs, replace them as a set.**

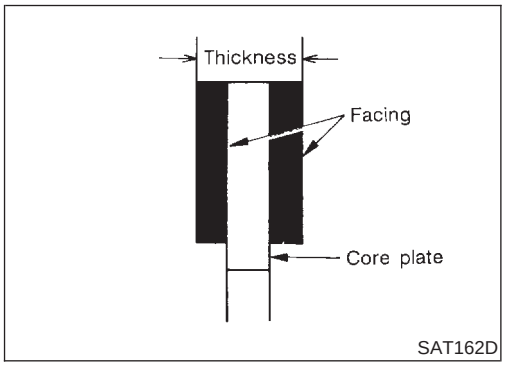

SAT162D

Low & Reverse Brake Drive Plates

NJAT0155S02

- Check facing for burns, cracks or damage.
- Measure thickness of facing.

  Thickness of drive plate:

  Standard value: 2.0 mm (0.079 in)

  Wear limit: 1.8 mm (0.071 in)
- If not within wear limit, replace.

ASSEMBLY

NJAT0156

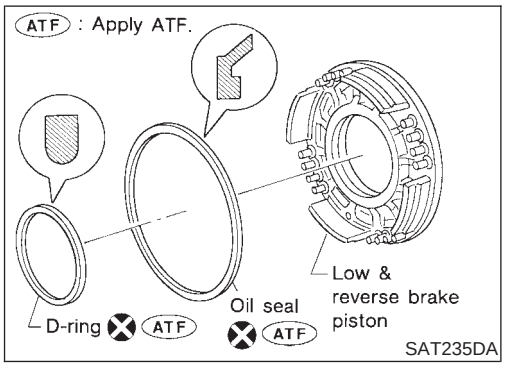

SAT235DA

1. Install D-ring and oil seal on piston.
- **Take care with the direction of the oil seal.**
- **Apply ATF to both parts.**

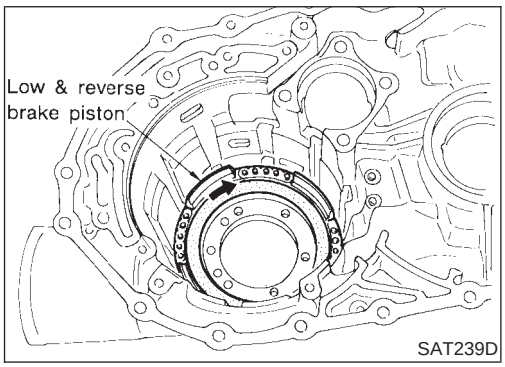

SAT239D

2. Stand transmission case.
3. Install piston assembly on transmission case while turning it slowly.
- **Apply ATF to inner surface of transmission case.**

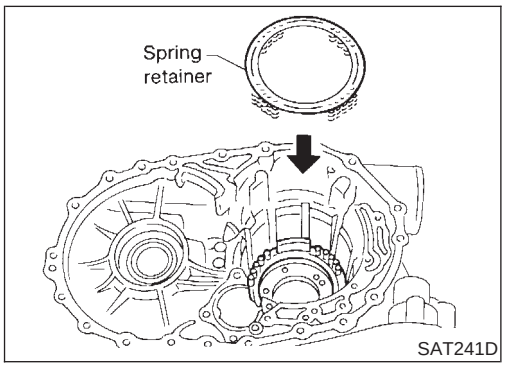

SAT241D

4. Install return springs and spring retainer on piston.
   For return spring, refer to AT-477.

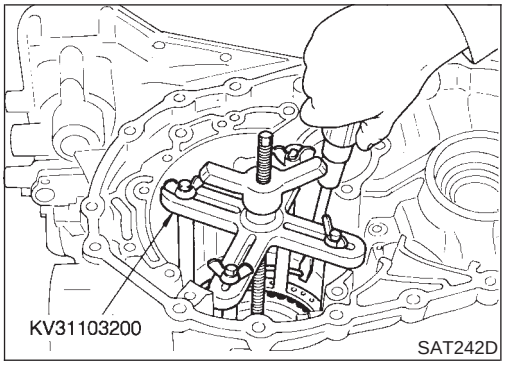

5. Install snap ring while compressing return springs.
- **Set Tool directly above return springs.**

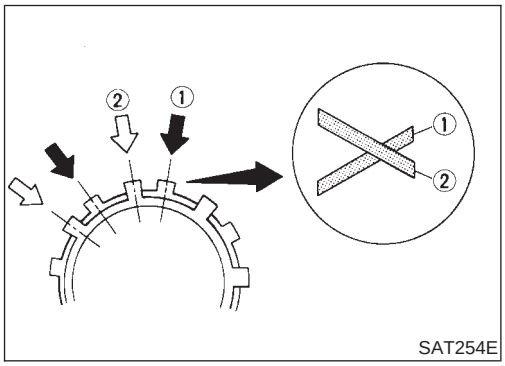

6. Install drive plates, driven plates, retaining plates and dished plates.
- **Do not align the projections on the two dished plates.**
- **Make sure to put the plates in the correct order and direction.**

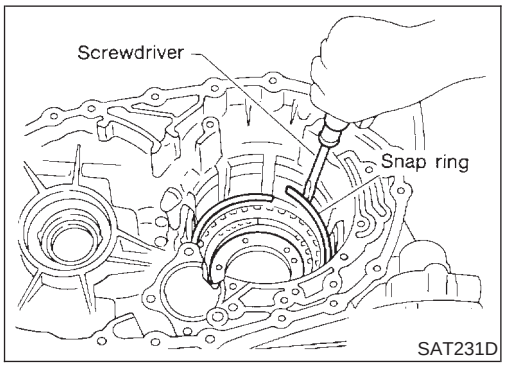

7. Install snap ring.

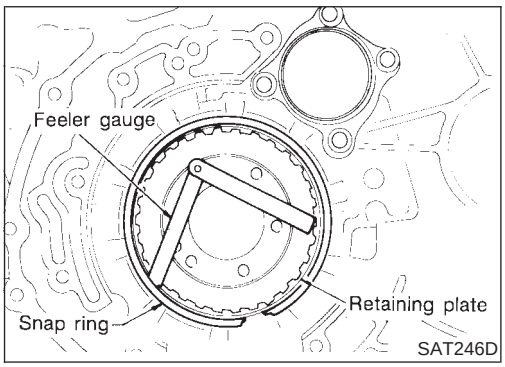

8. Measure clearance between retaining plate and snap ring. If not within allowable limit, select proper retaining plate (front side).

   Specified clearance:

   Standard: 1.4 - 1.8 mm (0.055 - 0.071 in)

   Allowable limit:

   2.8 mm (0.110 in)

   Retaining plate:

   Refer to SDS, AT-476.

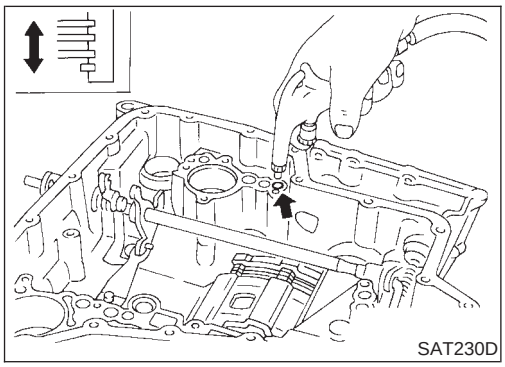

9. Check operation of low & reverse brake.
   Refer to "DISASSEMBLY", AT-419.

Rear Internal Gear, Forward Clutch Hub and Overrun Clutch Hub

COMPONENTS

NJAT0157

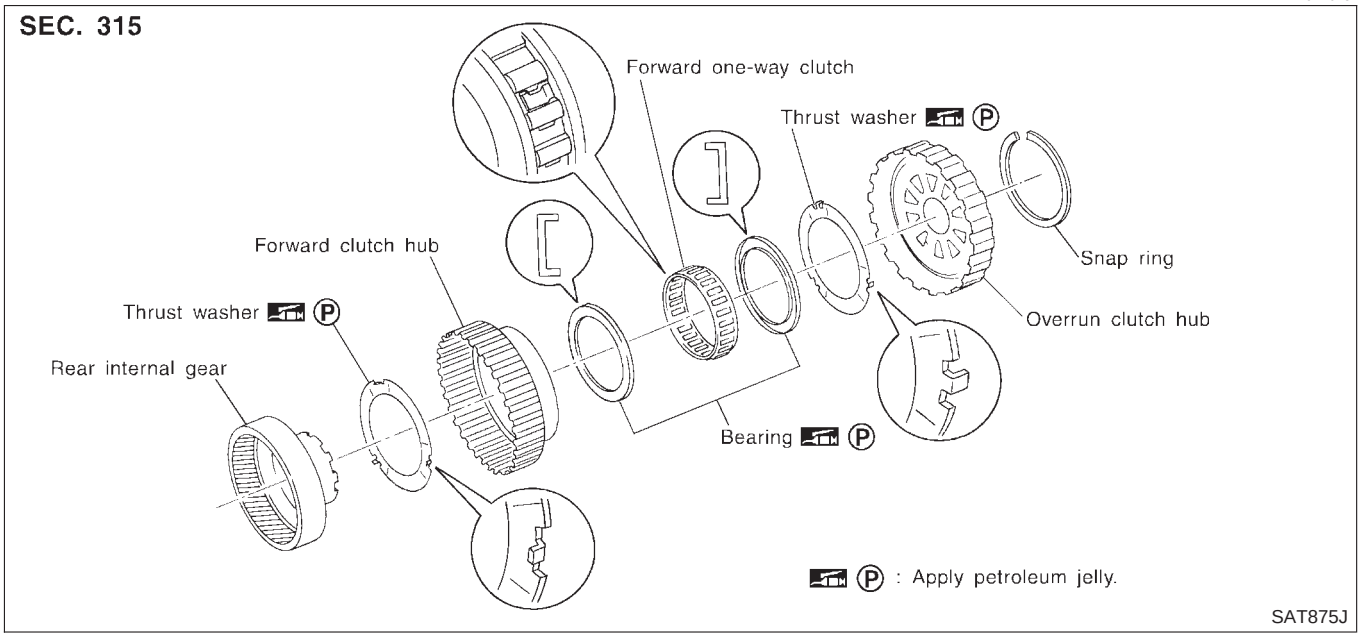

DISASSEMBLY

NJAT0158

1. Remove snap ring from overrun clutch hub.
2. Remove overrun clutch hub from forward clutch hub.

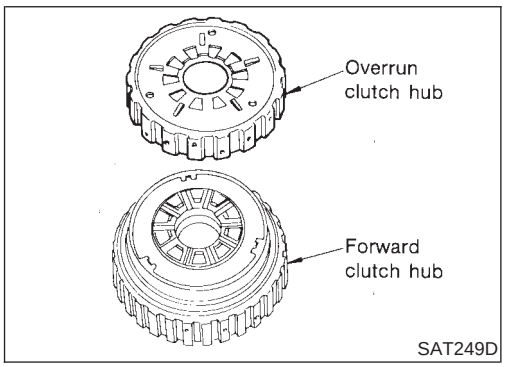

3. Remove thrust washer from forward clutch hub.

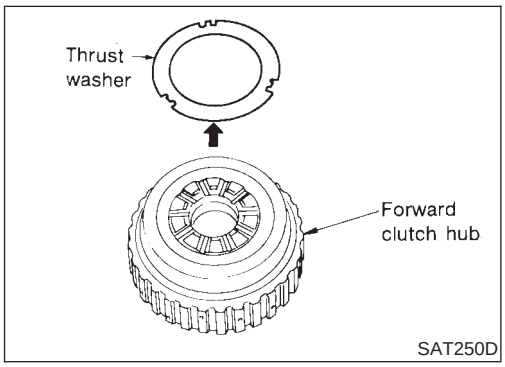

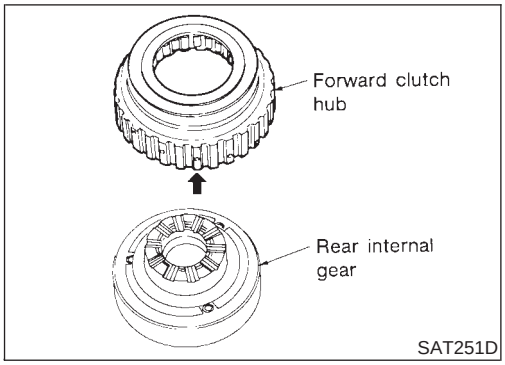

4. Remove forward clutch hub from rear internal gear.

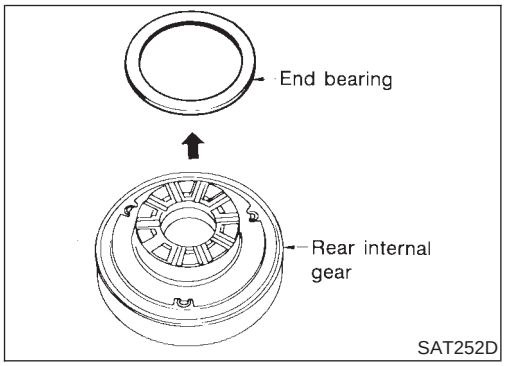

5. Remove end bearing from rear internal gear.

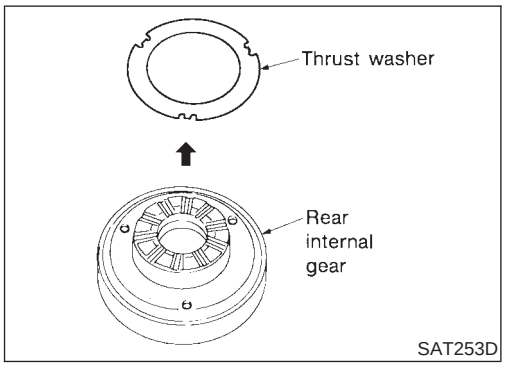

6. Remove thrust washer from rear internal gear.

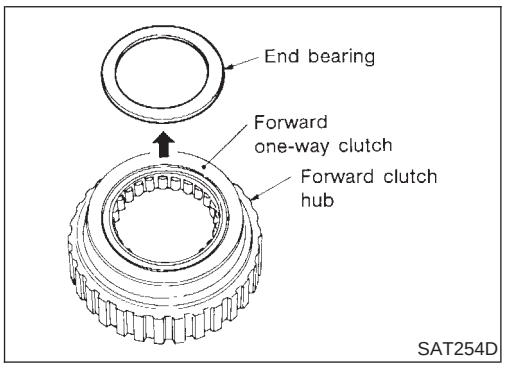

7. Remove end bearing from forward one-way clutch.

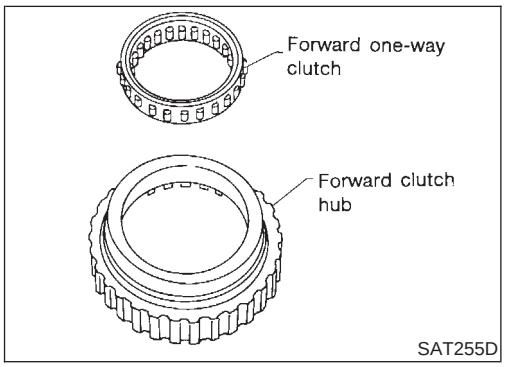

8. Remove one-way clutch from forward clutch hub.

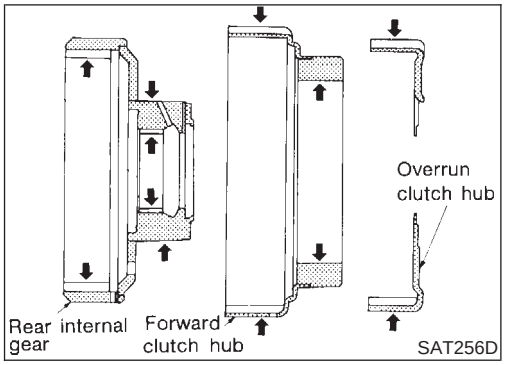

INSPECTION

NJAT0159

Rear Internal Gear, Forward Clutch Hub and Overrun Clutch Hub

NJAT0159S01

- Check rubbing surfaces for wear or damage.

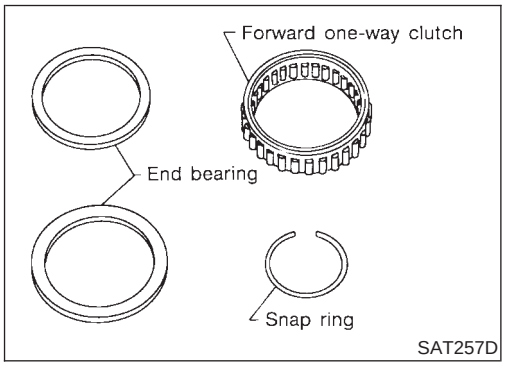

Snap Ring, End Bearings and Forward One-way Clutch

NJAT0159S02

- Check snap ring and end bearings for deformation and damage.
- Check forward one-way clutch for wear and damage.

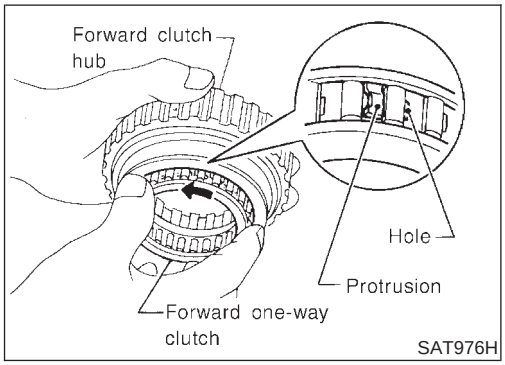

ASSEMBLY

NJAT0160

1. Install forward one-way clutch on forward clutch.
- **Take care with the direction of forward one-way clutch.**

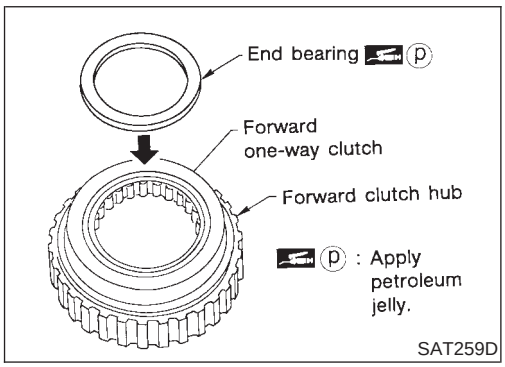

2. Install end bearing on forward one-way clutch.
- **Apply petroleum jelly to end bearing.**

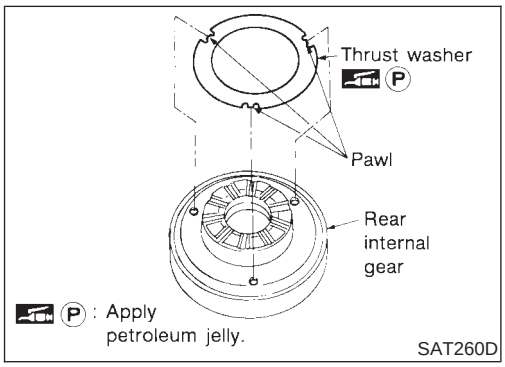

3. Install thrust washer on rear internal gear.
- **Apply petroleum jelly to thrust washer.**
- **Align pawls of thrust washer with holes of rear internal gear.**

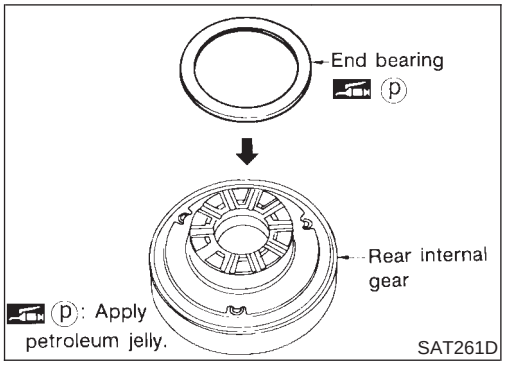

4. Install end bearing on rear internal gear.
- **Apply petroleum jelly to end bearing.**

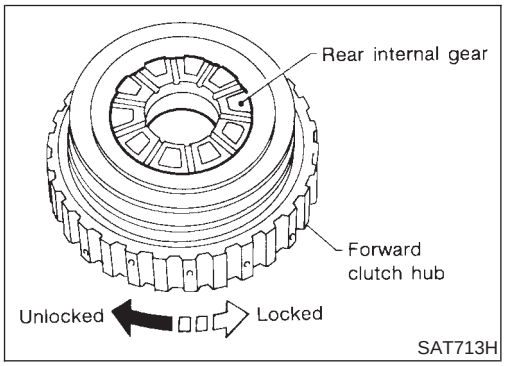

5. Install forward clutch hub on rear internal gear.
- **Check operation of forward one-way clutch.**
  Hold rear internal gear and turn forward clutch hub. Check forward clutch hub for correct locking and unlocking directions.
- **If not as shown in illustration, check installation direction of forward one-way clutch.**

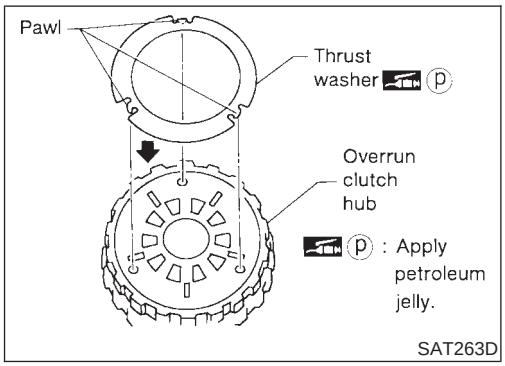

6. Install thrust washer and overrun clutch hub.
- **Apply petroleum jelly to thrust washer.**
- **Align pawls of thrust washer with holes of overrun clutch hub.**

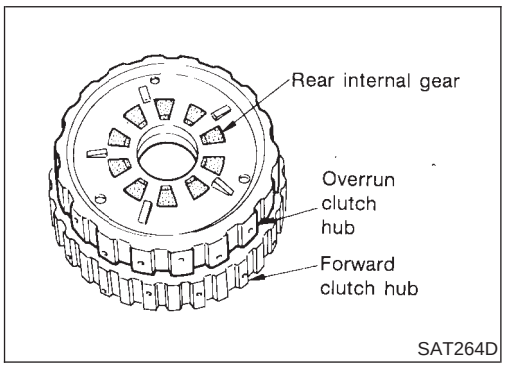

7. Install overrun clutch hub on rear internal gear.
- **Align projections of rear internal gear with holes of overrun clutch hub.**

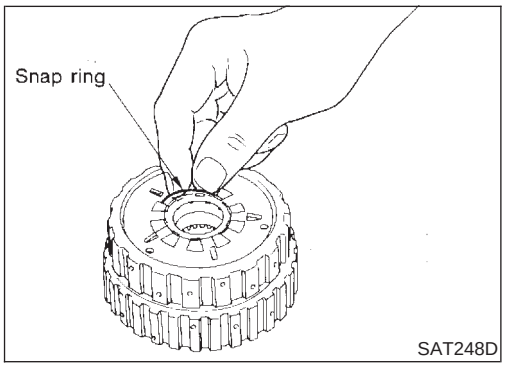

8. Install snap ring to groove of rear internal gear.

O/Shaft, O/Gear, I/Gear, R/Pinion Gear and B/Retainer — 3AX00, 01, 19, 63 and 64 models

COMPONENTS

NJAT0239

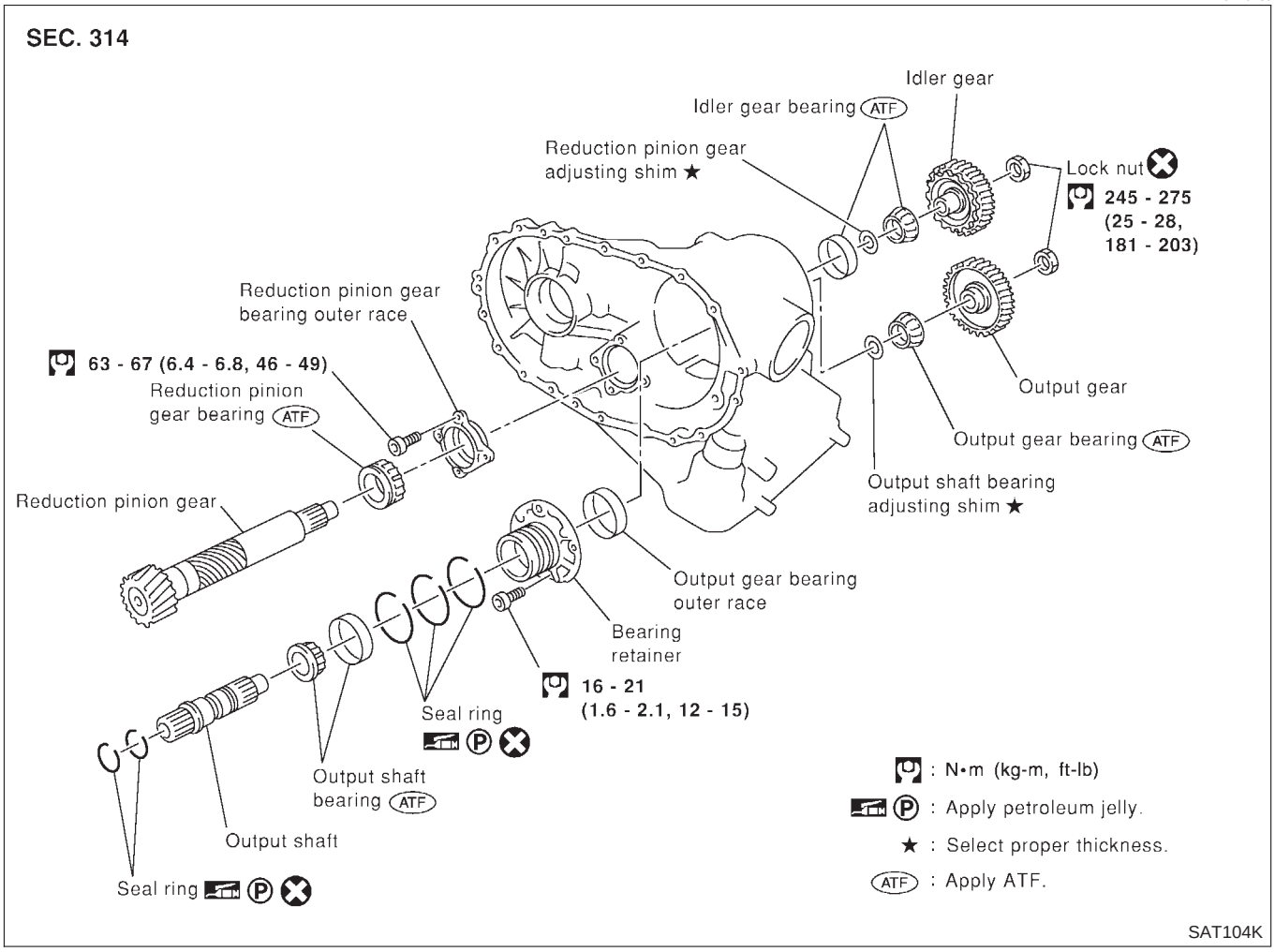

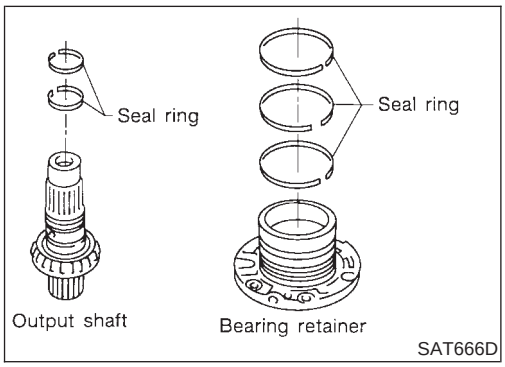

DISASSEMBLY

NJAT0240

1. Remove seal rings from output shaft and bearing retainer.

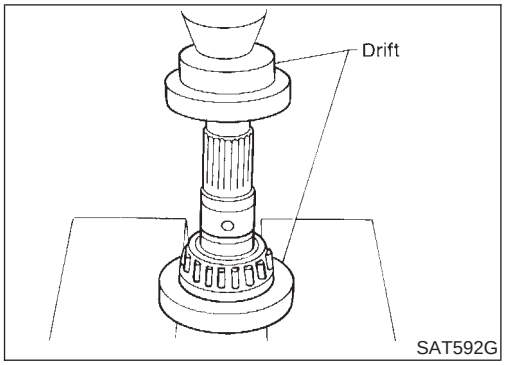

2. Press out output shaft bearing inner race.

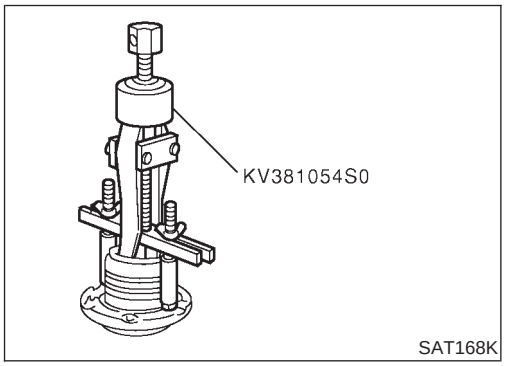

3. Remove output shaft bearing outer race from bearing retainer.

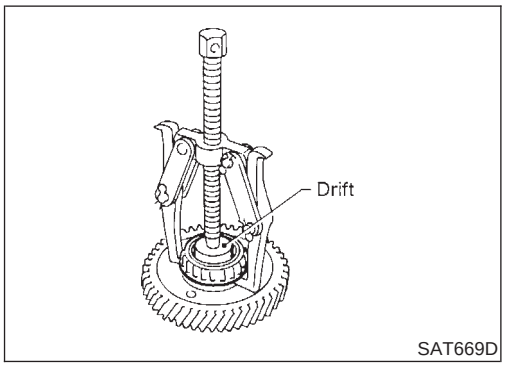

4. Remove output gear bearing inner race.

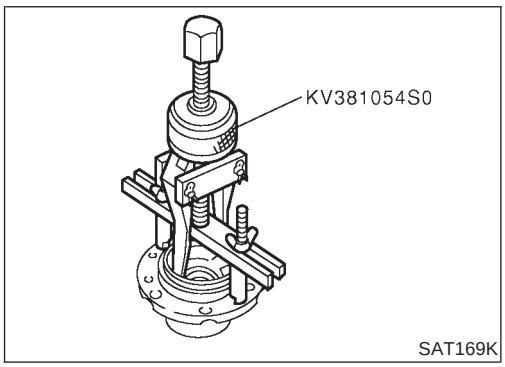

5. Remove output gear bearing outer race from bearing retainer.

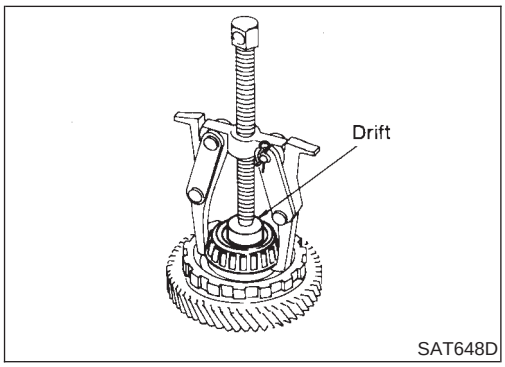

6. Remove idler gear bearing inner race.

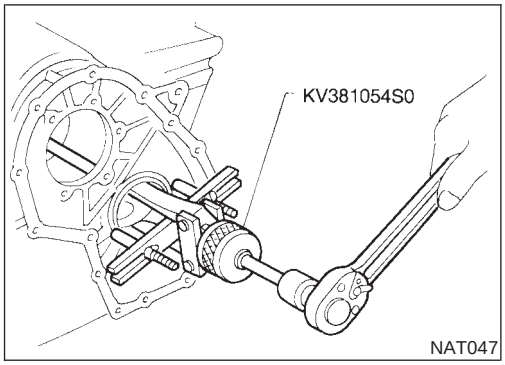

7. Remove idler gear bearing outer race from transmission case.

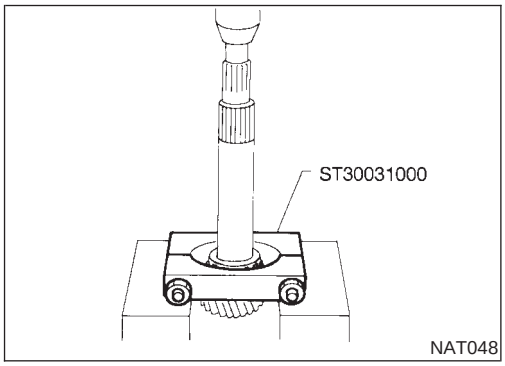

8. Press out reduction pinion gear bearing from reduction pinion gear.

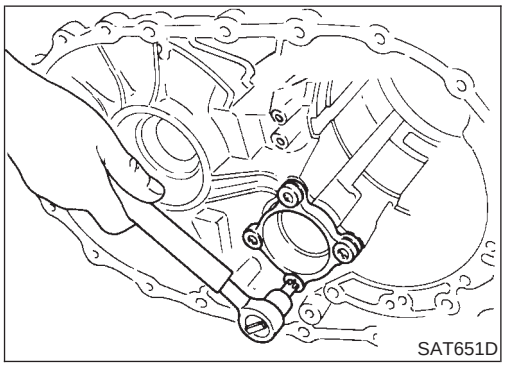

9. Remove reduction pinion gear bearing outer race from transmission case.

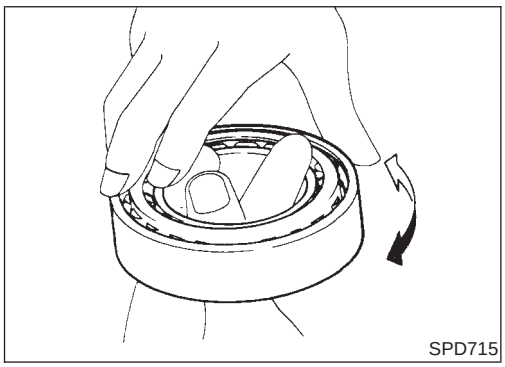

INSPECTION

NJAT0241

Output Shaft, Output Gear, Idler Gear and Reduction Pinion Gear

NJAT0241S01

- Check shafts for cracks, wear or bending.
- Check gears for wear, chips and cracks.

Bearings

NJAT0241S02

- Make sure bearings roll freely and are free from noise, cracks, pitting or wear.
- **When replacing taper roller bearing, replace inner and outer race as a set.**

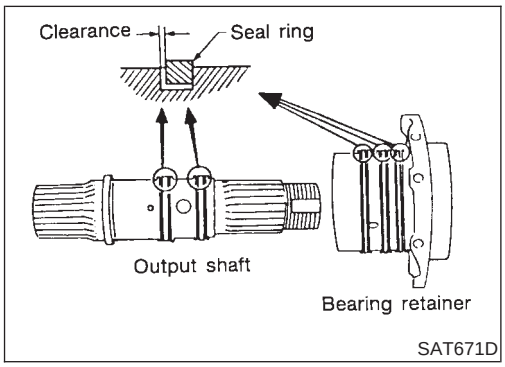

Seal Ring Clearance

NJAT0241S03

- Install new seal rings to output shaft.
- Measure clearance between seal ring and ring groove of output shaft.

  Standard clearance:

  0.10 - 0.25 mm (0.0039 - 0.0098 in)

  Wear limit:

  0.25 mm (0.0098 in)
- If not within wear limit, replace output shaft.
- Install new seal rings to bearing retainer.

- Measure clearance between seal ring and ring groove of bearing retainer.

  Standard clearance:

  0.10 - 0.25 mm (0.0039 - 0.0098 in)

  Wear limit:

  0.25 mm (0.0098 in)

- If not within wear limit, replace bearing retainer.

ASSEMBLY

NJAT0242

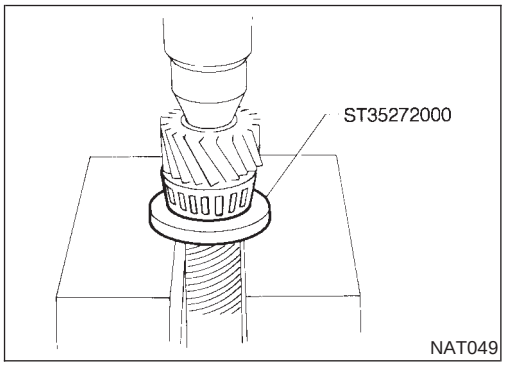

1. Press reduction pinion gear bearing on reduction pinion gear.

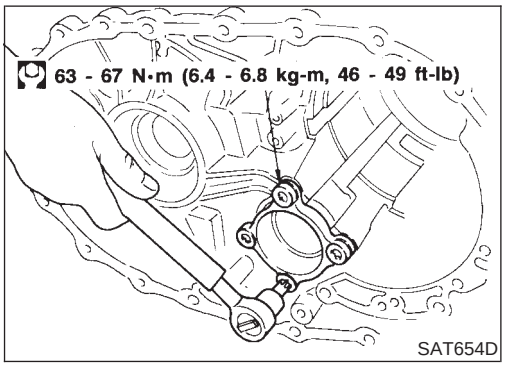

2. Install reduction pinion gear bearing outer race on transmission case.

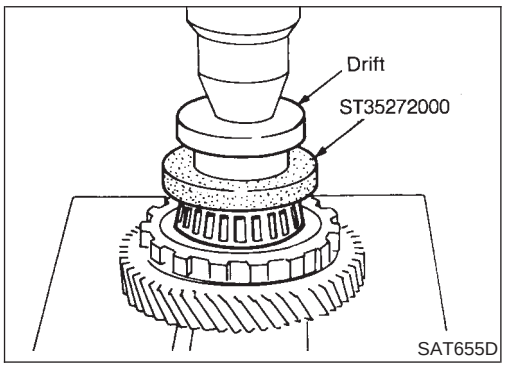

3. Press idler gear bearing inner race on idler gear.

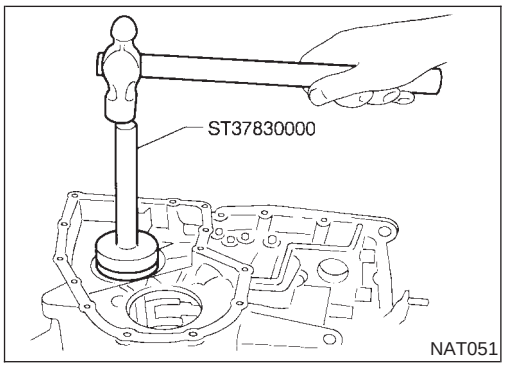

4. Install idler gear bearing outer race on transmission case.

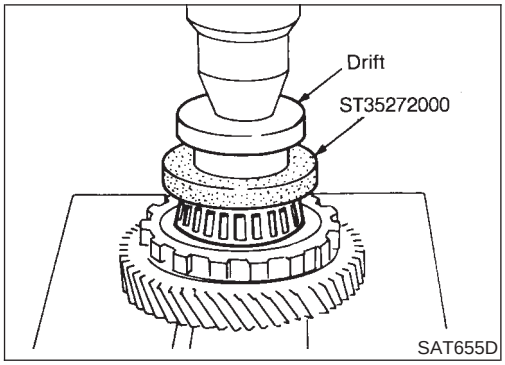

5. Press output gear bearing inner race on output gear.

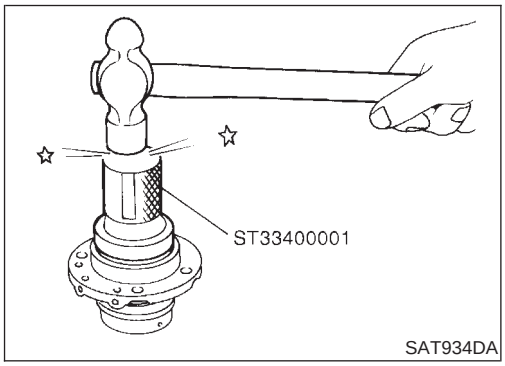

6. Install output gear bearing outer race on bearing retainer.

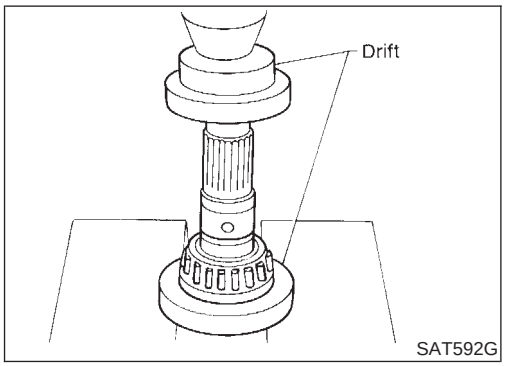

7. Press output shaft bearing inner race on output shaft.

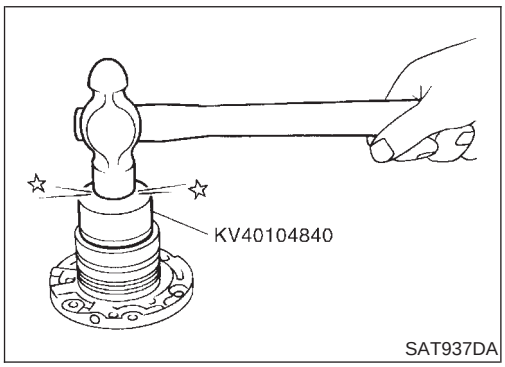

8. Install output shaft bearing outer race on bearing retainer.

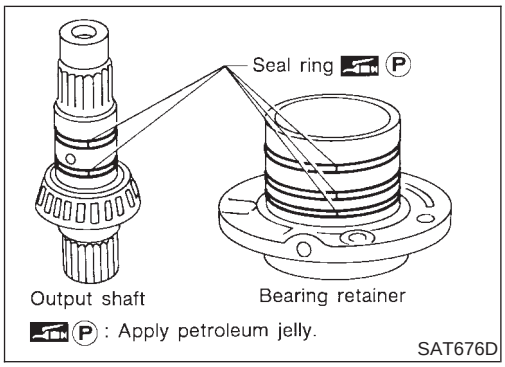

9. Install new seal rings onto output shaft and bearing retainer.
- **Apply petroleum jelly to seal rings.**

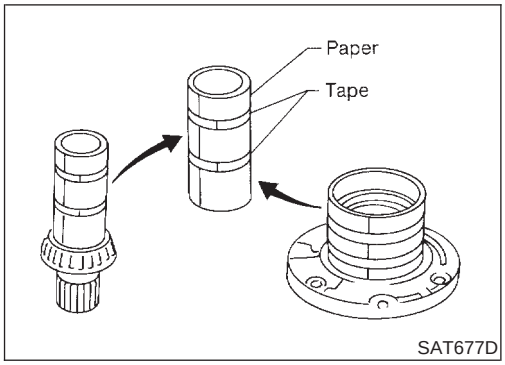

10. Roll paper around seal rings to prevent seal rings from spreading.

Output Shaft, Idler Gear, Reduction Pinion Gear and Bearing Retainer — 3AX10 and 3AX18 models

COMPONENTS

NJAT0161

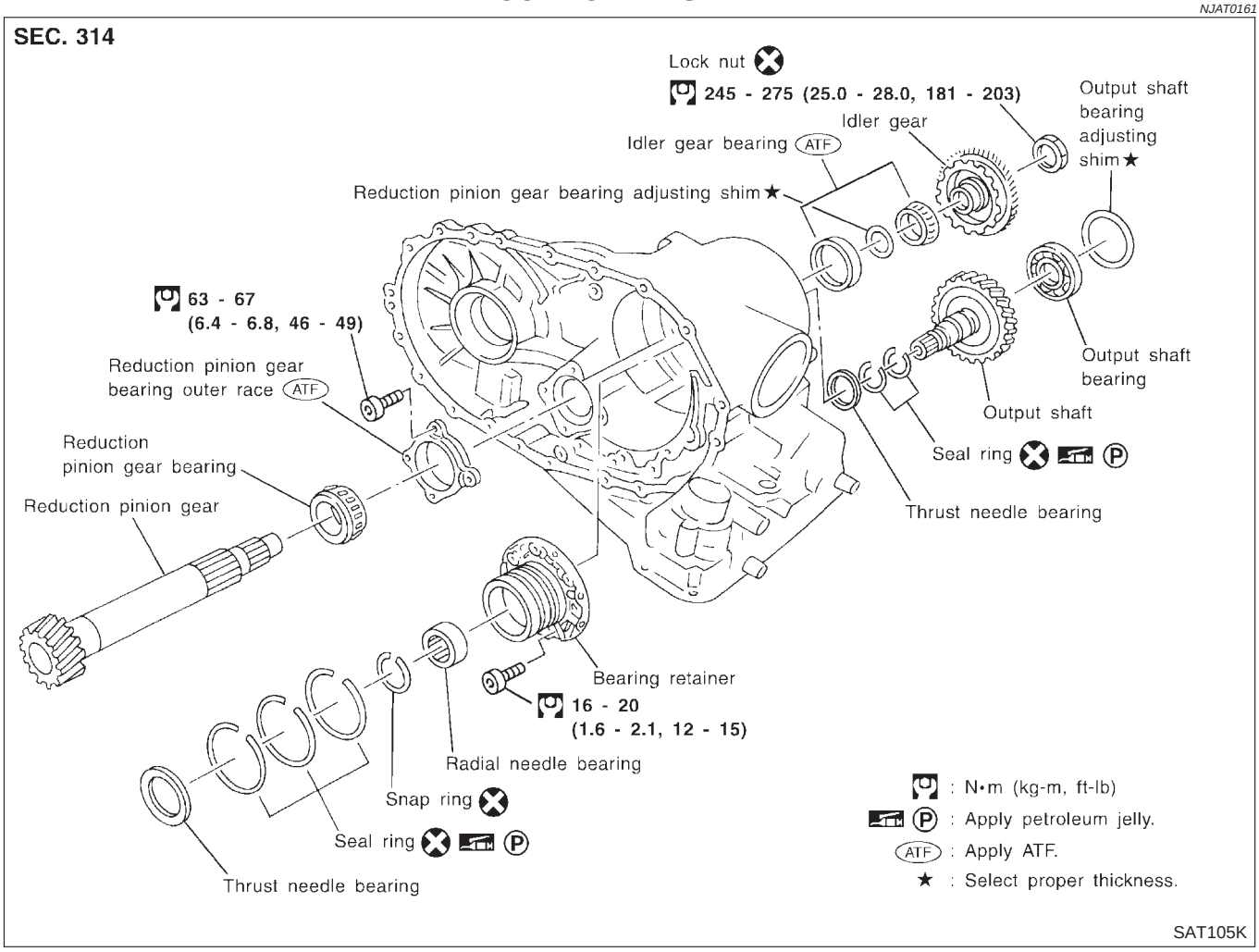

DISASSEMBLY

NJAT0162

1. Remove seal rings from output shaft and bearing retainer.

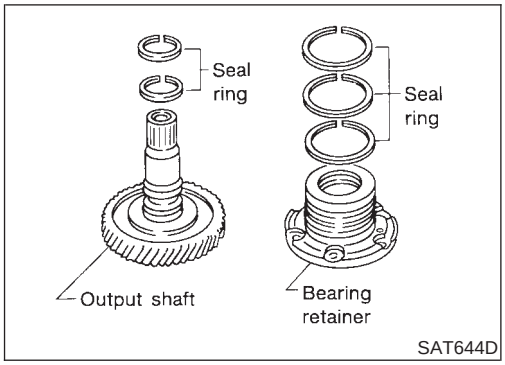

SAT644D

2. Remove output shaft bearing with screwdrivers.
- **Always replace bearing with a new one when removed.**
- **Do not damage output shaft.**

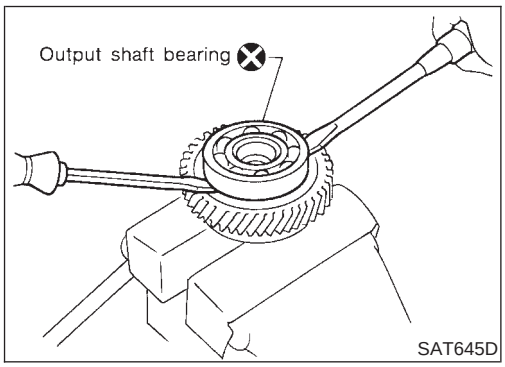

SAT645D

3. Remove snap ring from bearing retainer.

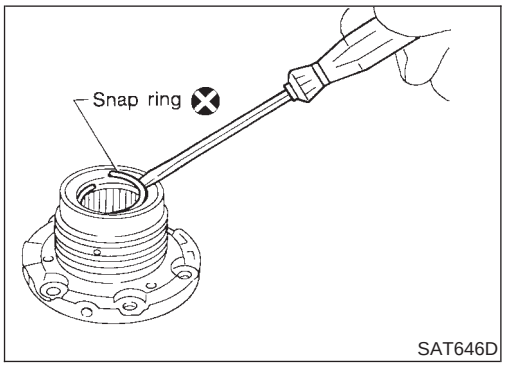

SAT646D

4. Remove needle bearing from bearing retainer.

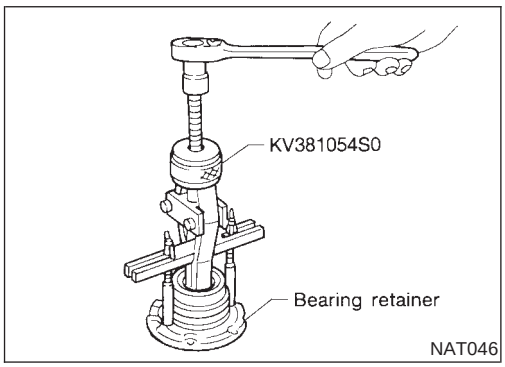

NAT046

5. Remove idler gear bearing inner race from idler gear.

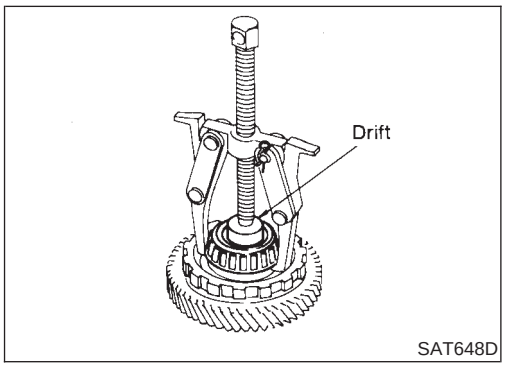

SAT648D

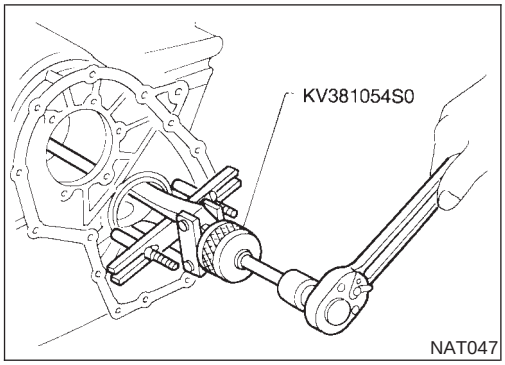

6. Remove idler gear bearing outer race from transmission case.

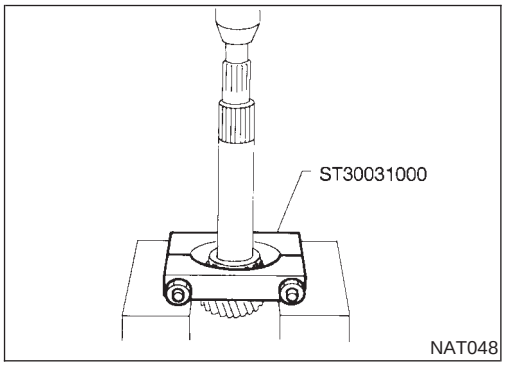

7. Press out reduction pinion gear bearing from reduction pinion gear.

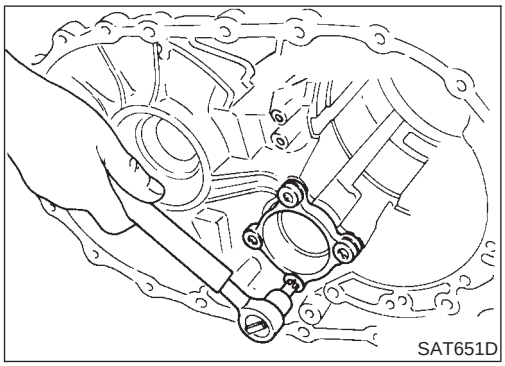

8. Remove reduction pinion gear bearing outer race from transmission case.

INSPECTION

NJAT0163

Output Shaft, Idler Gear and Reduction Pinion Gear

NJAT0163S01

- Check shafts for cracks, wear or bending.
- Check gears for wear, chips and cracks.

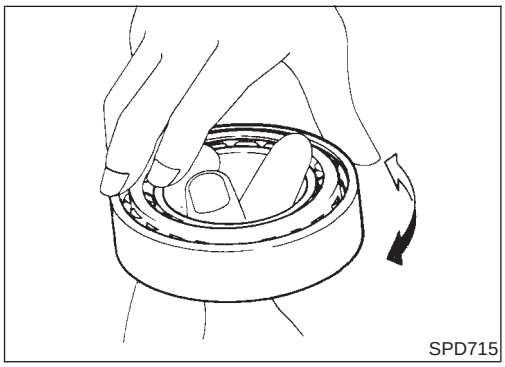

Bearing

NJAT0163S02

- Make sure bearings roll freely and are free from noise, cracks, pitting or wear.
- **When replacing taper roller bearing, replace outer and inner race as a set.**

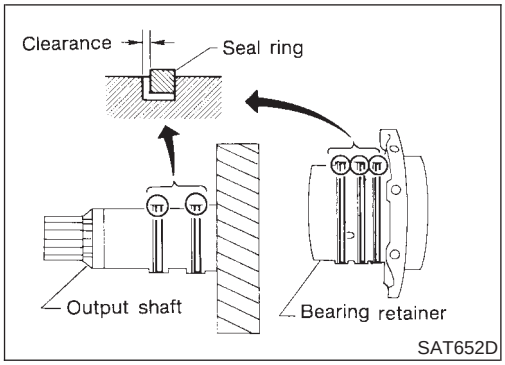

Seal Ring Clearance

NJAT0163S03

- Install new seal rings to output shaft.
- Measure clearance between seal ring and ring groove of output shaft.

  Standard clearance:
  0.10 - 0.25 mm (0.0039 - 0.0098 in)
  Allowable limit:
  0.25 mm (0.0098 in)
- If not within allowable limit, replace output shaft.
- Install new seal rings to bearing retainer.
- Measure clearance between seal ring and ring groove of bearing retainer.

  Standard clearance:
  0.10 - 0.25 mm (0.0039 - 0.0098 in)
  Allowable limit:
  0.25 mm (0.0098 in)
- If not within allowable limit, replace bearing retainer.

ASSEMBLY

NJAT0164

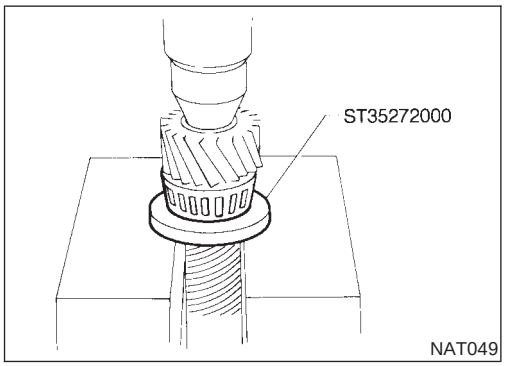

1. Press reduction pinion gear bearing on reduction pinion gear.

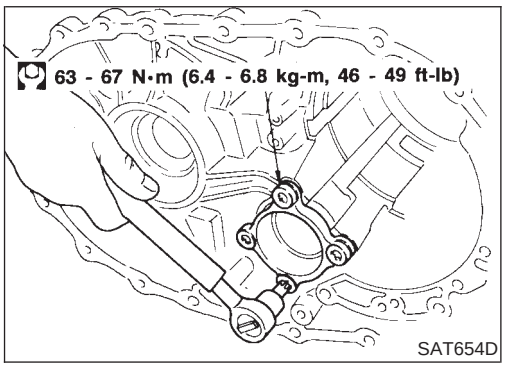

2. Install reduction pinion gear bearing outer race on transmission case.

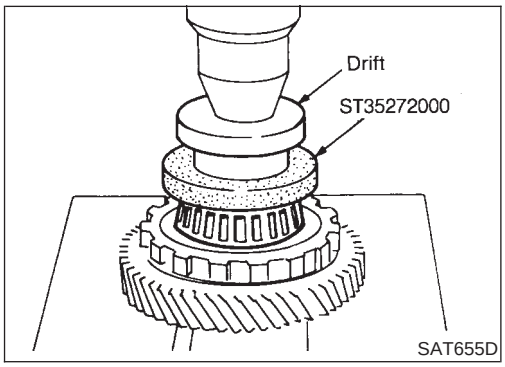

3. Press idler gear bearing inner race on idler gear.

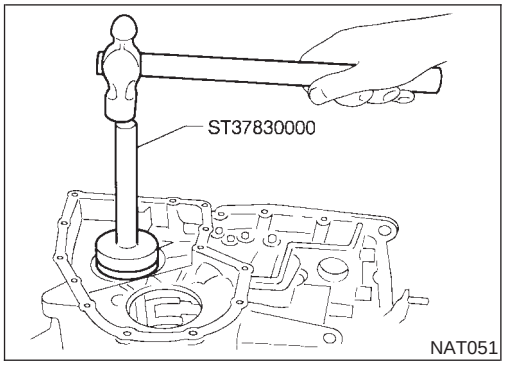

4. Install idler gear bearing outer race on transmission case.

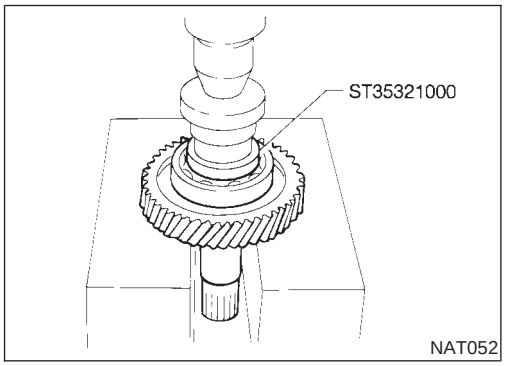

5. Press output shaft bearing on output shaft.

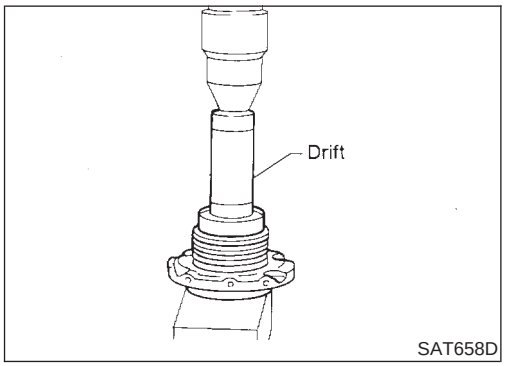

6. Press needle bearing on bearing retainer.

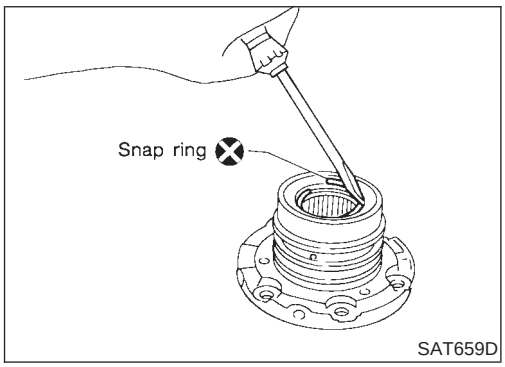

7. Install snap ring to bearing retainer.

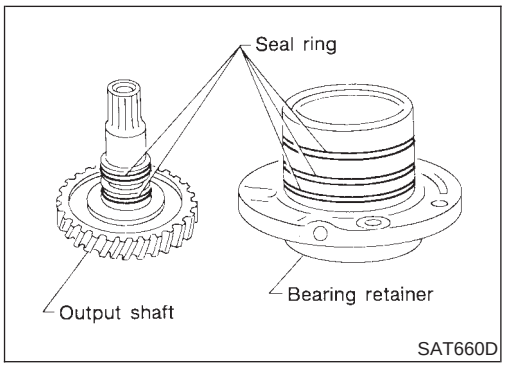

8. After packing ring grooves with petroleum jelly, carefully install new seal rings on output shaft and bearing retainer.

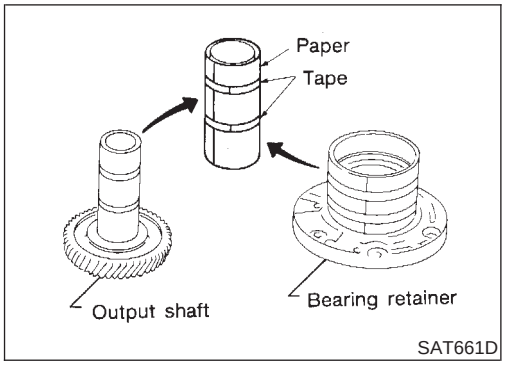

- **Roll paper around seal rings to prevent seal rings from spreading.**

Band Servo Piston Assembly

COMPONENTS

NJAT0165

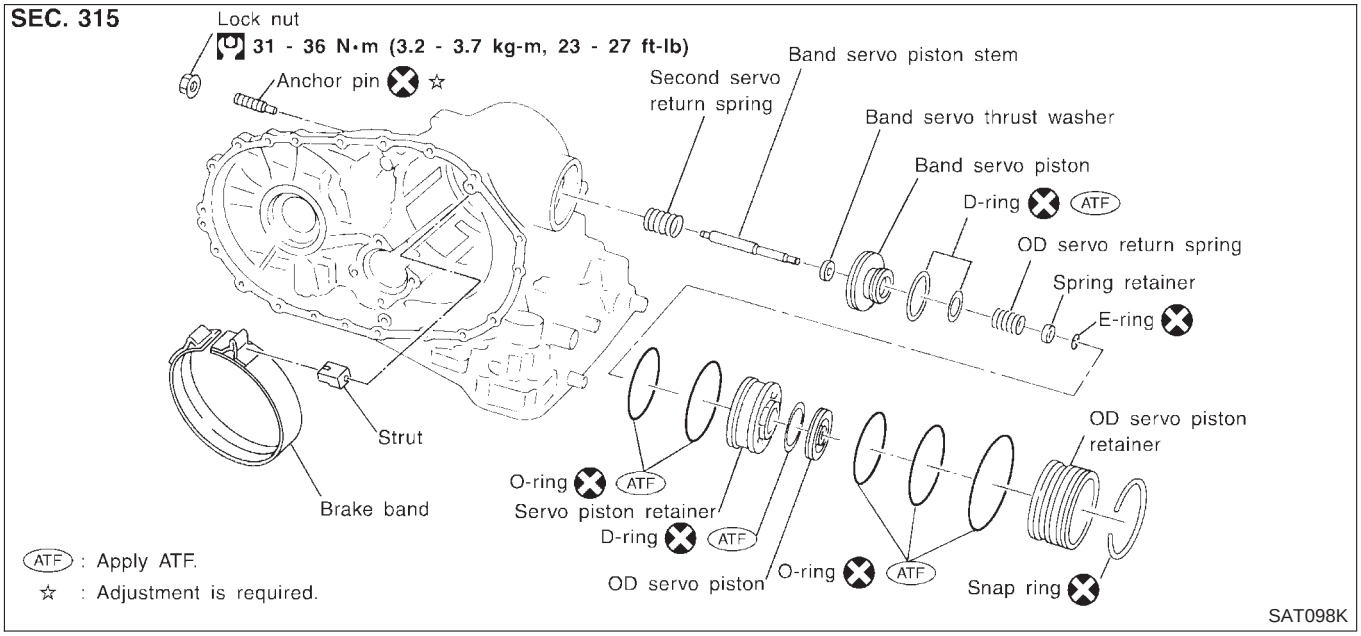

DISASSEMBLY

NJAT0166

1. Remove band servo piston snap ring.

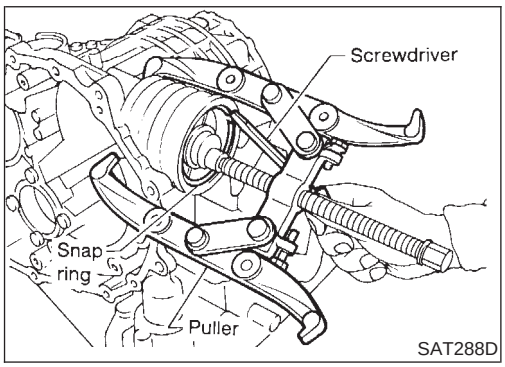

2. Apply compressed air to oil hole in transmission case to remove OD servo piston retainer and band servo piston assembly.

- **Hold band servo piston assembly with a rag or nylon waste.**

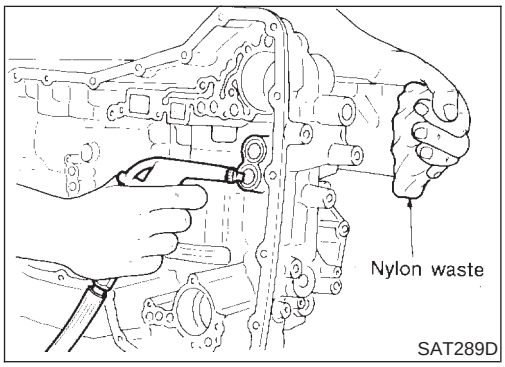

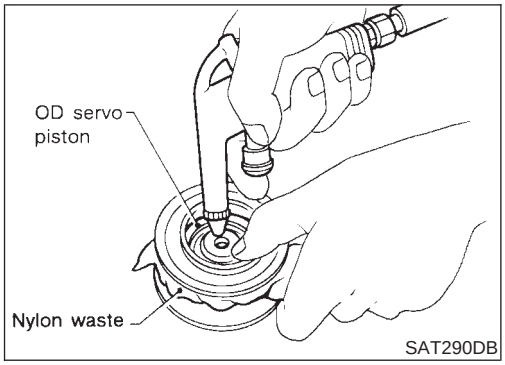

3. Apply compressed air to oil hole in OD servo piston retainer to remove OD servo piston from retainer.
- **Hold OD servo piston while applying compressed air.**

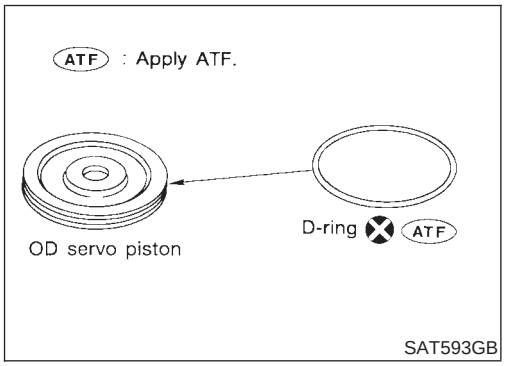

4. Remove D-ring from OD servo piston.

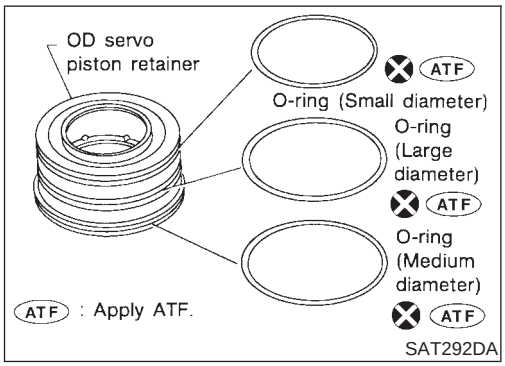

5. Remove O-rings from OD servo piston retainer.

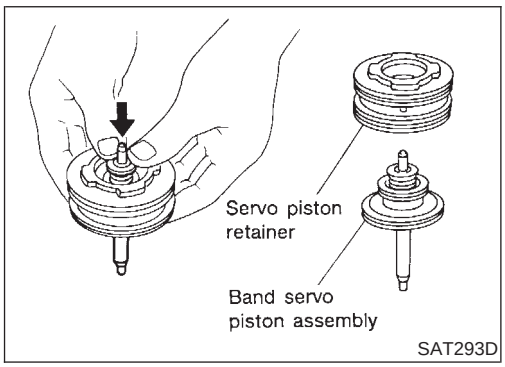

6. Remove band servo piston assembly from servo piston retainer by pushing it forward.

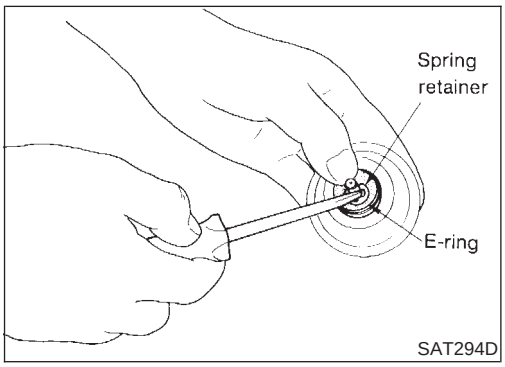

7. Place piston stem end on a wooden block. While pushing servo piston spring retainer down, remove E-ring.

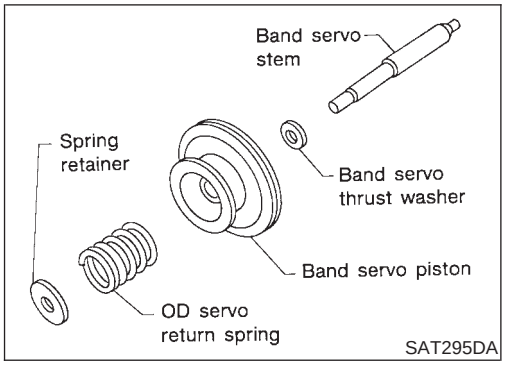

8. Remove OD servo return spring, band servo thrust washer and band servo piston stem from band servo piston.

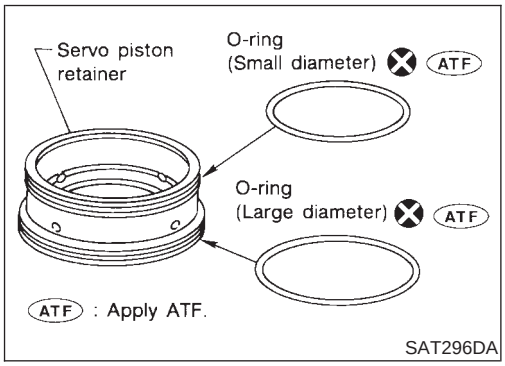

9. Remove O-rings from servo piston retainer.

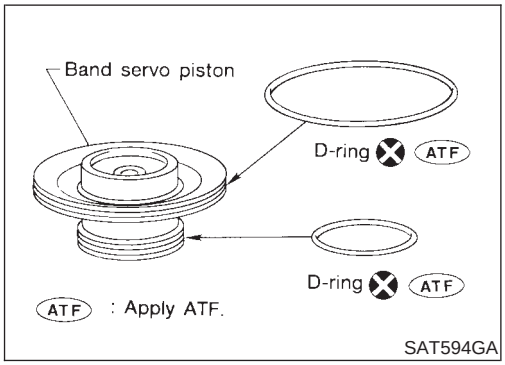

10. Remove D-rings from band servo piston.

INSPECTION

NJAT0167

Pistons, Retainers and Piston Stem

NJAT0167S01

- Check frictional surfaces for abnormal wear or damage.

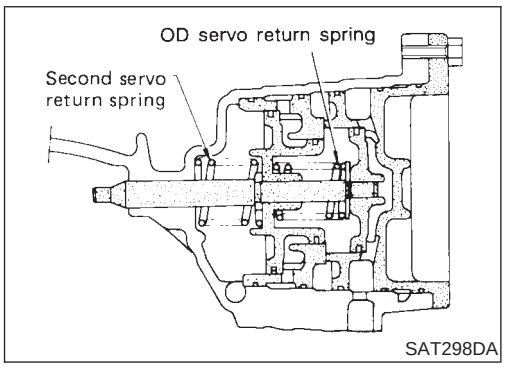

Return Springs

NJAT0167S02

- Check for deformation or damage.
- Measure free length and outer diameter.

Band servo inspection standard:
Refer to SDS, AT-485.

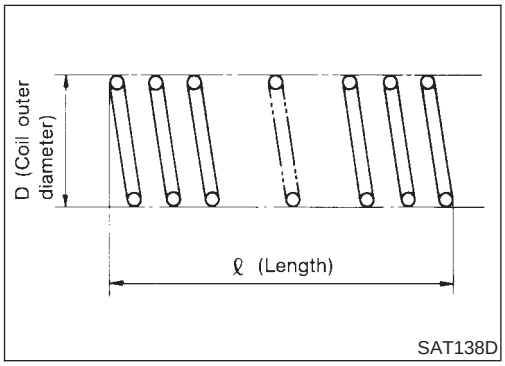

ASSEMBLY

NJAT0168

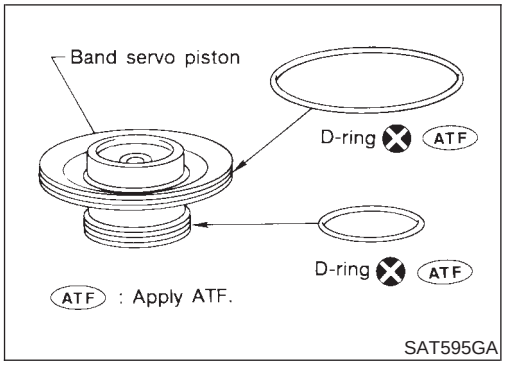

SAT595GA

1. Install D-rings to servo piston retainer.
- **Apply ATF to O-rings.**
- **Pay attention to position of each O-ring.**

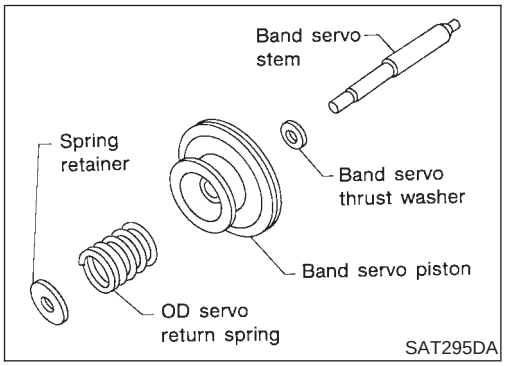

SAT295DA

2. Install band servo piston stem, band servo thrust washer, OD servo return spring and spring retainer to band servo piston.

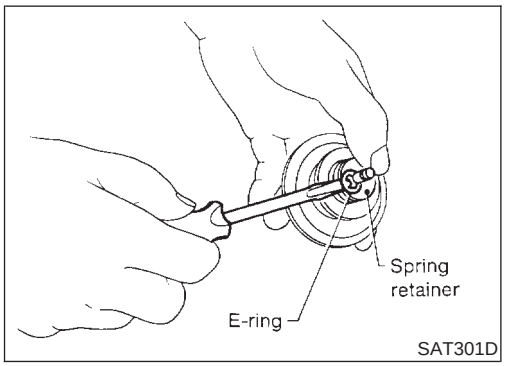

SAT301D

3. Place piston stem end on a wooden block. While pushing servo piston spring retainer down, install E-ring.

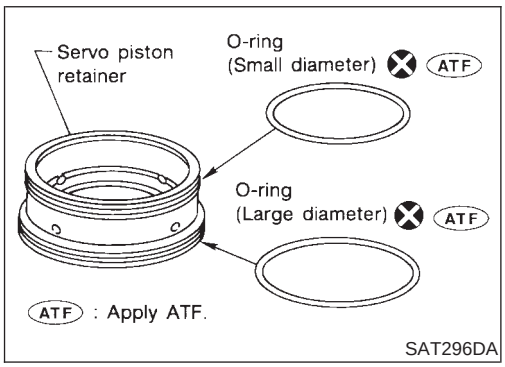

SAT296DA

4. Install O-rings to servo piston retainer.
- **Apply ATF to O-rings.**
- **Pay attention to the positions of the O-rings.**

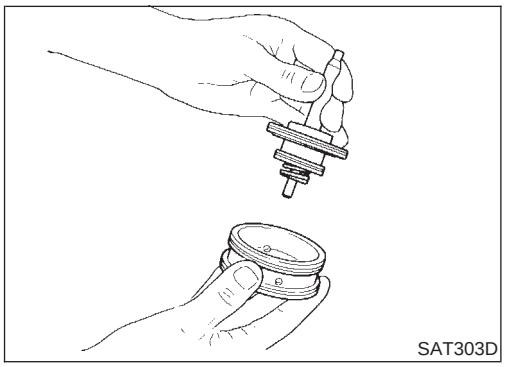
SAT303D

5. Install band servo piston assembly to servo piston retainer by pushing it inward.

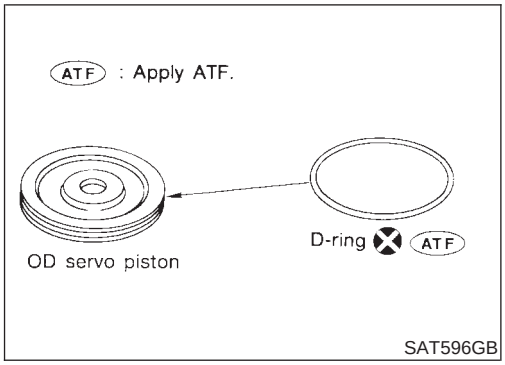

6. Install D-ring to OD servo piston.
- **Apply ATF to D-ring.**

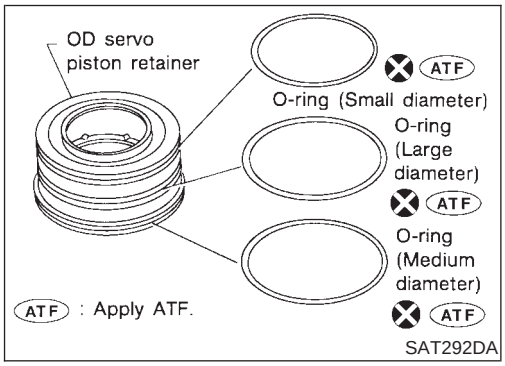

7. Install O-rings to OD servo piston retainer.
- **Apply ATF to O-rings.**
- **Pay attention to the positions of the O-rings.**

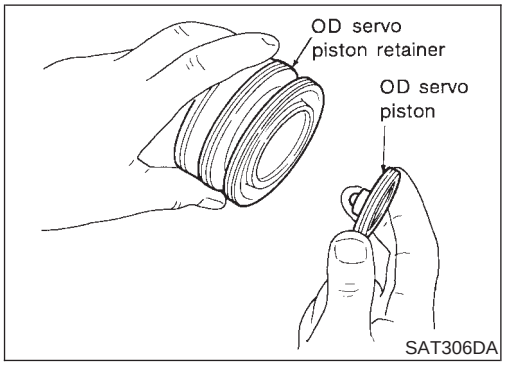

8. Install OD servo piston to OD servo piston retainer.

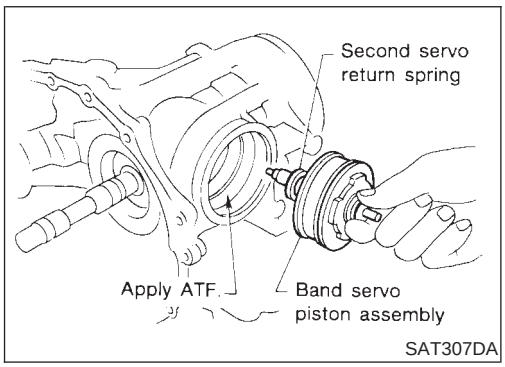

9. Install band servo piston assembly and 2nd servo return spring to transmission case.
- **Apply ATF to O-ring of band servo piston and transmission case.**

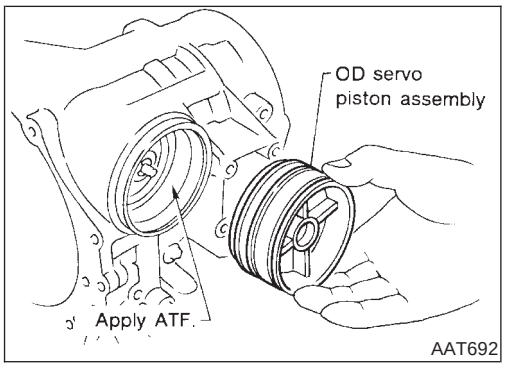

10. Install OD servo piston assembly to transmission case.
- **Apply ATF to O-ring of band servo piston and transmission case.**

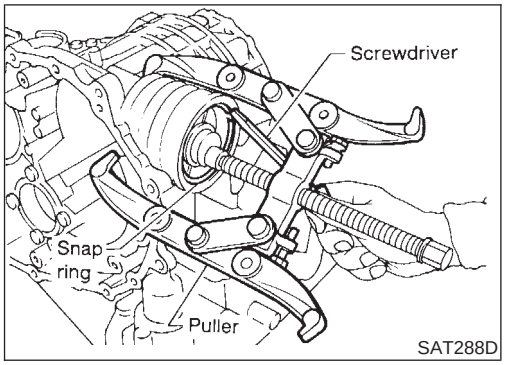

11. Install band servo piston snap ring to transmission case.

Final Drive

COMPONENTS-1 3AX00, 3AX01, 3AX19, 3AX63 AND 3AX64 MODELS

NJAT0354

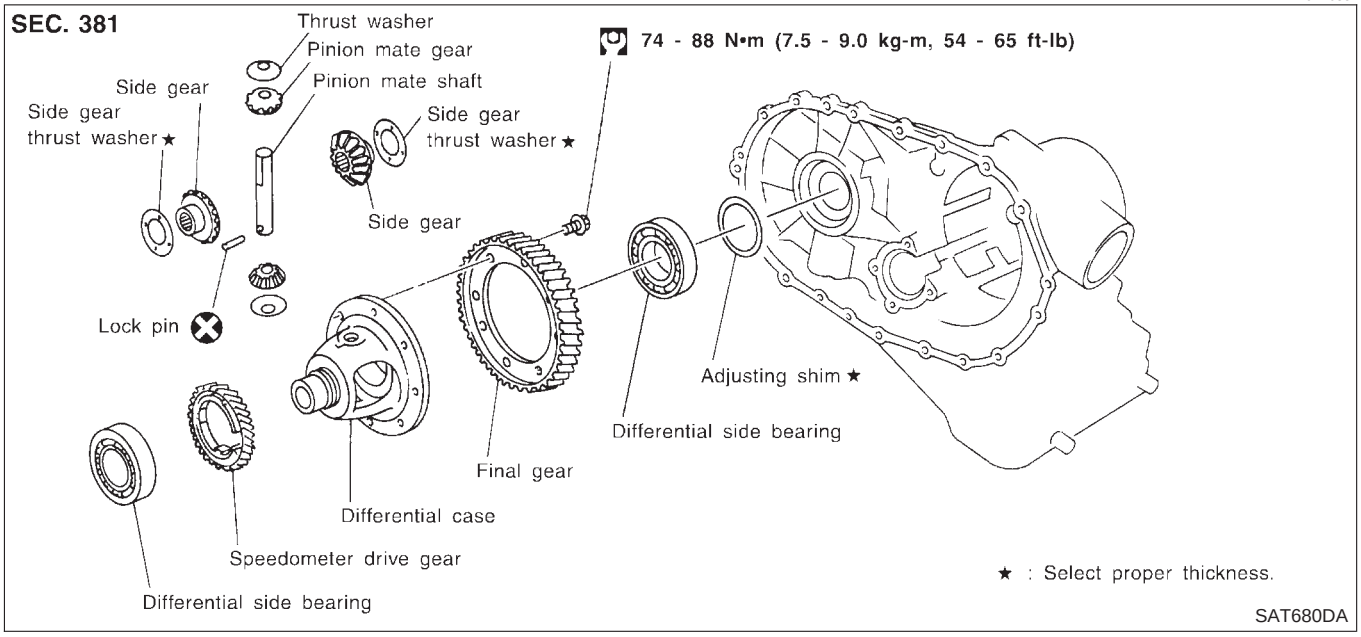

COMPONENTS-2 3AX10 AND 3AX18 MODELS

NJAT0169

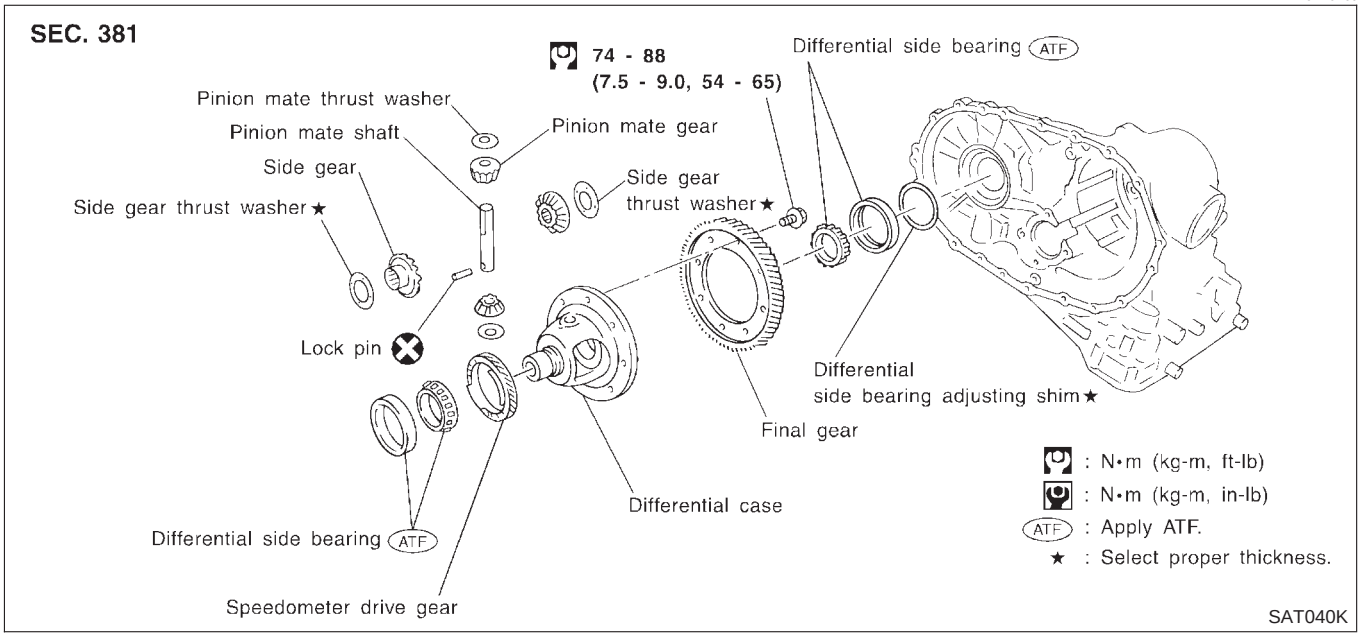

DISASSEMBLY

NJAT0170

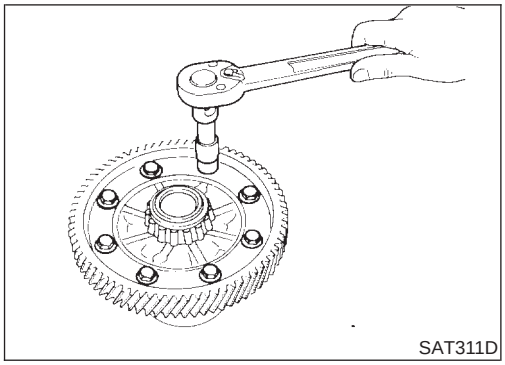

1. Remove final gear.

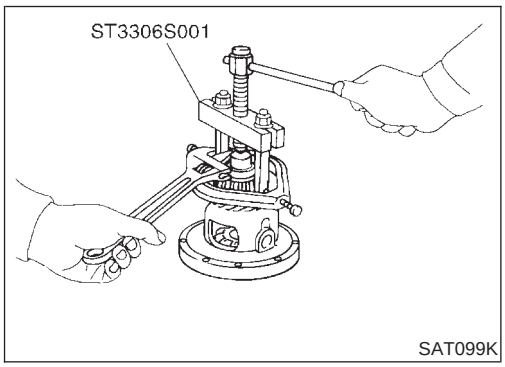

2. Press out differential side bearings.

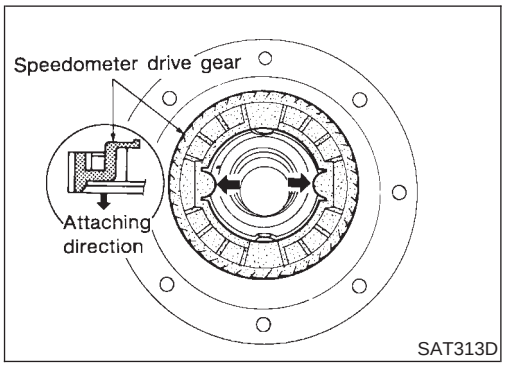

3. Remove speedometer drive gear.

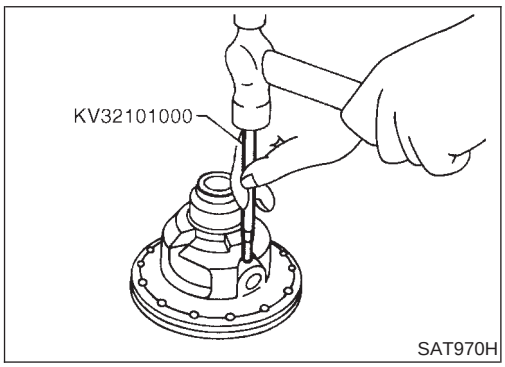

4. Drive out pinion mate shaft lock pin.

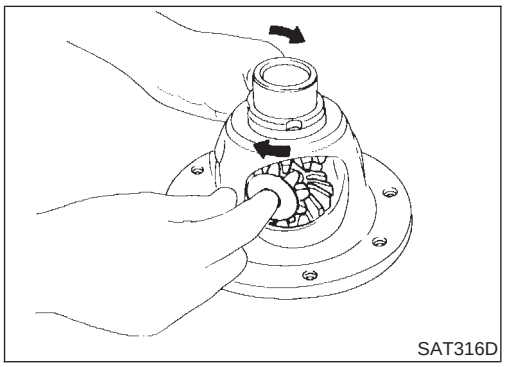

5. Draw out pinion mate shaft from differential case.
6. Remove pinion mate gears and side gears.

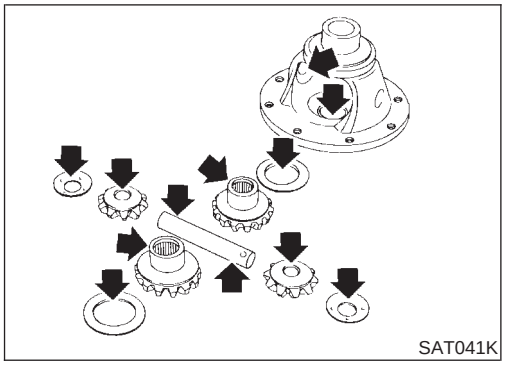
SAT041K

INSPECTION

NJAT0171

Gear, Washer, Shaft and Case

NJAT0171S01

- Check mating surfaces of differential case, side gears, pinion and mate gears.
- Check washers for wear.

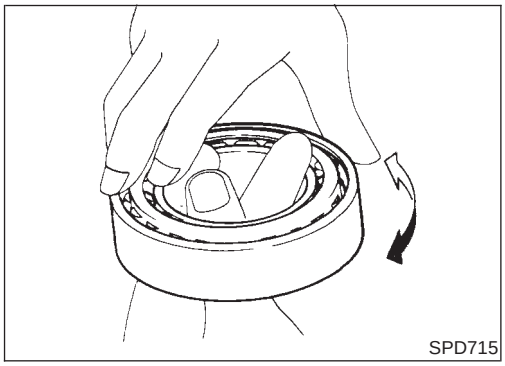
SPD715

Bearings

NJAT0171S03

- Make sure bearings roll freely and are free from noise, cracks, pitting or wear.
- **When replacing taper roller bearing, replace outer and inner race as a set.**

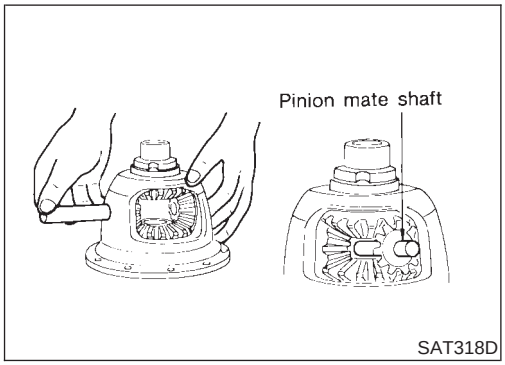

SAT318D

ASSEMBLY

NJAT0172

1. Install side gear and thrust washers in differential case.
2. Install pinion mate gears and thrust washers in differential case while rotating them.

- **When inserting, be careful not to damage pinion mate gear washers.**
- **Apply ATF to any parts.**

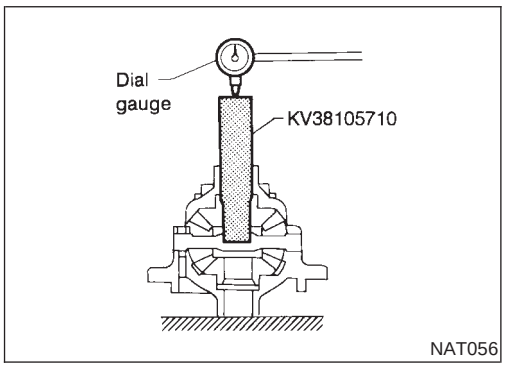

NAT056

3. Measure clearance between side gear and differential case with washers using the following procedure.

a. Set Tool and dial indicator on side gear.

b. Move side gear up and down to measure dial indicator deflection. Always measure indicator deflection on both side gears.

Clearance between side gear and differential case with washers:

0.1 - 0.2 mm (0.004 - 0.008 in)

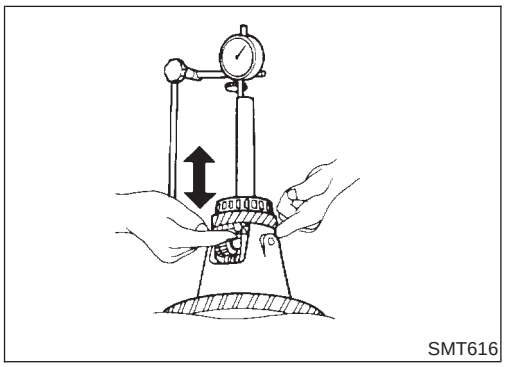
SMT616

c. If not within specification adjust clearance by changing thickness of side gear thrust washers.

Side gear thrust washer:

Refer to SDS, AT-478.

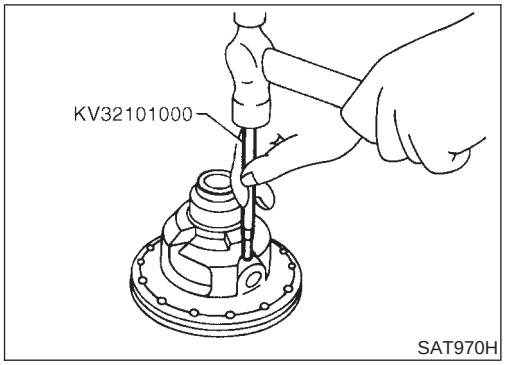

4. Install lock pin.
- **Make sure that lock pin is flush with case.**

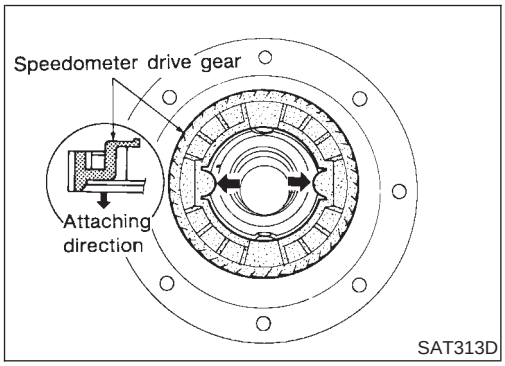

5. Install speedometer drive gear on differential case.
- **Align the projection of speedometer drive gear with the groove of differential case.**

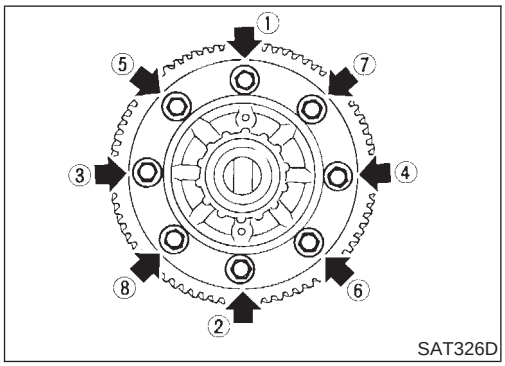

6. Install final gear and tighten fixing bolts in numerical order.

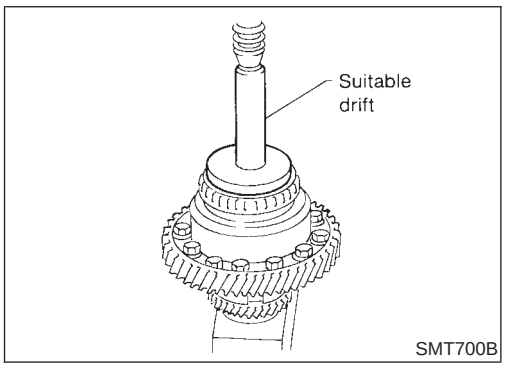

7. Press on differential side bearings.

Assembly (1)

NJAT0173

1. Install revolution sensor onto transmission case.

Always use new sealing parts.

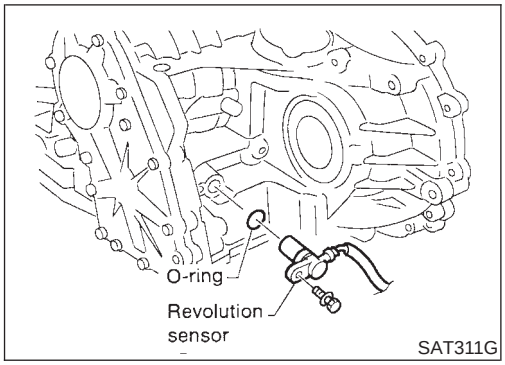

2. Install differential side oil seals on transmission case and converter housing, so that “A” and “B” are within specifications.

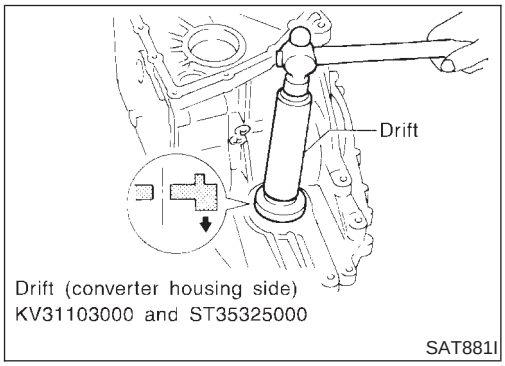

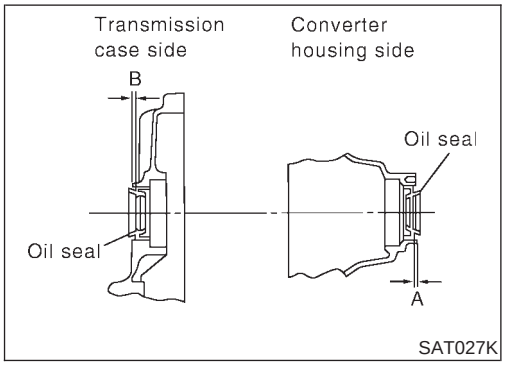

Unit: mm (in)

A	B
5.5 - 6.5 (0.217 - 0.256)	−0.5 to 0.5 (−0.020 to 0.020)

3. Install parking actuator support to transmission case.

- **Pay attention to direction of parking actuator support.**

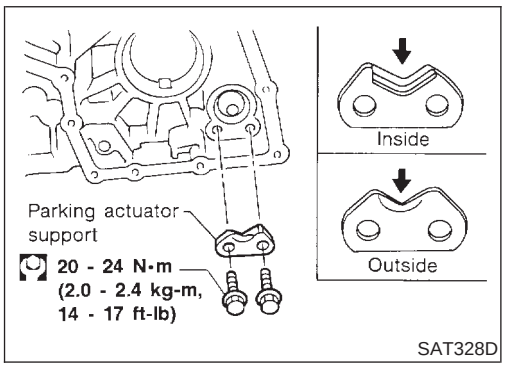

4. Install parking pawl on transmission case and fix it with parking shaft.

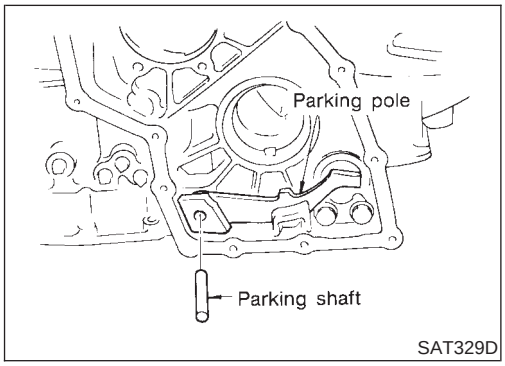

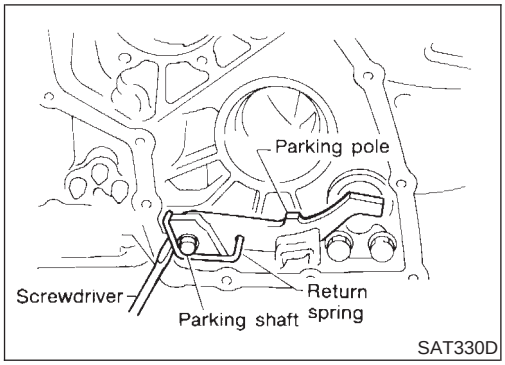

5. Install return spring.

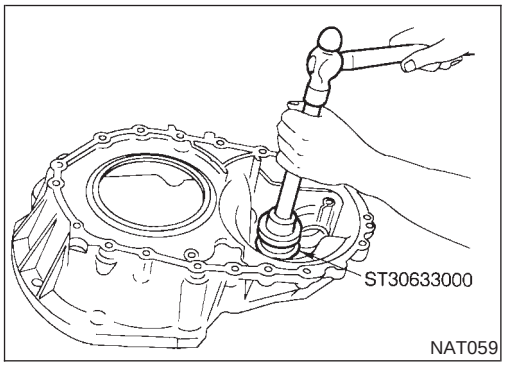

Adjustment (1)

NJAT0174

DIFFERENTIAL SIDE BEARING PRELOAD

NJAT0174S01

1. Install differential side bearing outer race without adjusting shim on transmission case.
2. Install differential side bearing outer race on converter housing.

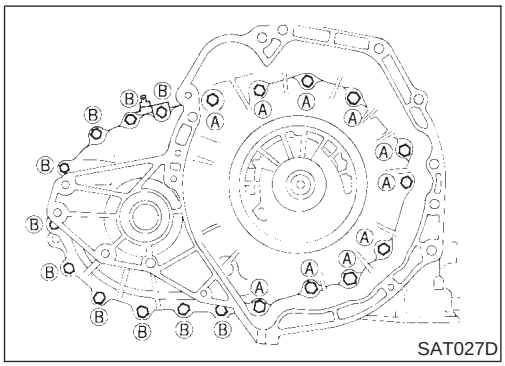

3. Place final drive assembly on transmission case.
4. Install transmission case on converter housing. Tighten transmission case fixing bolts **A** and **B** to the specified torque.

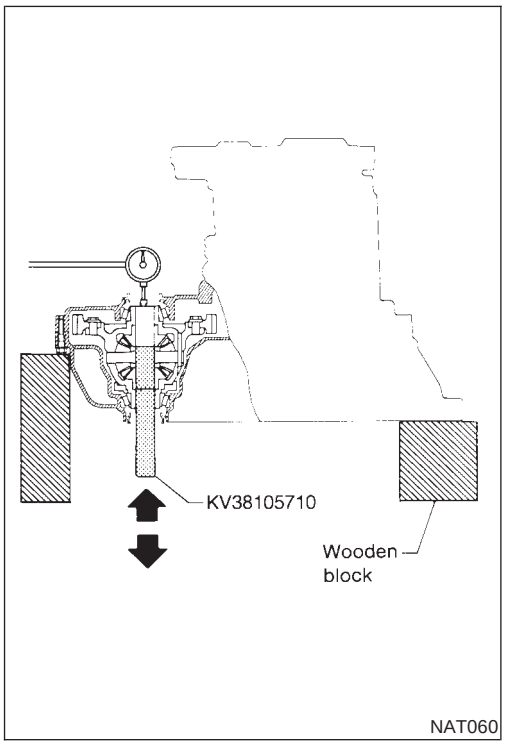

5. Attach dial indicator on differential case at transmission case side.
6. Insert Tool into differential side gear from converter housing.
7. Move Tool up and down and measure dial indicator deflection.

   Differential side bearing preload "T":
   0.04 - 0.09 mm (0.0016 - 0.0035 in)
8. Select proper thickness of differential side bearing adjusting shim(s) using SDS table as a guide.

   Differential side bearing adjusting shim:
   Refer to SDS, AT-478.

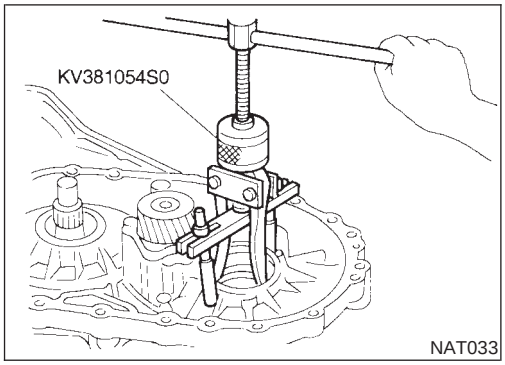

9. Remove converter housing from transmission case.
10. Remove final drive assembly from transmission case.
11. Remove differential side bearing outer race from transmission case.
12. Reinstall differential side bearing outer race and shim(s) selected from SDS table on transmission case.
13. Reinstall converter housing on transmission case and tighten transmission case fixing bolts to the specified torque.

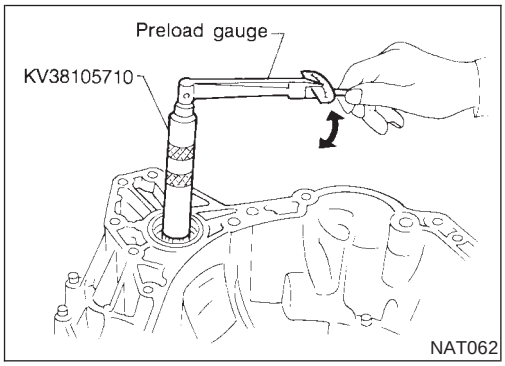

14. Insert Tool into differential case and measure turning torque of final drive assembly.

- **Turn final drive assembly in both directions several times to seat bearing rollers correctly.**

  Turning torque of final drive assembly (New bearing):
  0.49 - 1.08 N·m (5.0 - 11.0 kg-cm, 4.3 - 9.5 in-lb)
- **When old bearing is used again, turning torque will be slightly less than the above.**
- **Make sure torque is close to the specified range.**

REDUCTION PINION GEAR BEARING PRELOAD

NJAT0174S02

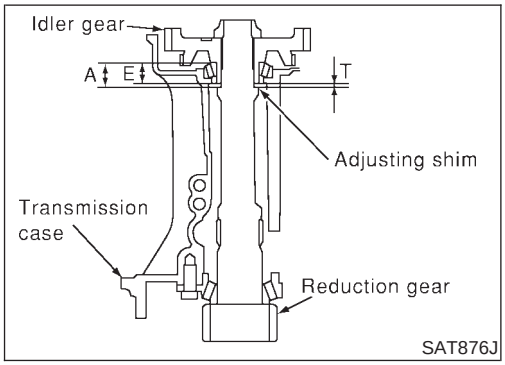

- Be sure to remove final drive assembly before doing this procedure.
- Using caliper and straightedge, calculate a dimention "T" (adjuster shim thickness) in the left figure by the following formula. And adjust the inspection standard for pre-load (rotating slide torque) as shown below.

  T = A – E

  Inspection standard for preload:
  0.1 - 0.69 N·m (1.1 - 7.0 kg-cm, 0.95 - 6.08 in-lb)

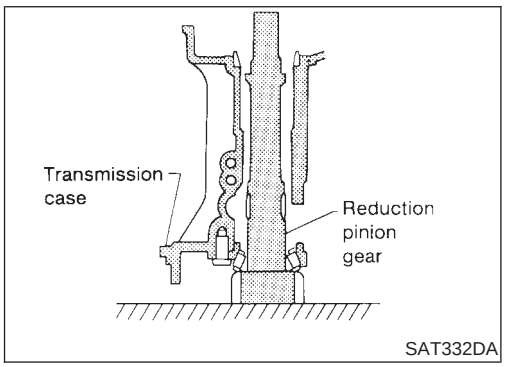

1. Remove transmission case and final drive assembly from converter housing.
2. Select proper thickness of reduction pinion gear bearing adjusting shim using the following procedures.

a. Place reduction pinion gear on transmission case as shown.

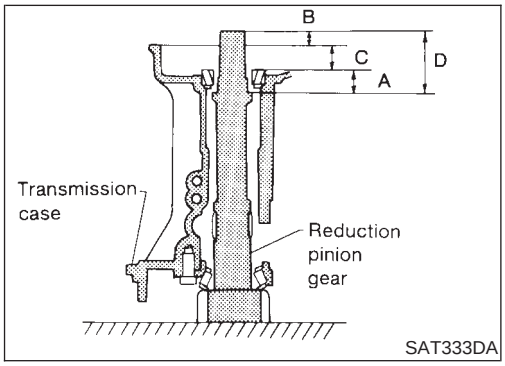

b. Place idler gear bearing on transmission case.
c. Measure dimensions "B", "C" and "D" and calculate dimension "A".

   A = D – (B + C)

   "A": Distance between the surface of idler gear bearing inner race and the adjusting shim mating surface of reduction pinion gear.

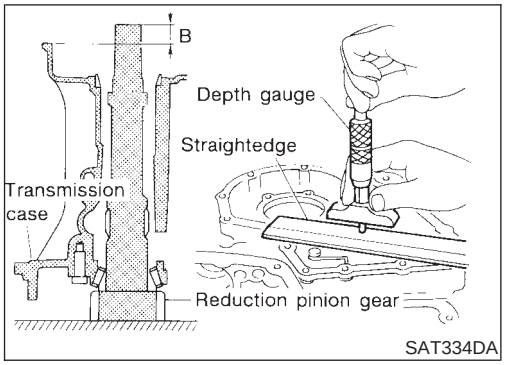

- Measure dimension "B" between the end of reduction pinion gear and the surface of transmission case.
- **Measure dimension "B" in at least two places.**

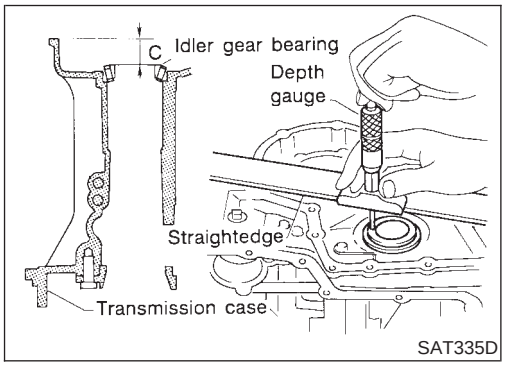

- Measure dimension "C" between the surface of idler gear bearing inner race and the surface of transmission case.
- **Measure dimension "C" in at least two places.**

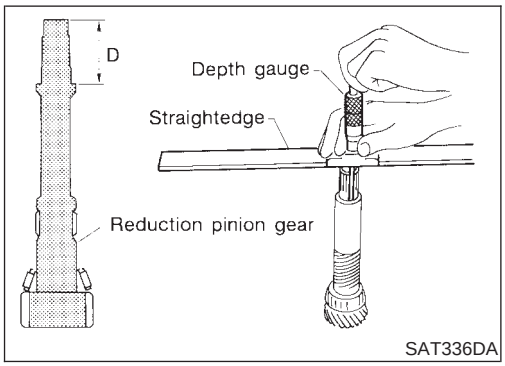

- Measure dimension "D" between the end of reduction pinion gear and the adjusting shim mating surface of reduction pinion gear.
- **Measure dimension "D" in at least two places.**
- Calculate dimension "A".

  A = D − (B + C)

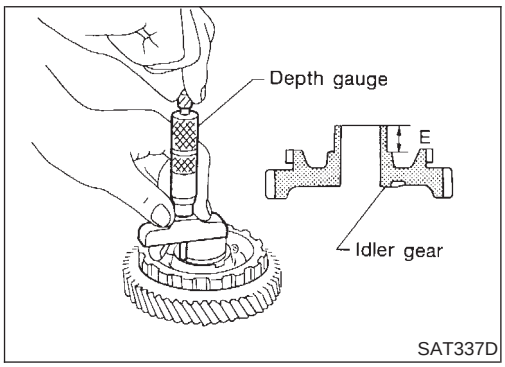

d. Measure dimension "E" between the end of idler gear and the idler gear bearing inner race mating surface of idler gear.

- **Measure dimension "E" in at least two places.**

e. Calculate "T" and select proper thickness of reduction pinion gear bearing adjusting shim using SDS table as a guide.

T = A − E − 0.05 mm (0.0020 in)*

Reduction pinion gear bearing adjusting shim:

Refer to SDS, AT-480.

*: Bearing preload

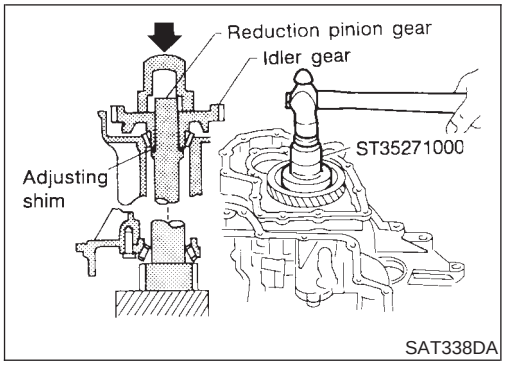

3. Install reduction pinion gear and reduction pinion gear bearing adjusting shim selected in step 2-e on transmission case.
4. Press idler gear bearing inner race on idler gear.
5. Press idler gear on reduction pinion gear.

- **Press idler gear so that idler gear can be locked by parking pawl.**

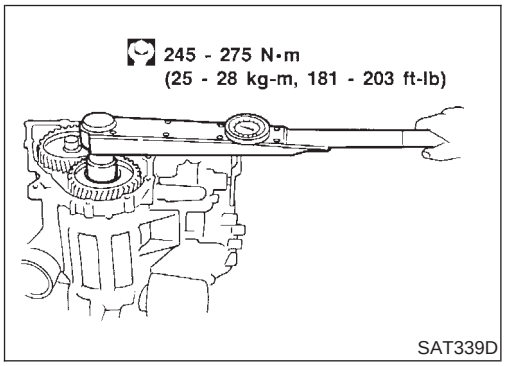

6. Tighten idler gear lock nut to the specified torque.

- **Lock idler gear with parking pawl when tightening lock nut.**

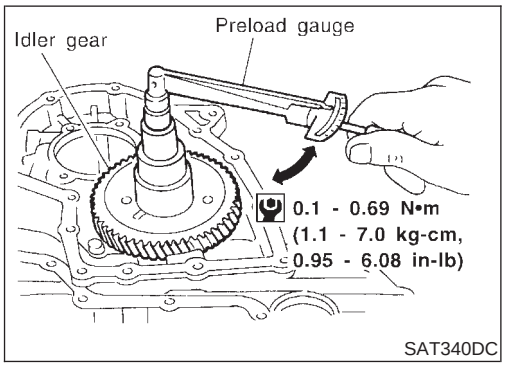

7. Measure turning torque of reduction pinion gear.

- **When measuring turning torque, turn reduction pinion gear in both directions several times to seat bearing rollers correctly.**

  Turning torque of reduction pinion gear:
  0.1 - 0.69 N·m (1.1 - 7.0 kg-cm, 0.95 - 6.08 in-lb)

OUTPUT SHAFT BEARING PRELOAD — 3AX00, 3AX01, 3AX19, 3AX63 AND 3AX64 MODELS

NJAT0174S04

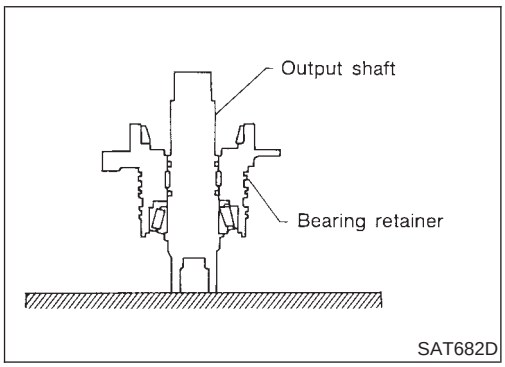

1. Select proper thickness of output shaft bearing adjusting spacer using the following procedures.

a. Remove paper rolled around output shaft.
b. Place bearing retainer on output shaft.

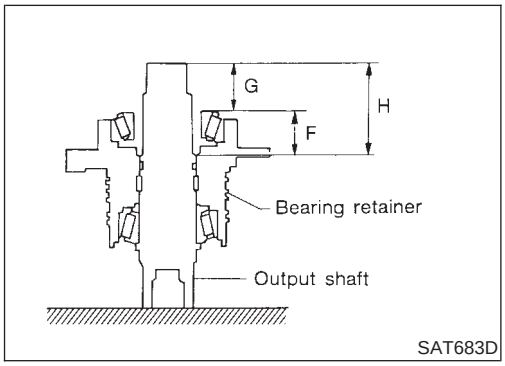

c. Place output gear bearing inner race on bearing retainer.
d. Measure dimensions "G" and "H" and calculate dimension "F".
   "F": Distance between the surface of output gear bearing inner race and adjusting shim mating surface of output shaft.

   F = H – G

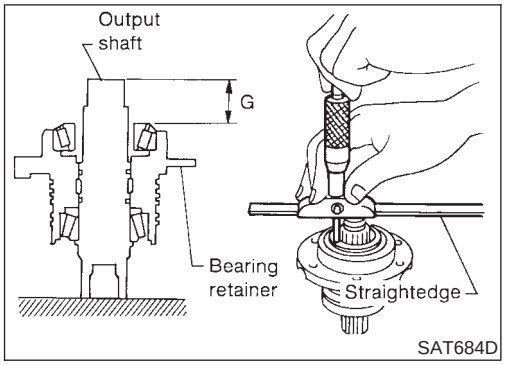

- Measure dimension "G" between end of output shaft and surface of output gear bearing inner race.
- **Measure dimension "G" in at least two places.**

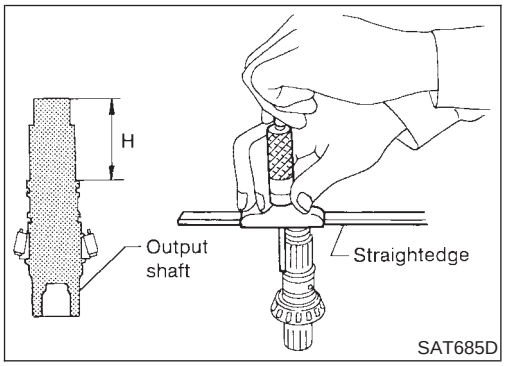

- Measure dimension "H" between end of output shaft and adjusting spacer mating surface of output shaft.
- **Measure dimension "H" in at least two places.**
- Calculate dimension "F".

  F = H – G

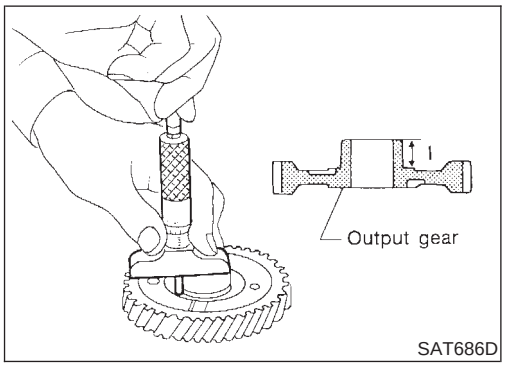

e. Measure dimension "I" between end of output gear (adjusting spacer mating surface) and bearing inner race fitting surface.

- **Measure dimension "I" in at least two places.**

f. Calculate dimension "T_2".

"T_2": Distance between adjusting spacer mating surface of output gear and output shaft

$T_2 = F - I$

g. Select proper thickness of output shaft bearing adjusting spacer using SDS table as a guide.

Output shaft bearing adjusting spacer:

Refer to SDS, AT-482.

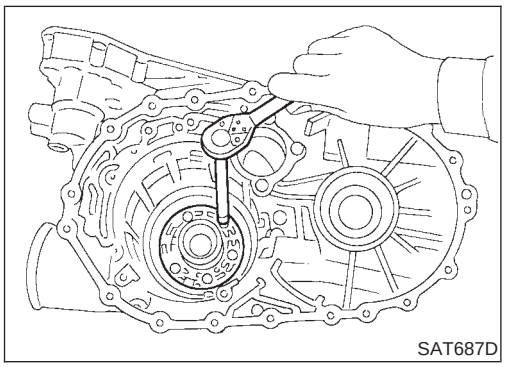

2. Install bearing retainer on transmission case.

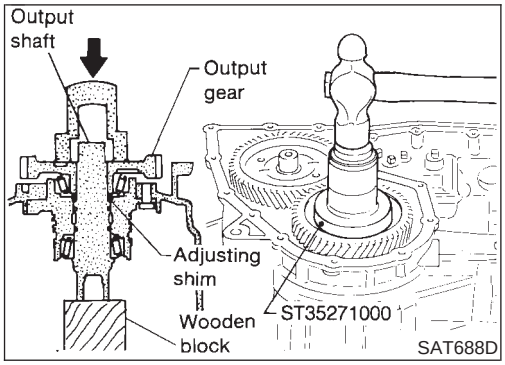

3. Place output shaft on bearing retainer.
4. Place output shaft bearing adjusting spacer selected in step 1-g on output shaft.
5. Press output gear bearing inner race on output gear.
6. Press output gear on output shaft.

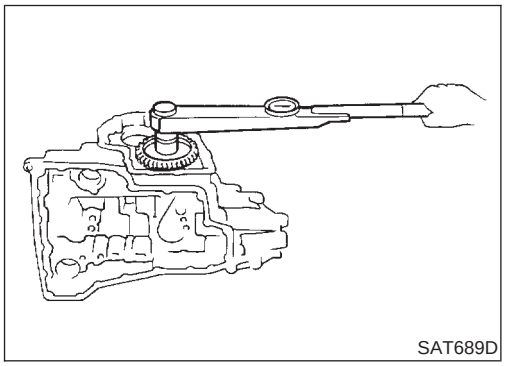

7. Tighten output gear lock nut to specified torque.

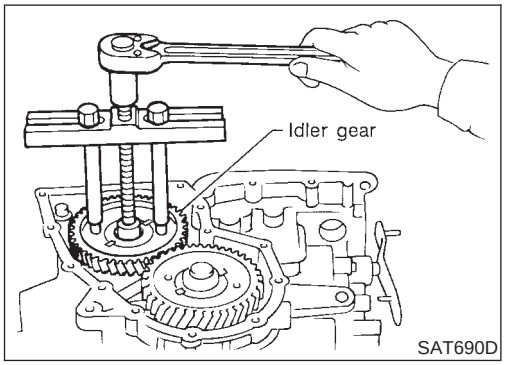

8. Remove idler gear to measure output shaft bearing preload.

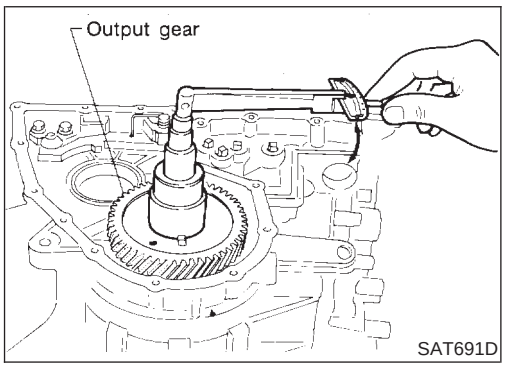

9. Measure output shaft bearing preload.

- **When measuring bearing preload, turn output shaft in both directions several times to seat bearing rollers correctly.**

  Output shaft bearing preload:

  0.25 - 0.88 N·m (2.5 - 9.0 kg-cm, 2.2 - 7.8 in-lb)
- **If not within specified range, readjust bearing preload.**

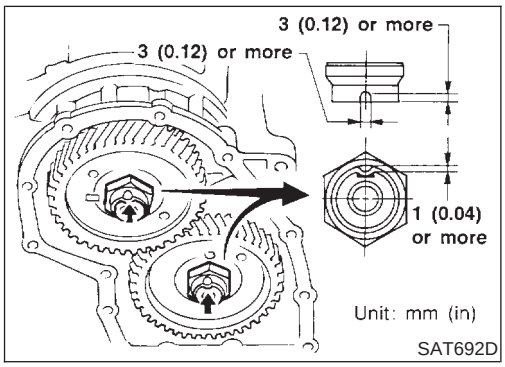

10. Install idler gear and tighten lock nut to specified torque.
11. After properly adjusting bearing preload, clinch idler gear and output gear lock nuts as shown.

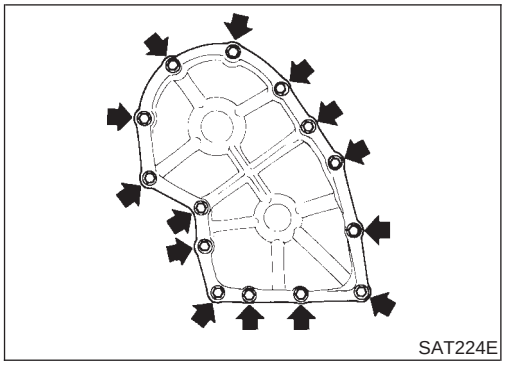
SAT224E

12. Install new gasket and side cover on transmission case.
- **Always replace side cover bolts when removed.**
- Refer to "Overhaul", AT-361.

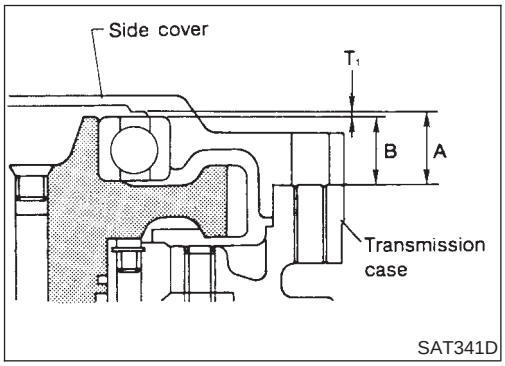

SAT341D

OUTPUT SHAFT END PLAY — 3AX10 AND 3AX18 MODELS

NJAT0174S03

- Measure clearance between side cover and the end of the output shaft bearing.
- Select proper thickness of adjusting shim so that clearance is within specifications.

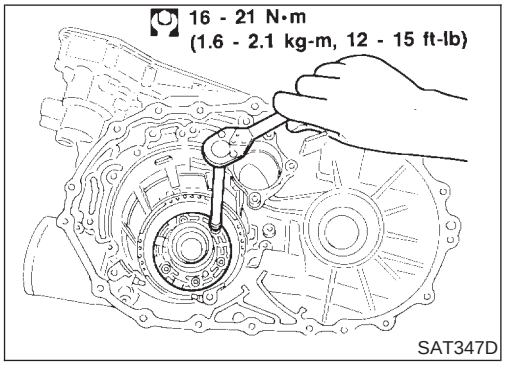

SAT347D

1. Install bearing retainer for output shaft.

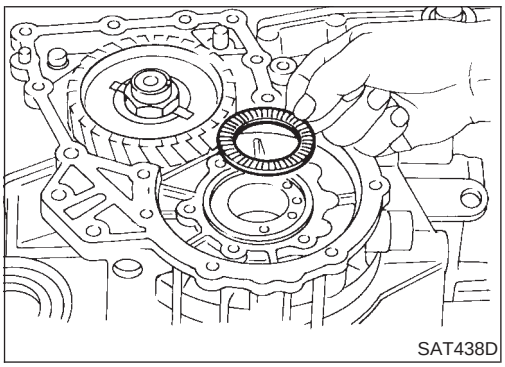
SAT438D

2. Install output shaft thrust needle bearing on bearing retainer.

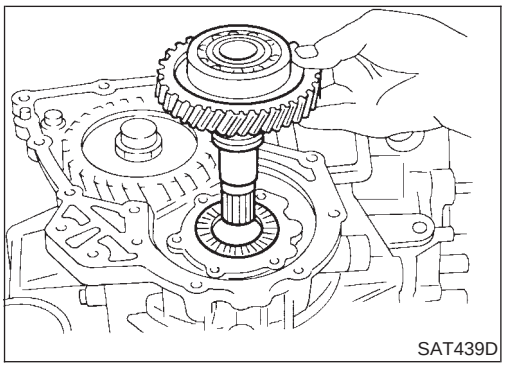
SAT439D

3. Install output shaft on transmission case.

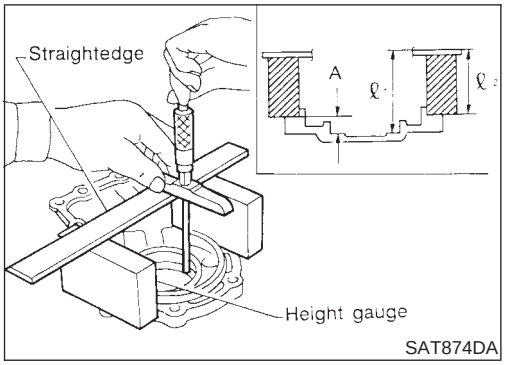

SAT874DA

4. Measure dimensions "ℓ_1" and "ℓ_2" at side cover and then calculate dimension "A".
- **Measure dimension "ℓ_1" and "ℓ_2" in at least two places**
  "A": Distance between transmission case fitting surface and adjusting shim mating surface

  $A = \ell_1 - \ell_2$

  ℓ_2: Height of gauge

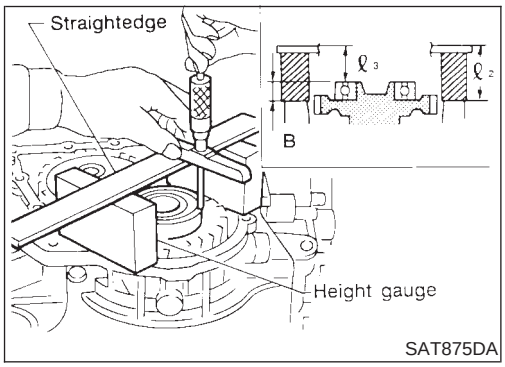

SAT875DA

5. Measure dimensions "ℓ_2" and "ℓ_3" and then calculate dimension "B".
   Measure "ℓ_2" and "ℓ_3" in at least two places.
   "B": Distance between the end of output shaft bearing outer race and the side cover fitting surface of transmission case

   $B = \ell_2 - \ell_3$

   ℓ_2: Height of gauge

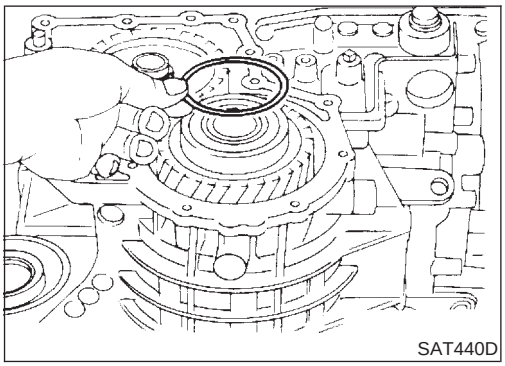
SAT440D

6. Select proper thickness of adjusting shim so that output shaft end play (clearance between side cover and output shaft bearing) is within specifications.

   Output shaft end play (A − B):
   0 - 0.5 mm (0 - 0.020 in)

   Output shaft end play adjusting shim:
   Refer to SDS, AT-483.

7. Install adjusting shim on output shaft bearing.

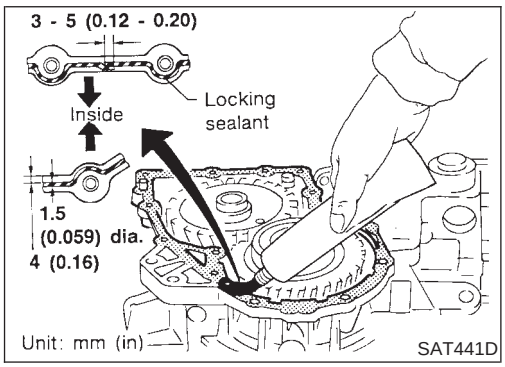

SAT441D

8. Apply locking sealant to transmission case as shown in illustration.

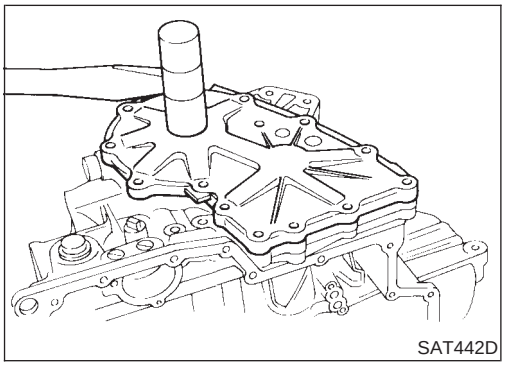
SAT442D

9. Install side cover on transmission case.
- **Apply locking sealant to the mating surface of transmission case.**

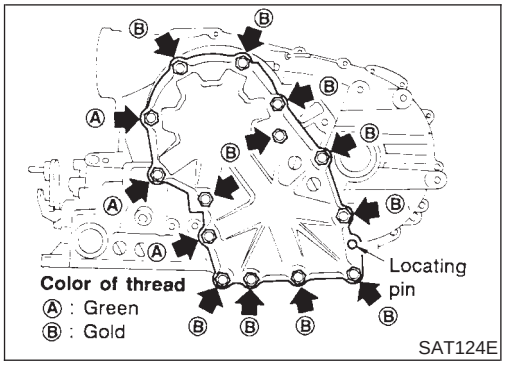

10. Tighten side cover fixing bolts to specified torque.
- **Do not mix bolts A and B.**
- **Always replace bolts A as they are self-sealing bolts.**
- Refer to "Overhaul", AT-362.

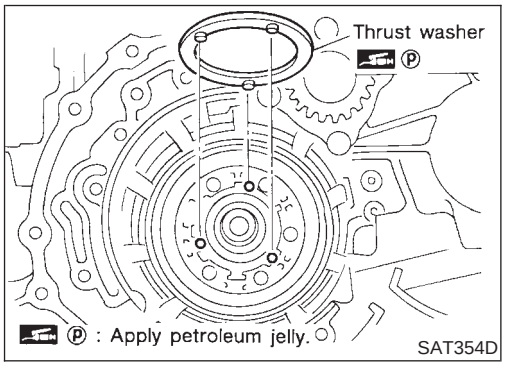

Assembly (2)

NJAT0175

1. Remove paper rolled around bearing retainer.
2. Install thrust washer on bearing retainer.
- **Apply petroleum jelly to thrust washer.**

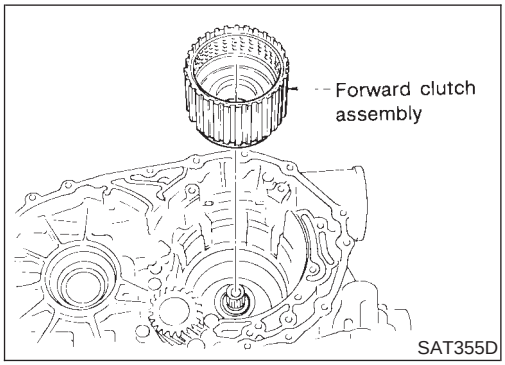

3. Install forward clutch assembly.
- **Align teeth of low & reverse brake drive plates before installing.**
- **Make sure that bearing retainer seal rings are not spread.**

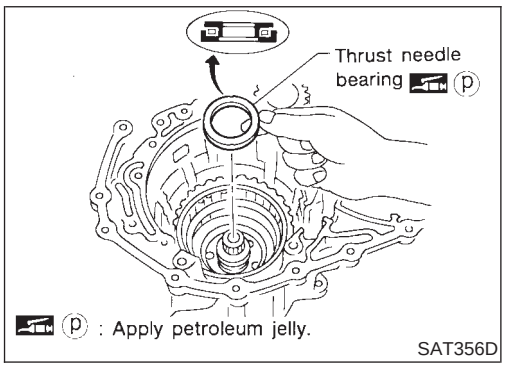

4. Install thrust needle bearing on bearing retainer.
- **Apply petroleum jelly to thrust bearing.**
- **Pay attention to direction of thrust needle bearing.**

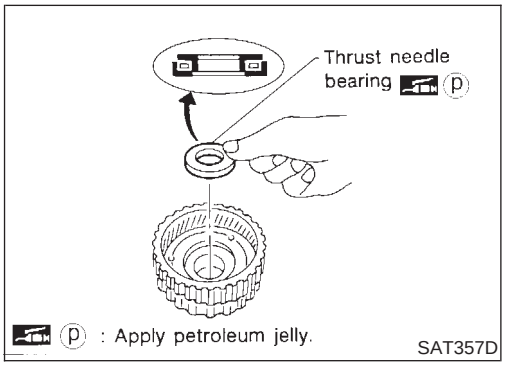

5. Install thrust needle bearing on rear internal gear.
- **Apply petroleum jelly to thrust needle bearing.**
- **Pay attention to direction of thrust needle bearing.**

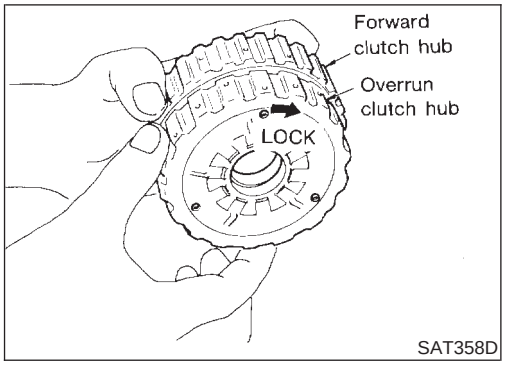

6. Hold forward clutch hub and turn overrun clutch hub. Check overrun clutch hub for directions of lock and unlock.
- If not as shown in illustration, check installed direction of forward one-way clutch.

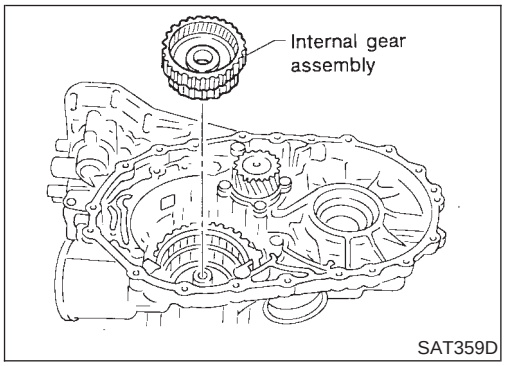

7. Install rear internal gear assembly.
- **Align teeth of forward clutch and overrun clutch drive plate.**

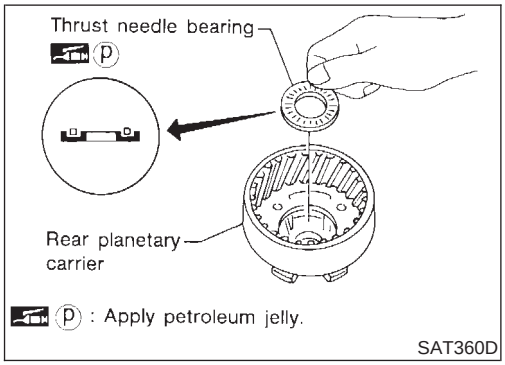

8. Install needle bearing on rear planetary carrier.
- **Apply petroleum jelly to needle bearing.**
- **Pay attention to direction of needle bearing.**

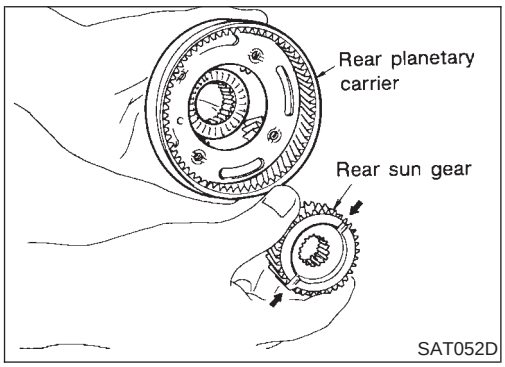

9. Install rear sun gear on rear planetary carrier.
- **Pay attention to direction of rear sun gear.**

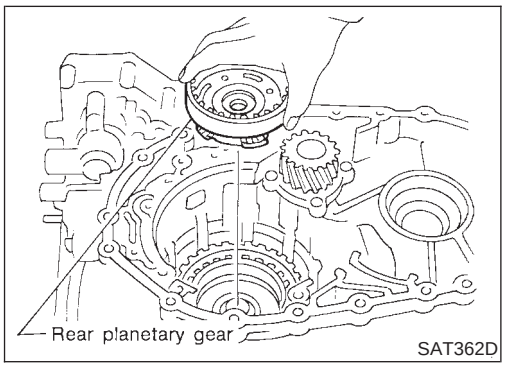

10. Install rear planetary carrier on transmission case.

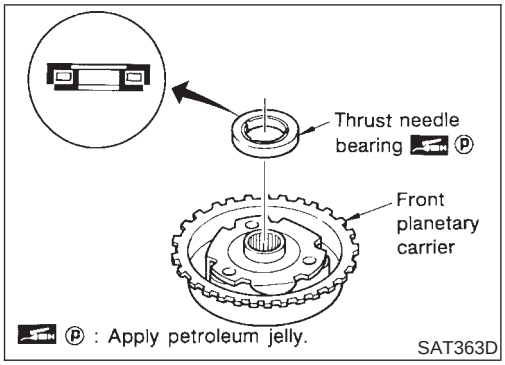

11. Install thrust needle bearing on front planetary carrier.
- **Apply petroleum jelly to thrust needle bearing.**
- **Pay attention to direction of thrust needle bearing.**

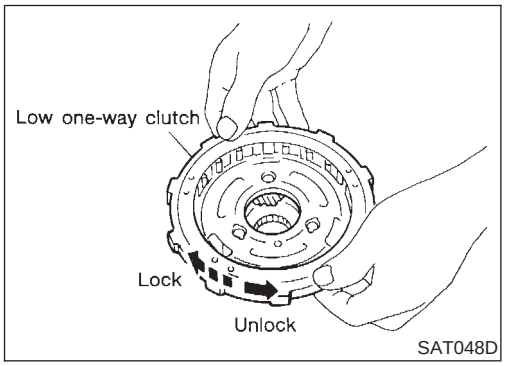

12. Install low one-way clutch to front planetary carrier by turning it in the direction of the arrow as shown.
13. While holding front planetary carrier, turn low one-way clutch. Check low one-way clutch for correct directions of lock and unlock.

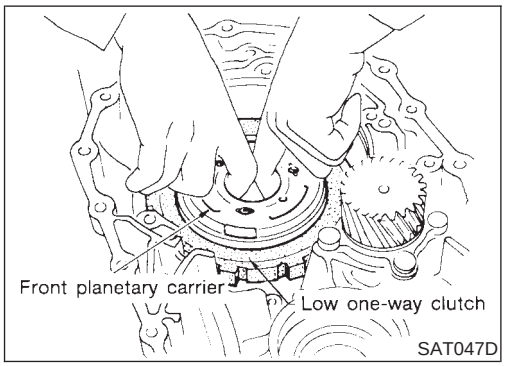

14. Install front planetary carrier assembly on transmission case.

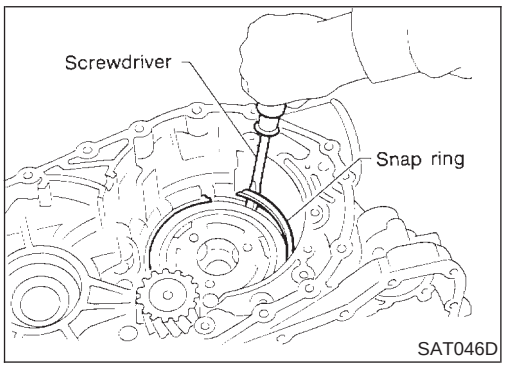

15. Install snap ring with screwdriver.
- **Forward clutch and bearings must be correctly installed for snap ring to fit groove of transmission case.**

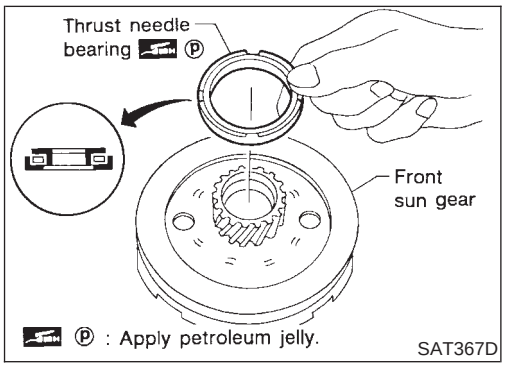

16. Install needle bearing on front sun gear.
- **Apply petroleum jelly to needle bearing.**
- **Pay attention to direction of needle bearing.**

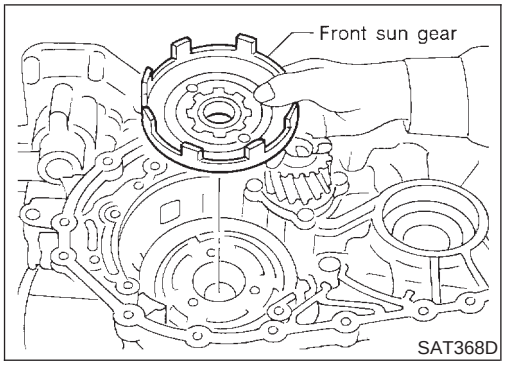

17. Install front sun gear on front planetary carrier.

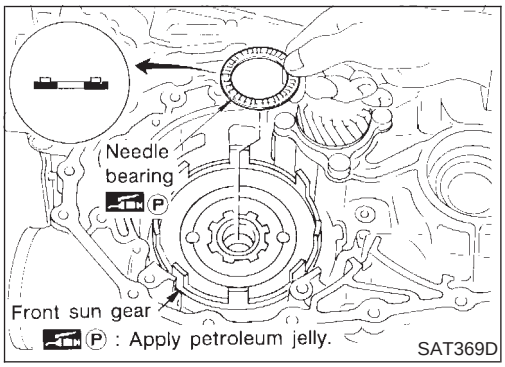

18. Install needle bearing on front sun gear.
- **Apply petroleum jelly to needle bearing.**
- **Pay attention to direction of needle bearing.**

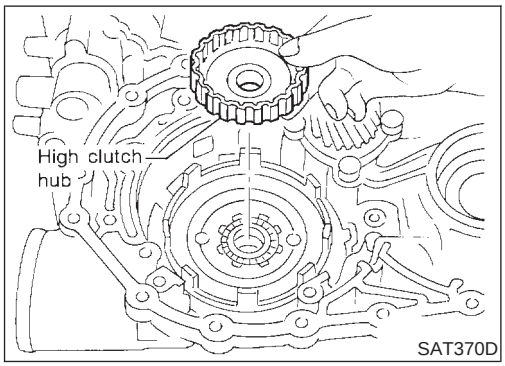

19. Install high clutch hub on front sun gear.

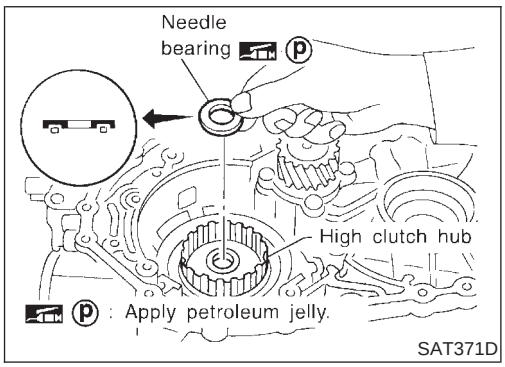

20. Install needle bearing on high clutch hub.
- **Apply petroleum jelly to needle bearing.**
- **Pay attention to direction of needle bearing.**

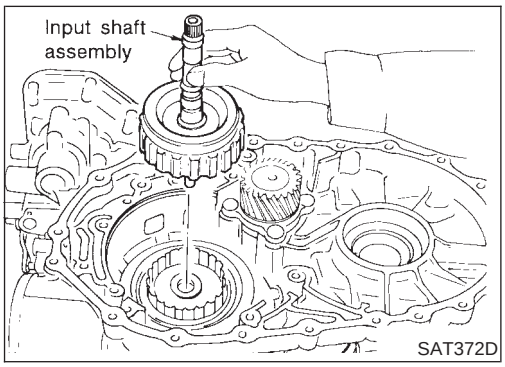

21. Remove paper rolled around input shaft.
22. Install input shaft assembly.
- **Align teeth of high clutch drive plates before installing.**

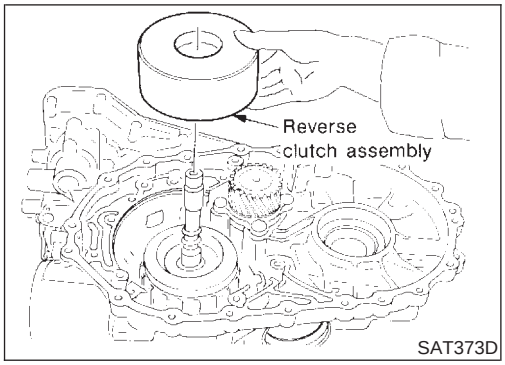

23. Install reverse clutch assembly.
- **Align teeth of reverse clutch drive plates before installing.**

Adjustment (2)

NJAT0176

When any parts listed below are replaced, adjust total end play and reverse clutch end play.

Part name	Total end play	Reverse clutch end play
Transmission case	●	●
Overrun clutch hub	●	●
Rear internal gear	●	●
Rear planetary carrier	●	●
Rear sun gear	●	●
Front planetary carrier	●	●
Front sun gear	●	●
High clutch hub	●	●
High clutch drum	●	●
Oil pump cover	●	●
Reverse clutch drum	—	●

TOTAL END PLAY

NJAT0176S01

- Measure clearance between reverse clutch drum and needle bearing for oil pump cover.
- Select proper thickness of bearing race so that end play is within specifications.

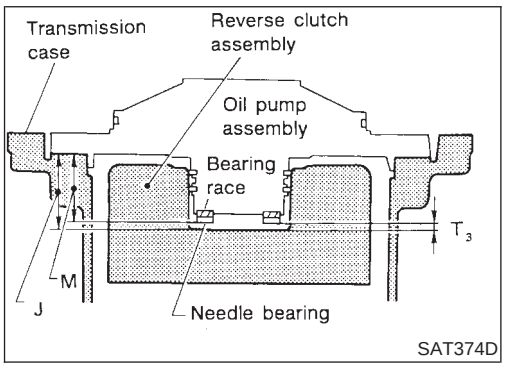

1. Measure dimensions "K" and "L" and then calculate dimension "J".

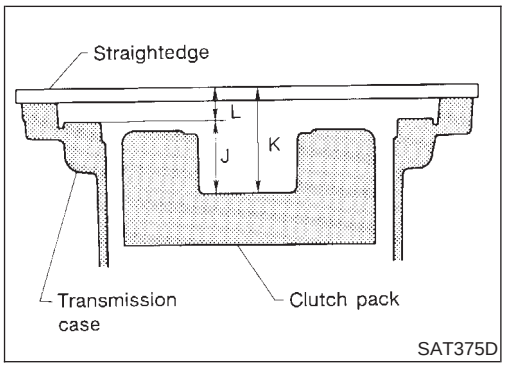

Adjustment (2) (Cont'd)

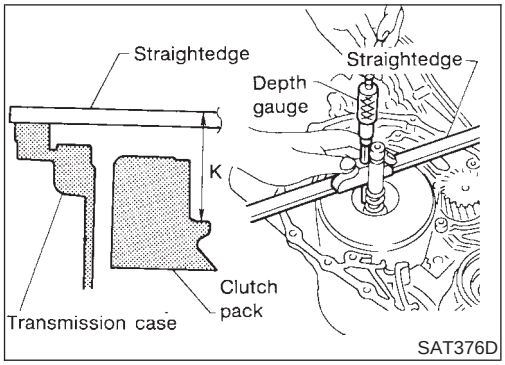

a. Measure dimension "K".

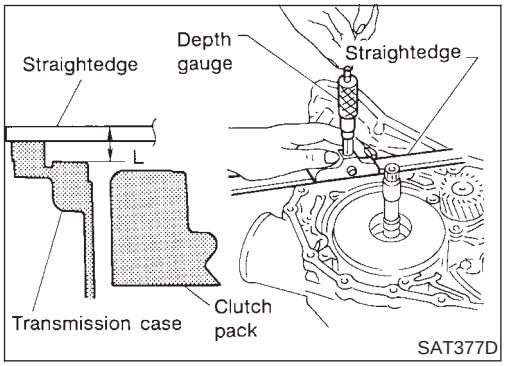

b. Measure dimension "L".

c. Calculate dimension "J".

"J": Distance between oil pump fitting surface of transmission case and needle bearing mating surface of high clutch drum

J = K − L

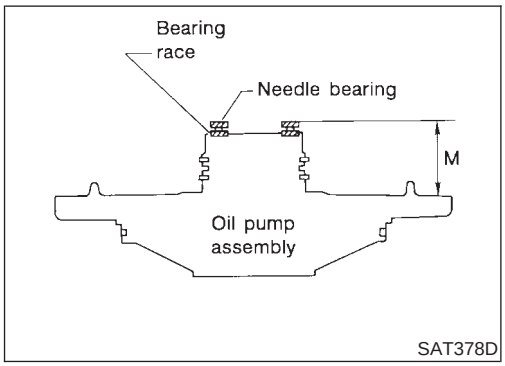

2. Measure dimension "M".

a. Place bearing race and needle bearing on oil pump assembly.

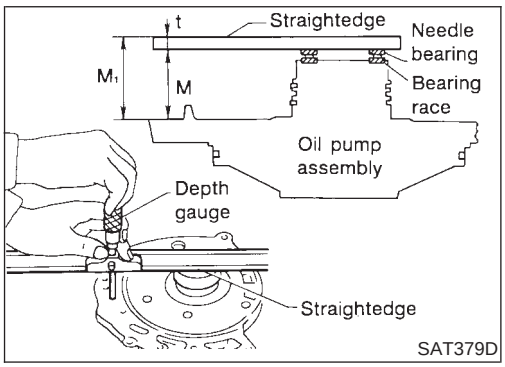

b. Measure dimension "M".

"M": Distance between transmission case fitting surface and needle bearing on oil pump cover

"M_1": Indication of gauge

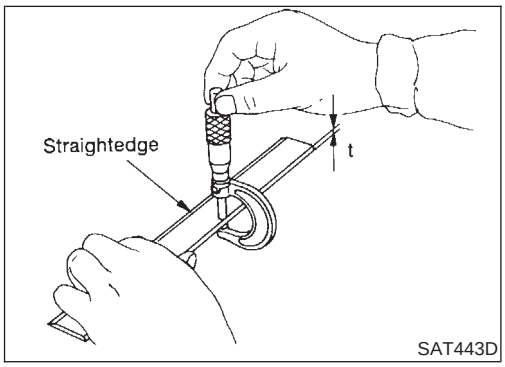

c. Measure thickness of straightedge "t".

$M = M_1 - t$

3. Adjust total end play "T_3".

   T_3 = J − M

   Total end play "T_3":

   0.25 - 0.55 mm (0.0098 - 0.0217 in)

- Select proper thickness of bearing race so that total end play is within specifications.

  Bearing races: Refer to SDS, AT-484.

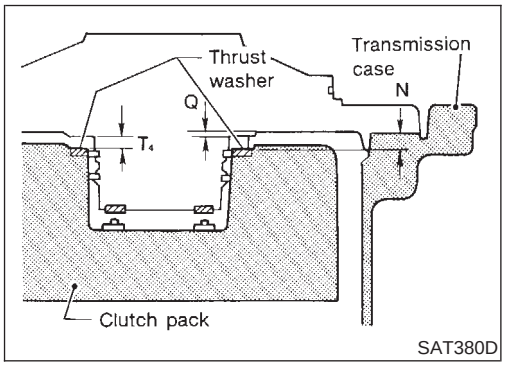

REVERSE CLUTCH END PLAY

NJAT0176S02

- Measure clearance between oil pump cover and thrust washer for reverse clutch drum.
- Select proper thickness of thrust washer so that end play is within specifications.

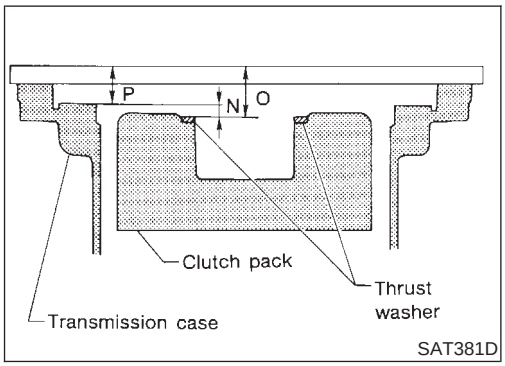

1. Measure dimensions "O" and "P" and then calculate dimension "N".

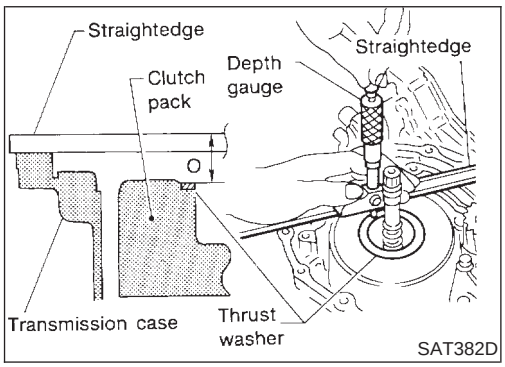

a. Place thrust washer on reverse clutch drum.
b. Measure dimension "O".

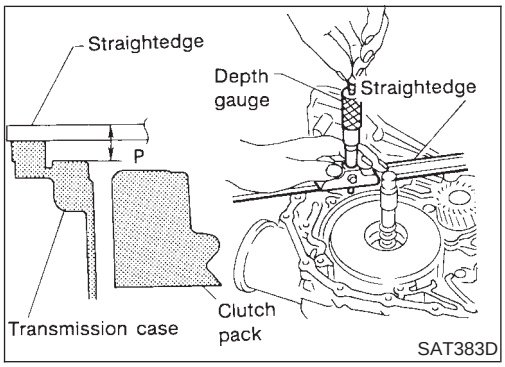

c. Measure dimension "P".
d. Calculate dimension "N".

   "N": Distance between oil pump fitting surface of transmission case and thrust washer on reverse clutch drum

   N = O − P

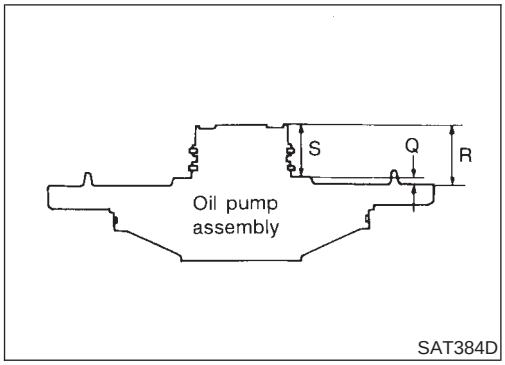

2. Measure dimensions "R" and "S" and then calculate dimension "Q".

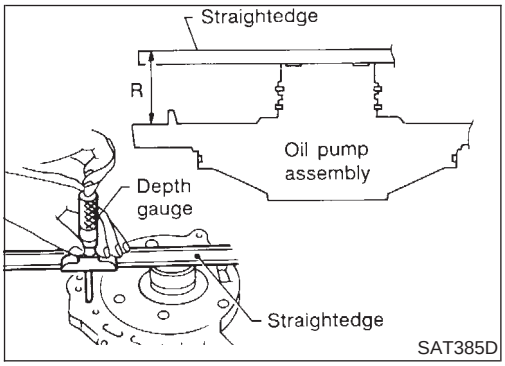

a. Measure dimension "R".

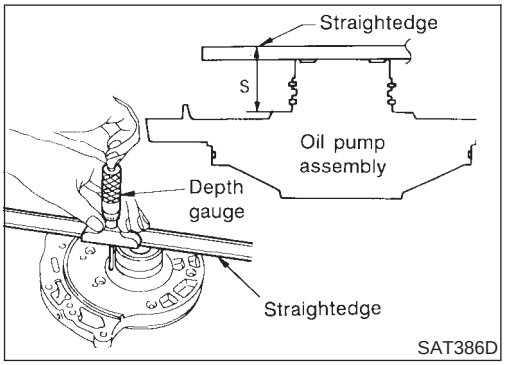

b. Measure dimension "S".
c. Calculate dimension "Q".
"Q": Distance between transmission case fitting surface and thrust washer mating surface

Q = R − S

3. Adjust reverse clutch end play "T_4".

T_4 = N − Q

Reverse clutch end play:

0.65 - 1.00 mm (0.0256 - 0.0394 in)

- Select proper thickness of thrust washer so that reverse clutch end play is within specifications.

Thrust washer: Refer to SDS, AT-484.

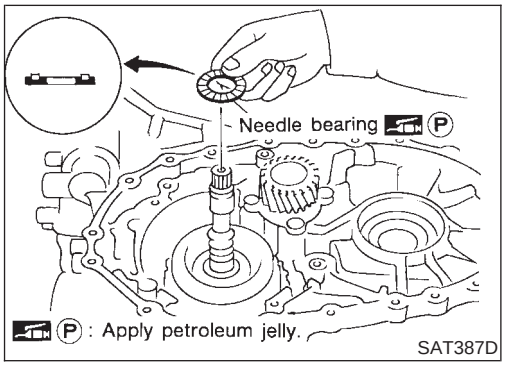

Assembly (3)

NJAT0177

1. Remove reverse clutch assembly and install needle bearing on high clutch assembly.

- **Pay attention to direction of needle bearing.**

2. Install reverse clutch assembly.

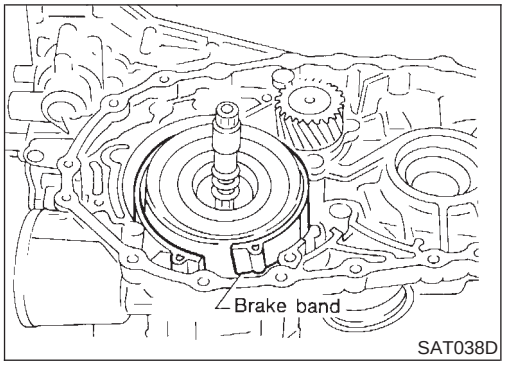

3. Install anchor end pin and lock nut on transmission case.
4. Place brake band on outside of reverse clutch drum. Tighten anchor end pin just enough so that brake band is evenly fitted on reverse clutch drum.

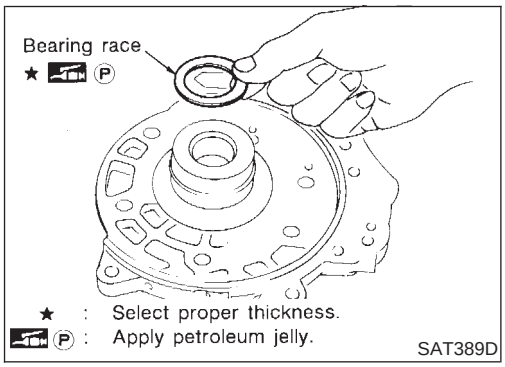

5. Place bearing race selected in total end play adjustment step on oil pump cover.
- **Apply petroleum jelly to bearing race.**

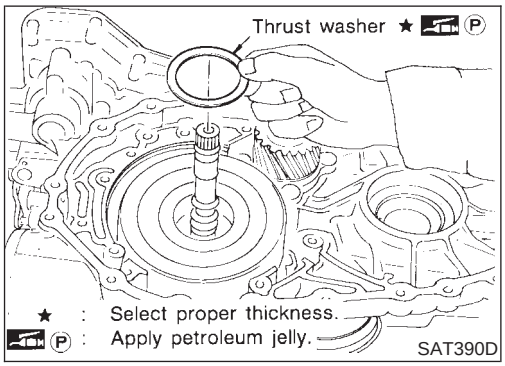

6. Place thrust washer selected in reverse clutch end play step on reverse clutch drum.
- **Apply petroleum jelly to thrust washer.**

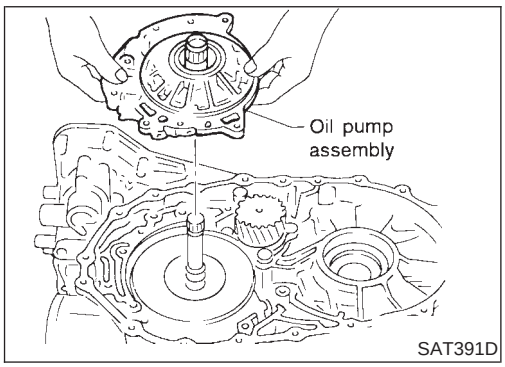

7. Install oil pump assembly on transmission case.

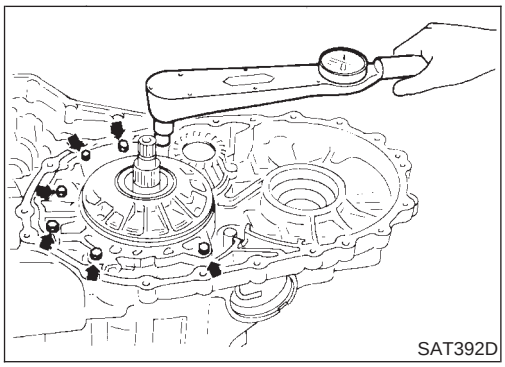

8. Tighten oil pump fixing bolts to specified torque.

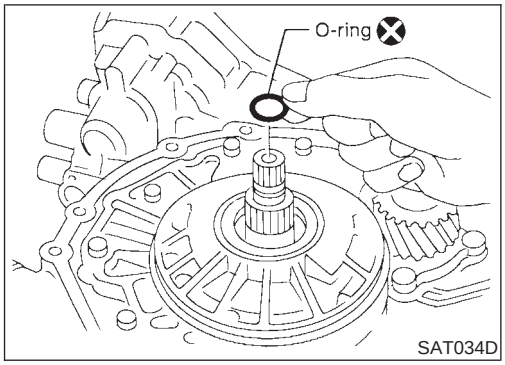

SAT034D

9. Install O-ring to input shaft.
- **Apply ATF to O-ring.**

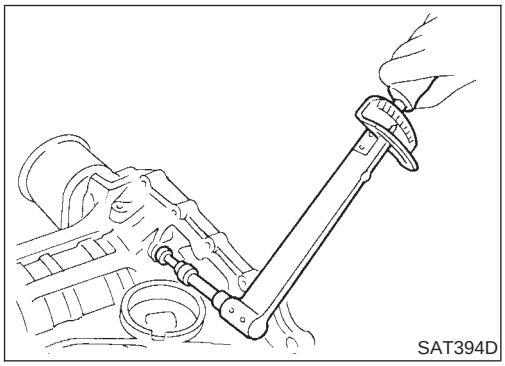
SAT394D

10. Adjust brake band.

a. Tighten anchor end pin to specified torque.

Anchor end pin:

: 3.9 - 5.9 N·m (0.4 - 0.6 kg-m, 35 - 52 in-lb)

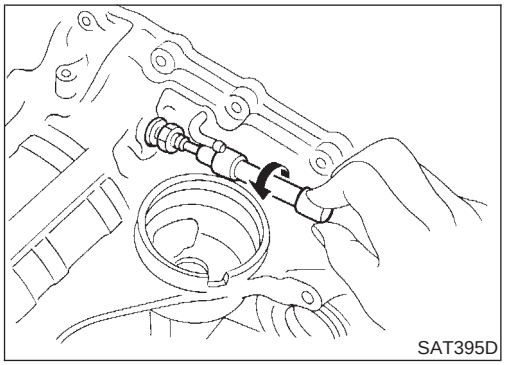
SAT395D

b. Back off anchor end pin two and a half turns.

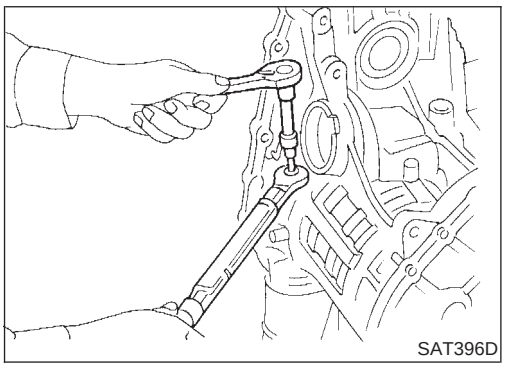
SAT396D

c. While holding anchor end pin, tighten lock nut.

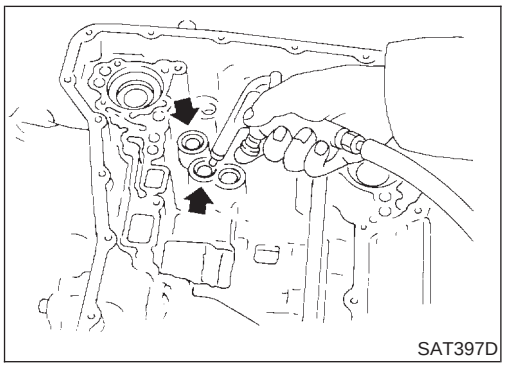
SAT397D

11. Apply compressed air to oil holes of transmission case and check operation of brake band.

Assembly (4)

NJAT0178

1. Install final drive assembly on transmission case.

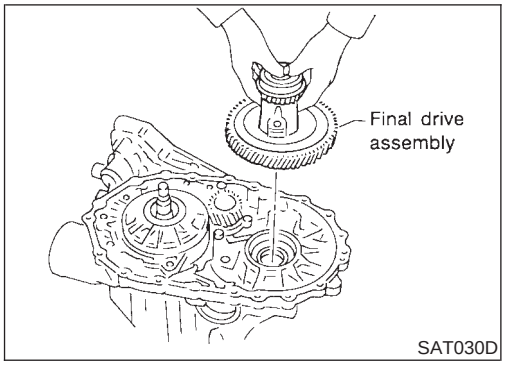

2. Install oil tube on converter housing.

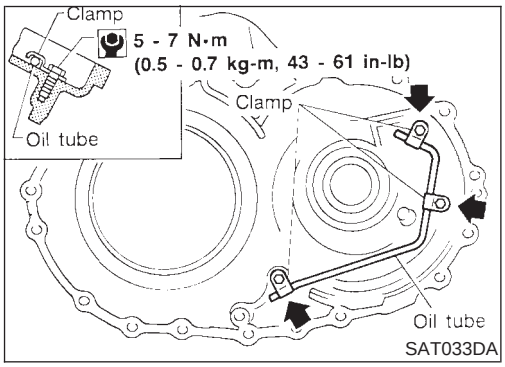

3. Install O-ring on differential oil port of transmission case.
4. Install converter housing on transmission case.

- **Apply locking sealant to mating surface of converter housing.**

Bolt	Length mm (in)
A	32.8 (1.291)
B	40 (1.57)

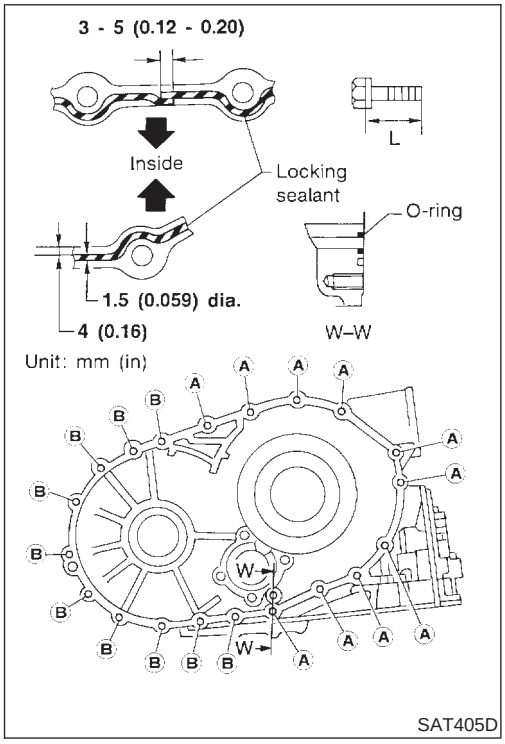

5. Install accumulator piston.

a. Check contact surface of accumulator piston for damage.

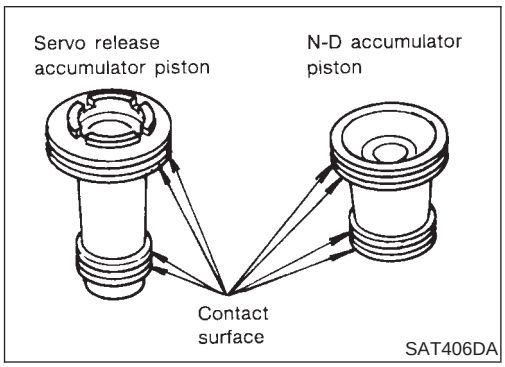

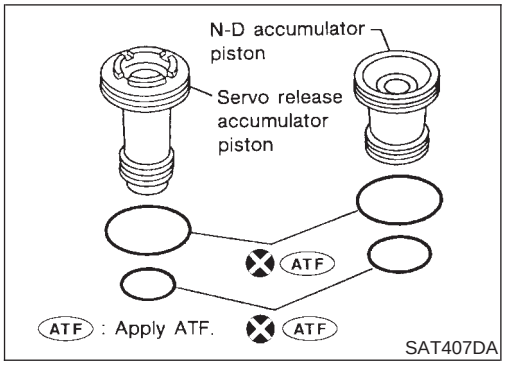

b. Install O-rings on accumulator piston.

- Apply ATF to O-rings.

Accumulator piston O-rings:
Refer to SDS, AT-484.

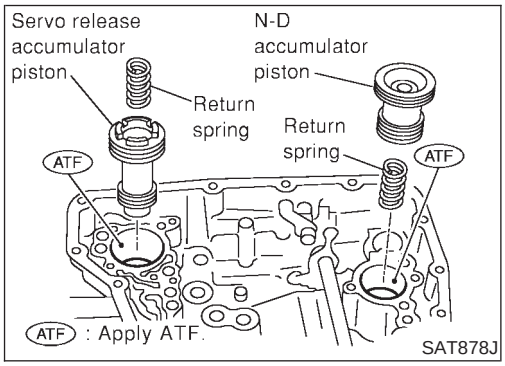

c. Install accumulator pistons and return springs on transmission case.

- **Apply ATF to inner surface of transmission case.**

Return springs:
Refer to SDS, AT-484.

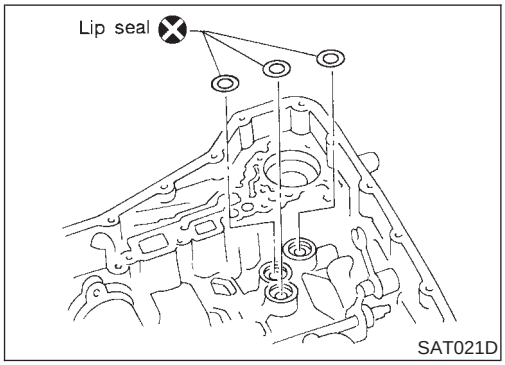

6. Install lip seals for band servo oil holes on transmission case.

- **Apply petroleum jelly to lip seals.**

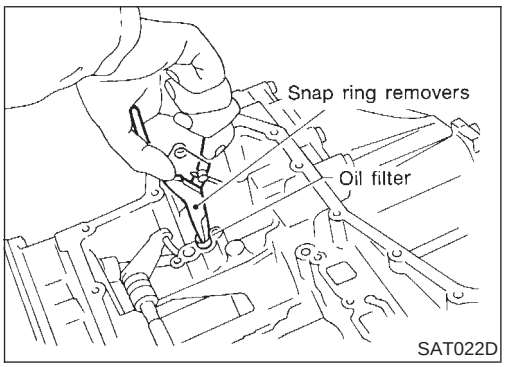

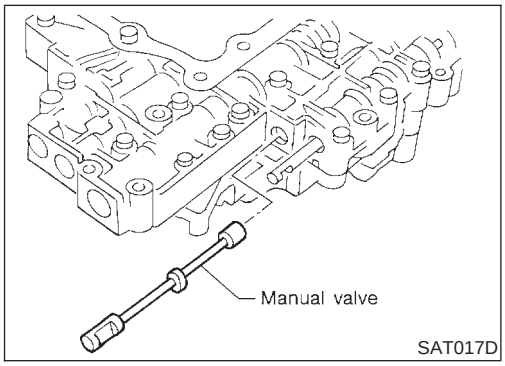

7. Install control valve assembly.

a. Insert manual valve into control valve assembly.

- **Apply ATF to manual valve.**

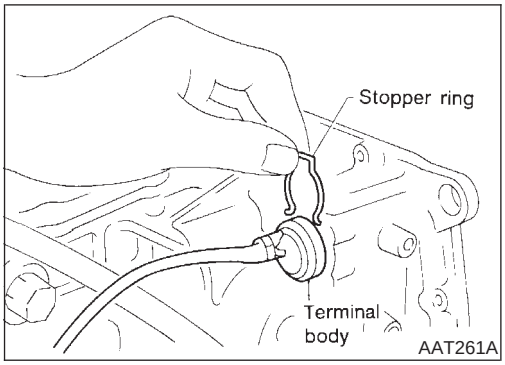

b. Pass solenoid harness through transmission case and install terminal body on transmission case by pushing it.

c. Install stopper ring to terminal body.

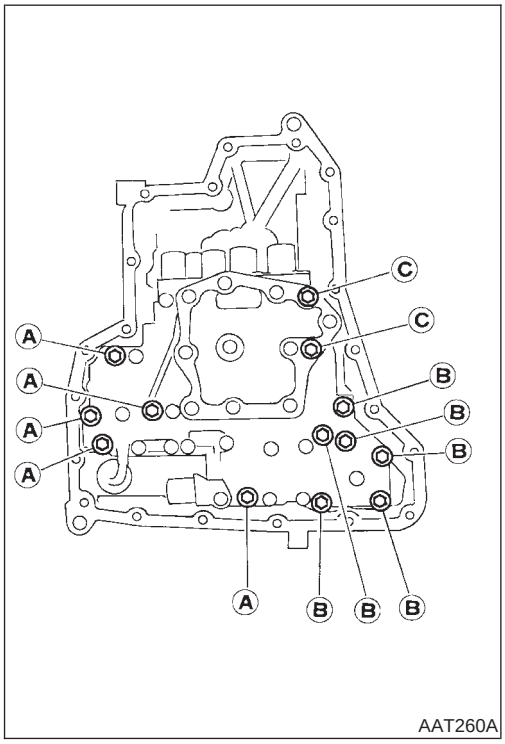

d. Tighten bolts **A**, **B** and **C**.

: 7 - 9 N·m (0.7 - 0.9 kg-m, 61 - 78 in-lb)

Bolt length, number and location

Bolt symbol	A	B	C
Bolt length "ℓ" ℓ	40.0 mm (1.575 in)	33.0 mm (1.299 in)	43.5 mm (1.713 in)
Number of bolts	5	6	2

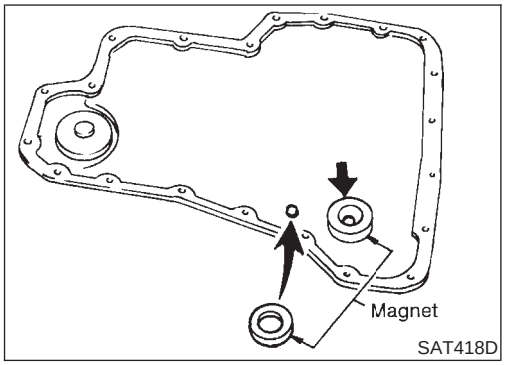

8. Install oil pan.

a. Attach magnet to oil pan.

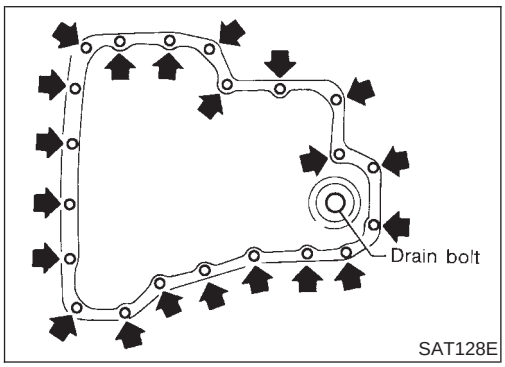

b. Install new oil pan gasket on transmission case.

c. Install oil pan on transmission case.

- **Always replace oil pan bolts as they are self-sealing bolts.**
- **Tighten the four bolts in a criss-cross pattern to prevent dislocation of gasket.**

d. Tighten drain plug to specified torque.

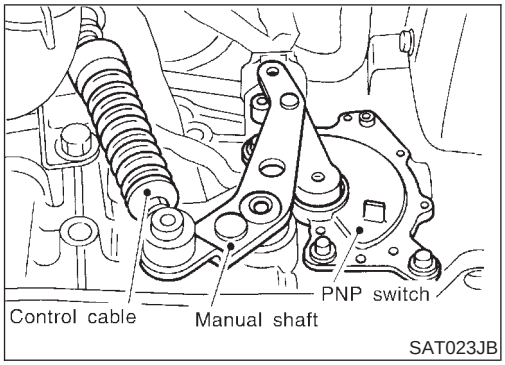

9. Install PNP switch.
a. Set manual shaft in "P" position.
b. Temporarily install PNP switch on manual shaft.
c. Move selector lever to "N" position.

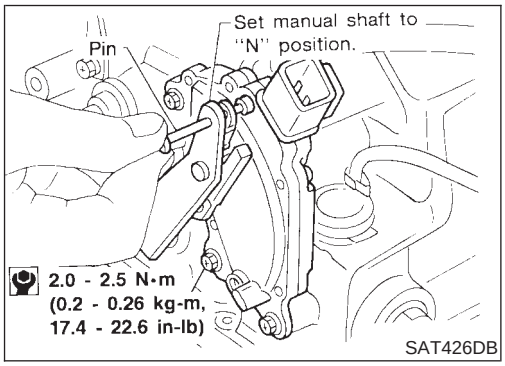

d. Use a 4 mm (0.157 in) pin for this adjustment.
1) Insert the pin straight into the manual shaft adjustment hole.
2) Rotate PNP switch until the pin can also be inserted straight into hole in PNP switch.
e. Tighten PNP switch fixing bolts.
f. Remove pin from adjustment hole after adjusting PNP switch.

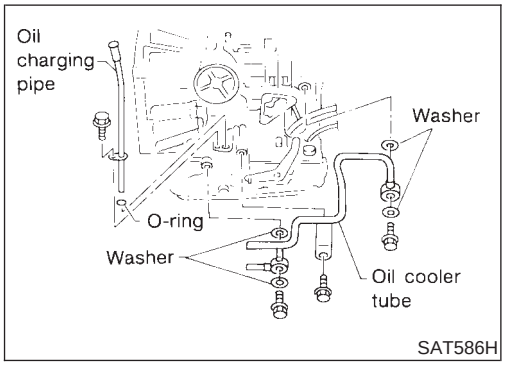

10. Install oil charging pipe and oil cooler tube to transmission case.

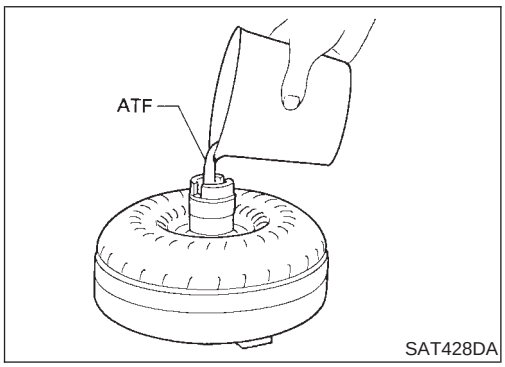

11. Install torque converter.
a. Pour ATF into torque converter.
- **Approximately 1 liter (7/8 Imp qt) of fluid is required for a new torque converter.**
- **When reusing old torque converter, add the same amount of fluid as was drained.**

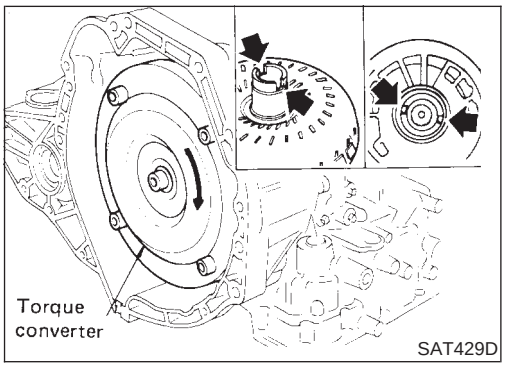

b. Install torque converter while aligning notches of torque converter with notches of oil pump.

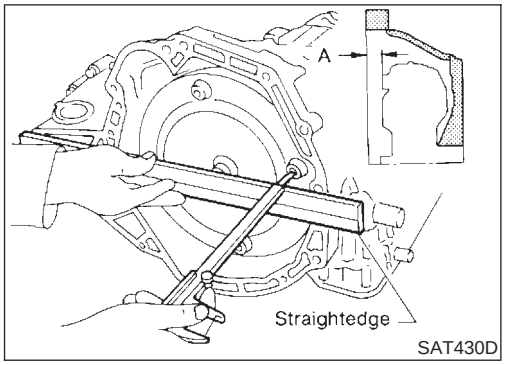

c. Measure distance "A" to check that torque converter is in proper position.

Distance "A":

15.9 mm (0.626 in) or more

General Specifications

NJAT0179

Applied model		General and except for Euro-OBD					
		QG15DE	QG16DE	QG18DE	QG13DE	QG16DE	QG18DE
		With catalyzer			Without catalyzer		
Automatic transaxle assembly		RE4F03B					
		3AX01	3AX19	3AX10	3AX00	3AX19	3AX10
Transaxle gear ratio	1st	2.861					
	2nd	1.562					
	3rd	1.000					
	4th	0.697					
	Reverse	2.310					
	Final drive	3.827	4.072	4.072	4.072	4.072	4.072
Recommended fluid		Genuine Nissan ATF or equivalent*1					
Fluid capacity ℓ (Imp qt)		7.0 (6-1/8)					

Applied model		Middle East			Australia		Euro-OBD
		RE4F03B					
		QG13DE	QG16DE	QG18DE	QG16DE	QG18DE	QG18DE
Automatic transaxle assembly		3AX63	3AX64	3AX10	3AX19	3AX10	3AX18
Transaxle gear ratio	1st	2.861					
	2nd	1.562					
	3rd	1.000					
	4th	0.697					
	Reverse	2.310					
	Final drive	4.072	4.072	4.072	4.072	4.072	4.072
Recommended fluid		Genuine Nissan ATF or equivalent*1					
Fluid capacity ℓ (Imp qt)		7.0 (6-1/8)					

*1: Refer to MA-16, “Fluids and Lubricants”.

Shift Schedule

NJAT0180

VEHICLE SPEED WHEN SHIFTING GEARS

NJAT0180S01

1. For General and except for Euro-OBD: QG15DE + 3AX01 model (With catalyzer)

Throttle position	Vehicle speed km/h (MPH)						
	$D_1 \rightarrow D_2$	$D_2 \rightarrow D_3$	$D_3 \rightarrow D_4$	$D_4 \rightarrow D_3$	$D_3 \rightarrow D_2$	$D_2 \rightarrow D_1$	$1_2 \rightarrow 1_1$
Full throttle	54 - 62 (34 - 39)	102 - 110 (63 - 68)	162 - 170 (101 - 106)	158 - 166 (98 - 103)	92 - 100 (57 - 62)	41 - 49 (25 - 30)	54 - 62 (34 - 39)
Half throttle	26 - 34 (16 - 21)	51 - 59 (32 - 37)	122 - 130 (76 - 81)	70 - 78 (43 - 48)	40 - 48 (25 - 30)	5 - 13 (3 - 8)	54 - 62 (34 - 39)

Shift Schedule (Cont'd)

For General and except for Euro-OBD: QG16DE + 3AX19 model (With catalyzer)

Throttle position	Vehicle speed km/h (MPH)						
	$D_1 \rightarrow D_2$	$D_2 \rightarrow D_3$	$D_3 \rightarrow D_4$	$D_4 \rightarrow D_3$	$D_3 \rightarrow D_2$	$D_2 \rightarrow D_1$	$1_2 \rightarrow 1_1$
Full throttle	50 - 58 (31 - 36)	96 - 104 (60 - 65)	152 - 160 (94 - 99)	148 - 156 (92 - 97)	86 - 94 (53 - 58)	41 - 49 (25 - 30)	50 - 58 (31 - 36)
Half throttle	28 - 36 (17 - 22)	55 - 63 (34 - 39)	119 - 127 (74 - 79)	76 - 84 (47 - 52)	36 - 44 (22 - 27)	5 - 13 (3 - 8)	50 - 58 (31 - 36)

For General and except for Euro-OBD: QG18DE + 3AX10 model (With catalyzer)

Throttle position	Vehicle speed km/h (MPH)						
	$D_1 \rightarrow D_2$	$D_2 \rightarrow D_3$	$D_3 \rightarrow D_4$	$D_4 \rightarrow D_3$	$D_3 \rightarrow D_2$	$D_2 \rightarrow D_1$	$1_2 \rightarrow 1_1$
Full throttle	49 - 57 (30 - 35)	93 - 101 (58 - 63)	148 - 156 (92 - 97)	144 - 152 (89 - 94)	83 - 91 (52 - 57)	41 - 49 (25 - 30)	49 - 57 (30 - 35)
Half throttle	26 - 34 (16 - 21)	50 - 58 (31 - 36)	112 - 120 (70 - 75)	63 - 71 (39 - 44)	32 - 40 (20 - 25)	5 - 13 (3 - 8)	49 - 57 (30 - 35)

2. For General and except for Euro-OBD: QG13DE + 3AX00 model (Without catalyzer)

Throttle position	Vehicle speed km/h (MPH)						
	$D_1 \rightarrow D_2$	$D_2 \rightarrow D_3$	$D_3 \rightarrow D_4$	$D_4 \rightarrow D_3$	$D_3 \rightarrow D_2$	$D_2 \rightarrow D_1$	$1_2 \rightarrow 1_1$
Full throttle	50 - 58 (31 - 36)	95 - 103 (59 - 64)	152 - 160 (94 - 99)	148 - 156 (92 - 97)	85 - 93 (53 - 58)	41 - 49 (25 - 30)	50 - 58 (31 - 36)
Half throttle	25 - 33 (16 - 21)	50 - 58 (31 - 36)	103 - 111 (64 - 69)	54 - 62 (34 - 39)	32 - 40 (20 - 25)	5 - 13 (3 - 8)	50 - 58 (31 - 36)

For General and except for Euro-OBD: QG16DE + 3AX19 model (Without catalyzer)

Throttle position	Vehicle speed km/h (MPH)						
	$D_1 \rightarrow D_2$	$D_2 \rightarrow D_3$	$D_3 \rightarrow D_4$	$D_4 \rightarrow D_3$	$D_3 \rightarrow D_2$	$D_2 \rightarrow D_1$	$1_2 \rightarrow 1_1$
Full throttle	50 - 58 (31 - 36)	96 - 104 (60 - 65)	152 - 160 (94 - 99)	148 - 156 (92 - 97)	86 - 94 (53 - 58)	41 - 49 (25 - 30)	50 - 58 (31 - 36)
Half throttle	28 - 36 (17 - 22)	55 - 63 (34 - 39)	119 - 127 (74 - 79)	76 - 84 (47 - 52)	36 - 44 (22 - 27)	5 - 13 (3 - 8)	50 - 58 (31 - 36)

For General and except for Euro-OBD: QG18DE + 3AX10 model (Without catalyzer)

Throttle position	Vehicle speed km/h (MPH)						
	$D_1 \rightarrow D_2$	$D_2 \rightarrow D_3$	$D_3 \rightarrow D_4$	$D_4 \rightarrow D_3$	$D_3 \rightarrow D_2$	$D_2 \rightarrow D_1$	$1_2 \rightarrow 1_1$
Full throttle	49 - 57 (30 - 35)	93 - 101 (58 - 63)	148 - 156 (92 - 97)	144 - 152 (89 - 94)	83 - 91 (52 - 57)	41 - 49 (25 - 30)	49 - 57 (30 - 35)
Half throttle	26 - 34 (16 - 21)	50 - 58 (31 - 36)	112 - 120 (70 - 75)	63 - 71 (39 - 44)	32 - 40 (20 - 25)	5 - 13 (3 - 8)	49 - 57 (30 - 35)

3. For the Middle East: QG13DE + 3AX63 model

Throttle position	Vehicle speed km/h (MPH)						
	$D_1 \rightarrow D_2$	$D_2 \rightarrow D_3$	$D_3 \rightarrow D_4$	$D_4 \rightarrow D_3$	$D_3 \rightarrow D_2$	$D_2 \rightarrow D_1$	$1_2 \rightarrow 1_1$
Full throttle	50 - 58 (31 - 36)	95 - 103 (59 - 64)	152 - 160 (94 - 99)	148 - 156 (92 - 97)	85 - 93 (53 - 58)	41 - 49 (25 - 30)	50 - 58 (31 - 36)

Shift Schedule (Cont'd)

Throttle position	Vehicle speed km/h (MPH)						
	$D_1 \rightarrow D_2$	$D_2 \rightarrow D_3$	$D_3 \rightarrow D_4$	$D_4 \rightarrow D_3$	$D_3 \rightarrow D_2$	$D_2 \rightarrow D_1$	$1_2 \rightarrow 1_1$
Half throttle	25 - 33 (16 - 21)	50 - 58 (31 - 36)	103 - 111 (64 - 69)	54 - 62 (34 - 39)	32 - 40 (20 - 25)	5 - 13 (3 - 8)	50 - 58 (31 - 36)

For the Middle East: QG16DE + 3AX64 model

Throttle position	Vehicle speed km/h (MPH)						
	$D_1 \rightarrow D_2$	$D_2 \rightarrow D_3$	$D_3 \rightarrow D_4$	$D_4 \rightarrow D_3$	$D_3 \rightarrow D_2$	$D_2 \rightarrow D_1$	$1_2 \rightarrow 1_1$
Full throttle	50 - 58 (31 - 36)	96 - 104 (60 - 65)	152 - 160 (94 - 99)	148 - 156 (92 - 97)	86 - 94 (53 - 58)	41 - 49 (25 - 30)	50 - 58 (31 - 36)
Half throttle	28 - 36 (17 - 22)	55 - 63 (34 - 39)	119 - 127 (74 - 79)	76 - 84 (47 - 52)	36 - 44 (22 - 27)	5 - 13 (3 - 8)	50 - 58 (31 - 36)

For the Middle East: QG18DE + 3AX10 model

Throttle position	Vehicle speed km/h (MPH)						
	$D_1 \rightarrow D_2$	$D_2 \rightarrow D_3$	$D_3 \rightarrow D_4$	$D_4 \rightarrow D_3$	$D_3 \rightarrow D_2$	$D_2 \rightarrow D_1$	$1_2 \rightarrow 1_1$
Full throttle	49 - 57 (30 - 35)	93 - 101 (58 - 63)	148 - 156 (92 - 97)	144 - 152 (89 - 94)	83 - 91 (52 - 57)	41 - 49 (25 - 30)	49 - 57 (30 - 35)
Half throttle	26 - 34 (16 - 21)	50 - 58 (31 - 36)	112 - 120 (70 - 75)	63 - 71 (39 - 44)	32 - 40 (20 - 25)	5 - 13 (3 - 8)	49 - 57 (30 - 35)

4. For Australia: QG16DE + 3AX19 model

Throttle position	Vehicle speed km/h (MPH)						
	$D_1 \rightarrow D_2$	$D_2 \rightarrow D_3$	$D_3 \rightarrow D_4$	$D_4 \rightarrow D_3$	$D_3 \rightarrow D_2$	$D_2 \rightarrow D_1$	$1_2 \rightarrow 1_1$
Full throttle	50 - 58 (31 - 36)	96 - 104 (60 - 65)	152 - 160 (94 - 99)	148 - 156 (92 - 97)	86 - 94 (53 - 58)	41 - 49 (25 - 30)	50 - 58 (31 - 36)
Half throttle	28 - 36 (17 - 22)	55 - 63 (34 - 39)	119 - 127 (74 - 79)	76 - 84 (47 - 52)	36 - 44 (22 - 27)	5 - 13 (3 - 8)	50 - 58 (31 - 36)

For Australia: QG18DE + 3AX10 model

Throttle position	Vehicle speed km/h (MPH)						
	$D_1 \rightarrow D_2$	$D_2 \rightarrow D_3$	$D_3 \rightarrow D_4$	$D_4 \rightarrow D_3$	$D_3 \rightarrow D_2$	$D_2 \rightarrow D_1$	$1_2 \rightarrow 1_1$
Full throttle	49 - 57 (30 - 35)	93 - 101 (58 - 63)	148 - 156 (92 - 97)	144 - 152 (89 - 94)	83 - 91 (52 - 57)	41 - 49 (25 - 30)	49 - 57 (30 - 35)
Half throttle	26 - 34 (16 - 21)	50 - 58 (31 - 36)	112 - 120 (70 - 75)	63 - 71 (39 - 44)	32 - 40 (20 - 25)	5 - 13 (3 - 8)	49 - 57 (30 - 35)

5. For Euro-OBD: QG18DE + 3AX18 model

Throttle position	Vehicle speed km/h (MPH)						
	$D_1 \rightarrow D_2$	$D_2 \rightarrow D_3$	$D_3 \rightarrow D_4$	$D_4 \rightarrow D_3$	$D_3 \rightarrow D_2$	$D_2 \rightarrow D_1$	$1_2 \rightarrow 1_1$
Full throttle	51 - 59 (32 - 37)	97 - 105 (60 - 65)	154 - 162 (96 - 101)	150 - 158 (93 - 98)	87 - 95 (54 - 59)	41 - 49 (25 - 30)	51 - 59 (32 - 37)
Half throttle	28 - 36 (17 - 22)	52 - 60 (32 - 37)	117 - 125 (73 - 78)	66 - 74 (41 - 46)	33 - 41 (21 - 25)	5 - 13 (3 - 8)	51 - 59 (32 - 37)

VEHICLE SPEED WHEN PERFORMING LOCK-UP
(Throttle opening: 2.0/8, Shift pattern: Comfort)

=NJAT0180S02

Engine model	Destination	OD switch	Vehicle speed km/h (MPH)	
			Lock-up ON	Lock-up OFF
QG13DE	General and except for Euro-OBD Middle East	ON (D_4)	76 - 86 (48 - 53)	54 - 62 (34 - 39)
		OFF (D_3)	Not applied	Not applied
QG15DE	General and except for Euro-OBD	ON (D_4)	91 - 99 (57 - 62)	56 - 64 (35 - 40)
		OFF (D_3)	Not applied	Not applied
QG16DE	General and except for Euro-OBD Australia Middle East	ON (D_4)	88 - 96 (55 - 60)	64 - 72 (40 - 45)
		OFF (D_3)	86 - 94 (53 - 58)	83 - 91 (52 - 57)
QG18DE	General (Except Taiwan) and except for Euro-OBD Australia Middle East	ON (D_4)	88 - 96 (55 - 60)	59 - 67 (37 - 42)
		OFF (D_3)	86 - 94 (53 - 58)	83 - 91 (52 - 57)
	Euro-OBD Taiwan South Africa	ON (D_4)	92 - 100 (57 - 62)	67 - 75 (42 - 47)
		OFF (D_3)	96 - 104 (60 - 65)	93 - 101 (58 - 63)

Stall Revolution

NJAT0181

Engine model	Stall revolution rpm
QG13DE	2,000 - 2,300
QG15DE	2,000 - 2,300
QG16DE	2,200 - 2,700
QG18DE	2,050 - 2,500

Line Pressure

NJAT0182

Engine model	Engine speed	Line pressure kPa (bar, kg/cm^2, psi)			
		R position	D position	2 position	1 position
QG13DE	Idle	778 (7.78, 7.9, 113)	500 (5.0, 5.1, 73)	500 (5.0, 5.1, 73)	500 (5.0, 5.1, 73)
	Stall	1,750 (17.5, 17.9, 254)	1,125 (11.25, 11.5, 163)	1,125 (11.25, 11.5, 163)	1,125 (11.25, 11.5, 163)
QG15DE	Idle	778 (7.78, 7.9, 113)	500 (5.0, 5.1, 73)	500 (5.0, 5.1, 73)	500 (5.0, 5.1, 73)
	Stall	1,639 (16.39, 16.7, 238)	1,053 (10.53, 10.7, 153)	1,053 (10.53, 10.7, 153)	1,053 (10.53, 10.7, 153)
QG16DE	Idle	778 (7.78, 7.9, 113)	500 (5.0, 5.1, 73)	500 (5.0, 5.1, 73)	500 (5.0, 5.1, 73)
	Stall	1,683 (16.83, 17.2, 244)	1,082 (10.82, 11.04, 157)	1,082 (10.82, 11.04, 157)	1,082 (10.82, 11.04, 157)
QG18DE	Idle	778 (7.78, 7.9, 113)	500 (5.0, 5.1, 73)	500 (5.0, 5.1, 73)	500 (5.0, 5.1, 73)
	Stall	1,705 (17.05, 17.4, 247)	1,096 (10.96, 11.2, 159)	1,096 (10.96, 11.2, 159)	1,096 (10.96, 11.2, 159)

Control Valves

NJAT0183

CONTROL VALVE AND PLUG RETURN SPRINGS

NJAT0183S01

Unit: mm (in)

	No.	Parts		Part No.*	Free length	Outer diameter
Upper body Refer to "Control Valve Upper Body", AT-397.	35	3-2 timing valve spring		31736-01X00	23.0 (0.906)	6.65 (0.2618)
	19	Cooler check valve spring		31742-3AX05	28.04 (1.1039)	7.15 (0.2815)
	23	Pilot valve spring		31742-3AX03	38.98 (1.5346)	8.9 (0.350)
	15	1-2 accumulator valve spring		31742-3AX00	20.5 (0.807)	6.95 (0.2736)
	28	1-2 accumulator piston spring	QG13DE model	31742-3AX08	55.26 (2.1756)	19.6 (0.772)
			QG15DE, QG16DE & QG18DE models	31742-3AX09	55.66 (2.1913)	19.5 (0.7677)
	33	1st reducing valve spring		31742-80X05	27.0 (1.063)	7.0 (0.276)
	2	Overrun clutch reducing valve spring		31742-80X06	37.5 (1.476)	7.0 (0.276)
	7	Torque converter relief valve spring		31742-3AX04	33.3 (1.3110)	9.0 (0.354)
	10	Torque converter clutch control valve spring		31742-3AX02	53.01 (2.0870)	6.5 (0.256)
Lower body Refer to "Control Valve Lower Body", AT-401.	34	Shuttle valve spring		31762-41X04	51.0 (2.0079)	5.65 (0.2224)
	18	Pressure regulator valve spring		31742-80X13	45.0 (1.772)	15.0 (0.591)
	23	Overrun clutch control valve spring		31762-80X00	21.7 (0.854)	7.0 (0.276)
	27	Accumulator control valve spring		31742-80X02	22.0 (0.866)	6.5 (0.256)
	29	Shift valve A spring		31762-80X00	21.7 (0.854)	7.0 (0.276)
	2	Shift valve B spring		31762-80X00	21.7 (0.854)	7.0 (0.276)
	11	Pressure modifier piston spring		31742-41X15	30.5 (1.201)	9.8 (0.386)
	7	Pressure modifier valve spring		31742-80X16	32.0 (1.260)	6.9 (0.272)
	—	Oil cooler relief valve spring		31872-31X00	17.02 (0.6701)	8.0 (0.315)
	—	T/C pressure spring		31742-3AX07	9.0 (0.354)	7.3 (0.287)

*: Always check with the Parts Department for the latest parts information.

Clutch and Brakes

NJAT0184

REVERSE CLUTCH

NJAT0184S01

Number of drive plates		2	
Number of driven plates		2	
Drive plate thickness mm (in)	Standard	2.0 (0.079)	
	Allowable limit	1.8 (0.071)	
Clearance mm (in)	Standard	0.5 - 0.8 (0.020 - 0.031)	
	Allowable limit	1.2 (0.047)	
Thickness of retaining plates		Thickness mm (in)	Part number*
		4.4 (0.173)	31537-31X00
		4.6 (0.181)	31537-31X01
		4.8 (0.189)	31537-31X02
		5.0 (0.197)	31537-31X03
		5.2 (0.205)	31537-31X04

*: Always check with the Parts Department for the latest parts information.

HIGH CLUTCH

NJAT0184S02

1. QG13DE + 3AX00, 3AX63 models

Number of drive plates		2	
Number of driven plates		6	
Drive plate thickness mm (in)	Standard	2.0 (0.079)	
	Allowable limit	1.4 (0.055)	
Clearance mm (in)	Standard	1.4 - 1.8 (0.055 - 0.071)	
	Allowable limit	2.4 (0.094)	
Thickness of retaining plates		Thickness mm (in)	Part number*
		4.4 (0.173)	31537-32X03
		4.6 (0.181)	31537-32X04
		4.8 (0.189)	31537-32X05
		5.0 (0.197)	31537-32X06
		5.2 (0.205)	31537-32X07
		5.4 (0.213)	31537-32X08
		5.6 (0.220)	31537-32X09
		5.8 (0.228)	31537-32X10

*: Always check with the Parts Department for the latest parts information.

2. QG15DE + 3AX01 model/QG16DE + 3AX19, 3AX64 models

Number of drive plates		3	
Number of driven plates		5	
Drive plate thickness mm (in)	Standard	2.0 (0.079)	
	Allowable limit	1.8 (0.071)	
Clearance mm (in)	Standard	1.4 - 1.8 (0.055 - 0.071)	
	Allowable limit	2.4 (0.094)	
Thickness of retaining plate		Thickness mm (in)	Part number*
		4.8 (0.189)	31537-32X05
		5.0 (0.197)	31537-32X06
		5.2 (0.205)	31537-32X07
		5.4 (0.213)	31537-32X08
		5.6 (0.220)	31537-32X09
		5.8 (0.228)	31537-32X10
		6.0 (0.236)	31537-32X11

*: Always check with the Parts Department for the latest parts information.

3. QG18DE + 3AX10, 3AX18 models

Number of drive plates		3	
Number of driven plates		5	
Drive plate thickness mm (in)	Standard	1.6 (0.063)	
	Allowable limit	1.4 (0.055)	
Clearance mm (in)	Standard	1.4 - 1.8 (0.055 - 0.071)	
	Allowable limit	2.4 (0.094)	
Thickness of retaining plate		Thickness mm (in)	Part number*
		3.6 (0.142)	31537-32X12
		3.8 (0.150)	31537-32X00
		4.0 (0.157)	31537-32X01
		4.2 (0.165)	31537-32X02
		4.4 (0.173)	31537-32X03
		4.6 (0.181)	31537-32X04
		4.8 (0.189)	31537-32X05

*: Always check with the Parts Department for the latest parts information.

FORWARD CLUTCH

NJAT0184S03

Number of drive plates		5	
Number of driven plates		5	
Drive plate thickness mm (in)	Standard	1.8 (0.071)	
	Allowable limit	1.6 (0.063)	
Clearance mm (in)	Standard	0.45 - 0.85 (0.0177 - 0.0335)	
	Allowable limit	1.85 (0.0728)	
Thickness of retaining plate		Thickness mm (in)	Part number*
		3.6 (0.142)	31537-31X60
		3.8 (0.150)	31537-31X61
		4.0 (0.157)	31537-31X62
		4.2 (0.165)	31537-31X63
		4.4 (0.173)	31537-31X64
		4.6 (0.181)	31537-31X65

*: Always check with the Parts Department for the latest parts information.

OVERRUN CLUTCH

NJAT0184S04

Number of drive plates		3	
Number of driven plates		4	
Drive plate thickness mm (in)	Standard	1.6 (0.063)	
	Allowable limit	1.4 (0.055)	
Clearance mm (in)	Standard	1.0 - 1.4 (0.039 - 0.055)	
	Allowable limit	2.0 (0.079)	
Thickness of retaining plate		Thickness mm (in)	Part number*
		3.6 (0.142)	31567-31X79
		3.8 (0.150)	31567-31X80
		4.0 (0.157)	31567-31X81
		4.2 (0.165)	31567-31X82
		4.4 (0.173)	31567-31X83

*: Always check with the Parts Department for the latest parts information.

LOW & REVERSE BRAKE

NJAT0184S05

1. QG13DE + 3AX00, 3AX63 models

Number of drive plates		4	
Number of driven plates		3 + 1	
Drive plate thickness mm (in)	Standard	2.0 (0.079)	
	Allowable limit	1.8 (0.071)	
Clearance mm (in)	Standard	1.4 - 1.8 (0.055 - 0.071)	
	Allowable limit	2.8 (0.110)	
Thickness of retaining plate		Thickness mm (in)	Part number*
		3.6 (0.142)	31667-31X16
		3.8 (0.150)	31667-31X17
		4.0 (0.157)	31667-31X18
		4.2 (0.165)	31667-31X19
		4.4 (0.173)	31667-31X20
		4.6 (0.181)	31667-31X21

*: Always check with the Parts Department for the latest parts information.

2. QG15DE + 3AX01 model/QG16DE + 3AX19, 3AX64 models/QG18DE + 3AX10, 3AX18 models

Number of drive plates		5	
Number of driven plates		4 + 1	
Drive plate thickness mm (in)	Standard	2.0 (0.079)	
	Allowable limit	1.8 (0.071)	
Clearance mm (in)	Standard	1.4 - 1.8 (0.055 - 0.071)	
	Allowable limit	2.8 (0.110)	
Thickness of retaining plate		Thickness mm (in)	Part number*
		3.6 (0.142) 3.8 (0.150) 4.0 (0.157) 4.2 (0.165) 4.4 (0.173) 4.6 (0.181)	31667-31X16 31667-31X17 31667-31X18 31667-31X19 31667-31X20 31667-31X21

*: Always check with the Parts Department for the latest parts information.

BRAKE BAND

NJAT0184S06

Anchor end pin tightening torque	3.5 - 5.8 N·m (0.35 - 0.6 kg-m, 31 - 52 in-lb)
Number of returning revolutions for anchor end pin	2.5±0.125
Lock nut tightening torque	31 - 36 N·m (3.2 - 3.7 kg-m, 23 - 27 ft-lb)

Clutch and Brake Return Springs

NJAT0185

Unit: mm (in)

Parts		Free length	Outer diameter	Part number*
Forward clutch (Overrun clutch)	Outer (16 pcs)	26.6 (1.047)	10.6 (0.417)	31505-31X02
	Inner (16 pcs)	26.3 (1.035)	7.7 (0.303)	31505-31X03
Reverse clutch (16 pcs)		18.6 (0.732)	8.0 (0.315)	31505-31X00
High clutch (12 pcs)		19.7 (0.776)	11.1 (0.437)	31505-31X01
Low reverse brake (20 pcs)		25.1 (0.988)	7.6 (0.299)	31505-31X04

*: Always check with the Parts Department for the latest parts information.

Oil Pump

NJAT0186

Oil pump side clearance mm (in)		0.02 - 0.04 (0.0008 - 0.0016)	
Thickness of inner gears and outer gears		Inner gear	
		Thickness mm (in)	Part number*
		9.99 - 10.00 (0.3933 - 0.3937) 9.98 - 9.99 (0.3929 - 0.3933) 9.97 - 9.98 (0.3925 - 0.3929)	31346-31X00 31346-31X01 31346-31X02
		Outer gear	
		Thickness mm (in)	Part number*
		9.99 - 10.00 (0.3933 - 0.3937) 9.98 - 9.99 (0.3929 - 0.3933) 9.97 - 9.98 (0.3925 - 0.3929)	31347-31X00 31347-31X01 31347-31X02
Clearance between oil pump housing and outer gear mm (in)	Standard	0.08 - 0.15 (0.0031 - 0.0059)	
	Allowable limit	0.15 (0.0059)	
Oil pump cover seal ring clearance mm (in)	Standard	0.1 - 0.25 (0.0039 - 0.0098)	
	Allowable limit	0.25 (0.0098)	

*: Always check with the Parts Department for the latest parts information.

Input Shaft

NJAT0187

Unit: mm (in)

Input shaft seal ring clearance	Standard	0.08 - 0.23 (0.0031 - 0.0091)
	Allowable limit	0.23 (0.0091)

Planetary Carrier

NJAT0188

Unit: mm (in)

Clearance between planetary carrier and pinion washer	Standard	0.15 - 0.70 (0.0059 - 0.0276)
	Allowable limit	0.80 (0.0315)

Final Drive

NJAT0189

DIFFERENTIAL SIDE GEAR CLEARANCE

NJAT0189S01

Clearance between side gear and differential case with washer	0.1 - 0.2 mm (0.004 - 0.008 in)

DIFFERENTIAL SIDE GEAR THRUST WASHERS

NJAT0189S02

1. QG13DE + 3AX00, 3AX63 models/QG15DE + 3AX01 model

NJAT0189S0201

Thickness mm (in)	Part number*
0.75 - 0.80 (0.0295 - 0.0315)	38424-31X00
0.80 - 0.85 (0.0315 - 0.0335)	38424-31X01
0.85 - 0.90 (0.0335 - 0.0354)	38424-31X02
0.90 - 0.95 (0.0354 - 0.0374)	38424-31X03
0.95 - 1.00 (0.0374 - 0.0394)	38424-31X04

*: Always check with the Parts Department for the latest parts information.

2. QG16DE + 3AX19, 3AX64 models/QG18DE + 3AX10, 3AX18 models

NJAT0189S0202

Thickness mm (in)	Part number*
0.75 - 0.80 (0.0295 - 0.0315)	38424-D2111
0.80 - 0.85 (0.0315 - 0.0335)	38424-D2112
0.85 - 0.90 (0.0335 - 0.0354)	38424-D2113
0.90 - 0.95 (0.0354 - 0.0374)	38424-D2114
0.95 - 1.00 (0.0374 - 0.0394)	38424-D2115

*: Always check with the Parts Department for the latest parts information.

BEARING PRELOAD

NJAT0189S03

Differential side bearing preload “T”	0.04 - 0.09 mm (0.0016 - 0.0035 in)

TURNING TORQUE

NJAT0189S04

Turning torque of final drive assembly	0.49 - 1.08 N·m (5.0 - 11.0 kg-cm, 4.3 - 9.5 in-lb)

DIFFERENTIAL SIDE BEARING ADJUSTING SHIMS

NJAT0189S05

1. QG13DE + 3AX00, 3AX63 models/QG15DE + 3AX01 model/QG16DE + 3AX19, 3AX64 models

NJAT0189S0501

Thickness mm (in)	Part number*
0.40 (0.0157)	38454-M8001
0.44 (0.0173)	38454-M8003
0.48 (0.0189)	38454-M8005
0.52 (0.0205)	38454-M8007
0.56 (0.0220)	38454-M8009
0.60 (0.0236)	38454-M8011
0.64 (0.0252)	38454-M8013
0.68 (0.0268)	38454-M8015

*: Always check with the Parts Department for the latest parts information.

2. QG18DE + 3AX10, 3AX18 models

NJAT0189S0502

Thickness mm (in)	Part number*
0.40 (0.0157)	31499-21X07
0.44 (0.0173)	31499-21X05
0.48 (0.0189)	31499-21X09
0.52 (0.0205)	31499-21X10
0.56 (0.0220)	31499-21X11
0.60 (0.0236)	31499-21X12
0.64 (0.0252)	31499-21X13
0.68 (0.0268)	31499-21X14
0.72 (0.0283)	31499-21X15
0.76 (0.0299)	31499-21X16
0.80 (0.0315)	31499-21X17
0.84 (0.0331)	31499-21X18
0.88 (0.0346)	31499-21X19
0.92 (0.0362)	31499-21X20
1.44 (0.0567)	31499-21X12

*: Always check with the Parts Department for the latest parts information.

TABLE FOR SELECTING DIFFERENTIAL SIDE BEARING ADJUSTING SHIMS

NJAT0189S06

Unit: mm (in)

Dial indicator deflection	Suitable shim(s)
0.31 - 0.35 (0.0122 - 0.0138)	0.40 (0.0157)
0.35 - 0.39 (0.0138 - 0.0154)	0.44 (0.0173)
0.39 - 0.43 (0.0154 - 0.0169)	0.48 (0.0189)
0.43 - 0.47 (0.0169 - 0.0185)	0.52 (0.0205)
0.47 - 0.51 (0.0185 - 0.0201)	0.56 (0.0220)
0.51 - 0.55 (0.0201 - 0.0217)	0.60 (0.0236)
0.55 - 0.59 (0.0217 - 0.0232)	0.64 (0.0252)
0.59 - 0.63 (0.0232 - 0.0248)	0.68 (0.0268)
0.63 - 0.67 (0.0248 - 0.0264)	0.72 (0.0283)
0.67 - 0.71 (0.0264 - 0.0280)	0.76 (0.0299)
0.71 - 0.75 (0.0280 - 0.0295)	0.80 (0.0315)
0.75 - 0.79 (0.0295 - 0.0311)	0.84 (0.0331)
0.79 - 0.83 (0.0311 - 0.0327)	0.88 (0.0346)
0.83 - 0.87 (0.0327 - 0.0343)	0.92 (0.0362)
0.87 - 0.91 (0.0343 - 0.0358)	0.48 (0.0189) + 0.48 (0.0189)
0.91 - 0.95 (0.0358 - 0.0374)	0.48 (0.0189) + 0.52 (0.0205)
0.95 - 0.99 (0.0374 - 0.0390)	0.52 (0.0205) + 0.52 (0.0205)
0.99 - 1.03 (0.0390 - 0.0406)	0.52 (0.0205) + 0.56 (0.0220)
1.03 - 1.07 (0.0406 - 0.0421)	0.56 (0.0220) + 0.56 (0.0220)
1.07 - 1.11 (0.0421 - 0.0437)	0.56 (0.0220) + 0.60 (0.0236)
1.11 - 1.15 (0.0437 - 0.0453)	0.60 (0.0236) + 0.60 (0.0236)
1.15 - 1.19 (0.0453 - 0.0469)	0.60 (0.0236) + 0.64 (0.0252)
1.19 - 1.23 (0.0469 - 0.0484)	0.64 (0.0252) + 0.64 (0.0252)
1.23 - 1.27 (0.0484 - 0.0500)	0.64 (0.0252) + 0.68 (0.0268)
1.27 - 1.31 (0.0500 - 0.0516)	0.68 (0.0268) + 0.68 (0.0268)
1.31 - 1.35 (0.0516 - 0.0531)	0.68 (0.0268) + 0.72 (0.0283)
1.35 - 1.39 (0.0531 - 0.0547)	1.44 (0.0567)
1.39 - 1.43 (0.0547 - 0.0563)	0.72 (0.0283) + 0.76 (0.0299)
1.43 - 1.47 (0.0563 - 0.0579)	0.76 (0.0299) + 0.76 (0.0299)
1.47 - 1.51 (0.0579 - 0.0594)	0.76 (0.0299) + 0.80 (0.0315)
1.51 - 1.55 (0.0594 - 0.0610)	0.80 (0.0315) + 0.80 (0.0315)
1.55 - 1.59 (0.0610 - 0.0626)	0.80 (0.0315) + 0.84 (0.0331)
1.59 - 1.63 (0.0626 - 0.0642)	0.84 (0.0331) + 0.84 (0.0331)
1.63 - 1.67 (0.0642 - 0.0657)	0.84 (0.0331) + 0.88 (0.0346)
1.67 - 1.71 (0.0657 - 0.0673)	0.88 (0.0346) + 0.88 (0.0346)
1.71 - 1.75 (0.0673 - 0.0689)	0.88 (0.0346) + 0.92 (0.0362)
1.75 - 1.79 (0.0689 - 0.0705)	0.92 (0.0362) + 0.92 (0.0362)
1.79 - 1.83 (0.0705 - 0.0720)	0.92 (0.0362) + 0.96 (0.0378)
1.83 - 1.87 (0.0720 - 0.0736)	0.96 (0.0378) + 0.96 (0.0378)
1.87 - 1.91 (0.0736 - 0.0752)	0.52 (0.0205) + 1.44 (0.0567)
1.91 - 1.95 (0.0752 - 0.0768)	0.56 (0.0220) + 1.44 (0.0567)

Reduction Pinion Gear

NJAT0190

BEARING PRELOAD

NJAT0190S01

Reduction pinion gear bearing preload	0.05 mm (0.0020 in)

TURNING TORQUE

NJAT0190S02

Turning torque of reduction pinion gear	0.1 - 0.69 N·m (1.1 - 7.0 kg-cm, 0.95 - 6.08 in-lb)

REDUCTION PINION GEAR BEARING ADJUSTING SHIMS

NJAT0190S03

Thickness mm (in)	Part number*
1.74 (0.0685)	31438-31X16
1.78 (0.0701)	31438-31X17
1.82 (0.0717)	31438-31X18
1.86 (0.0732)	31438-31X19
1.90 (0.0748)	31438-31X20
1.92 (0.0756)	31439-31X60
1.94 (0.0764)	31438-31X21
1.96 (0.0772)	31439-31X61
1.98 (0.0780)	31438-31X22
2.00 (0.0787)	31439-31X62
2.02 (0.0795)	31438-31X23
2.04 (0.0803)	31439-31X63
2.06 (0.0811)	31438-31X24
2.08 (0.0819)	31439-31X64
2.10 (0.0827)	31438-31X60
2.12 (0.0835)	31439-31X65
2.14 (0.0843)	31438-31X61
2.16 (0.0850)	31439-31X66
2.18 (0.0858)	31438-31X62
2.20 (0.0866)	31439-31X67
2.22 (0.0874)	31438-31X63
2.24 (0.0882)	31439-31X68
2.26 (0.0890)	31438-31X64
2.28 (0.0898)	31439-31X69
2.30 (0.0906)	31438-31X65
2.34 (0.0921)	31438-31X66
2.38 (0.0937)	31438-31X67
2.42 (0.0953)	31438-31X68
2.46 (0.0969)	31438-31X69
2.50 (0.0984)	31438-31X70
2.54 (0.1000)	31438-31X71
2.58 (0.1016)	31438-31X72
2.62 (0.1031)	31438-31X73
2.66 (0.1047)	31438-31X74

*: Always check with the Parts Department for the latest parts information.

TABLE FOR SELECTING REDUCTION PINION GEAR BEARING ADJUSTING SHIM

NJAT0190S04

Unit: mm (in)

Dimension "T"	Suitable shim(s)
1.77 - 1.81 (0.0697 - 0.0713)	1.74 (0.0685)
1.81 - 1.85 (0.0713 - 0.0728)	1.78 (0.0701)
1.85 - 1.89 (0.0728 - 0.0744)	1.82 (0.0717)
1.89 - 1.93 (0.0744 - 0.0760)	1.86 (0.0732)
1.93 - 1.96 (0.0760 - 0.0772)	1.90 (0.0748)
1.96 - 1.98 (0.0772 - 0.0780)	1.92 (0.0756)
1.98 - 2.00 (0.0780 - 0.0787)	1.94 (0.0764)
2.00 - 2.02 (0.0787 - 0.0795)	1.96 (0.0772)
2.02 - 2.04 (0.0795 - 0.0803)	1.98 (0.0780)
2.04 - 2.06 (0.0803 - 0.0811)	2.00 (0.0787)
2.06 - 2.08 (0.0811 - 0.0819)	2.02 (0.0795)
2.08 - 2.10 (0.0819 - 0.0827)	2.04 (0.0803)
2.10 - 2.12 (0.0827 - 0.0835)	2.06 (0.0811)
2.12 - 2.14 (0.0835 - 0.0843)	2.08 (0.0819)
2.14 - 2.16 (0.0843 - 0.0850)	2.10 (0.0827)
2.16 - 2.18 (0.0850 - 0.0858)	2.12 (0.0835)
2.18 - 2.20 (0.0858 - 0.0866)	2.14 (0.0843)
2.20 - 2.22 (0.0866 - 0.0874)	2.16 (0.0850)
2.22 - 2.24 (0.0874 - 0.0888)	2.18 (0.0858)
2.24 - 2.26 (0.0882 - 0.0890)	2.20 (0.0866)
2.26 - 2.28 (0.0890 - 0.0898)	2.22 (0.0874)
2.28 - 2.30 (0.0898 - 0.0906)	2.24 (0.0882)
2.30 - 2.32 (0.0906 - 0.0913)	2.26 (0.0890)
2.32 - 2.34 (0.0913 - 0.0921)	2.28 (0.0898)
2.34 - 2.37 (0.0921 - 0.0933)	2.30 (0.0906)
2.37 - 2.41 (0.0933 - 0.0949)	2.34 (0.0921)
2.41 - 2.45 (0.0949 - 0.0965)	2.38 (0.0937)
2.45 - 2.49 (0.0965 - 0.0980)	2.42 (0.0953)
2.49 - 2.53 (0.0980 - 0.0996)	2.46 (0.0969)
2.53 - 2.57 (0.0996 - 0.1012)	2.50 (0.0984)
2.57 - 2.61 (0.1012 - 0.1028)	2.54 (0.1000)
2.61 - 2.65 (0.1028 - 0.1043)	2.58 (0.1016)
2.65 - 2.69 (0.1043 - 0.1059)	2.62 (0.1031)
2.69 - 2.73 (0.1059 - 0.1075)	2.66 (0.1047)

Output Shaft — 3AX00, 3AX01, 3AX19, 3AX63 and 3AX64 models

NJAT0238

SEAL RING CLEARANCE

NJAT0238S01

Unit: mm (in)

Output shaft seal ring clearance	Standard	0.10 - 0.25 (0.0039 - 0.0098)
	Allowable limit	0.25 (0.0098)

BEARING PRELOAD

NJAT0238S02

Output shaft bearing preload	0.03 - 0.08 mm (0.0012 - 0.0031 in)

TURNING TORQUE

NJAT0238S03

Turning torque of output shaft	0.25 - 0.88 N·m (2.5 - 9.0 kg-cm, 2.2 - 7.8 in-lb)

OUTPUT SHAFT BEARING ADJUSTING SPACERS

NJAT0238S04

Thickness mm (in)	Part number*
6.26 (0.2465)	31437-31X16
6.30 (0.2480)	31437-31X17
6.34 (0.2496)	31437-31X18
6.38 (0.2512)	31437-31X19
6.42 (0.2528)	31437-31X20
6.46 (0.2543)	31437-31X21
6.50 (0.2559)	31437-31X22
6.54 (0.2575)	31437-31X23
6.58 (0.2591)	31437-31X24
6.62 (0.2606)	31437-31X60
6.64 (0.2614)	31437-31X78
6.66 (0.2622)	31437-31X61
6.68 (0.2630)	31437-31X79
6.70 (0.2638)	31437-31X62
6.72 (0.2646)	31437-31X80
6.74 (0.2654)	31437-31X63
6.76 (0.2661)	31437-31X81
6.78 (0.2669)	31437-31X64
6.80 (0.2677)	31437-31X82
6.82 (0.2685)	31437-31X65
6.84 (0.2693)	31437-31X83
6.86 (0.2701)	31437-31X66
6.88 (0.2709)	31437-31X84
6.90 (0.2717)	31437-31X67
6.92 (0.2724)	31437-31X46
6.94 (0.2732)	31437-31X68
6.96 (0.2740)	31437-31X47
6.98 (0.2748)	31437-31X69
7.00 (0.2756)	31437-31X48
7.02 (0.2764)	31437-31X70
7.06 (0.2780)	31437-31X71
7.10 (0.2795)	31437-31X72
7.14 (0.2811)	31437-31X73
7.18 (0.2827)	31437-31X74
7.22 (0.2843)	31437-31X75

*: Always check with the Parts Department for the latest parts information.

TABLE FOR SELECTING OUTPUT SHAFT BEARING ADJUSTING SPACER

NJAT0238S05

Unit: mm (in)

Dimension "T"	Suitable spacer
6.29 - 6.33 (0.2476 - 0.2492)	6.26 (0.2465)
6.33 - 6.37 (0.2492 - 0.2508)	6.30 (0.2480)
6.37 - 6.41 (0.2508 - 0.2524)	6.34 (0.2496)
6.41 - 6.45 (0.2524 - 0.2539)	6.38 (0.2512)
6.45 - 6.49 (0.2539 - 0.2555)	6.42 (0.2528)
6.49 - 6.53 (0.2555 - 0.2571)	6.46 (0.2543)
6.53 - 6.57 (0.2571 - 0.2587)	6.50 (0.2559)
6.57 - 6.61 (0.2587 - 0.2602)	6.54 (0.2575)
6.61 - 6.65 (0.2602 - 0.2618)	6.58 (0.2591)
6.65 - 6.68 (0.2618 - 0.2630)	6.62 (0.2606)
6.68 - 6.70 (0.2630 - 0.2638)	6.64 (0.2614)
6.70 - 6.72 (0.2638 - 0.2646)	6.66 (0.2622)
6.72 - 6.74 (0.2646 - 0.2654)	6.68 (0.2630)
6.74 - 6.76 (0.2654 - 0.2661)	6.70 (0.2638)
6.76 - 6.78 (0.2661 - 0.2669)	6.72 (0.2646)
6.78 - 6.80 (0.2669 - 0.2677)	6.74 (0.2654)
6.80 - 6.82 (0.2677 - 0.2685)	6.76 (0.2661)
6.82 - 6.84 (0.2685 - 0.2693)	6.78 (0.2669)
6.84 - 6.86 (0.2693 - 0.2701)	6.80 (0.2677)
6.86 - 6.88 (0.2701 - 0.2709)	6.82 (0.2685)
6.88 - 6.90 (0.2709 - 0.2717)	6.84 (0.2693)
6.90 - 6.92 (0.2717 - 0.2724)	6.86 (0.2701)
6.92 - 6.94 (0.2724 - 0.2732)	6.88 (0.2707)
6.94 - 6.96 (0.2732 - 0.2740)	6.90 (0.2717)
6.96 - 6.98 (0.2740 - 0.2748)	6.92 (0.2724)
6.98 - 7.00 (0.2748 - 0.2756)	6.94 (0.2732)
7.00 - 7.02 (0.2756 - 0.2764)	6.96 (0.2790)
7.02 - 7.04 (0.2764 - 0.2772)	6.98 (0.2748)
7.04 - 7.06 (0.2772 - 0.2780)	7.00 (0.2756)
7.06 - 7.09 (0.2780 - 0.2791)	7.02 (0.2764)
7.09 - 7.13 (0.2791 - 0.2807)	7.06 (0.2780)
7.13 - 7.17 (0.2807 - 0.2823)	7.10 (0.2795)
7.17 - 7.21 (0.2823 - 0.2839)	7.14 (0.2811)
7.21 - 7.25 (0.2839 - 0.2854)	7.18 (0.2827)
7.25 - 7.29 (0.2854 - 0.2870)	7.22 (0.2843)

Output Shaft — 3AX10 and 3AX18 models

NJAT0191

SEAL RING CLEARANCE

NJAT0191S01

Unit: mm (in)

Output shaft seal ring clearance	Standard	0.10 - 0.25 (0.0039 - 0.0098)
	Allowable limit	0.25 (0.0098)

END PLAY

NJAT0191S02

Output shaft end play	0 - 0.5 mm (0 - 0.020 in)

OUTPUT SHAFT END PLAY ADJUSTING SHIMS

NJAT0191S03

Thickness mm (in)	Part number*
0.56 (0.0220)	31438-31X46
0.96 (0.0378)	31438-31X47
1.36 (0.0535)	31438-31X48

*: Always check with the Parts Department for the latest parts information.

Bearing Retainer

=NJAT0192

SEAL RING CLEARANCE

NJAT0192S01

Unit: mm (in)

Bearing retainer seal ring clearance	Standard	0.10 - 0.25 (0.0039 - 0.0098)
	Allowable limit	0.25 (0.0098)

Total End Play

NJAT0193

Total end play "T_3"	0.25 - 0.55 mm (0.0098 - 0.0217 in)

BEARING RACE FOR ADJUSTING TOTAL END PLAY

NJAT0193S01

Thickness mm (in)	Part number*
0.6 (0.024)	31435-31X01
0.8 (0.031)	31435-31X02
1.0 (0.039)	31435-31X03
1.2 (0.047)	31435-31X04
1.4 (0.055)	31435-31X05
1.6 (0.063)	31435-31X06
1.8 (0.071)	31435-31X07
2.0 (0.079)	31435-31X08

*: Always check with the Parts Department for the latest parts information.

Reverse Clutch End Play

NJAT0194

Reverse clutch end play "T_4"	0.65 - 1.00 mm (0.0256 - 0.0394 in)

THRUST WASHERS FOR ADJUSTING REVERSE CLUTCH END PLAY

NJAT0194S01

Thickness mm (in)	Part number*
0.65 (0.0256)	31508-31X10
0.80 (0.0315)	31508-31X11
0.95 (0.0374)	31508-31X12
1.10 (0.0433)	31508-31X13
1.25 (0.0492)	31508-31X14
1.40 (0.0551)	31508-31X15

*: Always check with the Parts Department for the latest parts information.

Accumulator

NJAT0195

O-RING

NJAT0195S01

Unit: mm (in)

Accumulator	Diameter (Small)	Part number*	Diameter (Large)	Part number*
Servo release accumulator	26.9 (1.059)	31526-41X03	44.2 (1.740)	31526-41X02
N-D accumulator	34.6 (1.362)	31526-31X08	39.4 (1.551)	31672-21X00

*: Always check with the Parts Department for the latest parts information.

RETURN SPRING

NJAT0195S02

Unit: mm (in)

Accumulator		Free length	Outer diameter	Part number*
Servo release accumulator spring	QG18DE + 3AX10, 3AX18 models	52.5 (2.067)	20.1 (0.791)	31605-80X00
	Except QG18DE + 3AX10, 3AX18 models	52.5 (2.067)	20.4 (0.803)	31605-80X03
N-D accumulator spring		45.0 (1.772)	27.6 (1.087)	31605-33X01

*: Always check with the Parts Department for the latest parts information.

Band Servo

NJAT0196

RETURN SPRING

NJAT0196S01

Unit: mm (in)

Return spring	Free length	Outer diameter	Part number*
2nd servo return spring	32.5 (1.280)	25.9 (1.020)	31605-31X20
OD servo return spring	38.52 (1.5165)	22.0 (0.866)	31605-31X21

*: Always check with the Parts Department for the latest parts information.

Removal and Installation

NJAT0197

Unit: mm (in)

Distance between end of converter housing and torque converter	15.9 (0.626) or more

Shift Solenoid Valves

NJAT0223

Gear	Solenoid A	Solenoid B
1st	ON	ON
2nd	OFF	ON
3rd	OFF	OFF
4th	ON	OFF

Resistance

NJAT0224

Solenoid valve	Resistance (Approx.)	Terminal number
Shift solenoid A	20 - 30Ω	2
Shift solenoid B	5 - 20Ω	1
Ovr. clutch sol.	20 - 30Ω	3
Line pres. sol.	2.5 - 5Ω	4
T/conv. clutch sol.	5 - 20Ω	5

ATF Temp. Sensor

NJAT0225

Temperature	Resistance	
20°C (68°F) ↓ 80°C (176°F)	Approximately 1.5V ↓ Approximatley 0.5V	Approximately 2.5 kΩ ↓ Approximately 0.3 kΩ

Revolution Sensor

NJAT0226

Condition	Judgement standard
When moving at 20 km/h (12 MPH), use the CONSULT-II pulse frequency measuring function.*1 **CAUTION:** **Connect the diagnosis data link cable to the vehicle diagnosis connector.** *1: A circuit tester cannot be used to test this item.	Approximately 150 Hz
When vehicle parks.	Under 1.3V or over 4.5V

Dropping Resistor

NJAT0227

Resistance	10 - 15Ω