HYUNDAI

Owner's Manual

H-1

A000A01P-GAT

This Owner's Manual should be considered as a part of the vehicle and remain with it when it is sold for the use of the next owner.

OWNER'S I.D.

(ORIGINAL)

NAME: STREET:

ADDRESS: TOWN:

COUNTRY:

P. CODE:

DATE OF SALE:

(SUBSEQUENT)

NAME: STREET:

ADDRESS: TOWN:

COUNTRY:

P. CODE:

TRANSFER DATE:

All information in this Owner's Manual is current at the time of publication. However, Hyundai reserves the right to make changes at any time so that our policy of continual product improvement may be carried out.

This manual is valid for all Hyundai H-1 models and contains descriptions and explanations from optional as well as standard equipment. Therefore in this manual you will find information which does not relate to your specific vehicle.

Please note that in some H-1 models are equipped with Right-Hand Drive (RHD). The explanations and illustrations for some operations in RHD models are opposite of those written in this manual.

A040A01P-GAT

FOREWORD

Thank you for choosing Hyundai. We are pleased to welcome you to the growing number of discriminating people who drive Hyundais. The advanced engineering and high-quality construction of each Hyundai we build is something of which we're very proud.

Your Owner's Manual will introduce you to the features and operation of your new Hyundai. It is suggested that you read it carefully since the information it contains can contribute greatly to the satisfaction you receive from your new car.

The manufacturer also recommends that all service and maintenance on your vehicle be performed by an authorized Hyundai dealer. Hyundai dealers are prepared to provide high-quality service, maintenance and any other assistance that may be required.

A050A04P-GAT

HYUNDAI MOTOR COMPANY

Note: Because future owners will also need the information included in this manual, if you sell this Hyundai, please leave the manual in the vehicle for their use. Thank you.

CAUTION: Severe engine and transmission damage may result from the use of poor quality fuels and lubricants that do not meet Hyundai specifications. You must always use high quality fuels and lubricants that meet the specifications listed on Page 9-3 in the Vehicle Specifications section of the Owner's Manual.

Copyright 2002 Hyundai Motor Company. All rights reserved. No part of this publication may be reproduced, stored in any retrieval system or transmitted in any form or by any means without the prior written permission of Hyundai Motor Company.

A020A01P-GAT

RESPONSIBILITY FOR MAINTENANCE

The maintenance requirements for your new Hyundai are found in Section 6. As the owner, it is your responsibility to see that all maintenance operations specified by the manufacturer are carried out at the appropriate intervals. When the vehicle is used in severe driving conditions, more frequent maintenance is required for some operations. Maintenance requirements for severe operating conditions are also included in Section 6.

A070A01P-GAT

CAUTION : MODIFICATIONS TO YOUR HYUNDAI

Modification of components may void the manufacturer's warranty

Your Hyundai should not be modified in any way. Modifications may adversely affect the safety, durability and performance of your Hyundai. Components which are subjected to modification or are added to the vehicle resulting in consequential damage are not covered by the vehicle manufacturer's warranty.

A090A01P-GAT

SAFETY AND VEHICLE DAMAGE WARNING

This manual includes information titled as WARNING, CAUTION and NOTE.
These titles indicate the following:

WARNING:
This indicates that a condition may result in harm or injury to you or other persons if the warning is not heeded. Follow the advice provided with the warning.

CAUTION:
This indicates that a condition may result in damage to your vehicle or its equipment if the caution is not heeded. Follow the advice provided with the caution.

NOTE:
This indicates that interesting or helpful information is being provided.

A060A01P-GAT

TABLE OF CONTENTS

SECTION	PAGE
1. BEFORE DRIVING YOUR VEHICLE	1-1
2. INSTRUMENTS & CONTROLS	2-1
3. STARTING & OPERATING	3-1
4. IN CASE OF EMERGENCY	4-1
5. APPEARANCE CARE	5-1
6. PREVENTIVE MAINTENANCE	6-1
7. EMISSION CONTROL SYSTEM	7-1
8. CONSUMER INFORMATION	8-1
9. VEHICLE SPECIFICATIONS	9-1
10. INDEX	10-1

A100A01L-GAT

GUIDE TO HYUNDAI GENUINE PARTS

1. **What are Hyundai Genuine Parts?**
   Hyundai Genuine Parts are the same parts used by Hyundai Motor Company to manufacture vehicles. They are designed and tested for the optimum safety, performance, and reliability to our customers.

2. **Why should you use genuine parts?**
   Hyundai Genuine Parts are engineered and built to meet rigid original manufacturing requirements. Using imitation, counterfeit or used salvage parts are not covered under the Hyundai New Vehicle Limited Warranty or any other Hyundai warranty. In addition, any damage to or failure of Genuine Hyundai Parts caused by the installation or failure of an imitation, counterfeit or used salvage part is not covered by Hyundai Motor Company.

3. **How can you tell if you purchasing Hyundai Genuine Parts?**
   Look for the Hyundai Genuine Parts Logo on the package (see below).

   The export specifications are written in English only.

Hyundai Genuine Parts are only sold through authorized Hyundai Dealership and Service Center.

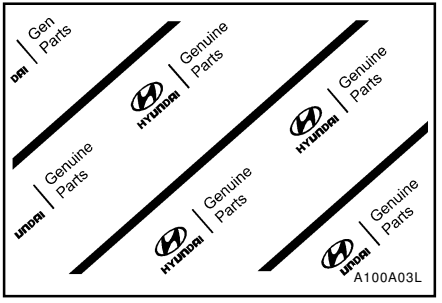

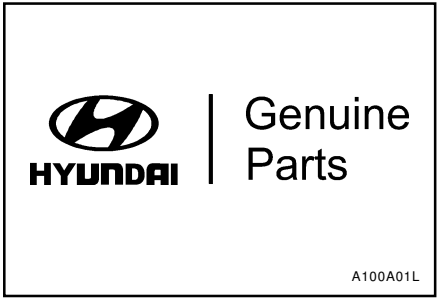

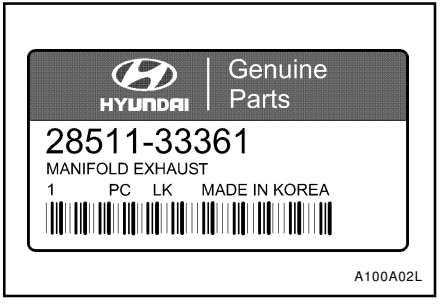

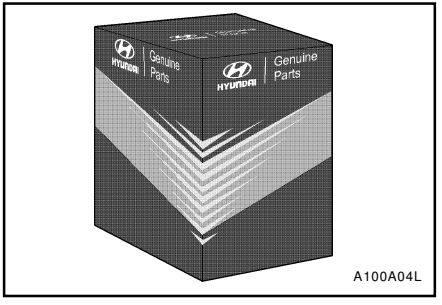

B000A01P-GAT

1. BEFORE DRIVING YOUR VEHICLE

B010A01P-GAT

BEFORE DRIVING YOUR VEHICLE SAFETY CHECKS

Be sure you know your vehicle and its equipment and how to use it safely.

B010B01P-GAT

Before entering the vehicle

- o Check that windows, mirrors and lights are clean.
- o Check if any tire is low or flat.
- o Look for fluid leaks.
- o Check that area is clear if you're about to back up.

B010C03P-GAT

After entering the vehicle

- o Lock all doors.
- o The driver and passengers are wearing properly adjusted seat belts.
- o The head restraints are properly adjusted, if so equipped.
- o Adjust inside and outside mirrors.
- o Check warning lights for correct operation, with the ignition key in the position "ON".
- o Check all gauges, for normal operation.

WARNING: (Diesel only)

To ensure that sufficient vacuum exists within the brake system during cold weather start-up conditions, it is necessary to run the engine at idle after starting the engine.

NOTE:

Fluid levels, such as engine oil, engine coolant, brake fluid, and windshield washer fluid, should be checked daily and/or weekly, or whenever you refuel.
Further details are described in the "CONSUMER INFORMATION" section.

B020A01P-GAT

RUNNING-IN RECOMMENDATIONS

During the running-in period for the first 1,000km(600miles), it is advisable to drive your new vehicle using the following precautions as a guideline to aid long life as well as future economy and performance.

1. Do not race the engine at high speeds.
2. Avoid rapid starting, acceleration, braking and prolonged high-speed running.
3. Keep to the running-in speed limit shown below.

km/h (mph)

Drive range	Running-in speed
1st	0~25(0~16)
2nd	20~50(13~31)
3rd	30~80(19~50)
4th	40~(25~)
5th	50~(32~)

Please note that the legal speed limits displayed must be adhered to.

4. Do not exceed loading limits.
5. Refrain from towing a trailer.

B030A01P-GAT

BEFORE OPERATION PRECAUTIONS FOR NEW VEHICLE

The performance and life of a vehicle depend largely on how the vehicle is handled when new.
To maintain the parts smoothly and sustain high performance for a long time to come, be sure to observe the following points.

Make sure that your vehicle does not miss the first 5,000 km inspections.

After the first 5,000 km of driving, take your vehicle to your nearest service shop for inspection.

B040A01P-GAT

OPERATION IN FOREIGN COUNTRIES

If you are going to drive your Hyundai in another country, be sure to:

- o Observe all regulations regarding registration and insurance.
- o Determine that acceptable fuel is available.

B050A02P-GAT

VEHICLE IDENTIFICATION NUMBER (VIN)

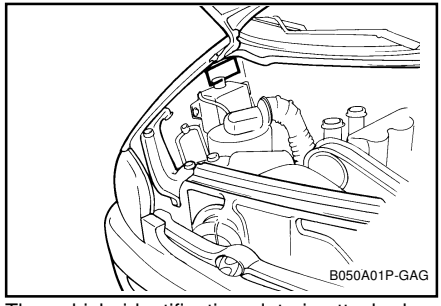

The vehicle identification plate is attached on the fender inner panel as shown in the illustration. The vehicle identification number (VIN) is the number used in registering your car and in all legal matters pertaining to its ownership, etc.

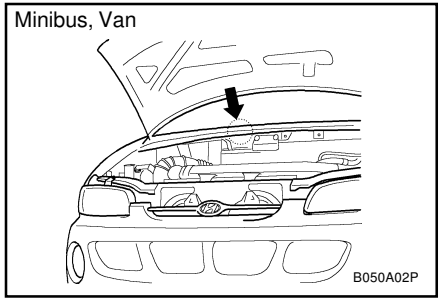

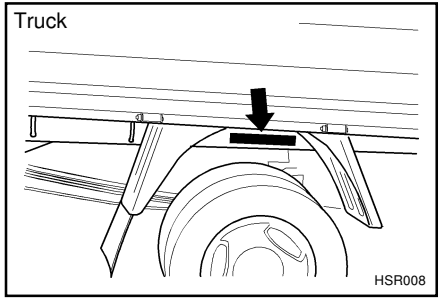

The vehicle identification number is stamped as shown in the illustration.
Please use this number when ordering replacement parts.

B055A02P-GAT

LOADING YOUR VEHICLE

Never load the luggage and people to exceed GVWR(MLW) and GAWR of your vehicle.
You can find the GVWR(MLW) and GAWR - maximum loading capacities- on the VIN plate.
The GVWR(Gross Vehicle Weight Rating) or MLW(Maximum Loaded Weight) means total weight of the vehicle, all occupants, fuel and cargo. And GAWR means the maximum weights that the front and rear axles can endure the weights including vehicle itself weight.

WARNING:

Improperly loading your car can serious affect its steering and braking performance causing a crash in which you may be seriously injured or killed.

NOTE:

Your warranty does not cover parts or components that fail because of overloading.

B060A01P-GAT

ENGINE NUMBER

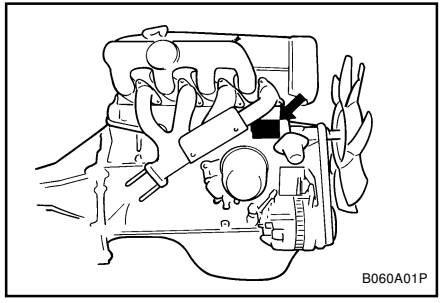

The engine number is stamped on the engine cylinder block as shown in the illustration.

B070A01P-GAT

MAINTENANCE

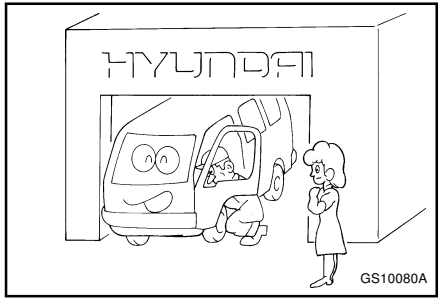

It is necessary to maintain your vehicle in top operating condition in order to enjoy safe and pleasant driving.

Some maintenance items can be done by the owner (Consumer information), while others should be done only by an authorized dealer (periodic inspection and maintenance).

For the maintenance items to be done by the owner, prepare the appropriate materials and tools and follow the procedures given in the "Consumer information" section of this manual.

However, the periodic inspection and maintenance should not be attempted by the owner, but should be done by an authorized HYUNDAI dealer.

Correct performance of the periodic inspection and maintenance items requires specialized knowledge and equipment.

Having these items performed by an authorized HYUNDAI dealer with the latest technology and equipment will ensure that your vehicle is maintained for optimum performance, economy, and safety.

In addition, having all periodic inspection and maintenance done by an authorized HYUNDAI dealer is a prerequisite for validity of the warranty on your vehicle in the event of a claim.

Refer to the separate "Service Booklet" for the periodic inspection and maintenance items and intervals.

B080A01P-GAT

INSTALLATION OF ACCESSORIES

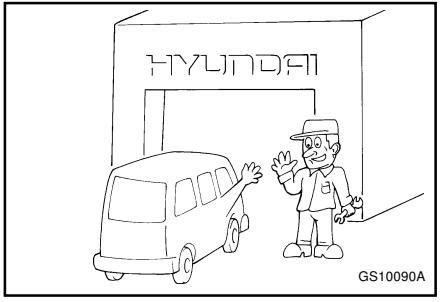

Consult an authorized HYUNDAI dealer when installing accessories.

(1) Installation of some accessories may be restricted by regulations.
(2) Improper installation of electrical parts could cause fire.
(3) Never use tires or wheels which do not meet specifications.
For wheel and tire sizes, refer to the "CONSUMER INFORMATION" section of this manual.

B100A02P-GAT

THE USE OF KEYS

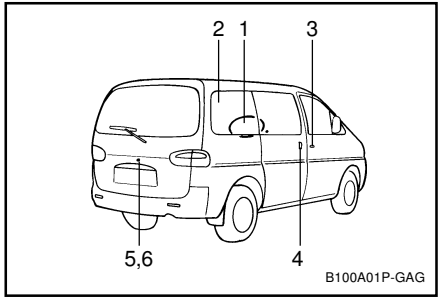

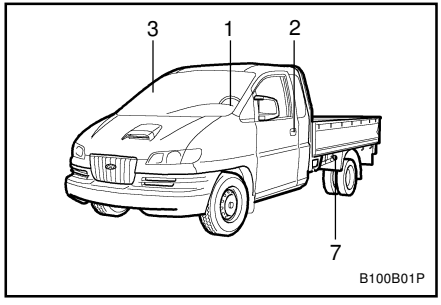

1. IGNITION SWITCH
2. FRONT DOOR (DRIVER'S DOOR)
3. FRONT DOOR (PASSENGER'S DOOR)
4. SLIDING DOOR
5. TAILGATE
6. TWIN SWING DOOR (If installed)
7. FUEL TANK CAP (TRUCK ONLY)

B030A01A-AAT

KEYS

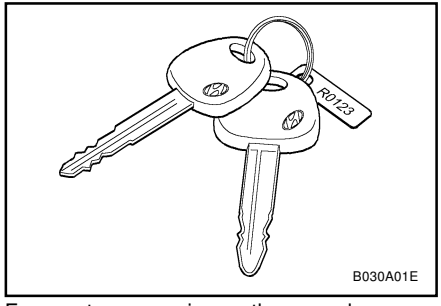

For greater convenience, the same key operates all the locks in your Hyundai. However, because the doors can be locked without a key, carrying a spare key is recommended in case you accidentally lock one key inside the car.

B030B01A-AAT

Record Your Key Number

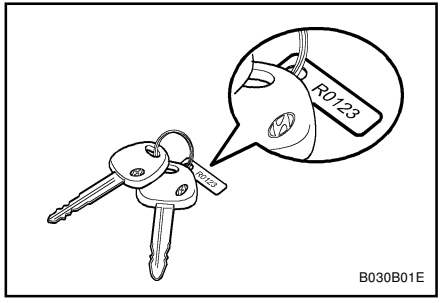

A code number is stamped on the number plate that came with the keys to your Hyundai. This key number plate should not be left with the keys but kept in a safe place, not in the vehicle. The key number should also be recorded in a place where it can be found in an emergency.

If you need additional keys, or if you should lose your keys, your authorized Hyundai dealer can make new keys if you can supply the key number.

B880A01P-GAT

IMMOBILIZER SYSTEM (If installed) (Minibus, Van only)

The immobilizer system is an anti-theft device, designed to prevent and deter automobile theft.

B880B02P-GAT

Keys

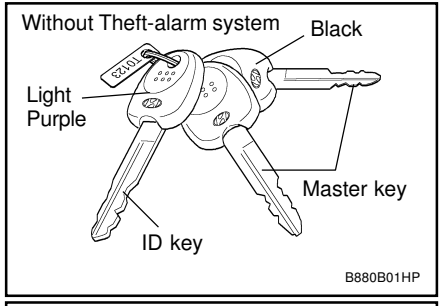

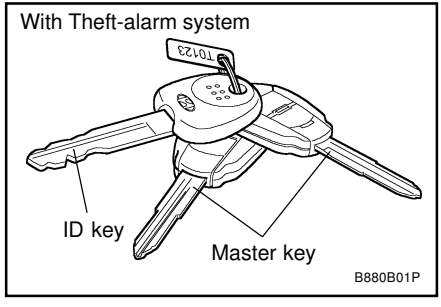

All of the locks fitted to the vehicle are operated by the same key. However, since it is possible to lock the doors without the use of the key, care should be exercised to ensure that the key does not become locked inside the vehicle by mistake.
For greater convenience, your Hyundai has two types of keys as shown in the illustration.

1) ID key
   This key must be used first to register a unique ID code in the ICM. This ID code is then recorded onto the master keys. Both sides of the key has a Hyundai logo.
2) Master key
   This key is for general use. It will open all locks on your vehicle.
   One side of the key has the Hyundai logo and the other side has the "M" symbol.
   If your vehicle is equipped with Theft-alarm system, the master keys with the function of transmitter will be provided. (E.C only)

NOTE:

If you make your own duplicate key, you will not be able to cancel the system or start the engine.

CAUTION:

Don't lose your ID key or forget the password. Always keep your ID key in a place where you remember and record your password. If you don't have both the password and ID key, consult your authorized Hyundai dealer.

B880C01A-GAT

Key Numbers

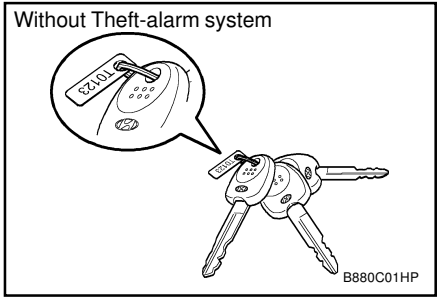

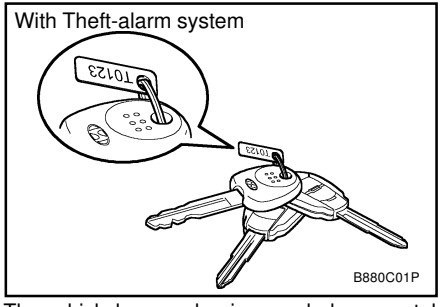

The vehicle key number is recorded on a metal tag attached to the keys when the vehicle is first delivered to you.
The key number should be recorded and kept in a safe place in case the need to order further keys arise. New keys are available from any Hyundai dealer by quoting the relevant key number.

In the interest of security, the metal tag attached to the keys which bears the key number should be removed from the key ring after delivery. In addition, key numbers cannot be provided by Hyundai for security reasons.
If you need additional keys or if you should lose your keys, your authorized Hyundai dealer can make new keys if you can supply the key number and ID key.

B880D02E-GAT

Limp Home Procedures

In case the immobilizer system is out of order, you cannot start the engine without the limp home procedures with ignition key.
The following procedure is how to start the engine with the function of the limp home. (0, 1, 2, 3 as a sample password).

NOTE:

You can get the limp home password when the vehicle is first delivered to you. If you do not have the password, consult your authorized Hyundai dealer.

1. To set the password, you may turn the ignition key "ON" and then turn it "OFF" according to the digit numbers. For example, turn the ignition key once for digit number "1", and twice for "2", and so on. However, for the digit number "0", you must turn the ignition key for 10 times.
2. Wait for 3~10 seconds.
3. You may set the remaining number of digits by following the same procedures 1 and 2.
4. If all of four digits have been tried successfully, from this time, you have to start your engine within 30 seconds. If you start your engine after 30 seconds, your engine will not start.

NOTE:

If the engine dies while driving after limp home procedure, you can start your engine within 8 seconds in condition of ignition OFF without limp home procedure again.

After doing the limp home procedure, you have to consult with your authorized Hyundai dealer as soon as possible.

CAUTION:

If you cannot start your engine in spite of limp home procedure, have your vehicle towed by an authorized Hyundai dealer.

B885A01O-GAT

IMMOBILIZER SYSTEM (If Installed)

The immobilizer system is an anti-theft device, designed to deter automobile theft.

B885B01P-GAT

Keys

Without Theft-alarm system

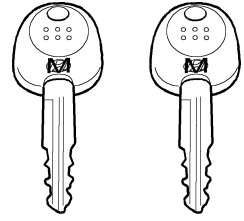

B880B01O

With Theft-alarm system

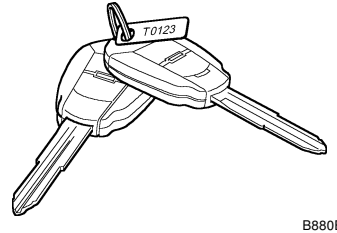

B880B02P

All of the locks fitted to the vehicle are operated by the same key. However, since it is possible to lock the doors without the use of the key, care should be exercised to ensure that the key does not become locked inside the vehicle by mistake.
If your vehicle is equipped with Theft-alarm system, the master keys with the function of transmitter will be provided. (E.C only)

NOTE:

If you make your own duplicate key, you will not be able to cancel the system or start the engine.

CAUTION:

- **The password should be recorded and kept in a safe place in case the need to order further keys arises.**
- **If you forget the password, consult your authorized Hyundai dealer.**

B885C02A-GAT

Key Numbers

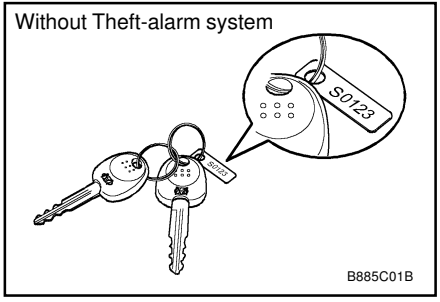

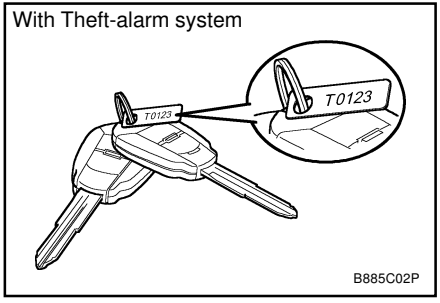

The vehicle key number is recorded upon a metal tag attached to the keys when the vehicle is first delivered to you.
The key number should be recorded and kept in a safe place in case the need to order further keys arises. New keys are available from any Hyundai dealer by quoting the relevant key number.
In the interest of security, the metal tag attached to the keys which bears the key number should be removed from the key ring after you receive your new vehicle. In addition, key numbers cannot be provided by Hyundai for security reasons.
If you need additional keys or if you should lose your keys, your authorized Hyundai dealer can make new keys.

B885D01A-GAT

Limp Home Procedures

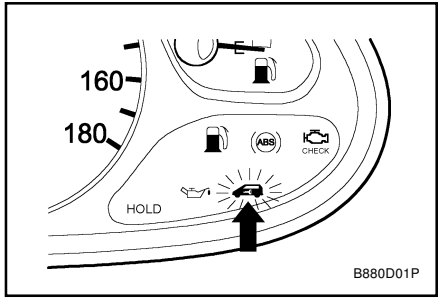

In case the immobilizer warning indicator blinks for five seconds when the ignition key is turned to "ON" position, this indicates that the immobilizer system is out of order. And you cannot start the engine without the limp home procedures with ignition key.

The following procedure is how to start the engine with the function of the limp home. (0, 1, 2, 3 as a sample password).

NOTE:

You can get the limp home password when the vehicle is first delivered to you. If you do not have the password, consult your authorized Hyundai dealer.

1. To set the password you may turn the ignition key "ON" and then turn it "OFF" according to the digit numbers, then the immobilizer indicator will blink along with the operation of the ignition key. For example, turn the ignition key once for digit number "1", and twice for "2", and so on. However, for the digit number "0", you must turn the ignition key for 10 times.
2. Wait for 3~10 seconds.
3. You may set the remaining number of digits by following the same procedures 1 and 2.
4. If all of four digits have been tried successfully, turn the ignition key "ON" and check that the immobilizer indicator illuminates. From this time, you have to start your engine within 30 seconds. If you start your engine after 30 seconds, your engine will not start.

NOTE:

If the engine dies while driving after limp home procedure, you can start your engine within 8 seconds without limp home procedure again.

5. If the immobilizer indicator blinks for five seconds, you have to try the limp home procedure again from the beginning.

After doing the limp home procedure, you have to consult with your authorized Hyundai dealer as soon as possible.

CAUTION:

- **If you fail to try the limp home procedure with the sequence of three times, you have to wait for about one hour to do the limp home procedure again.**
- **If you cannot start your engine in spite of limp home procedure, have your vehicle towed by an authorized Hyundai dealer.**

B120A01P-GAT

ILLUMINATED IGNITION SWITCH (If installed)

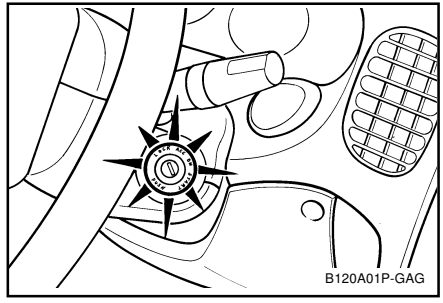

Whenever a front door is opened, the ignition switch will illuminate for your convenience. The light will go off 10 seconds after closing the door or when the ignition switch is turned on.

B040A01A-AAT

DOOR LOCKS

WARNING:

- **Unlocked doors can be dangerous. Before you drive away (especially if there are children in the car), be sure that all the doors are securely closed and locked so that the doors cannot be inadvertently opened from the inside. This helps assure that doors will not be opened accidentally.**

Also, when combined with the proper use of seat belts, locking the doors helps keep occupants from being ejected from the car in case of an accident.

- **Before opening the door, always look for and avoid oncoming traffic.**

B040B01A-AAT

Locking and Unlocking Front Doors With a Key

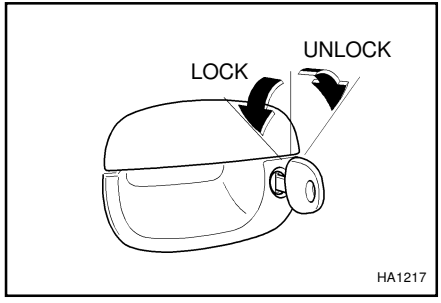

- The door can be locked or unlocked with a key.
- Lock the door by turning the key toward the front of the vehicle and unlock it by turning the key toward the rear.

B130B01P-GAT

To lock the front doors without a key

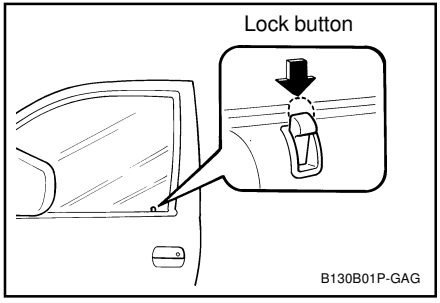

Set the inside lock button to the locked position, and close the door.
Be careful not to lock the doors while the key is inside the vehicle.

B130C01P-GAT

To lock the slide door without a key

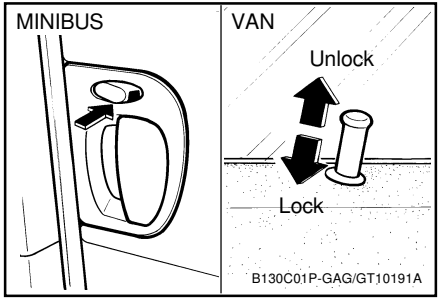

Set the inside lock button to the locked position, and close the door.

B150A01P-GAT

CENTRAL DOOR LOCKS (Minibus,Van) (If installed)

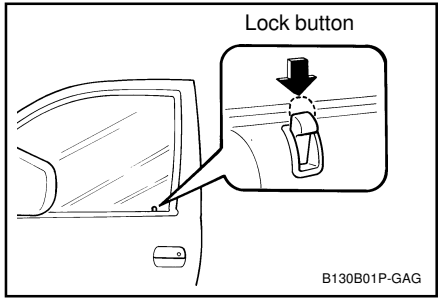

The central door locking system is located on the driver's door lock button. It is operated by depressing the door lock button. If the rear door is open when the button is depressed, the door will remain locked when closed. If the front door is open when the button is depressed, the door will lock when closed.

NOTE:

When the front door lock button is depressed, the front and slide doors will lock. When the front door lock button is pulled up, the front and slide doors will unlock. The operation of the tailgate door locking is identical to the central door locking system.

B150B01P-GAT

CENTRAL DOOR LOCKS (For Truck) (If installed)

The central door locking system is located on the driver's door lock button. It is operated by depressing the door lock button. If the front door is open when the button is depressed, the door will lock when closed.

NOTE:

When the front door lock button is depressed, the front doors will lock. When the front door lock button is pulled up, the front doors will unlock.

B070A01P-GAT

THEFT-ALARM SYSTEM (Minibus only) (If installed)

This system is designed to provide protection from unauthorized entry into the car. This system is operated in three stages: the first is the "Armed" stage, the second is the "Alarm" stage, and the third is the "Disarmed" stage. If triggered, the system provides an audible alarm with blinking of the turn signal light.

B070B01O-AAT

Armed Stage

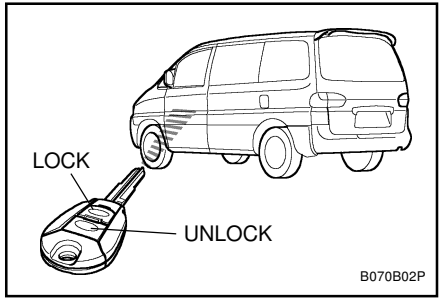

Park the car and stop the engine. Arm the system as described below.

1) Remove the ignition key from the ignition switch.
2) Make sure that the engine hood and tail gate are locked.
3) Lock the doors using the transmitter of the keyless entry system.

After completion of the steps above, the turn signal light will blink once to indicate that the system is armed.

NOTE:

1) If any door, tail gate or engine hood remains open, the system will not be armed.
2) If this happens, rearm the system as described above.

CAUTION:

Do not arm the system until all passengers have left the car. If the system is armed while a passenger(s) remains in the car, the alarm may be activated when the remaining passenger(s) leaves the car.

B070C01FC-GAT

Alarm Stage

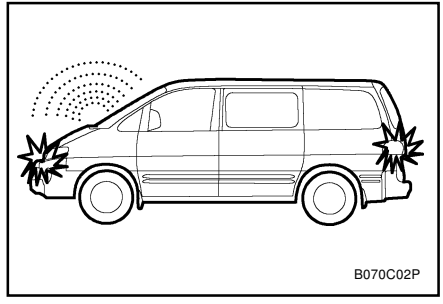

The alarm will be activated if any of the following occurs while the car is parked and the system is armed.

1) A front or rear door is opened without using the transmitter.
2) The tail gate is opened without using the transmitter.
3) The engine hood is opened.

The alarming horn will sound and the turn signal light will blink continuously for 27 seconds (E.C

only/ Except E.C 3 times). To turn off the system, unlock the door or tail gate with the transmitter.

CAUTION:
Avoid trying to start the engine while the system is armed.

B070D02O-AAT

Disarmed Stage

The system will be disarmed when the driver's or passenger's door is unlocked by depressing the "UNLOCK" button on the transmitter.

After completion of the step above, the turn signal light will blink twice to indicate that the system is disarmed.

NOTE:
Once the system has been disarmed, it can not be rearmed except by repeating the arming procedures.

CAUTION:
Only the transmitter can disarm the armed stage. If the transmitter does not disarm the system, it is necessary to take the following steps;

1. **Unlock the door with the key, which will cause, the alarm to be activated.**
2. **Insert the key in the ignition key cylinder and turn the ignition key to "ON" position.**
3. **Wait for 30 seconds.**

After completing the steps above, the system will be disarmed.

B070F01A-GAT

Keyless Entry System (If installed)

Locking doors

1. Close all doors.
2. Push the "LOCK" button on the transmitter.
3. At the same time all doors lock, the turn signal lamp will blink once to indicate that the system is armed.

Unlocking doors

1. Push the "UNLOCK" button on the transmitter.
2. At the same time all doors unlock, the turn signal lamp will blink twice to indicate that the system is disarmed.

B070E02HP-GAT

Replacing the battery

When the transmitter's battery begins to get weak, it may take several pushes on the button to lock or unlock the doors, and the LED will not light. Replace the battery as soon as possible.

Battery type : CR2032

Replacement instructions:

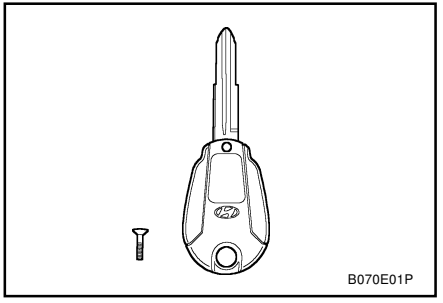

1. Separate the case with a phillips screwdriver.

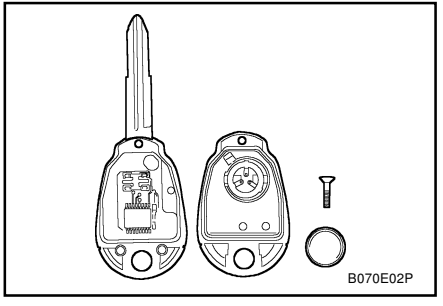

2. Remove the old battery from the case and note the polarity. Make sure the polarity of the new battery is the same(+side facing down), then insert it in the transmitter.

B160A02P-GAT

"CHILD-PROTECTION" SLIDE DOOR (Minibus,Van)

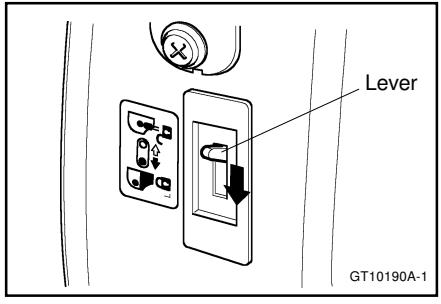

When the slide door is closed with the "child-protection" lever in the "🔒" position, it cannot be opened by using the inner handle. Use the outer handle to open the door.
If adults are to sit in the second seat, release the child protection lock. When this is done, the lever will be in the "🔓" position.

B160B01P-GAT

CARRYING CHILDREN

(1) If a child is left in the vehicle alone, always be sure to turn off the ignition and remove the key.
(2) If a child is seated alone in the second seat, use the child-protection system.

B570A01F-GAT

HOOD RELEASE

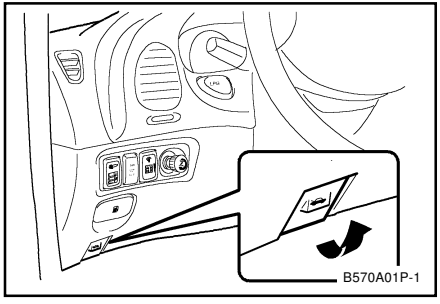

1. Pull the release knob to unlatch the hood.
2. Press the safety catch lever up side and lift the hood.
3. Hold the hood open with the support rod.

Before closing the hood, return the support rod to its clip to prevent it from rattling. Lower the hood until it is about 30 cm (1 ft.) above the closed position and let it drop. Make sure that it locks into place.

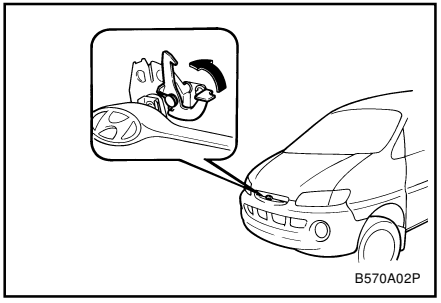

CAUTION:

Make sure that the support rod has been released prior to closing the hood. Always double check to be sure that the hood is firmly latched before driving away. If it is not latched, the hood could fly open while the vehicle is being driven, causing a total loss of visibility, which might result in an accident. The support rod must be inserted completely into the hole provided in the hood whenever you inspect the engine compartment. This will prevent the hood from falling and possibly injuring you. Do not move the vehicle with the hood in the raised position, as vision is obstructed and the hood could fall or be damaged.

B190A01P-GAT

TAIL GATE-Lift type (Minibus,Van)

Operation from outside the vehicle

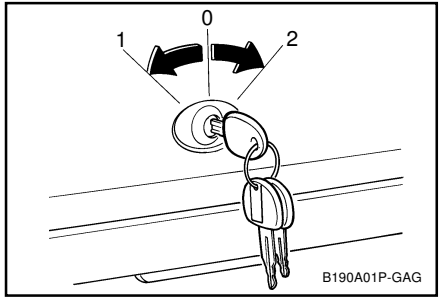

Pull the outside handle toward you to open the tailgate.

0 : Insert (or remove) the key
1 : Lock
2 : Unlock

B190B02P-GAT

Operation from inside the vehicle (VAN)

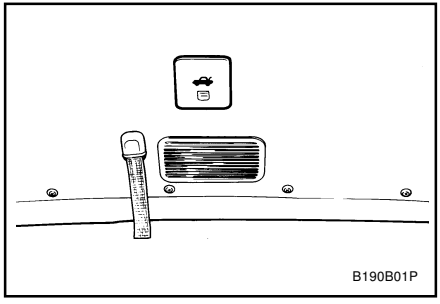

When the tail gate is unlocked

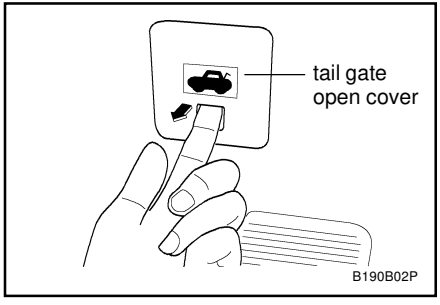

1. Pull the tail gate open cover.

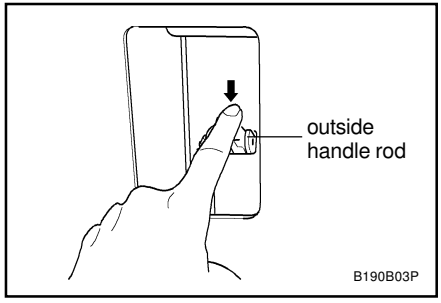

2. Insert the finger into the tail gate opening hole, and press down the outside handle rod to open the tail gate.

When the tail gate is locked

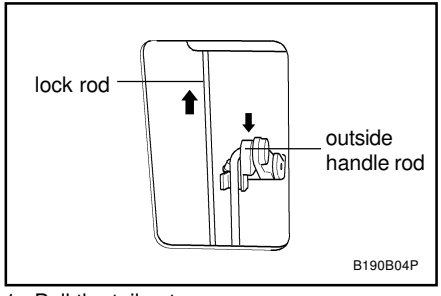

1. Pull the tail gate open cover.
2. Insert the finger into the tail gate opening hole, and pull upward the lock rod (thin rod), and press down the outside handle rod (thick rod) to open the tailgate.

B190C01P-GAT

Tail gate - Twin swing door type (Van)

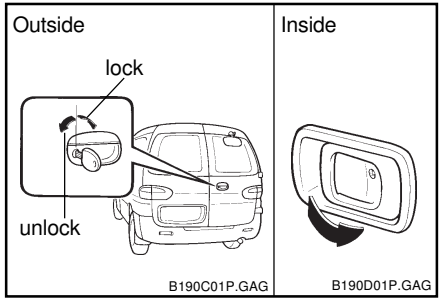

To open from outside, lift the door handle up.
To open from inside, pull the inside door handle.
1 : unlock
2 : lock

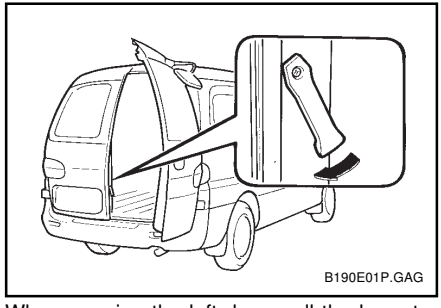

When opening the left door, pull the lever toward your side.

B191A01P-GAT

REAR GATE (For Truck)

To open the rear gate

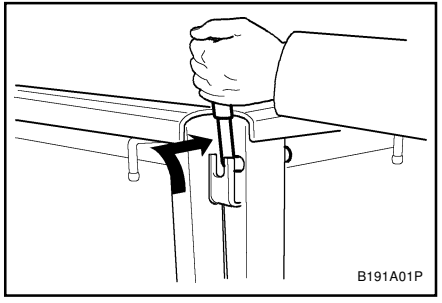

1. Push the rear gate handle inside and pull it toward you.

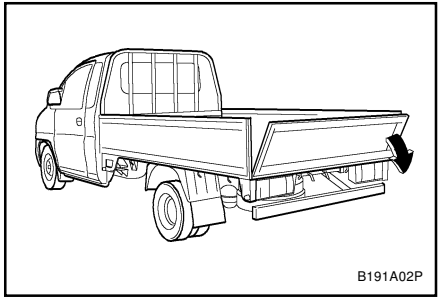

2. Lower the rear gate slowly.

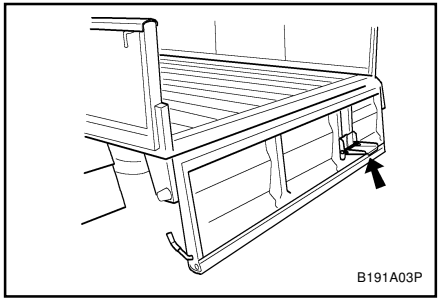

NOTE:
When you step on the cargo deck, use the foothold.

WARNING:
When the rear combination lamps are hidden, other road users should be warned by the means of warning triangle or other devices.

To close the rear gate

Lift the rear gate up and lock the rear gate handle in place.

B191B01P-GAT

SIDE GATE (For Truck)

To open the side gate

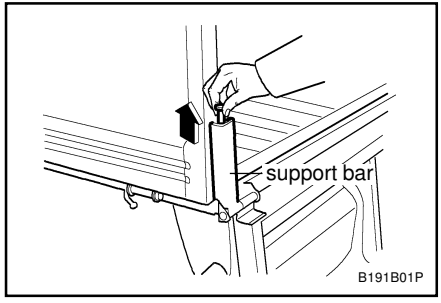

1. With the rear gate opened, pull up the knob to release the support bar down.

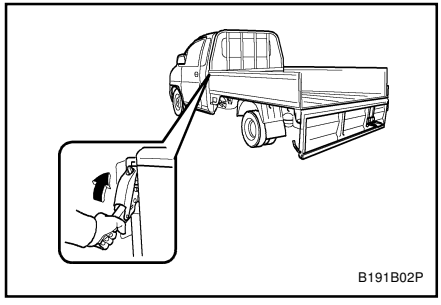

2. Remove the side gate handle from the hook after pulling it up.
3. Lower the side gates slowly.

To close the side gate

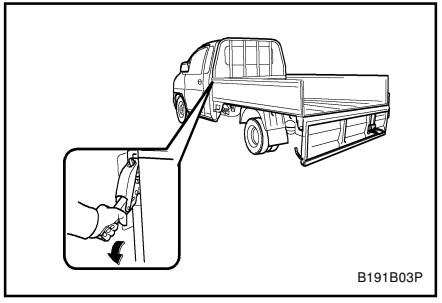

1. Lift the side gate up and lock the side gate handle in place.

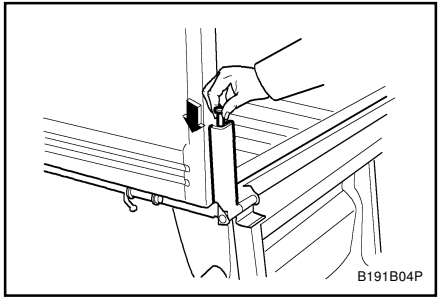

2. Push the knob down to lock the side gates.

B200A01P-GAT

REMOTE FUEL-FILLER LID RELEASE (Minibus,van)

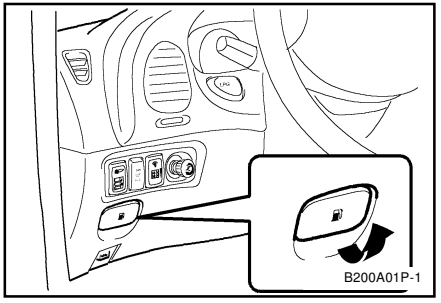

The fuel-filler lid may be opened from inside the vehicle by pulling up on the fuel-filler lid opener located on the dashboard at the left side of the car.

NOTE:

If the fuel-filler lid will not open because ice has formed around it, tap lightly or push on the lid to break the ice and release the lid. Do not pry on the lid. If necessary, spray around the lid with an approved de-icer fluid (do not use radiator anti-freeze) or move the vehicle to a warm place and allow the ice to melt.

WARNING:

Gasoline vapors are dangerous. Before re-fueling, always stop the engine and never

allow sparks or open flames near the filler area. If you need to replace the filler cap, use a genuine Hyundai replacement part.
If you open the fuel filler cap during high ambient temperatures, a slight "pressure sound" may be heard. This is normal and not a cause for concern.
Whenever you open the fuel filler cap, turn it slowly.

B200C01H-GAT

Fuel tank cap key (Truck)

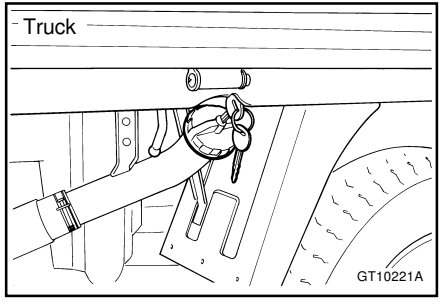

The fuel tank cap can be opened whenever you fuel-up. You lock the fuel tank cap by turning the key toward the front of the vehicle and unlock it by turning it toward the rear.
The fuel tank cap is located at the left side of the vehicle body.

B200B01P-GAT

REFUELING (Minibus,van)

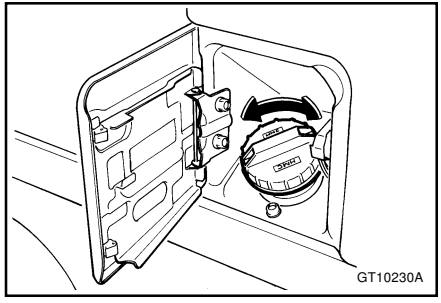

Use the fuel best suited to the engine of your vehicle.
Excessively low cetane fuel may cause ignition pinging and consequently damage engine.
Please find the cetane number most appropriate to your engine.

CAUTION:

Before refueling, always stop the engine and never allow sparks or open flames near the filler area. If you need to replace the filler cap, use a genuine Hyundai replacement part.
If you open the fuel filler cap during high ambient temperatures, a slight "pressure sound" may be heard. This is normal and not a cause for concern.
Whenever you open the fuel filler cap, turn it slowly.

B210A01P-GAT

REAR SIDE, QUARTER WINDOW

Hinged window (Minibus)

To open

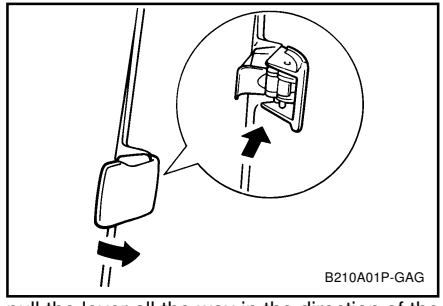

pull the lever all the way in the direction of the arrow. Press the center of the lever to hold it securely in place.

To close

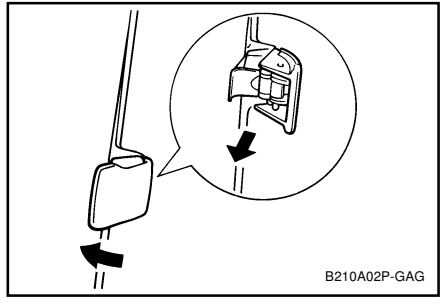

Pull the center of the lever toward you. When the window is closed, lock the lever securely.

B220A01P-GAT

SLIDING WINDOW GLASS (Van)

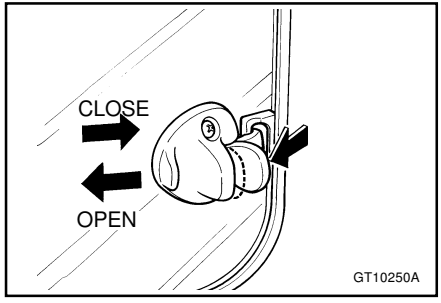

To open

Slide the window glass while pressing the lock knob.

To close

Slide the window glass all the way and it will automatically lock.

B230A01P-GAT

FRONT DOOR WINDOW GLASS

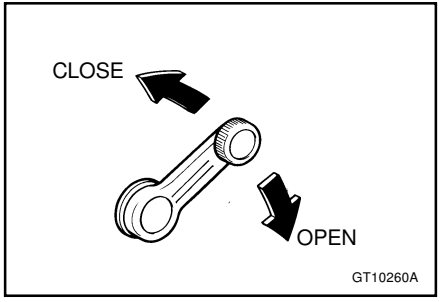

Turn the window regulator handle to raise or lower the window.

WARNING:

When opening or closing the windows, make sure your passenger's arms and hands are safely out of the way.

B250A01P-GAT

POWER WINDOW (If installed)

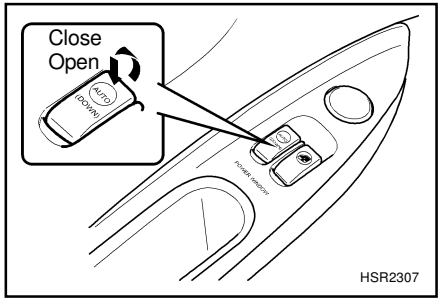

Power window operates when the ignition key is in the "ON" position.
The main switches are located on the driver's armrest and control the front windows on the respective sides of the vehicle.
The windows may be opened by depressing the appropriate window switch.
To stop at the desired opening, release the switch. The window may be closed by pulling the front portion of the switch.

Auto-Down window (Driver's Side)

The Auto-Down window is moved to its fully open position by push on the switch, and push in on the switch again to stop at the desire position.

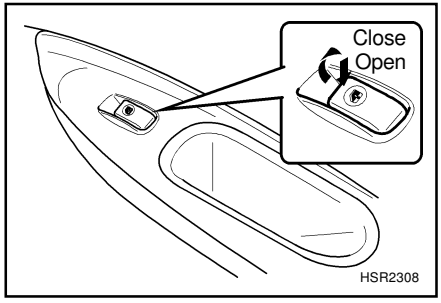

CAUTION:

Never try to operate the main switch and sub switch in opposing directions at the same time. If this is done, the window will stop and cannot be opened or closed.

WARNING:

- **Be careful that head or hands and body are not trapped by a closing window.**
- **If passengers remain in the car when you leave, especially if a child remains alone, always remove the ignition key for their safety.**

B080A01A-AAT

ADJUSTABLE FRONT SEATS

WARNING:

Never attempt to adjust the seat while the vehicle is moving. This could result in loss of control, and an accident causing death, serious injury, or property damage.

B080B01A-AAT

Adjusting Seat Forward and Rearward

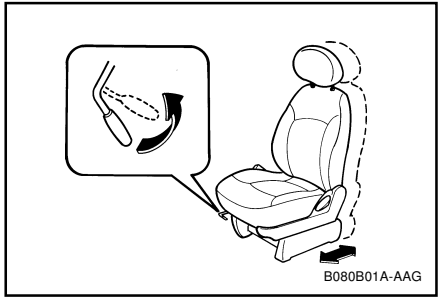

To move the seat toward the front or rear, pull the lock release lever upward. This releases the seat on its track so you can move it forward or rearward to the desired position. When you find the position you want, release the lever and slide the seat forward or rearward on its track until it locks into the position and cannot be moved further.

B080C01A-AAT

Adjusting Seatback Angle

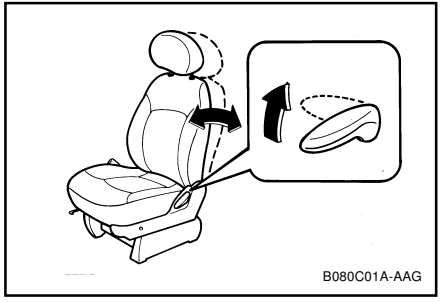

To recline the seatback, lean forward to take your weight off it, then pull up on the recliner control lever at the outside edge of the seat. Now lean back until the desired seatback angle is achieved. To lock the seatback into position, release the recliner control lever.

WARNING:

To minimize risk of personal injury in the event of a collision or a sudden stop, both the driver and passenger seatbacks should always be in an upright position while the vehicle is in motion. The protection provided by the seat belts and airbags may be reduced significantly when the seatbacks are reclined. There is greater risk that the driver and passenger will slide under the belt resulting in serious injury if a crash occurs when the seatbacks are reclined.

The seat belt cannot provide full protection to an occupant if the seat back is reclined.

B260A01P-GAT

LUMBAR SUPPORT CONTROL (Driver's seat only) (If installed)

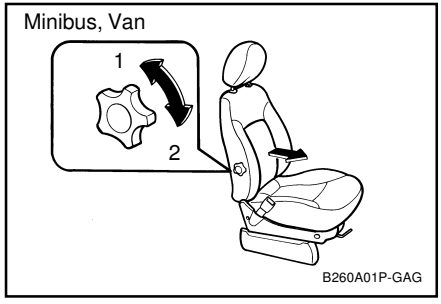

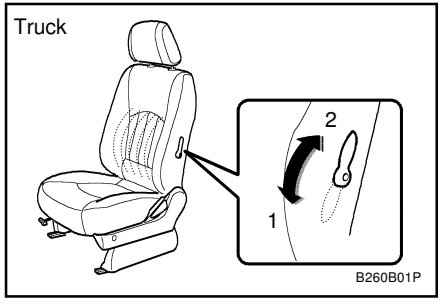

To increase the amount of lumbar support, turn the handle forward. To decrease it turn the handle toward the rear.

1. Minimum support
2. Maximum support

B270A01P-GAT

SEAT WARMER (Driver's seat only) (Minibus) (If installed)

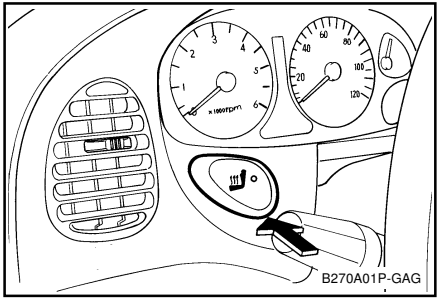

The seat warmer is provided to warm the front seats during cold weather. With the ignition key in the "ON" position, push the switch to warm the driver's seat.
During mild weather or under conditions where the operation of the seat warmer is not needed, keep the switch in the "OFF" position.

B290A01P-GAT

SECOND SEAT (Minibus)

Adjusting Seat Forward and Rearward

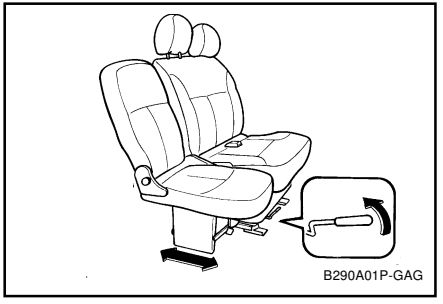

Pull the lever up and hold it while you slide the seat forward or backward to desired position. Release the lever to lock the seat in position.

B290B01P-GAT

To rotate (Second seats: type 1)

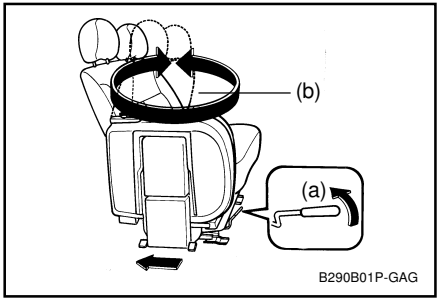

1. Pull the reclining lever and fold the seatback of the front seat forward.
2. Fold the auxiliary seat.
3. Pull the lever (a) and slide the seat at the end of rearward.
4. Pull the lever (b) and incline the seatback forward.
5. Rotate the seat clockwise
6. After rotating the seat 90° or 180°, the seat can be fixed, if its back is pulled rearward at each position.
7. Reverse the above procedure to return the seat to the original position.

B290C03P-GAT

To rotate (Second seats: type 2)

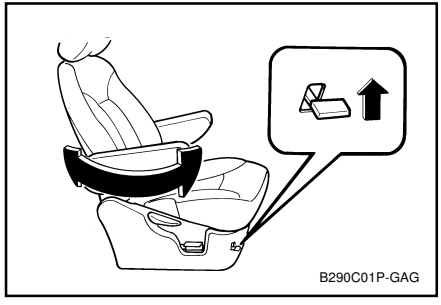

Pull the lever and rotate the seat clockwise.

WARNING:

- **Never rotate the seat while the vehicle is in motion.**
- **When the seat is rotated, be sure that the seat is securely locked in position.**
- **While driving, ensure the seat is locked facing forward.**
  If the seat is not facing forward, this may result in serious injury in the event of a sudden stop.

B310A01P-GAT

THIRD SEAT (Minibus)

Folding the third seat

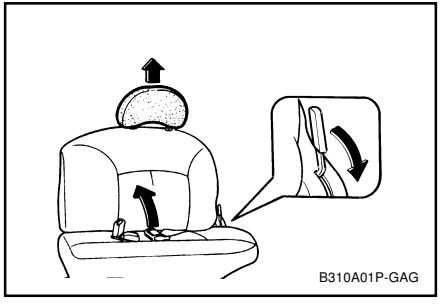

By folding the third seat, larger articles can be stowed in the vehicle.

1. Remove the headrest and tilt the seatback fully backward.
2. Pull the belt for raising and fold the seat sideways.

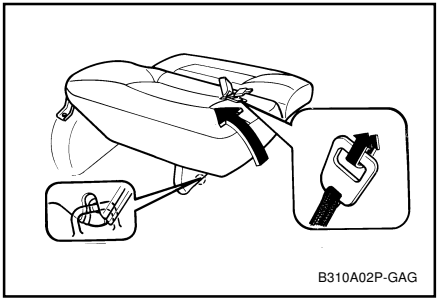

3. Hook the securing band to the assist handle to secure the seat, and fold the legs of the seat.

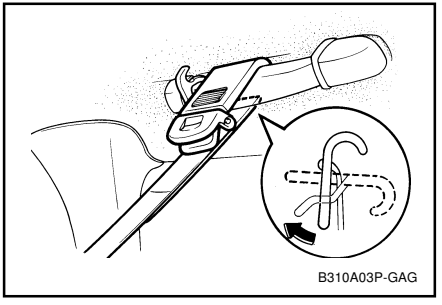

4. Pull the loop of the securing bands to take off any slackness.

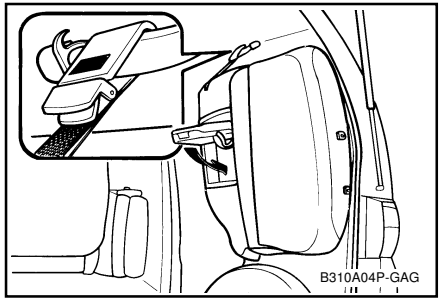

5. Fix the headrest at the upper part of the seat leg.
6. Reverse the above procedure when returning the seat to the normal position.

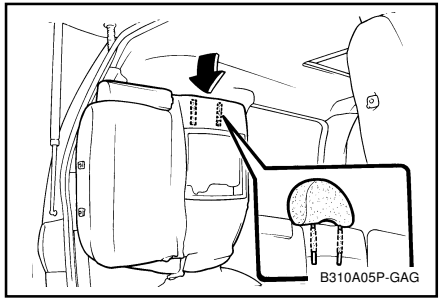

CAUTION:

To return the seat to the normal position, extend the leg of the seat, remove the securing band, and slowly lower the seat.

Be careful not to let the seat fall as the seat may catch your hand or foot.

B320A01P-GAT

FOURTH SEAT (Minibus) (If installed)

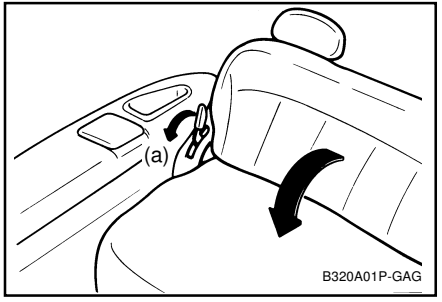

The seatback can be folded down as shown below to provide a large cargo space.

1. Push the lever (a) forward and fold the seatback forward.

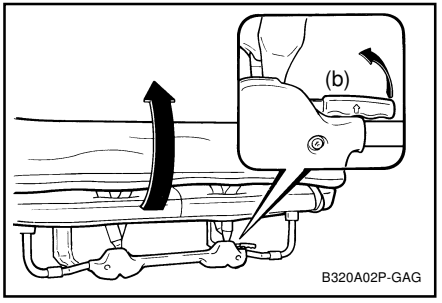

2. Pull the lever (b) in order to release the floor lock.
3. After lifting the seat cushion, fix the seat concretely.

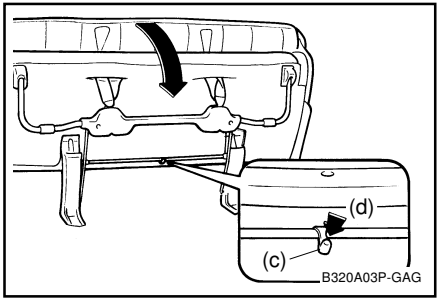

4. To make the seat to the original state, release the lock with pulling the lever (c) toward (d) direction and after locking the seat at the floor, push the lever (a) forward and make the seatback erect.

B330A01P-GAT

HEADREST (If installed)

Adjustment of the headrest

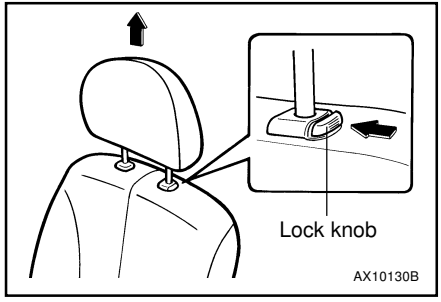

Adjust the headrest so that the top of the restraints is as close as possible to the back of the head at eye level, not neck level.

1. To raise the headrest, just pull it up.
2. To lower it, push it down while pressing the lock knob in the direction of the arrow. After adjustment, press the headrest down to be sure it is secure.

If equipped with a horizontally adjustable type of headrest, pull on the top.

B330B01P-GAT

Removal of the headrest

To remove the headrest, pull it out while pressing the lock knob in the direction of the arrow. When installing the headrest, first check to be sure that it is facing in the correct direction, and then insert it into the seatback and press downward until it locks in place.
Check to be sure that the lock knob is in the correct position, as shown in the figure, and then try to pull the headrest up to be sure it doesn't come out.

WARNING:

It is dangerous to drive without installing the head restraints.

B340A02P-GAT

AUXILIARY SEAT (If installed)

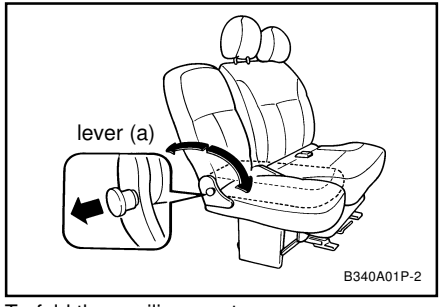

To fold the auxiliary seat.

1. Pull the lever (a) and fold the seatback forward.
2. Fold up the seat.

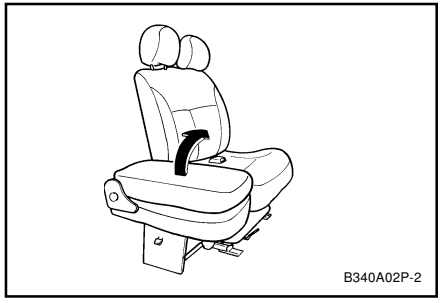

To incline the auxiliary seatback rearward, pull the lever (a) and incline the seatback rearward to the locking position.

CAUTION:

1. **Avoid full flat condition while driving.**
2. **Be careful not to be caught by hand or foot under the seat while fixing the auxiliary seat at the suitable position.**

B350A01P-GAT

MAKING A FLAT SEAT (If installed)

By removing the headrestraints and fully reclining the seatbacks of the front, second and third seats, one large flat seat is achieved.

CAUTION:

- **To make a flat seat, stop the vehicle in a safe place.**
- **Do not walk around on top of the seats after they have been laid flat. To avoid loosing your footing, step on the center of the seats and walk slowly.**
- **To ensure the seats are locked securely, attempt to move them back and forth.**
- **Do not jump on, or impact the seatbacks heavily.**
- **Never drive with the luggage or passengers on the flat seat. This is highly dangerous if heavy braking is required.**
- **To raise the seatback, sit on the seat and put a hand on the seatback and raise slowly. Never have a child do this operation, or an unexpected accident may be caused.**

B170A04A-AAT

HEIGHT ADJUSTABLE FRONT SEAT SHOULDER BELT (If installed)

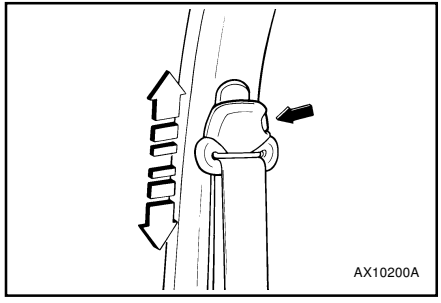

You can adjust the height of the front shoulder belt anchor to one of the 4 positions.
If the height of the adjusting seat belt is too near your neck, you will not be getting the most effective protection. The shoulder portion should be adjusted so that it lies across your chest and midway over your shoulder nearest the door and not your neck.
To adjust the height of seat belt anchor, lower or raise the height adjuster into an appropriate position. To raise the height adjuster, pull it up. To lower it, push it down while pressing the height adjuster button.
Release the button to lock the anchor into position. Try sliding the release button to make sure that it has locked into the position.

WARNING:

- **The height adjuster must be in the locked position whenever the vehicle is moving.**
- **The misadjustment of height of the shoulder belt could reduce the effectiveness of the seat belt in a crash.**

B360A01P-GAT

SEAT BELTS

To protect you and your passengers in the event of an accident, it is most important that the seat belts be worn correctly when you drive.

B370A01P-GAT

Seat belts

3-point system with Emergency Locking Retractor

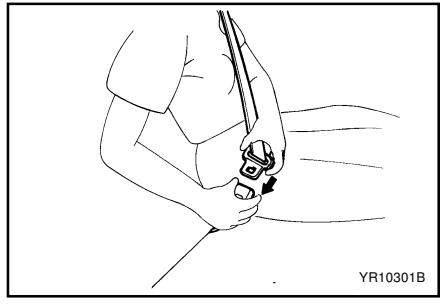

This type of belt requires no length adjustment. Once worn, the belt adjusts itself to the movement of wearer, but in the event of a sudden or strong shock, the belt automatically locks to hold to wearer's body.

B370B01P-GAT

To fasten

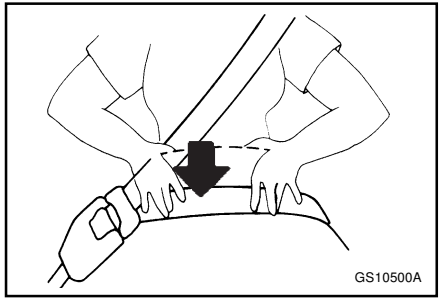

Insert the plate into the buckle until it snaps.

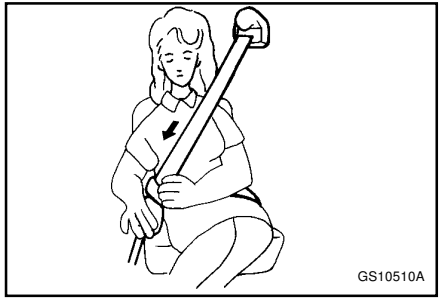

CAUTION:

(1) Always position the lap portion of belt as low as possible on your hips.

(2) The seat belts must not be twisted when worn.

Pull the belt slightly to adjust looseness as desired.

B370C01P-GAT

To unfasten

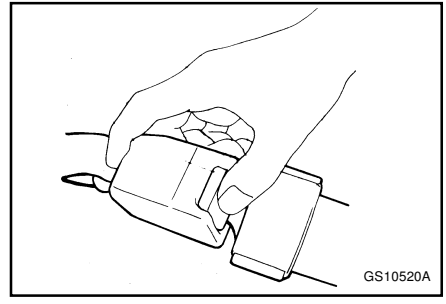

Hold the plate and push the button on the buckle.

NOTE:

As the belt retracts automatically, keep the plate held while retracting so that the belt stows slowly.

B180B01X-GAT

Pre-tensioner Seat Belt (If installed)

Ordinarily the pre-tensioner seat belt operates in the same way as E.L.R (Emergency Locking Retractor) type **(When vehicles stop suddenly, the belt will lock into the position. It will also lock if you try to lean forward too quickly.)**.

However, when vehicles crash, the retractor rewinds the belt webbing. This will restrain the passenger movement quickly and also reduce the slack between passenger and belt webbing.

NOTE:

- **When the pre-tensioner seat belt is activated, there may be an explosion noise. This noise is normal and is not hazardous.**
- **Pre-tensioner seat belt is designed to operate only when a sufficiently severe impact occurs and it will be only operated once.**

WARNING:

If the pre-tensioner seat belt was activated, never attempt to replace it by yourself. It must be replaced by an authorized Hyundai Dealer.

B370D01P-GAT

Seat lap belts (With Non-Locking Retractor) (If installed)

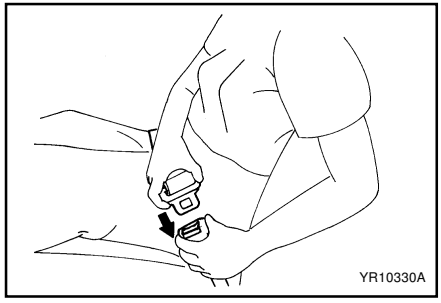

This type of lap belts are equipped with an Non-Locking Retractor.
Holding the latch plate by hand, pull it out until the webbing is fully extended and insert the latch plate into the buckle.
When it fits snugly around your hip, the webbing with the latch plate is automatically retracted. To release, unfasten the belt, and a light tug to the webbing with the latch plate will cause the retractor to work automatically.

B370E01P-GAT

Seat lap belts (With Static Type) (If installed)

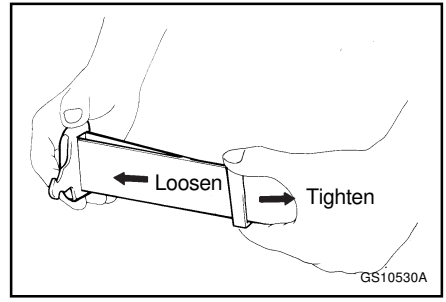

The lap belts should be adjusted by holding the belt and latch plate at right angles to each other, and then pulling the belt as illustrated below to a snug fit around the occupant.
Holding the latch plate by hand, insert the latch plate into the buckle.

B230A02P-GAT

CHILD RESTRAINT SYSTEM (Minibus, Van) (If installed)

Children riding in the car should sit in the rear seat and must always be restrained to minimize the risk of injury in an accident, sudden stop or sudden maneuver. According to accident statistics, children are safer when properly restrained in the rear seats than in the front seat. Larger children should use one of the seat belts provided.
You are required by law to use safety restraints for children. If small children ride in your vehicle you must put them in a child restraint system (safety seat).
Children could be injured in a crash if their restraints are not properly secured. For small children and babies, a child seat or infant seat must be used. Before buying a particular child restraint system, make sure it fits your car seat and seat belts, and fits your child. Follow all the instructions provided by the manufacturer when installing the child restraint system.

WARNING:

- **A child restraint system must be placed in the rear seat. Never install a child or infant seat on the front passenger's seat. Should an accident occur and cause the passenger side airbag to deploy, it could severely injure or kill an infant or child seated in an infant or child seat. Thus, only use a child restraint in the rear seat of your vehicle.**

- **Since a safety belt or child restraint system can become very hot if it is left in a closed vehicle, be sure to check the seat cover and buckles before placing a child there.**
- **When the child restraint system is not in use, fasten it with a safety belt so that it will not be thrown forward in the case of a sudden stop or an accident.**
- **Children who are too large to be in a child restraint should sit in the rear seat and be restrained with the available lap/shoulder belts.**
- **Always make sure that the shoulder belt portion of the outboard lap/shoulder belt is positioned midway over the shoulder, never across the neck. Moving the child closer to the center of the vehicle may help provide a good shoulder belt fit. The lap belt portion of the lap/shoulder belt or the center seat lap belt must always be positioned as low as possible on the child's hips and as snug as possible.**
- **If the seat belt will not properly fit the child, we recommend the use of an approved booster seat in the rear seat in order to raise the child's seating height so that the seat belt will properly fit the child.**
- **Never allow a child to stand up or kneel on the seat.**
- **Never use an infant carrier or child safety seat that "hooks" over a seatback; it may not provide adequate security in an accident.**
- **Never allow a child to be held in a person's arms while they are in a moving vehicle, as this could result in serious injury to the child in the event of an accident or a sudden stop. Holding a child in a moving vehicle does not provide the child with any means of protection during an accident, even if the person holding the child is wearing a seat belt.**

B230F01A-AAT

Installation on Rear Seat Center Position

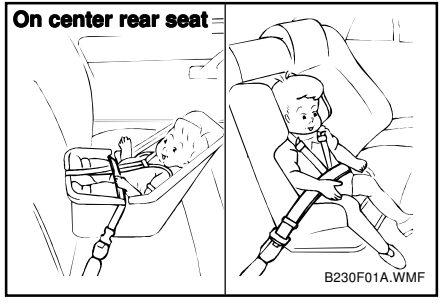

Use the center seat belt for the rear seat to secure the child restraint system as illustrated. After installation of the child restraint system, rock the child seat back and forth, and side to side to ensure that it is properly secured by the seat belt.

If the child seat moves, readjust the length of the seat belt. Then, if equipped, insert the child restraint tether strap hook into the child restraint hook holder and tighten to secure the seat. Always refer to the child restraint system manufacturer's recommendation before installing the child restraint system in your vehicle.

B230G01A-GAT

Installation on Outboard Rear Seats

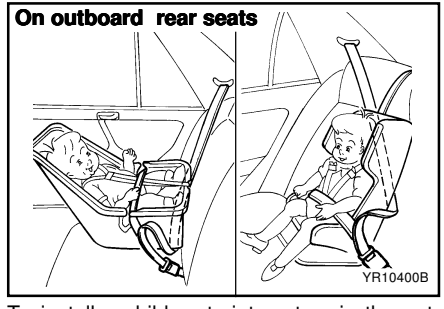

To install a child restraint system in the outboard rear seats, extend the shoulder/lap belt from its retractor. Install the child restraint system, buckle the seat belt and allow the seat belt to take up any slack. Make sure that the lap

portion of the belt is tight around the child restraint system and the shoulder portion of the belt is positioned so that it cannot interfere with the child's head or neck. After installation of the child restraint system, try to move it in all directions to be sure the child restraint system is securely installed.
If you need to tighten the belt, pull more webbing toward the retractor. When you unbuckle the seat belt and allow it to retract, the retractor will automatically revert back to its normal seated passenger emergency locking usage condition.

NOTE:

- **Before installing the child restraint system, read the instructions supplied by the child restraint system manufacturer.**
- **If the seat belt does not operate as described, have the system checked immediately by your authorized Hyundai dealer.**

WARNING:

Do not install any child restraint system in the front passenger seat. Should an accident occur and cause the passenger side airbag to deploy, it could severely injure or kill an infant or child seated in an infant or child seat. Therefore, only use a child restraint system in the rear seat of your vehicle.

G230G03P-GAT

Child Seat Restraint Suitability For Seat Position

Use child safety seats that have been officially approved and are appropriate for your children.

Age Group	Seating Position (Minibus for 7 Passengers)				
	Front Passenger	2nd Left Seat	2nd Right Seat	3rd Outboard	3rd Center
0 : Up to 10 kg (0 ~ 9 months)	X	U	U	X	UF
0+ : Up to 13 kg (0 ~ 2 years)	X	U	U	X	UF
I : 9kg to 18kg (9 months ~ 4 years)	X	U	U	X	UF
II & III : 15kg to 36kg (4 ~ 12 years)	UF	UF	UF	X	UF

Age Group	Seating Position (Minibus for 9 Passengers)						
	Front Passenger		2nd Seat			3rd Seat	
	Outboard	center	Left Seat	center	Right Seat	Outb-oard	cen-ter
0 : Up to 10 kg (0 ~ 9 months)	X	X	U	UF	X	X	UF
0+ : Up to 13 kg (0 ~ 2 years)	X	X	U	UF	X	X	UF
I : 9kg to 18kg (9 months ~ 4 years)	X	X	U	UF	X	X	UF
II & III : 15kg to 36kg (4 ~ 12 years)	X	X	UF	UF	X	X	UF

Age Group	Seating Position (Van for 3 Passengers)	
	Front Passenger Outboard	Front Passenger Center
0 : Up to 10 kg (0 ~ 9 months)	X	X
0+ : Up to 13 kg (0 ~ 2 years)	X	X
I : 9kg to 18kg (9 months ~ 4 years)	X	X
II & III : 15kg to 36kg (4 ~ 12 years)	X	X

Age Group	Seating Position (Van for 6 Passengers)			
	Front Passenger Outboard	Front Passenger Center	2nd Outboard	2nd Center
0 : Up to 10 kg (0 ~ 9 months)	X	X	UF	UF
0+ : Up to 13 kg (0 ~ 2 years)	X	X	UF	UF
I : 9kg to 18kg (9 months ~ 4 years)	X	X	UF	UF
II & III : 15kg to 36kg (4 ~ 12 years)	X	X	UF	UF

Age Group	Seating Position (For truck)	
	Front Passenger Outboard	Front Passenger Center
0 : Up to 10 kg (0 ~ 9 months)	X	X
0+ : Up to 13 kg (0 ~ 2 years)	X	X
I : 9kg to 18kg (9 months ~ 4 years)	X	UF
II & III : 15kg to 36kg (4 ~ 12 years)	X	UF

U : Suitable for "universal" category restraints approved for use in this mass group

UF : Suitable for forward-facing "universal" category restraints approved for use in this mass group

X : Seat poition not suitable for children in this mass group

B370F01P-GAT

Handling seat belts

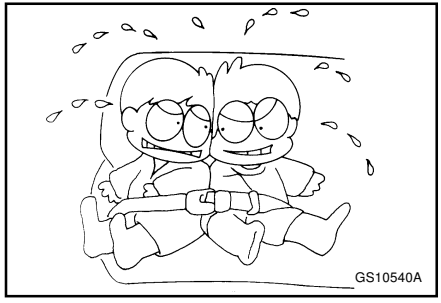

(1) One seat belt should be used by only one person. Doing otherwise can be dangerous.

(2) When driving with children, they should be seated in the second and third seats, and wear lap belts. For an infant, a children safety seat should be used.
The regulations concerning driving with children in the front seat may differ from country to country. It is recommended that you obey the pertinent regulations.

(3) The seat belts must not be twisted when worn.

(4) Check the belts for cuts, worn or frayed webbing and for checked or deformed metallic parts. Replace the belts if defective.

(5) A dirty belt should be cleaned with neutral detergent in warm water. After rinsing in water, let it dry in the shade. Do not attempt to bleach or re-dye the belts because this affects their characteristics.

(6) Seat belts worn at the time of an accident should not be reused even if they appear flawless, because deteriorated belts cannot withstand another accident. Be sure to replace the seat belt and mounting bolts with new ones.

B380A01P-GAT

SEAT AND SEAT BELT

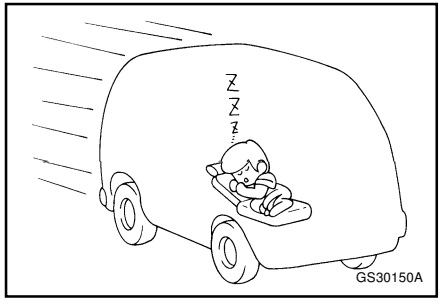

(1) Never adjust the driver's seat while the vehicle is in motion.
(2) For technical reasons, the second seat and third seat should not be folded down to make a bed while the vehicle is being driven.
(3) To protect you and your passengers in the event of an accident, it is most important that the seat belts be worn correctly when you drive.
(4) The seat belt will provide maximum protection for its wearer if the recliner seatback is placed in fully upright position.
When the seatback is reclined, there is greater risk that the passenger will slide under the belt, especially in a forward impact accident, and may be injured by the belt or by striking the instrument panel or seatbacks.

B600A01A-AAT

STEERING WHEEL TILT LEVER (If installed)

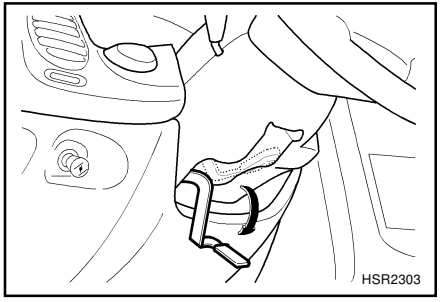

To adjust the steering wheel:

1. Push the lever downward to unlock.
2. Raise or lower the steering wheel to the desired position.
3. After adjustment, securely tighten the lever by pulling it upward.

WARNING:

Do not attempt to adjust the steering wheel while driving as this may result in loss of control of the vehicle and serious injury or death.

B240A01F-GAT

SUPPLEMENTAL RESTRAINT (AIRBAG) SYSTEM (If installed)

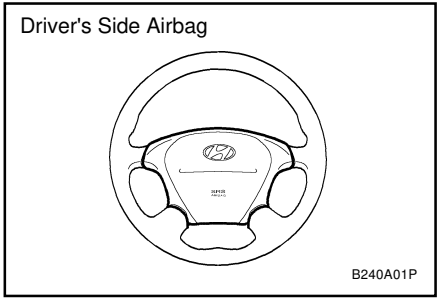

Your Hyundai is equipped with a Supplemental Restraint (Airbag) System. The indications of the system's presence are the letters "SRS AIR BAG" embossed on the airbag pad cover in the steering wheel and the passenger's side front panel pad above the glove box.

The Hyundai SRS consists of airbags installed under the pad covers in the center of the steering wheel and the passenger's side front panel above the glove box. (The purpose of the SRS is to provide the vehicle's driver and/or the front passenger with additional protection than that offered by the seat-belt system alone, in case of a frontal impact of sufficient severity.)

NOTE:

Be sure to read information about the SRS on the labels provided on the backside of the sun visor and in the glove box.

WARNING:

- **As its name implies, the SRS is designed to work with, and be supplemental to, the driver's and the passenger's three point seat belt systems and is not a substitute for them. Therefore your seat belts must be worn at all times while the vehicle is in motion. In addition, the airbags deploy only in certain frontal impact conditions severe enough to likely cause significant injury to the vehicle occupants.**
- **The SRS is designed to deploy the airbags only when an impact is sufficiently severe and when the impact angle is less than 30° from the forward longitudinal axis of the vehicle and will not deploy in side, rear or rollover impacts. Additionally, the airbags will only deploy once. Thus, seat belts must be worn at all times.**
- **For maximum safety protection in all types of crashes, all occupants including the driver should always wear their seat belts whether or not an airbag is also provided at their seating position to minimize the risk of severe injury or death in the event of a crash. Do not sit or lean unnecessarily close to the airbag while the vehicle is in motion.**
- **The SRS airbag system must deploy very rapidly to provide protection in a crash. If an occupant is out of position because of not wearing a seat belt, the airbag may forcefully contact the occupant causing serious or fatal injuries.**

B240B02P-AAT

SRS Components and Functions

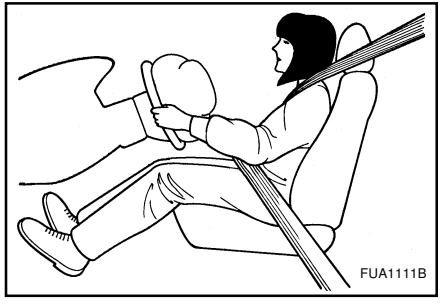

The SRS consists of the following components:

- Driver's Side Airbag Module
- Passenger's Side Airbag Module
- SRS Service Reminder Indicator (SRI)
- SRS Control Module (SRSCM)

The SRSCM continually monitors all elements while the ignition is "ON" to determine if a frontal or near-frontal impact is severe enough to require airbag deployment.

The SRS service reminder indicator (SRI) on the instrument panel will blink for about 6 seconds after the ignition key is turned to the "ON" position or after the engine is started, after which the SRI should go out.

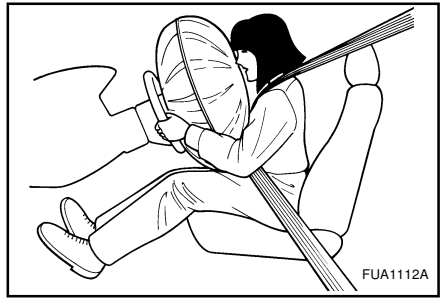

The airbag modules are located both in the center of the steering wheel and in the front passenger's panel above the glove box. When the SRSCM detects a considerable impact to the front of the vehicle, it will automatically deploy the airbags.

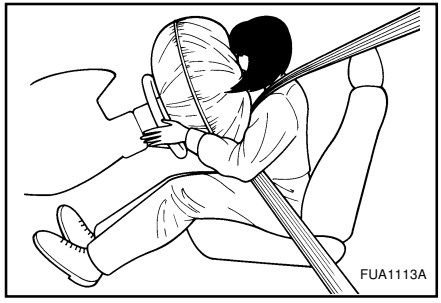

Upon deployment, tear seams molded directly into the pad covers will separate under pressure from the expansion of the airbags. Further opening of the covers then allows full inflation of the airbags.

A fully inflated airbag in combination with a properly worn seat belt slows the driver's or the passenger's forward motion, thus reducing the risk of head or chest injury.

After complete inflation, the airbag immediately starts deflating, enabling the driver to maintain forward visibility.

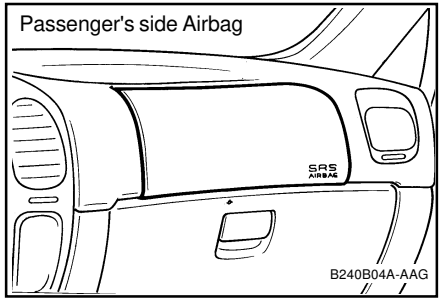

CAUTION:

When installing the container of liquid air refresher inside a vehicle, do not place it near the instrument cluster nor on the crash pad surface. If there is any leakage from the air refresher onto these areas (Instrument cluster, crash pad or air ventilator), it may damage these parts. If the liquid from air refresher does leak onto these areas, wash them with water immediately.

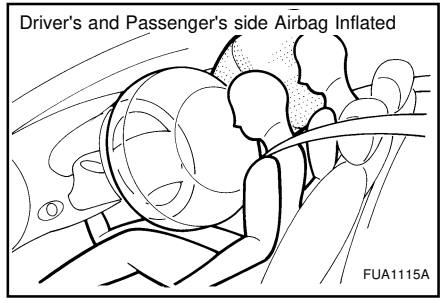

WARNING:

- **When the SRS is activated, there may be a loud noise and fine dust will be released through the vehicle. These conditions are normal and are not hazardous. However, the fine dust generated during airbag deployment may cause skin irritation. Be sure to wash your hands and face thoroughly with lukewarm water and a mild soap after an accident in which the airbags were deployed.**
- **The SRS can function only when the ignition key is in the "ON" position. If the SRS SRI does not come on, or continuously remains on, after flashing for about 6 seconds when the ignition key is turned to the "ON" position, or after the engine is started, or comes on while driving, the SRS is not working properly. If this occurs, have your vehicle immediately inspected by your Hyundai dealer.**

- **Before you replace a fuse or disconnect a battery terminal, turn the ignition key to the "LOCK" position or remove the ignition key. Never remove or replace the air bag related fuse(s) when the ignition key is in the "ON" position. Failure to heed this warning will cause the SRS SRI to illuminate.**

B240C01HP-GAT

SRS Care

The SRS is virtually maintenance-free and so there are no parts you can safely service by yourself. The entire SRS system must be inspected by an authorized Hyundai dealer 10 years after the date that the vehicle was manufactured.

Any work on the SRS system, such as removing, installing, repairing, or any work on the steering wheel must be performed by a qualified Hyundai technician. Improper handling of the SRS system may result in serious personal injury.

WARNING:

- **Extreme Hazard! Do not use a rearward facing child restraint on a seat protected by an airbag in front of it!**
- **Modification to SRS components or wiring, including the addition of any kind of badges to the pad covers or modifications to the body structure, can adversely affect SRS performance and lead to possible injury.**
- **For cleaning the airbag pad covers, use only a soft, dry cloth or one which has been moistened with plain water. Solvents or cleaners could adversely affect the airbag covers and proper deployment of the system.**
- **No objects should be placed over or near the airbag modules on the steering wheel, instrument panel, and the front passenger's panel above the glove box, because any such object could cause harm if the vehicle is in a crash severe enough to cause the airbags to inflate.**
- **If the airbags inflate, they must be replaced by an authorized Hyundai dealer.**
- **Do not tamper with or disconnect SRS wiring, or other components of the SRS system. Doing so could result in injury, due to accidental firing of the airbags or by rendering the SRS inoperative.**
- **Do not install a child restraint system in the front passenger seat position.**
  A child restraint system must never be placed in the front seat. The infant or child could be severely injured by an airbag deployment in case of an accident.
- **If components of the airbag system must be discarded, or if the vehicle must be scrapped, certain safety precautions must be observed. Your Hyundai dealer knows these precautions and can give you the necessary information. Failure to follow these precautions and procedures could increase the risk of personal injury.**
- **If you sell your vehicle, be sure to inform the new owner of these important points and make certain that this manual is transferred to the new owner.**
- **If your car was flooded and has soaked carpeting or water on flooring, you shouldn't try to start engine; have the car towed to authorized Hyundai dealer.**
- **Do not replace the bumper or the bumper guard with the one other than the Hyundai genuine parts. Otherwise, it can adversely affect SRS performance and lead to unexpected injury.**

C000A01P-GAT

2. INSTRUMENTS & CONTROLS

C020A02P-GAT

POSITIONS OF SWITCHES AND LEVERS (Minibus, Van)

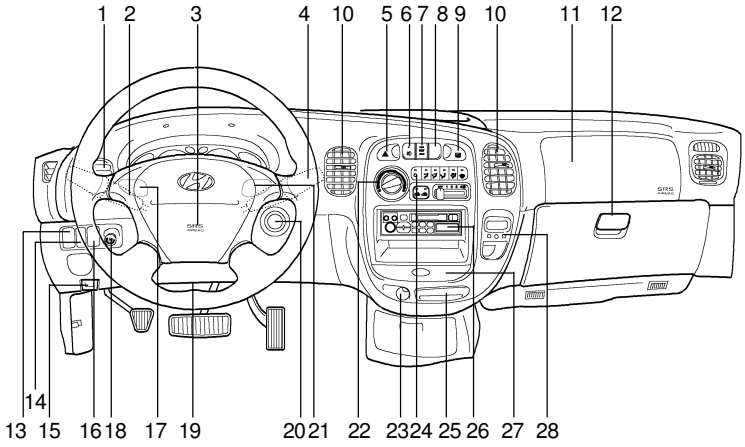

CAUTION:

When installing the container of liquid air refresher inside a vehicle, do not place it near the instrument cluster nor on the crash pad surface. If there is any leakage from the air refresher onto these areas (Instrument cluster, crash pad or air ventilator), it may damage these parts. If the liquid from air refresher does leak onto these areas, wash them with water immediately.

C020A01P-1

1. Side air vent
2. Multi-function light switch
3. Horn/Driver's Side Airbag (If installed)
4. Windshield wiper/washer switch (If installed)
5. Hazard warning switch
6. Front fog light switch (If installed)
7. 4WD Switch (If installed)
8. Rear fog light switch (If installed)
9. Rear window defroster switch
10. Center air vent louver
11. Passenger's Side Airbag (If installed)
12. Glove box
13. Headlamp leveling device switch (If installed)
14. ECT switch (A/T Only)
15. Hood release lever
16. Panel brightness control knob (=RHEOSTAT) (If installed)
17. Seat warmer switch (If installed)
18. Choke knob (If installed)
19. Steering wheel tilt lever (If installed)
20. Ignition switch
21. Rear heater switch (If installed)
22. Heater/air conditioner control panel
23. Cigarette lighter
24. Air conditioner switch (If installed)
25. Ashtray
26. Audio system (If installed)
27. Drink holder
28. Digital clock (If installed)

C020B01P-GAT

POSITIONS OF SWITCHES AND LEVERS (Truck)

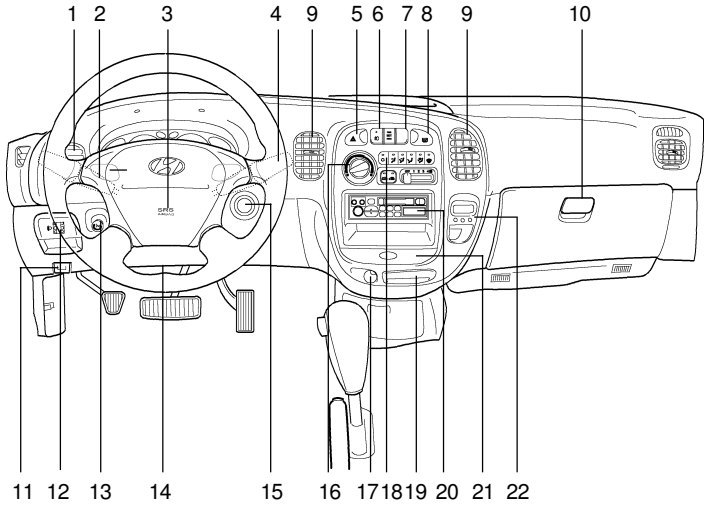

CAUTION:

When installing the container of liquid air refresher inside a vehicle, do not place it near the instrument cluster nor on the crash pad surface. If there is any leakage from the air refresher onto these areas (Instrument cluster, crash pad or air ventilator), it may damage these parts. If the liquid from air refresher does leak onto these areas, wash them with water immediately.

C020A02P-1

1. Side air vent
2. Multi-function light switch
3. Horn/Driver's Side Airbag (If installed)
4. Windshield wiper/washer switch (If installed)
5. Hazard warning switch
6. Front fog light switch (If installed)
7. Rear fog light switch (If installed)
8. Outside rearview mirror heater switch (If installed)
9. Center air vent louver
10. Glove box
11. Hood release lever
12. Headlamp leveling device switch (If installed)
13. Choke knob
14. Steering wheel tilt lever (If installed)
15. Ignition switch
16. Heater/air conditioner control panel
17. Cigarette lighter
18. Air conditioner switch (If installed)
19. Ashtray
20. Audio system (If installed)
21. Drink holder
22. Digital clock (If installed)

C030A03P-GAT

INSTRUMENTS

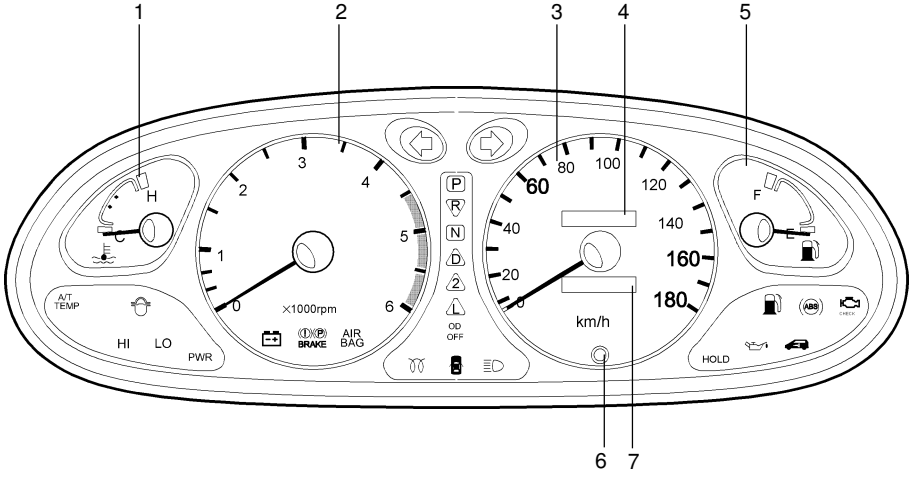

C130A01P-3

1. Water temperature gauge
2. Tachometer (If installed)
3. Speedometer
4. Odometer
5. Fuel gauge
6. Trip meter reset button
7. Trip meter

C031A01P-GAT

MULTIMETER (Minibus) (If installed)

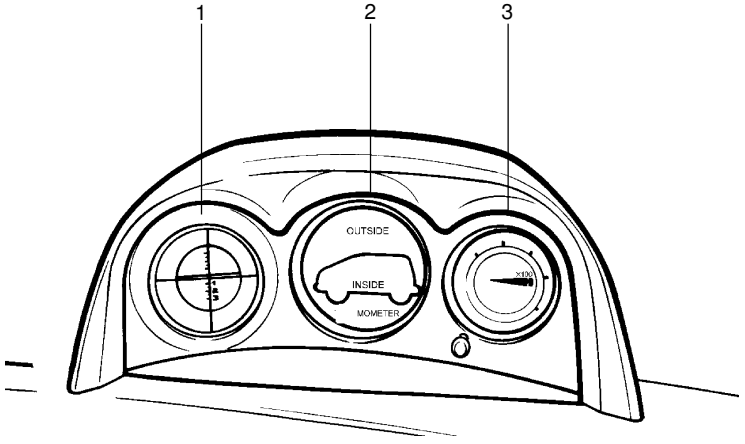

C031A01P

1. Inclinometer
2. Thermometer
3. Altimeter

C040A01P-GAT

SPEEDOMETER

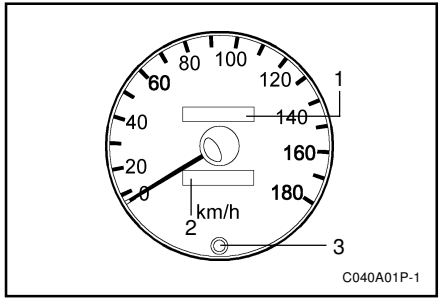

The speedometer indicates the vehicle's speed in kilometers per hour (km/h) or miles per hour (mph).

1. Odometer
2. Tripmeter
3. Tripmeter reset button

C050A01P-GAT

ODOMETER

The odometer indicates the total distance the vehicle has travelled.

C060A01P-GAT

TRIPMETER AND RESET BUTTON

The tripmeter indicates the distance travelled during a particular trip or period.
Press the reset button to return the tripmeter indication to zero.

C070A01P-GAT

TACHOMETER (If installed)

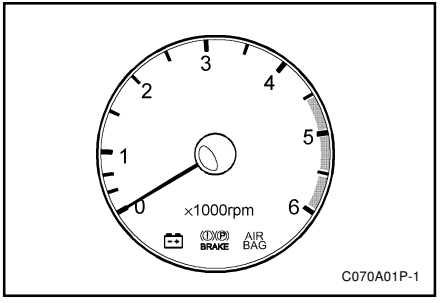

The tachometer indicates the engine speed(rpm). The tachometer can help you obtain more economical driving and also warns you of excessive engine speeds. During travel, watch the tachometer to be sure that the engine speed indication does not rise to the red zone (range of the excessive engine rpm).

C080A01P-GAT

FUEL GAUGE

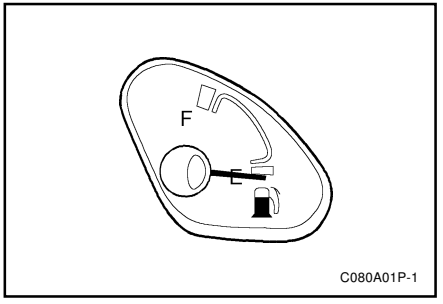

The fuel gauge indicates the fuel level in the fuel tank regardless of the ignition switch position.

F : Full
E : Empty

C090A01P-GAT

WATER TEMPERATURE GAUGE

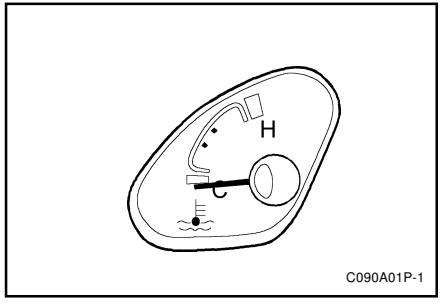

The water temperature gauge indicates the engine coolant temperature. If the indication needle enters the red zone while the engine is running, it probably indicates that the engine is overheated. While driving, care should always be taken to maintain the normal operating temperature.

C100A01P-GAT

INCLINOMETER (If installed)

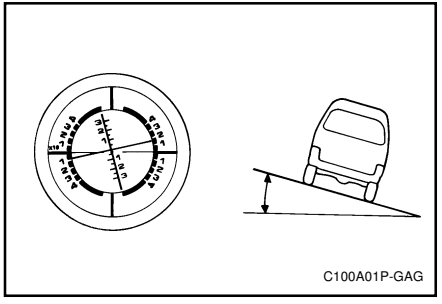

This meter indicates the inclination angle of the vehicle, both front-to-rear and side to side.

1. Side-to-side inclination (Right inclination of 15°)

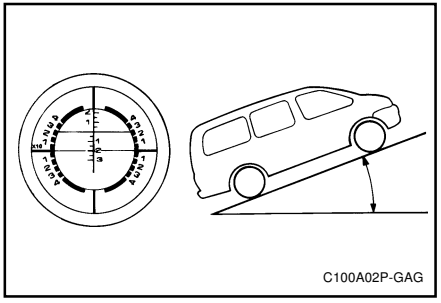

2. Front-to rear inclination (Rear inclination of 20°)

NOTE:

The inclinometer indicates the correct inclination when the vehicle is stationary, but a slight reading error may be given when driving the vehicle.

C110A01P-GAT

THERMOMETER (If installed)

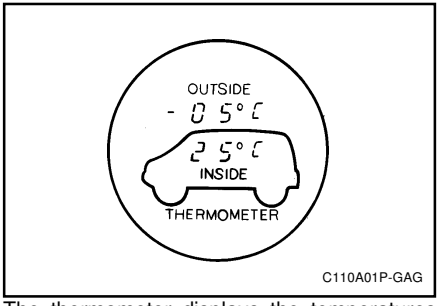

The thermometer displays the temperatures inside and outside the vehicle when the ignition switch is at "ACC" or "ON".

1. Temperature out side the vehicle
2. Temperature inside vehicle

NOTE:

- **The external temperature displayed may differ from the actual temperature on account of surrounding conditions, driving conditions, etc.**
- **Temperature inside or outside the vehicle that are below -30°C or over 70°C will result in error message being displayed (-E°C, E°C).**

C120A01P-GAT

ALTIMETER (If installed)

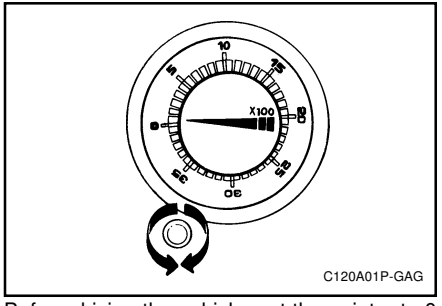

Before driving the vehicle, set the pointer to 0 on the dial by turning the adjusting knob. The meter will indicate the height at the destination.

C130A04P-GAT

INDICATION AND WARNING LAMPS

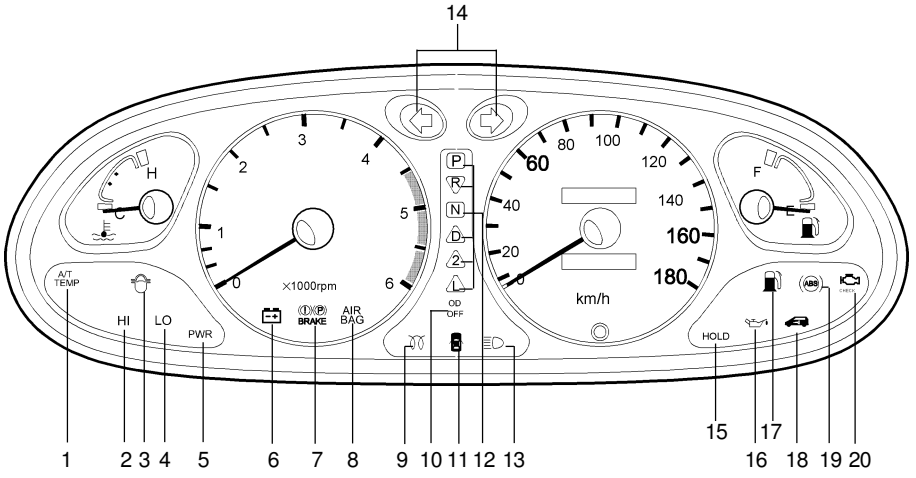

C130A01P-3

1. A/T Oil temperature warning light (If installed)
2. 4WD high indicator light
3. Fuel filter warning light (Diesel only)
4. 4WD low indicator light
5. POWER mode indicator light (A/T only)
6. Charge warning light
7. Brake warning and parking brake indicator light
8. SRS (Airbag) warning light (If installed)
9. Diesel preheat indicator light
10. Overdrive off indicator light (A/T only)
11. Door-ajar warning light
12. Automatic transmission position indicator light (A/T only)
13. High-beam indicator light
14. Turn-signal indicator light
15. HOLD mode indicator light (A/T only)
16. Oil pressure warning light
17. Low fuel warning light
18. Immobilizer warning indicator light/ Seat belt reminder light (If installed)
19. ABS Service reminder indicator light (SRI) (If installed)
20. Malfunction indicator light (MIL) (If installed)

C130B01P-GAT

DOOR-AJAR WARNING LAMP-RED

This lamp illuminates and the warning chime will sound at the same time when a door is opened or incompletely closed.

C130C01P-GAT

OIL PRESSURE WARNING LAMP-RED

This lamp illuminates when the ignition switch is set to the "ON" position and goes off after the engine has started. If it lights up while the engine is running, the engine must be stopped at once. Contact the nearest authorized HYUNDAI dealer.

C130D01P-GAT

LOW FUEL WARNING LAMP-AMBER

This lamp illuminates when the fuel level in the fuel tank falls to a low level. If it illuminates, the fuel should be added soon.

C130E01P-GAT

CHARGE WARNING LAMP-RED

This lamp illuminates when the ignition switch is set to the "ON" position and goes off after the engine has started. If it lights up while the engine is running, there is a problem in the charging system. Check to see if the V-belt is broken, and then contact the nearest authorized HYUNDAI dealer.

C130F01P-GAT

TURN-SIGNAL INDICATION LAMPS-GREEN

These indication lamps blink on and off when a turn-signal lamp is blinking. If the blinking is too short, the cause may be a faulty turn-signal lamp connection or a blown lamp bulb.

C130G01P-GAT

HIGH-BEAM INDICATION LAMP-BLUE

This indication lamp illuminates when the high beams are on.

C130H01P-GAT

FUEL FILTER WARNING LAMP-RED

This lamp illuminates when the ignition switch is set to the "ON" position and goes off after the engine has started. If it lights up while the engine is running, it indicates that water has accumulated inside the fuel filter. If this happens, remove the water from the fuel filter. (Refer to "In case of emergency")

C130I01P-GAT

OVERDRIVE/OFF INDICATOR (If installed)

When the overdrive switch is turned on and 4th gear is engaged, the overdrive off indicator will go out. This amber indicator will be illuminated when the overdrive switch is turned off.

C130J01P-GAT

BRAKE WARNING AND PARKING BRAKE INDICATION LAMP-RED

With the ignition switch at the "ON" position, the brake warning lamp illuminates under the following conditions:

1. When the brake fluid level in the reservoir falls to a low level.
2. If a malfunction develops in the brake servo system.

If the lamp illuminates, stop the vehicle immediately and call the nearest authorized HYUNDAI dealer.

C130L01P-GAT

DIESEL PREHEAT INDICATION LIGHT-AMBER

The indication light illuminates amber when the ignition switch is placed at the "ON" position. The engine can be started after the preheat indication light goes off. The illuminating time varies with the water temperature.

Water temperature (°C)	Illuminating time (sec)
Below -30	15
-20	10
0	3
20	2
40	1

NOTE:
If the engine were not started within 10 seconds after the preheating is completed, turn the ignition key once more to the "LOCK" position, and then to the "ON" position, in order to preheat again.

B260E02A-GAT

SEAT BELT REMINDER LIGHT (If installed)

The seat belt reminder light comes on until your seat belt is fastened when the ignition key is turned from the "OFF" position to "ON" or "START".

C130N01P-GAT

ANTI-LOCK BRAKE WARNING LIGHT (If installed)

When the key is turned to the "ON" position, the ABS light will come on and then go off in a few seconds.
If the ABS light remains on, comes on while driving, or does not come on when the key is turned to the "ON" position, this indicates that there may be a problem with the ABS.
If this occurs, have your vehicle checked by your Hyundai dealer as soon as possible. The normal braking system will still be operational, but without the assistance of the anti-lock brake system.

C130O01P-GAT

ENGINE WARNING LIGHT (If installed)

This light illuminates when there is a malfunction of an exhaust gas related component, and the system is not functioning properly so that the exhaust gas regulation values are not satisfied. This light will also illuminate when the ignition key is turned to the "ON" position, and then it will go out in a few seconds. If it illuminates while driving, or does not illuminate when the ignition key is turned to the "ON" position, take your car to your nearest authorized Hyundai dealer and have the system checked.

B260B01S-GAT

SRS (AIRBAG) SERVICE REMINDER INDICATOR (SRI) (If installed)

The SRS service reminder indicator (SRI) comes on and flashes for about 6 seconds after the ignition key is turned to the "ON" position or after the engine is started, after which it will go out.

This light also comes on when the SRS is not working properly. If the SRI does not come on, or continuously remains on after flashing for about 6 seconds when you turned the ignition key to the "ON" position or started the engine, or if it comes on while driving, have the SRS inspected by an authorized Hyundai Dealer.

C130P01P-GAT

A/T (AUTOMATIC TRANSMISSION) OIL TEMPERATURE WARNING LIGHT (If installed)

The A/T oil temperature warning light comes on when the automatic transmission oil temperature goes up to the temperature that may result in serious damage of automatic transmission.
If the A/T oil temperature warning light comes on while driving, park your vehicle in at a safe place as soon as possible and with the selector lever is shifted into "P" position, and allow the engine to idle until the warning light goes off. And when the warning light goes off, the vehicle can be driven normally.
If the warning light doesn't go off or it lights up frequently, have the vehicle checked by your Hyundai dealer.

B270B02O-GAT

PARKING START WARNING SOUND (If installed)

If the vehicle driven at over 10km/h(6mph) more 2~3 seconds, the warning chime will sound continuously when the parking brake engaged.

C140A01P-GAT

MULTI-FUNCTION LIGHT SWITCH

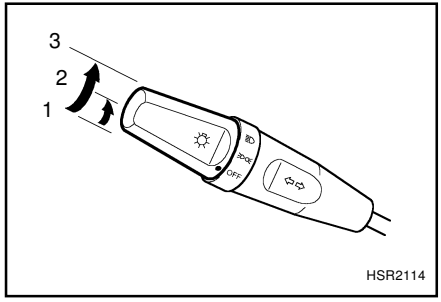

Rotate the switch to turn on the lights.

1. Lights off
2. Position, tail, licence-plate, and instrument panel lamps on
3. Headlights on
   To operate the headlights, turn the barrel on the end of the multifunction switch.

Parking light auto cut (If installed)

If you do not turn the parking lights "OFF" after driving, the parking light will automatically shut "OFF" when the driver's door is opened.
To turn them "ON" again you must simply turn the ignition key to the "ON" position.

C150A01P-GAT

TURN SIGNAL SWITCH

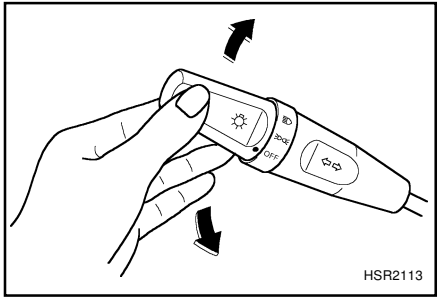

Pulling down on the lever causes the turn signals on the left side of the car to blink. Pushing upward on the lever causes the turn signals on the right side of the car to blink. As the turn is completed, the lever will automatically return to the center position and turn off the turn signals at the same time. If either turn signal indicator light blinks more rapidly than usual, goes on but does not blink, or does not go on at all, there is a malfunction in the system. Check for a burned-out fuse or bulb or see your Hyundai dealer.

C160A01P-GAT

HIGH-BEAM SWITCH

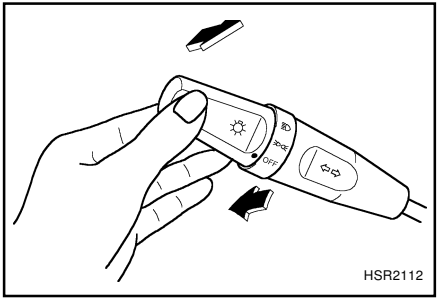

To turn on the headlight high beams, push the lever forward (away from you). The High Beam Indicator Light will come on at the same time. For low beams, pull the lever back toward you.

C170A01P-GAT

PASSING SWITCH

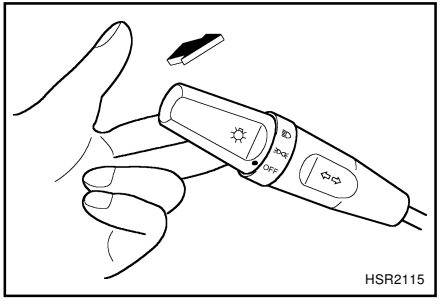

The headlights will go on when the lever is pulled toward you and will go off when it is released.
The headlights can be flashed even though the headlight switch is in the "OFF" position.

C180A01P-GAT

WINDSHIELD WIPER AND WASHER SWITCH

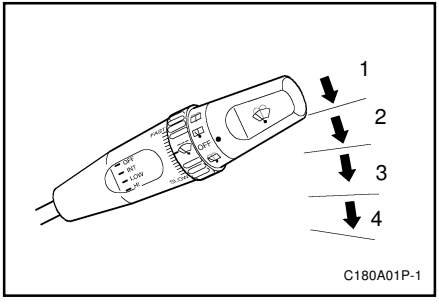

C180A01P-1

The windshield wiper and washer switch can be operated with the ignition switch at the "ON" or "START position.
Move the switch to operate the windshield wipers or spray the washer fluid.

Windshield wipers

1. Off
2. Intermittent wiper operation
   To use the intermittent wiper feature, place the wiper switch in the "INT" position. With the switch in this position, the interval between wipers can be varied from 2 to 10 seconds by turning the Interval Adjuster Switch.
3. Low-Speed operation
4. High-Speed operation

NOTE:

(1) Before operating the wipers in cold weather, check to be sure that the wiper blades are not frozen to the windshield. Attempting to operate the wipers while the blades are frozen to the windshield could cause the motor to burn out.

(2) If the wipers stop during operation because of ice or some other obstruction on the windshield, the wiper motor could burn out even if the wiper switch is turned off. If this occurs, promptly stop the vehicle, turn off the ignition switch, and clean the windshield to allow proper wiper operation.

(3) Do not use the wipers when the windshield is dry:doing so could scratch the windshield and wear the blades prematurely.

C180B01P-GAT

Windshield Washer

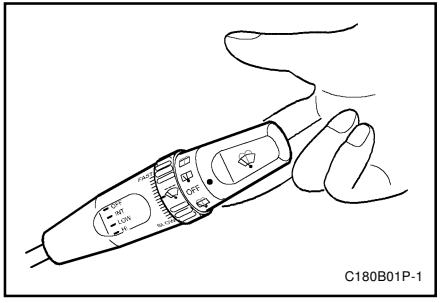

C180B01P-1

The washer fluid will be sprayed onto the windshield by moving the lever in the direction of the arrow, that is, toward you.
The wipers operate automatically while the washer fluid is being sprayed.
Avoid using the washer continuously for more than 20 seconds.
Do not operate the washer when the fluid reservoir is empty.

B350C01O-AAT

Adjustable Intermittent Wiper Operation (If installed)

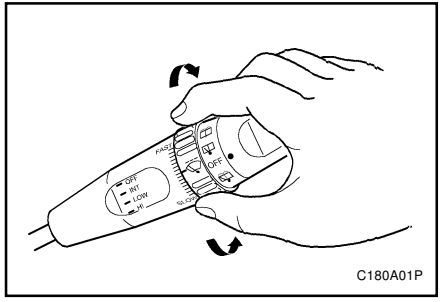

C180A01P

To use the intermittent wiper feature, place the wiper switch in the "INT" position. With the switch in this position, the interval between wipes can be varied from approximately 1 to 18 seconds by turning the interval adjuster barrel.

C190A01P-GAT

TAILGATE WIPER AND WASHER SWITCH (Minibus, Van)

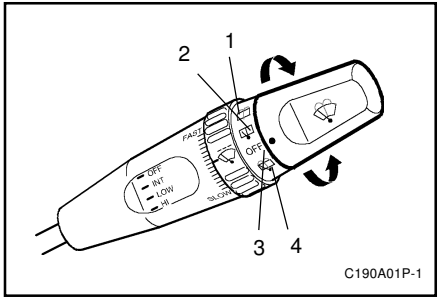

C190A01P-1

1. When the point indicates the ⊡, the rear window wiper starts to operate continuously after the washer fluid sprays onto the rear window.
2. When the point indicates the ⊡, the rear window wiper starts to operate continuously.
3. OFF
4. The washer fluid will be sprayed onto the windshield by indicating the point onto the ⊡. The wiper operates automatically while the washer fluid is being sprayed.

NOTE:

(1) Before operating the wiper in cold weather, check to be sure that the wiper blade is not frozen to the rear window. Attempting to operate the wiper while the blade is frozen to the rear window could cause the motor to burn out.

(2) If the wiper stops during operation because of ice or some other obstruction on the rear window, the wiper motor could burn out even if the wiper switch is turned off. If this occurs, promptly stop the vehicle, turn off the ignition switch, and clean the rear window to allow proper wiper operation.

(3) Do not use the wiper when the rear window is dry; doing so could scratch the rear window and wear the blade prematurely.

B340F01A-GAT

Daytime Running Lights (If installed)

Your Hyundai is equipped with daytime running lights. The daytime running lights are used to improve visibility for oncoming traffic. Your vehicle daytime running lights are designed to remain on continuously when the engine is operating even though the headlight switch is in the "OFF" position. However, the daytime running lights will be off while the parking brake is applied.

C210A04P-GAT

HEADLAMP LEVELING DEVICE SYSTEM (If installed)

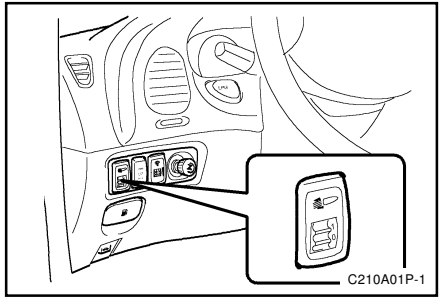

To adjust the headlight beam level according to the number of the passengers and the loading weight in the cargo, turn the beam leveling switch.
The higher the number of the switch position, the lower the headlight beam level.
Always keep the headlight beam at the proper leveling position, or headlights may dazzle other road users.
Listed chart is the examples of proper switch settings.
For loading conditions other than those listed, adjust the switch position so that the beam level may be the nearest as the condition obtained according to the list.

LOADING CONDITION	MINIBUS			VAN	
	2WD		4WD	2WD	
	7/9	12	7	3	6
Driver only	0	0	0	0	0
Driver + Front passenger	0	-	0	-	0
Driver, front passenger + Farthest Rear Seat Full	1	-	1	-	0
Full passengers	1	-	1	-	0
Full passengers + Maximum Permissible loading	2	-	2	-	1
Driver+Maximum Permissible loading	3	1	3	1	2

Loading condition	Truck
Driver only	0
Driver + Permissible RR axle load	1

C220A01P-GAT

INSTRUMENT PANEL LIGHT CONTROL (=RHEOSTAT) (Minibus, Van) (If installed)

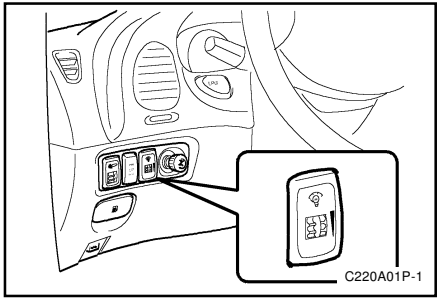

The instrument panel lights can be made brighter or dimmer by turning the instrument panel light control knob.

C230A01P-GAT

ENGINE RPM ADJUSTMENT KNOB (Diesel)

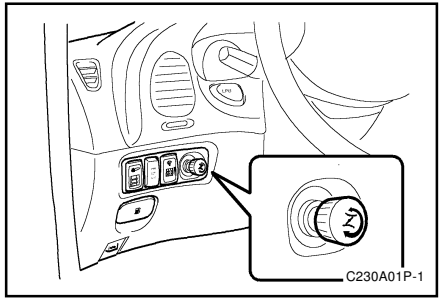

When the outside air temperature is very low, or when it is necessary to warm up the engine, then turn the knob clockwise to that point at which the engine runs smoothly, and then, once the warming up is completed, fully turn the knob counter-clockwise.

CAUTION:

Never attempt to adjust the vehicle during driving by using the control knob.

B620A01S-AAT

FRONT DOOR EDGE WARNING LIGHT (If installed)

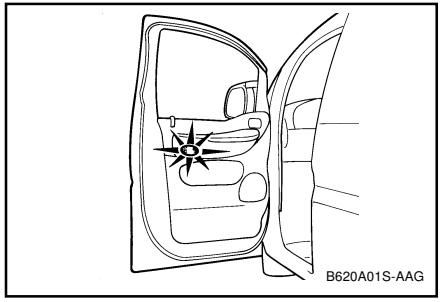

A red light comes on when the front door is opened. The purpose of this light is to assist when you get in or out and also to warn passing vehicles.

B550A01Y-AAT

HIGH-MOUNTED REAR STOP LIGHT (Minibus, Van) (If installed)

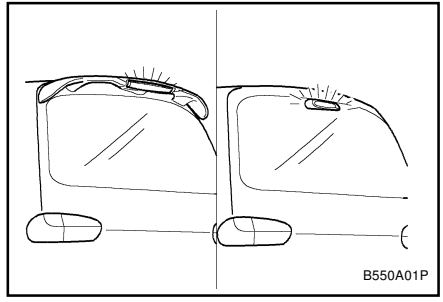

In addition to the lower-mounted rear stoplights on either side of the car, the high mounted rear stoplight in the center of the rear window or installed in the rear spoiler also comes on when the brakes are applied.

C250A01P-GAT

FOG LAMP SWITCH (If installed)

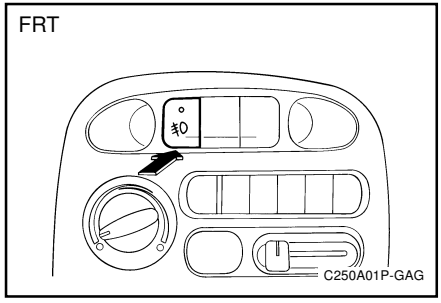

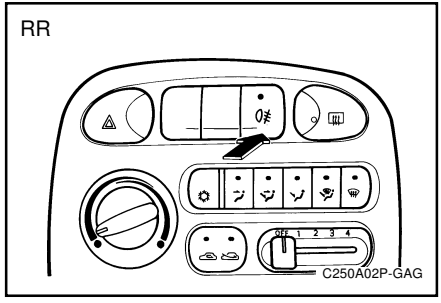

NOTE:

The lamps will only function when the headlamps are in use.

The front fog lamp is turned on by pushing the switch located in the instrument panel. To turn the front fog lamp off, push the switch again.

The indicator becomes illuminated when the fog lamp switch is turned on.
The operation of the rear fog lamp is identical to the front fog lamp. (If installed)

C260A01P-GAT

HAZARD WARNING LIGHT SWITCH

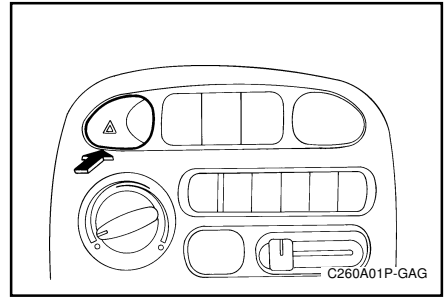

The hazard warning flashers can always be operated, regardless of the position of the ignition key.

When the button is pushed, hazard warning light gets on.
When the button is pushed once again, hazard warning light gets off.

When this switch is operated, all turn-signal indication lamps will flash continuously.
Limit the operating time to less than an hour, otherwise the battery will be discharged.

B380A01A-AAT

REAR WINDOW DEFROSTER SWITCH (If installed)

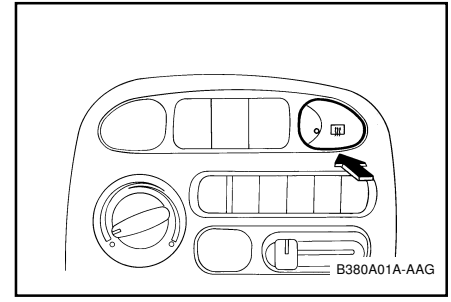

The rear window defroster is turned on by pushing in on the switch. To turn the defroster off, push in on the switch a second time. The rear window defroster automatically turns itself off after about 15 minutes. To restart the defroster cycle, push in on the switch again after it has turned itself off.

CAUTION:

Do not clean the inner side of the rear window glass with an abrasive type of glass cleaner or use a scraper to remove the foreign deposits from the inner surface of the glass as this may cause damage to the defroster elements.

NOTE:

The engine must be running for the rear grid defroster to operate.

C280A01P-GAT

HORN SWITCH

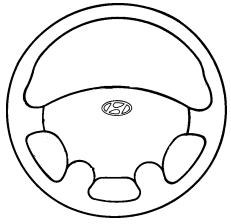

C280A01P-GAG

The horn button is located in the steering wheel. The horn sounds when the horn button is pressed.

B480A01P-AAT

FRONT INTERIOR LIGHT (Minibus) (If Installed)
Map Light (With Sunroof)

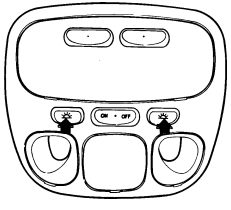

SSA1340A

The two map light switches are located on both side of the front overhead console. Push in the map light switch to turn the light on or off.

B490A01S-AAT

INTERIOR LIGHT

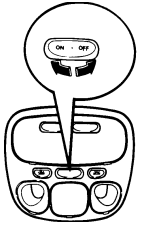

With Sunroof

SSA1340B

The interior courtesy light has a button of three positions. The three positions are:

o DR (●)
In the middle position (●), the interior courtesy light comes on when any door is opened regardless of the ignition key position. The light goes out when the door is closed.

o ON
In the "ON" position, the light stays on at all times.

o OFF
In the "OFF" position, the light stays off at all times even though a door is open.

C300A01P-GAT

FRONT INTERIOR LIGHT (Minibus)
Map Light (Without Sunroof)

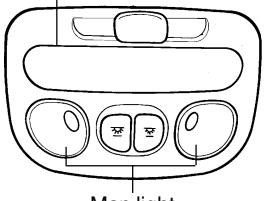

C300A01P-GAG

The two map light switches are located on both sides of the front overhead console. Push in the map light switch to turn the light on or off.

C310A01P-GAT

FRONT ROOM LAMP (Van, Truck)

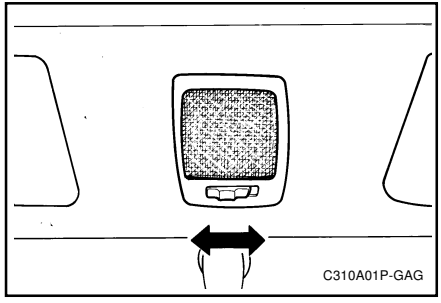

OFF : The lamp goes out.
● : The lamp illuminates when a front door is opened and goes out when it is closed.
ON : The lamp illuminates.

C320A01P-GAT

REAR ROOM LAMP (Minibus)

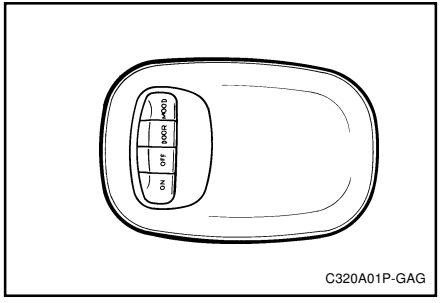

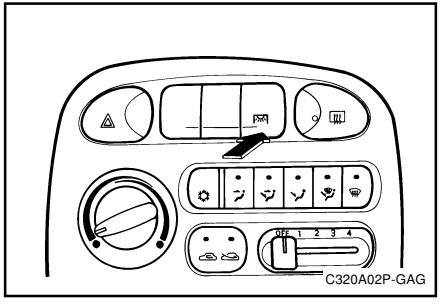

OFF : The lamp goes out.
DOOR : The lamp illuminates when the slide door and/or the tailgate is opened and goes out when it closed.
ON : The lamp illuminates.
- Direct illumination (white)

MOOD : The lamp illuminates.
- Indirect illumination (orange)

By depressing the main switch in the instrument panel, driver can operate the rear room lamp (ON, OFF).

C330A01P-GAT

REAR ROOM LAMP (Van)

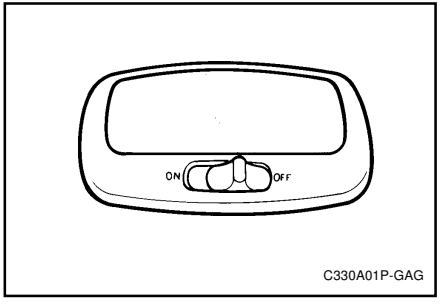

OFF : The lamp goes out.
● : The lamp illuminates when the slide door and/or the tailgate is opened and goes out when it is closed.
ON : The lamp illuminates.

B470A01S-AAT

SUNSHADE (Minibus) (If installed)

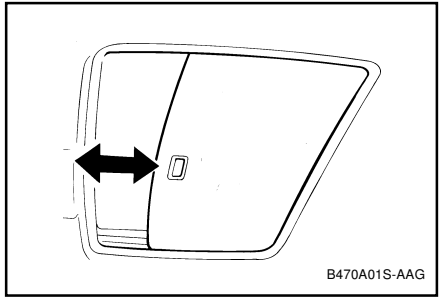

The sunshade can be opened and closed by sliding it forward or rearward when the sunroof is closed. The sunshade will open automatically when the sunroof is opened, but it must be closed manually.

B460A01S-AAT

SUNROOF (Minibus) (If installed)

The sunroof can be operated with the ignition key in the "ON" position.

B460B02P-GAT

OPERATING THE SUNROOF SYSTEM

Opening or closing the sunroof

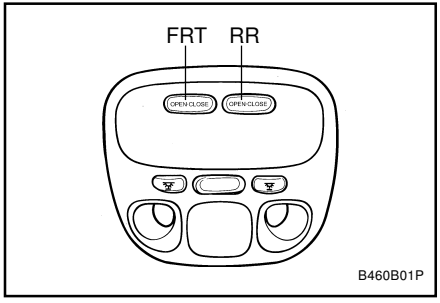

The sunfoof can be electrically opened or closed. To open or close, press and hold the button located in the front of the roof panel. And release the button when the sunfoof reaches the desired position.

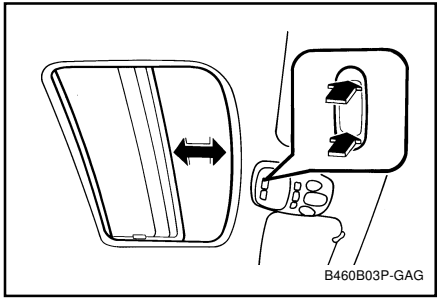

In case of closing the rear sunroof, it stops at a half position before full closing. Therefore, release the button and then press and hold it again to close it completely.

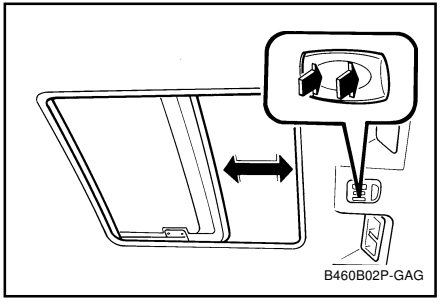

WARNING:

- **Do not close a sunroof if anyone's hands, arms or body are between the sliding glass and the sunroof sash, as this could result in an injury.**
- **Do not stand up or extend any portion of your body out of the opening while the vehicle is moving.**

CAUTION:

- **Do not open the sunroof in severely cold temperature or when it is covered with ice or snow.**
- **Periodically remove any dirt that may have accumulated on the guide rails.**

- **After washing the car or after there being rain, be sure to wipe off any water that is on the sunroof before operating it.**

B460D01P-GAT

Manual Operation of Sunroof

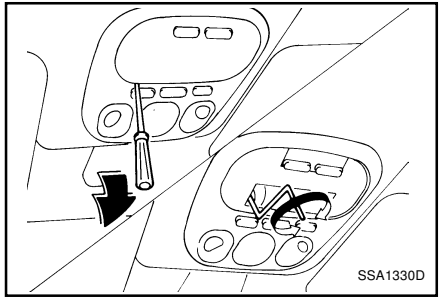

If the sunroof does not electrically operate:

1. Remove the rectangular plastic cover in the front of the roof panel.
2. Insert the hexagonal head wrench into the socket. This wrench can be found in the tool bag at the right corner of the vehicle.
3. Turn the wrench clockwise to open or counterclockwise to close.

B460E01P-GAT

Rear sunroof

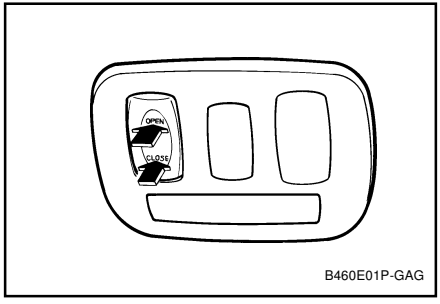

The rear sunroof can be electrically opened or closed. To open or to close, press and hold the button located on the center of the roof panel. Release the button when the sunroof reaches the desired position. As a precaution when closing , it stops at a half position before fully closing. Therefore, release the button and then press it again to close it completely.

Manual Operation of Sunroof

If the sunroof does not electrically operate:

1. Remove the plastic cover in the roof panel.
2. Insert the hexagonal head wrench in to the socket. This wrench can be founded in the tool bag at the right corner of the vehicle.
3. Turn the wrench clockwise to open or counter clockwise to close.

C340A01P-GAT

SUNVISOR

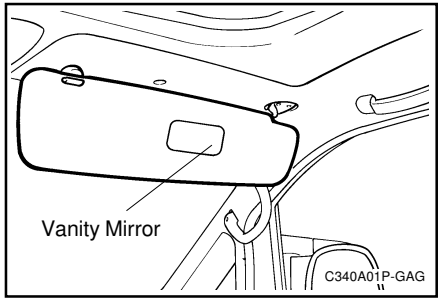

Your Hyundai is equipped with sunvisors to give the driver and front passenger either frontal or sideward shade.
The sunvisors are installed on both sides. To reduce glare or to shut out direct rays of the sun, turn the sunvisor down to block the annoyance.
A vanity mirror is provided on the back of the sunvisor for the front passenger. (If installed)

CAUTION:

Do not place the sunvisor in such a manner that it obscures visibility or the roadway, traffic or other objects.

B630A02P-GAT

ROOF RACK (Minibus) (If installed)

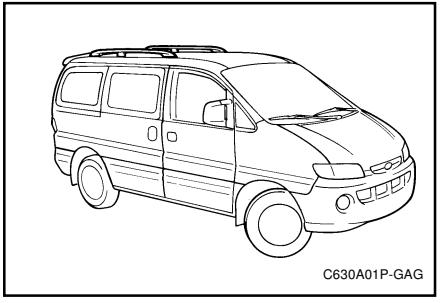

If your Hyundai has a roof rack, you can load things on top of your vehicle. Crossrails and fixing components to adapt roof rack on your vehicle may be obtained from an authorized Hyundai dealer.
Hyundai dealers are prepared to provide high quality service that may be required.

CAUTION:

- **The following specifications are recommended when loading cargo or luggage.**

ROOF RACK	80 kg (174 lb)

- **Loading cargo or luggage above 80 kg (174 lb) on the roof rack may damage your vehicle.**
  When you carry large objects, never let them hang over the rear or the sides of your vehicle.
- **To prevent damage or loss of cargo as you are driving, check now and then to make sure the luggage carrier and cargo are still securely fastened.**
- **Always drive your vehicle at a moderate speed.**
- **To use the roof rails as a roof rack, you must fit the roof rails with two or more crossrails or equivalent.**

B520A01A-AAT

DAY/NIGHT INSIDE REARVIEW MIRROR (If installed)

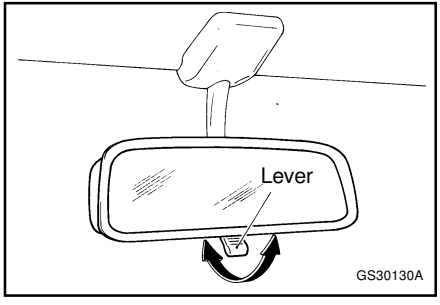

Your Hyundai is equipped with a day/night inside rearview mirror.
The "night" position is selected by flipping the tab at the bottom of the mirror toward you. In the "night" position, the glare of headlights of cars behind you is reduced.

C370A01P-GAT

OUTSIDE REAR VIEW MIRROR

Manual Type (If installed)

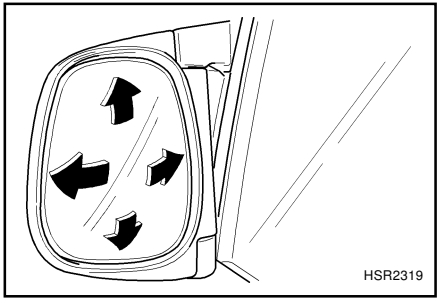

Before driving away, always check that your mirror is positioned so you can see directly behind you. When using the mirror, always exercise caution when attempting to judge the distance of vehicles behind you.

C370B01P-GAT

Electric Type (If installed)

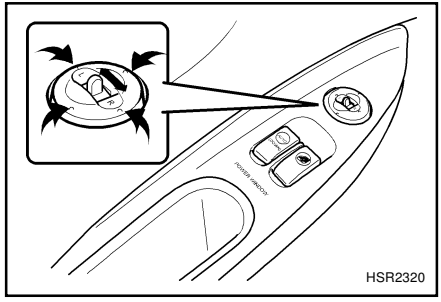

The outside rear view mirror can be adjusted in any direction to give the maximum rear-view vision.
The remote control outside rear view mirror switch controls the adjustments for both right and left door mirror.

To adjust the position of either mirror:

1. Move the selecting switch to the "R" (or "L") position to activate the adjustable mechanism for the adjusting door mirror.
2. Now, adjust mirror angle by depressing the appropriate perimeter switch as illustrated.

B510D01Y-AAT

OUTSIDE REARVIEW MIRROR HEATER (If installed)

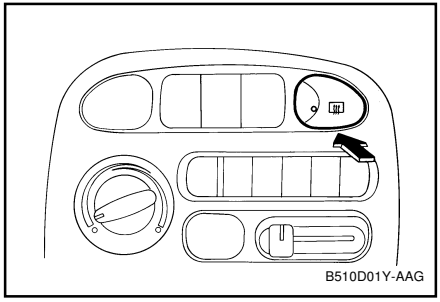

The outside rearview mirror heater is actuated in connection with rear window defroster. So, to heat the outside rearview mirror glass, push in the switch for rear window defroster. The rearview mirror glass will be heated for defrosting or defogging and will give you improved rear vision in all weather conditions. Push the switch again to turn the heater off. The outside rearview mirror heater automatically turns itself off after 15 minutes.

B450A01S-AAT

DRINK HOLDER (If installed)

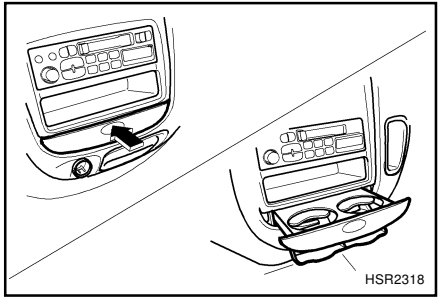

The drink holder is located on the front main console for holding cups or cans in its holes. The drink holder can be used by pushing it at its top edge.

CAUTION:

Place the drink holder in its original position while not in use.

WARNING:

Do not place anything else on the drink holder. Such objects can be thrown out, possibly injuring persons in the vehicle during sudden braking or in an accident.

C400A02P-GAT

CIGARETTE LIGHTER

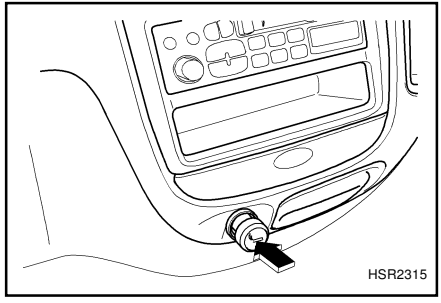

The cigarette lighter can be used while the ignition switch is at either the "ON" or "ACC". To use the cigarette lighter, push it all the way into its socket.
The lighter will automatically return to its original position with a "click" when ready.
Pull it out for use.

CAUTION:

- **Something is wrong with the cigarette lighter if it does not pop back out within approximately 8~18 seconds of being pushed in. Leaving the cigarette lighter pushed in for an extended period could cause a fire. If it does not pop out by itself, pull it out and have the problem corrected at an authorized HYUNDAI dealer.**
- **Do not use electric accessories or equipment other than the Hyundai genuine parts in the socket.**

C410A01P-GAT

FRONT ASHTRAY

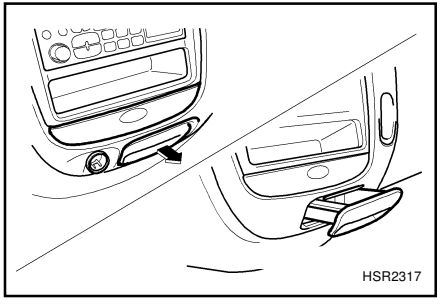

Pull out the ashtray to open. To remove the ashtray, pull it out while pressing the stubber.

C420A01P-GAT

REAR ASHTRAY

Type A (If installed)

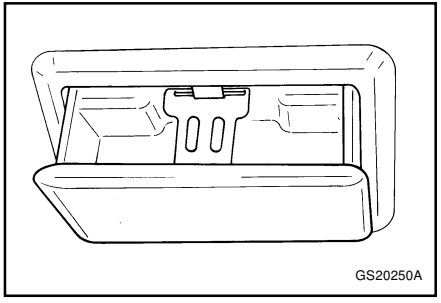

Pull the ashtray downward to open. To remove the ashtray, pull it out while pressing the stubber.

C430A01P-GAT

Type B (If installed)

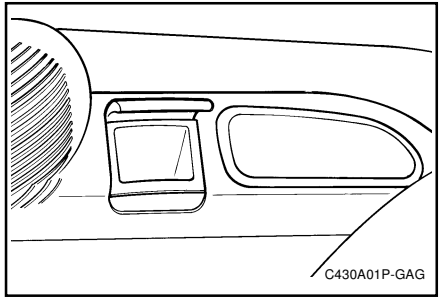

To use the ashtray, open up the lid.
To remove the ashtray, open the lid and lift upward holding the lid.

C440A01P-GAT

DIGITAL CLOCK (If installed)

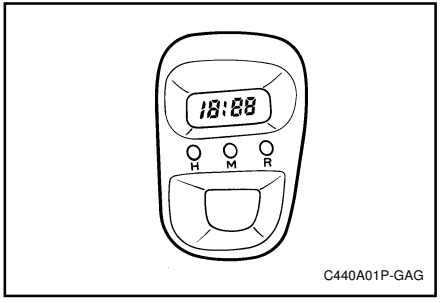

The digital clock indicates the time while the ignition switch is at either the "ON" or "ACC" position.
Set the time by pressing the various buttons as described below.

H - To adjust the hours
M - To adjust the minutes
R - To reset the minutes to zero.

Example:
10 : 01 - 10 : 29 ..... change to 10 : 00
10 : 30 - 10 : 59 ..... change to 11 : 00

C610A01P-GAT

HEATING AND COOLING

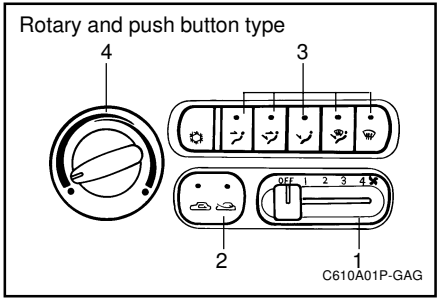

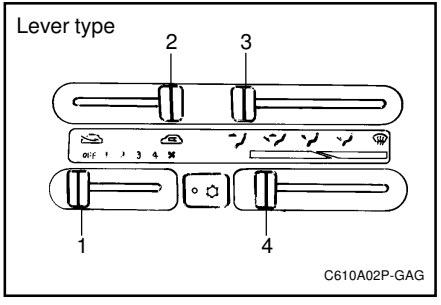

There are four controls for the heating and cooling system. They are:

1. Fan Speed Control.
   This is used to turn the fan on and select the fan speed.

2. Air Intake Control.
   This allows you to select fresh ( ) outside air or to recirculate ( ) inside air.
3. Air Flow Control.
   This is used to direct the flow of air. Air can be directed to the floor, dashboard outlets or windshield. Five symbols are used to represent Face ( ), Bi-Level ( ), Floor ( ), Floor-Defrost ( ) and Defrost ( ) air positions.
4. Temperature Control
   This is used to turn the heater on and off and to select the degree of heating desired.

C620A01P-GAT

HEATING CONTROLS

For normal heater operation, move the air intake control to the "Fresh" position and the air flow control to the "Floor" position.
For faster heating, the air intake control should be placed in the intermediate position between "Fresh" and "Recirc".
For quickest heating, the control should be in the "Recirc" position.
If the windows fog up, move the air flow control to the "Def" (defroster) position and the air intake control to "Fresh".
For maximum heat, move the temperature control to "Warm".

C630A01P-GAT

BI-LEVEL HEATING

Your Hyundai is equipped with bi-level heating controls. This makes it possible to have cooler air from the dashboard vents and warmer air from the floor outlets at the same time. To use this feature,

- o Set the air intake control at the "Fresh" position.
- o Set the air flow control at the "Bi-Level" position.
- o Set the temperaute control between "Cool" and "Warm"

C640A01P-GAT

VENTILATION

To operate the ventilation system:

- o Set the air intake control to the "Fresh" position.
- o To direct all intake air to the dashboard vents, set the air flow control to the "Face" position.
- o Adjust the fan speed control to the desired speed.
- o Set the temperature control between "Cool" and "Warm".

B710B01A-AAT

CENTER VENTILATOR

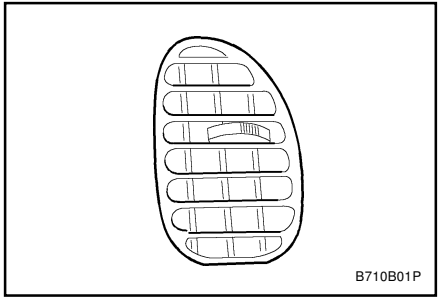

The center ventilators are located in the middle of the dashboard.
To change the direction of the airflow, turn the control knob on the middle of the ventilator as desired.

C650A01P-GAT

SIDE VENTILATOR

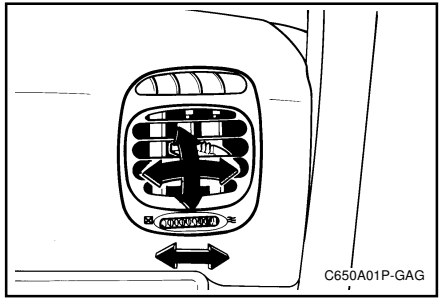

The side ventilators are located on each side of the dash board. The side vent knobs control the amount of outside air entering the vehicle through the side vents. These vents can also be closed, so no air enters through the side vents. To change the direction of the air flow, turn the control knobs as desired.

C660A01P-GAT

DEFROSTING/DEFOGGING

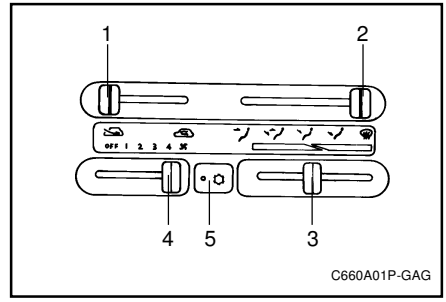

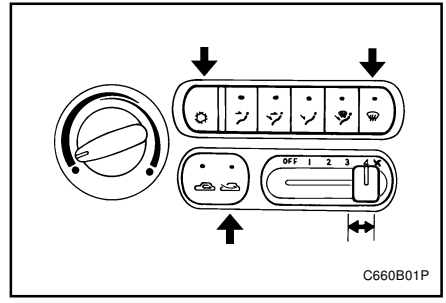

To use the heating/ventilation system to defrost or defog the windshield:

- o Set the air intake control (1) to the "Fresh" position.
- o Set the air flow control (2) to the "Def" position.
- o Set the temperature control (3) to a comfortably warm position.
- o Set the fan speed control (4) to position 3 or 4.
- o If the vehicle is equipped with a A/C system, turn the A/C switch (5) on for increased defogging action.

NOTE:

In high humidity areas, the A/C can be used with the air intake in the "Recirc" position for increased defogging action.

C670A01P-GAT

Operation Tips

- o To keep dust or unpleasant fumes from entering the vehicle through the ventilation system, temporarily set the air intake control at "Recirc". Be sure to return the control to "Fresh" when the irritation has passed to keep fresh air in the vehicle.
  This will help keep the driver alert and comfortable.
- o Air for the heating/cooling system is drawn in through the grilles just ahead of the windshield. Care should be taken that these are not blocked by leaves, snow, ice or other obstructions.

C680A01P-GAT

AIR CONDITIONER OPERATION (If installed)

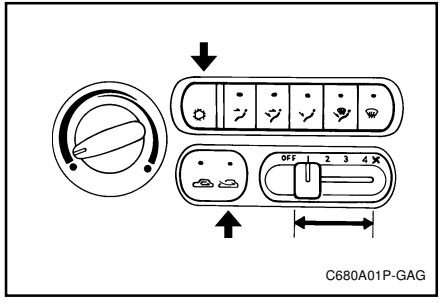

C680A01P-GAG

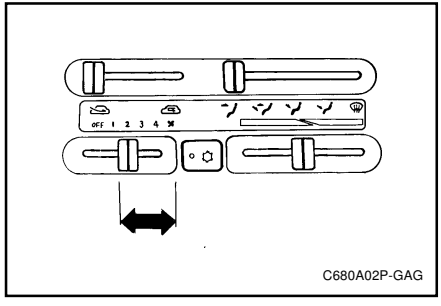

C680A02P-GAG

Cooling

To use the air conditioner to cool interior:

- o Set the side vent control to "OFF", to shut off outside air entry.
- o Turn on the fan control switch.
- o Turn on the air conditioner switch by pushing in on the switch. The air conditioner indicator light should come on at the same time.
- o Set the air intake control to the "Fresh" position.
- o Set the temperature control to the "Cool" position.
  ("Cool" provides maximum cooling. The temperature may be moderated by moving the control toward "Warm".)
- o Adjust the fan control to the desired speed. For greater cooling, turn the fan control to one of the higher speeds or temporarily select the "Recirc" position on the air intake control.

C690A01P-GAT

Dehumidified heating

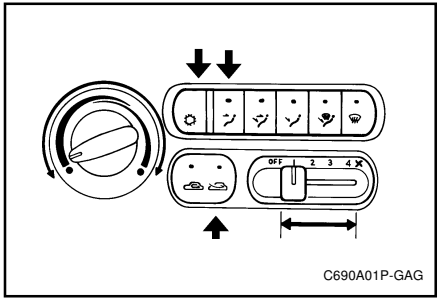

C690A01P-GAG

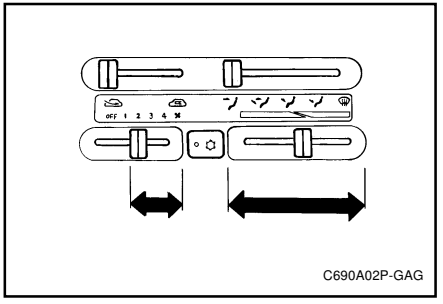

C690A02P-GAG

For dehumidified heating:

- o Turn on the fan control switch.
- o Turn on the air conditioner switch by pushing in on the switch. The air conditioner indicator light should come on at the same time.
- o Set the air intake control to "Fresh".
- o Set the air flow control to "Face".
- o Adjust the fan control to the desired speed. For more rapid action, set the fan at one of the higher speeds.
- o Adjust the temperature control to provide the desired amount of warmth.

C700A01P-GAT

Operation Tips

- o If the interior of the vehicle is hot when you first get in, open the windows for a few minutes to expel the hot air.
- o When you are using the air conditioning system, keep all windows closed to keep hot air out.
- o When you must drive slowly, as in heavy traffic, shift to a lower gear. This increases engine speed, which in turn increases the speed of the air conditioning compressor.
- o When driving up long grades, turn occasionally the air conditioner off to avoid the possibility of the engine overheating.
- o During winter months or in periods when the air conditioner is not used regularly, turn on the air conditioner switch occasionally for a few minutes. This will help circulate the lubricants and keep your system in peak operating condition.

C710A01P-GAT

REAR HEATER (If installed)

The rear heater can be operated with the ignition switch at the "ON" position by depressing the main switch in the instrument panel.

C720A01P-GAT

Main switch for the rear heater

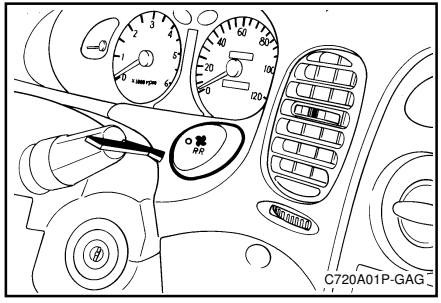

The main switch for the rear heater is installed in the instrument panel.
The main switch should be used to switch the power of the rear heater ON and OFF.
The power is switched ON when the button is pressed, and the lamp within the switch is illuminated. Illumination will stop and the power will be switched OFF when the button is pressed once again.

C730A01P-GAT

CONTROL PANEL

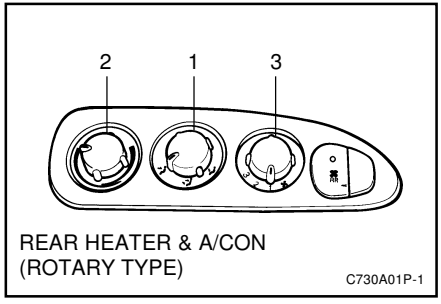

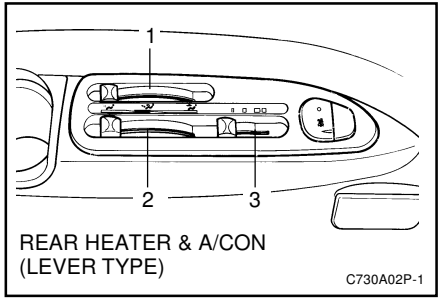

1. Mode selector lever
Air flow can be switched in three modes. Three symbols are used to represent Floor Heat, Bi-level and Vent Air position.

2. Temperature controller

Lever type - Select the desired temperature by sliding the lever left or right.

Rotary type - Select the desired temperature by turn the knob left or right.

Red - High temperaute (heating)
Blue - Ambient temperature (ventilating)

3. Blower controller

The blower can be operated (when the ignition key and main switch for the rear heater is at the "ON" position) at three speeds to regulate the amount of air forced through the vehicle.
The blower speed will increase as the switch is moved to the right.

C740A01P-GAT

REAR AIR CONDITIONING (If installed)

The rear air conditioner can be operated with the ignition switch at the "ON" position by depressing the main switch in the instrument panel.

1. Air conditioning switch
   The air conditioning is turned on or off by pushing the button.
2. The operations of the rear air conditioner is identical to AIR CONDITIONER OPERRATION of page 2-27.

C750A03P-GAT

OVERHEAD AIR CONDITIONING (If installed)

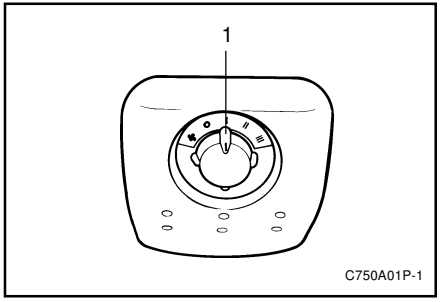

The overhead air conditioner can be operated with the ignition switch at the "ON" position by depressing the main switch in the instrument panel.

1. Blower knob
   The blower can be operated at three speeds to regulate the amount of air forced through the vehicle. The overhead air conditioner will not operate if the knob is set to the "O". The blower speed will increase as the knob is moved to the right.

B760A02P-GAT

AIR FILTER (FOR EVAPORATOR AND BLOWER UNIT) (If installed)

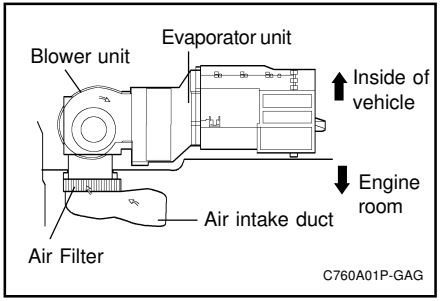

The air filter is located in the air intake duct behind the windshield washer reservoir. It operates to prevent the pollutant entering the car.

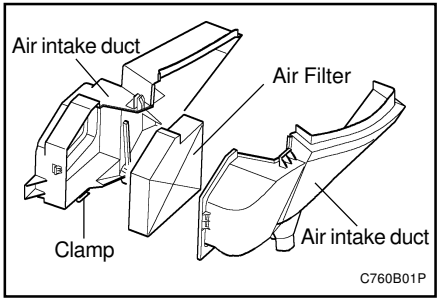

Replacement instructions:
1. Open the hood.
2. Remove the clamps (5 EA) on the air intake duct and replace the filter.
3. Installation is the reverse order of the disassembly.

CAUTION:

- **Replace the filter every 20,000 km (12,000 miles) or once a year. If the car is being driven in severe conditions such as dusty, rough roads, more frequent air filter inspections and changes are required.**
- **When the air flow rate is suddenly decreased, it must be checked at authorized dealer.**

B750A01A-AAT

STEREO SOUND SYSTEM

How Car Audio Works

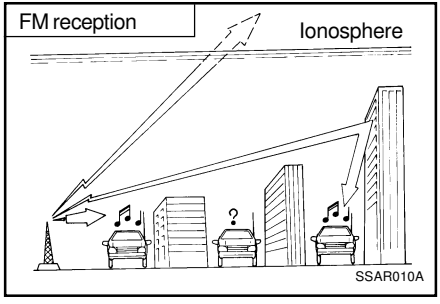

AM and FM radio signals are broadcast from transmitter towers located around your city. They are intercepted by the radio antenna on your car. This signal is then received by the radio and sent to your car speakers.

When a strong radio signal has reached your vehicle, the precise engineering of your audio system ensures high quality reproduction. However, in some cases the signal coming to your vehicle is not strong and clear. This can be due to factors such as the distance from the radio station, closeness of other strong radio stations or the presence of buildings, bridges or other large obstructions in the area.

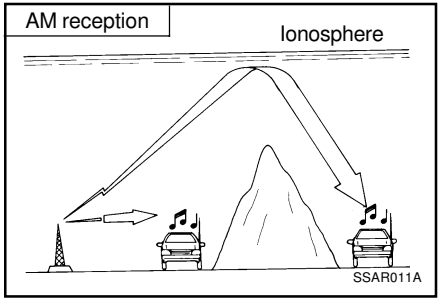

AM signal reception is usually better than FM reception. This is because AM radio waves are transmitted at low frequency. These long, low frequency radio waves can follow the curvature of the earth rather than travelling straight out into the atmosphere. In addition, they curve around obstructions so that they can provide better signal coverage. Because of this, clear AM broadcasts can be received at greater distances than FM broadcasts.

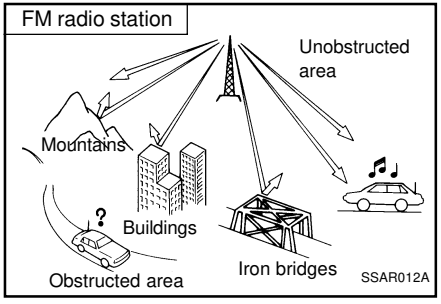

FM broadcasts are transmitted at high frequency and do not bend to follow the earth's surface. Because of this, FM broadcasts generally begin to fade at short distances from the station. Also, FM signals are easily affected by buildings, mountains, or other obstructions. These can result in certain listening conditions which might lead you to believe a problem exists with your radio. The following conditions are normal and do not indicate radio trouble:

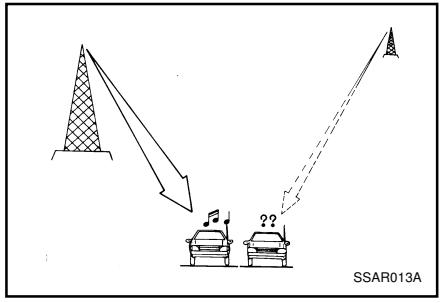

- Fading - As your car moves away from the radio station, the signal will weaken and sound will begin to fade. When this occurs, we suggest that you select another stronger station.
- Flutter/Static - Weak FM signals or large obstructions between the transmitter and your radio can disturb the signal causing static or fluttering noises to occur. Reducing the treble level may lessen this effect until the disturbance clears.

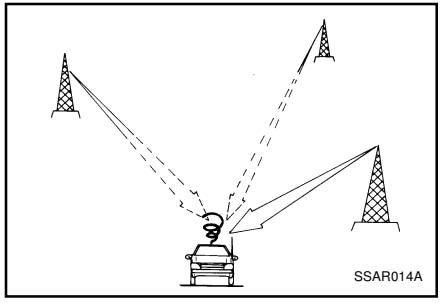

- Station Swapping - As an FM signal weakens, another more powerful signal near the same frequency may begin to play. This is because your radio is designed to lock onto the clearest signal. If this occurs, select another station with a stronger signal.
- Multi-Path Cancellation - Radio signals being received from several directions can cause distortion or fluttering. This can be caused by a direct and a reflected signal from the same station, or by signals from two stations with close frequencies. If this occurs, select another station until the condition has passed.

B750B02Y-AAT

Using a cellular phone or a two-way radio

When a cellular phone is used inside the vehicle, noise may be produced from the audio equipment. This does not mean that something is wrong with the audio equipment. In such a case, use the cellular phone at a place as far as possible from the audio equipment.

CAUTION

When using a communication system such a cellular phone or a radio set inside the vehicle, a separate external antenna must be fitted. When a cellular phone or a radio set is used by using an internal antenna alone, it may interfere with the vehicle's electrical system and adversely affect safe operation of the vehicle.

WARNING:

Don't use a cellular phone when you are driving, you must stop at a safe place to use a cellular phone.

K210A01P-GAT

STEREO RADIO OPERATION (K220) (If installed)

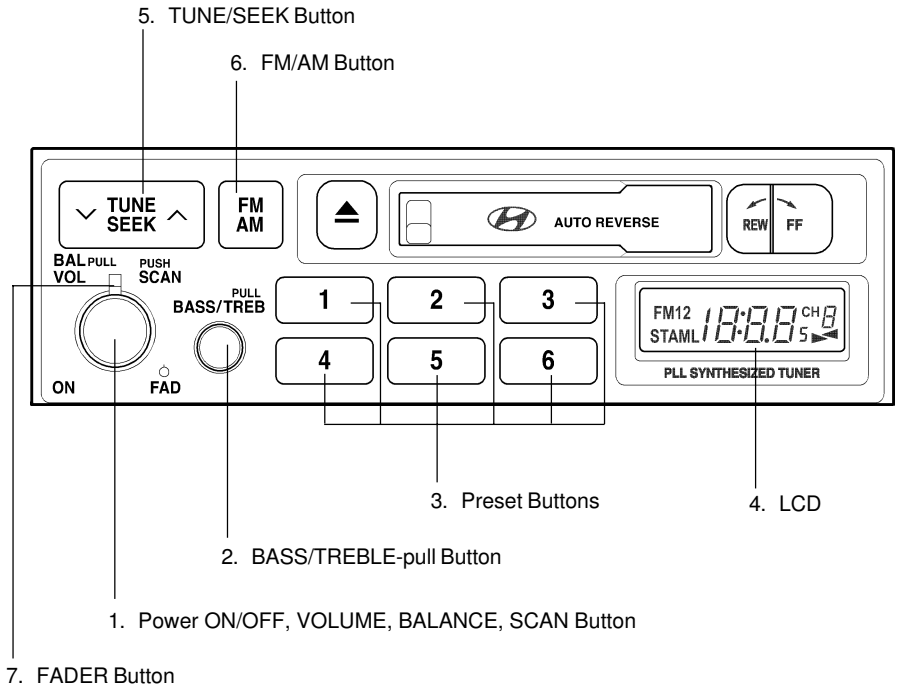

K220A01TB-1

K210B01TB-GAT

1. POWER ON/OFF, VOLUME

Rotate the Power switch clockwise to turn on the audio when the ignition switch is at ACC or ON position. Once the system is on, you can increase or decrease the volume by rotating the knob clockwise or counter-clockwise.

o BALANCE

Further pull the volume button and rotate clockwise to emphasize right sound speaker.
Or rotate counter-clockwise to emphasize left sound speaker.

o SCAN Button

When this button is pressed, the frequency will be increased to be tuned to the next receivable station one after another, receiving each station for 5 seconds. if the desirable station is tuned, press this button (scan) again to cancel scan function.

2. BASS/TREBLE-pull

Press this button to pop up. Rotate the knob clockwise to increase the Bass and rotate to counter-clockwise to decrease the Bass.
Further pull the button and rotate clockwise to increase the Treble.
Or rotate counter-clockwise to decrease the Treble. After adjustment press the button.

3. PRESET (1 ~ 6)

Press any of these buttons not more than 2 seconds to listen to the station in memory. Press the preset button for 2 seconds or more, then the current station will be stored into the memory of the preset button.

4. LCD

LCD shows the following information; band of FM1/FM2/AM/(L)/(M) frequency, preset channel number, ST in case of FM Stereo.

5. TUNE

Press the ∧ button not more than 1 second then frequency is increased. Likewise press the ∨ button not more than 1 second to decrease the frequency.

o SEEK

Press the ∧ button for over 1 second, then it will tune to the next receivable higher frequency station. Likewise, press the ∨ button for over 1 second then it will tune to the next receivable lower frequency station.If the selected station is in the preset memory, memorized channel will be on the display too.

6. FM/AM Button

FM/AM band button, which is used to change the band repeatedly in following manner.

FM1→ FM2 → AM → FM1
(FM1→ FM2 → M → L → FM1 : Europe)

7. Fader (If installed)

This button is located top side of the volume switch. Rotate clockwise to attenuate front speaker sound. Rotate counter-clockwise to attenuate rear speaker sound.

K220A01TB-GAT

CASSETTE TAPE PLAYER OPERATION (K220) (If installed)

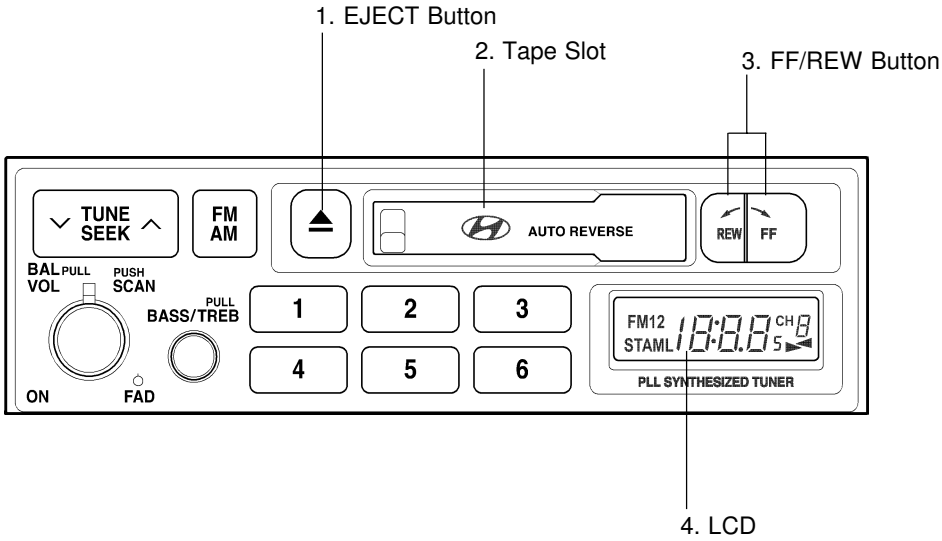

K220A01TB-1

K220B01TB-GAT

1. Tape Eject Button (▲)

Press this button to eject the cassette tape.

2. Cassette tape loading slot

Insert the tape into the loading slot as the open side faces the right.

3. FF/REW, tape side selection Button

Press "REW " button to fast backward the tape,
Press "FF" button to fast forward the tape.
While the cassette is in operation, press these button altogether to play reverse side.

4. LCD

LCD shows the tape direction (► or ◄) of the cassette in play.

K240A01TB-GAT

STEREO RADIO OPERATION (H240, K240) (If installed)

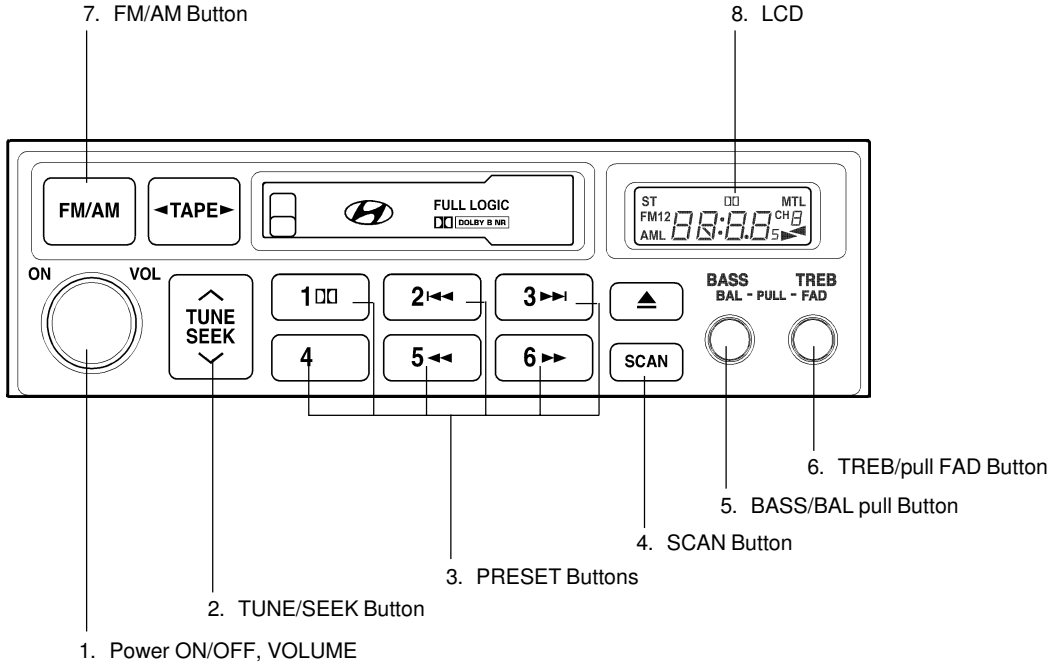

K240A01TB

K240B01TB-GAT

1. POWER ON/OFF, VOLUME

Press this button to turn on/off the audio when the ignition switch is at ACC or ON position. Once the system is on, you can increase or decrease the volume by rotating the knob clockwise or counter-clockwise. Press this button again to
turn it off.

2. TUNE

Press the ∧ button not more than 0.5 second then frequency is increased.
Likewise press the ∨ button not more than 0.5 second to decrease the frequency.
With the button held down for 0.5 sec or more, the beep sound will be heard and frequency will increase or decrease rapidly. if you release the button after the beep sound, seek function is in operation.

o SEEK

Press the ∧ button for over 0.5 second and release the button after beep sound, then it will tune to the next receivable higher frequency station. Likewise, press the ∨ button for over 0.5 second and release the button after the beep sound, then it will tune to the next receivable lower frequency station. if the selected station is in the preset memory, memorized channel will be on the display too.

3. PRESET

Press any of these buttons not more than 2 seconds to listen to the station in memory. Press the preset button for 2 seconds or more, then the current station will be stored into the memory of the preset button with the sound.

4. SCAN Button

When this button is pressed, the frequency will be increased to be tuned to the next receivable station one after another, receiving each station for 5 seconds. if the desirable station is tuned, press this button (scan) again to cancel scan function.

5. BASS/BAL- pull

Press to pop the knob out, To increase the bass, rotate the knob clockwise, while to decrease the Bass, rotate the knob counterclockwise. Further pull the popped-ed knob for the balance control. Rotate the knob clockwise to emphasize right speaker sound. (Left speaker sound will be attenuated) When the control knob is turned counter-clockwise, left speaker sound will be emphasized. (Right speaker will be attenuated)

6. TREB/pull-FAD

Press the pop the knob out and turn clockwise to increase the treble or counterclockwise to decrease the treble. Further pull the popped-up knob for the Fader control. Turn the control knob counter clockwise to emphasize front speaker sound.
(Rear speaker sound will be attenuated) When the control knob is turned clockwise, rear speaker sound will be emphasized. (Front speaker sound will be attenuated)

7. FM/AM Button

FM/AM band button, which is used to change the band repeatedly in the following manner .

FM1→FM2→AM→FM1
(FM1→ FM2 → M → L → FM1 : Europe)

8. LCD

LCD shows the following information; band of FM1/FM2/AM frequency, preset channel number, ST in case of FM Stereo.

K240C01TB-GAT

CASSETTE TAPE PLAYER OPERATION (H240, K240) (If installed)

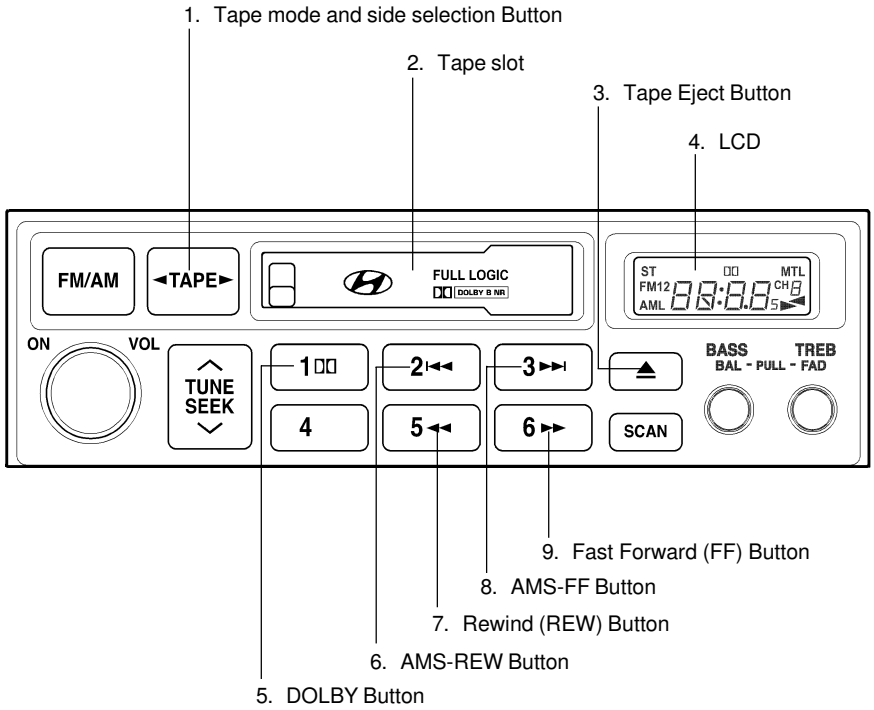

K240A01TB

K240D01TB-GAT

1. Tape mode and side selection Button

Press this button to play the tape when it is in the cassette deck. Once the tape mode is selected, you can play the reverse side of the tape by merely depressing the button again.

2. Cassette tape loading slot

Insert the tape into the loading slot as the open side faces the right. The player will pull the tape in and automatically begin playback even when the audio power is off and the ignition switch is either in the position of "ACC"or "ON".

3. Tape Eject Button (▲)

Press this button to eject the cassette tape. Tape will be ejected even when the ignition switch is in the position of "OFF".

4. LCD

LCD shows the operating conditions of the cassette in play. It informs the driver of playing status, tape direction, FF or REW, MTL in metallic tape use, and Dolby etc.

5. Dolby Button

When you play the Dolby recorded tape, press this button to reduce the background noise. If you press this button DD is displayed. One more press will let the DD disappear from the dis-play.

6. AMS-REW Button (|◄◄)

Press button to rewind the tape quickly and start replay at the beginning of the current music. During the AMS-REWINDING. "REW" sign blinks on the display.
Press the button once more to stop REWINDING and start play again.

7. Rewind button (◄◄)

You can rewind the tape to the beginning of the tape by pressing the " ◄◄ " button during the play ("Rew" is shown on the display). Tape play starts when the " ◄◄ " button is pressed again during the REW mode.

8. AMS-FF Button (►►|)

Press button to fast forward the tape and start play at the beginning of next music segment. During the AMS-FF, "FF"sign blinks on the display.
Press the button again to stop FF action and start play.

9. Fast Forward Button (►►)

You can fast forward the tape to the end of the tape by pressing the " ►► " button during the play. (Then "FF" is shown on the display). Tape play starts when the ►► button is pressed again during the ff mode.

H260A01O-AAT

STEREO RADIO OPERATION (H260) (If Installed)

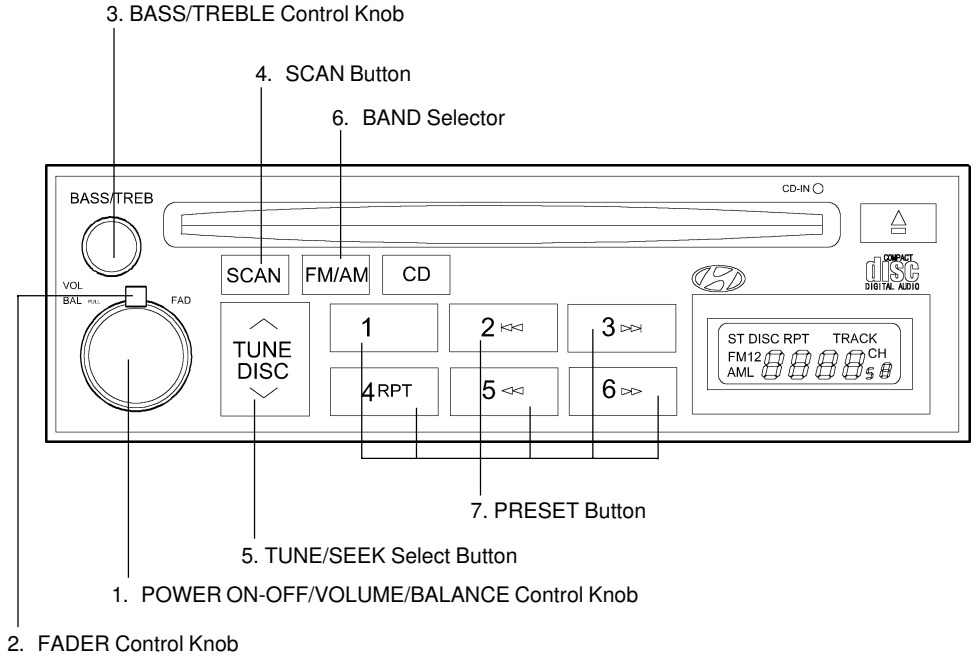

H260A01O

H260B02E-AAT

1. POWER ON-OFF Control Knob

The radio unit may be operated when the ignition key is in the "ACC" or "ON" position. Press the knob to switch the power on. The LCD shows the radio frequency in the radio mode or the CD track indicator in either the CD mode or CD AUTO CHANGER mode. To switch the power off, press the knob again.

VOLUME Control

Rotate the knob clockwise to increase the volume and turn the knob counterclockwise to reduce the volume.

BALANCE Control

Pull and turn the control knob clockwise to emphasize right speaker sound (Left speaker sound will be attenuated). When the control knob is turned counterclockwise, left speaker sound will be emphasized. (Right speaker sound will be attenuated)

2. FAD (Fader Control) Knob

Turn the control knob counterclockwise to emphasize front speaker sound. (Rear speaker sound will be attenuated) When the control knob is turned clockwise, rear speaker sound will be emphasized. (Front speaker sound will be attenuated)

3. BASS Control Knob

Press to pop the knob out and turn to the left or right for the desired bass tone.

TREB (Treble Control) Knob

Pull the bass control knob further out. Turn to the left or right for the desired treble tone.

4. SCAN Button

When the scan button is pressed, the frequency will increase and the receivable stations will be tuned in one after another, receiving each station for 5 seconds. To stop scanning, press the scan button again.

5. TUNE (Manual) Select Button

Press the (∧) side or (∨) side to increase or to decrease the frequency. Press either button and hold down to continuously scroll. Release button once the desired station is reached.

SEEK Operation (Automatic Channel Selection)

Press the TUNE select button for 0.5 sec or more, and releasing will automatically tune the next available station with beep sound.
When the (∧) side is pressed longer than 0.5 second and releasing will automatically tune the next higher frequency and when the (∨) side is pressed longer than 0.5 second and releasing will automatically tune the next lower frequency.

6. BAND Selector

Pressing the FM/AM button changes the AM, FM1 and FM2 bands. The mode selected is displayed on LCD.

7. PRESET STATION SELECT Button

Six (6) stations for AM, FM or FM2 respectively can be preset in the electronic memory circuit on this unit.

HOW TO PRESET STATIONS

Six AM and twelve FM stations may be programmed into the memory of the radio. Then, by simply pressing the band select button and/or one of the six station select buttons, you may recall any of these stations instantly. To program the stations, follow these steps:

- o Press band selector to set the band for AM, FM or FM2.
- o Select the desired station to be stored by seek, scan or manual tuning.
- o Determine the preset station select button you wish to use to access that station.
- o Press the station select button for more than two seconds. A select button indicator will show in the display indicating which select button you have depressed. The frequency display will flash after it has been stored into the memory.

You should then release the button, and proceed to program the next desired station. A total of 18 stations can be programmed by selecting one AM and two FM stations per button.

- When completed, any preset station may be recalled by selecting AM, FM or FM2 band and the appropriate station button.

H260B01O-AAT

COMPACT DISC PLAYER OPERATION (H260) (If Installed)

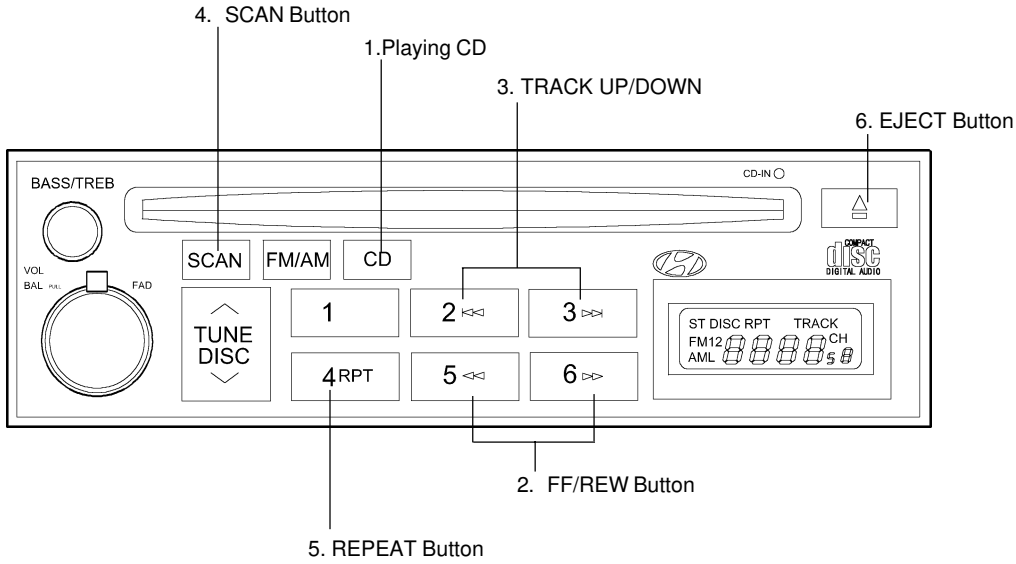

H260A01O

B260D01O-AAT

1. Playing CD

- o Insert the CD with the label facing upward.
- o Insert the CD to start CD playback, during radio operation.
- o When a disc is in the CD deck, if you press the play button, the CD player will begin playing even if the radio is being used.
- o The CD player can be used when the ignition switch is in either the "ON" or "ACC" position.

2. FF/REW (▸▸ / ◂◂)

If you want to fast forward or reverse through the compact disc track, push and hold in the FF (▸▸) or REW (◂◂) button.
When you release the button, the compact disc player will resume playing.

3. TRACK UP/DOWN

- o The desired track on the disc currently being played can be selected using the track number.
- o Press ▸▸I once to skip forward to the beginning of the next track. Press I◂◂ once to skip back to the beginning of the track.

4. SCAN Button

- o Press the SCAN button to playback the first 10 seconds of each track.
- o Press the SCAN button again within 10 sec. for the desired track.

5. REPEAT Button

- o To repeat the music you are listening to, press the RPT button. To cancel , press again.
- o If you do not release RPT operation, when the track ends, it will automatically be replayed.
  This process will be continued until you push the button again.

6. EJECT Button

When the EJECT button ⏏ is pressed with the CD loaded, the CD is ejected.

NOTE:

- **o To assure proper operation of the unit, keep the vehicle interior temperature within a normal range by using the vehicle's air conditioning or heating system.**
- **o When replacing the fuse, replace it with a fuse having the correct capacity.**
- **o The preset station frequencies are all erased when the car battery is disconnected. Therefore, all data will have to be set again if this should occur.**
- **o Do not add any oil to the rotating parts. Keep magnets, screwdrivers and other metallic objects away from the tape mechanism and head.**
- **o This equipment is designed to be used only in a 12 volt DC battery system with negative ground.**
- **o This unit is made of precision parts. Do not attempt to disassemble or adjust any parts.**
- **o When driving your vehicle, be sure to keep the volume of the unit set low enough to allow you to hear sounds coming from the outside.**
- **o Do not expose this equipment (including the speakers) to water or excessive moisture.**

B260E01E-AAT

CD AUTO CHANGER (H260) (If Installed)

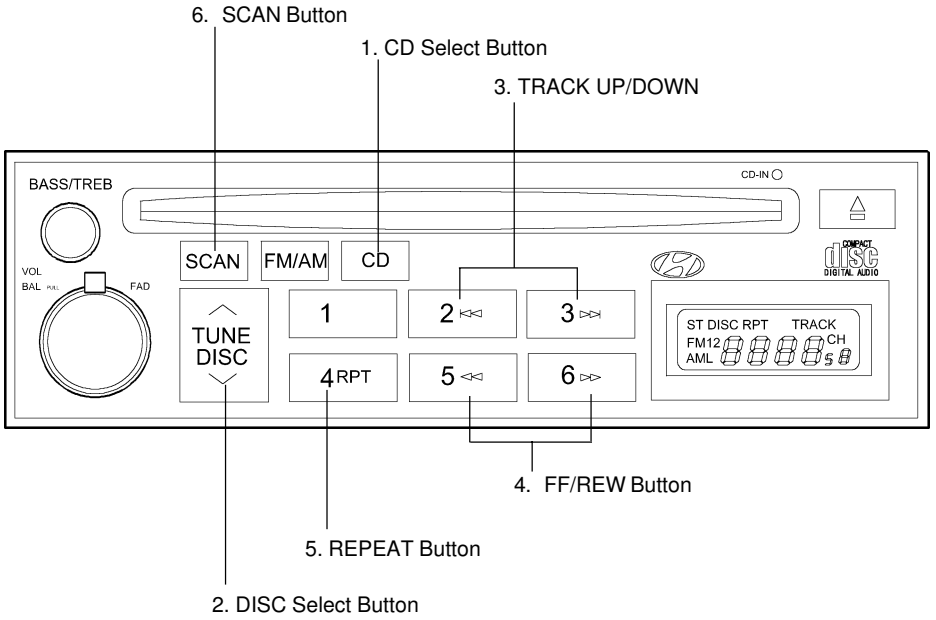

H260A01O

B260F01P-AAT

o To use the CD auto changer.

1. Open the sliding lid of the CD auto changer.
2. To eject the compact disc magazine, press the EJECT button located inside the CD auto changer.
3. Insert the discs into the magazine.
4. Push the magazine into the CD auto changer and close the sliding lid.

o The CD auto changer can be used when the ignition switch is in either the "ON" or "ACC" position.

1. CD Select Button

When the CD changer magazine contains discs, press the "CD" button and the CD changer can be used even if the radio is being used. The Hyundai CD changer can hold up to eight discs. The disc number will be lit, and the track number, and elapsed time will be displayed.

2. DISC Select Button

To select the CD you want, push " TUNE DISC " to change the disc number.

3. TRACK UP/DOWN

o The desired track on the disc currently being played can be selected using the track number.

o Press ▸▸ once to skip forward to the beginning of the next track. Press ◂◂ once to skip back to the beginning of the track.

4. FF/REW (▸▸ /◂◂)

If you want to fast forward or reverse through the compact disc track, push and hold in the FF (▸▸) or REW (◂◂) button.
When you release the button, the compact disc player will resume playing.

5. REPEAT

o To repeat the music you are listening to, press the RPT button. To cancel , press again.

o If you do not release RPT operation when the track ends, it will automatically be replayed.
This process will be continued until you push the button again.

6. SCAN Button

o Press the SCAN button to playback the first 10 seconds of each track.

o Press the SCAN button again within 10 sec. for the desired track.

NOTE:

- **When replacing the fuse, replace it with a fuse having the correct capacity.**
- **This equipment is designed to be used only in a 12 volt DC battery system with negative ground.**
- **This unit is made of precision parts. Do not attempt to disassemble or adjust any parts.**
- **When driving your vehicle, be sure to keep the volume of the unit set low enough to allow you to hear sounds coming from the outside.**

H290A01E-GAT

STEREO RADIO OPERATION (H280) (If Installed)

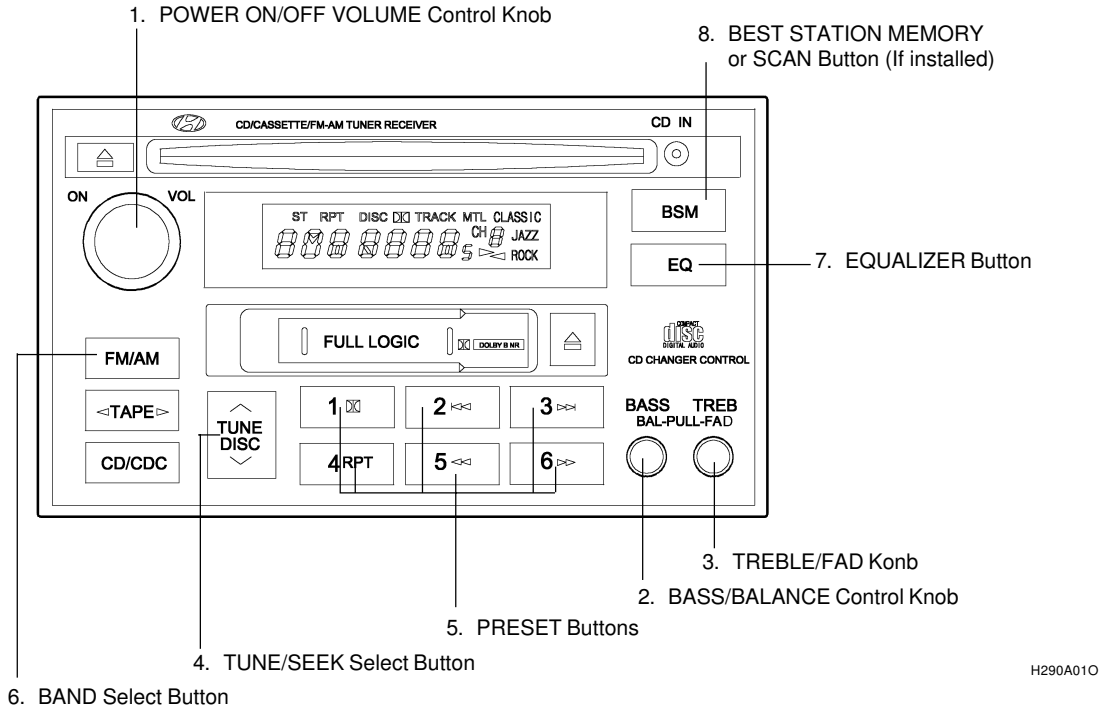

H290B01P-GAT

1. POWER ON-OFF Control Knob

The radio unit may be operated when the ignition key is in the "ACC" or "ON" position. Press the button to switch the power on. The display shows the radio frequency in the radio mode or the tape direction indicator in the tape mode, or CD track either the CD mode or CD AUTO CHANGER mode. To switch the power off, press the button again.

VOLUME Control

Rotate the knob clockwise to increase the volume and turn the knob counterclockwise to reduce the volume.

2. BASS/BALANCE Control Knob

BASS Control Knob

Press to pop the knob out. To increase the bass, rotate the knob clockwise, while to decrease the bass, rotate the knob counterclockwise.

BALANCE Control knob

Further pull the popped-up knob. Rotate the knob clockwise to emphasize right speaker sound. (Left speaker sound will be attenuated) When the control knob is turned counterclockwise, left speaker sound will be emphasized (Right speaker sound will be attenuated).

3. TREBLE/FAD Knob

TREBLE Control Knob

Press to pop the knob out and turn to the left or right for the desired treble tone.

FAD (Fader Control) Knob (Minibus only)

Further pull the popped-up knob. Turn the control knob counterclockwise to emphasize front speaker sound. (Rear speaker sound will be attenuated) When the control knob is turned clockwise, rear speaker sound will be emphasized. (Front speaker sound will be attenuated)

4. TUNE (Manual) Select Button

Press the (∧) side or (∨) side to increase or to decrease the frequency. With the button held down for 0.5 sec. or more, the stop signal (broadcasting radio wave) is ignored and channel selection continues.

SEEK Operation (Automatic Channel Selection)

Press the TUNE select button for 1 sec or more, and releasing will automatically tune the next available station with beep sound.
When the (∧) side is pressed longer than 1 second and releasing will automatically tune the next higher frequency and when the (∨) side is pressed longer than 1 second and releasing will automatically tune the next lower frequency.

5. PRESET STATION Select Buttons

Six (6) stations for AM, FM and FM2 respectively can be preset in the electronic memory circuit.

HOW TO PRESET STATIONS

Six AM and twelve FM stations may be programmed into the memory of the radio. Then, by simply pressing the band select button and/or one of the six station select buttons, you may recall any of these stations instantly. To program the stations, follow these steps:

- Press band selector to set the band for AM, FM and FM2.
- Select the desired station to be stored by seek or manual tuning.
- Determine the preset station select button you wish to use to access that station.
- Press the station select button for more than two seconds. A select button indicator will show in the display indicating which select button you have depressed. The frequency display will flash after it has been stored into the memory with beep sound. You should then release the button, and proceed to program the next desired station. A total of 18 stations can be programmed by selecting one AM and two FM station per button.
- When completed, any preset station may be recalled by selecting AM, FM or FM2 band and the appropriate station button.

6. BAND Selector

Pressing the FM/AM button changes the AM, FM1 and FM2 bands. The mode selected is shown on the display.

7. EQUALIZER Button

Press the EQ button to select the CLASSIC, JAZZ, ROCK and DEFEAT MODE for the desired tone quality. Each press of the button changes the display as follows;

CLASSIC → JAZZ → ROCK → DEFEAT

8. Best Station Memory Button (BSM) (If installed)

When the BSM button is pressed for two seconds or longer, the six channels from the highest field intensity are selected next and stored in memory. The stations selected are stored in the sequence frequency from the first preset key.

SCAN Button (If installed)

When the scan button is pressed, the frequency will increase and the receivable stations will be tuned in one after another, receiving each station for 5 seconds. To stop scanning, press the scan button again.

H290C01E-GAT

CASSETTE TAPE PLAYER OPERATION (H280) (If Installed)

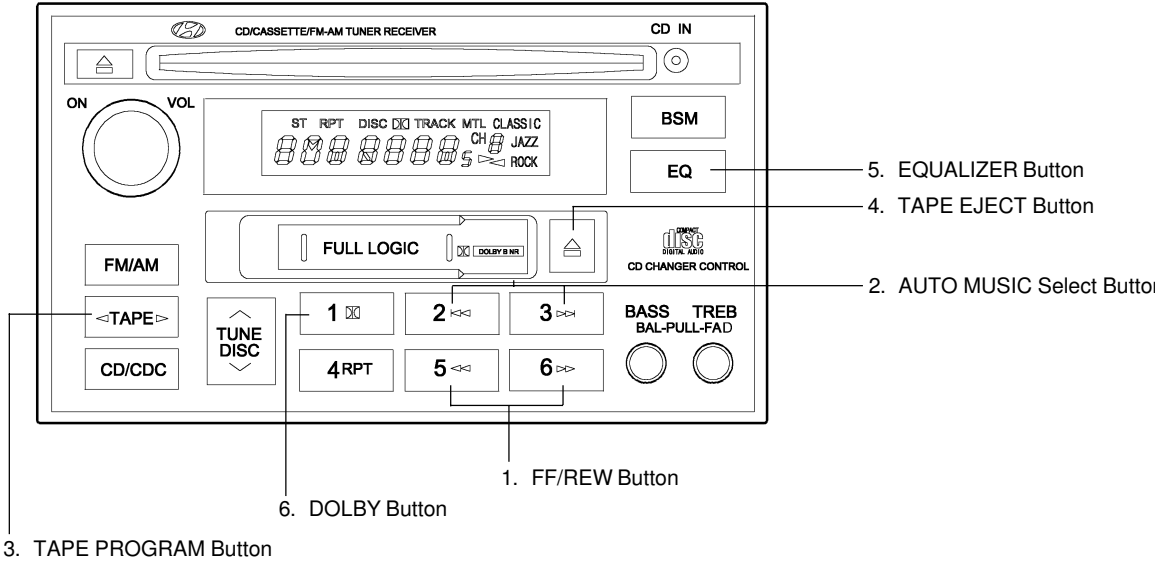

H290A01O

H290D01O-GAT

1. FF/REW Button

- o Fast forward tape winding starts when the FF (▶▶) button is pressed during the PLAY or REW mode.
- o Tape play starts when the FF (▶▶) button is pressed again during the FF mode.
- o Tape rewinding starts when the REW (◀◀) button is pressed during the PLAY or FF mode.
- o Tape play starts when the REW (◀◀) button pressed again during the REW mode.

2. AUTO MUSIC Select Button

Press the button to find the starting point of each song in a prerecorded music tape. The quiet space between songs (must have at least a 4 sec. gap) can be accepted by the AUTO MUSIC Select button.

- o Pressing the ▶▶| button will play the beginning of the next music segment.
- o Pressing the |◀◀ button will start replay at the beginning of the music just listened to.

3. TAPE PROGRAM Button

This allows you to play the reverse side of the tape by merely depressing the program button. An arrow will appear in the display to show tape direction.

4. TAPE EJECT button

- o When the ⏏ button is pressed with the cassette loaded, the cassette is ejected.
- o When the ⏏ button is pressed during the FF/REW mode, the cassette is ejected.

5. EQ Button

Press the EQ button to select the CLASSIC, JAZZ, ROCK and DEFEAT MODE for the desired tone quality. Each press of the button changes the display as follows;

CLASSIC → JAZZ → ROCK → DEFEAT

6. DOLBY Button

If you get background noise during tape PLAY, you can reduce this considerably by merely pressing the DOLBY button. If you want to cancel the DOLBY feature, press the button again.

H290E01E-GAT

COMPACT DISC PLAYER OPERATION (H280) (If Installed)

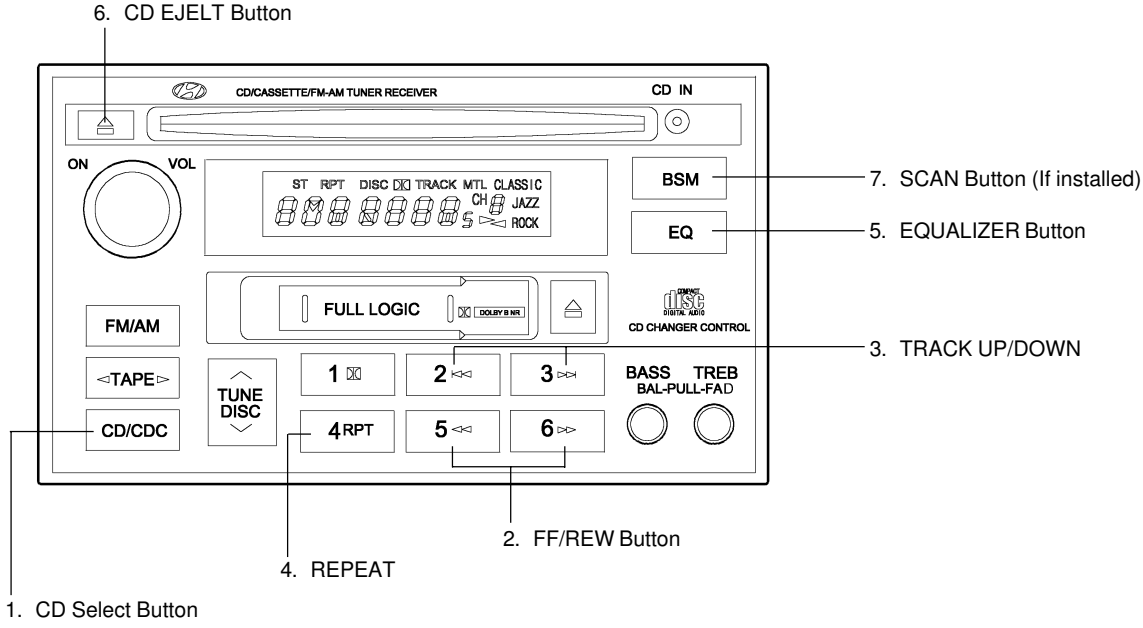

H290A01O

H290F01O-GAT

1. CD Select Button

- o Insert the CD with the label facing upward.
- o Insert the CD to start CD playback, during radio operation or cassette tape playing.
- o When a disc is in the CD deck, if you press the play button the CD player will begin playing even if the radio or cassette player is being used.
- o The CD player can be used when the ignition switch is in either the "ON" or "ACC" position.

2. FF/REW (▸▸/◂◂)

If you want to fast forward or reverse through the compact disc track, push and hold in the FF (▸▸) or REW (◂◂) button.
When you release the button, the compact disc player will resume playing.

3. TRACK UP/DOWN

- o The desired track on the disc currently being played can be selected using the track number.
- o Press ▸▸| button once to skip forward to the beginning of the next track. Press |◂◂ button once to skip back to the beginning of the track.

4. REPEAT

- o To repeat the music you are listening to, press the RPT button. To cancel , press again.
- o If you do not release RPT operation when the track ends, it will automatically be replayed.
  This process will be continued until you push the button again.

5. EQUALIZER Button

Press the EQ button to select the CLASSIC, JAZZ, ROCK and DEFEAT MODE for the desired tone quality. Each press of the button changes the display as follows;

CLASSIC → JAZZ → ROCK → DEFEAT

6. CD EJECT Button

When the ⏏ button is pressed with the CD loaded, the CD is ejected.

7. SCAN Button (If installed)

- o Press the SCAN button to playback the first 10 seconds of each track.
- o Press the SCAN button again within 10 sec. for the desired track.

NOTE:

- **o To assure proper operation of the unit, keep the vehicle interior temperature within a normal range by using the vehicle's air conditioning or heating system.**
- **o When replacing the fuse, replace it with a fuse having the correct capacity.**
- **o The preset station frequencies are all erased when the car battery is disconnected. Therefore, all data will have to be set again if this should occur.**
- **o Do not add any oil to the rotating parts. Keep magnets, screwdrivers and other metallic objects away from the tape mechanism and head.**
- **o This equipment is designed to be used only in a 12 volt DC battery system with negative ground.**
- **o This unit is made of precision parts. Do not attempt to disassemble or adjust any parts.**
- **o When driving your vehicle, be sure to keep the volume of the unit set low enough to allow you to hear sounds coming from the outside.**
- **o Do not expose this equipment (including the speakers and tape) to water or excessive moisture.**

B890A01P-AAT

AUDIO FAULT CODE

If you see any error indication in the display while using the CD or Tape mode, find the cause in the chart below. If you cannot clear the error indication, take the car to your Hyundai dealer.

INDICATION	CAUSE	SOLUTION
Er2	CDP DECK MECHANICAL ERROR (EJECT ERROR, LOADING ERROR)	After resetting the audio, push the eject button. If disc is not ejected, consult your hyundai dealer.
Er3	FOCUS ERROR DATA READ ERROR	Make sure the disc is not scratched or damaged. Press the eject button and pull out the disc. Then insert a normal CD disc.
Er6	DISC ERROR	Check if the disc is inserted correctly in the CD player. Make sure the disc is not scratched or damaged.
Er8	TAPE DECK ERROR TAPE EJECT ERROR	After resetting the audio, push the eject button. If tape is not ejected, consult your hyundai dealer.
HHH	TEMPERATURE IS TOO HIGH	Fault code will reset automatically when the temperature returns to normal.

B850A01F-AAT

CARE OF DISC

Proper Handling

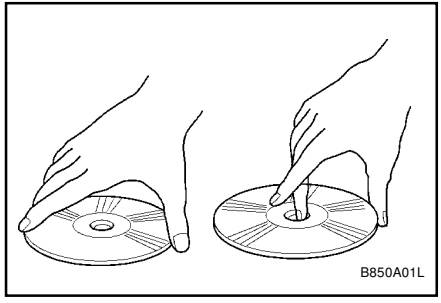

Handle your disc as shown. Do not drop the disc. Hold the disc so you will not leave fingerprints on the surface. If the surface is scratched, it may cause the pickup to skip signal tracks. Do not affix tape, paper, or gummed labels on the disc. Do not write on the disc.

Damaged Disc

Do not attempt to play damaged, warped or cracked discs. It could severely damage the playback mechanism.

Storage

When not in use, place your discs in their individual case and store them in a cool place away from the sun, heat, and dust.
Do not grip or pull out the disc with your hand while the disc is being pulled into the unit by the Self Loading mechanism.
Do not pull the unit from the dash immediately after a disc is inserted or the Eject Switch has been pressed. If the unit is pulled out before an operation is completed, the disc will be unstable in the unit and may be damaged. Do not attempt to insert a disc into the unit when the unit is out of the dash or the power is off.

Keep Your Discs Clean

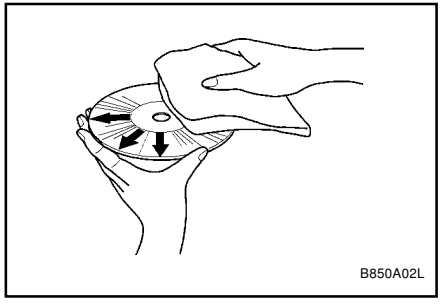

Fingerprints, dust, or soil on the surface could cause the pickup to skip signal tracks. Wipe the surface clean with a clean soft cloth. If the surface is heavily soiled, dampen a clean soft cloth in a solution of mild neutral detergent to wipe it clean. See drawing.

B860A01A-AAT

CARE OF CASSETTE TAPES

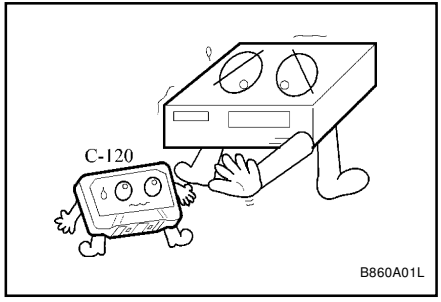

Proper care of your cassette tapes will extend the tape life and increase your listening enjoyment. Always protect your tapes and cassette cases from direct sunlight, severely cold and dusty conditions. When not in use, cassettes should always be stored in the protective cassette case in which they were originally supplied. When the vehicle is very hot or cold, allow the interior temperature to become more comfortable before listening to your cassettes.

- o Never leave a cassette inserted in the player when not being played. This could damage the tape player unit and the cassette tape.
- o We strongly recommend against the use of tapes longer than C-60 (60 minutes total). Tapes such as C-120 or C-180 are very thin and do not perform as well in the automotive environment.

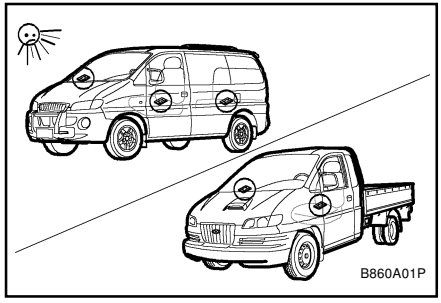

- Be sure that the cassette label is not loose or peeling off or tape ejection may be difficult.
- Never touch or soil the actual audio tape surfaces.
- Keep all magnetized objects, such as electric motors, speakers or transformers away from your cassette tapes and tape player unit.
- Store cassettes in a cool, dry place with the open side facing down to prevent dust from settling in the cassette body.
- Avoid repeated fast reverse usage to replay one given tune or tape section. This can cause poor tape winding to occur, and eventually cause excessive internal drag and poor audio quality in the cassette. If this occurs, it can sometimes be corrected by fast winding the tape from end to end several times. If this does not correct the problem, do not continue to use the tape in your vehicle.

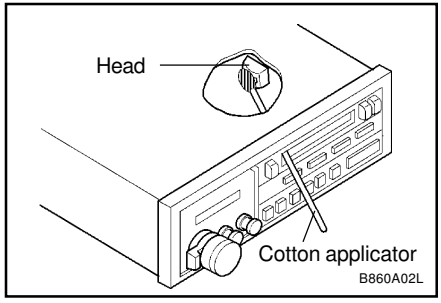

- The playback head, capstan and pinch rollers will develop a coating of tape residue that can result in deterioration of sound quality, such as a wavering sound. They should be cleaned monthly using a commercially available head cleaning tape or special solution available from audio specialty shops. Follow the supplier's directions carefully and never oil any part of the tape player unit.
- Always be sure that the tape is tightly wound on its reel before inserting in the player. Rotate a pencil in the drive sprockets to wind up any slack.

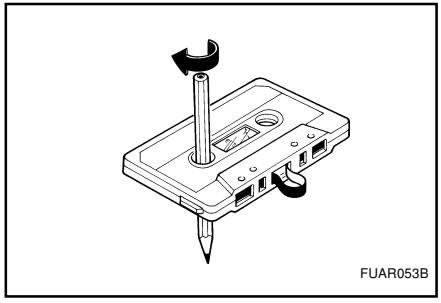

NOTE:

Look at a tape before you insert it. If the tape is loose, tighten it by turning one of the hubs with a pencil or your finger. If the label is peeling off, do not put it in the drive mechanism when you try to eject it.

Do not leave tape sitting where they are exposed to hot warm or, high humidity, such as on top of the dashboard or in the player. If a tape is exposed to extreme heat or cold, let it reach a moderate temperature before putting it in the player.

B870A01A-GAT

ANTENNA

Fixed Rod Antenna (If installed)

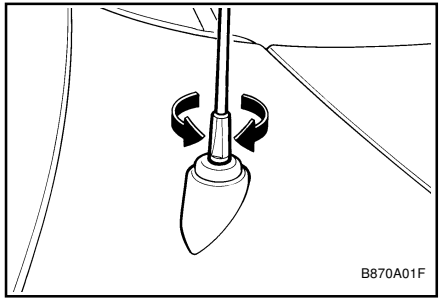

Your car uses a fixed rod antenna to receive both AM and FM broadcast signals.
This antenna is a removable type. To remove the antenna, turn the antenna counterclockwise. To install the antenna, turn the antenna clockwise.

CAUTION:

Be sure to remove the antenna before washing the car in an automatic car wash or the antenna may be damaged.

B870C01A-GAT

Manual Antenna

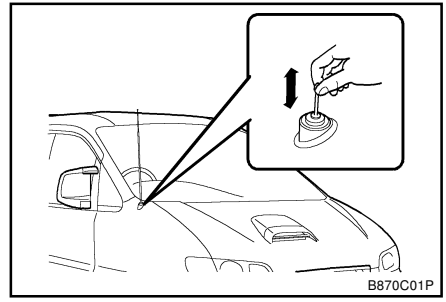

Your car uses a manual stainless steel antenna to receive both AM and FM broadcast signals. Pull up the antenna using your fingers, as shown in the drawing.

NOTE:

Before entering an automatic car wash or a place with a low height clearance, be sure that the antenna is fully retracted.

B870B01Y-AAT

Power Antenna (If installed)

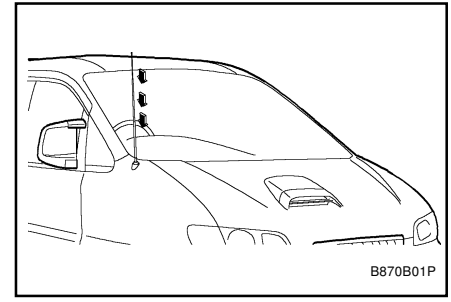

The antenna will automatically be extended when the radio power switch is turned on while the ignition key is in either the "ON" or "ACC" position. The antenna will automatically be retracted and stored when either the radio power switch is turned off or the ignition key is set to the "LOCK" position.

NOTE:

- **Before turning on the radio, make sure that no one is near the antenna.**
- **Before entering an automatic car wash or a place with a low height clearance, be sure that the antenna is retracted and stored.**
- **If the antenna is dirty, be sure to clean it in order to avoid an operation malfunction.**

D000A01P-GAT

3. STARTING & OPERATING

D010A01P-GAT

PRECAUTION FOR EXHAUST FUMES WHILE STARTING AND DRIVING

1. Do not breathe exhaust fumes containing carbons monoxide when starting or driving. Carbon monoxide is a colorless, odorless gas and can cause unconsciousness or death by asphyxiation.
2. Open all the windows fully and get the back door closed if you smell exhaust fumes inside the vehicle. Have the cause immediately located and corrected.
3. Check the exhaust system, from time to time, for holes or loose connections if you hear a change in the exhaust sound, or if something has hit the exhaust system.
4. Do not race the engine in a garage or enclosed area any longer than it takes to start the engine and drive the vehicle in or out. The sealed exhaust fume may make a particularly dangerous situation.
5. Avoid idling the engine for prolonged periods with people inside the car. If it is unavoidable, however, be sure to do so in an open area and adjust the heating or cooling system to force outside into the vehicle.
6. Make sure that the ventilation air intakes located just in front of the windshield are kept clear of snow, ice, leaves or other obstructions, to assure proper operation of the ventilation system.
7. Get the back door closed while driving. An incompletely closed back door may cause exhaust fumes to be drawn into the vehicle. If you must drive with the back door open to accommodate a large object, close the windows, open the dashboard vents and have the heating or cooling system deliver fresh air into the vehicle by turning the fan to high speeds with the air intake control lever set in the "Fresh" position (Minibus, Van).

D020A01P-GAT

IGNITION SWITCH

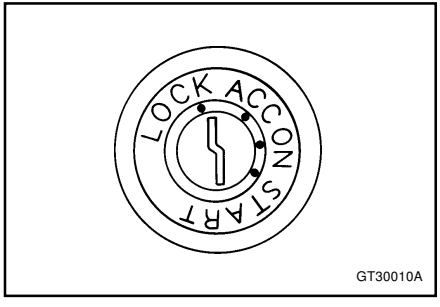

LOCK : The engine stops and the steering wheel is locked. The key can be inserted and removed only at this position.

ACC : The engine stops, but the radio, cigarette lighter, etc., can be operated.

ON : The engine is running and all electrical systems can be operated.

START: The starter motor operates. After the engine has started, release the key and it will automatically return to the "ON" position.

CAUTION:

(1) If the engine is stopped while driving, the brake servomechanism will cease to function and braking efficiency will deteriorate.

(2) Do not leave the key at the "ON" position for a long time when the engine is not running; doing so will cause the battery to be discharged.

(3) Do not turn the key to the "START" position when the engine is running; doing so could damage the starter motor.

D020B01P-GAT

How to lock and unlock the steering wheel

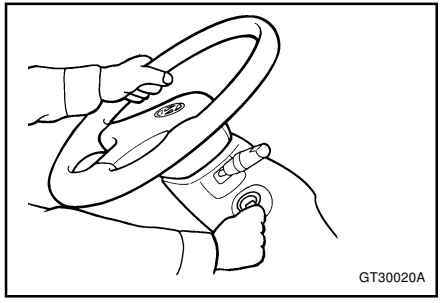

TO LOCK

Remove the key at the "LOCK" position. Slightly turn the steering wheel until it is locked.

TO UNLOCK

Turn the key to the "ACC" position while moving the steering wheel slightly.

CAUTION:

If the key is accidentally removed, the steering wheel will lock making it impossible to control the vehicle.

D030A02P-GAT

STARTING THE ENGINE

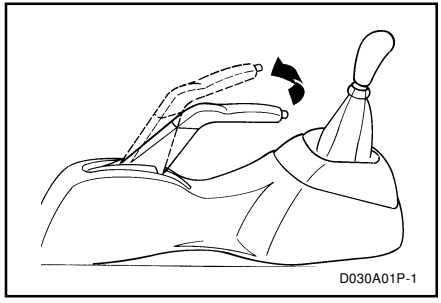

1. Apply the parking brake.

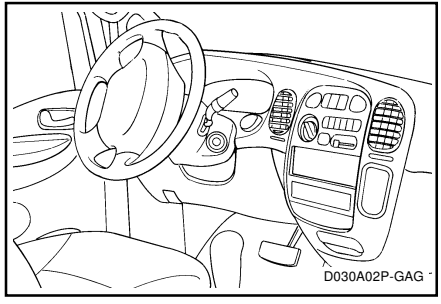

2. If your Hyundai is equipped with a manual transmission, place the shift lever in neutral and depress the clutch pedal fully. If your Hyundai has an automatic transmission, place the shift lever in "P" (park).

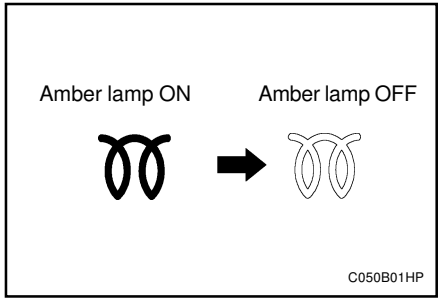

3. On vehicles equipped with the diesel preheat indication lamp, turn the ignition key to the "ON" position. The diesel-preheat indication lamp will first illuminate in amber, and then after a short time, the amber illumination will go off, indicating that preheating is completed.

NOTE:

If the engine were not started 10 seconds after the preheating is completed, turn the ignition key once more to the "LOCK" position, and then to the "ON" position, in order to preheat again.

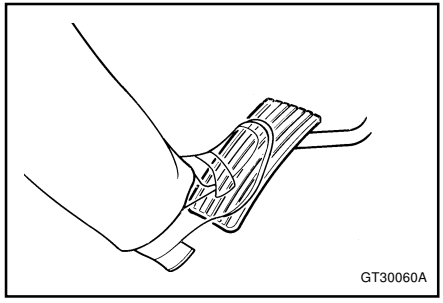

4. Operate the accelerator pedal as described below in accordance with the atmospheric temperature and/or engine condition.
   (1) When the atmospheric temperature is moderate or the engine is warm:
   Start the engine without depressing the accelerator pedal.
   (2) When the atmospheric temperature is low and the engine is cold:
   Start the engine while depressing the accelerator pedal. If the atmospheric temperature is very low, setting the ignition switch to ON for one or two seconds before attempting to start the engine will make it easier to start.
5. Start the engine

D040A01P-GAT

Tips for starting

(1) Do not operate the starter motor continuously for longer than ten seconds; doing so could run down the battery. If the engine does not start, turn the ignition switch back to "LOCK", wait a few minutes, and then try again.
(2) If the engine cannot be started because the battery is weak or dead, refer to the emergency starting section for instructions on Emergency Starting.
(3) After starting the engine, do not keep the engine idling without driving.
Once when the atmospheric temperature is very low, warm up the engine at a high idling speed to ensure proper circulation of the oil.

CAUTION:

(1) Do not run the engine at high rpm or drive the vehicle at high speed until the engine has had a chance to warm up.
(2) Release the ignition key as soon as the engine starts to avoid damaging the starter motor.

D041A02P-GAT

STARTING AND STOPPING THE ENGINE FOR TURBO CHARGER OR TURBO CHARGER INTERCOOLER (If installed)

(1) Do not race the engine or sudden accelerate the engine immediately after start it. If the engine is cold, allow the engine to idle for several seconds before it is driven to ensure sufficient lubrication of the turbo charger unit.
(2) After high speed or extended driving, requiring a heavy engine load, the engine should be allowed to idle, as shown in the chart below, before turning it off.
This idle time will allow the turbo charger to cool prior to shutting the engine off.

Driving Condition		Required Idle Time
Normal driving		Not necessary
High speed driving	Up to 80 km/h	About 20 seconds
	Up to 100km/h	About 1 minute
Steep mountain slopes or continued driving in excess of 100km/h		About 2 minutes

WARNING:

Do not turn the engine off immediately after it has been subjected to a heavy load. Doing so may cause severe damage to the engine or turbo charger unit.

D050A02P-GAT

MANUAL TRANSMISSION

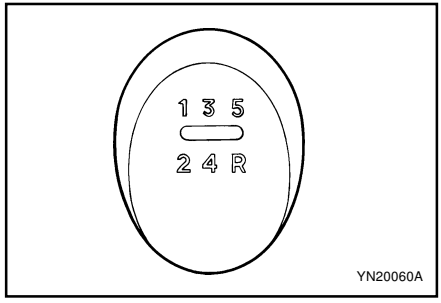

The shift pattern is shown on the gearshift lever knob. Be sure to always fully depress the clutch pedal before attempting to shift to lever.
To shift into reverse from 5th gear,move the gearshift lever to neutral, and then shift it into reverse.

NOTE:

- **During cold weather, shifting may be difficult until the transmission lubricant has warmed up. This is normal and not harmful to the transmission.**
- **If you 've come to a complete stop and it's hard to shift into 1st or R(Reverse), put the shift lever in N(Neutral) position and let up on the clutch. Press the clutch pedal back down, and then shift into 1st or R(Reverse) gear position.**
- **Do not use the shift lever as a handrest during driving, as this can result in premature wear of the transmission shift forks.**

CAUTION:

Do not move the gearshift lever into reverse while the vehicle is moving forward; doing so will damage the transmission.

D050B01P-GAT

Using the Clutch

The clutch should be pressed all the way to the floor before shifting, then released slowly. Do not rest your foot on the clutch pedal while driving. This can cause unnecessary wear.
Do not partially engage the clutch to hold the vehicle on an incline. This causes unnecessary wear.
Use the parking brake to hold the vehicle on an incline. Do not operate the clutch pedal rapidly and repeatedly.

D050C02P-GAT

Good Driving Practices

- Never take the vehicle out of gear and coast down a hill. This is extremely hazardous. Always leave the vehicle in gear.
- Don't "ride" the brakes. This can cause them to overheat and malfunction. Instead, when you are driving down a long hill, slow down and shift to a lower gear. When you do this, engine braking will help slow the car.
- Slow down before shifting to a lower gear. This will help avoid over-running the engine, which can cause damage.
- Slow down when you encounter cross winds. This gives you much better control of your car.
- Be sure the vehicle is completely stopped before you attempt to shift into reverse. The transmission can be damaged if you do not. To shift into reverse, depress the clutch, move the shift lever to neutral, wait three seconds, then shift to the reverse position.
- Exercise extreme caution when driving on a slippery surface. Be especially careful when braking, accelerating or shifting gears.
  On a slippery surface, an abrupt change in engine speed can cause the drive wheels to lose traction and the vehicle to go out of control.

CAUTION:

- **The risk of rollover is greatly increased if you lose control of your vehicle at highway speeds.**
- **Loss of control often occurs if two or more wheels drop off the roadway and the driver oversteers to reenter the roadway.**
- **In the event your vehicle leaves the roadway, do not steer sharply. Instead, slow down before pulling back into the travel lanes.**
- **In a collision crash, an unbelted person is significantly more likely to die than a person wearing a seatbelt.**

D050D01P-GAT

Changing Gears

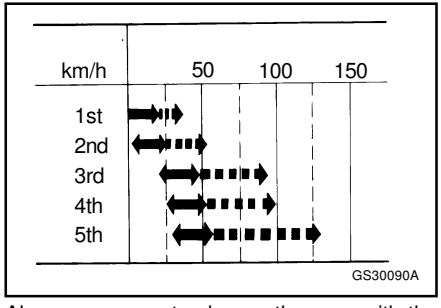

Always use care to change the gear with the vehicle speed matched to the engine speed.

Proper shifting will improve fuel economy and prolong engine life.
Avoid shifting down at excessively high speed, doing so could damage the engine.

NOTE:

:Economical driving range

:Possible driving range

D060A01P-GAT

AUTOMATIC TRANSMISSION (Minibus, Van) (If installed)

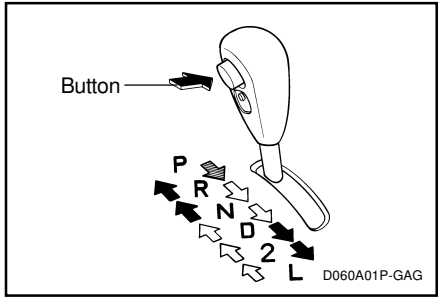

The highly efficient Hyundai automatic transmission has four forward speeds and one reverse speed. It has a conventional shift pattern as shown in the illustration.
At night, with the side markers or headlights switched on, the appropriate symbol on the quadrant will be illuminated according to the range selected.

CAUTION:

Never shift into "R" or "P" position while the vehicle is moving.

- **Depress the brake pedal and push the button when shifting.**
- **Push the button when shifting.**
- **The selector lever can be shifted freely.**

For optimum fuel economy, accelerate gradually. The transmission will automatically shift to the second, third and overdrive gears.

D060B01P-GAT

The function of each position is as follows:

o P (Park):

Use to hold the vehicle in place when parking or while starting the engine; shift the selector lever to the "P" position. Whenever parking the car, apply the parking brake and shift the selector lever to the "P" position.

CAUTION:

Never place the selector lever in the "P" position unless the vehicle is fully stopped. Failure to observe this caution will cause severe damage to the transmission.

D060C01P-GAT

o R (Reverse):

Use for backing up the vehicle. Bring the vehicle to a complete stop before shifting the selector lever to "R" position.

D060D01P-GAT

o N (Neutral):

In the "N" position, the transmission is in neutral, which means that no gears are engaged. The engine can be started with the shift lever in "N" position, although this is not recommended except if the engine stalls while the car is moving.

D060E01P-GAT

o D (Drive):

Use for normal driving. The transmission will automatically shift through a four-gear sequence, giving best economy and power. Never downshift manually to "2" position or "L" position when vehicle speed is more than 96 km/h (60 mph).

D060F01P-GAT

o 2 (Second gear):

Use for driving on slippery road, hill climbing or engine braking downhill. "2" automatically shifts between 1st and 2nd gears.
This means that no shift-up to 3rd gear is performed. However, the shift-up to 3rd gear is done when the vehicle speed exceeds a certain value to prevent the engine from over-running. Manually move the selector to "D" returning to normal driving condition.

D060G01P-GAT

o L (Low gear):

Use for driving up a very steep grade or for engine braking when descending steep hills. When downshifting to "L", the transmission will temporarily remain in second gear until the vehicle has slowed enough for low gear to engage. Do not exceed 50 km/h (31 mph) in low gear.
"L" engages 1st gear only. However, shift-up to 2nd is performed when the vehicle exceeds a certain speed, and as the speed increases, shift-up to 3rd gear occurs to prevent over-running the engine.

D060H01P-GAT

CAUTION:

o P (Park):

Use this range to park the vehicle. This range is also used when engine is started and warmed up.

o N (Neutral):

The engine can be started in this range, but the use of P range is recommended for safer start up.

NOTE:

- **For smooth operation, depress the brake pedal when shifting from NEUTRAL or PARK to a forward or reverse gear.**
- **The ignition key must be in the "ON" position and the brake pedal fully depressed in order to move the shift lever from the "P" (Park)position to any of the other positions.**
- **It is always possible to shift from "R", "N", "D", "2", "L" positions to "P" position.**

CAUTION:

- **Shift into "R" and "P" only when the vehicle has completely stopped.**
- **Do not accelerate the engine in the reverse or any of the forward positions with the brakes applied.**
- **Always apply the footbrake when shifting from "P" or "N" to "R", "D", "2" or "L" position.**
- **Do not use the P(Park) position in place of the parking brake. Always set the parking brake, shift the transmission into P(Park) and turn off the ignition when you leave the vehicle, even momentarily. Never leave the vehicle unattended while the engine is running.**
- **Check the automatic transmission fluid level regularly, and add fluid as necessary.**

D070A01P-GAT

DRIVING WITH ELECTRONIC DUAL-RANGE AUTOMATIC TRANSMISSION (If installed)

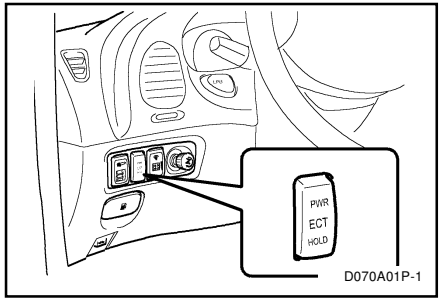

The electronically controlled dual-range (Power/Normal) 4 speed automatic transmission is available for you Hyundai.
According to the road conditions, set the switch at the "NORMAL", "POWER" or "HOLD" mode for normal driving, for greater power driving or for shift stage hold driving.
Each time you press the switch, the "NORMAL", "POWER" and "HOLD" modes will switch alternately. The "POWER" and "HOLD" indicator in the instrument panel comes on or off. Normally, drive your vehicle in the "NORMAL" mode where the switch is not pressed. (The "PWR" and "HOLD" indicators go out.)

D070B01P-GAT

"Normal" Mode

The "N" (Normal) mode offers quiet and smooth auto-shifting with outstanding fuel economy. The "N" (Normal) mode is recommended for normal driving. Set the driving pattern selector switch to the "N" (Normal) position. Push the selector lever to the "D" range and depress the accelerator pedal slowly. If you need rapid acceleration, fully depress the accelerator pedal.

D070C01P-GAT

"Power" Mode

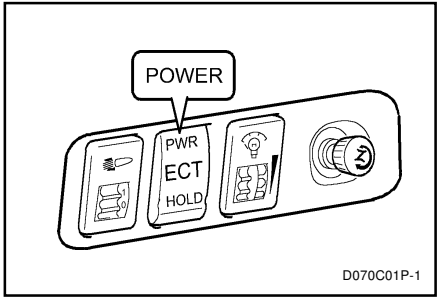

In the "Power" mode, you can obtain full potential of the engine for maximum acceleration and driveability. The "Power" mode is recommended for higher speeds than the "Normal" mode, driving in mountainous areas and for strong acceleration. Set the driving pattern selector switch to the "Power" position.

D070D01P-GAT

"Hold" mode

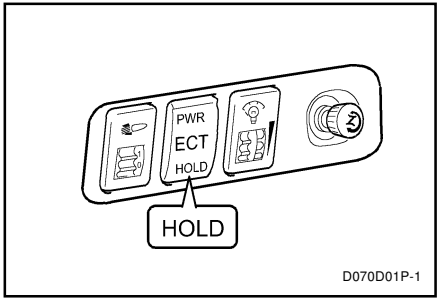

Select the "HOLD" mode when starting your vehicle on a road surface slippery from snow or the like, and the vehicle will start smoothly in second gear.
When you need quick acceleration or engine braking power on a downhill grade, or when you are going to go up a long hill, press the "Hold" switch once again to cancel the "Hold" function.
When "Hold" button is depressed, "Hold" indicator light in the instrument cluster will illuminate and automatic shifting will be performed in the range from 2nd gear to 3rd gear only, as shown in the table.

Position	Shifting gear
1	2
2	2
3	3
4	3

D070E02P-GAT

Good Driving Practices

- o Never move the gear selector lever from "P" or "N" to any other position with the accelerator pedal depressed.
- o Never move the gear selector lever into "P" when the vehicle is in motion.
- o Be sure the vehicle is completely stopped before you attempt to shift into "R".
- o Never take the vehicle out of gear and coast down a hill. This may be extremely hazardous. Always leave the vehicle in gear when moving.
- o Do not "ride" the brakes. This can cause them to overheat and malfunction. Instead, when you are driving down a long hill, slow down and shift to a lower gear. When you do this, engine braking will help slow the car.
- o Slow down before shifting to a lower gear. Otherwise, the lower gear may not be engaged.
- o Always use the parking brake. Do not depend on placing the transmission in "P" to keep the vehicle from moving.
- o Exercise extreme caution when driving on a slippery surface. Be especially careful when braking, accelerating or shifting gears.
  On a slippery surface, an abrupt change in engine speed can cause the drive wheels to lose traction and the vehicle to go out of control.
- o Do not hold the vehicle on the upgrade with the accelerator pedal. This can cause the transmission to overheat. Always use the brake pedal or parking brake.

CAUTION:

- **o The risk of rollover is greatly increased if you lose control of your vehicle at highway speeds.**
- **o Loss of control often occurs if two or more wheels drop off the roadway and the driver oversteers to reenter the roadway.**
- **o In the event your vehicle leaves the roadway, do not steer sharply. Instead, slow down before pulling back into the travel lanes.**
- **o In a collision crash, an unbelted person is significantly more likely to die than a person wearing a seatbelt.**

D080A01P-GAT

OVERDRIVE SWITCH (If installed)

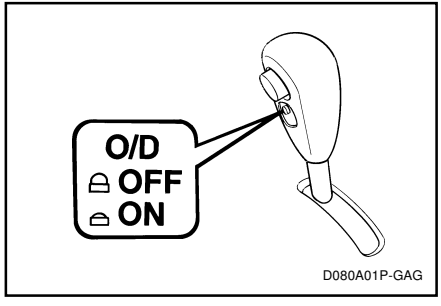

When the overdrive switch is turned on, the transmission will automatically upshift to the second, third and overdrive gears. When the overdrive switch is turned off, the transmission will not upshift to the overdrive gear at all.
For normal driving, the selector lever should be left in the "D" position and the overdrive switch turned on. To move the selector lever, the push button on the selector lever handle may have to be depressed first.

If you need to accelerate rapidly, press the accelerator pedal all the way to the floor. The transmission will automatically shift to a lower gear, depending on the speed.

NOTE:

Turn the overdrive switch on for good fuel economy and smooth driving. If engine braking is needed in the "D" range or if repeated upshifting and downshifting between the 3rd and 4th gear is needed when climbing a gentle slope, it is recommended that the overdrive switch be turned off. Turn the overdrive switch back on immediately afterward.

D090A01P-GAT

FOUR-WHEEL DRIVE (4WD) (Minibus, Van) (If installed)

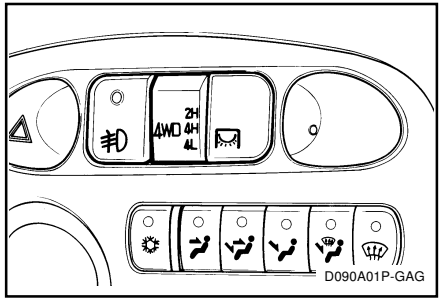

You can send your engine power to all front and rear wheels for maximum power. 4WD is useful when you drive in snow, mud, ice, mountainous or sandy areas where good traction is required, or when your wheels lose traction using two-wheel drive.

Switch position

2H(Rear-wheel drive)

When driving on normal roads and highway.

4H(High range 4-wheel drive)

When driving deep snow, sand or rough roads with normal speed. The 4WD indication light(HI) will be turned on to remind you that you are in the 4H mode.

4L(Low range 4-wheel drive)

When driving up or descending steep slopes or rough roads such as muddy road. Especially when increased drive power is required.
The indication light(LO) will be turned on to remind you that you are in the 4L mode.

CAUTION:

Do not select 4WD mode on dry paved roads. Especially on dry high way, never select the 4WD(4H or 4L).
Four-wheel driving on dry paved roads for a long period will increase the fuel consumption with possible noise generation and early tire wear. In addition, differential oil temperature increases with possible driving system part wear.

D090D02P-GAT

Transfer shift switch operation

By selecting the transfer shift switch(4H, 4L), the both axles of the vehicle are rigidly connected with each other. This improves the traction characteristics.

2H → 4H

Select the 4H mode switch at speed below 60~70 km/h. It is not necessary to depress the clutch pedal (Manual Transmission) or put the shift lever into "N(neutral)" position (Automatic Transmission). Perform this operation when driving straight.

4H → 2H

Select the 2H mode switch. This can be done at any speed, and it is not necessary to depress the clutch pedal (Manual Transmission) or put the shift lever into "N(neutral)" position (Automatic Transmission). Perform this operation when driving straight.

NOTE:

If the transfer shift is switched into 2H mode, while the vehicle is making a sharp turn or performing abrupt maneuver, the 4H indicator light in the instrument panel will turn off. However, the vehicle will still be in 4H mode. This condition is normal.
When the vehicle returns to normal driving condition, the 4WD system will automatically transfer to the 2H mode.

4H → 4L or 4L → 4H

1. Stop the vehicle.(0-3km/h)
2. Depress the clutch pedal (Manual Transmission) or put the shift lever into "N(neutral)" position (Automatic Transmission).
3. Select the 4H or 4L mode switch.

2H → 4L

1. Stop the vehicle.(0-3km/h)
2. Depress the clutch pedal (Manual Transmission) or put the shift lever into "N(neutral)" position (Automatic Transmission).
3. Select the 4L mode switch.

4L → 2H

1. Stop the vehicle.(0 - 3km/h)
2. Depress the clutch pedal (Manual Transmission) or put the shift lever into "N(neutral)" position (Automatic Transmission).
3. Select the 2H mode switch.

D090E01P-GAT

Driving Four-wheel drive safely

- The driving posture should be more upright and closer to the wheel than usual; adjust the seat to a good position for easy steering and pedal operation.
- Be sure to wear the seat belt.
- Drive carefully when off the road and avoid dangerous areas.
- 4WD has higher ground clearance and a narrower track to make them capable of performing in a wide variety of off road applications. Specific design characteristics give them a higher center of gravity than ordinary cars. An advantage of the higher ground clearance is a better view of the road allowing you to anticipate problems. They are not designed for cornering at the same speeds as conventional 2-wheel drive vehicles any more than low-slung sports cars are designed to perform satisfactorily under off-road conditions. If at all possible, avoid sharp turns or abrupt maneuvers. As with other vehicles of this type, failure to operate this vehicle correctly may result in loss of control or vehicle rollover.
- Do not grip the inside or spokes of the steering wheel when driving off-road. The steering wheel could jerk and injure your hands. Always firmly hold the outer steering wheel when you are driving off-road.
- Drive at lower speeds in strong crosswinds. Because of your vehicle's high center of gravity, its stability will be affected in crosswinds. Slower speeds ensure better vehicle control.
- Whenever you drive off-road through sand, mud or water as deep as the wheel hub, more frequent maintenance may be required.
- Do not drive in water if the level is higher than the bottom of the wheel hubs.
- Check your brake condition once you are out of mud or water. Press the brake several times as you move slowly until your feel normal braking forces return.
- Four-wheel driving on flat and normal roads can result in a severe binding condition when turning the steering wheel.

Driving on dry paved road and highway

Select 2H(2WD) to drive on dry paved roads. Especially on dry highway, never select the 4H or 4L(4WD).

Driving on snowy or icy roads

Select the 4H or 4L in accordance with the road conditions, and then gradually depress the accelerator pedal for a smooth start.

Driving on sandy or muddy roads

Select the 4H or 4L and then gradually depress the accelerator pedal for a smooth start. Keep the pressure on the accelerator pedal constant as possible, and drive at low speed.

Climbing sharp grades

Select the 4L to maximize use the engine torque.

Descending sharp grades

Select 4L, use the engine brake and descend slowly.

D100A01P-GAT

BRAKE PEDAL

Excessive use of the brake can cause fading, resulting in poor brake response and premature wear of brake linings.

When going down a long or steep grade, use engine braking by shifting the transmission into the "2" (SECOND) or "L" (LOW) position.

CAUTION:

It is important that you do not drive the vehicle with your foot resting on the brake pedal when braking is not required. This practice can result in abnormally high brake temperature, excessive lining wear, and possible damage to the brakes.

D110A01P-GAT

Good Braking Practices

WARNING:

Nothing should be carried on top of the cargo area cover behind the rear seat. If there were an accident or a sudden stop, such objects could move forward and cause damage to the vehicle or injure the occupants.

- After being parked, check to be sure the parking brake is not engaged and that the parking brake indicator light is out before driving away.
- Driving through water may get the brakes wet. They can also get wet when the vehicle is washed. Your vehicle may not stop as quickly if the brakes are wet and it may also pull to one side. To dry the brakes, apply the brakes lightly until the braking action returns to normal, taking care to keep the vehicle under control at all times. If the braking action does not return to normal, stop as soon as it is safe to do so and call your Hyundai dealer for assistance.
- Don't coast down hills with the vehicle out of gear. This may be extremely hazardous. Keep the vehicle in gear at all times, use the brakes to slow down, then shift to a lower gear so that engine braking will help you maintain a safe speed.
- Don't "ride" the brake pedal. Resting your foot on the brake pedal while driving can be dangerous because it can result in the brakes overheating and losing their effectiveness. It also increases the wear of the brake components.
- If a tire goes flat while you are driving, apply the brakes gently and keep the vehicle pointed straight ahead while you slow down. When you are moving slowly enough for it to be safe to do so, pull off the road and stop in a safe place.
- If your vehicle is equipped with an automatic transmission, don't let your vehicle creep forward.
  To avoid creeping forward, keep your foot on the brake pedal when the vehicle is stopped.
- Use caution when parking on a hill. Engage the parking brake and place the gear selector lever in "P"(automatic transmission) or in first or reverse gear (manual transmission). If your vehicle is facing downhill, turn the front wheels away from the curb to help keep the vehicle from rolling. If there is no curb or if it is required by other conditions to keep the vehicle from rolling, block the wheels.
- Under some conditions your parking brake can freeze in the engaged position. This is most likely to happen when there is an accumulation of snow or ice around or near the rear brakes or if the brakes are wet. if there is a risk that the parking brake may freeze, apply it only temporarily while you put the gear selector lever in "P" (automatic) or in first or reverse gear (manual transmission) and block the rear wheels so the vehicle cannot roll. Then release the parking brake.

D120A01P-GAT

PARKING BRAKE

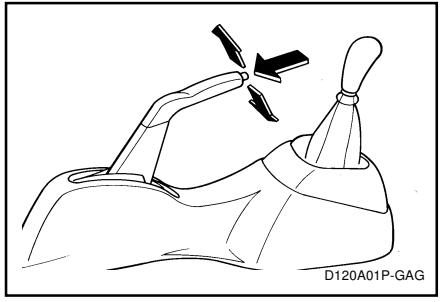

To park the vehicle, first bring it to a complete stop, fully engage the parking brake, and then set the gearshift lever at 1st or reverse. Move the transfer shift lever to any position.

1. To apply, pull the lever up without pushing the button at the end of hand grip.
2. To release, pull the lever slightly, push the button at the end of hand grip, and then push it downward.

CAUTION:

Before driving, be sure that the parking brake is fully released and brake warning lamp is off.

D130A01P-GAT

LOADING

Loading should not be to the point at which the Maximum Gross Vehicle Weight is exceeded.
Loading should be as uniform as possible.
Driving stability will be reduced if the load is unequal between front/rear or left/right.
Avoid sudden starts, sudden braking, and sharp cornering.

D140A02P-GAT

ANTI-LOCK BRAKE SYSTEM (If installed)

The Anti-Lock Brake System (ABS) is designed to prevent wheel lock-up during sudden braking or on hazardous road surfaces. A computer monitors the wheel speed and controls the pressure applied to each brake. Thus, in emergency situations or on slick roads, your ABS will increase vehicle control during braking.

NOTE:

During ABS operation, a slight pulsation may be felt in the brake pedal when the brakes are applied. Also, a noise may be heard in the engine compartment while driving. These conditions are normal and indicate that the anti-lock brake system is functioning properly.

WARNING:

Your ABS will not prevent accidents due to improper or dangerous driving maneuvers. Even though vehicle control is improved during emergency braking, always maintain a safe distance between you and objects ahead. Vehicle speeds should always be reduced during extreme road conditions. The braking distance for cars equipped with an anti-lock braking system may be longer than for those without it in the following road conditions.

- **Driving on rough, gravel or snow-covered roads.**
- **Driving with tire chains installed.**
- **Driving on roads where the road surface is pitted or has different surface height.**

These roads should be driven at reduced speeds. The safety features of an ABS equipped vehicle should not be tested by high speed driving or cornering. This could endanger the safety of yourself or others.

D150A01P-GAT

BRAKE SYSTEM

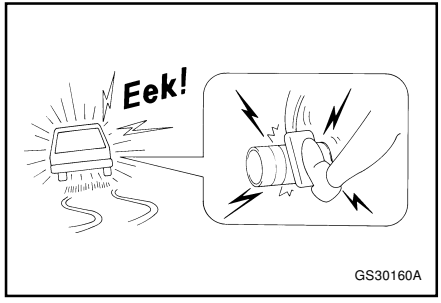

All the parts of the brake system are critical to safety. Have the vehicle serviced by an authorized HYUNDAI dealer at regular intervals according to the service standards.

(1) The service brake is divided into two brake circuits so that when one brake circuit fails, the other is available to stop the vehicle. If this occurs, however, the brake pedal must be depressed further than usual; stop driving as soon as possible and have the brake system serviced at the nearest authorized HYUNDAI dealer.

(2) Do not place a thick floor mat around the brake pedal; doing so could prevent the full pedal stroke that would be necessary in an emergency. Make sure that the pedal can be operated freely at all times.

(3) If the vehicle is equipped with a brake warning lamp, the lamp will light up if the brake fluid level is abnormally low.

(4) If the vehicle is equipped with a brake booster, the brake boosting force is lost after the brake pedal is depressed once or twice while the engine is off. If this occurs, the brake will require greater force than usual. This is especially important when the vehicle is being towed.

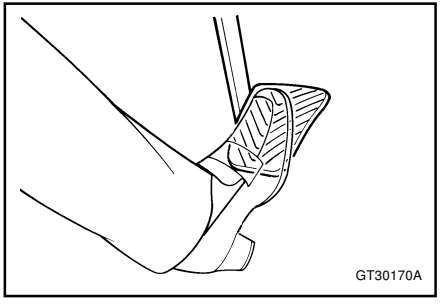

(5) Check the brake system while driving at a low speed immediately after starting, especially when the brakes are wet, to confirm that it works normally.
A film of water can form on the brake discs or brake drums and prevent normal functioning after driving in heavy rain or through large puddles, or after the vehicle is washed. If this occurs, repeatedly tap the brake pedal lightly while driving to dry out the brakes.

(6) It is important to take advantage of the braking power of the engine by shifting to a lower gear while driving on steep downhill roads in order to prevent the brakes from overheating.

(7) Periodically confirm that the brake warning lamp functions properly.

(8) With new brake linings, if possible, avoid applying the brakes fully during the first 200 km (124 miles) of driving.

D160A01P-GAT

PARKING

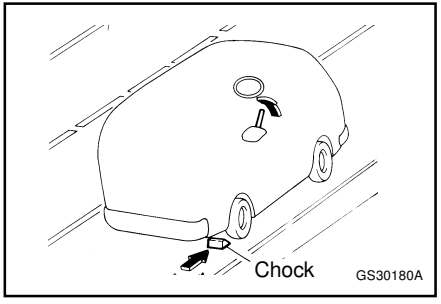

(1) When parking on a hill, fully engage the parking brake and set the gear shift lever to 1st or reverse position. It is recommended to use chocks for greater safety.

(2) Do not keep the engine running for a long time in a closed or poorly ventilated place. Carbon monoxide gas is odourless and extremely poisonous and dangerous.

(3) Do not park in places where there are such inflammable objects as dry grass, waste cloth, etc. Exhaust pipe temperature is very high just after driving and dry grass etc., if present around the exhaust pipe, can catch fire.
Also avoid such places for parking where there are inflammable objects at the rear of car.

D160B01P-GAT

BACK WARNING SYSTEM (If installed)

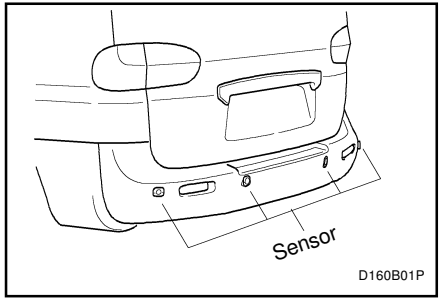

This system features four supersonic ware sensors in the rear bumper which measure the distance from the nearest object. It warns the driver when the car approaches an object to prevent possible damage to the bumper.
This system will activate when the back up light comes on with the ignition switch is in "ON" position. The warning signal will alert 2 intervals. The 1st warns intermittently and 2nd warns consecutively. The backing speed is limited to 5 km/h. If you hear an audible warning sound when shifting the gear to "R" position, this does not indicate malfunction of the vehicle because it is the sign that the back warning system is operating normally.

NOTE:

- **Back warning system should only be considered as a supplementary function. The driver must check the rear view.**
- **The audible warning signal can be different depending on the objects.**
- **The audible warning signal might not activate in case the sensor is frozen or stained with dirt or mud.**
- **There is a chance of malfunction of the back warning system when driving in uneven surfaces such as woods, gravel road, jagged road, or gradient.**
- **Do not push, or scratch the surface of the sensor. This will likely damage the covering.**
- **The sensor system might not recognize sharp objects, thick winter clothes or sponges which absorb the frequency.**

WARNING:

If you don't hear an audible warning sound or if the buzzer sounds intermittently when shifting the gear to "R" position, this indicate a malfunction in the back warning system. If this occurs, have your vehicle checked your Hyundai dealer as soon as possible.

D170A01P-GAT

ECONOMICAL DRIVING

For economical driving, there are some technical requirements that have to be met.
The prerequisite for low fuel consumption is a properly adjusted engine.
In order to achieve longer life of the vehicle and the most economical operation, have the vehicle serviced by an authorized HYUNDAI dealer at regular intervals in accordance with the service standards.

D170B01P-GAT

(1)Speed

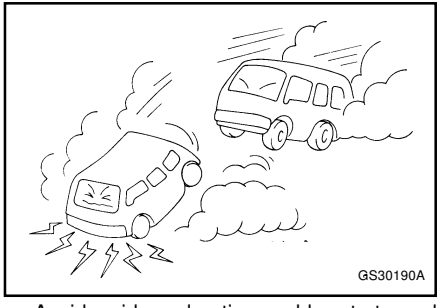

Avoid rapid acceleration, sudden starts, and maximum speed driving; such operation will result in more fuel consumption.

D170C01P-GAT

(2)Shifting

Shift only at an appropriate vehicle speed and engine rpm.
Always use the highest gear possible.
Fuel consumption depends largely on the manner in which vehicle is driven but it is also affected by other driving conditions.

D170D01P-GAT

(3)City traffic

Frequent starting and stopping increases the average fuel consumption. Use roads with smooth traffic flow whenever possible. When driving on congested roads, avoid use of a low gear at high engine rpm.

D170E01P-GAT

(4)Idling

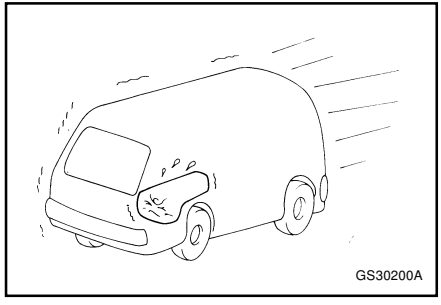

The vehicle consumes fuel even during idling. Avoid extended idling whenever possible.

D170F01P-GAT

(5)High speed

The higher the vehicles speed, the more fuel consumed. Avoid driving at full speed. Even a slight release of the accelerator pedal will save significant amount of fuel.

D170G01P-GAT

(6)Tire inflation pressure

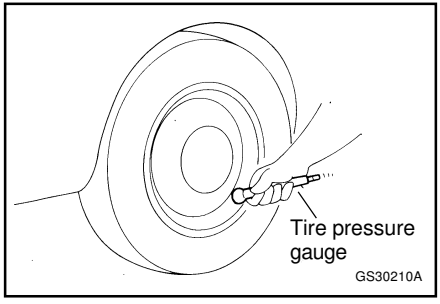

Check the tire inflation pressure at regular intervals. Low tire inflation pressures increase road resistance and fuel consumption. In addition, low tire pressures adversely affect tire wear and driving control.

D170H01P-GAT

(7)Load

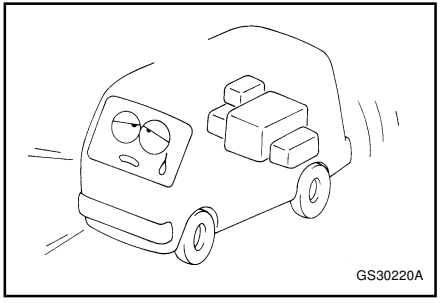

Do not drive with unnecessary articles in the luggage compartment.
Especially during city driving where frequent starting and stopping is necessary, the increased weight of the vehicle will greatly affect fuel consumption.
Also avoid driving with unnecessary luggage, etc., on the roof; the increased air resistance will cause more fuel consumption.

D170I01P-GAT

(8)Cold engine starting

Starting of a cold engine consumes more fuel. Unnecessary fuel consumption is also caused by keeping a hot engine running. After the engine is started, begin driving soon.

D180A01P-GAT

DURING COLD WEATHER

Engine oil

The engine oil can become very thick at low temperatures, thus making it difficult to start the engine.
Change to a thinner oil designed for winter use before the start of cold weather; for the appropriate oil viscosity, refer to the "Consumer Information" section.

D180B01P-GAT

Engine coolant

If the temperature in your area drops below freezing, there is the danger that the coolant in the engine or radiator could freeze and cause severe damage to the engine and/or radiator.
Be sure to add a sufficient amount of antifreeze to the coolant to prevent it from freezing.
The engine coolant mixture used at the factory is intended to be left in the cooling system and provides protection against freezing for temperature as low as approximately -30°C (-20°F).
The concentration should be checked before the start of cold weather and anti-freeze added to the system if necessary

D180C01P-GAT

Battery

The capacity of the battery is reduced at low temperatutes.
This is an inevitable result of its chemical and physical properties. This is why a very cold battery, particularly one that is not fully charged anyway, will only deliver a fraction of the starter current which is normally available.
It is recommended that you have the battery checked by an authorized HYUNDAI dealer before the start of cold weather and, if necessary, have it charged.
This not only ensures reliable starting, but a battery which is kept fully charged also has a longer life.

D180D01P-GAT

Washer fluid

To ensure proper operation of the windshield or rear window at low temperatures, anti-freeze should be added to the washer fluid at a rate of one part antifreeze to one part water.

D180E01P-GAT

Wiper blades

Before operating the wipers, check the wiper blades to confirm that they are not frozen to the windshield or tailgate. If the blades are frozen to the windshield or tailgate, do not operate the wipers until the ice has melted and the blades are freed.

D180F01P-GAT

Ventilation slots

The ventilation slots in the headlight housing on the assistant seat side should be brushed clear after a heavy snowfall so that the operation of the heating and ventilation systems will not be impaired.

C160G02A-AAT

To Keep Locks from Freezing

To keep the locks from freezing, squirt an approved de-icer fluid or glycerine into the key opening. If a lock is covered with ice, squirt it with an approved de-icing fluid to remove the ice. If the lock is frozen internally, you may be able to thaw it out by using a heated key. Handle the heated key with care to avoid burning your fingers.

NOTE:

The proper temperature for using the immobilizer key is from -40°C to 80°C. If you heat the immobilizer key over 80°C to open the frozen lock, it may cause damage to the transponder in its head.

D180G01P-GAT

Door locks

To prevent the door locks from freezing up, the lock cylinders should be masked with tape, etc., when washing the vehicle in cold weather to prevent the entrance of water.

D180H01P-GAT

Parking brake

If the atmospheric temperature is below freezing, park the vehicle with the gearshift lever in 1st or reverse and do not engage the parking brake. If the parking brake is engaged and there is moisture on the brake linings, the linings could become frozen to the brake drums, making it impossible to release the parking brake.

When parking on a steep slope, turn the front wheels in towards the kerb and chock the wheels.

D180I01P-GAT

Washing the vehicle

The salt and other chemicals spread on winter roads in some areas can have a detrimental effect on a vehicle body. You should therefore wash the vehicle as often as convenient in accordance with our care-instruction. Have a preservative applied and the underfloor protection checked at an authorized HYUNDAI dealer before and after the cold weather season.

D180J01P-GAT

Weather strip

To prevent freezing of the weather strip on the doors, the roof, etc., they should be treated with silicone grease.

D180K01P-GAT

Snow tires

The use of snow tires is recommended for driving in snow and ice. To preserve driving stability, mount snow tires of the same size and tread pattern on all four wheels.
Snow tires worn more than 50% are no longer suitable for use as snow tires.
Snow tires which do not meet specifications must not be used.

NOTE:
The laws and regulations concerning snow tires (driving speed, required use, type, etc.) vary. Find out and follow the laws and regulations in your area.

D180L01P-GAT

Tire chains

If tire chains are to be used, be sure that they are mounted on the rear wheels.
Use only tire chains which are designed for use with the tires mounted on the vehicle; use of the incorrect size or type of chain could result in damage to the vehicle body.
Before driving over long stretches of road which are free of snow, you should remove the chains to avoid damage to the tires.

NOTE:
The laws and regulations concerning tire chains vary. Find out and follow the laws and regulations in your area.

D180M02P-GAT

ADDITIONAL EQUIPMENT

It is a good idea to carry a shovel or a short-handled spade in the vehicle during the winter so that you can clear away snow if you get stuck. A small hand-brush for sweeping snow off the windscreen and rear window is also useful.

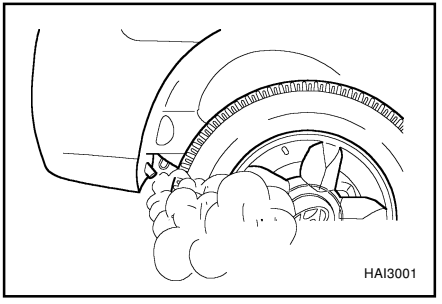

CAUTION:(If installed)
White smoke may arise from the fuel fired heater outlet in the driver's front wheel housing during winter driving. This is a normal condition.
But, if a black (or gray) smoke is generated heavily, have the fuel fired heater checked by your Hyundai dealer.
If the engine stops while the fuel fired heater is operating, whizzing noise may be heard from the lower of the battery in the engine compartment.

This is due to cleaning process for fuel fired heater and a normal operation.
It will takes about 1- 3 minutes according to fuel quantity in the fuel fired heater fuel line.

D190A02P-GAT

LIMITED-SLIP DIFFERENTIAL (If installed)

A limited-slip differential, if equipped, is for the rear wheel differential only. The features of this limited-slip differential are described below:
Just as with a conventional differential, the wheel on one side is allowed to turn at a different speed from the wheel on the other side when the vehicle is cornering. The difference between the limited-slip differential and a conventional differential is that if the wheel on one side of the vehicle loses traction, a greater amount of torque is applied to the rear wheel on the other side to improve traction.

NOTE:

In a stationary position, the L.S.D will operate when the torque difference between the rear right wheel and the left wheel is from 5Kgf·m to 9 Kgf·m.

The following procedures can be used to confirm that the limited-slip differential is functioning properly:

(1) Position the vehicle so that one wheel is on a dry paved surface and the other on ice, snow, mud, etc.
Drive the vehicle, and observe the operation of the limited-slip differential.
The vehicle should not become stuck if the differential is functioning properly.
(2) Depress the accelerator pedal gradually, and then when traction is good, depress it forcefully. If the vehicle accelerates well, the differential is functioning properly.

CAUTION:

(1) Never start the engine while one of the rear wheels is jacked up and the other in contact with the ground; doing so may cause the vehicle to jump forward.
(2) If one of the rear wheels begins to spin in mud, snow, etc., the vehicle can sometimes be driven out by depressing the accelerator pedal further; however, avoid running the engine continuously at high rpm because doing so could damage the limited-slip differential.

E000A01P-GAT

4. IN CASE OF EMERGENCY

E010A01P-GAT

TOOLS AND JACK

To provide for cases of emergency, always remember where the tools and jack are stowed and how the jack is removed for use.

E010B02P-GAT

Storage places

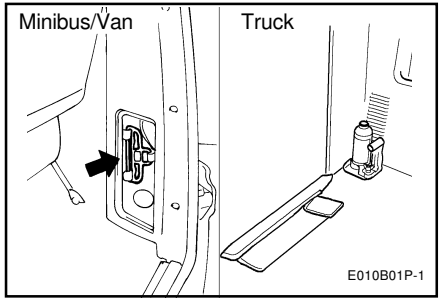

The tool box is at the right rear corner of the luggage compartment. (Minibus, Van) or on the floor behind the seat (truck).

1. Tools
2. Jack

E010C03P-GAT

Tools

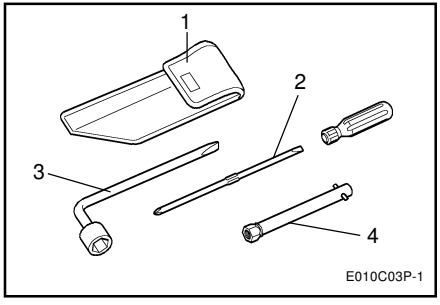

1. Tool case
2. Screwdriver
3. Wheel nut wrench
4. Spare wheel carrier wrench (Truck only)

E020A01P-GAT

JACK

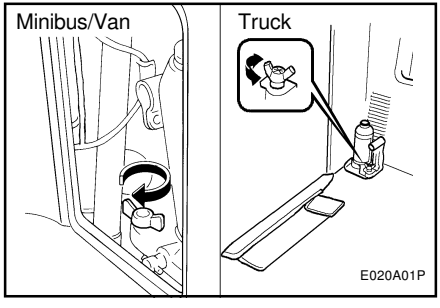

To remove

Turn the knob clockwise, and then remove the lid.

Remove the securing nut, and then take out the jack.

E030A01P-GAT

JACK HANDLE

To use the jack handle

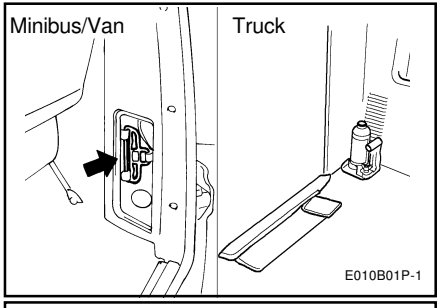

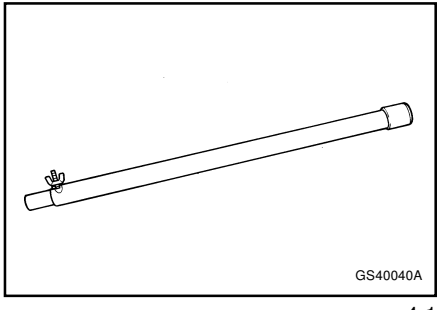

The jack handle is stored as shown in the figure.
To assemble, follow the steps below.

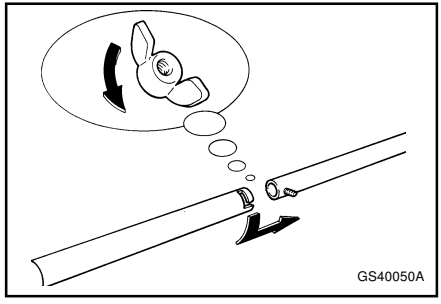

1. Loosen the holding nut and pull out the handle.

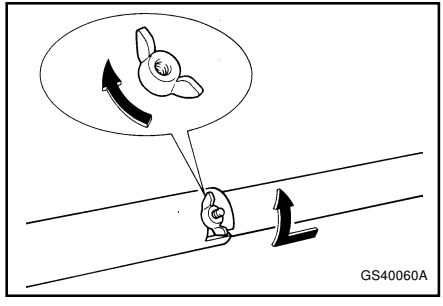

2. Insert the opposite end of the handle, and then tighten the holding nut.

E040A02P-GAT

JACKING UP THE VEHICLE

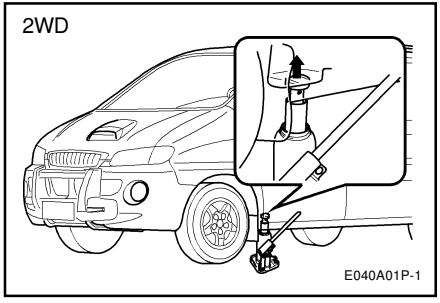

The method for jacking up the vehicle should be remembered in order to change a tire in the event of a puncture and in order to install tire chains.

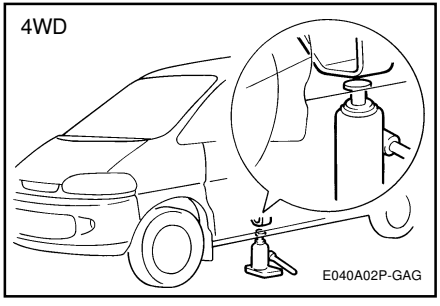

After stopping the engine and applying the parking brake on a flat level surface, also use chocks to hold the wheels.

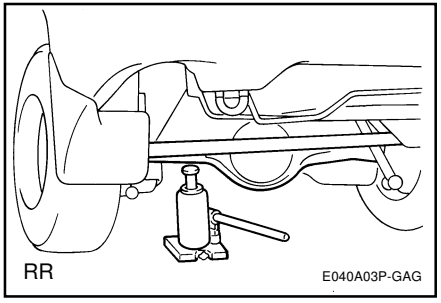

Position the jack only at the specified points indicated in the illustration, and the use of the jack at other points could damage the vehicle body.

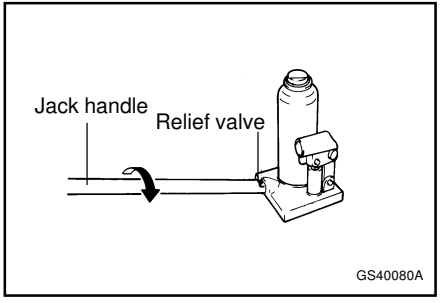

Using the jack handle, turn the relief valve clockwise until it reaches a stop.

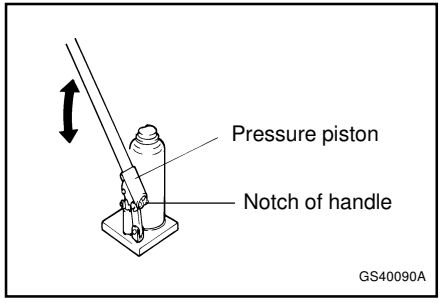

Then fit the handle into the pressure piston, and align the groove of the handle with the notch of the holder.
Move the jack handle up and down to raise the piston.
Using a jack handle, turn the relief valve counterclockwise slowly to lower the piston.
Press the piston down all the way, and turn the relief valve clockwise as far as possible.

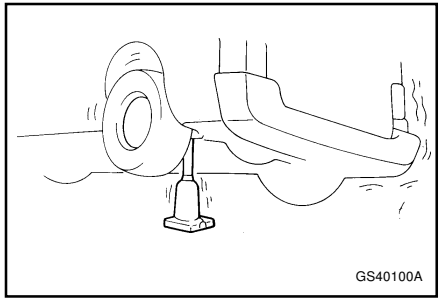

CAUTION:

(1) Use only the jack included with the vehicle and use it only for changing a wheel.
(2) Position the jack on a hard level surface.
(3) If the relief valve is loosened by turning it 2 or more times in the counterclockwise direction, the jack's oil will leak and the jack cannot be used.
(4) This jack is hydraulic, and the ram is a two-stage type. When both rams are raised and the stop mark(Green paint) of the upper ram becomes visible, stop jacking immediately.
Further extension of the ram may damage the jack.
(5) When the jack is used, be sure that there is no one in or under the vehicle.
(6) When jacking up the vehicle, do so only until the tires are slightly lifted from the ground. It is dangerous to jack up the vehicle more than that much.
(7) It is very dangerous if the jack somehow slips, so never leave the vehicle in the jacked-up position, and never shake the vehicle while it is raised.

E040B01P-GAT

To jack up vehicle on 4-wheel drive

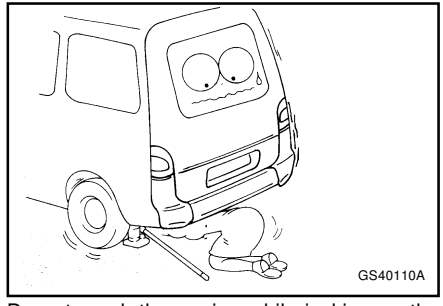

Do not crank the engine while jacking up the vehicle.
The tire on the ground may turn and the vehicle may roll off the jack.

E050A01P-GAT

SPARE WHEEL (If installed)

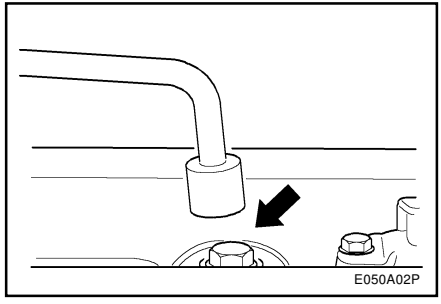

Check the air pressure of the spare tire frequently and make sure it is ready for emergency use at any time.
Maintaining the spare wheel at the highest specified air pressure will ensure that it can always be used under any conditions (city/-high-speed driving, varying load weight, etc.).
The spare wheel is stored under the floor of the cargo space.
To remove the spare wheel, follow the procedures described below.

1. Use the wheel nut wrench to loosen the holder mounting bolt.
2. Lift up the hanger and separate it from the holder, and then lower the hanger and remove the spare tire.

E050B01P-GAT

To reinstall the spare tire

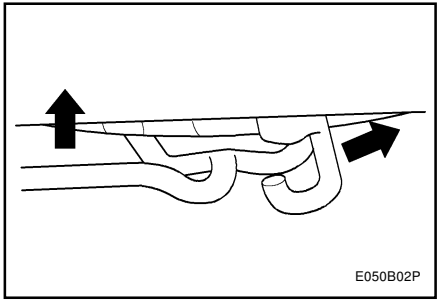

1. Set the spare tire on the center of the hanger.
2. Raise the hanger and hook it onto the holder.

CAUTION:

The spare wheel should always be securely in position.
If a flat tire is changed, put the flat tire in the spare wheel mounting position, and use the wheel nut wrench to secure it firmly.

E050C01P-GAT

SPARE WHEEL (TRUCK)

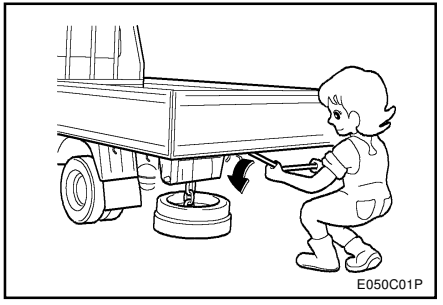

1. Connect the spare wheel carrier wrench with the wheel nut wrench.
2. Insert the spare wheel carrier wrench into the hole in the spare tire carrier then turn the wheel nut wrench counterclockwise, and the spare tire comes down.

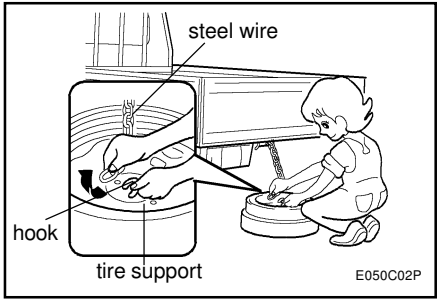

3. Disconnect the steel wire from the tire support hook after the spare tire comes down completely.
4. To install the spare tire, build the spare tire as following.

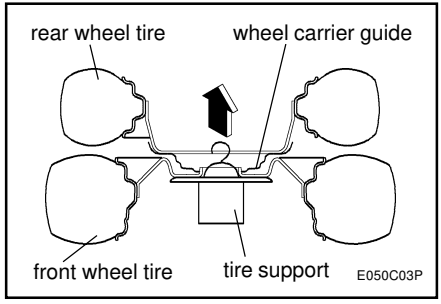

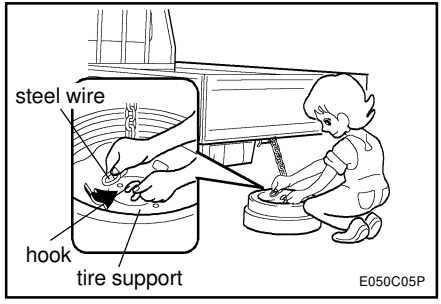

5. Connect the steel wire with the support hook.

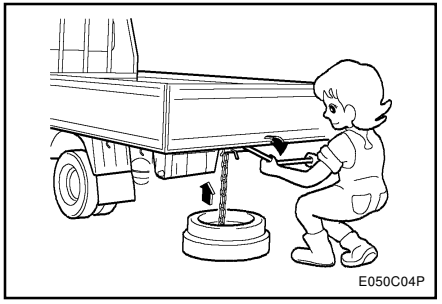

6. Insert the spare wheel carrier wrench into the hole in the spare tire carrier then turn the wheel nut wrench clockwise.
7. After the spare tire fully raised, tighten by hand to about 30 kg · f (295 N).
   Then, remove the spare wheel carrier wrench with care not to turn it in the reverse direction. Now, ensure that the tire is secured in position.

CAUTION:

If you cannot secure the spare tire in position, load it on the cargo deck and ask your nearest service shop for inspection.

E050D01P-GAT

SPARE TIRE ANTI-THEFT DEVICE (If installed)

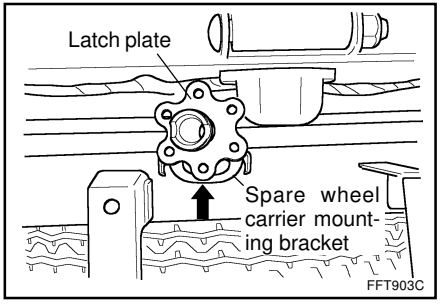

This device is designed to protect the spare tire theft.
After fitting the latch plate hole in spare wheel carrier mounting bracket with a spare wheel carrier wrench, lock with a key bought personally.

E060A02P-GAT

IF A TIRE IS FLATENED

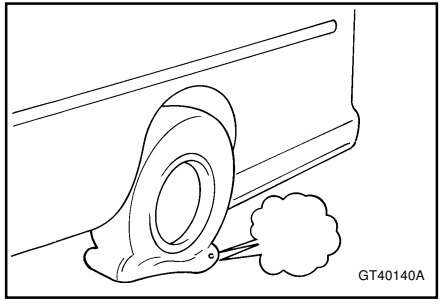

If a tire must be changed due to a flat, do so only after first following every precaution for safety parking the vehicle in a place where it is not a traffic hazard or dangerous to you and your vehicle's occupants, on a flat surface, and in such a way that you will not be injured by any part of the vehicle while changing the tire.

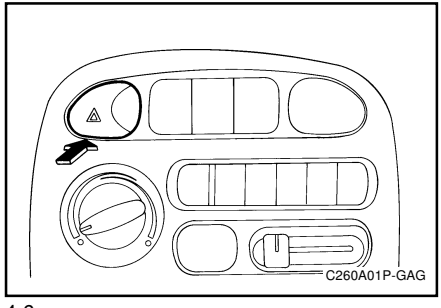

1. Comply with local regulations concerning the protection of broken-down vehicles by switching on the hazard warning flashers, setting up a warning triangle flashing signal lamp, etc., at an adequate distance from the vehicle.
   Others in the vehicle should get out of the vehicle and wait in a safe place.

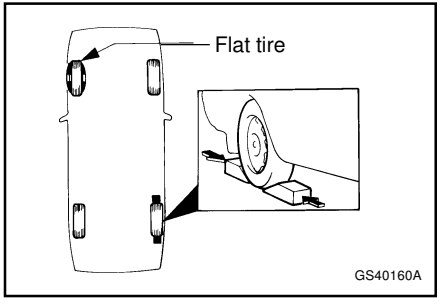

2. Position the vehicle on a flat, hard surface and apply the parking brake.
   To prevent the vehicle from rolling when it is raised on the jack, chock the wheel diagonally opposite to that being changed.
3. Prepare the spare wheel, jack and wheel nut wrench.

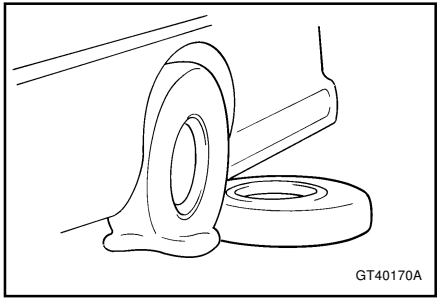

4. The spare tire should be placed, for safety, under the vehicle and near the jack for convenient access when ready to be mounted.

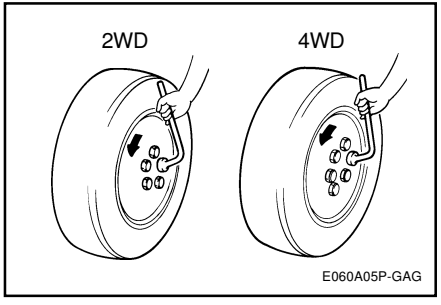

5. Loosen the wheel nuts with the wheel nut wrench as shown in the drawing. Do not remove the wheel nuts yet.

6. Refer to the section entitled "Jacking up the vehicle" to select a jacking point near the flat tire at which to position the jack, and then raise the vehicle until the tire is slightly off the ground.
   Remove the wheel nuts.

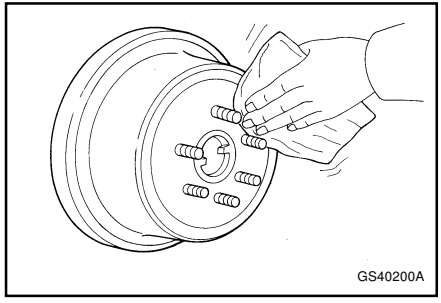

7. Clean away any mud, etc. on the hub surface or in the installation holes in the wheel, and then mount the spare tire.
8. With the tapered side of the wheel nuts facing toward the wheel (see illustration), screw the nuts onto the bolt and tighten all the way by hand, to the extent that the wheel is not loose.

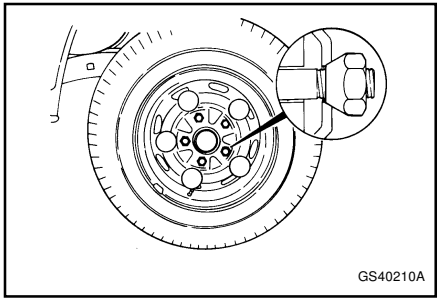

CAUTION:
Never put oil on the wheel bolts or nuts, because this may cause them to become loose.

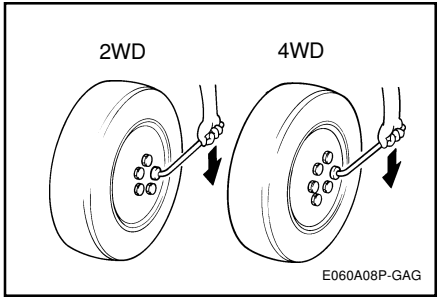

9. Lower the vehicle slowly and then alternately tighten the nuts until each nut has been tightened to the specified torque.

Tightening torque:

	Front	Rear
Minibus, Van	12 to 14 kg.m (118 to 137 N.m, 87 to 101 lbs.ft)	12 to 14 kg.m (118 to 137 N.m, 87 to 101 lbs.ft)
Truck	18 to 22 kg.m (177 to 216 N.m, 130 to 159 lbs.ft)	18 to 22 kg.m (177 to 216 N.m, 130 to 159 lbs.ft)

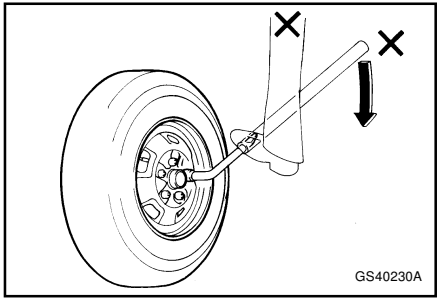

CAUTION:
When tightening the wheel nuts, do not apply excessive force to tighten them, such as by using your foot to apply force to the wheel nut wrench, or by using a pipe or similar tool.

10. Remove the chock from the wheel.
11. Place the wheel cap, and then tap the wheel cap edge with your hand.
12. The fault tire should be repaired and balanced as soon as possible.

13. After the spare tire is once again replaced by the original tire, adjust the inflation pressure to the correct specification.

E070A01P-GAT

TOWING

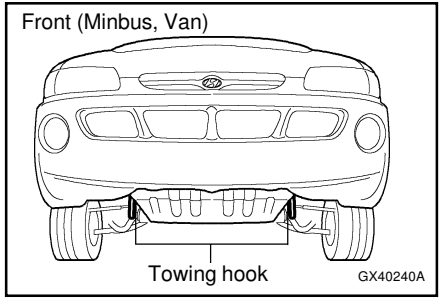

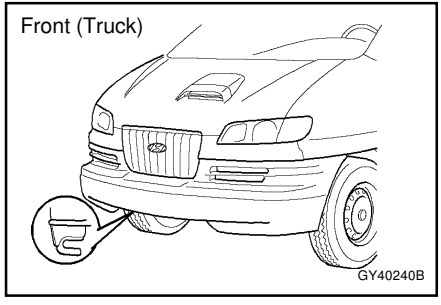

Tow at the illustrated point.
Using any part other than the designated towing hooks could result in damage to vehicle body.

The regulations concerning towing may differ from country to country. It is recommended that you may obey the regulations in your area. If your vehicle is to be towed, pay careful attention to the following points.

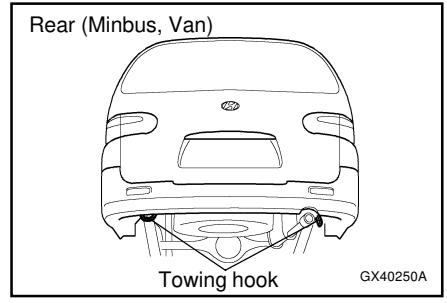

(1) Move the gearshift lever to neutral.
(2) Be sure the towing speed is within the legal limit.
(3) On vehicles with steering lock system, turn the ignition switch to "ACC" to unlock the steering wheel. If you will be using the turn signals while being towed, turn the ignition switch to "ON" position.
(4) To prevent the exhaust gas from entering the towing vehicle, set the air selection lever on the heater control to the recirculation position.
(5) Turn on the hazard warning lamps.
(6) During towing, make sure that close contact is maintained between the drivers of both vehicles, and that the vehicles travel at low speed. Avoid abrupt starting or stopping which might subject the vehicles to shock.
(7) If the transmission is malfunctioning or damaged, tow the vehicle with the rear wheels raised off the ground.
(8) If the vehicle is equipped with a brake booster system, the brake boosting power will be lost and greater force will be required to depress the brake pedal.
(9) If the vehicle is equipped with a power steering system, greater force will be required to operate the steering wheel.

NOTE:

Your vehicle should only be used to tow another vehicle if the weight of the other vehicle is less than that of your vehicle.

C190A01A-GAT

TRAILER OR VEHICLE TOWING

If you are considering towing with your car, you should first check with your Province Department of Motor Vehicles to determine their legal requirements.
Since laws vary from province to province, the requirements for towing trailers, cars, other types of vehicles, or apparatus may differ. Ask your Hyundai dealer for further details before towing.

CAUTION:

Do not do any towing with your car during its first 2,000 km (1,200 miles) in order to allow the engine to properly break in. Failure to heed this caution may result in serious engine or transmission damage.

C190B01S-AAT

Trailer Hitches

Select the proper hitch and ball combination, making sure that its location is compatible with that of the trailer or vehicle being towed. Use a quality non-equalizing hitch which distributes the tongue load uniformly throughout the chassis.

The hitch should be bolted securely to the car and installed by a qualified technician. DO NOT USE A HITCH DESIGNED FOR TEMPORARY INSTALLATION AND NEVER USE ONE THAT ATTACHES ONLY TO THE BUMPER.

C190C01P-GAT

Trailer Brakes

If your trailer is equipped with a braking system, make sure it conforms to federal and/or local regulations and that it is properly installed and operating correctly.

NOTE:

If you tow a trailer or vehicle, your car will require more frequent maintenance due to the additional load. See "Maintenance Under Severe Usage Conditions" on page 6-8.

CAUTION:

- **Never connect a trailer brake system directly to the vehicle brake system.**
- **When towing a trailer on steep grades (in excess of 12%) pay close attention to the engine coolant temperature gauge to ensure the engine does not overheat. If the needle of the coolant temperature gauge moves across the dial towards "H" (HOT), pull over and stop as soon as it is safe to do so, and allow the engine to idle until it cools down. You may proceed once the engine has cooled sufficiently.**

C190D01A-GAT

Safety Chains

Should the hitch connection between your car and the trailer or vehicle you are towing fail, the trailer or vehicle could wander dangerously across other lanes of traffic and ultimately collide with another vehicle.

To eliminate this potentially dangerous situation, safety chains, attached between your car and the trailer or towed vehicle, are required in most provinces.

C190E04P-GAT

Trailer Weight Limit

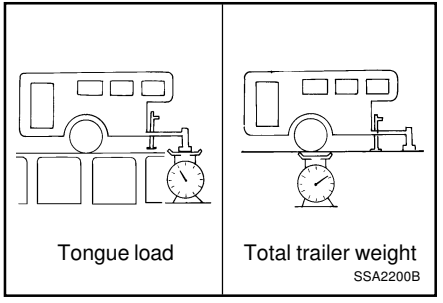

Tongue loads can be increased or decreased by redistributing the load in the trailer. This can be verified by checking the total weight of the loaded trailer and then checking the load on the tongue.

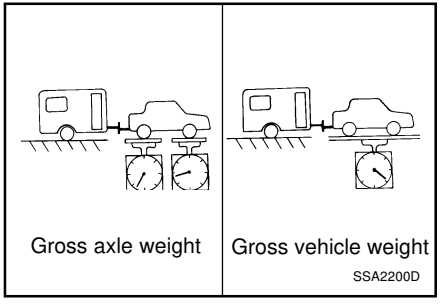

NOTE:

1. **Never load the trailer with more weight in the back than in the front. About 60% of the trailer load should be in the front half on the trailer and the remaining 40% in the rear.**
2. **The total gross vehicle weight with trailer must not exceed the Gross Vehicle Weight Rating (GVWR) shown on the vehicle identification plate (see page 1-2). The total gross vehicle weight is the combined weight of the vehicle, driver, all passengers and their luggage, cargo, hitch, trailer tongue load and other optional equipment.**
3. **The front or rear axle weight must not exceed the Gross Axle Weight Rating (GAWR) shown on the vehicle identification plate (see page 1-2). It is possible that your towing package does not exceed the GVWR but exceeds the GAWR. Improper trailer loading and/or too much luggage in the tail gate can overload the rear axle. Redistribute the load and check the axle weight again.**
4. **The maximum permissible static vertical load on the coupling device is 75 kg.**

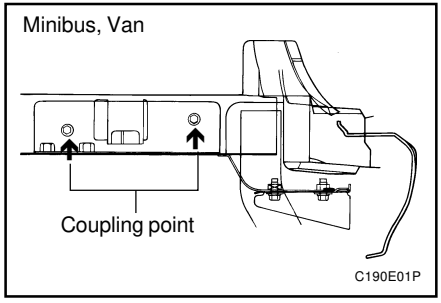

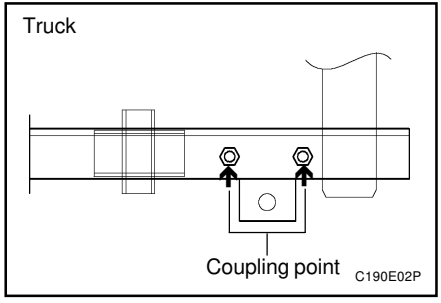

5. **The maximum permissible overhang of the coupling point:**

Short	Minibus,Van	1120 mm
Long	Minibus,Van	1190 mm
	Truck (1 ton)	1240 mm
Extra Long (1.25 ton)	Standard	1370 mm
	Super	

6. **The maximum permissible mass of the coupling device is 25 kg. (Truck only)**

CAUTION:

The following specifications are recommended when towing a trailer. The loaded trailer weight cannot safely exceed the values in the following chart.

kg. (lbs)

	Maximum Towable Weight		
	Trailer weight	Tongue load	
		Minibus, Van	Truck
With brake Type	1,500 (3,307)	75 (165.4)	60 (132.3)
Without brake Type	700 (1,543)	-	

WARNING:

- **Improperly loading your car and trailer can serious affect its steering and braking performance causing a crash in which you may be seriously injured.**
- **For automatic transmission vehicles, the trailer should be towed with the towing vehicle unloaded, with the exception of the driver.**
  Otherwise, the automatic transmission oil temperature may rise to a temperature that may result in serious damage of the automatic transmission.

C190F01A-GAT

Trailer or Vehicle Towing Tips

1. Before towing, check hitch and safety chain connections as well as proper operation of the trailer running lights, brake lights, and turn signals.
2. Always drive your vehicle at a moderate speed (Less than 100 km/h).
3. Trailer towing requires more fuel than normal conditions.
4. To maintain engine braking efficiency and electrical charging performance, do not use fifth gear (manual transmission) or overdrive (automatic transmission).
5. Always secure items in the trailer to prevent load shift while driving.
6. Check the condition and air pressure of all tires on the trailer and your car. Low tire pressure can seriously affect the handling. Also check the spare tire.
7. The vehicle/trailer combination is more affected by crosswind and buffeting. When being passed by a large vehicle, keep a constant speed and steer straight ahead. If there is too much wind buffeting slow down to get out of the other vehicle's air turbulence.
8. When parking your car and trailer, especially on a hill, be sure to follow all the normal precautions. Turn your front wheel into the curb, set the parking brake firmly, and put the transmission in 1st or Reverse (manual) or Park (automatic). In addition, place wheel chocks at each of the trailer's tires.
9. If the trailer has electric brakes, start your vehicle and trailer moving, and then apply the trailer brake controller by hand to be sure the brakes are working. This lets you check your electrical connection at the same time.
10. During your trip, check occasionally to be sure that the load is secure, and that the lights and any trailer brakes are still working.
11. Avoid jerky starts, sudden acceleration or sudden stops.
12. Avoid sharp turns and rapid lane changes.
13. Avoid holding the brake pedal down too long or too frequently. This could cause the brakes to overheat, resulting in reduced braking efficiency.
14. When going down a hill, shift into a lower gear and use the engine braking effect. When ascending a long grade, downshift the transmission to a lower gear and reduce speed to reduce chances of engine overloading and/or overheating.
15. If you have to stop while going uphill, do not hold the vehicle in place by pressing on the accelerator. This can cause the automatic transmission to overheat. Use the parking brake or footbrake.

NOTE:

When towing, check transmission fluid more frequently.

CAUTION:

If overheating should occur when towing, (temperature gauge reads near red zone), taking the following action may reduce or eliminate the problem.

1. **Turn off the air conditioner.**
2. **Reduce highway speed.**
3. **Select a lower gear when going uphill.**
4. **While in stop and go traffic, place the gear selection in park or neutral and idle the engine at a higher speed.**

D030A01A-AAT

IF THE ENGINE OVERHEATS

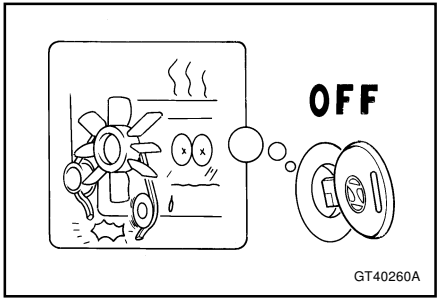

If your temperature gauge indicates overheating, you experience a loss of power, or hear loud pinging or knocking and the engine is probably too hot. If this happens to you, you should:

1. Pull off the road and stop as soon as it is safe to do so.
2. Place the gear selector lever in "P" (automatic), or neutral (manual transmission) and set the parking brake. If the air conditioning is on, turn it off.

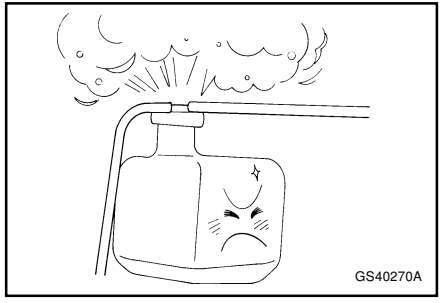

3. If engine coolant is running out under the car or steam is coming out from the hood, stop the engine. Do not open the hood until the engine coolant has stopped running or the steaming has stopped. If there is no visible loss of engine coolant and no steam, leave the engine running and check to be sure the engine cooling fan is operating. If the fan is not running, turn the engine off.
4. Check to see if the water pump drive belt is missing. If it is not missing, check to see that it is tight. If the drive belt seems to be satisfactory, check for engine coolant leaking from the radiator, hoses or under the car. (If the air conditioning had been in use, it is normal for cold water to be draining from it when you stop).

WARNING:

While the engine is running, keep hair, hands, long hair and clothing away from moving parts such as the fan and drive belts to prevent injury.

5. If the water pump drive belt is broken or engine coolant is leaking out, stop the engine immediately and call the nearest Hyundai dealer for assistance.

WARNING:

Do not remove the radiator cap when the engine is hot. This can allow coolant to be blown out of the opening and cause serious burns.

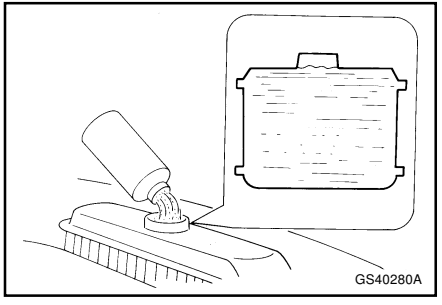

6. If you cannot find the cause of the overheating, wait until the engine temperature has returned to normal. Then, if engine coolant has been lost, carefully remove the radiator cap and add engine coolant to bring the fluid level in the reservoir up to the halfway mark.
7. Proceed with caution, keeping alert for further signs of overheating. If overheating happens again, call a Hyundai dealer for assistance.

CAUTION:

Serious loss of engine coolant indicates there is a leak in the cooling system and this should be checked as soon as possible by a Hyundai dealer.

E090A01P-GAT

BLEEDING THE FUEL SYSTEM

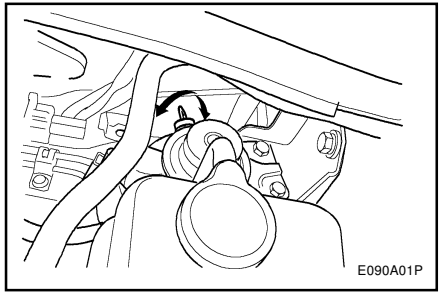

The fuel system should be bled to remove air as described in the illustration if the fuel supply is exhausted during travel, when the fuel filter is replaced, or if the vehicle is not used for a long time.

1. Loosen the air plug at the top of the fuel filter.
2. Pump the hand pump until there are no more bubbles in the fuel coming out of the air plug. When doing this, place a cloth around the air plug to prevent the escaping fuel from spewing about.
3. Tighten the air plug when there are no more bubbles in the fuel.
4. Continue pumping until the hand pump becomes stiff.
5. Finally, check to be sure that there is no leakage of fuel.
   If in doubt, consult your nearest authorized HYUNDAI dealer.

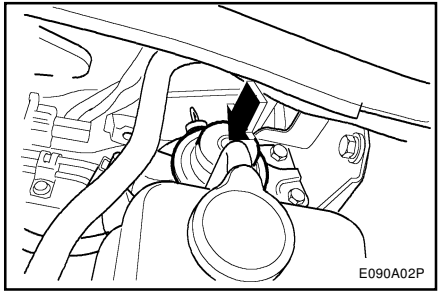

WARNING:

(1) Do not smoke or have any other open flame near the vehicle while bleeding the fuel system.

(2) Be sure to carefully clean away any fuel which spilled onto nearby parts coming out of the air plug, because such accumulations of fuel might ignite and cause a fire.

E100A01P-GAT

REMOVAL OF WATER FROM THE FUEL FILTER

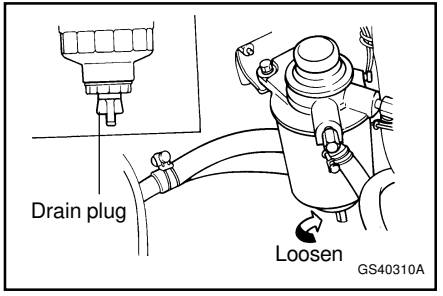

If the fuel filter warning lamp illuminates during driving, it indicates that water has accumulated in the fuel filter. If this occurs, remove the water as described below.

1. Loosen the drain plug at the bottom of the fuel filter.

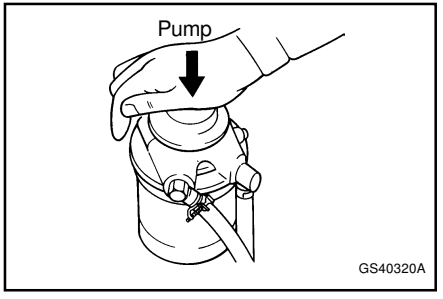

2. Operate the hand pump slowly 6 or 7 times in order to force the water out through the drain plug.
3. Tighten the drain plug when water no longer comes out.
4. Loosen the air plug and bleed the air. (Refer to "Bleeding the fuel system".)
5. Check to be sure that the warning lamp illuminates when the ignition key is turned to "ON", and that it goes off when the engine is started.
   If in doubt, consult your nearest authorized HYUNDAI dealer.

WARNING:

(1) Do not smoke or have any other open flame near the vehicle while bleeding the fuel system.

(2) Be sure to carefully wipe away any water drained out in this manner, because the fuel mixed in the water might be ignited and result in a fire.

E110A01P-GAT

EMERGENCY STARTING

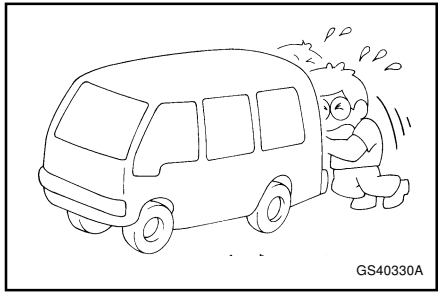

If the engine cannot be started because the battery is weak or dead, the battery from another vehicle can be used with jumper cables to start the engine.

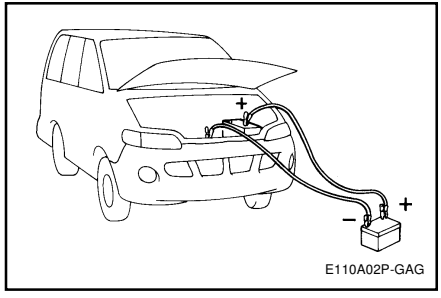

CAUTION:

Do not attempt to start the engine by pulling or pushing the vehicle.

The following points should be observed:

1. Both batteries must be 12V. The capacity (Ah) of the battery supplying current should not be significantly below that of the discharged battery.
2. Use only heavy-duty jumper cables.
3. A discharged battery can freeze. A frozen battery must be thawed out before connecting the jumper cables.
4. There should be no contact between the two vehicles; otherwise current may flow when the positive terminal is connected.
5. The discharged battery must be correctly connected to the vehicle electrical system.
6. Run the engine of the vehicle supplying current.
7. Connect the jumper cables as follows:

(1) Connect one end of one jumper cable to the positive terminal of the flat battery, and the other end to the positive terminal of the booster battery.

(2) Connect one end of the other jumper cable to the negative terminal of the booster battery, and the other end to the engine block of the vehicle with the flat battery at the point farthest from the battery.

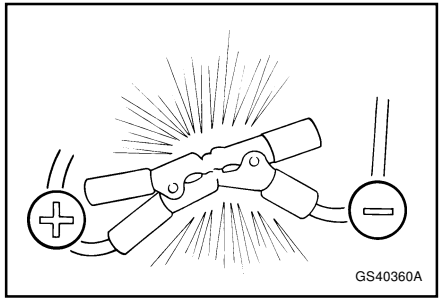

CAUTION:

(1) Do not allow the jumper cable clips to touch one another.

(2) Do not connect the jumper cable to the negative terminal of the flat battery. The battery generates explosive gas, and a spark caused when the jumper cable is disconnected from the negative terminal could ignite this gas and cause an explosion.

(3) Be careful that the jumper cable becomes not caught in the cooling fan, etc.

8. Start engine as described in "Starting the engine".
9. After the engine is started, disconnect the cables in the reverse order.

E120A01P-GAT

FUSES

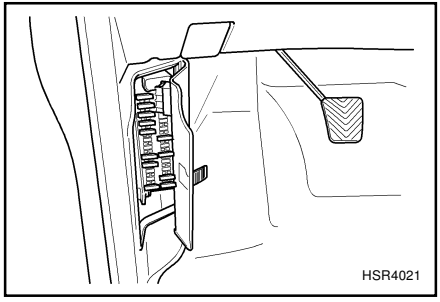

To prevent damage to the electrical system due to short-circuiting or overloading, each individual current circuit is provided with a fuse.
The fuse housing is located under the dashboard on the driver's side.

E120B01P-GAT

Fuse load capacity

The fuse housing cover lists the names of the electrical systems and the fuse capacities.

E120C01P-GAT

Spare fuse

Spare fuses are contained in the fuse housing. Always use a fuse of the same capacity for replacement.

E120D01P-GAT

Changing a fuse

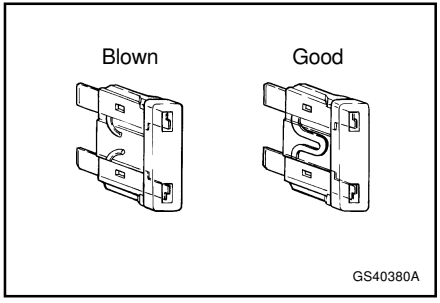

1. Before replacing a fuse, be sure to turn off the electrical item concerned.
2. Remove the fuse housing cover.
3. Referring to the fuse load capacity table, check the fuse pertaining to the problem.
4. If the fuse is blown, pull it straight out. If it is not blown, something else must be causing the problem; contact an authorized HYUNDAI dealer to have the problem checked.
5. Insert a new fuse of the same capacity securely into the clip.

CAUTION:

(1) If the newly inserted fuse blows again after a short time, the cause should be diagnosed and corrected by an authorized HYUNDAI dealer.

(2) Never use a fuse with a capacity larger than that specified or any substitute, such as wire, foil, etc.;doing so will cause the circuit wiring to heat up and can cause a fire.

E130A02P-GAT

REPLACEMENT OF LAMP BULBS

Before replacing a bulb, be sure the light is off. Do not touch the glass part of the new bulb with your bare fingers; the skin oil left on the glass will evaporate when the bulb gets hot and the vapor will condense on the reflector and dim the surface.

CAUTION:

Keep the lamps out of contact with petroleum product, such as oil, gasoline, etc.

E130B01P-GAT

Bulb capacity

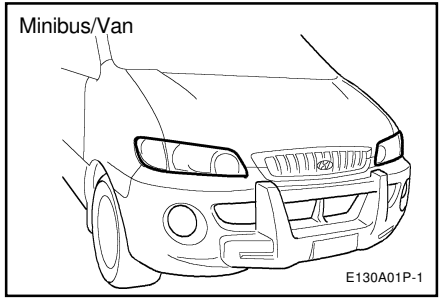

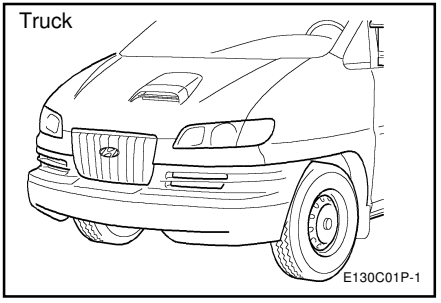

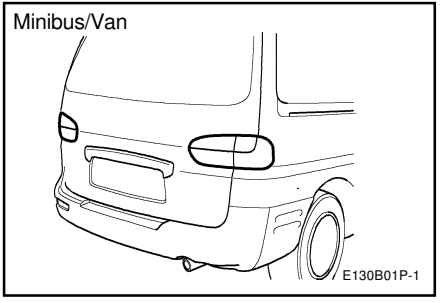

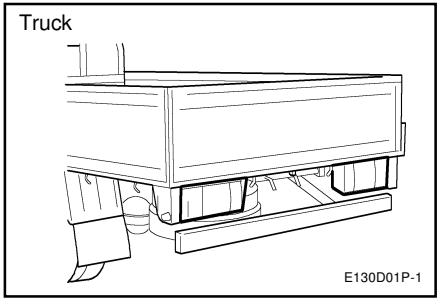

A bulb should only be replaced with a new bulb of the same rating and type. The designation can be found on the base of the bulb.

Headlight, upper/lower beam 60/55W
Front turn-signal lamps 21W
Position lamps 5W
Rear turn-signal lamps 21W
Reversing lamps 21W
Licence-plate lamps 5W
Stop and tail lamps 21/5W
Front fog lamp 55W
Side repeater lamp 5W
Rear fog lamp 21W

G270A01S-AAT

HEADLIGHT BULB

Replacement instructions:

1. Allow the bulb to cool. Wear eye protection.
2. Always grasp the bulb by its plastic base, avoid touching the glass.
3. Disconnect the power cord from the bulb base in the back of the headlight.
4. Push the bulb spring for removing the headlight bulb.
5. Remove the protective cap from the replacement bulb and install the new bulb by matching the plastic base with the headlight hole. Retighten the bulb spring and reconnect the power cord.
6. Use the protective cap and carton to dispose of the old bulb.
7. Check for proper headlight aim.

WARNING

This halogen bulb contains gas under pressure and if impacted could shatter, resulting in flying fragments. Always wear eye protection when servicing the bulb. Protect the bulb against abrasions or scratches and against liquids when lighted. Turn on the bulb only when installed in a headlight. Replace the headlight if damaged or cracked. Keep the bulb out of the reach of children and dispose of the used bulb with care.

G290A03P-AAT

HEADLIGHT AIMING ADJUSTMENT

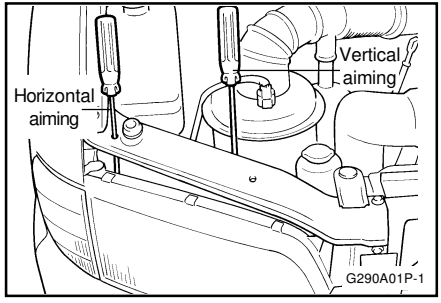

Before performing aiming adjustment, make sure of the following.

1. Keep all tires inflated to the correct pressure.
2. Place the vehicle on level ground and press the front bumper & rear bumper down several times.
3. See that the vehicle is unloaded (except for full levels of coolant, engine oil and fuel, and spare tire, jack, and tools).
4. Clean the head lights lens and turn on the headlight (Low beam).
5. Open the hood.
6. Draw the vertical line (through the center of each headlight) and the horizontal line (through the center of each headlight) on the aiming screen.
   1) Horizontal line dimension from ground
      MINIBUS — 2WD:849 mm (33.43 in.)
      4WD:972 mm (38.27 in.)
      VAN(2WD) : 855 mm (33.66 in.)
      TRUCK — Long Wheel base
      :847 mm (33.35 in.)
      Extra long Wheel base
      :845 mm (33.27 in.)
   2) Distance between each vertical line.
      MINIBUS/VAN(2WD/4WD)
      :1300mm (51.18 in.)
      TRUCK (Long wheel base/Extra long wheel base) : 1272 mm (50.08 in.)
   3) Distance between the headlights and the wall that the lights are tested against: 3000 mm (118.11 in)

   And then, draw the parallel line at 30 mm (1.18 in.) place under the horizontal line.
7. Adjust each cut-off line of the low beam to the parallel line with a phillips screwdriver - VERTICAL AIMING
8. Adjust each cut-off line of the low beam to the each vertical line with a phillips screwdriver - HORIZONTAL AIMING.

G290B02P-AAT

Adjustment After Headlight Assembly Replacement

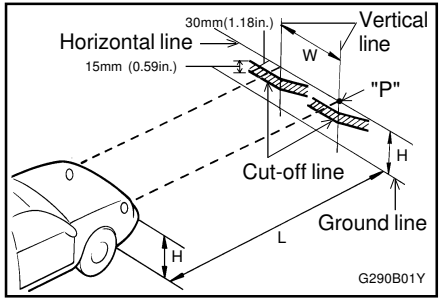

If the vehicle has had front body repair and the headlight assembly has been replaced, the headlight aiming should be checked using the aiming screen as shown in the illustration. Turn on the headlight switch. (Low Beam Position)

1. Adjust headlights so that main axis of light is parallel to center line of the body and is aligned with point "P" shown in the illustration.
2. Dotted lines in the illustration show center of headlights.

"H";
Horizontal center line of headlights from ground.
MINIBUS ┬ 2WD:849 mm (33.43 in.)
└ 4WD:972 mm (38.27 in.)
VAN(2WD) : 855 mm (33.66 in.)
TRUCK ┬ Long Wheel base
:847 mm (33.35 in.)
└ Extra long Wheel base
:845 mm (33.27 in.)

"W";
Distance between each headlight center.
MINIBUS/VAN(2WD/4WD)
:1300mm (51.18 in.)
Truck (Long wheel base/Extra long wheel base) : 1272 mm (50.08 in.)

"L";
Distance between the headlights and the wall that the lights are tested against
: 3,000 mm (118.11 in.).

E130D01P-GAT

Front combination lamps

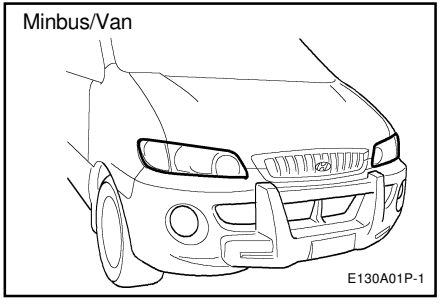

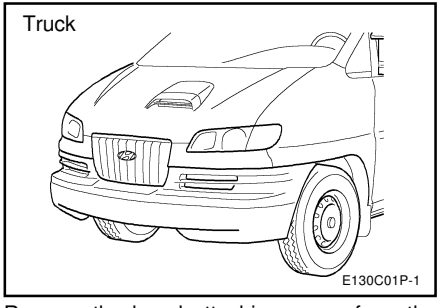

Remove the bezel attaching screw from the front combination lamp.
Then turn the bulb socket counterclockwise to remove it.
To remove the bulb of the side turn-signal lamps, turn the bulb counterclockwise while pressing it inward.

To remove the bulb of the position lamps, pull out the bulb from the socket.

E130E01P-GAT

Rear combination lamps

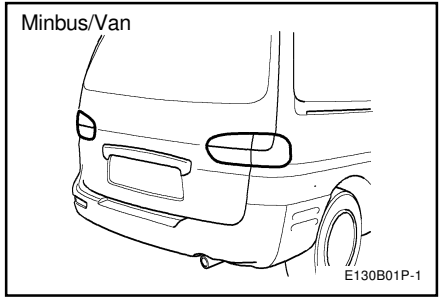

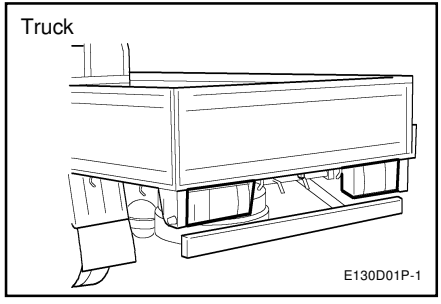

Remove the bezel attaching screws from the rear combination lamp.
Then, turn the bulb socket counterclockwise to remove it.

And remove the bulb by turning it counterclockwise while pressing it inward.

E130F01P-GAT

Licence-plate lamps

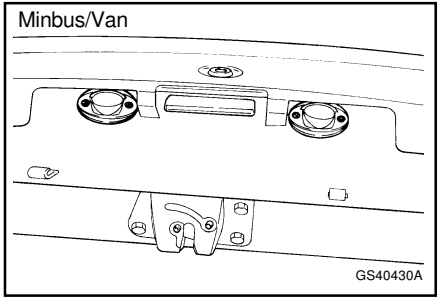

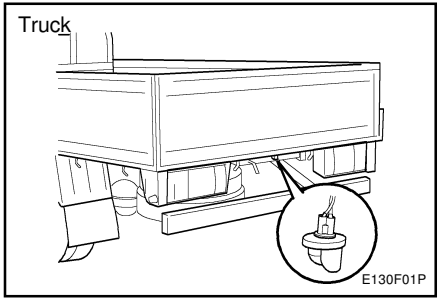

Remove the lens mounting screws, remove the lens, then remove the bulb by turning it counterclockwise while pressing it inward.

E130G01P-GAT

Room lamp

Insert a screwdriver into the notch of the lamp assembly and pry gently to remove the lens. Remove the lamp bulb from the lamp holder.

NOTE:

Wrap a piece of cloth around the tip of the screwdriver in order to avoid scratching the lens.

E130H01P-GAT

Step lamp (If installed)

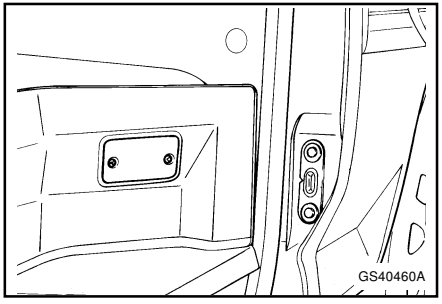

Remove the lens mounting screws, remove the lens, and then remove the bulb by turning it counterclockwise while pressing it inward.

F000A01P-GAT

5. APPEARANCE CARE

F010A01P-GAT

APPEARANCE CARE

In order to maintain the value of your vehicle, it is necessary to perform regular maintenance using the proper procedure. Be sure to maintain your vehicle in compliance with any pertinent environmental pollution control regulations. Carefully select the materials to be used for washing, etc., to be sure that they do not contain corrosives; if in doubt, contact an authorized HYUNDAI dealer for assistance in the selection of these materials.

F010B01P-GAT

Washing

Chemicals contained in the dirt and dust picked up from the road surface can damage the paint coat and body of your vehicle if left in prolonged contact.
Frequent washing is the best way to protect your vehicle from this damage. This will also be effective in protecting it from environmental elements such as rain, snow, salt air, etc.
Do not wash the vehicle in direct sunlight.
Park the vehicle in the shade and spray it with water to remove dust. Next, using an ample amount of clean water and a vehicle washing brush or sponge, wash the vehicle from top to bottom.
Use a mild vehicle washing soap if necessary. Rinse thoroughly and wipe dry with a soft cloth. After washing the vehicle (including washing in an automatic vehicle wash), carefully clean the joints and flanges of the doors, hood, etc., where dirt is likely to remain.

F010C01P-GAT

Waxing

Waxing the vehicle will help prevent the adherence of dust and road chemicals to the paintwork. Apply a wax solution after washing the vehicle, and apply wax at least once every three months.

F010D01P-GAT

Polishing

The vehicles should only be polished if the paintwork has become stained or lost its luster. Mat-finish parts and plastic bumpers must not be polished; polishing these parts will stain them or damage their finish.

F010E01P-GAT

Wheels

The wheels are painted and, therefore, require the same care and maintenance as the vehicle body.

F010F01P-GAT

Chrome parts

In order to prevent spots and corrosion of chrome parts, wash with water, dry thoroughly, and apply a special protective coating. This should be done move frequently in the winter.

F010G01P-GAT

Window glass

The window glass can normally be cleaned using only a sponge and water.
Glass cleaner can be used to remove oil, grease, dead insects, etc. After washing the glass, wipe dry with a clean, dry, soft cloth.
Never use the same cloth to wipe the window glass as would be used to wipe the paintwork; wax from the painted surfaces could adhere to the glass and reduce its transparency and visibility.

F010H01P-GAT

Wiper blades

Use a soft cloth and glass cleaner to remove grease, dead insects, etc., from the wiper blades. Replace the wiper blades when they no longer wipe properly.

F010I01P-GAT

Chassis and underbody protection

Your vehicle's underbody has been treated at the factory in order to protect it from rust and corrosion. Some areas have been injected with anti-corrosion agents and wax.
The effectiveness of these measures, however, will be reduced by flying stones, road chemicals, etc., as the vehicle is driven.

Have the underbody checked regularly (autumn and spring) and have additional protection treatment carried out as required. As not all of the commercially available materials are suitable for use on your vehicle, it is recommended that you have this work done at an authorized HYUNDAI dealer.
When washing the vehicle, especially in winter, spray the underbody with water to remove dirt and dust which might contain salts, road chemicals, etc.

F010J01P-GAT

Engine compartment

Clean the engine compartment at the beginning and end of winter. Pay particualr attention to flanges, crevices, and peripheral parts where dust containing road chemicals and other corrosive materials might collect.
If salt and other chemicals are used on the roads in your area, clean the engine compartment at least every three months.

F010K01P-GAT

Upholstery and Interior

To maintain the value of your new vehicle, handle the upholstery carefully and keep the interior clean.
Use a vacuum cleaner and brush to clean the seats. If stained, vinyl and synthetic leather should be cleaned with an appropriate cleaner, and cloth fabrics can be cleaned with either upholstery cleaner or a 3% solution of neutral detergent in lukewarm water.
Clean the carpeting with a vacuum cleaner and remove any stains with carpet cleaner.
Oil and grease can be removed by lightly dabbing with a clean colorfast cloth and benzene or spot remover.

F010L01P-GAT

Damaged paint

Small cracks and scratches in the paint coat should be touched up as soon as possible with HYUNDAI paint pencil or spray paint to prevent corrosion. Check body areas facing the road or the tires especially carefully for damage to the paint coat caused by flying stones, etc. The paint code number for your vehicle can be found on the vehicle information code plate.

F010M01P-GAT

Tar

If tar becomes adhered to the vehicle, use special tar remover to remove it as soon as possible. If the tar leaves a stain, polish the affected area.

F010N01P-GAT

Plastic and rubber parts

Use a soft cloth and wash with water. If necessary, a cleaning agent specially designed for plastics can be used. If engine oil, brake fluid, battery fluid, etc., comes in contact with these parts, wash promptly with water and then use alcohol to remove the stain completely.

F010O01P-GAT

Load weight and driving speed

Remove any luggage, etc., which is not necessary from the vehicle. The load weight placed on the roof or towed in a trailer also should not be excessive.
Correctly adjusting the air pressure of the tires before driving under maximum load weight conditions and before driving long distances is especially important.

F010P01P-GAT

Tire replacement

Tires which do not meet the size specifications must not be used. Replacement of the tires must be made as a set of the two front tires, the two rear tires, or all four tires.
A mixture of bias-ply tires and radial tires must not be used. Consult an authorized HYUNDAI dealer regarding tire replacement.

F010Q01P-GAT

Kerb parking

If the tires strike a kerb or concrete parking barrier, they could be damaged, and this damage could become a source of extreme danger when the vehicle is subsequently driven at high speed. If the vehicle is to be driven or onto a kerb or any other such barrier, it should be driven slowly and at an appropriate angle to the kerb or barrier.

F010R01P-GAT

Tire care

For driving safely, and in order to obtain the maximum useful life of the tires, the following points should be observed. For information concerning inspection, air pressure, and rotation of the tires, refer to the part which deals with wheels in the section of this manual entitled "Consumer Information".

F010S01P-GAT

Tire air pressure

The air pressure of the tires must always be maintained in accordance with the specifications, and should be measured when the tires are cool.

If any changes in driving conditions(speed and/or load weight) occur, the air pressure of the tires must meet the specifications which apply to the new driving conditions. If the vehicle is going to be driven under varying load weight, etc., the air pressure must be adjusted in order to meet the highest specifications of the conditions under which the vehicle is driven (high speeds and maximum load weight).

F010T01P-GAT

Tire storage

Storage of the tires should be in a dark, well-ventilated place.

Tires not mounted on rims should be stored vertically. Be sure that the tires are not in contact with fuel, oil grease, etc.

G000A01P-GAT

6. PREVENTIVE MAINTENANCE

G010A01P-GAT

SCHEDULED MAINTENANCE (EXCEPT EUROPEAN COMMUNITY)

The following maintenance services must be performed to assure good vehicle control and performance. Keep receipts for all vehicle services to protect your warranty.

Where both kilometers and time are shown, the frequency of service is determined by whichever occurs first.

R : REPLACE I : INSPECT AND, AFTER INSPECTION, CLEAN, ADJUST, REPAIR OR REPLACE IF NECESSARY

NO.	DESCRIPTION	KILOMETERS X 1000	5	10	20	30	40	50	60	70	80	90
		MONTHS	4	8	16	24	32	40	48	56	64	72
	ENGINE CONTROL SYSTEM MAINTENANCE (GASOLINE)											
1	ENGINE OIL/FILTER		R	R	R	R	R	R	R	R	R	R
2	AIR CLEANER FILTER			I	I	R	I	I	R	I	I	R
3	FUEL FILTER					R			R			R
4	FUEL SYSTEM LEAKS			I	I	I	I	I	I	I	I	I
5	SPARK PLUG					R			R			R
6	VACUUM CRANKCASE VENTILATION HOSE				I		I		I		I	
7	TIMING BELT								I			R
8	DRIVE BELT (FOR WATER PUMP/ALTERNATOR)			I	I	I	I	I	R	I	I	I

G020A03P-GAT

R : REPLACE I : INSPECT AND, AFTER INSPECTION, CLEAN, ADJUST, REPAIR OR REPLACE IF NECESSARY

NO.	DESCRIPTION	KILOMETERS X 1000	5	10	20	30	40	50	60	70	80	90
		MONTHS	4	8	16	24	32	40	48	56	64	72
	ENGINE CONTROL SYSTEM MAINTENANCE (DIESEL)											
1	ENGINE OIL AND FILTER		See Note (1)									
2	AIR CLEANER FILTER			I	I	R	I	I	R	I	I	R
3	FUEL FILTER					R			R			R
4	VALVE CLEARANCE				I		I		I		I	
5	INJECTION TIMING				I		I		I		I	
6	TIMING BELT								I			R
7	DRIVE BELT (FOR WATER PUMP/ALTERNATOR)			I	I	I	I	I	R	I	I	I
8	ENGINE IDLE SPEED				I		I		I		I	
9	FUEL SYSTEM LEAKS			I	I	I	I	I	I	I	I	I
10	INJECTION NOZZLE (If exhaust gas includes black smoke)					I			I			I

Note : (1) For every 6 months or 5,000 km, whichever occurs first : "R"

G030A04P-GAT

R : REPLACE I : INSPECT AND, AFTER INSPECTION, CLEAN, ADJUST, REPAIR OR REPLACE IF NECESSARY

NO.	DESCRIPTION	KILOMETERS X 1000	5	10	20	30	40	50	60	70	80	90
		MONTHS	4	8	16	24	32	40	48	56	64	72
	GENERAL MAINTENANCE											
1	ENGINE COOLANT *1		See below									
2	MANUAL TRANSMISSION OIL			I	I	I	I	I	I	I	I	I
3	AUTOMATIC TRANSMISSION OIL			I	I	I	I	I	I	I	I	I
4	TRANSFER CASE OIL *2		See below									
5	REAR AXLE OIL		R		I		R		I		R	
6	CLUTCH / BRAKE PEDAL FREE PLAY			I	I	I	I	I	I	I	I	I
7	CLUTCH / BRAKE OIL RESERVOIR			I	I	I	I	I	I	I	I	I
8	BRAKE HYDRAULIC FLUID					I			I			I
9	FRONT BRAKE PADS			I	I	I	I	I	I	I	I	I
10	FRONT BRAKE CALIPERS / CYLINDERS / DISC				I		I		I		I	
11	REAR BRAKE DRUMS / LININGS / CYLINDERS				I		I		I		I	
12	HANDBRAKE			I	I	I	I	I	I	I	I	I
13	TIRE CONDITION / PRESSURE			I	I	I	I	I	I	I	I	I
14	EXHAUST SYSTEM / MOUNTING			I	I	I	I	I	I	I	I	I
15	STEERING JOINT / RACK / BOX OIL LEAKS			I	I	I	I	I	I	I	I	I
16	SUSPENSION JOINT / SEALS				I		I		I		I	
17	FRONT WHEEL BEARING				I		I		I		I	
18	ENGINE COOLANT HOSES			I	I	I	I	I	I	I	I	I
19	BRAKE PIPE CORROSION			I	I	I	I	I	I	I	I	I
20	SEATBELTS / MOUNTINGS					I			I			I
21	HEAD LAMPS				I		I		I		I	
22	AIR FILTER (For Evaporator and Blower unit) *3		See below									

*1. For every 24 months or 40,000 km, whichever occurs first : "R"
*2. For every 24 months or 48,000 km, whichever occurs first : "R"
*3. For every 12 months or 20,000 km, whichever occurs first : "R"

G040A02P-GAT

SCHEDULED MAINTENANCE (FOR EUROPEAN COMMUNITY ONLY)

The following maintenance services must be performed to assure good vehicle control and performance. Keep receipts for all vehicle services to protect your warranty.

Where both kilometers and time are shown, the frequency of service is determined by whichever occurs first.

R : REPLACE I : INSPECT AND, AFTER INSPECTION, CLEAN, ADJUST, REPAIR OR REPLACE IF NECESSARY

NO.	DESCRIPTION	KILOMETERS X 1000	7.5	15	30	45	60	75	90
		MONTHS	6	12	24	36	48	60	72
	ENGINE CONTROL SYSTEM MAINTENANCE (GASOLINE)								
1	ENGINE OIL AND FILTER (SG OR ABOVE)*		R	R	R	R	R	R	R
2	AIR CLEANER FILTER			I	R	I	R	I	R
3	FUEL FILTER					R			R
4	FUEL SYSTEM LEAKS				I		I		I
5	SPARK PLUG				R		R		R
6	TIMING BELT						I		R
7	DRIVE BELT (FOR WATER PUMP/ALTERNATOR)			I	I	I	R	I	I

* SF or LOWER : every 10,000 km or 6 months "R".

G050A03P-GAT

R : REPLACE I : INSPECT AND, AFTER INSPECTION, CLEAN, ADJUST, REPAIR OR REPLACE IF NECESSARY

NO.	DESCRIPTION	KILOMETERS X 1000	7.5	15	30	45	60	75	90
		MONTHS	6	12	24	36	48	60	72
	ENGINE CONTROL SYSTEM MAINTENANCE (EXCEPT 2.5 CRDi DIESEL)								
1	ENGINE OIL AND FILTER		R	R	R	R	R	R	R
2	AIR CLEANER FILTER			I	R	I	R	I	R
3	FUEL SYSTEM LEAKS				I		I		I
4	FUEL FILTER				R		R		R
5	VALVE CLEARANCE			I	I	I	I	I	I
6	INJECTION TIMING				I		I		I
7	TIMING BELT						I		R
8	DRIVE BELT (FOR WATER PUMP/ALTERNATOR)			I	I	I	R	I	I
9	ENGINE IDLE SPEED			I	I	I	I	I	I
10	INJECTION NOZZLE (If exhaust gas includes black smoke)				I		I		I

G080A01P-GAT

R : REPLACE I : INSPECT AND, AFTER INSPECTION, CLEAN, ADJUST, REPAIR OR REPLACE IF NECESSARY

NO.	DESCRIPTION	KILOMETERS X 1000	15	30	45	60	75	90
		MONTHS	12	24	36	48	60	72
	ENGINE CONTROL SYSTEM MAINTENANCE (2.5 CRDi DIESEL ONLY)							
1	ENGINE OIL		R	R	R	R	R	R
2	ENGINE OIL FILTER		R	R	R	R	R	R
3	AIR CLEANER FILTER		I	R	I	R	I	R
4	FUEL SYSTEM LEAKS			I		I		I
5	FUEL FILTER			R		R		R
6	DRIVE BELT (FOR WATER PUMP/ALTERNATOR)			I		I		R
7	INJECTION NOZZLE (If exhaust gas includes black smoke)			I		I		I

G060A04P-GAT

R : REPLACE I : INSPECT AND, AFTER INSPECTION, CLEAN, ADJUST, REPAIR OR REPLACE IF NECESSARY

NO.	DESCRIPTION	KILOMETERS X 1000	7.5	15	30	45	60	75	90
		MONTH	6	12	24	36	48	60	72
	GENERAL MAINTENANCE								
1	ENGINE COOLANT *1		See below						
2	MANUAL TRANSMISSION OIL			I	I	I	I	I	I
3	AUTOMATIC TRANSMISSION OIL			I	I	I	I	I	R
4	TRANSFER CASE OIL *2		See below						
5	REAR AXLE OIL		R	I	I	R	I	I	R
6	CLUTCH/BRAKE PEDAL FREEPLAY			I	I	I	I	I	I
7	CLUTCH/BRAKE OIL RESERVOIR			I	I	I	I	I	I
8	BRAKE HYDRAULIC FLUID				I		I		I
9	FRONT BRAKE PAD			I	I	I	I	I	I
10	FRONT BRAKE CALIPERS/CYLINDERS/DISC				I		I		I
11	REAR BRAKE DRUMS/LININGS/CYLINDERS				I		I		I
12	HAND BRAKE			I	I	I	I	I	I
13	TIRE CONDITION/PRESSURE			I	I	I	I	I	I
14	EXHAUST SYSTEM/MOUNTING				I		I		I
15	STEERING JOINT/RACK/BOX/OIL LEAKS				I		I		I
16	SUSPENSION JOINT/SEALS				I		I		I
17	FRONT WHEEL BEARING				I		I		I
18	ENGINE COOLANT HOSES				I		I		I
19	BRAKE PIPE CORROSION			I	I	I	I	I	I
20	AIR FILTER (For Evapoerator and Blower unit) *3		See below						

*1. For every 24 months or 45,000 km, whichever occurs first : "R"
*2. For every 24 months or 48,000 km, whichever occurs first : "R"
*3. For every 12 months or 20,000 km, whichever occurs first : "R"

G070A06P-GAT

MAINTENANCE UNDER SEVERE USAGE CONDITIONS

The following items must be serviced more frequently on cars normally used under severe driving conditions. Refer to the chart below for the appropriate maintenance intervals.

R : REPLACE I : INSPECT AND, AFTER INSPECTION, CLEAN, ADJUST, REPAIR OR REPLACE IF NECESSARY

MAINTENANCE ITEM		MAINTENANCE OPERATION	MAINTENANCE INTERVALS			DRIVING CONDITION
			GASOLINE	DIESEL		
ENGINE OIL AND FILTER		R	EVERY 5,000 KM or 3 MONTHS	Except E.C	EVERY 3,000 KM	A, B, C, F, H
				For E.C	EVERY 4,000 KM (Except 2.5 CRDi)	
					EVERY 7,500 KM or 6 MONTHS (2.5 CRDi only)	
AIR CLEANER FILTER		R	MORE FREQUENTLY			C, E
SPARK PLUGS		R	MORE FREQUENTLY			B, H
TIMING BELT		R	EVERY 60,000 KM or 48 MONTHS (Except 2.5 CRDi)			D, E, F, G
BRAKE PADS, CALIPERS, ROTORS		I	MORE FREQUENTLY			C, D, G, H
REAR BRAKE DRUMS/LININGS		I	MORE FREQUENTLY			C, D, G, H
STEERING GEAR BOX, LINKAGE & BOOTS		I	EVERY 10,000 KM or 6 MONTHS			C, D, E, F
AIR FILTER (For Evaporator and Blower unit)		R	MORE FREQUENTLY			C,E
MANUAL TRANSMISSION OIL		R	EVERY 100,000 KM			A, C, D, E, F, G, H, I, J
AUTOMATIC TRANSMISSION OIL	Except E.C	R	EVERY 40,000 KM			A, C, E, F, G, H, I
	For E.C		EVERY 45,000 KM			

SEVERE DRIVING CONDITIONS

A - Repeated short distance driving
B - Extensive idling
C - Driving in dusty conditions
D - Driving in areas using salt or other corrosive materials or in very cold weather
E - Driving in sandy areas
F - More than 50% driving in heavy city traffic during hot above 32°C (90°F)
G - Driving in mountainous areas
H - Towing a trailer or police car, taxi, or commercial type operation
I - Driving for patrol car, taxi, commercial car or vehicle towing
J - Driving over 170 km/h

G080A01P-GAT

EXPLANATION OF SCHEDULED MAINTENANCE ITEMS

o Engine oil and filter

The engine oil and filter should be changed at those intervals specified in the maintenance schedule. If the vehicle is being driven in severe conditions, more frequent oil and filter changes are required.

G080B01P-GAT

o Valve clearances (DIESEL)

An incorrect valve clearance will not only result in rough engine operation, but will also cause excessive noise and reduced engine output.
Inspect valve clearance and adjust as required while the engine is hot.

Valve-to-rocker arm clearance:

DIESEL:
Hot ..... 0.25 mm (0.0098 in.)
Cold ..... 0.15 mm (0.0059 in.)

G080C01P-GAT

o Fuel lines and connections

Check the fuel lines and connections for leakage and damage. Replace any damaged or leaking parts immediately.

G080D01P-GAT

o Fuel filter

A clogged filter can limit the speed at which the vehicle may be driven, damage the emission system and cause hard starting. If an excessive amount of foreign matter accumulates in the fuel tank, the filter may require replacement more frequently.
After installing a new filter, run the engine for several minutes, and check for leaks at the connections.

G080E01P-GAT

o Vacuum and crankcase ventilation hoses

Inspect the surface of hoses for evidence of heat and/or mechanical damage. Hard and brittle rubber, cracking, tears, cuts, abrasions, and excessive swelling indicate deterioration. Particular attention should be paid to examining those hose surfaces nearest to high heat sources, such as the exhaust manifold.
Inspect the hose routing to assure that the hoses do not come in contact with any heat source, sharp edges or moving component which might cause heat damage or mechanical wear. Inspect all hose connections, such as clamps and couplings, to make sure they are secure, and that no leaks are present. Hoses should be replaced immediately if there is any evidence of deterioration or damage.

G080F01P-GAT

o Fuel hose, vapor hose and fuel filler cap

The fuel hose, vapor hose and fuel filler cap should be inspected at those intervals specified in the maintenance schedule. Make sure that a new fuel hose, vapor hose or fuel filler cap is correctly replaced. Consult your Hyundai dealer if you have any questions.

G080G01P-GAT

o Air cleaner filter

A genuine Hyundai part is recommended for replacement of the air cleaner filter.

G080H01P-GAT

o Spark plugs

Make sure to install new spark plugs of the correct heat range.

G080I01P-GAT

o Drive belts

Inspect all drive belts (water pump and alternator) for evidence of cuts, cracks, excessive wear or oiliness, and replace if necessary. Drive belts should be checked periodically for proper tension and adjusted as necessary.

G080J01P-GAT

o Engine coolant

The coolant should be changed at those intervals specified in the Vehicle Maintenance Requirements Section.

G080K01P-GAT

o Timing belt

Inspect all parts related with the timing belt for damage and deformation. Replace any damaged parts.

G080L01P-GAT

o Manual transmission oil

Check manual transaxle oil according to the maintenance schedule.

NOTE:

If the oil level is low, check for possible leaks before adding oil. Do not overfill.

G080M02P-GAT

o Automatic transmission fluid

The fluid level should be in the "HOT" range of the dipstick, after engine and transaxle are at normal operating temperature. Check the Automatic Transaxle Fluid level with the engine running and the transaxle in neutral, with the parking brake properly applied. Use GENUINE HYUNDAI ATF AUTOMATIC TRANSMISSION FLUID, DIAMOND ATF DEXRON Ⅱ or DIAMOND ATF SP Ⅰ when adding or changing fluid.

G080N01P-GAT

o Brake hoses and lines

Visually check for proper installation, chafing, cracks, deterioration and any leakage. Replace any deteriorated or damaged parts immediately.

G080O01P-GAT

o Brake fluid

Check brake fluid level in the brake fluid reservoir. The level should be between "MIN" and "MAX" marks on the side of the reservoir. Use only hydraulic brake fluid conforming SAE J1703.

G080P01P-GAT

o Rear brake drums and linings

Check for scoring, burning, leaking fluid, broken parts, and excessive wear.

G080Q01P-GAT

o Brake pads, calipers and rotors

Check the pads for excessive wear, discs for run out and wear, and calipers for fluid leakage.

G080R01P-GAT

o Parking brake

Inspect the parking brake system such as parking brake lever, cables, and so on. For detailed service procedures, refer to the Shop Manual.

G080S01P-GAT

o Exhaust pipe connections, muffler and suspension bolts

Check the exhaust pipe, muffler, and suspension connections for looseness or damage.

G080T01P-GAT

o Steering gear box, linkage and boots

With the vehicle stopped and engine off, check for excessive free-play in the steering wheel. Check the linkage for bends or damage. Check the dust boots and ball joints for deterioration, cracks, or damage. Replace any damaged parts.

G080U01P-GAT

o Wheel bearing grease

Check the wheel bearings and grease according to the maintenance schedule. For inspection procedures, see Shop Manual.

H000A01P-GAT

7. EMISSION CONTROL SYSTEM

H010A01P-GAT

EMISSION CONTROL SYSTEM (Gasoline)

Your Hyundai is equipped with an emission control system.
There are three emission control systems which are as follows.

(1) Crankcase emission control system
(2) Evaporative emission control system
(3) Exhaust emission control system

In order to assure the proper function of the emission control systems, it is recommended that you have your vehicle inspected and maintained by an authorized Hyundai dealer in accordance with the maintenance schedule in this manual.

H020A01P-GAT

1. CRANKCASE EMISSION CONTROL SYSTEM

The positive crankcase ventilation system is employed to prevent air pollution caused by blow-by gases being emitted from the crankcase. This system supplies fresh air to the crankcase through the air cleaner. Inside the crankcase, the fresh air mixes with blow-by gases, then passes through the PCV valve into the induction system.

H080A01P-GAT

PCV Valve

The crankcase ventilation system must be kept clean to maintain good engine performance.
Periodic servicing is required to remove combustion products from the PCV valve.

H030A01P-GAT

2. EVAPORATIVE EMISSION CONTROL SYSTEM (Except canister)

The Evaporative Emission Control System is designed to prevent fuel vapors from escaping into the atmosphere.
If the fuel-vapor vent line is clogged or damaged, the fuel-vapor mixture will escape into the atmosphere and cause insufficient emission control.
Disconnect the line at both ends, and blow it clean with compressed air.
Remove the filler cap from the filler pipe, and check to see if there is evidence that the packing contact to the filler pipe is faulty. The overfill limiter (2-way valve) installed on the vapor line between the canister inlet and fuel tank outlet must be checked for correct operation.

H040A01P-GAT

Canister

While the engine is inoperative, fuel vapors generated inside the fuel tank are absorbed and stored in the canister. When the engine is running, the fuel vapors absorbed in the canister are drawn into the induction system through the purge control solenoid valve.

H090A01P-GAT

Purge Control Solenoid Valve

The purge control solenoid valve is controlled by the ECU; when the engine coolant temperature is low, and during idling, it closes, so that evaporated fuel is not taken into the surge tank. After engine warm-up, during ordinary driving, it opens so as to introduce evaporated fuel to the surge tank.

H050A01P-GAT

3. EXHAUST EMISSION CONTROL SYSTEM

The Exhaust Emission Control System is a highly effective system which controls exhaust emission while maintaining good vehicle performance.

H060A01P-GAT

Catalytic Converter

All Hyundai vehicles are equipped with a monolith type three-way catalytic converter to reduce the carbon monoxide, hydrocarbons and nitrogen oxides contained in the exhaust gas.

H100A01P-GAT

Vacuum Hoses, Crankcase Ventilation Hoses and Water Hoses

Inspect the surface of hoses for evidence of heat and mechanical damage.

Hard and brittle rubber, cracking, checking, tears, cuts, abrasions, and excessive swelling indicate deterioration of the rubber.

Particular attention should be paid to examining those surfaces nearest to high heat sources, such as the exhaust manifold.

Inspect the hose routing to assure that the hoses do not come in contact with any heat source or moving component which might cause heat damage or mechanical wear. Inspect all hose connections, such as clamps and couplings, to make sure they are secure and that no leaks are present. Hoses should be replaced immediately if there is any evidence of deterioration or damage.

H110A01P-GAT

Fuel System (tank, pipe line, connections and fuel filler cap)

Check for damage or leakage in the fuel lines and connections. Check for damage and looseness of fuel filler cap. Particular attention should be paid to examine those fuel lines nearest to high heat sources such as the exhaust manifold.

H120A01P-GAT

Distributor Cap, Rotor and Spark Advancer System

Check the distributor cap, rotor and spark advancer system to maintain driveability and good exhaust gas.

I000A01P-GAT

8. CONSUMER INFORMATION

I010A01P-GAT

DIESEL ENGINE ROOM (For 2.6 N/A)

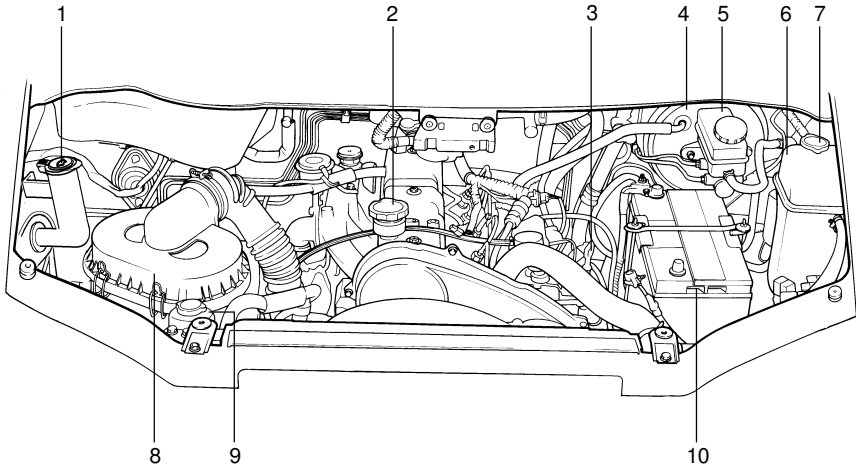

I010A01P-1

1. Windshield washer fluid reservoir cap
2. Engine oil filler cap
3. Engine oil level dipstick
4. Brake booster
5. Brake fluid reservoir
6. Engine coolant reservoir
7. Radiator cap
8. Air cleaner
9. Power steering fluid reservoir
10. Battery

I010D01P-GAT

DIESEL ENGINE ROOM (For 2.5 4D56 T/C)

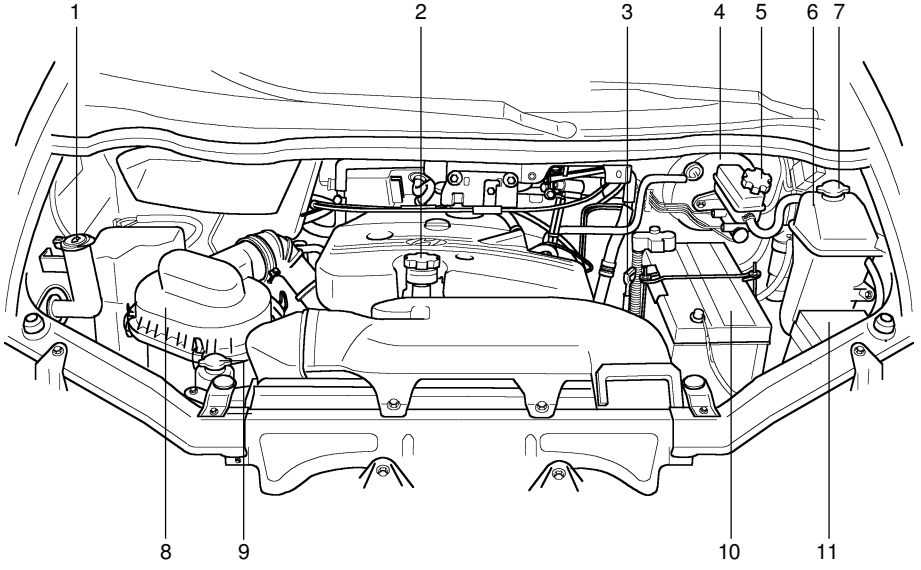

I010D01P

1. Windshield washer fluid reservoir cap
2. Engine oil filler cap
3. Engine oil level dipstick
4. Brake booster
5. Brake fluid reservoir
6. Engine coolant reservoir
7. Radiator cap
8. Air cleaner
9. Power steering fluid reservoir
10. Battery
11. Fuse and relay box

I010B01P-GAT

DIESEL ENGINE ROOM (For 2.5 4D56 TCI)

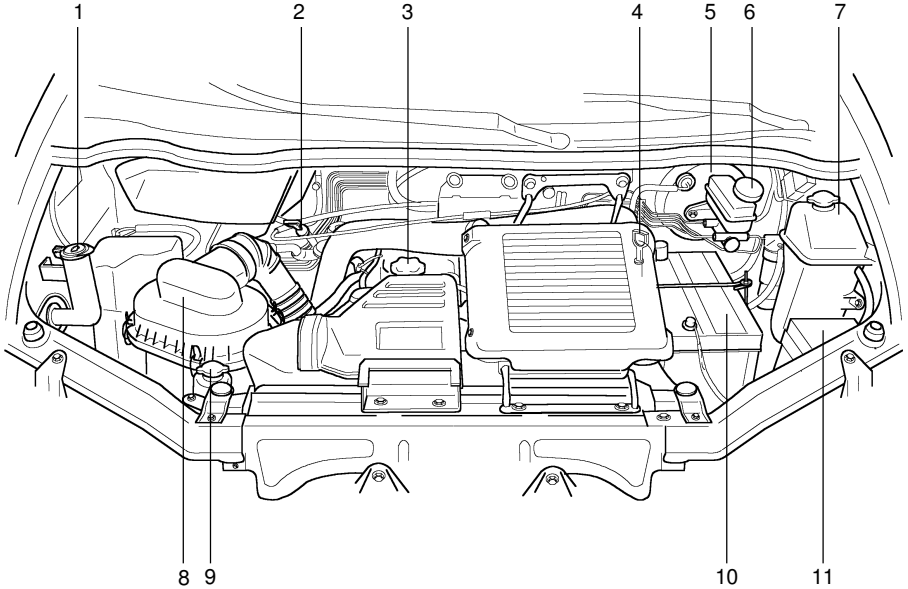

I010B01P

1. Windshield washer fluid reservoir cap
2. Automatic transmission fluid level dipstick (A/T only)
3. Engine oil filler cap
4. Engine oil level dipstick
5. Brake booster
6. Brake fluid reservoir
7. Engine coolant reservoir
8. Air cleaner
9. Power steering fluid reservoir
10. Battery
11. Fuse and relay box

I010C01P-GAT

DIESEL ENGINE ROOM (For 2.5 CRDi TCI)

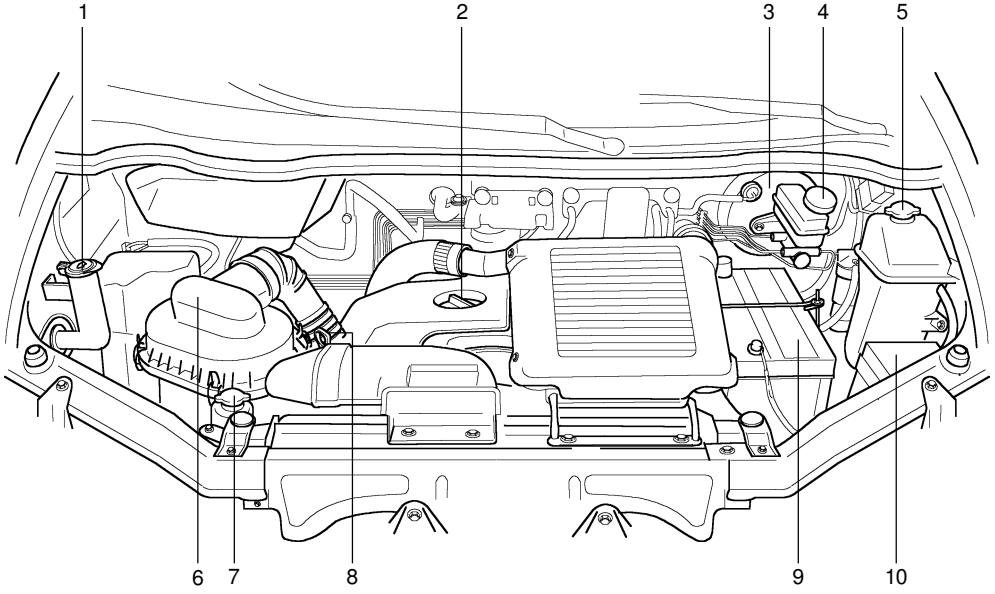

I010C01P

1. Windshield washer fluid reservoir cap
2. Engine oil filler cap
3. Brake booster
4. Brake fluid reservoir
5. Engine coolant reservoir
6. Air cleaner
7. Power steering fluid reservoir
8. Engine oil level dipstick
9. Battery
10. Fuse and relay box

I011A02P-GAT

GASOLINE ENGINE ROOM

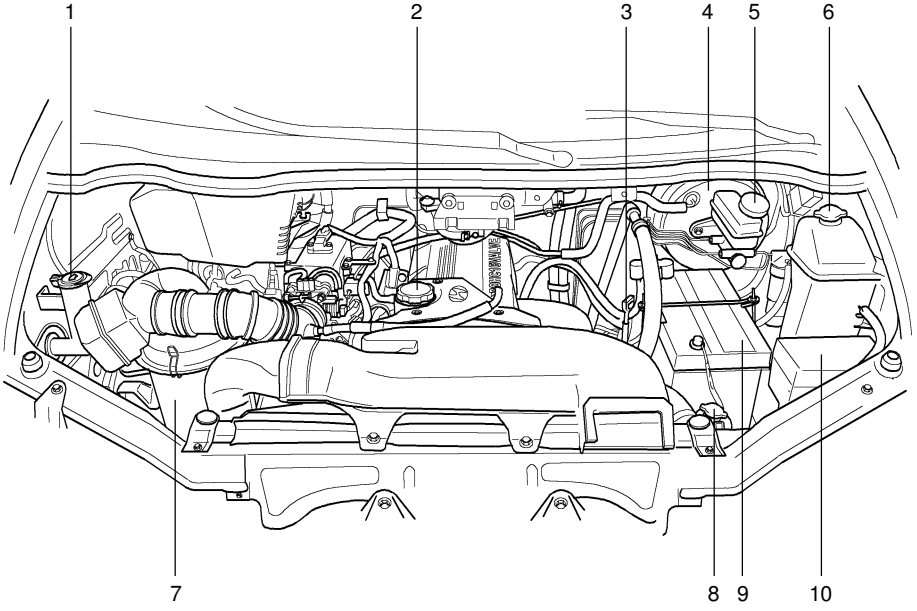

I011A01P-2

1. Washer tank cap
2. Engine oil filler cap
3. Engine oil level gauge
4. Brake booster
5. Brake fluid reservoir
6. Radiator cap
7. Air cleaner
8. Power steering oil tank
9. Battery
10. Fuse box

I020A02P-GAT

GENERAL CHECKS

Engine Compartment

The following should be checked regularly:

- o Engine oil level and condition
- o Transmission fluid level and condition
- o Brake fluid level
- o Clutch fluid level
- o Engine coolant level
- o Windshield washer fluid level
- o Accessory drive belt condition
- o Coolant hose condition
- o Fluid leaks (on or below components)
- o Power steering fluid level and condition
- o Tire pressure and condition (including spare)
- o Battery condition

I030A02P-GAT

Vehicle Exterior

The following should be checked monthly:

- o Overall appearance and condition
- o Wheel condition and wheel nut tightness
- o Air cleaner filter condition
- o Exhaust system condition
- o Light condition and operation
- o Windshield glass condition
- o Wiper blade condition
- o Paint condition and corrosion
- o Fluid leaks
- o Door and hood lock condition

I040A01P-GAT

Vehicle Interior

The following should be checked each time when the vehicle is driven:

- o Light operation
- o Windshield wiper operation
- o Horn operation
- o Defroster, heater operation (and air conditioning, if equipped)
- o Steering operation and condition
- o Mirror condition and operation
- o Turn signal operation
- o Accelerator pedal operation
- o Brake operation, including parking brake
- o Manual transmission operation, including clutch operation
- o Automatic transmission operation, including "Park" mechanism operation
- o Seat control condition and operation
- o Seat belt condition and operation
- o Sunvisor operation

If you notice anything that does not operate correctly or appear to be functioning correctly, inspect it carefully and seek assistance from your Hyundai dealer if service is needed.
Adequate care of your vehicle at regular intervals serves to preserve the value and appearance as long as possible.

Some maintenance items can be carried out by the owner (Consumer Information), while other should be done only by an authorized dealer (Periodic Inspection and Maintenance). This section describes only those items which can be carried out by the owner. In the event a malfunction or other problem is discovered, have it corrected by an authorized HYUNDAI dealer. This section contains information on inspection maintenance procedures that you can do yourself, if you so desire. Follow the instructions and cautions for each of the various procedures.
When checking or servicing the inside of the engine compartment, be sure the engine is stopped and has had a chance to cool down. If it is necessary to do work in the engine compartment with the engine running, be especially careful that your clothing, hair, etc., becomes not caught by the fan, V-belts, or other moving parts.

I050A01P-GAT

Inspection items

(1) Engine oil
(2) Engine coolant
(3) Battery
(4) Brake fluid
(5) Clutch fluid (hydraulic clutch only)
(6) Washer fluid
(7) Wheel condition (including spare wheel)
(8) Tire inflation pressure (including spare wheel)

(9) Fuel, engine coolant, oil and exhaust gas leakage
(10) Exterior and interior lamp operation
(11) Meter, gauge, and indication/warning lamp operation
(12) Steering wheel free play
(13) Clutch pedal free play
(14) Brake pedal free play
(15) Parking brake lever stroke

Others

(1) Wheel rotation
Every 20,000km (12,000miles)or 12 months, whichever comes first
(2) Hinge and latch lubrication

I060A01P-GAT

ENGINE OIL

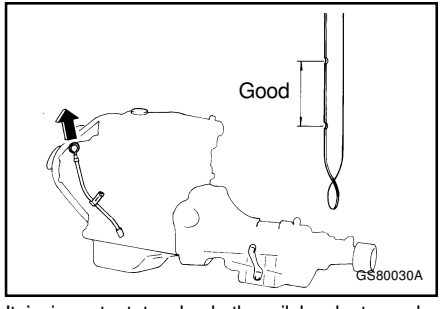

It is important to check the oil level at regular intervals or before starting a long trip.
This check must be made with the engine warm but not running. Park the vehicle on a level surface, stop the engine, and then wait a few moments to allow the engine oil in circulation to return to the oil pan to ensure accurate measurement. Remove the dipstick and wipe it with a clean cloth. Reinsert the dipstick and read the oil level, which should always be within the range indicated in the figure.

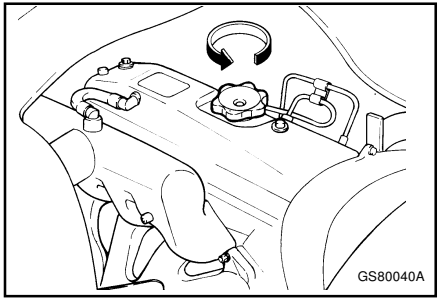

If the oil level is below the specified limit, remove the cap located on the cylinder head cover and add enough oil to raise the level to within the specified range. Be sure to use the specified engine oil and do not mix various types of oil. Also, avoid mixing different makes of oil together if possible. After adding oil, close the cap securely.

WARNING:
Be careful not to touch the hot exhaust manifold.

CAUTION:
Avoid overfilling, or the engine could be damaged.

NOTE:
Check the oil level on the dipstick once again after adding the oil.

I070A05P-GAT

Selection of engine oil

(1) Use engine oil conforming to the following API classification.
Gasoline Engine
Europe : SG, SG/CD, SH or SH/CD
Except Europe : SE or above
Diesel Engine
2.6 N/A : CF-4 or above
2.5 4D56 T/C or TCI : CF-4 or above
2.5 CRDi TCI : CE or above

(2) Select engine oil of the proper SAE viscosity number according to the atmospheric temperature.
Recommened viscosity is given in the following drawing.

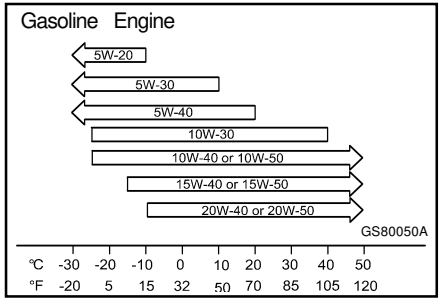

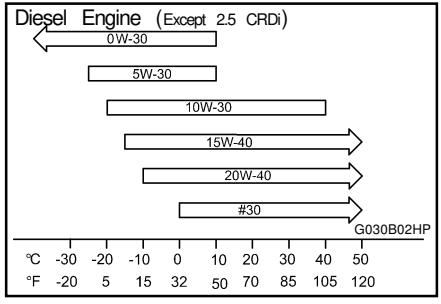

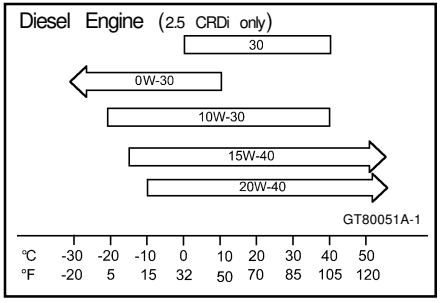

NOTE:

For diesel-powered vehicle SAE 0W-30 oil should be used only in areas where extremely cold temperatures of 10°C (50°F) or below are experienced.

For diesel-powered vehicle, if the atmospheric temperatures are 0°C (32°F) or below, SAE 30 oil must not be used. This oil should be used only in areas where the atmospheric temperatures are 0°C(32°F) or above.

G350A01A-GAT

ENGINE OIL CONSUMPTION

Function of Engine Oil

Engine oil has the primary function of lubricating and cooling the inside of the engine.

Engine oil consumption

It is normal that an engine should consume some engine oil while normal driving. The cause of oil consumption in a normal engine are as follows;

- o Engine oil is used to lubricate pistons, piston rings and cylinders.
  A thin film of oil is left on the cylinder wall when a piston moves downwards in the cylinder. High negative pressure generated during engine operation sucks some of the oil into the combustion chamber.
  This oil with some oil of the cylinder wall is burned by the high temperature combustion gases during the combustion process.
- o The engine oil consumption is strongly effected by the viscosity and quality of oil, engine rpm and driving condition etc. The engine oil is more consumed under severe driving conditions such as high speeds and frequent acceleration and deceleration than normal driving condition.

I080A01P-GAT

ENGINE COOLANT

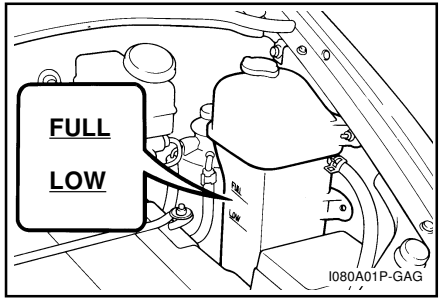

A translucent coolant reservoir tank is in the engine compartment.
The coolant level in this tank should be kept between the "LOW" and "FULL" marks when measured while the engine is warm and idling. The cooling system is a closed system and normally the loss of coolant should be very slight. A noticeable drop in the coolant level could indicate leakage.
If this occurs, have the system checked at an authorized HYUNDAI dealer as soon as possible.
If the level should drop below the "LOW" level on the reservoir tank, add coolant.
Also, if the reservoir tank is completely empty, remove the radiator cap and add coolant until the level reaches the filler neck.

WARNING:
Do not open the reservoir tank lid or radiator cap while the engine is hot. The coolant system is under pressure and any hot coolant escaping could cause severe burns.

I080B01P-GAT

Anti-freeze

The engine coolant contains an ethylene glycol anti-corrosion agent. The cylinder head and coolant pump housing are cast aluminium alloy, and periodic changing of the engine coolant is necessary to prevent corrosion of these parts. Because of the necessity of this anti-corrosion agent, the coolant must not be replaced with plain water even in summer.
The required concentration of anti-freeze differs depending on the expected ambient temperature.

Ambient temperature (minimum) °C (°F)	-10 (15)	-20 (-5)	-30 (-20)	-45 (-49)
Anti-freeze concentration %	30	40	50	60

CAUTION:
For effective anti-corrosion and anti-freeze performance, keep the anti-freeze concentration within the range of 30 to 60%.
Concentrations exceeding 60% will result in a reduction of both the anti-freeze and cooling performance thus adversely affecting the engine.

G210A01A-AAT

CHECKING THE BATTERY

WARNING:
When working with batteries, carefully observe the following precautions to avoid serious injuries.

The fluid in the battery contains a strong solution of sulfuric acid, which is poisonous and highly corrosive. Be careful not to spill it on yourself or the car. If you do spill battery fluid on yourself, immediately do the following:

- If battery fluid is on your skin, flush the affected areas with water for at least 15 minutes and then seek medical assistance.
- If battery fluid is in your eyes, rinse out your eyes with water and get medical assistance as soon as possible. While you are being driven to get medical assistance, continue to rinse your eyes by using a sponge or soft cloth saturated with water.
- If you swallow battery fluid, drink a large quantity of water or milk followed by milk of magnesia, eat a raw egg or drink vegetable oil. Get medical assistance as soon as possible.

While batteries are being charged (either by a battery charger or by the vehicle's alternator), they produce explosive gases. Always observe these warnings to prevent injuries from occurring:

- o Charge batteries only in a well ventilated area.
- o Do not permit flames, sparks or smoking in the area.
- o Keep children away from the area.

I090C01P-GAT

Disconnection and connection

Never disconnect the battery while the engine is running; doing so could damage the vehicle's electrical components. First disconnect the negative terminal and then the positive terminal. When connecting the battery, first connect the positive terminal and then the negative terminal.

CAUTION:

(1) Keep the terminals clean. After the battery is connected, apply terminal protection grease. To clean the terminals, use lukewarm water.

(2) Never short-circuit the battery; doing so could cause it to overheat and be damaged.

(3) Do not smoke or bring an open flame near the battery; doing so could ignite the explosive gas generated by the battery.

(4) The battery electrolyte is extremely caustic. Do not allow it to come in contact with your eyes, skin, clothing, or the painted surfaces of the vehicle.
Spilled electrolyte should be flushed immediately with ample amounts of water.
Irritation to eyes or skin from contact with electrolyte requires immediate medical attention.

(5) If the battery is to be quick-charged, first disconnect the battery cables.

(6) In order to prevent a short circuit, be sure to disconnect the negative (-) terminal before doing anything else.

I100A02P-GAT

BRAKE FLUID

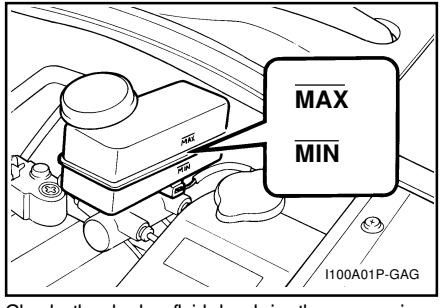

Check the brake fluid level in the reservoir.
The brake fluid level must be between the "MAX" and "MIN" marks on the reservoir.
The fluid level falls slightly with wear of the brake pads but it does not indicate any abnormality.
If the brake fluid level falls markedly in a short time, it indicates leaks from the brake system. In such a case, have your vehicle checked by an authorized HYUNDAI dealer.

Use SAE J1703 (or DOT3 or DOT 4) or equivalent type brake fluid.
On a vehicle with the brake fluid warning lamp, the brake fluid level is monitored by a float. When the brake fluid level falls to below the "MIN" mark, the brake fluid warning lamp lights up.

WARNING:

(1) Use only the specified brake fluid. Also, the additives in different brands may result in a chemical reaction when mixed together, so avoid mixing different brands if possible.

(2) Use extreme caution in filling the brake fluid because it is toxic and corrosive, and it can harm your eyes and damage painted surface. If the fluid gets in your eyes, flush your eyes with clean water.

I110A01P-GAT

CLUTCH FLUID (If installed)

In the case of vehicles with the hydraulic operating clutch, the reservoir for the clutch fluid also serves as the reservoir for the brake fluid. See the paragraph on the brake fluid.

I120A01P-GAT

CHECKING THE AUTOMATIC TRANSMISSION FLUID (If installed)

Transmission fluid in the automatic transmission should be changed at those intervals specified in the vehicle maintenance schedule in Section 6.

I120B01P-GAT

Recommended Fluid

Your Hyundai automatic transmission is specially designed to operate with "DIAMOND ATF DEXRON II" or "DIAMOND ATF SP I" type fluid.

I120C02P-GAT

Automatic transmission fluid capacity

The fluid capacity of the automatic transmission will be found on page 9-4.

WARNING:

The transmission fluid level should be checked when the engine is at normal operating temperature. This means that the engine, radiator, exhaust system etc., are very hot. Exercise great care not to burn yourself during this procedure.

I120D02P-GAT

To Check the Transmission Fluid Level

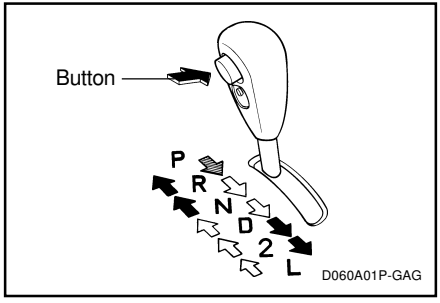

Park the vehicle on level ground with the parking brake engaged. When the transmission fluid level is checked, the transmission fluid should be at normal operating temperature and the engine idling.

While the engine is idling, apply the brakes and move the gear selector lever from "P" to each of its other positions-"R", "N", "D", "2", "L"-and then return to "N" or "P" with the engine still idling:

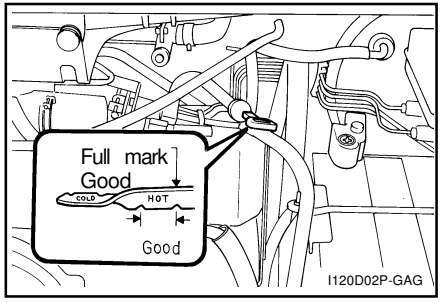

1. Open the hood, being careful to keep hands, long hair and clothing clear of any moving parts.
2. Remove the transmission dipstick, wipe it clean, reinsert the dipstick as far as it will go, then remove it again. Now check the fluid level on the dipstick. It should be in the "HOT" range on the dipstick.
3. If the transmission fluid level is low, use a funnel to add transmission fluid through the dipstick tube until the level reaches the "HOT" range. Do not overfill, otherwise the transmission could be damaged.

WARNING:

The radiator fan is controlled by engine coolant temperature and may sometimes operate even after the ignition key has even turned off. Use extreme caution when working near the blades of the cooling fan, so that you are not injured by a rotating fan blade. As the coolant temperature decreases,

the fan will automatically shut off. This is a normal condition.

I130A01P-GAT

WINDSHIELD WASHER FLUID LEVEL

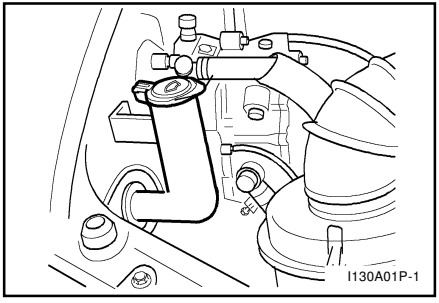

The washer fluid reservoir supplies fluid to the windshield washer system.
A good quality washer fluid should be used to fill the washer reservoir. The fluid level should be checked more frequently during bad weather or whenever the washer system is in more frequent use.

CAUTION:

- **Radiator antifreeze (engine coolant) should not be used in the washer system because it will damage the car's finish.**
- **The washer lever should not be pulled and the washer should not be operated if the washer reservoir is empty. This can damage the washer fluid pump.**

I140A02P-GAT

TAILGATE WINDOW WASHER FLUID LEVEL (Minibus, Van) (If installed)

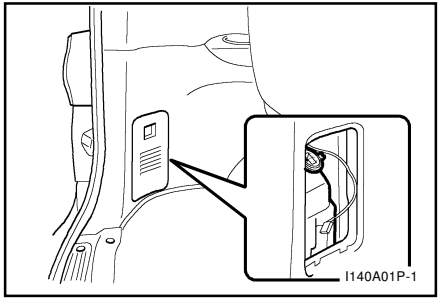

After opening the cover of quarter trim panel which is located on the left side of quarter trim, check the fluid level.
If the fluid level is low, refill the washer fluid.

I150A01P-GAT

WHEEL CONDITION

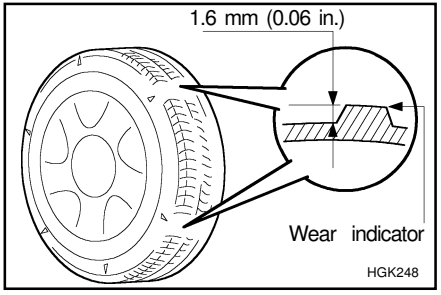

Check the tires for cuts, cracks and other damage. Replace the tires if there are deep cuts or cracks. Also check each tire for pieces of metal or pebbles.
The use of worn tires can be very dangerous because of the greater chance of skidding or hydroplaning. The tread depth of the tires must exceed 1.6 mm (0.06 in.) in order for the tires to meet the minimum requirement for use.
If there are belt-line wear indicators on the tires, they will appear in six places on the surface of the tire thereby indicating that the tire no longer meets the minimum requirement for use. When these wear indicators appear, the tires must be replaced with new one. Confirm that the wheel nuts are tightened sufficiently. Refer to the section of this manual entitled "In case of emergency" for information concerning care of the tires.

I160A02P-GAT

TIRE INFLATION PRESSURE

Check the tire inflation pressure of all the tires while they are cold; if insufficient or excessive, adjust to the specified value.
After the tire inflation pressure has been adjusted, check the tires for damage and air leaks.
Be sure to put rubber caps on the valves.

kg/cm² (PSI)

Vehicle	Tire size	Up to 3 persons		Up to MAX. load	
		Front	Rear	Front	Rear
Mini-Bus	195R 14C-6PR	2.8(40)	2.8(40)	2.8(40)	3.5(50)
	205/70R 15	2.8(40)	2.8(40)	2.8(40)	2.8(40)
	215/80R 15	2.2(32)	2.2(32)	2.2(32)	2.2(32)
	205/70R 15C-6PR	2.8(40)	2.8(40)	2.8(40)	3.5(50)

kg/cm² (PSI)

Vehicle	Tire size	Front	Rear
VAN	195R 14C-8PR	2.8(40)	4.5(65)
TRUCK	195R 14C-6PR	2.8(40)	-
	195R 13C-8PR	-	3.5(50)

I170A01P-GAT

FUEL, ENGINE COOLANT, OIL, AND EXHAUST GAS LEAKAGE

Look under the body of your vehicle to check for fuel, engine coolant, oil, and exhaust gas leaks.
If leaks are evident, take your vehicle to an authorized HYUNDAI dealer for inspection.

I180A01P-GAT

EXTERIOR AND INTERIOR LAMP OPERATION

Operate the light switch and combination switch to confirm that all lamps are functioning properly.
If the lamps do not go on, the probable cause is a blown fuse or defective lamp bulb. Check the fuses first. If there is no blown fuse, check the lamp bulbs.
For information regarding the inspection and replacement of the fuses and the lamp bulbs, refer to the section entitled "In case of emergency"
If the fuses and bulbs are all OK, take the vehicle to an authorized HYUNDAI dealer for inspection.

I190A01P-GAT

METER, GAUGE, AND INDICATION/ WARNING LAMP OPERATION

Run the engine to check the operation of all meters, gauge, and indication/ warning lamps. If there is anything wrong, take the vehicle to an authorized HYUNDAI dealer for inspection.

I200A01P-GAT

STEERING WHEEL FREE PLAY

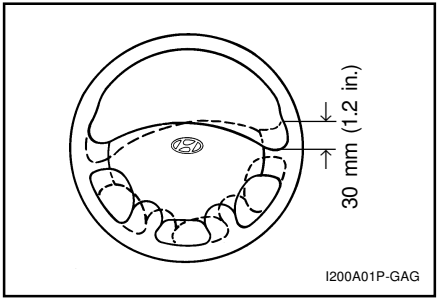

Check by moving the steering wheel left and right.
The free play at the circumference should not exceed the standard value.
Free play 30 mm (1.2 in.)
If the steering wheel free play exceeds the standard value, have the steering wheel adjusted at an authorized HYUNDAI dealer.

I210A01P-GAT

CLUTCH PEDAL FREE PLAY

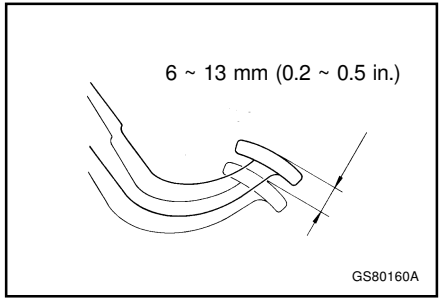

Press down the clutch pedal with your fingers until initial resistance is felt. This distance should be within the specified range.
Free play : 6 to 13 mm (0.2 to 0.5 in.)
If the clutch pedal free play is not within the standard range, have the clutch pedal adjusted at an authorized HYUNDAI dealer.

I220A01P-GAT

BRAKE PEDAL FREE PLAY

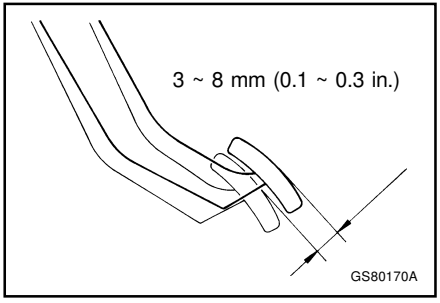

Stop the engine, depress the brake pedal several times, and press down the pedal with your fingers until initial resistance is felt. This distance should be within the specified range.
Free play : 3 to 8 mm (0.1 to 0.3 in.)
If the brake pedal free play is not within the standard range, have the brake pedal adjusted at an authorized HYUNDAI dealer.

I230A01P-GAT

PARKING BRAKE LEVER STROKE

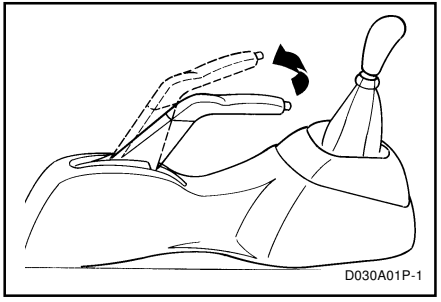

Pull the parking brake lever all the way up to check the number of "clicks" that the ratchet makes. One click represents a lever movement of one notch. The lever should move the specified number of notches for normal brake application.

- **Parking brake lever stroke;**
  5 to 7 notches

If the parking brake lever stroke is not within the standard range, have the brake lever adjusted at an authorized HYUNDAI dealer.

I240A01P-GAT

WHEEL ROTATION

Type 1

Bias tires

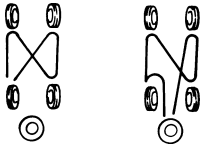

GS80190A

Type 2

Radial tires

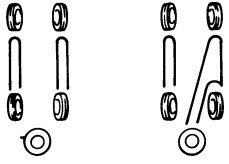

GS80200A

Tires tend to wear unevenly over a long period of service. To make sure that the tires wear evenly as possible and for longer tire life, rotate the wheels in the sequence illustrated.
Take the vehicle to an authorized HYUNDAI dealer to have the chance of the wheels properly adjusted.

CAUTION:

If the front wheels are of a different type from the rear and spare wheels, do not attempt to mount the wheel for front onto rear. In this instance, use the type 2 wheel rotation method.

I250A01P-GAT

HINGES AND LATCHES LUBRICATION

Check all latches and hinges and lubricate if necessary by first cleaning and then applying multipurpose grease.

J000A01P-GAT

9. VEHICLE SPECIFICATIONS

J010A02P-GAT

MEASUREMENT

mm(inch)

MINIBUS, VAN		SHORT	LONG
Overall length		4695 (184)	5035 (198)
Overall width		1820 (71)	1820 (71)
Wheel base		2810 (110)	3080 (121)
Wheel tread	Front	1570 (62)	1570 (62)
	Rear	1545 (61)	1545 (61)

J010A02P-GAT

MEASUREMENT

mm(inch)

TRUCK		LONG(1ton)	EXTRA LONG (1.25 ton)	
		Standard	Standard	Super
Overall length		5085 (200)	5415 (213)	←
Overall width		1820 (71)	1820 (71)	←
Wheel base		3080 (121)	3280 (129)	←
Wheel tread	Front	1570 (62)	1570 (62)	←
	Rear	1408 (55)	1408 (55)	←

J020A02P-GAT

FUEL TANK CAPACITY

ITEMS	MINIBUS, VAN	TRUCK
FUEL TANK CAPACITY	65L	70L

J040A04P-GAT

ENGINE

ITEMS	DIESEL				GASOLINE
Engine type	D4BB(N/A)	D4BF(T/C)	D4BH(TCI)	D4CB(TCI)	G4JS
Total displacement	2,607 cc	2,476 cc	←	2,497 cc	2,351 cc
Compression ratio	22	21	←	17.6	10
Firing order	1 - 3 - 4 - 2	←	←	←	←
Injection (or Ignition) timing	ATDC 5°	ATDC 7°	ATDC 9°	-	BTDC 5°± 2°
Idle speed (RPM)	850 ± 100	750 ± 100	←	800 ± 100	750 ± 100

J050A03P-GAT

ELECTRICAL

ITEMS	DIESEL	GASOLINE (Minibus, Van)
Battery	12V-90AH MF, *100AH MF	12V-68AH MF
Generator	12V-75A/110A	13.5V-95A
Starter	12V-2.0 kw, 2.2 kw (A/TM)	12V-1.2 kw

* FOR USE ONLY IN COLD AREA

J060A06P-GAT

LUBRCATION CHART

Items		Recommended in field		Quantity (liter)
ENGINE OIL (DIESEL)	2.6 N/A	API CF-4 or ABOVE	SAE #30 (ABOVE 0°C) SAE 20W-40 (ABOVE -10°C) SAE 15W-40 (ABOVE -15°C) SAE 10W-30 (-20°C ~ 40°C) SAE 5W-30 (-25°C ~ 10°C) SAE 0W-30 (BELOW 10°C) *1	Engine Oil : 6.1 at Oil Pan : 4.9
	2.5 4D56 T/C or TCI	API CF-4 or ABOVE		
	2.5 CRDi TCI	API CE or ABOVE	SAE 30 (0°C ~ 40°C) SAE 20W-40 (ABOVE -10°C) SAE 15W-40 (ABOVE -15°C) SAE 10W-30 (-20°C~ 40°C) SAE 0W-30 (BELOW 10°C) *1	Engine Oil : 7.4 at Oil Pan : 6.6 (MAX) 4.9 (MIN)
ENGINE OIL (GASOLINE) (Minibus, Van)	E.C	API SG, SG/CD, SH or SH/CD	SAE 20W-40, 20W-50 (ABOVE -10°C) SAE 15W-40, 15W-50 (ABOVE -15°C) SAE 10W-30 (-25°C ~ 40°C) SAE 10W-40, 10W-50 (ABOVE -25°C) SAE 5W-20 (BELOW -10°C) *1, *2 SAE 5W-30 (BELOW 10°C) *1 SAE 5W-40 (BELOW 20°C) *1	Engine Oil : 4.3 at Oil Pan : 4.0 (MAX) 3.0 (MIN) at Oil Filter : 0.3
	Except E.C	API SE or ABOVE		
ENGINE OIL CONSUMPTION		NORMAL DRIVING CONDITION		Max. 1L/ 1,500 km
		SEVERE DRIVING CONDITION		Max. 1L/ 1,000 km

*1. Restricted by driving condition and area.
*2. SAE 5W-20 not recommended for sustained high speed vehicle operation.

J060A05P-GAT

LUBRCATION CHART

Items	Recommended in field	Quantity (liter)	
MANUAL TRANSMISSION OIL	HYUNDAI GENUINE PARTS MTF 75W/90 (API GL-4)	Gasoline	Diesel
		2.0	2.6 N/A : 2.0
			2.5 4D56 T/C or TCI : 2.4
			2.5 CRDi TCI : 3.2
AUTOMATIC TRANSMISSION OIL	DIAMOND ATF DEXRON II, DIAMOND ATF SP I	Gasoline	Diesel
		7.53	2.6 N/A(long Van) : 8.5
			2.6 N/A : 7
			2.5 4D56 T/C : 8.5
			2.5 4D56 TCI(3Van, 11/12Minibuss) : 8.5
			2.5 4D56 TCI EURO III(3Van, 11/12Minibuss) : 7.53
			2.5 4D56 TCI EURO III(6Van, 7/9Minibuss) : 7.53
			2.5 4D56 TCI(4WD) : 9.83
			2.5 CRDi TCI(2WD) : 8.3
			2.5 CRDi TCI(4WD) : 11.7
TRANSFER CASE OIL	DIAMOND ATF SP II	Minibus, Van : 1.3	
POWER STEERING OIL	PSF-3	0.8	
COOLANT	HIGH QUALITY ETHYLENE GLYCOL BASE FOR ALUMINUM RADIATOR	Minibus : 13, Van : 10, Truck : 7.2	
CLUTCH & BRAKE FLUID	SAE J 1703 EQUIVALENT	As required	
FRONT, REAR WHEEL BEARING	SAE J310a, MULTI-PURPOSE GREASE NLGI-2 OR EQUIVALENT.	As required	
REAR AXLE	API GL-4 (MS517-15) : SAE 90, 140	Minibus, Van : 2.6, Truck : 1.7	
STEERING GEAR BOX	API GL-5 (MS517-15) : SAE 80	As required	

K000A01P-GAT

10. INDEX

A ADJUSTABLE FRONT SEATS 1-18
AIR CONDITIONER OPERATION 2-27
ANTENNA 2-58
ALTIMETER 2-7
ANTI-FREEZE 8-9
ANTI-LOCK BRAKE SYSTEM 3-12
ANTI-LOCK BRAKE WARNING LIGHT 2-10
APPEARANCE CARE 5-1
ASHTRAY (Front) 2-23
ASHTRAY (Rear) 2-23
A/T OIL TEMPERATURE WARNING LIGHT 2-10
AUDIO FAULT CODE 2-55
AUXILIARY SEAT 1-22
AUTOMATIC TRANSMISSION OPERATION ..... 3-5 ~ 3-8
AUTOMATIC TRANSMISSION FLUID CHECK ..... 8-11 ~ 8-12

B BATTERY 8-9
BEFORE OPERATION PRECAUTIONS FOR NEW VEHICLE 1-1
BI-LEVEL HEATING 2-25
BLEEDING THE FUEL SYSTEM ..... 4-13 ~ 4-14
BRAKE FLUID 8-10
BRAKE PEDAL 3-11
BRAKE PEDAL FREE PLAY 8-14
BRAKE SYSTEM ..... 3-13 ~ 3-14
BRAKE WARNING AND PARKING BRAKE INDICATION LAMP-RED 2-9

C CARE OF CASSETTE TAPES ..... 2-56 ~ 2-57
CARE OF DISC 2-56
CARRYING CHILDREN 1-12
CENTRAL DOOR LOCKS 1-10
CHANGING GEARS 3-5
CHARGE WARNING LAMP-RED 2-9
CHILD PROTECTION SLIDE DOOR 1-12
CHILD RESTRAINT SYSTEM ..... 1-25 ~ 1-28
CIGARETTE LIGHTER 2-23
CLUTCH FLUID 8-10
CLUTCH PEDAL FREE PLAY 8-14

D DAYTIME RUNNING LIGHTS 2-13
DEFROSTING/DEFOGGING 2-26
DIGITAL CLOCK 2-24
DISEL ENGINE ROOM ..... 8-1 ~ 8-4
DIESEL PREHEAT INDICATION LIGHT-AMBER ..... 2-9 ~ 2-10
DOOR-AJAR WARNING LAMP-RED 2-9
DRINK HOLDER 2-22
DURING COLD WEATHER ..... 3-16 ~ 3-17

E ECONOMICAL DRIVING ..... 3-14 ~ 3-15
EMERGENCY STARTING 4-14

EMISSION CONTROL SYSTEM 7-1
ENGINE 9-2
ENGINE COOLANT 8-9
ENGINE NUMBER 1-2
ENGINE OIL ..... 8-7 ~ 8-8
ENGINE OVERHEATING ..... 4-11 ~ 4-12
ENGINE RPM ADJUSTMENT KNOB 2-15
ENGINE WARNING LIGHT 2-10
EXTERIOR AND INTERIOR LAMP OPERATION 8-13

F FOUR-WHEEL DRIVE (4WD) ..... 3-9 ~ 3-10
FOURTH SEAT 1-21
FRONT DOOR EDGE WARNING LIGHT 2-15
FRONT DOOR WINDOW GLASS 1-17
FRONT FOG LAMP SWITCH 2-16
FRONT INTERIOR LIGHT 2-17
FRONT ROOM LAMP 2-18
FRONT SEATS 1-18
FUEL FILTER WARNING LAMP-RED 2-9
FUEL GAUGE 2-5
FUEL TANK CAPACITY 9-1
FUEL, ENGINE COOLANT, OIL, AND EXHAUST GAS LEAKAGE 8-13
FUSES 4-15

G GASOLINE ENGINE ROOM 8-5
GOOD BRAKING PRACTICE 3-11

H HAZARD WARNING LIGHT SWITCH 2-16
HEADLAMP LEVELING DEVICE SYSTEM 2-14
HEADREST 1-22
HEATING AND COOLING ..... 2-24 ~ 2-25
HEATING CONTROLS 2-25
HEIGHT ADJUSTABLE FRONT SEAT SHOULDER BELT 1-23
HIGH-BEAM INDICATION LAMP-BLUE 2-9
HIGH-BEAM SWITCH 2-11
HINGED WINDOW ..... 1-16 ~ 1-17
HINGES AND LATCHES LUBRICATION 8-15
"HOLD" MODE SWITCH 3-7
HOOD RELEASE 1-12
HORN SWITCH 2-17

I IF A TIRE IS FLATENED ..... 4-6 ~ 4-8
IF THE ENGINE OVERHEATS ..... 4-11 ~ 4-12
IGNITION SWITCH 3-1
ILLUMINATED IGNITION SWITCH 1-8
IMMOBILIZER SYSTEM ..... 1-5 ~ 1-8
INCLINOMETER 2-6
INDEX 10-1
INDICATION AND WARNING LAMPS ..... 2-9 ~ 2-10
INSIDE REAR-VIEW MIRROR 2-21
INSTALLATION OF ACCESSORIES 1-3
INSTRUMENTS 2-3
INSTRUMENTS PANEL LIGHT CONTROL (=RHEOSTAT) 2-14

INDEX

J JACK HANDLE 4-1
JACKING UP THE VEHICLE ..... 4-2 ~ 4-3

K KEYS 1-4

L LIMITED-SLIP DIFFERENTIAL 3-18
LOADING 3-12
LOCKING USING THE KEY 1-9
LOW FUEL WARNING LAMP-AMBER 2-9
LUBRICATION CHART ..... 9-3 ~ 9-4
LUMBAR SUPPORT CONTROL 1-19

M MAINTENANCE 1-2
MAKING A FLAT SEAT 1-23
MANUAL TRANSMISSION ..... 3-4 ~ 3-5
MEASUREMENT 9-1
METER, GAUGE, AND INDICATION/WARNING LAMP OPERATION 8-13
MULTI-FUNCTION LIGHT SWITCH 2-11
MULTIMETER 2-4

O ODOMETER 2-5
OIL PRESSURE WARNING LAMP-RED 2-9
OUTSIDE REAR VIEW MIRROR 2-21
OUTSIDE REAR VIEW MIRROR HEATER 2-22
OVERDRIVE OFF INDICATOR 2-9
OVERDRIVE SWITCH 3-8
OVERHEAD AIR CONDITIONING 2-29

P PARKING BRAKE LEVEL STROKE 8-14
PARKING BRAKE 3-12
PARKING ..... 3-13 ~ 3-14
PASSING SWITCH ..... 2-11 ~ 2-12
POSITIONS OF SWITCHES AND LEVERS 2-1
POWER WINDOW ..... 1-17 ~ 1-18
PRE-TENSIONER SEAT BELT 1-24
PREVENTIVE MAINTENANCE 6-1

R REAR AIR-CONDITIONING 2-29
REAR HEATER 2-28
REAR ROOM LAMP 2-18
REAR SIDE, QUARTER WINDOW ..... 1-16 ~ 1-17
REAR WINDOW DEFROSTER SWITCH 2-16
REMOTE FUEL-FILLER LID RELEASE ..... 1-15 ~ 1-16
REMOVAL OF WATER FROM THE FUEL FILTER ..... 4-13 ~ 4-14
REPLACEMENT OF LAMP BULBS 4-16
ROOF RACK 2-21
RUNNING-IN RECOMMENDATIONS 1-1

S SEAT BELTS 1-23
3-point system ..... 1-23 ~ 1-24
Lap belts 1-25
SEAT BELT REMINDER LIGHT 2-10
SEAT WARMER 1-19
SECOND SEAT ..... 1-19 ~ 1-20
SIDE VENTILATOR 2-26
SLIDING WINDOW GLASS 1-17

SPARE TIRE ANTI-THEFT DEVICE 4-5
SPARE WHEEL ..... 4-4 ~ 4-5
SPEEDOMETER 2-5
SRS AIRBAG SYSTEM ..... 1-29 ~ 1-32
SRS (Airbag) SERVICE REMINDER INDICATOR 2-10
STARTING THE ENGINE 3-2
STARTING AND STOPPING THE ENGINE FOR TURBO CHARGER OR TURBO CHARGER INTERCOOLER 3-3
STEERING WHEEL FREE PLAY 8-13
STEERING WHEEL TILT LEVER 1-29
STEREO RADIO AND CASSETTE TAPE PLAYER OPERATION (K220) ..... 2-33 ~ 2-36
STEREO RADIO AND CASSETTE TAPE PLAYER OPERATION (H240, K240) ..... 2-37 ~ 2-40
STEREO RADIO AND CASSETTE TAPE AND COMPACT DISC PLAYER OPERATION (H280) ..... 2-48 ~ 2-54
STEREO RADIO AND COMPACT DISC PLAYER OPERATION (H260) ..... 2-41 ~ 2-47
SUNROOF ..... 2-19 ~ 2-20
SUN SHADE 2-19
SUN VISOR 2-20

T TACHOMETER 2-5
TAILGATE WINDOW WASHER FLUID LEVEL 8-12
TAILGATE WIPER AND WASHER SWITCH 2-13
TAILGATE 1-9
THEFT-ALARM SYSTEM ..... 1-10 ~ 1-11
THERMOMETER 2-7
THIRD SEAT ..... 1-20 ~ 1-21
TIRE INFLATION PRESSURE 8-13
TOOLS AND JACK 4-1
TOWING 4-8
TRAILER OR VEHICLE TOWING ..... 4-8 ~ 4-11
TRANSAXLE FLUID 9-4
TURN-SIGNAL INDICATION LAMPS-GREEN 2-9
TURN-SIGNAL SWITCH 2-11
TWIN SWING DOOR 1-14

V VENTILATION 2-25
VEHICLE IDENTIFICATION NUMBER (VIN) 1-2

W WATER TEMPERATURE GAUGE 2-6
WHEEL CONDITION 8-12
WHEEL ROTATION 8-15
WINDSHIELD WASHER FLUID LEVEL 8-12
WINDSHIELD WASHER 2-12
WINDSHIELD WIPER AND WASHER SWITCH 2-12

일반영어

HYUNDAI MOTOR COMPANY
Seoul Korea

Printing: AUG. 27, 2003
Publication No.: A4AO-EG33J(A)
Printed in Korea