Table of Contents

E60 Driver Information

Subject **Page**

Instrument Cluster **3**

Display Areas **5**
Instrument Dials 5
Indicators and Warning Lamps 7
LC Display 8
Program and Gear Display 8

Condition Based Service (CBS) **9**
CBS Displays 10
Displays in the Instrument Cluster 10
Displays in the Central Information Display (CID) 10
Resetting the Service Operations 12
Diagnostics 12

Central Information Display (CID) **13**
New Features 14
Bus Network 14
Components 15
LC Display 15
Controller 16
Status Bar 17
Communications 19
Navigation 19
Entertainment 19
Climate 19
Settings 19
Service Mode 19

cardiagn.com

Initial Print Date: 08/03 Revision Date: 09/03

Model: E60

Production: Start of Production MY 2004

Driver Information

Objectives:

After completion of this module you will be able to:

- Identify the instrument cluster warning symbols.
- Reset the Condition Based Service Indicators.
- Navigate through all screens of the CID with the controller.
- Explain the new CID screens.

cardiagn.com

Instrument Cluster

Annular indicators used for the first time by BMW for the two main instruments represent an innovation in display technology. This system has enabled the displays for the cruise control system set speed and the variable engine speed warning zone to be visually illustrated.

The pendulum dial layout for the analogue fuel gauge and fuel consumption indicator augments the compact appearance and design of the instrument cluster.

The indicator lamp for the fuel reserve has been replaced by a Check Control message in text and graphics. Likewise, the Check Control texts are no longer displayed in the instrument cluster but in the status bar of the Central Information Display (CID).

Two large instrument dials show vehicle speed and engine speed. Two smaller pointer instruments display fuel level and current fuel consumption. The scales on the instrument cluster are specific to each country, vehicle and engine. Most of the indicator lamps are located in the centre at the top between the two large instrument dials. Also in the centre between the two large instrument dials are the two LC Displays.

Components

The instrument cluster comprises the following components:

- Instrument dials
- Indicator and warning lamps
- LC display
- Program and gear displays for automatic gearbox and SMG Sequential Manual Gearbox
- Setting button for resetting the trip meter and operating the Condition Based Service, CBS menu
- Connected components which serve to activate the displays in the instrument cluster

Instrument Cluster IPO

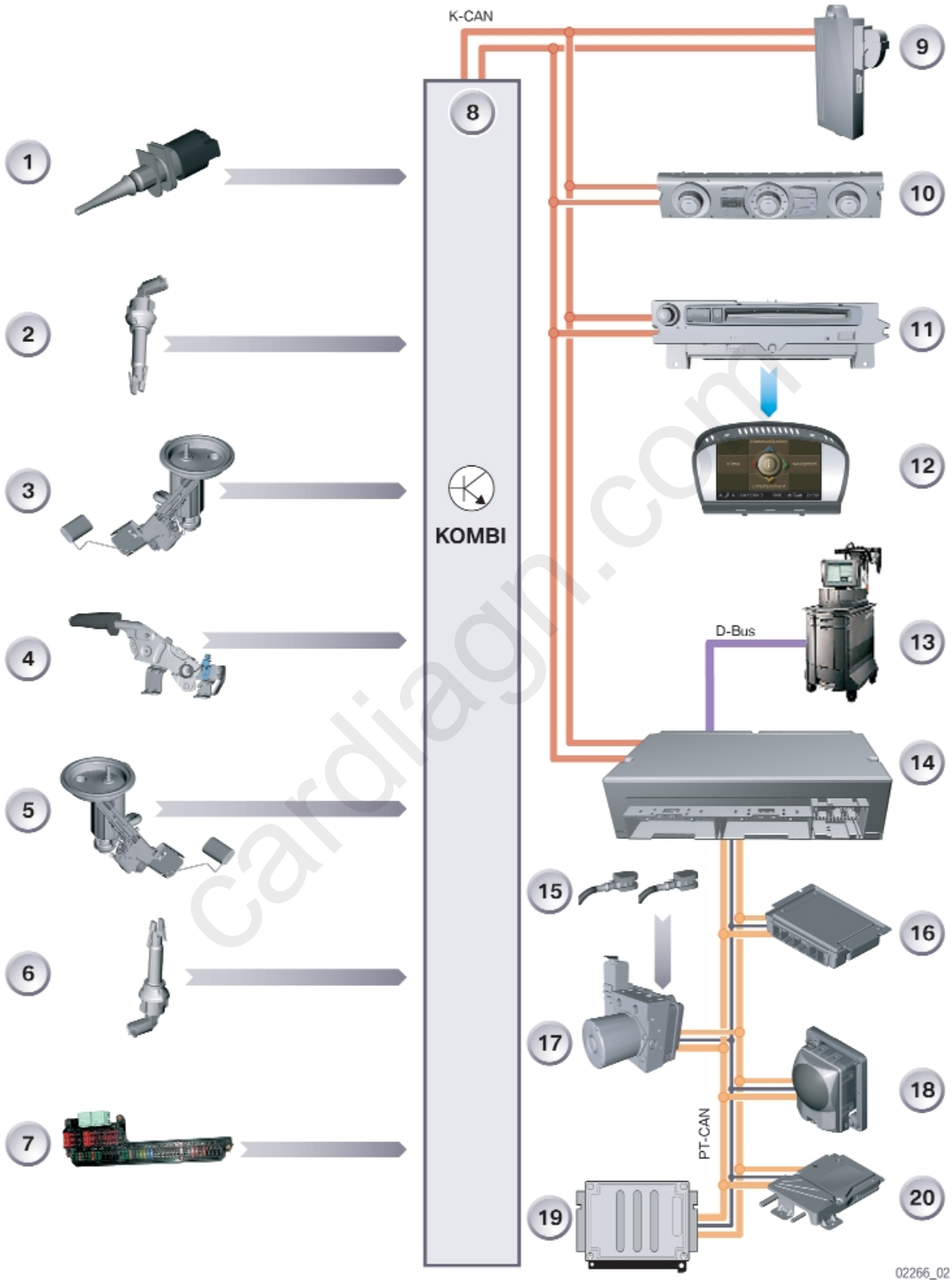

cardiagn.com

Display Areas

The instrument cluster is divided into the following display areas:
- Instrument dials
- Indicator and warning lamps
- LC display
- Program and gear displays for automatic gearbox and SMG Sequential Manual Gearbox

Instrument Dials

The instrument cluster includes the following dials:
- Speedometer
- Rev counter
- Fuel gauge
- Fuel consumption (economy) indicator

The set speed for the cruise control system and the tach warning are displayed by means of annular indicators (moving rings).

1. Set Speed for Cruise Control
2. Speedometer
3. Tach
4. Tach Warning Zone
5. Fuel Guage
6. Fuel Consumption Indicator

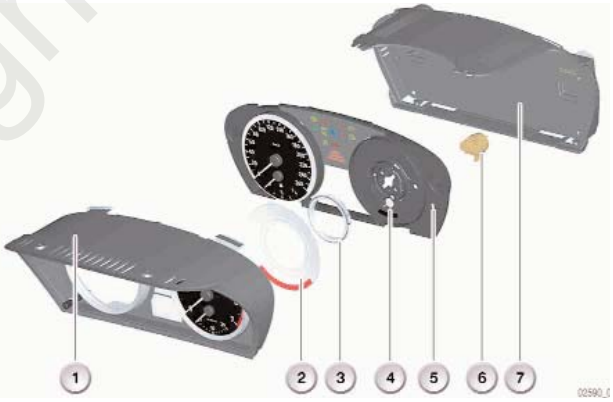

1. Front Frame
2. Annular Indicator
3. Ring Gear
4. Pinion
5. Light Duct
6. Stepper Motor
7. Base with Printed Circuit Board and Display

The annular indicator is moved by means of the ring gear, connected to the indicator, the pinion and the stepper motor which is attached to the rear of the light duct.

U.S. vehicle will have speedometers with 0-160 MPH and 0-7000 RPM displays.

The maximum engine speed warning display is indicated by the tach as a function of engine temperature.

Instrument Cluster Schematic

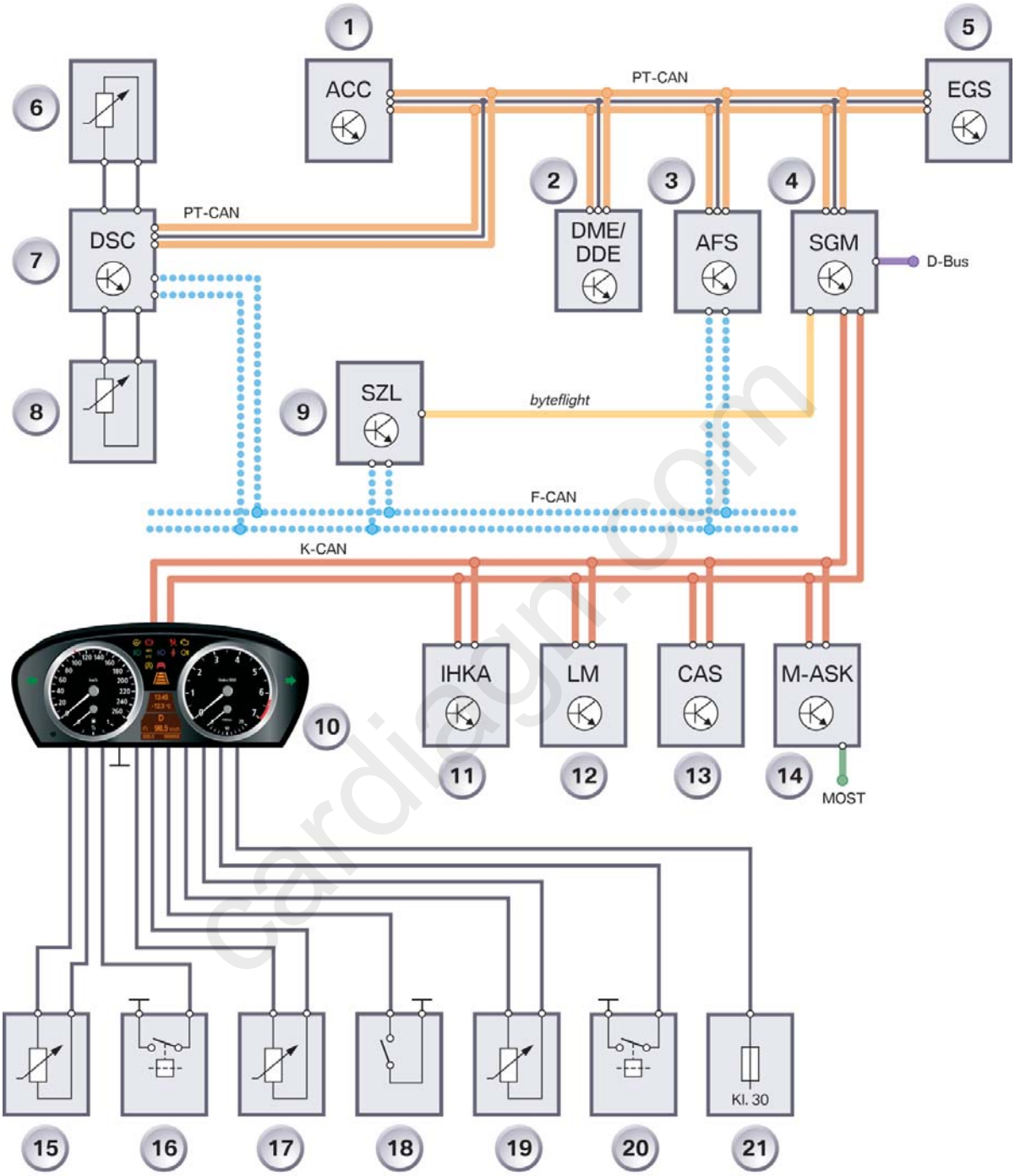

1.	8.	15.
2.	9.	16.
3.	10.	17.
4.	11.	18.
5.	12.	19.
6.	13.	20.
7.	14.	21.

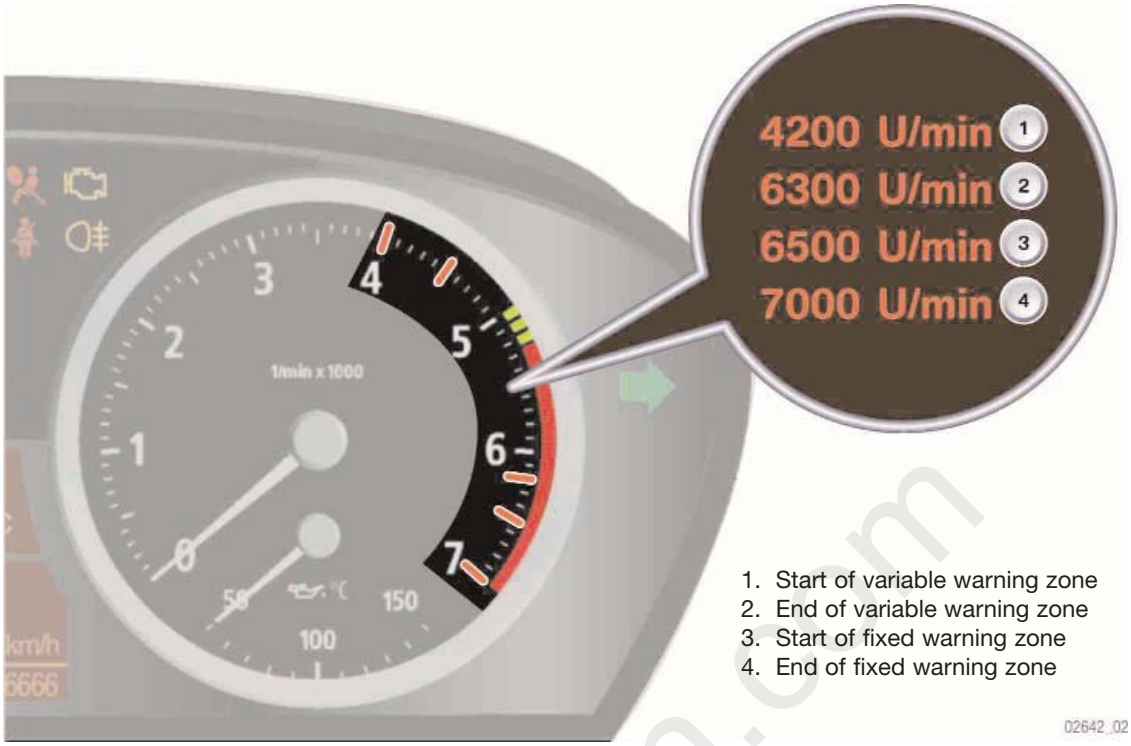

Indicators and Warning Lamps

The indicator and warning lamps are activated by the processor in the instrument cluster. The main indicator and warning lamps are activated in the Predrive Check when terminal 15 is switched on. The indicator lamps and warning symbols are lit by soldered-in LEDs (replacement of LEDs not possible).

cardiagn.com

LC Display

The LC display is located between the speedometer and the rev counter. The LC display is divided into two areas. The time and outside temperature are displayed in the upper window, along with the set speed for the ACC, check control messages and CBS displays. The on-board computer functions, trip distance counter and CBS messages are output to the lower window. A manipulation dot indicates if there are different vehicle identification numbers in the light module and in the instrument cluster.

Program and Gear Display

On vehicles with automatic transmission or sequential manual transmission (SMG), the program and gear selected are shown in the center of the lower window of the LC display. The program and gear display is activated when terminal 15 is on. At terminal 15 off, run-on operation of the display is possible provided the SMG is still transmitting CAN messages.

The information between the control units for the automatic gearbox or SMG and the instrument cluster are exchanged via the K-CAN. The program and gear display shows letters and numbers. The program mode is displayed all the time and is not overwritten by other information.

Note:
With SMG, the selector-lever position "N" flashes after the engine is turned off. This indication serves as a visual reminder that the car could still roll away.

Condition Based Service (CBS)

With the series launch of the new 5 Series, BMW will also be offering service intervals that are geared towards the current condition of selected critical components - i.e. servicing that depends on the condition of components and maintenance requirements; this is known as Condition Based Service (CBS). CBS means thus: maintenance only for the component which is worn.

The system calculates when a service operation, e.g. an oil change or emissions inspection, is due and informs the customer of this via the LC display in the instrument cluster. CBS sorts all the data according to date due and can determine when the vehicle should be taken into BMW Service.

The instrument cluster sends the sorted data to the Central Information Display (CID). There, the data can be selected for display in the Service menu. There are ten different types of service, with each of these types being assigned to a specific service group.

The system involves the following components:

- Instrument cluster
- External units (DME, IHKA, DSC)
- Car Access System (CAS) 2
- Central Information Display (CID)

All information that the CBS system requires is sent on the K-CAN bus. The instrument cluster is a subscriber on the K-CAN and acts as the CBS master control unit. The CBS requests from all the control units are therefore sent via the K-CAN to the instrument cluster and to the Central Information Display.

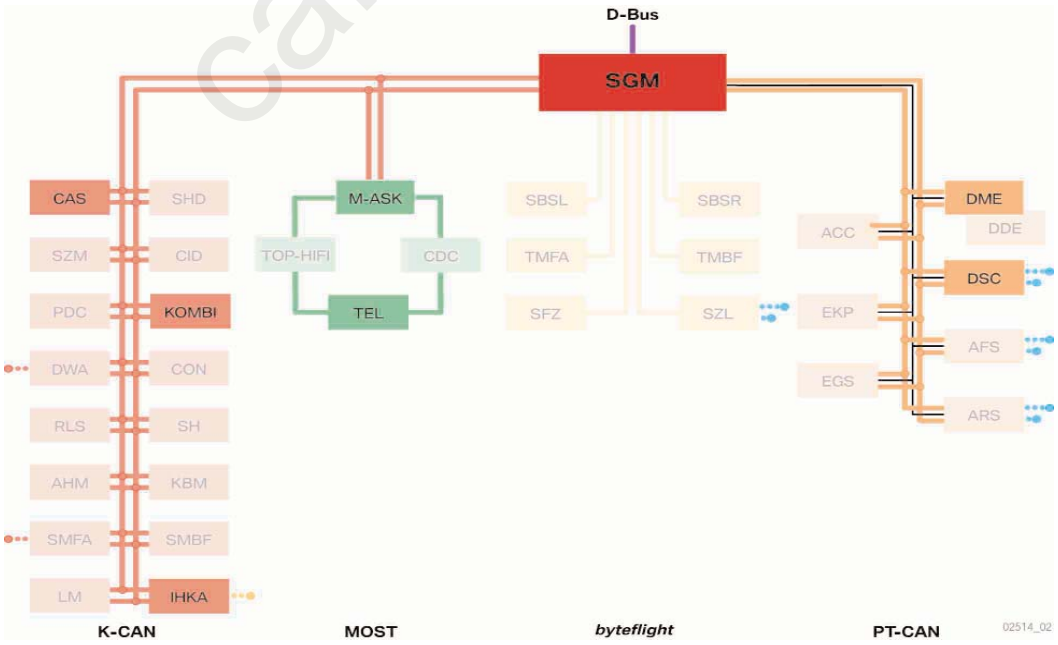

carmagn.com

CBS Displays

Displays in the Instrument Cluster

The CBS display always comprises the following two separate displays:

- A colored symbol in the upper display
  - -Orange for normal
  - -Yellow for service due
  - -Red for service overdue

- And information on remaining distance and/or due date in the lower display.

1. CBS Symbol
2. Final Date Information
3. Remaining Distance Display

Displays in the Central Information Display (CID)

All information on the individual service operations can be displayed in the CID. The CBS functions are stored in the "Settings" menu item which is used exclusively for individual user settings.

Press the Controller, the "Settings" menu will appear.

Turn the controller until "Service" is highlighted, then press to activate the CBS menu.

The CBS menu window will appear; this is divided into the following control and display fields:

- Status bar
- First menu bar
- Second menu bar
- Display field for CBS symbol
- Display field for service operation

Note:
All screen shots shown are derived from a simulation of a version with featuring a 6.5" medium-resolution colour LC display and correspond to the status at the time of going to press. Further changes are possible to the contents and the layout.

cardiagn.com

Index	Explanation
1	First Menu Bar -Service Requirement, Check Control Messages -Service
2	Second Menu Bar -Status
3	Display Field For CBS Symbols
4	Status Bar
5	Display Field for Service Operation

The service operation display field always shows the first five messages.

The displays are colour-coded and some also have a symbol. The displays mean the following:

- Red - The service operation is overdue
- Yellow - The service operation is due shortly
- Green - No service operation required

Any overdue service operations and symbols marked in red in the list are always at the top of the list of messages.
You can scroll through the list of the service operations from top to bottom by turning the controller (left/right).
To display the information concerning a specific service operation on the CID, turn the controller to select the required service operation and display the selection by pressing the controller.

cardiagn.com

Resetting the Service Operations

When one or more operations have been carried out, e.g. front pads have been changed, these operations must be reset to their full service interval.

There are two options for resetting the service operations:

- Legally required service operations
  Legally required service operations such as the Statutory vehicle inspection (HU) and the Statutory exhaust test (AU), can only be reset in the "Service" menu.
- Maintenance service operations
  All service operations for the purpose of maintenance are reset by means of the reset button of the trip distance counter in the instrument cluster. If the reset button is pressed for longer than ten seconds, the reset mode opens automatically. "Reset?" is displayed in the lower display window.

In the upper display window, the CBS symbol , e.g. for "engine oil service overdue" will be displayed. Press the reset button until the time/distance-dependent displays in the lower display window are replaced with dashes. Reset is no longer possible once more than 80 percent of the interval has expired. A reset lock will be shown in the display with "OK".

1. Reset button for trip counter
2. Upper Display Window
   - CBS Symbol
3. Lower Display Window
   - Gear Indicator
   - Reset Mode

Diagnostics

There are three possible combinations for replacing the instrument clusters and Car Access System.

- Instrument cluster faulty, Car Access System OK
- Car Access System faulty, instrument cluster OK
- Car Access System and instrument cluster must be replaced.

Simultaneous replacement of the Car Access System and the instrument cluster must be avoided. The odometer reading will be lost as a result. In principle it is also possible to carry out a trial replacement of the instrument cluster/Car Access System.

Central Information Display (CID)

The Central Information Display is an integrated display and operating panel for the following functions:

- Audio systems such as radio, CD, MC
- Computer, journey computer
- Check Control messages
- Navigation
- Needs-based service (BOS)
- Vehicle info
- Brief info
- Telephone and data services
- CD-ROM or DVD
- Personalized functions such as station selection
- Heating and air conditioning system
- Vehicle functions such as DSC, EDC, PDC, RDC
- Service mode

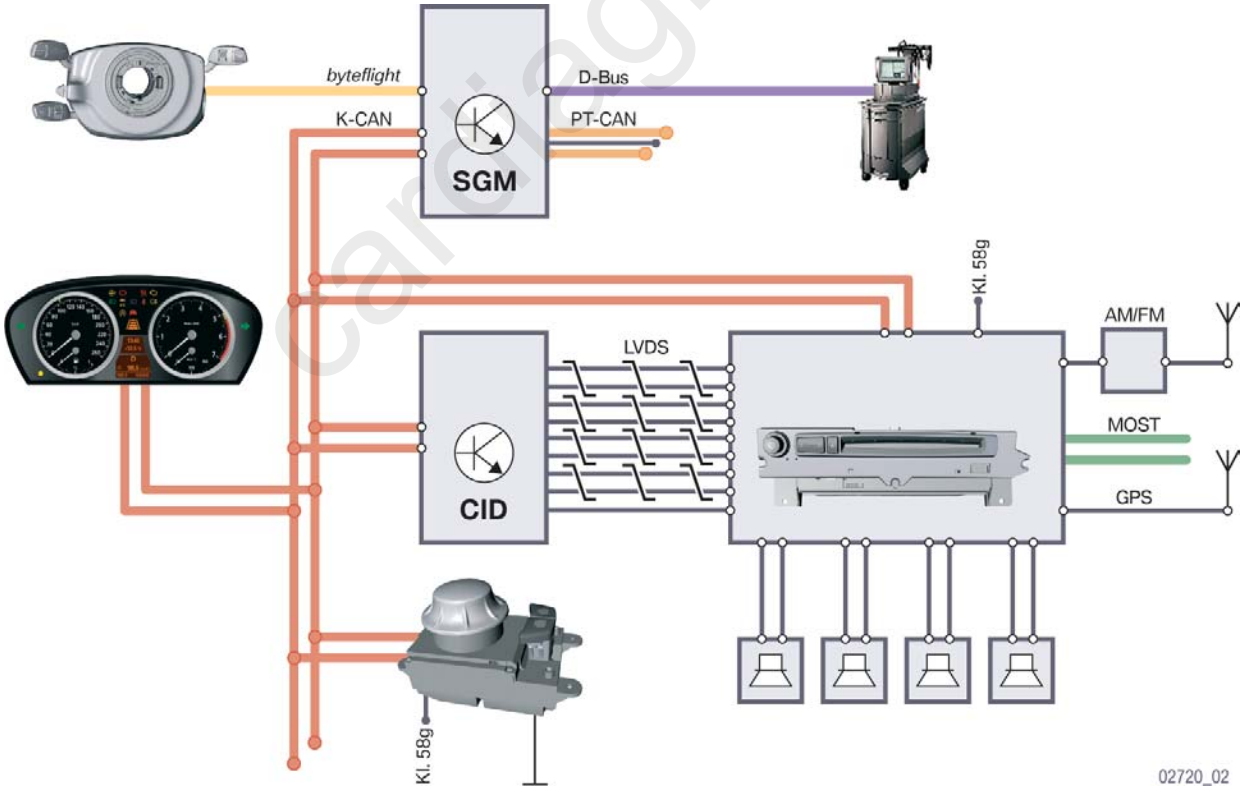

cardiagn.com

New Features

The CID of the E60 has new features or modified features:

- Main Menu reduced to four selections
  - Communication
  - Car Data (unless equipped with Navigation)
  - Entertainment
  - Climate Control
- User settings available in an additional menu setting
- Two variants of controller
- New Menu button
- Voice Input button on center console

Bus Network

The M-ASK generates the LVDS data (Low Voltage Differential Signaling) for the graphic display in the Central Information Display.
The central operating control for the Central Information Display is the controller. The controller is connected to the CID via the centre console control centre (SZM) and the K-CAN system.
The safety base module (SGM) provides the diagnostics interface for the CID via the diagnostics bus.

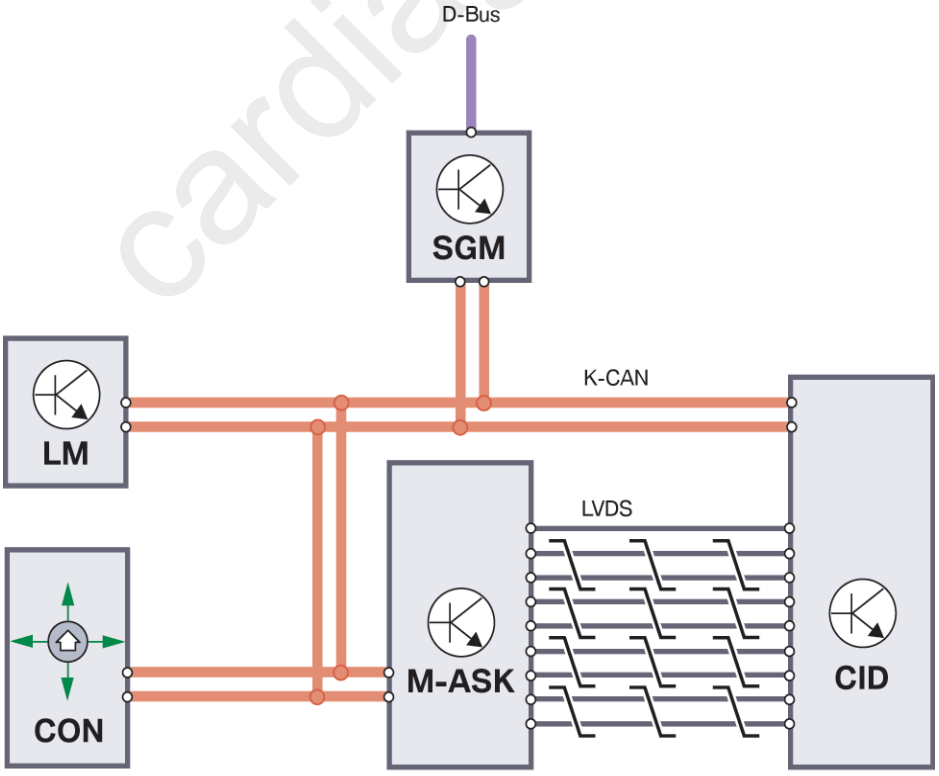

02726 02

cardiagn.com

Components

The Central Information Display (CID) comprises the following components:

- Casing with integral electronic module
- LC display
- Casing attachment (tube) with cover glass
- Controller, a connected component which controls the displays in the CID.

1. Casing w/ Electronic Module
2. LC Display
3. Casing w/ Glass

LC Display

In order to cope with the various equipment specifications, the following variants are used for the E60:

- CID with 6.5" medium-resolution colour LCD (400 x 240 pixels)
- CID with 8.8" high-resolution colour LCD (640 x 240 pixels)
  The LCD also features a help window.

The casing is designed to be able to accommodate all screen variants offered.
The entire Central Information Display assembly is fixed to the dashboard by two screws.

Controller

The controller is the central operating control for all comfort functions and selected options for some vehicle functions that are displayed on the Central Information Display.
The controller is located in the centre console immediately behind the gear selector lever, within reach of the user (driver and front passenger).
For the first time, the controller will be available in the following two variants for the E60:

- Variant A
  The base variant has a mechanical latch system with 24 latches per full turn.
- Variant B
  On the high-end version, the tactile feedback for the rotational movement of the controller is generated electrically. The tactile feedback for the rest position, the main directions of movement and the depressed position is created by mechanical means.

The operating principle of the controller is identical with that of the E65.
The controller is slid from a rest position (centre position) to which it always returns again when it is released.

02723_02

The main features of the operating principle are:

- The centre is the rest position (centre position)
- Slide to select the four main directions of movement
- Turn to select the function
- Press to select or confirm entry.

There is also a panel of buttons immediately behind the controller. There are two variants, as follows:

- Basic variant
  This version comprises a menu button which is used to call up the main menu in the Central Information Display.
- High-end variant
  This version has two buttons. In addition to the menu button, there is a button for activating/deactivating the voice input system (SVS). The button signals are read into the controller and converted into K-CAN telegrams.

The four menu items are displayed in a cross pattern on the Central Information Display corresponding to the four main directions in which the controller can be moved.
In addition to these four main menu items, there is a fifth menu item used exclusively for individual user settings. The screen can also be switched on and off from this menu.

Status Bar

The status bar displays the main information on the various functions, such as the telephone signal strength or the time; this information is permanently displayed after Ignition ON.

1. Automatic A/C activated
2. Audio Source activated
3. TMC (Not for USA)
4. Unread Text Message
5. Telephone Signal Strength
6. Time

cardiagn.com

BMW Assist
BMW Info
Meldungen aktualisieren
Telefon SMS BMW Assist BMW
0 1 2 3 4 5 6 7 8 9
PIN eingeben
T-Mobile
SOS 10:35
Navigation Bordinfo Adressbuch
neues Ziel
HAMBURG, HELLBROOKSTR.
Navigation
Bitte Karten-DVD einlegen
BAYERN3 TP TMC SOS 14:26
Kommunikation
Navigation
Klima
Entertainment
BAYERN 3 TMC 21:50
Standheizung / -lüftung
Direktbetrieb Einschaltzeiten
Luftverteilung Heizverteilung Sitz
Fahrer
auto
BAYERN3 TP TMC SOS 10:54
Set
BAYERN3
T-Mobile TP TMC SOS 10:45
BAYERN3
T-Mobile TP TMC SOS 10:46
Bildschirm aus
Einstellungen Entertainment
Verkehrsinfo
Einstellungen Anzeige
Einstellungen Fahrzeug
BMW Service
Kommunikationsschnittstelle
BAYERN3 TP TMC SOS 10:23
RDC PDC
Reifendruck
2.0 bar
2.1 bar
BAYERN3 TP TMC SOS 9:26

02800_02

Communications

In this menu, entries in the telephone directory can be displayed and sorted according to various criteria. Here too, the user can query his SMS (Short Message Service) inbox for incoming text messages or display any calls that were not answered.
This menu also contains the BMW services such as BMW Assist and BMW Online. Certain services are only available to customers once released.

Navigation

This menu provides access to all functions necessary to operate the navigation system. The computer can also be selected from this menu item. Certain services are relevant to specific equipment and are only available to customers after appropriate authorization. The main menu is activated as soon as terminal 15 ON is on.

Entertainment

The Entertainment menu is a frequently used function. Certain services are relevant to specific equipment and are only available to customers once released. The main menu is activated as soon as terminal 15 ON is on.

Climate

As on the E65, the extended conditioning functions such as mixture control and automatic heater can be selected and activated from the Central Information Display. The main menu is activated as soon as terminal 15 ON is on.

Settings

The individual user settings can be adjusted from this menu. The main menu is activated as soon as terminal 15 ON is on.

Service Mode

Service mode is a special facility which provides information about the status of the display and user control system. The function is designed for use by BMW Service and is not intended to be accessible to vehicle owners. Service mode provides access to details of the hardware/software versions for the Central Information Display and the control units in the M-ASK network. As an addition to the comprehensive facilities of the diagnosis system, Service mode acts as a simple means of quickly accessing diagnostic data without the need for a diagnosis tester.

cardiagn.com

Activating Service Mode

In the main menu, press and hold the controller. Tactile feedback will then be generated.
- Turn controller 3 stops clockwise
- Turn controller 3 stops anti-clockwise
- Turn controller 1 stop clockwise
- Turn controller 1 stop anti-clockwise
- Turn controller 1 stop clockwise
- Press the controller to confirm, Service mode will then appear in the CID.

Workshop Exercise - Driver Information

1. *List the steps necessary to set a preset radio station.* _____

   _____

2. *What information is found under the heading "Car Data"?* _____

   _____

   _____

3. *What are the possible "program" options for the "Star" MFL Button?*

   _____

   _____

4. *List the steps necessary to reset the average speed reading.*

   _____

5. *Using the Controller and CID, set the door locks to "Relock door if not Opened"*

6. *What is the current setting of the speed dependent volume?* _____

7. *What is the current setting of the pathway lighting?* ____*Increase the time setting by 2 increment levels. What is the setting?* _____

8. *Access the check control messages. What is the current message?* _____

   _____

   _____

   _____

cardiagn.com