Table of Contents

E65 BUS SYSTEMS

Subject **Page**

Introduction. 3

Bus Systems. 3

E65 Bus System Overview. 6

E65 Sub-Bus Systems. 7

Gateways. 10

Controller Area Network (CAN Bus). 16

E65 K-CAN. 16

PT-CAN. 20

Fiber-Optic Bus Lines. 21

Fiber-Optic use in the E65. 28

MOST Bus. 31

Byteflight. 45

Diagnosis Bus. 49

Review Questions. 51

cardiagn.com

Initial Print Date: 10/01 Revision Date: 11/01

E65 BUS SYSTEMS

Model: E65 - 745i

Production Date: 11/2001- Start of Production

Objectives:

After completing this module you should be able to:

- Identify the various bus systems used in the E65.
- Define the purpose of a “Gateway” module.
- Describe the structure of the various bus systems.
- Explain the purpose of Terminal Resistors in the CAN bus.
- Understand the reason why fiber-optic bus systems are used in the E65.
- Describe how fiber-optic cables can be damaged due to improper handling.

cardiagn.com

Introduction

The safety and comfort of vehicles are continually advancing. Legal requirements relating to fuel consumption and exhaust emissions can now only be met by the use of more electronic components (e.g. control units, actuators and sensors) in vehicles.

Processes controlled by individual control units are increasingly being linked to one another via bus systems. That means that the processes are shared together and control units interact with one another in a coordinated manner.

As a result, the exchange of data across the vehicle's electrical system is increasing rapidly and because of that exchange of information, many new functions are being made possible. The consequences of this trend are greater vehicle safety, superior ride comfort and improved fuel economy. However, such continuing advances can no longer be achieved with conventional electrical systems.

Limits of Conventional Electrical Systems

The increasing amount of desirable electronic components in cars is limited by a number of factors. These factors include:

- Increasing complexity of wiring systems
- Higher production costs
- Increasing demands on available space in the vehicle
- Extreme complexity of component configuration
- Reduced reliability of the overall system

In order to minimize such disadvantages, bus systems are now being used for the vehicle's electrical system.

Bus systems

Bus systems enable the individual control units on the vehicle to be networked with one another via "serial interfaces." The use of bus systems in vehicle electrical systems provides a number of advantages.

cardiagn.com

Advantages of Bus Systems

- Greater reliability of the overall system
- Simplification of wiring systems
- Reduction of the number of separate cables
- Reduction of the cross-sectional areas of wiring looms
- Greater versatility in terms of cable routing
- Multiple use of sensors in the vehicle, thereby reducing the number of duplicated sensors
- Use of shared interfaces by signals, thereby reducing the number of interfaces
- Transmission of complex data
- Greater flexibility in the event of system modifications
- Data volume can be expanded at any time
- Flexible configuration of control units
- Adoption of new functions for customers
- Efficient diagnosis
- Lower hardware costs

The E65 introduces three (3) new bus systems. Two of them are based on fiber-optic technology. The two new fiber-optic bus systems are called:

MOST bus (Media Orientated System Transport) and **" *byteflight*"** (safety systems bus).

The third bus system consists of two insulated copper twisted-pair wires and is called the:

K-CAN (Body-Controller Area Network). The K-CAN bus replaces the single wire K bus (body bus) and is subdivided into two sections: the K-CAN System and the K-CAN Periphery.

The powertrain control units continue to use a CAN bus called the **PT-CAN,** except that now it is a three wire bus to include a KL-15 wake-up wire.

Comparison of E38 and E65 bus systems

E38	E65
CAN	PT-CAN
I-Bus K-Bus P-Bus	 K-CAN System K-CAN Periphery
-------	MOST Bus
-------	*byteflight*
D-Bus	D-bus

cardiagn.com

Bus Communication Speeds

The communication speed of the busses in the E65 have been increased significantly to handle the demand placed on them by a greater number of control units.

Here is a comparison between the busses of the E38 and the E65.

Model	Bus	Data Rate	Structure
E38	I/K/P Bus	9.6Kbps	linear
	CAN	500Kbps	linear
	D-Bus	9.6Kbps	linear
E65/E66	K-CAN-S	100Kbps	linear
	K-CAN-P	100Kbps	linear
	PT-CAN	500Kbps	linear
	MOST	22.5Mbps	ring
	byteflight	10Mbps	star
	Sub-Busses	9.6Kbps	linear
	D-Bus	115Kbps	linear

cardiagn.com

E65 BUS SYSTEM

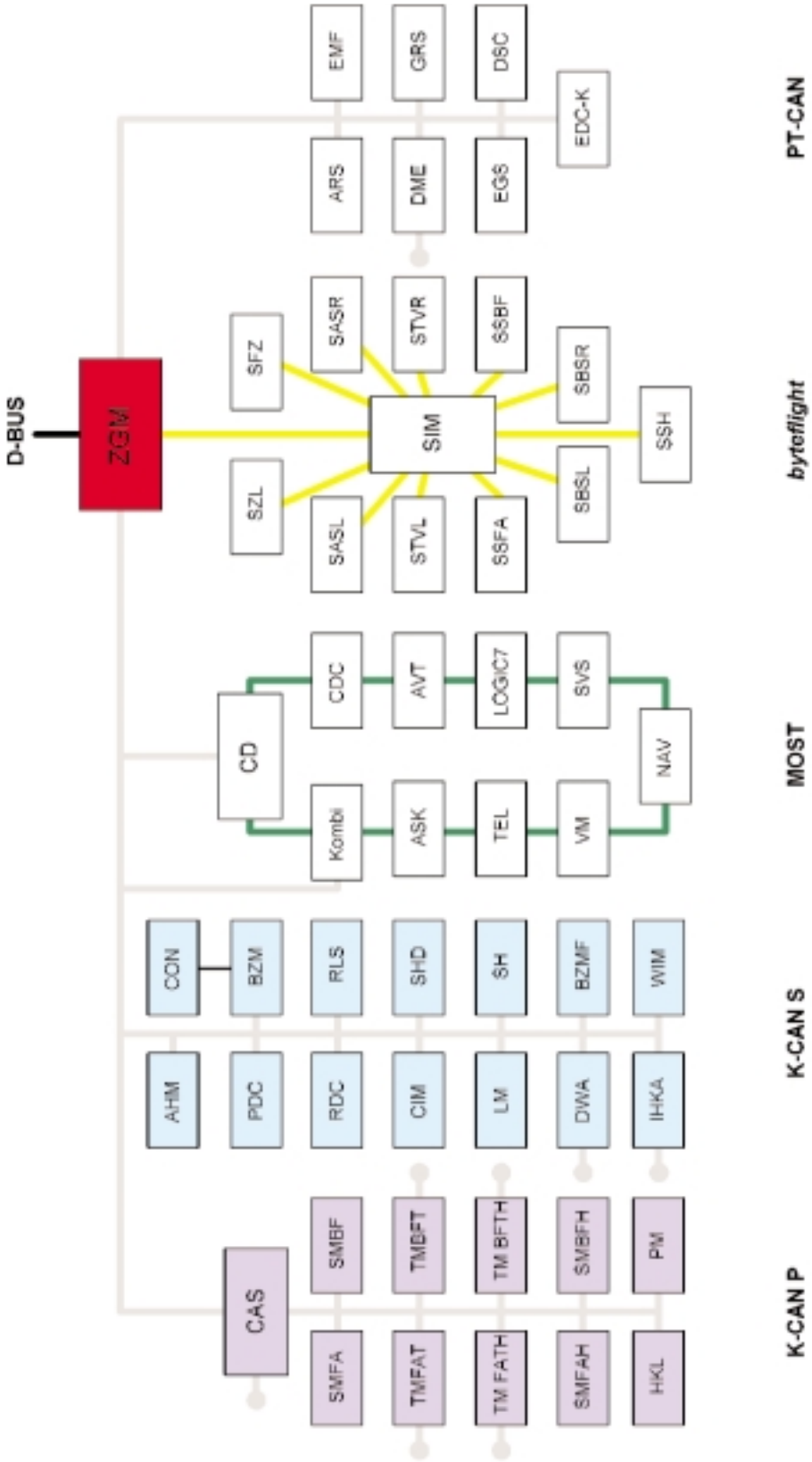

KT-7323

cardiagn.com

E65 Sub-Bus Systems

In addition to the bus systems, sub-bus systems are also used. These are subordinate serial bus systems. Their functions correspond to those of the previous I/K bus.
The following sub-bus systems are fitted on the E65:

- Driver's door P bus (driver's door switch block periphery bus)
- Engine LoCAN (engine Low CAN bus; link between DME and Valvetronic control unit)
- Telcommander CAN (Phone board CAN)
- M bus (air-conditioning motor bus)
- DWA K bus (alarm system body bus)
- BSD interface (bit-serial data interface)

Driver’s Door P-Bus

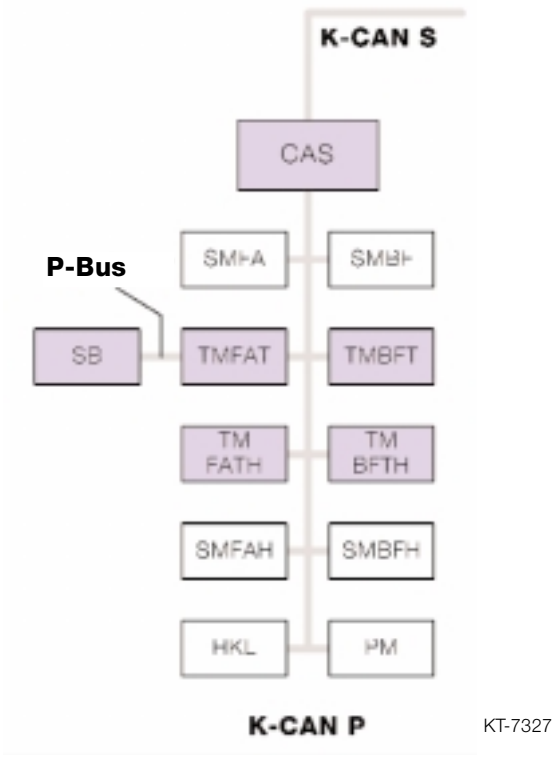

The driver's door P bus passes the signals from the driver's-door switch block to the door module (e.g. functions window lift, child lock-out request, Sun shade).

cardiagn.com

Engine LoCAN

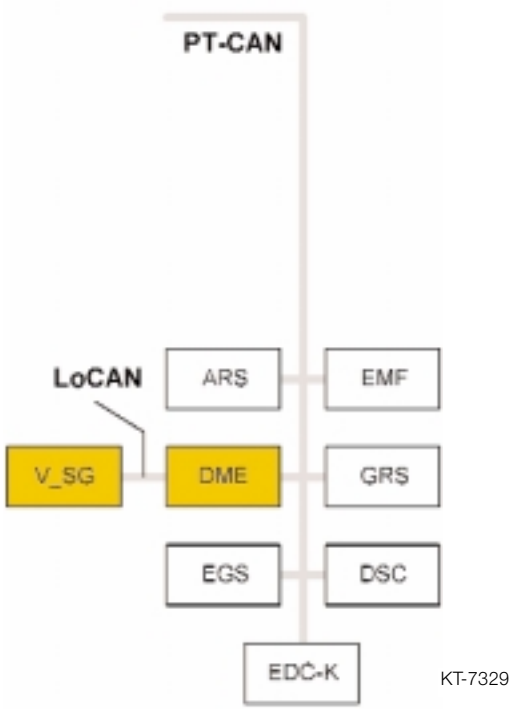

The Engine LoCAN enables communication between the DME and the Valvetronic control unit.

TelCommander CAN

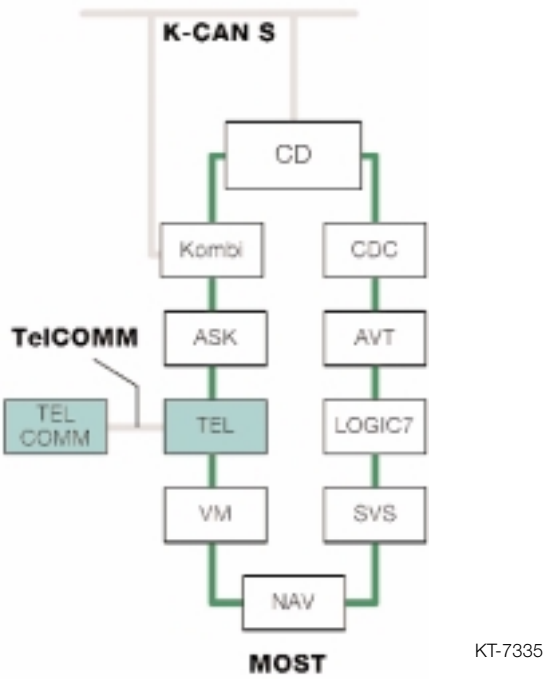

The TelCommander CAN provides the link to the telephone control panel module. It is a two-wire cable.

cardiagn.com

M-Bus

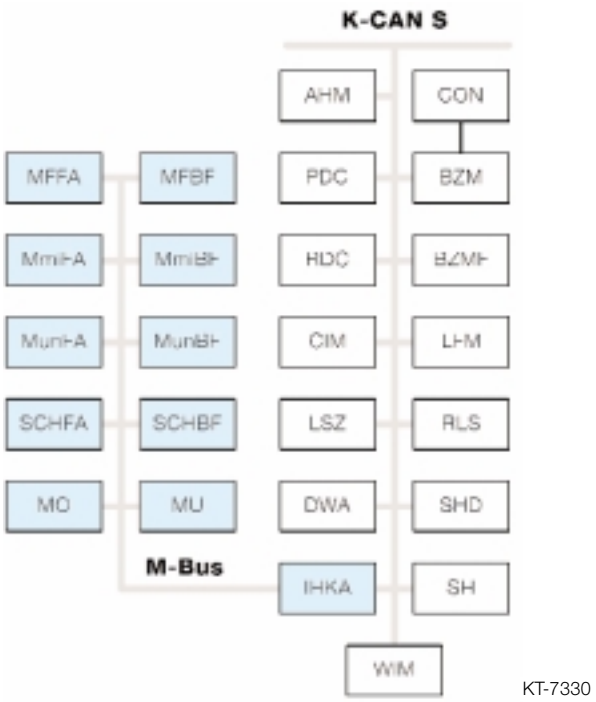

The M bus enables control of the various motors for the air conditioning system.

DWA K-Bus

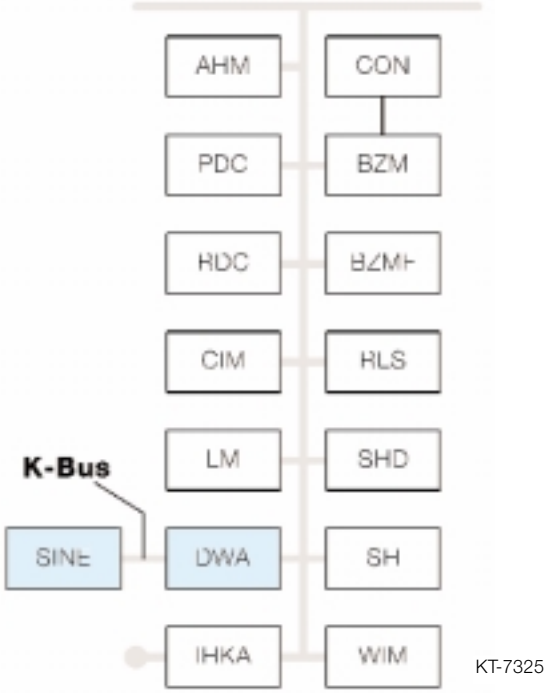

The functions of the alarm system are split between the two control units (DWA and SINE). The alarm system K bus enables communication between those two control units.

cardiagn.com

BSD

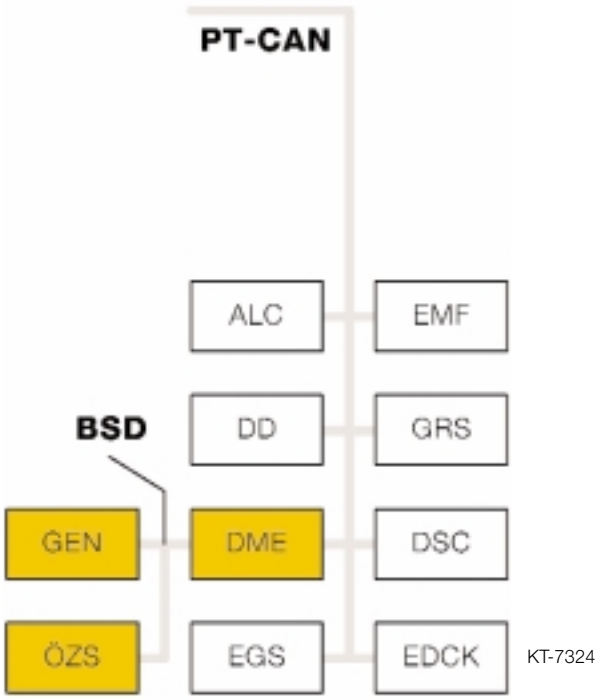

Communication via the BSD enables adjustment of the battery charging voltage, and communication between the DME and oil quality sensor for example.

Gateways

Introduction

A gateway (GW) is an interface. It connects different bus systems within the vehicle's electrical system. It provides a means of ensuring the exchange of information in spite of differences in the rates of data transmission on the individual bus systems. Diagnostic access to the individual control units from a central point is made possible by the gateway.

The gateway modules used in the E65 are the Car Access System (CAS), Control Display (MCGW-MOST/CAN gateway) and the Central Gateway Module (ZGM).

Method of Operation

The data transmitted by the various bus systems is received by the gateway. At this point, transmission rates, data and priority levels of the individual messages are filtered and temporarily stored if necessary. This requires a non-volatile memory.

cardiagn.com

Using gateway rules and conversion tables, the gateway converts the messages as required by the various bus systems concerned. The messages are then passed to the various bus systems via which they reach their ultimate destinations (recipient control unit). If necessary, messages that are relatively less important are held in the gateway's memory and sent later.

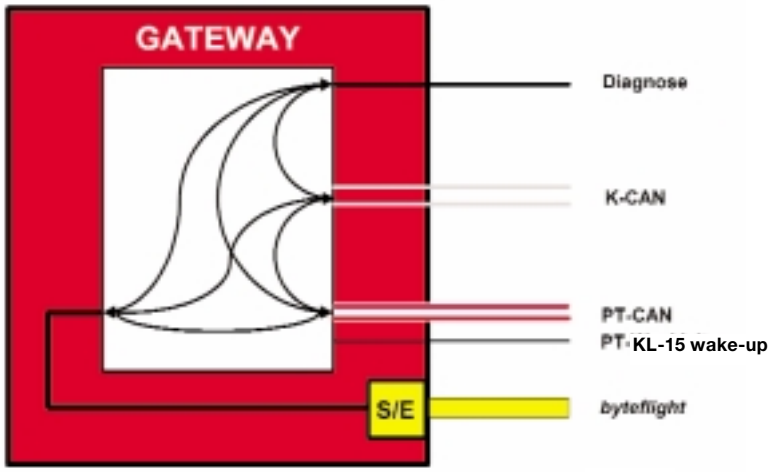

KT-8136

Overview of E65 gateways

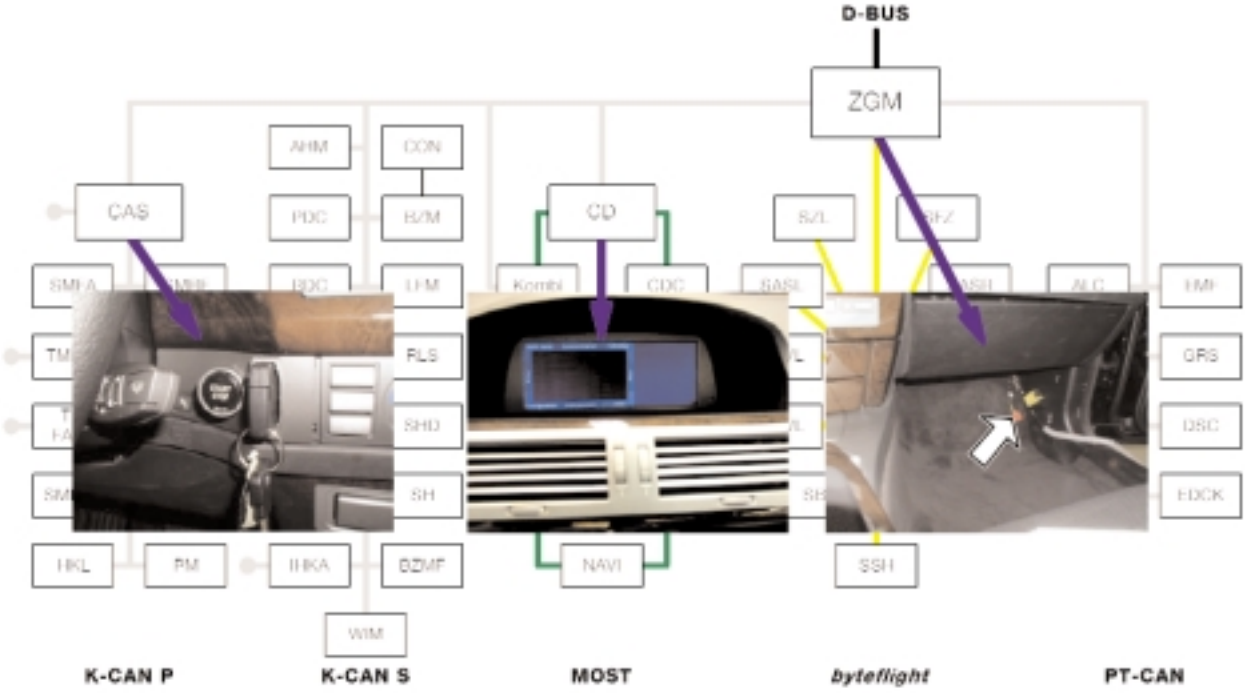

KT-8293

cardiagn.com

Examples of the Function of the Central Gateway Module (ZGM)

The DME and DSC control units both place messages on the PT-CAN. Those messages are received by the Central Gateway Module from the PT-CAN. The buffer memory on the Central Gateway Module temporarily stores the messages from the PT-CAN.

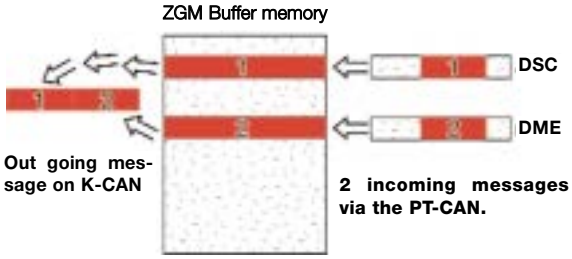

They are converted by the Central Gateway Module according to specific gateway rules and conversion tables for the K-CAN System Bus. As the K-CAN System Bus is slower than the PT-CAN, the two messages are joined together and are sent out as one message. The messages reach their destinations (IHKA/Kombi) via the K-CAN SYSTEM bus.

Electronic Fuel Pump Control

The DME calculates the delivery rate of fuel required on the basis of the vehicle's operating status. The figure calculated is sent in the form of a message to the SBSR (right B-pillar satellite).

The original message (PT-CAN signal) is converted by the ZGM to a *byteflight* message (fibre-optic signal). From the ZGM, the message is passed via the *byteflight* to the SIM, which passes it to the SBSR.

The electronic evaluation unit integrated in the SBSR converts the signal to a PWM signal. That PWM signal controls the electronic fuel pump (EKP). The required fuel delivery rate can now be provided by the electronic fuel pump.

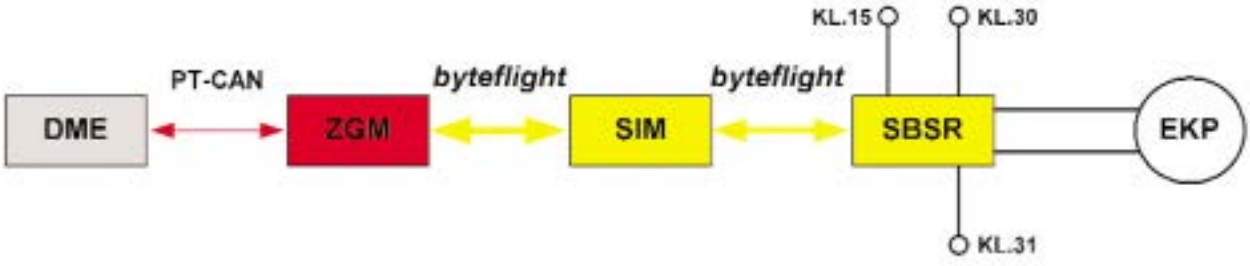

KT-7872

cardiagn.com

Windscreen Wiper Function

The driver operates the windscreen wiper switch (SWS) to initiate a wiper system function. The wiper switch is plugged directly into the Steering Column Switch Center Module (SZL).

The SZL module analyzes the signals from the wiper switch and calculates which wiper system function has been selected by the driver. That information is placed on the *byteflight* in the form of a message.

The Safety Information Module (SIM) receives the driver's instruction from the SZL and passes it on to the ZGM via the *byteflight*. The ZGM receives the message from the SIM and passes it on in its role as "gateway control unit" to the Wiper Module (WIM) via the K-CAN S. The wiper module performs the action requested by the driver (e.g. wipe or wash).

KT-8527

Optimum Charging Controlled by Power Module (PM)

In order to drain as little energy as possible from the battery (particularly in the winter), the idling speed is increased at an early stage. This ensures that the battery charge level is kept high. If the charge level falls below the minimum required to be able to start the car, the idling speed is increased.

The PM detects that the battery charge level is low and places a message to that effect on the K-CAN P. The Car Access System (CAS) passes the message on to the K-CAN S. The ZGM receives the message from the CAS and passes it on via the PT CAN in its role of "gateway control unit".

The DME module receives the request to increase the engine speed over the PT-CAN. The DME passes that request on via the LoCAN to the Valvetronic control unit (VVT). The Valvetronic control unit controls the output stage for the valvetronic motors to increase the engine idle speed accordingly.

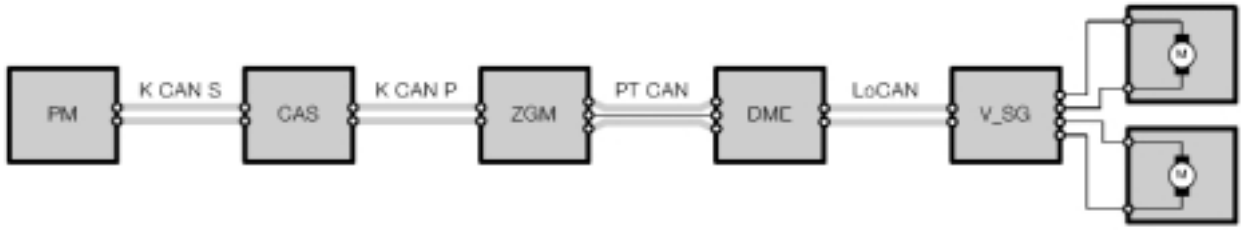

KT-8529

cardiagn.com

Examples of CAS Gateway Function

Seat Adjustment

The driver operates the seat adjustment switch. The command is processed by the switch block and passed via a 3-core data line to the Center Console Control Center Module (BZM). The BZM places the message on the K-CAN S for the Car Access System (CAS).

The CAS passes the message on in its role as "gateway control unit" to the driver's seat module (SMFA) via the K-CAN P. The seat module activates the required seat adjustment motor via its output stages.

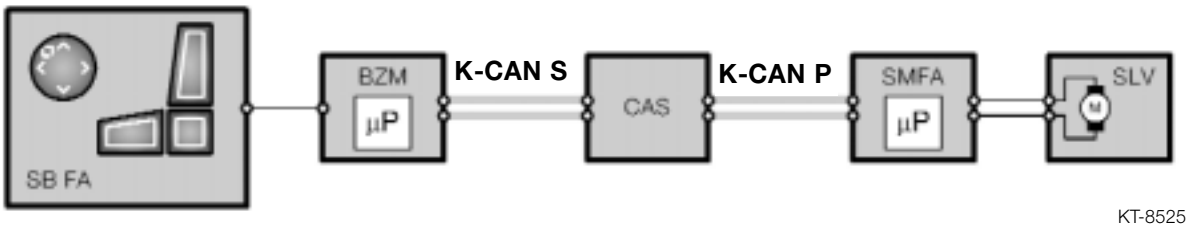

Electric Windows (FH) and Sunroof (SHD)

Using the convenience open function, the windows and sunroof can be opened by pressing the open button on the remote control. The commands from the remote control are received by the Car Access System (CAS).

The CAS places the message on the K-CAN P and the K-CAN S. All 4 door modules (TM...) receive their messages from the K-CAN P, while the sunroof receives its message from the K-CAN S. The modules then activate their output stages to open the windows and sunroof. If the button on the remote control is released while the operation is still in progress, it is then immediately halted. In order to re-activate the convenience open/close function, the appropriate button on the remote control has to be pressed again.

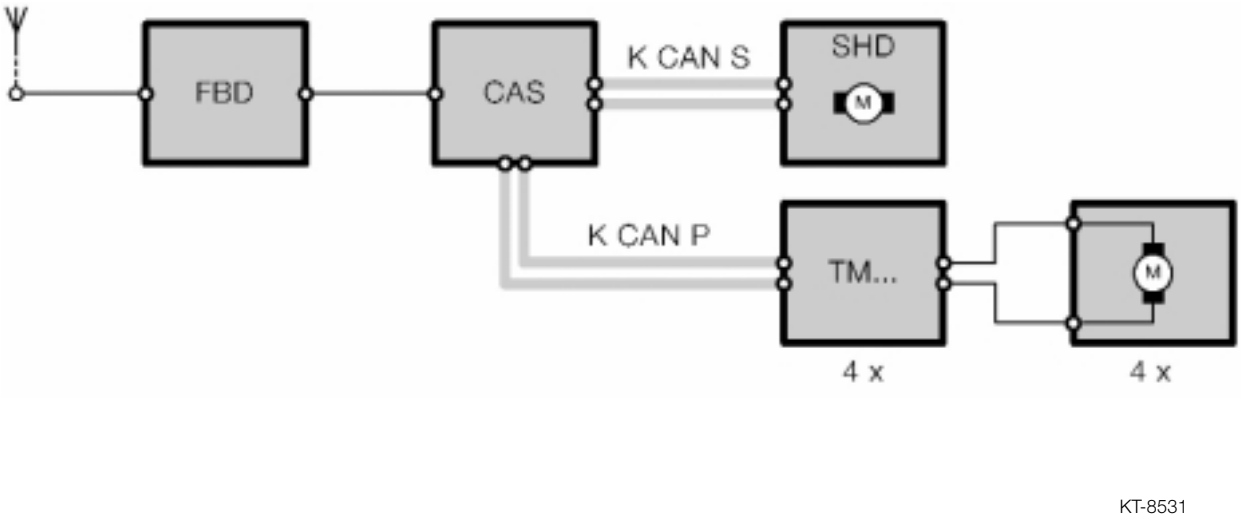

cardiagn.com

Example of CD Gateway Function

PDC

The audible PDC warning is output via the audio system speakers. If the car gets close to an obstacle when the PDC is active, this is signalled by the relevant sensor to the PDC control unit via the bi-directional data line. The PDC control unit calculates the distance from the obstacle and places that information on the K-CAN S.

The Control Display (CD) receives the message and passes it on in its role as "gateway control unit" to the MOST bus. The Audio System Controller (ASK) receives the message from the CD and calculates from it the required signal tone and frequency. On the basis of that calculation, the ASK activates the mid-range speaker in the appropriate corner of the vehicle. The audible signal is superimposed (mixed) over the current audio sound (radio, CD, etc.).

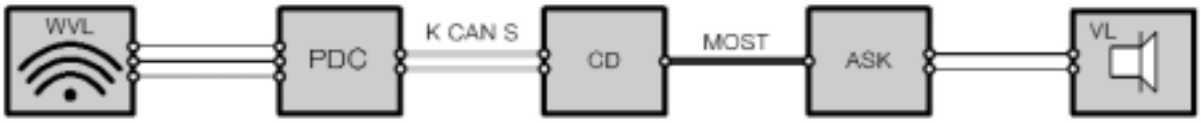

KT-8532

cardiagn.com

Controller Area Network (CAN Bus)

Introduction

The CAN bus is a serial communications bus in which all connected control units can send as well as receive information. Data exchanges over a CAN operate at a rate of 100 to 500Kbps.

The CAN protocol was originally developed by Robert Bosch GMbH and the Intel corporation in 1988 for use in the automotive electronics industry to provide a standardized, reliable and cost-effective communications bus.

The CAN bus was originally introduced on BMW automobiles in 1992 740i/iL as a data link between the DME and AGS control units.

E65 K-CAN

Introduction

For the E65, the functions that were incorporated within the main bodyshell electrical system on the E38 have been distributed among a number of separate control units. Those control units and various new control units are connected to the K-CAN.

The K-CAN is a new development and is subdivided into two sections, the K-CAN System and the K-CAN Peripherals.

Examples of new control units and functions on the K-CAN are the Car Access System (CAS), the Centre Console Control Center module (BZM), the Rear Centre Console Control Center module (BZMF) and the Power Module (PM).

K-CAN System/Peripherals

The subdivision of the K-CAN into the sections "SYSTEM" and "PERIPHERALS" relieves the load on the bus because the number of vehicle components (control units/modules) is divided between two "independent" bus systems.

cardiagn.com

Advantages of two K-CAN Busses

- In a crash, it is possible that components could fail as a result of a short circuit on the K-CAN. The K-CAN Peripherals covers such at-risk areas. If the K-CAN Peripherals were to fail, the K-CAN System would still remain functional.

- Addition of new vehicle components to either bus is possible at any time. (Maximum 40 control units per bus)

- Low data load on the bus system from bus users due to division into two sections.

- Greater reliability.

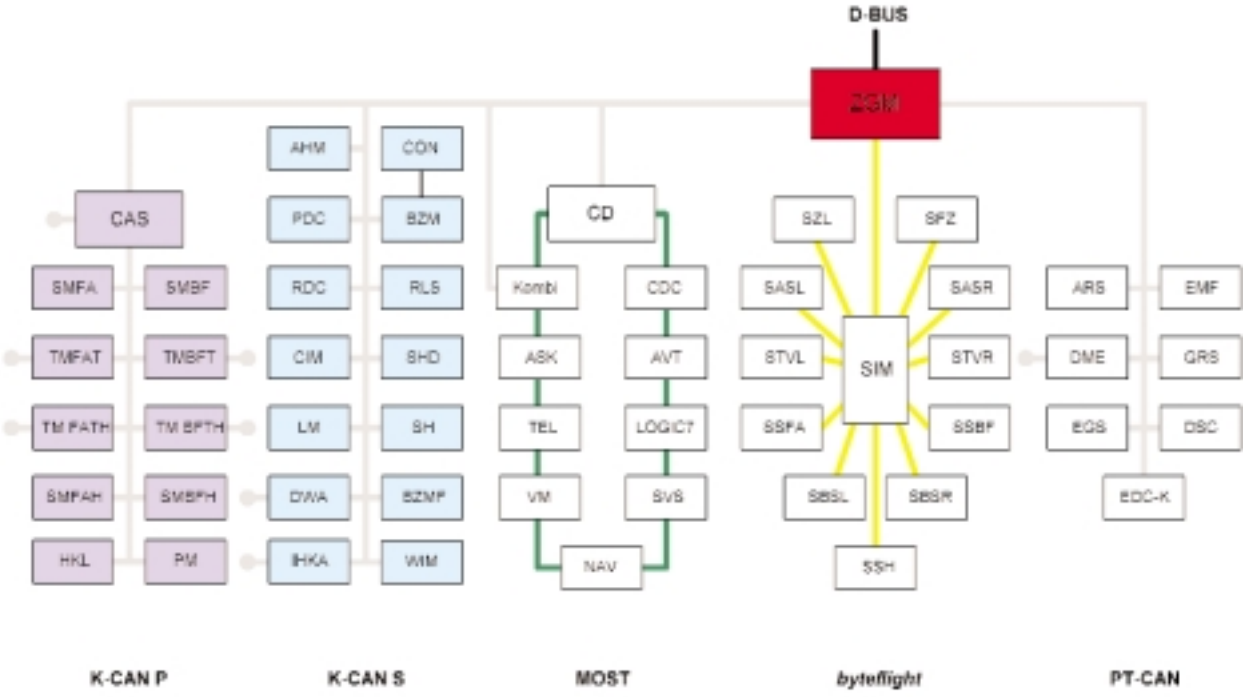

KT-7805

cardiagn.com

Voltage Level on the K-CAN.

If the CAN High voltage level changes from low to high, this represents a logical 1. If the voltage level changes back to low, this represents a logical 0. The voltage level on the CAN is in the range of 1V to 5V.

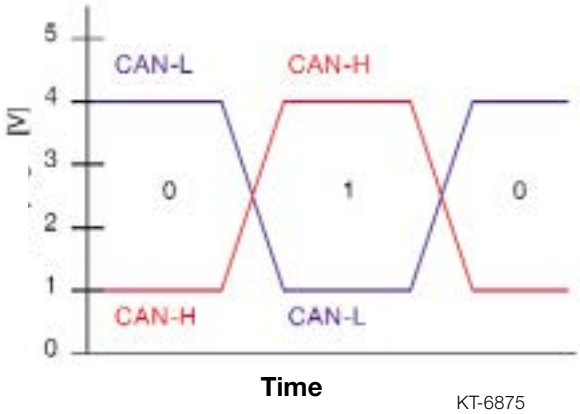

KT-6875

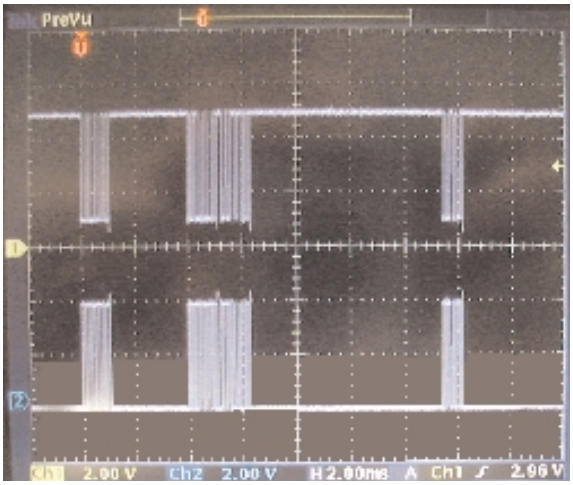

KT-6876

Note:
The voltage can alter as a result of a defective terminal resistor, for example. This has an effect on the CAN system. Communication between bus nodes no longer functions properly.

Terminal Resistor

An electrical conductor through which current passes always has an ohmic, an inductive and a capacitive impedance. When data is transmitted from point "A" to point "B" over a CAN line, the total sum of that impedance has an effect on the transmission of that data.

The higher the transmission frequency, the greater the effect of the inductive and capacitive impedance. The result of this can be that when the signal reaches the end of the data transmission line, it is unidentifiable. For that reason, the data line is "modified" by terminal resistors so as to preserve the original signal.

The inductive impedance is produced by phenomena such as the coil effect of the wire. The capacitive impedance for example is produced by the effect of routing the wire parallel to the vehicle body. The terminal resistors on a bus system vary. They are generally dependent on the following parameters:

- Frequency of data transmission on the bus system.
- Inductive/capacitive load on the transmission channel.
- Length of the data transmission cable (The longer the cable is, the greater is the inductive component).

cardiagn.com

The control units are categorized either as basic control units or other control units. Categorization is performed on the basis of the impedance level. Basic control units are those which always have to be fitted in the car regardless of equipment level or market. Other control units are those that are dependent on the options fitted.

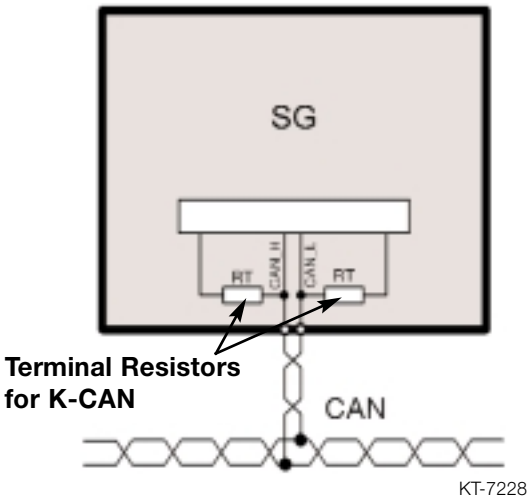

The terminal resistor values for the K-CAN system are 820 Ohm for “Basic” controllers and 12K Ohms for all other control units.

For the E65 the Basic controllers are:

K-CAN S: LM, IHKA, CAS, CD, ZGM, KOMBI.

K-CAN P: CAS, TMFAT, TMBFT, HKL

The resistors are located inside of the control units.

Wake-Up on the K-CAN

The control units on the K-CAN network are "awakened" via the bus. For that reason, it has been possible to dispense with the previous function of terminal 15 as wake-up line. The wake-up message is passed directly to the control unit output stage by the CAS module receiver. The output stage switches terminal 30 on and the unit is woken up.

cardiagn.com

PT (Powertrain) CAN

Introduction

The PT CAN is the fastest CAN bus in the E65. It is an existing bus system. PT CAN stands for powertrain CAN. It links all control units/modules associated with the powertrain. All the bus nodes are connected in parallel with one another. In contrast with the previous bus, (two-core twisted pair) it now has three wires. The third wire of the bus cable is used as the wake-up line and has nothing to do with the actual CAN bus function.

Voltage Level on the PT CAN

When the bus is inactive, the bus high and low levels are at 2.5 V.

When the bus becomes active, the CAN Low voltage level changes to low (1.5 V) and the CAN High level changes to high (4 V), thus representing logical 1.

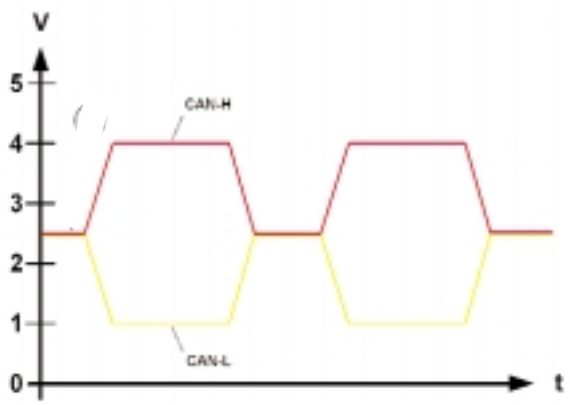

KT-7333

PT CAN Terminal Resistors

The PT CAN uses two terminal resistors to establish the correct inductive and capacitive impedance in the communication lines. Two 120 Ohm resistors are located in the wire harness (no longer in the control units as on previous systems). The resistors are located:

- Behind the right front kick-panel trim. (A-pillar)
- Below the rear seat.

The resistance is measured by connecting the appropriate adapter to any of the modules on the PT-CAN and measuring resistance between CAN-H and CAN-L.

The measured resistance should be close to 60 Ohms.

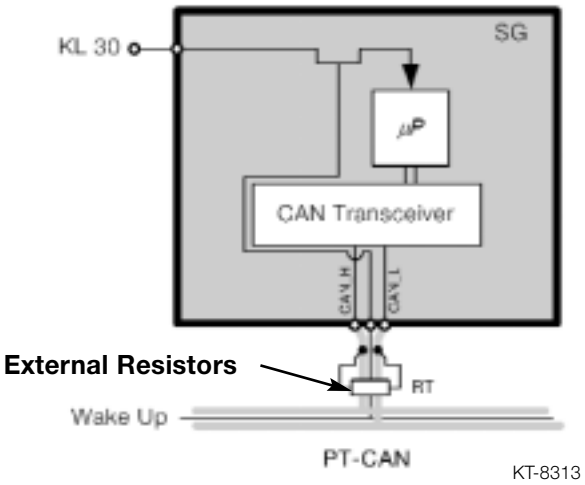

KT-8313

cardiagn.com

Failsafe Characteristics
If the PT CAN goes into emergency mode it is no longer available for the engine control system. However, it can still provide communication between the other bus nodes even if:

- One of the CAN leads (cores) is broken- one of the CAN leads (cores) is shorting to ground.
- One of the CAN leads (cores) is shorting to the power supply B+.

"Wake-up" Lead in PT CAN Network
The PT CAN for the E65 is now a three wire CAN, the third wire is a hard wire KL-15 signal used to wake up the powertrain control units. The "wake-up" lead has nothing to do with the actual PT CAN function. A wake-up telegram is still transmitted by the CAS via the ZGM - PT-CAN as a CAN message.

Fiber-Optic Bus Lines

Introduction

Transmission of data, voice and images involves ever increasing volumes of data. Fiber-optic technology (already in use in tele-communications and industrial installations) is capable of handling such large volumes of data while at the same time offering additional advantages.

High data transmission rates in copper wires cause electromagnetic interference. This can interfere with other vehicle systems. Compared with copper wires, fiber-optic lines require less space and are lighter in weight for the same transmission band width. In contrast with copper wires, which carry digital or analog voltage signals as the means of transmitting data, fibre-optic busses transmit light. BMW uses plastic (POF-polymer optical fibers) cables manufactured by Dow-Corning.

Advantages of Plastic Fiber-Optic Lines
Because of the large cross section of the fibers, the positioning of the fiber core does not present a significant technical problem in production.

Relatively Low Sensitivity to Dust. Even with the most careful precautions, dust can find its way onto the surface and alter the amount of light entering/leaving the optical fibre. Small amounts of contamination do not result in communication failure.

cardiagn.com

Easy to Work With. The fiber (core) is approximately 1 mm thick and easier to handle than glass optical fiber with a thickness of approximately 62.5 µmm, for example. In comparison with a glass fiber-optic cable, it is considerably easier to handle. The simplest way of putting it is that glass breaks and plastic doesn't.

Processing. The optical fiber material used by BMW is polymethyl methacrylate (PMMA) which, in comparison with glass optical fibers, is relatively easy to cut, smooth down or melt - which offers major advantages with regard to the production of wiring looms and in repair work.

Economical Costs. All of the above characteristics of plastic fiber-optic cables ultimately make them relatively cheap to connect to transmitters and receivers (connectors, casings). The ease with which the fiber ends can be prepared makes assembly and installation in the field in particular very economical to perform.

Structure of a Fiber-Optic line

Light source provided by control unit transmitter

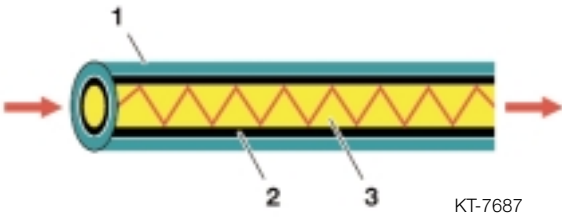

KT-7687

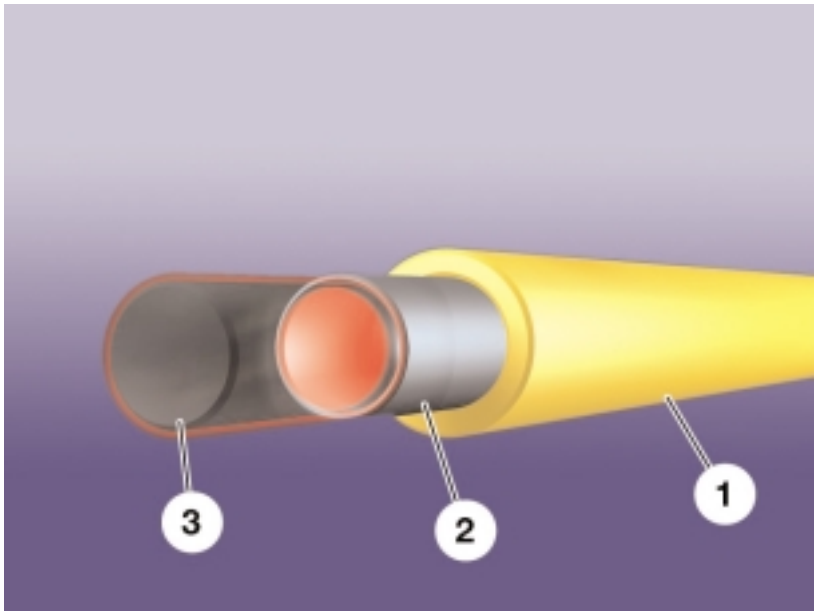

KT-8939

(1) Insulation

(2) Cladding

(3) Fiber core

cardiagn.com

Principle of Light Transmission

The electrical signal generated by the control unit is converted into an optical signal by an internal transmitter module and sent along the fiber optic bus. The fiber core carries the light beam.

In order to prevent the light escaping, the fibre core is enclosed by a cladding layer. The cladding is reflective and reflects the light back into the core, thus making it possible to transmit light along the fibre.

In this way, the light passes along the optical fibre and is ultimately converted back into an electrical signal by a receiver module in side the recipient control unit.

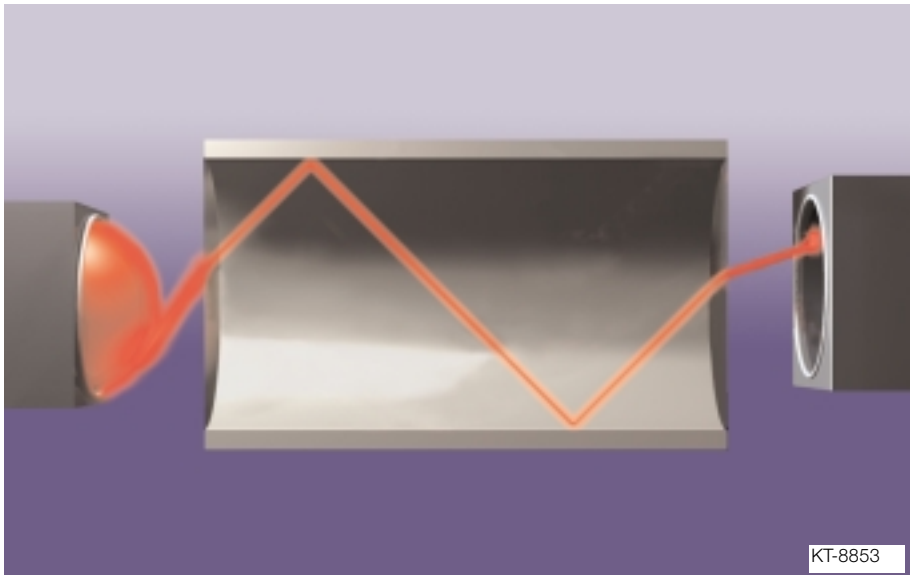

cardiagn.com

Light Attenuation

Attenuation refers to the reduction in strength of a signal. The light transmitted along the optical fiber becomes weaker the further it has to travel. Attenuation is usually measured in decibel units (dB). In fiber optic cables attenuation is measured in terms of the number of decibels per unit of length (foot/meter etc.) The less the attenuation per unit distance the more efficient the cable.

Average attenuation in the E65 fiber optic bus lines:

- .5dB at each connector
- .3dB for each meter of cable

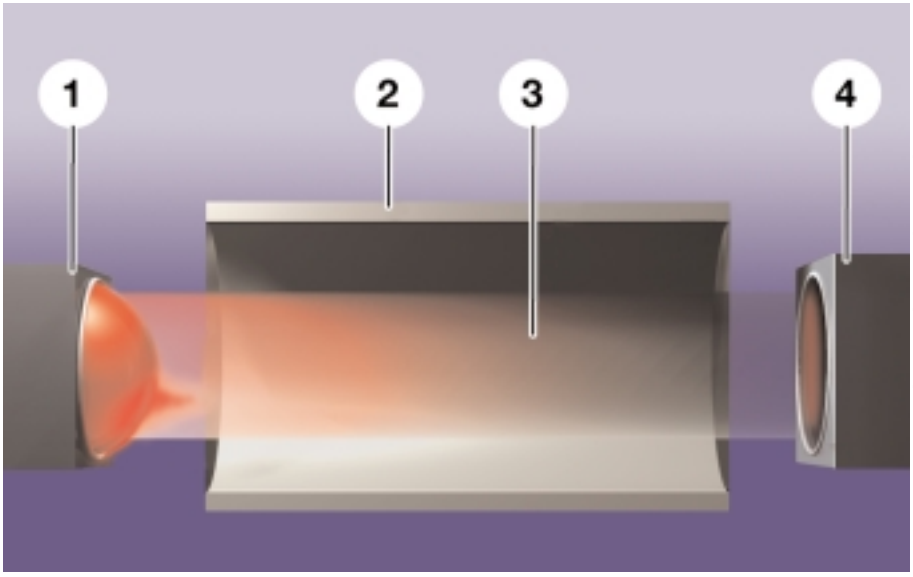

(1) Transmitter Diode

(2) Cladding

(3) Fiber core

(4) Receiver Diode

Special considerations when handling fibre-optic cables

Excessive attenuation can be caused by the following reasons:

- Bends in the fiber-optic cable with a radius smaller than 50mm.
- Kinks in the fiber-optic cable.
- Squashed or compressed fiber-optic cable.
- Damaged insulation on fiber-optic cable.
- Stretched fiber-optic cable.
- Dirt or grease on the exposed cable ends.
- Scratches on the exposed cable ends.
- Overheated fiber-optic cable.

cardiagn.com

Bending radius

The plastic fibre-optic cable should not be bent to a radius of less than 50 mm. That is roughly equivalent to the diameter of a soft-drink can. Bending the plastic fiber-optic cable any tighter than that can impair its function or even damage it irreparably.

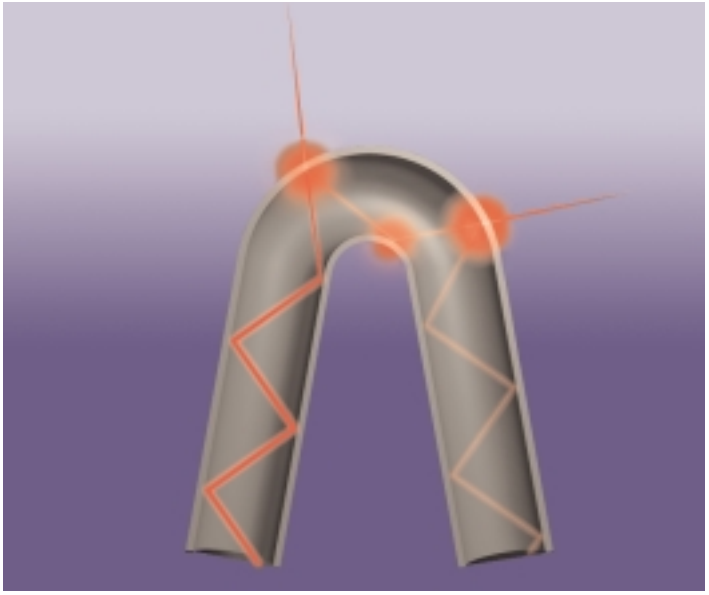

KT-8782

Light can escape at points where the cable is bent too tightly.

This is caused by the fact that the light beam strikes the interface between core and cladding at too steep an angle and is not reflected.

Fibre-optic cables must not under any circumstances be kinked when fitted because this damages the cladding and the fibre core. The light is then partially dispersed at the point where the fibre is kinked and transmission loss results. Even just kinking an optical fibre once very briefly is enough to damage it!

Example of fiber optic damaged by kinking

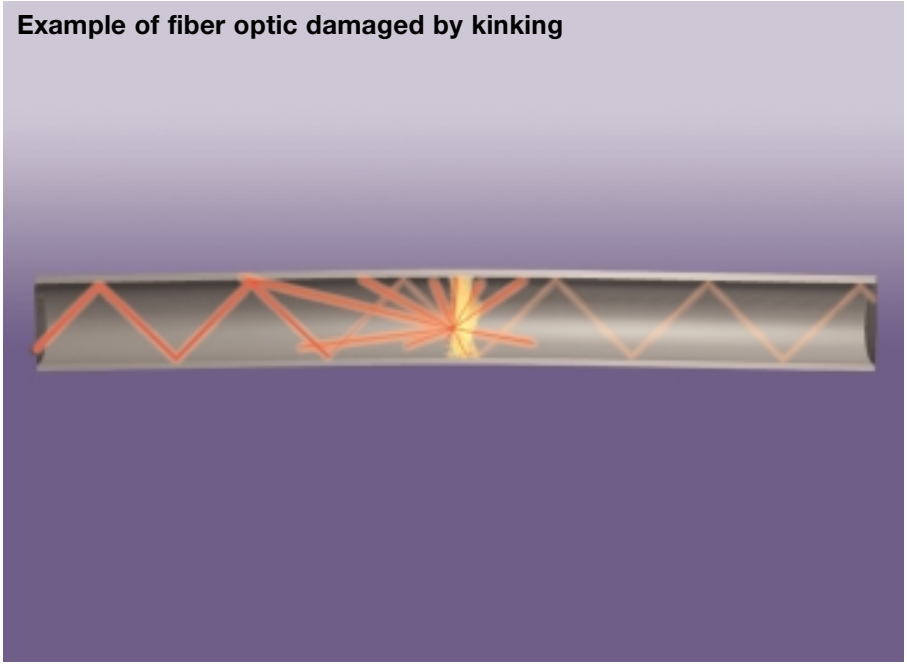

KT-8784

cardiagn.com

Compression Points and Stretching
Compression points must also be avoided because they can permanently deform the light-conducting cross section of the optical fiber.

Light is then lost during transmission.

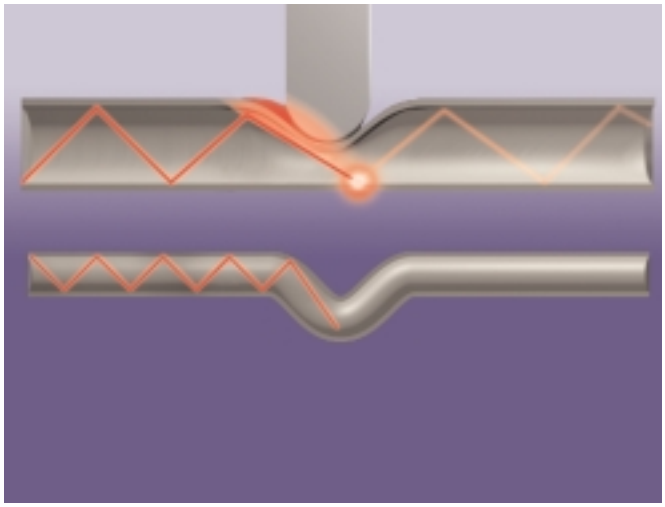

KT-8781

Pulling fibre-optic cables too tight can also cause compression points as it increases the lateral pressure on the cable. The effect is exaggerated at higher temperatures because the cable straps then become tighter as well. The fiber-optic cable is then constricted, the attenuation increases at that point and function is severely impaired.

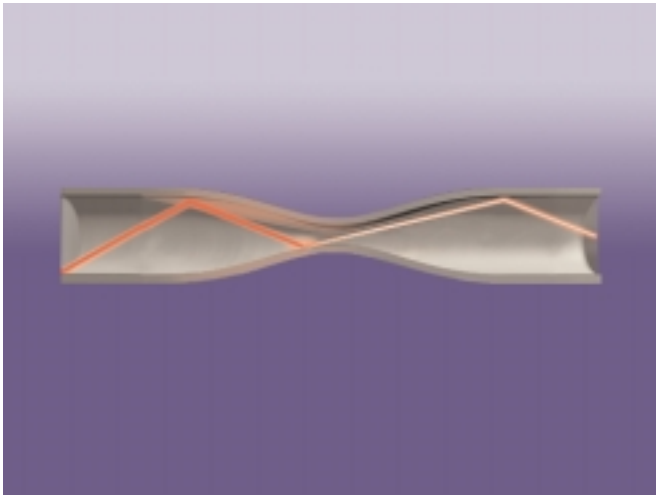

Overstretching of fibre-optic cables, caused by pulling for example, can destroy them.

Stretching reduces the cross-sectional area of the fibre core. Restricted passage of light (attenuation) is the result.

KT-8785

cardiagn.com

Abrasion Points

In contrast with copper wires, abrasion of fiber-optic cables does not cause a short circuit.

Instead, loss of light or intrusion of external light occurs. The system then suffers interference or fails completely.

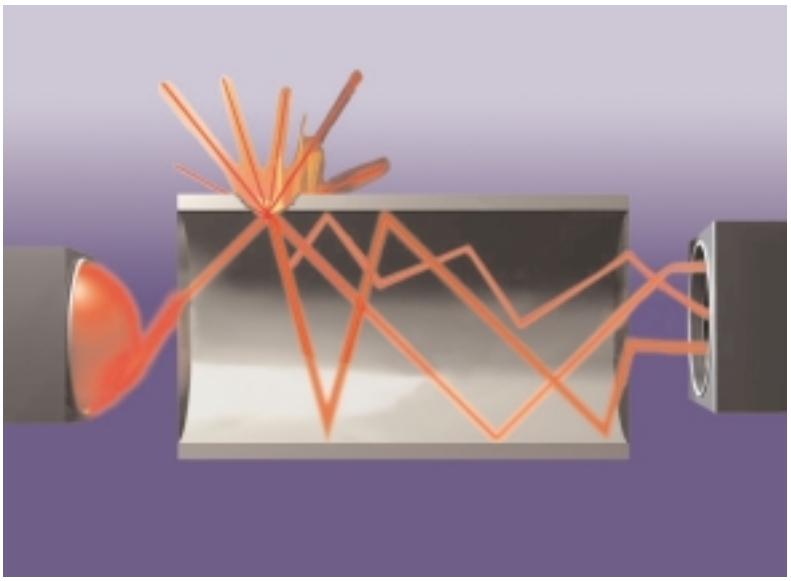

KT-8940

Dirty or Scratched Fiber-Optic Cable Ends

Another potential source of problems are dirty or scratched cable ends. Although the ends of the cables are protected against accidental contact, they can still be damaged by incorrect handling.

Dirt on the end of an optical fiber will prevent the light entering/exiting the fiber. The dirt absorbs the light and the attenuation is then too great.

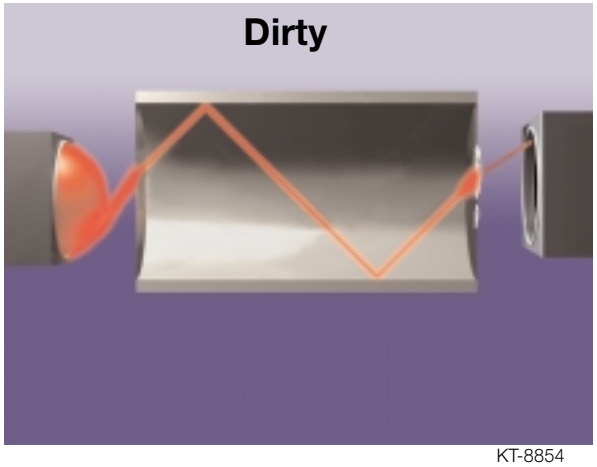

KT-8854

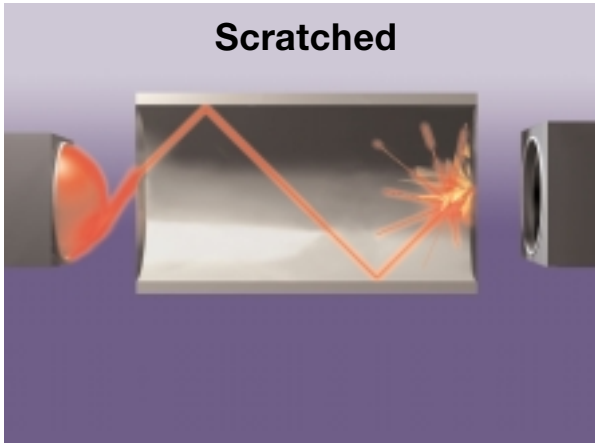

KT-8855

Scratches on the cable ends scatter light striking them so that the amount of light reaching the receiver is reduced.

cardiagn.com

Overheated Fibre-Optic Cables
The demands of the new technology even have to be taken into account in subsequent repair work such as painting. As fiber-optic cables are damaged by heat, care must be taken to ensure that the maximum permissible temperature of 85 ºC is not exceeded when drying paintwork.

Notes on Working With Fiber-Optic Cables
Extreme care is required when working on vehicle wiring harnesses, unlike copper wiring damage does not immediately result in a fault but may come to the owner's notice later.

Notes on Repairing Fiber-Optic Cables The MOST fiber-optic cable may be repaired once between each control unit. The *byteflight* cannot be repaired at present. A special crimping tool will be available to the service department for crimping the new "optical fiber sleeves." The precise procedure are described in the instructions for using the crimping tool.

Fiber optic use in the E65

Two optical bus systems have been developed for the E65:

- MOST bus
- *byteflight*

The light wavelength is 650 nm (red light).

In order that the fiber-optic cables for the various bus systems can be distinguished, four different colors are currently used:

- Yellow byteflight
- Green MOST
- Orange service replacement line for *byteflight* (*byteflight* is not repairable).
- Black service repair line for MOST.

cardiagn.com

MOST Bus

The MOST bus transmits all data required by the communication and information systems in the vehicle. MOST stands for Media Orientated Systems Transport.

The connection between the individual control units is provided by a ring bus which transports the data in one direction only. That means that a control unit always has two optical fiber cables - one for the transmitter and one for the receiver.

The MOST control units are linked exclusively by fiber-optic connections. Therefore, the transmitter and receiver diodes can be positioned anywhere within the control unit as optical fibers are used inside the control unit as well.

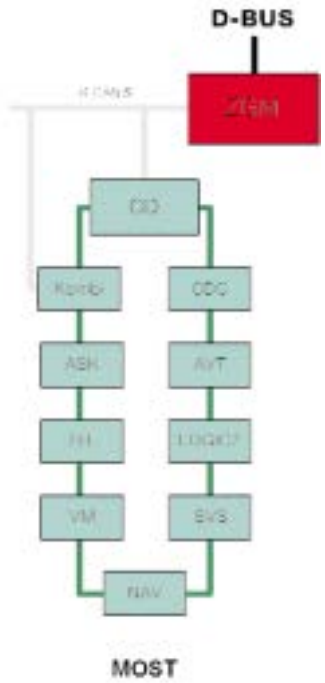

KT-8788

example: ASK

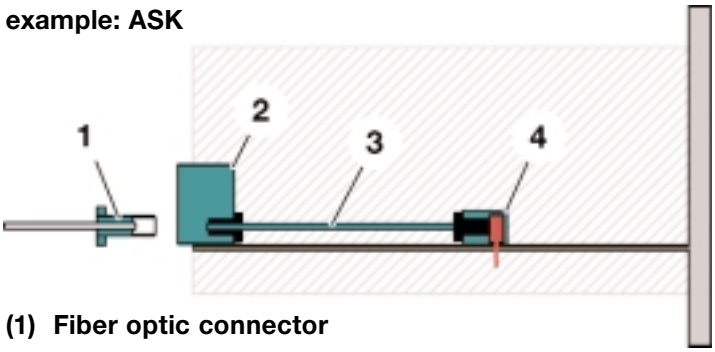

KT-8887

(1) Fiber optic connector

(2) Socket on control unit

(3) Fiber optic "jumper" inside of control unit

(4) Receiver module with diode

As a result of the receiver modules being set far into the control unit, the fiber ends can be set back inside the wiring loom connector.

This provides additional protection for the delicate fiber ends.

The 2-pin fibre-optic module is identical on all types of connectors.

Component families and connectors are defined as standards within the MOST® consortium.

Pin 1 is always assigned to the **incoming** optical fiber and Pin 2 to the **outgoing** optical fiber.

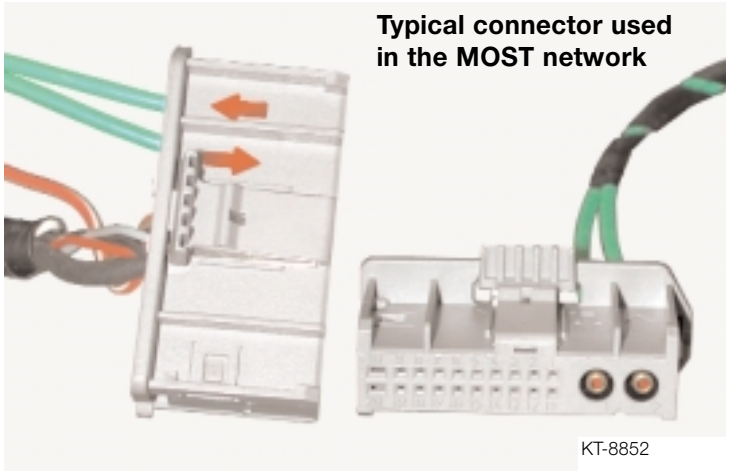

KT-8852

cardiagn.com

byteflight

In contrast with the MOST bus, the *byteflight* is a star bus which transports data in two directions. That means that there is only one fiber-optic cable for each control unit.

The transmitter is immediately above the receiver.
Both are integrated in the control unit's connector strip.

Due to those differences from the MOST bus, a different connector system is required.

Since the *byteflight* is connected directly to the diode, the protruding fiber end has to be protected by a flap.

This is automatically opened as the connectors are joined up.

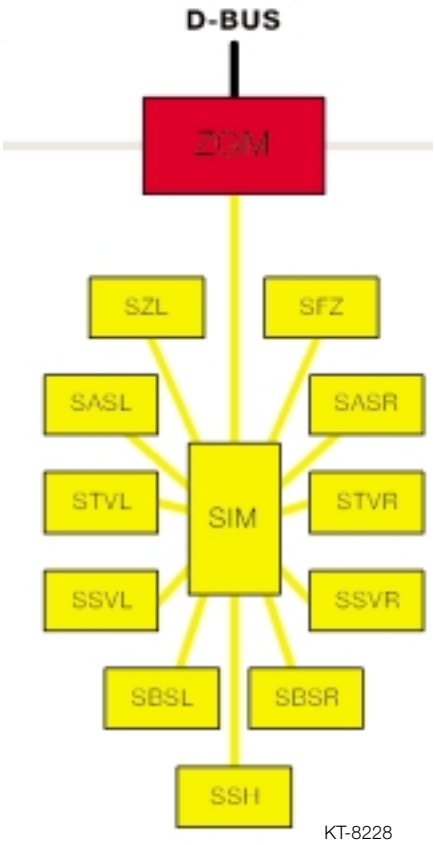

***byteflight* Connector for satellite**

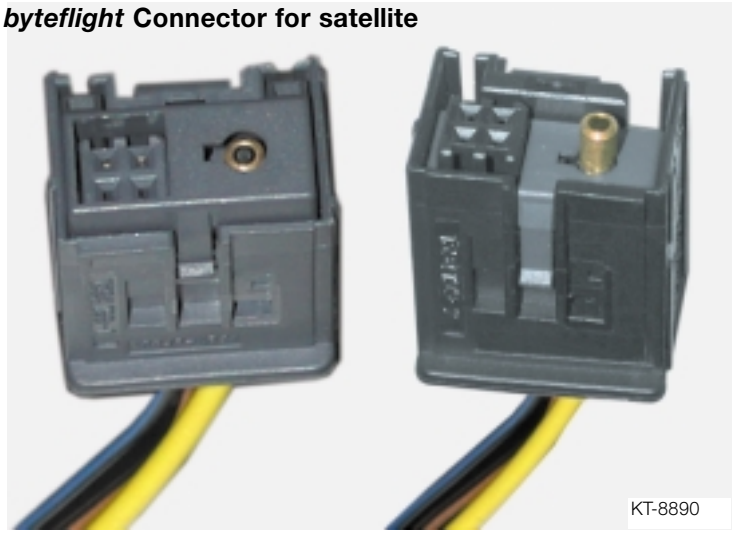

cardiagn.com

MOST bus

Introduction

MOST is communications technology for multimedia applications, specially developed for use in the automobile. MOST stands for "Media Oriented System Transport".

The need for increasingly high-quality entertainment services (information and entertainment) makes high demands on vehicle developers. Digital information and entertainment services should be available to all vehicle occupants at any time they wish to use them. Available services include:

- Telephone
- Navigation services
- Telematics and ASSIST, Internet services (E-mail, web pages)
- Audio functions (radio, music cassettes, compact discs, CDchangers)
- Video (DVD)

The information and entertainment services are required by different vehicle occupants at one time. This means they must be able to run parallel and synchronously without disrupting one another. The data transmission therefore requires a high band-width (data transfer rate).

Approx. 4 years ago, the following companies came together to develop a multimedia network to series maturity:

- Audi
- Becker
- BMW
- DaimlerChrysler

In 2001, MOSTCo (Cooperation) has approx. 65 members. In addition to all the European and all the American manufacturers of vehicles, the Japanese automobile industry is also represented by Toyota and Nissan. This means that MOSTCo unites approx. 90% of all the automobile production in the world. A large number of suppliers also work with MOSTCo. MOST is on track to becoming the standard for automotive multimedia services.

cardiagn.com

System Overview

MOST Technology

Until very recently, only very few entertainment-related control units were networked. In the course of the development, the number of components increased continuously.

In addition, the scope of functions of individual components has been extended considerably. In particular, however, completely new logical networking means that all the components are growing to become a system: individual functions work together and produce a high-quality overall system. This results in significant growth in system complexity.

This new dimension of system complexity can no longer be managed using the existing bus systems.

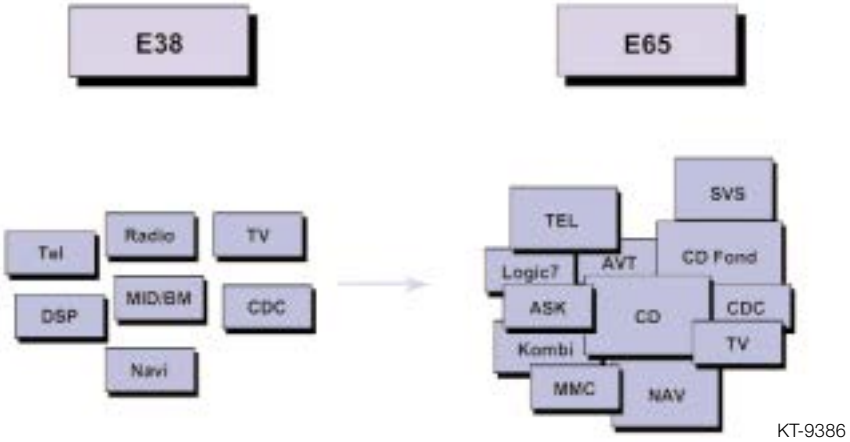

MOST Multimedia Network

MOST technology meets 2 essential requirements:

1. The MOST bus transports control data as well as data from audio, video, navigation and other services (SMS=Short Message Service, TMC =Traffic Message Channel, in other markets).

2. MOST technology provides a logical framework model for control of the variety and complexity of data: the MOST Application Framework. The MOST Application Framework organizes the functions of the overall system.

MOST is able to control and dynamically manage functions that are distributed in the vehicle.

cardiagn.com

Principle of a Multimedia Network

An important feature of a multimedia network is that it transports not only control data and sensor data, e.g. like the CAN bus and I bus (instrumentation bus). A multimedia network can also carry digital audio and video signals and graphics as well as other data services.

Information transmitted on MOST network

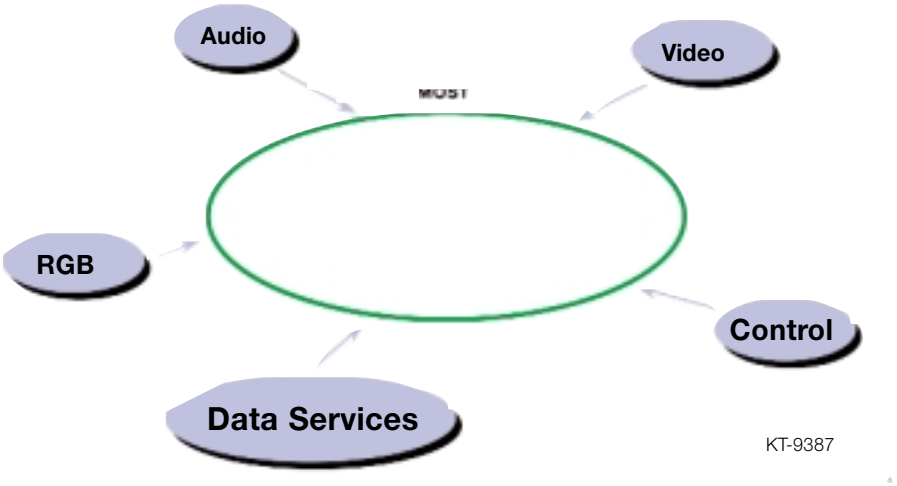

Advantages of the Multimedia Network

All data can be transported across a shared network. This offers the following benefits:

- Additional signal wiring harnesses are eliminated.
- The only addition many control units need is the power supply.
- As each participant (= each control unit) has access to all the data, cost-intensive assemblies for signal distribution can be eliminated.

Different data formats also have different requirements for transmission regarding both mechanism (synchronous or asynchronous data) and the required band-width (baud or bits/second). The MOST format is able to meet these requirements to a satisfactory extent.

cardiagn.com

Data Quantities

The aim is that in the near future all vehicle occupants can call up different services at one time, e.g.:

- The driver calls up navigation information.
- The passenger talks on the telephone.
- A rear seat passenger listens to a CD.
- The other rear seat passenger watches a DVD video.

The data quantities this requires produce the following example:

Application	Band-width	Data	Data Format
Am-FM Check-Control Audio CD Telephone SVS	1.4Mbit/s	1 channel stereo	Synchronous
TV CD Video	1.4Mbit/s 1.4Mbit/s	Audio MPEG 1 video	Synchronous
DVD	2.8-11Mbit/s	MPEG 2 video	Synchronous and asynchronous
Navigation	250kbit/s 1.4Mbit/s 1.4Mbit/s	Vector data (arrows) MPEG 1 video (Maps) Voice commands	Asynchronous Synchronous synchronous
Telematic services	A few bytes		asynchronous

Using MOST, there is already the capability today to transport these large data quantities.

cardiagn.com

Functional Description

Data Transport

MOST currently offers a band-width of 22.5 Mbits/s . In the next generation, the band-width will be increased to 50 and then later to 150 Mbits/s (as of approx. 2002).

In order to meet the different requirements of the applications regarding data transport, each MOST message is divided into three parts:

- Control data
- Asynchronous data: e.g. navigation system, arrow representation
- Synchronous data: e.g. audio, video signals

Data Transport on the MOST

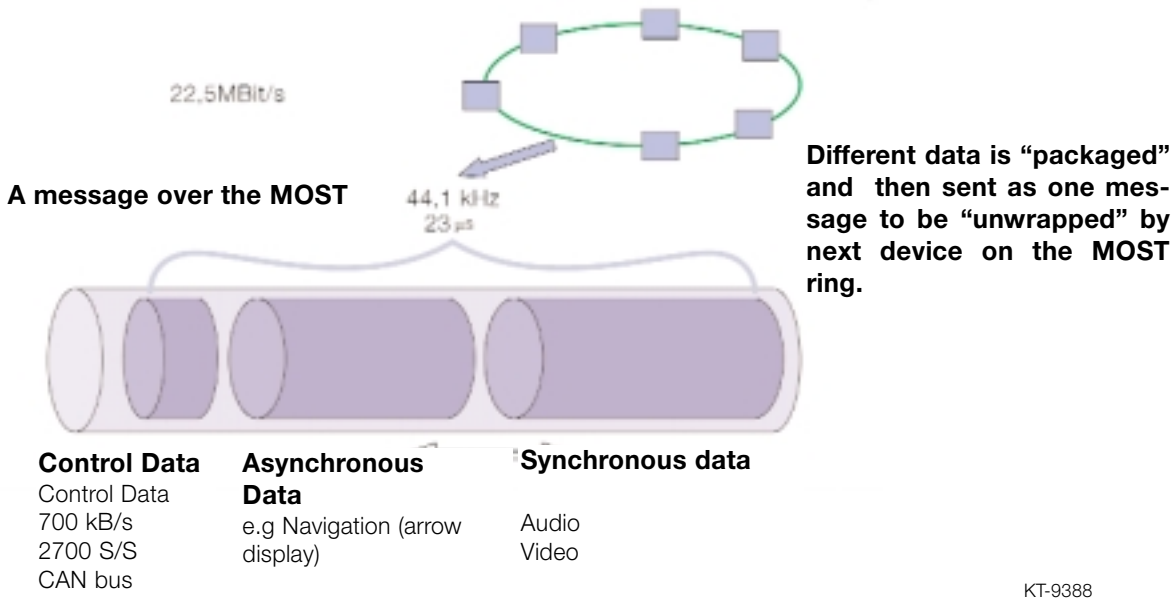

The control data controls the functions and devices in the network. The information can be compared to CAN bus data.

The control data has a band-width of 700 Kbit/s. That corresponds to around 2700 messages per second.

For the data transmission of synchronous and/or asynchronous data, there is a total of 60 bytes. The limit is variable: e.g. 20 bytes of synchronous data and 40 bytes of asynchronous data.

cardiagn.com

Optical Bus

The MOST bus is a plastic optical waveguide. The MOST bus is coded in green in the E65. The light wavelength is 650 nm (red light). The MOST bus requires the following converter components:

- Optical transmitter
- Optical receiver

Each control unit of the MOST framework contains a transmitter and a receiver. The transmitter and receiver have been developed by BMW. The low closed circuit (rest) current properties of the transmitter and receiver enable optical wake-up by the MOST bus.

Optical Transmitter

A driver is fitted in the transmitter. The driver energizes an LED (light-emitting diode).

The LED transmits light signals on the MOST bus (650 nm light, i.e. red, visible light). The repeat frequency is 44.1 KHz.

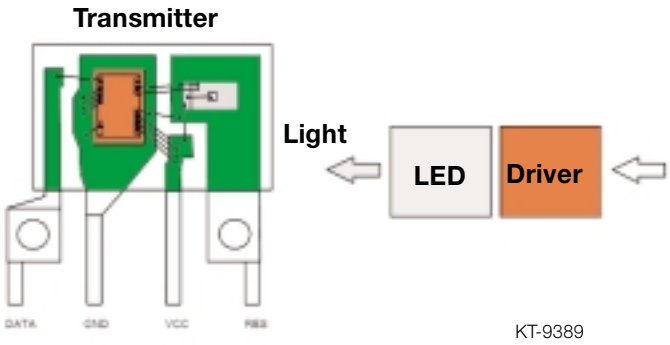

The sensing frequency on a CD player and for audio is 44.1 MHz; this means than no additional buffer is required, yet another reason why this bus system is so efficient for multimedia.

Optical Receiver

The receiver receives the data from the MOST bus. The receiver consists of:

- An LED
- A pre-amplifier
- A wake-up circuit
- An interface that converts the optical signal into an electrical signal

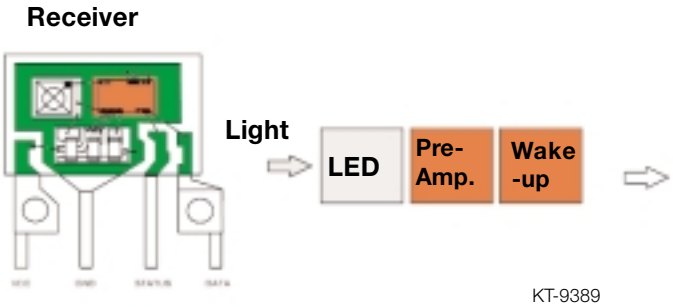

The receiver contains a diode that converts the optical signal into an electrical signal. This signal is amplified and further processed at the MOST network interface.

cardiagn.com

Control Unit/Control Unit Connection

The MOST ring is composed of optical point-to-point connections between 2 control units. Each control unit has a network interface. The network interface consists of:

Example

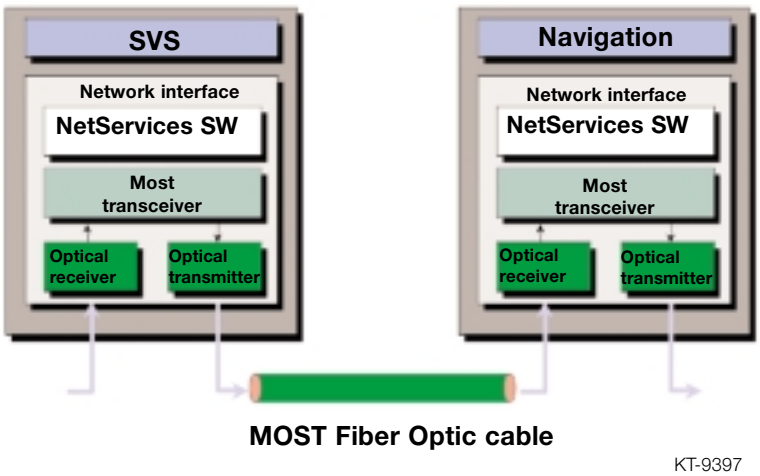

- An opto-electrical converter (optical waveguide receiver, already mentioned).
- An opto-electrical converter (optical waveguide transmitter, already mentioned).
- A MOST transceiver (interface between the optical waveguide receiver/transmitter and the electronic network driver).
- A network driver, the so-called NetServices.

The NetServices run on a microcontroller (main computer in the control unit)

On the application level, a control unit in the MOST framework contains stand-alone function units, so-called function blocks. Examples of function blocks include:

- Tuners
- Amplifiers
- CD players

A control unit can contain several function blocks at one time, e.g. the AVT contains the functions:

- Antenna
- Amplifier
- Tuner

cardiagn.com

Interfaces

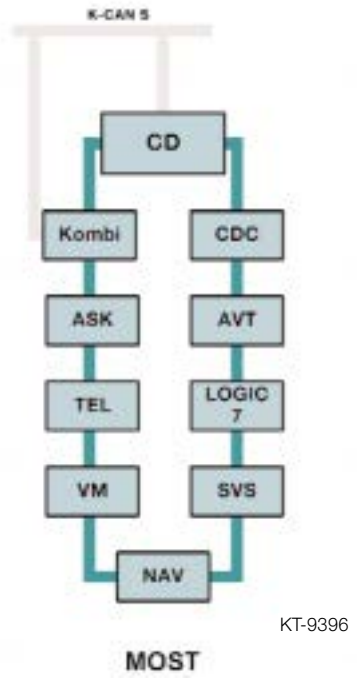

The following contains a brief summary of the tasks of the connected control units in the MOST framework:

Control Display
The Control Display is the system master of all MOST bus functions.

The Control Display is the power master. It wakes up the bus and is responsible for switching it off (power down).

Audio System Controller (ASK)
The audio system controller has the following controller functions:

- Connection master
- Network master
- Audio master

More detailed information can be found in the Entertainment and Communication chapter.

CD Changer Audio (CDC)
The CD changer is a slave control unit in the MOST framework.

Navigation System (NAV 01)
The control unit of the navigation system has controller tasks and slave functions in the MOST framework.

Slave Control Units
The following control units are slave control units:
- Kombi (control unit of the instrument cluster)
- AVT
- LOGIC7
- SVS Speech processing system
- Telephone

cardiagn.com

Diagnosis

If faults occur in the MOST network, the corresponding fault code memory entries can be read out.

- Receiver has not accepted a message
  (Error_NAK)

- Ring break diagnosis carried out
  (Error_Ring_Diagnosis)

- Requesting control unit receives no reply although the relevant
  control unit is present (Error_Device_No_Answer)

Ring Break Diagnosis
When a defect occurs between two controllers, communication on the MOST is interrupted. This is referred to as a “Ring break”. With a ring break three patterns indicating defects can occur:

- Defective control unit transmission diode,
- Defective control unit receiver diode,
- Defective fiber-optic cables.

These defects can also occur in combination. With a possible ring break, the first two controllers must be found, between those the ring break is present. This is determined with the help of the ring break Test Module in the Diagnosis Program of the DISplus/GT-1. To clearly locate the ring break, examination with the fiber-optic cable testing set (OPPS) must be performed.

cardiagn.com

Communication Direction in MOST structure

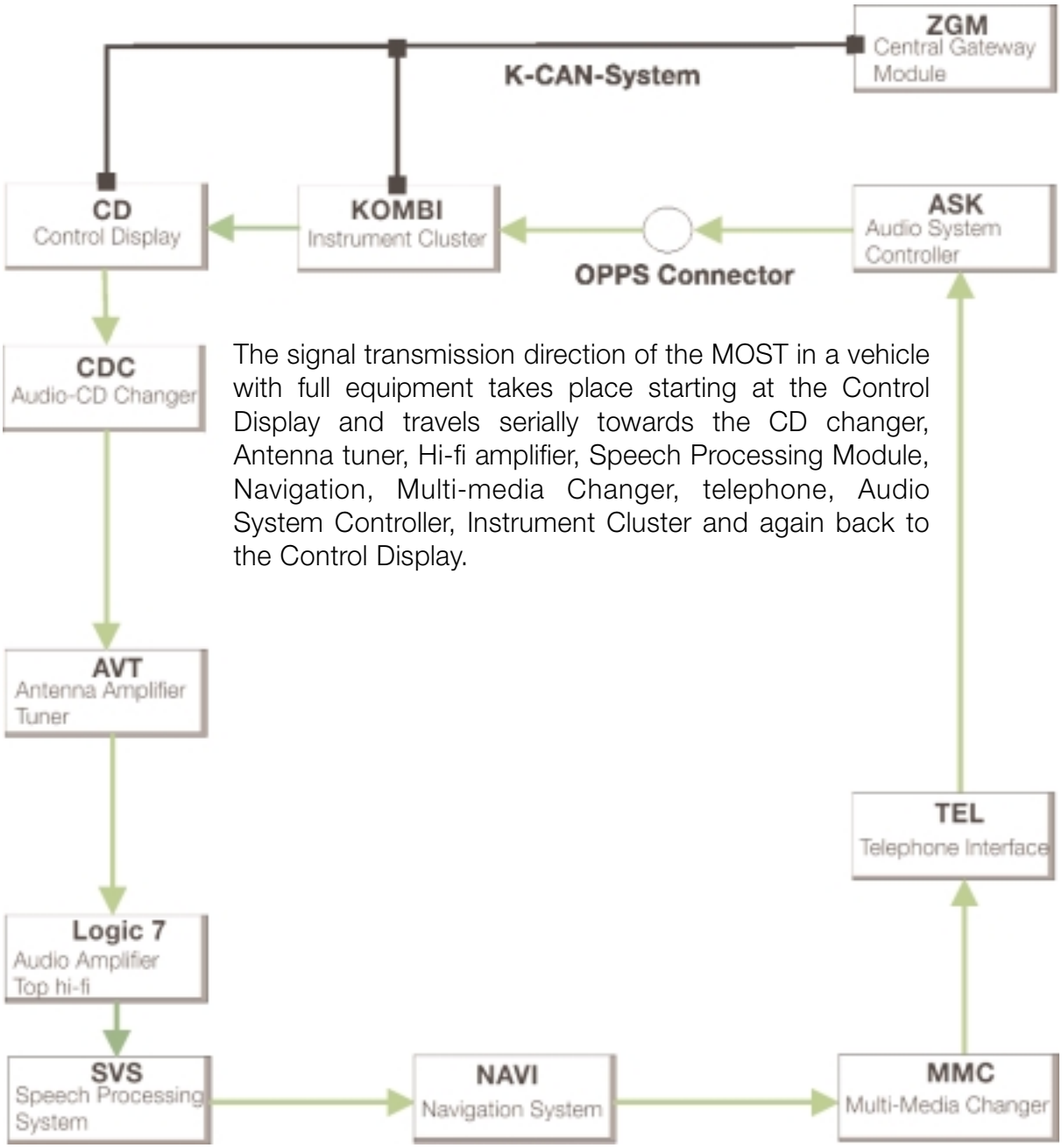

The signal transmission direction of the MOST in a vehicle with full equipment takes place starting at the Control Display and travels serially towards the CD changer, Antenna tuner, Hi-fi amplifier, Speech Processing Module, Navigation, Multi-media Changer, telephone, Audio System Controller, Instrument Cluster and again back to the Control Display.

Important!!! The component sequence of the MOST controllers in the ETM is incorrect when it comes to signal transmission direction. The correct sequence is indicated above!

cardiagn.com

Relative Node Position " 0 "
The voltage supply of the MOST controllers is switched off (battery disconnected), afterwards again switched on (attach battery), then the MOST controllers go into the so-called "ring break mode":

All MOST controllers send light at the same time to their successor in the ring. Every MOST controller then examines whether it receives light at its receiver diode. The controller which does not recognize light by its receiver stores the relative node number of 0 in its error memory. Thus, the ring interruption lies between the controller with the relative node number of 0 and the controller that lies before it in the ring.

Example 1

In the audio system controller (ASK) is located the relative node position 0. Then the ring break lies between the ASK and the controller that is before the ASK in the MOST ring (with vehicle fully equipped: Telephone).

To locate a ring break between two controllers, the controller which registered the relative node position 0 must be found. If the Ring break in the MOST group is currently present, only the Instrument Cluster and the Control Display can communicate with the diagnosis. This is possible because those two controllers are also attached on the K-CAN SYSTEM bus.

Since the signal transmission takes place in one direction, when the ring is interrupted there is no communication with the other controllers. Thus, the controller with the relative node position of 0 stored cannot be determined. Nevertheless, with a ring break, the two controllers between which the ring break is present may be determined. This is accomplished by a further method that is implemented in the MOST controllers:

The controller that lies after the one with the relative node position of 0 stores the relative node position of 1, the next controller in the ring stores position 2, etc.

Example 2

If in the Audio System Controller (ASK) is located the relative node position 0. Then the relative node position 1 is in the Instrument Cluster and in the Control Display would be the relative node position 2. The relative node position 2 of the Control Display (MCGW MOST/CAN gateway) can be read using the diagnosis. With the help of the relative node position in the Control Display and the knowledge of the installed MOST equipment in the vehicle, the location of the break can be determined. **Simply work backwards:**

cardiagn.com

- Relative node position Control Display: 2
- Relative node position Instrument Cluster: 1
- Relative node position Audio System Controller: 0

(The ring interruption lies between the controller whose stored relative node number is 0 and the controller that comes before it in the MOST network!)

Important!!!

When counting backwards from the Control Display, for the **Multimedia Changer** and the **navigation system** controllers **a counting jump of 2 controllers are made!** (Each controller counts as 2 nodes) This is described best with the help of a further example:

Example 3
If in the Control Display is stored the relative node number of 9, then based on a fully equipped vehicle:

- Relative node position Control Display: 9
- Relative node position Instrument Cluster: 8
- Relative node position Audio System Controller: 7
- Relative node position Telephone: 6
- Relative node position Multimedia Changer: 4 (jump 2 nodes)
- Relative node position Video Module: 3
- Relative node position Navigation system: 1 (jump 2 nodes)
- Relative node position Speech Processing module: 0

(Ring interruption lies between the Speech Processing Module whose relative node number is 0 and the Logic 7 amplifier that lies before it).

Important!!!
A deviation to the above scenario can arise for the relative node positions of 0 and 2 in the Control Display:

cardiagn.com

Control Display (relative Node position	Defect determined between Fiber-optic line
0	ASK-Fiber optic-KOMBI-Fiber optic-CD.
2 (with no telephone installed)	ASK-Fiber optic-Controller before ASK.
2 (with telephone installed)	ASK-Fiber optic-telephone-Fiber optic-Controller before telephone.

Important!!
The relative node positions are counted starting from the Control Display, backwards to the controller with the relative node position 0. For the correct counting method, first it must be determined which controllers are installed in the MOST group.

Example 4

MOST controllers vehicle equipment: Full equipment without Multimedia Changer and Speech Processing Module. In the Control Display is stored the relative node number of 9, counting backwards results in:

- Relative node position Control Display: 9
- Relative node position Instrument Cluster: 8
- Relative node position Audio System Controller: 7
- Relative node position Telephone: 6
- Relative node position Video module: 5
- Relative node position Navigation System: 3 (jump 2 nodes!)
- Relative node position Amplifier: 2
- Relative node position Antenna Tuner: 1
- Relative node position CD changer: 0

(Ring interruption lies between the CD Changer whose relative node number is 0 and the Control Display that lies before it.)

cardiagn.com

Repair of the MOST Fiber-Optic Cables

The MOST bus may only be repaired (spliced) **once** between 2 control units, otherwise the attenuation may become too much and disrupt communication.

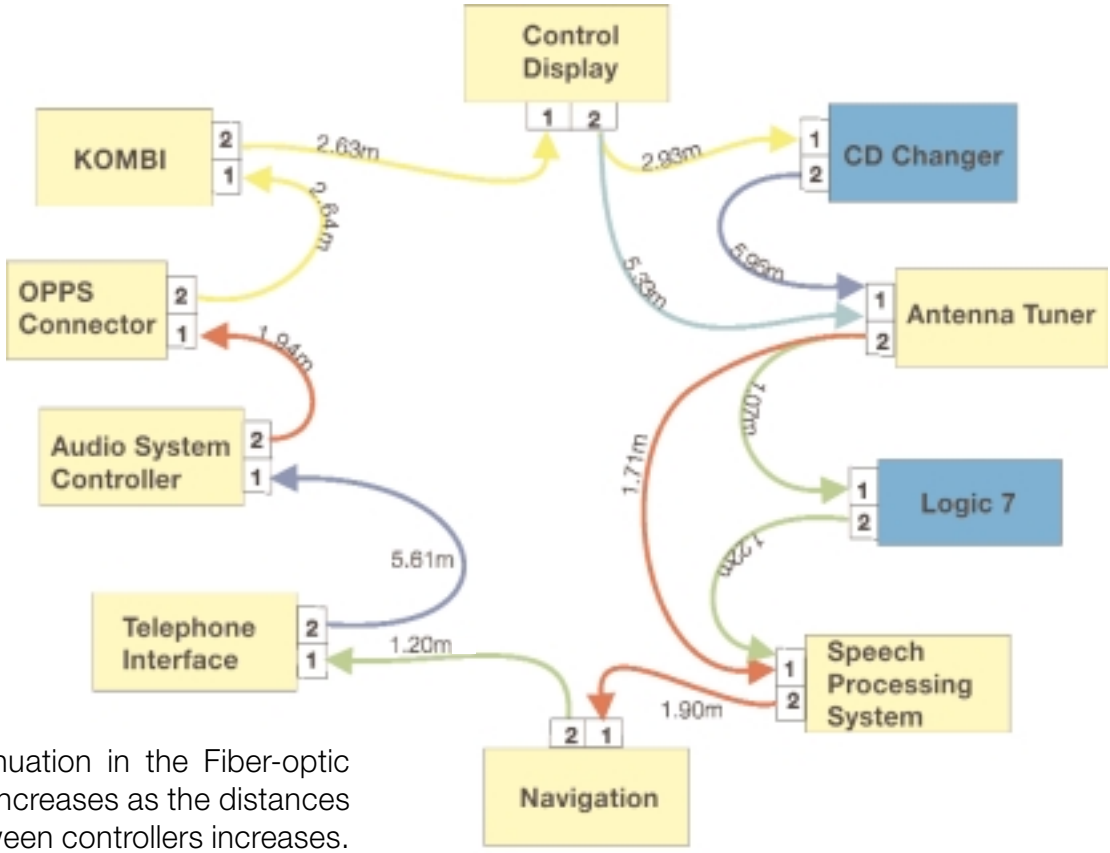

Attenuation in the Fiber-optic line increases as the distances between controllers increases.

This diagram describes the approximate length of the fiber optic cable from one controller to the next.

The chart to the right provides maximum attenuation values based on the cable length.

Color	Length	Max. Attenuation
	1-1.5	-1.4dB
	1.5-2	-1.7dB
	2.5-3	-2.4dB
	5-5.5	-4.5dB

The MOST bus may only be repaired using the prescribed special tool (crimping pliers) and special connectors.

cardiagn.com

byteflight

Introduction

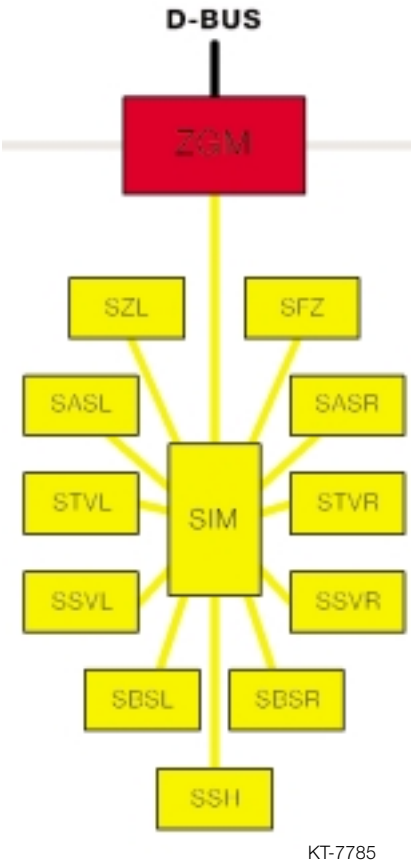

The permanently increasing complexity of in-car electronics and the rapidly growing amount of sensors, actuators and electronic control units, places higher demands on high-speed data communication protocols.

Safety critical systems need quick “thinking” protocols with fault-tolerant behavior. The need for on-board diagnostics calls for flexible use of bandwidth and an ever-increasing number of functions.

None of the communication solutions available on the market until now have been able to fulfill all these demands.

To solve these problems, BMW together with several semi-conductor companies have developed *byteflight* a new protocol for safety-critical applications in automotive vehicles.

The *byteflight* is the bus system used exclusively for the ISIS system.

Design

The Intelligent Safety Integration System (ISIS) consists, depending on equipment level, of up to 11 satellites (control units), the Safety Information Module (SIM) and the Central Gateway Module (ZGM). Seven of the eleven satellites contain crash detection sensors.

In the event of an accident, the necessary restraint systems have to be activated within a fraction of a second in order to provide the maximum amount of protection for the vehicle's occupants.

The system also has to ensure that the restraint systems are not deployed accidentally. In order to ensure that the ISIS meets the requirements placed upon it, large volumes of data have to be exchanged between the control units. This is achieved by means of an extremely high data transmission rate.

The data is exchanged via a bus system. In order to protect the signals traveling along the bus system from interference caused by electrical or magnetic fields, the ISIS system does not use copper bus wires but optical fibers.

cardiagn.com

The layout of the ISIS takes the form of a star pattern. The Safety Information Module (SIM) is at the centre of the system. Arranged radially around it are the satellite modules.
Each of the eleven satellites is connected to the SIM by a fibre-optic cable. Each of the satellites contains a transmitter/receiver module.

The SIM contains twelve transmitter and receiver modules. All information from each of the satellites is made available to every other satellite by the SIM. Each individual fibre-optic cable in the *byteflight* bus system is used for bi-directional data transmission.

Function

Transmitter/Receiver Module (SE)
The transmitter/receiver module is a module that can convert electrical signals into optical signals and transmit them via optical fibers. Every satellite has an electrical-optical transmitter/ receiver module.

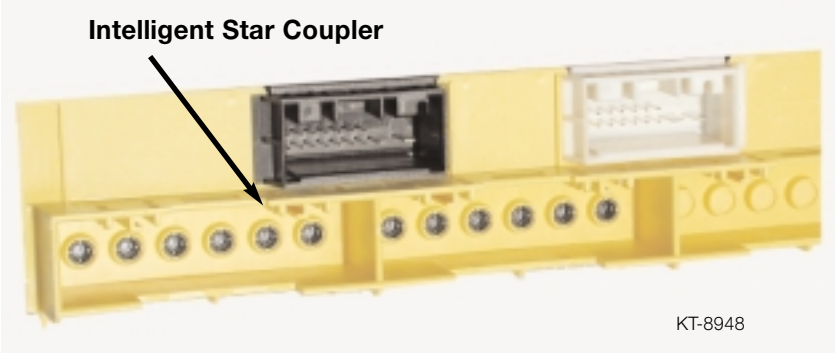

The transmitter/receiver modules are connected individually via the *byteflight* to the Intelligent Star Coupler in the SIM. The SIM also contains a transmitter/receiver module for each satellite.

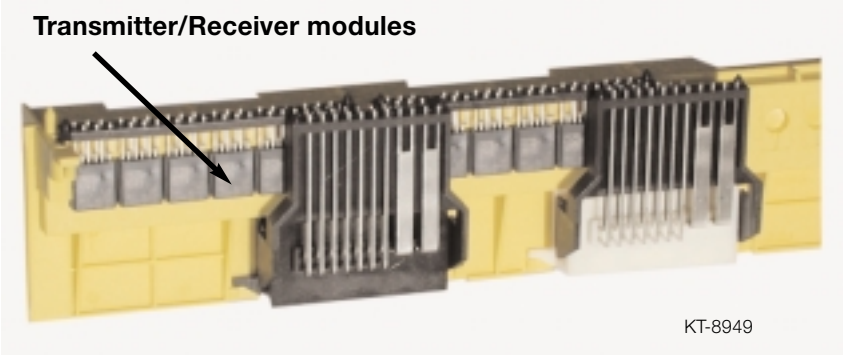

All information transmitted across the *byteflight* is in the form of data telegrams sent by means of light pulses. The transmitter/ receiver modules in the SIM receive the light pulses from the various satellites. The Intelligent Star Coupler sends the data telegrams to all satellites. Data transmission is possible in both directions.

cardiagn.com

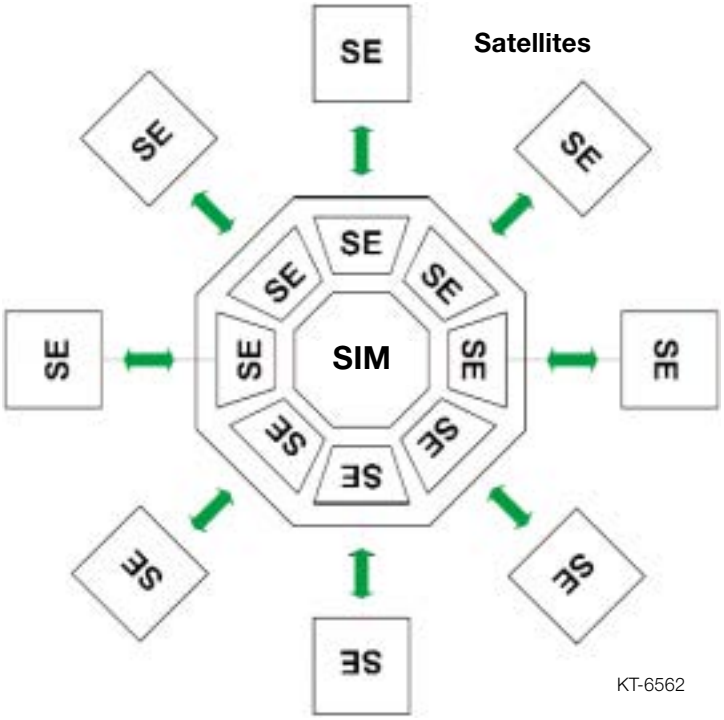

The transmitter/receiver (SE) module contains the LED for the driver circuit and the receiver amplifier for converting the optical signals into digital signals. It also has an integral transmission quality monitoring circuit.

If one of the following faults occurs on one of the fiber-optic cables, the satellite concerned is shut down:

- No optical signal received over a pre-defined period.
- Transmitter diode sends a continuous light signal.
- Attenuation on the fiber-optic cable too great.

The permissible degree of attenuation is stored within the system. If the attenuation exceeds the specified maximum level, one of the following faults may be the cause:

- Kinking in the fiber-optic cable.
- Compression of the fiber-optic cable.
- Stretching of the fiber-optic cable.
- Broken fiber-optic cable.
- Damaged fiber-optic cable.

cardiagn.com

Data Transmission

The ISIS has a number of sensors positioned at strategic points throughout the vehicle. They are located in the satellites that are connected to the SIM via the *byteflight*. All sensors are scanned continuously and the data distributed to all satellites.

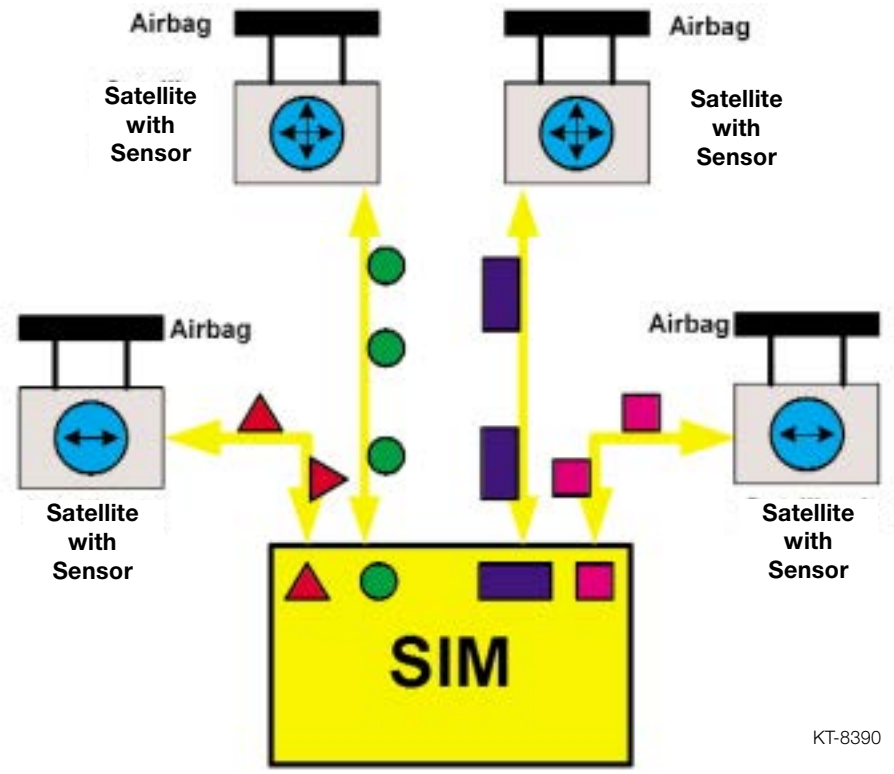

Diagnosis

Diagnosis of the *byteflight* is carried out using the Diagnosis Program. Since the *byteflight* is a star structure and not a continuous ring like the MOST there is a test module “Data transmission to the satellites” that can check communication between each satellite and the SIM module.

Any satellite that does not respond must then be checked individually using a separate Test Module.

Repairs to the *byteflight* fiber-optic cable are not permitted. However, complete cables between the SIM and the affected satellites may be replaced.

cardiagn.com

Diagnosis bus

Introduction

The aim of diagnosis is to enable a Technician to reliably identify a defective component. By the use of appropriate hardware and monitoring software, the microprocessor of a control unit, for example, is able to detect faults in the control unit and its peripherals.

Faults identified are stored in the fault memory and can be read out using the Diagnosis Program. Data transfer between the vehicle and the diagnosis tool takes place via the Diagnosis bus (D bus). The new features of the diagnosis bus are:

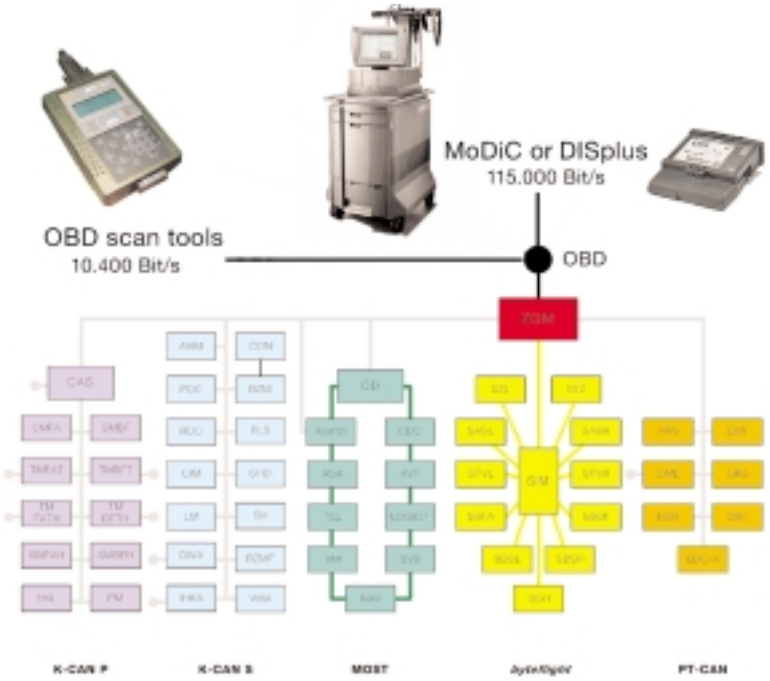

KT-8713

- Faster data transmission speed of 115 kBd.
- Central diagnosis access point (OBD connector).
- Single diagnostic cable (TxD II) for the entire vehicle.
- Omission of the TxD1 cable.
- Access to diagnosis functions requires “Authorization”.
- Diagnosis protocol "KWP 2000" (Keyword Protocol 2000).
- Standardized diagnosis structure for all control units.

cardiagn.com

Diagnosis Concept

The "BMW Fast" (BMW fast access for service and testing) diagnosis concept introduced on the E65 is applied. This concept is based on the "Keyword Protocol 2000" (KWP 2000) diagnosis protocol defined as part of the ISO 14230 standard. Diagnosis communication takes place entirely on the basis of a transport protocol on the CAN bus.

The Diagnosis bus is connected to the Central Gateway Module. All bus systems apart from the MOST bus are connected to the Central Gateway Module (ZGM).

Vehicle Diagnosis Access Point

The diagnosis tool is connected to the vehicle by means of the diagnosis connector OBD (On-Board Diagnosis). The connector is located behind a small cover in the drivers side kick panel trim. There is a black plastic cap that bridges KL-30 to the D-bus when the connector is not being used. This cap must be removed before installing the diagnosis cable.

KT-8946

The TxD lead is located in pin 7 of the OBD socket and is connected directly to the ZGM.

The ZGM detects by means of the data transmission speed whether a BMW diagnosis tool (DISplus, MoDiC, GT-1) or an aftermarket scanner is connected.

The DME allows access to different data depending on the diagnosis tool connected.

Note:
When using an OBD scan tool for diagnosis, the transmission speed is 10.4 KBit/s.

cardiagn.com

Review Questions

1. How many bus systems is the E65 equipped with? Hint: Don't forget the sub-busses.

2. Which modules perform the task of "Gateway"?

3. How many terminal resistors are located in the PT-CAN? Where are they located? What should the total resistance be on the PT-CAN?

4. What are some of the handling precautions to be adhered to when working with fiber-optic cables?

5. What is the difference between the fiber-optic connector of a MOST component and a *byteflight* component?

6. What test is available in case of an interruption in the MOST circuit?

7. What is the difference between the D-Bus of the E65 and other BMW models?

cardiagn.com