KOLEOS

DRIVER'S HANDBOOK

RENAULT

RENAULT recommends ELF

ELF has developed a complete range of lubricants for RENAULT:

- engine oils
- manual and automatic gearbox oils

Warning: to ensure the engine operates optimally, the use of a lubricant may be restricted to certain vehicles. Please refer to your maintenance document.

Benefiting from the research applied to Formula 1, lubricants are very high-tech products.

Updated with the help of RENAULT's technical teams, this range is perfectly compatible with the specific features of the brand's vehicles.

- ELF lubricants enhance your vehicle's performance significantly.

RENAULT recommends approved ELF lubricants for oil changes and top-ups.
Contact your RENAULT Dealer or visit www.lubrifiants.elf.com

elf

Une marque de TOTAL

Photo credit: Total/DPPI Imacom group

Welcome to your new vehicle

This Driver's Handbook contains the information necessary:

– for you to familiarise yourself with your vehicle, to use it to its best advantage and to benefit fully from the all the functions and the technical developments it incorporates.

– to ensure that it always gives the best performance by following the simple, but comprehensive advice concerning regular maintenance.

– to enable you to deal quickly with minor faults not requiring specialist attention.

It is well worth taking a few minutes to read this handbook to familiarise yourself with the information and guidelines it contains about the vehicle and its functions and new features. If certain points are still unclear, our Network technicians will be only too pleased to provide you with any additional information.

The following symbol will help you when reading this handbook:

To indicate a hazard, danger or safety recommendation.

The descriptions of the models given in this handbook are based on the technical specifications at the time of writing. **This handbook covers all items of equipment** (both standard and optional) **available for these models but whether or not these are fitted to the vehicle depends on the version, options selected and the country where the vehicle is sold.**

This handbook may also contain information about items of equipment to be introduced later in the model year.

Throughout the manual, the "approved Dealer" is your RENAULT Dealer.

Enjoy driving your new vehicle.

Translated from French. Copying or translation, in part or in full, is forbidden unless prior written permission has been obtained from the vehicle manufacturer.

0.2

C O N T E N T S

Sections

Getting to know your vehicle 1

Driving 2

Your comfort 3

Maintenance 4

Practical advice 5

Technical specifications 6

Alphabetical index 7

0.4

Section 1: Getting to know your vehicle

RENAULT cards: general information, use, deadlocking . . . 1.2
Doors . . . 1.9
Automatic locking of opening elements when driving . . . 1.13
Front headrests/Seats . . . 1.14
Seat belts . . . 1.17
to the rear seat belts . . . 1.19
Additional methods of restraint: . . . 1.21
to the front seat belts . . . 1.21
to the rear seat belts . . . 1.25
side protection . . . 1.26
Child safety: general information . . . 1.28
choosing a child seat mounting . . . 1.31
fitting a child seat . . . 1.33
deactivating/activating the front passenger airbags . . . 1.36
Clock and exterior temperature . . . 1.39
Driving position . . . 1.40
Warning lights . . . 1.44
Instrument panel . . . 1.48
trip computer and warning system . . . 1.50
Steering wheel . . . 1.60
Power-assisted steering . . . 1.60
Rear-view mirrors . . . 1.61
Audible and visual signals . . . 1.62
Exterior lighting and signals . . . 1.63
Electric beam height adjustment . . . 1.66
Front windscreen wash/wiper . . . 1.67
Rear windscreen wash/wiper . . . 1.69
Fuel tank . . . 1.70

RENAULT CARDS: general information (1/2)

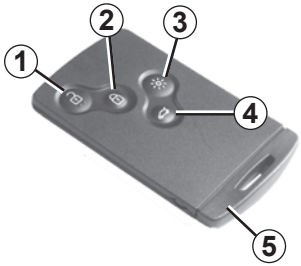

1 Unlocking the doors and the tailgate;

2 Locking the doors and the tailgate;

3 Switching on the lighting remotely;

4 Unlocking/locking the tailgate;

5 Integrated key.

The RENAULT card is used for:

– locking and unlocking the doors and tailgate (refer to the following pages);
– depending on the vehicle, automatically closing the electric windows and sunroof remotely (see the information on "Electric windows" and "Electric sunroof" in Section 3);
– switching on the vehicle lighting remotely (refer to the following pages);
– starting the engine (refer to the information on "Starting the engine" in Section 2).

Battery life

Make sure that the correct battery type is being used, and that the battery is in good condition and inserted correctly. Its service life is approximately two years: replace it when the message "Replace card battery" appears on the instrument panel (refer to the information on the "RENAULT card: Battery" in Section 5).

RENAULT card operating range

This varies according to the surroundings: It is important to make sure when handling the RENAULT card that you do not lock or unlock the doors by inadvertently pressing the buttons.

When the battery is flat, you can still lock/unlock and start your vehicle. Refer to the information on “Locking/unlocking the doors” in Section 1 and “Starting the engine” in Section 2.

Driver’s responsibility
Never leave your vehicle with the Renault card inside and never leave a child (or a pet) unsupervised, even for a short while.
They may pose a risk to themselves or to others by starting the engine, activating equipment such as the electric windows or by locking the doors.
Risk of serious injury.

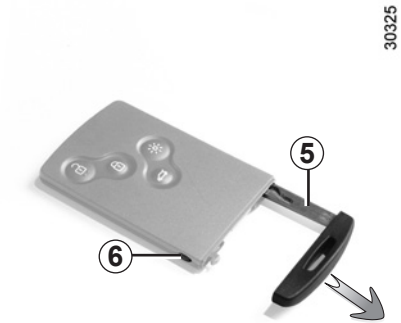

Integrated key *5*

The integrated key is used to lock or unlock the front left-hand door if the RENAULT card does not work:

– when the RENAULT card battery is drained, discharged battery, etc.

– use of devices using the same frequency as the card;

– if the vehicle is located in a zone of high electromagnetic radiation.

Access to key 5

Press button ***6*** and pull on key ***5*** then release the button.

Using the key

Refer to the information on "Locking/unlocking the doors".

Once you have accessed the vehicle using the integrated key, replace it in its housing in the RENAULT card, then insert the RENAULT card into the card reader to start the vehicle.

Advice

Avoid leaving the card in hot, cold or humid areas.

Do not store the RENAULT card in an area where it may accidentally become bent or damaged: this may occur if, for example, it is sat on when placed in the back pocket of a garment.

Replacement: need for an additional RENAULT Card

If you lose your RENAULT card or require another, you can obtain one from an approved dealer.

If a RENAULT card is replaced, it will be necessary to take the vehicle and **all of its RENAULT cards** to an approved dealer to initialise the system.

You can use up to four RENAULT cards per vehicle.

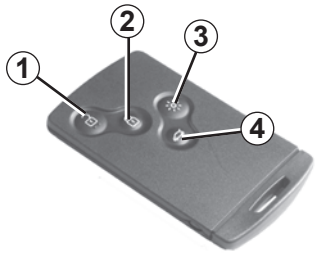

26787

Unlocking the doors

Press unlocking button ***1***.

The hazard warning lights **flash once** to indicate that the doors have been unlocked.

Locking the doors

Press the locking button ***2***.

The hazard warning lights **flash twice** to indicate that the doors have locked: if a door or the boot is open or not properly shut, or if a RENAULT card is still in the reader, the doors and boot quickly lock then unlock and the hazard warning lights and indicator lights **do not flash**.

Unlocking/locking the tailgate only

Press button ***4*** to unlock or lock the boot.

The flashing status of the hazard warning lights informs you of the vehicle status:

– **one flash** indicates that the vehicle is unlocked;

– **two flashes** indicates that the vehicle is locked.

Distance lighting function

This can, for example, identify the vehicle from a distance when parked in a car park.

The dipped beam headlights, indicator lights and interior lights come on for approximately 30 seconds when button ***3*** is pressed.

Note: pressing button ***3*** again switches off the lighting.

RENAULT card non-detection alarm

The message “Keycard not detected” and a beep will warn you if you open a door with the engine running and the card is not in the reader. The warning disappears when the card is inserted in the reader again.

The card buttons are deactivated when the engine is running.

Use

For vehicles with a hands-free RENAULT card, this allows the vehicle to be locked/unlocked automatically (in addition to the functions of the remote control RENAULT card) if a card is present in access zone ***1***.

Note: ensure that the RENAULT card is not in contact with other electronic equipment (computer, PDA, phone, etc.) as this could hinder its operation.

Unlocking the vehicle

With the RENAULT card in zone ***1***, place your hand on a door handle ***2***: the vehicle will unlock (in some cases, you may need to pull door handle ***2*** twice to unlock the vehicle and open the door).

Pressing the button ***3*** also unlocks all the doors and the tailgate.

The hazard warning lights **flash once** to indicate that the doors have been unlocked.

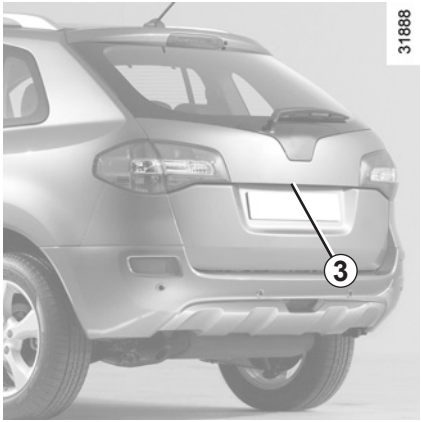

The flashing status of the hazard warning lights informs you of the vehicle status:

– **one flash** indicates that the vehicle is unlocked;

– **two flashes** indicates that the vehicle is locked.

Never leave your vehicle with the RENAULT card inside.

Locking the vehicle

There are two ways to lock the vehicle: using buttons ***4*** or ***5*** or using the RENAULT card.

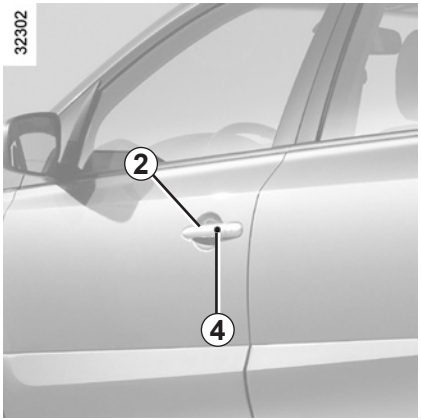

Locking using button *4* or *5*

When the doors and tailgate are closed, press one of the buttons ***4*** on the door handles ***2*** or the button ***5*** on the tailgate. The vehicle will lock. If a door or the tailgate is open or not closed properly, the vehicle will quickly lock/unlock.

Note: a RENAULT card must be within the vehicle's access zone (zone ***1***) to be able to lock the vehicle using the button.

Special note:

If you wish to check that the doors are locked after locking with button ***4***, you have approximately **three seconds** to try the door handles without unlocking them.

After this delay, the hands-free mode is activated once again and any movement of a handle will unlock the vehicle.

26787

Locking using the RENAULT card

With the doors and tailgate closed, press button ***6***: the vehicle will lock.

The hazard warning lights **flash twice** to indicate that the doors have locked.

Note: the maximum distance at which the vehicle locks depends on the surroundings.

32303

Special Note:

The vehicle will not lock if:

– a door or the tailgate is open or not properly closed;

– a card is still in zone ***7*** (or in the card reader) and no other card is in the external detection zone.

With the engine running, if, after having opened and closed a door, the card is no longer in the passenger compartment, the message “Keycard not detected” (accompanied by a beep when the speed passes a certain level) warns you that the card is no longer in the vehicle. This avoids you driving away after having dropped off a passenger who has the card, for example.

The warning disappears when the card is detected again.

After locking or unlocking the vehicle doors or the tailgate only, using the buttons on the RENAULT card, hands-free unlocking is deactivated.

To reactivate the “hands-free” mode: restart the vehicle.

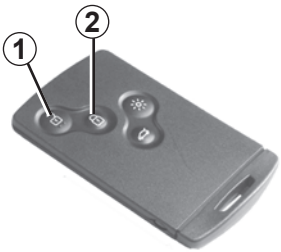

26787

If the vehicle is equipped with a deadlocking function, this allows you to lock the opening elements and to prevent the doors from being unlocked using the interior handles (for example, by breaking the window and then trying to open the door from the inside).

Warning: deadlocking is activated the first time button ***1*** is pressed.

Never use deadlocking if someone is still inside the vehicle.

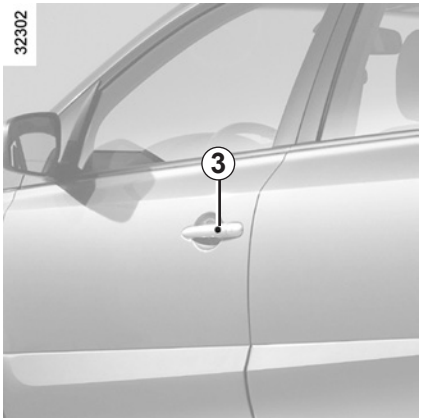

32302

To activate deadlocking

Press button ***2*** or ***3*** once.

Note: to raise the windows simultaneously, the button must be held down for more than one second.

The hazard warning lights will **flash three times** to signal deadlocking.

To lock the vehicle, without deadlocking

Press button ***2*** or ***3*** twice.

Note: to raise the windows simultaneously, the second time the button is pressed, it must be held down for more than one second.

The hazard warning lights **flash twice** to indicate that the doors have locked.

To unlock the vehicle

Press button ***1***.

The hazard warning lights **flash once** to indicate that the doors have been unlocked.

After activating deadlocking using button ***2***, “hands-free” unlocking is deactivated.

To reactivate the “hands-free” mode: restart the vehicle.

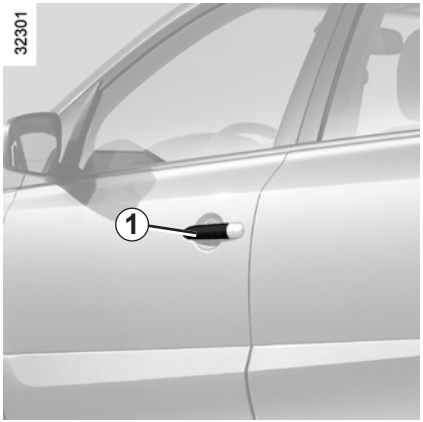

Opening the doors from the outside

With the doors unlocked or the “hands-free” RENAULT card in your possession, hold handle ***1*** and pull it towards you.

In some cases, it may be necessary to pull the handle twice to open the door.

As a safety precaution, the doors should only be opened or closed when the vehicle is stationary.

Opening from the inside

Pull handle ***2*** and push the door.

Lights-on reminder buzzer

If you have switched off the ignition and left the lights switched on, a reminder buzzer will sound when a door is opened.

Card reminder buzzer

A beep will let you know if you have left the card in the reader when you open the driver’s door, and the “Please remove keycard” message will appear on the instrument panel.

Special note

After switching off the engine, the lights and some accessories that are in operation (radio, etc.) will continue to operate.

They stop as soon as the driver’s door is opened.

Door/tailgate open buzzer

If a door (or tailgate) is open or not properly closed, as soon as the vehicle reaches a speed of approximately 9 mph (15 km/h), the message “Boot open” or “Door open” (depending on which is open) will appear on the instrument panel accompanied by a warning light.

Child safety

Manually locking the rear doors

Move lever ***3*** and check from the inside that the doors are securely locked, to prevent the rear doors being opened from the inside.

Driver's responsibility when parking or stopping the vehicle

Never leave an animal, child or adult who is not self-sufficient alone on your vehicle, even for a short time.

They may pose a risk to themselves or to others by starting the engine, activating equipment such as the electric windows or by locking the doors.

Also, in hot and/or sunny weather, please remember that the temperature inside the passenger compartment increases very quickly.

RISK OF DEATH OR SERIOUS INJURY.

Locking/unlocking the doors from the outside

This is done using the RENAULT Card; refer to the information on the RENAULT Card" in Section 1.

In certain cases, the RENAULT card may not work:

– when the RENAULT card battery is drained, flat battery, etc.

– use of appliances operating on the same frequency as the card (mobile phone, etc.);

– vehicle located in a high electromagnetic radiation zone.

It is then possible:

– to use the key integrated into the card to unlock the front left-hand door;

– to lock each of the doors manually (see the following page);

– to use the interior door locking/unlocking control (refer to the following pages).

Using the key integrated in the RENAULT card

– Take out the integrated key (refer to the section on “RENAULT cards: general information" in section 1);

– remove cover ***A*** from the left-hand door (using the end of key ***2***) in notch ***1***;

– move it upwards to remove cover ***A***;

– insert the key ***2*** into the lock in the front left-hand door and lock or unlock.

Locking the doors manually

Turn screw ***3*** with the door open (using the end of the key) and close the door.

This means that the doors are then locked from the outside.

The doors may then only be opened from the inside or by using the key in the front left-hand door.

Interior locking/unlocking door control

The switch ***4*** simultaneously controls the doors and the tailgate.

If a door or the tailgate is open or not closed properly, the doors and tailgate lock/unlock quickly.

If transporting an object with a door or tailgate open: **with the engine stopped**, press the switch ***4*** for more than five seconds to lock the other opening elements.

Locking the opening elements without the RENAULT card

(if the RENAULT card is not working, for example)

With the engine switched off and a front door open, press switch ***4*** for more than five seconds.

When the door is closed, all the doors and the tailgate will be locked.

Unlocking the vehicle from the outside will only be possible with the RENAULT card.

Driver's responsibility

Never leave your vehicle with the RENAULT card inside.

Doors and tailgate status indicator light

When the ignition is on, the indicator light integrated in switch ***4*** informs you of the status of the doors and tailgate:

– indicator light on, the doors and tailgate are locked;

– indicator light off, the doors and tailgate are unlocked.

When you lock the vehicle from the outside, the indicator light remains lit for approximately one minute, then goes out.

Driver's responsibility

If you decide to keep the doors locked when you are driving, remember that it may be more difficult for those assisting you to gain access to the passenger compartment in the event of an emergency.

Operating principle

When the vehicle is started, the system automatically locks the doors when the vehicle reaches approximately 6 mph (10 km/h).

The door can be unlocked:

– by pressing door unlocking button ***1***.

– by opening a front door (vehicle stationary).

Note: if a door is opened or closed, it will automatically lock again when the vehicle reaches a speed of 6 mph (10 km/h).

To activate this function:

After switching on the ignition and when the vehicle is stationary, you have approximately 20 seconds to press and hold door locking switch ***1*** (for approximately 5 seconds).

The message “Auto door lock on” is displayed on the instrument panel and a beep sounds.

To deactivate this function:

After switching on the ignition and when the vehicle is stationary, press and hold door locking switch ***1*** for approximately 5 seconds.

The message “Auto door lock off” is displayed on the instrument panel and a beep sounds.

Driver’s responsibility

If you decide to keep the doors locked when you are driving, remember that it may be more difficult for those assisting you to gain access to the passenger compartment in the event of an emergency.

Operating faults

If you experience an operating fault (no automatic locking, the indicator light incorporated in button ***1*** does not light up when trying to lock the doors and tailgate, etc.), firstly check that the doors and tailgate are properly closed. If they are closed correctly, contact an approved dealer.

FRONT HEADRESTS

To raise the headrest

Pull the headrest upwards to the desired height.

To lower the headrest

Press button ***1*** and guide the headrest down to the desired height.

Adjusting the angle of the headrest (depending on vehicle)

Tilt the headrest ***A*** forwards or backwards to the required position.

To remove the headrest

Raise the headrest as far as possible, then while pressing button ***1***, raise the headrest to release it.

To refit the headrest

Insert the headrest rods into the holes, with the notches facing forwards.

Hold down button ***1*** and move the headrest to the required height.

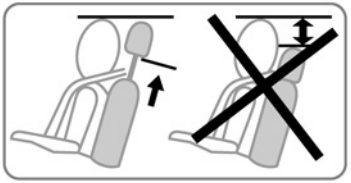

The headrest is important for safety. Ensure that it is in place and in the correct position: the top of the headrest should be as close as possible to the top of the head and there must be a minimal distance between the head and the ***A*** headrest.

Front seat with electric controls

To move the seat forwards or back
Move switch ***1*** forwards or backwards.

To raise or lower the seat base
Move the rear of switch ***1*** upwards or downwards.

To tilt the seatback
Move the rear of switch ***2*** forwards or backwards.

Front seat with manual controls

To move the seat forwards or back
Lift handle ***3*** to release. Release the handle at the desired position and make sure that it is locked.

To raise or lower the seat base
(depending on vehicle)
Move lever ***4*** as required:
– move it upwards to raise the seat;
– move it downwards to lower the seat.

To tilt the seatback

Move lever ***5*** to control the angle of the seatback.

For safety reasons, make these adjustments only when the vehicle is stationary.

We would advise you not to recline the seatbacks too far to ensure that the effectiveness of the seat belts is not reduced.

Nothing should be placed on the floor (area in front of driver) as such objects may slide under the pedal during braking manoeuvres, thus obstructing its use.

To fold down the passenger seat
Depending on the vehicle, the passenger seatback may be folded down onto the seat base to create a table.
Lift handle ***6*** and lower the seatback.

To adjust the lumbar support on the driver's seat:

Move lever ***7***.

Heated seats
(depending on vehicle)

With the engine running, press switch ***8***, pressing on the top of the switch (to select the warmest setting) or the bottom of the switch (to select the average setting).

The indicator light on the button lights up.

The system, which has a thermostat, decides whether or not the heating is needed, according to the position selected.

If the heated front passenger seat is activated, the indicator light lights up on the instrument panel.

Since front passenger airbag operation and the position of a front passenger seatback table are incompatible, ensure that the airbag is deactivated. (Refer to the information on "Front passenger air bag activation/deactivation" in Section 1).

There is a risk of very serious injury if the air bags deploy.

When driving, rear passengers must not place their feet on the seatback of the front seats under any circumstances. Risk of injury.

Always wear your seat belt when travelling in your vehicle. You must also comply with the legislation of the particular country you are in.

Make sure that the rear bench seat is securely locked in position so that the rear seat belts will operate efficiently. Refer to “Rear bench seat” in Section 3.

Seat belts which are incorrectly adjusted or twisted may cause injuries in the event of an accident.

Use one seat belt per person, whether child or adult.

Even pregnant women should wear a seat belt. In this case, ensure that the lap belt is not exerting too much pressure on the abdomen, but do not allow any slack.

Before starting, first adjust your driving position, then ask all occupants to adjust their seat belts to ensure optimum protection.

Adjusting your driving position

- **Sit well back in your seat** (having first removed your coat or jacket). This is essential to ensure your back is positioned correctly;
- **adjust the distance between the seat and the pedals.** Your seat should be as far back as possible while still allowing you to depress the clutch pedal fully. The seatback should be adjusted so that your arms are slightly bent when you hold the steering wheel;
- **adjust the position of your headrest.** For maximum safety, your head must be as close as possible to the headrest;
- **adjust the height of the seat.** This adjustment allows you to select the seat position which offers you the best possible view;
- **adjust the position of the steering wheel**.

Adjusting the seat belts

Sit with your back firmly against the seatback.

The shoulder strap ***1*** should be as close as possible to the base of the neck but not on it.

The lap strap ***2*** should be worn flat over the thighs and against the pelvis.

The belt should be worn so that it is as close as possible to your body, i.e.: avoid wearing heavy clothing or keeping bulky objects under the belts, etc.

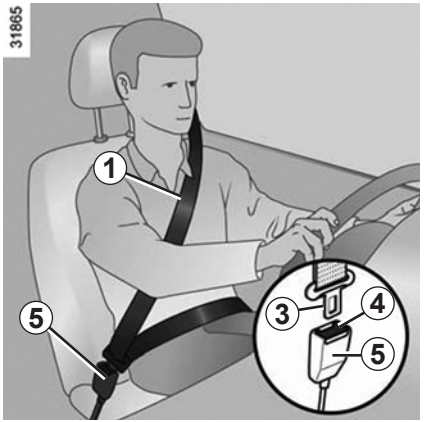

Fastening

Unwind the belt **slowly and smoothly** and ensure that buckle ***3*** locks into catch ***5*** (check that it is locked by pulling on buckle ***3***). If the belt jams, allow it to return slightly before attempting to unwind it again. If your seat belt is completely jammed, pull slowly, but firmly so that just over 3 cm unwinds. Allow it to return slightly before attempting to unwind it again. If there is still a problem, contact an approved dealer.

Unfastening

Press button ***4*** and the seat belt will be rewound by the inertia reel. Guide the belt.

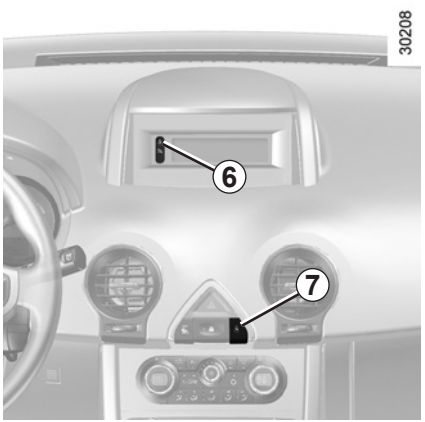

Front passenger seat belt reminder warning light
(depending on the vehicle)

This comes on the central display ***6*** or on the instrument panel ***7*** when the engine is started then, if the driver's or front passenger's seat belt (if this seat is occupied) is not fastened and the vehicle has reached approximately 12 mph (20 km/ h), it flashes and a bleep sounds for around 120 seconds.
Note: an object placed on the passenger seat base may activate the warning light in some cases.

Adjusting the height of the front seat belts

Press button ***8*** to adjust the seat belt height so that the shoulder strap ***1*** is worn as shown previously:
– to lower the seat belt, press button ***8*** and lower the seat belt at the same time;
– to raise the seat belt, press button ***8*** and raise the seat belt at the same time.

Make sure that the seat belt is locked in position correctly after you have adjusted it.

REAR SEAT BELTS

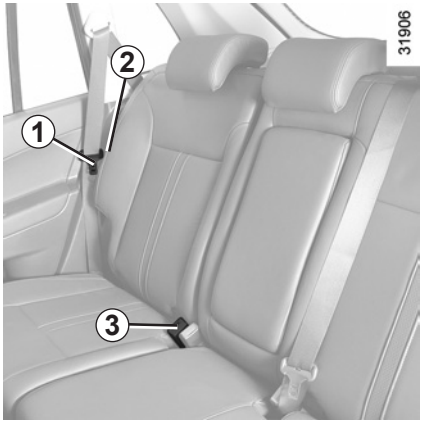

Side seat belt

Hold the buckle ***1*** and pull slowly on the belt.

Place the upper section of the belt as close to your shoulder as possible and the lower section as close to your pelvis as possible.

Click buckle ***1*** into the catch ***3***.

Note: feed the side seat belts into the clips ***2*** when they are not being used.

Centre seat belt

Hold the buckle ***4*** and pull slowly on the belt.

Place the upper section of the belt as close to your shoulder as possible and the lower section as close to your pelvis as possible.

Click buckle ***4*** into the catch ***5***.

Check that the rear seat belts are correctly positioned each time the rear bench seat is moved.

SEAT BELTS: warnings

The following information applies to the vehicle's front and rear seat belts.

– No modification may be made to the component parts of the originally fitted restraint system: belts, seats and their mountings. For special operations (e.g. fitting child seats) contact an authorised dealer.

– Do not use devices which allow any slack in the belts (e.g. clothes pegs, clips, etc.): a seat belt which is worn too loosely may cause injury in the event of an accident.

– Never wear the shoulder strap under your arm or behind your back.

– Never use the same belt for more than one person and never hold a baby or child on your lap with your seat belt around them.

– The belt should never be twisted.

– Following an accident, have the seat belts checked and replaced if necessary. Always replace your seat belts as soon as they show any signs of wear.

– When repositioning the rear bench seat, make sure that the seat belt is correctly positioned so that it can be used properly.

– Make sure that the buckle is inserted into the appropriate catch.

– Ensure that no objects are placed in the area around the seat belt catch as they could prevent it from being properly secured.

METHODS OF RESTRAINT IN ADDITION TO THE FRONT SEAT BELTS (1/4)

Depending on the vehicle, they are composed of:

- **seat belt inertia reel pretensioners *1*;**
- **lap belt pretensioner *2*;**
- **air bags for driver and front passenger *3*.**

These systems are designed to act independently or together when the vehicle is subjected to a frontal impact.

The following systems will be triggered according to the level of impact force:

- seat belt locking;
- the seat belt inertia reel pretensioner (which engages to correct seat belt slack);
- the lap seat belt pretensioners to hold the occupant in his seat;
- the front air bag.

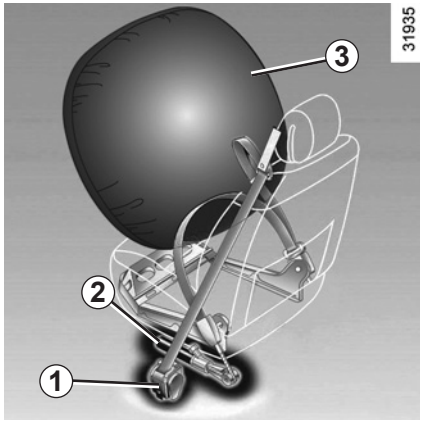

Pretensioners

The pretensioners flatten the belt against the body, holding the occupant against the seat, thus improving the efficiency of the belt.

In the event of a severe frontal impact and if the ignition is switched on, the system may engage the following depending on the force of the impact:

- the seat belt inertia reel pretensioner ***1*** which instantly retracts the seat belt;
- the lap belt pretensioner ***2*** which instantly retracts the lap belt.

- Have the entire restraint system checked following an accident.
- No operation whatsoever is permitted on any part of the system (pretensioners, air bags, computers, wiring) and the system components must not be reused on any other vehicle, even if identical.
- To avoid incorrect triggering of the system which may cause injury, only qualified personnel from an approved dealer may work on the pretensioner and air bag system.
- The ignition module electrical specifications may only be tested by a specially trained technician using special equipment.
- When the vehicle is scrapped, contact an approved dealer for disposal of the pretensioner and air bag gas generators.

Force limiter

Above a certain level of impact force, this mechanism is used to limit the force of the belt against the chest so that it is at an acceptable level.

Air bags for driver and front passenger

An “airbag” marking on the steering wheel and the dashboard (airbag area ***A***) indicates that this device is fitted.

Each air bag system consists of:

– an air bag and gas generator fitted on the steering wheel for the driver and in the dashboard for the front passenger;

– an intelligent computer for both systems, which includes an impact sensor and a monitor controlling the electrical trigger system for the gas generator;

– an air bag warning light on the instrument panel;

– remote sensors for the device.

The air bag system operates using the principles of pyrotechnics. This explains why, when the air bag inflates, it will generate heat, produce smoke (this does not mean that a fire is about to start) and make a noise upon detonation. In a situation where an air bag is required, it will inflate immediately and this may cause some minor, superficial grazing to the skin or other problems.

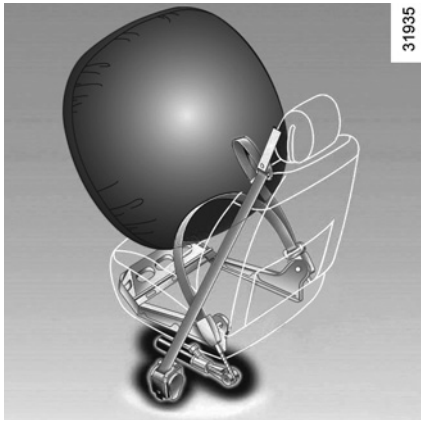

Operation

This system is only operational when the ignition is switched on.

In a severe **frontal** impact, the air bags inflate rapidly, cushioning the impact of the driver's head and chest against the steering wheel and of the front passenger against the dashboard. The air bags then deflate immediately so that the passengers are not in any way hindered from leaving the vehicle.

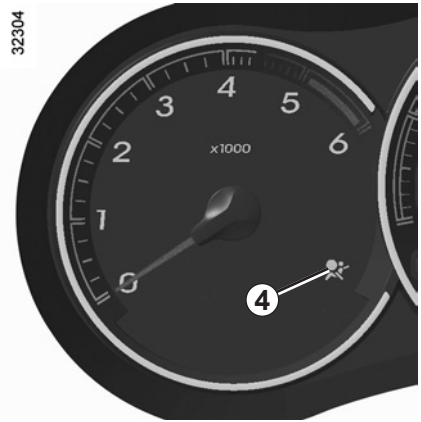

Operating faults

Warning light ***4*** will light up on the instrument panel when the ignition is switched on and then go out after a few seconds.

If it does not light up when the ignition is switched on, or lights up while the engine is running, there is a fault in the system (air bags, pretensioners etc.).

Contact your approved dealer as soon as possible. Your protection will be reduced until this fault is rectified.

METHODS OF RESTRAINT IN ADDITION TO THE FRONT SEAT BELTS (4/4)

All of the warnings below are given so that the air bag is not obstructed in any way when it is inflated and also to prevent the risk of serious injuries caused by items which may be dislodged when the air bag inflates.

Warnings concerning the driver's air bag

– Do not modify the steering wheel or the steering wheel boss.

– Do not cover the steering wheel boss under any circumstances.

– Do not attach any objects (badge, logo, clock, telephone holder, etc.) to the steering wheel boss.

– The steering wheel must not be removed (except by qualified personnel from an approved dealership).

– Do not sit too close to the steering wheel when driving: sit with your arms slightly bent (see Section 1 "Adjusting your driving position"). This will allow sufficient space for the air bag to deploy correctly and be fully effective.

Warnings concerning the passenger air bag

– Do not attach or glue any objects (badge, logo, clock, telephone holder, etc.) to the dashboard on or near the air bag.

– Do not place anything between the dashboard and the passenger (pet, umbrella, walking stick, parcels, etc.).

– The passenger must not put his or her feet on the dashboard or seat as there is a risk that serious injuries may occur. In general, parts of the body should be kept away from the dashboard (knees, hands, head, etc.).

– The devices in addition to the front passenger seat belt should be reactivated as soon as a child seat is removed, to ensure the protection of the passenger in the event of an impact.

A REAR-FACING CHILD SEAT MUST NOT BE FITTED TO THE FRONT PASSENGER SEAT UNLESS THE ADDITIONAL RESTRAINT SYSTEMS, I.E. THE PASSENGER AIR BAG, ARE DEACTIVATED.

(Refer to the information on "Deactivating the front passenger air bags" in Section 1.)

Force limiter

Above a certain level of impact force, this mechanism is used to limit the force of the belt against the chest so that it is at an acceptable level.

– Have the entire restraint system checked following an accident.

– No operation whatsoever is permitted on any part of the system (pre-tensioners, air bags, computers, wiring) and the system components must not be reused on any other vehicle, even if identical.

– To avoid incorrect triggering of the system which may cause injury, only qualified personnel from an approved dealer may work on the pretensioner and air bag system.

– The ignition module electrical specifications may only be tested by a specially trained technician using special equipment.

– When the vehicle is scrapped, contact an approved dealer for disposal of the pretensioner and air bag gas generators.

Side air bags

This air bag is fitted to each of the front seats and is inflated at the sides of the seats (door side) to protect the occupants in the event of a severe side impact.

Curtain air bags

These are air bags fitted along the sides of the vehicle in the ceiling which trigger along the front and rear side windows to protect the passengers in case of a severe side impact.

Warnings concerning the side air bag

– **Fitting seat covers:** seats equipped with an air bag require covers specifically designed for your vehicle. Contact an approved dealer to find out if these covers are sold at approved accessory outlets. The use of any covers other than those designed for your vehicle (and including those designed for another vehicle) may affect the operation of the air bags and reduce your protection.

– Do not place any accessories, objects or even pets between the seatback, the door and the internal fittings. Do not cover the seatback with any items such as clothes or accessories. This may prevent the air bag from operating correctly or cause injury when the air bag is deployed.

– No work or modification whatsoever may be carried out on the seat or internal fittings, except by qualified personnel from an approved Dealer.

– These air bags operate through slits in the front seatbacks (door side): never insert any objects in these slits.

ADDITIONAL METHODS OF RESTRAINT

All of the warnings below are given so that the air bag is not obstructed in any way when it is inflated and also to prevent the risk of serious injuries caused by items which may be dislodged when the air bag inflates.

The air bag is designed to complement the action of the seat belt. Both the air bags and seat belts are integral parts of the same protection system. It is therefore essential to wear your seat belt at all times. If seat belts are not worn, the occupants of the vehicle are at risk of serious injury in the event of an accident. The risk of minor superficial injuries occurring when the air bag is deployed may also increase, although such minor injuries are always possible with air bags.

If the vehicle should overturn or suffer a rear impact, however severe, the pretensioners and air bags are not always triggered. Impacts to the underside of the vehicle, e.g. from pavements, potholes or stones, can all trigger these systems.

– No work or modification **whatsoever** may be carried out on any part of the air bag system (air bags, pretensioners, computer, wiring harness, etc.), except by qualified personnel from an approved Dealer.

– To ensure that the system is in good working order and to avoid accidental triggering of the system which may cause injury, only qualified Network personnel may work on the air bag system.

– As a safety precaution, have the air bag system checked if your vehicle has been involved in an accident, or is stolen or broken into.

– When selling or lending the vehicle, inform the user of these points and hand over this handbook with the vehicle.

– When scrapping your vehicle, contact your approved Dealer for disposal of the gas generator(s).

Carrying children

Children, and adults, must be correctly seated and strapped in for all journeys. The children being carried in your vehicle are your responsibility.

A child is not a miniature adult. Children are at risk of specific injuries as their muscles and bones have not yet finished growing. The seat belt alone would not provide suitable protection. Use an approved child seat and ensure you use it correctly.

To prevent the doors being opened, use the “Child safety” device (refer to the information on “Opening and closing the doors” in Section 1).

A collision at 30 mph (50 km/h) is the same as falling a distance of 10 metres.
Transporting a child without a restraint is the equivalent of allowing him or her to play on a fourth-floor balcony without railings.
Never travel with a child held in your arms. In the event of an accident, you will not be able to keep hold of the child, even if you yourself are wearing a seat belt.
If your vehicle has been involved in a road accident, replace the child seat and have the seat belts and ISOFIX anchorage points checked.

Driver’s responsibility when parking or stopping the vehicle

Never leave an animal, child or adult who is not self-sufficient alone on your vehicle, even for a short time.

They may pose a risk to themselves or to others by starting the engine, activating equipment such as the electric windows or by locking the doors.

Also, in hot and/or sunny weather, please remember that the temperature inside the passenger compartment increases very quickly.

RISK OF DEATH OR SERIOUS INJURY.

Using a child seat

The level of protection offered by the child seat depends on its ability to restrain your child and on its installation. Incorrect installation compromises the protection it offers the child in the event of harsh braking or an impact.

Before purchasing a child seat, check that it complies with the regulations for the country you are in and that it can be fitted in your vehicle. Consult an approved dealer to find out which seats are recommended for your vehicle.

Before fitting a child seat, read the manual and respect its instructions. If you experience any difficulties during installation, contact the manufacturer of the equipment. Keep the instructions with the seat.

Set a good example by always fastening your seat belt and teaching your child:
- to strap themselves in correctly;
- to always get in and out of the car at the kerb, away from busy traffic.

Do not use a second-hand child seat or one without an instruction manual.

Check that there are no objects in the vicinity of the child seat which could impede its operation.

Never leave a child unattended in the vehicle.

Check that your child is always strapped in and that the belt or safety harness used is correctly set and adjusted. Avoid wearing bulky clothing which could cause the belts to slacken.

Never let your child put their head or arms out of the window.

Check that the child is in the correct position for the entire journey, especially if asleep.

Rear-facing child seats
A baby's head is, proportionally, heavier than that of an adult and its neck is very fragile. Transport the child in this position for as long as possible (until the age of 2 at the very least). It supports both the head and the neck.
Choose a bucket type seat for best side protection and change it as soon as the child's head is higher than the shell.

Forward-facing child seats
The child's head and abdomen need to be protected as a priority. A forward-facing child seat which is firmly attached to the vehicle will reduce the risk of impact to the head. Ensure your child travels in a forward-facing seat with a harness or buckle for as long as their size permits. Choose a bucket type seat for optimum side protection.w

Booster cushions
From 15 kg or 4 years, the child can travel using a booster seat, which will enable the seat belt to be adapted to suit his/her size and shape. The booster seat cushion must be fitted with guides to position the seat belt on the child's thighs rather than the stomach. It is recommended that you use a seat-back fitted with a belt strap guide which can be adjusted in terms of height to position the seat belt in the centre of the shoulder. It must never rest on the neck or on the arm.
Choose a bucket type seat for optimum side protection.

CHILD SAFETY: choosing a child seat mounting (1/2)

There are two ways of attaching child seats: via the seat belt or using the ISOFIX system.

Attachment via the seat belt

The seat belt must be adjusted to ensure that it is effective in the event of harsh braking or an impact.

Ensure that the strap paths indicated by the child seat manufacturer are respected.

Always check that the seat belt is correctly fastened by pulling it up, then pulling it out fully whilst pressing on the child seat.

Check that the seat is correctly held by moving it from side to side and back to front: the seat should remain firmly fixed.

Check that the child seat has not been installed at an angle and that it is not resting against a window.

No modifications may be made to the component parts of the restraint system (ISOFIX seat belts, seats and their mountings) originally fitted.

Do not use the child seat if it may unfasten the seat belt restraining it: the base of the seat must not rest on the buckle and/or catch of the seat belt.

The seat belt must never be twisted or the tension relieved. Never pass the shoulder strap under the arm or behind the back.
Check that the seat belt has not been damaged by sharp edges.
If the seat belt does not operate normally, it will not protect the child. Consult an approved dealer. Do not use this seat until the seat belt has been repaired.

Attachment using the ISOFIX system

Authorised ISOFIX child seats are approved in accordance with regulation ECE-R44 in one of the three following scenarios:
– universal ISOFIX 3-point forward-facing seat;
– semi-universal ISOFIX 2-point seat;
– specific.

For the latter two, check that your child seat can be installed by consulting the list of compatible vehicles.

Attach the child seat with the ISOFIX locks, if these are provided. The ISOFIX system allows quick, easy, safe fitting.

The ISOFIX system consists of 2 rings and, in some cases, a third ring.

Before using an ISOFIX child seat that you purchased for another vehicle, check that its installation is authorised. Consult the list of vehicles which can be fitted with the seat from the equipment manufacturer.

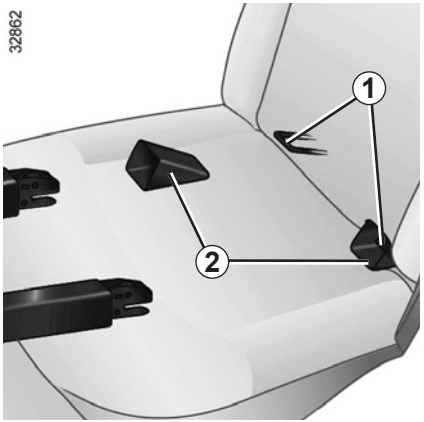

The two rings ***1*** are located between the seatback and the seat base (behind a cover) and are identified by a marking.

To ensure your child seat can be easily fitted and locked on rings ***1***, use access guides ***2*** on the child seat.

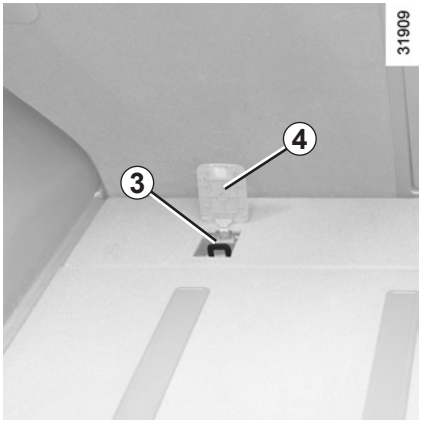

The third ring is used to attach the upper strap on some child seats.

To access it, pass the belt on the child seat behind the rear bench seatback, then open flap ***4***.

Fit the hook of the strap onto ring ***3*** and pull the strap so that the seatback of the child seat comes into contact with the top of the seatback on the vehicle seat.

The ISOFIX anchorage points have been exclusively designed for child seats with the ISOFIX system. Never fit a different type of child seat, seat belt or other objects to these anchorage points.

Check that nothing is obstructing the anchorage points.

If your vehicle has been involved in a road accident, have the ISOFIX anchorage points checked and replace your child seat.

Check that the seatback of the forward-facing child seat is in contact with the seatback of the vehicle seat.

In this case, the child seat may not always rest on the seat base of the vehicle seat.

CHILD SAFETY: fitting a child seat (1/3)

Some seats are not suitable for fitting child seats. The diagram on the following page shows you how to attach a child seat.

The types of child seats indicated may not be available. Before using a different child seat, check with the manufacturer that it can be fitted.

Fit the child seat in a rear seat wherever possible.

Check that when installing the child seat in the vehicle it is not at risk of coming loose from its base.

If you have to remove the headrest, check that it is correctly stored so that it does not come loose under harsh braking or impact.

Always attach the child seat to the vehicle even if it is not in use so that it does not come loose under harsh braking or impact.

In the front seat

The laws concerning children travelling in the front passenger seat differ in every country. Consult the legislation in force and follow the indications on the diagram on the following page. Before fitting a child seat in this seat (if authorised):

– disconnect the air bag (refer to information on the following pages);
– lower the seat belt as far as possible;
– move the seat back as far as possible and tilt the seatback backwards slightly (at an angle of 25° approximately);
– on equipped vehicles, raise the seat base as far as possible.

Do not change these settings after the child seat is installed.

RISK OF DEATH OR SERIOUS INJURY: before fitting a rear-facing child seat to this seat, check that the air bag has been deactivated (refer to the information on “Child safety: deactivating/activating the front passenger air bag” in Section 1).

In the rear side seat

A carrycot can be installed across the vehicle and will take up at least two seats. Position the child with his or her feet nearest the door.

Move the front seat as far forward as possible to install a rear-facing child seat, then move back the seat or seats in front in accordance with the child seat instructions.

For the safety of the child in the forward-facing seat, do not move the seat in front back past the middle of the runner, do not tilt the seatback too far (maximum of 25°) and raise the seat as much as possible.

Check that the forward-facing child seat is resting against the back of the vehicle seat and that the headrest of the vehicle is not obstructing its use.

Rear centre seat

Check that the belt is suitable for securing your child seat. Consult an approved Dealer.

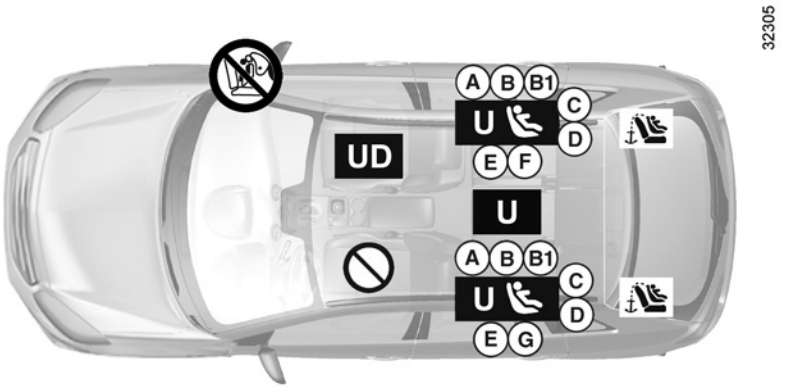

Child seat installation diagram

Check the status of the air bag before fitting a child seat or allowing a passenger to use the seat.

Seat not suitable for fitting child seats.

Child seat attached using the belt

U Seat which allows a standardised “Universal” seat to be fitted using a seat belt;

UD Seat which **only** allows a **rear-facing** standardised “Universal” seat to be installed using a seat belt.

RISK OF DEATH OR SERIOUS INJURY: before fitting a rear-facing child seat in the front passenger seat, check that the air bag has been deactivated (refer to the information on “Child safety: deactivating/activating the front passenger air bag” at the end of the paragraph).

Child seat attached using the ISOFIX mounting

seat which allows an ISOFIX child seat to be fitted.

the rear seats are fitted with an anchorage point which allows a forward-facing ISOFIX child seat with universal approval to be fitted. The anchorage points are located under the carpet in the luggage compartment, behind the bench seat.

The size of the ISOFIX child seat is indicated by a letter:

– A, B and B1: for forward-facing seats in group 1 (9 to 18 kg);
– C: rear-facing seats in group 1 (9 to 18 kg);
– D and E: shell seat or rear-facing seats in group 0 or 0+ (less than 13 kg);
– F and G: carrycots in group 0 (less than 10 kg).

Using a child safety system which is not approved for this vehicle will not correctly protect the baby or child. They risk serious or even fatal injury.

CHILD SAFETY: fitting a child seat (3/3)

The table below summarises the information already shown on the diagram on the previous page, to ensure the regulations in force are respected.

Type of child seat	Weight of the child	Seat size ISOFIX	Passenger front seat (1) (5)	Rear side seats	Rear centre seat
Carrycot fitted across the vehicle Group 0	< 10 kg	F- G	X	U - IL (2)	U
Shell seat/rear-facing seat Group 0, 0+ and 1	< 13 kg and 9 to 18 kg	C, D, E	U	U - IL (3)	U
Forward-facing seat Group 1	9 to 18 kg	A, B, B1	X	U - IUF - IL (4)	U
Booster seat Group 2 and 3	15 to 25 kg and 22 to 36 kg		X	U (4)	U

X = Seat not suitable for fitting child seats.
U = Seat which allows a child seat with “Universal” approval to be installed using a seat belt; check that it can be fitted.
IUF/IL = On equipped vehicles, seat which allows an approved “Universal”/“semi-universal” or “vehicle specific” child seat to be attached using the ISOFIX system; check that it can be fitted.

(1) Only a rear-facing child seat can be fitted in this seat: raise the seat to the maximum and position it as far back as possible, tilting the seatback slightly (approximately 25°).
(2) A carrycot can be installed across the vehicle and will take up two seats. Position the child with his or her feet nearest the door.
(3) Move the front seat as far forward as possible to install a rear-facing child seat, then move back the seat or seats in front in accordance with the child seat instructions.
(4) Forward-facing child seat; position the seatback of the child seat in contact with the seatback of the vehicle seat. Adjust the height of the headrest or remove it if necessary, do not push the seat more than halfway back on its runners and do not recline the seatback more than 25°.

(5) RISK OF DEATH OR SERIOUS INJURY: before fitting a rear-facing child seat in the front passenger seat, check that the air bag has been deactivated (refer to the information on “Child safety: deactivating/activating the front passenger air bag” at the end of the paragraph).

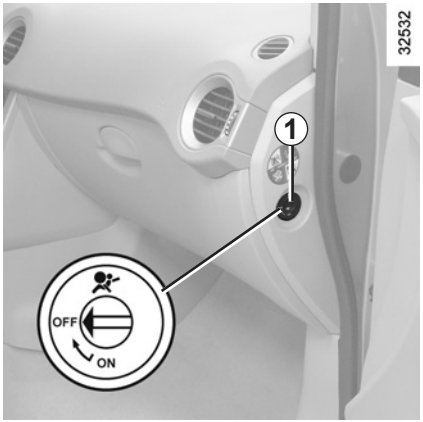

Deactivating the front passenger airbags

(on equipped vehicles)

You **must** deactivate the devices in addition to the front passenger seat belt before fitting a child seat in the front passenger seat.

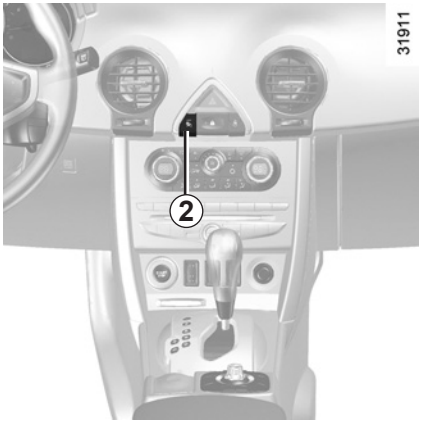

To deactivate the air bags: with the vehicle stationary, insert the integrated key into the switch ***1*** then push it and turn it to the **OFF** position.

With the ignition on, you **must** check that the indicator light is lit on the instrument panel ***2*** or on the central display and, depending on the vehicle, that the message “Passenger airbag off” is displayed.

This light remains continuously lit to let you know that you can fit a child seat.

DANGER

Since operation of the front passenger air bag is not compatible with the position of a rear-facing child seat, **NEVER** fit a rear-facing child seat on a front passenger seat with an active front air bag. The child may suffer very serious injuries if the air bag is triggered.

The passenger air bag must only be deactivated or activated **with the ignition off**.

If it is interfered with when the vehicle is being driven, indicator lights and will come on.

Switch the ignition off then on again to reset the air bag in accordance with the lock.

CHILD SAFETY: deactivating, activating the front passenger air bag (2/3)

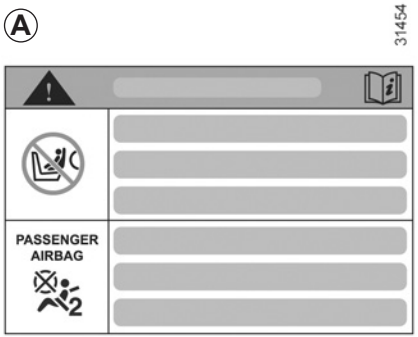

The markings on the dashboard and labels ***A*** on each side of the passenger sun visor ***3*** (example: label shown above) remind you of these instructions.

DANGER

Since operation of the front passenger air bag is not compatible with the position of a rear-facing child seat, **NEVER** fit a rear-facing child seat on a front passenger seat with an active front air bag. The child may suffer very serious injuries if the air bag is triggered.

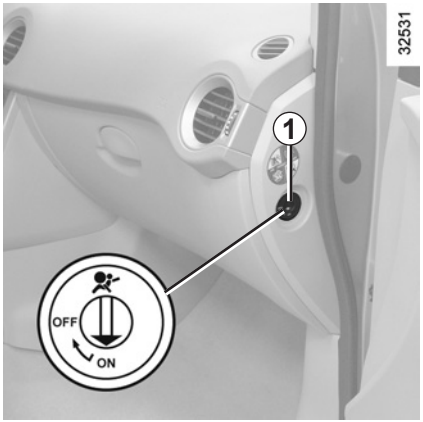

Activating the front passenger air bags

You should reactivate the air bag as soon as you remove the child seat from the front passenger seat to ensure the protection of the front passenger in the event of an impact.

To reactivate the air bags: with the vehicle stationary, insert the integrated key into the lock ***1*** then push it and turn it to the **ON** position.
With the ignition on, you **must** check that the indicator light on the instrument panel ***2*** or on the central display is off.
The front passenger seat belt additional restraint systems are activated.

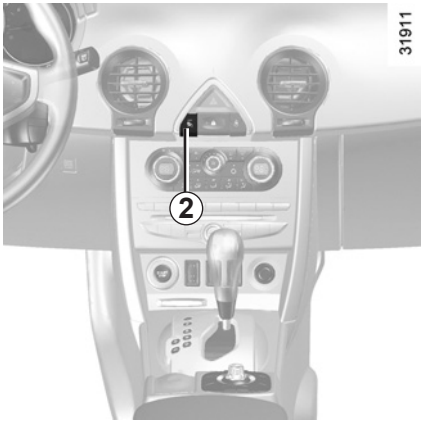

Operating faults

In the event of a fault, warning light flashes and warning light lights up on the instrument panel accompanied by the message “check air bag”.

Contact your approved dealer as soon as possible.

It is forbidden to fit a rear-facing child seat to the front passenger seat if the air bag activation/deactivation system is faulty.

Allowing any other passenger to sit in that seat is not recommended.

The passenger air bag must only be deactivated or activated **with the ignition off**.

If it is interfered with when the vehicle is being driven, indicator lights and will come on.

Switch the ignition off then on again to reset the air bag in accordance with the lock.

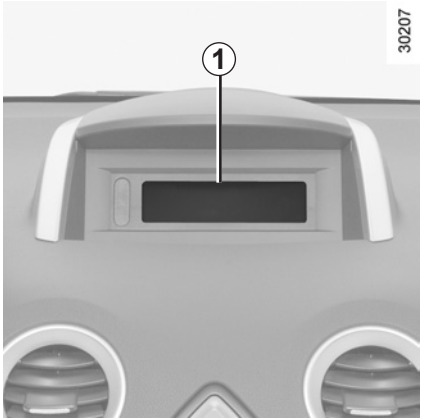

With the ignition on, the clock and the exterior temperature are displayed.

Resetting clock *1*

Refer to the specific equipment instructions (navigation system, radio) for the particular features.

If the power supply is cut (battery disconnected, supply wire cut, etc.), the clock must be reset.

We recommend that you do not adjust these settings while driving.

External temperature indicator

Special note:

When the outside temperature is –3°C to +3°C, the °C characters flash (signalling a risk of black ice on the road).

Note: in some cases (vehicle stopped for less than 3 hrs 30 mins), the information displayed on the screen when the ignition is switched on may be incorrect.

External temperature indicator

As ice formation is related to climatic exposure, local air humidity and temperature, the external temperature alone is not sufficient to detect ice.

DRIVING POSITION: LEFT-HAND DRIVE (1/2)

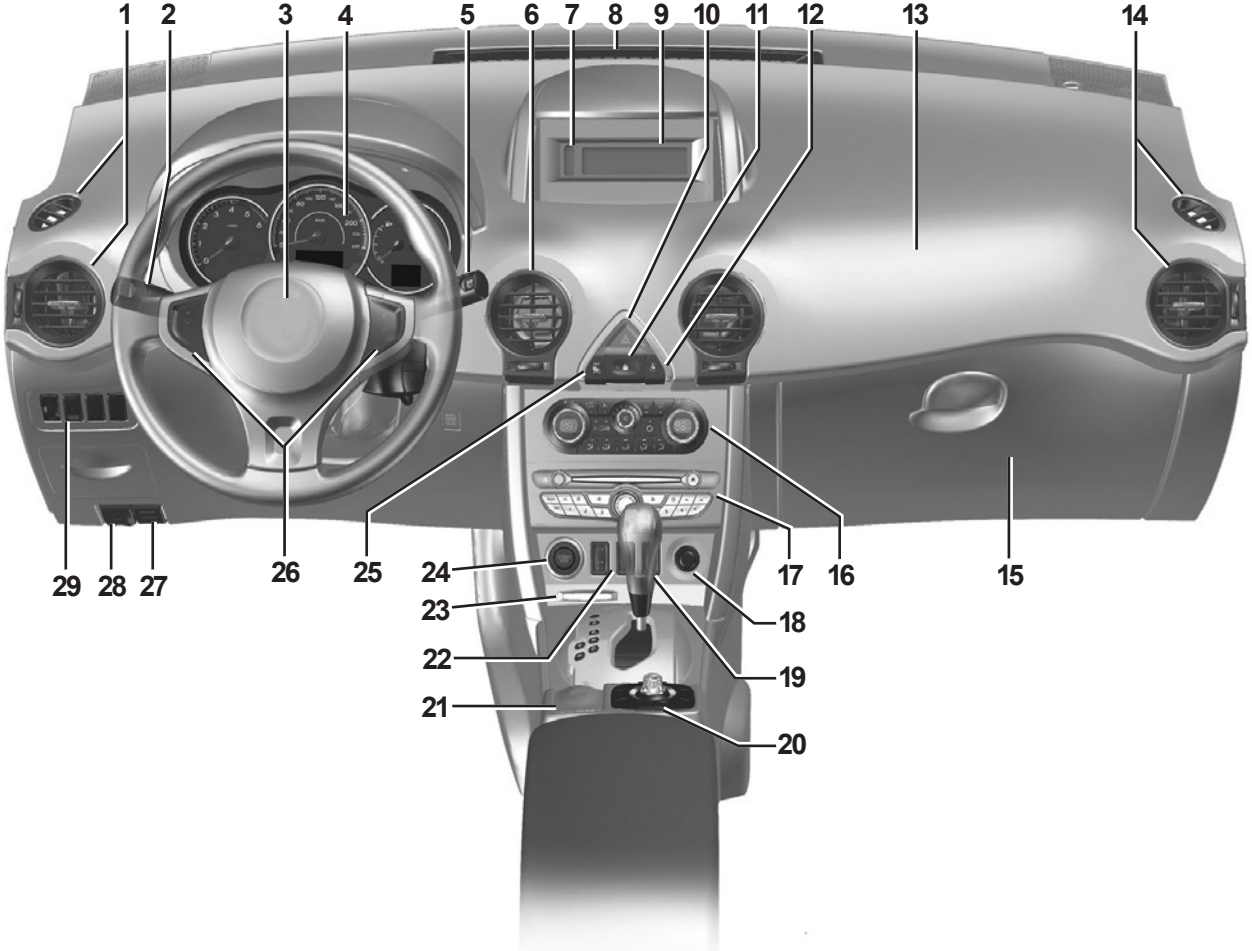

DRIVING POSITION: LEFT-HAND DRIVE (2/2)

The equipment fitted, described below, DEPENDS ON THE VERSION AND COUNTRY.

1 Vents

2 Stalk for:

– Direction indicator lights;

– Exterior lights;

– Front fog lights;

– Rear fog light.

3 Location of driver's air bag and horn.

4 Instrument panel.

5 Stalk for:

– Windscreen and rear screen wash/wiper;

– Trip computer and warning system information readout control.

6 Centre air vents.

7 Seat belt unfastened and passenger air bag deactivated warning lights.

8 Windscreen demister outlet.

9 Display (depending on the vehicle) of time, temperature, radio information, navigation system information, etc.

10 Hazard warning lights switch.

11 Central door locking switch.

12 Passenger seat belt indicator light.

13 Location for passenger air bag.

14 Vents.

15 Glovebox.

16 Heating and ventilation controls.

17 Audio equipment.

18 Cigar lighter.

19 Gear lever.

20 Navigation system.

21 Manual or electronic parking brake.

22 Switch for:

– Hill Descent Control (HDC);

– Cruise control and speed limiter.

23 Card reader.

24 Ignition switch.

25 Front passenger airbag deactivation warning light.

26 Cruise control/speed limiter controls.

27 Tailgate release.

28 Bonnet release.

29 Switches:

– Headlight adjustment control knob;

– Instrument panel and dashboard brightness control knob;

– Parking distance control deactivation switch;

– Electronic stability control deactivation switch.

DRIVING POSITION: RIGHT-HAND DRIVE (1/2)

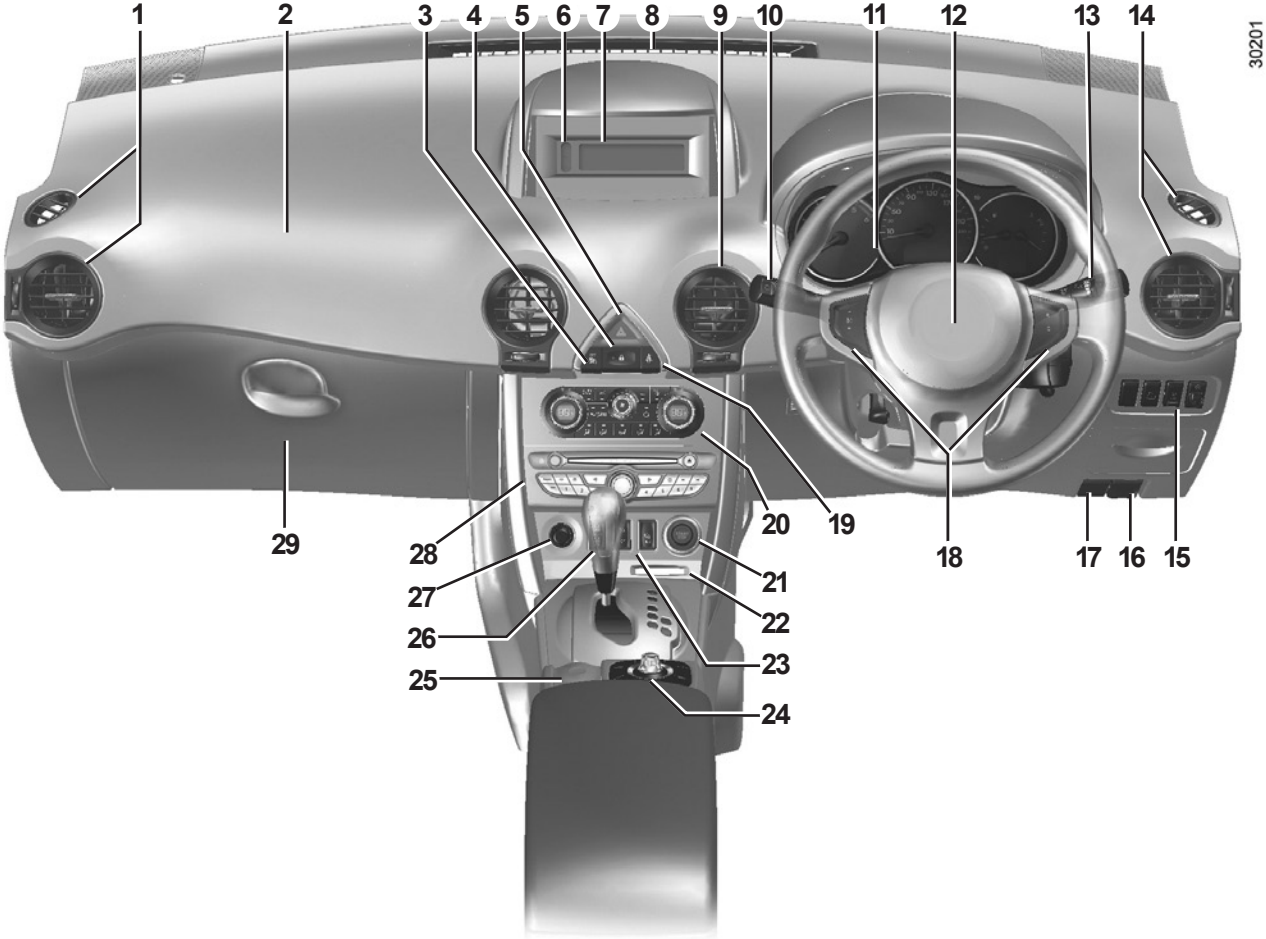

DRIVING POSITION: RIGHT-HAND DRIVE (2/2)

The fittings described below DEPEND ON THE VEHICLE EQUIPMENT AND COUNTRY.

1 Vents

2 Location for passenger air bag.

3 Front passenger airbag deactivation warning light.

4 Central door locking switch.

5 Hazard warning lights switch.

6 Seat belt unfastened and passenger air bag deactivated warning lights.

7 Display (depending on the vehicle) of time, temperature, radio information, navigation system information, etc.

8 Windscreen demister outlet.

9 Centre air vents.

10 Stalk for:

– Direction indicator lights;

– Exterior lights;

– Front fog lights;

– Rear fog light.

11 Instrument panel.

12 Location of driver's air bag and horn.

13 Stalk for:

– Windscreen and rear screen wash/wiper;

– Trip computer and warning system information readout control;

14 Vents.

15 Switches:

– Headlight adjustment control knob;

– Instrument panel and dashboard brightness control knob;

– Parking distance control deactivation switch;

– Electronic stability control deactivation switch.

16 Bonnet release.

17 Tailgate release.

18 Cruise control/speed limiter controls.

19 Passenger seat belt indicator light.

20 Heating and ventilation controls.

21 Ignition switch.

22 Card reader.

23 Switch for:

– Hill Descent Control (HDC);

– Cruise control and speed limiter.

24 Navigation system.

25 Manual or electronic parking brake.

26 Gear lever.

27 Cigar lighter.

28 Audio equipment.

29 Glovebox.

WARNING LIGHTS (1/4)

The presence and operation of the warning lights DEPEND ON THE EQUIPMENT AND COUNTRY.

The instrument panel *A* lights up when the ignition is switched on.
In some cases, the appearance of a warning light is accompanied by a message.

The warning light means you should **drive very carefully** to an authorised dealer as soon as possible. If you fail to follow this recommendation, you risk damaging your vehicle.

Air bag warning light
This comes on when the ignition is switched on and goes out after a few seconds. If it does not light up when the ignition is switched on, or if it lights up when the engine is running, it indicates a fault in the system. Contact an authorised dealer as soon as possible.

Cruise control/speed limiter indicator lights
Refer to the information on the “Cruise control/Speed limiter” in Section 2.

Heating passenger seat operating indicator light
This indicates that the front passenger’s heated seat is on.

Warning light STOP requires you to stop immediately, for your own safety, as soon as traffic conditions allow. Switch off the engine and do not restart it. Contact an approved Dealer.

Toxic Fume Filter System Warning Light
This lights up when the ignition is switched on and goes out when the engine is started.
– If it comes on continuously, consult your authorised dealer as soon as possible.
– If it flashes, reduce the engine speed until the light stops flashing. Contact your approved Dealer as soon as possible.

Refer to the information on “Antipollution, fuel economy and driving” in Section 2.

If no lights or sounds are apparent, this indicates a fault in the instrument panel. This indicates that it is essential to stop immediately (as soon as traffic conditions allow). Ensure that the vehicle is correctly immobilised and contact an approved Dealer.

WARNING LIGHTS (2/4)

The presence and operation of the warning lights DEPEND ON THE EQUIPMENT AND COUNTRY.

Warning light

This lights up when the ignition is switched on and goes out as soon as the engine is started. It can light up in conjunction with other indicator lights and/or messages on the instrument panel.

It means you should **drive very carefully** to an authorised dealer as soon as possible. If you fail to follow this recommendation, you risk damaging your vehicle.

STOP light

This lights up when the ignition is switched on and goes out as soon as the engine is started. It comes on with other warning lights and/or messages, and is accompanied by a beep.

It requires you to stop immediately, for your own safety, as soon as traffic conditions allow. Switch off the engine and do not restart it.

Contact an approved Dealer.

Electronic parking brake and brake circuit fault warning light

If it lights up while braking, accompanied by the STOP warning light, this indicates a low level in one of the circuits or a fault in the braking system.

Stop as soon as traffic conditions allow and contact an authorised dealer.

Battery charge warning light

If the light comes on accompanied by the STOP warning light, this indicates that the electrical circuit is overcharged or undercharged.

Oil pressure warning light

If it comes on when you are driving accompanied by the STOP warning light and a beep, it is essential to stop and switch off the ignition.

Check the oil level (refer to the information on the “Engine oil level” in Section 4). If the level is normal, the light has come on for another reason: contact an authorised dealer.

WARNING LIGHTS (3/4)

The presence and operation of the warning lights DEPEND ON THE EQUIPMENT AND COUNTRY.

Fuel economy indicator light

This lights up to advise you to change to a higher gear (up arrow) or lower gear (down arrow).

Fuel gauge warning light

If this warning light lights up or flashes, fill the tank as soon as possible.

There is only approximately 30 miles (50 km) worth of fuel left after the warning light first comes on.

Tyre pressure monitor indicator light

Refer to the information on the “Tyre pressure monitor” in Section 2.

Preheating warning light (diesel version)

This should come on when the ignition is switched on. It indicates that the heater plugs are in operation. This goes out as soon as the engine starts.

Particle filter warning light (depending on the vehicle)

Refer to the information on “Special features of diesel versions with particle filter” in Section 2.

2WD mode operating telltale

Refer to the information on “Allwheel drive: 4 wheel drive (4WD)” in Section 2.

Hill Descent Control indicator light

This lights up when the ignition is switched on and goes out after a few seconds. Refer to information on “Driver correction devices and aids” in Section 2.

4WD mode locking indicator light

Refer to the information on “Allwheel drive: 4 wheel drive (4WD)” in Section 2.

WARNING LIGHTS (4/4)

The presence and operation of the warning lights DEPEND ON THE EQUIPMENT AND COUNTRY.

Front seat belt reminder warning light

This comes on when the engine is started then, if the driver's or front passenger's seat belt (if this seat is occupied) is not fastened and the vehicle has reached approximately 12 mph (20 km/h), it flashes and a bleep sounds for around 120 seconds.

Note: an object placed on the passenger seat base may activate the warning light in some cases.

Driver correction devices indicator light

Refer to information on "Driver correction devices" in Section 2.

Anti-lock braking warning light

This comes on when the ignition is switched on and goes out after a few seconds. If it does not go out after the ignition is switched on, or lights up when driving, there is a fault with the ABS. The braking system then operates as it would on a vehicle without the ABS system: Contact an authorised dealer as soon as possible.

Handbrake "on" or electronic parking brake warning light

Refer to the information on the "Handbrake" or "Electronic parking brake" in Section 2.

Side light tell-tale light

Headlight main beam tell-tale light

Dipped beam headlight tell-tale light

Front fog light tell-tale light

Rear fog light tell-tale light

Right-hand direction indicator tell-tale light

Left-hand direction indicator tell-tale light

INSTRUMENT PANEL: displays and indicators (1/2)

Rev counter *1* (rpm × 1,000)

The red area indicates the engine speed which should not be exceeded.

Speedometer *2* (kph or mph)

Overspeed buzzer

Depending on the vehicle, a buzzer sounds for approximately 10 seconds every 40 seconds, as long as the vehicle is travelling in excess of 72 mph (120 kph).

Fuel level gauge *3*

If the minimum level is reached, the warning light integrated with the indicator comes on. Fill up as soon as possible. There is only approximately 30 miles (50 km) worth of fuel left after the warning light first comes on.

Coolant temperature indicator

In normal use, the needle ***6*** should be positioned before mark ***5***. It may approach mark ***5*** under severe conditions of use.

There is a warning only if the STOP indicator and engine overheating indicator ***4*** come on along with the message “Engine overheating” on the instrument panel.

INSTRUMENT PANEL: displays and indicators (2/2)

Engine oil level low warning *7*

The display warns the driver if the engine oil level is low when the ignition is switched on. Refer to the information on the “Engine oil level” in Section 4.

Trip computer and warning system *7*

The trip parameters and warning messages are displayed on display ***7***. Refer to the section on the “Trip computer and warning system” in the following pages.

Information display *8*

Depending on the vehicle, the following information is shown on display ***8***:

– the status of the doors and luggage compartment lid;

– the tyre pressures (refer to the information on the “Tyre pressure monitor” in Section 2);

– the gear selected (on vehicles with automatic transmissions).

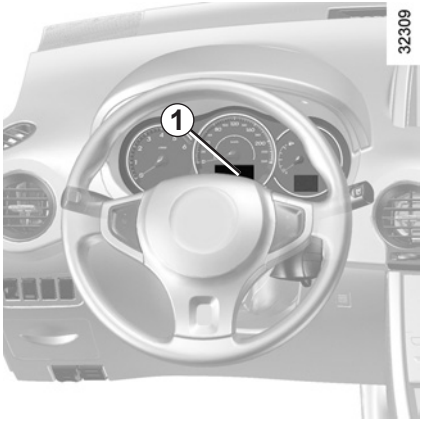

Trip computer and warning system *1*

This includes the following functions:

– distance travelled;

– journey parameters;

– information messages;

– operating fault messages (associated with the warning light);

– warning messages (connected to the warning light STOP).

All these functions are described on the following pages.

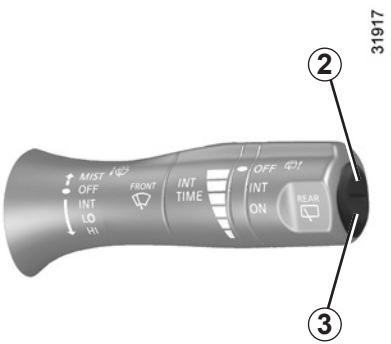

Display selection buttons *2* and *3*

Scroll through the following information upwards (button ***2***) or downwards (button ***3***) by pressing briefly and successively (the display depends on the vehicle equipment and country).

a) total mileage and trip mileage recorder;

b) journey parameters (depending on vehicle):

– fuel used;
– average fuel consumption;
– current fuel consumption;
– estimated range;
– distance travelled;
– average speed.

c) mileage before service;

d) programmed speed (speed limiter/cruise control);

e) trip log, operating faults and information message readout.

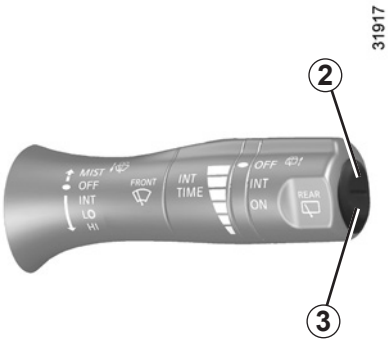

Trip mileage resetting

With “trip mileage recorder” selected on the display, press button ***2*** or ***3*** until the mileage recorder resets to zero.

Resetting the journey parameters (reset button)

With one of the journey parameters selected on the display, press button ***2*** or ***3*** until the display resets.

Interpreting some of the values displayed after resetting

The values showing average fuel consumption, range and average speed will become more stable and reliable the further you travel after pressing the reset button.

For the first few miles after pressing the reset button you will notice that the range increases as you travel. This range takes into account the average fuel consumption since the last time the reset button was pressed. Therefore, the average fuel consumption may decrease when:

– the vehicle is no longer accelerating;

– the engine reaches its operating temperature (if the engine was cold when reset button was pressed);

– when driving from an urban area onto the open road.

Automatic resetting of the journey parameters

Resetting occurs automatically when the maximum value of any of the parameters is exceeded.

TRIP COMPUTER AND WARNING SYSTEM (3/10)

The display of information shown below DEPENDS ON THE VEHICLE EQUIPMENT AND COUNTRY.

Examples of selections	Interpreting the display selected
123456 Km 1234.5 Km 28217	**a) Total mileage and trip mileage recorder.**
Carburant 25 L 28223	**b) Journey parameters.** **Fuel used** since the last reset.
Moyenne 7.2 L/100 28224	**Average fuel consumption** since the last reset. This value is displayed after having travelled at least 500 metres since the last reset.

TRIP COMPUTER AND WARNING SYSTEM (4/10)

The display of information shown below DEPENDS ON THE VEHICLE EQUIPMENT AND COUNTRY.

Examples of selections	Interpreting the display selected
Instantanée 9.2 L/100 (28225)	**Current fuel consumption.** This value is displayed above a speed of approximately 20 mph (30 km/h).
Autonomie 160 Km (31592)	**Estimated range with remaining fuel.** This range takes into account the average fuel consumption since the last time the reset button was pressed. The value is displayed after driving 500 metres.
Distance 275.5 Km (28227)	**Distance travelled** since the last reset.
Moyenne 58.9 Km/h (28228)	**Average speed** since the last reset. The value is displayed after driving 500 metres.

The display of information shown below DEPENDS ON THE VEHICLE EQUIPMENT AND COUNTRY.

Examples of selections	Interpreting the display selected
Prévoir révision sous 1432 Km (28218)	**c) Mileage before service.** Distance remaining before the next service. When the distance value approaches the limit, there are several possible scenarios: – mileage before service less than **900** miles (1,500 km): the message “Service due in” is displayed, accompanied by the remaining mileage; – distance equal to **0 miles** or **service date reached:** the message “service vehicle” is displayed accompanied by the warning light. The vehicle requires a service as soon as possible.
Faire révision (28219)	

Note: depending on the vehicle, the mileage before a service changes according to driving style (frequent driving at low speeds, door-to-door journeys, extensive use at idle speed, towing, etc.). The distance remaining until the next service can therefore decrease more quickly in some cases than the actual distance travelled.

Resetting the display after the service in accordance with the maintenance schedule.
The mileage before service must only be reset after a service which complies with the recommendations in the Maintenance Service Booklet. If you decide to change the oil more frequently, do not reset this data each time the oil is changed to avoid exceeding the replacement intervals for other parts in the maintenance schedule.

To reset the distance before service, press and hold one of the display reset buttons for approximately 10 seconds until the display shows the mileage permanently.

Journey parameters

The display of information shown below DEPENDS ON THE VEHICLE EQUIPMENT AND COUNTRY.

Examples of selections	Interpreting the display selected
Régulateur 90 Km/h (28221)	**e) Cruise control/speed limiter programmed speed.** Refer to the information on the “Cruise control/Speed limiter” in Section 2.
Limiteur 90 Km/h (28222)	
Pas de message mémorisé (28229)	**g) Computer log.** Successive display: – of information messages (Replace card battery, etc.); – operating fault messages (Check injection system, etc.).

Information messages

These can help either in the vehicle starting phase, or give information about a selection or a driving status. Examples of information messages are given in the following pages.

Examples of messages	Interpretation of messages
“Top up oil level”	Top up as soon as possible.
“Replace card battery”	The card battery charge is too low (refer to the information on the “Renault card: battery” in section 5).
“Bleed diesel filter”	Indicates the presence of water in the diesel filter; contact your authorised dealer as soon as possible.
“No keycard press and hold”	To stop the engine when no card has been recognised, press and hold the engine start/stop button.
“Press clutch + START”	To start, depress the clutch pedal then press the engine start/stop button.

Operating fault messages

These appear with the warning light and mean that you should drive very carefully to an authorised dealer as soon as possible. If you fail to follow this recommendation, you risk damaging your vehicle.
They disappear when the display selection key is pressed or after several seconds and are stored in the computer log. The warning light stays on. Examples of operating fault messages are given in the following pages.

Examples of messages	Interpretation of messages
“Check vehicle”	Indicates a fault in one of the pedal sensors, battery management system or oil level sensor.
“Check power steering”	Indicates a fault in the power-assisted steering system.
“Check parking brake”	Indicates a fault on the parking brake.
“Check exhaust emission”	Indicates a fault in the vehicle’s particle filter system.
“Check 4WD”	Indicates a fault in the vehicle’s all-wheel drive (4WD) transmission system.
“Check airbag”	Indicates a fault in the air bag system (air bag, pretensioners, etc.).

Warning messages

These appear with the STOP warning light and require you to stop immediately, for your own safety, as soon as traffic conditions allow. Stop your engine and do not restart it. Contact an approved Dealer.

Examples of warning messages are given in the following pages. **Note:** the messages appear on the display either individually or alternately (when there are several messages to be displayed), and may be accompanied by a warning light and/or a beep.

Examples of messages	Interpretation of messages
“Injection system fault”	Indicates that the vehicle has a serious engine fault.
“Oil pressure fault”	Indicates an engine oil pressure fault.
“Brake system fault”	Indicates a fault in the braking system.
“Battery charging fault”	Indicates a fault with the vehicle’s battery charging circuit.
“Power steering fault”	Indicates a fault in the power-assisted steering system.
“Parking brake fault”	Indicates a fault in the parking brake system.

Warning messages

These appear with the STOP warning light and require you to stop immediately, for your own safety, as soon as traffic conditions allow. Stop your engine and do not restart it. Contact an approved Dealer.

Examples of warning messages are given in the following pages. **Note:** the messages appear on the display either individually or alternately (when there are several messages to be displayed), and may be accompanied by a warning light and/or a beep.

Examples of messages	Interpretation of messages
“Stop vehicle”	Indicates an electronic parking brake fault. Apply the electronic parking brake manually and ensure that the vehicle is immobilised using a chock.
“Engine overheating”	Indicates that the engine is overheating.
“Puncture”	Indicates a puncture affecting the tyre shown on the display.
“Underinflation critical”	Indicates major under-inflation of the tyre shown on the display.
“Risk of steering locking”	Indicates a fault in the steering.

Height and reach adjustment

Pull lever ***1*** and move the steering wheel to the required position; then push the lever beyond the point of resistance to lock the steering wheel.

Make sure that the steering wheel is correctly locked.

For safety reasons, only adjust the steering wheel when the vehicle is stationary.

Variable power-assisted steering

It is equipped with a system which adapts the level of assistance to the vehicle speed.

Steering is made easier during parking manoeuvres (for added comfort) whilst the force needed to steer increases progressively as the speed rises (for enhanced safety at high speeds).

Never switch off the ignition when travelling downhill, and avoid doing so in normal driving (assistance is not provided).

Operating faults

– If the message “Check power steering” is displayed on the instrument panel accompanied by the warning light, consult an authorised dealer straight away.

– If the message "Power steering fault" is displayed on the instrument panel and the warning light STOP comes on, stop the vehicle as soon as possible and contact an authorised dealer.

Never leave the steering wheel on full lock when the vehicle is stationary.

Do not drive with a low battery charge. The steering wheel may not operate correctly.

With the engine switched off, or if there is a system fault, it is still possible to turn the steering wheel. The force required will be greater.

A noise may be heard when the steering wheel is moved quickly. This is normal.

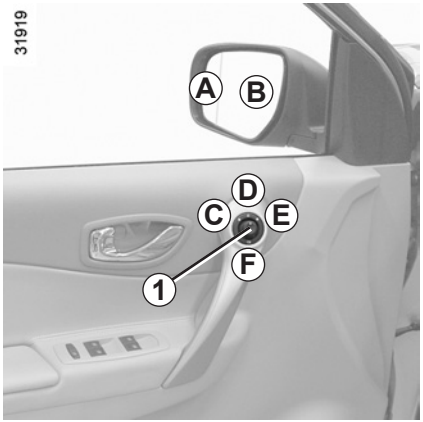

Door mirrors

With the engine running, move button *1*:

– position ***C*** to adjust the left-hand door mirror;

– position ***E*** to adjust the right-hand door mirror;

D is the inactive position.

Folding door mirrors

With the engine running, move button ***1*** to position ***F***: the door mirrors fold away.

To reset them for driving, return to position ***C***, ***D*** or ***E***.

Heated door mirrors

Mirror de-icing is carried out at the same time as rear screen de-icing.

The driver's door mirror may have two clearly defined zones. Zone ***B*** shows what can normally be seen in an ordinary rear-view mirror. Zone ***A*** increases rear side visibility for greater safety.

The objects in zone *A* look much further away than they really are.

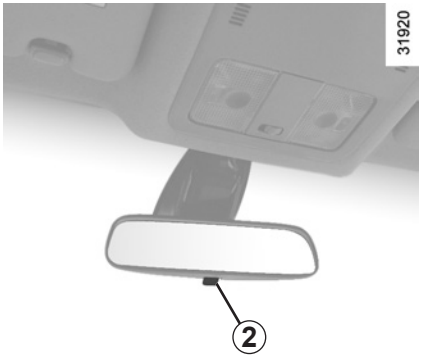

Interior rear view mirror

Its position can be adjusted.

Rear view mirror with lever *2*

For night driving, to avoid being dazzled by the headlights of the car behind you, flip the small lever ***2*** located behind the rear view mirror.

Rear view mirror without lever *2*

The rear view mirror darkens automatically at night if you are being followed by a vehicle with its lights on.

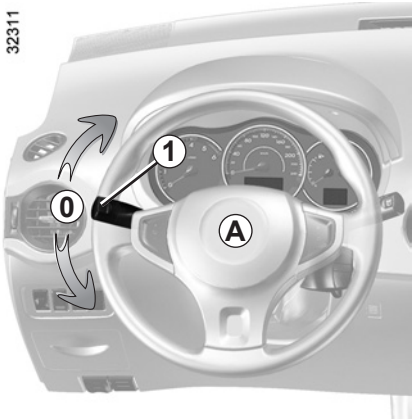

Horn

Press steering wheel ***A***.

Headlight flasher

Pull stalk ***1*** towards you to flash the headlights.

Direction indicators

Move stalk ***1*** parallel to the steering wheel and in the direction you are going to turn it.

When driving on the motorway, the steering wheel is not often turned enough to return the stalk automatically to ***0***. There is an intermediate position in which the switch may be held when changing lanes.

When the stalk is released, it automatically returns to ***0***.

Move the stalk ***1*** briefly up or down as far as the intermediate position and release it to flash three times with the direction indicator.

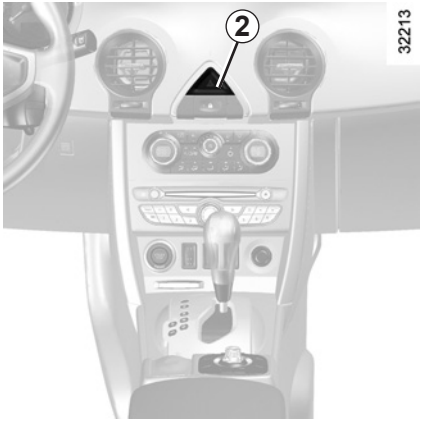

Hazard warning lights

Press switch ***2***. This switch illuminates all four direction indicators and the side-mounted indicator lights simultaneously. It must only be used in an emergency to warn drivers of other vehicles that you have had to stop in an area where stopping is prohibited or unexpected or that you are obliged to drive under special conditions.

Depending on the vehicle, the hazard warning lights may come on automatically under heavy deceleration. You can switch them off by pressing switch ***2*** twice.

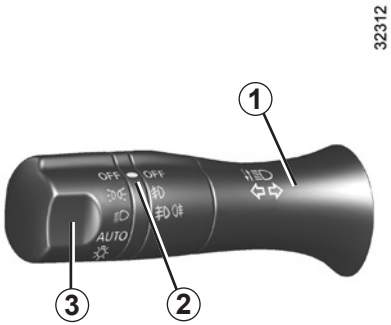

Side lights

Turn the ring ***3*** until the symbol is opposite mark ***2***.

The instrument panel will light up. The brightness can be adjusted by turning the control knob ***4***. If the side lights are not switched on, it is not possible to set the brightness. This control can also be used to adjust the brightness of the audio equipment and air conditioning display.

Dipped beam headlights

Manual operation

Turn the ring ***3*** until the symbol is opposite mark ***2***. This indicator light on the instrument panel comes on.

Automatic operation

(depending on vehicle)

Turn ring ***3*** until the AUTO symbol is opposite mark ***2***: with the engine running, the dipped beam headlights switch on or off automatically depending on the brightness of the light outside, without any action on stalk ***1***.

Main beam headlights

With the dipped beam headlights lit, push stalk ***1*** forwards. This indicator light on the instrument panel comes on.

To return to the dipped headlight position, pull the stalk ***1*** towards you again.

If the headlights are off, you can pull stalk ***1*** towards you to flash the headlights. The headlights go off as soon as the stalk is released.

Before driving at night: check the electrical equipment is operating correctly and adjust your headlights (if your vehicle is not carrying its normal load). As a general precaution, check that the lights are not obscured (by dirt, mud, snow or objects being transported).

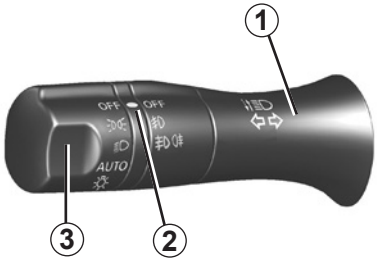

Cornering lights

Depending on the vehicle, if the dipped beam headlights are on when cornering, and under certain driving conditions (speed, steering wheel angle, etc.), additional lights are switched on to light the inside of the bend.

Switching off the lights

There are two possibilities:

– manually, move ring ***3*** to the OFF position;

– automatically, the lights are switched off when the engine is switched off or when the driver's door is opened. In this case, the next time the engine is started the lights will be switched back on according to the position of the ring ***3***.

Lights-on warning buzzer

If the lights are on after the engine is switched off, a warning beep sounds when the driver's door is opened to warn you that the lights are still on.

"See-me-home lighting" function

This function (useful, for example, for opening a gate, garage, etc.) enables you to switch the dipped headlights on momentarily.

With the engine and lights off and ring *3* in the OFF position, pull stalk ***1*** towards you: the dipped beam headlights light up for approximately thirty seconds.

This action may be carried out no more than ten times for a maximum lighting period of ten minutes.

To switch off the lights before they go out automatically, turn the ring on the stalk ***1***, then return it to the OFF position.

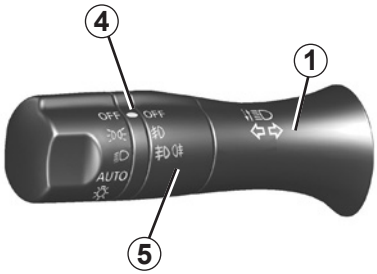

Front fog lights

Turn the centre ring ***5*** until the symbol is opposite mark ***4***.

Operation of the fog lights depends on the exterior lighting position selected, and an indicator light will light up on the instrument panel.

Rear fog light

Turn the centre ring ***5*** on the stalk until the symbol is opposite mark ***4***, then release it.

Operation of the fog lights depends on the exterior lighting position selected and an indicator light will light up on the instrument panel.

To turn off the rear fog light, turn the centre ring ***5*** on the stalk until the symbol is opposite mark ***4***, then release.

The indicator light on the instrument panel goes out.

To avoid inconveniencing other road users, remember to switch off the rear fog light when it is no longer needed.

Turning off the front and rear fog lights.

Turn the ring ***5*** until the mark ***4*** is opposite the OFF symbol.

The front and rear fog lights switch off when the exterior lights are switched off.

When driving in fog or snow, or when transporting objects which are higher than the roof, the headlights do not come on automatically.

The driver remains in full control of switching on the fog lights: the indicator lights on the instrument panel inform you whether the fog lights are lit (indicator light on) or not (indicator light off).

ELECTRIC BEAM HEIGHT ADJUSTMENT

On equipped vehicles, control ***A*** allows you to adjust the height of the beams according to the load.

Turn control ***A*** downwards to lower the headlights and upwards to raise them.

For vehicles not fitted with control ***A***, adjustment is automatic.

Examples of positions for adjusting control *A* according to the load	
	0
	0
	1
	1
	2
	3

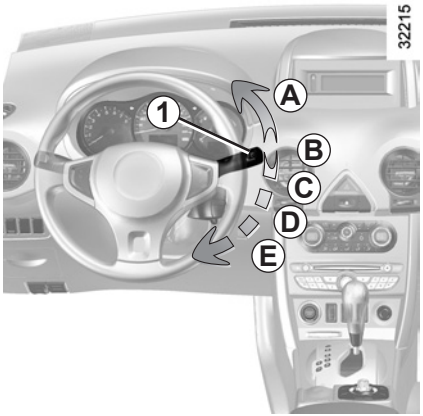

With the ignition on, move stalk ***1***.

A **Wiping on request**
The stalk returns to position ***B*** when released.

B **Off**

C **Intermittent wiping**
The wipers will pause for several seconds between sweeps. It is possible to change the time between sweeps by turning ring ***2***.

D **Normal wiping speed**

E **Fast wiping speed**

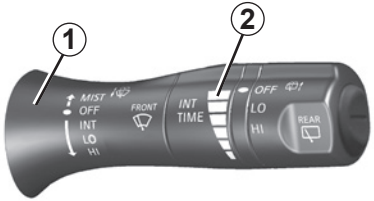

Special note

When driving, every time the vehicle stops the fast wiping speed is reduced to normal wiping speed.

As soon as the vehicle moves off, wiping will return to the speed originally selected.

If stalk ***1*** is operated, it overrides and cancels the automatic function.

Vehicle fitted with front windscreen wiper rain sensor

A **Wiping on request**
The stalk returns to position ***B*** when released.

B **Off**

C **Automatic wiper function**
When this position is selected, the system detects water on the windscreen and triggers the wipers at a suitable wiping speed.

It is possible to change the time between sweeps by turning ring ***2***.

D **Normal wiping speed**

E **Fast wiping speed**

When working in the engine compartment, ensure that the windscreen wiper stalk is in position ***B*** (off).

Risk of injury.

Windscreen washer, headlight washers
(depending on vehicle)

With the ignition on, pull stalk ***1*** towards you, then release.

Headlights off

One short pull activates the windscreen washers and one sweep of the windscreen wipers.

A longer pull activates the windscreen washers and four sweeps of the windscreen wipers followed by one sweep a few seconds later.

Headlights on

The headlight washers will be activated at the same time.

In freezing or snowy weather, ensure they are not stuck to the windscreen (including the central area located behind the interior rear-view mirror) and the rear screen before starting the wipers (risk of motor overheating).

Check the condition of the wiper blades. You are responsible for their service life:
- they must remain clean: clean the blades, windscreen and rear screen regularly with soapy water;
- do not use them when the windscreen or rear screen are dry;
- free them from the windscreen or rear screen when they have not been used for a long time.

In all cases, replace them as soon as they begin to lose efficiency: approximately once a year.

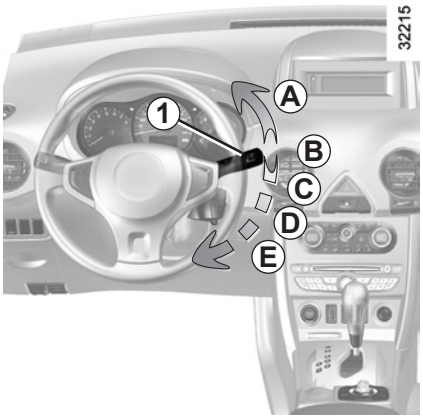

Before any action involving the windscreen (washing the vehicle, de-icing, cleaning the windscreen, etc.) return stalk ***1*** to position ***B*** (park).

Risk of injury and/or damage.

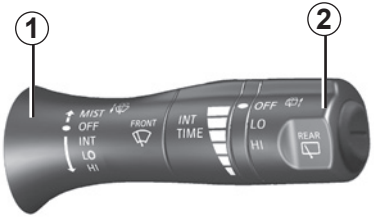

Rear screen wiper

With the ignition on, turn the end of the ring ***2***.

– OFF: Wiping off

– LO: Normal wiping speed

– HI: Fast wiping speed

Before using the rear wiper, check that no object obstructs the travel of the blade.
Do not use the wiper arm to open or close the tailgate.

Rear screen wash/wipe

To use this, push stalk ***1***.

A longer pull activates the windscreen washers and four sweeps of the windscreen wipers followed by one sweep a few seconds later.

Special note

If the windscreen wipers are operational when you select reverse gear, the rear screen is wiped intermittently.

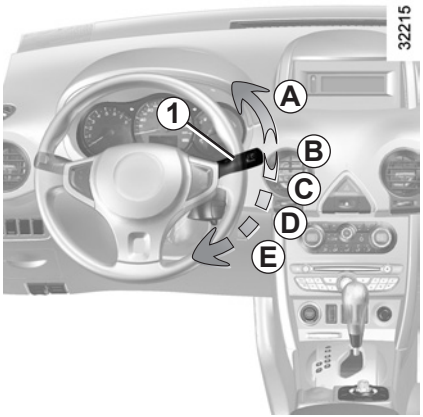

Before any action involving the windscreen (washing the vehicle, de-icing, cleaning the windscreen, etc.) return stalk ***1*** to position ***B*** (park).

Risk of injury and/or damage.

Capacity of the fuel tank: 65 liters (approximately).

Pull lever ***1***, located under the dashboard on the driver's side to release the cover ***A***. Open it then unscrew fuel filler cap ***B***.

For details on filling the fuel tank, refer to the information on "Filling up with fuel".

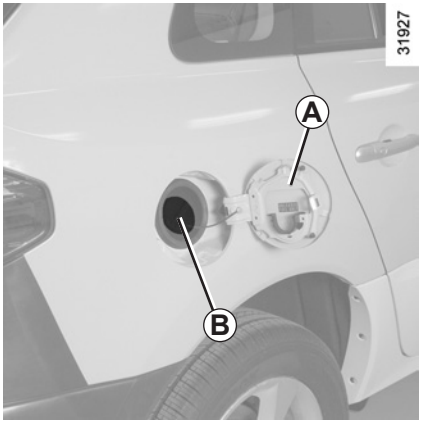

Fuel grade

Use a high-grade fuel that complies with the legislation in force in each country and which **must** conform to the specifications given on the label on cover ***A***. Refer to the information on "Engine specifications" in Section 6.

Do not wash the filler area with a high-pressure washer.

Diesel versions

It is **essential** to use diesel fuel that conforms with the information given on the label inside cover ***A***.

Petrol versions

It is **essential** to use unleaded petrol. The octane rating (RON) must conform with the information given on the label on cover ***A***. Refer to the information on "Engine specifications" in Section 6.

Fuel filler cap: this is of a special type. If you have to replace it, make sure the new cap is of the same type.

Contact your approved Dealer.

Never place the cap near a source of heat or flame.

Vehicles running on ethanol-based fuel

It is **essential** to use unleaded petrol or fuel containing a maximum of 85% ethanol (E85).

In very cold conditions, it may be very difficult or even impossible to start the engine. To avoid this problem, use unleaded petrol or, on equipped vehicles, use the heater integrated in the engine: connect the special end of the extension piece supplied into the socket integrated into the radiator grille and the other end into a **220V** socket for at least 6 hours before starting.

Note: you may notice an increase in fuel consumption with this type of fuel.

Do not mix even small amounts of petrol (unleaded or E85) with diesel. Do not use ethanol-based fuel if your vehicle is not compatible with this fuel.

Filling with fuel

Insert the nozzle **fully** before beginning to fill the tank (risk of splashback).

Keep the nozzle in this position throughout the entire filling operation. When the pump cuts out automatically at the end of the filling procedure, a maximum of two further filling attempts may be made, as there must be sufficient space in the fuel tank to allow for expansion.

Make sure that no water enters the fuel tank during filling. The cap and its surround must remain clean.

Petrol versions

Using leaded petrol will damage the antipollution system and may lead to a loss of warranty.

To ensure that the fuel tank is not filled with leaded petrol, the fuel tank filler neck contains a restrictor fitted with a foolproof system which **only allows the nozzle for unleaded petrol to be used** (at the pump).

Persistent smell of fuel

If you notice a persistent smell of fuel you should:

– stop the vehicle if traffic conditions allow and switch off the ignition;

– switch on the hazard warning lights and ask your passengers to leave the vehicle and to keep away from traffic;

– contact an authorised dealer.

Running out of fuel on diesel versions

After a breakdown caused by completely running out of fuel, the system must be reprimed before the engine is restarted:

– Open the bonnet;
– operate priming bulb ***2*** several times and stop when you can feel the pressure.

The engine can then be restarted; if it still does not run properly, allow it to run at idle. If the engine does not start after several attempts, contact an authorised dealer.

No modifications whatsoever are permitted on any part of the fuel supply system (electronic unit, wiring, fuel circuit, injector, protective covers, etc.) as this may be dangerous (unless undertaken by qualified Network personnel).

The engine may be hot during operations in close proximity. In addition, the engine cooling fan may start at any moment.

Risk of injury.

Section 2: Driving

(Advice on use relating to fuel economy and the environment)

Running in 2.2
Starting the engine 2.3
Stopping the engine. 2.5
Special features of petrol versions 2.6
Special features of diesel versions 2.7
Special features of diesel versions fitted with a particle filter 2.8
Gear lever 2.9
Handbrake. 2.9
Electronic parking brake 2.10
Advice: antipollution and fuel economy 2.14
Environment 2.17
Tyre pressure monitor 2.18
All-wheel drive transmission: 4-wheel drive (4WD) 2.21
Driver correction devices. 2.24
Speed limiter 2.29
Cruise control 2.32
Parking sensor. 2.36
Automatic or continuously variable transmission. 2.39

RUNNING IN

Petrol version

For the first **1,200 miles** (2,000 km), do not exceed 78 mph (130 km/h) in top gear (or 3,000 to 3,500 rpm), and change gears without over-revving the engine. Also avoid rapid acceleration from stationary and harsh braking, as far as possible.

You may only expect top performance from your vehicle after approximately 1,800 miles (3,000 km).

Service intervals: refer to the Maintenance Service Booklet for the vehicle.

Do not tow a trailer for the **first 480 miles (800 km)**. This may damage the engine, axles and other components.

Diesel version

For the first **900 miles** (1,500 km), do not exceed 2,500 rpm. After completing this mileage you may drive faster, although you may only expect top performance after approximately 3,600 miles (6,000 km).

During the running in period, do not accelerate hard while the engine is still cold and do not let the engine over-rev.

Service intervals: refer to the Maintenance Service Booklet for the vehicle.

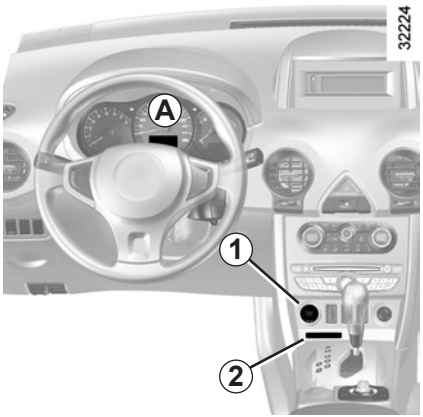

Starting the engine

Remote control RENAULT card

When you get into the vehicle, insert the RENAULT card fully into card reader ***2***.

To start, press button ***1***. If a gear is engaged, depress the clutch pedal to start the vehicle.

Hands-free RENAULT card:

The RENAULT card must be inserted in card reader ***2*** or in detection zone ***3***.

To start, depress the brake or clutch pedal and press button ***1***. If a gear is engaged, the vehicle may only be started by depressing the clutch pedal.

Starting a vehicle with an automatic gearbox

Lever in position **P**.

For all vehicles:

– if one of the starting conditions is not met, the message “Apply brake + START” or “Press clutch + START” or “Gear lever to P” is displayed on the instrument panel ***A***.

– In some cases it will be necessary to turn the steering wheel while pressing start button ***1*** to assist in unlocking the steering column; the message “Turn steering wheel + START” warns of this.

Starting with the boot open (in hands-free mode)

It is only possible to start the engine if the card is in the reader ***2***.

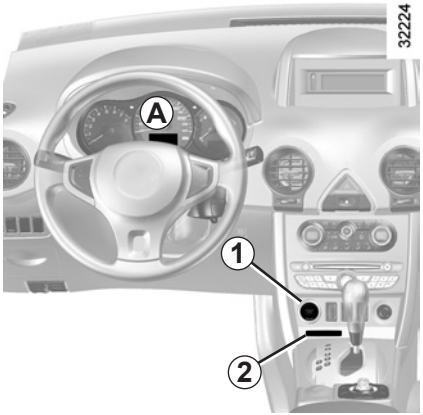

Accessories function

(Switching on the ignition)

To switch on certain functions with the engine off (radio, navigation system, etc.), press button ***1*** without depressing the pedals.

Note: these can be switched off by pressing button ***1*** twice.

Operating faults

In certain cases, the hands-free RENAULT card may not work:

– when the RENAULT card battery is drained, flat battery, etc.

– near to appliances operating on the same frequency as the card (monitor, mobile phone, video game, etc.);

– if the vehicle is located in a zone of high electromagnetic radiation.

The message “Please insert card” appears on the instrument panel ***A***.

Insert the RENAULT card fully into card reader ***2***.

Driver’s responsibility

Never leave your vehicle with the RENAULT card inside and never leave a child (or a pet) unsupervised, even for a short while.

There is a risk that they could start the engine or operate electrical equipment (electric windows etc.) and trap part of their body (neck, arms, hands, etc.).
Risk of serious injury.

Never switch off the ignition before the vehicle has come to a complete stop. Switching off the engine disables the assistance equipment: brakes, steering, etc., and passive safety equipment such as airbags and pretensioners.

STOPPING THE ENGINE

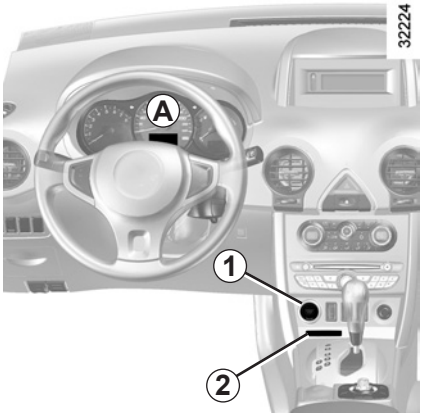

Conditions for stopping the engine

The vehicle must be stationary, with the lever positioned in **N** or **P** for vehicles with an automatic transmission.

Remote control RENAULT card

With the card in reader ***2***, press button ***1***: the engine will stop. Removing the card from the reader locks the steering column.

Special note

If the card is no longer in the reader when you try to switch the engine off, the message “No keycard Press and hold” appears on the instrument panel ***A***: press button ***1*** for over two seconds.

Hands-free RENAULT card:

With the card in the vehicle, press button ***1***: the engine will stop. The steering column is locked when the driver’s door is opened or the vehicle is locked.

If the card is no longer in the passenger compartment when you try to switch the engine off, the message “No keycard Press and hold” appears on the instrument panel: press button ***1*** for over two seconds.

With the engine switched off, any accessories being used (radio, etc.) will continue to function for approximately 10 minutes.

When the driver’s door is opened, the accessories stop working.

When leaving your vehicle, in particular with the RENAULT card, check that the engine has completely stopped.

Never leave your vehicle with the RENAULT card inside and never leave a child (or a pet) unsupervised, even for a short while.

There is a risk that they could start the engine or operate electrical equipment (electric windows etc.) and trap part of their body (neck, arms, hands, etc.).
Risk of serious injury.

Never switch off the ignition before the vehicle has come to a complete stop. Switching off the engine disables the assistance equipment: brakes, steering, etc., and passive safety equipment such as airbags and pretensioners.

The following operating conditions should be avoided:

– driving for long periods when the low fuel level warning light is lit up,

– using leaded petrol,

– using fuel or lubrication additives which are not approved.

Or operating faults such as:

– faulty ignition system, running out of fuel or disconnected spark plugs resulting in the engine misfiring or cutting out when driving;

– loss of power,

may cause the catalytic converter to overheat, reducing its efficiency **which may irreparably damage it and cause heat damage to the vehicle.**

If you notice any of the above operating faults, have the necessary repairs carried out as soon as possible by an approved dealer.

These faults may be avoided by regularly taking your vehicle to an approved Dealer at the intervals specified in the Maintenance Service Booklet.

Starting problems

To avoid damaging the catalytic converter, **do not keep** trying to start the engine (using the start button, or by pushing or towing the vehicle) **without having identified and corrected the cause of the fault**.

If the fault cannot be identified, do not continue to try and start the engine, but contact an approved dealer.

Do not park the vehicle or run the engine in locations where combustible substances or materials such as grass or leaves can come into contact with the hot exhaust system.

SPECIAL FEATURES OF DIESEL VERSIONS

Diesel engine speed

Diesel engines are fitted with injection equipment **which prevents the engine speed being exceeded** irrespective of the gear selected.

Running out of fuel

You may start the engine normally after refilling the fuel tank **even if you have completely run out of fuel**, provided that the battery is fully charged.

However, if the engine fails to start after a few seconds and several attempts, contact an approved Dealer.

Precautions to be taken in winter

To avoid faults in icy weather:

– ensure that the battery is always fully charged;

– always keep the diesel tank relatively full to avoid water vapour condensing in it and accumulating at the bottom of the tank.

Do not park the vehicle or run the engine in locations where combustible substances or materials such as grass or leaves can come into contact with the hot exhaust system.

SPECIAL FEATURES OF DIESEL VERSIONS FITTED WITH A PARTICLE FILTER

Depending on the vehicle, the warning light lights up on the instrument panel to show that there is a risk of the particle filter becoming clogged.

To clean the particle filter, for 60 miles (100 km) after the warning light comes on drive at an average speed of at least 42 mph (70 kph), where traffic conditions and the speed limit will allow, until the warning light goes out.

You may need to restart the operation if the vehicle has to stop before the warning light goes out.

As an example, in this case, the cleaning operation lasts for up to 20 minutes.

Diesel engine speed

Diesel engines are fitted with injection equipment **which prevents the engine speed being exceeded** irrespective of the gear selected.

If the message “Check exhaust emission” is displayed on the instrument panel accompanied by the and warning lights. Consult an authorised dealer straight away.

When driving, depending on the fuel grade used, it is possible that white smoke may be emitted.

This is due to the exhaust particle filter being cleaned automatically, and does not affect the way the vehicle runs.

Precautions to be taken in winter

To avoid faults in icy weather:

– ensure that the battery is always fully charged,

– always keep the diesel tank relatively full to prevent water vapour condensing in it and accumulating at the bottom of the tank.

Do not park the vehicle or run the engine in locations where combustible substances or materials such as grass or leaves can come into contact with the hot exhaust system.

Selecting reverse gear

Vehicle with manual gearbox: follow the grid drawn on knob ***1***, and depending on the vehicle, lift ring ***2*** against the gear lever knob to select reverse.

Vehicle with automatic gearbox: refer to the information on the “Automatic gearbox” in Section 2.

The reversing lights will come on as soon as reverse gear is selected with the ignition on.

An impact to the underside of the vehicle (e.g.: striking a post, raised kerb or other street furniture) may result in damage to the vehicle (e.g.: deformation of an axle).

To avoid any risk of accident, have your vehicle checked by an approved Dealer.

Handbrake

To release
Pull lever ***4*** upwards, press button ***3*** and then lower the lever to the floor.

To apply
Pull upwards, check that the vehicle is properly immobilised.

When driving, ensure that the handbrake has been completely released (red warning light off), risk of overheating.

When stationary and depending on the gradient and/or vehicle load, it may be necessary to pull up the handbrake at least two extra notches and engage a gear (1st or reverse gear) for vehicles with a manual gearbox or position **P** for vehicles with an automatic transmission.

Automatic operation

The electronic parking brake ensures automatic vehicle immobilisation when the **engine is stopped by pressing the engine start/stop button *1***.

For certain country-specific model versions, the automatic brake application function is not activated. Refer to the information on “Manual operation”.

To confirm that the electronic parking brake is applied, the message “Parking brake on” and indicator light (Ⓟ) on the instrument panel and indicator light ***3*** on switch ***2*** light up.

Indicator lights ***3*** and (Ⓟ) go out a few seconds after the engine has been switched off.

Note: if the driver’s door is opened, indicator lights ***3*** and (Ⓟ) will light up again. They will go out when the door is closed.

Warning: if one of the doors is open but the parking brake has not been applied, a bleep sounds and the message “Apply parking brake” is displayed on the instrument panel.

In this case, the vehicle must be immobilised by pulling then releasing the switch ***2***.
The parking brake is released as soon as the vehicle is driven.

> ⚠ Before leaving the vehicle, check that the electronic parking brake is fully applied.
>
> The (Ⓟ) indicator light lights up on the instrument panel accompanied by the message “Parking brake on”.

Automatic releasing of the electronic parking brake
The brake will be released as soon as the vehicle starts and accelerates.

Manual operation

Applying the parking brake

Pull then release switch ***2***. The (Ⓟ) indicator light lights up on the instrument panel accompanied by the message “Parking brake on” and indicator light ***3***.

Releasing the parking brake
With the ignition on and while depressing the brake pedal, press switch ***2*** until indicator lights ***3*** on the switch ***2*** and (Ⓟ) on the instrument panel go out.

Dynamic braking
In an emergency, **under exceptional circumstances**, switch ***2*** can be pulled to stop the vehicle. Beyond a threshold, the (Ⓟ) and 🔧 indicator lights come on. Consult an approved Dealer.

Special cases

When the vehicle is on an incline or when towing a trailer, pull handle ***2*** for approximately 3 seconds to fully apply the parking brake.

Note: if the vehicle is not immobilised despite fully applying the parking brake, due to the steepness of the incline, the message “Stop vehicle” is displayed on the instrument panel. The vehicle must be parked elsewhere.

Parking without applying the parking brake
(if there is a risk of ice etc.):

– Stop the engine by pressing the engine on/off button ***1***;

– engage a gear (on vehicles with manual gearboxes) or shift the gear lever into position P (on vehicles with automatic transmissions);

– simultaneously depress the brake pedal and press switch ***2*** until indicator light ***3*** goes out.

When the driver’s door is opened, a warning message will be displayed and a beep sounds for around 5 seconds to indicate that the parking brake has not been applied.

Note: it is still possible to release the parking brake as long as no door is opened or closed and the vehicle is not locked.

Brief stop

To manually activate the electronic parking brake, (when stopping at a red light, or stopping when the engine is running, etc.): pull and release switch ***2***. The brake is released as soon as the vehicle is started up again.

Versions with an automatic gearbox

For safety reasons, automatic release is deactivated when the driver's door is open or not shut properly and the engine is running (in order to prevent the vehicle from moving without the driver). The "Release manually parking brake" message appears on the instrument panel when the driver depresses the accelerator.

Never leave your vehicle without moving the selector lever to position **P** or **N**. This is because when the vehicle is stationary with the engine running and a gear engaged, the vehicle may begin to move if you accelerate.

There is a risk of accidents.

Operating faults

When indicator lights and in certain cases light up on the instrument panel accompanied by the message "Check parking brake", contact an approved dealer urgently.

If no lights or sounds are apparent, this indicates a fault in the instrument panel. This indicates that it is essential to stop immediately (as soon as traffic conditions allow). Ensure that the vehicle is correctly immobilised and contact an approved Dealer.

Indicator light flashes, accompanied by indicator lights STOP and and the message "Parking brake fault": this indicates that it is essential to stop immediately (as soon as traffic conditions allow). Contact an approved Dealer.

It is therefore essential to immobilise the vehicle by engaging first gear (manual gearbox) or position **P** (automatic transmission). If the slope requires it, chock the vehicle.

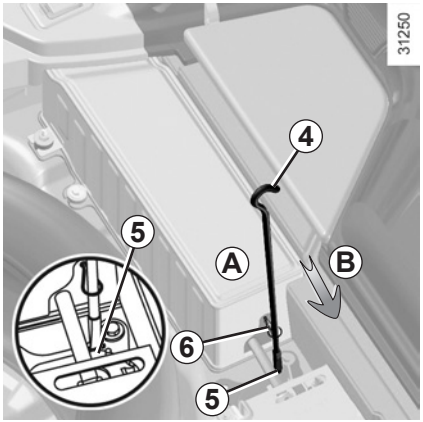

Emergency unlocking

Before releasing the parking brake manually, it is essential to immobilise the vehicle by engaging first gear (manual gearbox) or shifting to position **P** (automatic transmission). If the slope requires it, chock the vehicle. If it is not possible to immobilise the vehicle, do not operate the lever and contact an approved Dealer.
A reminder can be found on the label in area ***A***.

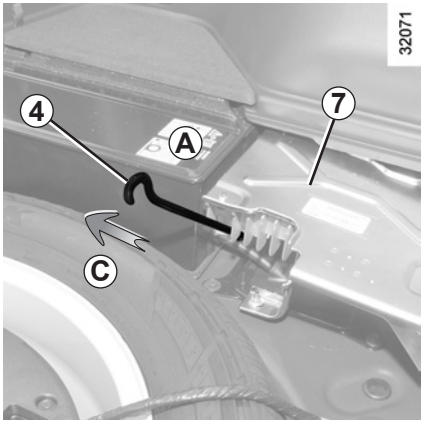

The parking brake can be released. To release manually:
– remove the luggage compartment carpet and the emergency spare wheel cover;
– insert wheelbrace ***4*** into loop ***6*** and, for vehicles without amplifier ***7***, press on housing ***5***;
– pull (movement ***B***) or push (movement ***C***) the top of wheelbrace ***4*** until the parking brake is heard to release.

This control cannot be used to reapply the parking brake.

Indicator light comes on accompanied by the message “Check parking brake”. With the ignition on, simultaneously depress the brake pedal and press switch ***2***. If they do not go off, do not drive the vehicle and contact an approved dealer.

Never leave a child (or animal) alone in the vehicle with the RENAULT card inside. They could accidentally release the parking brake which would enable the vehicle to roll away.

Your vehicle complies with criteria for recycling and recovering vehicles at the end of their service life which will come into force in 2015.

Some parts of your vehicle have therefore been designed to facilitate future recycling.

These parts are easy to remove so that they can be recovered and reprocessed by recycling companies.

By virtue of its design, moderate fuel consumption and initial settings, your vehicle also conforms to current antipollution regulations. The manufacturer is actively striving to reduce pollutant exhaust gas emissions and to save energy. But the fuel consumption of your vehicle and the level of pollutant exhaust gas emissions are also your responsibility. Ensure that it is maintained and used correctly.

Aiding fuel economy

Depending on the vehicle, in order to optimise consumption, an indicator light on the instrument panel will inform you of the best moment to upshift or downshift gears:

shift up a gear;

shift down a gear.

Maintenance

It is important to remember that failure to respect antipollution regulations could lead to legal action being taken against the vehicle owner. In addition, replacing engine, fuel supply system and exhaust components with parts other than those originally recommended by the manufacturer may alter your vehicle so that it no longer complies with antipollution regulations.

Have your vehicle adjusted and checked by an approved Dealer, in accordance with the instructions given in your maintenance schedule: they will have all the equipment necessary for ensuring that your vehicle is maintained to its original standard.

Engine adjustments

– **ignition:** this does not require adjustment.

– **spark plugs:** for optimum fuel economy, efficiency and performance the specifications laid down by our Design Department must be strictly applied.

  If the spark plugs have to be changed, use the make, type and gap specified for your vehicle's engine. Contact an approved dealer for this.

– **idle:** this does not require adjustment.

– **air filter, diesel filter:** a clogged element reduces performance. It must be replaced.

Exhaust gas monitoring system

The exhaust gas monitoring system will detect any operating faults in the vehicle's antipollution system.
If this system malfunctions, toxic substances may be released into the atmosphere or damage may occur.

This warning light on the instrument panel will indicate if there are any faults in the system:
This lights up when the ignition is switched on and goes out when the engine is started.

– If it lights up continuously, consult an approved Dealer as soon as possible;
– if it flashes, reduce the engine speed until the light stops flashing. Contact your approved dealer as soon as possible.

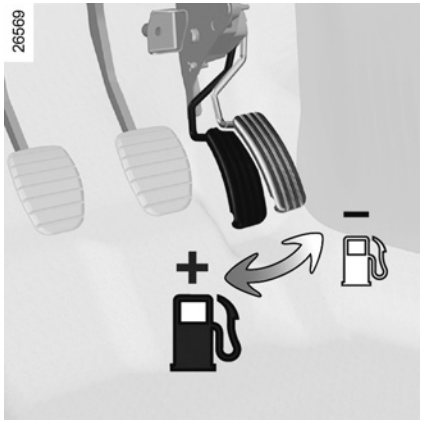

Driving

– Drive carefully for the first few miles until the engine reaches its normal operating temperature, rather than let it warm up while the vehicle is stationary.
– Speed is expensive.
– Do not overrev the engine in the intermediate gears.
  Always use the highest gear possible without labouring the engine.
  On versions with an automatic gearbox, it is preferable to keep the gear lever in position **D**.
– Avoid sudden acceleration.
– Sporty driving uses a lot of fuel: drive with a light right foot.
– Brake as little as possible. If you anticipate an obstacle or bend in advance, you may then simply release the accelerator pedal.
– Do not try to maintain the same speed up a hill, accelerate no more than you would on the level. Keep your foot in the same position on the accelerator pedal.
– Double declutching and accelerating before switching off are unnecessary in modern vehicles.
– Bad weather, flooded roads:

Do not drive through floods if the water is above the lower edge of the wheel rims.

Obstructions to the driver
On the driver's side, only use mats suitable for the vehicle, attached with the pre-fitted components, and check the fitting regularly. Do not lay one mat on top of another.
There is a risk of wedging the pedals

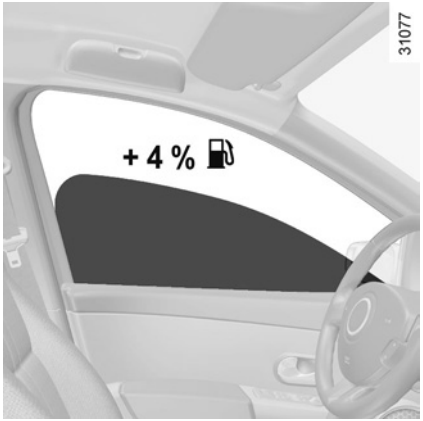

Advice on use

– Electricity is fuel; switch off all the electrical components which are not really needed. **However** (safety first), keep your lights on when the visibility is bad (“see and be seen”).

– Use the air vents. Driving with the windows open at 60 mph (100 km/h) will increase fuel consumption by 4%.

– **In vehicles fitted with air conditioning,** it is normal to observe an increase in fuel consumption (especially in urban conditions) when it is used. For vehicles fitted with manual air conditioning, switch off the system when it is not required.

Advice for reducing consumption and therefore helping to preserve the environment:

If the vehicle has been parked in the sun, open the doors for a few moments to let the hot air escape before starting the engine.

– Never fill the fuel tank right to the brim to avoid overflow.

– Do not leave an empty roof rack fitted to the vehicle.

– It is better to fit a trailer for bulky objects.

– When towing a caravan, fit a wind deflector and adjust it carefully.

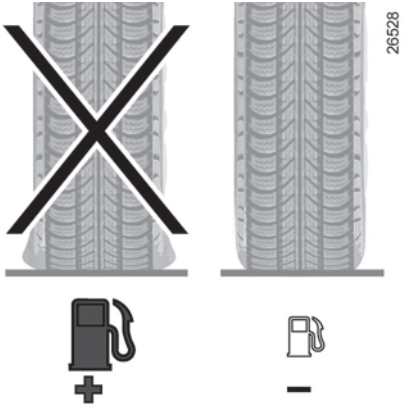

– Avoid using the car for door-to-door calls (short journeys with long waits in between) because the engine never reaches its normal operating temperature.

Tyres

– An underinflated tyre increases fuel consumption.

– The use of non-recommended tyres can increase fuel consumption.

ENVIRONMENT

Your vehicle has been designed with respect for the **environment** in mind for its entire service life: during production, use and at the end of its life.
This commitment is illustrated by the Renault eco² group signature.

31016

Manufacture

Your vehicle has been manufactured at an industrial site which uses a progress policy to reduce environmental impacts on rivers and natural areas (reduction of water and energy consumption, visual and noise pollution, atmospheric emissions and waste water, sorting and reusing waste).

Emissions

Your vehicle has been designed to emit fewer greenhouse gases (CO2) while in use, and therefore to consume less fuel (eg. 140 g/km, equivalent to 5.3 l/100 km for a diesel vehicle).

Our vehicles are also equipped with a particle filter system including a catalytic converter, an oxygen sensor and an active carbon filter (the latter prevents vapour from the fuel tank being released into the open air).

For certain diesel vehicles, this system also has a particle filter to reduce the volume of soot particles emitted.

Please make your own contribution towards protecting the environment too

– Worn parts replaced in the course of routine vehicle maintenance (vehicle battery, oil filter, air filter, batteries, etc.) and oil containers (empty or filled with used oil) must be disposed of through specialist organisations.
– At the end of the vehicle's service life, it should be sent to approved centres to ensure that it is recycled.
– In all cases, comply with local legislation.

Recycling

Your vehicle is 85% recyclable and 95% recoverable.

To achieve these objectives, many of the vehicle components have been designed to enable them to be recycled. The materials and structures have been carefully designed to allow these components to be easily removed and reprocessed by specialist companies.

In order to preserve raw material resources, this vehicle incorporates numerous parts made from recycled plastics or renewable materials (vegetable or animal-derived materials such as cotton or wool).

TYRE PRESSURE MONITOR (1/3)

This system monitors the tyre pressure.

The pressures must be adjusted when the tyres are cold.

If the tyre pressures cannot be checked when the tyres are **cold**, assume an increase of **0.2** to **0.3** bar (or **3 PSI**).

Never deflate a hot tyre.

This function is an additional driving aid.

However, the function does not take the place of the driver. It cannot, therefore, under any circumstances replace the vigilance or the responsibility of the driver.

Check the tyre pressures, including the emergency spare wheel, once a month.

Operating principle

Each wheel (except for the emergency spare wheel) has a sensor in the inflation valve which periodically measures the tyre pressure.

The system informs the driver via the trip computer and warning system ***1*** that the tyres are sufficiently inflated and warns if they are underinflated or leaking.

The operation of the tyre pressure monitor may be affected by using devices near the vehicle which operate on the same frequency.

In this case, the system indicates a drop in tyre pressure under normal conditions.

The operation of the tyre pressure monitor may be affected if snow chains are fitted to the tyres or if the tyres are stuck in snow.

Changing a wheel

Depending on use, the system may take several minutes for the new wheel positions and pressures to be recognised; check the tyre pressures after all operations.

Changing a wheel

The tyre pressure monitor takes approximately 8 minutes to identify the tyres which have been replaced. The system will not operate during this time.

Fitting tyres

(replacing tyres or fitting winter tyres)

Since replacing tyres requires special precautions, we advise you to contact your approved dealer.

While the tyre pressure monitor is identifying the tyres which have been replaced, the information sent by the system may be inaccurate and this could have serious consequences.

Emergency spare wheel

The emergency spare wheel has no sensor, and cannot be recognised by the system.

When it is fitted in the place of another wheel, the system then detects an operating fault.

Replacing wheels/tyres

This system requires specific equipment (wheels, hubcaps, etc.).

Contact an approved dealer to fit new tyres and to find out about available accessories compatible with the system and available from your approved dealer: the use of any other accessory could affect the correct operation of the system or damage a sensor.

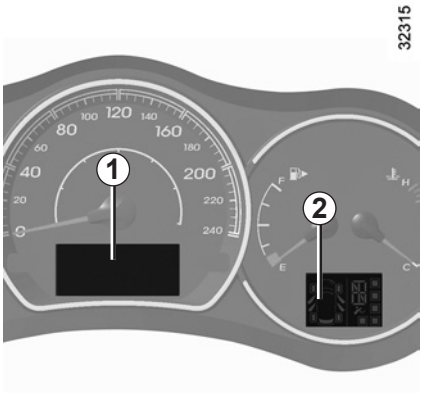

Display

If warning lights ***1*** and ***2*** light up on the instrument panel, this indicates there is a fault relating to the tyre pressure (flat tyre, puncture, system malfunction, etc.).

An explanation of the indicator lights, signals and messages is given on the following page.

TYRE PRESSURE MONITOR (3/3)

Examples of messages which may appear on the instrument panel displays

Message	Display	Interpretation of messages
“Adjust tyre pressure”		The tyre pressure is lower than normal.
“Underinflation critical”		Indicator light STOP comes on, accompanied by a bleep. Stop the vehicle as soon as possible and contact an approved dealer. The tyre pressure indicated is much lower than normal and is becoming dangerously low.
“Puncture”		Indicator light STOP comes on, accompanied by a bleep. Stop the vehicle as soon as possible and contact an approved dealer. The tyre indicated is deflated or punctured.
“Check tyre pressure sensors”		One of the tyres is no longer being displayed; there is a fault with the sensor on this tyre.
“Check tyre pressure sensors”		None of the tyre pressure sensors can be detected, or there is a fault with the system.
“Tyre pressure sensors absent”		There is no signal being received from the tyre indicated and the tyre can no longer be monitored by the pressure sensor (emergency spare wheel fitted, etc.).

Driving mode switch *1*

Depending on the road conditions, pressing button ***1*** enables the following modes to be selected:

– AUTO;

– 2WD;

– 4WD Lock.

“AUTO” mode

This is the mode defined each time the engine is started.

Operating principle

The “AUTO” mode automatically distributes the torque between the front and rear axles according to the road conditions and the vehicle speed. This position optimises roadholding. Use this mode where the roads are slippery or in good condition.

“2WD” mode

Press on the upper section of button ***1***.

The 2WD indicator light will light up on the instrument panel.

Operating principle

The “2WD” mode uses the front wheels only. Use this mode where the roads are in good condition.

To deactivate this mode, press the upper section of button ***1*** again. The indicator light on the instrument panel will go out.

“4WD Lock” mode

Press the bottom section of button ***1***. The button returns immediately to its original position. The 4WD LOCK indicator light will light up on the instrument panel.

To deactivate this mode, press the lower section of button ***1*** again. The indicator light on the instrument panel will go out.

Operating principle

The “4WD Lock” mode uses the front and rear axles, each with 50% of the power. Use this mode on uneven and unsurfaced roads.

Note: if the vehicle speed exceeds 24 mph (40 km/h) in “4WD Lock” mode, the system automatically switches back to “AUTO” mode.

Special note on all-wheel drive system

– The vehicle may make more noise when the “AUTO” or “4WD Lock” modes are activated. This is normal;

– if the system detects a difference in the size of the front and rear wheels (as is the case, for example, when the wrong size tyres are fitted, or if the tyres are under-inflated or significantly worn on one axle etc.) the message “4WD not available” is displayed on the instrument panel and the indicator light 2WD flashes. Select “2WD” mode and drive at a moderate speed;

– always use four tyres with the same level of wear;

– as soon as the vehicle speed exceeds 24 mph (40 km/h) in “4WD Lock” mode, the system automatically switches back to “AUTO” mode. The indicator light goes out;

– when the front and rear wheels are turning at different speeds (for example, when driving on uneven road surfaces, sand or mud, or when being towed, tyres with different levels of wear), the oil temperature may rise, given the mechanical stresses. In this case, the system automatically switches back to “2WD” mode to prevent overheating. **The message “4WD not available” is displayed on the instrument panel and the 2WD or 4WD LOCK indicator light comes on.** Park the vehicle in a safe place and wait until the message “4WD not available” disappears.

If the warning appears again, contact an approved Dealer.

Operating faults

When the system detects an operating fault the message “Check 4WD” and warning light appear on the instrument panel.

Contact your approved Dealer as soon as possible.

All-wheel drive system

– Depending on the driving conditions, the system may switch automatically from “2WD” to “4WD”. In this case, the “4WD” indicator light does not come on.

– Whichever mode is selected, do not start the engine if the rear wheels are on the ground and the front wheels are in the air (e.g. vehicle jacked up) or if they are resting on rollers.

– Do not press the mode selector switch while cornering, reversing or if the wheels are slipping. Only select the “2WD”, “AUTO” or “4WD Lock” mode when the vehicle is being driven in a straight line.

– When the engine warms up, the idle speed may be higher. Be careful when driving or stopping on slippery roads with the “AUTO” mode selected.

– Only use tyres which meet the required specifications.

– Snow chains must only be fitted to the front wheels.

– This function is an additional aid in the event of critical driving conditions, enabling the vehicle behaviour to be adapted to suit the driving conditions.

However, the function does not take the place of the driver. **It does not increase the vehicle’s limits and should not encourage you to drive more quickly.** Therefore, it can under no circumstances replace the vigilance or responsibility of the driver when manoeuvring the vehicle (the driver must always be ready for sudden incidents which may occur when driving).

– It is recommended not to use “4WD Lock” mode permanently when driving on roads in good condition.
– Always ensure tyres with identical specifications are fitted to all four wheels (brand, size, structure, wear etc.). Fitting tyres of different sizes to the front and rear wheels and/or left and right wheels may have serious consequences for the tyres, gearbox, transfer gearbox and the rear differential pinions.

Depending on the vehicle, this is composed of:
- **the anti-lock braking system ABS;**
- **the electronic stability control ESC with traction control ASR;**
- **the emergency brake assist;**
- **the hill descent control;**
- **the hill start assistance.**

These functions are an additional aid in the event of critical driving conditions, enabling the vehicle behaviour to be adapted to suit the driving conditions.

However, the functions do not take the place of the driver. **They do not increase the vehicle's limits and should not encourage you to drive more quickly.** Therefore, they can under no circumstances replace the vigilance or responsibility of the driver when manoeuvring the vehicle (the driver must always be ready for sudden incidents which may occur when driving).

ABS (anti-lock braking system)

Under heavy braking, the ABS prevents the wheels from locking, allowing the stopping distance to be managed and keeping control of the vehicle.

Under these circumstances, the vehicle can be steered to avoid an obstacle whilst braking. In addition, this system can increase stopping distances, particularly on roads with low surface grip (wet ground etc.).

You will feel a pulsation through the brake pedal each time the system is activated. The ABS does not in any way improve the vehicle's physical performance relating to the road surface and roadholding. It is still **essential** to follow the rules of good driving practice (such as driving at a safe distance from the vehicle in front etc.).

In an emergency, apply **firm and continuous pressure** to the brake pedal. There is no need to pump it repeatedly. The ABS will modulate the force applied in the braking system.

Operating faults:
- If the message "Check ABS" is displayed and the ABS and warning lights on the instrument panel come on when driving, **braking safety is still guaranteed, but without ABS;**
- if the message "Brake system fault" is displayed and the ABS, and STOP warning lights on the instrument panel come on when driving, **there is a fault in the braking system.**

Consult an approved Dealer.

Your braking systems are partially operational. However, it is **dangerous to brake suddenly** and it is essential to stop immediately, as soon as traffic conditions allow. Contact an approved dealer.

Electronic stability control ESC with understeer control and traction control ASR

Electronic stability control ESC

This system helps you to keep control of the vehicle in critical driving conditions (avoiding an obstacle, loss of grip on a bend, etc.).

Operating principle
A sensor in the steering wheel detects the direction selected by the driver.

Other sensors throughout the vehicle measure the actual direction.

The system compares the direction selected by the driver and the actual direction of the vehicle and corrects this as necessary by applying the brakes selectively and/or acting on the engine power.

Traction control ASR

This system helps to limit wheelspin of the drive wheels and to control the vehicle when pulling away accelerating or decelerating.

Operating principle
Using the wheel sensors, the system measures and compares the speed of the drive wheels at all times and slows down their over-rotation. If a wheel is starting to slip, the system brakes automatically until the drive supplied becomes compatible with the level of grip under the wheel again.

The system also adjusts the engine speed to the grip available under the wheels, independently of the pressure exerted on the accelerator pedal.

lit indicates that the ESC system (with the ASR) is active.

Operating faults

When the system detects an operating fault the message “Check ESC” and warning light and appear on the instrument panel. In this case, the ESC and ASR are deactivated.

Consult an approved dealer.

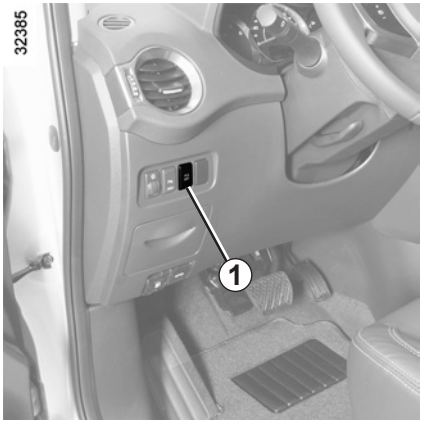

Disabling the ESC function (including traction control (ASR) system)

In some situations (driving on very wet ground: snow, mud, etc. or driving with snow chains fitted), the system may reduce the engine output to limit wheel-spin. If this is not required, it is possible to deactivate the function by pressing switch ***1***.

The message “ESC off” is displayed on the instrument panel to inform you.

If you deactivate this function, the traction control (ASR) system will also be deactivated.

As the ESC and ASR provide enhanced safety, it is not advisable to drive with the function switched off. Correct this as soon as possible by pressing switch ***1*** again.

Note: the system is automatically reactivated each time the engine is switched off.

Emergency brake assist

This system supplements the ABS and helps reduce vehicle stopping distances.

Operating principle

Depending on the speed at which the brake pedal is depressed, the system will detect emergency braking. In this case, the braking assistance immediately develops maximum power and may trigger ABS regulation.

ABS braking is maintained as long as the brake pedal is applied.

Hazard warning lights switching on

Depending on the vehicle, these may light up in the event of sudden deceleration.

Hill descent control

This function enables the vehicle speed to be limited to approximately 4 mph (7 km/h), without depressing the brake pedal (when driving down a steep hill).

Activating/deactivating the system

– **Activating:** press button ***1***. The message “HDC on” appears on the instrument panel.

– **Deactivating:** press button ***1*** again: the message “HDC off” appears on the instrument panel.

Starting the system

With the vehicle travelling downhill at less than 15 mph (25 km/h) in first or reverse gear (position **D** or **R** for vehicles with an automatic transmission), press switch ***2*** to switch to “4WD Lock” mode. Once a sufficient gradient is detected, the indicator light appears on the instrument panel, accompanied by the “HDC operational” message.

Note: if the vehicle speed exceeds 24 mph (40 km/h), the transmission switches automatically to “AUTO” mode (the indicator light goes out).

The system can be reactivated by pressing “4WD Lock” when the vehicle speed drops below 24 mph (40 km/h).

This system does not operate when the gear lever is in neutral (position **N** or **P** for vehicles with an automatic transmission), or if the vehicle is travelling on flat ground.

The hill descent control system is deactivated as soon as you depress the brake pedal or the accelerator pedal, and reactivated as soon as you release it.

With the engine cold, the automatic hill descent control function can be deactivated temporarily (the warning light goes out). When the engine temperature rises, the warning light comes on again and the function is available.

The automatic hill descent control system may be deactivated temporarily if there is a risk of the braking system overheating.

If necessary, use the brake pedal to stop the vehicle.

The driver must remain particularly vigilant when driving on slippery or low-grip surfaces and/or on hills.

Risk of serious injury.

Hill start assistance

This function assists the driver when starting on hills. It prevents the vehicle from rolling backwards, depending on the slope, by automatically applying the brakes when the driver lifts his/her foot off the brake pedal to depress the accelerator pedal.

System operation

It only operates when the gear lever is in a position other than neutral (other than **N** or **P** for automatic transmissions) and the vehicle is completely stationary (brake pedal depressed)

The system holds the vehicle for approximately **2 seconds**. The brakes are then gradually released (the vehicle will move according to the slope).

The hill start assistance system cannot completely prevent the vehicle from rolling backwards in all situations (extremely steep gradients, etc.).

In all cases, the driver may depress the brake pedal to prevent the vehicle from rolling backwards.

The hill start assistance function should not be used for prolonged stops: use the brake pedal.

This function is not designed to immobilise the vehicle permanently.

If necessary, use the brake pedal to stop the vehicle.

The driver must remain particularly vigilant when driving on slippery or low-grip surfaces and/or on hills.

Risk of serious injury.

The speed limiter function helps you stay within the driving speed limit that you choose, known as the **limit speed**.

Controls

1 Main “On/Off” switch.

2 Limit speed activation, storage and increase switch (+).

3 Limit speed activation, storage and recall (R).

4 Switch the function to standby, with limit speed stored (O).

5 Limit speed activation, storage and decrease (-).

Switching on

Press switch ***1*** on the side showing .
Indicator light ***6*** comes on, lit orange, and the message “Speed limiter” appears on the instrument panel, accompanied by dashes to indicate that the speed limiter function is activated and waiting to store a limit speed.
To store the current speed, press switch ***2*** (+) or ***5*** (-): the minimum speed which can be stored is 20 mph (30 km/h).

Driving

When a limited speed has been stored and this speed is not reached, driving is similar to driving a vehicle without the speed limiter function.

Once you have reached the stored speed, no effort on the accelerator pedal will allow you to exceed the programmed speed except in an emergency (refer to information on “Exceeding the limit speed”).

Varying the limit speed

To vary the limit speed, press switch ***2*** (+) repeatedly to increase the speed or switch ***5*** (-) to decrease.

The speed limiter function is in no way linked to the braking system.

Exceeding the limit speed

It is possible to exceed the limit speed at any moment. To do this: press the accelerator pedal **firmly and fully** (beyond the kickdown point).

Whilst the speed is being exceeded, the cruising speed displayed on the instrument panel flashes.

Then, release the accelerator pedal: the speed limiter function will return as soon as you reach a speed lower than the stored speed.

Limited speed cannot be maintained

When driving down a steep gradient, the system is unable to maintain the limit speed: the stored speed will flash on the instrument panel information display to inform you of this situation.

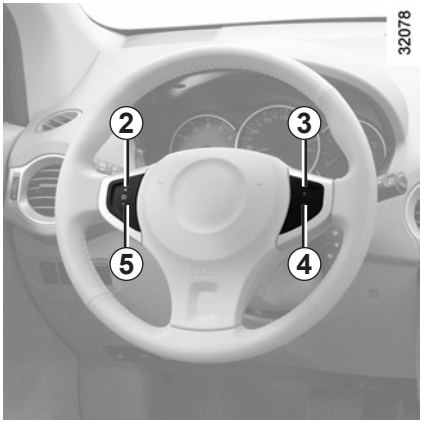

Putting the function on standby

The speed limiter function is suspended when you press switch ***4*** (O). In this case, the limit speed remains stored and the message “Memorised” appears on the instrument panel,

Recalling the limit speed

If a speed has been stored, it can be recalled by pressing switch ***3*** (R).

When the speed limiter is suspended, pressing switches ***2*** (+) or ***5*** (-) reactivates the function without taking into account the stored speed: it is the speed at which the vehicle is moving that is taken into account.

Switching off the function

The speed limiter function is deactivated if you press switch ***1***: in this case a speed is no longer stored. The instrument panel orange indicator light goes out, confirming that the function is deactivated.

The cruise control function helps you to maintain your driving speed at a speed that you choose, called the **cruising speed.**

This cruising speed may be set at any speed above 20 mph (30 km/h).

The cruise control function is in no way linked to the braking system.

The system is designed in such a way that it is possible to detect a difference between the programmed speed and the speed shown on the instrument panel.

This function is an additional driving aid.

However, the function does not take the place of the driver. Therefore, it can under no circumstances replace the driver's responsibility to respect speed limits and to be vigilant (the driver must always be ready to brake). Cruise control must not be used in heavy traffic, on winding or slippery roads (black ice, aquaplaning, gravel) and during bad weather (fog, rain, side winds etc.).

There is a risk of accidents.

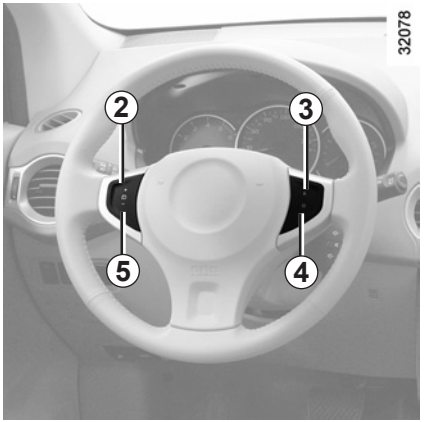

Controls

1 Main "On/Off" switch.

2 Cruising speed activation, storage and increase switch (+).

3 Cruising speed activation, storage and recall (R).

4 Switch the function to standby (with stored cruising speed) (O).

5 Cruising speed activation, storage and decrease switch (–).

Switching on

Press switch ***1*** on the side showing .

Indicator light ***7*** comes on, lit green, and the message “Cruise control” appears on the instrument panel, accompanied by dashes to indicate that the cruise control function is activated and waiting to store a cruising speed.

Activating cruise control

At a steady speed (above approximately 20 mph (30 km/h)) press switch ***2*** (+) or ***5*** (-): the function is activated and the speed is stored.

Cruise control activation is confirmed when indicator light ***6*** is lit up in green in addition to indicator light ***7***.

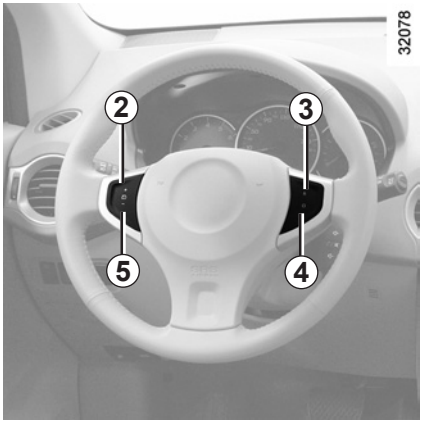

Driving

Once a cruising speed is stored and the cruise control function is active, you may lift your foot off the accelerator pedal.

Important: you are nevertheless advised to keep your feet close to the pedals in order to react if necessary.

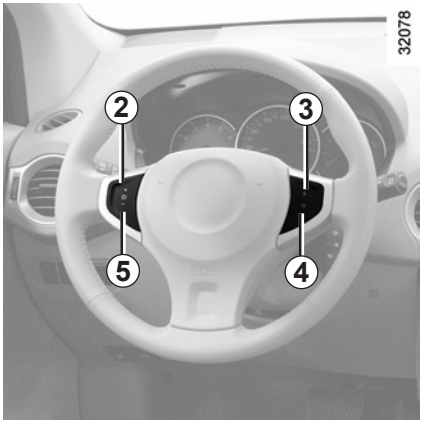

Adjusting the cruising speed

The cruising speed may be changed by pressing the following repeatedly:

– switch ***2*** (+) to increase the speed;

– switch ***5*** (-) to decrease the speed.

The cruise control function is in no way linked to the braking system.

Exceeding the cruising speed

The cruising speed may be exceeded at any time by depressing the accelerator pedal. While it is being exceeded, the cruising speed flashes on the instrument panel.

Then, release the accelerator: after a few seconds, the vehicle will automatically return to its set cruising speed.

Cruising speed cannot be maintained

When driving down a steep gradient, the system is unable to maintain the cruising speed: the stored speed will flash on the instrument panel information display to inform you of this situation.

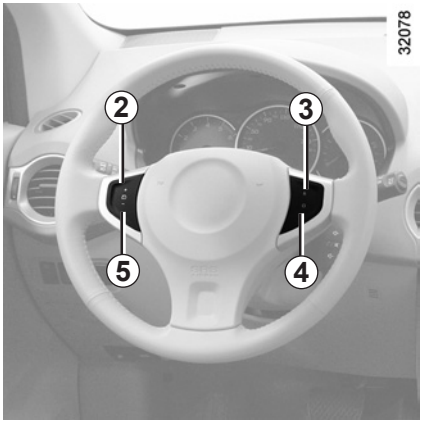

Putting the function on standby

The function is suspended when you:

– press switch ***4*** (O);

– depress the brake pedal;

– depress the clutch pedal or shift the gear lever into neutral on vehicles with automatic transmissions or continuously variable transmissions.

In all three cases, the message “Memorised” appears on the instrument panel, followed by the stored speed. Standby is confirmed when indicator light goes out.

Returning to the cruising speed

If a speed is stored, it can be recalled, once you are sure that the road conditions are suitable (traffic, road surface, weather conditions, etc.). With a vehicle speed above 20 mph (30 km/h), press switch ***3*** (R).

Note: if the speed previously stored is much higher than the current speed, the vehicle will accelerate more rapidly to reach this threshold.

When the cruise control is suspended, pressing switches ***2*** (+) or ***5*** (-) reactivates the function without taking into account the stored speed: it is the speed at which the vehicle is moving that is taken into account.

Switching off the function

The cruise control function is deactivated if you press switch ***1***: in this case a speed is no longer stored. The instrument panel green indicator lights and go out, confirming that the function is deactivated.

Putting the cruise control on standby or switching it off does not cause a rapid reduction in speed: you must brake by depressing the brake pedal.

Operating principle

On equipped vehicles, ultrasonic sensors fitted in the vehicle's rear and/or front bumper measure the distance between the vehicle and an obstacle when reversing.

This measurement is indicated by beeps which become more frequent the closer you come to the obstacle, until they become a continuous beep when the vehicle is approximately 25 centimetres from the obstacle.

Special features

Ensure that the ultrasonic sensors are not obscured (by dirt, mud, snow, etc.).

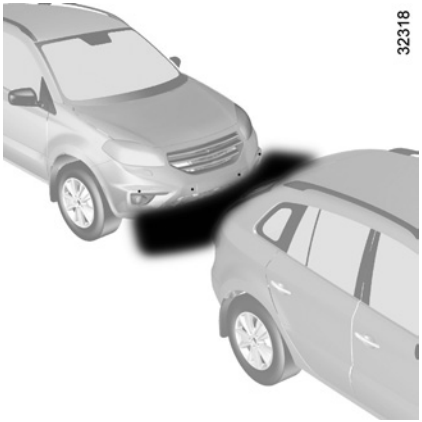

This function is an additional aid that indicates the distance between the vehicle and an obstacle whilst reversing, using sound signals.

Under no circumstances should it replace the driver's care or responsibility whilst reversing.

The driver should always look out for sudden hazards during driving: always ensure that there are no moving obstacles (such as a child, animal, pram or bicycle, etc.) or small, narrow objects such as stones or posts in your path when manoeuvring.

Front parking distance control

(Depending on the vehicle)

Operation

When moving forwards at less than 7 mph (12 km/h), when any object is detected less than approximately 1 metre from the front of the vehicle: a beep sounds.

Automatic activation/deactivation of front parking distance control

The system deactivates:

– when the vehicle speed is above approximately 7 mph (12 km/h);
– When the vehicle is stationary for more than three seconds: only in the case that the vehicle speed dropped from above approximately 7 mph (12 km/h) and an obstacle is more than 30 centimetres away from the vehicle (e.g., traffic jam);
– when the vehicle is in neutral or when the gear lever has been shifted to **N** or **P** for automatic gearboxes.

Rear parking distance control

Operation

When reversing, when any object is detected approximately 1.50 metres from the rear of the vehicle: a beep sounds.

If there are obstacles located close to both the front and rear of the vehicle, only the closest of the two will be acknowledged and the corresponding front or rear beep sound will be emitted. If obstacles are detected both to the front and to the rear of the vehicle at the same time, and they are both within 30 centimetres from the vehicle, the corresponding front and rear beeps will be emitted alternately.

Automatic activation/deactivation of rear parking distance control

The system deactivates:

– when the electronic parking brake is applied;

– when the vehicle speed is above approximately 7 mph (12 km/h);

– when the vehicle is in neutral or when the gear lever has been shifted to **N** or **P** for automatic gearboxes.

An impact to the underside of the vehicle while manoeuvring (e.g.: striking a post, raised kerb or other street furniture) may result in damage to the vehicle (e.g.: deformation of an axle).

To avoid any risk of accident, have your vehicle checked by an approved Dealer.

Temporary activation/deactivation

Press switch ***1*** to deactivate the system: the indicator light on the switch comes on and the message “Parking sensor off” is displayed on the instrument panel.

The system is reactivated by pressing the switch.

Note: in this case, the system is automatically reactivated each time the engine is switched off.

Activating/deactivating for long periods

Press the switch for approximately 3 seconds to deactivate the system: the indicator light on the switch comes on and the message “Parking sensor off” is displayed on the instrument panel.

The system is reactivated by pressing the switch again for approximately 3 seconds.

Operating faults

When the system detects an operating fault, the message “Check parking sensor” is displayed on the instrument panel, the warning light comes on and a beep sounds.

Consult an approved Dealer.

When the vehicle is being driven at a speed below 7 mph (12 km/h), certain noises (motorcycle, lorry, pneumatic drill, rain, alarm etc.) may trigger the beeping sound.

Under the following conditions, the parking distance control system may not function:
– the sensors are obscured (dirt, mud, snow, etc.);
  Clean with a soft cloth.
– the sensors are frozen.

Under the following conditions, the parking distance control system may malfunction:
– uneven surface, gravel track, hill, forest track, etc.
– floods or water splashes.

The system may not detect objects such as the following:
– narrow obstacles (sharp-edged objects or rope);
– materials which absorb sound waves easily (cotton, sponge, snow, etc.)

Depending on the vehicle, the vehicle is either fitted with an automatic transmission, or a continuously variable transmission.

Selector lever *2*

Display ***A*** on the instrument panel shows the mode and gear selected.

***3*: P:** park
***4*: R:** reverse gear
***5*: N:** neutral
***6*: D:** automatic mode
***7*:** manual mode
***8*:** zone displaying gearbox mode or gear engaged in manual mode

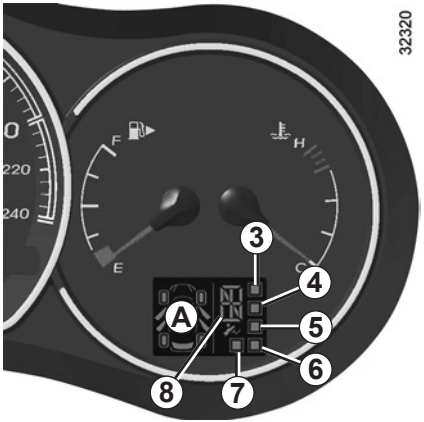

Operation

N With the gear lever ***2*** in position **P**, switch on the ignition.

To move out of position **P**, you must depress the brake pedal before pressing the unlocking button ***1***.

With the foot on the brake pedal (warning light on display ***A*** goes out), move the lever out of position **P**.

Only engage D or R when the vehicle is stopped, with your foot on the brake and the accelerator pedal released.

Driving in automatic mode

Select position **D**. In most traffic conditions, you will not have to touch the gear selector lever again: the gears will change automatically at the right time and at the most suitable engine speed because the automatic system takes into account the vehicle load and road contour and adjusts itself to the particular driving style you have chosen.

Economical driving

When driving, always leave the lever in position **D**, keeping the accelerator pedal lightly depressed to ensure automatic gear changes at a lower engine speed.

Accelerating and overtaking

Depress the accelerator pedal firmly and fully (so that it goes beyond the kickdown point).

This will enable you to change down to the optimum gear within the engine range.

Driving in manual mode

With the selector lever in position **D**, move the lever to the left. Shifting the lever repeatedly allows you to change gears manually:

– backwards to shift down the gears;

– forwards to shift up the gears.

The gear selected is displayed on the instrument panel.

Special cases

Under certain driving conditions (e.g. engine protection, or electronic stability control (ESC) operational etc.) the automatic system may change gear automatically.

Likewise, to prevent incorrect manoeuvres, a gear change may be refused by the automatic system: in this case the gear display flashes for a few seconds as a warning.

Special circumstances

– **If the bends and road surface** do not allow you to stay in automatic mode (e.g. in the mountains), we recommend that you change to manual mode.

  This will prevent repeated gear changes when climbing and will enable engine braking on long descents.

– **In very cold weather**, to avoid stalling the engine, start the engine and wait a few seconds before moving the lever from position **P** or **N** to position **D** or **R**.

– **Vehicles not fitted with traction control:** to avoid wheelspin when starting on a slippery or low grip surface, change to manual mode and select second gear before moving off.

In very cold weather, the system may prevent the gears from being shifted in manual mode until the gearbox reaches the right temperature.

Parking the vehicle

When the vehicle is stopped, move the lever to position **P** while keeping your foot on the brake pedal: the gearbox is in neutral and the drive wheels are mechanically locked by the driveshaft.

Depending on the vehicle, **apply the handbrake or check that the electronic parking brake is on** (refer to the information on the Parking brake in Section 2).

An impact to the underside of the vehicle while manoeuvring (e.g.: striking a post, raised kerb or other street furniture) may result in damage to the vehicle (e.g.: deformation of an axle).

To avoid any risk of accident, have your vehicle checked by an approved Dealer.

Operating faults

– **when driving,** if the “Check auto gearbox” message appears on the instrument panel, it indicates a fault.

  Contact your approved Dealer as soon as possible.

– **when driving**, if the message “Auto gearbox overheating” appears on the instrument panel, shift the gear lever into position **N**, as soon as possible.

  Contact your approved dealer as soon as possible.

– **If a vehicle with an automatic gearbox breaks down**, refer to the information on “Towing” in Section 5.

Special note for vehicles equipped with continuously variable transmissions:

Under certain driving conditions at high speeds, the gearbox may temporarily limit the maximum engine speed. This is normal.

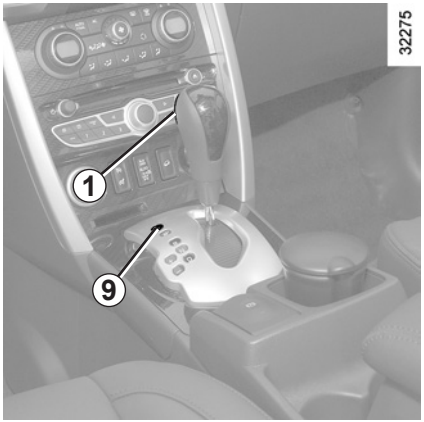

When setting off, if the lever is locked in position **P** even though you are depressing the brake pedal and pressing unlocking button ***1***, the lever can be released manually. To do this, unclip the cover ***9*** at the base of the lever. Then, simultaneously press:

– press the button located under cover ***5*** (using a flat-blade screwdriver or similar tool);

– depress the brake pedal;

– press button ***1***.

Then shift the lever.

Section 3: Your comfort

Air vents (air outlets) 3.2
Manual air conditioning/heating system 3.4
Automatic climate control 3.7
Air conditioning: information and advice on use 3.13
Electric windows 3.14
Electric sunroof 3.16
Sun visor 3.18
Child minder mirror 3.19
Interior lighting 3.20
Passenger compartment storage/fittings 3.22
Accessories sockets 3.28
Ashtray/cigarette lighter 3.28
Rear headrests 3.29
Rear bench seat functions 3.30
Boot 3.32
Luggage cover 3.34
Transporting objects in the boot/towing 3.35
Anchorage points/luggage net 3.36
Roof bars 3.37
Multimedia equipment 3.38

AIR VENTS, air outlets (1/2)

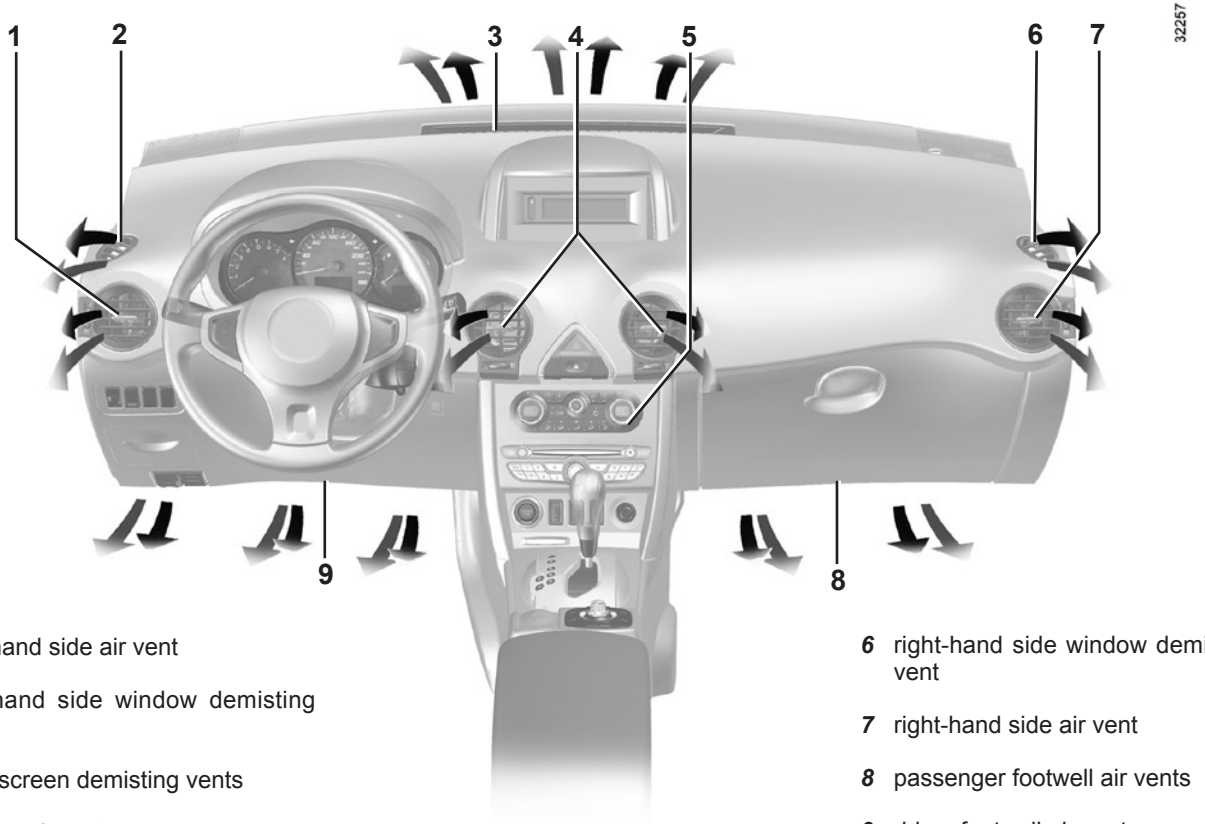

1 left-hand side air vent

2 left-hand side window demisting vent

3 windscreen demisting vents

4 Centre air vents.

5 control panel

6 right-hand side window demisting vent

7 right-hand side air vent

8 passenger footwell air vents

9 driver footwell air vents

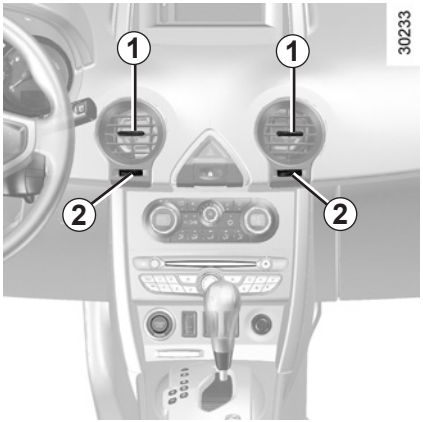

Air flow

Turn the control knobs ***2*** to adjust the flow of air.

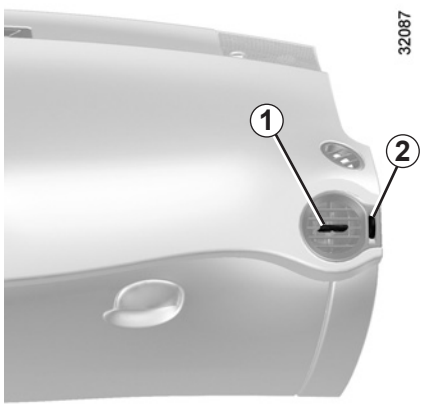

Direction

Move tabs ***1*** or ***3***.

Flow of air from rear air vents.

(depending on vehicle)

Refer to the information on “Automatic climate control”.

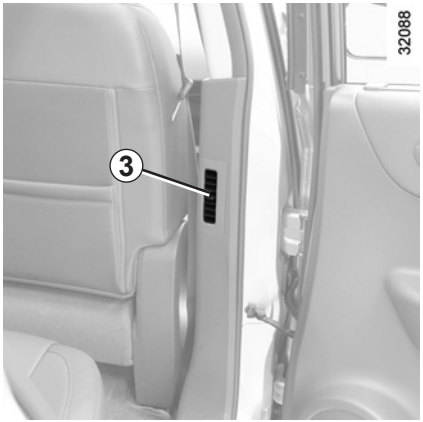

To remove bad odours from your vehicles, only use the systems designed for this purpose. Consult an approved Dealer.

Do not add anything to the vehicle’s ventilation circuit (for example, to remove bad odours).

There is a risk of damage or of fire.

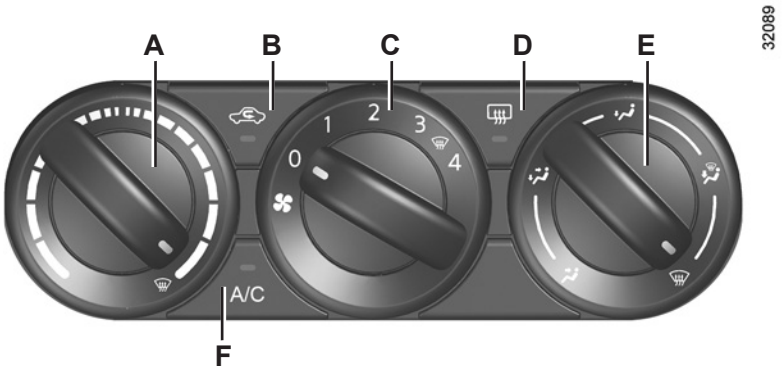

Controls
(depending on vehicle)

A – Adjusting the air temperature.

B – Air recirculation activation/deactivation.

C – Adjusting the ventilation speed.

D – Rear screen and door mirror de-icing/demisting control.

E – Air distribution control.

F – Air conditioning operation control and indicator light.

Temperature adjustment

Turn the control ***A*** according to the required temperature. The further towards the red the slide is, the higher the temperature will be.

Information and advice for use:

Refer to information on “Air conditioning: information and advice on use”.

Air recirculation mode

Press the button ***B***: the indicator light on the button comes on.

In these conditions air is taken from the passenger compartment and is recirculated, with no air being taken from outside the vehicle.

Recirculation allows:

– isolating the vehicle from the external atmosphere (driving in polluted areas, etc.);

– the passenger compartment to be brought to the desired temperature more quickly.

Prolonged use of air recirculation can lead to condensation forming on the side windows and windscreen, and discomfort due to the use of non-renewed air in the passenger compartment.

We therefore advise you to return to normal mode (external air) as soon as the air recirculation function is no longer required, by pressing the button ***B*** again.

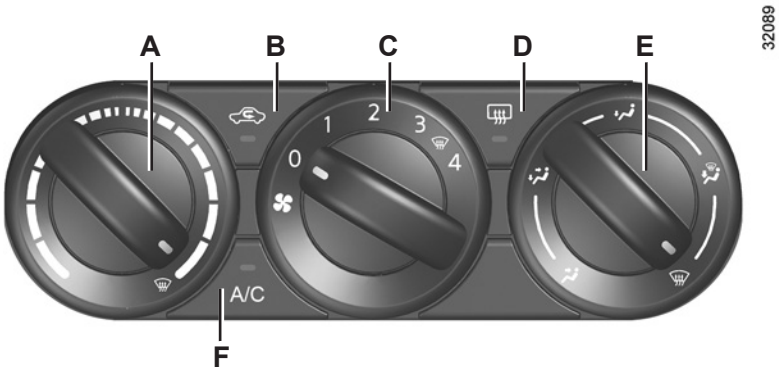

Adjusting the ventilation speed

Normal use

Turn control ***C*** to one of the four positions to start the ventilation system and adjust the power.

Select position **1** for minimum ventilation and position **4** for maximum ventilation.

Position 0

In this case:

– the air conditioning stops automatically even if button ***F*** is activated (the indicator light on the button remains lit).

– the ventilation speed is zero.

– you will, however, feel a slight flow of air when the vehicle is moving.

Switching air conditioning on or off

The air conditioning is switched on (indicator light illuminated) or off (indicator light extinguished) using button ***F***.

The air conditioning system is used for:

– lowering the temperature inside the passenger compartment;

– quickly eliminating humidity.

The air conditioning does not operate when the exterior temperature is low.

When the air conditioning system is used for long periods, it may begin to feel cold.

If it does, increase the temperature (turn control ***A*** clockwise).

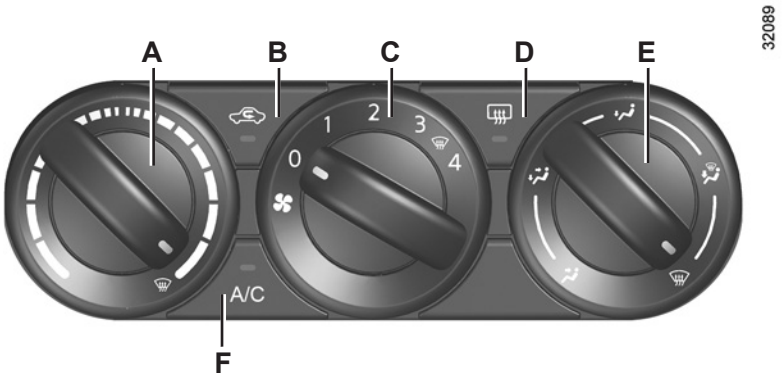

Distribution of air in the passenger compartment

Turn the control ***E*** to select the required mode.

The air flow is directed to the dashboard vents.

The air flow is directed to the dashboard vents and the passenger footwells: this setting maintains the temperature at the optimum level in warm weather.

The air flow is directed mainly towards the footwells.

To avoid misting, the air flow is distributed evenly to the windscreen, side windows and the footwells: this setting maintains the temperature at an optimal level in cold weather.

To avoid condensation forming, the entire air flow is directed to the windscreen and the side windows.

Rear screen de-icing/ demisting

Press button ***D***: the indicator light on the button comes on.

This function is used to prevent condensation forming on the rear screen.

To switch it off, press button ***D*** again.

“Clear View” function

To prevent condensation forming, move all the controls to position (temperature, ventilation speed and distribution of air in the passenger compartment).

Ensure that the control is set to admit external air (the indicator light on button ***B*** goes off).

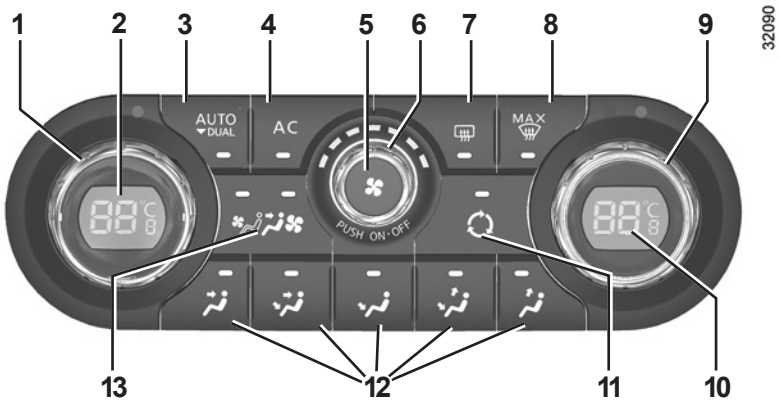

The controls

(depending on vehicle)

1 Left-hand temperature adjustment.
2 Left-hand temperature display.
3 Automatic mode on/off switch. DUAL function.
4 Air conditioning on/off switch.
5 Main “On/Off” switch.
6 Ventilation speed adjustment.
7 Rear screen and door mirror de-icing/demisting.
8 Maximum de-icing.
9 Right-hand temperature adjustment.
10 Right-hand temperature display.
11 Air recirculation control.
12 Adjustment of distribution of air in the passenger compartment.
13 Ventilation adjustment in the rear seats.

Information and advice on use
Refer to information on “Air conditioning: information and advice on use”.

Adjusting the air temperature

– Turn control ***1*** to adjust the temperature on the driver’s side: the temperature is displayed on screen ***2***;
– Turn control ***9*** to adjust the temperature on the passenger’s side: the temperature is displayed on screen ***10***.

Special note: the “HI” and “LO” temperature settings of “32°C” and “16°C” allow the system to produce a maximum or minimum temperature.

DUAL function

Pressing button ***3*** for more than 2 seconds sets the passenger temperature to the driver’s temperature.

There is an indicator light on each button.
– Indicator light on, the function is switched on.
– Indicator light off, the function is switched off.

Automatic mode

Press the automatic mode button ***3***. The indicator light on the button comes on.

The automatic climate control system ensures, in most cases, a comfortable temperature in the passenger compartment, while maintaining good visibility and optimising fuel consumption.

This is the recommended mode of use.

To reach and keep the chosen comfort level and to maintain good visibility, the system controls:

– ventilation speed;

– air distribution;

– air conditioning start/stop;

– air temperature.

Only the temperatures and the indicator light on the button *3* are lit up.

In automatic mode (with the indicator light lit up on button ***3***), the system automatically controls all the functions.

When you modify certain functions, the indicator light on button ***3*** goes out. Only the modified function stops being controlled by the system.

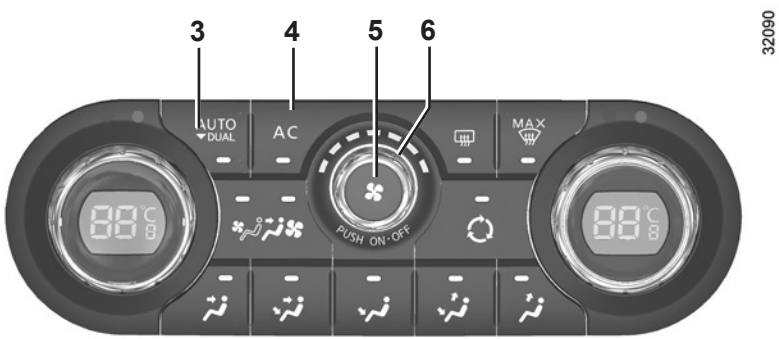

Varying the ventilation speed

In automatic mode, the system uses the most suitable amount of air to reach and maintain the desired comfort level.

Use control ***6*** to increase or reduce the ventilation speed.

In this case, automatic mode is switched off.

Switching air conditioning on or off

In automatic mode, the system switches the air conditioning system on or off, depending on the climate conditions.

Press button ***4*** to switch the air conditioning on (indicator light on) or (indicator light off).

Note: activating the “Clear View” function automatically activates the air conditioning. Press button ***3*** to activate automatic mode again.

The displayed temperature values show a comfort level.

When the vehicle is started in cold or hot weather, increasing or decreasing the values displayed does not mean that the temperature is reached more quickly. Whatever the indicated temperature may be, the system optimises the increase or decrease in temperature (the ventilation system does not start instantly at maximum speed: it gradually increases until the engine temperature is sufficient, which may take from a few seconds to several minutes).

Generally speaking, unless there is a particular fault, the dashboard air vents should remain open.

“Clear View” function

Press button ***8***: the integrated indicator light comes on.

This function quickly demists and de-ices the windscreen, the rear screen, the front side windows, and the door mirrors (depending on the vehicle). The air conditioning and rear screen de-icing functions must be activated.

Press button ***7*** to stop the heated rear screen operating, and the integrated indicator goes out.

You can change the ventilation speed by turning control ***6***.

To exit this function, press:

– button ***8*** again;

– button ***3***.

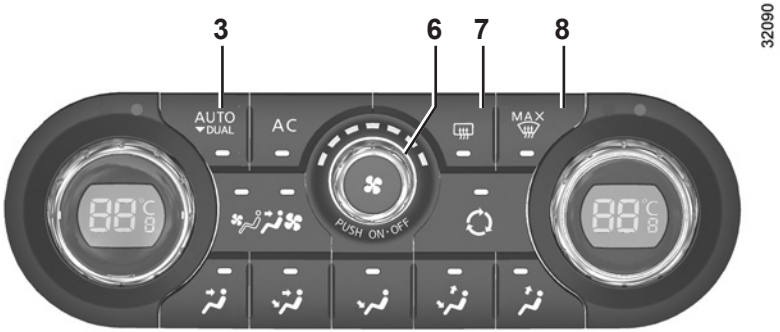

Rear screen de-icing/ demisting

Press button ***7***: the integrated indicator light comes on. This function permits rapid demisting/de-icing of the rear screen and de-icing of the door mirrors (on equipped vehicles).

To exit this function, press button ***7*** again. Demisting automatically stops by default.

In cold weather, the ventilation system does not come on automatically at maximum speed in automatic mode: the speed is increased gradually until the engine is warm enough to heat the air in the passenger compartment. This may take from a few seconds to several minutes.

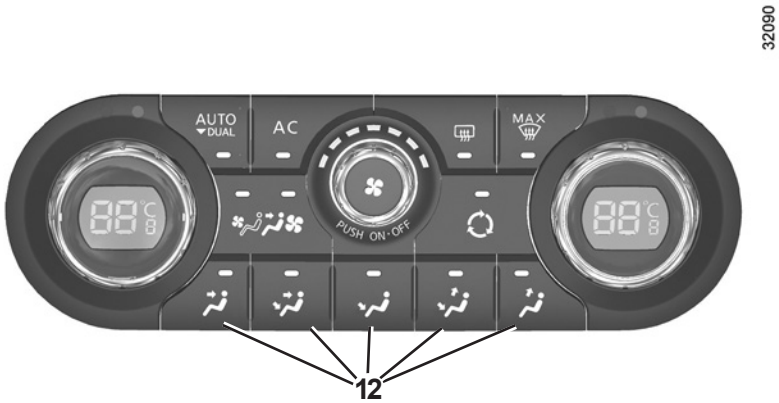

Distribution of air in the passenger compartment

There are five possible combinations for air distribution and these can be selected by pressing buttons ***12***.

The indicator lights on the buttons show which mode has been selected.

All the air flow is directed to the demisting vents for the windscreen and the side windows.

All the air flow is directed to the windscreen demisting vents, the side windows and the dashboard vents.
This setting maintains the optimum temperature level in cold weather.

The air flow is mainly directed to the dashboard vents.

The air flow is directed to the windscreen demisting vents and the dashboard vents.

This setting maintains the optimum temperature level in warm weather.

The air flow is directed to the windscreen demisting vents

If manual mode is used for air distribution, the operating indicator light on button ***3*** goes out (automatic mode). Only the air distribution function is no longer automatically controlled by the system.

Press button ***3*** to return to automatic mode.

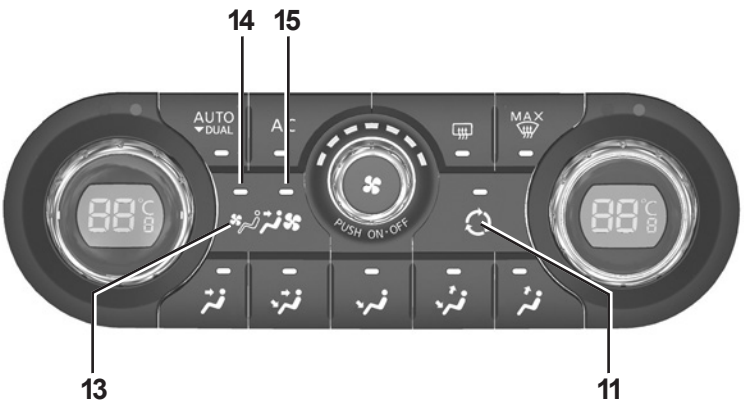

32090

Setting the air recirculation mode

Pressing button ***11*** activates air recirculation mode (the symbol lights up on the display).

During recirculation, air is taken from the passenger compartment and is recycled, with no air being taken from outside the vehicle.

Air recirculation allows the passenger compartment to be isolated from the outside air (when driving in polluted areas, etc.).

Prolonged use of this position may lead to odours, caused by non-renewal of air, and the formation of condensation on the windows.

We therefore advise you to return to normal mode (external air or automatic recirculation) as soon as air recirculation is no longer needed, by pressing button ***11***.

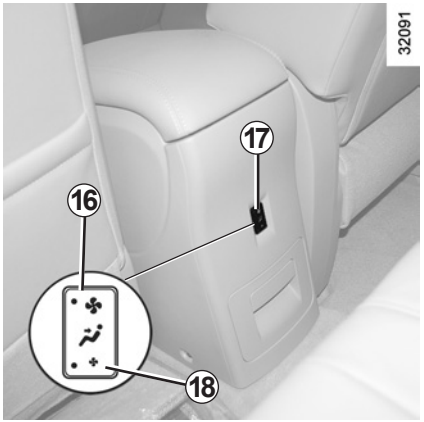

32091

Flow of air from rear air vents.

(depending on vehicle)

Repeatedly pressing buttons ***13*** or ***17*** enables the ventilation speed in the rear seats to be modified, according to three different settings:

– slow speed (indicator lights ***14*** and ***18*** on);

– fast speed (indicator lights ***15*** and ***16*** on);

– park.

Advice on use

In some situations, (air conditioning off, air recirculation activated, ventilation speed at zero or low, etc.) you may notice that condensation starts to form on the windows and windscreen.

If there is condensation, use the **"Clear View"** function to remove it, then use the air conditioning in automatic mode to stop it forming again.

Note

Presence of water under the vehicle. After prolonged use of the air conditioning system, it is normal for water to be present under the vehicle. This is caused by condensation.

Fuel consumption

You will normally notice an increase in fuel consumption (especially when driving in town) when the air conditioning is operating.

For vehicles fitted with manual air conditioning, switch off the system when it is not required.

Advice for reducing consumption and therefore helping to preserve the environment:

Drive with the air vents open and the windows closed.

If the vehicle has been parked in the sun, open the doors for a few moments to let the hot air escape before starting the engine.

Maintenance

Refer to the Maintenance Service Booklet for your vehicle for the inspection frequency.

Operating faults

As a general rule, contact your approved dealer in the event of an operating fault.

- **Reduction in de-icing, demisting or air conditioning performance.** This may be caused by the passenger compartment filter cartridge becoming clogged.
- **No cold air is being produced.** Check that the controls are set correctly and that the fuses are sound. Otherwise, switch off the system.

Do not open the refrigerant fluid circuit. The fluid may damage eyes or skin.

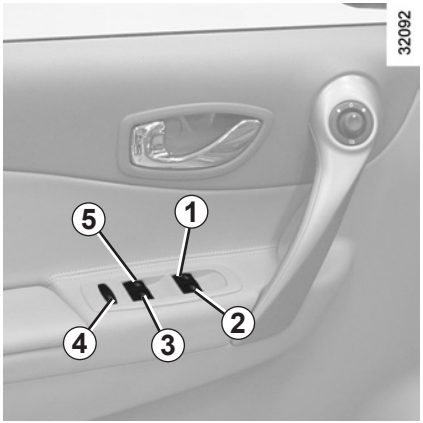

With the ignition on, press the switch to lower the window to the required level;

Lift the switch to raise the window to the desired height.

From the driver's seat

Operate the switches as follows:

– ***1*** for the driver's side;

– ***2*** for the front passenger's side;

– ***3*** and ***5*** for the rear passenger windows.

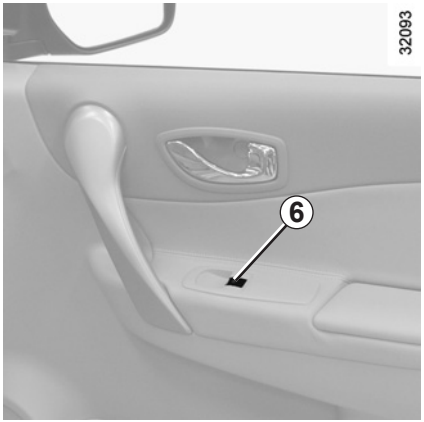

Front and rear passenger seats

Press switch ***6***.

Safety of rear occupants

The driver can inhibit operation of the rear electric windows by pressing switch ***4***.

Special note: the electric windows operate up to approximately 45 seconds after the engine is switched off or until the driver's door is opened.

Driver's responsibility

Never leave your vehicle with the RENAULT card inside and never leave a child (or a pet) unsupervised, even for a short period of time.

They may pose a risk to themselves or to others by starting the engine, activating equipment such as the electric windows or by locking the doors.

If something gets trapped, reverse the direction of travel as soon as possible by pressing the relevant switch.

Risk of serious injury.

One-touch windows

When the vehicle is equipped with this function, the one-touch mode works in addition to the operation of the electric windows described previously.

– **Fully and briefly press down** on the relevant switch down: the window will open completely.

– **Fully and briefly lift** the relevant switch: the window will close completely.

Pressing the switch again while the window is moving will stop its movement.

This mode can be fitted to the driver's window only or to all of the windows: press switches ***1***, ***2***, ***3***, ***5***, or ***6***.

Special features
If the window detects resistance when closing (e.g.: fingers, branch of a tree, etc.) it stops and then lowers again by a few centimetres.

If you use the switch while the window is moving, it stops working.

Remote control window closing

(for vehicles with one-touch windows on all windows).

When you lock the doors from the outside, **press the locking button on the RENAULT card or**, in hands-free mode, **the door or tailgate button, twice in quick succession**, and the windows will close automatically.

It is recommended that the user only operates the system when the vehicle can be seen clearly and no one is inside.

Special note: for vehicles fitted with the deadlocking function, refer to information on the "RENAULT card: deadlocking" in section 1.

Note: closing the windows with the RENAULT card deactivates hands-free mode.

Closing windows can cause serious injury.

Operating faults

In case of a fault when closing a window, the system reverts to normal mode: pull the switch concerned up to fully close the window, then hold the switch (still on the closure side) for three seconds then lower and raise the window fully to reinitialise the system.

If necessary, contact an approved Dealer.

Avoid resting any objects against a half-open window: there is a risk that the electric window could be damaged.

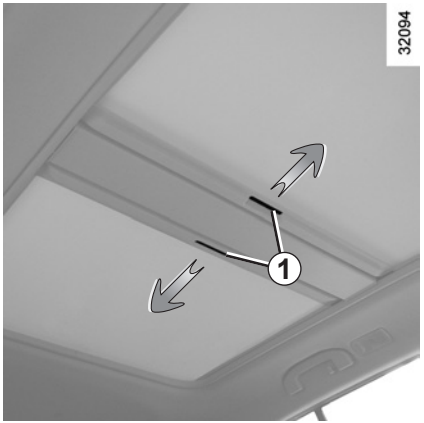

Sunroof blind

Move handles ***1*** forwards or backwards to open the blind as required.

– Never operate the sunroof with the blind closed.
– Never drive with the sunroof open and the sun blind closed.

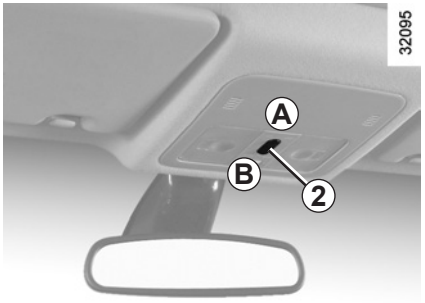

Tilting the sunroof

Opening: open the sunroof blind, then press button ***2*** (side ***A***): the sunroof tilts open.

Closing: press ***2*** (side ***B***).

Sliding the sunroof

Opening: open the sunroof blind then briefly press button ***2*** (side ***A***)

Using button ***2*** stops the sunroof moving.

Closing: briefly press ***2*** (side ***B***).

The system operates:

– when the ignition is switched on,
– when the ignition is switched off until the driver's door is opened/closed (limited to approximately 45 seconds).

Driver's responsibility

Never leave your vehicle with the RENAULT card inside and never leave a child (or a pet) unsupervised, even for a short period of time.

They may pose a risk to themselves or to others by starting the engine, activating equipment such as the electric windows or by locking the doors.

If something gets trapped, reverse the direction of travel as soon as possible by pressing the rear of button ***2*** (on the side marked ***A***).

Risk of serious injury.

Closing the sunroof by remote control

(for vehicles equipped with one-touch windows on all windows).

When you lock the doors from the outside, **press the locking button on the RENAULT card or, in hands-free mode, the door or tailgate button twice in quick succession** and the windows and sunroof will close automatically.

Special note

Your vehicle is equipped with an anti-pinch facility: when the sunroof encounters resistance whilst closing, (somebody's fingers, etc.) it stops and then moves back several centimetres.

It is recommended that the user only operates the system when the vehicle can be seen clearly and no one is inside.

Closing the sunroof can cause severe injuries.

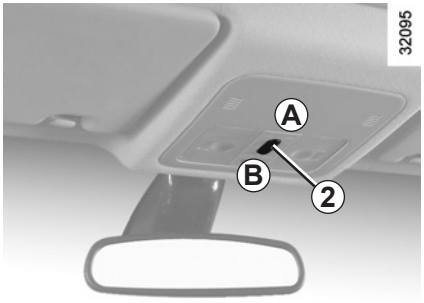

Note: for vehicles fitted with the deadlocking function, refer to information on the "RENAULT card: deadlocking" in section 1.

Sunroof operating fault

In this case, check that there are no obstacles, then move button ***2*** to position ***B*** until the sunroof is fully closed.

Important: during this operation, the sunroof anti-pinch facility is deactivated. Contact your approved dealer as soon as possible.

Precautions during use

- **check** that the sunroof is properly closed before leaving your vehicle;
- **clean** the seal every three months using products recommended by our Technical Department;
- **do not open** the sunroof immediately after the vehicle has been in the rain or after your car has been washed.
- **Vehicle with roof bars**

  As a general rule, if there is a load on the roof, use of the sunroof is not recommended.

  Before using the sunroof, check the objects and/or accessories (bike racks, roof boxes, etc.) attached to the roof bars: they should be properly arranged and secured and should not interfere with the operation of the sunroof.

  Contact your approved Dealer for details of possible conversions.

SUN VISOR

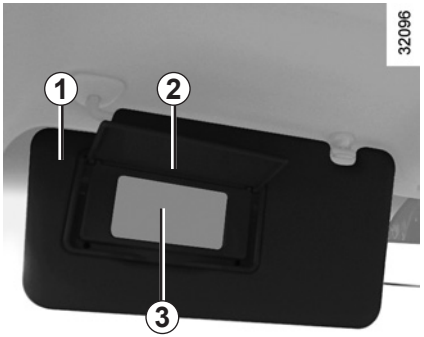

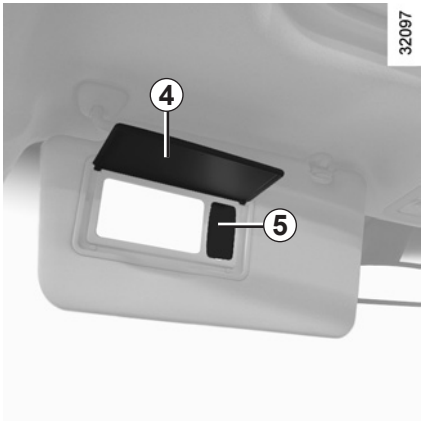

Front sun visor

Lower the sun visor ***1*** over the windscreen or unclip it and turn it over the side window.

Courtesy mirror without light *3*

Lift cover ***2***.

Courtesy mirror with light

Lift the cover ***4***.

Light ***5*** switches on automatically.

When driving, ensure the courtesy mirror cover is closed.

Risk of injury.

SUN VISOR/CHILD MINDER MIRROR

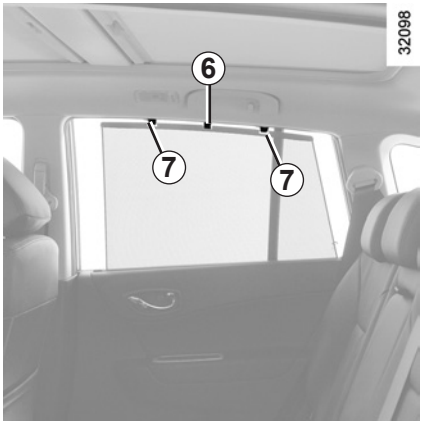

Side sun blind

Pull the sun visor upwards using tab ***6*** until hooks ***7*** engage in their housing (make sure the hooks are properly locked in position).

Child minder mirror

(depending on vehicle)

This allows you to see the rear seats.

– **Opening:** press button ***8***. The mirror ***9*** is lowered.

– **Closing:** move the mirror ***9*** upwards.

It can be positioned vertically.

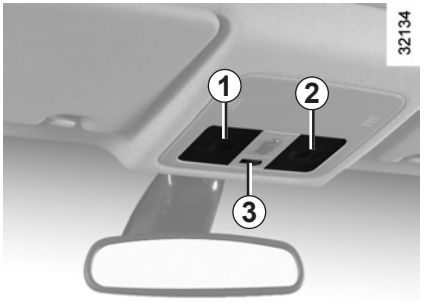

Courtesy lights

Use switch ***3***:

– **left-hand side:** the light comes on when a door is opened. The light goes off when all the doors are closed. If the ignition is off and a door is closed, the light goes off after approximately 30 seconds;

– **right-hand side:** the light does not come on when a door is opened.

Map reading lights

In the front seats, press lens ***1*** for the driver and ***2*** for the front passenger.

Door lights

Each light ***4*** comes on when a door is opened.

When the doors or luggage compartment are unlocked and opened the courtesy and footwell lights come on temporarily.

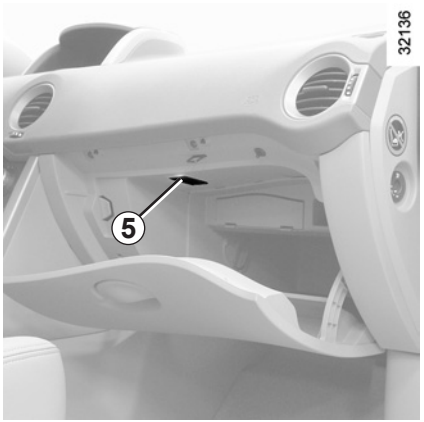

Glove box light *5*

Light ***5*** comes on when the cover is opened.

Rear light *7*

Use switch ***6***:

– **top position:** the light is off;

– **central position:** the light comes on when a door is opened. The light goes off when the door is closed.

  With the ignition on and the doors closed, the light goes off approximately 15 seconds after;

– **bottom position:** the light is on permanently.

Luggage compartment light *9*

Use switch ***8***:

– **top and bottom positions:** light off;

– **central position:** the light comes on when the tailgate is opened. The light goes off when the tailgate is closed.

Passenger storage compartment

Pull handle ***1*** to open it.
It can hold A4 size documents, large bottles of water, etc.

Nothing should be placed on the floor area in front of the driver as such objects may slide under the pedal during braking manoeuvres, thus obstructing its use.

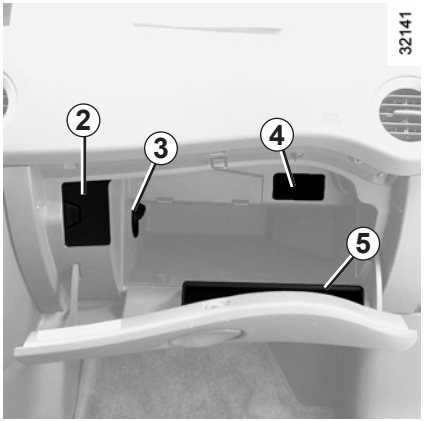

Depending on the vehicle, this storage compartment has:

– **a card holder *2***

– **an air vent**: depending on the vehicle, use control ***3*** to open or close it. The air comes from the outside or from the air conditioning system.

– **a storage compartment for a mobile phone *4***.

Vehicle documentation storage compartment *5*

Front door armrest storage *6*

Door pockets *7*

It can hold books, maps, cups, etc.

Ensure that no hard, heavy or pointed objects are placed in the open storage compartments in such a way that they may fall on any passengers during sudden turning, braking or in the event of an accident.

Sunglasses holder *8*

Sun visor storage *9*

This can be used for storing motorway tickets, road maps, etc.

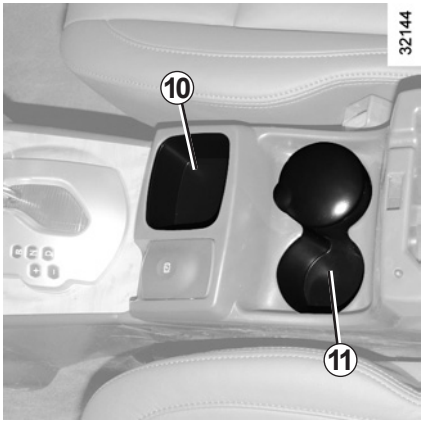

Mobile phone storage compartment and ashtray *10*

(depending on vehicle)
Note: do not use this storage compartment for bottles or cups.

Cup holder *11*

When turning corners, accelerating or braking, ensure that the receptacle being held by the cup holder is not dislodged.
There is a risk of burning if hot liquid escapes.

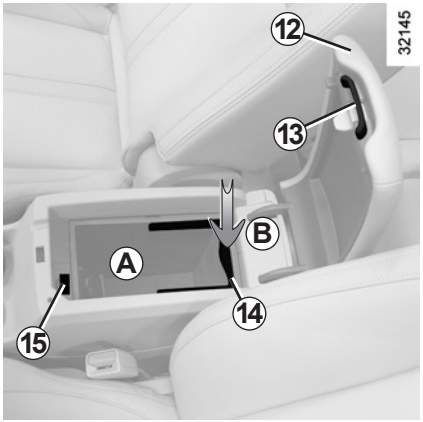

Front centre armrest storage compartment *A*

Lift control ***13*** then lift cover ***12***.

Removable storage compartment

(depending on vehicle)
To remove the storage compartment: lift handle ***14***, then pull upwards. To fit the storage compartment back in place, push down handle ***14*** and press the storage compartment (movement ***B***).

Coin holder *15*

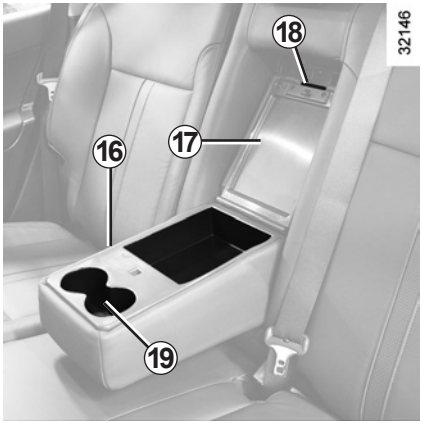

Rear armrest storage *16*

Depending on the vehicle, a storage compartment may be fitted in the rear armrest.

Lower the armrest ***16*** and lift the cover ***17*** using the release handle ***18***.

Cup holder *19*

(depending on vehicle)

Ski hatch

If you want to transport long objects (skis etc.) in the luggage compartment, lower armrest ***16***, press flap ***20*** and fold it forwards.

When turning corners, accelerating or braking, ensure that the receptacle being held by the cup holder is not dislodged.

There is a risk of burning if hot liquid escapes.

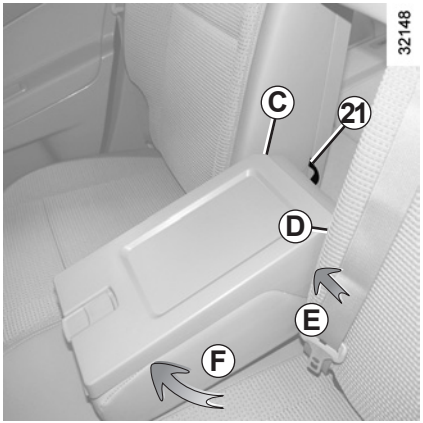

Removing the rear armrest

Pull strap ***21*** to unclip it.

Press on the left-hand side of the armrest (movement ***E***) then release the pins ***D*** on the same side (movement ***F***). The armrest can be removed.

To refit it, first insert the pins in side ***C***, then in side ***D***. Reposition the belt ***21***.

Close the armrest again to check that it is correctly locked in place.

Handle for holding bags whilst cornering *22*

This offers support and can be held when the vehicle is moving. Do not use these for getting into or out of the vehicle.

Clothes hooks *23*

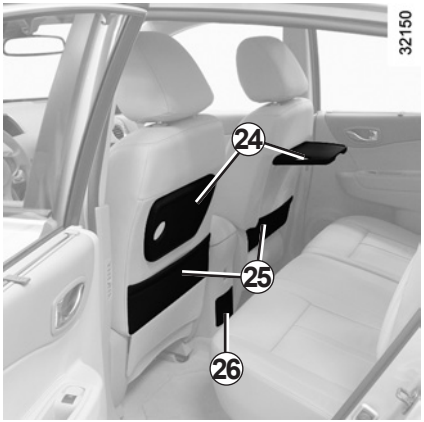

Rear parcel shelves *24*

(depending on vehicle)

Raise it to the horizontal position.

Storage pockets *25*

Centre console rear storage compartment drawer *26*

(depending on vehicle)

Rear door storage compartment *27*

This can be used to store books, drinks or maps.

Ensure that no hard, heavy or pointed objects are placed in the open storage compartments in such a way that they may fall on any passengers during sudden turning, braking or in the event of an accident.

Drawer under passenger seat *29*

Hold handle ***28*** and pull out drawer ***29***.

This can be used to store road maps, books etc.

Ensure that no hard, heavy or pointed objects are placed in the open storage compartments in such a way that they may fall on any passengers during sudden turning, braking or in the event of an accident.

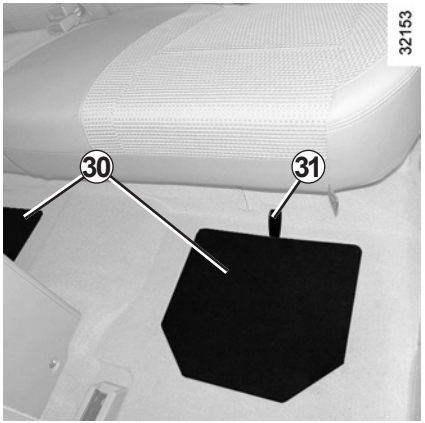

Passenger compartment floor storage *30*

(depending on vehicle)

A flap ***30*** is located either side of the floor by the rear seats.

Lift the cover using the strap ***31***.

This can be used for storing a torch, books, clothes etc.

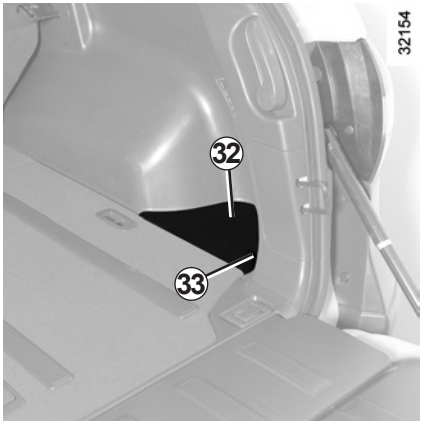

Luggage compartment floor storage *32*

There is a flap ***32*** on both sides of the luggage compartment.

Remove the cover by pulling on the strap ***33***.

This can be used to store the luggage net.

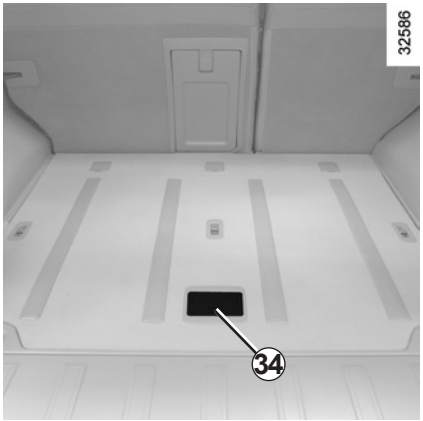

Storage compartment under the luggage compartment carpet.

Lift the luggage compartment carpet with handle ***34***.

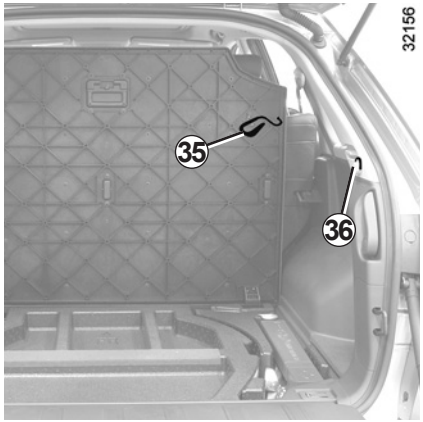

Lift the handle then attach the hook ***35*** to the ring ***36***.

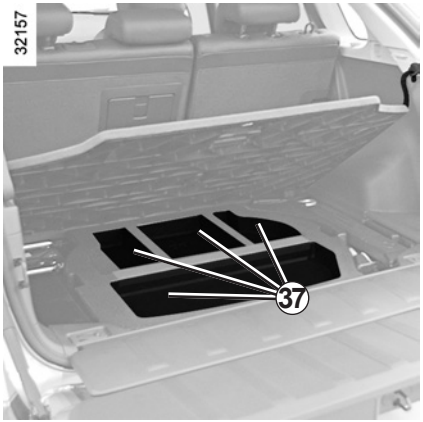

Depending on the vehicle, these storage compartments are available ***37***.

Ashtray *1*

This is a removable ashtray which may be fitted into one of the cup holders or storage compartments ***3*** in the vehicle.

Cigar lighter *2*

With the ignition on, push in cigar lighter **2**.

It will spring back with a click when it is ready. Pull it out to use. After use, replace it without pushing it all the way in.

Accessories socket *4* and *5*

(depending on vehicle)

Depending on the vehicle, this can be fitted instead of cigar lighter **2**.

These sockets are designed for connecting accessories with a maximum power rating of 120 Watts (voltage: 12 V) which have been approved by our Technical Department. Contact an authorised dealer for further information.

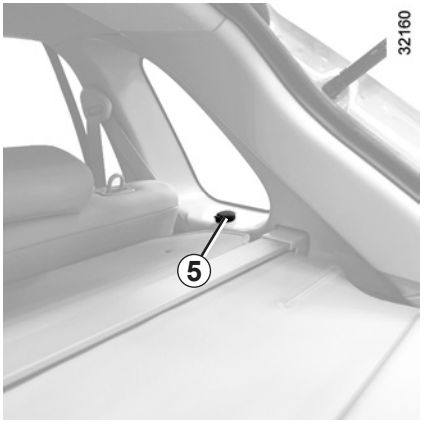

If your vehicle is not fitted with a cigar lighter and an ashtray, these can be obtained from an approved Dealer.

Connect accessories with a maximum power of 120 Watts only.

Fire hazard.

REAR HEADRESTS

Position for use

Raise or lower the headrest while pulling it towards the front of the vehicle.

Storage position *A*

Press tab ***1*** or ***2*** and lower the headrest completely.

When the headrest is set at the lowest position, this is for storage only: it should not be in this position when a seat is occupied.

To remove the headrest

Press tabs ***1*** and ***2*** simultaneously and remove the headrest.

To refit the headrest

Slide the headrest rods into the holes, press tabs ***1*** and ***2*** simultaneously and lower the headrest.

Note: to remove or refit the headrest, the seatback must be tilted. Refer to “Rear bench seat” in Section 3.

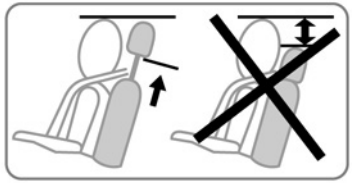

The headrest is an important safety component. Ensure that it is fitted and positioned correctly.

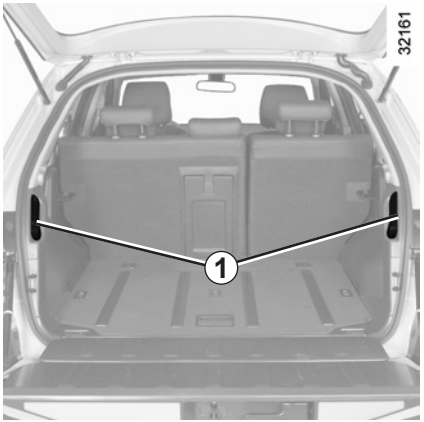

To fold down the rear seats from the luggage compartment

(depending on vehicle)

– lower the headrests;
– move the front seat as far forward as necessary;
– feed the seat belt into the clip ***5***;
– use the controls ***1***.

Check that no-one, including animals, is in the vicinity of the rear bench seat before pulling handle ***1***.

Risk of injury.

To fold down the rear seats from inside the passenger compartment

– lower the headrest;
– move the front seat as far forward as necessary;
– feed the seat belt into the clip ***5***;
– pull lever ***3***: the seat base is raised;
– pull handle ***4*** and fold down the seatback.

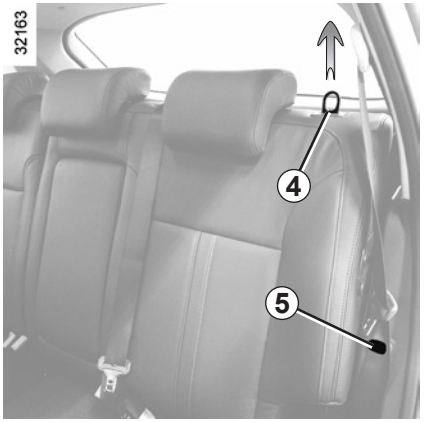

To return the seat to its original position

– lift the seatback and return it to its original position;
– fold down the seat base ***2***;
– ensure that the seat is correctly locked in position.

When the seat belt is not being used, attach it to hook ***5***.

When adjusting the seat, always ensure that the seat belt can return to its original position.

When refitting the seatback, make sure it is correctly locked in place.

To adjust the seatback on the rear seat

(depending on vehicle)

There are 5 position settings for the rear seatback inclination. Tilt it while raising the lever ***6***.

When adjusting the seat, always ensure that the seat belt can return to its original position.

When moving the rear bench seat, make sure the bench seat anchorage points are clean (they should be free from grit, cloths etc.).

When refitting the seatback, make sure it is correctly locked in place.

If seat covers are fitted, make sure these do not prevent the seatback latch from locking in.

Make sure that the seat belts are positioned correctly.

Reposition the headrests.

Double opening tailgate

Opening

Quick access: press switch ***1*** and lift the upper section ***A***.

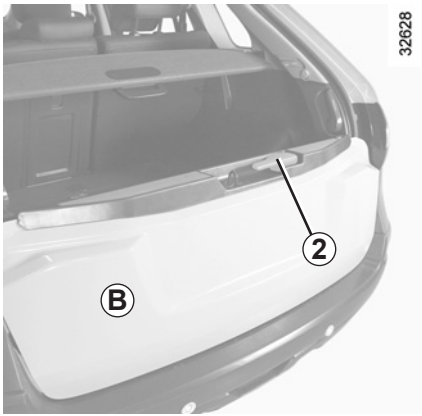

Full access: when the upper section is open, pull handle ***2*** and guide the lower section ***B*** fully downwards.

Do not drive the vehicle when the lower section of the tailgate is open.

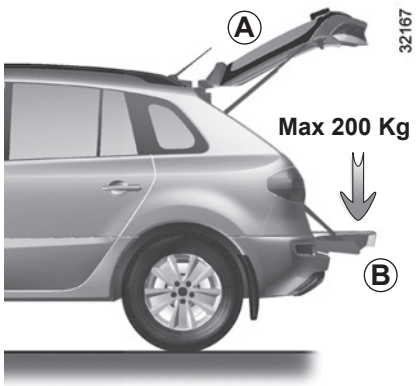

The maximum authorised weight on the lower section of the boot when open: 200 kg, and this weight must be evenly distributed (even when loading).

Ensure that any objects being transported cannot fall out when the lower section of the boot is opened.

Hold onto the lower section of the tailgate while opening it. Do not let it fly open.

Driving with the rear screen open may be unpleasant for passengers as exhaust gases may enter the passenger compartment. This use is solely **for short distances**, whilst **transporting bulky objects** without having to open the tailgate. In that case, close the other windows and the sunroof and switch the **ventilation to medium or maximum power**, as this will help to prevent exhaust gas from entering the passenger compartment.

To close the tailgate

Lift the lower section ***B*** of the tailgate, then close it.

Next, lower the upper section ***A*** and close it.

For your comfort, use handle ***3*** on the tailgate to close it.

Note: always ensure that the lower section of the tailgate is properly closed before closing the upper section.

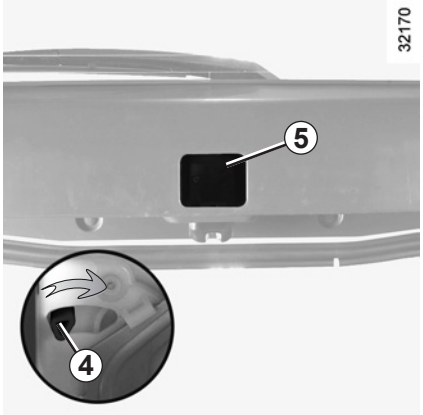

Opening the tailgate from inside the vehicle

If the tailgate cannot be opened from the outside, it can be opened from inside the vehicle.

– Move the rear seats forwards and down and climb into the luggage compartment;

– remove cover ***5*** using a screwdriver or suitable tool;

– move control ***4***;

– push the upper section of the tailgate to open it.

LUGGAGE COMPARTMENT COVER (DEPENDING ON THE VEHICLE)

To unfold the flexible section of the luggage compartment cover

Pull handle ***1*** located under the cover and place each end of the cover in the notch ***2***.

To remove the flexible section of the luggage compartment cover

Pull handle ***1*** then lift it while unfolding the luggage compartment cover.

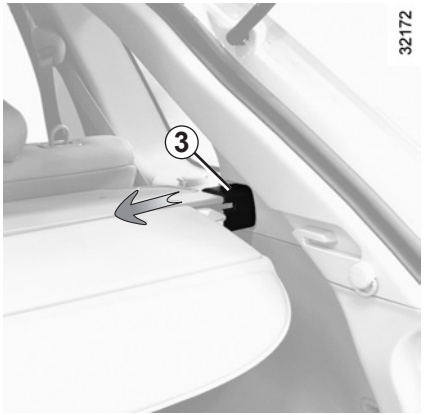

Removing the luggage cover

Press the two ends ***3*** and move them towards the centre of the luggage compartment cover, then tilt the cover.

Caution: the luggage compartment cover is heavy.

To fit the luggage compartment cover, proceed in reverse order.

Note: it is easier to remove the luggage compartment cover if the lower section of the tailgate is closed.

Luggage compartment cover storage

Move the parcel shelf up (movement ***A***).

Remove the luggage compartment cover and place it in position ***B***.

Do not place any heavy or hard objects on the luggage cover. These may pose a risk to the vehicle occupants if the driver has to brake suddenly or if the vehicle is involved in an accident.

32322

Always place the objects to be transported so that their largest side rests against the back of the rear bench seat, for normal loads (example ***A***), or against the back of the front seats when the rear bench seatbacks are folded down (example ***B***).

32323

Always position the heaviest items directly on the floor. Use the lashing points on the floor of the luggage compartment, if these are fitted to the vehicle. The luggage should be loaded in such a way that no items will be thrown forward and strike the occupants if the driver has to brake suddenly. Fasten the rear seat belts, even if the seats are not occupied.

32180

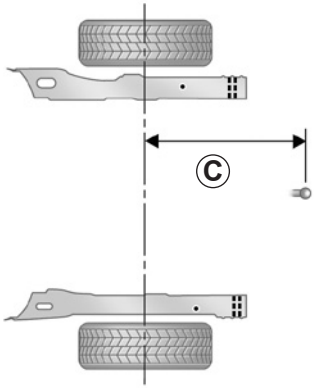

32179

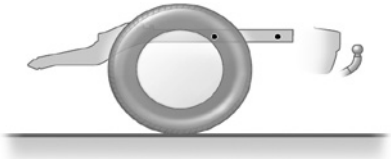

***C*: 1138 mm**

Permissible nose weight, maximum permissible towing weight, braked and unbraked: refer to the information on “Weights” in Section 6.

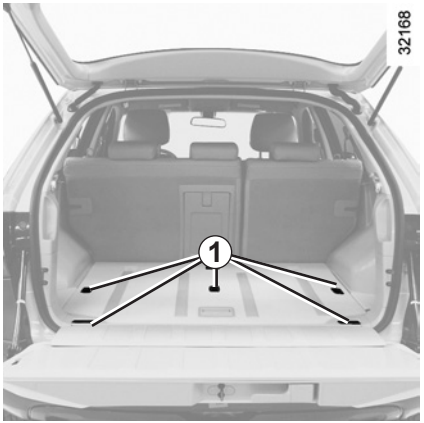

Anchorage points *1*

Always position the heaviest items directly on the floor. If the vehicle is equipped with anchorage points ***1*** on the luggage compartment floor, use them. The luggage should be loaded in such a way that no items will be thrown forward and strike the occupants if the driver has to brake suddenly. Fasten the rear seat belts, even if the seats are not occupied.

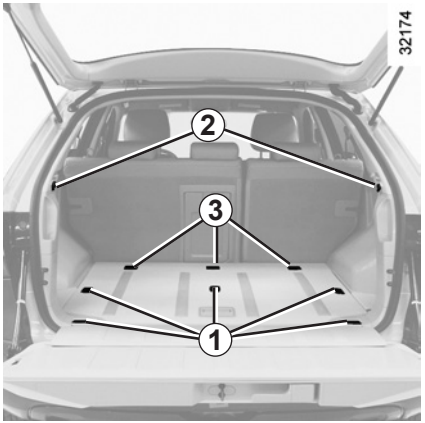

Luggage net

The luggage net can be attached using anchorage points ***1***, ***2*** and ***3***.

It is prohibited to attach a luggage net to one of the hooks ***3*** if this is already being used to hold a child seat in place (refer to information on “Child safety” in section 1).

Risk of injury in the event of an impact.

The luggage net must not be used to restrain or hold objects.

Risk of injury.

Roof bars *1*
(depending on vehicle)

Luggage can be transported on the luggage bars mounted on the roof bars. Please refer to the manufacturer's instructions on how to fit and use the bars.

If original roof bars, approved by our Technical Department, are supplied with screws, only use these screws for attaching the roof bars to the vehicle.

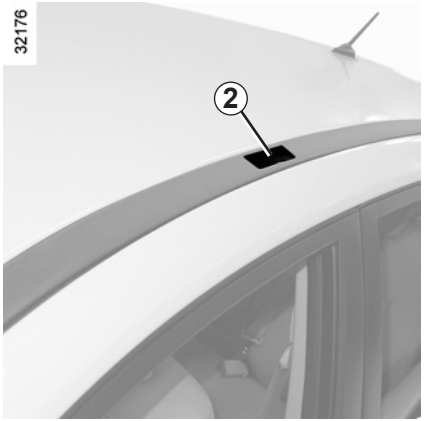

Roof bar mounting points *2*

To access the mounting points, pivot each section ***2*** upwards using a flatblade screwdriver or similar tool.

Refer to the manufacturer's instructions for information on how to fit and use the roof rack.

Before fitting roof bars, remove the blanking covers located under the sections ***2*** and keep them safe.

Refit them after removing the roof bars.

It is strictly forbidden to place the roof bars in the transverse position (carrying position) when entering a roller-type car wash.

Maximum permissible load on roof rack: refer to the information on Weights in Section 6.

Please refer to the manufacturer's instructions on how to fit and use the bars.

Please keep these instructions with the rest of the vehicle documentation.

MULTIMEDIA EQUIPMENT

The presence and location of this equipment depends on the vehicle's multimedia equipment.

1 Radio;
2 central control;
3 steering column control;
4 microphones;
5 multimedia sockets.

Hands-free telephone integrated control

On equipped vehicles, use microphones ***4*** and steering column control ***3***.

To use this equipment, consult the instructions for the equipment which should be kept with the other vehicle documentation.

Using the telephone

We remind you of the need to conform to the legislation in force concerning the use of such equipment.

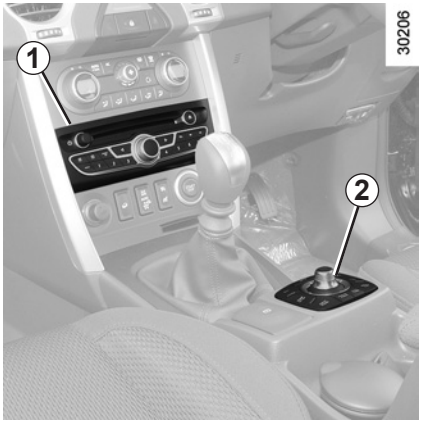

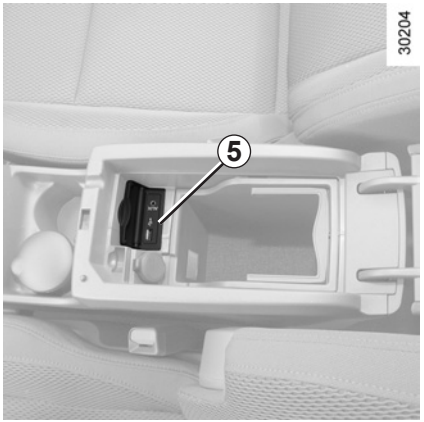

Section 4: Maintenance

Bonnet 4.2
Engine oil level: general information 4.3
Engine oil level: topping up, filling 4.5
Engine oil change 4.6
Levels: 4.7
coolant 4.7
brake fluid 4.8
windscreen/headlight washer reservoir 4.9
Filters 4.9
Tyre pressures 4.10
Battery 4.11
Bodywork maintenance 4.12
Interior trim maintenance 4.14

Opening the bonnet

To open, pull handle ***1***, located on the left-hand side of the dashboard.

To unlock, push tab ***5*** in the direction of arrow ***A*** (the hook releases the bonnet).

The engine may be hot when carrying out operations in close proximity. In addition, the engine cooling fan can come on at any moment.

Risk of injury.

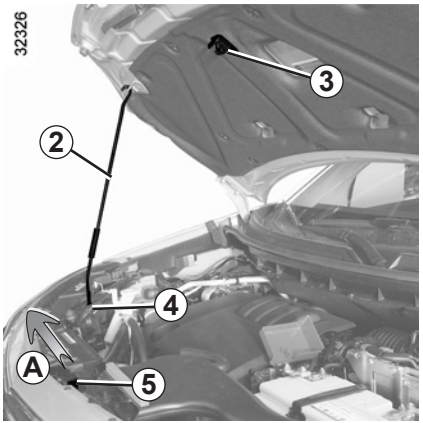

Lift the bonnet, release stay ***2*** from its holder ***3***; for your safety, **always** fix it in location ***4***.

In the event of even a slight impact involving the radiator grille or bonnet, have the bonnet lock checked by an approved Dealer as soon as possible.

Closing the bonnet

Check that nothing has been left in the engine compartment.

To close the bonnet, replace stay ***2*** back into its holder ***3***, hold the bonnet in the middle and lower it to 30 cm above the closed position, then release it. It will latch automatically under its own weight.

After any procedure in the engine compartment, make sure that you do not forget anything (cloth, tools, etc.).

Ensure that the bonnet is properly locked.

Check that nothing is preventing the catch from locking (gravel, cloth, etc.).

ENGINE OIL LEVEL: general information (1/2)

It is normal for an engine to use oil for lubrication and cooling of moving parts and it is normal to top up the level between oil changes.

However, contact an approved Dealer if more than 0.5 litres is being consumed every 600 miles (1,000 km) after the running in period.

Oil change frequency: check the oil level from time to time and certainly before any long journey to avoid the risk of damaging your engine.

Reading the oil level

The oil level should be read with the vehicle on level ground, after the engine has been switched off for some time.

The dipstick must be used to read the exact oil level and make sure that the maximum level has not been exceeded (risk of engine damage). Refer to the following pages.

The instrument panel display only alerts the driver when the oil level is at its minimum.

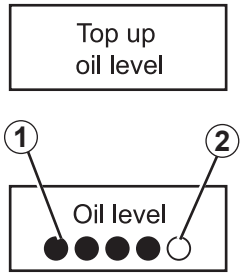

Message 1

Minimum amount warning

Message 2

Indication of oil amount

Oil level information on the instrument panel

While starting the engine, press either ***3*** or ***4*** when the message “Checking control functions” appears.

if the level is above the minimum level:

The “Oil level” message appears on the display, accompanied by squares ***1*** indicating the level. These squares disappear as the level drops and they are replaced by squares ***2***.

To advance to trip computer reading, press button ***3*** or ***4*** again.

If the oil level reaches the minimum mark: the message “Top up oil level” appears on the instrument panel display.

It is vital to top up the oil as soon as possible.

The display only warns the driver if the oil level is at the minimum level. It does not inform the driver that the oil level has exceeded the maximum level as this can only be measured using a dipstick.

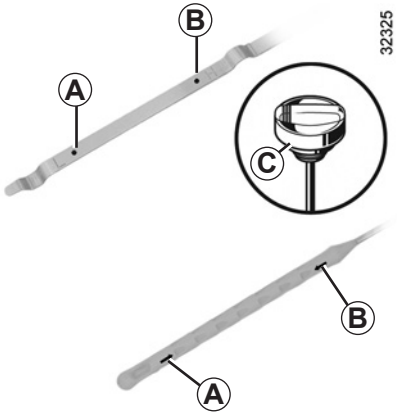

Reading the level using the dipstick

– remove the dipstick (refer to the following pages for its location) and wipe it with a clean lint-free cloth;

– push the dipstick in as far as it will go (for vehicles equipped with “cap-type dipstick” ***C***, screw the cap in completely);

– take out the dipstick again;

– read the level: it should never fall below **minimum** mark ***A*** or exceed **maximum** mark ***B***.

Once the operation is complete, ensure that the dipstick is fully inserted, or the cap-type dipstick screwed in completely.

Maximum engine oil level exceeded.

The oil level should only be read with the dipstick as explained above.

If the oil level exceeds the maximum level, **do not start your vehicle** and contact an approved Dealer.

Under no circumstances should maximum filling level ***B*** be exceeded: this could damage the engine and the catalytic converter.

Consult your approved Dealer at once if you notice an abnormal or repeated drop in any of the fluid levels.

In order to prevent splashback, it is recommended that a funnel be used when topping up/filling with oil.

The engine may be hot when carrying out operations in close proximity. In addition, the engine cooling fan can come on at any moment.

Risk of injury.

ENGINE OIL LEVEL: topping up/filling (1/2)

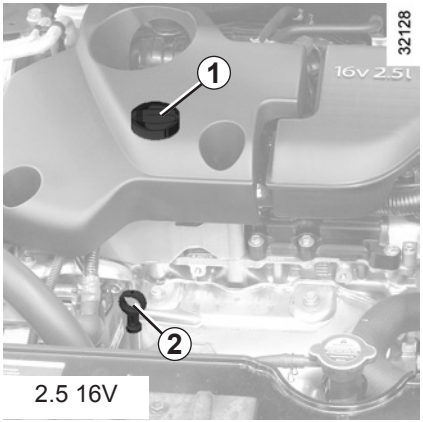

2.5 16V

2.0 dCi

Topping up/filling

The vehicle must be parked on level ground and the engine should be cold (for instance, before the engine is started up for the first time in the day).

Engine oil grade

Refer to the Maintenance Service Booklet for your vehicle.

Do not exceed the “maximum” level and do not forget to refit the cap ***1*** and dipstick ***2***.

– Unscrew cap ***1***;

– top up the level (as a guide, the capacity between the minimum and maximum reading on the dipstick ***2*** is between 1.5 and 2 litres, depending on the engine);

– wait for approximately 10 minutes to allow the oil to flow into the engine;

– check the level using the dipstick ***2*** (as described above).

Once the operation is complete, ensure that the dipstick is fully inserted, or the cap-type dipstick screwed in completely.

Oil change

Service interval: refer to the Maintenance Service Booklet for your vehicle.

Average capacities for oil change including oil filter
(for information)

2.5 16V engine: 5.1 liters
2.0 dCi engine: 7.4 liters

Engine oil grade

Refer to the Maintenance Service Booklet for your vehicle.

Engine oil change: if you are changing the oil when the engine is hot, be careful not to scald yourself if the oil overflows.

Filling: take care when topping up the oil that no oil drips onto engine components - risk of fire. Remember to refit the cap securely as there is a risk of fire if oil splashes onto hot engine components.

The engine may be hot when carrying out operations in close proximity. In addition, the engine cooling fan can come on at any moment.

Risk of injury.

Never run the engine in an enclosed space as exhaust gases are poisonous.

Consult your approved Dealer at once if you notice an abnormal or repeated drop in any of the fluid levels.

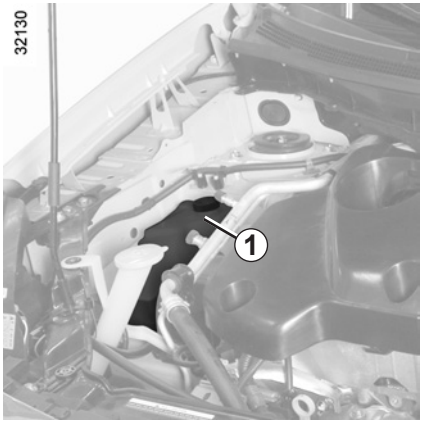

Coolant

With the engine switched off and on level ground, the level **when cold** must be between the "**MIN"** and "**MAX"** marks on coolant reservoir ***1***.

Top this level up **when cold** before the "**MIN**" mark is reached.

Consult your approved dealer at once if you notice an abnormal or repeated drop in any of the fluid levels.

Checking intervals

Check the coolant level regularly (very severe damage is likely to be caused to the engine if it runs out of coolant).

If the level needs to be topped up, only use products approved by our Technical Department which ensure:

– protection against freezing;

– anticorrosion protection of the cooling system.

No operations should be carried out on the cooling circuit when the engine is hot.

Risk of burns.

Replacement intervals

Refer to the Maintenance Service Booklet for your vehicle.

Brake fluid level

This should be checked frequently, and immediately if you notice even the slightest loss in braking efficiency.

The level should be read with the engine switched off and on level ground.

Consult your approved dealer at once if you notice an abnormal or repeated drop in any of the fluid levels.

Level 2

It is normal for the level to drop as the linings become worn, but it should never drop below the "**MIN**" warning line.

If you wish to check the disc and drum wear yourself, you should obtain the document explaining the checking procedure from our network or from the manufacturer's website.

The engine may be hot when carrying out operations in close proximity. In addition, the engine cooling fan can come on at any moment.

Risk of injury.

Topping up

After any operation on the hydraulic circuit, a specialist must replace the fluid.

Only use fluids approved by our Technical Department (and taken from a sealed container).

Replacement intervals

Refer to the Maintenance Service Booklet for your vehicle.

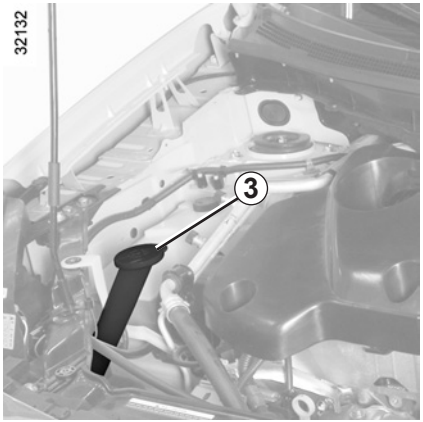

Windscreen/headlight washer reservoir

Topping up

Open cap ***3***, fill until you can see the fluid, then refit the cap.

Note

Depending on the vehicle, to find out the fluid level, open cap ***3***, pull out the dipstick and read the level again.

Liquid

Screen wash product (product with antifreeze in winter).

Jets

Use a tool such as a needle to adjust the height of the windscreen washer jets.

Filters

The replacement of filter elements (air filter, passenger compartment filter, diesel filter, etc.) is scheduled in the maintenance operations for your vehicle.

Replacement intervals for filter elements: refer to the Maintenance Service Booklet for your vehicle.

The engine may be hot when carrying out operations in close proximity. In addition, the engine cooling fan can come on at any moment.

Risk of injury.

TYRE PRESSURE

The tyre pressure is indicated on the label ***A*** affixed to the edge of driver's door.

When they need to be replaced, only tyres of the same make, size, type and profile should be used.

They must: either be identical to those fitted originally or conform to those recommended by your authorised dealer.

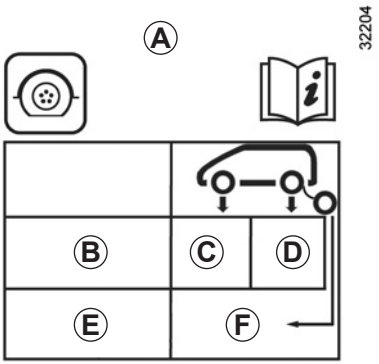

Zone ***B***: dimension of the tyres fitted to the vehicle.

Zone ***C***: front tyre pressure.

Zone ***D***: rear tyre pressure.

Zone ***E***: dimensions of the emergency spare wheel tyre.

Zone ***F***: tyre pressure for the emergency spare wheel tyre.

Tyre safety and use of snow chains

Refer to the information on "Tyres" in Section 5 for the servicing conditions and, depending on the version, the use of chains.

Special note

For vehicles used fully laden (Maximum Permissible All-up Weight) **and towing a trailer**. The maximum speed must be limited to **60 mph (100 kph)** and the tyre pressure increased by **0.2 bar**.

Refer to the information on "Weights" in Section 6.

The battery does not require any maintenance.

Handle the battery with care as it contains sulphuric acid, which must not come into contact with eyes or skin. If it does, wash the affected area with plenty of cold water. If necessary, consult a doctor.

Ensure that naked flames, red hot objects and sparks do not come into contact with the battery as there is a risk of explosion.

Replacing the battery

As this operation is complex, we advise you to contact an approved Dealer.

As the battery is **specific to the vehicle** (presence of a ventilation pipe to expel corrosive and explosive gases), make sure that it is replaced with a battery that enables this pipe to be connected. Consult an approved Dealer.

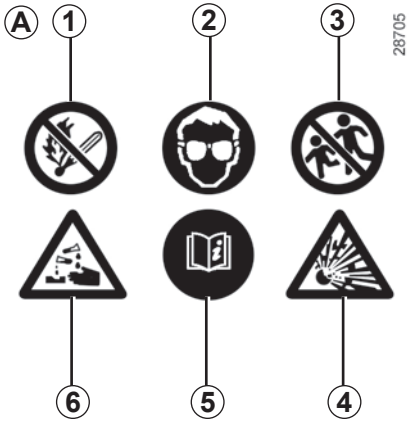

Label *A*

Observe the indications on the battery:

– ***1*** naked flames and smoking are forbidden;
– ***2*** eye protection required;
– ***3*** keep away from children;
– ***4*** explosive materials;
– ***5*** refer to the instructions;
– ***6*** corrosive materials.

The engine may be hot during operations in close proximity. In addition, the engine cooling fan may start at any moment.

Risk of injury.

A well-maintained vehicle will last longer. It is therefore recommended to maintain the exterior of the vehicle regularly.

Protection against the effects of corrosive agents

Although your vehicle has been treated with very effective anti-corrosion products, it nevertheless remains subject to the effects of:

- **corrosives in the atmosphere**
  - atmospheric pollution (built-up and industrial areas),
  - saline atmospheres (near the sea, particularly in hot weather),
  - seasonal and damp climatic conditions, (e.g.: road salt in winter, water from road cleaners, etc.).
- **abrasives**
  Wind-borne dust and sand, mud, road grit thrown up by other vehicles, etc.
- **minor impacts**

You should take a minimum number of precautions in order to safeguard your vehicle against such risks and not to lose the benefit of your vehicle's anti-corrosion protection.

What you should not do

- Degrease or clean mechanical components (e.g. the engine compartment), underneath the body, parts with hinges (e.g. inside the fuel tank flap) and painted plastic external fittings (e.g. bumpers) using high-pressure cleaning equipment or by spraying on products not approved by our Technical Department. If adequate precautions are not taken, this could give rise to corrosion or operational faults.
- Wash the vehicle in bright sunlight or freezing temperatures.
- Scrape off mud or dirt without prewetting.
- Allow dirt to accumulate.
- Allow rust to form following minor impacts.
- Use solvents not approved by our Technical Department to remove stains as this could damage the paintwork.
- Drive frequently in snow or muddy conditions without washing the vehicle, particularly under the wheel arches and body.

You should

– Observe the vehicle stopping distances when driving on gravelled surfaces to prevent paint damage.

– Repair, or have repaired quickly, areas where the paint has been damaged, to prevent corrosion spreading.

– Remember to visit the body shop periodically if your vehicle has an anti-corrosion warranty. Refer to the Maintenance Service Booklet.

– Respect local regulations about washing vehicles (e.g. do not wash your vehicle on a public highway).

– Wash your car frequently, **with the engine off**, with cleaning products recommended by our Technical Department (never use abrasive products) and be sure to jet-rinse off:

  – spots of tree resin and industrial grime;

  – **bird droppings**, which cause a chemical reaction with the paint that **rapidly discolours paintwork and may even cause the paint to peel off;**

    Wash the vehicle **immediately** to remove these marks since it is impossible to remove them by polishing;

  – salt, particularly in the wheel arches and underneath the body after driving in areas where the roads have been gritted;

  – mud in the wheel arches and underneath the body which forms damp patches.

– Before going through a roller type car wash, return the windscreen wiper stalk to the Park position (refer to the information on the “Windscreen wash/wipe” in Section 1). Check the mounting of external accessories, additional lights and mirrors, and ensure that the wiper blades are secured with adhesive tape.

  Remove the radio aerial mast if your vehicle is fitted with this equipment.

  Remember to remove the tape and refit the antenna after washing.

– Spray mechanical components, hinges, etc. with products approved by our Technical Department to protect them after they have been cleaned.

We have selected special products to care for your vehicle and you can obtain these from the manufacturer’s accessory outlets.

INTERIOR TRIM MAINTENANCE (1/2)

A well-maintained vehicle will last longer. It is therefore recommended to maintain the interior of the vehicle regularly.

A stain should always be dealt with swiftly.

Whatever type of stain is on the trim, use **cold** (or warm) **soapy water with natural soap**.

Detergents (washing-up liquid, powdered products, alcohol-based products) should not be used.

Use a soft cloth.

Rinse and soak up the excess.

Glass instrument panel

(e.g. instrument panel, clock, exterior temperature display, radio display, etc.)

Use a soft cloth (or cotton wool).
If this does not clean it properly, use a soft cloth (or cotton wool) slightly moistened with soapy water and then wipe clean with a soft damp cloth or cotton wool.
Finally, **carefully** dry off with a soft dry cloth.

Cleaning products containing alcohol must not be used under any circumstances.

Seat belts

These must be kept clean.
Use products selected by our Technical Department (Approved outlets) or warm, soapy water and a sponge and wipe with a dry cloth.
Detergents or dyes must not be used under any circumstances.

Textiles (seats, door trim, etc)

Vacuum-clean the textiles **regularly**.

Liquid stain

Use soapy water.

Dab lightly (never rub) with a soft cloth, rinse and remove the excess.

Solid or pasty stain

Carefully remove the excess solid or pasty material **immediately** with a spatula (working from the edges to the centre to avoid spreading the stain).
Clean as for a liquid stain.

Special instructions for sweets or chewing gum

Put an ice cube on the stain to solidify it, then proceed as for a solid stain.

For further recommendations for maintaining the interior, and/or for any unsatisfactory results, please see an authorised dealer.

Removal/replacing removable equipment originally fitted in the vehicle

If you need to remove equipment in order to clean the passenger compartment (for example, mats), always ensure that they are correctly refitted and are the right way around (the driver's mat should be fitted on the driver's side, etc.) and fit them with the components supplied with the equipment (for example, the driver mat should always be fixed using the pre-fitted mounting components).

With the vehicle stationary, ensure that nothing will impede driving (anything obstructing the pedals, heel wedged by the mat, etc.).

You should not:

You are strongly advised not to position objects such as deodorants, scents, etc. near air vents, as this could damage your dashboard trim.

You are strongly recommended not to use high-pressure or spray cleaning equipment inside the passenger compartment: use of such equipment could impair the correct functioning of the electrical or electronic components in the vehicle, or have other detrimental effects.

Section 5: Practical advice

Puncture 5.2
Emergency spare wheel 5.2
Tool kit 5.3
Changing a wheel 5.4
Tyres (tyre and wheel safety, use in winter) 5.6
Headlights (changing bulbs) 5.9
Rear lights and side lights (changing bulbs) 5.12
Interior lights (changing bulbs) 5.15
Fuses. 5.18
battery: troubleshooting. 5.20
RENAULT card: battery 5.22
Accessories 5.23
Wipers (replacing blades) 5.24
Towing 5.25
Operating faults 5.29

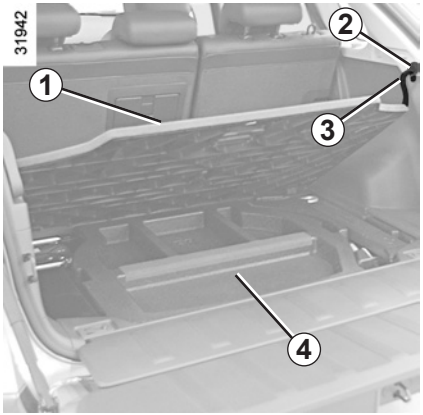

Emergency spare wheel *6*

This is located in the luggage compartment. To access it:

– Open the tailgate, lift the floor carpet ***1***, attach the strap ***3*** to the hook ***2*** then remove the cover ***4***;

– unscrew mounting ***5*** by turning it anticlockwise and remove it;

– if the vehicle is fitted with speaker ***7***, remove the adhesive tape then place it to the side;

– remove the emergency spare wheel ***6***.

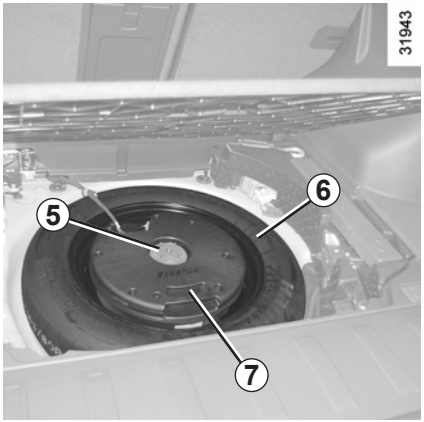

Special note

The tyre pressure monitor does not check the emergency spare wheel (the wheel replaced by the emergency spare wheel disappears from the instrument panel display).

Refer to the information on the “Tyre pressure monitor” in Section 2.

If the emergency spare wheel has been stored for several years, have it checked by your Dealer to ensure that it is safe to use.

Vehicles fitted with an emergency spare wheel smaller than the four other wheels:

– Never fit more than one emergency spare wheel to the same vehicle.

– Replace the emergency spare wheel as soon as possible with a wheel with the same dimensions as the original.

– When this is fitted to the vehicle, which must only be a temporary measure, the driving speed must not exceed the speed indicated on the label on the wheel.

– Fitting an emergency spare wheel may alter the way the vehicle usually runs. Avoid sudden acceleration or deceleration and reduce your speed when cornering.

– If snow chains must be used, fit the emergency spare wheel on the rear axle in order to have a normal size wheel at the front then check the tyre pressure.

TOOL KIT

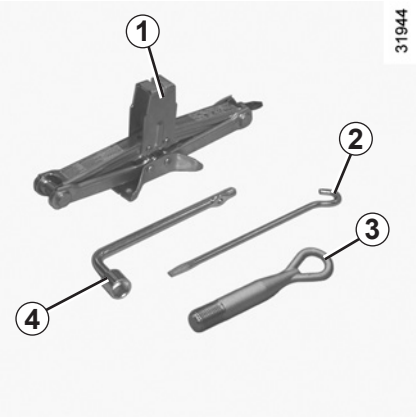

The tools are located in the luggage compartment under the luggage compartment carpet.

The tools included in the tool kit depend on the vehicle.

Jack *1*
Fold the jack away correctly before storing it in its housing.

Jack handle *2*

Towing hitch *3*
Refer to the information on “Towing” in Section 5.

Wheelbrace *4*
Allows the wheel bolts to be locked/unlocked.

Note: depending on the vehicle, tools ***2*** and ***4*** are stored in a bag.

Do not leave the tools unsecured inside the vehicle as they may come loose under braking. After use, check that all the tools are correctly clipped into the tool kit, then position it correctly in its housing: there is a risk of injury.

If wheel bolts are supplied in the tool kit, only use these bolts for the emergency spare wheel: refer to the label affixed to the emergency spare wheel.

The jack is designed for wheel changing purposes only. Under no circumstances should it be used for carrying out repairs underneath the vehicle or to gain access to the underside of the vehicle.

Switch on the hazard warning lights.

Keep the vehicle away from traffic and on a level surface where it will not slip (if necessary, place a solid support under the jack base).

Apply the parking brake and engage a gear (first or reverse, or **P** for automatic transmissions).

Ask all the passengers to leave the vehicle and keep them away from traffic.

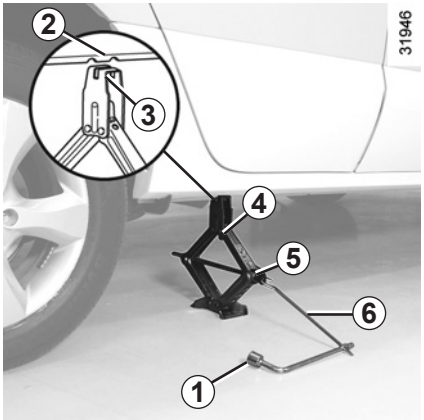

Vehicles equipped with jack, wheelbrace and wheel wrench

Use the wheelbrace ***1*** to slacken off the wheel bolts. Fit it so that you press downwards rather than pulling upwards.

Start cranking up jack ***4*** by hand to align the base plate (which should sit flat against the ground) and until the jack head ***3*** is in the centre of mark ***2***.

Attach the wheelbrace ***1*** and the jack handle ***6*** (in groove ***5***).

Turn the wheelbrace until the wheel lifts off the ground.

If the vehicle is not equipped with a jack, wheelbrace or wheel wrench, these can be obtained from an approved dealer.

To prevent any risk of injury or damage to the vehicle, raise the jack until the wheel you are replacing is a maximum of 3 centimetres off the ground.

CHANGING A WHEEL (2/2)

Undo the bolts and take off the wheel.

Fit the emergency spare wheel on the central hub and turn it to locate the mounting holes in the wheel and the hub.

If bolts are supplied with the emergency spare wheel, only use these bolts for the emergency spare wheel. Tighten the bolts, checking that the wheel is correctly positioned on its hub and lower the jack.

With the wheel on the ground, tighten the screws as fully as possible and check the tightness as soon as possible (tightening torque 108 N.m).

If you have a puncture, replace the wheel as soon as possible.

A tyre which has been punctured should always be inspected (and repaired, where possible) by a specialist.

Anti-theft bolt

If you use anti-theft bolts, fit these nearest the valve (wheel embellisher may not be able to fit).

If the vehicle is parked on the hard shoulder, you must warn other road users of your vehicle's presence with a warning triangle or with other devices as per the legislation applying to the country you are in.

Tyre and wheel safety

The tyres are the only contact between the vehicle and the road, so it is essential to keep them in good condition.

You must make sure that your tyres conform to local road traffic regulations.

When they need to be replaced, only tyres of the same make, size, type and profile should be used.

Tyres fitted to the vehicle should either be identical to those fitted originally or conform to those recommended by your approved dealer.

Maintaining the tyres

The tyres must be in good condition and the tread form must have sufficient depth; tyres approved by our technical department have tread wear indicators ***1*** which are **indicators moulded into the tread at several points**.

When the tyre tread has been worn to the level of the wear indicators, **they become visible *2*:** it is **then** necessary to replace your tyres because the tread rubber is **1.6 mm deep at most, resulting in poor roadholding on wet roads**.

An overloaded vehicle, long journeys by motorway, particularly in very hot weather, or continual driving on poorly surfaced minor roads will lead to more rapid tyre wear and affect safety.

Incidents which occur when driving, such as striking the kerb, may damage the tyres and wheel rims, and could also lead to misalignment of the front or rear axle geometry. In this case, have the condition of these checked by an approved dealer.

Tyre pressures

Adhere to the tyre pressures (including the emergency spare wheel). The tyre pressures should be checked at least once a month and additionally before any long journey (refer to the label affixed to the edge of the driver's door).

Incorrect tyre pressures lead to abnormal tyre wear and unusually hot running. These are factors which may seriously affect safety and lead to:

– poor road holding,

– risk of bursting or tread separation.

The pressure depends on the load and the speed of use. Adjust the pressures according to the conditions of use (refer to the information on "Tyre pressures").

Pressures should be checked when the tyres are cold; ignore higher pressures which may be reached in hot weather or following a fast journey.

If tyre pressures cannot be checked when the tyres are **cold,** the normal pressures must be increased by **0.2** to **0.3** bar (or **3 PSI**).

Never deflate a hot tyre.

Special note

Depending on the vehicle, there may be an adapter which needs to be positioned on the valve before air is added.

Please be aware that a poorly tightened or missing valve cap can make the tyres less airtight and lead to pressure loss.

Always use valve caps identical to those fitted originally and tighten them fully.

Emergency spare wheel

Refer to the information on the "Emergency spare wheel" and instructions on "Changing a wheel" in Section 5.

Changing wheels around

Vehicles fitted with the tyre pressure monitors

The tyre pressure monitor takes around 8 minutes to identify that tyres have been swapped or replaced. The system will not operate during this time.

While the tyre pressure monitor is identifying the tyres which have been replaced, the information sent by the system may be inaccurate and this could have serious consequences.

Fitting new tyres

Always ensure tyres with identical specifications are fitted to all four wheels (brand, size, structure, wear etc.). Fitting tyres of different sizes to the front and rear wheels and/or left and right wheels may have serious consequences for the tyres, gearbox, transfer gearbox and the rear differential pinions.

For safety reasons, this operation must be carried out by a specialist.
Fitting different tyres may change your vehicle as follows:
- it may mean that your vehicle no longer conforms to current regulations;
- it may change the way it handles when cornering;
- it may cause the steering to be heavy;
- It may affect the use of snow chains.

Use in winter

Chains

For safety reasons, fitting snow chains to the rear axle is strictly forbidden.
Chains cannot be fitted to tyres which are larger than those originally fitted to the vehicle.

Snow or Winter tyres

We would recommend that these be fitted to all **four wheels** to ensure that your vehicle retains maximum adhesion.

Warning: These tyres sometimes have a specific direction of rotation and a maximum speed index which may be lower than the maximum speed of your vehicle.

Chains may only be fitted to tyres of the same size as those originally fitted to **your vehicle**.

Studded tyres

This type of equipment may only be used for a limited period and as laid down by local legislation. It is necessary to observe the speed specified by current legislation.

These tyres must, at a minimum, be fitted to the two front wheels.

In all cases, we would recommend that you contact an approved dealer who will be able to advise you on the choice of equipment which is most suitable for your vehicle.

When changing a tyre, make sure all four tyres are changed at the same time in order to preserve the transmission system.

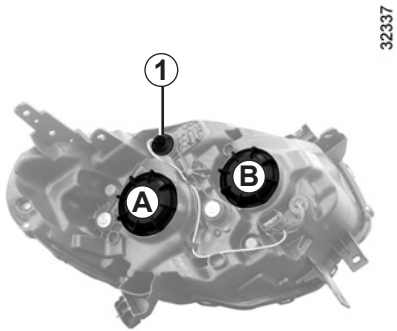

However, because the protective covers need to be removed, **you are advised to have your bulbs replaced by an approved dealer.**

To comply with current legislation, or as a precaution, you can obtain an emergency kit from an approved dealer containing a set of spare bulbs and fuses.

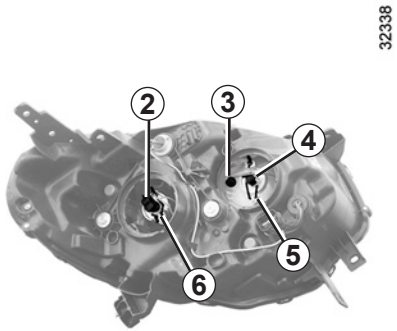

Dipped beam/main beam headlights

Remove cover ***A*** or ***B*** then remove connector ***2*** or ***4*** from the bulb. Unclip attachment ***6*** or ***5*** then remove the bulb.

Bulb type: always use **55W** anti UV bulbs to prevent damage to the lights' plastic glass.

Bulb *2* → H7 (long life)

Bulb *4* → H7

Do not touch the bulb glass. Hold it by its base.

When the bulb has been changed, make sure you refit the cover correctly.

Direction indicator lights

Undo bulb holder ***1*** a quarter of a turn.

Undo the bulb a quarter of a turn.

Bulb type: WY21W.

Front side light

Disconnect the bulb holder ***3*** then remove the bulb.

Bulb type: W5W.

The bulbs are under pressure and can break when replaced.

Risk of injury.

The engine may be hot when carrying out operations in close proximity. In addition, the engine cooling fan can come on at any moment.

Risk of injury.

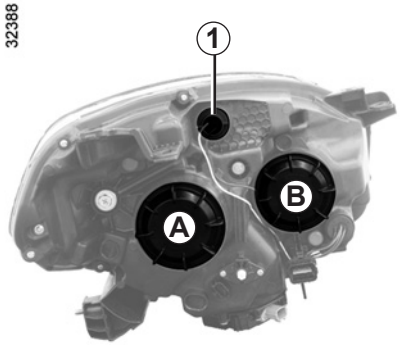

Because some components (the battery, its mounting) need to be removed, **you are advised to have your bulbs replaced by an approved dealer.**

Dipped beam headlights *A*

Never remove cover *A*. fire hazard.

Due to the danger involved in handling high-voltage devices, this type of bulb must be replaced by an approved dealer.

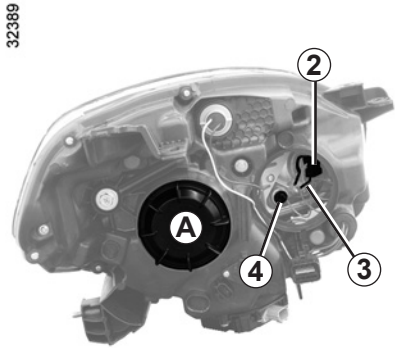

Cornering lights

Remove cover ***B***, pull on the connector ***2***. Remove clip ***3***, pressing down on it, then remove the bulb holder.
Bulb type: H7.

Front side light

Remove the cover ***B***, then pull bulb holder ***4***.
Bulb type: W5W.

Direction indicator lights

Turn the bulb holder ***1*** to the left.
Bulb type: WY21W.

Cleaning the headlights

As the headlights are made of plastic glass, use a soft cloth or cotton wool to clean them. If this does not clean it properly, moisten the cloth with soapy water, then wipe clean with a soft damp cloth or cotton wool.

Finally, **carefully** dry off with a soft dry cloth.

Cleaning products containing alcohol must not be used.

The engine may be hot when carrying out operations in close proximity. In addition, the engine cooling fan can come on at any moment.

Risk of injury.

A special mounting is required to fit this type of headlight, **it is forbidden to fit a headlight with xenon bulbs to a vehicle which was not designed for it.**

Front fog lights *1*

Changing a bulb:

Contact an approved dealer.

The bulbs are under pressure and can break when replaced.

Risk of injury.

Additional lights

If you wish to fit fog lights or long range headlights to your vehicle, consult an approved dealer.

Any operation on (or modification to) the electrical system must be performed by an approved dealer since an incorrect connection might damage the electrical equipment (harness, components and in particular the alternator). In addition, your Dealer has all the parts required for fitting these units.

However, because bodywork components need to be removed, **you are advised to have your bulbs replaced by an approved dealer.**

When changing the bulb, do not touch the electrical circuit in which the new bulb is to be inserted.

You could damage the light.

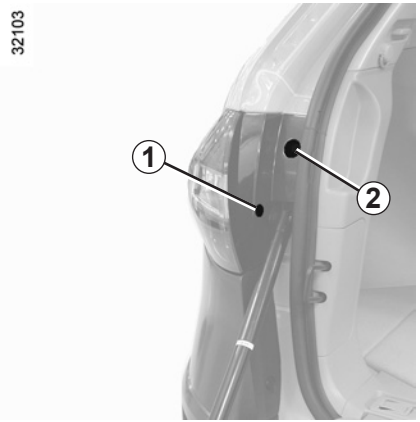

Removing the bulbs

Open the tailgate then unclip cover ***1*** using a flat blade screwdriver or similar tool.

Remove the cover ***2*** then remove the nut behind.

The bulbs are under pressure and can break when replaced.

Risk of injury.

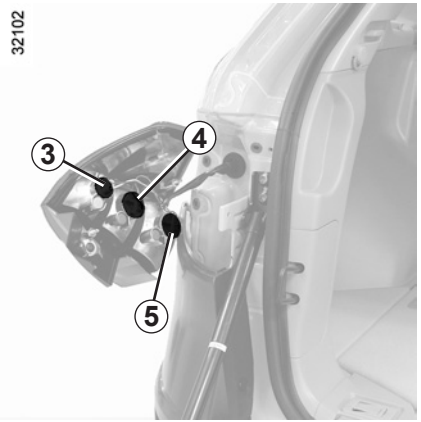

Release the light unit by pulling it backwards.

Undo bulb holder ***3***, ***4*** or ***5*** a quarter of a turn then replace the bulb.

Note: Ensure that the lead is in place before inserting the light unit.

Side light *3*

Bulb type: W5W.

Indicator light *4*

Bulb type: PY21W.

Brake light *5*

Bulb type: P21W.

Side lights and tailgate reversing light

Remove the screws ***7*** on the tailgate before removing the light unit ***6*** by pushing it outwards.

Undo bulb holder ***8*** or ***9*** a quarter of a turn then replace the bulb.

Note: Ensure that the lead is in place before inserting the light unit.

Reversing light *8*

Bulb type: W16W.

Side light *9*

Bulb type: W5W.

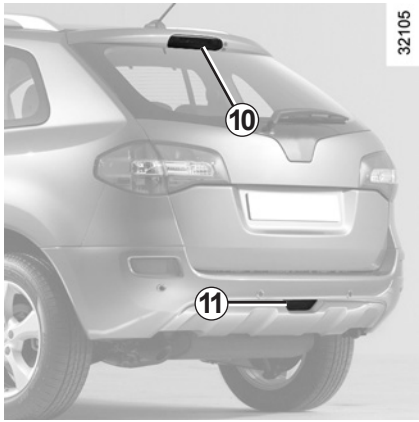

High-level brake light *10*

Consult an approved Dealer.

Rear fog light *11*

(depending on vehicle)

Consult an approved Dealer.

The bulbs are under pressure and can break when replaced.

Risk of injury.

Do not raise your vehicle with the jack to change the bulbs.

Risk of injury.

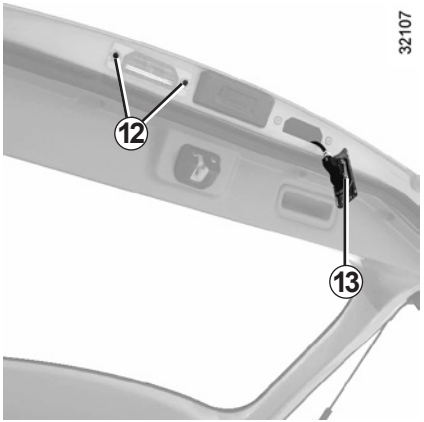

Number plate lights *13*

Remove the two screws ***12*** then unclip the light.

Unclip the lens (using a flat-blade screwdriver or similar).

Remove the bulb.

Bulb type: W5W.

High-level indicator lights *14*

Consult an approved Dealer.

The bulbs are under pressure and can break when replaced.

Risk of injury.

Vanity mirror light

Use a flat-blade screwdriver or similar to unclip the lens ***1***.

Remove the bulb.

Bulb type: 12V 0.15A.

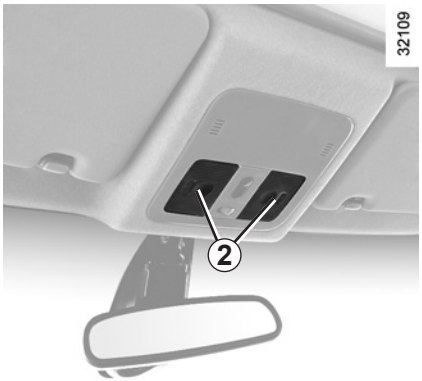

Courtesy light

Use a flat-blade screwdriver or similar to unclip the lens ***2***.

Remove the bulb ***3***.

Bulb type: C5W festoon bulb.

The bulbs are under pressure and can break when replaced.

Risk of injury.

Passenger storage compartment light *4*

Consult an approved Dealer.

Door lights

Unclip light ***5*** (using a flat-blade screwdriver or similar). Unclip the lens then remove the bulb.

Bulb type: W5W.

The bulbs are under pressure and can break when replaced.

Risk of injury.

Rear passenger lights *6* and light for luggage compartment *7*

Unclip light ***6*** or ***7*** (using a flat-blade screwdriver or similar).

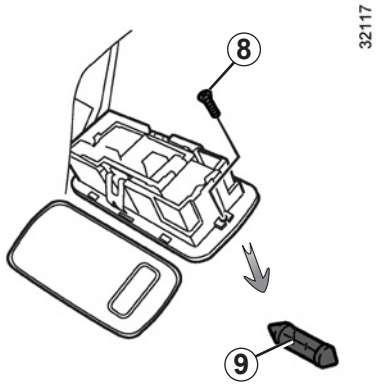

Remove the screw ***8*** (using a tool such as a flat-blade screwdriver) then unclip the lens. Remove the bulb ***9***.

Bulb type: C5W festoon bulb.

The bulbs are under pressure and can break when replaced.

Risk of injury.

Fuse box *1*

If any electrical component does not work, check the condition of the fuses.

Open the cover.

To identify the fuses, refer to the fuse allocation label (shown on the following page).

Check the fuse in question and **replace it,** if necessary, **by a fuse of the same rating**.

If a fuse is fitted where the rating is too high, it may cause the electrical circuit to overheat (risk of fire) in the event of an item of equipment using an excessive amount of current.

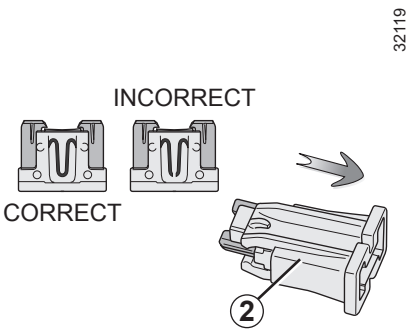

Disconnect the fuse using tweezers ***2***.

Slide the fuse backwards to remove it from the tweezers.

Do not reuse the fuse.

In accordance with local legislation or as a precautionary measure:

Obtain an emergency kit containing a set of spare bulbs and fuses from an approved Dealer.

FUSES (2/2)

Allocation of fuses (DEPENDING ON THE EQUIPMENT LEVEL)

Symbol	Allocation
SPARE	Spare fuses
BLOWER MOTOR	Ventilation
REAR DEFOG	Heated rear screen
BOSE AMP	Audio system
FRONT POWER SOCKET	Front lights
CIGAR LIGHTER	Cigar lighter
AUDIO MIRROR	Audio system and electric rear-view mirrors
REAR POWER SOCKET	Rear lights

Symbol	Allocation
ELEC IGN	Electrical equipment
4WD CONT	All-wheel drive transmission
METER	Counter
ROOM LAMP	Interior light
MIRROR HEATER	Heated door mirrors
BOSE AMP	Audio system
STOP LAMP	Brake lights
ELEC B (+)	Electrical equipment
AIR BAG	Air bag
METER	Equipment and options

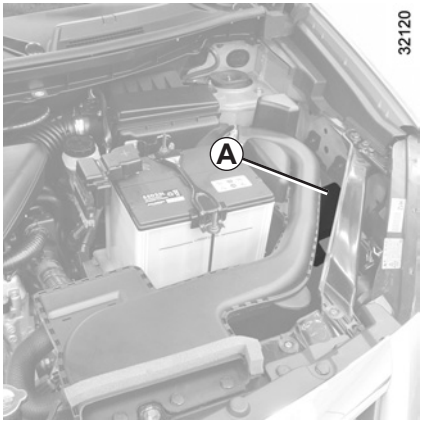

Some accessories are protected by fuses located in the engine compartment in fuse box ***A***.

However, because of their reduced accessibility, we advise you to have your fuses replaced by an approved Dealer.

BATTERY: troubleshooting (1/2)

To avoid all risk of sparks

– Ensure that any electrical consumers (courtesy lights, etc.) are switched off before disconnecting or reconnecting the battery.

– When charging, stop the charger before connecting or disconnecting the battery.

– Do not place metal objects on the battery to avoid creating a short circuit between the terminals.

– Always wait at least one minute after the engine has been switched off before disconnecting a battery.

– Make sure that you reconnect the battery terminals after refitting.

Handle the battery with care as it contains sulphuric acid, which must not come into contact with eyes or skin. If it does, wash the affected area with plenty of cold water. If necessary, consult a doctor.

Ensure that naked flames, red hot objects and sparks do not come into contact with the battery as there is a risk of explosion.

The engine may be hot when carrying out operations in close proximity. In addition, the engine cooling fan can come on at any moment.

Risk of injury.

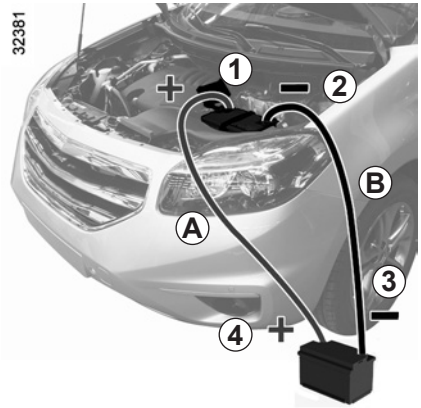

Connecting a battery charger

The battery charger must be compatible with a battery with nominal voltage of 12 volts.

Switch the engine off and then disconnect both battery leads **starting with the negative terminal**.

Do not disconnect the battery when the engine is running. **Follow the instructions given by the manufacturer of the battery charger you are using.**

Starting the vehicle using the battery from another vehicle

If you have to use the battery from another vehicle to start, obtain suitable jump leads (with a large cross section) from an approved dealer or, if you already have jump leads, ensure that they are in perfect condition.

The two batteries must have an identical nominal voltage of 12 volts. The battery supplying the current should have a capacity (amp-hours, Ah) which is at least the same as that of the discharged battery.

Ensure that there is no risk of contact between the two vehicles (risk of short circuiting when the positive terminals are connected) and that the discharged battery is properly connected. Switch off your vehicle ignition.

Start the engine of the vehicle supplying the current and run it at an intermediate engine speed.

Attach the positive lead ***A*** to the (+) **terminal *1*** then to the (+) **terminal *4*** of the battery supplying the current.

Connect the negative cable ***B*** to the (–) **terminal *3*** of the battery supplying the current and then to the (–) **terminal *2*** of the discharged battery.

Check that there is no contact between leads ***A*** and ***B*** and that the positive lead ***A*** is not touching any metal parts on the vehicle supplying the current.

Start the engine as you would normally. As soon as it starts, disconnect cables ***A*** and ***B*** in reverse order **(*2 - 3 - 4 - 1*).**

Special procedures may be required to charge some batteries. Contact your approved dealer.

Avoid all risk of sparks which may cause an immediate explosion, and charge the battery in a well-ventilated area. Risk of serious injury.

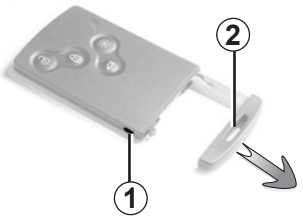

Replacing the battery

When the message “Replace card battery” appears on the instrument panel, replace the RENAULT card battery, press button ***1***, pulling on emergency key ***2***, then unclip cover ***3*** using tab ***4***. Remove the battery by pressing on one side (movement ***A***) and by lifting the other (movement ***B***) then replace it, ensuring the polarity and model, shown on cover ***3*** are respected.

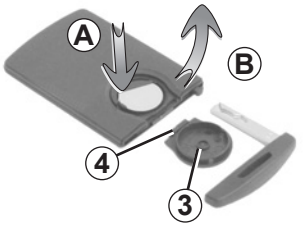

When refitting, proceed in the reverse order, then press one of the buttons on the card four times, close to the vehicle: the next time the vehicle is started, the message will disappear.

Note: it is not advisable to touch the electronic circuit or contacts on the RENAULT card when replacing the battery.

Check that the cover is clipped shut.

Operating faults

If the battery is too weak to ensure correct operation, you may start (insert the RENAULT card in the card reader) and lock/unlock the vehicle (refer to the information on “Locking/unlocking the doors” in Section 1).

The batteries are available from approved Dealers, and their service life approximately two years. Check that there is no dye on the battery: risk of an incorrect electrical contact.

Do not throw away your used batteries; give them to an organisation responsible for collecting and recycling batteries.

Before fitting an electrical or electronic device (particularly for transmitters/receivers: frequency bandwidth, power level, position of the aerial etc.), ensure that it is compatible with your vehicle.

Contact an approved dealer for this information.

Use of transmission/ receiving devices (telephones, CB equipment etc.).

Telephones and CB equipment with integrated aerials may cause interference to the original electronic systems fitted to the vehicle: it is advisable only to use equipment with an external aerial.

Furthermore, we remind you of the need to comply with the legislation in force concerning the use of such equipment.

Fitting after-market accessories

If you wish to install accessories on the vehicle: consult an approved dealer.

Also, to ensure the correct operation of your vehicle, and to avoid any risk to your safety, we recommend that you use only specific accessories, designed for your vehicle, which are the only accessories for which the manufacturer will provide a warranty.

If you are using an anti-theft device, only attach it to the brake pedal.

Electrical and electronic accessories

– Connect accessories with a maximum power of 120 Watts only.

Fire hazard.

– No work may be carried out on the vehicle's electrical or radio circuits, except by approved Dealers: an incorrectly connected system may result in damage being caused to the electrical equipment and/or the components connected to it;

– if the vehicle is fitted with any aftermarket electrical equipment, make sure that the unit is correctly protected by a fuse. Establish the rating and position of this fuse.

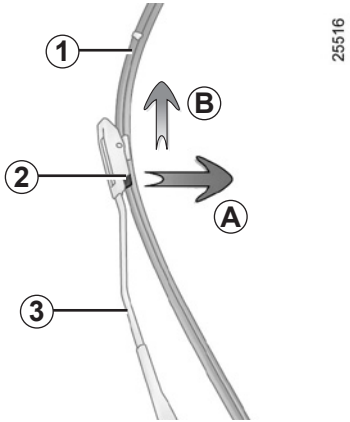

Replacing windscreen wiper blades *1*

With the ignition on and engine switched off, lower the windscreen wiper stalk completely: they stop slightly away from the bonnet. Lift the wiper arm ***3***, pinch the tabs ***2***, gently pull upwards (movement ***A***) then push the blade upwards (movement ***B***).

Refitting

Slide the blade along the arm until it clips on. Check that it is correctly locked. Return the windscreen wiper stalk to the park position.

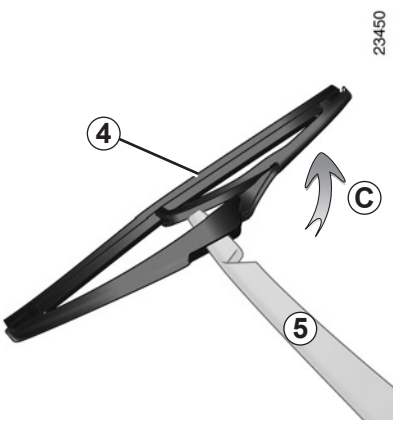

Rear screen wiper blade *4*

– Lift wiper arm ***5***;

– pivot the blade ***4*** beyond the point of resistance. (movement ***C***);

Replace the blade.

To refit

To refit the wiper blade, proceed in reverse order to removal. Make sure that the blade is correctly locked in position.

Check the condition of the wiper blades. You are responsible for their service life:

– clean the blades, windscreen and rear screen regularly with soapy water;

– do not use them when the windscreen or rear screen are dry;

– free them from the windscreen or rear screen when they have not been used for a long time.

In frosty weather, make sure that the wiper blades are not stuck by ice (to avoid the risk of the motor overheating).

Check the condition of the wiper blades.

Replace the wiper blades as soon as they begin to lose efficiency (approximately once a year).

Whilst changing the blade, take care not to drop the arm onto the window after it has been removed as this may break the window.

Towing procedure

Before any towing, check that the steering column is not locked.

If it is locked, insert the RENAULT card into the reader and press the Start/Stop button **twice** without pressing on the pedals. The steering column unlocks, the vehicle accessory functions are supplied with power and you can use the lights (stop lights, directional indicator lights, etc.): the vehicle must have its lights on at night.

Do not remove the RENAULT card from the reader when the vehicle is being towed.

Press the Start/Stop button twice in succession to switch off the ignition once towing is finished (risk of running down the battery).

Furthermore, it is essential to respect the towing regulations set out in the legislation of the country concerned and, if your vehicle is the towing vehicle, not to exceed the towing weight of your vehicle. Contact your approved Dealer.

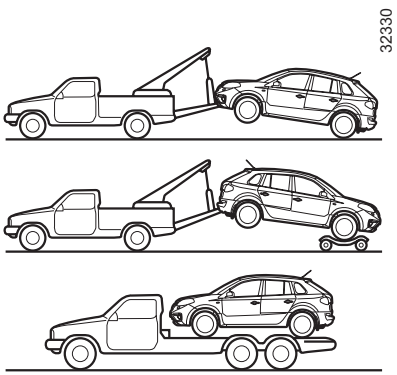

2WD vehicles

Vehicles fitted with an automatic transmission or continuously variable transmission.

With the ignition off, the gearbox is no longer lubricated. If it is not, the vehicle must be transported on a trailer or be towed with the front wheels off the ground.

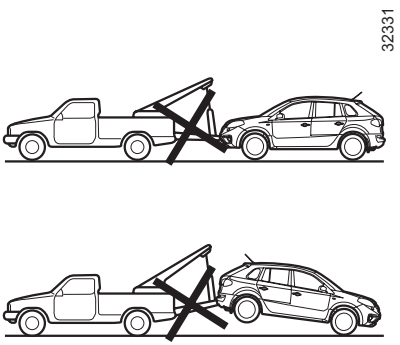

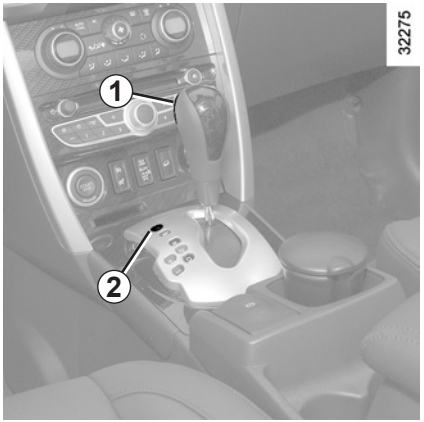

If the lever is stuck in **P**, even though you are depressing the brake pedal, the lever can be released manually.

To do this, first remove the cover ***2*** on the left-hand side of the gear lever.

While depressing the brake pedal, shift the gear lever into neutral **(N)** and simultaneously press the button ***1*** on the lever and on the button under the cover ***2***.

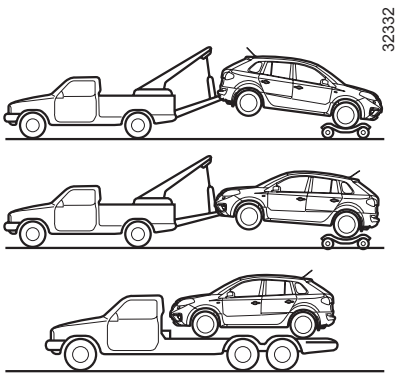

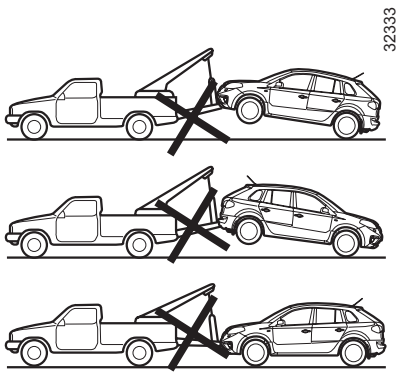

4WD vehicles

Whichever type of gearbox is fitted, a 4WD vehicle must never be towed if any of its 4 wheels are touching the ground.

A 4WD vehicle must never be towed if one of its 4 wheels is touching the ground.

Only use the front towing point *1* and the rear towing point *4* (never use the driveshafts). These towing points may only be used for towing: never use them for lifting the vehicle directly or indirectly.

When the engine is stopped, steering and braking assistance are not operational.

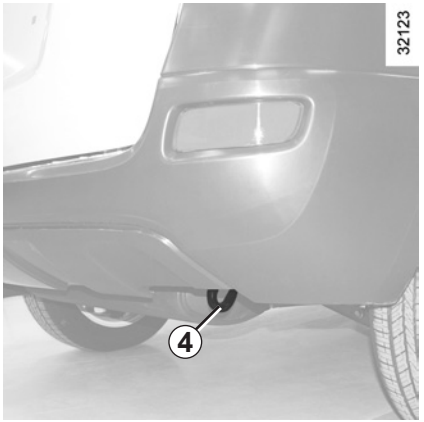

Using the towing hitch

Remove cover ***2***.

Screw in towing hitch *3* as far as possible. To do this, insert the towing hitch ***3*** and screw it in by hand, then tighten it using the wheelbrace.

The towing hitch ***3*** and the wheelbrace are located in the tool kit in the luggage compartment (refer to information concerning the tool kit in Section 5).

– RENAULT recommends the use of a rigid towing bar. If a rope or cable is used (where the law allows this), the vehicle being towed must be able to brake.

– A vehicle must not be towed if it is not fit to be driven.

– Do not accelerate or brake suddenly when towing, as this may result in damage being caused to the vehicle.

– When towing a vehicle, it is advisable not to exceed **15 mph (25 km/h)**.

Never leave tools unsecured in the vehicle: there is a risk that they may be thrown about during braking.

OPERATING FAULTS (1/5)

The following advice will enable you to carry out quick, temporary repairs. For safety reasons you should always contact an approved Dealer as soon as possible.

Using the RENAULT card	POSSIBLE CAUSES	WHAT TO DO
The RENAULT card does not lock or unlock the doors.	Card battery is flat.	Replace the battery. You can still lock/unlock and start your vehicle (refer to the information on “Locking/unlocking the doors” in Section 1 and “Starting/Stopping the engine” in Section 2).
	Use of appliances operating on the same frequency as the card (mobile phone, etc.).	Stop using the equipment or use the emergency key (refer to the information on “Locking/unlocking the doors” in Section 1).
	Vehicle located in a high electromagnetic radiation zone. Vehicle battery flat.	Use the emergency key integrated in the card (refer to the information on “Locking/unlocking the doors” in Section 1).

OPERATING FAULTS (2/5)

The starter is activated	POSSIBLE CAUSES	WHAT TO DO
The instrument panel indicator lights are weak or fail to light up and the starter does not turn.	Battery terminals not tight, battery terminals disconnected or oxidised.	Retighten or reconnect the terminals, or clean them if they are oxidised.
	Discharged battery or not operational.	Connect another battery to the faulty battery. Refer to information on “Battery: troubleshooting” in Section 5 or replace the battery if necessary. Do not push the vehicle if the steering column is locked.
The engine will not start.	Starting conditions are not fulfilled.	Refer to the information on “Starting/stopping the engine” in Section 2.
	The RENAULT “hands-free” card does not work.	Insert the card in the card reader in order to start the engine. Refer to the information on “Starting/stopping the engine” in Section 2.
The engine cannot be switched off.	Card not detected.	Insert the card in card reader.
	Electronic fault.	Press the starter button quickly five times.
The steering column remains locked.	Steering wheel locked.	Move the steering wheel while pressing the engine start button (refer to the information on “Starting the engine” in Section 2).

OPERATING FAULTS (3/5)

On the road	POSSIBLE CAUSES	WHAT TO DO
Vibrations.	Tyres not inflated to correct pressures, incorrectly balanced or damaged.	Check the tyre pressures: if this is not the problem, have them checked by an approved Dealer.
White smoke from the exhaust.	This is not necessarily a fault. Smoke may be caused by regeneration of the particle filter.	Refer to the information on “Special features of diesel versions” in Section 2.
Smoke under the bonnet.	Short-circuit or cooling system leak.	Stop, switch off the ignition, stand away from the vehicle and contact an approved dealer.
The oil pressure warning light comes on:		
while cornering or braking	The level is too low.	Top up the engine oil (refer to the information on “Engine oil level – Topping up/refilling” in Section 4).
is slow to go out or remains lit under acceleration	Loss of oil pressure.	Stop the vehicle: contact an authorised dealer.

OPERATING FAULTS (4/5)

On the road	POSSIBLE CAUSES	WHAT TO DO
Steering becomes heavy.	Assistance overheating.	Consult an approved dealer.
The engine is overheating. The coolant temperature indicator is in the warning zone and warning light STOP comes on.	Engine cooling fan not working.	Stop the vehicle, switch off the engine and contact an approved dealer.
	Coolant leaks.	Check the coolant reservoir: it should contain fluid. If there is no coolant, consult an approved dealer as soon as possible.

Radiator: If there is a significant lack of coolant, remember that it must never be topped up using cold coolant while the engine is very warm. After any procedure on the vehicle which has involved even partial draining of the cooling system, it must be refilled with a new mixture prepared in the correct proportions. Reminder: only products approved by our Technical Department may be used for this purpose.

OPERATING FAULTS (5/5)

Electrical equipment	POSSIBLE CAUSES	WHAT TO DO
The wipers do not work.	Wiper blades stuck.	Free the blades before using the wipers.
	Faulty electrical circuit.	Consult an approved dealer.
	Fuse damaged.	Replace the fuse, refer to the information on “Fuses”.
The wiper does not stop.	Faulty electrical controls.	Consult an approved dealer.
Direction indicators flashing more quickly.	Blown bulb.	See information on “Headlights: changing the bulbs” or “Rear lights: changing the bulbs” in section 5.
The direction indicators do not work.	Faulty electrical circuit.	Consult an approved dealer.
The lights do not come on or go off.	Faulty electrical circuit or control.	Consult an approved dealer.
Traces of condensation in the lights.	Traces of condensation may be a natural phenomenon caused by variations in temperature. In this situation, these traces soon disappear when the lights are switched on.	
The illumination of the seat belt reminder warning light does not match the seat belt status.	An object is stuck between the floor and the seat and is disrupting the operation of the sensor.	Remove any objects from underneath the rear seats.

Section 6: Technical specifications

Vehicle identification plates 6.2
Dimensions 6.4
Engine specifications 6.5
Weights 6.6
Towing weights 6.6
Replacement parts and repairs 6.7
Service sheets 6.8
Anti-corrosion check 6.14

VEHICLE IDENTIFICATION PLATES

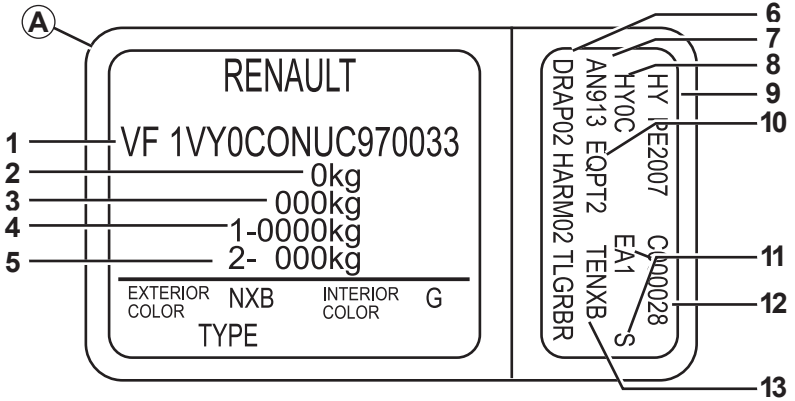

The information shown on the vehicle identification plate should be quoted on all correspondence or orders.

Vehicle identification plate *A*

1 Vehicle type and chassis number. **Depending on the vehicle, this information is also given on marking *B*.**

2 Maximum permissible all-up weight.

3 Total train weight (vehicle fully loaded, with trailer).

4 Front axle maximum permissible all-up weight.

5 Rear axle maximum permissible all-up weight.

6 Technical specifications of vehicle.

7 Vehicle paint reference.

8 Equipment level.

9 Vehicle type.

10 Trim code.

11 Additional equipment specification.

12 Fabrication number.

13 Interior trim code.

ENGINE IDENTIFICATION PLATES

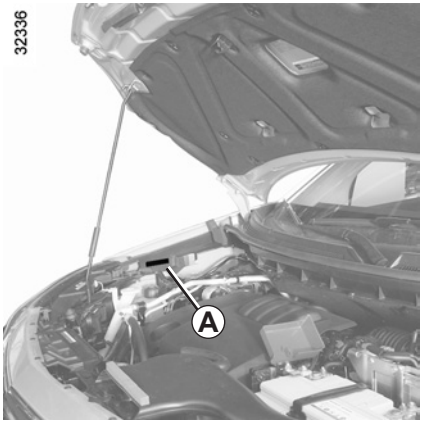

The information on the label *A* or engine plate *B* should be quoted on all of your correspondence or orders.

Vehicle plate *A*

This includes the vehicle type and the chassis number.

Note: depending on the vehicle, a label stating “Do not cover, paint over, weld, cut, perforate, alter or remove the Vehicle Identification Number” is under the vehicle plate ***A***.

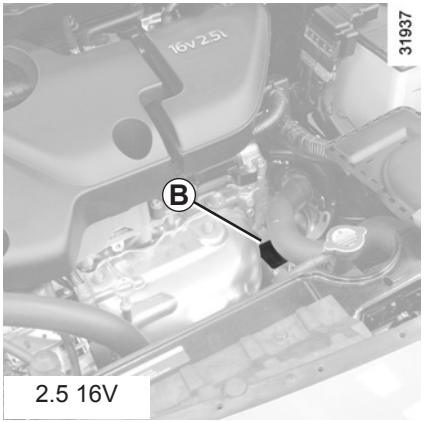

2.5 16V

Engine plate *B*

This gives the engine type and number (it may be in a different location, depending on the engine).

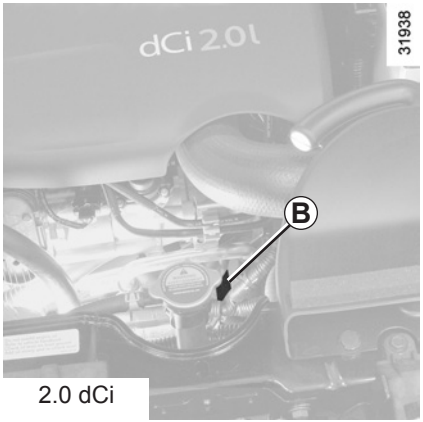

2.0 dCi

DIMENSIONS (in metres)

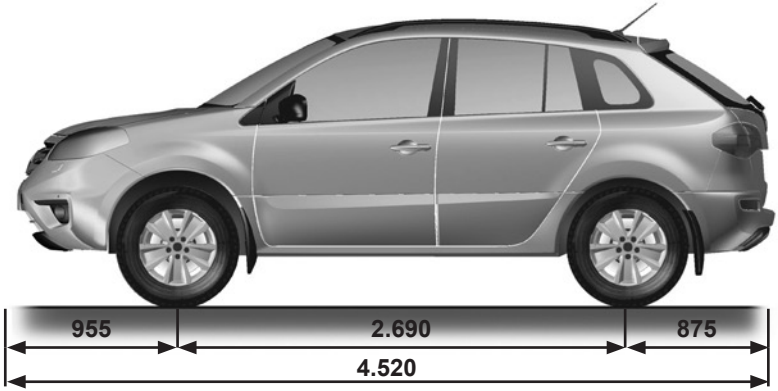

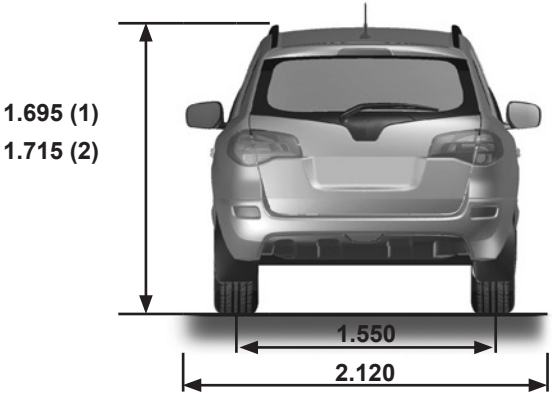

32329

(1) without roof rack

(2) with roof rack

ENGINE SPECIFICATIONS

Versions	2.5 16V	2.0 dCi
Engine type (see engine number)	2TR	M9R Turbo
Cubic capacity (cc)	2488	1995
Type of fuel **Octane Rating**	It is **essential** to use unleaded petrol with the octane rating stated on the label inside the fuel filler flap. If not available, for a limited time only, use unleaded fuel: – with an Octane rating of 91 for a label showing 95 or 98; – with an octane rating of 87 for a label showing 91, 95 or 98.	Diesel The label located in the fuel filler flap indicates authorised fuels.
Spark plugs	Only use the spark plugs specified for your vehicle's engine. The type should be marked on a label affixed inside the engine compartment. If it is not then contact an approved dealer. Fitting spark plugs which are not to specification may damage the engine.	–

WEIGHTS (in kg)

The weights indicated are those of a basic model without options: they will vary depending on the equipment level of your vehicle. Consult an authorised dealer.

Maximum permissible all-up weight (MMAC) **Total train weight (MTR)**	Weights indicated on the manufacturer's plate (refer to Section 6 "Vehicle identification plate")
Towing weight braked	found by calculating: **Total train weight** **Maximum permissible all-up weight**
Towing weight unbraked	750
Permissible nose weight	100
Permissible load on the roof with the carrying device	85 kg (including the carrying device)

Towing weight (Towing a caravan, boat, etc.)

– It is important to comply with the towing weights, governed by local legislation in each country and, in particular, laid down in the Road Traffic Regulations. Contact your approved Dealer about any towing equipment.

– For vehicles fitted with a trailer, **the total train weight (vehicle + trailer) must never be exceeded.** However, the following is tolerated:

  – rear axle maximum permissible weight exceeded by no more than 15%,
  – maximum permissible all-up weight exceeded by no more than 10% or 100 kg (whichever is reached first).

In either case, the maximum speed of the vehicle and trailer must not exceed 60 mph (100 kph) and the tyre pressures must be increased by 0.2 bar (3 PSI).

– The engine output and climbing capability are reduced with altitude. We recommend that the maximum load be reduced by 10% at an altitude of 1,000 metres and by an additional 10% for each 1,000 metres thereafter.

REPLACEMENT PARTS AND REPAIRS

Original parts are based on strict specifications and are subject to highly-specialised tests. Therefore, they are of at least the same level of quality as the parts fitted originally.

If you always fit genuine replacement parts to your vehicle, you will ensure that it performs well. Furthermore, repairs carried out within the manufacturer's Network using original parts are guaranteed according to the conditions set out on the reverse of the repair order.

SERVICE SHEETS (1/6)

VIN: .....

Date: Miles (Km):	Invoice number:	Comments/miscellaneous
Type of operation: Service □ ..... □ **Anti-corrosion check:** OK □ Not OK* □ *See specific page	**Stamp**	

Date: Miles (Km):	Invoice number:	Comments/miscellaneous
Type of operation: Service □ ..... □ **Anti-corrosion check:** OK □ Not OK* □ *See specific page	**Stamp**	

Date: Miles (Km):	Invoice number:	Comments/miscellaneous
Type of operation: Service □ ..... □ **Anti-corrosion check:** OK □ Not OK* □ *See specific page	**Stamp**	

SERVICE SHEETS (2/6)

VIN: .....

Date: Miles (Km):	Invoice number:	Comments/miscellaneous
Type of operation: Service □ ..... □ **Anti-corrosion check:** OK □ Not OK* □ *See specific page	**Stamp**	

Date: Miles (Km):	Invoice number:	Comments/miscellaneous
Type of operation: Service □ ..... □ **Anti-corrosion check:** OK □ Not OK* □ *See specific page	**Stamp**	

Date: Miles (Km):	Invoice number:	Comments/miscellaneous
Type of operation: Service □ ..... □ **Anti-corrosion check:** OK □ Not OK* □ *See specific page	**Stamp**	

SERVICE SHEETS (3/6)

VIN: .....

Date: Miles (Km):	Invoice number:	Comments/miscellaneous
Type of operation: Service □ ..... □ **Anti-corrosion check:** OK □ Not OK* □ *See specific page	**Stamp**	

Date: Miles (Km):	Invoice number:	Comments/miscellaneous
Type of operation: Service □ ..... □ **Anti-corrosion check:** OK □ Not OK* □ *See specific page	**Stamp**	

Date: Miles (Km):	Invoice number:	Comments/miscellaneous
Type of operation: Service □ ..... □ **Anti-corrosion check:** OK □ Not OK* □ *See specific page	**Stamp**	

SERVICE SHEETS (4/6)

VIN: .....

Date: Miles (Km):	Invoice number:	Comments/miscellaneous
Type of operation: Service □ ..... □ **Anti-corrosion check:** OK □ Not OK* □ *See specific page	**Stamp**	

Date: Miles (Km):	Invoice number:	Comments/miscellaneous
Type of operation: Service □ ..... □ **Anti-corrosion check:** OK □ Not OK* □ *See specific page	**Stamp**	

Date: Miles (Km):	Invoice number:	Comments/miscellaneous
Type of operation: Service □ ..... □ **Anti-corrosion check:** OK □ Not OK* □ *See specific page	**Stamp**	

SERVICE SHEETS (5/6)

VIN: .....

Date: Miles (Km):	Invoice number:	Comments/miscellaneous
Type of operation: Service □ ..... □ **Anti-corrosion check:** OK □ Not OK* □ *See specific page	**Stamp**	

Date: Miles (Km):	Invoice number:	Comments/miscellaneous
Type of operation: Service □ ..... □ **Anti-corrosion check:** OK □ Not OK* □ *See specific page	**Stamp**	

Date: Miles (Km):	Invoice number:	Comments/miscellaneous
Type of operation: Service □ ..... □ **Anti-corrosion check:** OK □ Not OK* □ *See specific page	**Stamp**	

SERVICE SHEETS (6/6)

VIN: .....

Date: Miles (Km):	Invoice number:	Comments/miscellaneous
Type of operation: Service □ ..... □ **Anti-corrosion check:** OK □ Not OK* □ *See specific page	**Stamp**	

Date: Miles (Km):	Invoice number:	Comments/miscellaneous
Type of operation: Service □ ..... □ **Anti-corrosion check:** OK □ Not OK* □ *See specific page	**Stamp**	

Date: Miles (Km):	Invoice number:	Comments/miscellaneous
Type of operation: Service □ ..... □ **Anti-corrosion check:** OK □ Not OK* □ *See specific page	**Stamp**	

ANTICORROSION CHECK (1/5)

If the continuation of the warranty is subject to repair, it is indicated below.

VIN: .....

Corrosion repair operation to be carried out: Date of repair:	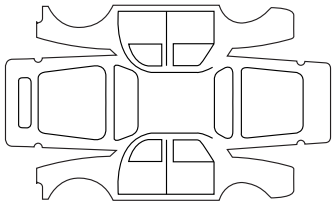	**Stamp**
Repair to be carried out: Date of repair:	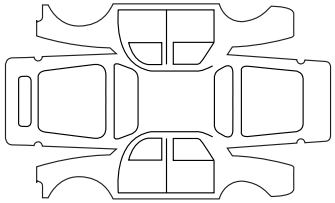	**Stamp**
Repair to be carried out: Date of repair:	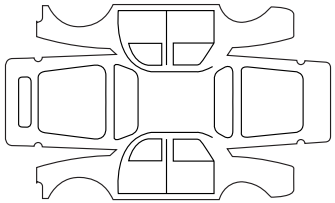	**Stamp**

ANTICORROSION CHECK (2/5)

If the continuation of the warranty is subject to repair, it is indicated below.

VIN: .....

Corrosion repair operation to be carried out: Date of repair:		**Stamp**
Repair to be carried out: Date of repair:		**Stamp**
Repair to be carried out: Date of repair:		**Stamp**

ANTICORROSION CHECK (3/5)

If the continuation of the warranty is subject to repair, it is indicated below.

VIN: .....

Corrosion repair operation to be carried out: Date of repair:		**Stamp**
Repair to be carried out: Date of repair:		**Stamp**
Repair to be carried out: Date of repair:		**Stamp**

ANTICORROSION CHECK (4/5)

If the continuation of the warranty is subject to repair, it is indicated below.

VIN: .....

Corrosion repair operation to be carried out: Date of repair:		**Stamp**
Repair to be carried out: Date of repair:		**Stamp**
Repair to be carried out: Date of repair:		**Stamp**

ANTICORROSION CHECK (5/5)

If the continuation of the warranty is subject to repair, it is indicated below.

VIN: .....

Corrosion repair operation to be carried out: Date of repair:		**Stamp**
Repair to be carried out: Date of repair:		**Stamp**
Repair to be carried out: Date of repair:		**Stamp**

ALPHABETICAL INDEX (1/5)

A

ABS ....2.24 → 2.28
accessories....5.23
accessories socket 3.28
additional methods of restraint 1.27
side protection 1.26
to the front seat belts ....1.21 → 1.24
to the rear seat belts 1.25
adjusting your driving position ....1.17 – 1.18
advice on antipollution ....2.14 → 2.16
air bag....1.21 → 1.27
activating the front passenger air bags 1.38
deactivating the front passenger air bags 1.36
air conditioning ....3.4 → 3.13
air vents ....3.2 – 3.3
all-wheel drive system ....2.21 → 2.23
anti-corrosion check ....6.14 → 6.18
anti-corrosion protection ....4.12 – 4.13
anti-lock braking system: ABS ....2.24 → 2.28
antipollution
advice 2.14
armrest:
front....3.23
rear 3.24
ashtray....3.28
automatic gearbox (use)....2.39 → 2.41
automatic gearbox selector lever....2.39 → 2.41

B

battery....4.11
troubleshooting ....5.20 – 5.21
bonnet....4.2
brake fluid 4.8
bulbs
changing ....5.9 → 5.14

C

catalytic converter....2.6, 2.8
central door locking ....1.8, 1.11 → 1.13
changing a bulb ....5.9 → 5.14
changing a wheel....5.4 – 5.5
changing gear....2.9, 2.39 → 2.41
child minder mirror....3.19
child restraint/seat ....1.28 – 1.29, 1.31 → 1.35
child safety... 1.2 – 1.3, 1.28 – 1.29, 1.31 → 1.35, 3.14 → 3.17
child seats....1.28 – 1.29, 1.31 → 1.35
children ....1.28 – 1.29
children (safety)....1.2 – 1.3, 3.14 → 3.17
cigar lighter 3.28
cleaning:
inside the vehicle ....4.14 – 4.15
outside the vehicle ....4.12 – 4.13
clock 1.39
closing the doors ....1.9 → 1.12
continuous variation....2.39 → 2.41
continuously variable transmission....2.39 → 2.41
control instruments ....1.48 → 1.59
controls ....1.40 – 1.41
coolant....1.48, 4.7
courtesy light ....3.20 – 3.21, 5.15 → 5.17
courtesy mirrors....3.18
cruise control ....2.29 → 2.35
cruise control-speed limiter....2.29 → 2.35

D

dashboard....1.40 – 1.41
deadlocking the doors 1.8
dimensions 6.4
display ....1.44 → 1.49
doors....1.9 – 1.10, 1.13
doors/tailgate 1.8
downhill speed control 2.27

driver's position .....1.40 – 1.41, 1.44 → 1.47
driving .....2.2 → 2.16, 2.18 → 2.41
driving position
settings ..... 1.17 – 1.18

E
electric beam height adjustment..... 1.66
electric windows ..... 3.14 – 3.15
electronic parking brake .....2.10 → 2.13
Electronic Stability Program: ESP .....2.24 → 2.28
emergency key ..... 1.2 – 1.3
emergency spare wheel ..... 5.2 – 5.3
engine
technical specifications 6.5
engine oil .....4.4 → 4.6
engine oil level..... 1.49
engine specifications 6.5
engine start/stop button ..... 2.3 – 2.4
environment..... 2.17
ESP: Electronic Stability Program .....2.24 → 2.28
external lights and signals 1.66

F
4 wheel drive (4WD).....2.21 → 2.23
faults
operating faults .....5.29 → 5.33
filter
air filter 4.9
diesel filter..... 4.9
particle filter 1.46, 2.8
passenger compartment filter 4.9
fittings .....3.22 → 3.27
fog lights 5.11
front passenger air bag deactivation 1.36
front seat adjustment
electric controls 1.15
manual controls ..... 1.15 – 1.16
front seats
adjustment .....1.14 → 1.16
fuel
advice on fuel economy 2.14
capacity.....1.70 → 1.72
filling.....1.46, 1.70 → 1.72
grade.....1.70 → 1.72
fuel economy .....2.14 → 2.16
fuel filler cap .....1.70 → 1.72
fuel level 1.48
fuel priming bulb 1.72, 2.8
fuel repriming..... 1.72
fuel tank
capacity.....1.70 → 1.72
fuel tank capacity.....1.70 → 1.72
fuses..... 5.18 – 5.19

G
gear lever..... 2.9
glove box 3.22

H
handbrake..... 2.9
hands-free telephone integrated control..... 3.38
hazard warning lights signal .....1.62 → 1.65
headlight beam adjustment 1.66
headlight flashers 1.62
headrest..... 1.14, 3.29
heating and air conditioning system .....3.7 → 3.13
heating system .....3.4 → 3.12
hill start 2.28
Hill Start Assistance (HSA)..... 2.28
horn 1.62
horn:
flash 1.62

sounding the horn 1.62

I
indicators 5.9
indicators:
exterior temperature indicator 1.39
instrument panel ..... 1.44 → 1.59
instrument panel ..... 1.44 → 1.59, 1.63 → 1.65
instrument panel messages ..... 1.52 → 1.59
interior trim
maintenance ..... 4.14 – 4.15

J
jack ..... 5.3 → 5.5

L
levels:
brake fluid 4.8
coolant 4.7
engine oil ..... 4.4 → 4.6
windscreen washer reservoir 4.9
lifting the vehicle
changing a wheel ..... 5.4 – 5.5
lighting:
exterior ..... 1.63 → 1.65
instrument panel ..... 1.63 → 1.65
interior ..... 3.20 – 3.21, 5.15 → 5.17
lights
additional 5.11
adjustment 1.66
changing bulbs ..... 5.9 – 5.10
fog lights 5.11
front 5.9
mobile directional 1.64
lights:
adjustment of headlight beam height 1.66
brake lights 5.12, 5.14
dipped beam headlights ..... 1.63 → 1.65, 5.9
direction indicators 1.62, 5.9, 5.12
fog lights 1.65, 5.11
hazard warning 1.62
main beam headlights 5.9
number plate lights 5.14
reversing lights 5.13
side lights ..... 1.63 → 1.65, 5.9, 5.12 – 5.13
lights-on warning buzzer 1.64
locking the doors ..... 1.2 → 1.10, 1.13
luggage compartment cover 3.34
luggage retaining net 3.36

M
maintenance:
bodywork ..... 4.12 – 4.13
interior trim ..... 4.14 – 4.15
mechanical ..... 4.2 – 4.4, 6.8 → 6.13
mileage before service ..... 6.8 → 6.13
map reading lights ..... 3.20 – 3.21
methods of restraint in addition to the seat belts ... 1.25 → 1.27
multimedia equipment 3.38

N
navigation 3.38
navigation system 3.38

O
oil change 4.6
opening the doors ..... 1.9 → 1.12
operating faults ..... 5.29 → 5.33

P
paintwork
maintenance ..... 4.12 – 4.13

reference 6.2
parking distance control ..... 2.36 → 2.38
power-assisted steering 1.60
puncture ..... 5.2 → 5.5

R
radio 3.38
rear bench seat ..... 3.30 – 3.31
rear parcel shelf 3.34
rear screen de-icing/demisting 3.6, 3.10
rear seats
functions ..... 3.30 – 3.31
rear view mirrors 1.61
RENAULT ANTI-INTRUDER DEVICE (RAID) 1.13
RENAULT card
battery 5.22
use ..... 1.2 → 1.8
RENAULT card battery 5.22
replacement parts 6.7
reverse gear
selecting ..... 2.9, 2.39 → 2.41
reversing sensor ..... 2.36 → 2.38
roof bars 3.37
roof rack
roof bars 3.37
running in 2.2

S
screen wash/wipe ..... 1.67 – 1.68
seat belt pretensioners
front seat belt ..... 1.21 → 1.24
seat belts ..... 1.17 → 1.19, 1.21 → 1.24
see-me-home lighting 1.64
service sheets ..... 6.8 → 6.13
side and number plate lighting
changing bulbs 5.14
side indicator lights
changing bulbs 5.14
signals and lights ..... 1.63 → 1.65
special features of diesel versions ..... 2.7 – 2.8
special features of petrol vehicles 2.6
speed limiter ..... 2.29 → 2.31
starting the engine ..... 2.3 – 2.4
steering wheel
adjustment 1.60
stopping the engine 2.5
storage compartment ..... 3.22 → 3.27
storage compartments ..... 3.22 → 3.27
sun visor 3.18
sunroof ..... 3.16 – 3.17

T
tailgate ..... 3.32 – 3.33, 3.35
tanks and reservoirs
brake fluid 4.8
coolant 4.7
tanks and reservoirs:
windscreen washer 4.9
technical specifications ..... 6.2, 6.4 → 6.7
telephone 3.38
temperature 1.39
temperature regulation ..... 3.7 → 3.12
tool kit 5.3
towing
breakdown ..... 5.25 → 5.28
towing equipment 3.35
towing a caravan 3.35, 6.6
towing equipment
fitting 3.35
towing hitch ..... 5.25 → 5.28
towing rings ..... 3.35 – 3.36
towing weights 6.6

ALPHABETICAL INDEX (5/5)

transporting children .....1.28 – 1.29, 1.31 → 1.35
transporting objects
    in the luggage compartment 3.35
    luggage net 3.36
trip computer and warning system... 1.44 → 1.47, 1.50 → 1.59
tyre pressure.....2.18 → 2.20, 4.10, 5.7
tyre pressure monitor.....2.18 → 2.20
tyre pressures..... 4.10
tyres.....2.18 → 2.20, 4.10, 5.6 → 5.8

U
unlocking the doors ..... 1.11 – 1.12

V
vehicle identification 6.2
vehicle identification plates..... 6.2 – 6.3
ventilation .....3.4 → 3.6
    heating and air conditioning system .....3.7 → 3.12

W
warning buzzer 1.9, 1.62
warning lights..... 1.44 → 1.47, 1.50 → 1.59
washing ..... 4.12 – 4.13
weights 6.6
wheelbrace 5.3
wheels (safety) .....5.6 → 5.8
windows..... 3.14 – 3.15
windscreen 3.18
windscreen de-icing/demisting 3.6, 3.10
windscreen washer.....1.67 → 1.69, 4.9
windscreen washer/wiper 1.69
wiper blades 5.24
wipers
    blades 5.24

(www.e-guide.renault.com)

RENAULT S.A.S. SOCIÉTÉ PAR ACTIONS SIMPLIFIÉE AU CAPITAL DE 533 941 113 € / 13-15, QUAI LE GALLO
92100 BOULOGNE-BILLANCOURT R.C.S. NANTERRE 780 129 987 — SIRET 780 129 987 03591 / TÉL. : 0810 40 50 60
NU 977-2 – 99 91 058 23R – 02/2012 – Edition anglaise