VAUXHALL Adam

Owner's Manual
Model Year 2014.5
Edition: August 2013

KTA-2744/3-VX-en

Downloaded from www.Manualslib.com manuals search engine

Contents

Introduction 2
In brief 6
Keys, doors and windows 18
Seats, restraints 30
Storage 49
Instruments and controls 68
Lighting 101
Climate control 109
Driving and operating 118
Vehicle care 149
Service and maintenance 193
Technical data 196
Customer information 207
Index 210

Downloaded from www.Manualslib.com manuals search engine

Introduction

Fuel	Designation			
Engine oil	Grade			
	Viscosity			
Tyre pressure		Tyre size	Front	Rear
	Summer tyres			
	Winter tyres			
Weights				
	Gross vehicle weight rating			
	- Kerb weight, basic model			
	= Loading			

Downloaded from www.Manualslib.com manuals search engine

Vehicle specific data

Please enter your vehicle's data on the previous page to keep it easily accessible. This information is available in the sections "Service and maintenance" and "Technical data" as well as on the identification plate.

Introduction

Your vehicle is a designed combination of advanced technology, safety, environmental friendliness and economy.

This Owner's Manual provides you with all the necessary information to enable you to drive your vehicle safely and efficiently.

Make sure your passengers are aware of the possible risk of accident and injury which may result from improper use of the vehicle.

You must always comply with the specific laws and regulations of the country that you are in. These laws may differ from the information in this Owner's Manual.

When this Owner's Manual refers to a workshop visit, we recommend your Vauxhall Authorised Repairer. For gas vehicles, we recommend a Vauxhall Authorised Repairer licensed to service gas vehicles.

All Vauxhall Authorised Repairers provide first-class service at reasonable prices. Experienced mechanics trained by Vauxhall work according to specific Vauxhall instructions.

The customer literature pack should always be kept ready to hand in the vehicle.

Using this manual

- This manual describes all options and features available for this model. **Certain descriptions, including those for display and menu functions, may not apply to your vehicle due to model variant, country specifications, special equipment or accessories.**
- The "In brief" section will give you an initial overview.
- The table of contents at the beginning of this manual and within each section shows where the information is located.
- The index will enable you to search for specific information.
- This Owner's Manual depicts left-hand drive vehicles. Operation is similar for right-hand drive vehicles.
- The Owner's Manual uses the factory engine designations. The corresponding sales designations can be found in the section "Technical data".
- Directional data, e.g. left or right, or front or back, always relate to the direction of travel.
- The vehicle display screens may not support your specific language.
- Display messages and interior labelling are written in **bold** letters.

Downloaded from www.Manualslib.com manuals search engine

Danger, Warnings and Cautions

⚠Danger

Text marked ⚠**Danger** provides information on risk of fatal injury. Disregarding this information may endanger life.

⚠Warning

Text marked ⚠**Warning** provides information on risk of accident or injury. Disregarding this information may lead to injury.

Caution

Text marked **Caution** provides information on possible damage to the vehicle. Disregarding this information may lead to vehicle damage.

Symbols

Page references are indicated with ➪.
➪ means "see page".

Thank you for choosing a Vauxhall.

We wish you many hours of pleasurable driving.

Your Vauxhall Team

Downloaded from www.Manualslib.com manuals search engine

Downloaded from www.Manualslib.com manuals search engine

In brief

Initial drive information

Vehicle unlocking

Press button 🔓 to unlock the doors and load compartment. Open the doors by pulling the handles.

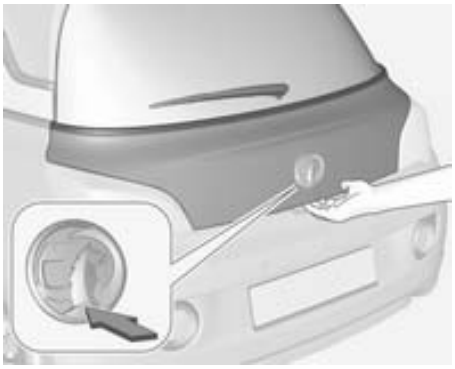

To open the tailgate, press the brand emblem at the bottom half.

Radio remote control ⇨ 19, Central locking system ⇨ 20, Load compartment ⇨ 22.

Downloaded from www.Manualslib.com manuals search engine

Seat adjustment

Seat positioning

Pull handle, slide seat, release handle.

Seat position ⇨ 31, Seat adjustment ⇨ 32.

⚠ Danger

Do not sit nearer than 25 cm from the steering wheel, to permit safe airbag deployment.

Seat backrests

Turn handwheel to adjust inclination. Do not lean on backrest while adjusting.

Seat position ⇨ 31, Seat adjustment ⇨ 32, Seat folding ⇨ 33.

Seat height

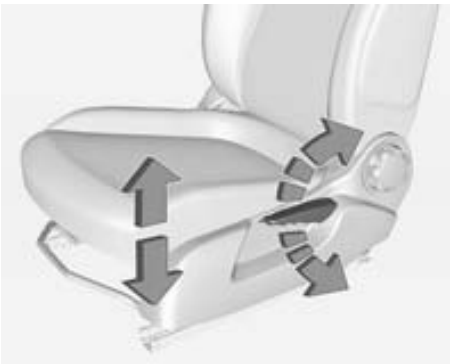

Lever pumping motion

up = seat higher
down = seat lower

Seat position ⇨ 31, Seat adjustment ⇨ 32.

Downloaded from www.Manualslib.com manuals search engine

Head restraint adjustment

Press release button, adjust height, engage.

Head restraints ⇨ 30.

Seat belt

Pull out the seat belt and engage in belt buckle. The seat belt must not be twisted and must fit close against the body. The backrest must not be tilted back too far (maximum approx. 25 °).

To release belt, press red button on belt buckle.

Seat position ⇨ 31, Seat belts ⇨ 34, Airbag system ⇨ 37.

Mirror adjustment

Interior mirror

To reduce dazzle, adjust the lever on the underside of the mirror housing.

Interior mirror ⇨ 26, Automatic anti-dazzle interior mirror ⇨ 27.

Downloaded from www.Manualslib.com manuals search engine

Exterior mirrors

Select the relevant exterior mirror and adjust it.

Convex exterior mirrors ⇨ 25, Electric adjustment ⇨ 25, Folding exterior mirrors ⇨ 26, Heated exterior mirrors ⇨ 26.

Steering wheel adjustment

Unlock the lever, adjust the steering wheel, then engage the lever and ensure it is fully locked.

Do not adjust the steering wheel unless the vehicle is stationary and the steering wheel lock has been released.

Airbag system ⇨ 37, Ignition positions ⇨ 119.

Downloaded from www.Manualslib.com manuals search engine

Instrument panel overview

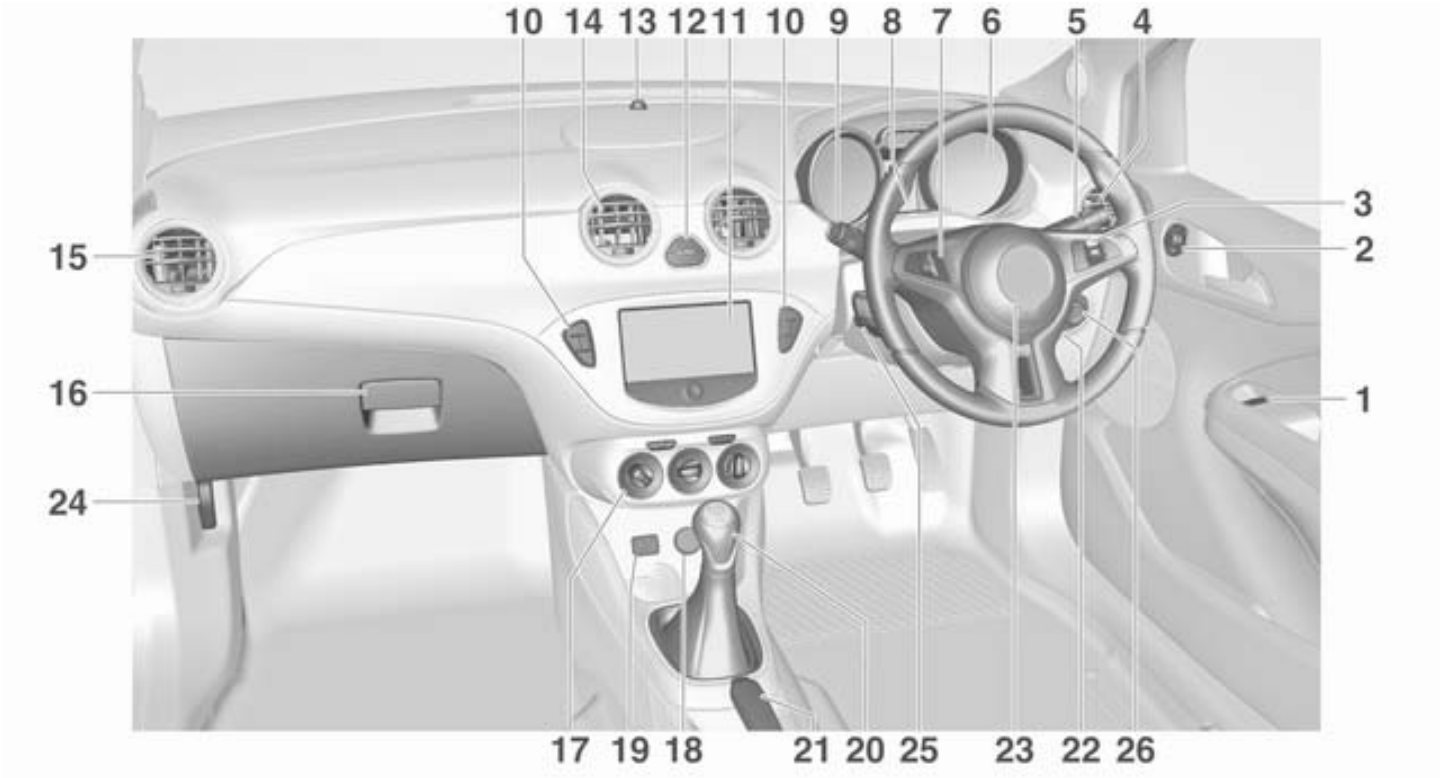

Downloaded from www.Manualslib.com manuals search engine

1 Power windows 27
2 Exterior mirrors 25
3 Cruise control 129
Speed limiter 130
4 Side air vents 116
5 Turn and lane-change signals, headlight flash, low beam and high beam 104
Exit lighting 107
Parking lights 104
Buttons for Driver Information Centre 86
6 Instruments 76
7 Steering wheel controls 68
8 Driver Information Centre 86
9 Windscreen wiper, windscreen washer system, headlight washer system, rear wiper, rear washer system 70
10 Central locking system 20
City mode 127
Fuel selector 77
Eco button for stop-start system 120
Parking assist 131
Seat heating 34
Heated steering wheel 69
11 Info-Display 90
12 Hazard warning flashers 103
Control indicator for airbag deactivation 82
Control indicator for front passenger seat belt 81
13 Anti-theft alarm system status LED 24
14 Centre air vents 116
15 Side air vents passenger side 116
16 Glovebox 49
Fuse box 167
17 Climate control system 109
18 Power outlet 75
19 AUX input, USB input 10
20 Selector lever, manual transmission 123
21 Parking brake 125
22 Ignition switch with steering wheel lock 119
23 Horn 69
Driver airbag 40
24 Bonnet release lever 151
25 Steering wheel adjustment . . 68
26 Light switch 101
Headlight range adjustment 103
Rear fog light 104
Brightness of instrument panel illumination and ambient light 105

Downloaded from www.Manualslib.com manuals search engine

Exterior lighting

Turn light switch:

0 = lights off
⇒⇐ = sidelights
≣D = headlights

Automatic light control

AUTO = automatic light control: exterior lighting is switched on and off automatically
⏻ = activation or deactivation of the automatic light control
⇒⇐ = sidelights
≣D = headlights

Rear fog light

Press ◖‡ in the light switch.

Headlight flash, high beam and low beam

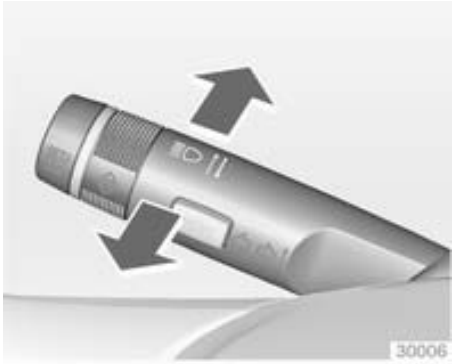

headlight flash = pull lever
high beam = push lever
low beam = push or pull lever

Automatic light control ⇨ 102, High beam ⇨ 102, Headlight flash ⇨ 102.

Downloaded from www.Manualslib.com manuals search engine

Turn and lane-change signals

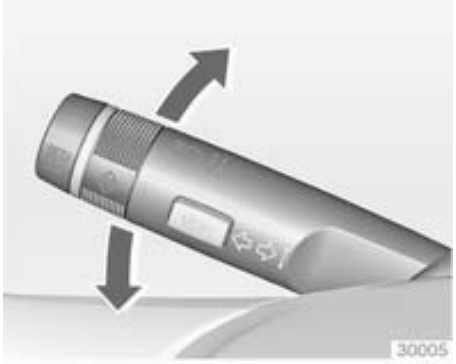

lever up = right turn signal
lever down = left turn signal

Turn and lane-change signals ⇨ 104, Parking lights ⇨ 104.

Hazard warning flashers

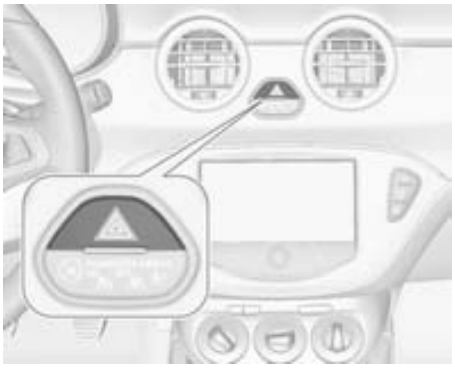

Operated with the button.

Hazard warning flashers ⇨ 103.

Horn

Press .

Downloaded from www.Manualslib.com manuals search engine

Washer and wiper systems

Windscreen wiper

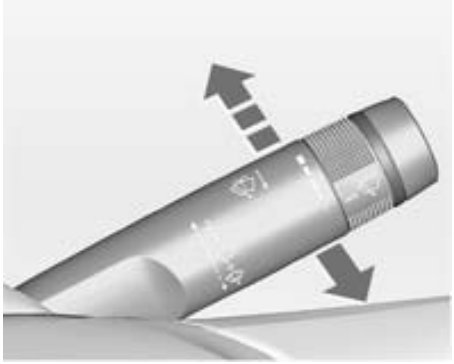

2 = fast
1 = slow
⊡ = interval wiping or automatic wiping with rain sensor
O = off

For a single wipe when the windscreen wiper is off, press the lever down.

Windscreen wiper ⇨ 70, Wiper blade replacement ⇨ 156.

Windscreen washer

Pull lever.

Windscreen washer system ⇨ 70, Washer fluid ⇨ 153.

Rear window wiper

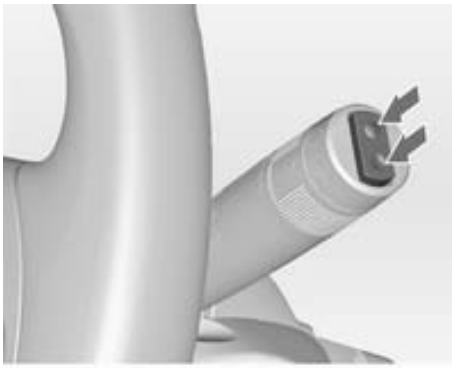

Press the rocker switch to activate the rear window wiper:

upper switch	=	continuous operation
lower switch	=	intermittent operation
middle position	=	off

Downloaded from www.Manualslib.com manuals search engine

Rear window washer

Push lever.

Washer fluid is sprayed on the rear window and the wiper wipes a few times.

Rear window wiper/washer ⇨ 71.

Climate control

Heated rear window, heated exterior mirrors

The heating is operated by pressing the button.

Heated rear window ⇨ 29.

Demisting and defrosting the windows

- Switch on cooling .
- Set temperature control to warmest level.
- Set fan speed to highest level.
- Set air distribution control to .
- Switch on heated rear window .
- Open side air vents as required and direct them towards the door windows.

Climate control system ⇨ 109.

Downloaded from www.Manualslib.com manuals search engine

Transmission

Manual transmission

Reverse: with the vehicle stationary, wait 3 seconds after depressing clutch pedal and then press the release button on the selector lever and engage the gear.

If the gear does not engage, set the lever to neutral, release the clutch pedal and depress again; then repeat gear selection.

Manual transmission ⇨ 123.

Starting off

Check before starting off

- Tyre pressure and condition ⇨ 171, ⇨ 206.
- Engine oil level and fluid levels ⇨ 151.
- All windows, mirrors, exterior lighting and number plates are free from dirt, snow and ice and are operational.
- Proper position of mirrors, seats, and seat belts ⇨ 25, ⇨ 31, ⇨ 35.
- Brake function at low speed, particularly if the brakes are wet.

Starting the engine

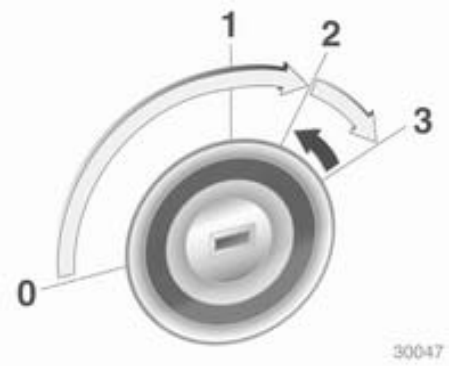

- Turn key to position **1**
- move the steering wheel slightly to release the steering wheel lock
- operate clutch and brake
- do not operate accelerator pedal
- turn key to position **3** and release

Starting the engine ⇨ 119.

Downloaded from www.Manualslib.com manuals search engine

Stop-start system

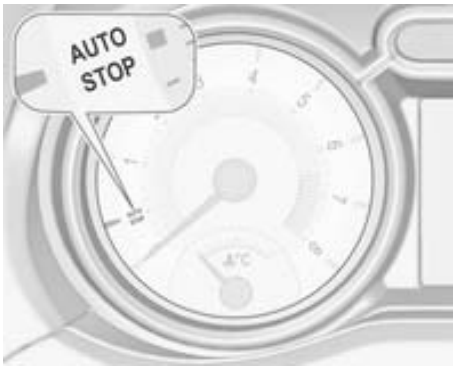

If the vehicle is at a low speed or at a standstill and certain conditions are fulfilled, activate an Autostop as follows:

- Depress the clutch pedal
- set the lever in neutral
- release the clutch pedal

An Autostop is indicated by the needle at the **AUTOSTOP** position in the tachometer.

To restart the engine, depress the clutch pedal again.

Stop-start system ⇨ 120.

Parking

- Always apply the parking brake. Activate the manual parking brake without pressing the release button. Apply as firmly as possible on a downhill slope or uphill slope. Depress foot brake at the same time to reduce operating force.
- Switch off the engine. Turn the ignition key to position **0** and remove it. Turn the steering wheel until the steering wheel lock is felt to engage.
- If the vehicle is on a level surface or uphill slope, engage first gear before switching off the ignition. On an uphill slope, turn the front wheels away from the kerb.

  If the vehicle is on a downhill slope, engage reverse gear before switching off the ignition. Turn the front wheels towards the kerb.
- Lock the vehicle with button 🔒 on the radio remote control.

  Activate the anti-theft alarm system ⇨ 24.
- Do not park the vehicle on an easily ignitable surface. The high temperature of the exhaust system could ignite the surface.
- Close the windows.
- The engine cooling fans may run after the engine has been switched off ⇨ 150.
- After running at high engine speeds or with high engine loads, operate the engine briefly at a low load or run in neutral for approx. 30 seconds before switching off, in order to protect the turbocharger.

Keys, locks ⇨ 18, Laying the vehicle up for a long period of time ⇨ 149.

Downloaded from www.Manualslib.com manuals search engine

Keys, doors and windows

Keys, locks 18
Doors 22
Vehicle security 23
Exterior mirrors 25
Interior mirrors 26
Windows 27
Roof 29

Keys, locks

Keys

Replacement keys

The key number is specified in the Car Pass or on a detachable tag.

The key number must be quoted when ordering replacement keys as it is a component of the immobiliser system.

Locks ⇨ 190.

Lock cylinders

Designed to free-wheel if they are forcefully rotated without the correct key or if the correct key is not fully inserted. To reset, turn cylinder with the correct key until its slot is vertical, remove key and then re-insert it. If the cylinder still free-wheels, turn the key through 180° and repeat operation.

Key with foldaway key section

Press button to extend. To fold the key, first press the button.

Car Pass

The Car Pass contains security-related vehicle data and should therefore be kept in a safe place.

When the vehicle is taken to a workshop, this vehicle data is needed in order to perform certain operations.

Downloaded from www.Manualslib.com manuals search engine

Radio remote control

Used to operate:

- Central locking system
- Anti-theft locking system
- Anti-theft alarm system
- Power windows

The radio remote control has a range of approx. 20 metres. It can be restricted by external influences. The hazard warning flashers confirm operation.

Handle with care, protect from moisture and high temperatures and avoid unnecessary operation.

Fault

If the central locking system cannot be operated with the radio remote control, it may be due to the following:

- Range exceeded
- Battery voltage too low
- Frequent, repeated operation of the radio remote control while not in range, which will require re-synchronisation
- Overload of the central locking system by operating at frequent intervals, the power supply is interrupted for a short time
- Interference from higher-power radio waves from other sources

Unlocking ⇨ 20.

Basic settings

Some settings can be changed in the Info-Display.

Vehicle personalisation ⇨ 97.

Radio remote control battery replacement

Replace the battery as soon as the range reduces.

Batteries do not belong in household waste. They must be disposed of at an appropriate recycling collection point.

Key with foldaway key section

Downloaded from www.Manualslib.com manuals search engine

Extend the key and open the unit. Replace the battery (battery type CR 2032), paying attention to the installation position. Close the unit and synchronise.

Key with fixed key section
Have the battery replaced by a workshop.

Radio remote control synchronisation

After replacing the battery, unlock the door with the key in the driver's door lock. The radio remote control will be synchronised when the ignition is switched on.

Memorised settings

Whenever the key is removed from the ignition switch, the following settings are automatically memorised by the key:

- Lighting
- Infotainment system
- Central locking system
- Comfort settings

The saved settings are automatically used the next time the memorised key is inserted into the ignition switch and turned to position **1** ⇨ 119.

A precondition is that **Personalization by driver** is activated in the personal settings of the Info-Display. This must be set for each key used.

Vehicle personalisation ⇨ 97.

Central locking system

Unlocks and locks doors, load compartment and fuel filler flap.

A pull on an interior door handle unlocks the respective door. Pulling the handle once more opens the door.

Note
In the event of an accident in which airbags or belt pretensioners are deployed, the vehicle is automatically unlocked.

Note
A short time after unlocking with the remote control the doors are locked automatically if no door has been opened.

Unlocking

Press button 🔓.

Two settings are selectable:

- To unlock only the driver's door, load compartment and fuel filler flap, press button 🔓 once. To unlock both doors, press button 🔓 twice

  or

- press button 🔓 once to unlock doors, load compartment and fuel filler flap

The setting can be changed in the Info-Display.

Vehicle personalisation ⇨ 97.

Downloaded from www.Manualslib.com manuals search engine

The setting can be saved for the key being used.

Memorised settings ⇨ 20.

Unlocking and opening the tailgate ⇨ 22.

Locking

Close doors, load compartment and fuel filler flap.

Press button 🔒.

If the driver's door is not closed properly, the central locking system will not work.

Central locking buttons

Locks or unlocks doors, the load compartment and fuel filler flap from inside the passenger compartment.

Press the 🔒 button to lock.

Press the 🔓 button to unlock.

Fault in radio remote control system

Unlocking

Manually unlock the driver's door by turning the key in the lock. Switch on the ignition and press the central locking button 🔓 to unlock the passenger door, load compartment and fuel filler flap. By switching on the ignition, the anti-theft locking system is deactivated.

Locking

Manually lock the driver's door by turning the key in the lock.

Downloaded from www.Manualslib.com manuals search engine

Fault in central locking system

Unlocking

Manually unlock the driver's door by turning the key in the lock. The passenger door can be opened by pulling the interior handle twice. The load compartment and fuel filler flap cannot be opened. To deactivate the anti-theft locking system, switch on the ignition ⇨ 24.

Locking

Press inside locking knob of passenger door. Then close the driver's door and lock it from the outside with the key. The fuel filler flap and tailgate cannot be locked.

Automatic locking

This security feature can be configured to automatically lock doors, load compartment and fuel filler flap as soon as a certain speed is exceeded.

Additionally it is configurable to unlock the driver's door or both doors after the ignition is switched off and the ignition key is removed.

Settings can be changed in the Info-Display.

Vehicle personalisation ⇨ 97.

The settings can be saved for the key being used ⇨ 20.

Doors

Load compartment

Tailgate

Opening

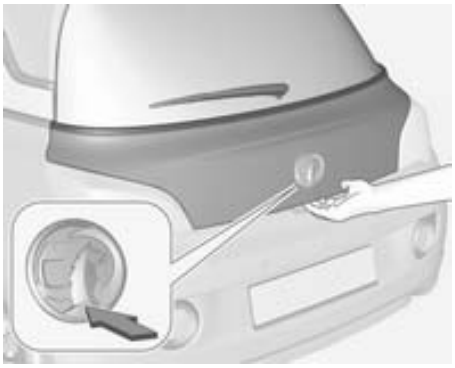

Press the brand emblem at the bottom half to unlock and open the tailgate.

Downloaded from www.Manualslib.com manuals search engine

Closing

Use interior handle.

Do not press the touchpad switch or the emblem whilst closing as this will unlock the tailgate again.

Central locking system ⇨ 20.

General hints for operating tailgate

⚠Warning

Do not drive with the tailgate open or ajar, e.g. when transporting bulky objects, since toxic exhaust gases, which cannot be seen or smelled, could enter the vehicle. This can cause unconsciousness and even death.

Caution

Before opening the tailgate, check overhead obstructions, e.g. a garage door, to avoid damage to the tailgate. Always check the moving area above and behind the tailgate.

Note
The installation of certain heavy accessories onto the tailgate may affect its ability to remain open.

Vehicle security

Anti-theft locking system

⚠Warning

Do not use the system if there are people in the vehicle! The doors cannot be unlocked from the inside.

The system deadlocks all the doors. All doors must be closed otherwise the system cannot be activated.

If the ignition was on, the driver's door must be opened and closed once so that the vehicle can be secured.

Unlocking the vehicle disables the mechanical anti-theft locking system. This is not possible with the central locking button.

Downloaded from www.Manualslib.com manuals search engine

Activating

Press button on the radio remote control twice within 15 seconds.

Anti-theft alarm system

The anti-theft alarm system is combined with the central locking system.

It monitors:

- Doors, tailgate, bonnet
- Ignition

Activation

- Self-activated 30 seconds after locking the vehicle (initialisation of the system)
- Press button on the radio remote control twice within 15 seconds.

Status LED

Status LED is integrated in the sensor on top of the instrument panel.

Status during the first 30 seconds of anti-theft alarm system activation:

LED illuminates	=	test, arming delay.
LED flashes quickly	=	doors, tailgate or bonnet not completely closed, or system fault.

Status after system is armed:

LED flashes slowly	=	system is armed.

Seek the assistance of a workshop in the event of faults.

Deactivation

Unlocking the vehicle deactivates the anti-theft alarm system.

Alarm

When triggered, the alarm sounds via a power sounder, and the hazard warning lights flash simultaneously. The number and duration of alarm signals are stipulated by legislation.

The alarm can be silenced by pressing any button on the radio remote control or by switching on the ignition.

Downloaded from www.Manualslib.com manuals search engine

The anti-theft alarm system can only be deactivated by pressing button 🔓 on the radio remote control or by switching on the ignition.

A triggered alarm, which has not been interrupted by the driver, will be indicated by the hazard warning lights. They will flash quickly three times when the vehicle is unlocked with the radio remote control.

Vehicle messages ⇨ 92.

If the vehicle's battery is to be disconnected (e.g. for maintenance work), the alarm siren must be deactivated as follows: switch the ignition on then off, then disconnect the vehicle's battery within 15 seconds.

Immobiliser

The system is part of the ignition switch and checks whether the vehicle is allowed to be started with the key being used.

The immobiliser is activated automatically after the key has been removed from the ignition switch.

If the control indicator 🔒 flashes when the ignition is on, there is a fault in the system; the engine cannot be started. Switch off the ignition and repeat the start attempt.

If the control indicator continues flashing, attempt to start the engine using the spare key and seek the assistance of a workshop.

Note
The immobiliser does not lock the doors. You should always lock the vehicle after leaving it and switch on the anti-theft alarm system ⇨ 20, ⇨ 24.

Control indicator 🔒 ⇨ 85.

Exterior mirrors

Convex shape

The convex exterior mirror contains an aspherical area and reduces blind spots. The shape of the mirror makes objects appear smaller, which will affect the ability to estimate distances.

Electric adjustment

Select the relevant exterior mirror by turning the control to left **(L)** or right **(R)**. Then swivel the control to adjust the mirror.

Downloaded from www.Manualslib.com manuals search engine

In position **0** no mirror is selected.

Folding mirrors

For pedestrian safety, the exterior mirrors will swing out of their normal mounting position if they are struck with sufficient force. Reposition the mirror by applying slight pressure to the mirror housing.

Parking position

The exterior mirrors can be folded in by pressing gently on the outer edge of the housing, e.g. when in a confined parking situation.

Heated mirrors

Operated by pressing the button.

Heating works with the engine running and is switched off automatically after a short time.

Interior mirrors

Manual anti-dazzle

To reduce dazzle, adjust the lever on the underside of the mirror housing to the front or rear. Lever in the middle position is the normal driving position.

If the vehicle is equipped with the illuminated starlight panel, adjust the lever to the front when anti-dazzling is required. Starlight panel ⇨ 105.

Downloaded from www.Manualslib.com manuals search engine

Automatic anti-dazzle

Dazzle from following vehicles at night is automatically reduced.

Windows

Windscreen

Windscreen stickers

Do not attach stickers such as toll road stickers or similar on the windscreen in the area of the interior mirror. Otherwise the detection zone of the sensor in the mirror housing could be restricted.

Power windows

⚠ Warning

Take care when operating the power windows. Risk of injury, particularly to children.

Be careful when closing the windows. Ensure that nothing becomes trapped in them as they move.

Switch on ignition to operate power windows.

Retained power off ⇨ 119.

Operate the switch for the respective window by pushing to open or pulling to close.

Pushing or pulling gently to the first detent: window moves up or down as long as the switch is operated.

Pushing or pulling firmly to the second detent and then releasing: window moves up or down automatically with safety function enabled. To stop movement, operate the switch once more in the same direction.

Downloaded from www.Manualslib.com manuals search engine

Safety function

If the window glass encounters resistance above the middle of the window during automatic closing, it is immediately stopped and opened again.

Override safety function

In the event of closing difficulties due to frost or the like, switch on the ignition, then pull the switch to the first detent and hold. The window moves up without safety function enabled. To stop movement, release the switch.

Operating windows from outside

The windows can be operated remotely from outside the vehicle.

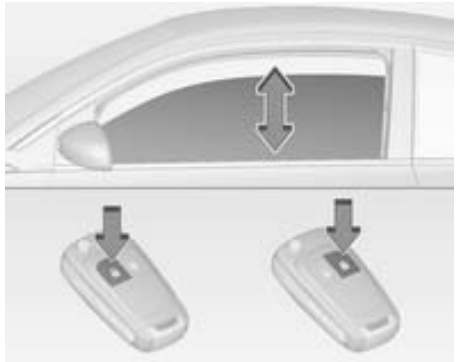

Press and hold button to open windows.

Press and hold button to close windows.

Release button to stop window movement.

If the windows are fully opened or closed, the hazard warning lights will flash twice.

Overload

If the windows are repeatedly operated within short intervals, the window operation is disabled for some time.

Initialising the power windows

If the windows cannot be closed automatically (e.g. after disconnecting the vehicle battery), a warning message or a warning code is displayed in the Driver Information Centre.

Vehicle messages ⇨ 92.

Activate the window electronics as follows:

1. Close doors.
2. Switch on ignition.
3. Pull switch until the window is closed and keep pulling for additional 2 seconds.
4. Repeat for each window.

Downloaded from www.Manualslib.com manuals search engine

Heated rear window

Operated by pressing the button.

Heating works with the engine running and is switched off automatically after a short time.

Sun visors

The sun visors can be folded down or swivelled to the side to prevent dazzling.

If the sun visors have integral mirrors, the mirror covers should be closed when driving.

A ticket holder is located on the backside of the sun visor.

Roof

Glass panel

Sunblind

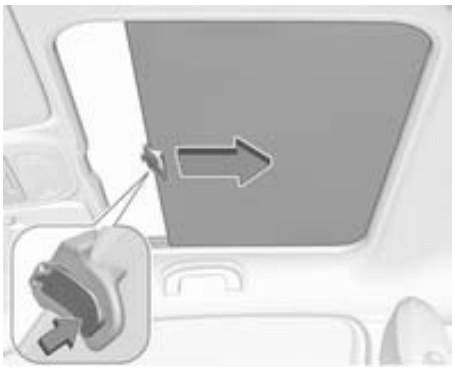

Press the button in the handle to open the sunblind and guide it backwards. It rolls up automatically.

No intermediate positions are possible.

To close, draw the sunblind to the front and allow the button to engage.

Downloaded from www.Manualslib.com manuals search engine

Seats, restraints

Head restraints 30
Front seats 31
Seat belts 34
Airbag system 37
Child restraints 43

Head restraints

Position

⚠Warning

Only drive with the head restraint set to the proper position.

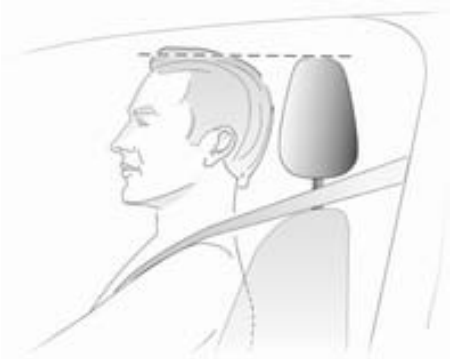

The upper edge of the head restraint should be at upper head level. If this is not possible for extremely tall people, set to highest position, and set to lowest position for small people.

Adjustment

Front head restraints, height adjustment

Press release button, adjust height, engage.

Downloaded from www.Manualslib.com manuals search engine

Rear head restraints, height adjustment

Pull the head restraint upwards and let engage. To move downwards, press the catch to release and push the head restraint downwards.

Removal of rear head restraint

E.g. when using a child restraint system ⇨ 43.

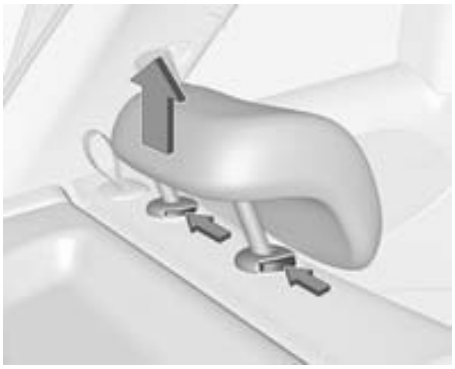

Press both catches, pull the head restraint upwards and remove.

Place the head restraint in a net bag and secure the underside of the bag with Velcro fasteners to the load compartment floor. A suitable net bag is available from your workshop.

Front seats

Seat position

⚠ Warning

Only drive with the seat correctly adjusted.

- Sit with buttocks as far back against the backrest as possible. Adjust the distance between the seat and the pedals so that legs are slightly angled when pressing the pedals. Slide the front passenger seat as far back as possible.

Downloaded from www.Manualslib.com manuals search engine

- Sit with shoulders as far back against the backrest as possible. Set the backrest rake so that it is possible to easily reach the steering wheel with arms slightly bent. Maintain contact between shoulders and the backrest when turning the steering wheel. Do not angle the backrest too far back. We recommend a maximum rake of approx. 25°.
- Adjust the steering wheel ⇨ 68.
- Set seat height high enough to have a clear field of vision on all sides and of all display instruments. There should be at least one hand of clearance between head and the roof frame. Your thighs should rest lightly on the seat without pressing into it.
- Adjust the head restraint ⇨ 30.

Seat adjustment

⚠ Danger

Do not sit nearer than 25 cm from the steering wheel, to permit safe airbag deployment.

⚠ Warning

Never adjust seats while driving as they could move uncontrollably.

⚠ Warning

Never store any objects under the seats.

Seat positioning

Pull handle, slide seat, release handle. Allow seat to engage in position.

Downloaded from www.Manualslib.com manuals search engine

Seat backrests

Turn handwheel to adjust inclination. Do not lean on backrest while adjusting.

Seat height

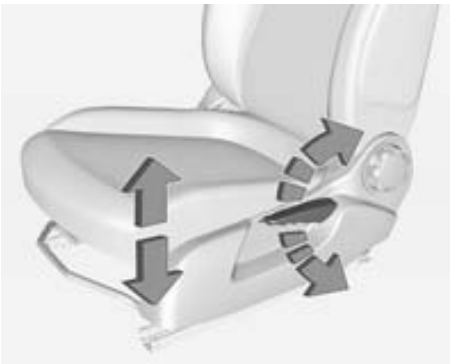

Lever pumping motion

up = seat higher
down = seat lower

Seat folding

Pull release lever towards the front and fold backrest forwards. Then slide seat forwards to the stop.

To restore, slide the seat backwards to the stop. Lift backrest to upright position without operating the release lever. Let backrest engage.

The memory function allows the seat to engage in its original position after folding.

Do not operate handwheel for backrest inclination while backrest is folded forwards.

Downloaded from www.Manualslib.com manuals search engine

Caution

When seat height is in the highest position, push head restraints down and fold up sun visors before folding backrest forwards.

Heating

Activate seat heating by pressing button for the respective front seat.

Activation is indicated by the LED in the button.

Pressing button once more deactivates seat heating.

Seat heating is operational when engine is running and during an Autostop.

Stop-start system ⇨ 120.

Seat belts

The seat belts are locked during heavy acceleration or deceleration of the vehicle holding the occupants in the sitting position. Therefore the risk of injury is considerably reduced.

⚠ Warning

Fasten seat belt before each trip.

In the event of an accident, people not wearing seat belts endanger their fellow occupants and themselves.

Downloaded from www.Manualslib.com manuals search engine

Seat belts are designed to be used by only one person at a time. Child restraint system ⇨ 43.

Periodically check all parts of the belt system for damage, pollution and proper functionality.

Have damaged components replaced. After an accident, have the belts and triggered belt pretensioners replaced by a workshop.

Note
Make sure that the belts are not damaged by shoes or sharp-edged objects or trapped. Prevent dirt from getting into the belt retractors.

Seat belt reminder

Each seat is equipped with a seat belt reminder, indicated for driver seat as control indicator in the tachometer ⇨ 81, for front passenger seat as control indicator ² in the centre console ⇨ 78, and for rear seats by symbols in the Driver Information Centre ⇨ 86.

Belt force limiters

On the front seats, stress on the body is reduced by the gradual release of the belt during a collision.

Belt pretensioners

In the event of a head-on or rear-end collision of a certain severity, the front seat belts are tightened.

⚠ Warning

Incorrect handling (e.g. removal or fitting of belts) can trigger the belt pretensioners.

Deployment of the belt pretensioners is indicated by continuous illumination of control indicator ⇨ 82.

Triggered belt pretensioners must be replaced by a workshop. Belt pretensioners can only be triggered once.

Note
Do not affix or install accessories or other objects that may interfere with the operation of the belt pretensioners. Do not make any modifications to belt pretensioner components as this will invalidate the vehicle type approval.

Three-point seat belt

Fastening

Withdraw the belt from the retractor, guide it untwisted across the body and insert the latch plate into the buckle. Tighten the lap belt regularly while driving by pulling the shoulder belt.

Downloaded from www.Manualslib.com manuals search engine

Loose or bulky clothing prevents the belt from fitting snugly. Do not place objects such as handbags or mobile phones between the belt and your body.

⚠ Warning

The belt must not rest against hard or fragile objects in the pockets of your clothing.

Seat belt reminder ⇨ 81.

Removing

To release belt, press red button on belt buckle.

Using the seat belt while pregnant

⚠ Warning

The lap belt must be positioned as low as possible across the pelvis to prevent pressure on the abdomen.

Downloaded from www.Manualslib.com manuals search engine

Airbag system

The airbag system consists of a number of individual systems depending on the scope of equipment.

When triggered, the airbags inflate within milliseconds. They also deflate so quickly that it is often unnoticeable during the collision.

⚠ Warning
If handled improperly the airbag systems can be triggered in an explosive manner.

Note
The airbag systems and belt pretensioner control electronics are located in the centre console area. Do not put any magnetic objects in this area.

Do not affix any objects onto the airbag covers and do not cover them with other materials.

Each airbag is triggered only once. Have deployed airbags replaced by a workshop. Furthermore, it may be necessary to have the steering wheel, the instrument panel, parts of the panelling, the door seals, handles and the seats replaced.

Do not make any modifications to the airbag system as this will invalidate the vehicle type approval.

When the airbags inflate escaping hot gases may cause burns.

Fault

If there is a fault in the airbag system the control indicator lights up and a message or a warning code appears in the Driver Information Centre. The system is not operational.

Have the cause of the fault remedied by a workshop.

Control indicator for airbag systems ⇨ 82.

Child restraint systems on front passenger seat with airbag systems

Warning according to ECE R94.02:

EN: NEVER use a rearward-facing child restraint on a seat protected by an ACTIVE AIRBAG in front of it; DEATH or SERIOUS INJURY to the CHILD can occur.

DE: Nach hinten gerichtete Kindersitze NIEMALS auf einem Sitz verwenden, der durch einen davor befindlichen AKTIVEN AIRBAG geschützt ist, da dies den TOD oder SCHWERE VERLETZUNGEN DES KINDES zur Folge haben kann.

FR: NE JAMAIS utiliser un siège d'enfant orienté vers l'arrière sur un siège protégé par un COUSSIN GONFLABLE ACTIF placé devant lui,

Downloaded from www.Manualslib.com manuals search engine

sous peine d'infliger des BLESSURES GRAVES, voire MORTELLES à l'ENFANT.

ES: NUNCA utilice un sistema de retención infantil orientado hacia atrás en un asiento protegido por un AIRBAG FRONTAL ACTIVO. Peligro de MUERTE o LESIONES GRAVES para el NIÑO.

RU: ЗАПРЕЩАЕТСЯ устанавливать детское удерживающее устройство лицом назад на сиденье автомобиля, оборудованном фронтальной подушкой безопасности, если ПОДУШКА НЕ ОТКЛЮЧЕНА! Это может привести к СМЕРТИ или СЕРЬЕЗНЫМ ТРАВМАМ РЕБЕНКА.

NL: Gebruik NOOIT een achterwaarts gericht kinderzitje op een stoel met een ACTIEVE AIRBAG ervoor, om DODELIJK of ERNSTIG LETSEL van het KIND te voorkomen.

DA: Brug ALDRIG en bagudvendt autostol på et forsæde med AKTIV AIRBAG, BARNET kan komme i LIVSFARE eller komme ALVORLIGT TIL SKADE.

SV: Använd ALDRIG en bakåtvänd barnstol på ett säte som skyddas med en framförvarande AKTIV AIRBAG. DÖDSFALL eller ALLVARLIGA SKADOR kan drabba BARNET.

FI: ÄLÄ KOSKAAN sijoita taaksepäin suunnattua lasten turvaistuinta istuimelle, jonka edessä on AKTIIVINEN TURVATYYNY, LAPSI VOI KUOLLA tai VAMMAUTUA VAKAVASTI.

NO: Bakovervendt barnesikringsutstyr må ALDRI brukes på et sete med AKTIV KOLLISJONSPUTE foran, da det kan føre til at BARNET utsettes for LIVSFARE og fare for ALVORLIGE SKADER.

PT: NUNCA use um sistema de retenção para crianças voltado para trás num banco protegido com um AIRBAG ACTIVO na frente do mesmo, poderá ocorrer a PERDA DE VIDA ou FERIMENTOS GRAVES na CRIANÇA.

IT: Non usare mai un sistema di sicurezza per bambini rivolto all'indietro su un sedile protetto da AIRBAG ATTIVO di fronte ad esso: pericolo di MORTE o LESIONI GRAVI per il BAMBINO!

EL: ΠΟΤΕ μη χρησιμοποιείτε παιδικό κάθισμα ασφαλείας με φορά προς τα πίσω σε κάθισμα που προστατεύεται από μετωπικό ΕΝΕΡΓΟ ΑΕΡΟΣΑΚΟ, διότι το παιδί μπορεί να υποστεί ΘΑΝΑΣΙΜΟ ή ΣΟΒΑΡΟ ΤΡΑΥΜΑΤΙΣΜΟ.

PL: NIE WOLNO montować fotelika dziecięcego zwróconego tyłem do kierunku jazdy na fotelu, przed którym znajduje się WŁĄCZONA PODUSZKA POWIETRZNA. Niezastosowanie się do tego zalecenia może być przyczyną ŚMIERCI lub POWAŻNYCH OBRAŻEŃ u DZIECKA.

Downloaded from www.Manualslib.com manuals search engine

TR: Arkaya bakan bir çocuk emniyet sistemini KESİNLİKLE önünde bir AKTİF HAVA YASTIĞI ile korunmakta olan bir koltukta kullanmayınız. ÇOCUK ÖLEBİLİR veya AĞIR ŞEKİLDE YARALANABİLİR.

UK: НІКОЛИ не використовуйте систему безпеки для дітей, що встановлюється обличчям назад, на сидінні з УВІМКНЕНОЮ ПОДУШКОЮ БЕЗПЕКИ, інакше це може призвести до СМЕРТІ чи СЕРЙОЗНОГО ТРАВМУВАННЯ ДИТИНИ.

HU: SOHA ne használjon hátrafelé néző biztonsági gyerekülést előlről AKTÍV LÉGZSÁKKAL védett ülésen, mert a GYERMEK HALÁLÁT vagy KOMOLY SÉRÜLÉSÉT okozhatja.

HR: NIKADA nemojte koristiti sustav zadržavanja za djecu okrenut prema natrag na sjedalu s AKTIVNIM ZRAČNIM JASTUKOM ispred njega, to bi moglo dovesti do SMRTI ili OZBILJNJIH OZLJEDA za DIJETE.

SL: NIKOLI ne nameščajte otroškega varnostnega sedeža, obrnjenega v nasprotni smeri vožnje, na sedež z AKTIVNO ČELNO ZRAČNO BLAZINO, saj pri tem obstaja nevarnost RESNIH ali SMRTNIH POŠKODB za OTROKA.

SR: NIKADA ne koristiti bezbednosni sistem za decu u kome su deca okrenuta unazad na sedištu sa AKTIVNIM VAZDUŠNIM JASTUKOM ispred sedišta zato što DETE može da NASTRADA ili da se TEŠKO POVREDI.

MK: НИКОГАШ не користете детско седиште свртено наназад на седиште заштитено со АКТИВНО ВОЗДУШНО ПЕРНИЧЕ пред него, затоа што детето може ДА ЗАГИНЕ или да биде ТЕШКО ПОВРЕДЕНО.

BG: НИКОГА не използвайте детска седалка, гледаща назад, върху седалка, която е защитена чрез АКТИВНА ВЪЗДУШНА ВЪЗГЛАВНИЦА пред нея - може да се стигне до СМЪРТ или СЕРИОЗНО НАРАНЯВАНЕ на ДЕТЕТО.

RO: Nu utilizați NICIODATĂ un scaun pentru copil îndreptat spre partea din spate a mașinii pe un scaun protejat de un AIRBAG ACTIV în fața sa; acest lucru poate duce la DECESUL sau VĂTĂMAREA GRAVĂ a COPILULUI.

CS: NIKDY nepoužívejte dětský zádržný systém instalovaný proti směru jízdy na sedadle, které je chráněno před sedadlem AKTIVNÍM AIRBAGEM. Mohlo by dojít k VÁŽNÉMU PORANĚNÍ nebo ÚMRTÍ DÍTĚTE.

SK: NIKDY nepoužívajte detskú sedačku otočenú vzad na sedadle chránenom AKTÍVNYM AIRBAGOM, pretože môže dôjsť k SMRTI alebo VÁŽNYM ZRANENIAM DIEŤAŤA.

LT: JOKIU BŪDU nemontuokite atgal atgręžtos vaiko tvirtinimo sistemos sėdynėje, prieš kurią įrengta AKTYVI ORO PAGALVĖ, nes VAIKAS GALI ŽŪTI arba RIMTAI SUSIŽALOTI.

LV: NEKĀDĀ GADĪJUMĀ neizmantojiet uz aizmuguri vērstu bērnu sēdeklīti sēdvietā, kas tiek aizsargāta ar tās priekšā uzstādītu

Downloaded from www.Manualslib.com manuals search engine

AKTĪVU DROŠĪBAS SPILVENU, jo pretējā gadījumā BĒRNS var gūt SMAGAS TRAUMAS vai IET BOJĀ.

ET: ÄRGE kasutage tahapoole suunatud lapseturvaistet istmel, mille ees on AKTIIVSE TURVAPADJAGA kaitstud iste, sest see võib põhjustada LAPSE SURMA või TÕSISE VIGASTUSE.

Beyond the warning required by ECE R94.02, for safety reasons never use a forward-facing child restraint system on the passenger seat with active front airbag.

⚠ Danger

Do not use a child restraint system on the passenger seat with active front airbag.

Airbag deactivation ⇨ 42.

Front airbag system

The front airbag system consists of one airbag in the steering wheel and one in the instrument panel on the front passenger side. The location is identified by the word **AIRBAG**.

The front airbag system is triggered in the event of a front-end impact of a certain severity. The ignition must be switched on.

The inflated airbags cushion the impact, thereby reducing the risk of injury to the upper body and head of the front seat occupants considerably.

⚠ Warning

Optimum protection is only provided when the seat is in the proper position.

Seat position ⇨ 31.

Keep the area in which the airbag inflates clear of obstructions.

Fit the seat belt correctly and engage securely. Only then is the airbag able to protect.

Side airbag system

Downloaded from www.Manualslib.com manuals search engine

The side airbag system consists of an airbag in each front seat backrest. The location is identified by the word **AIRBAG**.

The side airbag system is triggered in the event of a side impact of a certain severity. The ignition must be switched on.

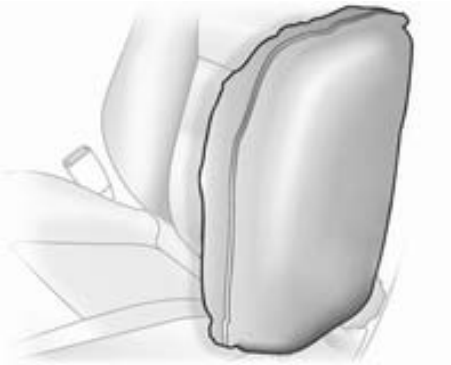

The inflated airbags cushion the impact, thereby reducing the risk of injury to the upper body and pelvis in the event of a side-on collision considerably.

⚠Warning

Keep the area in which the airbag inflates clear of obstructions.

Note
Only use protective seat covers that have been approved for the vehicle. Be careful not to cover the airbags.

Curtain airbag system

The curtain airbag system consists of an airbag in the roof frame on each side. The location is identified by the word **AIRBAG** on the roof pillars.

The curtain airbag system is triggered in the event of a side-on impact of a certain severity. The ignition must be switched on.

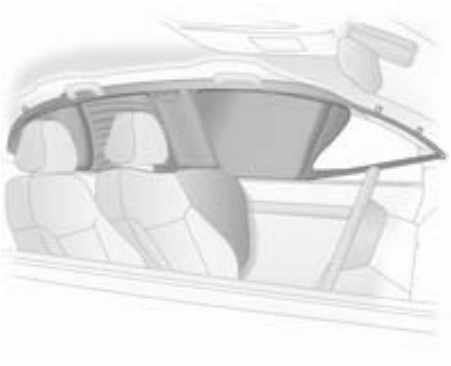

The inflated airbags cushion the impact, thereby reducing the risk of injury to the head in the event of a side-on impact considerably.

⚠Warning

Keep the area in which the airbag inflates clear of obstructions.

The hooks on the handles in the roof frame are only suitable for hanging up light articles of clothing, without coat hangers. Do not keep any items in these clothes.

Downloaded from www.Manualslib.com manuals search engine

Airbag deactivation

The front passenger airbag system must be deactivated if a child restraint system is to be fitted on this seat. The side airbag and curtain airbag systems, the belt pretensioners and all driver airbag systems will remain active.

The front passenger airbag system can be deactivated via a key-operated switch on the right side of the instrument panel.

Use the ignition key to choose the position:

OFF = front passenger airbag is deactivated and will not inflate in the event of a collision. Control indicator OFF illuminates continuously in the centre console. A child restraint system can be installed in accordance with the chart **Child restraint installation locations** ⇨ 45. No adult person is allowed to occupy the front passenger seat.

ON = front passenger airbag is active. A child restraint system must not be installed.

⚠ Danger

Risk of fatal injury for a child using a child restraint system on a seat with activated front passenger airbag.

Risk of fatal injury for an adult person on a seat with deactivated front passenger airbag.

If the control indicator illuminates for approx. 60 seconds after the ignition is switched on, the front passenger airbag system will inflate in the event of a collision.

If both control indicators are illuminated at the same time, there is a system failure. The status of the system is not discernible, therefore no person is allowed to occupy the front passenger seat. Contact a workshop immediately.

Downloaded from www.Manualslib.com manuals search engine

Change status only when the vehicle is stopped with the ignition off.

Status remains until the next change.

Control indicator for airbag deactivation ⇨ 82.

Child restraints

Child restraint systems

We recommend the following Vauxhall child restraint system which are tailored specifically to the vehicle:

- **Group 0, Group 0+**

  VAUXHALL Baby cradle, with or without **ISOFIX** base, for children up to 13 kg

- **Group I**

  FAIR G 0/1 S **ISOFIX**, for children fom 9 kg to 13 kg in this group

  VAUXHALL Duo, for children fom 13 kg to 18 kg in this group

- **Group II, Group III**

  VAUXHALL Kid, VAUXHALL Kidfix, TAKATA MAXI 2/3 for children from 15 kg up to 36 kg

When a child restraint system is being used, pay attention to the following usage and installation instructions and also those supplied with the child restraint system.

Always comply with local or national regulations. In some countries, the use of child restraint systems is forbidden on certain seats.

⚠ Warning

When using a child restraint system on the front passenger seat, the airbag systems for the front passenger seat must be deactivated; if not, the triggering of the airbags poses a risk of fatal injury to the child.

This is especially the case if rear-facing child restraint systems are used on the front passenger seat.

Airbag deactivation ⇨ 42.

Selecting the right system

The rear seats are the most convenient location to fasten a child restraint system.

Children should travel facing rearwards in the vehicle as long as possible. This ensures that the child's

Downloaded from www.Manualslib.com manuals search engine

backbone, which is still very weak, is under less strain in the event of an accident.

Suitable are restraint systems that comply with ECE 44-03 or ECE 44-04. Check local laws and regulations for mandatory use of child restraint systems.

Ensure that the child restraint system to be installed is compatible with the vehicle type.

Ensure that the mounting location of the child restraint system within the vehicle is correct.

Allow children to enter and exit the vehicle only on the side facing away from the traffic.

When the child restraint system is not in use, secure the seat with a seat belt or remove it from the vehicle.

Note

Do not affix anything on the child restraint systems and do not cover them with any other materials.

A child restraint system which has been subjected to stress in an accident must be replaced.

Downloaded from www.Manualslib.com manuals search engine

Child restraint installation locations

Permissible options for fitting a child restraint system

Weight and age class	On front passenger seat activated airbag	On front passenger seat deactivated airbag	On rear seats
Group 0: up to 10 kg or approx. 10 months	X	U[1]	U[2] *
Group 0+: up to 13 kg or approx. 2 years	X	U[1]	U[2] *
Group I: 9 to 18 kg or approx. 8 months to 4 years	X	U[1]	U[2, 3] *
Group II: 15 to 25 kg or approx. 3 to 7 years	U **	X	U *
Group III: 22 to 36 kg or approx. 6 to 12 years	U **	X	U *

[1] = Only if front passenger seat airbag system is deactivated. If the child restraint system is being secured using a three-point seat belt, move seat height adjustment in the uppermost position. Adjust seat backrest inclination as far as necessary to a vertical position to ensure that the belt is tight on the buckle side.
[2] = Seat available with ISOFIX and Top-Tether mounting brackets ⇨ 48.
[3] = Remove rear head restraint when using child restraint systems in this group ⇨ 30.
* = Move the respective front seat ahead of the child restraint system in one of the foremost adjustment positions.

Downloaded from www.Manualslib.com manuals search engine

** = Move the front passenger seat in the rearmost adjustment position. Move seat height adjustment in the uppermost position and the headrest in the lowest position. Adjust seat backrest inclination as far as necessary to a vertical position to ensure that vehicle safety belt runs forwards from the upper anchorage point.
U = Universal suitability in conjunction with three-point seat belt.
X = No child restraint system permitted in this weight class.

Permissible options for fitting an ISOFIX child restraint system

Weight class	Size class	Fixture	On front passenger seat	On rear seats
Group 0: up to 10 kg	E	ISO/R1	X	IL *
Group 0+: up to 13 kg	E	ISO/R1	X	IL *
	D	ISO/R2	X	X
	C	ISO/R3	X	X
Group I: 9 to 18 kg	D	ISO/R2	X	X
	C	ISO/R3	X	X
	B	ISO/F2	X	IL, IUF**
	B1	ISO/F2X	X	IL, IUF**
	A	ISO/F3	X	IL, IUF**

Downloaded from www.Manualslib.com manuals search engine

IL = Suitable for particular ISOFIX restraint systems of the "specific-vehicle", "restricted" or "semi-universal" categories. The ISOFIX restraint system must be approved for the specific vehicle type.
IUF = Suitable for ISOFIX forward-facing child restraint systems of universal category approved for use in this weight class.
X = No ISOFIX child restraint system approved in this weight class.
* = Move the respective front seat ahead of the child restraint system in one of the foremost adjustment positions.
** = Remove respective rear head restraint when using child restraint systems in this size class ⇨ 30.

ISOFIX size class and seat device

A – ISO/F3 = Forward-facing child restraint system for children of maximum size in the weight class 9 to 18 kg.
B – ISO/F2 = Forward-facing child restraint system for smaller children in the weight class 9 to 18 kg.
B1 – ISO/F2X = Forward-facing child restraint system for smaller children in the weight class 9 to 18 kg.
C – ISO/R3 = Rear-facing child restraint system for children of maximum size in the weight class up to 18 kg.
D – ISO/R2 = Rear-facing child restraint system for smaller children in the weight class up to 18 kg.
E – ISO/R1 = Rear-facing child restraint system for young children in the weight class up to 13 kg.

Downloaded from www.Manualslib.com manuals search engine

ISOFIX child restraint systems

Fasten vehicle-approved ISOFIX child restraint systems to the ISOFIX mounting brackets. Specific vehicle ISOFIX child restraint system positions are marked in the table by IL.

ISOFIX mounting brackets are indicated by the ISOFIX logo on the backrest.

The vehicle is equipped with guides in the backrests to support the installation of the child restraint system. Open the flaps of the guides to mount a child restraint system.

Remove rear head restraint before mounting a child restraint system, if required ⇨ 45.

Top-tether fastening eyes

The vehicle has two fastening eyes on the backside of the rear seats.

Top-Tether fastening eyes are marked with the symbol for a child seat.

In addition to the ISOFIX mounting, fasten the Top-Tether strap to the Top-Tether fastening eyes.

ISOFIX child restraint systems of universal category positions are marked in the table by IUF.

Remove rear head restraint before mounting a child restraint system if required ⇨ 45.

Downloaded from www.Manualslib.com manuals search engine

Storage

Storage compartments 49
Load compartment 60
Roof rack system 66
Loading information 66

Storage compartments

⚠ Warning

Do not not store heavy or sharp objects in the storage compartments. Otherwise, the storage compartment lid could open and vehicle occupants could be injured by objects being thrown around in the event of sharp braking, a sudden change in direction or an accident.

Glovebox

Pull lever to open the glovebox cover.

The glovebox features a coin holder.

The intermediate shelf can be removed.

The glovebox should be closed whilst driving.

Cupholders

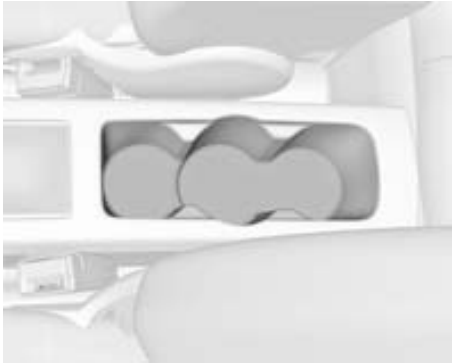

Cupholders are located in the console between the front seats. They are designed for different sizes.

Downloaded from www.Manualslib.com manuals search engine

Door pockets in both doors are designed to carry bottles.

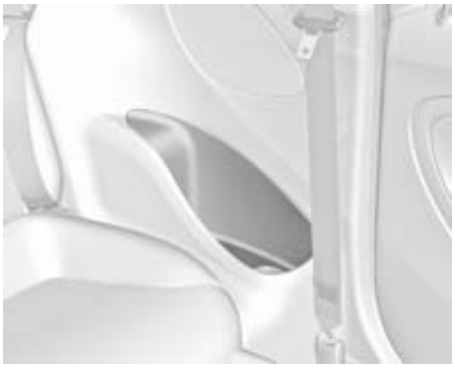

Additional cupholders or bottleholders are located in the rear side panels.

Flexible cupholder strap

A movable rubber strap is located in the storage compartment in front of the gear selector lever. Pull out the strap to fix a cup or ashtray.

Front storage

Storage compartments are located below the light switch, in the centre console in front of the gear selector lever, in the door pockets and in the side panels near the rear seats.

Downloaded from www.Manualslib.com manuals search engine

Rear carrier system

Rear carrier system for two bicycles

The rear carrier system (Flex-Fix system) allows one bicycle to be attached to a pull-out carrier integrated into the vehicle floor. It is possible to attach one further bicycle on an adapter. The transportation of other objects is not permitted.

The maximum load of the rear carrier system is 50 kg with attached adapter and 30 kg without attached adapter. This allows the attachment of an electrically-powered bicycle to the pull-out carrier. The maximum load on the adapter is 20 kg.

The wheelbase of a bicycle must not exceed 1.15 metre. Otherwise the secure fastening of a bicycle is not possible.

If not in use, the carrier system must be slid back into the vehicle floor.

There must not be any objects on the bicycles that could become loose during transportation.

Caution

If the rear carrier system is extended and the vehicle is fully loaded, the chassis clearance will be reduced.

Drive carefully whenever the road has a strong inclination or when driving over a ramp, bump, etc.

Caution

Consult your bicycle dealer before attaching bicycles with carbon frames. The bicycles might get damaged.

Extending

Open the tailgate.

⚠Warning

No-one should be in the extension zone of the rear carrier system, risk of injury.

Downloaded from www.Manualslib.com manuals search engine

Pull release lever up. The system disengages and travels quickly out of the bumper.

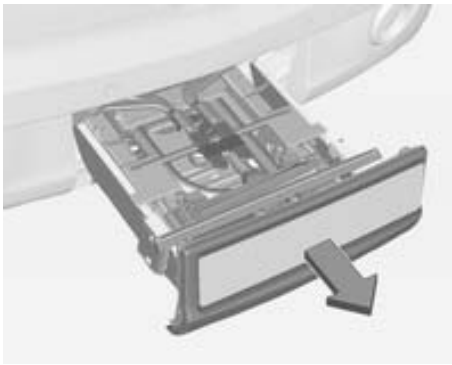

Completely pull out the rear carrier system until you hear it engage.

Ensure that it is not possible to push in the rear carrier system without pulling the release lever again.

⚠Warning

It is only permissible to fit objects to the rear carrier system if the system has been correctly engaged. If the rear carrier system will not engage correctly, do not fit objects to the system and slide the system back. Seek the assistance of a workshop.

Unfold number plate light

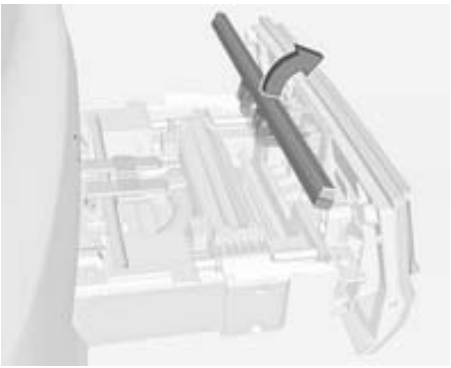

Lift the number plate light and fold it backwards.

Fold out tail lamps

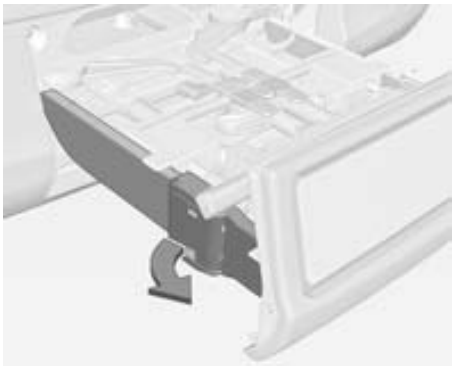

Swivel hinges of both tail lamps backwards as far as it will go.

Downloaded from www.Manualslib.com manuals search engine

Swivel both tail lamps backwards as far as it will go.

Fold out wheel recess

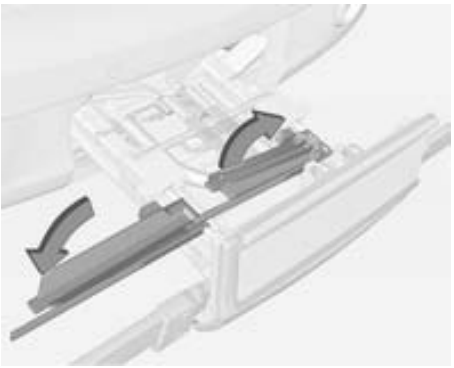

Remove strap and fold out the wheel recess.

Lock the rear carrier system

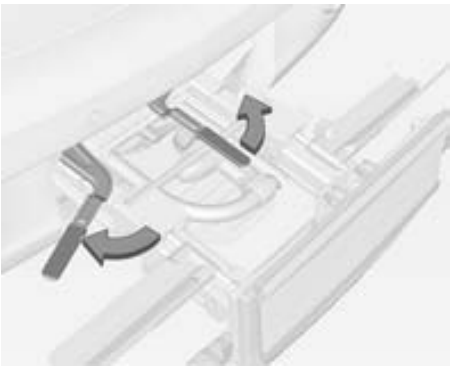

Remove strap and swivel both clamping levers sidewards as far as it will go.

Otherwise safe functionality is not guaranteed.

Assembling the bicycle rack

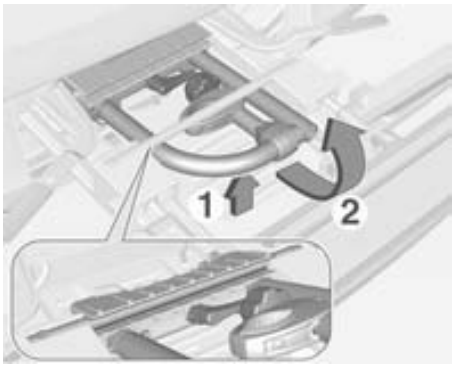

Lift the rack at the rear (1) and pull it backwards.

Fold up the rack (2).

Downloaded from www.Manualslib.com manuals search engine

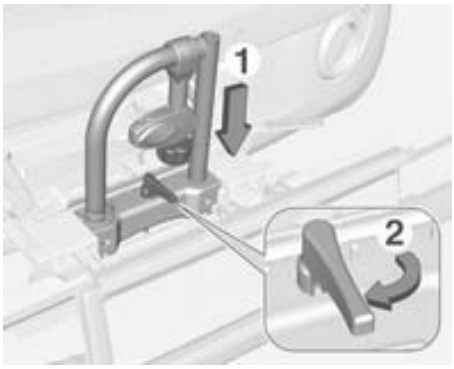

Push down the rack (1) and swivel handle (2) backwards to engage.

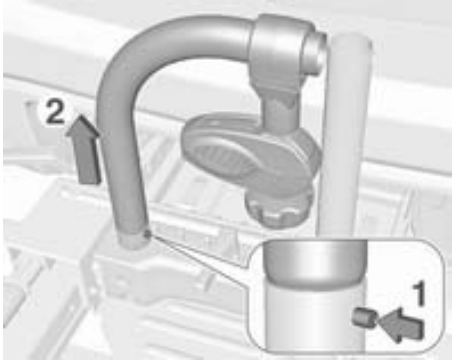

Press button (1) and remove left part of rack (2).

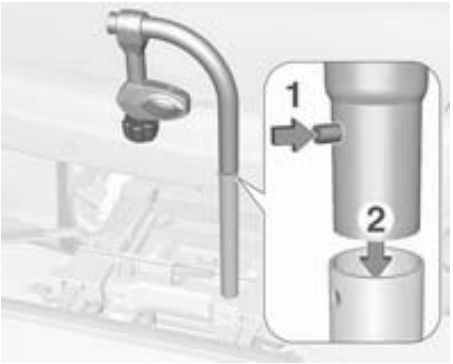

Press button (1) and insert left part of rack into the right part (2).

Attaching the adapter

When carrying two bicycles, the adapter must be fixed before attaching the first bicycle.

1. Apply the adapter to the rear carrier system as shown in the illustration.

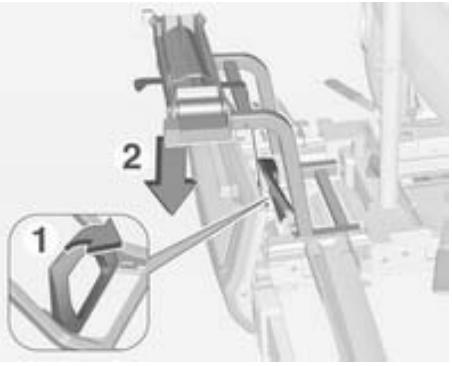

Downloaded from www.Manualslib.com manuals search engine

2. Turn the lever (1) forwards and hold, then lower the adapter (2) at the rear.
3. Release lever and check if the adapter is engaged securely.

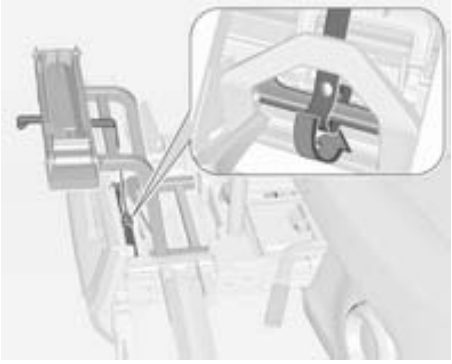

4. Guide the strap attached to the adapter underneath the lever for folding back the rear carrier system. Fasten the strap.

Attaching the first bicycle

1. Rotate the pedals into position as shown in the illustration and put the bicycle on the wheel recess.

   Make sure that the bicycle stands centrally on the wheel recesses.

2. Attach the short mounting bracket to the bicycle frame. Turn the knob clockwise to fasten.

Downloaded from www.Manualslib.com manuals search engine

3. Secure both bicycle wheels to the wheel recesses using the strap retainers.
4. Check the bicycle to make sure it is secure.

Caution
Ensure gap between bicycle and vehicle is at least 5 cm. If necessary, loosen handlebar and swivel sideways.

Attaching the second bicycle

The attachment of a second bicycle is similar to the attachment of the first bicycle. Additionally some steps must be considered:

1. Always rotate the pedals into an appropriate position before putting on the bicycle.

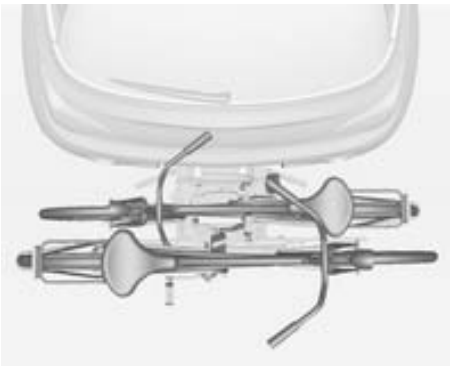

2. Position the bicycles on the rear carrier system alternately aligned to the left and to the right.
3. Align the rear bicycle to the front bicycle. The wheel hubs of the bicycles must not touch each other.
4. Attach the rear bicycle with the longer mounting bracket and the strap retainers as described for the front bicycle. The mounting brackets should be fixed in parallel.

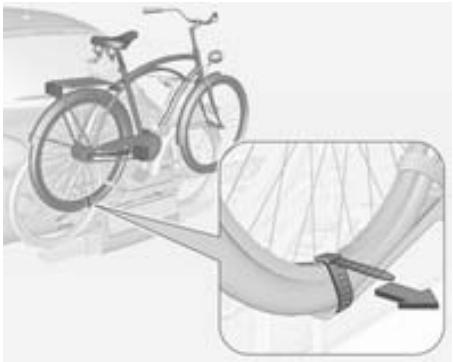

5. Additionally secure both bicycle wheels of the rear bicycle to the wheel recesses using the tensioning straps.

It is recommended to attach a warning sign at the rearmost bicycle, to increase visibility.

Fold the rear carrier system backwards

The rear carrier system can be folded backwards to gain access to the load compartment.

Downloaded from www.Manualslib.com manuals search engine

- Without attached adapter:

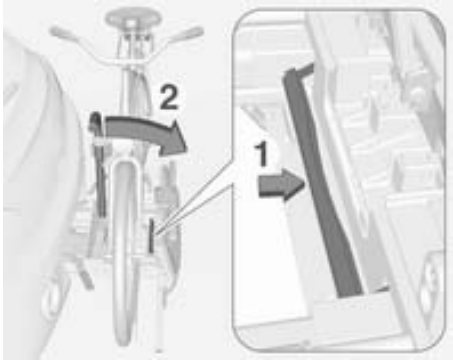

Push the lever (1) to disengage and hold.

Pull the rack (2) backwards to fold the rear carrier system.

- With attached adapter:

⚠ Warning

Take care when disengaging the rear carrier system as it will tilt backwards. Risk of injury.

Hold frame (1) of rear bicycle with one hand and pull the loop (2) to disengage.

Hold rear bicycle with both hands and fold the rear carrier system backwards.

To increase visibility, the tail lights of the vehicle are activated when the rear carrier system is folded back.

⚠ Warning

When folding the rear carrier system forwards again, take care that the system is engaged securely.

Removing bicycles

Undo strap retainers on both bicycle tyres.

Turn knob anti-clockwise and remove mounting brackets.

Detaching adapter

1. Fold in wheel recesses.

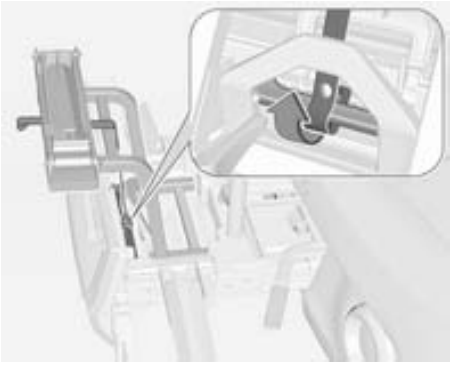

2. Unbutton the strap.

Downloaded from www.Manualslib.com manuals search engine

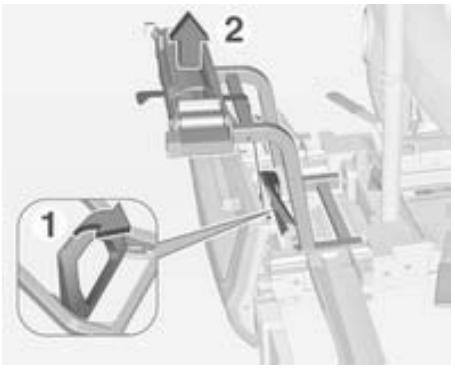

3. Turn the lever (1) forwards and hold.
4. Lift the adapter (2) at the rear and remove.

Disassembling the bicycle rack

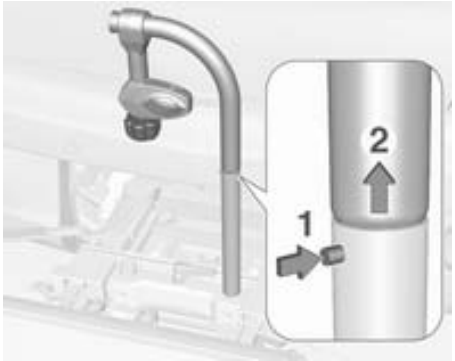

Press button (1) and remove upper part of rack (2).

Press button (1) and reinstall rack (2).

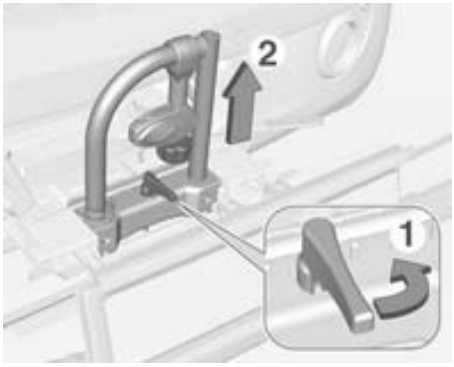

Arrange mounting bracket as shown in the illustration.

Swivel handle (1) sidewards to disengage and lift the rack (2).

Downloaded from www.Manualslib.com manuals search engine

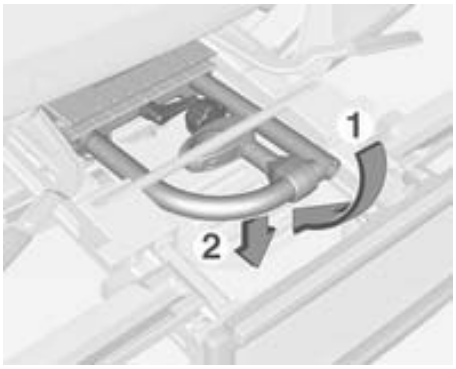

Fold the rack backwards, then push forwards until it stops (1).

Press the rack down at the rear (2).

Fold in wheel recess

Fold in wheel recess. Fasten strap.

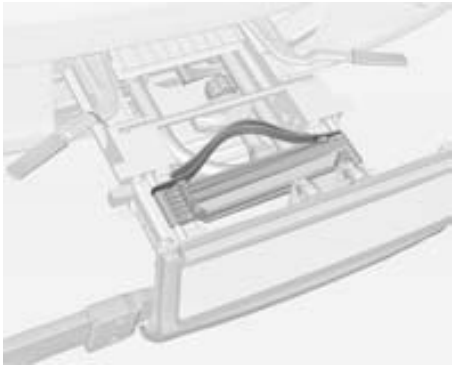

Stow the strap retainers accurately.

Unlock the rear carrier system

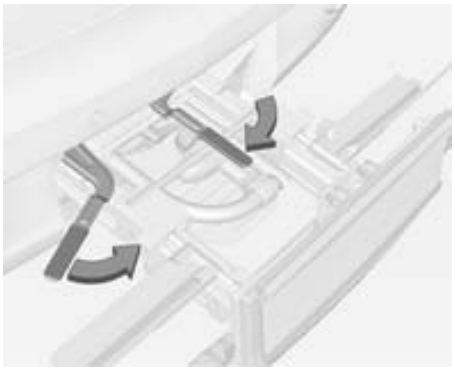

Swivel both clamping levers inwards as far as it will go. Fasten strap.

Fold in tail lamps

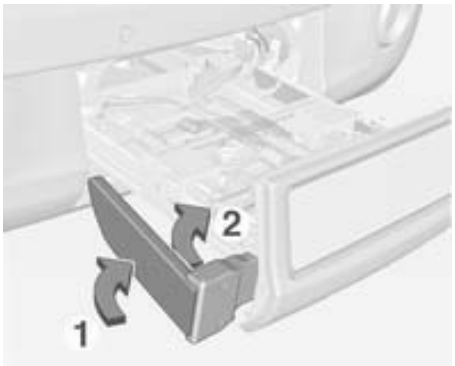

First swivel tail lamps (1) forwards as far as it will go.

Then swivel hinges (2) forwards as far as it will go.

Downloaded from www.Manualslib.com manuals search engine

Fold in number plate light

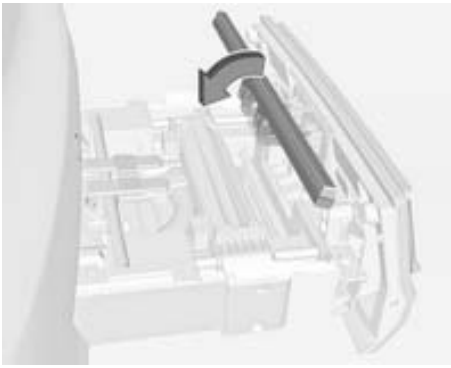

Fold number plate light forwards.

Retracting the rear carrier system

Caution

Take care that all foldable parts, e.g. wheel recesses and mounting brackets, are stowed accurately. Otherwise the rear carrier system might get damaged when trying to retract it.

Push the release lever up and hold. Lift the system slightly and push it into the bumper until it engages.

Release lever must return to original position.

⚠ Warning

If the system cannot be correctly engaged, please seek the assistance of a workshop.

Load compartment

The rear seat backrest is divided into two parts. Both parts can be folded down separately.

Load compartment extension

Remove the load compartment cover if necessary.

Press the catch and push down the head restraint.

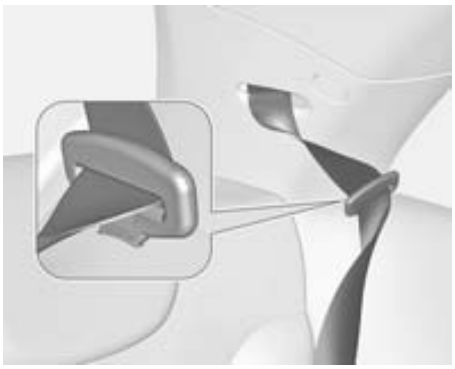

Insert seat belt latch plate into side holder to protect the belt against damage.

Downloaded from www.Manualslib.com manuals search engine

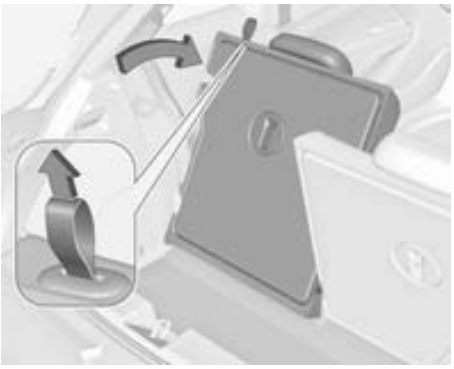

Pull the strap on one or both backrests and fold them down onto the seat cushion.

To fold up, raise the backrests into upright position and let them engage audibly.

The backrests are properly engaged when the red marks on both release straps are not visible.

⚠ Warning

When folding up, ensure that backrests are securely locked in position before driving. Failure to do so may result in personal injury or damage to load or vehicle in the event of heavy braking or collision.

Hook for carrier bags

Use the hook at the right sidewall of the load compartment for hanging up carrier bags. Maximum load: 5 kg

Rear storage

Storage box

A closable storage box is located in the load compartment. The cover is lockable by turning the knob. It must be locked while driving.

To open, unlock and lift up the cover.

To remove the cover, open it and slide sideways to the left.

The box can be separated by a divider.

The storage box cover can be loaded with max. 20 kg.

Removal

To gain access to the warning triangle, the tyre repair kit (on some versions), the mounting of the spare wheel or for bulb replacement of the tail lights, the storage box must be removed:

- Remove load compartment cover ⇨ 62,
- fold down rear backrests ⇨ 60,
- open the storage box,

Downloaded from www.Manualslib.com manuals search engine

- turn the lock hooks on both sides to the rear and push down the lashing eyes in the recesses,
- raise the storage box and place it on the folded backrests,
- remove storage box out of the load compartment.

Installation

- Place storage box on the folded backrests,
- lower the box in the load compartment,
- open the storage box,
- raise the lashing eyes on both sides and turn the lock hooks to the front to fix the box to the lashing eyes,
- raise rear backrests and install load compartment cover,
- if equipped, stow the suitcase with tyre repair kit in a chamber of the storage box,
- close and lock the cover.

Load compartment cover

Do not place any objects on the cover.

Opening

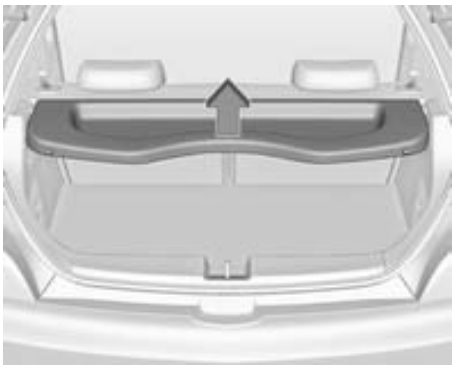

Lift up the cover at the rear end. It engages in a nearly vertical position. Further opening up to head restraints is possible. To close, move down the cover beyond the engage point.

Removing

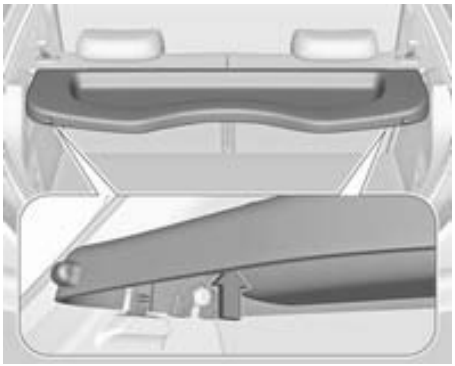

Push cover upwards at the left and right from the lower side and remove.

Fitting

Engage cover by pushing into guides on both sides.

Downloaded from www.Manualslib.com manuals search engine

Rear floor storage cover

Rear floor cover

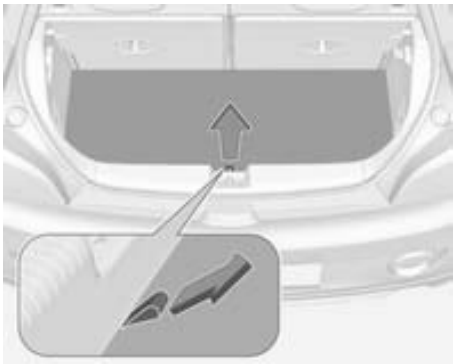

Lift up rear floor cover.

Depending on the version, there are vehicle tools, jacking equipment or a tyre repair kit under the floor cover.

Tools ⇨ 169, tyre repair kit ⇨ 175.

Rear floor cover on version with subwoofer box

Lift up rear part of floor cover to gain access to the warning triangle.

When closing floor cover, ensure it is fixed with the Velcro fastener.

Removal

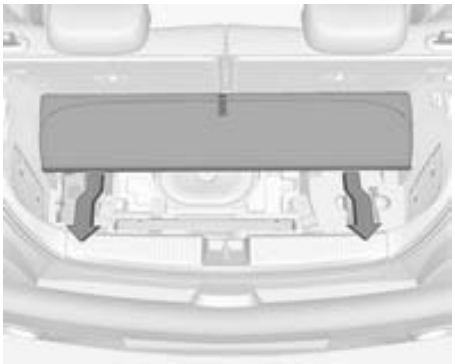

Remove floor cover to gain access to the tool box ⇨ 169, tyre repair kit ⇨ 175 and for bulb replacement of tail lights:

- Lift up and fold rear part to the front,
- pull out the cover to the rear, it will be lifted a little by a guide,
- detach cover from the load compartment.

To gain access to the right cover in the load compartment, e.g. for bulb replacement, fold down rear right backrest and pull out the tool box beside the subwoofer.

Bulb replacement ⇨ 159.

Installation

- Install tool box if removed,
- place floor cover in load compartment,

Downloaded from www.Manualslib.com manuals search engine

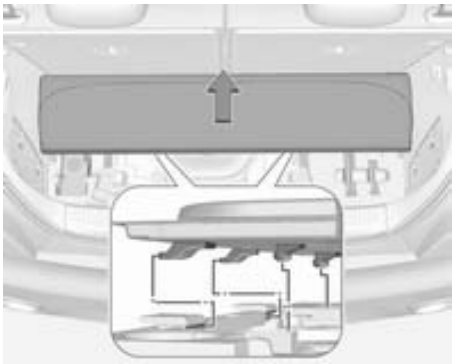

- move floor cover slowly to the front, taking care that the guiding bolts slide into the attachments of the load compartment, and allow the floor cover to lower into position,
- close the floor cover by folding the upper part to the rear, and fix it with the Velcro fastener,
- fold up rear backrests.

General hint

⚠ Warning

For safety reasons, stow all parts in the load compartment in its position, always drive with a closed rear floor cover and, if possible, with folded up rear backrests.

Otherwise, vehicle occupants could be injured by objects being thrown around in the event of sharp braking, a sudden change in direction or an accident.

Lashing eyes

The lashing eyes are designed to secure items against slippage, e.g. using lashing straps or luggage net.

Downloaded from www.Manualslib.com manuals search engine

Warning triangle

The warning triangle is stowed with elastic straps in the load compartment below the tailgate.

If the vehicle is equipped with a storage box in the load compartment, remove the storage box to gain access to the warning triangle ⇨ 61.

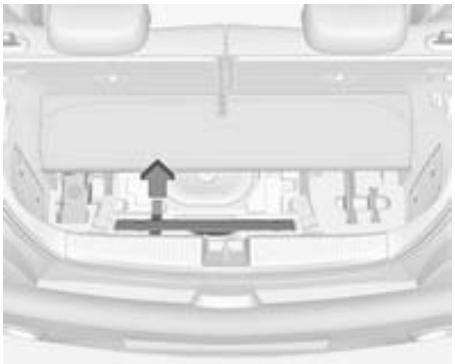

Version with subwoofer box: lift up the rear part of the load compartment floor cover. Pull the handle to remove the warning triangle.

Rear floor storage cover ⇨ 63.

First aid kit

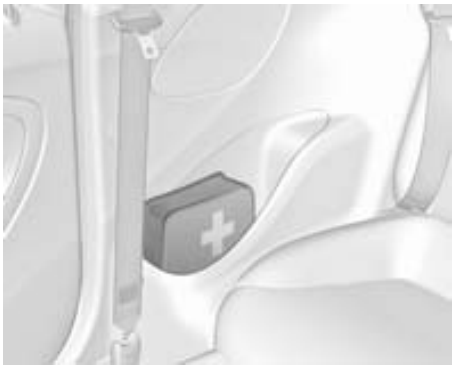

Stow the first aid kit in the side panel storage near the rear seats.

Downloaded from www.Manualslib.com manuals search engine

Roof rack system

Roof rack

For safety reasons and to avoid damage to the roof, the vehicle approved roof rack system is recommended. For further information contact your workshop.

Follow the installation instructions and remove the roof rack when not in use.

Mounting roof rack

Open the cover from each mounting point by using a coin.

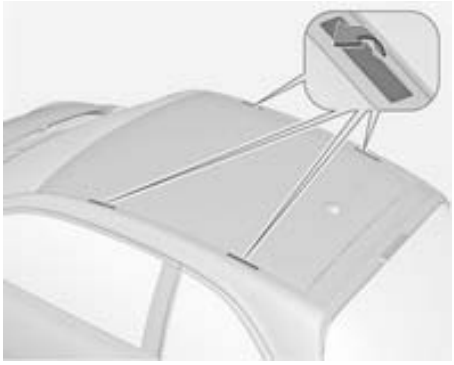

Loading information

- Heavy objects in the load compartment should be placed against the seat backrests. Ensure that the backrests are securely engaged. If objects can be stacked, heavier objects should be placed at the bottom.
- Secure objects with lashing straps attached to the lashing eyes ⇨ 64.
- Use the hook at the right sidewall of the load compartment for hanging up carrier bags. Maximum load: 5 kg.
- Secure loose objects in the load compartment to prevent them from sliding.
- When transporting objects in the load compartment, the backrests of the rear seats must not be angled forward.
- Do not allow the load to protrude above the upper edge of the backrests.
- Do not place any objects on the load compartment cover or the instrument panel, and do not cover the sensor on top of the instrument panel.
- The load must not obstruct the operation of the pedals, parking brake and gear selector lever, or hinder the freedom of movement of the driver. Do not place any unsecured objects in the interior.
- Do not drive with an open load compartment.

Downloaded from www.Manualslib.com manuals search engine

⚠ Warning

Always make sure that the load in the vehicle is securely stowed. Otherwise objects can be thrown around inside the vehicle and cause personal injury or damage to the load or car.

- The payload is the difference between the permitted gross vehicle weight (see identification plate ⇨ 196) and the EC kerb weight.

  To calculate the payload, enter the data for your vehicle in the Weights table at the front of this manual.

  The EC kerb weight includes weights for the driver (68 kg), luggage (7 kg) and all fluids (tank 90 % full).

  Optional equipment and accessories increase the kerb weight.
- Driving with a roof load increases the sensitivity of the vehicle to cross-winds and has a detrimental effect on vehicle handling due to the vehicle's higher centre of gravity. Distribute the load evenly and secure it properly with retaining straps. Adjust the tyre pressure and vehicle speed according to the load conditions. Check and retighten the straps frequently.

  Do not drive faster than 75 mph.

  The permissible roof load is 50 kg. The roof load is the combined weight of the roof rack and the load.

Downloaded from www.Manualslib.com manuals search engine

Instruments and controls

Controls 68
Warning lights, gauges and indicators 76
Information displays 86
Vehicle messages 92
Trip computer 95
Vehicle personalisation 97

Controls

Steering wheel adjustment

Unlock lever, adjust steering wheel, then engage lever and ensure it is fully locked.

Do not adjust steering wheel unless vehicle is stationary and steering wheel lock has been released.

Steering wheel controls

The Infotainment system, the cruise control and a connected mobile phone can be operated via the controls on the steering wheel.

Further information is available in the Infotainment manual.

Driver assistance systems ⇨ 129.

Downloaded from www.Manualslib.com manuals search engine

Heated steering wheel

Activate heating by pressing button. Activation is indicated by the LED in the button.

The recommended grip areas of the steering wheel are heated quicker and to a higher temperature than the other areas.

Heating is operational when the engine is running and during an Autostop.

Stop-start system ⇨ 120.

Horn

Press .

Downloaded from www.Manualslib.com manuals search engine

Windscreen wiper/washer

Windscreen wiper

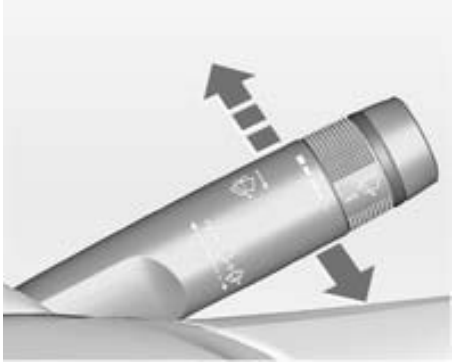

2 = fast
1 = slow
⊡ = interval wiping
O = off

For a single wipe when the windscreen wiper is off, press the lever down.

Do not use if the windscreen is frozen.

Switch off in car washes.

Adjustable wiper interval

Wiper lever in position ⊡.

Turn the adjuster wheel to adjust the desired wipe interval:

short interval	=	turn adjuster wheel upwards
long interval	=	turn adjuster wheel downwards

Automatic wiping with rain sensor

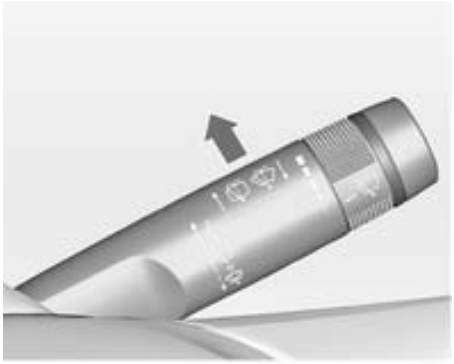

⊡ = automatic wiping with rain sensor

The rain sensor detects the amount of water on the windscreen and automatically regulates the frequency of the windscreen wiper.

If the wiper frequency is above 20 seconds the wiper arm moves slightly down to park position.

Downloaded from www.Manualslib.com manuals search engine

Adjustable sensitivity of the rain sensor

Turn the adjuster wheel to adjust the sensitivity:

low sensitivity	=	turn adjuster wheel downwards
high sensitivity	=	turn adjuster wheel upwards

Keep the sensor free from dust, dirt and ice.

Windscreen washer

Pull lever. Washer fluid is sprayed onto the windscreen and the wiper wipes a few times.

Rear window wiper/washer

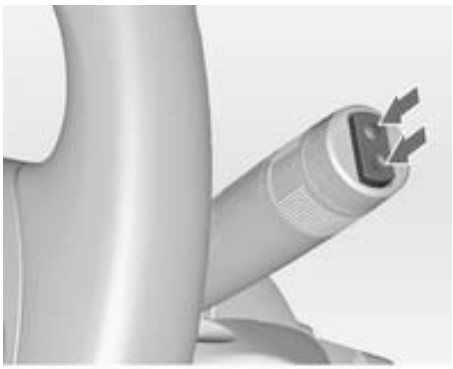

Press the rocker switch to activate the rear window wiper:

upper position	=	continuous operation
lower position	=	intermittent operation
middle position	=	off

Downloaded from www.Manualslib.com manuals search engine

Push lever. Washer fluid is sprayed onto the rear window and the wiper wipes a few times.

Do not use if the rear window is frozen.

Switch off in car washes.

The rear window wiper comes on automatically when the windscreen wiper is switched on and reverse gear is engaged.

Activation or deactivation of this function can be changed in the Info-Display.

Vehicle personalisation ⇨ 97.

Outside temperature

A drop in temperature is indicated immediately and a rise in temperature after a time delay.

Illustration shows Graphic-Info-Display

Illustration shows Colour-Info-Display

Downloaded from www.Manualslib.com manuals search engine

If outside temperature drops to 3 °C, a warning message is displayed in the Driver Information Centre with Uplevel-Display.

⚠ Warning

The road surface may already be icy even though the display indicates a few degrees above 0 °C.

Clock

Graphic-Info Display

Press the **CONFIG** button to open the **Settings** menu.

Scroll through the list and select the menu item **Time Date** to display the respective submenu.

Note
Find a detailed description of the menu operation in the user guide for the Infotainment system.

Set time

Press the **MENU-TUNE** knob to enter the **Set time** submenu.

Turn the **MENU-TUNE** knob to change the current value of the first setting.

Press the **MENU-TUNE** knob to confirm the set value.

The cursor then switches to the next value. If all values are set, you are automatically returned to the next higher menu level.

Set date

Press the **MENU-TUNE** knob to enter the **Set date** submenu.

Turn the **MENU-TUNE** knob to change the current value of the first setting.

Press the **MENU-TUNE** knob to confirm the set value.

The cursor then switches to the next value. If all values are set, you are automatically returned to the next higher menu level.

Set time format

To switch between the available options, repeatedly press the **MENU-TUNE** knob.

Downloaded from www.Manualslib.com manuals search engine

Set date format

To switch between the available options, repeatedly press the **MENU-TUNE** knob.

RDS clock synchronization

The RDS signal of most VHF transmitters automatically sets the time. RDS time synchronisation can take a few minutes. Some transmitters do not send a correct time signal. In such cases, it is recommended to switch off the automatic time synchronisation.

To switch between the options **On** and **Off**, repeatedly press the **MENU-TUNE** knob.

Colour-Info Display

Press the ⌂ button and then select the **Settings** screen button.

Select **Time & date settings** to display the respective submenu.

Note
Find a detailed description of the menu operation in the user guide for the Infotainment system.

Set time format

To select the desired time format, tap on the screen buttons **12 h** or **24 h**.

Set date format

To select the desired date format, tap on the < and > screen buttons and choose between the available options.

Set time and date

To adjust the time and date settings, tap on the ∧ and ∨ screen buttons.

RDS clock synchronization

The RDS signal of most VHF transmitters automatically sets the time. RDS time synchronisation can take a few minutes. Some transmitters do not send a correct time signal. In such cases, it is recommended to switch off the automatic time synchronisation.

To activate or deactivate **RDS clock synchronization**, tap on the screen buttons **On** or **Off**.

Downloaded from www.Manualslib.com manuals search engine

Power outlets

A 12 Volt power outlet is located in the centre console.

Do not exceed the maximum power consumption of 120 watts.

With ignition off, the power outlet is deactivated. Additionally the power outlet is deactivated in the event of low vehicle battery voltage.

Electrical accessories that are connected must comply with the electromagnetic compatibility requirements laid down in DIN VDE 40 839.

Do not connect any current-delivering accessories, e.g. electrical charging devices or batteries.

Do not damage the outlet by using unsuitable plugs.

Stop-start system ⇨ 120.

Cigarette lighter

The cigarette lighter is located in the centre console.

Press in cigarette lighter. It switches off automatically once the element is glowing. Pull out lighter.

Ashtrays

Caution
To be used only for ash and not for combustible rubbish.

The portable ashtray can be placed in the cupholders.

Downloaded from www.Manualslib.com manuals search engine

Warning lights, gauges and indicators

Instrument cluster

The needles of the instruments briefly rotate to the end position when the ignition is switched on.

Speedometer

Indicates vehicle speed.

Odometer

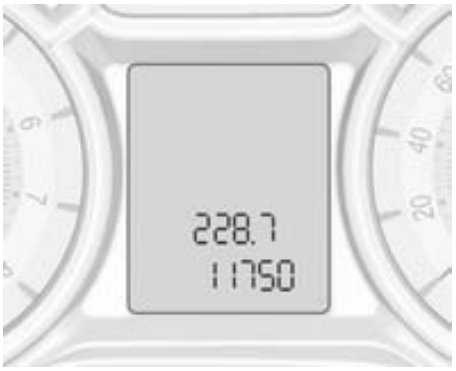

The bottom line displays the recorded distance in miles.

Trip odometer

The top line displays the recorded distance since the last reset.

To reset, press the **SET/CLR** button on the turn signal lever for a few seconds ⇨ 86.

Trip odometer counts up to a distance of 2000 miles and then restarts at 0.

Tachometer

Displays the engine speed.

Drive in a low engine speed range for each gear as much as possible.

Caution
If the needle is in the red warning zone, the maximum permitted engine speed is exceeded. Engine at risk.

Downloaded from www.Manualslib.com manuals search engine

Fuel gauge

Displays the fuel level or gas level in the tank depending on the operation mode.

Control indicator ⛽ illuminates if the level in the tank is low. Refuel immediately if it flashes.

During liquid gas operation, the system automatically switches over to petrol operation when gas tanks are empty ⇨ 77.

Never run the tank dry.

Because of the fuel remaining in the tank, the top-up quantity may be less than the specified tank capacity.

Fuel selector

Press button **LPG** to switch between petrol and liquid gas operation. The LED in the button shows the current operating mode.

LED off	=	petrol operation
LED illuminates	=	liquid gas operation
LED flashes	=	no switching is possible, one type of fuel is empty

As soon as the liquid gas tank is empty, petrol operation is automatically engaged until the ignition is switched off.

Fuel for liquid gas operation ⇨ 143.

Engine coolant temperature gauge

Displays the coolant temperature.

left area	=	engine operating temperature not yet reached
central area	=	normal operating temperature
right area	=	temperature too high

Downloaded from www.Manualslib.com manuals search engine

Caution
If engine coolant temperature is too high, stop vehicle, switch off engine. Danger to engine. Check coolant level.

Service display

The engine oil life system lets you know when to change the engine oil and filter. Based on driving conditions, the interval at which an engine oil and filter change will be indicated can vary considerably.

In the Uplevel-Display, the remaining oil life duration is displayed in the **Vehicle Information Menu**s.

In the Midlevel-Display, the remaining engine oil life duration is displayed by the control indicator, therefore the ignition must be switched on, with the engine off.

The menu and function can be selected via the buttons on the turn signal lever.

To display the remaining engine oil life duration:

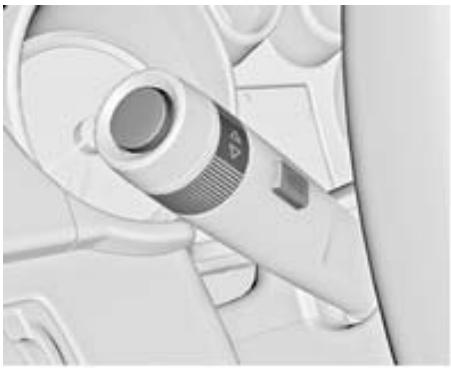

Press the **MENU** button to select the **Vehicle Information Menu**.

Turn the adjuster wheel to select **Remaining Oil Life**.

The system must be reset every time the engine oil is changed to ensure proper functionality. Seek the assistance of a workshop.

Press the **SET/CLR** button to reset. Therefore the ignition must be switched on, with the engine off.

When the system has calculated that engine oil life has been diminished, **Change Engine Oil Soon** or a warning code appears in the Driver Information Centre. Have engine oil and filter changed by a workshop within one week or 300 miles (whichever occurs first).

Driver Information Centre ⇨ 86.

Service information ⇨ 193.

Control indicators

The control indicators described are not present in all vehicles. The description applies to all instrument versions. Depending on the equipment, the position of the control indicators may vary. When the

Downloaded from www.Manualslib.com manuals search engine

ignition is switched on, most control indicators will illuminate briefly as a functionality test.

The control indicator colours mean:

red	=	danger, important reminder
yellow	=	warning, information, fault
green	=	confirmation of activation
blue	=	confirmation of activation
white	=	confirmation of activation

Downloaded from www.Manualslib.com manuals search engine

Control indicators in the instrument cluster

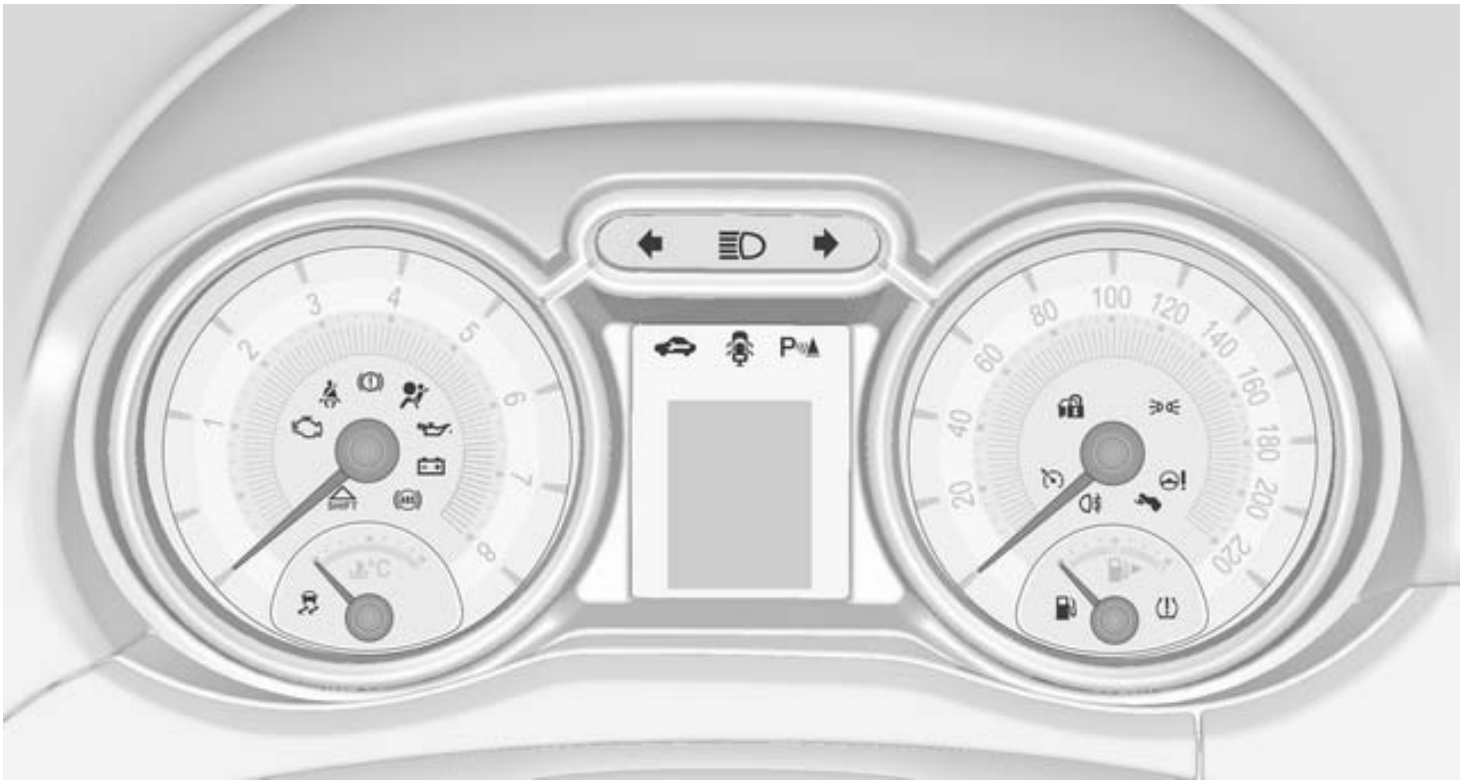

Downloaded from www.Manualslib.com manuals search engine

Control indicators in the centre console

Turn signal

⇦⇨ illuminates or flashes green.

Illuminates briefly

The parking lights are switched on.

Flashes

A turn signal or the hazard warning flashers are activated.

Rapid flashing: failure of a turn signal light or associated fuse.

Bulb replacement ⇨ 156, Fuses ⇨ 164.

Turn signals ⇨ 104.

Seat belt reminder

Seat belt reminder on front seats

for driver's seat illuminates or flashes red in the tachometer.

2 for front passenger seat illuminates or flashes red in the centre console, when the seat is occupied.

Illuminates

After the ignition has been switched on until the seat belt has been fastened.

Flashes

After having started the engine for a maximum of 100 seconds until the seat belt has been fastened.

Fastening the seat belt ⇨ 35.

Seat belt status on rear seats

in the Driver Information Centre flashes or illuminates.

Illuminates

After the ignition has been switched on for a minimum of 35 seconds until the seat belt has been fastened.

If an unfastened seat belt is fastened whilst driving.

Flashes

After starting off when the seat belt is unfastened.

Fastening the seat belt ⇨ 35.

Downloaded from www.Manualslib.com manuals search engine

Airbag and belt tensioners

illuminates red.

When the ignition is switched on, the control indicator illuminates for approx. 4 seconds. If it does not illuminate, does not go out after 4 seconds or illuminates whilst driving, there is a fault in the airbag system. Seek the assistance of a workshop. The airbags and belt pretensioners may fail to trigger in the event of an accident.

Deployment of the belt pretensioners or airbags is indicated by continuous illumination of .

⚠ Warning

Have the cause of the fault remedied immediately by a workshop.

Belt pretensioners, airbag system ⇨ 34, ⇨ 37.

Airbag deactivation

illuminates yellow.

Illuminates for approx. 60 seconds after the ignition is switched on. The front passenger airbag is activated.

illuminates yellow.

The front passenger airbag is deactivated ⇨ 42.

⚠ Danger

Risk of fatal injury for a child using a child restraint system together with activated front passenger airbag.

Risk of fatal injury for an adult person with deactivated front passenger airbag.

Charging system

illuminates red.

Illuminates when the ignition is switched on and extinguishes shortly after the engine starts.

Illuminates when the engine is running

Stop, switch off engine. Vehicle battery is not charging. Engine cooling may be interrupted. The brake servo unit may cease to be effective. Seek the assistance of a workshop.

Malfunction indicator light

illuminates or flashes yellow.

Illuminates when the ignition is switched on and extinguishes shortly after the engine starts.

Illuminates when the engine is running

Fault in the emission control system. The permitted emission limits may be exceeded. Seek the assistance of a workshop immediately.

Downloaded from www.Manualslib.com manuals search engine

Flashes when the engine is running

Fault that could lead to catalytic converter damage. Ease up on the accelerator until the flashing stops. Seek the assistance of a workshop immediately.

Service vehicle soon

illuminates yellow.

Additionally a warning message or a warning code is displayed.

The vehicle needs a service.

Seek the assistance of a workshop.

Vehicle messages ⇨ 92.

Brake and clutch system

Brake and clutch fluid level

illuminates red.

The brake and clutch fluid level is too low ⇨ 153.

⚠Warning
Stop. Do not continue your journey. Consult a workshop.

Illuminates after the ignition is switched on if the manual parking brake is applied ⇨ 125.

Operate pedal

illuminates or flashes yellow.

Clutch pedal needs to be operated to start the engine. Stop-start system ⇨ 120.

Illuminates

Brake pedal needs to be operated to release the electrical parking brake ⇨ 125.

Flashes

Clutch pedal needs to be operated to start the engine ⇨ 119.

Antilock brake system (ABS)

illuminates yellow.

Illuminates for a few seconds after the ignition is switched on. The system is ready for operation when the control indicator extinguishes.

If the control indicator does not go out after a few seconds, or if it illuminates while driving, there is a fault in the ABS. The brake system remains operational but without ABS regulation.

Antilock brake system ⇨ 124.

Upshift

illuminates green as control indicator, or is shown as a symbol in the Driver Information Centre with Uplevel-Display, when upshifting is recommended for fuel saving reasons.

On some versions gear shift indication is popped up as full page in the Driver Information Centre.

EcoFlex drive assistant ⇨ 95.

Power steering

illuminates yellow.

Downloaded from www.Manualslib.com manuals search engine

Illuminates with power steering reduced

Power steering is reduced due to overheating of the system. Control indicator extinguishes when the system has cooled down.

Stop-start system ⇨ 120.

Illuminates with power steering disabled

Failure in the power steering system. Consult a workshop.

Illumination of ⊖! and simultaneously

Power steering system has to be calibrated, system calibration ⇨ 127.

Ultrasonic parking assist

P illuminates yellow.

Fault in system

or

Fault due to sensors that are dirty or covered by ice or snow

or

Interference due to external sources of ultrasound. Once the source of interference is removed, the system will operate normally.

Have the cause of the fault in the system remedied by a workshop.

Ultrasonic parking assist ⇨ 131.

Electronic Stability Control and Traction Control system

flashes or illuminates yellow.

Flashes

The system is actively engaged. Engine output may be reduced and the vehicle may be braked automatically to a small degree.

Illuminates

A fault in the system is present. A warning message or warning code appears in the Driver Information Centre. Continued driving is possible. The system is not operational. Driving stability, however, may deteriorate depending on road surface conditions.

Have the cause of the fault remedied by a workshop.

Electronic Stability Control ⇨ 126, Traction Control system ⇨ 126.

Tyre pressure monitoring system

(!) illuminates or flashes yellow.

Illuminates

Tyre pressure loss. Stop immediately and check tyre pressure.

Flashes

Fault in system or tyre without pressure sensor mounted (e.g. spare wheel). After 60-90 seconds the control indicator illuminates continuously. Consult a workshop.

Tyre pressure monitoring system ⇨ 172.

Downloaded from www.Manualslib.com manuals search engine

Engine oil pressure

illuminates red.

Illuminates when the ignition is switched on and extinguishes shortly after the engine starts.

Illuminates when the engine is running

Caution

Engine lubrication may be interrupted. This may result in damage to the engine and/or locking of the drive wheels.

1. Depress clutch.
2. Select neutral gear.
3. Move out of the flow of traffic as quickly as possible without impeding other vehicles.
4. Switch off ignition.

⚠ Warning

When the engine is off, considerably more force is needed to brake and steer. During an Autostop the brake servo unit will still be operational.

Do not remove key until vehicle is stationary, otherwise the steering wheel lock could engage unexpectedly.

Check oil level before seeking the assistance of a workshop ⇨ 151.

Low fuel

illuminates or flashes yellow.

Illuminates

Level in fuel tank is too low.

Flashes

Fuel used up. Refuel immediately. Never run the tank dry.

Catalytic converter ⇨ 123.

Immobiliser

flashes yellow.

Fault in the immobiliser system. The engine cannot be started.

Exterior light

illuminates green.

The exterior lights are on ⇨ 101.

High beam

illuminates blue.

Illuminated when high beam is on or during headlight flash ⇨ 102.

Rear fog light

illuminates yellow.

The rear fog light is on ⇨ 104.

Cruise control

illuminates white or green.

Illuminates white

The system is on.

Downloaded from www.Manualslib.com manuals search engine

Illuminates green

Cruise control is active.

Cruise control ⇨ 129.

Door open

illuminates red.

A door or the tailgate is open.

Information displays

Driver Information Centre

The Driver Information Centre (DIC) is located in the instrument cluster between speedometer and tachometer. It is available as Midlevel-Display or Uplevel-Display.

Midlevel-Display indicates:

- overall odometer
- trip odometer
- some control indicators
- vehicle information
- trip/fuel information
- vehicle messages, displayed as code numbers ⇨ 92.

Uplevel-Display indicates:

- **Vehicle Information Menu**
- **Trip/Fuel Information Menu**
- **EcoFlex Drive Assist Menu eco**

Select menu pages by presing the **MENU** button; Menu symbols are indicated in the top line of the display.

Downloaded from www.Manualslib.com manuals search engine

Some of the displayed functions differ when the vehicle is being driven or at a standstill. Some functions are only available when the vehicle is being driven.

Vehicle personalisation ⇨ 97.
Memorised settings ⇨ 20.

Selecting menus and functions

The menus and functions can be selected via the buttons on the turn signal lever.

Press the **MENU** button to switch between the menus or to return from a submenu to the next higher menu level.

Turn the adjuster wheel to highlight a menu option or to set a numeric value.

Press the **SET/CLR** button to select a function or to confirm a message.

Vehicle Information Menu

Press the **MENU** button to select in the top line of the Uplevel-Display.

Turn the adjuster wheel to select a submenu. Press the **SET/CLR** button to confirm.

Follow the instructions given in the submenus.

Possible submenus (depending on the version) can be:

- **Unit**: displayed units can be changed
- **Tire Pressure**: checks tyre pressure of all wheels during driving ⇨ 172
- **Tire Load**: select tyre pressure category according to the actually inflated tyre pressure ⇨ 172

Downloaded from www.Manualslib.com manuals search engine

- **Remaining Oil Life**: indicates when to change the engine oil and filter ⇨ 78

- **Speed Warning**: if exceeding the preset speed, a warning chime will be activated

Selection and indication can be different between Midlevel- and Uplevel-Display.

Trip/Fuel Information Menu /⁝\

Press the **MENU** button to select /⁝\ in the top line of the Uplevel-Display.

Turn the adjuster wheel to select a submenu. Press the **SET/CLR** button to confirm.

- Trip odometer 1
- Trip odometer 2
- Digital speed

Trip odometer 2 and digital speed are only available on vehicles with Uplevel-Display.

Reset trip odometer by pressing the **SET/CLR** button on the turn signal lever for a few seconds or by pressing the reset knob between speedometer and Driver Information Centre with the ignition on.

On vehicles with trip computer more submenus are available.

Selection and indication can be different between Midlevel- and Uplevel-Display.

Trip/Fuel Information Menu, Trip Computer ⇨ 95.

ECO Information Menu eco

Press the **MENU** button to select eco in the top line of the Uplevel-Display.

Turn the adjuster wheel to select a submenu. Press the **SET/CLR** button to confirm.

Downloaded from www.Manualslib.com manuals search engine

Submenus are:

- **Shift indication**: Current gear is indicated inside an arrow. The figure above recommends upshifting for fuel saving reasons.

  Eco index display: The current fuel consumption is indicated on a segment display. For economical driving, adapt your driving style to keep the filled segments within the Eco area. The more segments are filled, the higher the fuel consumption. Simultaneously the current consumption value is indicated.

- **Top Consumers**: List of top comfort consumers currently switched on is displayed in descending order. Fuel saving potential is indicated. A switched-off consumer disappears from the list and the consumption value will be updated.

- **Economy Trend**: Displays the average consumption development over a distance of 50 miles. Filled segments display the consumption in 5 mile steps and shows the effect of topography or driving behaviour on fuel consumption.

Downloaded from www.Manualslib.com manuals search engine

Graphic-Info-Display, Colour-Info-Display

Depending on the vehicle configuration the vehicle has a

- **Graphic-Info-Display**

  or
- **Colour-Info-Display** with Touch-Screen functionality.

Both displays are located in the instrument panel.

Graphic-Info-Display

Graphic-Info-Display indicates:

- time ⇨ 73
- outside temperature ⇨ 72
- date ⇨ 73
- electronic climate control settings ⇨ 112
- Infotainment system, see description in the Infotainment manual
- settings for vehicle personalisation ⇨ 97

Selecting menus and settings

Menus and settings are accessed via the display.

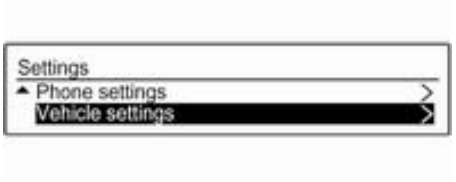

Press button **CONFIG**: Menu page **Settings** is displayed.

Turn knob **MENU-TUNE** to select a setting or value.

Press knob **MENU-TUNE** to confirm a setting or value.

Press button **BACK** to exit a menu or setting without changing or delete the last character in a character sequence. Press the button for a few seconds to delete the entire entry.

To exit the **Settings** menu, press button **BACK** in steps or press button **CONFIG** after confirming the changes.

Vehicle personalisation ⇨ 97.

Memorised settings ⇨ 20.

Colour-Info-Display

Downloaded from www.Manualslib.com manuals search engine

The Colour-Information-Display indicates in colour:

- time ⇨ 73
- outside temperature ⇨ 72
- date ⇨ 73
- electronic climate control settings ⇨ 112
- parking assist and advanced parking assist instructions ⇨ 131
- Infotainment system, see description in the Infotainment manual
- navigation, see description in the Infotainment manual
- system messages
- vehicle messages ⇨ 92
- settings for vehicle personalisation ⇨ 97

The type of information and how it is displayed depends on the equipment of the vehicle and the settings made.

Selecting menus and settings

Menus and settings are selected via the touch screen display.

Press button ⌂: **Home** page is displayed.

Tap display icon **Settings**: Menu page **Settings** is displayed. Select a setting by tapping.

Tap selection once more to confirm a setting or value.

Press display button ⮌ to exit a menu or setting without changing or delete the last character in a character sequence.

To exit the **Settings** menu, press display button ⮌ in steps or press button ⌂ after confirming the changes.

Vehicle personalisation ⇨ 97.

Memorised settings ⇨ 20.

Downloaded from www.Manualslib.com manuals search engine

Vehicle messages

Messages are indicated mainly in the Driver Information Centre (DIC), in some cases together with a warning and signal buzzer.

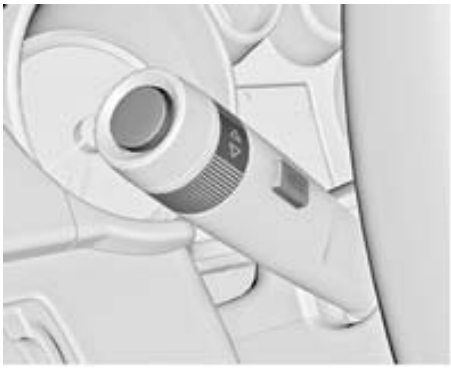

Press the **SET/CLR** button, the **MENU** button or turn the adjuster wheel to confirm a message.

Vehicle messages on the Midlevel-Display

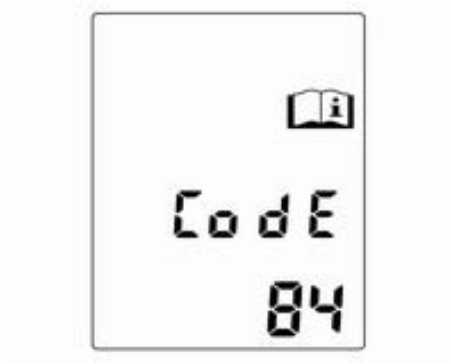

The vehicle messages are displayed as code numbers.

No.	Vehicle message
1	Change engine oil
2	No radio remote control detected, depress clutch pedal for a restart
3	Engine coolant level low
4	Air conditioning off
5	Steering wheel is locked
7	Turn steering wheel, switch ignition off and then on
9	Turn steering wheel, start engine again
12	Vehicle overloaded
13	Compressor overheated
15	Centre high-mounted brake light failure
16	Brake light failure
17	Headlight levelling malfunction
18	Left low beam failure
19	Rear fog light failure
20	Right low beam failure
21	Left sidelight failure
22	Right sidelight failure
23	Reversing light failure
24	Number plate light failure

Downloaded from www.Manualslib.com manuals search engine

No.	Vehicle message
25	Left front turn signal failure
26	Left rear turn signal failure
27	Right front turn signal failure
28	Right rear turn signal failure
35	Replace battery in radio remote control
48	Clean side blind spot alert system
53	Tighten gas cap
56	Tyre pressure imbalance on front axle
57	Tyre pressure imbalance on rear axle
58	Winter tyres detection
59	Open and then close driver window
60	Open and then close front passenger window
66	Service theft alarm system

No.	Vehicle message
67	Service steering wheel lock
68	Service power steering
75	Service air conditioning
76	Service side blind spot alert system
79	Top up engine oil
82	Change engine oil soon
84	Engine power reduced
89	Service vehicle soon
95	Service airbag
120	Reduce speed for hill decent control
128	Bonnet open
134	Park assist fault, clean bumper
136	Service parking assist
174	Low vehicle battery
258	Park assist off

Vehicle messages on the Uplevel-Display

The vehicle messages are displayed as text. Follow the instructions given in the messages.

The system displays messages regarding the following topics:

- Fluid levels
- Anti-theft alarm system
- Brakes
- Ride control systems
- Cruise control, Speed limiter
- Parking assist systems

Downloaded from www.Manualslib.com manuals search engine

- Lighting, bulb replacement
- Wiper/washer system
- Doors, windows
- Radio remote control
- Seat belts
- Airbag systems
- Engine and transmission
- Tyre pressure
- Vehicle battery

Vehicle messages on the Colour-Info-Display

Some important messages appear additionally in the Colour-Info-Display. Some messages only pop up for a few seconds.

Warning chimes

When starting the engine or whilst driving

Only one warning chime will sound at a time.

The warning chime regarding unfastened seat belts has priority over any other warning chime.

- If seat belt is not fastened.
- If a door or the tailgate is not fully closed when starting off.
- If a certain speed is exceeded with parking brake applied.
- If a programmed speed is exceeded.
- If a warning message or a warning code appears in the Driver Information Centre or Graphic-Info-Display.
- If the parking assist or advanced parking assist detects an object.
- If the reverse gear is engaged and the rear end carrier extended.

When the vehicle is parked and/or the driver's door is opened

- When the key is in the ignition switch.
- With exterior lights on.

During an Autostop

- If the driver's door is opened.

Battery voltage

When the vehicle battery voltage is running low, a warning message or warning code 174 will appear in the Driver Information Centre.

1. Switch off immediately electrical consumers which are not required for a safe ride, such as seat heating, heated rear window or other main consumers.
2. Charge the vehicle battery by driving continuously for a while or by using a charging device.

The warning message or warning code will disappear after the engine has been started two times consecutively without voltage drop.

If the vehicle battery cannot be recharged, have the cause of the fault remedied by a workshop.

Downloaded from www.Manualslib.com manuals search engine

Trip computer

The menus and functions can be selected via the buttons on the turn signal lever ⇨ 86.

Press the **MENU** button to select /⁝\ on the Uplevel-Display.

Trip/Fuel Information Menu on Uplevel-Display

Turn the adjuster wheel to select the submenus:

- Trip odometer 1
- Average consumption 1
- Average speed 1

- Trip odometer 2
- Average consumption 2
- Average speed 2

Downloaded from www.Manualslib.com manuals search engine

- Digital speed
- Range
- Instantaneous consumption

Trip computer 1 and 2

The information of two trip computers can be reset separately for odometer, average consumption and average speed by pressing the **SET/CLR** button, making it possible to display different trip information for different drivers.

Trip odometer

Trip odometer displays the recorded distance since a certain reset.

Trip odometer counts up to a distance of 2,000 miles and then restarts at 0.

To reset, press the **SET/CLR** button for a few seconds.

Fuel range

Range is calculated from current fuel tank content and current consumption. The display shows average values.

After refuelling, the range is updated automatically after a brief delay.

When the fuel level in the tank is low, a message appears on vehicles with Uplevel-Display.

When the tank must be refuelled immediately, a warning code or warning message is displayed on vehicles with Midlevel- and Uplevel-Display.

Additionally the control indicator ⛽ in the fuel gauge illuminates or flashes ⇨ 85.

Fuel range LPG version

Display of approximate fuel range available with the remaining fuel in each respective fuel tank of gasoline and LPG fuel, along with a total range of both fuel types together. Switch between the mode by pressing **SET/CLR** button.

Average consumption

Display of average consumption. The measurement can be reset at any time and starts with a default value.

To reset, press the **SET/CLR** button for a few seconds.

Downloaded from www.Manualslib.com manuals search engine

On vehicles with LPG engines: Average consumption is indicated for the currently selected mode; LPG or Gasoline.

Instantaneous consumption

Display of the instantaneous consumption.

On vehicles with LPG engines: Instantaneous consumption is indicated for the currently selected mode; LPG or Gasoline.

Average speed

Display of average speed. The measurement can be reset at any time.

To reset, press the **SET/CLR** button for a few seconds.

Digital speed

Digital display of the instantaneous speed.

Vehicle personalisation

The vehicle's behaviour can be personalised via changing the settings in the Info-Display.

Some of the personal settings for different drivers can be memorised individually for each vehicle key. Memorised settings ⇨ 20.

Depending on vehicle equipment and country-specific regulations some of the functions described below might not be available.

Some functions are only displayed or active when the engine is running.

Personal settings in the Graphic-Info-Display

Press the **CONFIG** button for the Settings menu.

Turn the **MENU-TUNE** control to move to the desired setup menu, and then press **MENU-TUNE** button.

The following settings can be selected:

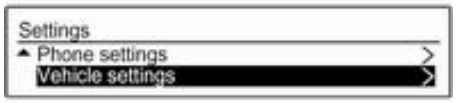

- **Languages**
- **Time Date**
- **Radio settings**
- **Phone settings**
- **Vehicle settings**

Downloaded from www.Manualslib.com manuals search engine

In the corresponding submenus the following settings can be changed:

Languages
Selection of the desired language.

Time Date
See Clock ⇨ 73.

Radio settings
See Infotainment manual for further information.

Phone settings
See Infotainment manual for further information.

Vehicle settings

- **Climate and air quality**

  Auto fan speed: Modifies the level of the cabin airflow of the climate control in automatic mode.

  Climate control mode: Controls the state of the cooling compressor when the vehicle is started. Last setting (recommended) or at vehicle start is either always ON or always OFF.

  Auto rear demist: Activates automatically rear heated window.

- **Comfort settings**

  Chime volume: Change the volume of warning chimes.

  Personalization by driver: Activates or deactivates the personalisation function.

  Rear auto wipe in reverse:

  Activate or deactivate automatic switching on of the rear window wiper when reverse gear is engaged.

- **Park assist / Collision detection**

  Park assist: Activate or deactivate the ultrasonic sensors.

  Side blind zone alert: Changes the settings for the side blind spot alert system.

- **Exterior ambient lighting**

  Exterior lighting by unlocking:

  Activate or deactivate the entry lighting.

  Duration upon exit of vehicle:

  Activate or deactivate and change the duration of exit lighting.

- **Power door locks**

  Auto door unlock: Activates or deactivates the automatic door unlocking function after switching off ignition.

  Auto door lock: Activates or deactivates the automatic door locking function after switching on ignition.

  Stop door lock if door open: Activate or deactivate the automatic door locking function while a door is open.

  Delayed door lock: Activates or deactivates the delayed door locking function.

- **Remote locking, unlocking, starting**

  Remote unlock feedback:

  Activate or deactivate the hazard warning flasher feedback whilst unlocking.

  Passive door unlock: Change the configuration to unlock only the driver's door or the whole vehicle whilst unlocking.

Downloaded from www.Manualslib.com manuals search engine

Auto relock doors: Activates or deactivates the automatic relock function after unlocking without opening the vehicle.

- **Restore factory settings**:

  Reset all settings to the default settings.

Personal settings in the Colour-Info-Display

When audio is switched on, press ⌂ on the control panel.

Press **Settings**.

The following settings can be selected:

- **Time & date settings**
- **Radio settings**
- **Connection settings**
- **Vehicle settings**
- **Language**
- **Text scroll**
- **Touch beep volume**
- **Max startup volume**
- **System version**
- **DivX®) VOD**

In the corresponding submenus the following settings can be changed:

Time & date settings

See Clock ⇨ 73.

Radio settings

See Infotainment manual for further information.

Connection settings

See Infotainment manual for further information.

Vehicle settings

- **Climate & air quality**

  Auto fan speed: Modifies the level of the cabin airflow of the climate control in automatic mode.

  Climate control mode: Controls the state of the cooling compressor when the vehicle is started. Last setting (recommended) or at vehicle start is either always ON or always OFF.

  Auto rear defog: Activates automatically rear heated window.

- **Comfort & convenience**

  Chime volume: Change the volume of warning chimes.

Downloaded from www.Manualslib.com manuals search engine

Personalization by driver: Activates or deactivates the personalisation function.

Auto wipe in reverse gear: Activate or deactivate automatic switching on of the rear window wiper when reverse gear is engaged.

- **Collision / detection**

  Park assist: Activate or deactivate the ultrasonic sensors.

  Side blind zone alert: Changes the settings for the side blind spot alert system.

- **Lighting**

  Exit lighting: Activates or deactivates and changes the duration of exit lighting.

  Vehicle locator lights: Activates or deactivates the welcome lighting.

- **Power door locks**

  Auto door unlock: Activates or deactivates the automatic door unlocking function after switching off ignition.

  Auto door lock: Activates or deactivates the automatic door locking function after switching on ignition.

  Unlocked door anti lock out: Activates or deactivates the automatic door locking function while a door is open.

  Delayed door lock: Activates or deactivates the delayed door locking function.

- **Lock, unlock settings**

  Remote unlock light feedback: Activates or deactivates the hazard warning flasher feedback whilst unlocking.

  Remote door unlock: Changes the configuration to unlock only the driver's door or the whole vehicle whilst unlocking.

  Relock remotely unlocked doors: Activates or deactivates the automatic relock function after unlocking without opening the vehicle.

- **Vehicle factory settings**: Restore the setting values back to the factory default settings.

Language
Selection of the desired language.

Text scroll
See Infotainment manual for further information.

Touch beep volume
See Infotainment manual for further information.

Max startup volume
See Infotainment manual for further information.

System version
See Infotainment manual for further information.

DivX®) VOD
See Infotainment manual for further information.

Downloaded from www.Manualslib.com manuals search engine

Lighting

Exterior lighting 101
Interior lighting 105
Lighting features 107

Exterior lighting

Light switch

Turn light switch:

0 = lights off
⇒⇐ = sidelights
≣D = headlights

Control indicator ⇒⇐ ⇨ 85.

Light switch with Automatic light control

Turn light switch:

AUTO = automatic light control: low beam is switched on and off automatically depending on external lighting conditions.
⏻ = activation or deactivation of the automatic light control. Switch turns back to **AUTO**.
⇒⇐ = sidelights
≣D = headlights

Downloaded from www.Manualslib.com manuals search engine

The current status of the automatic light control is displayed In the Driver Information Centre with Uplevel-Display.

When switching on the ignition, automatic light control is active.

When headlights are on, lights up. Control indicator ⇨ 85.

Tail lights

Tail lights are illuminated together with headlights and sidelights.

Automatic light control

When the automatic light control function is switched on and the engine is running, the system switches between daytime running light and headlights automatically depending on the lighting conditions and information given by the rain sensor system.

Daytime running light ⇨ 103.

Automatic headlight activation

During poor lighting conditions the headlights are switched on.

Furthermore the headlights are switched on if the windscreen wipers have been activated for several wipes.

Tunnel detection

When a tunnel is entered the headlights are switched on without any delay.

High beam

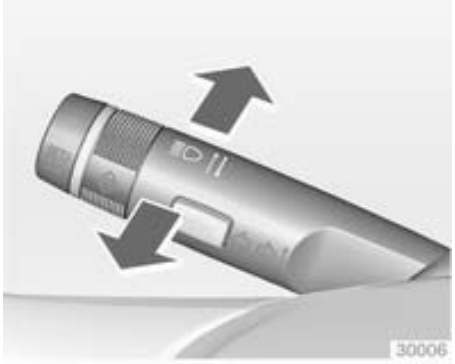

To switch from low to high beam, push lever.

To switch to low beam, push lever again or pull.

Headlight flash

To activate the headlight flash, pull lever.

Downloaded from www.Manualslib.com manuals search engine

Headlight range adjustment

Manual headlight range adjustment

To adapt headlight range to the vehicle load to prevent dazzling: turn thumb wheel to required position.

0 = front seats occupied
1 = all seats occupied
2 = all seats occupied and load compartment laden
3 = driver's seat occupied and load compartment laden.

Headlights when driving abroad

The asymmetrical headlight beam extends visibility at the edge of the road at the passenger side.

However, when driving in countries where traffic drives on the opposite side of the road, adjust the headlights to prevent dazzling of oncoming traffic.

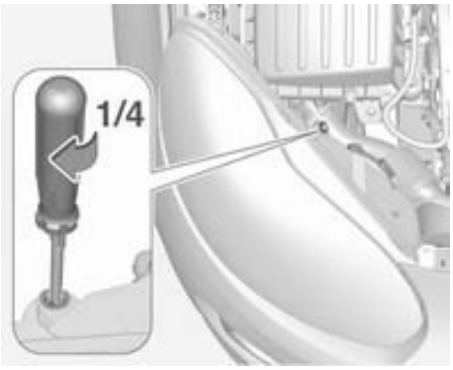

Turn adjuster on both headlight housings $^1/_4$ turn clockwise to set tourist mode.

Daytime running lights

Daytime running light increases visibility of the vehicle during daylight.

They are switched on automatically when ignition is on.

Hazard warning flashers

Operated by pushing the button.

In the event of an accident with airbag deployment the hazard warning flashers are activated automatically.

Downloaded from www.Manualslib.com manuals search engine

Turn and lane-change signals

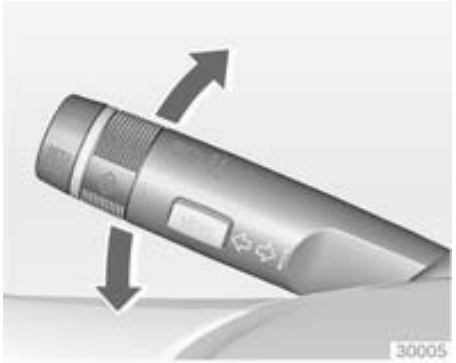

lever up = right turn signal
lever down = left turn signal

If the lever is moved past the resistance point, the turn signal is switched on constantly. When the steering wheel moves back, the turn signal is automatically deactivated.

For three flashes, e.g. when changing lanes, press the lever until resistance is felt and then release.

Move the lever to the resistance point and hold for longer indication.

Switch the turn signal off manually by moving the lever to its original position.

Rear fog lights

Operated by pushing the button.

Light switch in position **AUTO**: switching on rear fog light will switch on headlights automatically.

Parking lights

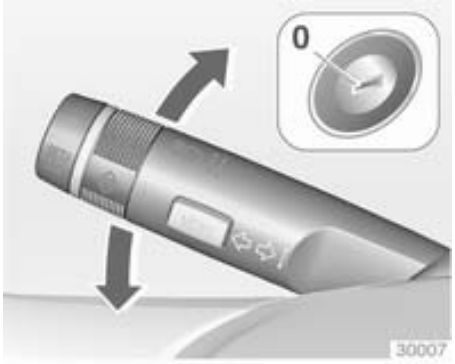

When the vehicle is parked, the parking lights on one side can be activated:

1. Switch off ignition.
2. Move turn signal lever all the way up (right parking lights) or down (left parking lights).

Confirmed by a signal and the corresponding turn signal control indicator.

Downloaded from www.Manualslib.com manuals search engine

Reversing lights

The reversing light comes on when the ignition is on and reverse gear is selected.

Misted light covers

The inside of the light housing may mist up briefly in poor, wet and cold weather conditions, in heavy rain or after washing. The mist disappears quickly by itself; to help switch on the headlights.

Interior lighting

Instrument panel illumination control

Brightness of the following lights can be adjusted when the exterior lights are on:

- instrument panel illumination
- ambient light
- dome light
- Info-Display
- illuminated switches and operation elements.

Turn thumb wheel and hold until the desired brightness is obtained.

On vehicles with light sensor, the brightness can only be adjusted when the exterior lights are on and the light sensor detects night conditions.

Interior lights

Front courtesy light

During entry and exit of the vehicle, the courtesy light automatically switches on and then off after a delay.

Downloaded from www.Manualslib.com manuals search engine

Operate rocker switch:

	=	automatic switching on and off.
press	=	on.
press	=	off.

Note
In the event of an accident with airbag deployment the courtesy lights are turned on automatically.

Dome light

Spotlight incorporated in the interior lighting comes on when headlights are switched on.

Ambient light

Ambient light consists of indirect lights in the doors, in the instrument panel below the heating and ventilation unit and in the passenger foot well. 8 colours can be selected by a button in the roof console.

Operate button with ignition switched on:

one brief press	=	on or off.
repeated brief presses	=	colours change in steps.
long press	=	colours change continuously.

Ambient light can be dimmed with the thumb wheel together with the instrument panel illumination ⇨ 105.

The selected colour remains the next time the ignition is switched on.

Ambient light comes on automatically when switching off ignition and extinguishes after opening a door. Pressing button after switching off ignition; ambient light remains on for 60 minutes.

It is also activated with Entry lighting ⇨ 107 and Exit lighting ⇨ 107.

Starlight panel

Starlight panel consists of approx. 64 LEDs in the roof. The intensity can be dimmed with a button in the roof console.

Downloaded from www.Manualslib.com manuals search engine

Operate button with ignition switched on:

⏻ one brief press	=	on or off.
☼ repeated brief presses	=	dimming stepwise.
☼ long press	=	dimming continuously.

The selected intensity remains the next time the ignition is switched on.

Starlight comes on automatically when switching off ignition and extinguishes after opening a door. Pressing button ⏻ after switching off ignition; ambient light remains on for 60 minutes.

It is also activated with Entry lighting ⇨ 107 and Exit lighting ⇨ 107.

Lighting features

Entry lighting

Welcome lighting

The following lights are switched on for a short time by unlocking the vehicle with the radio remote control:

- headlights
- tail lights
- reversing light
- number plate lights
- instrument panel light
- interior lights

Some functions are only operable when it is dark outside to facilitate locating the vehicle.

The lighting switches off immediately when the ignition key is turned to position **1** ⇨ 119.

Activation or deactivation of this function can be changed in the Info-Display.

Vehicle personalisation ⇨ 97.

The settings can be saved for the key being used ⇨ 20.

The following lights will additionally switch on when the driver's door is opened:

- all switches
- Driver Information Centre
- ambient light
- starlight panel

Exit lighting

The following lights switch on if the key is removed from the ignition switch:

- interior lights
- instrument panel light (only when it is dark)
- ambient light
- starlight panel

They will switch off automatically after a delay and will be activated again if the driver's door is opened.

Downloaded from www.Manualslib.com manuals search engine

Path lighting

Headlights, tail lights, reversing lights and number plate lights illuminate the surrounding area for an adjustable time after leaving the vehicle.

Activating

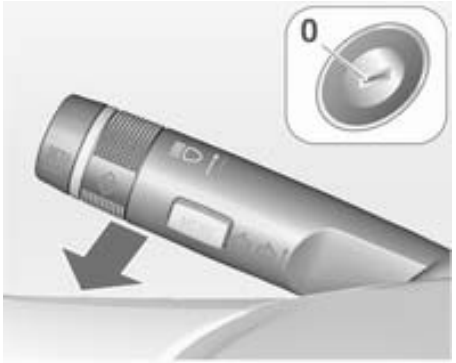

1. Switch off ignition
2. remove ignition key
3. open driver's door
4. pull turn signal lever
5. close driver's door

If the driver's door is not closed the lights switch off after two minutes.

Exit lighting is switched off immediately if the turn signal lever is pulled while the driver's door is open.

Activation, deactivation and duration of this function can be changed in the Info-Display. Vehicle personalisation ⇨ 97.

The settings can be saved for the key being used ⇨ 20.

Battery discharge protection

Vehicle battery state of charge function

The function guarantees longest vehicle battery life via a generator with controllable power output and optimised power distribution.

To prevent discharge of the vehicle battery when driving, following systems are reduced automatically in two stages and finally switched off:

- Auxiliary heater
- Heated rear window and mirrors
- Heated seats
- Fan

In the second stage a message which confirms the activation of the vehicle battery discharge protection will be displayed in the Driver Information Centre.

Switching off electric lights

To prevent discharge of the vehicle battery when the ignition is switched off, some interior lights are switched off automatically after some time.

Downloaded from www.Manualslib.com manuals search engine

Climate control

Climate control systems 109
Air vents 116
Maintenance 117

Climate control systems

Heating and ventilation system

Controls for:

- Temperature
- Fan speed
- Air distribution

Heated rear window ⇨ 29.

Temperature

red = warm
blue = cold

Heating will not be fully effective until the engine has reached normal operating temperature.

Fan speed

Adjust the air flow by switching the fan to the desired speed.

Air distribution

= to head area
= to head area and foot well
= to foot well
= to windscreen, front door windows and foot well
= to windscreen and front door windows

Intermediate settings are possible.

Downloaded from www.Manualslib.com manuals search engine

Demisting and defrosting the windows

- Set temperature control to warmest level.
- Set fan speed to highest speed.
- Set air distribution control to .
- Switch on heated rear window .
- Open side air vents as required and direct them towards door windows.
- For simultaneous warming of the foot well, set air distribution control to .

Note

If air distribution mode is selected while engine is running, an Autostop will be inhibited until another air distribution is selected.

If air distribution mode is selected while the engine is in an Autostop, the engine will restart automatically.

Stop-start system ⇨ 120.

Air conditioning system

In addition to the heating and ventilation system, the air conditioning system has controls for:

= cooling
= air recirculation

Heated seats ⇨ 34, Heated steering wheel ⇨ 69.

Cooling

Press button to switch on cooling. Activation is indicated by the LED in the button. Cooling is only functional when the engine is running and climate control fan is switched on.

Downloaded from www.Manualslib.com manuals search engine

Press button ❄ again to switch off cooling.

The air conditioning system cools and dehumidifies (dries) as soon as the outside temperature is slightly above the freezing point. Therefore condensation may form and drip from under the vehicle.

If no cooling or drying is required, switch off the cooling system to save fuel. Activated cooling might inhibit Autostops.

Stop-start system ⇨ 120.

Air recirculation system

Press button to activate air recirculation mode. Activation is indicated by the LED in the button.

Press button again to deactivate recirculation mode.

⚠ Warning

The exchange of fresh air is reduced in air recirculation mode. In operation without cooling the air humidity increases, so the windows may mist up from inside. The quality of the passenger compartment air deteriorates, which may cause the vehicle occupants to feel drowsy.

In warm and very humid ambient air conditions, the windscreen might mist up from outside, when cold air is directed to it. If windscreen mists up from outside, activate windscreen wiper and deactivate .

Maximum cooling

Briefly open the windows so that hot air can disperse quickly.

- Switch on cooling ❄.
- Air recirculation system on.
- Set temperature control to coldest level.
- Set fan speed to highest level.
- Set air distribution control to .
- Open all vents.

Downloaded from www.Manualslib.com manuals search engine

Demisting and defrosting the windows

- Switch on cooling.
- Set temperature control to warmest level.
- Set fan speed to highest level.
- Set air distribution control to.
- Switch on heated rear window.
- Open side air vents as required and direct them towards the door windows.

Note

If air distribution mode is selected while engine is running, an Autostop will be inhibited until another air distribution is selected.

If air distribution mode is selected while the engine is in an Autostop, the engine will restart automatically.

Stop-start system ⇨ 120.

Electronic climate control system

Controls for:

- Fan speed
- Temperature
- Air distribution

	=	Cooling
AUTO	=	Automatic mode
	=	Manual air recirculation
	=	Demisting and defrosting

Heated rear window ⇨ 29, Heated seats ⇨ 34, Heated steering wheel ⇨ 69.

In Automatic mode temperature, fan speed and air distribution are regulated automatically.

Downloaded from www.Manualslib.com manuals search engine

Climate control settings are shown on the Graphic-Info-Display, or depending on the version, on Colour-Info-Display. Setting modifications are briefly popped-up in both displays, superimposed over the currently displayed menu.

The electronic climate control system is only fully operational when the engine is running.

Automatic mode AUTO

Basic setting for maximum comfort:

- Press **AUTO** button, the air distribution and fan speed are regulated automatically. Activation is indicated by the LED in the button.
- Open all air vents to allow optimised air distribution in automatic mode.
- Press ☼ to switch on optimal cooling and demisting. Activation is indicated by the LED in the button.
- Set the preselected temperature using the centre rotary knob. Recommended temperature is 22 °C.

Temperature preselection

Set temperature by turning the centre rotary knob to the desired value. It is indicated in the display of the switch.

For reasons of comfort, change temperature only in small increments.

If the minimum temperature **Lo** is set, the climate control system runs at maximum cooling, if cooling ☼ is switched on.

If the maximum temperature **Hi** is set, the climate control system runs at maximum heating.

Note
If ☼ is switched on, reducing the set cabin temperature can cause the engine to restart from an Autostop or inhibit an Autostop.

Downloaded from www.Manualslib.com manuals search engine

Demisting and defrosting the windows

- Press button . Activation is indicated by the LED in the button.
- Press button for cooling. Activation is indicated by the LED in the button.
- Temperature and air distribution are set automatically and the fan runs at high speed.
- Switch on heated rear window .
- To return to previous mode: press button , to return to automatic mode: press button **AUTO**.

Setting of automatic rear window heating can be changed in the Info-Display. Vehicle personalisation ⇨ 97.

Note

If the button is pressed while the engine is running, an Autostop will be inhibited until the button is pressed again.

If the button is pressed while the engine is in an Autostop, the engine will restart automatically.

Stop-start system ⇨ 120.

Manual settings

Climate control system settings can be changed by activating the buttons and rotary knobs as follows.
Changing a setting will deactivate the automatic mode.

Fan speed

Turn left rotary knob to decrease or increase fan speed. The fan speed is indicated in the Info-Display.

Turning knob to ○: fan and cooling are switched off.

To return to automatic mode: Press **AUTO** button.

Downloaded from www.Manualslib.com manuals search engine

Air distribution

Turn right rotary knob for desired adjustment. Setting is indicated in the Info-Display.

- = to foot well
- = to windscreen, front door windows and foot well
- = to windscreen and front door windows
- = to head area via adjustable air vents
- = to head area and foot well

Return to automatic air distribution: press button **AUTO**.

Cooling

Press button to switch on cooling. Activation is indicated by the LED in the button. Cooling is only functional when the engine is running and climate control fan is switched on.

Press button again to switch off cooling.

The air conditioning system cools and dehumidifies (dries) as soon as the outside temperature is slightly above the freezing point. Therefore condensation may form and drip from under the vehicle.

If no cooling or drying is required, switch off cooling to save fuel. When the cooling system is switched off, no engine restart will be requested by the climate control system during an Autostop. Exception: defrost system is activated and outside temperature above 0° C requests a restart.

The status of cooling operation is indicated in the Info-Display.

Activation or deactivation of cooling operation after engine start can be changed in the Info-Display. Vehicle personalisation ⇨ 97.

Air recirculation mode

Downloaded from www.Manualslib.com manuals search engine

Press button to activate air recirculation mode. Activation is indicated by the LED in the button.

Press button again to deactivate recirculation mode.

⚠Warning

The exchange of fresh air is reduced in air recirculation mode. In operation without cooling the air humidity increases, so the windows may mist up from inside. The quality of the passenger compartment air deteriorates, which may cause the vehicle occupants to feel drowsy.

In warm and very humid ambient air conditions, the windscreen might mist up from outside, when cold air is directed to it. If windscreen mists up from outside, activate windscreen wiper and deactivate .

Basic settings

Some settings can be changed in the Info-Display. Vehicle personalisation ⇨ 97.

Air vents

Adjustable air vents

At least one air vent must be open while the cooling is on.

Adjust the air amount at the vent outlet by turning the adjuster wheel. The vent is closed when the adjuster wheel is turned close to the left or right.

Direct the flow of air by tilting and swivelling the slats.

⚠Warning

Do not attach any objects to the slats of the air vents. Risk of damage and injury in case of an accident.

Fixed air vents

Additional air vents are located beneath the windscreen and door windows and in the foot wells.

Downloaded from www.Manualslib.com manuals search engine

Maintenance

Air intake

The air intake in front of the windscreen in the engine compartment must be kept clear to allow air intake. Remove any leaves, dirt or snow.

Pollen filter

The pollen filter cleans dust, soot, pollen and spores from the air entering the vehicle through the air intake.

Air conditioning regular operation

In order to ensure continuously efficient performance, cooling must be operated for a few minutes once a month, irrespective of the weather and time of year. Operation with cooling is not possible when the outside temperature is too low.

Service

For optimal cooling performance, it is recommended to annually check the climate control system, starting three years after initial vehicle registration, including:

- Functionality and pressure test
- Heating functionality
- Leakage check
- Check of drive belts
- Cleaning of condenser and evaporator drainage
- Performance check

Downloaded from www.Manualslib.com manuals search engine

Driving and operating

Driving hints 118
Starting and operating 118
Engine exhaust 123
Manual transmission 123
Brakes 124
Ride control systems 126
Driver assistance systems 129
Fuel 143

Driving hints

Control of the vehicle

Never coast with engine not running (except during Autostop)

Many systems will not function in this situation (e.g. brake servo unit, power steering). Driving in this manner is a danger to yourself and others. All systems function during an Autostop.

Stop-start system ⇨ 120.

Idle boost

If charging of the vehicle battery is required due to battery condition, the power output of the generator has to be increased. This will be achieved by an idle boost which may be audible.

On vehicles with Uplevel-Display, a message appears in the Driver Information Centre.

Pedals

To ensure the pedal travel is uninhibited, there must be no mats in the area of the pedals.

Starting and operating

New vehicle running-in

Do not brake unnecessarily hard for the first few journeys.

During the first drive, smoke may occur because of wax and oil evaporating off the exhaust system. Park the vehicle in the open for a while after the first drive and avoid inhaling the fumes.

During the running-in period fuel and engine oil consumption may be higher. Autostop may be inhibited to allow for charging the vehicle battery.

Downloaded from www.Manualslib.com manuals search engine

Ignition switch positions

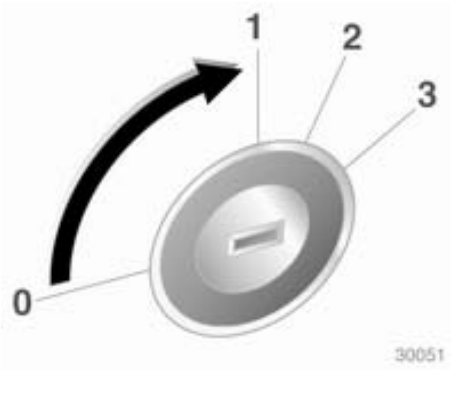

0 = Ignition off
1 = Steering wheel lock released, ignition off
2 = Ignition on
3 = Starting

Retained power off

The following electronic systems can work until the driver's door is opened or at the latest for 10 minutes after the ignition is switched off:

- Power windows
- Power outlets

Power to the Infotainment system will continue to operate for 30 minutes or until the key is removed from the ignition switch, regardless of whether any door will be opened.

Starting the engine

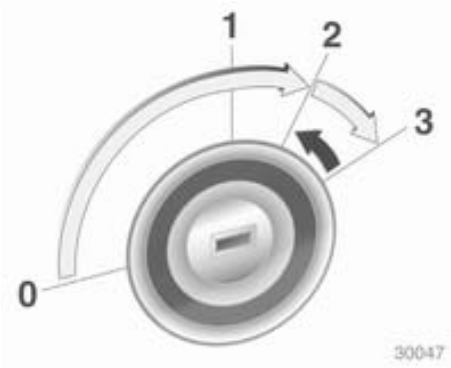

Operate clutch.

Do not operate the accelerator pedal.

Turn key briefly to position **3** and release: an automatic procedure operates the starter after a brief delay, until the engine is running. See Automatic Starter Control.

Before restarting or to switch off the engine, turn the key back to position **0**.

During an Autostop, the engine can be started by depressing the clutch pedal.

Starting the vehicle at low temperatures

The start of the engine without additional heaters is possible down to -30 °C. Required is an engine oil with the correct viscosity, the correct fuel, performed services and a sufficiently charged vehicle battery.

Automatic Starter Control

This function controls the engine starting procedure. The driver does not have to hold the key in position **3**. Once applied, the system will go on starting automatically until the engine is running. Because of the checking procedure, the engine starts running after a short delay.

Downloaded from www.Manualslib.com manuals search engine

Possible reasons for a non-starting engine:

- Clutch pedal not operated
- Timeout occurred

Turbo engine warm-up

Upon start-up, engine available torque may be limited for a short time, especially when the engine temperature is cold. The limitation is to allow the lubrication system to fully protect the engine.

Overrun cut-off

The fuel supply is automatically cut off during overrun, i.e. when the vehicle is driven with a gear engaged but accelerator is released.

Stop-start system

The stop-start system helps to save fuel and to reduce the exhaust emissions. When conditions allow, it switches off the engine as soon as the vehicle is at a low speed or at a standstill, e.g. at a traffic light or in a traffic jam. It starts the engine automatically as soon as the clutch is depressed. A vehicle battery sensor ensures that an Autostop is only performed if the vehicle battery is sufficiently charged for a restart.

Activation

The stop-start system is available as soon as the engine is started, the vehicle starts-off and the conditions as stated below in this section are fulfilled.

Deactivation

Deactivate the stop-start system manually by pressing the **eco** button. The deactivation is indicated when the LED in the button extinguishes.

Autostop

If the vehicle is at a low speed or at a standstill, activate an Autostop as follows:

- Depress the clutch pedal
- set the lever in neutral
- release the clutch pedal

The engine will be switched off while the ignition stays on.

Downloaded from www.Manualslib.com manuals search engine

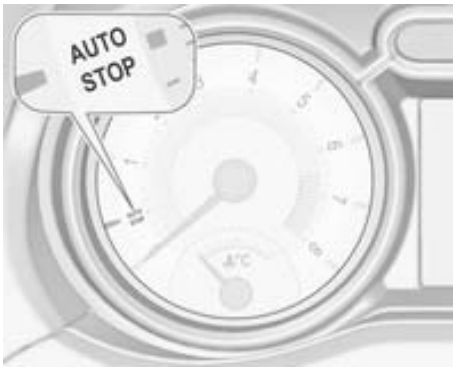

An Autostop is indicated by the needle at the **AUTOSTOP** position in the tachometer.

During an Autostop, the heating and brake performance will be maintained.

Conditions for an Autostop

The stop-start system checks if each of the following conditions is fulfilled:

- The stop-start system is not manually deactivated
- the bonnet is fully closed
- the driver's door is closed or the driver's seat belt is fastened
- the vehicle battery is sufficiently charged and in good condition
- the engine is warmed up
- the engine coolant temperature is not too high
- the engine exhaust temperature is not too high, e.g. after driving with high engine load
- the ambient temperature is above -5° C
- the climate control system allows an Autostop
- the brake vacuum is sufficient
- the vehicle was driven at least at walking speed since the last Autostop

Otherwise an Autostop will be inhibited.

Certain settings of the climate control system may inhibit an Autostop. See Climate control chapter for more details ⇨ 112.

Immediately after motorway driving an Autostop may be inhibited.

New vehicle running-in ⇨ 118.

Vehicle battery discharge protection

To ensure reliable engine restarts, several vehicle battery discharge protection features are implemented as part of the stop-start system.

Power saving measures

During an Autostop, several electrical features such as auxiliary electric heater or rear window heating are disabled or switched into a power saving mode. The fan speed of the climate control system is reduced to save power.

Restart of the engine by the driver

Depress the clutch pedal to restart the engine.

The engine start is indicated by the needle at the idle speed position in the tachometer.

If the selector lever is shifted out of neutral before depressing the clutch first, control indicator illuminates or is shown as a symbol in the Driver Information Centre.

Control indicator ⇨ 83.

Downloaded from www.Manualslib.com manuals search engine

Restart of the engine by the stop-start system

The selector lever must be in neutral to enable an automatic restart.

If one of the following conditions occurs during an Autostop, the engine will be restarted automatically by the stop-start system:

- The stop-start system is manually deactivated:
- the bonnet is opened
- the driver's seat belt is unfastened and the driver's door is opened
- the engine temperature is too low
- the charging level of the vehicle battery is below a defined level
- the brake vacuum is not sufficient
- the vehicle is driven at least at walking speed
- the climate control system requests an engine start
- the air conditioning is manually switched on

If the bonnet is not fully closed, a warning message is displayed in the Driver Information Centre.

If an electrical accessory, e.g. a portable CD player, is connected to the power outlet, a brief power drop during restart might be noticeable.

Parking

- Do not park the vehicle on an easily ignitable surface. The high temperature of the exhaust system could ignite the surface.
- Always apply parking brake. Apply manual parking brake without pressing release button. Apply as firmly as possible on downhill or uphill slopes. Depress the foot brake at the same time to reduce operating force.
- Switch off the engine and ignition. Turn the steering wheel until the steering wheel lock engages.
- If the vehicle is on a level surface or uphill slope, engage first gear before switching off the ignition. On an uphill slope, turn the front wheels away from the kerb.

  If the vehicle is on a downhill slope, engage reverse gear before switching off the ignition. Turn the front wheels towards the kerb.
- Lock the vehicle and activate the anti-theft alarm system.

Note
In the event of an accident with airbag deployment, the engine is turned off automatically if the vehicle comes to a standstill within a certain time.

Downloaded from www.Manualslib.com manuals search engine

Engine exhaust

⚠ Danger

Engine exhaust gases contain poisonous carbon monoxide, which is colourless and odourless and could be fatal if inhaled.

If exhaust gases enter the interior of the vehicle, open the windows. Have the cause of the fault rectified by a workshop.

Avoid driving with an open load compartment, otherwise exhaust gases could enter the vehicle.

Catalytic converter

The catalytic converter reduces the amount of harmful substances in the exhaust gases.

Caution

Fuel grades other than those listed on pages ⇨ 143, ⇨ 201 could damage the catalytic converter or electronic components.

Unburnt petrol will overheat and damage the catalytic converter. Therefore avoid excessive use of the starter, running the fuel tank dry and starting the engine by pushing or towing.

In the event of misfiring, uneven engine running, a reduction in engine performance or other unusual problems, have the cause of the fault rectified by a workshop as soon as possible. In an emergency, driving can be continued for a short period, keeping vehicle speed and engine speed low.

Manual transmission

To engage reverse, with the vehicle stationary wait 3 seconds after depressing the clutch pedal and then press the release button on the selector lever and engage the gear.

If the gear does not engage, set the lever to neutral, release the clutch pedal and depress again; then repeat gear selection.

Do not grind the clutch unnecessarily.

When operating, depress the clutch pedal completely. Do not use the pedal as a foot rest.

Downloaded from www.Manualslib.com manuals search engine

Caution
It is not advisable to drive with the hand resting on the selector lever.

Brakes

The brake system comprises two independent brake circuits.

If a brake circuit fails, the vehicle can still be braked using the other brake circuit. However, braking effect is achieved only when the brake pedal is depressed firmly. Considerably more force is needed for this. The braking distance is extended. Seek the assistance of a workshop before continuing your journey.

When the engine is not running, the support of the brake servo unit disappears once the brake pedal has been depressed once or twice. Braking effect is not reduced, but braking requires significantly greater force. It is especially important to bear this in mind when being towed.

Control indicator ⓘ ➪ 83.

Antilock brake system

Antilock brake system (ABS) prevents the wheels from locking.

ABS starts to regulate brake pressure as soon as a wheel shows a tendency to lock. The vehicle remains steerable, even during hard braking.

ABS control is made apparent through a pulse in the brake pedal and the noise of the regulation process.

For optimum braking, keep the brake pedal fully depressed throughout the braking process, despite the fact that the pedal is pulsating. Do not reduce the pressure on the pedal.

After starting off the system performs a self-test which may be audible.

Control indicator (ABS) ➪ 83.

Adaptive brake light

During full braking, all three brake lights flash for the duration of ABS control.

Downloaded from www.Manualslib.com manuals search engine

Fault

⚠ Warning

If there is a fault in the ABS, the wheels may be liable to lock due to braking that is heavier than normal. The advantages of ABS are no longer available. During hard braking, the vehicle can no longer be steered and may swerve.

Have the cause of the fault remedied by a workshop.

Parking brake

Manual parking brake

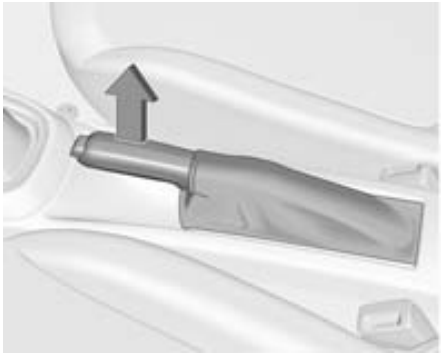

Always apply parking brake firmly without operating the release button, and apply as firmly as possible on a downhill or uphill slope.

To release the parking brake, pull the lever up slightly, press the release button and fully lower the lever.

To reduce the operating forces of the parking brake, depress the foot brake at the same time.

Control indicator ⓘ ⇨ 83.

Brake assist

If the brake pedal is depressed quickly and forcefully, maximum brake force is automatically applied (full braking).

Maintain steady pressure on the brake pedal for as long as full braking is required. Maximum brake force is automatically reduced when the brake pedal is released.

Hill start assist

The system helps prevent unintended movement when driving away on inclines.

When releasing the foot brake after stopping on an incline, the brakes remain on for a further two seconds. The brakes release automatically as soon as the vehicle begins to accelerate or the two seconds holding time is over.

The hill start assist is not active during an Autostop.

Downloaded from www.Manualslib.com manuals search engine

Ride control systems

Traction Control system

The Traction Control system (TC) is a component of the Electronic Stability Control (ESC).

TC improves driving stability when necessary, regardless of the type of road surface or tyre grip, by preventing the drive wheels from spinning.

As soon as the drive wheels starts to spin, engine output is reduced and the wheel spinning the most is braked individually. This considerably improves the driving stability of the vehicle on slippery road surfaces.

TC is operational after each engine start as soon as the control indicator extinguishes.

When TC operates flashes.

⚠ Warning

Do not let this special safety feature tempt you into taking risks when driving.

Adapt speed to the road conditions.

Fault

If there is a fault in the system the control indicator lights up continuously and a message or a warning code appears in the Driver Information Centre. The system is not operational.

Have the cause of the fault remedied by a workshop.

Electronic Stability Control

Electronic Stability Control (ESC) improves driving stability when necessary, regardless of the type of road surface or tyre grip. It also prevents the drive wheels from spinning. ESC operates in combination with the Traction Control system (TC).

As soon as the vehicle starts to swerve (understeer/oversteer), engine output is reduced and the wheels are braked individually. This considerably improves the driving stability of the vehicle on slippery road surfaces.

Downloaded from www.Manualslib.com manuals search engine

ESC is operational after each engine start as soon as the control indicator extinguishes.

When ESC operates flashes.

⚠ Warning

Do not let this special safety feature tempt you into taking risks when driving.

Adapt speed to the road conditions.

Fault

If there is a fault in the system the control indicator lights up continuously and a message or a warning code appears in the Driver Information Centre. The system is not operational.

Have the cause of the fault remedied by a workshop.

City mode

City mode is a feature which enables increased steering assistance during lower speed conditions, e.g. city traffic or parking. Steering assistance is increased for greater convenience.

Activation

Press button when engine is running. The system works from standstill up to 22 mph, and in reverse gear. Above this speed the system changes to normal mode. When activated, City mode engages automatically below 22 mph.

An illuminated LED in the City mode button indicates that the system is active and a message pops-up in the Driver Information Centre.

City mode remains active during an Autostop, but is only operational when the engine is running.

Downloaded from www.Manualslib.com manuals search engine

Stop-start system ⇨ 120.

Deactivation

Press button ⊖; LED in the button extinguishes and a message pops-up in the Driver Information Centre.

Each time the engine is started, City mode is deactivated.

Overload

If the steering in City mode is heavily loaded, e.g. in long parking manoeuvres or heavy city traffic, the system is deactivated for overheat protection. Steering operates in normal mode until City mode activates automatically.

Fault

In the event of a fault in the system, ⊖! illuminates and a message is displayed in the Driver Information Centre.

Vehicle messages ⇨ 92.

System calibration

If control indicators ⊖! and ⊖ illuminate simultaneously, a calibration of the power steering system is necessary. This can occur e.g. when turning the steering wheel for one rotation with ignition switched off. In this case switch on ignition and turn steering wheel once from lock to lock.

If control indicators ⊖! and ⊖ do not extinguish after calibration, seek the assistance of a workshop.

Downloaded from www.Manualslib.com manuals search engine

Driver assistance systems

⚠ Warning

Driver assistance systems are developed to support the driver and not to replace his attention.

The driver accepts full responsibility when driving the vehicle.

When using driver assistance systems, always take care regarding the current traffic situation.

Cruise control

The Cruise control can store and maintain speeds of approx. 20 to 120 mph. Deviations from the stored speeds may occur when driving uphill or downhill.

For safety reasons the cruise control cannot be activated until the foot brake has been operated once. Activating in first gear is not possible.

Do not use the cruise control if it is not advisable to maintain a constant speed.

Control indicator ⇨ 85.

Switching on

Press button, control indicator in instrument cluster illuminates white.

Activation

Accelerate to the desired speed and turn thumb wheel to **SET/-**, the current speed is stored and maintained. Control indicator in instrument cluster illuminates green. Accelerator pedal can be released.

Vehicle speed can be increased by depressing the accelerator pedal. When the accelerator pedal is released, the previously stored speed is resumed.

Cruise control remains activated while gearshifting.

Increase speed

With cruise control active, hold thumb wheel turned to **RES/+** or briefly turn to **RES/+** repeatedly: speed increases continuously or in small increments.

Alternatively accelerate to the desired speed and store by turning to **SET/-**.

Downloaded from www.Manualslib.com manuals search engine

Reduce speed

With cruise control active, hold thumb wheel turned to **SET/-** or briefly turn to **SET/-** repeatedly: speed decreases continuously or in small increments.

Deactivation

Press button, control indicator in instrument cluster illuminates white. Cruise control is deactivated. Last used set speed is stored in memory for later speed resume.

Automatic deactivation:

- vehicle speed below approx. 20 mph,
- vehicle speed above approx. 125 mph,
- the brake pedal is depressed,
- the clutch pedal is depressed for a few seconds,
- engine speed in a very low range,
- the Traction Control system or Electronic Stability Control is operating.

Resume stored speed

Turn thumb wheel to **RES/+** at a speed above 20 mph. The stored speed will be obtained.

Switching off

Press button, control indicator in instrument cluster extinguishes. The stored speed is deleted.

Pressing button for activating speed limiter or switching off the ignition also switches off cruise control and deletes the stored speed.

Speed limiter

The speed limiter prevents the vehicle exceeding a preset maximum speed.

The maximum speed can be set at a speed above 15 mph.

The driver can only accelerate up to the preset speed. Deviations from the limited speed may occur when driving downhill.

The preset speed limit is displayed in the top line of the Driver Information Centre when the system is active.

Activation

Press button . If cruise control has been activated before, it is switched off when speed limiter is activated and the control indicator extinguishes.

Set speed limit

With speed limiter active, hold thumb wheel turned to **RES/+** or briefly turn to **RES/+** repeatedly until the desired maximum speed is displayed in the Driver Information Centre.

Alternatively accelerate to the desired speed and briefly turn thumb wheel to **SET/-**: the current speed is stored as

Downloaded from www.Manualslib.com manuals search engine

maximum speed. Speed limit is displayed in the Driver Information Centre.

Change speed limit

With speed limiter active, turn thumb wheel to **RES/+** to increase or **SET/-** to decrease the desired maximum speed.

Exceeding the speed limit

In the event of an emergency it is possible to exceed the speed limit by depressing the accelerator pedal firmly beyond the point of resistance.

The limited speed will flash in the Driver Information Centre and a chime sounds during this period.

Release the accelerator pedal and the speed limiter function is reactivated once a speed lower than the limit speed is obtained.

Deactivation

Press button : speed limiter is deactivated and the vehicle can be driven without speed limit.

The limited speed is stored and a corresponding message appears in the Driver Information Centre.

Resume limit speed

Turn thumb wheel to **RES/+**. The stored speed limit will be obtained.

Switching off

Press button , the speed limit indication in the Driver Information Centre extinguishes. The stored speed is deleted.

By pressing button to activate cruise control or by switching off the ignition, speed limiter is also deactivated and the stored speed is deleted.

Parking assist

Rear parking assist

⚠Warning

It is the driver who bears full responsibility for the parking manoeuvre.

Always check the surrounding area while reversing and using the rear parking assist system.

The rear parking assist makes parking easier by measuring the distance between the vehicle and rear obstacles. It informs and warns the driver by giving acoustic signals.

Downloaded from www.Manualslib.com manuals search engine

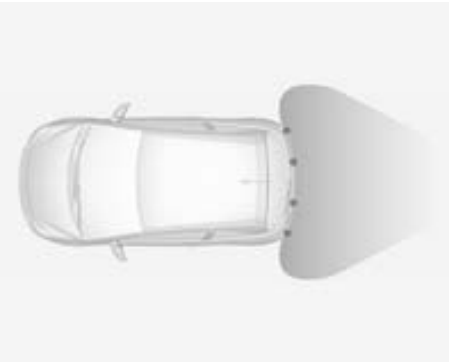

The system has four ultrasonic parking sensors in the rear bumper.

Activation

When reverse gear is engaged, the system is ready to operate automatically.

An illuminated LED in the parking assist button P⁾⁾⁾▲ indicates that the system is ready to operate.

Indication

The system warns the driver with acoustic signals against potentially hazardous obstacles behind the vehicle in a distance range up to 1.5 metre. The interval between the sounds becomes shorter as the vehicle gets closer to that obstacle. When the distance is less than about 30 cm, the sound is continuous.

Deactivation

The system automatically switches off when reverse gear is disengaged.

Manual deactivation is also possible by pressing the parking assist button P⁾⁾⁾▲.

In both cases the LED in the button extinguishes.

Fault

In the event of a fault or if the system does not work temporarily, e.g. because of high external noise level or other interference factors, the LED in the button flashes for 3 seconds and then extinguishes. Control indicator P⁾⁾⁾▲ illuminates in the instrument cluster ⇨ 84 and a message pops-up in the Driver Information Centre.

Front-rear parking assist

⚠ Warning

The driver bears full responsibility for the parking manoeuvre.

Always check the surrounding area when driving backwards or forwards while using parking assist system.

The front-rear parking assist measures the distance between the vehicle and obstacles in front and behind the vehicle. The system gives acoustic signals and display messages.

Downloaded from www.Manualslib.com manuals search engine

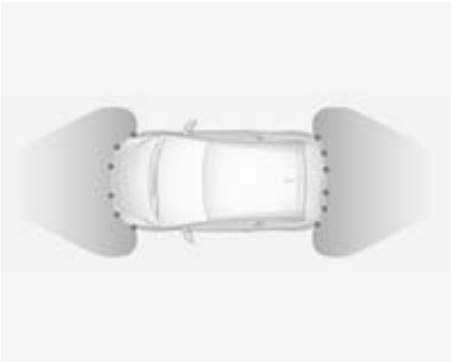

The system has six ultrasonic parking sensors each in the rear and front bumper.

It uses two different acoustic warning signals for the front and rear monitoring areas, each with a different tone frequency.

Front-rear parking assist is always combined with advanced parking assist, see Advanced parking assist section below.

Parking assist button and operation logic

Front-rear parking assist and advanced parking assist both use the same button for activation and deactivation:

A brief press of button activates or deactivates the parking assist.

Long press of button (approx. one second) activates or deactivates the advanced parking assist, see separate description.

Button logic operates the systems by pressing as follows:

- If only front-rear parking assist is active, a brief press deactivates front-rear parking assist.
- If only front-rear parking assist is active, long press activates advanced parking assist.
- If only advanced parking assist is active, a brief press activates front-rear parking assist.
- If only advanced parking assist is active, long press deactivates advanced parking assist.
- If forward gear or neutral is selected, a brief press activates or deactivates only front parking assist.
- If reverse gear is selected, a brief press activates or deactivates front and rear parking assist.

Operation

When reverse gear is engaged, the front and rear parking assist is ready to operate.

Downloaded from www.Manualslib.com manuals search engine

An illuminated LED in the parking assist button indicates that the system is ready to operate.

The front parking assist can also be activated at a speed up to 7 mph with a brief press of the parking assist button.

If the button is switched on once within an ignition cycle, the front parking assist is deactivated at a speed above 7 mph. It will be reactivated if vehicle speed has not exceeded 16 mph beforehand. If vehicle speed has exceeded 16 mph beforehand, front parking assist remains deactivated when speed drops below 7 mph.

When the system is deactivated, the LED in the button extinguishes and **Park Assist Off** pops-up in the Driver Information Centre.

The system is deactivated automatically when exceeding 16 mph.

Indication

The system warns the driver with acoustic signals against potentially hazardous obstacles behind the vehicle in a distance range up to 1.5 metres and in front up to 1.2 metres. Depending on which side of the vehicle is closer to an obstacle, you will hear acoustic warning signals in the vehicle on the respective side. The interval between the sounds becomes shorter as the vehicle gets closer to that obstacle. When the distance is less than approx. 30 cm, the sound is continuous.

Additionally the distance to obstacles is shown in the Driver Information Centre ⇨ 86 or, depending on the version, on the Colour-Info-Display ⇨ 90.

In the Driver Information Centre, the distance to a front and rear obstacle is displayed by changing distance lines.

Downloaded from www.Manualslib.com manuals search engine

In the Colour-Info-Display, distance is displayed by coloured zones in front of or behind the vehicle.

The distance indication in the Driver Information Centre can be inhibited by vehicle messages with a higher priority. After approving the message by pressing the **SET/CLR** button on the turn signal lever, distance indication appears again.

Fault

In the event of a fault or if the system does not work temporarily, e.g. because of high external noise level or other interference factors, the LED in the button flashes for 3 seconds and then extinguishes. Control indicator **P** illuminates in the instrument cluster ⇨ 84 and a message pops-up in the Driver Information Centre.

Vehicle messages ⇨ 92.

Advanced parking assist

⚠ Warning

It is the driver who bears full responsibility for accepting the parking slot suggested by the system and the parking manoeuvre.

Always check the sourrounding area in all directions when using advanced parking assist.

The advanced parking assist measures a suitable parking slot while passing, calculates the trajectory and automatically steers the vehicle into a parallel or perpendicular parking slot. Instructions are given by the Driver Information Centre or the Colour-Info-Display supported by acoustic signals. The driver must control acceleration, braking and gear shifting, while steering is done automatically.

Advanced parking assist can only be activated when driving forwards.

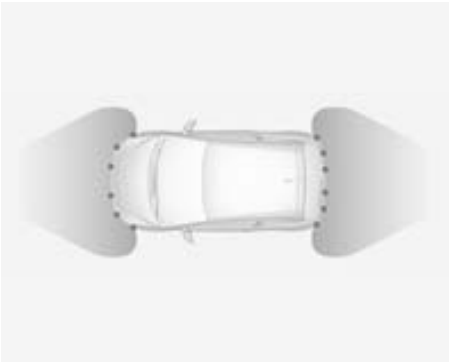

Advanced parking assist is always combined with front-rear parking assist, see previous section. Both systems use the same sensors in the front and rear bumper.

Button and operation logic

Advanced parking assist and front-rear parking assist both use the same button for activation and deactivation:

A brief press of button activates or deactivates the parking assist.

Long press of button (approx. one second) activates or deactivates the advanced parking assist, see separate description below.

Downloaded from www.Manualslib.com manuals search engine

Button logic operates the systems by pressing as follows:

- If only front-rear parking assist is active, a brief press deactivates front-rear parking assist.
- If only front-rear parking assist is active, long press activates advanced parking assist.
- If only advanced parking assist is active, a brief press activates front-rear parking assist.
- If only advanced parking assist is active, long press deactivates advanced parking assist.
- If forward gear or neutral is selected, a brief press activates or deactivates only front parking assist.
- If reverse gear is selected, a brief press activates or deactivates front and rear parking assist.

Activation

When searching for a parking slot, the system is ready to operate with a long press of button ⊡P⊿.

The system recognises and memorises (10 metres for parallel parking slots or 6 metres for perpendicular parking slots) even in the parking assist mode. Long press of button ⊡P⊿ activates advanced parking assist to start parking manoeuvre.

The system can only be activated at a speed up to 18 mph and the system searches for a parking slot at a speed up to 18 mph.

The maximum allowed parallel distance between the vehicle and a row of parked cars is 1.8 metres for parallel parking and 2.5 metres for perpendicular parking.

Functionality

Illustrations show the indications in Driver Information Centre and Colour-Info-Display.

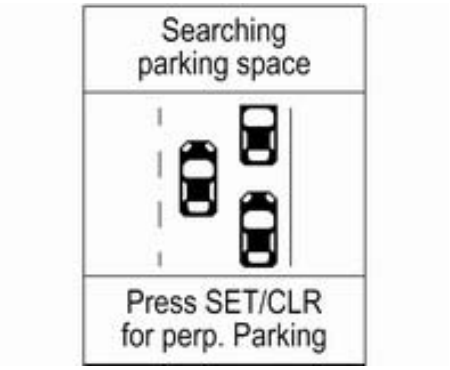

Downloaded from www.Manualslib.com manuals search engine

Parking slot searching mode
Select parallel or perpendicular parking slot on Driver Information Centre by pressing the **SET/CLR** button or on Colour-Info Display tap icon ⊞ or ⊟.

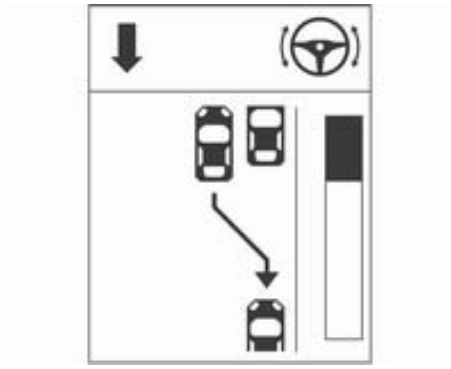

When a slot is detected, a visual feedback in the Driver Information Centre or Colour-Info-Display and an acoustic signal is given.

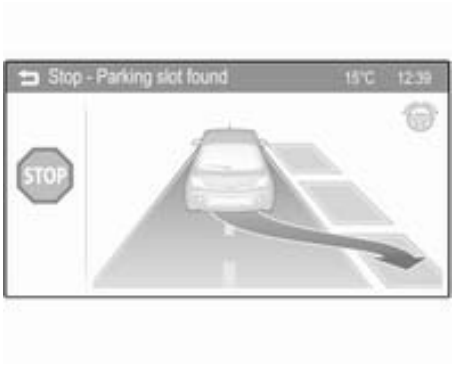

If the driver does not stop the vehicle within 10 metres for parallel parking slots or 6 metres for perpendicular parking slots after a parking slot is proposed, the system starts to search for another suitable parking slot.

Parking guiding mode
The parking slot suggestion of the system is accepted when the vehicle is stopped by the driver within 10 metres for parallel parking slots or 6 metres for perpendicular parking slots after the **Stop** message is given. The system calculates the optimal path into the parking slot.

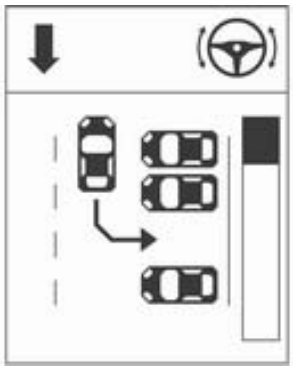

Downloaded from www.Manualslib.com manuals search engine

A brief vibration in the steering wheel after engaging reverse gear indicates that the steering is controlled by the system. Then the vehicle is steered into the slot automatically by giving the driver detailed instructions for braking, accelerating and gear shifting. The driver must keep hands away from the steering wheel.

Pay always attention on the sound of the front-rear parking assist. Continuous sound means that the distance to an obstacle is less than approx. 30 cm.

If, for any reason, the driver must take over control of the steering, hold the steering wheel only at the outer edge. Automatic steering is cancelled in this event.

Display indication

The instructions in the display show:

- general hints and warning messages
- a hint when driving faster than 18 mph during parking slot searching mode, or 5 mph in guiding mode,
- the demand to stop the vehicle, when a parking slot is detected,
- the direction of driving during the parking manoeuvre,
- the demand to shift rearwards or forwards,
- the demand to accelerate or brake,
- for some of the instructions a progress bar is shown in the Driver Information Centre,
- the successful parking indicated by a pop-up symbol and a chime,
- the cancelling of a parking manoeuvre.

Selecting of parallel or perpendicular parking

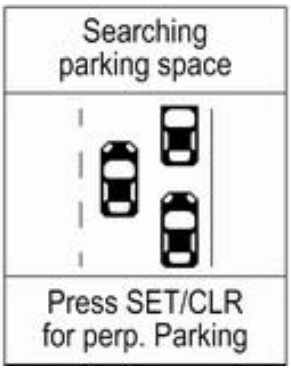

When searching for a parking slot, select parallel or perpendicular parking slot by pressing **SET/CLR** button on the turn signal lever.

Downloaded from www.Manualslib.com manuals search engine

If the system is equipped with Colour-Info-Display, select the type of parking slot by tapping the display icon ▥ or ▤.

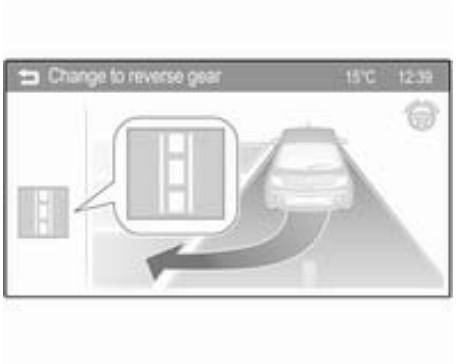

The display shows the type of parking slot.

Changing the parking side

The system is configured to detect parking slots by default on the passenger side. To detect parking slots on the driver side, switch on turn indicator to the driver side for the durance of the search.

As soon as the turn indicator is switched off, the system searches for parking slots on the passenger side again.

Display priorities

After activating the advanced parking assist, a message appears in the Driver Information Centre or Colour-Info-Display. Advanced parking assist indication in the Driver Information Centre can be inhibited by vehicle messages with a higher priority. After approving the message by pressing the **SET/CLR** button on the turn signal lever, advanced parking assist instructions appear again and the parking manoeuvre can be continued.

Deactivation

The system is deactivated by:

- long press of button ⊟P⊿,
- parking manoeuvre successfully ended,
- driving faster than 18 mph during parking slot search,
- driving faster than 5 mph during parking guidance,
- driver interference on steering wheel detected,

Downloaded from www.Manualslib.com manuals search engine

- exceeding number of maximum gear changes: 8 parking cycles when parallel parking or 5 cycles when perpendicular parking,
- switching off the ignition.

Deactivation by the driver or by the system during manoeuvring will be indicated by **Parking Deactivated** in the Driver Information Centre or Colour-Info-Display. Additionally an acoustic signal sounds.

Fault

A message appears in the Driver Information Centre when:

- there is a fault in the system; control indicator P illuminates in the instrument cluster,
- the driver did not successfully complete the parking manoeuvre,
- the system is not operational,
- any of the deactivation reasons described above apply.

If an object is detected during parking instructions, **Stop** is indicated in the Driver Information Centre. Removing the object will resume the parking manoeuvre. If the object is not removed, the system will be deactivated. A long press of button will activate the system and search for a new parking slot.

Basic notes on parking assist systems

⚠Warning

Under certain circumstances, various reflective surfaces on objects or clothing as well as external noise sources may cause the system to fail to detect obstacles.

Special attention has to be paid to low obstacles which can damage the lower part of the bumper.

Caution

Performance of the system can be reduced when sensors are covered, e.g. by ice or snow.

Performance of the parking assist system can be reduced due to heavy loading.

Special conditions apply if there are taller vehicles in the vicinity (e.g. off-road vehicles, mini vans, vans). Object identification and

Downloaded from www.Manualslib.com manuals search engine

correct distance indication in the upper part of these vehicles cannot be guaranteed.

Objects with a very small reflection cross-section, e.g. objects of narrow size or soft materials, may not be detected by the system.

Parking assist systems do not detect objects outside the detection range.

Note
It is possible that the sensor detects a non-existing object caused by echo disturbance from external acoustic noise or mechanical misalignments (sporadic false warnings might happen).

Make sure that the front license plate is properly mounted (not bent and no gaps to the bumper on the left or right side) and the sensors are well in place.

Advanced parking assist system may not respond to changes in the available parking space after initiating a parking manoeuvre. The system may recognize an entry, a gateway, a courtyard or even a crossing as parking slot. After selecting reverse gear the system would start a parking manoeuvre. Take care of the availability of the suggested parking slot.

Surface irregularities, e.g. on construction zones, are not detected by the system. The driver accepts responsibility.

Note
If engaging a forward gear and exceeding a certain speed, the rear parking assist will be deactivated when the rear carrier system is extended.

If engaging reverse at first, the parking assist will detect the rear carrier system and provide a buzzing sound. Press P or briefly to deactivate the parking assist.

Note
After production, the system requires a calibration. For optimal parking guidance, a driving distance of at least 6 miles, including a number of bends, is required.

Side blind spot alert

The Side blind spot alert system detects and reports objects on either side of the vehicle, within a specified "blind spot" zone. The system alerts visually in each exterior mirror, when detecting objects that may not be visible in the interior and exterior mirrors.

Side blind spot alert uses some of the advanced parking assist sensors which are located in the front and rear bumper on both sides of the vehicle.

⚠ Warning

Side blind spot alert does not replace driver vision.

The system does not detect:

- Vehicles outside the side blind zones which may be rapidly approaching.
- Pedestrians, cyclists or animals.

Before changing a lane, always check all mirrors, look over the shoulder and use the turn signal.

Downloaded from www.Manualslib.com manuals search engine

When the system detects a vehicle in the side blind zone while driving forward, either while passing a vehicle or being passed, an amber warning symbol will light up in the relevant exterior mirror. If the driver then activates the turn signal, the warning symbol starts flashing amber as a warning not to change lanes.

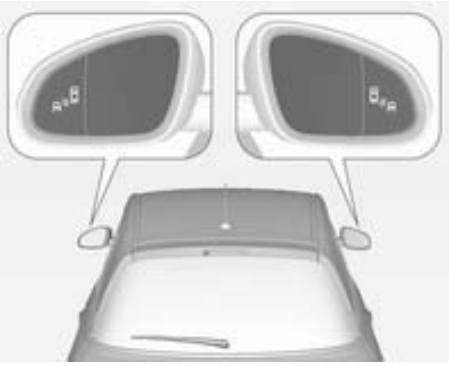

Side blind spot alert is active from speeds of 6 mph up to 87 mph. Driving faster than 87 mph deactives the system, indicated by low lighting warning symbols in both exterior mirrors. Reducing the speed again will extinguish the warning symbols. If a vehicle is then detected in the blind zone, the warning symbols will illuminate as normal on the relevant side.

When the vehicle is started, both exterior mirror displays will briefly come on to indicate that the system is operating.

The system can be activated or deactivated in the Info-Display, vehicle personalisation ⇨ 97.

Deactivation is indicated by a message in the Driver Information Centre.

Detection zones

The detection zones start at the rear bumper and extend approx. 3 metres rearwards and to the sides. The height of the zone is approx. between 0.5 metres and 2 metres off the ground.

Side blind spot alert is designed to ignore stationary objects, e.g. guardrails, posts, curbs, walls and beams. Parked vehicles or oncoming vehicles are not detected.

Fault

Occasional missed alerts can occur under normal circumstances and will increase in wet conditions.

Side blind spot alert does not operate when the left or right corners of the rear bumper are covered with mud, dirt, snow, ice, slush, or in heavy rainstorms. Cleaning instructions ⇨ 190.

In the event of a fault in the system or if the system does not work due to temporary conditions, a message is displayed in the Driver Information Centre. Seek the assistance of a workshop.

Downloaded from www.Manualslib.com manuals search engine

Fuel

Fuel for petrol engines

Only use unleaded fuel that complies with European standard EN 228 or E DIN 51626-1 or equivalent.

Your engine is capable of running with E10 fuel that fulfills these standards. E10 fuel contains up to 10 % bioethanol.

Use fuel with the recommended octane rating ⇨ 201. Use of fuel with too low an octane rating can reduce engine power and torque and slightly increases fuel consumption.

Caution
Do not use fuel or fuel additives that contain metallic compounds such as manganese-based additives. This may cause engine damage.

Caution
Use of fuel that does not comply to EN 228 or E DIN 51626-1 or equivalent can lead to deposits or engine damage and may affect your warranty.

Caution
Use of fuel with too low an octane rating could lead to uncontrolled combustion and engine damage.

Fuel for liquid gas operation

Liquid gas is known as LPG (Liquefied Petroleum Gas) or under its French name GPL (Gaz de Pétrole Liquéfié). LPG is also known as Autogas.

LPG consists mainly of propane and butane. The octane rating is between 105 and 115, depending on the butane proportion. LPG is stored liquid at around 5 - 10 bar pressure.

The boiling point depends on the pressure and mixing ratio. At ambient pressure, it is between -42 °C (pure propane) and -0.5 °C (pure butane).

Caution
The system works at an ambient temperature of approx. -8 °C to 100 °C.

Full function of the LPG system can only be guaranteed with liquid gas which complies with the minimum requirements of DIN EN 589.

Fuel selector

Downloaded from www.Manualslib.com manuals search engine

Pressing the **LPG** button switches between petrol and liquid gas operation as soon as the required parameters (coolant temperature, gas temperature and minimum engine speed) have been reached. The requirements are usually fulfilled after approx. 60 seconds (depending on exterior temperature) and the first firm press on the accelerator. The LED status shows the current operating mode.

LED off	=	petrol operation
LED illuminates	=	liquid gas operation
LED flashes	=	no switching is possible, one type of fuel is empty

As soon as the liquid gas tanks are empty, petrol operation is automatically engaged until the ignition is switched off.

Every six months, run the petrol tank down until control indicator ⛽ illuminates, then refuel. This helps maintain fuel quality and system function for petrol operation.

Fill the tank completely at regular intervals to prevent corrosion in the tank.

Faults and remedies

If gas mode is not possible, check the following:

- Is there enough liquid gas present?
- Is there enough petrol present for starting?

Due to extreme temperatures in combination with the gas composition, it may take slightly longer before the system switches from petrol to gas mode.

In extreme situations, the system may also switch back to petrol mode if the minimum requirements are not fulfilled.

Seek the assistance of a workshop in the event of all other faults.

Caution

Repairs and adjustments may only be made by trained specialists in order to maintain the safety and warranty on the LPG system.

Liquid gas is given a particular odour (odorised) so that any leaks can be detected easily.

⚠ Warning

If you smell gas in the vehicle or in the immediate vicinity, switch to petrol mode immediately. No smoking. No naked flames or ignition sources.

If the gas odour persists, do not start the engine. Have the cause of the fault remedied by a workshop.

When using underground car parks, follow the instructions of the operator and local laws.

Note
In the event of an accident, switch off the ignition and lights.

Downloaded from www.Manualslib.com manuals search engine

Refuelling

⚠ Danger

Before refuelling, switch off the engine.

Switch off any mobile phones.

Follow the operating and safety instructions of the gas station when refuelling.

⚠ Danger

Fuel is flammable and explosive. No smoking. No naked flames or sparks.

If you can smell fuel in your vehicle, have the cause of this remedied immediately by an authorized dealer.

Caution

In case of misfuelling, do not switch on ignition.

Fuel filler flap is located at right rear side of the vehicle.

The fuel filler flap can only be opened when the vehicle is unlocked.

Push the flap to engage. Then open the flap.

Turn the fuel filler cap slowly anticlockwise to open.

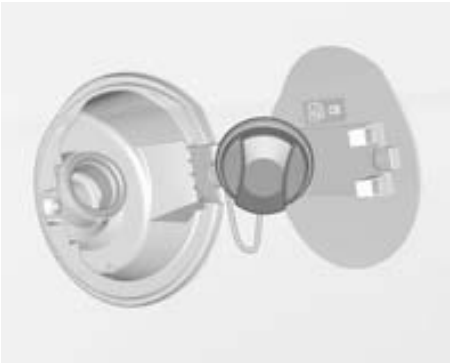

The fuel filler cap can be retained in the bracket on the fuel filler flap.

For refuelling, fully insert the pump nozzle and switch it on.

After automatic cut-off, it can be topped up with max. two doses of fuel.

Caution

Wipe off any overflowing fuel immediately.

To close, turn the fuel filler cap clockwise until it clicks.

Close the flap and let engage.

Downloaded from www.Manualslib.com manuals search engine

Liquid gas refuelling

Follow the operating and safety instructions of the filling station when refuelling.

The filling valve for the liquid gas is behind the fuel filler cap.

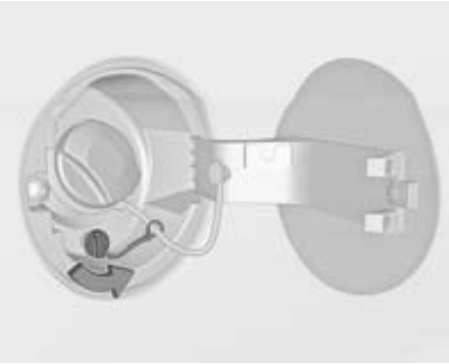

Unscrew protective cap from the filler neck.

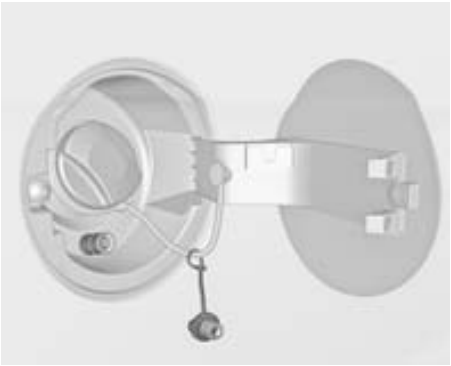

Fit the required adapter.

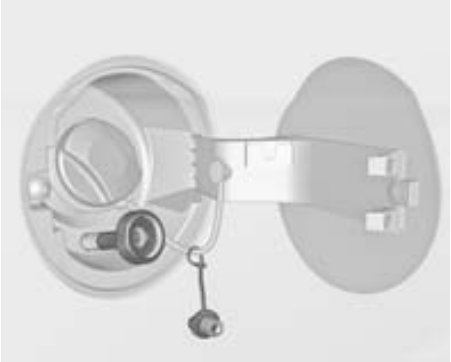

ACME Adapter: Screw the nut of the filling nozzle onto the adapter. Press locking lever on filler nozzle down.

DISH (Italy) filler neck: Place the filler nozzle into the adapter. Press locking lever on filler nozzle down.

Bayonet filler neck: Place filler nozzle on the adapter and turn to the left or right through one quarter turn. Pull locking lever of filler nozzle fully.

EURO filler neck: Press the filler nozzle onto the adapter until it engages.

Press the button of the liquid gas supply point. The filling system stops or begins to run slowly when 80% of the tank volume is reached (maximum fill level).

Release button on filling system and the filling process stops. Release the locking lever and remove the filler nozzle. A small quantity of liquid gas can escape.

Remove adapter and stow in vehicle.

Fit protective cap to prevent the penetration of foreign bodies into the filler opening and the system.

Downloaded from www.Manualslib.com manuals search engine

⚠Warning

Due to the system design, an escape of liquid gas after releasing the locking lever is unavoidable. Avoid inhaling.

⚠Warning

The liquid gas tank may only be filled to 80% for safety reasons.

The multivalve on the liquid gas tank automatically limits the fill quantity. If a larger quantity is added, we recommend not exposing the vehicle to the sun until the excess amount has been used up.

Filling adapter
As filling systems are not standardised, different adapters are required which are available from Vauxhall Distributors and from Vauxhall Authorised Repairers.

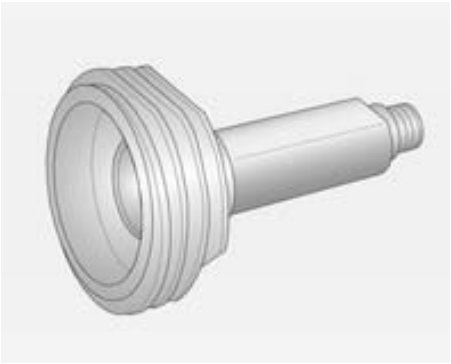

ACME adapter: Belgium, Germany, Ireland, Luxembourg, Switzerland

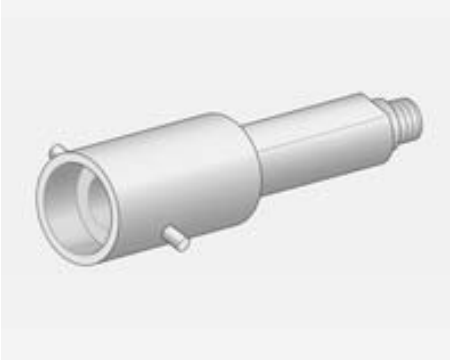

Bayonet adapter: Netherlands, Norway, Spain, United Kingdom

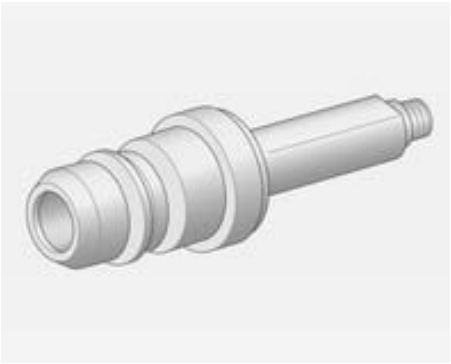

EURO adapter: Spain

DISH (Italy) adapter: Bosnia-Herzegovina, Bulgaria, Denmark, Estonia, France, Greece, Italy,

Downloaded from www.Manualslib.com manuals search engine

Croatia, Latvia, Lithuania, Macedonia, Austria, Poland, Portugal, Romania, Sweden, Switzerland, Serbia, Slovakia, Slovenia, Czech Republic, Turkey, Ukraine, Hungary

Fuel filler cap

Only use genuine fuel filler caps.

Fuel consumption - CO_2-Emissions

The fuel consumption (combined) of the model Vauxhall Adam is within a range of 57 to 51 mpg.

The CO_2 emission (combined) is within a range of 130 to 118 g/km.

For the values specific for your vehicle, refer to the EEC Certificate of Conformity provided with your vehicle or other national registration documents.

General information

The official fuel consumption and specific CO_2 emission figures quoted relate to the EU base model with standard equipment.

Fuel consumption data and CO_2 emission data are determined according to regulation R (EC) No. 715/2007 (in the latest applicable version), taking into consideration the vehicle weight in running order, as specified by the regulation.

The figures are provided only for the purpose of comparison between different vehicle variants and must not be taken as a guarantee for the actual fuel consumption of a particular vehicle. Additional equipment may result in slightly higher results than the stated consumption and CO_2 figures.

Furthermore, fuel consumption is dependent on personal driving style as well as road and traffic conditions.

Downloaded from www.Manualslib.com manuals search engine

Vehicle care

General Information 149
Vehicle checks 150
Bulb replacement 156
Electrical system 164
Vehicle tools 169
Wheels and tyres 170
Jump starting 186
Towing 188
Appearance care 190

General Information

Accessories and vehicle modifications

We recommend the use of genuine parts and accessories and factory approved parts specific for your vehicle type. We cannot assess or guarantee reliability of other products - even if they have a regulatory or otherwise granted approval.

Do not make any modifications to the electrical system, e.g. changes of electronic control units (chip tuning).

Caution
When transporting the vehicle on a train or on a recovery vehicle, the mud flaps might be damaged.

Vehicle storage

Storage for a long period of time

If the vehicle is to be stored for several months:

- Wash and wax the vehicle.
- Have the wax in the engine compartment and underbody checked.
- Clean and preserve the rubber seals.
- Fill up fuel tank completely.
- Change the engine oil.
- Drain the washer fluid reservoir.
- Check the coolant antifreeze and corrosion protection.
- Adjust tyre pressure to the value specified for full load.
- Park the vehicle in a dry, well ventilated place. Engage first or reverse gear. Prevent the vehicle from rolling.
- Do not apply the parking brake.

Downloaded from www.Manualslib.com manuals search engine

- Open the bonnet, close all doors and lock the vehicle.
- Disconnect the clamp from the negative terminal of the vehicle battery. Beware that all systems are not functional, e.g. anti-theft alarm system.

Putting back into operation

When the vehicle is to be put back into operation:

- Connect the clamp to the negative terminal of the vehicle battery. Activate the electronics of the power windows.
- Check tyre pressure.
- Fill up the washer fluid reservoir.
- Check the engine oil level.
- Check the coolant level.
- Fit the number plate if necessary.

End-of-life vehicle recovery

Information on end-of-life vehicle recovery centres and the recycling of end-of-life vehicles is available on our website. Only entrust this work to an authorised recycling centre.

Gas vehicles must be recycled by a service centre authorised for gas vehicles.

Vehicle checks

Performing work

⚠ Warning

Only perform engine compartment checks when the ignition is off.

The cooling fan may start operating even if the ignition is off.

Downloaded from www.Manualslib.com manuals search engine

⚠ Danger

The ignition system uses extremely high voltage. Do not touch.

Bonnet

Opening

Pull the release lever and return it to its original position.

Push the safety catch upwards and open the bonnet.

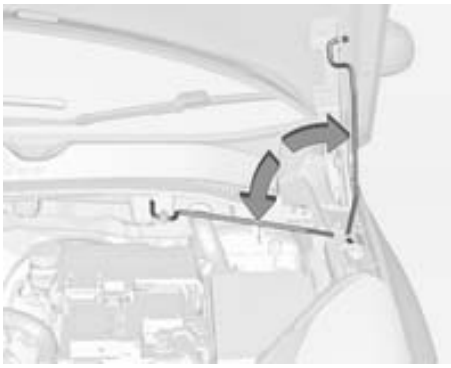

Secure the bonnet support.

If the bonnet is opened during an Autostop, the engine will be restarted automatically for safety reasons.

Closing

Before closing the bonnet, press the support into the holder.

Lower the bonnet and allow it to drop into the catch. Check that the bonnet is engaged.

Engine oil

Check the engine oil level manually on a regular basis to prevent damage to the engine. Ensure that the correct specification of oil is used. Recommended fluids and lubricants ⇨ 194.

Check with the vehicle on a level surface. The engine must be at operating temperature and switched off for at least 5 minutes.

Pull out the dipstick, wipe it clean, insert it to the stop on the handle, pull out and read the engine oil level.

Downloaded from www.Manualslib.com manuals search engine

Caution
It is the owner's responsibility to maintain the proper level of an appropriate quality oil in the engine.

Insert dipstick to the stop on the handle and make half a turn.

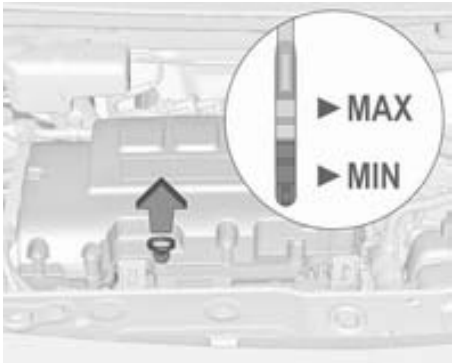

Different dipsticks are used depending on engine variant.

When the engine oil level has dropped to the **MIN** mark, top up engine oil.

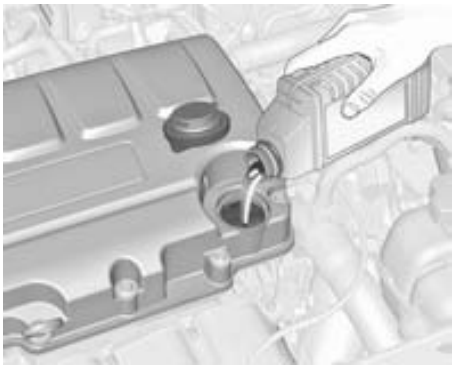

We recommend the use of the same grade of engine oil that was used at last change.

The engine oil level must not exceed the **MAX** mark on the dipstick.

Caution
Overfilled engine oil must be drained or suctioned out.

Capacities ⇨ 205.

Fit the cap on straight and tighten it.

Engine coolant

The coolant provides freeze protection down to approx. -28 °C. In northern countries with very low temperatures the factory filled coolant provides frost protection down to approx. -37 °C.

Caution
Only use approved antifreeze.

Coolant level

Caution
Too low a coolant level can cause engine damage.

Downloaded from www.Manualslib.com manuals search engine

If the cooling system is cold, the coolant level should be above the filling line mark. Top up if the level is low.

⚠Warning

Allow the engine to cool before opening the cap. Carefully open the cap, relieving the pressure slowly.

To top up use a 1:1 mixture of released coolant concentrate mixed with clean tap water. If no coolant concentrate is available, use clean tap water. Install the cap tightly. Have the coolant concentration checked and have the cause of the coolant loss remedied by a workshop.

Washer fluid

Fill with clean water mixed with a suitable quantity of windscreen washer fluid which contains antifreeze. For the correct mixing ratio refer to the washer fluid container.

Caution

Only washer fluid with a sufficient antifreeze concentration provides protection at low temperatures or a sudden drop in temperature.

Brakes

In the event of minimum thickness of the brake lining, a squealing noise sounds during braking.

Continued driving is possible but have the brake lining replaced as soon as possible.

Once new brake linings are installed, do not brake unnecessarily hard for the first few journeys.

Brake fluid

⚠Warning

Brake fluid is poisonous and corrosive. Avoid contact with eyes, skin, fabrics and painted surfaces.

Downloaded from www.Manualslib.com manuals search engine

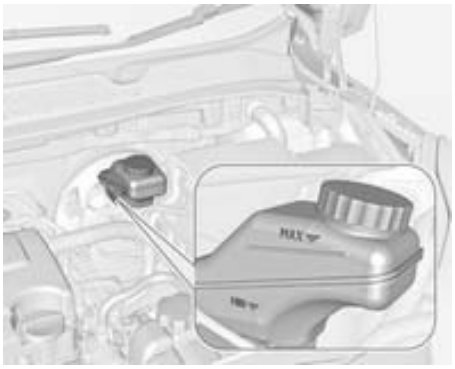

The brake fluid level must be between the **MIN** and **MAX** marks.

When topping up, ensure maximum cleanliness as contamination of the brake fluid can lead to brake system malfunctions. Have the cause of the loss of brake fluid remedied by a workshop.

Only use high-performance brake fluid approved for the vehicle. Brake and clutch fluid ⇨ 194.

Vehicle battery

Vehicles without stop-start system will be equipped with a lead acid battery. Vehicles with stop-start system will be equipped with an AGM battery which is not a lead acid battery. The vehicle battery is maintenance-free provided that the driving profile allows sufficient charging of the battery. Short-distance-driving and frequent engine starts can discharge the vehicle battery. Avoid the use of unnecessary electrical consumers.

Batteries do not belong in household waste. They must be disposed of at an appropriate recycling collection point.

Laying up the vehicle for more than 4 weeks can lead to vehicle battery discharge. Disconnect the clamp from the negative terminal of the vehicle battery.

Ensure the ignition is switched off before connecting or disconnecting the vehicle battery.

The anti-theft alarm siren must be deactivated as follows: Switch the ignition on then off, disconnect the vehicle's battery within 15 seconds.

Battery discharge protection ⇨ 108.

Replacing the vehicle battery

Note
Any deviation from the instructions given in this section may lead to temporary deactivation of the stop-start system.

When the vehicle battery is being replaced, please ensure that there are no open ventilation holes in the vicinity of the positive terminal. If a ventilation hole is open in this area, it must be closed off with a dummy cap, and the ventilation in the vicinity of the negative terminal must be opened.

Downloaded from www.Manualslib.com manuals search engine

Only use batteries that allow the fuse box to be mounted above the vehicle battery.

In vehicles with stop-start system, be sure to have the AGM (Absorptive Glass Mat) battery replaced with another AGM battery

An AGM battery can be identified by the label on the battery. We recommend the use of an original Vauxhall battery.

Note
Using an AGM battery different from the original Vauxhall battery might result in a lower performance of the stop-start system.

We recommend that you have the vehicle battery replaced by a workshop.

Stop-start system ⇨ 120.

Charging the vehicle battery

⚠Warning

On vehicles with stop-start system, ensure that the charging potential does not exceed 14.6 volts when using a battery charger. Otherwise the battery might be damaged.

Jump starting ⇨ 186.

Warning label

Meaning of symbols:

- No sparks, naked flames or smoking.
- Always shield eyes. Explosive gases can cause blindness or injury.
- Keep the vehicle battery out of the reach of children.
- The vehicle battery contains sulfuric acid which could cause blindness or serious burn injuries.

Downloaded from www.Manualslib.com manuals search engine

- See the Owner's manual for further information.
- Explosive gas may be present in the vicinity of the battery.

Wiper blade replacement

Lift the wiper arm until it stays in the raised position, press button to disengage the wiper blade and remove.

Attach the wiper blade slightly angled to the wiper arm and push until it engages.

Lower wiper arm carefully.

Wiper blade on the rear window

Lift wiper arm. Disengage wiper blade as shown in illustration and remove.

Attach the wiper blade slightly angled to the wiper arm and push until it engages.

Lower wiper arm carefully.

Bulb replacement

Switch off the ignition and switch off the relevant switch or close the doors.

Only hold a new bulb at the base! Do not touch the bulb glass with bare hands.

Use only the same bulb type for replacement.

Replace headlight bulbs from within the engine compartment.

Bulb check

After a bulb replacement switch on the ignition, operate and check the lights.

Halogen headlights

Halogen headlights with separate bulbs for low beam and high beam.

Downloaded from www.Manualslib.com manuals search engine

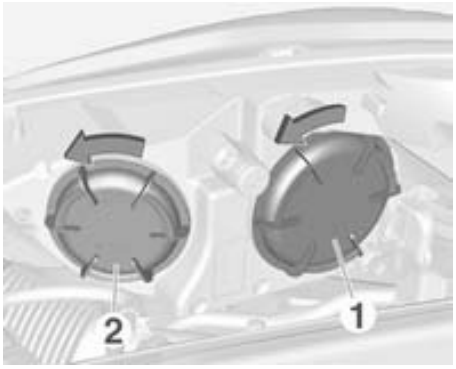

Low beam outer bulb (1).

High beam inner bulb (2).

Low beam (1)

1. Rotate the cap anticlockwise and remove it.

2. Press the clip to disengage bulb holder. Withdraw the bulb holder from the reflector.

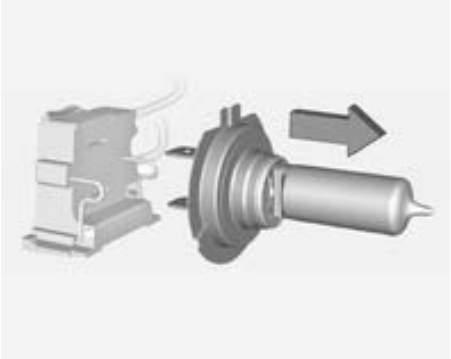

3. Detach the bulb from the bulb holder and replace the bulb.
4. Insert the bulb holder with the clip downwards and engage into the reflector until it clicks.
5. Install cap.

High beam (2)

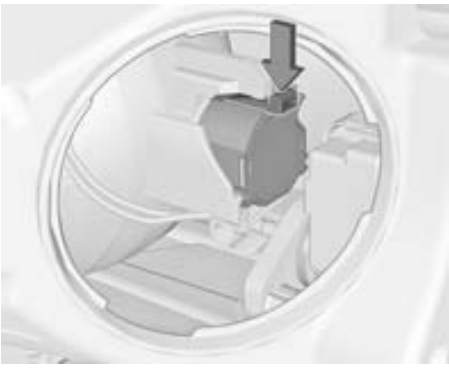

1. Rotate the cap anticlockwise and remove it.

Downloaded from www.Manualslib.com manuals search engine

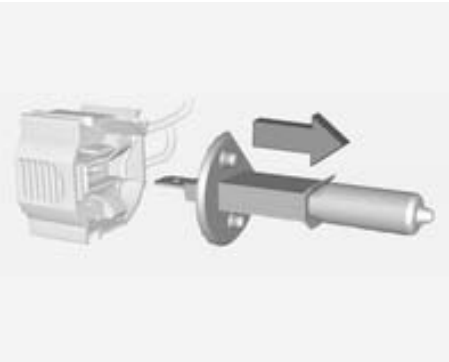

2. Press the clip to disengage bulb holder. Withdraw the bulb holder from the reflector.
3. Detach the bulb from the bulb holder and replace the bulb.
4. Insert the bulb holder with the clip upwards and engage into the reflector until it clicks.
5. Install cap.

Sidelight/Daytime running light (3)

Version with bulb

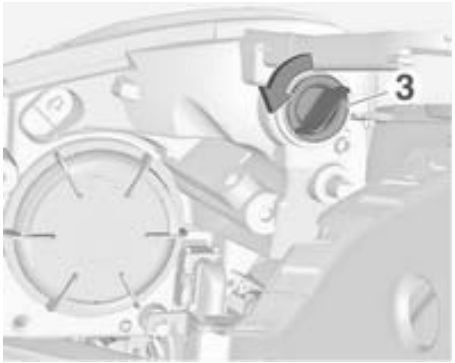

1. Rotate bulb socket (3) anticlockwise to disengage. Withdraw the bulb socket from the headlamp housing.

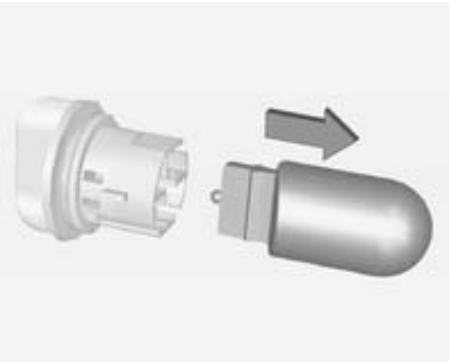

2. Remove the bulb from the socket by pulling.
3. Replace and insert new bulb into socket.
4. Insert the bulb socket into the headlamp housing and turn clockwise.

Uplevel version with Light Emitting Diode (LED)

LEDs can not be changed. Consult a workshop in case of defective LED.

Downloaded from www.Manualslib.com manuals search engine

Front turn signal lights

1. Undo screw and remove cover.

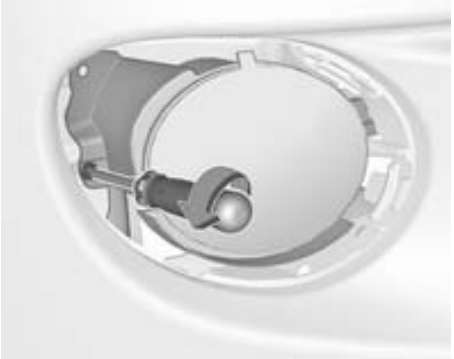

2. Undo screw and remove light assembly from the bumper.

3. Disengage and remove the bulb socket by turning anticlockwise.

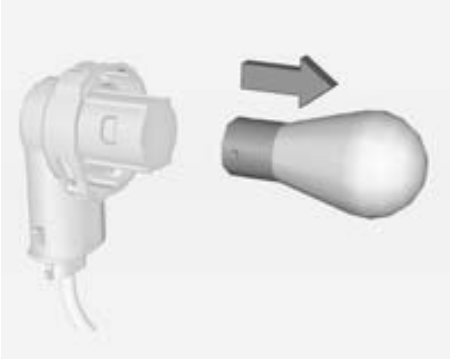

4. Remove bulb by turning anticlockwise a little and withdrawing. Replace the bulb.
5. Insert the bulb socket into the assembly and turn clockwise.
6. Attach light assembly into the bumper and fix with the screw.
7. Insert cover into the bumper and fix with the screw.

Tail lights

1. Release the cover on the respective side and remove.

Downloaded from www.Manualslib.com manuals search engine

Version with subwoofer box: remove load compartment floor cover, on right side also remove the tool box to gain access to the cover ⇨ 63.

Version with storage box: remove storage box to gain access to the cover ⇨ 61.

2. Unscrew the plastic securing nut from the inside by hand.

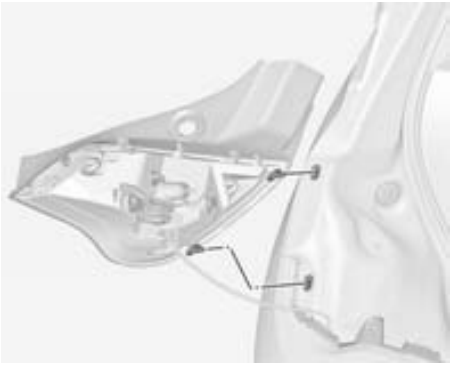

3. Carefully withdraw the light assembly from the recesses and remove.

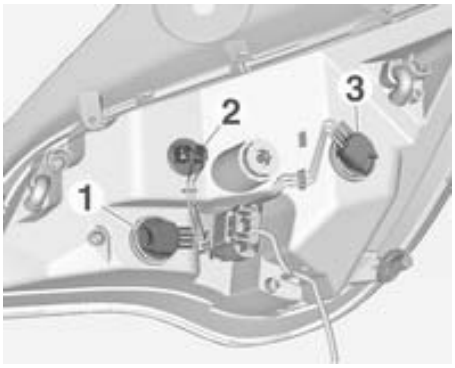

4. Turn bulb holder anticlockwise and remove. Replace bulb by withdrawing:

   Turn signal light **1**

   Tail light **2**

   Tail light/Brake light **3**

   Version with Light Emitting Diode (LED)

   Only turn signal light **1** can be changed.

5. Insert and turn bulb holder clockwise into the tail light assembly. Ensure the wires remain in the cable ducts.

Downloaded from www.Manualslib.com manuals search engine

Fit light assembly with the retaining pins into the recesses of the vehicle body and tighten the securing nut from inside the load compartment. Pull the circular gasket over the recess in the lamp housing.

Close cover and engage.

Reversing light/rear fog light

Reversing light is located on the right side of the bumper, and the rear fog light is located on the left side of the bumper for left-hand drive vehicles, and vice versa for right hand drive models.

The description of bulb replacement is the same for both.

1. Undo screw and remove cover.

2. Undo screw and remove light assembly from the bumper.

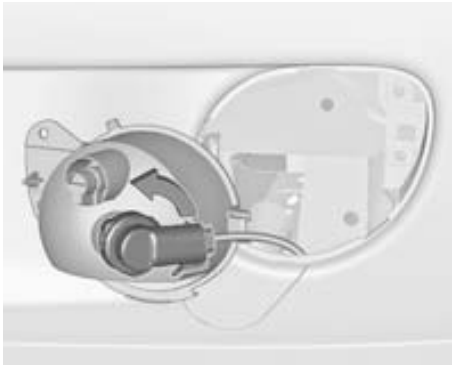

3. Disengage and remove the bulb socket by turning anticlockwise.

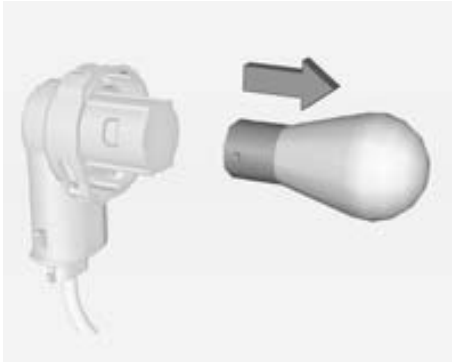

Downloaded from www.Manualslib.com manuals search engine

4. Remove bulb by turning anticlockwise slightly and withdrawing. Replace the bulb.
5. Insert the bulb socket into the assembly and turn clockwise.
6. Replace light assembly in the bumper and fix with the screw.
7. Insert cover into the bumper and fix with the screw.

Side turn signal lights

To replace bulb, remove lamp housing:

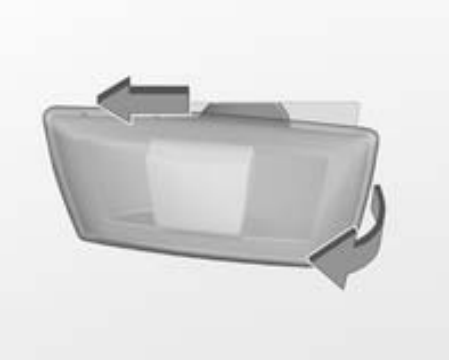

1. On left vehicle side, slide lamp to the front and remove it out of the wing with the rear end.

   On right vehicle side, slide lamp to the rear and remove it out of the wing with the front end.

2. Turn bulb holder anticlockwise and remove from housing.

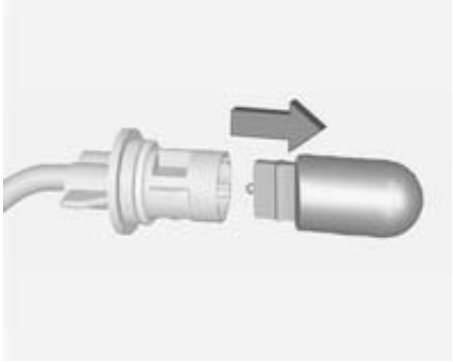

3. Pull bulb from bulb holder and replace it.
4. Insert bulb holder and turn clockwise.
5. On left vehicle side: insert front end into fender, slide forward and insert rear end.

   On right vehicle side: insert rear end into fender, slide rearward and insert front end.

Downloaded from www.Manualslib.com manuals search engine

Number plate light

1. Insert screwdriver in recess of the cover, press to the side and release spring.

2. Remove lamp downwards, taking care not to pull on the cable.

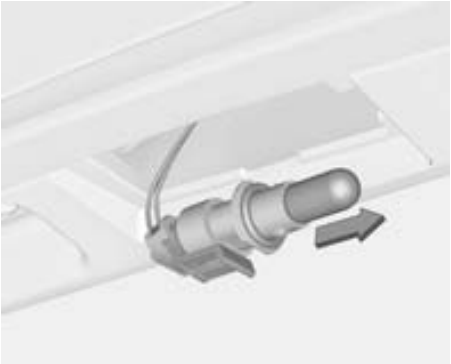

3. Remove bulb holder from lamp housing by turning anticlockwise.
4. Pull bulb from bulb holder and replace it.
5. Insert bulb holder into lamp housing and turn clockwise.
6. Insert lamp into bumper and let engage.

Interior lights

Courtesy light, reading lights

Have bulbs replaced by a workshop.

Load compartment light

Have bulbs replaced by a workshop.

Dome light, ambient light, starlight panel

Have bulbs replaced by a workshop.

Instrument panel illumination

Have bulbs replaced by a workshop.

Downloaded from www.Manualslib.com manuals search engine

Electrical system

Fuses

Data on the replacement fuse must match the data on the defective fuse.

There are two fuse boxes in the vehicle:

- in the front left of the engine compartment,
- in left-hand drive vehicles behind the light switch, or, in right-hand drive vehicles, behind the glovebox.

Before replacing a fuse, turn off the respective switch and the ignition.

There are different kinds of fuses in the vehicle.

Depending on the type of fuse, a blown fuse can be recognized by its melted wire. Do not replace the fuse until the cause of the fault has been remedied.

Some functions are protected by several fuses.

Fuses may also be inserted without existence of a function.

Fuse extractor

A fuse extractor may be located in the fuse box in the engine compartment.

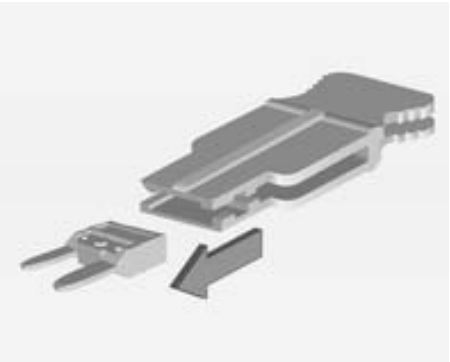

Place the fuse extractor on the various types of fuse from the top, and withdraw fuse.

Downloaded from www.Manualslib.com manuals search engine

Engine compartment fuse box

The fuse box is in the front left of the engine compartment.

Disengage the cover and fold it upwards until it stops. Remove the cover vertically upwards.

No.	Circuit
1	–
2	Exterior mirror switch
3	Body control module
4	Chassis control module
5	ABS
6	Daytime running light left
7	–
8	Body control module
9	Vehicle battery sensor
10	Headlamp levelling, TPMS,
11	Rear wiper
12	Window defog
13	Daytime running light right
14	Mirror defog
15	–
16	LPG system
17	Interior mirror

Downloaded from www.Manualslib.com manuals search engine

No.	Circuit
18	Engine control module
19	Fuel pump
20	–
21	Injection coil
22	–
23	Injection system
24	Washer system
25	Lighting system
26	Engine control module
27	–
28	Engine control module
29	Engine control module
30	–
31	Left headlamp
32	Right headlamp
33	Engine control module
34	Horn

No.	Circuit
35	Clutch
36	–

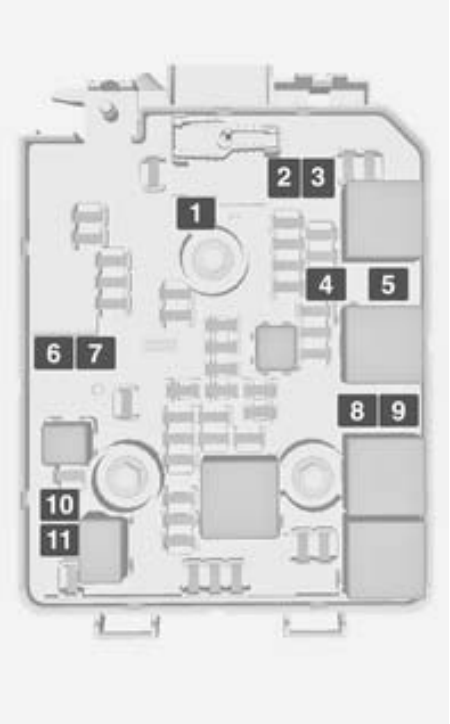

No.	Circuit
1	ABS pump
2	Front wiper
3	Blower
4	Instrument panel
5	–
6	–
7	–
8	Cooling fan low
9	Cooling fan high
10	Cooling fan
11	Starter

After having changed defective fuses close the fuse box cover and press until it engages.

If the fuse box cover is not closed correctly, malfunction may occur.

Downloaded from www.Manualslib.com manuals search engine

Instrument panel fuse box

In left-hand drive vehicles, the fuse box is behind the light switch in the instrument panel.

Hold the handle, then pull and fold down the light switch.

In right-hand drive vehicles, the fuse box is located behind a cover in the glovebox. Open the glovebox, then open the cover and fold it down.

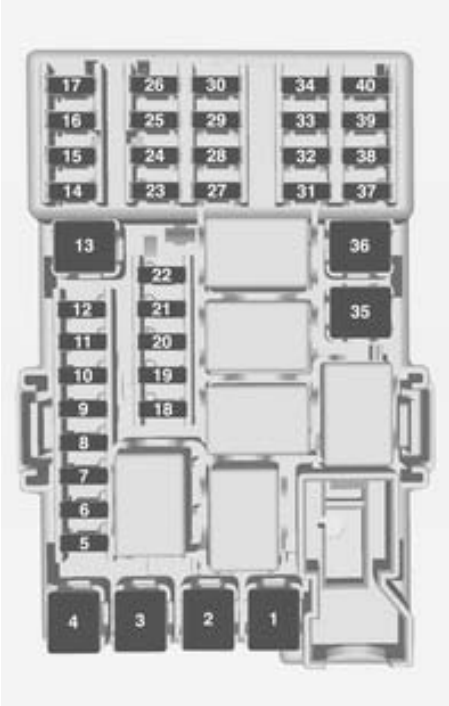

Downloaded from www.Manualslib.com manuals search engine

No.	Circuit
1	–
2	–
3	Power windows
4	Voltage transformer
5	Body control module 1
6	Body control module 2
7	Body control module 3
8	Body control module 4
9	Body control module 5
10	Body control module 6
11	Body control module 7
12	Body control module 8
13	–
14	Tailgate
15	Diagnostic connector
16	Data link connection
17	Ignition

No.	Circuit
18	Air conditioning system
19	Audio amplifier
20	Parking assist
21	Brake switch
22	Audio system
23	Display
24	–
25	–
26	Instrument panel
27	Seat heating, driver
28	–
29	–
30	Instrument panel
31	Horn
32	Seat heating, passenger
33	Heated steering wheel
34	–

No.	Circuit
35	–
36	–
37	Rear wiper
38	Cigarette lighter
39	–
40	–

Downloaded from www.Manualslib.com manuals search engine

Vehicle tools

Tools

Vehicles with tyre repair kit

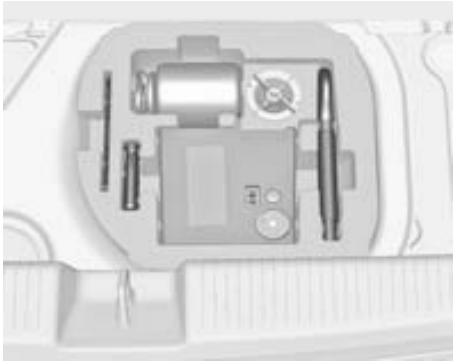

Some tools and the towing eye are located together with the tyre repair kit in a tool box in the load compartment below the floor cover. On version with storage box, remove box first ⇨ 61.

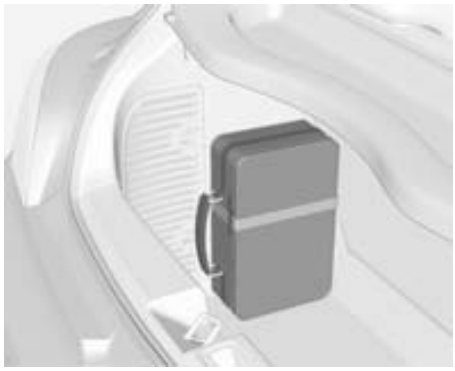

On versions with rear carrier system or liquid gas engine, the tools are located together with the towing eye and tyre repair kit in a suitcase, fixed with a strap at the left sidewall in the load compartment.

On version with storage box, the suitcase with the tools, the towing eye and the tyre repair kit is located in a chamber of the box in the load compartment ⇨ 61.

Downloaded from www.Manualslib.com manuals search engine

On version with subwoofer box, the tools and the towing eye are located together with the tyre repair kit and the warning triangle in the box below the floor cover. To gain access, remove floor cover: fold rear part to the front and pull out the cover to the rear ⇨ 63.

Vehicles with spare wheel

The jack, the wheel bolt wrench, the tools and two straps for securing a damaged wheel are in the tool box below the load compartment floor cover ⇨ 63.

On version with storage box, remove box first ⇨ 61.

Wheels and tyres

Tyre condition, wheel condition

Drive over edges slowly and at right angles if possible. Driving over sharp edges can cause tyre and wheel damage. Do not trap tyres on the kerb when parking.

Regularly check the wheels for damage. Seek the assistance of a workshop in the event of damage or unusual wear.

We recommend not swapping the front wheels with the rear wheels and vice versa, as this can affect vehicle stability. Always use less worn tyres on the rear axle.

Winter tyres

Winter tyres improve driving safety at temperatures below 7 °C and should therefore be fitted on all wheels.

In accordance with country-specific regulations, affix the speed sticker in the driver's field of view.

Downloaded from www.Manualslib.com manuals search engine

Tyre designations

E.g. **195/55 R 16 95 H**

195 = Tyre width, mm
55 = Cross-section ratio (tyre height to tyre width), %
R = Belt type: Radial
RF = Type: RunFlat
16 = Wheel diameter, inches
95 = Load index e.g. 95 is equivalent to 690 kg
H = Speed code letter

Speed code letter:

Q = up to 100 mph
S = up to 112 mph
T = up to 118 mph
H = up to 130 mph
V = up to 150 mph
W = up to 168 mph

Tyre pressure

Check the pressure of cold tyres at least every 14 days and before any long journey. Do not forget the spare wheel. This also applies to vehicles with tyre pressure monitoring system.

Unscrew the valve cap.

Tyre pressure ⇨ 206.

The tyre and loading information label on the right door frame indicates the original equipment tyres and the correspondent tyre pressures.

The tyre pressure data refers to cold tyres. It applies to summer and winter tyres.

The ECO tyre pressure serves to achieve the smallest amount of fuel consumption possible.

Incorrect tyre pressures will impair safety, vehicle handling, comfort and fuel economy and will increase tyre wear.

Tyre pressures differ depending on various options. For the correct tyre pressure value, follow the procedure below:

1. Identify drive axle and body style.
2. Identify the engine identifier code. Engine data ⇨ 201.
3. Identify the respective tyre.

The tyre pressure tables show all possible tyre combinations ⇨ 206.

For the tyres approved for your vehicle, refer to the EEC Certificate of Conformity provided with your vehicle or other national registration documents.

The driver is responsible for correct adjustment of tyre pressure.

⚠ Warning

If the pressure is too low, this can result in considerable tyre warm-up and internal damage, leading to tread separation and even to tyre blow-out at high speeds.

Downloaded from www.Manualslib.com manuals search engine

If the tyre pressure must be reduced or increased on a vehicle with tyre pressure monitoring system, switch off ignition. After adjusting tyre pressure switch on ignition and select the relevant setting on the page **Tyre load** in the Driver Information Centre, ⇨ 86.

Tyre pressure monitoring system

The tyre pressure monitoring system checks the pressure of all four tyres once a minute when vehicle speed exceeds a certain limit.

Caution
Tyre pressure monitoring system warns only about low tyre pressure condition and does not replace regular tyre maintenance by the driver.

All wheels must be equipped with pressure sensors and the tyres must have the prescribed pressure.

The current tyre pressures can be shown in the **Vehicle Information Menu** in the Driver Information Centre with Uplevel-Display.

The menu can be selected with the buttons on the turn signal lever.

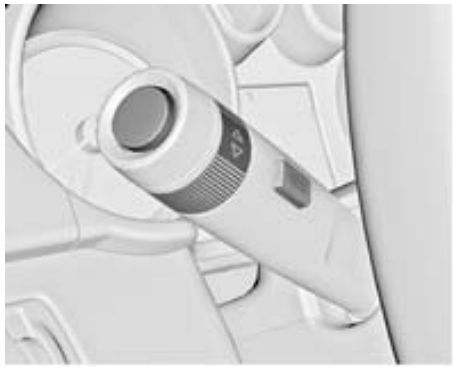

Press the **MENU** button to select the **Vehicle Information Menu**.

Turn the adjuster wheel to select the tyre pressure monitoring system.

System status and pressure warnings are displayed by a message with the corresponding tyre flashing in the Driver Information Centre.

Downloaded from www.Manualslib.com manuals search engine

A detected low tyre pressure condition is indicated by the control indicator ⓘ ⇨ 84.

If ⓘ illuminates, stop as soon as possible and inflate the tyres as recommended ⇨ 206.

After inflating, driving may be required to update the tyre pressure values in the Driver Information Centre. During this time ⓘ may illuminate.

If ⓘ illuminates at lower temperatures and extinguishes after driving, this could be an indicator for getting low pressure. Check tyre pressure.

Vehicle messages ⇨ 92.

If the tyre pressure must be reduced or increased, switch off ignition.

Only mount wheels with pressure sensors, otherwise the tyre pressure will not be displayed and ⓘ illuminates continuously.

A spare wheel or temporary spare wheel is not equipped with pressure sensors. The tyre pressure monitoring system is not operational for these tyres. Control indicator ⓘ illuminates. For the further three tyres the system remains operational.

The use of commercially-available liquid tyre repair kits can impair the function of the system. Factory-approved repair kits can be used.

External high-power radio equipment could disrupt the tyre pressure monitoring system.

Each time the tyres are replaced, tyre pressure monitoring system sensors must be dismounted and serviced. For the screwed sensor; replace valve core and sealing ring. For the clipped sensor; replace complete valve stem.

Vehicle loading status

Adjust tyre pressure to load condition according tyre information label or tyre pressure chart ⇨ 206, and select the according setting in the menu **Tire Load** in the Driver Information Centre, **Vehicle Information Menu** ⇨ 86.

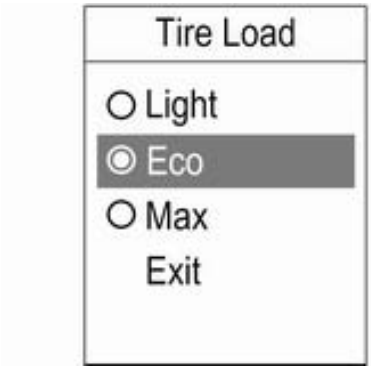

Downloaded from www.Manualslib.com manuals search engine

Select:

- **Light** for comfort pressure up to 3 people
- **Eco** for Eco pressure up to 3 people
- **Max** for full loading

Auto learn function

After changing wheels the vehicle must be stationary for approx. 20 minutes, before the system recalculates. The following relearn process takes up to 10 minutes of driving with a minimum speed of 12 mph. In this case – – can be displayed or pressure values can swap in the Driver Information Centre.

If problems occur during the relearn process a warning message is displayed in the Driver Information Centre.

Temperature dependency

Tyre pressure depends on the temperature of the tyre. During driving tyre temperature and pressure increase.

The tyre pressure value displayed in the Driver Information Centre shows the actual tyre pressure. Therefore it is important to check tyre pressure with cold tyres.

Tread depth

Check tread depth at regular intervals.

Tyres should be replaced for safety reasons at a tread depth of 2-3 mm (4 mm for winter tyres).

For safety reasons it is recommended that the tread depth of the tyres on one axle should not vary by more than 2 mm.

The legally permissible minimum tread depth (1.6 mm) has been reached when the tread has worn down as far as one of the tread wear indicators (TWI). Their position is indicated by markings on the sidewall.

Tyres age, even if they are not used. We recommend tyre replacement every 6 years.

Downloaded from www.Manualslib.com manuals search engine

Changing tyre and wheel size

If tyres of a different size than those fitted at the factory are used, it may be necessary to reprogramme the speedometer as well as the nominal tyre pressure and make other vehicle modifications.

After converting to a different tyre size, have the label with tyre pressures replaced.

⚠Warning

Use of unsuitable tyres or wheels may lead to accidents and will invalidate the vehicle type approval.

Wheel covers

Wheel covers and tyres that are factory approved for the respective vehicle and comply with all of the relevant wheel and tyre combination requirements must be used.

If the wheel covers and tyres used are not factory approved, the tyres must not have a rim protection ridge.

Wheel covers must not impair brake cooling.

⚠Warning

Use of unsuitable tyres or wheel covers could lead to sudden pressure loss and thereby accidents.

Tyre chains

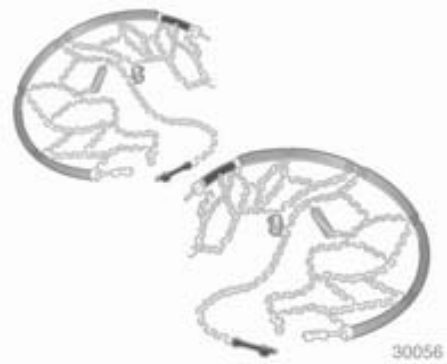

Tyre chains are only permitted on the front wheels.

Always use fine mesh chains that add no more than 10 mm to the tyre tread and the inboard sides (including chain lock).

⚠Warning

Damage may lead to tyre blowout.

Tyre chains are only permitted on tyres of size 175/70 R 14, 185/60 R 15, 185/65 R 15 and 195/55 R 16.

Tyre chains are not permitted on tyres of size 215/45 R 17 and 225/35 R 18.

The use of tyre chains is not permitted on the temporary spare wheel.

Tyre repair kit

Minor damage to the tyre tread can be repaired with the tyre repair kit.

Do not remove foreign bodies from the tyres.

Downloaded from www.Manualslib.com manuals search engine

Tyre damage exceeding 4 mm or that is at tyre's sidewall cannot be repaired with the tyre repair kit.

⚠Warning

Do not drive faster than 50 mph.

Do not use for a lengthy period.

Steering and handling may be affected.

If you have a flat tyre:

Apply the parking brake and engage first gear.

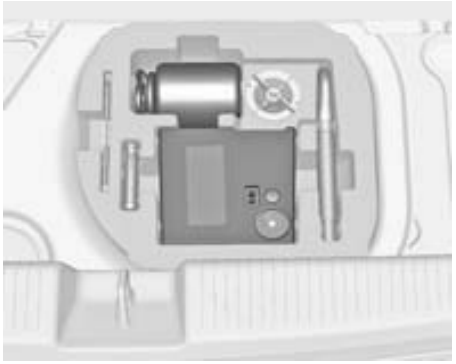

The tyre repair kit is in the tool box under the floor cover in the load compartment.

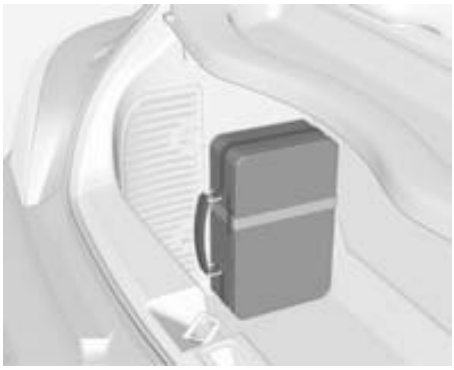

On versions with rear carrier system or liquid gas engine, tyre repair kit is located in a suitcase and fixed with a strap at the left sidewall in the load compartment.

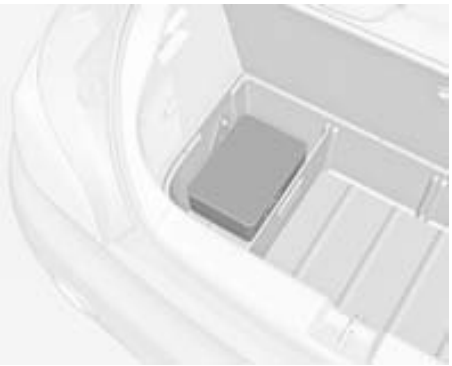

On versions with storage box in the load compartment the suitcase with the tyre repair kit is located in a chamber of the box ⇨ 61.

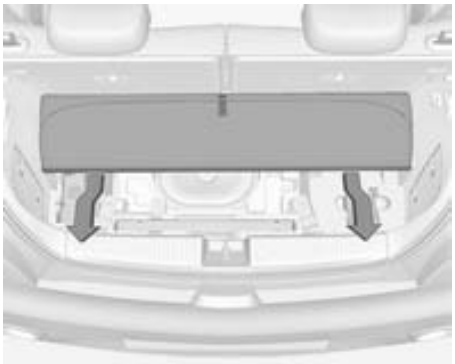

Downloaded from www.Manualslib.com manuals search engine

On versions with subwoofer box the tyre repair kit is located in the box under the floor cover in the load compartment. To use tyre repair kit, firstly remove floor cover: fold rear part to the front and pull out the cover to the rear ⇨ 63.

1. Take the tyre repair kit from the compartment.
2. Remove the compressor.

3. Remove the electrical connection cable and air hose from the stowage compartments on the underside of the compressor.

4. Screw the compressor air hose to the connection on the sealant bottle.
5. Fit the sealant bottle into the retainer on the compressor.

   Set the compressor near the tyre in such a way that the sealant bottle is upright.

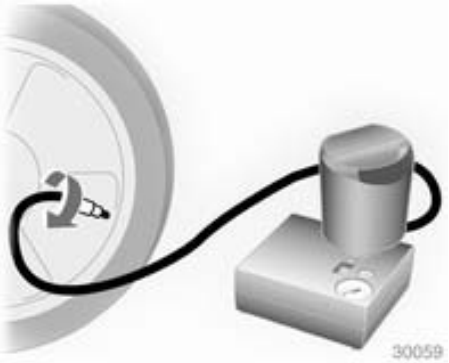

6. Unscrew valve cap from defective tyre.
7. Screw the filler hose to the tyre valve.
8. The switch on the compressor must be set to O.

Downloaded from www.Manualslib.com manuals search engine

9. Connect the compressor plug to the power outlet or cigarette lighter socket.

   To avoid discharging the battery, we recommend running the engine.

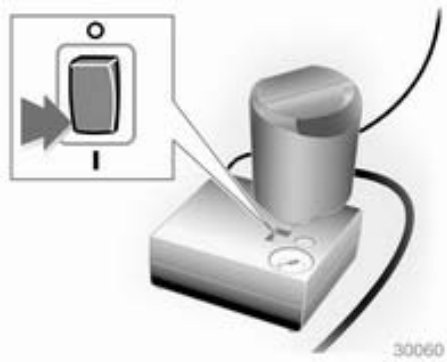

10. Set the rocker switch on the compressor to I. The tyre is filled with sealant.
11. The compressor pressure gauge briefly indicates up to 6 bar whilst the sealant bottle is emptying (approx. 30 seconds). Then the pressure starts to drop.
12. All of the sealant is pumped into the tyre. Then the tyre is inflated.
13. The prescribed tyre pressure should be obtained within 10 minutes. Tyre pressure ⇨ 206. When the correct pressure is obtained, switch off the compressor.

   If the prescribed tyre pressure is not obtained within 10 minutes, remove the tyre repair kit. Move the vehicle one tyre rotation. Reattach the tyre repair kit and continue the filling procedure for 10 minutes. If the prescribed tyre pressure is still not obtained, the tyre is too badly damaged. Seek the assistance of a workshop.

   Drain excess tyre pressure with the button over the pressure indicator.

   Do not run the compressor longer than 10 minutes.
14. Detach the tyre repair kit. Push catch on bracket to remove sealant bottle from bracket. Screw the tyre inflation hose to the free connection of the sealant bottle. This prevents sealant from escaping. Stow tyre repair kit in load compartment.
15. Remove any excess sealant using a cloth.
16. Take the label indicating maximum permitted speed from the sealant bottle and affix in the driver's field of view.
17. Continue driving immediately so that sealant is evenly distributed in the tyre. After driving approx. 6 miles (but no more than 10 minutes), stop and check tyre pressure. Screw compressor air

Downloaded from www.Manualslib.com manuals search engine

hose directly onto tyre valve and compressor when doing this.

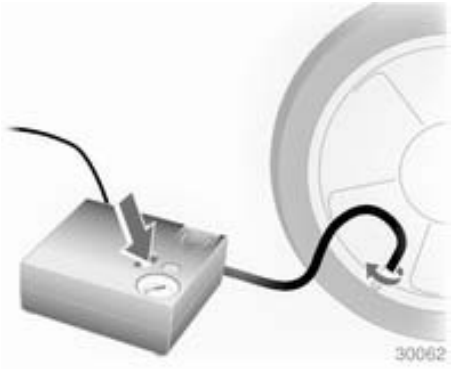

If tyre pressure is more than 1.3 bar, set it to the correct value. Repeat the procedure until there is no more loss of pressure.

If the tyre pressure has fallen below 1.3 bar, the vehicle must not be used. Seek the assistance of a workshop.

18. Stow away tyre repair kit in load compartment. On version with subwoofer install floor cover. Rear floor storage cover ⇨ 63.

Note
The driving characteristics of the repaired tyre are severely affected, therefore have this tyre replaced.

If unusual noise is heard or the compressor becomes hot, turn compressor off for at least 30 minutes.

The built-in safety valve opens at a pressure of 102 psi.

Note the expiry date of the kit. After this date its sealing capability is no longer guaranteed. Pay attention to storage information on sealant bottle.

Replace the used sealant bottle. Dispose of the bottle as prescribed by applicable laws.

The compressor and sealant can be used from approx. -30 °C.

The adapters supplied can be used to pump up other items e.g. footballs, air mattresses, inflatable dinghies etc. They are located on the underside of the compressor. To remove, screw on compressor air hose and withdraw adapter.

Wheel changing

Some vehicles are equipped with a tyre repair kit instead of a spare wheel ⇨ 175.

Make the following preparations and observe the following information:

- Park the vehicle on a level, firm and non-skid surface. The front wheels must be in the straight-ahead position.
- Apply the parking brake and engage first gear or reverse gear.
- Remove the spare wheel ⇨ 182.
- Never change more than one wheel at once.
- Use the jack only to change wheels in case of puncture, not for seasonal winter or summer tyre change.
- If the ground on which the vehicle is standing is soft, a solid board (max. 1 cm thick) should be placed under the jack.
- Take heavy objects out of the vehicle before jacking up.

Downloaded from www.Manualslib.com manuals search engine

- No people or animals may be in the vehicle when it is jacked-up.
- Never crawl under a jacked-up vehicle.
- Do not start the vehicle when it is raised on the jack.
- Clean wheel bolts and thread with a clean cloth before mounting the wheel.

⚠Warning

Do not grease wheel bolt, wheel nut and wheel nut cone.

1. Disengage wheel bolt caps with a screwdriver and remove. Pull off the wheel cover with the hook. Vehicle tools ⇨ 169.

   Alloy wheels: Disengage wheel bolt caps with a screwdriver and remove. To protect the wheel, place a soft cloth between the screwdriver and the alloy wheel.

2. Install the wheel wrench ensuring that it locates securely and loosen each wheel bolt by half a turn.

3. Ensure the jack is correctly positioned under the relevant vehicle jacking point.

Downloaded from www.Manualslib.com manuals search engine

Some versions have sill panellings with covered vehicle jacking points: pull out the cover at the respective jacking point firstly.

4. Set the jack to the necessary height. Position it directly below the jacking point in a manner that prevents it from slipping.

Attach jack handle and with the jack correctly aligned rotate handle until wheel is clear of the ground.

5. Unscrew the wheel bolts.
6. Change the wheel. Spare wheel ⇨ 182
7. Screw on the wheel bolts.
8. Lower vehicle.
9. Install the wheel wrench ensuring that it locates securely and tighten each bolt in a crosswise sequence. Tightening torque is 110 Nm.
10. Align the valve hole in the wheel cover with the tyre valve before installing.

    Install wheel bolt caps.
11. Stow the replaced wheel ⇨ 182 and the vehicle tools ⇨ 169.
12. Check the tyre pressure of the installed tyre and the wheel nut torque as soon as possible.

Have the defective tyre renewed or repaired as soon as possible.

Jacking position for lifting platform

Downloaded from www.Manualslib.com manuals search engine

Rear arm position of the lifting platform centrically under the recess of the sill.

Front arm position of the lifting platform at the underbody.

Spare wheel

Some vehicles are equipped with a tyre repair kit instead of a spare wheel.

The spare wheel is classified as a temporary spare wheel depending on the size compared to the other mounted wheels and country regulations.

The spare wheel has a steel rim.

Caution

The use of a spare wheel that is smaller than the other wheels or in combination with winter tyres could affect driveability. Have the defective tyre replaced as soon as possible.

The spare wheel is located in a holder beneath the vehicle floor.

1. Open the load compartment floor ⇨ 63.

   Remove storage box if equipped ⇨ 61.

2. Remove the wheel wrench from the tool box.

3. Fit the wheel wrench on the hexagon bolt near the tool box and turn it anti-clockwise until a resistance is noticeable.

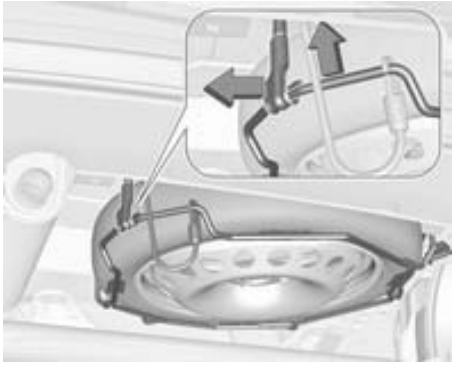

Downloaded from www.Manualslib.com manuals search engine

4. Lift the spare wheel holder a bit by hand and unhook the catch.
5. Lower the spare wheel holder.

6. Lift the spare wheel holder a bit by hand and detach the safety cable.

7. Lower holder all the way and remove spare wheel.
8. Change the wheel ⇨ 179.

   The damaged wheel has to be secured in the load compartment, see below.
9. Lift the empty spare wheel holder and insert the safety cable.
10. Lift the spare wheel holder farther and engage in catch. The open side of the catch must point in the direction of travel.
11. Close the empty spare wheel holder by turning the hexagon bolt clockwise successively using the wheel wrench.
12. Stow wheel wrench and the jack in the tool box in vehicle floor.
13. Close the load compartment floor.

Stowing a damaged wheel in the load compartment

The spare wheel holder is not designed for other tyre sizes than the spare wheel.

A damaged wheel wider than the spare wheel has to be stowed in the load compartment and secured with a strap. Vehicle tools ⇨ 169.

Wheels with tyre size up to 195/55R16

1. Remove load compartment cover and lift up load compartment floor. Stow both behind the raised up backrests of the rear seats.

Downloaded from www.Manualslib.com manuals search engine

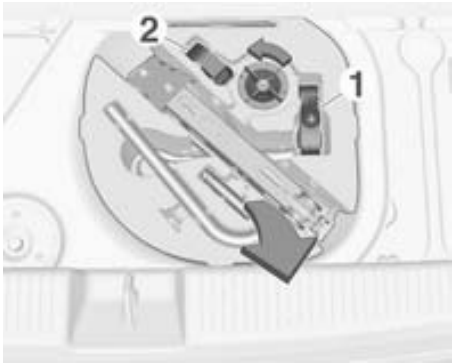

2. Untwist wing nut and remove tool box.
3. Position the damaged wheel to stand upright into the tool box spare, facing to the front.

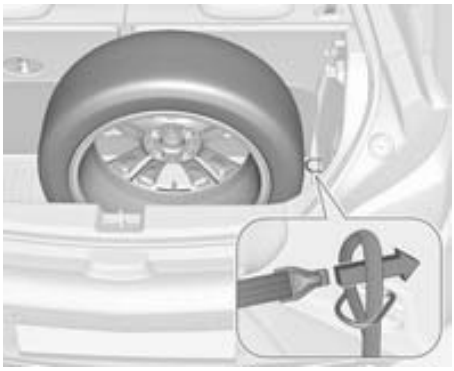

4. Remove strap **1** from the tool box and place the loop end of the strap through the right side lashing eye.
5. Place the hook end of the strap through the loop and pull it until the strap is fastened securely to the lashing eye.

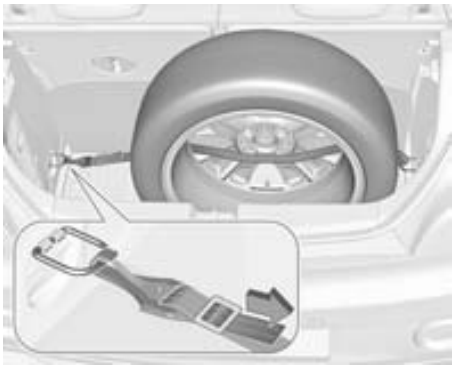

6. Insert the strap through the spokes of the wheel as shown in the illustration.
7. Mount the hook to the left side lashing eye.
8. Tighten the strap and secure it using the buckle.

Downloaded from www.Manualslib.com manuals search engine

9. Position the tool box in the inside of the wheel and secure it with strap **2** inserted through two spokes of the wheel.

Wheels with tyre size bigger than 195/55R16

1. Fold down backrests of the rear seats ⇨ 60.

2. Remove strap **1** from the tool box.
3. Position the damaged wheel outside down in the load compartment.

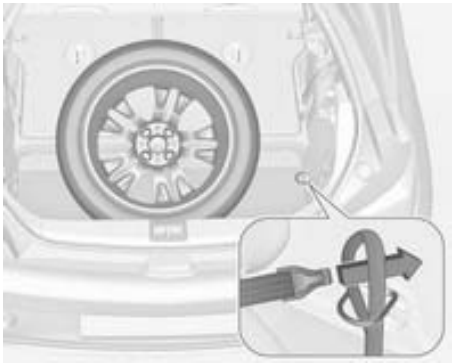

4. Take strap **1** and place the loop end of the strap through the right side lashing eye.
5. Place the hook end of the strap through the loop and pull it until the strap is fastened securely to the lashing eye.

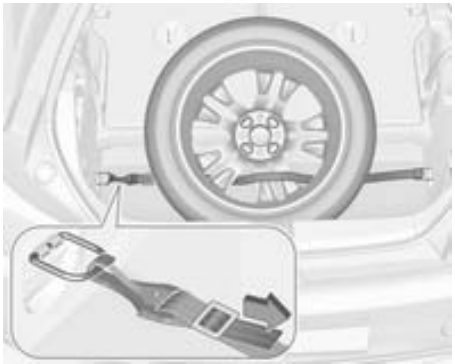

6. Insert the strap through the spokes of the wheel as shown in the illustration.
7. Mount the hook to the left side lashing eye.
8. Tighten the strap and secure it using the buckle.

Downloaded from www.Manualslib.com manuals search engine

⚠Warning

Storing a jack, a wheel or other equipment in the load compartment could cause injury if they are not fixed properly. During a sudden stop or a collision, loose equipment could strike someone.

Store jack and tools always in the respective storage compartments and secure them by fixing.

Damaged wheel placed in the load compartment must always be secured by the strap.

Temporary spare wheel

The use of the temporary spare wheel could affect driveability. Have the defective tyre renewed or repaired as soon as possible.

Only mount one temporary spare wheel. Do not drive faster than 50 mph. Take curves slowly. Do not use for a long period of time.

If your vehicle gets a flat tyre on the rear while towing another vehicle, mount the temporary spare wheel in the front and the full size tyre in the rear.

Tyre chains ⇨ 175.

Directional tyres

Fit directional tyres such that they roll in the direction of travel. The rolling direction is indicated by a symbol (e.g. an arrow) on the sidewall.

The following applies to tyres fitted opposing the rolling direction:

- Driveability may be affected. Have the defective tyre renewed or repaired as soon as possible.
- Drive particularly carefully on wet and snow-covered road surfaces.

Jump starting

Do not start with a quick charger.

A vehicle with a discharged vehicle battery can be started using jump leads and the vehicle battery of another vehicle.

⚠Warning

Be extremely careful when starting with jump leads. Any deviation from the following instructions can lead to injuries or damage caused by battery explosion or damage to the electrical systems of both vehicles.

⚠Warning

Avoid contact of the battery with eyes, skin, fabrics and painted surfaces. The fluid contains sulphuric acid which can cause injuries and damage in the event of direct contact.

Downloaded from www.Manualslib.com manuals search engine

- Never expose the battery to naked flames or sparks.
- A discharged vehicle battery can already freeze at a temperature of 0 °C. Defrost the frozen battery before connecting jump leads.
- Wear eye protection and protective clothing when handling a battery.
- Use a booster battery with the same voltage (12 Volts). Its capacity (Ah) must not be much less than that of the discharged battery.
- Use jump leads with insulated terminals and a cross section of at least 16 mm^2 (25 mm^2 for diesel engines).
- Do not disconnect the discharged vehicle battery from the vehicle.
- Switch off all unnecessary electrical consumers.
- Do not lean over the battery during jump starting.
- Do not allow the terminals of one lead to touch those of the other lead.
- The vehicles must not come into contact with each other during the jump starting process.
- Apply the parking brake, transmission in neutral.
- Open the positive terminal protection caps of both vehicle batteries.

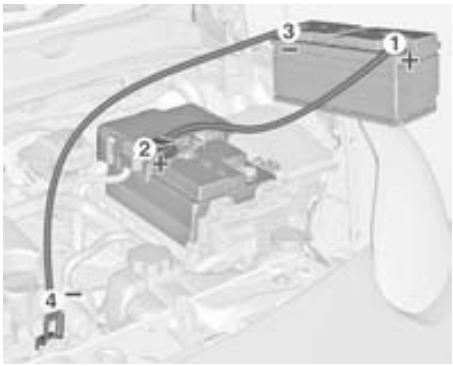

Lead connection order:

1. Connect the red lead to the positive terminal of the booster battery.
2. Connect the other end of the red lead to the positive terminal of the discharged battery.
3. Connect the black lead to the negative terminal of the booster battery.
4. Connect the other end of the black lead to a vehicle grounding point, such as the engine block or an engine mounting bolt. Connect as far away from the discharged vehicle battery as possible, however at least 60 cm.

Route the leads so that they cannot catch on rotating parts in the engine compartment.

To start the engine:

1. Start the engine of the vehicle providing the jump.
2. After 5 minutes, start the other engine. Start attempts should be made for no longer than 15 seconds at an interval of 1 minute.
3. Allow both engines to idle for approx. 3 minutes with the leads connected.

Downloaded from www.Manualslib.com manuals search engine

4. Switch on electrical consumers (e.g. headlights, heated rear window) of the vehicle receiving the jump start.
5. Reverse above sequence exactly when removing leads.

Towing

Towing the vehicle

Disengage the cap by pushing on the marked position.

The towing eye is stowed with the vehicle tools ⇨ 169.

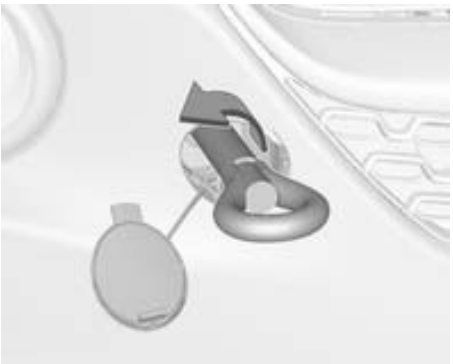

Screw in the towing eye as far as it will go until it stops in a horizontal position.

Attach a tow rope – or better still a tow rod – to the towing eye.

The towing eye must only be used for towing and not for recovering the vehicle.

Switch on ignition to release steering wheel lock and to permit operation of brake lights, horn and windscreen wiper.

Transmission in neutral.

Downloaded from www.Manualslib.com manuals search engine

Caution
Drive slowly. Do not drive jerkily. Excessive tractive force can damage the vehicle.

When the engine is not running, considerably more force is needed to brake and steer.

To prevent the entry of exhaust gases from the towing vehicle, switch on the air recirculation and close the windows.

Seek the assistance of a workshop.

After towing, unscrew the towing eye.

Insert cap and engage in the bumper.

Towing another vehicle

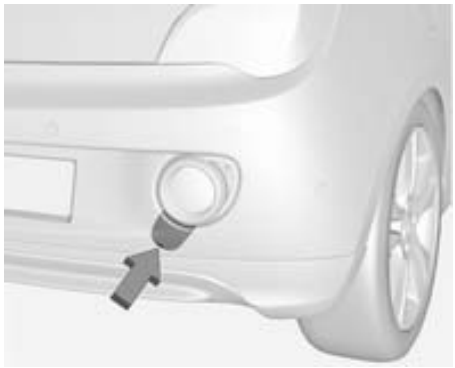

Insert a screwdriver in the slot at the lower bend of the cap. Disengage the cap by carefully moving the screwdriver downwards.

The towing eye is stowed with the vehicle tools ⇨ 169.

Screw in the towing eye as far as it will go until it stops in a horizontal position.

The lashing eye at the rear underneath the vehicle must never be used as a towing eye.

Attach a tow rope – or even better a tow bar – to the towing eye.

The towing eye must only be used for towing and not for recovering a vehicle.

Downloaded from www.Manualslib.com manuals search engine

Caution
Drive slowly. Do not drive jerkily. Excessive tractive force can damage the vehicle.

After towing, unscrew the towing eye.

Insert cap and engage in the bumper.

Appearance care

Exterior care

Locks

The locks are lubricated at the factory using a high quality lock cylinder grease. Use de-icing agent only when absolutely necessary, as this has a degreasing effect and impairs lock function. After using de-icing agent, have the locks regreased by a workshop.

Washing

The paintwork of your vehicle is exposed to environmental influences. Wash and wax your vehicle regularly. When using automatic vehicle washes, select a programme that includes waxing.

Bird droppings, dead insects, resin, pollen and the like should be cleaned off immediately, as they contain aggressive constituents which can cause paint damage.

If using a vehicle wash, comply with the vehicle wash manufacturer's instructions. The windscreen wiper and rear window wiper must be switched off. Remove antenna and external accessories such as roof racks etc.

If you wash your vehicle by hand, make sure that the insides of the wheel housings are also thoroughly rinsed out.

Clean edges and folds on opened doors and the bonnet as well as the areas they cover.

Caution
Always use a cleaning agent with a pH value of 4 to 9. Do not use cleaning agents on hot surfaces.

Have the door hinges of all doors greased by a workshop.

Do not clean the engine compartment with a steam-jet or high-pressure jet cleaner.

Downloaded from www.Manualslib.com manuals search engine

On vehicles with emblem touchpad: when cleaning with a high-pressure jet cleaner ensure a minimum distance of 30 cm when working around the tailgate to prevent unintended unlocking.

Thoroughly rinse and leather-off the vehicle. Rinse leather frequently. Use separate leathers for painted and glass surfaces: remnants of wax on the windows will impair vision.

Exterior lights

Headlight and other light covers are made of plastic. Do not use any abrasive or caustic agents, do not use an ice scraper, and do not clean them dry.

Polishing and waxing

Wax the vehicle regularly (at the latest when water no longer beads). Otherwise, the paintwork will dry out.

Polishing is necessary only if the paint has become dull or if solid deposits have become attached to it.

Paintwork polish with silicone forms a protective film, making waxing unnecessary.

Plastic body parts must not be treated with wax or polishing agents.

Windows and windscreen wiper blades

Use a soft lint-free cloth or chamois leather together with window cleaner and insect remover.

When cleaning the rear window from inside, always wipe in parallel to the heating element to prevent damage.

For mechanical removal of ice, use a sharp-edged ice scraper. Press the scraper firmly against the glass so that no dirt can get under it and scratch the glass.

Clean smearing wiper blades with a soft cloth and window cleaner.

Glass panel

Never clean with solvents or abrasive agents, fuels, aggressive media (e.g. paint cleaner, acetone-containing solutions etc.), acidic or highly alkaline media or abrasive pads. Do not apply wax or polishing agents to the glass panel.

Wheels and tyres

Do not use high-pressure jet cleaners.

Clean rims with a pH-neutral wheel cleaner.

Rims are painted and can be treated with the same agents as the body.

Paintwork damage

Rectify minor paintwork damage with a touch-up pen before rust forms. Have more extensive damage or rust areas repaired by a workshop.

Underbody

Some areas of the vehicle underbody have a PVC undercoating while other critical areas have a durable protective wax coating.

Downloaded from www.Manualslib.com manuals search engine

After the underbody is washed, check the underbody and have it waxed if necessary.

Bitumen/rubber materials could damage the PVC coating. Have underbody work carried out by a workshop.

Before and after winter, wash the underbody and have the protective wax coating checked.

Liquid gas system

⚠ Danger

Liquid gas is heavier than air and can collect in sink points.

Take care when performing work at the underbody in a pit.

For painting work and when using a drying booth at a temperature above 60 °C, the liquid gas tank must be removed.

Do not make any modifications to the liquid gas system.

Rear carrier system

Clean the rear carrier system with a steam-jet or high-pressure jet cleaner at least once a year.

Operate the rear carrier system periodically if not in regular use, in particular during winter.

Interior care

Interior and upholstery

Only clean the vehicle interior, including the instrument panel fascia and panelling, with a dry cloth or interior cleaner.

Clean the leather upholstery with clear water and a soft cloth. In case of heavy soiling, use leather care.

The instrument cluster and the displays should only be cleaned using a soft damp cloth. If necessary use a weak soap solution.

Clean fabric upholstery with a vacuum cleaner and brush. Remove stains with an upholstery cleaner.

Clothing fabrics may not be colourfast. This could cause visible discolourations, especially on light-coloured upholstery. Removable stains and discolourations should be cleaned as soon as possible.

Clean seat belts with lukewarm water or interior cleaner.

Caution

Close Velcro fasteners as open Velcro fasteners on clothing could damage seat upholstery.

The same applies to clothing with sharp-edged objects, like zips or belts or studded jeans.

Plastic and rubber parts

Plastic and rubber parts can be cleaned with the same cleaner as used to clean the body. Use interior cleaner if necessary. Do not use any other agent. Avoid solvents and petrol in particular. Do not use high-pressure jet cleaners.

Downloaded from www.Manualslib.com manuals search engine

Service and maintenance

General information 193
Recommended fluids, lubricants and parts 194

General information

Service information

In order to ensure economical and safe vehicle operation and to maintain the value of your vehicle, it is of vital importance that all maintenance work is carried out at the proper intervals as specified.

The detailed, up-to-date service schedule for your vehicle is available at the workshop.

Service display ⇨ 78.

European service intervals

Maintenance of your vehicle is required every 20000 miles or after 1 year, whichever occurs first, unless otherwise indicated in the service display.

The European service intervals are valid for the following countries:

Andorra, Austria, Belgium, Bosnia-Herzegovina, Bulgaria, Croatia, Cyprus, Czech Republic, Denmark, Estonia, Finland, France, Germany, Greece, Greenland, Hungary, Iceland, Ireland, Italy, Latvia, Lithuania, Luxembourg, Macedonia, Malta, Montenegro, Netherlands, Norway, Poland, Portugal, Romania, Slovakia, Slovenia, Spain, Sweden, Switzerland, United Kingdom.

Service display ⇨ 78.

International service intervals

Maintenance of your vehicle is required every 10000 miles or after 1 year, whichever occurs first, unless otherwise indicated in the service display.

The international service intervals are valid for the countries which are not listed in the European service intervals.

Service display ⇨ 78.

Confirmations

Confirmation of service is recorded in the Service and Warranty Booklet. The date and mileage is completed with the stamp and signature of the servicing workshop.

Downloaded from www.Manualslib.com manuals search engine

Make sure that the Service and Warranty Booklet is completed correctly as continuous proof of service is essential if any warranty or goodwill claims are to be met, and is also a benefit when selling the vehicle.

Service interval with remaining engine oil life duration

The service interval is based on several parameters depending on usage.

The service display lets you know when to change the engine oil.

Service display ⇨ 78.

Recommended fluids, lubricants and parts

Recommended fluids and lubricants

Only use products that meet the recommended specifications. Damage resulting from the use of products not in line with these specifications will not be covered by the warranty.

⚠ Warning

Operating materials are hazardous and could be poisonous. Handle with care. Pay attention to information given on the containers.

Engine oil

Engine oil is identified by its quality and its viscosity. Quality is more important than viscosity when selecting which engine oil to use. The oil quality ensures e.g. engine cleanliness, wear protection and oil aging control, whereas viscosity grade gives information on the oil's thickness over a temperature range.

Dexos is the newest engine oil quality that provides optimum protection for gasoline and diesel engines. If it is unavailable, engine oils of other listed qualities have to be used. Recommendations for gasoline engines are also valid for Compressed Natural Gas (CNG), Liquified Petroleum Gas (LPG) and Ethanol (E85) fuelled engines.

Select the appropriate engine oil based on its quality and on the minimum ambient temperature ⇨ 198.

Topping up engine oil

Engine oils of different manufacturers and brands can be mixed as long as they comply with the required engine oil quality and viscosity.

Use of engine oil with only ACEA A1/B1 or only A5/B5 quality is prohibited, since it can cause long-term engine damage under certain operating conditions.

Downloaded from www.Manualslib.com manuals search engine

Select the appropriate engine oil based on its quality and on the minimum ambient temperature ⇨ 198.

Additional engine oil additives

The use of additional engine oil additives could cause damage and invalidate the warranty.

Engine oil viscosity grades

The SAE viscosity grade gives information of the thickness of the oil.

Multigrade oil is indicated by two figures, e.g. SAE 5W-30. The first figure, followed by a W, indicates the low temperature viscosity and the second figure the high temperature viscosity.

Select the appropriate viscosity grade depending on the minimum ambient temperature ⇨ 198.

All of the recommended viscosity grades are suitable for high ambient temperatures.

Coolant and antifreeze

Use only silicate-free long life coolant (LLC) antifreeze. Consult a workshop.

The system is factory filled with coolant designed for excellent corrosion protection and frost protection down to approx. -28 °C. In northern countries with very low temperatures the factory filled coolant provides frost protection down to approx. -37 °C. This concentration should be maintained all year round. The use of additional coolant additives that intend to give additional corrosion protection or seal against minor leaks can cause function problems. Liability for consequences resulting from the use of additional coolant additives will be rejected.

Brake and clutch fluid

Only use high-performance brake fluid approved for the vehicle, consult a workshop.

Over time, brake fluid absorbs moisture which will reduce braking effectiveness. The brake fluid should therefore be replaced at the specified interval.

Brake fluid should be stored in a sealed container to avoid water absorption.

Ensure brake fluid does not become contaminated.

Downloaded from www.Manualslib.com manuals search engine

Technical data

Vehicle identification 196
Vehicle data 198

Vehicle identification

Vehicle Identification Number

The Vehicle Identification Number is visible through the windscreen.

Identification plate

The identification plate is located on the left door frame.

Downloaded from www.Manualslib.com manuals search engine

Information on identification label:

1 = Manufacturer
2 = Type approval number
3 = Vehicle Identification Number
4 = Permissible gross vehicle weight rating in kg
5 = Permissible gross train weight in kg
6 = Maximum permissible front axle load in kg
7 = Maximum permissible rear axle load in kg
8 = Vehicle-specific or country-specific data

The combined total of front and rear axle loads must not exceed the permissible gross vehicle weight. For example, if the front axle is bearing its maximum permissible load, the rear axle can only bear a load that is equal to the gross vehicle weight minus the front axle load.

The technical data is determined in accordance with European Community standards. We reserve the right to make modifications.

Specifications in the vehicle documents always have priority over those given in this manual.

Engine identification

The technical data tables show the engine identifier code. Engine data ⇨ 201.

To identify the respective engine, refer to the engine power in the EEC Certificate of Conformity provided with your vehicle or other national registration documents.

Downloaded from www.Manualslib.com manuals search engine

Vehicle data
Recommended fluids and lubricants

European service schedule

Required engine oil quality

	All European countries (except Belarus, Moldova, Russia, Serbia, Turkey)	Only Israel
Engine oil quality	Petrol engines (including CNG, LPG, E85)	Petrol engines (including CNG, LPG, E85)
dexos 1	–	✓
dexos 2	✓	–

In case dexos quality is unavailable you may use max. 1 litre engine oil quality ACEA C3 for topping up once between each oil change.

Engine oil viscosity grades

	All European countries and Israel (except Belarus, Moldova, Russia, Serbia, Turkey)
Ambient temperature	Petrol engines
down to -25 °C	SAE 5W-30 or SAE 5W-40
below -25 °C	SAE 0W-30 or SAE 0W-40

Downloaded from www.Manualslib.com manuals search engine

International service schedule

Required engine oil quality

	All countries outside Europe except Israel	Only Belarus, Moldova, Russia, Serbia, Turkey
Engine oil quality	Petrol engines (including CNG, LPG, E85)	Petrol engines (including CNG, LPG, E85)
dexos 1	✓	–
dexos 2	–	✓

In case dexos quality is unavailable you may use the oil qualities listed below:

	All countries outside Europe except Israel	Only Belarus, Moldova, Russia, Serbia, Turkey
Engine oil quality	Petrol engines (including CNG, LPG, E85)	Petrol engines (including CNG, LPG, E85)
GM-LL-A-025	✓	✓
GM-LL-B-025	–	–

Downloaded from www.Manualslib.com manuals search engine

	All countries outside Europe except Israel	Only Belarus, Moldova, Russia, Serbia, Turkey
Engine oil quality	Petrol engines (including CNG, LPG, E85)	Petrol engines (including CNG, LPG, E85)
ACEA A3/B3	✓	✓
ACEA A3/B4	✓	✓
ACEA C3	✓	✓
API SM	✓	✓
API SN resource conserving	✓	✓

Engine oil viscosity grades

	All countries outside Europe (except Israel), including Belarus, Moldova, Russia, Serbia, Turkey
Ambient temperature	Petrol engines
down to -25 °C	SAE 5W-30 or SAE 5W-40
below -25 °C	SAE 0W-30 or SAE 0W-40
down to -20 °C	SAE 10W-30[1)] or SAE 10W-40[1)]

[1)] Permitted, but usage of SAE 5W-30 or SAE 5W-40 with dexos quality is recommended.

Downloaded from www.Manualslib.com manuals search engine

Engine data

Sales designation	1.2	1.4	1.4 LPG	1.4
Engine identifier code	A12XEL	A14XEL	A14XEL	A14XER
Number of cylinders	4	4	4	4
Piston displacement [cm^3]	1229	1398	1398	1398
Engine power [kW]	51	64	64	74
at rpm	5600	6000	6000	6000
Torque [Nm]	115	130	130	130
at rpm	4000	4000	4000	4000
Fuel type	Petrol	Petrol	Liquid Gas/Petrol	Petrol
Octane rating RON				
recommended	95	95	95	95
possible	98	98	98	98
Gas	–	–	LPG	–
Oil consumption [l/1000 km]	0.6	0.6	0.6	0.6

Downloaded from www.Manualslib.com manuals search engine

Performance

Engine	A12XEL	A14XEL	A14XER
Maximum speed[2)] [mph]			
Manual transmission	103	109	115
Automatic transmission	–	–	–

2) The maximum speed indicated is achievable at kerb weight (without driver) plus 200 kg payload. Optional equipment could reduce the specified maximum speed of the vehicle.

Downloaded from www.Manualslib.com manuals search engine

Vehicle weight

Kerb weight, basic model without any optional equipment

	Engine	Manual transmission	Automatic transmission
without/with air conditioning [kg]	A12XEL	1086/1101	–
	A14XEL	1120/1135	–
	A14XER	1120/1135	–

Kerb weight, basic model with all optional equipment

	Engine	Manual transmission	Automatic transmission
without/with air conditioning [kg]	A12XEL	–/1237	–
	A14XEL	–/1237	–
	A14XER	–/1237	–

Vehicle dimensions

Length [mm]	3698
Width without exterior mirrors [mm]	1720
Width with two exterior mirrors [mm]	1966
Height (without antenna) [mm]	1484

Downloaded from www.Manualslib.com manuals search engine

Length of load compartment floor [mm]	462
Length of load compartment with folded rear seats [mm]	1041
Load compartment width [mm]	954
Load compartment height [mm]	874
Wheelbase [mm]	2311
Turning circle diameter [m]	10.1

Downloaded from www.Manualslib.com manuals search engine

Capacities

Engine oil

Engine	A12XEL	A14XEL	A14XER
including Filter [l]	4.0	4.0	4.0
between MIN and MAX [l]	1.0	1.0	1.0

Fuel tank

Engine	A12XEL	A14XEL	A14XER
Petrol, refilling quantity [l]	35	35	35
LPG, refilling quantity [l]	–	41	–

Downloaded from www.Manualslib.com manuals search engine

Tyre pressures

Engine	Tyres	Comfort with up to 3 people		ECO with up to 3 people		With full load	
		front	rear	front	rear	front	rear
		[kPa/bar] ([psi])	[kPa/bar] ([psi])	[kPa/bar] ([psi])	[kPa/bar] ([psi])	[kPa/bar] ([psi])	[kPa/bar] ([psi])
A12XEL, A14XEL, A14XER	175/70 R14, 185/60 R15, 185/65 R15	200/2.0 (29)	240/2.4 (35)	260/2.6 (38)	320/3.2 (46)	260/2.6 (38)	320/3.2 (46)
	195/55 R16, 215/45 R17, 225/35 R18	200/2.0 (29)	260/2.6 (38)	260/2.6 (38)	320/3.2 (46)	260/2.6 (38)	320/3.2 (46)
All	Temporary spare wheel	420/4.2 (61)	420/4.2 (61)	–	–	420/4.2 (61)	420/4.2 (61)

Downloaded from www.Manualslib.com manuals search engine

Customer information

Customer information 207
Vehicle data recording and privacy 207

Customer information

Declaration of conformity

This vehicle has systems that transmit and/or receive radio waves subject to Directive 1999/5/EC. These systems are in compliance with the essential requirements and other relevant provisions of Directive 1999/5/EC. Copies of the original Declarations of Conformity can be obtained on our website.

Vehicle data recording and privacy

Event data recorders

Data storage modules in the vehicle

A large number of electronic components of your vehicle contain data storage modules temporarily or permanently storing technical data about the condition of the vehicle, events and errors. In general, this technical information documents the condition of parts, modules, systems or the environment:

- Operating conditions of system components (e.g. filling levels)
- Status messages of the vehicle and its single components (e.g. number of wheel revolutions / rotational speed, deceleration, lateral acceleration)
- Dysfunctions and defects in important system components

Downloaded from www.Manualslib.com manuals search engine

- Vehicle reactions in particular driving situations (e.g. inflation of an airbag, activation of the stability regulation system)
- Environmental conditions (e.g. temperature)

These data are exclusively technical and help identifying and correcting errors as well as optimizing vehicle functions.

Motion profiles indicating travelled routes cannot be created with these data.

If services are used (e.g. repair works, service processes, warranty cases, quality assurance), employees of the service network (manufacturer included) are able to read out this technical information from the event and error data storage modules applying special diagnostic devices. If required, you will receive further information at these workshops. After an error has been corrected, the data are deleted from the error storage module or they are constantly overwritten.

When using the vehicle, situations may occur in which these technical data related to other information (accident report, damages on the vehicle, witness statements etc.) may be associated with a specific person - possibly, with the assistance of an expert.

Additional functions contractually agreed upon with the client (e.g. vehicle location in emergency cases) allow the transmission of particular vehicle data from the vehicle.

Radio Frequency Identification (RFID)

RFID technology is used in some vehicles for functions such as tyre pressure monitoring and ignition system security. It is also used in connection with conveniences such as radio remote controls for door locking/unlocking and starting, and in-vehicle transmitters for garage door openers. RFID technology in Vauxhall vehicles does not use or record personal information or link with any other Vauxhall system containing personal information.

Downloaded from www.Manualslib.com manuals search engine

Downloaded from www.Manualslib.com manuals search engine

Index

A

Accessories and vehicle modifications 149
Adjustable air vents 116
Airbag and belt tensioners 82
Airbag deactivation 42, 82
Airbag system 37
Air conditioning regular operation 117
Air conditioning system 110
Air intake 117
Air vents..... 116
Antilock brake system 124
Antilock brake system (ABS) 83
Anti-theft alarm system 24
Anti-theft locking system 23
Appearance care..... 190
Ashtrays 75
Automatic anti-dazzle 27
Automatic light control 102
Automatic locking 22

B

Battery discharge protection 108
Battery voltage 94
Belts..... 34
Bicycle rack..... 51
Bonnet 151
Brake and clutch fluid..... 194
Brake and clutch system 83
Brake assist 125
Brake fluid 153
Brakes 124, 153
Breakdown..... 188
Bulb replacement 156

C

Capacities 205
Car Pass 18
Catalytic converter 123
Central locking system 20
Changing tyre and wheel size . . . 175
Charging system 82
Child restraint installation locations 45
Child restraints..... 43
Child restraint systems 43
Cigarette lighter 75
City mode..... 127
Climate control 15
Climate control systems..... 109
Clock 73
Code..... 92
Control indicators..... 78
Control of the vehicle 118
Controls..... 68
Convex shape 25
Coolant and antifreeze..... 194
Cruise control 85, 129

Downloaded from www.Manualslib.com manuals search engine

Cupholders 49
Curtain airbag system 41

D

Danger, Warnings and Cautions ... 4
Daytime running lights 103
Declaration of conformity..... 207
Door open 86
Doors..... 22
Driver assistance systems..... 129
Driver Information Centre..... 86
Driving hints..... 118

E

Electric adjustment 25
Electrical system..... 164
Electronic climate control system 112
Electronic Stability Control..... 126
Electronic Stability Control and Traction Control system..... 84
End-of-life vehicle recovery 150
Engine compartment fuse box ... 165
Engine coolant 152
Engine coolant temperature gauge 77
Engine data 201
Engine exhaust 123
Engine identification..... 197
Engine oil 151, 194, 198
Engine oil pressure 85
Entry lighting 107
Event data recorders..... 207
Exit lighting 107
Exterior care 190
Exterior light 85
Exterior lighting 12, 101
Exterior mirrors..... 25

F

First aid..... 65
First aid kit 65
Fixed air vents 116
Flex-Fix system..... 51
Folding mirrors 26
Front airbag system 40
Front seats..... 31
Front storage..... 50
Front turn signal lights 159
Fuel..... 143
Fuel consumption - CO_2-Emissions 148
Fuel for liquid gas operation..... 143
Fuel for petrol engines 143
Fuel gauge 77
Fuel selector 77
Fuses 164

G

Gauges..... 76
Glass panel 29
Glovebox 49
Graphic-Info-Display, Colour-Info-Display 90

H

Halogen headlights 156
Hand brake..... 124, 125
Hazard warning flashers 103
Headlight flash 102
Headlight range adjustment 103
Headlights..... 101
Headlights when driving abroad 103
Head restraint adjustment 8
Head restraints 30
Heated mirrors 26
Heated rear window 29
Heated steering wheel 69
Heating 34
Heating and ventilation system . 109
High beam 85, 102
Hill start assist 125
Horn 13, 69

I

Identification plate 196
Ignition switch positions 119
Immobiliser 25, 85
Indicators..... 76
Information displays..... 86
Instrument cluster 76

Downloaded from www.Manualslib.com manuals search engine

Instrument panel fuse box 167
Instrument panel illumination 163
Instrument panel illumination control 105
Instrument panel overview 10
Interior care 192
Interior lighting..... 105
Interior lights 105, 163
Interior mirrors..... 26
Introduction 3
ISOFIX child restraint systems 48

J
Jump starting 186

K
Key, memorised settings..... 20
Keys 18
Keys, locks..... 18

L
Lashing eyes 64
Light switch 101
Load compartment 22, 60
Load compartment cover 62
Loading information 66
Low fuel 85

M
Malfunction indicator light 82
Manual anti-dazzle 26
Manual transmission 123
Memorised settings..... 20
Mirror adjustment 8
Misted light covers 105

N
New vehicle running-in 118
Number plate light 163

O
Object detection systems..... 131
Odometer 76
Oil, engine..... 194, 198
Outside temperature 72
Overrun cut-off 120

P
Parking 17, 122
Parking assist 131
Parking brake 125
Parking lights 104
Performance 202
Performing work 150
Pollen filter 117
Power outlets 75
Power steering..... 83
Power windows 27
Puncture..... 179

R
Radio Frequency Identification (RFID)..... 208
Radio remote control 19
Rear carrier system..... 51
Rear floor storage cover 63
Rear fog light 85
Rear fog lights 104
Rear storage..... 61
Rear window wiper/washer 71
Recommended fluids and lubricants 194, 198
Refuelling 145
Retained power off..... 119
Reversing lights 105
Ride control systems..... 126
Roof load..... 66
Roof rack 66

S
Safety belts..... 34
Seat adjustment 7, 32
Seat belt 8
Seat belt reminder 81
Seat belts 34
Seat folding 33
Seat position 31

Downloaded from www.Manualslib.com manuals search engine

Service 117
Service display 78
Service information 193
Service vehicle soon 83
Side airbag system 40
Side blind spot alert..... 141
Sidelights..... 101
Side turn signal lights 162
Spare wheel 182
Speed limiter..... 130
Speedometer 76
Starting and operating..... 118
Starting off 16
Starting the engine 119
Steering wheel adjustment 9, 68
Steering wheel controls 68
Stop-start system..... 120
Storage..... 49
Storage compartments..... 49
Sun visors 29
Symbols 4

T

Tachometer 76
Tail lights 159
Three-point seat belt 35
Tools 169
Top-tether fastening eyes 48
Towing..... 188
Towing another vehicle 189
Towing the vehicle 188
Traction Control system 126
Transmission 16
Tread depth 174
Trip computer 95
Trip odometer 76
Turn and lane-change signals ... 104
Turn signal 81
Tyre chains 175
Tyre designations 171
Tyre pressure 171
Tyre pressure monitoring system..... 84, 172
Tyre pressures 206
Tyre repair kit 175

U

Ultrasonic parking assist 84, 131
Upholstery..... 192
Upshift..... 83
Using this manual 3

V

Vehicle battery 154
Vehicle checks..... 150
Vehicle data..... 198
Vehicle data recording and privacy..... 207
Vehicle dimensions 203
Vehicle Identification Number 196
Vehicle jack..... 169
Vehicle messages 92
Vehicle personalisation 97
Vehicle security..... 23
Vehicle specific data 3
Vehicle storage..... 149
Vehicle tools..... 169
Vehicle unlocking 6
Vehicle weight 203
Ventilation..... 109

W

Warning chimes 94
Warning lights..... 76
Warning triangle 65
Washer and wiper systems 14
Washer fluid 153
Wheel changing 179
Wheel covers 175
Wheels and tyres 170
Windows..... 27
Windscreen..... 27
Windscreen wiper/washer 70
Winter tyres 170
Wiper blade replacement 156

Downloaded from www.Manualslib.com manuals search engine

Downloaded from www.Manualslib.com manuals search engine