1999-2000 ACCESSORIES & EQUIPMENT

Power Sun Roofs

DESCRIPTION & OPERATION

NOTE: **This article also applies to Lexus LX470. Refer to Land Cruiser, unless otherwise indicated.**

NOTE: **The Camry may have been manufactured by Toyota Motor Mfg. U.S.A. (USA built), or manufactured by Toyota Motor Corp. Japan (Japan built). Ensure correct procedures are used when servicing vehicle.**

AVALON (1999) & CELICA (1999)

The power sun roof system has a tilt and sliding mode. Ignition switch must be in ON position for sun roof to operate. If all doors are closed, sun roof will operate for an additional 60 seconds after ignition is turned off. Power sun roof is opened and closed by pressing and holding the open or close button. As a safety precaution feature, when sliding sun roof closed, sun roof will stop part way until sun roof switch is released and pressed a second time. Sun shade will either open with sun roof operation or when manually operated.

AVALON (2000) & LAND CRUISER (2000)

The power sun roof system has a tilt and sliding mode. Ignition switch must be in ON position for sun roof to operate. If all doors are closed, sun roof will operate for an additional 43-45 seconds after ignition is turned off. Power sun roof slide operation is equipped with an one-touch open and close feature. Press either button to stop sun roof operation. The tilt operation is not equipped with the one-touch feature. To reduce wind throbs while driving, power sun roof will stop 0.4" (10 mm) on Avalon and 1.4" (35 mm) on Land Cruiser from its fully opened position. To completely open sun roof, press sun roof switch a second time.

As a safety precaution feature, the power sun roof system is equipped with a jam protection function. During closing operation, the sun roof will stop and open half way if something is caught between sun roof and frame. If sun roof is damaged, received a strong enough impact or sat upon, the jam protection function may work even when nothing is caught between the sun roof and the frame. Sun shade will either open with sun roof operation or when manually operated.

CAMRY

The power sun roof system has a tilt mode and a sliding mode. Ignition switch must be in ON position for sun roof to operate. If all doors are closed, sun roof will operate for an additional 45 seconds after ignition is turned off. Power sun roof is equipped with a one-touch open and close feature. Press either button to stop sun roof operation. The tilt operation is not equipped with the one-touch feature. As a safety precaution feature, when sliding sun roof closed, sun roof will stop part way until sun roof switch is released and pressed a second time. Sun shade will either open with sun roof operation or when manually operated.

CAMRY SOLARA & LAND CRUISER (1999)

The power sun roof system has a tilt mode and a sliding mode. Ignition switch must be in ON position for sun roof to operate. If all doors are closed, sun roof will operate for an additional 45 seconds after ignition is turned off. Power sun roof is equipped with a one-touch open, close and tilt feature. Press either button to stop sun roof operation.

As a safety precaution, the power sun roof system is equipped with a jam protection function. During closing operation, the sun roof will stop and open half-way if something is caught between sun roof and frame. If sun roof is damaged, received a strong enough impact or sat upon, the jam protection function may work even when nothing is caught between the sun roof and the frame. Sun shade will either open with sun roof operation or when manually operated.

CELICA (2000)

The power sun roof system has a tilt mode and a sliding mode. The ignition switch must be in ON position for sun roof to operate. If all doors are closed, sun roof will operate for an additional 43 seconds after ignition is turned off. Power sun roof is equipped with a one-touch open, close and tilt feature. To open sun roof, while the sun roof is in the tilt up position, press open button briefly. To open sun roof, while the sun roof is in the tilt down position, press open button for at least 2 seconds. Press either open or close button to stop sun roof operation.

As a safety precaution, the power sun roof system is equipped with a jam protection function. During closing operation, the sun roof will stop and open half-way if something is caught between sun roof and frame. If sun roof is damaged, received a strong enough impact or is sat upon, the jam protection function may work even when nothing is caught between the sun roof and the frame. Sun shade will either open with sun roof operation or when manually operated.

COROLLA & RAV4

The power sun roof system has a tilt mode and a sliding mode. The ignition switch must be in ON position for sun roof to operate. Power sun roof is opened and closed by pressing and holding the open or close button. As a safety precaution, when sliding sun roof closed, sun roof will stop part way until sun roof switch is released and pressed a second time. Sun shade will either open with sun roof operation or when manually operated.

SIENNA

The power sun roof system has a tilt mode and a sliding mode. The ignition switch must be in ON position for sun roof to operate. If all doors are closed, sun roof will operate for an additional 45 seconds after ignition is turned off. Power sun roof is equipped with a one-touch open, close and tilt feature. Press either button to stop sun roof operation. As a safety precaution, when sliding sun roof closed, sun roof will stop part way until sun roof switch is released and pressed a second time. Sun shade will either open with sun roof operation or when manually operated.

COMPONENT LOCATIONS

For component locations, see **Fig. 1** -**Fig. 11** .

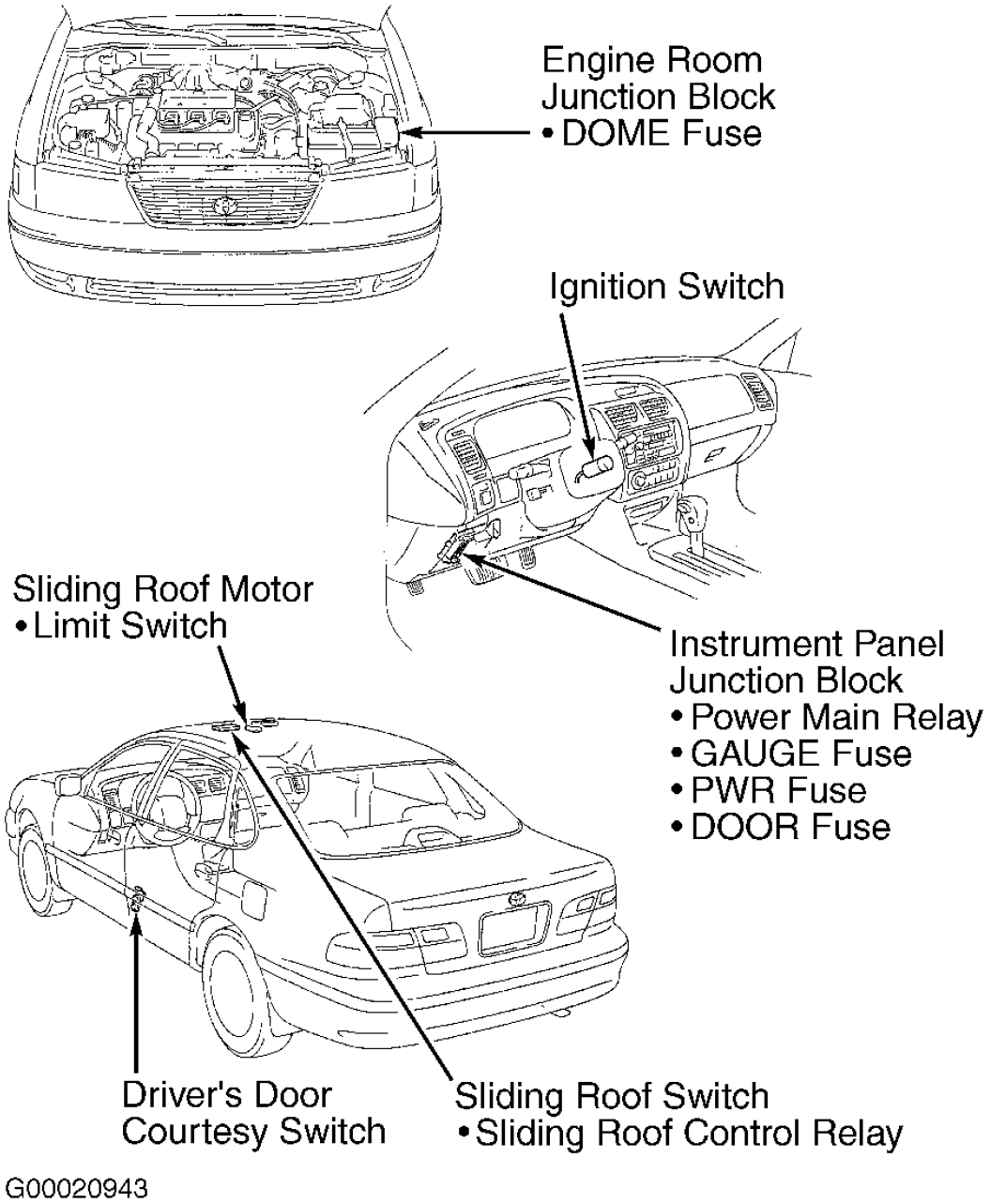

Fig. 1: Identifying Component Locations (1999 Avalon)
Courtesy of TOYOTA MOTOR SALES, U.S.A., INC.

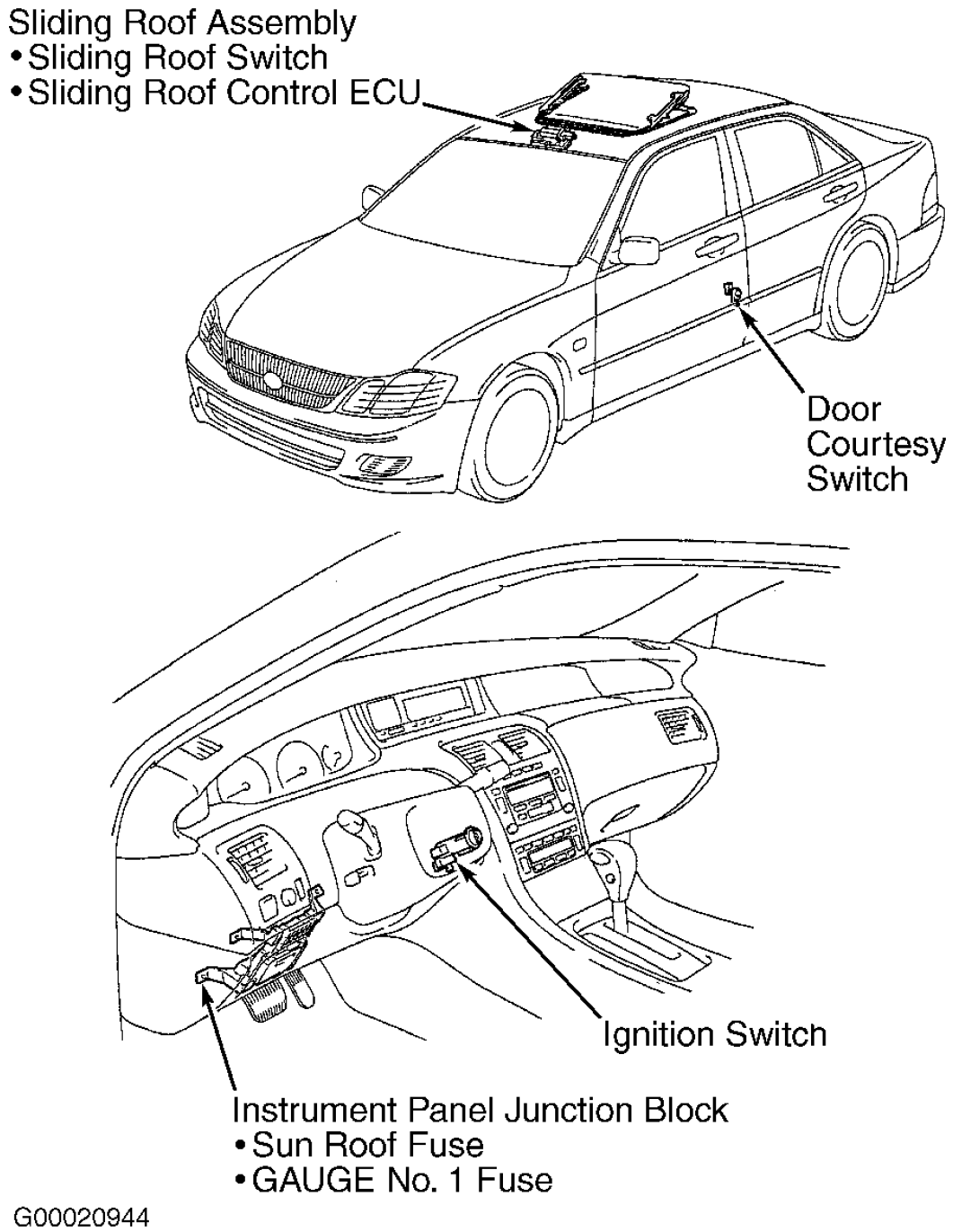

Fig. 2: Identifying Component Locations (2000 Avalon)
Courtesy of TOYOTA MOTOR SALES, U.S.A., INC.

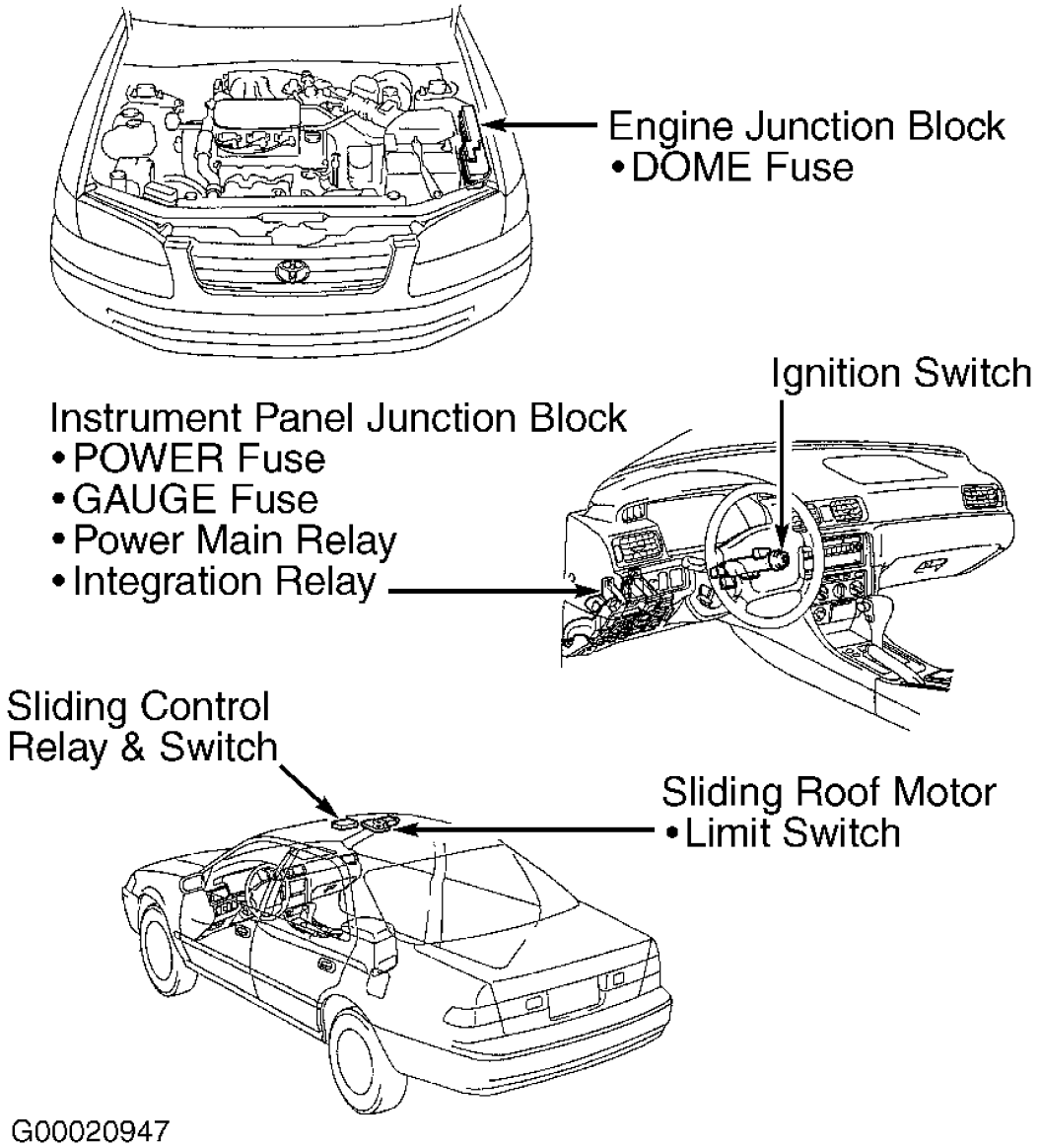

Fig. 3: Identifying Component Locations (Camry)
Courtesy of TOYOTA MOTOR SALES, U.S.A., INC.

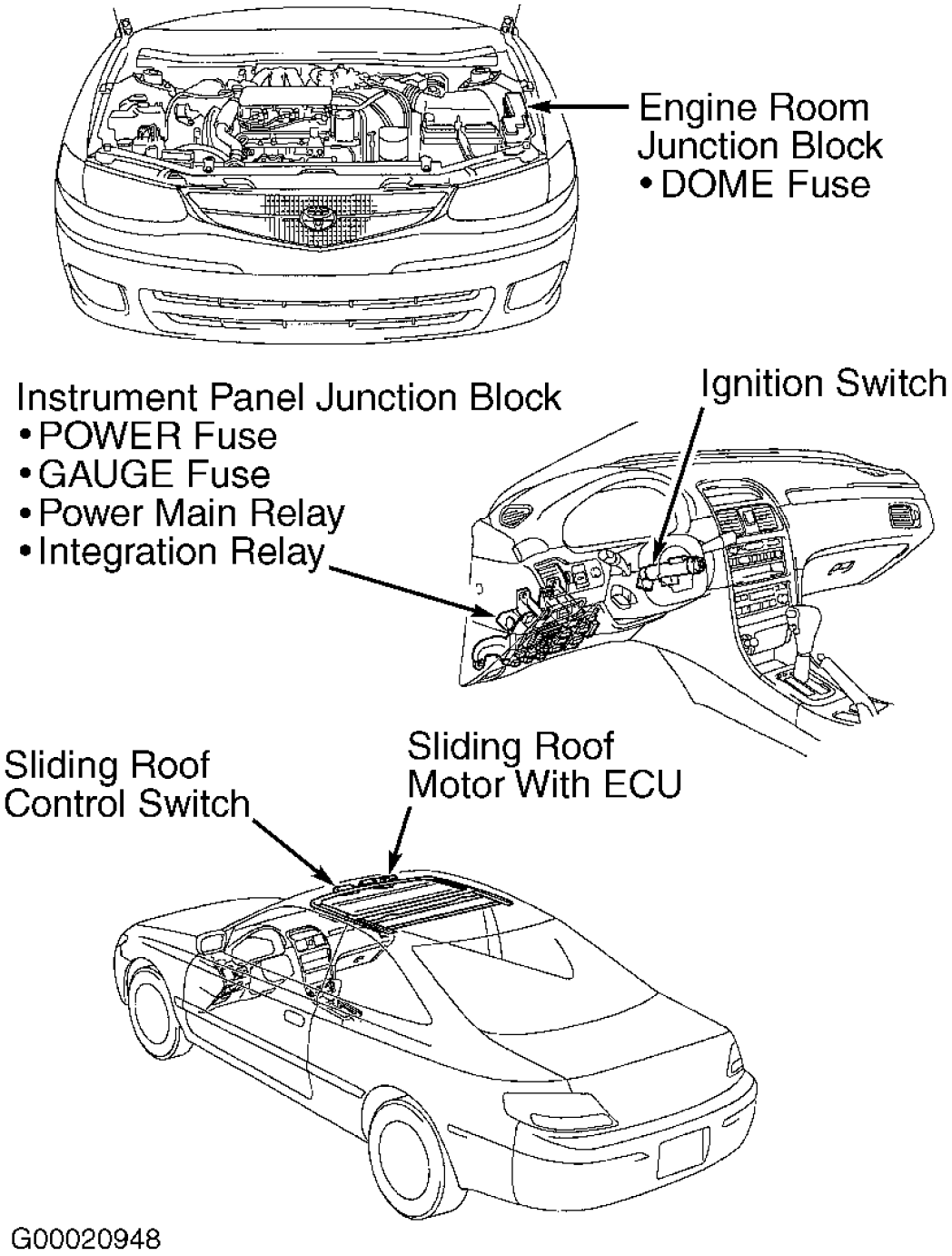

Fig. 4: Identifying Component Locations (Camry Solara)
Courtesy of TOYOTA MOTOR SALES, U.S.A., INC.

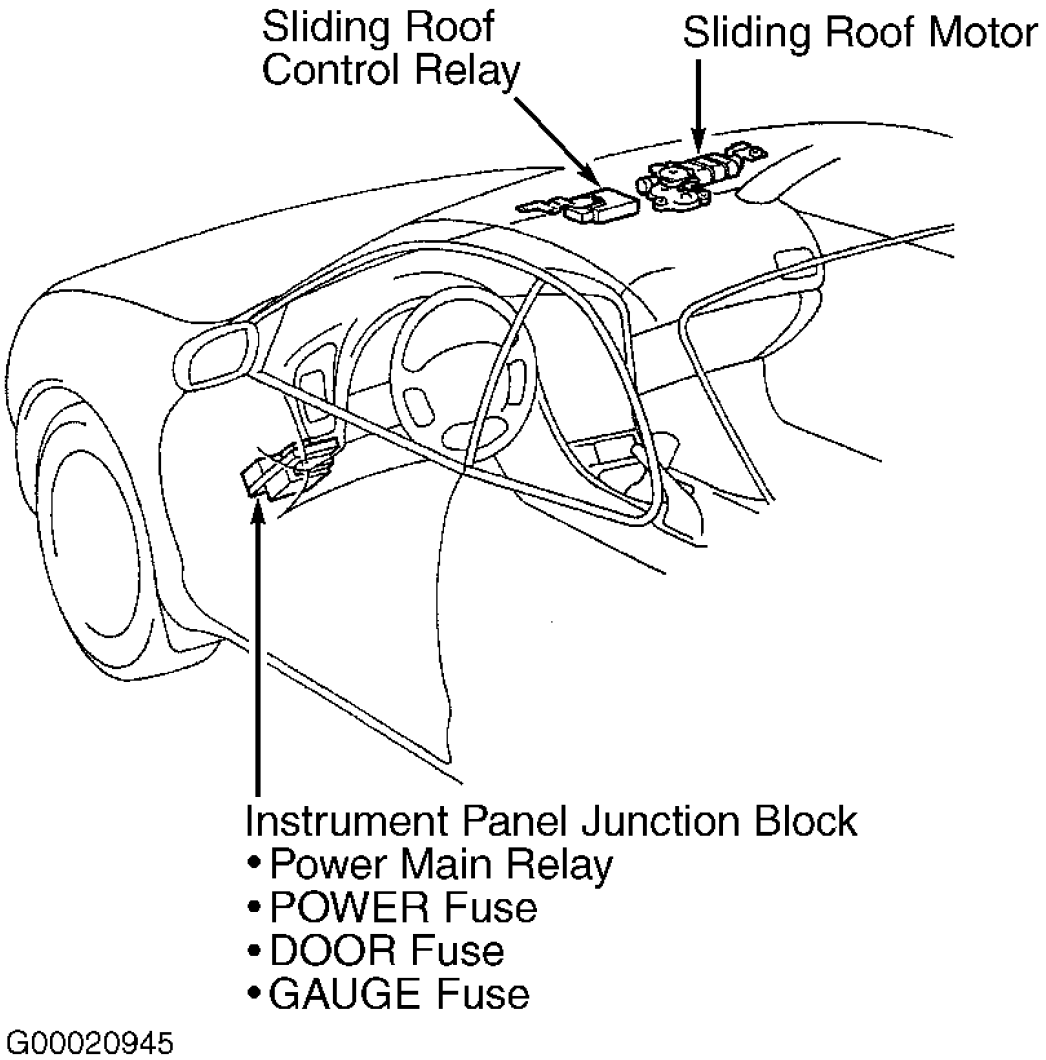

Fig. 5: Identifying Component Locations (1999 Celica)
Courtesy of TOYOTA MOTOR SALES, U.S.A., INC.

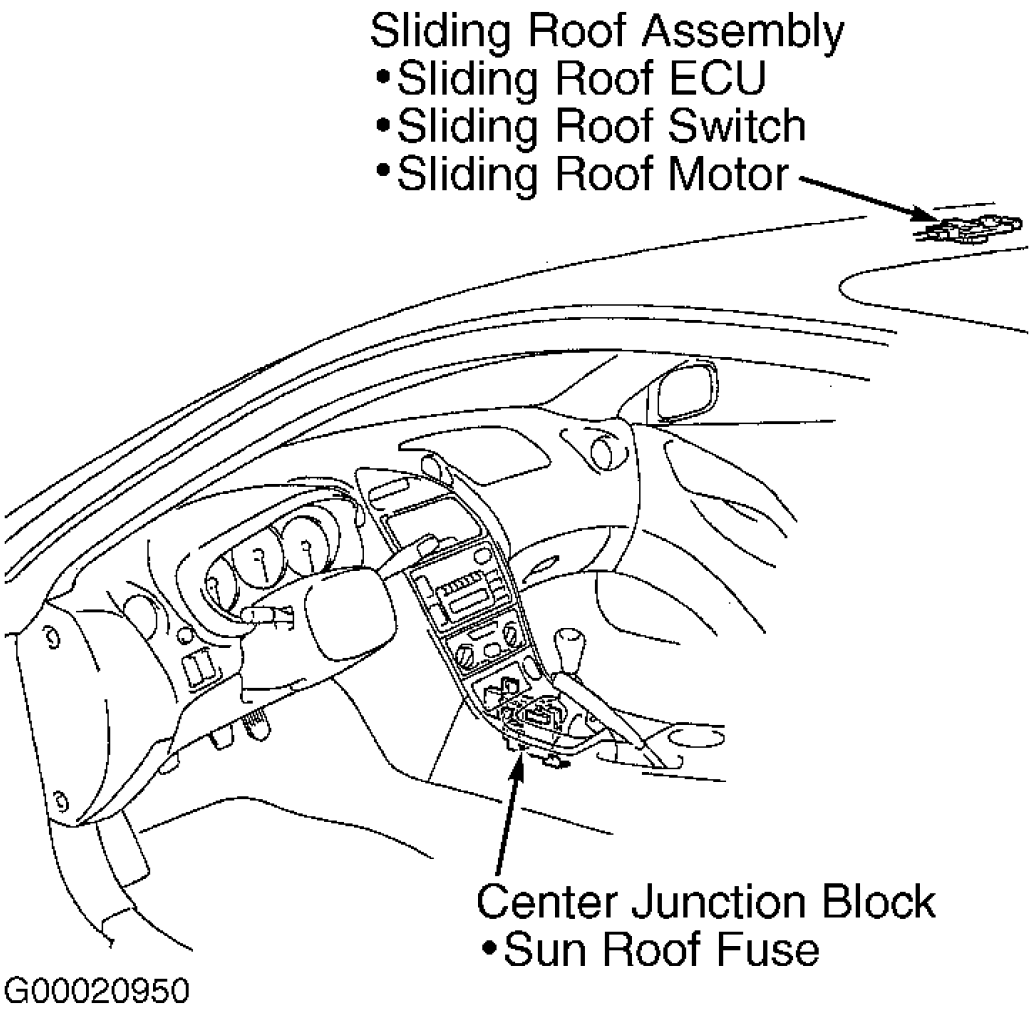

Fig. 6: Identifying Component Locations (2000 Celica)
Courtesy of TOYOTA MOTOR SALES, U.S.A., INC.

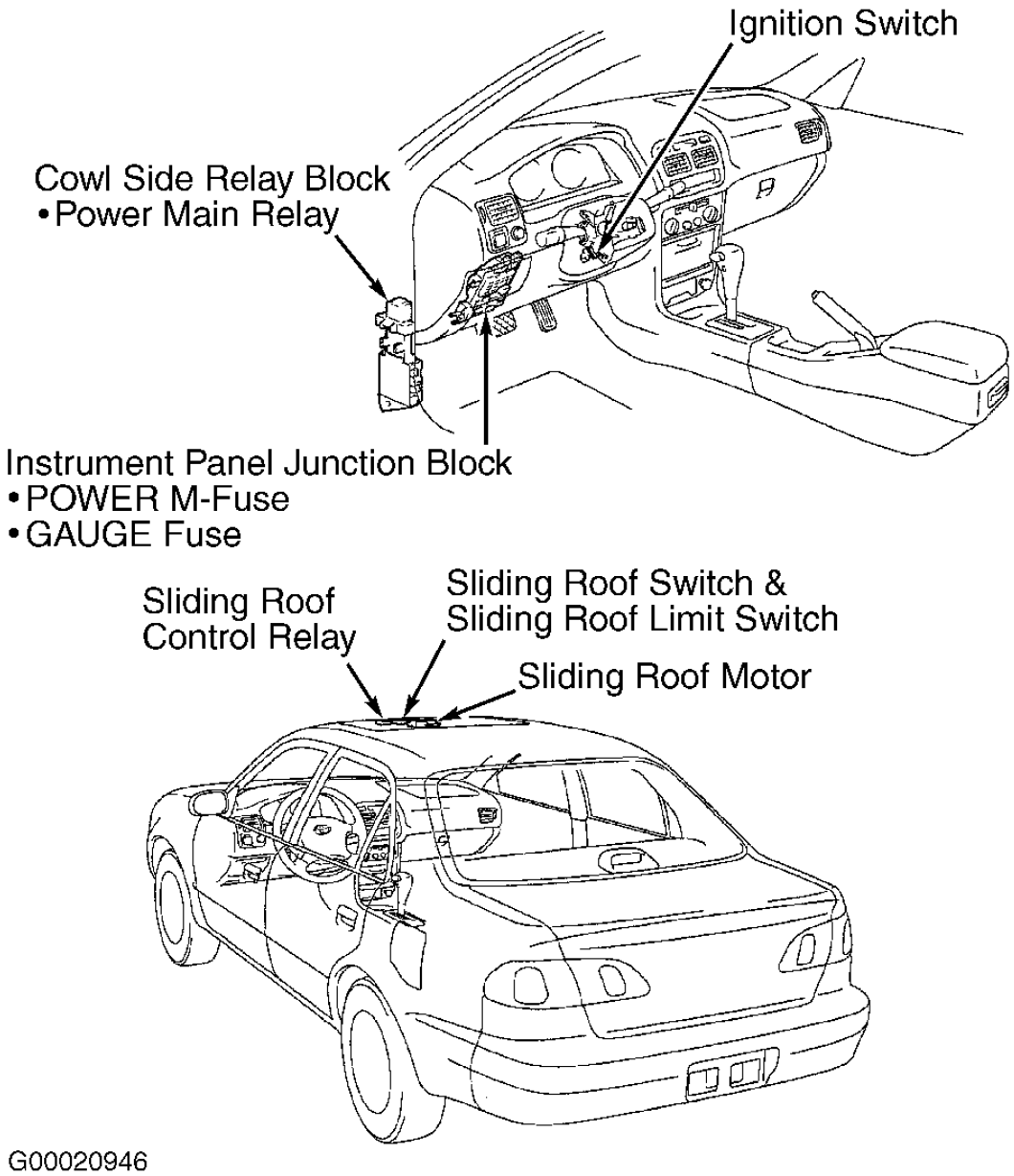

Fig. 7: Identifying Component Locations (Corolla)
Courtesy of TOYOTA MOTOR SALES, U.S.A., INC.

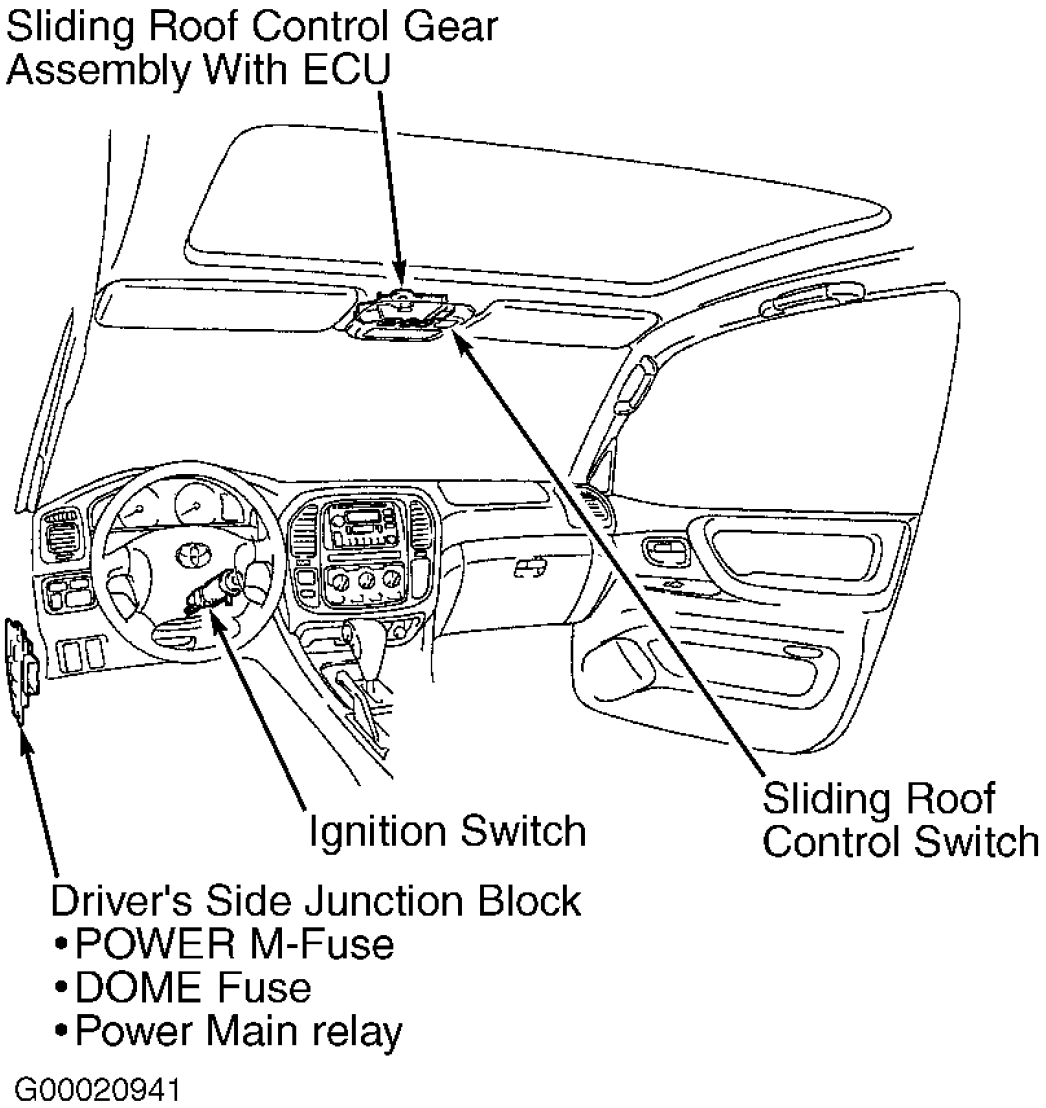

Fig. 8: Identifying Component Locations (Land Cruiser)
Courtesy of TOYOTA MOTOR SALES, U.S.A., INC.

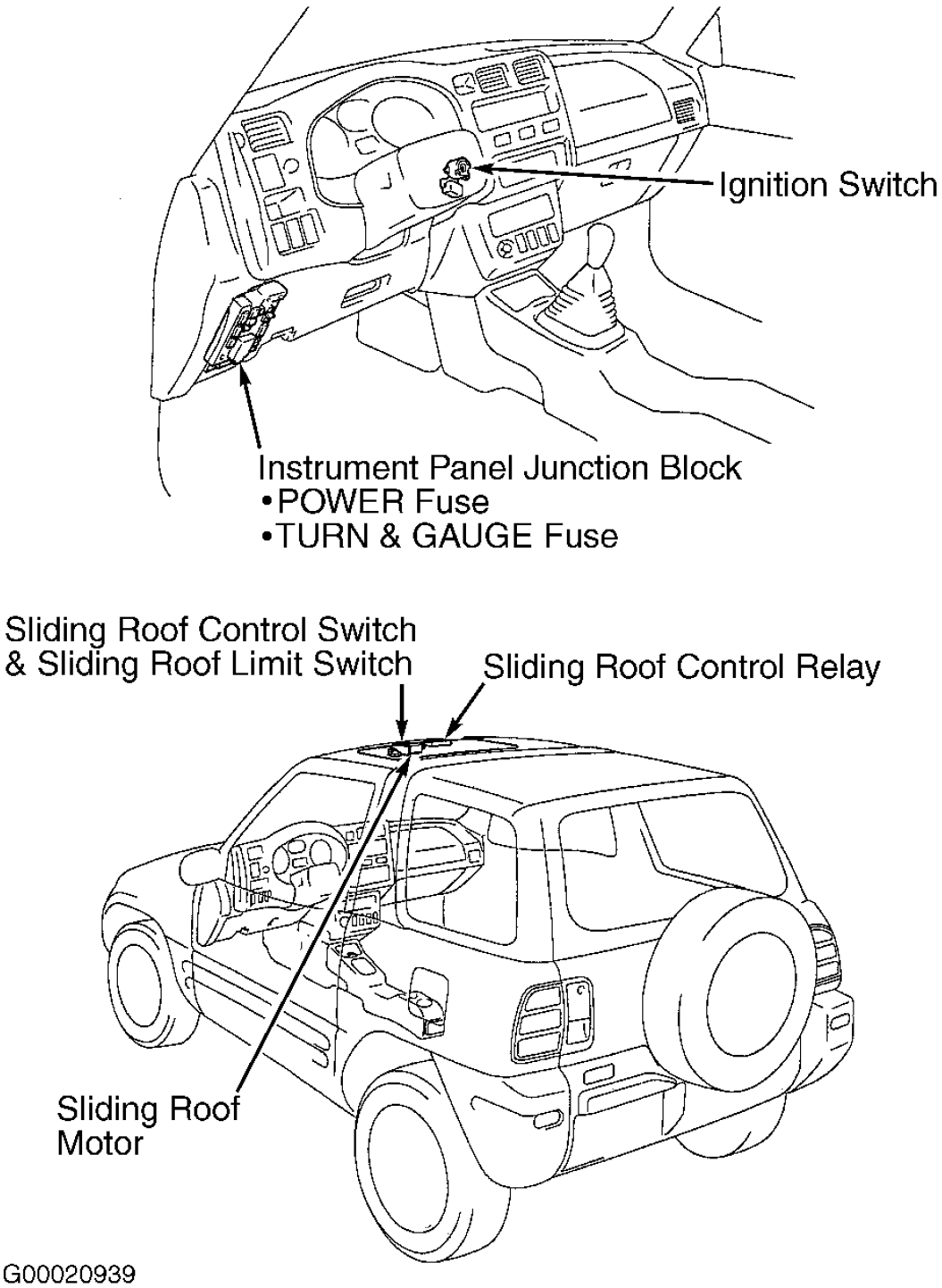

Fig. 9: Identifying Component Locations (RAV4)
Courtesy of TOYOTA MOTOR SALES, U.S.A., INC.

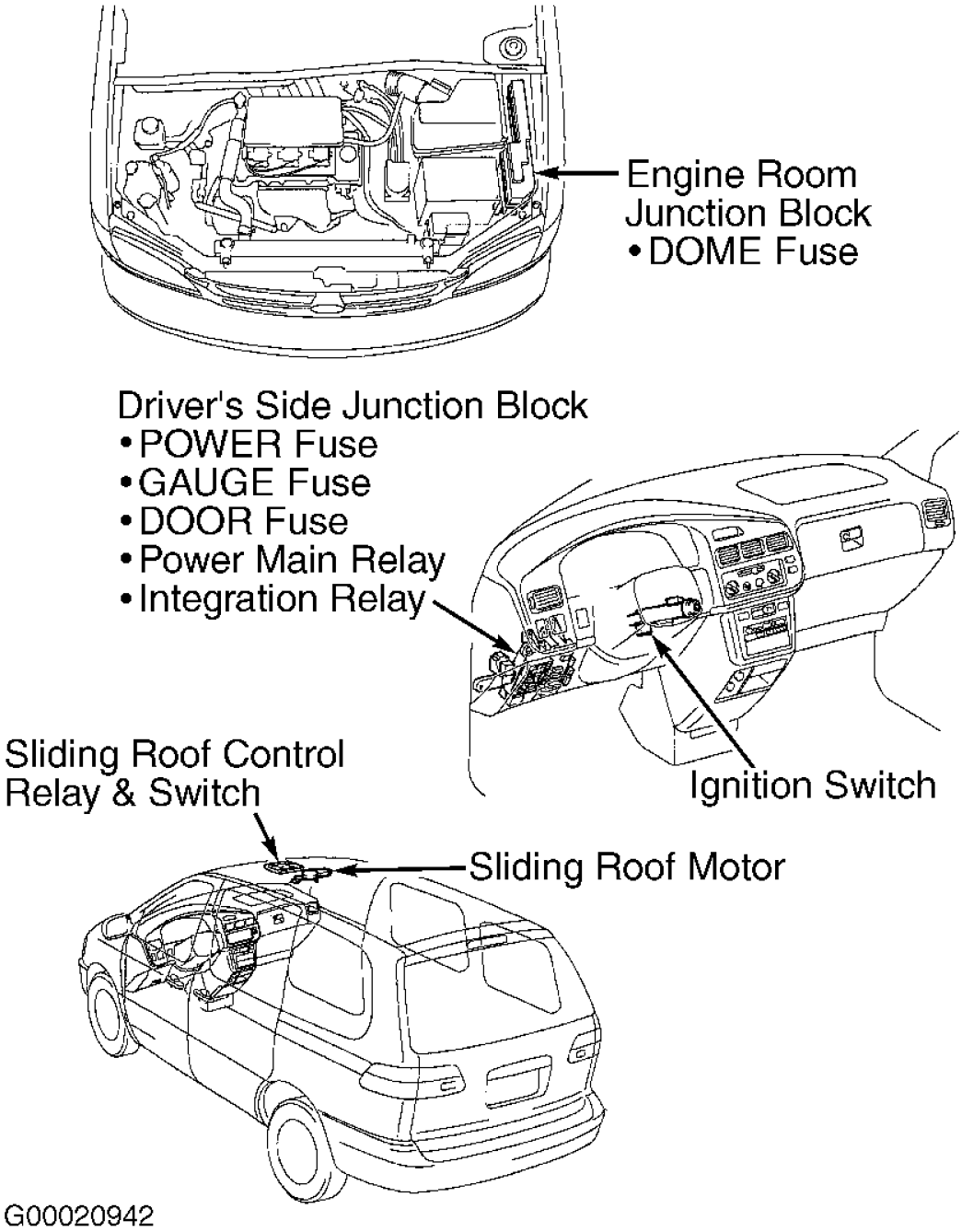

Fig. 10: Identifying Component Locations (Sienna)
Courtesy of TOYOTA MOTOR SALES, U.S.A., INC.

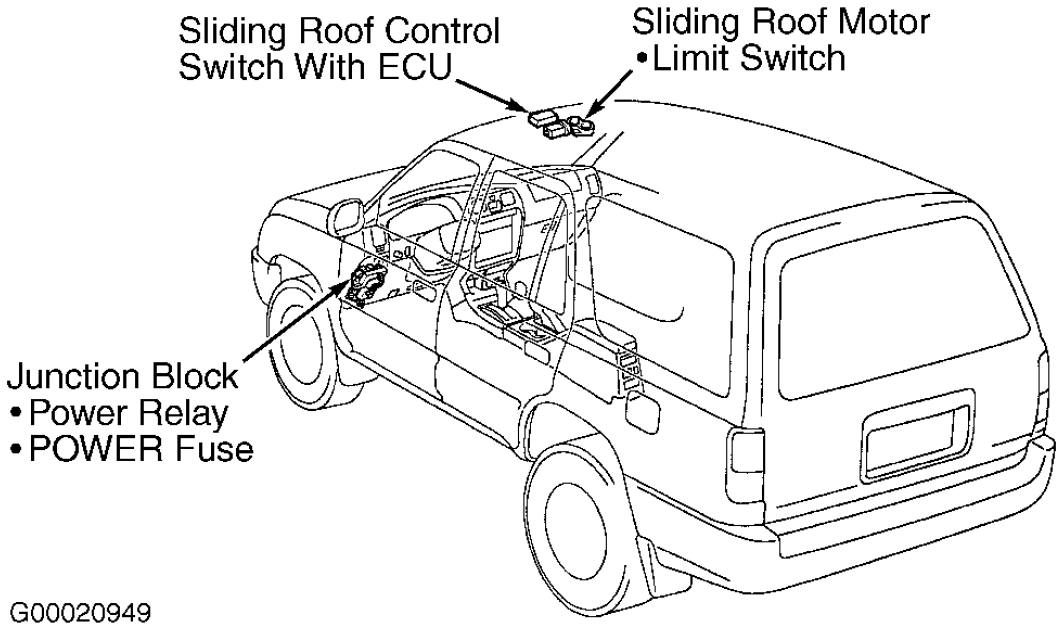

Fig. 11: Identifying Component Locations (4Runner)
Courtesy of TOYOTA MOTOR SALES, U.S.A., INC.

SERVICING

MANUALLY OPERATING SUN ROOF

Camry (USA Built)

Remove map light assembly. Insert Allen wrench into sun roof motor drive to operate.

Celica & RAV4

Remove sun roof switch cover. Remove large screw. Ensure not to lose spring washer or shim. Insert "S" shaped screwdriver into hole and turn drive shaft to operate.

PROGRAMING

SUN ROOF INITIALIZATION

Celica

If battery was disconnected, sun roof control system may need to be initialized for proper operation. To re-initialize sun roof system, close sun roof and hold sun roof control switch in this position a few more seconds. Ensure proper sun roof operation. If sun roof does not operate properly, repair system as necessary.

ADJUSTMENTS

SUN ROOF HEIGHT

Corolla, Celica (1999), RAV4 & 4Runner

Completely close sun roof. Measure sun roof height. Roof panel should be even with glass weatherstrip, within 0.06" (1.5 mm). If adjustment is required, pry out trim panels from left and right sides of sun roof opening. Install or remove shims between bracket and sun roof as necessary. Recheck sun roof height.

Camry

Completely close sun roof. Measure sun roof height. On USA-built Camry, roof panel should be even with glass weatherstrip, within 0.06" (1.5 mm). On Japan-built Camry and Camry Solara, roof panel should be even with glass weatherstrip, within 0.06" (1.5 mm) at front, and +0.06" (1.5 mm) or -0.04" (1.0 mm) at rear. On all models, if adjustment is required, pry out trim panels from left and right sides of sun roof opening. Install or remove shims between bracket and sun roof as necessary. Recheck sun roof height.

Land Cruiser

Completely close sun roof. Measure sun roof height. Roof panel should be even with glass weatherstrip, within 0.06" (1.5 mm) at front, and +0.06" (1.5 mm) or -0.04" (1.0 mm) on all sides except rear. Roof panel should be even with glass weatherstrip, within 0.06" (1.5 mm) at rear. If adjustment is required, pry out trim panels from left and right sides of sun roof opening. Install or remove shims between bracket and sun roof as necessary. Recheck sun roof height.

Avalon, Celica (2000) & Sienna

Completely close sun roof. Measure sun roof height. Roof panel should be even with glass weatherstrip, within 0.06" (1.5 mm) at front, and +0.06" (1.5 mm) or -0.04" (1.0 mm) at rear. If adjustment is required, pry out trim panels from left and right sides of sun roof opening. Install or remove shims between bracket and sun roof as necessary. Recheck sun roof height.

SUN ROOF CLOSING CLEARANCE

RAV4 (4-Door), Land Cruiser & 4Runner

If sun roof closing clearances are unequal between right and left sides, pry out trim panels from left and right sides of sun roof opening. Loosen sun roof slider mount nuts (RAV4 4-door and 4Runner; screws on Land Cruiser). Move either side forward or backward as necessary. Tighten sun roof slider mount nuts. Recheck sun roof alignment and operation.

SUN ROOF FRONT-TO-REAR ALIGNMENT

Avalon (1999), Camry, Camry Solara & Sienna

If front-to-rear position of sun roof is incorrect, pry out trim panels from left and right sides of sun roof opening.

Loosen Torx screws securing sun roof glass. Move sun roof to front or rear as necessary. Tighten Torx screws.

Corolla, Celica (2000) & RAV4 (2-Door)

If front-to-rear position of sun roof is incorrect, loosen Torx screws securing sun roof glass. Move sun roof to front or rear as necessary. Tighten Torx screws.

Celica (1999), RAV4 (4-Door) & 4Runner

If front-to-rear position of sun roof is incorrect, pry out trim panels from left and right sides of sun roof opening. Loosen sun roof slider mount nuts. Move sun roof to front or rear as necessary. If front-to-rear position still does not adjust, remove sun roof glass and adjust guide rail. Using screwdriver, slide link front or rear to align marks. See **Fig. 45** , **Fig. 60** or **Fig. 65** . Tighten sun roof slider mount nuts.

Land Cruiser

If front-to-rear position of sun roof is incorrect, pry out trim panels from left and right sides of sun roof opening. Loosen screws securing sun roof glass. Move sun roof to front or rear as necessary. Tighten screws.

SUN ROOF SIDE-TO-SIDE ALIGNMENT

Camry, Camry Solara, Celica (2000), Corolla, Land Cruiser & Sienna

If sun roof closing clearances are unequal between right and left sides, ensure sun roof is completely closed. Remove sun roof motor assembly and sun roof glass. Adjust drive rail by sliding cables forward or backward. Align 2 marks shown. See **Fig. 45** , **Fig. 60** or **Fig. 65** . Reinstall sun roof motor assembly.

Avalon & RAV4 (2-Door)

If sun roof is mounted to right or left of center line in roof opening, close sun roof. Remove sun roof motor and glass. See **SUN ROOF ASSEMBLY** under REMOVAL & INSTALLATION. Adjust drive rail by sliding cables forward or backward. Align 2 marks shown. See **Fig. 30** , **Fig. 33** or **Fig. 52** . Tighten sun roof slider mount nuts.

Celica (1999), RAV4 (4-Door) & 4Runner

If sun roof is mounted to right or left of center line in roof opening, pry out trim panels from left and right sides of sun roof opening. Loosen sun roof rear slider mount nuts. Move sun roof right or left as necessary. Tighten sun roof slider mount nuts.

TROUBLE SHOOTING

PRELIMINARY INSPECTION

With engine running, check time necessary for sun roof to open or close. Open and close time should be about 5-6 seconds. Check for abnormal noise or binding during sun roof operation. Check for water leakage. Adjust as necessary. See **ADJUSTMENTS** .

SUN ROOF DOES NOT CLOSE

Celica (2000)

1. If when sun roof is closing, it stops and reverses direction, perform the following: with ignition on and sun roof in open position, operate close switch for at least 10 seconds until sun roof is completely closed. This will prohibit jam protection system operation. Go to next step.
2. Check sun roof operation. If sun roof system operates normally, a temporary malfunction occurred. If sun roof system does not operate normally, check for a mechanical problem.

COMPONENT TESTS

LIMIT SWITCHES

Avalon & Celica (1999)

1. Limit switches are located next to sun roof motor. Disconnect limit switch connector. See **Fig. 12** or **Fig. 13** . If testing limit switch No. 1, continuity should not exist between terminals No. 1 and 3 with switch pin released. Continuity should exist between terminals No. 1 and 3 with switch pin pushed in. If continuity is not as specified, replace switch.
2. If testing limit switch No. 2, continuity should not exist between terminals No. 2 and 3 with switch pin released. Continuity should exist between terminals No. 2 and 3 with switch pin pushed in. If continuity is not as specified, replace switch.

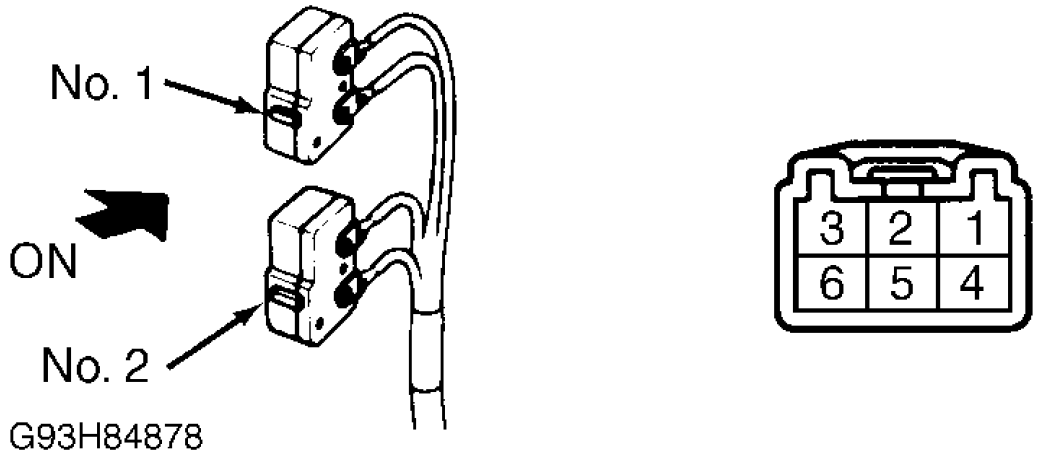

Fig. 12: Identifying Limit Switch & Sun Roof Motor Terminals (1999 Avalon)
Courtesy of TOYOTA MOTOR SALES, U.S.A., INC.

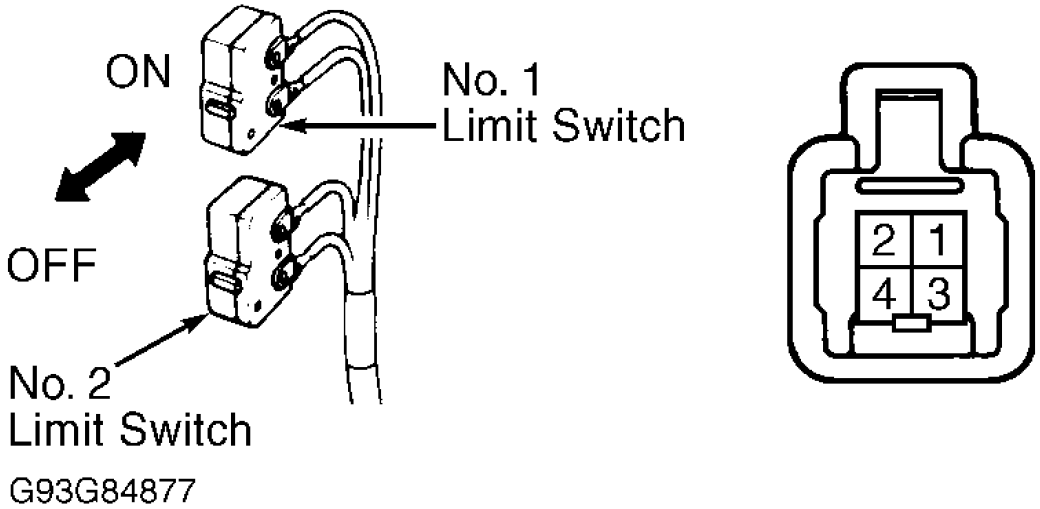

Fig. 13: Identifying Limit Switch Terminals (1999 Celica & RAV4 4-Door)
Courtesy of TOYOTA MOTOR SALES, U.S.A., INC.

Camry (USA Built)

NOTE: The Camry may have been manufactured by Toyota Motor Mfg. U.S.A. (USA built), or manufactured by Toyota Motor Corp. Japan (Japan built). Ensure correct test procedure is being used.

1. Unplug sun roof motor and limit switch connector. See **Fig. 14** . For limit switch No. 1, continuity should not exist between terminals No. 3 and 5 with switch pin released. With pin pressed in, continuity should exist between terminals No. 3 and 5.
2. For limit switch No. 2, continuity should not exist between terminals No. 3 and 6 with switch pin released. With pin pressed in, continuity should exist between terminals No. 3 and 6.
3. For limit switch No. 3, continuity should not exist between terminals No. 3 and 4 with switch pin released. With pin pressed in, continuity should exist between terminals No. 3 and 4. Replace switch if continuity is not as specified.

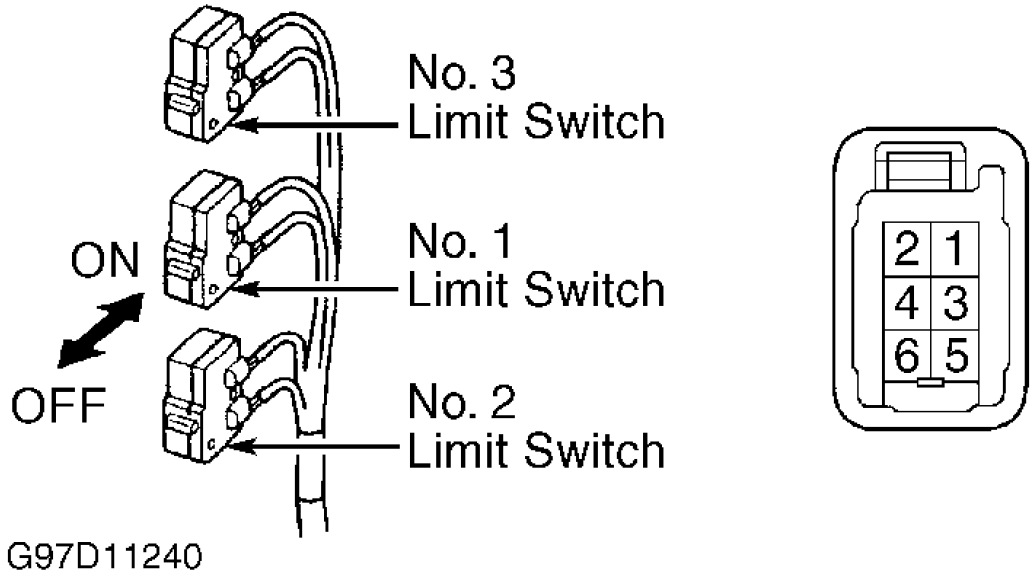

Fig. 14: Identifying Sun Roof Motor & Limit Switch Terminals (Camry - USA Built)
Courtesy of TOYOTA MOTOR SALES, U.S.A., INC.

Camry (Japan Built)

1. Unplug sun roof motor and limit switch connector. See **Fig. 15** . For limit switch No. 1, continuity should not exist between terminals No. 4 and 5 with switch pin released. With pin pressed in, continuity should exist between terminals No. 4 and 5.
2. For limit switch No. 2, continuity should not exist between terminals No. 4 and 6 with switch pin released. With pin pressed in, continuity should exist between terminals No. 4 and 6. Replace switch if continuity is not as specified.

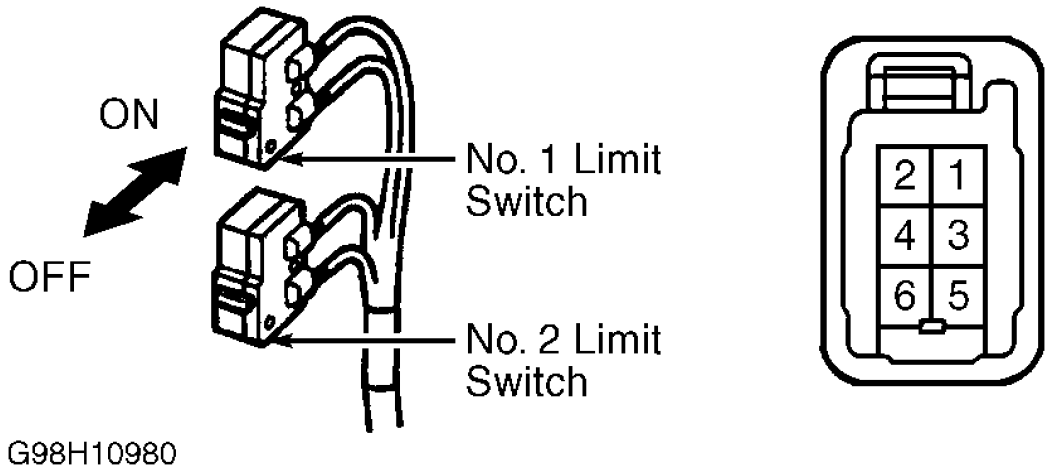

Fig. 15: Identifying Sun Roof Motor & Limit Switch Terminals (Camry - Japan Built, Corolla, RAV4 2-Door & Sienna)
Courtesy of TOYOTA MOTOR SALES, U.S.A., INC.

Corolla & Sienna

1. Unplug sun roof motor and limit switch connector. See **Fig. 15** . For limit switch No. 1, continuity should not exist between terminals No. 4 and 5 with switch pin released. With pin pressed in, continuity should exist between terminals No. 4 and 5.
2. For limit switch No. 2, continuity should not exist between terminals No. 4 and 6 with switch pin released. With pin pressed in, continuity should exist between terminals No. 4 and 6. Replace switch if continuity is not as specified.

RAV4 (2-Door)

1. Limit switch is located next to sun roof control switch. Unplug limit switch connector. See **Fig. 15** . For limit switch No. 1, continuity should not exist between terminals No. 4 and 5 with switch pin released. With pin pressed in, continuity should exist between terminals No. 4 and 5.
2. For limit switch No. 2, continuity should not exist between terminals No. 4 and 6 with switch pin released. With pin pressed in, continuity should exist between terminals No. 4 and 6. Replace switch if continuity is not as specified.

RAV4 (4-Door)

1. Limit switch is located next to sun roof control switch. Unplug limit switch connector. See **Fig. 13** . For limit switch No. 1, continuity should not exist between terminals No. 1 and 4 with switch pin released. With pin pressed in, continuity should exist between terminals No. 1 and 4.
2. For limit switch No. 2, continuity should not exist between terminals No. 2 and 4 with switch pin

released. With pin pressed in, continuity should exist between terminals No. 2 and 4. Replace switch if continuity is not as specified.

4Runner

1. Unplug switch connector. See **Fig. 16** . For limit switch No. 1, continuity should not exist between terminals No. 3 and 5 with switch pin released. With pin pressed in, continuity should exist between terminals No. 3 and 5.
2. For limit switch No. 2, continuity should not exist between terminals No. 3 and 4 with switch pin released. With pin pressed in, continuity should exist between terminals No. 3 and 4. Replace switch if continuity is not as specified.

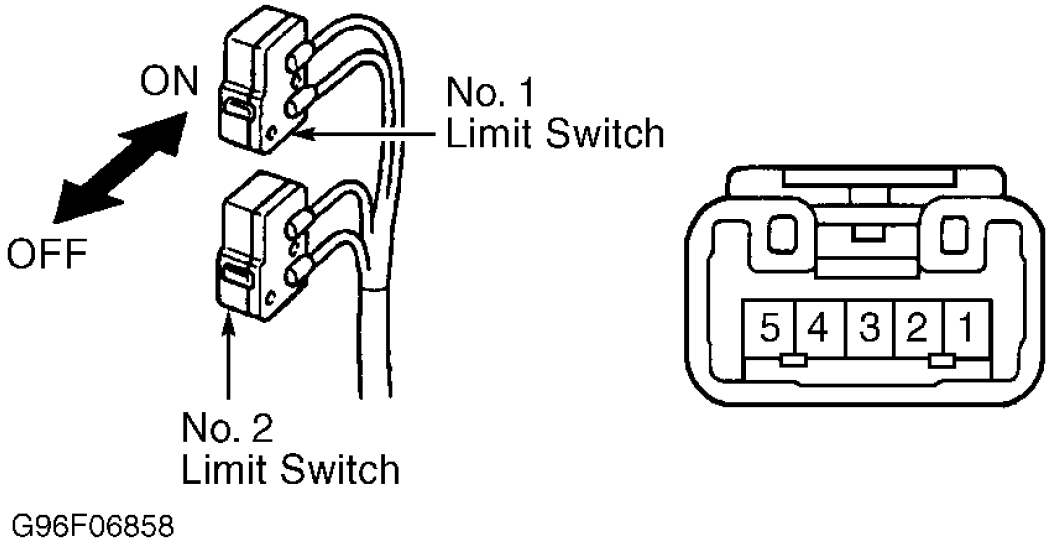

Fig. 16: Identifying Sun Roof Motor & Limit Switch Terminals (4Runner)
Courtesy of TOYOTA MOTOR SALES, U.S.A., INC.

SUN ROOF MOTOR CIRCUIT BREAKER

1. Ensure sun roof motor is connected. Check sun roof motor circuit breaker operation. Completely open sun roof. Hold sun roof switch in open position until a circuit breaker operation noise is heard. Circuit breaker should sound within 10-60 seconds. If sun roof motor circuit breaker operation is as specified, go to next step. If sun roof motor circuit breaker operation is not as specified, replace sun roof motor.
2. Ensure sun roof is completely open. Hold sun roof switch in close position. Sun roof should begin to close within 60 seconds. If sun roof does not begin to close within 60 seconds, replace sun roof motor.

SUN ROOF MOTOR

Avalon (1999), Camry, Corolla, RAV4 (2-Door), Sienna & 4Runner

Unplug sun roof motor and limit switch connector. See **Fig. 12** , **Fig. 14** , **Fig. 15** or **Fig. 16** . Using fused jumper wires, connect positive battery lead to sun roof motor connector terminal No. 2 and negative lead to terminal No. 1. Motor should rotate smoothly. Reverse battery leads. Motor should rotate smoothly in opposite direction. If motor operates as specified, check sun roof motor circuit breaker operation. See **SUN ROOF MOTOR CIRCUIT BREAKER** . If motor does not operate as specified, replace motor.

Celica (1999) & RAV4 (4-Door)

Unplug sun roof motor connector. Using fused jumper wires, connect positive battery lead to sun roof motor terminal No. 1 and negative lead to terminal No. 3. See **Fig. 17** . Motor should rotate smoothly. Reverse battery leads. Motor should rotate smoothly in opposite direction. If motor operates as specified, check sun roof motor circuit breaker operation. See **SUN ROOF MOTOR CIRCUIT BREAKER** . If motor does not operate as specified, replace sun roof motor.

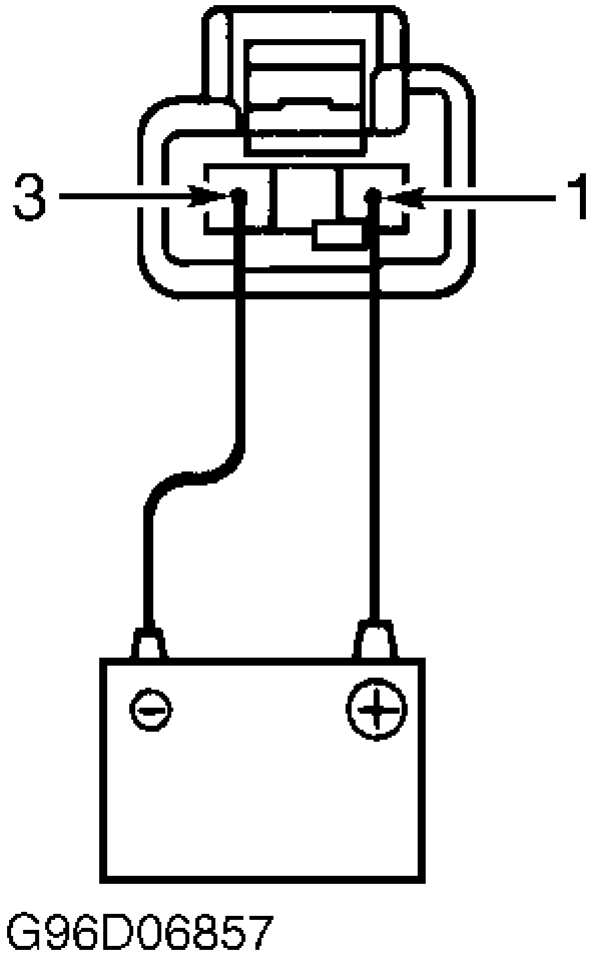

Fig. 17: Identifying Sun Roof Motor Terminals (1999 Celica & RAV4 4-Door)
Courtesy of TOYOTA MOTOR SALES, U.S.A., INC.

Land Cruiser

Sun roof motor testing procedures are not available. If sun roof is inoperative, check sun roof ECU. See **SUN ROOF ELECTRONIC CONTROL UNIT (ECU)** under SYSTEM TESTS. Sun roof ECU and sun roof motor are one assembly. Replace sun roof motor and ECU assembly as necessary.

SUN ROOF SWITCH

NOTE: On Camry and Sienna, sun roof switch is part of sun roof control relay. For

testing procedures, see CONTROL RELAY under SYSTEM TESTS.

Remove power sun roof switch. Check for continuity between switch terminals with switch in specified positions. If continuity is not as specified, replace switch. See appropriate SUN ROOF SWITCH CONTINUITY TEST table. See **Fig. 18** -**Fig. 21** .

SUN ROOF SWITCH CONTINUITY TEST (2000 AVALON)

Switch Position	Continuity Between Terminals No.
Slide Open	2 & 3
Tilt Up	1 & 2

SUN ROOF SWITCH CONTINUITY TEST (1999 AVALON & COROLLA)

Switch Position	Continuity Between Terminals No.
Slide	
Off	(1)
Open	3 & 4
Close	4 & 6
Tilt	
Off	(1)
Up	4 & 5
Down	2 & 4
(1) No continuity should exist.	

SUN ROOF SWITCH CONTINUITY TEST (CAMRY SOLARA)

Switch Position	Continuity Between Terminals No.
Slide	
Off	(1)
Open	4 & 8
Tilt	
Off	(1)
Up	4 & 6
(1) No continuity should exist.	

SUN ROOF SWITCH CONTINUITY TEST (2000 CELICA)

Switch Position	Continuity Between Terminals No.
Slide	
Off	(1)
Open	3 & 8
Close	4 & 8

(1) No continuity should exist.

SUN ROOF SWITCH CONTINUITY TEST (1999 CELICA & RAV4)

Switch Position	Continuity Between Terminals No.
Slide	
Off	(1)
Open	3 & 8
Close	4 & 8
Tilt	
Off	(1)
Up	5 & 8
Down	6 & 8

(1) No continuity should exist.

SUN ROOF SWITCH CONTINUITY TEST (LAND CRUISER)

Switch Position	Continuity Between Terminals No.
Slide	
Off	(1)
Open	3 & 5
Close	3 & 4
Tilt	
Off	(1)
Up	1 & 3
Down	2 & 3

(1) No continuity should exist.

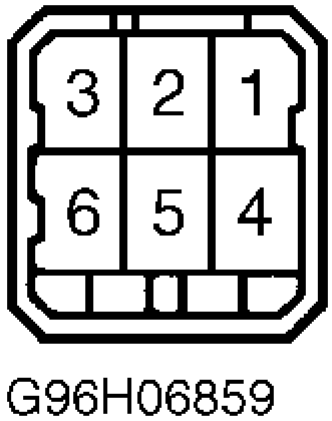

Fig. 18: Sun Roof Switch Terminals (1999 Avalon & Corolla)
Courtesy of TOYOTA MOTOR SALES, U.S.A., INC.

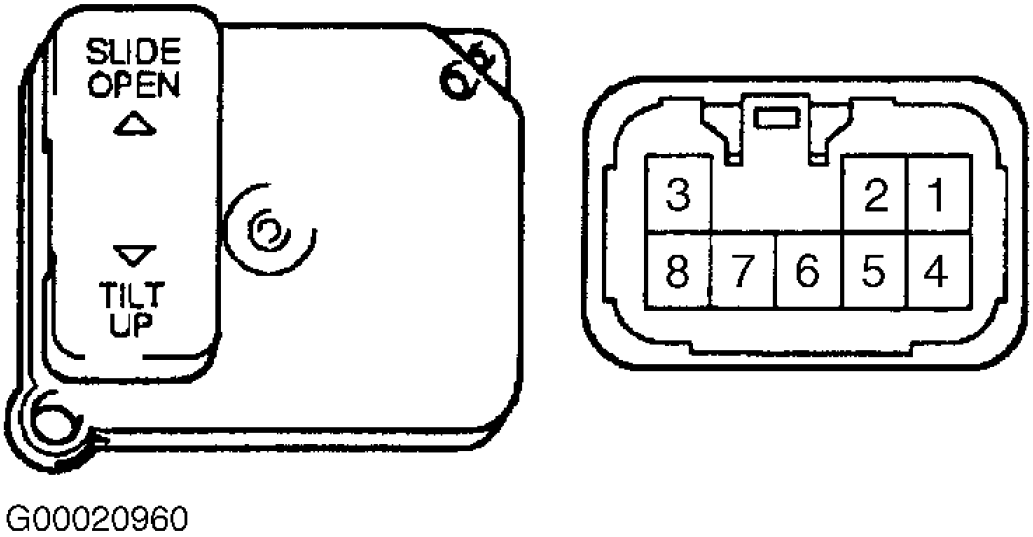

Fig. 19: Sun Roof Switch Terminals (Camry Solara)
Courtesy of TOYOTA MOTOR SALES, U.S.A., INC.

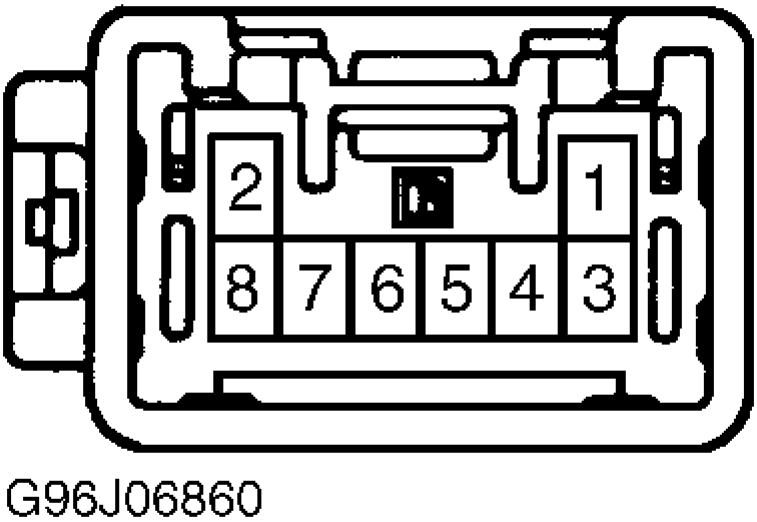

Fig. 20: Sun Roof Switch Terminals (Celica & RAV4)
Courtesy of TOYOTA MOTOR SALES, U.S.A., INC.

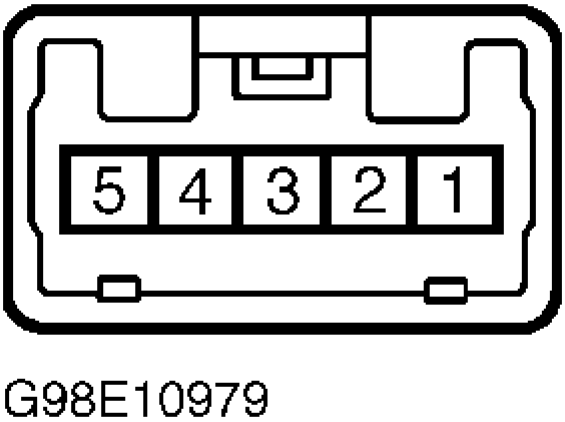

Fig. 21: Sun Roof Switch Terminals (Land Cruiser)

Courtesy of TOYOTA MOTOR SALES, U.S.A., INC.

POWER MAIN RELAY

Remove power main relay. See **COMPONENT LOCATIONS** . Using an ohmmeter, check continuity between terminals No. 1 and 2. Continuity should exist. See **Fig. 22** or **Fig. 23** . Apply battery voltage to terminal No. 1 and ground terminal No. 2. Continuity should exist between terminals No. 3 and 5. If continuity is not as specified, replace power main relay.

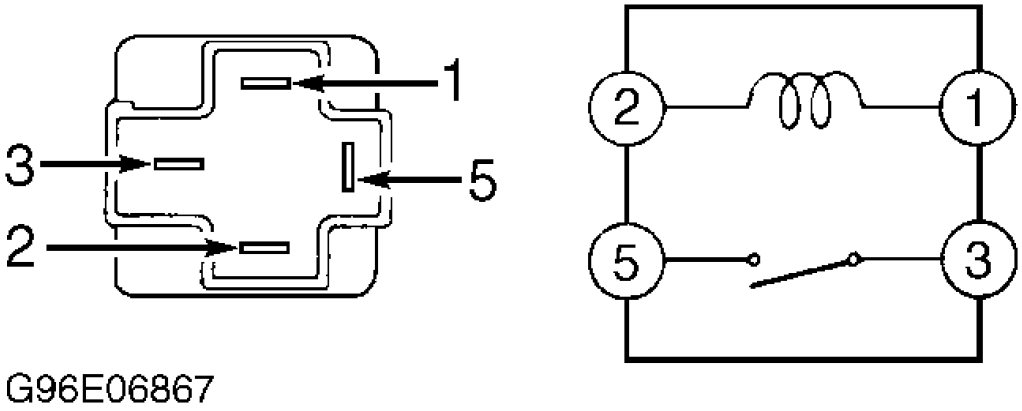

Fig. 22: Power Main Relay Terminals (1999 Avalon, 1999 Celica, Land Cruiser)
Courtesy of TOYOTA MOTOR SALES, U.S.A., INC.

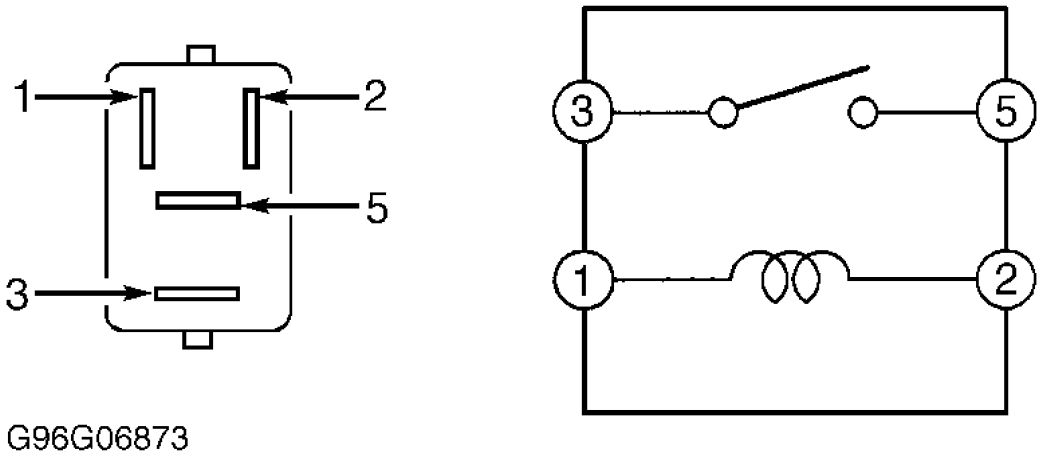

Fig. 23: Power Main Relay Terminals (Camry, Camry Solara, Corolla, Sienna & 4Runner)
Courtesy of TOYOTA MOTOR SALES, U.S.A., INC.

SYSTEM TESTS

CONTROL RELAY

NOTE: **All models except Avalon (2000), Camry Solara, Land Cruiser use a control relay to supply power to sun roof motor. Land Cruiser uses a sun roof ECU to control sun roof motor. To test ECU, see SUN ROOF ELECTRONIC CONTROL UNIT (ECU) .**

Disconnect control relay connector. See **COMPONENT LOCATIONS** . Check for continuity or voltage as indicated at control relay wiring harness connector terminals with sun roof switch or limit switch in specified positions. See appropriate CONTROL RELAY TEST table. If test results are as specified, control relay circuits are okay. Replace control relay. If test results are not as specified, repair or replace appropriate switch or wire. See **Fig. 24** through **Fig. 26** .

CONTROL RELAY TEST (1999 AVALON, 1999 CELICA, COROLLA & RAV4)

Terminal No. & Switch Position	Specification
1 (1)	
Slide	
Off Or Close	No Continuity
Open	Continuity
2 (1)	
Slide	

Off Or Open	No Continuity
Close	Continuity
3 (1)	
Tilt	
Off Or Down	No Continuity
Up	Continuity
4 & 5	Continuity
6 (1)	
Ignition Switch LOCK Or ACC	(2) No Voltage
Ignition Switch ON	Battery Voltage
7 (1)	
Tilt	
Off Or Up	No Continuity
Down	Continuity
8 (1)	
No. 1 Limit Switch	
Off (3)	No Continuity
On (4)	Continuity
9 (1)	
No. 2 Limit Switch	
Off (Sun Roof Closed)	No Continuity
On (Sun Roof Open)	Continuity
11 (1)	Continuity
12 (1)	Battery Voltage

(1) Terminal connected to ground.

(2) Except within 60 seconds of turning ignition off or until a front door is opened after ignition is turned off. If circuit is as specified, replace control relay.

(3) Sliding roof is tilted up or open about 7.87" (200 mm).

(4) Sliding roof not tilted up or open about 7.87" (200 mm).

CONTROL RELAY TEST (CAMRY - USA BUILT)

Terminal No. & Switch Position	Specification
1 & 5	Continuity
2 (1)	Continuity
3 (1)	
No. 1 Limit Switch	
Off (Roof Closed)	No Continuity

On (Roof Open)	Continuity
4 (1)	
Ignition Switch LOCK Or ACC	(2) No Voltage
Ignition Switch ON	Battery Voltage
7 (1)	
No. 2 Limit Switch	
Off (Tilt Up)	No Continuity
On (Roof Open)	Continuity
8 (1)	
No. 3 Limit Switch	
Off (Roof Closed)	No Continuity
On (Roof Open)	Continuity

(1) Terminal connected to ground.

(2) Except within 60 seconds of turning ignition off or until a front door is opened after ignition is turned off. If circuit is as specified, replace control relay.

CONTROL RELAY TEST (CAMRY - JAPAN BUILT & SIENNA)

Terminal No. & Switch Position	Specification
1 & 5	Continuity
2 (1)	Continuity
3 (1)	
No. 1 Limit Switch	
Off (Roof Closed)	No Continuity
On (Roof Open)	Continuity
4 (1)	
Ignition Switch LOCK Or ACC	(2) No Voltage
Ignition Switch ON	Battery Voltage
7 (1)	
No. 2 Limit Switch	
Off (3)	No Continuity
On (4)	Continuity

(1) Terminal connected to ground.

(2) Except within 60 seconds of turning ignition off or until a front door is opened after ignition is turned off. If circuit is as specified, replace control relay.

(3) Sliding roof is tilted up or open about 7.87" (200 mm).

(4) Sliding roof not tilted up or open about 7.87" (200 mm).

CONTROL RELAY TEST (2000 CELICA)

Terminal No. & Switch Position	Specification
1 (1)	Continuity
2 (1)	
Ignition Switch LOCK Or ACC	(2) No Voltage
Ignition Switch ON	Battery Voltage
5 (1)	Battery Voltage
6 (1)	No Continuity
7 (1)	Continuity
8 (1)	
Ignition Switch LOCK Or ACC	No Voltage
Ignition Switch ON	Battery Voltage
9 (1)	
Slide	
Close	No Continuity
Open	Continuity
10 (1)	
Slide	
Close	Continuity
Open	No Continuity

(1) Terminal connected to ground.

(2) Except within 43 seconds of turning ignition off or until a front door is opened after ignition is turned off. If circuit is as specified, replace control relay.

CONTROL RELAY TEST (4RUNNER)

Terminal No. & Switch Position	Specification
1 (1)	
Slide Switch Open	Continuity
2 (1)	
Slide Switch Closed	Continuity
3 (1)	
Tilt Switch Up	Continuity
4 (1)	No Continuity
4 & 5	Continuity
5 (1)	No Continuity
6 (1)	
Ignition Switch LOCK Or ACC	No Voltage
Ignition Switch ON	Battery Voltage

7 (1)	
Tilt Switch Down	Continuity
8 (1)	
Limit Switch No. 1 OFF	No Continuity
Limit Switch No. 1 ON	Continuity
9 (1)	
Limit Switch No. 2 OFF	No Continuity
Limit Switch No. 2 ON	Continuity
11 (1)	Continuity
12 (1)	Battery Voltage
(1) Measured between terminal and ground.	

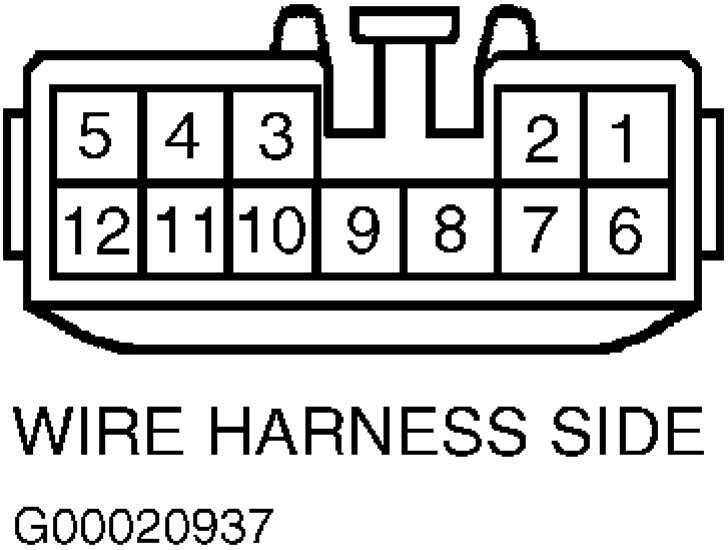

Fig. 24: Control Relay Connector Terminals (Corolla & RAV4)
Courtesy of TOYOTA MOTOR SALES, U.S.A., INC.

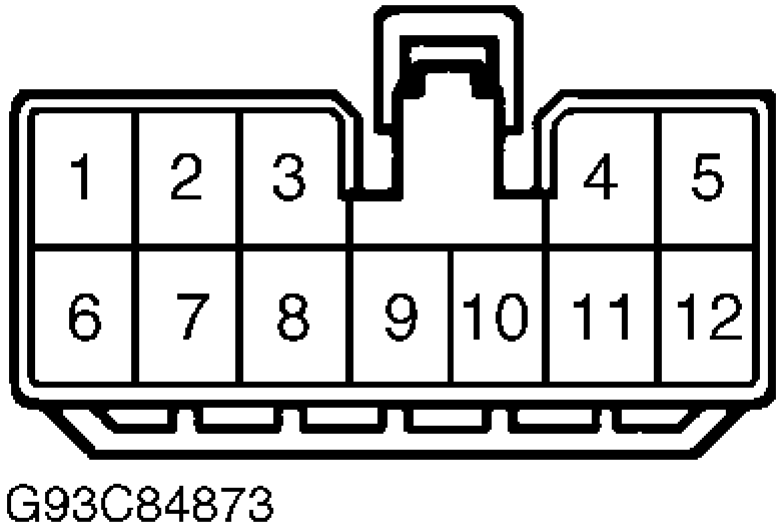

Fig. 25: Control Relay Connector Terminals (1999 Avalon & 1999 Celica)
Courtesy of TOYOTA MOTOR SALES, U.S.A., INC.

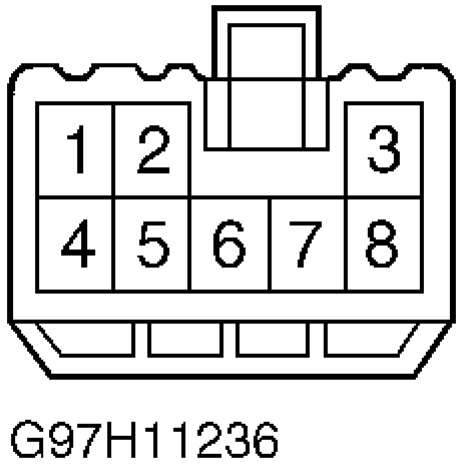

Fig. 26: Control Relay Connector Terminals (Camry, Sienna & 4Runner)
Courtesy of TOYOTA MOTOR SALES, U.S.A., INC.

SUN ROOF ELECTRONIC CONTROL UNIT (ECU)

NOTE: Avalon (2000), Camry Solara, Land Cruiser uses a sun roof ECU to control power to sun roof motor. All other models use a control relay to supply power to sun roof motor. To test control relay, see CONTROL RELAY .

Avalon (2000), Camry Solara, Land Cruiser

Disconnect sun roof ECU 10-pin connector. ECU is located behind overhead console. Check for continuity or voltage at indicated ECU wiring harness connector terminals with sun roof switch in specified positions. See appropriate SUN ROOF ECU TEST table. If test results are as specified, sun roof ECU circuits are okay. Replace sun roof ECU. If test results are not as specified, repair or replace appropriate switch or wire. See **Fig. 27** .

SUN ROOF ECU TEST (2000 AVALON)

Terminal No. & Switch Position	Specification
3 (1)	
Driver's Door	
Open Or Switch On	Continuity
Closed Or Switch Off	No Continuity
4 (1)	
Passenger's Door	
Open Or Switch On	Continuity
Closed Or Switch Off	No. Continuity
5 (1)	Battery Voltage
7 (1)	Continuity
8 (1)	
Ignition Switch LOCK Or ACC	No Voltage
Ignition Switch ON	Battery Voltage
9 (1)	
Slide	
Off Or Open	No Continuity
Close	Continuity
10 (1)	
Slide	
Off Or Open	No Continuity
Close	Continuity
(1) Terminal connected to ground.	

SUN ROOF ECU TEST (CAMRY SOLARA)

Terminal No. & Switch Position	Specification
2 (1)	
Slide	
Off	No Continuity
Open	Continuity
3 (1)	
Ignition Switch OFF Or ACC	No Voltage
Ignition Switch ON	Battery Voltage
5 (1)	
Tilt	
Off	No Continuity
Up	Continuity
8 (1)	Continuity
(1) Terminal connected to ground.	

SUN ROOF ECU TEST (LAND CRUISER)

Terminal No. & Switch Position	Specification
3 (1)	
Tilt	
Off Or Up	No Continuity
Down	Continuity
4 (1)	
Tilt	
Off Or Down	No Continuity
Up	Continuity
5 (1)	Battery Voltage
7 (1)	Continuity
8 (1)	
Ignition Switch LOCK Or ACC	No Voltage
Ignition Switch ON	Battery Voltage
9 (1)	
Slide	
Off Or Close	No Continuity
Open	Continuity
10 (1)	
Slide	
Off Or Open	No Continuity

Close	Continuity
(1) Terminal connected to ground.	

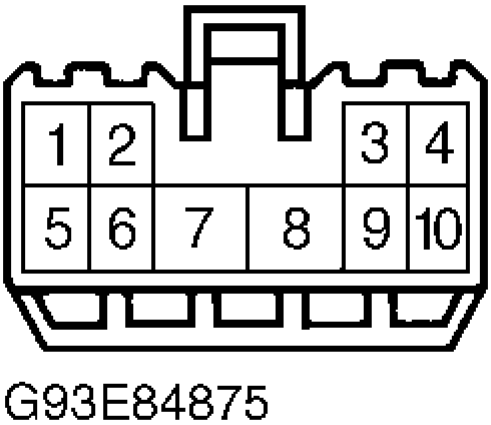

Fig. 27: Identifying Sun Roof ECU Connector Terminals (2000 Avalon, Camry Solara, Land Cruiser) Identifying Control Relay Connector Terminals & Sun Roof Switch Terminals (2000 Avalon)
Courtesy of TOYOTA MOTOR SALES, U.S.A., INC.

REMOVAL & INSTALLATION

CAUTION: When prying out trim pieces and other parts that are secured by clips, use a plastic tool or a flat-blade screwdriver with tape on tip to prevent damage.

SUN ROOF ASSEMBLY

Removal (1999 Avalon)

1. Close sun roof. Turn ignition off. Remove rear seat cushion. Remove 4 bolts. Raise up and remove seatback assembly. Remove front and rear door opening trim. See **Fig. 28** . Remove front door and rear door scuff plates. Remove center pillar lower trim.
2. Pull rear centrally mounted brakelight cover by pinching in sides and pulling cover up. Remove rear centrally mounted brakelight. Remove rear deck tray trim. Remove rear pillar trim panels. Remove front seat outer belt shoulder anchor bolt. Remove center pillar upper trim. Remove front pillar and sun roof trim. Remove front and rear map lights. Remove sun visors and assist grips. Remove roof headlining.
3. Remove sun roof glass mounting nuts. See **Fig. 29** . Pull upward on sun roof glass to remove. Remove

sun roof control relay, and sun roof motor assembly. Disconnect 4 drain hoses from sun roof housing. Remove 16 bolts, 4 brackets, 4 nuts and sun roof housing.

Disassembly & Reassembly

1. Remove screws and sun roof panel stoppers. Remove sunshade trim. Remove rear sun roof drip channel. Remove screws and guide rail stoppers. Slide drive cable rearward and remove it. Remove sun roof wind deflector panel. Remove 2 screws and guide blocks. Remove 6 screws and sun roof housing.
2. To reassemble, adjust drive cables to a completely closed and tilted down position. Slide both cables forward or backward to align marks. See **Fig. 30** . To complete reassembly, reverse disassembly procedure.

Installation

Prior to installing drive motor, remove cam plate cover from drive motor. See **Fig. 31** . Turn drive gear until marks align, indicating a completely closed position. Reinstall cam plate cover. Tighten nuts and bolt to specification. See **TORQUE SPECIFICATIONS** . To complete installation, reverse removal procedure.

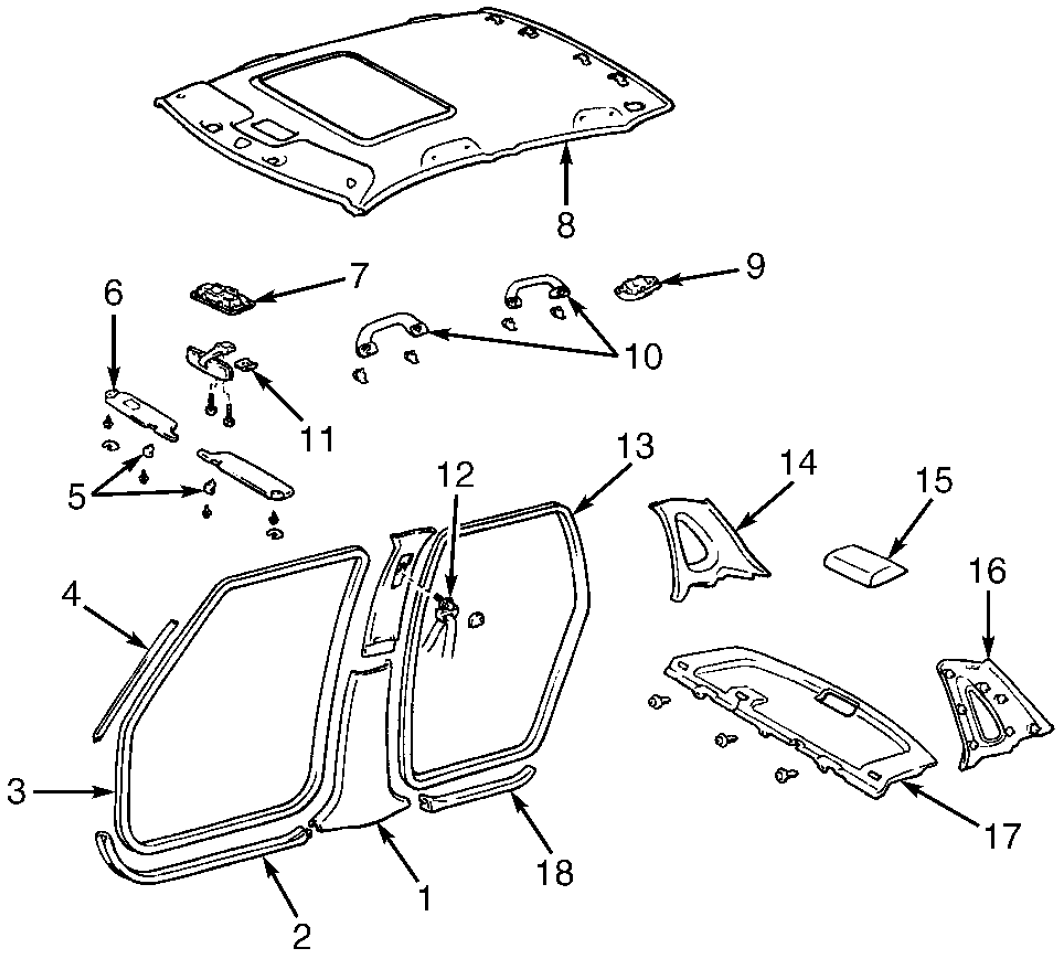

1. Center Pillar Lower Trim
2. Front Door Scuff Plate
3. Front Door Opening Trim
4. Front Pillar Trim
5. Sun Visor Holder
6. Sun Visor
7. Front Interior Light
8. Headliner
9. Rear Interior Light
10. Assist Grip
11. Rearview Mirror
12. Seat Belt Anchor Bolt
13. Rear Door Opening Trim
14. Rear Pillar Trim
15. Brakelight
16. Rear Pillar Trim
17. Rear Deck Tray Trim
18. Rear Door Scuff Plate

G98I10981

Fig. 28: Removing Headlining (1999 Avalon Is Shown; 2000 Avalon Is Similar)
Courtesy of TOYOTA MOTOR SALES, U.S.A., INC.

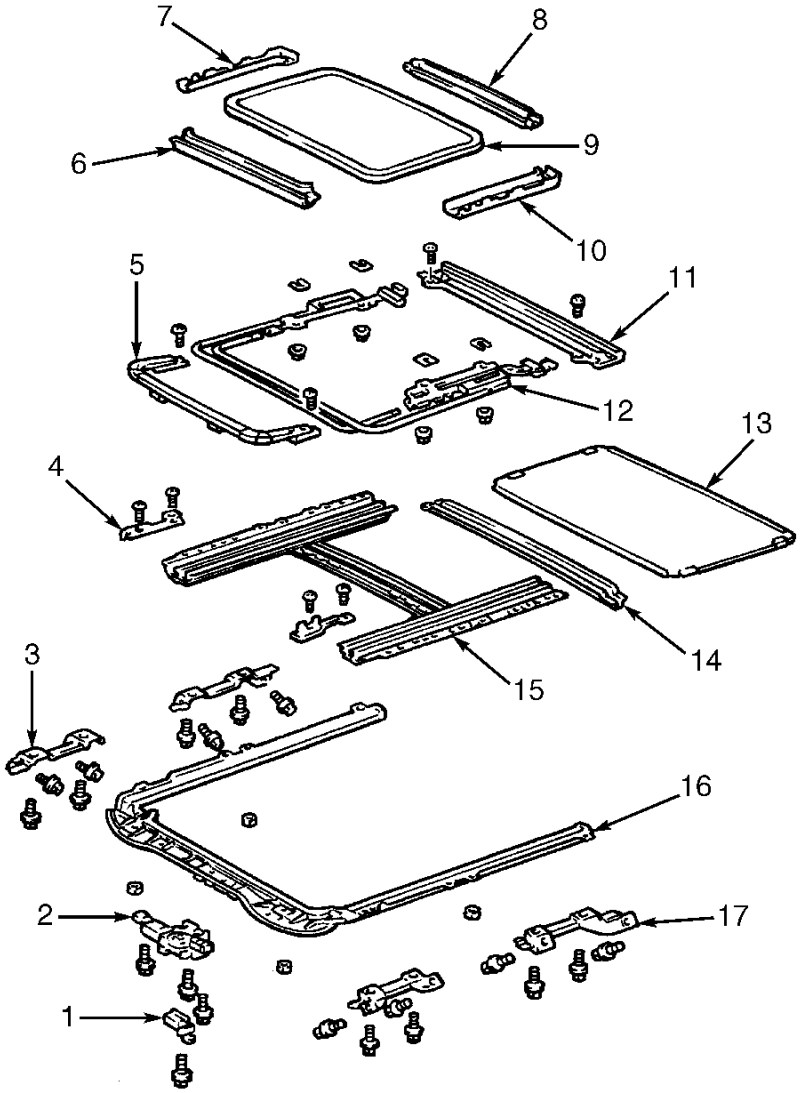

1. Control Relay
2. Sun Roof Motor
3. Bracket
4. Drive Rail Stopper
5. Wind Defector
6. Sun Roof Front Trim
7. Sun Roof Side Trim
8. Sun Roof Rear Trim
9. Sun Roof Glass
10. Sun Roof Side Trim
11. Drip Channel
12. Drive Cable
13. Sunshade Trim
14. Rear Frame
15. Drive Rail
16. Sun Roof Housing
17. Bracket

G98J10982

Fig. 29: Exploded View Of Sun Roof Assembly (1999 Avalon)
Courtesy of TOYOTA MOTOR SALES, U.S.A., INC.

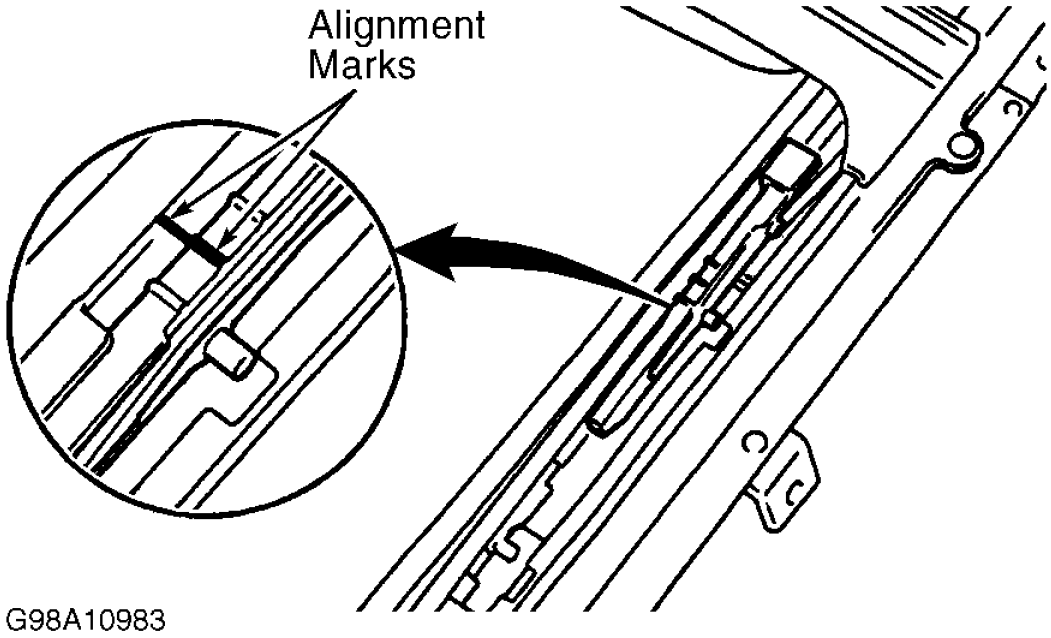

Fig. 30: Aligning Drive Cable (1999 Avalon, Camry - Japan Built, Camry Solara & Sienna)
Courtesy of TOYOTA MOTOR SALES, U.S.A., INC.

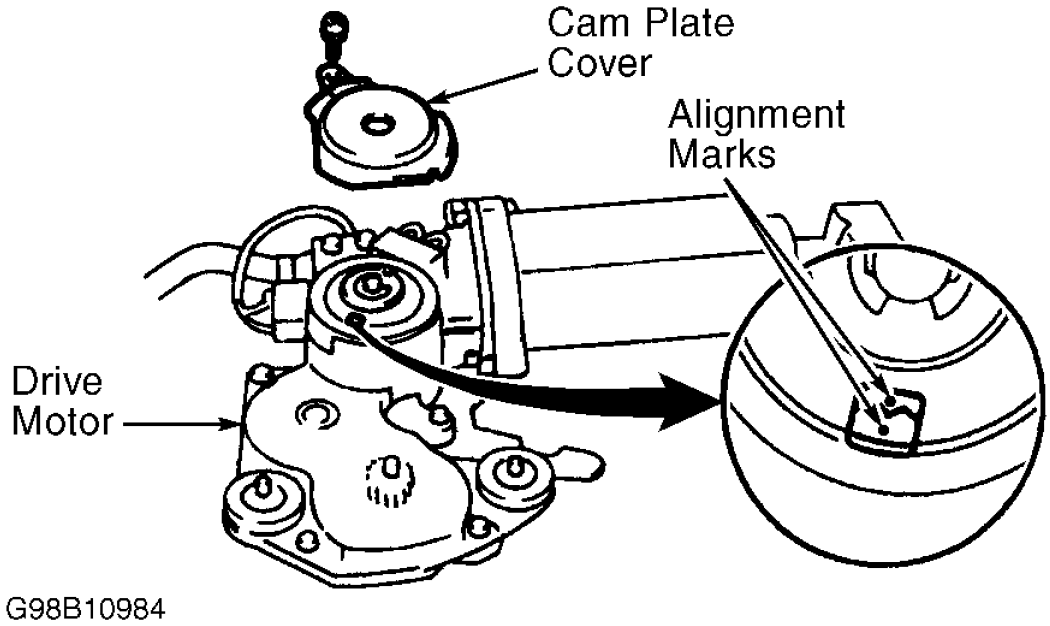

Fig. 31: Aligning Sun Roof Drive Gear (1999 Avalon, 1999 Celica & RAV4 4-Door)
Courtesy of TOYOTA MOTOR SALES, U.S.A., INC.

Removal & Installation (2000 Avalon)

1. Close sun roof. Turn ignition off. Remove rear seat cushion. Remove 4 bolts. Raise up and remove seatback assembly. Remove front door and rear door scuff plates. See **Fig. 28** . Remove front and rear door opening trim. Remove rear pillar trim panels. Remove rear map light lenses and rear map lights. Remove front door scuff inside plate. Remove front door opening trim.
2. Remove front seat outer belt shoulder floor anchor bolt. Remove center pillar lower and upper trim. Remove front pillar trim. Remove front map light cover. Remove 3 screws and roof console box. Remove dome light cover and dome light. Remove sun roof trim. Remove sun visors and assist grips. Remove roof headlining.
3. Remove sun roof glass mounting nuts. See **Fig. 32** . Pull upward on sun roof glass to remove. Remove sun roof motor assembly. Disconnect 4 drain hoses from sun roof housing. Remove 8 bolts, 4 brackets, 6 nuts and sun roof housing. To install, reverse removal procedure.

Disassembly & Reassembly

1. Remove screws and sun roof panel stoppers. Remove sunshade trim. Remove rear sun roof drip channel. Remove 4 screws and rear frame. Remove screws and guide rail stoppers. Remove screw from sliding roof housing. Slightly lift sliding roof housing, slide drive cable rearward and remove it. Remove sun roof wind deflector panel. Remove 2 screws and guide blocks. Disconnect sun roof housing from drive rail and slide sun roof housing forward. Remove guide blocks. Remove sun roof housing and cable guide casing.

2. To reassemble, adjust drive cables to a completely closed and tilted down position. Slide both cables forward or backward to align marks. See **Fig. 33** . To complete reassembly, reverse disassembly procedure.

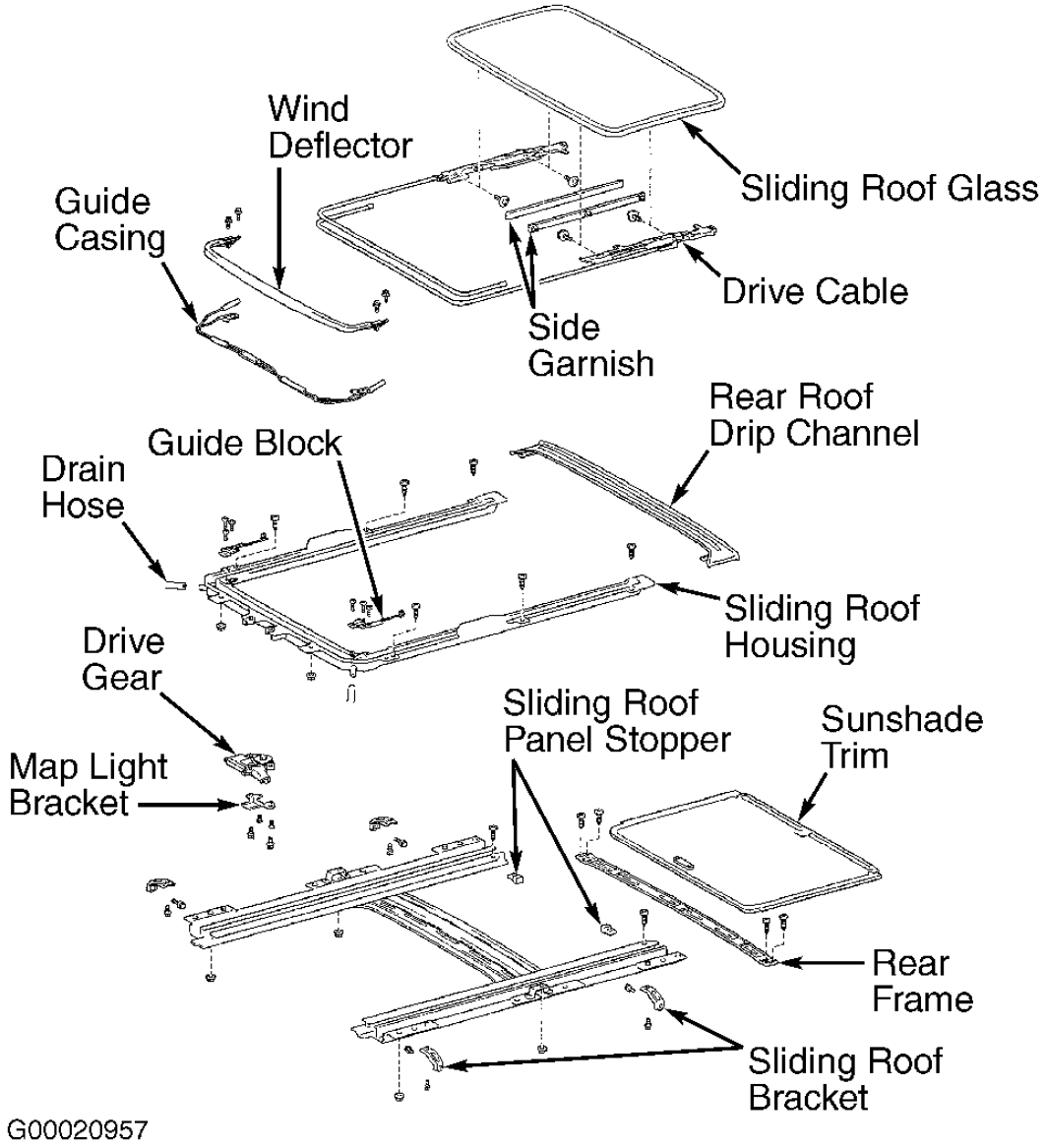

Fig. 32: Exploded View Of Sun Roof Assembly (2000 Avalon)
Courtesy of TOYOTA MOTOR SALES, U.S.A., INC.

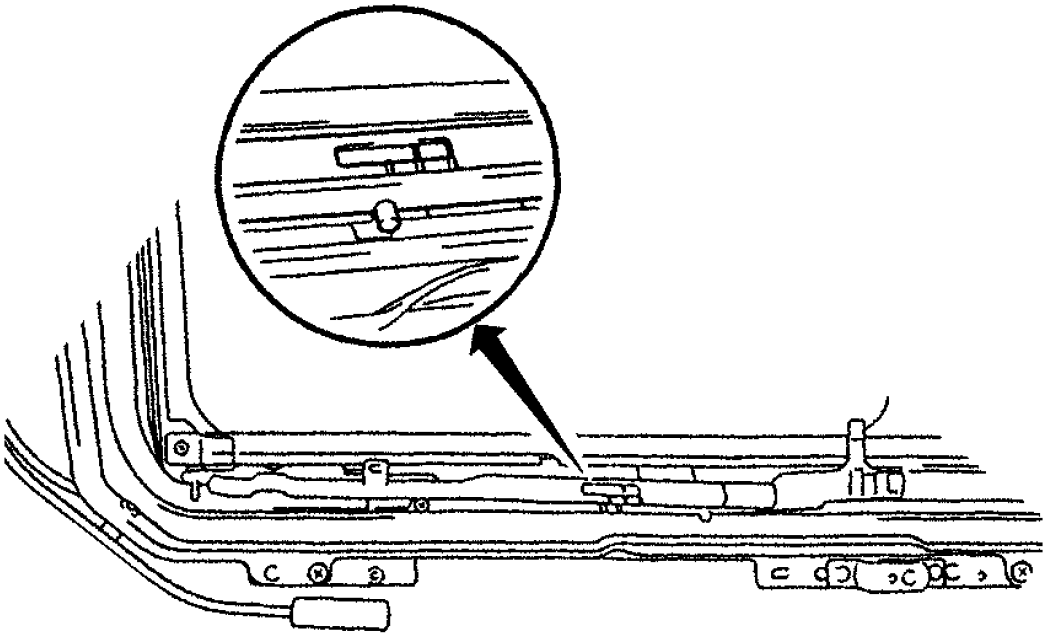

Fig. 33: Aligning Drive Cable (2000 Avalon)
Courtesy of TOYOTA MOTOR SALES, U.S.A., INC.

Removal (Camry - USA Built)

NOTE: The Camry may have been manufactured by Toyota Motor Mfg. U.S.A. (USA built), or manufactured by Toyota Motor Corp. Japan (Japan built). Ensure correct removal and installation procedure is being used.

1. Close sun roof. Turn ignition off. Remove rear seat cushion and seat backs. Remove front door scuff plates. See **Fig. 34** . Remove front seat belt shoulder anchor bolts. Remove sun visor and holders. Remove assist grips. Remove clips, pull up and remove front pillar trim. Remove rear door scuff plates. Remove center pillar lower and upper trim. Remove rear pillar trim.
2. Remove dome light cover and dome light. Remove map light assembly. Release 2 clips at rear of roof headlining and remove roof headlining. Remove sun roof side trim. Remove 4 sun roof glass adjustment screws. See **Fig. 35** .
3. Pull upward on sun roof glass and remove. Disconnect 4 drain hoses. Remove 8 bolts and 4 brackets. Remove 6 nuts and sun roof housing.

Disassembly

1. Pull drain cap backward and remove it. Remove rear sun roof drip channel. Remove sunshade trim. Using screwdriver, remove left and right roof drip channel guides. Remove 3 bolt and sun roof motor assembly.

Using a drill, remove stop rivets from each side rail. Slide left and right sun roof lift arm and drive cable from side rail.

2. Remove right and left roof lift arm and cable assemblies. Remove 2 screws from front rail assembly. Using a drill, remove 4 side rail rivets. Ensure not to damage side rail rivet holes when drilling. Remove deflector and spring assembly. Remove sun roof wind deflector panel.

Reassembly

1. To reassemble, apply seal packing to drain cap. Align rear roof drip channel with roof drip channel guide hook. Prior to installing drive motor, use an Allen wrench and align motor housing pointer to gear pointer. See **Fig. 36** .
2. Install NEW left and right sun roof lift arm and cable assembly rivets. Ensure not to sandwich sun roof wind deflector between upper and lower sections of front rail assembly. Install NEW sealing type rivets when installing sun roof wind deflector.

Installation

1. Soak sun roof side trim in water to soften it before installing. Adjust height of glass panel using 4 adjusting screws.
2. If sun roof housing was disassembled, adjust drive cable to a completely closed and tilted down position. Using a screwdriver, slide left and right cable assemblies forward or backward to align holes in cable arm and lift arm. Insert a .12" (3 mm) pin to ensure holes are aligned. Ensure hook is positioned as shown. See **Fig. 37** .
3. Remove alignment pin. Cycle assembly once (vent position closed, slide open and slide completely closed). After cycling assembly closed, ensure alignment holes align. See **Fig. 38** . If holes are not aligned, repeat procedure.
4. A slight interference between guide pin and curved lead-in on side rail should exist. Cycle sun roof and ensure hook engages wind deflector spring smoothly. If clicking sound is heard, adjustment is incorrect. To readjust guide pin, loosen screw and adjust pin so there is a slight interference. Tighten nuts and bolt to specification. See **TORQUE SPECIFICATIONS** . To complete installation, reverse removal procedure.

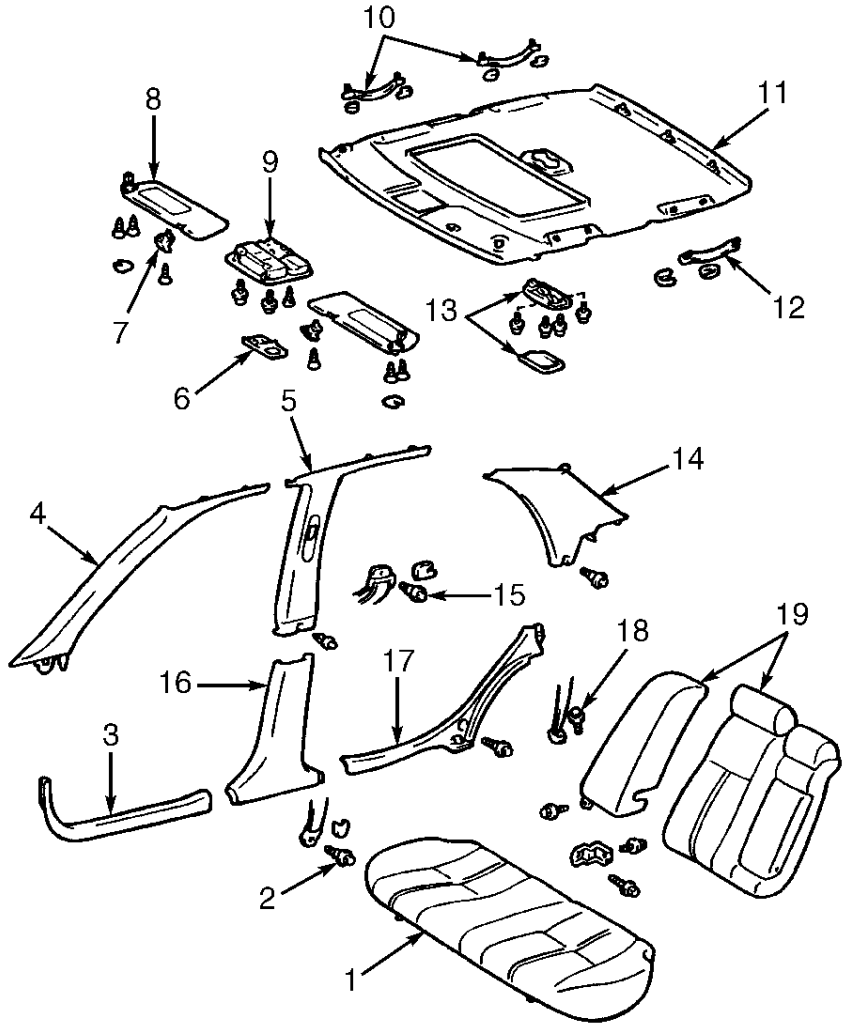

1. Rear Seat Cushion
2. Seat Belt Anchor Bolt
3. Front Door Scuff Plate
4. Front Pillar Trim
5. Center Pillar Upper Trim
6. Cover
7. Sun Visor Holder
8. Sun Visor
9. Map Light Assembly
10. Assist Grip
11. Headliner
12. Assist Grip
13. Interior Light Assembly
14. Rear Pillar Trim
15. Seat Belt Anchor Bolt
16. Center Pillar Lower Trim
17. Rear Seat Trim
18. Seat Belt Anchor Bolt
19. Rear Seat Back

G98A10967

Fig. 34: Removing Headlining (Camry)
Courtesy of TOYOTA MOTOR SALES, U.S.A., INC.

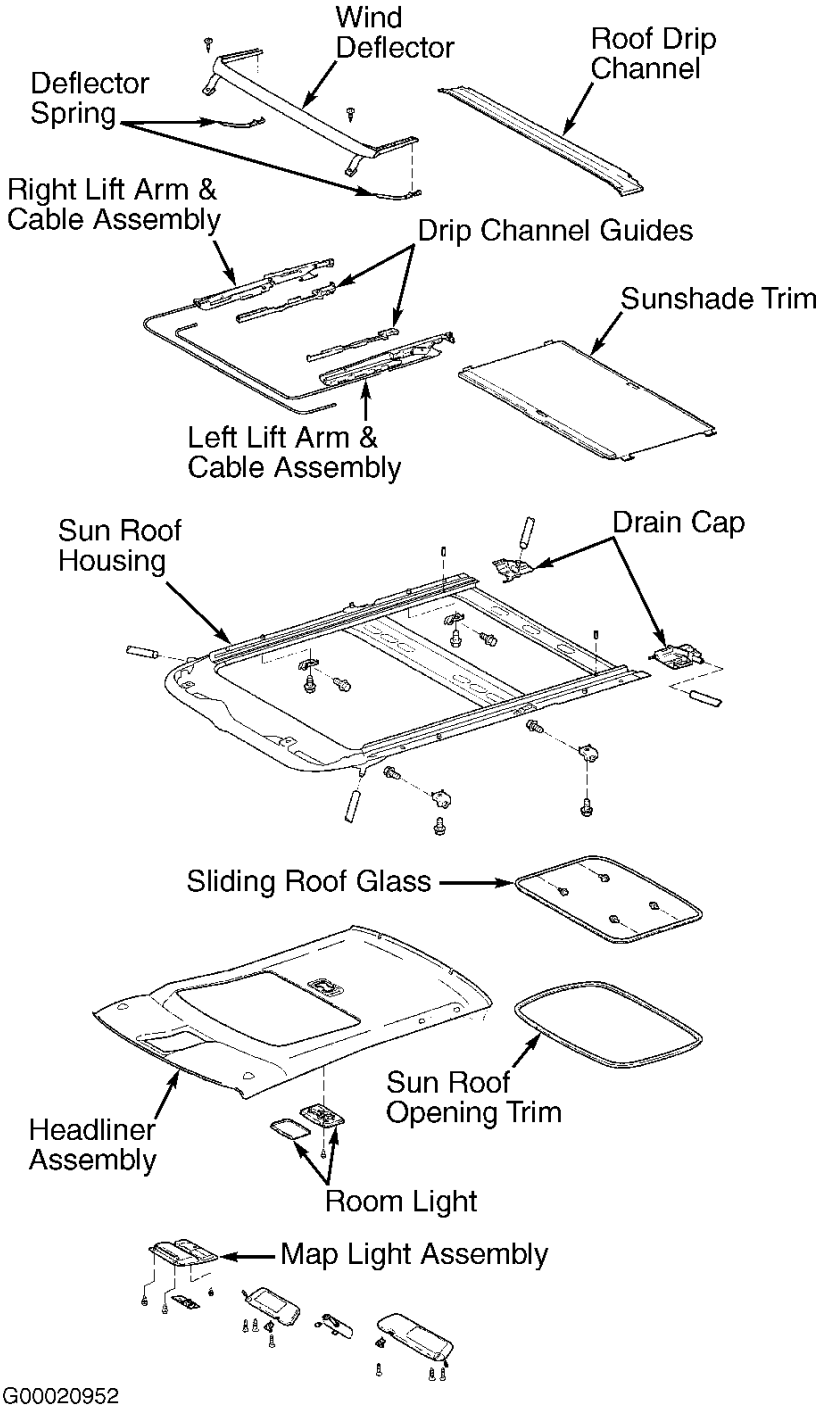

Fig. 35: Exploded View Of Sun Roof Assembly (Camry - USA Built)
Courtesy of TOYOTA MOTOR SALES, U.S.A., INC.

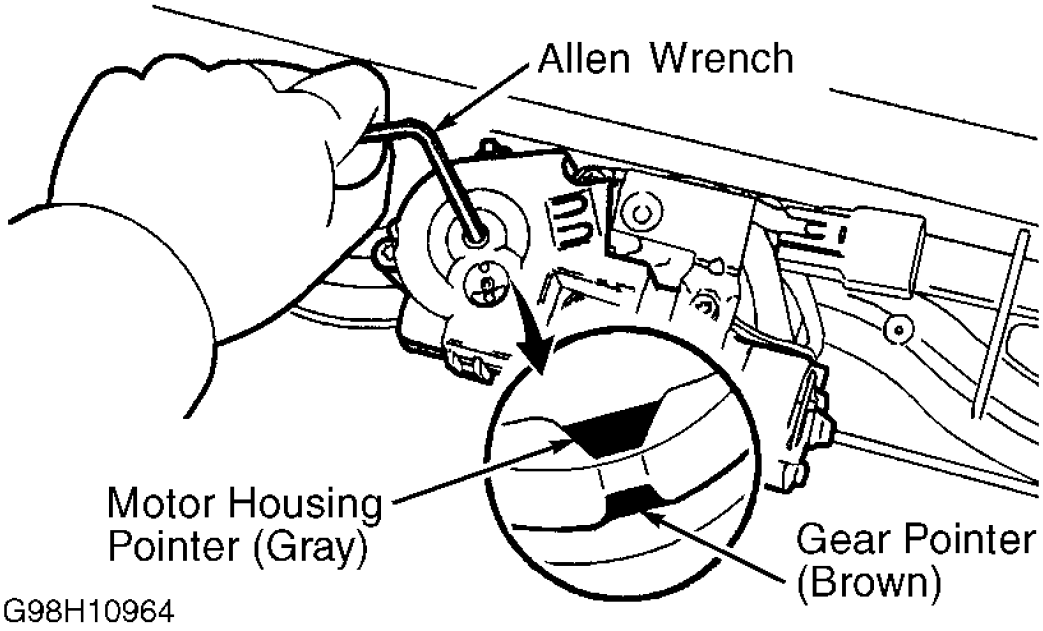

Fig. 36: Aligning Sun Roof Drive Gear (Camry - USA Built)
Courtesy of TOYOTA MOTOR SALES, U.S.A., INC.

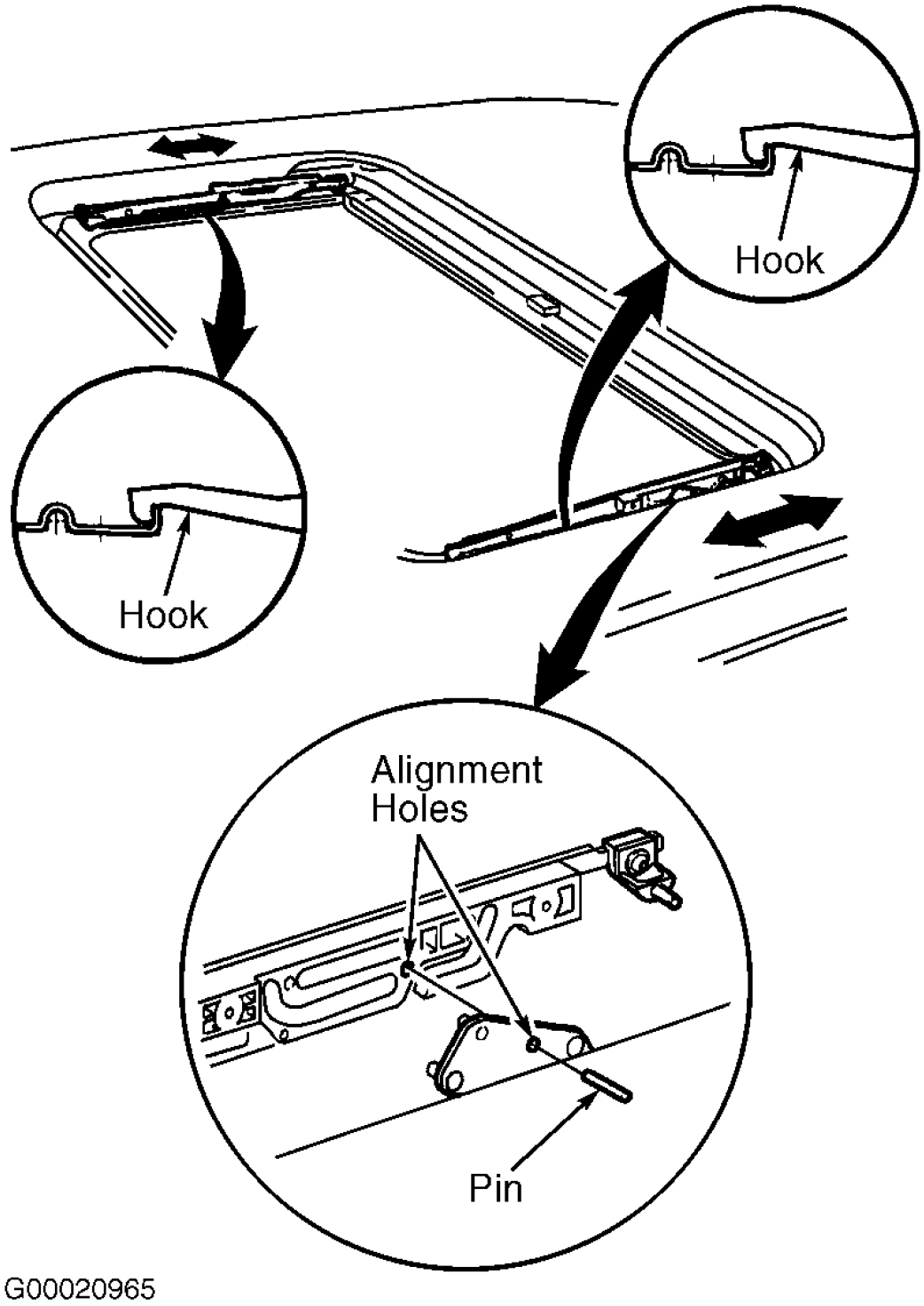

Fig. 37: Aligning Drive Cable (Camry - USA Built)

Courtesy of TOYOTA MOTOR SALES, U.S.A., INC.

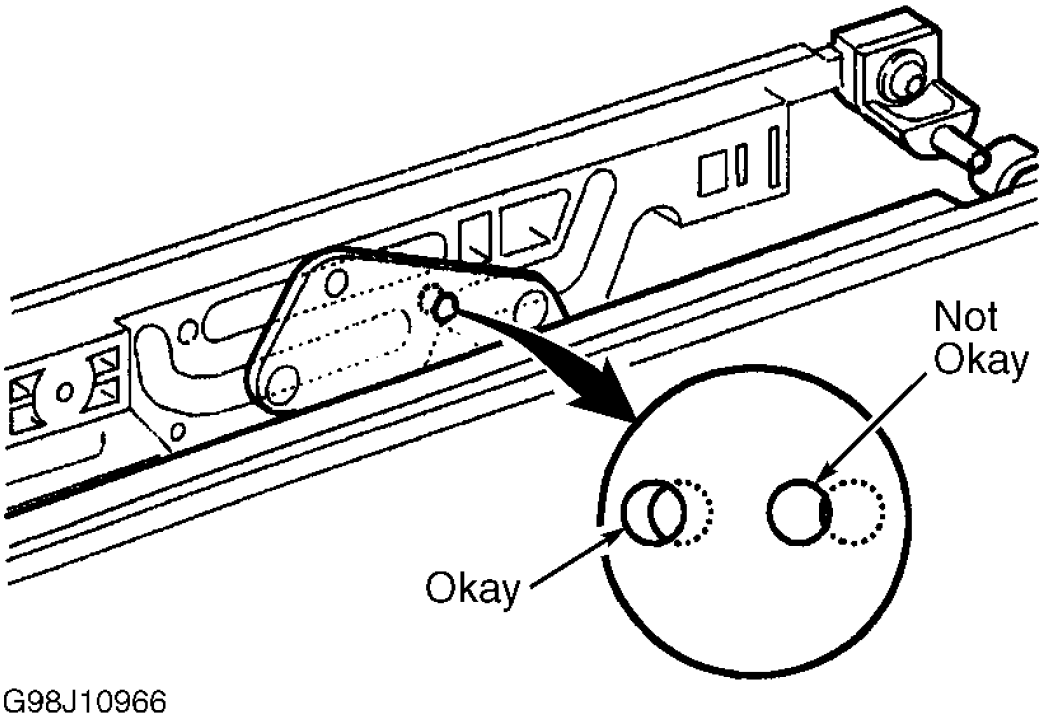

Fig. 38: Checking Drive Cable Alignment (Camry - USA Built)
Courtesy of TOYOTA MOTOR SALES, U.S.A., INC.

Removal (Camry - Japan Built)

1. Close sun roof. Turn ignition off. Remove rear seat cushion and seat backs. Remove front door scuff plates. See **Fig. 34** . Remove front seat belt shoulder anchor bolts. Remove sun visor and holders. Remove assist grips. Remove clips, pull up and remove front pillar trim. Remove rear door scuff plates. Remove center pillar lower and upper trim. Remove rear pillar trim.
2. Remove dome light cover and dome light. Remove map light assembly. Release 2 clips at rear of roof headlining and remove roof headlining. Remove sun roof side trim. Using a Torx wrench, remove 4 sun roof glass mounting screws. See **Fig. 39** .
3. Pull upward on sun roof glass and remove. Remove 3 bolt and sun roof motor assembly. Disconnect 4 drain hoses. Remove 8 bolts and 4 brackets. Remove 6 nuts and sun roof housing.

Disassembly & Reassembly

1. Remove screws and sun roof panel stoppers. Remove sunshade trim. Remove rear sun roof drip channel. Remove screws and guide rail stoppers. Slide drive cable rearward and remove it. Remove sun roof wind deflector panel. Remove 2 screws and guide blocks. Remove 6 screws and sun roof housing.

2. To reassemble, adjust drive cables to a completely closed and tilted down position. Slide both cables forward or backward to align marks. See **Fig. 30** . To complete reassembly, reverse disassembly procedure.

Installation

Prior to installing drive motor, remove cam plate cover from sun roof drive motor. See **Fig. 40** . Turn drive gear until marks align, indicating a full closed position. Reinstall cam plate cover. Ensure sun roof is properly aligned. See **ADJUSTMENTS** . Tighten nuts and bolt to specification. See **TORQUE SPECIFICATIONS** . To complete installation, reverse removal procedure.

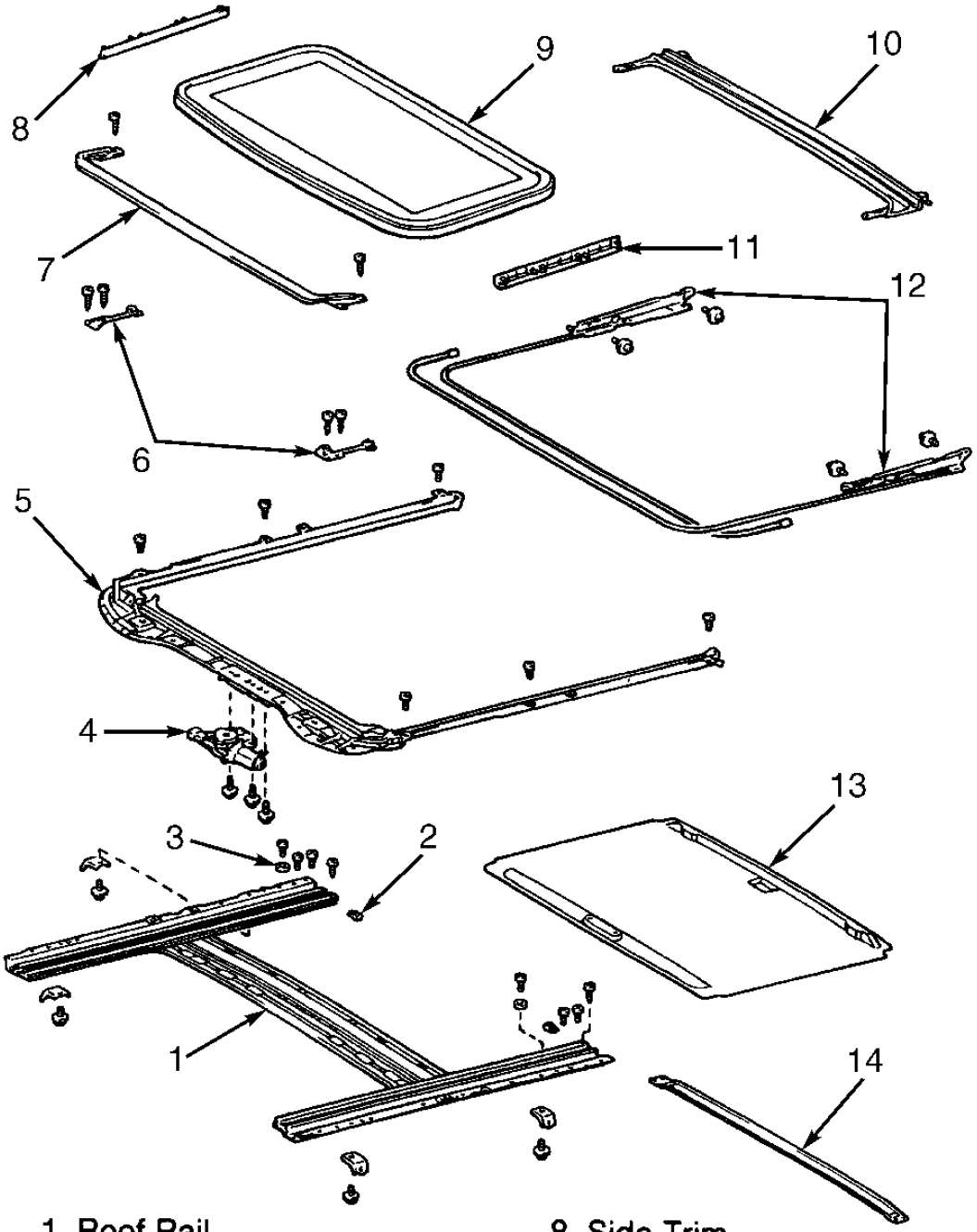

1. Roof Rail
2. Sun Roof Panel Stopper
3. Guide Rail Stopper
4. Sun Roof Motor
5. Sun Roof Housing
6. Guide Blocks
7. Wind Deflector
8. Side Trim
9. Sun Roof Glass
10. Rear Roof Drip Channel
11. Side Trim
12. Drive Cable
13. Sunshade Trim
14. Rear Frame

G98C10969

Fig. 39: Exploded View Of Sun Roof Assembly (Camry - Japan Built & Camry Solara)
Courtesy of TOYOTA MOTOR SALES, U.S.A., INC.

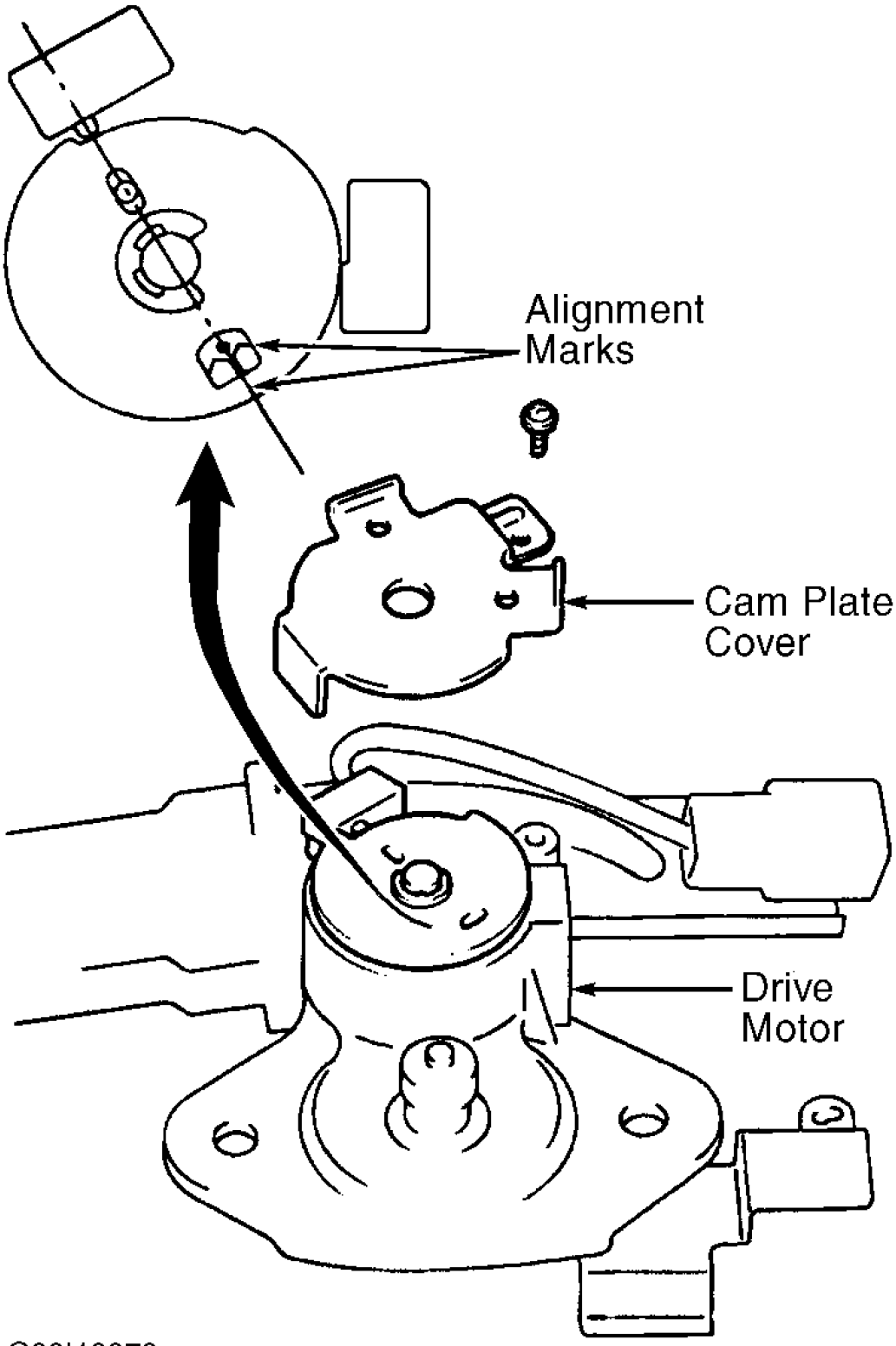

G98I10973

Fig. 40: Aligning Sun Roof Drive Gear (Camry - Japan Built, Corolla, RAV4 2-Door & Sienna)
Courtesy of TOYOTA MOTOR SALES, U.S.A., INC.

Removal (Camry Solara)

1. Close sun roof. Turn ignition off. Remove front door scuff plates. See **Fig. 41** . Remove front door opening covers. Remove clips, pull up and remove front pillar trim. Pull up and remove front of rear seat cushion. Release and fold seatback. Remove 3 clips. Remove 2 bolts and seatback assembly. Remove rear seatback side hinges. Remove rear assist grips and quarter trim panels. Remove front seat belt shoulder anchor and coat hook. Remove clip and "C" pillar trim.
2. Remove map light assembly. Remove dome light cover and dome light. Remove sun roof side trim. Remove front assist grips. Remove sun visors and holders. Remove roof headlining. Using a Torx wrench, remove 4 sun roof glass mounting screws. See **Fig. 39** .
3. Pull upward on sun roof glass and remove. Remove 2 bolt and sun roof motor assembly. Disconnect 4 drain hoses. Remove 8 bolts and 4 brackets. Remove 6 nuts and sun roof housing.

Disassembly & Reassembly

1. Remove screws and sun roof panel stoppers. Remove sunshade trim. Remove rear sun roof drip channel. Remove 4 screws and rear frame. Remove screws and guide rail stoppers. Slide drive cable rearward and remove it. Remove sun roof wind deflector panel. Remove 2 screws and guide blocks. Remove 6 screws and sun roof housing.
2. To reassemble, adjust drive cables to a completely closed and tilted down position. Slide both cables forward or backward to align marks. See **Fig. 30** . To complete reassembly, reverse disassembly procedure.

Installation

Prior to installing drive motor, turn drive gear until marks align, indicating a full closed position. See **Fig. 42** . Tighten nuts and bolt to specification. See **TORQUE SPECIFICATIONS** . To complete installation, reverse removal procedure.

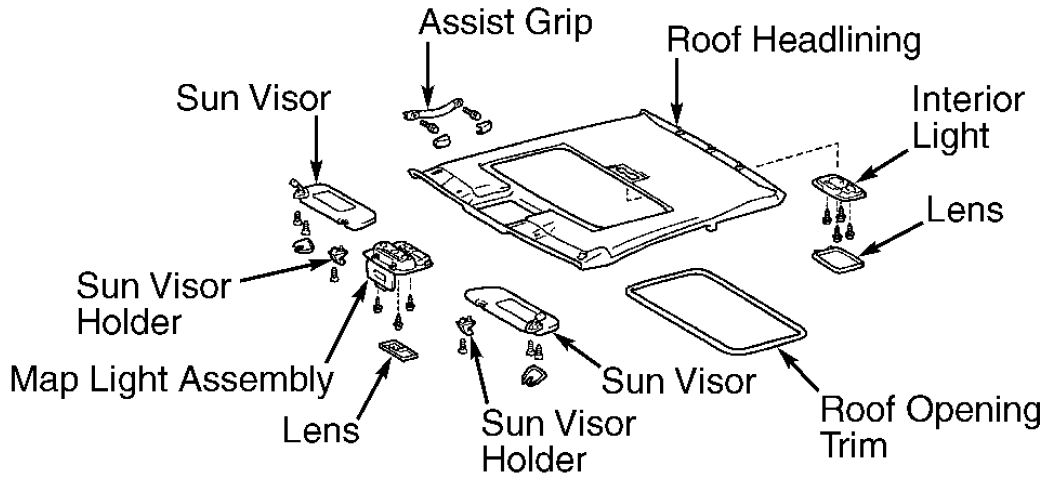
Assist Grip
Roof Headlining
Sun Visor
Interior Light
Lens
Sun Visor Holder
Map Light Assembly
Lens
Sun Visor Holder
Sun Visor
Roof Opening Trim

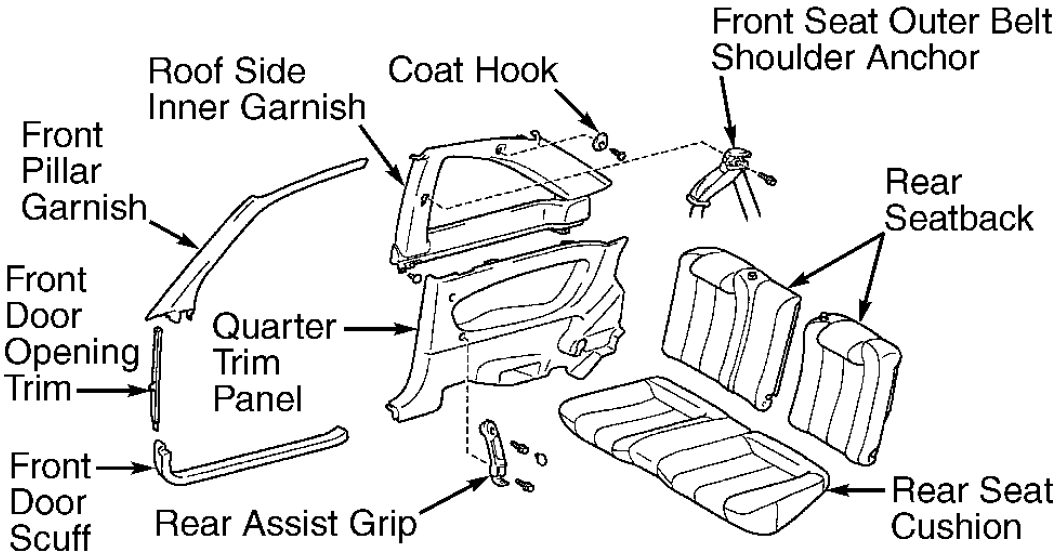
Front Seat Outer Belt Shoulder Anchor
Roof Side Inner Garnish
Coat Hook
Front Pillar Garnish
Rear Seatback
Front Door Opening Trim
Quarter Trim Panel
Front Door Scuff Plate
Rear Assist Grip
Rear Seat Cushion

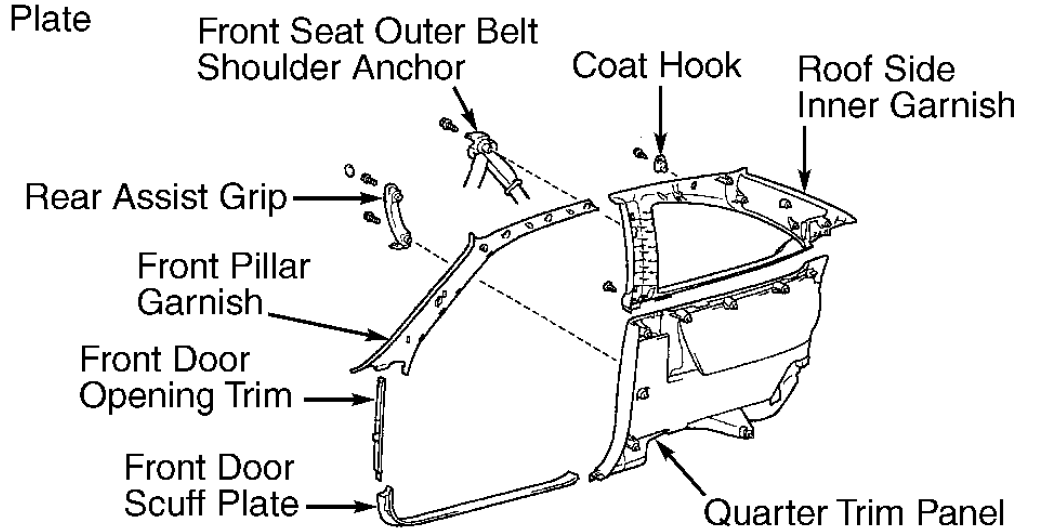
Front Seat Outer Belt Shoulder Anchor
Coat Hook
Roof Side Inner Garnish
Rear Assist Grip
Front Pillar Garnish
Front Door Opening Trim
Front Door Scuff Plate
Quarter Trim Panel

G00020958

Fig. 41: Removing Headlining (Camry Solara)
Courtesy of TOYOTA MOTOR SALES, U.S.A., INC.

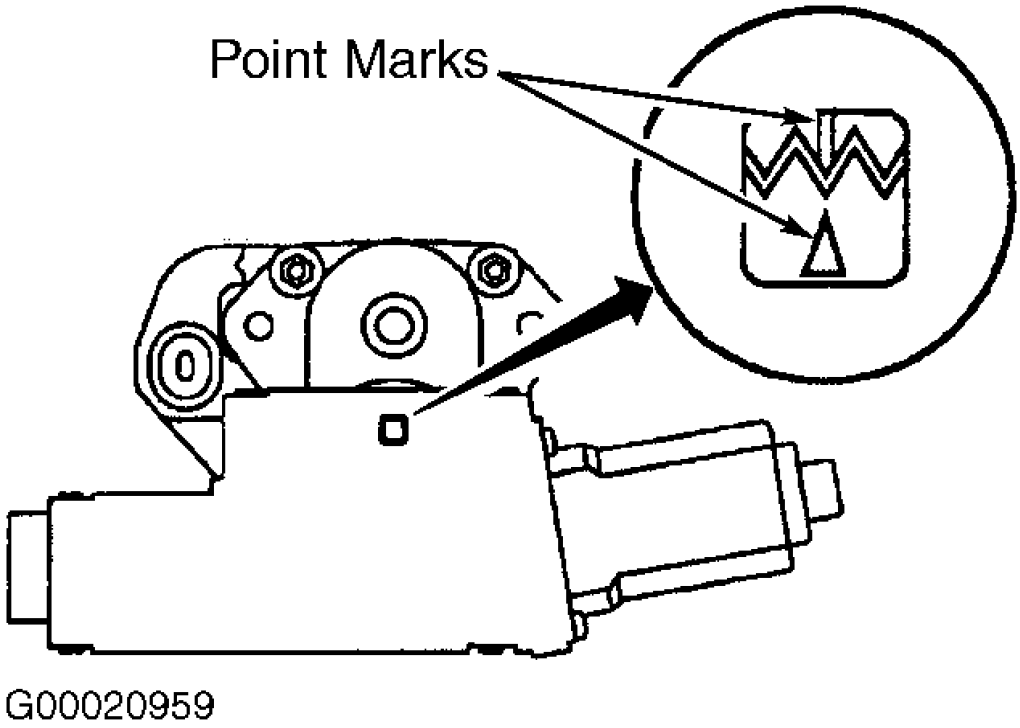

Fig. 42: Aligning Sun Roof Drive Gear (Camry Solara)
Courtesy of TOYOTA MOTOR SALES, U.S.A., INC.

Removal (1999 Celica)

1. Close sun roof. Turn ignition off. Release and fold down rear seatback. Remove 2 bolts and seatback. Pull up on front of rear seat cushion and remove seat belts through seat cushion. Remove seat cushion wire from seatback center hinge and remove rear seat cushion. Remove front pillar upper and lower trim. See **Fig. 43** . Remove front door scuff plates. Remove rear view mirror, sun visors and holders. Remove sun roof control switch cover and switch. Remove rear seatback hinges and lock strikers.
2. On liftback models, remove rear package tray trim panel, luggage compartment mat and rear deck trim cover. Remove deck trim panels. On Coupe models, remove rear centrally mounted brakelight and rear package tray trim panel. Remove rear speaker grilles and quarter trim panels.
3. On all models, Remove front seat outer belt shoulder anchor bolt. Remove rear seat outer belt floor anchor bolt. Remove coat hook and clip. Remove rear pillar upper trim. Remove rear seat outer belt from rear pillar upper trim. Remove sun roof opening trim. Remove 3 clips, stoppers and headlining.
4. Remove sun roof glass mounting nuts and shims. See **Fig. 44** . Record number and location of shims. Pull

upward on sun roof glass and remove. Remove sun roof control relay. Remove sun roof motor. Remove 4 drain hoses. Remove 4 bolts, 6 nuts and sun roof housing.

Disassembly & Reassembly

1. Remove 4 sun roof housing brackets. Remove sun roof wind deflector panel. Remove sun roof drip channel. Remove 12 screw and drive rail assembly. Remove sun roof panel stoppers. Pull sun roof wind deflector panel backwards and remove. Pull cable guide casing forward and remove. Remove 2 screws and drive cables guide blocks. Remove drive cable from guide rail.
2. To reassemble, adjust drive cables to a completely closed and tilted down position. Slide both cables forward or backward to align marks. See **Fig. 45** . To complete reassembly, reverse disassembly procedure.

Installation

Prior to installing drive motor, remove cam plate cover from drive motor. See **Fig. 31** . Turn drive gear until marks align, indicating a completely closed position. Reinstall cam plate cover. Tighten nuts and bolt to specification. See **TORQUE SPECIFICATIONS** . To complete installation, reverse removal procedure.

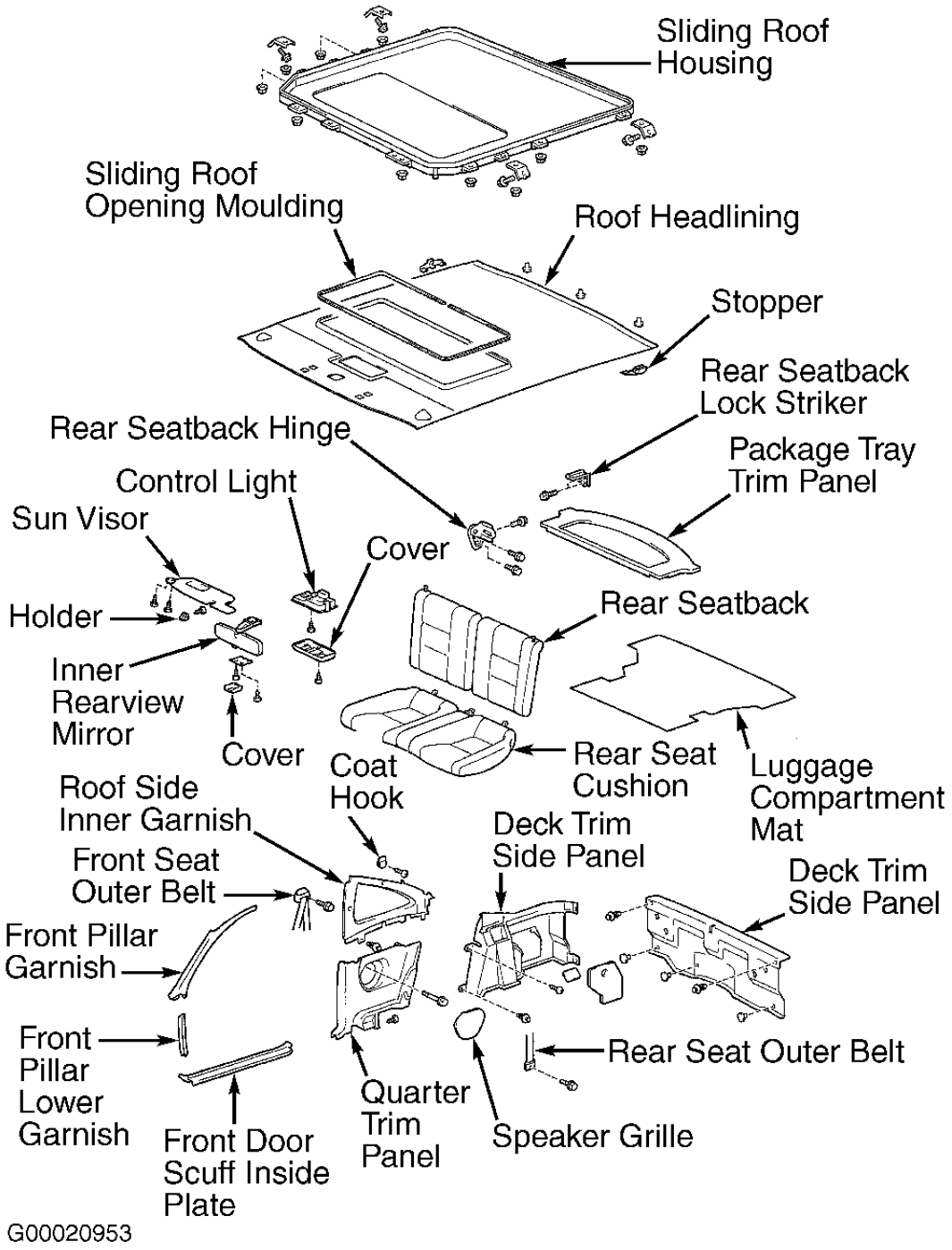

Fig. 43: Remove Headlining (1999 Celica)
Courtesy of TOYOTA MOTOR SALES, U.S.A., INC.

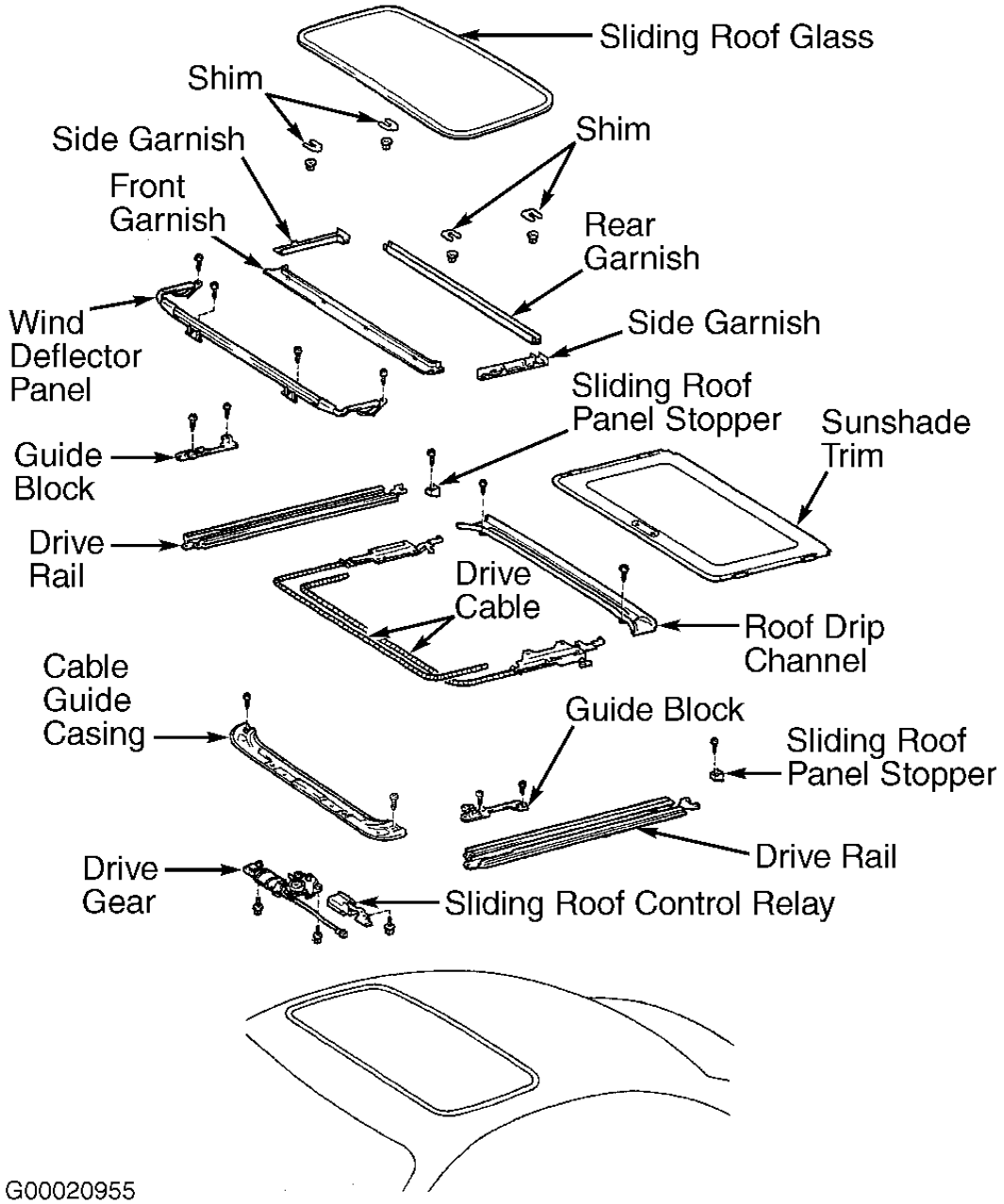

Fig. 44: Exploded View Of Sun Roof Assembly (1999 Celica)
Courtesy of TOYOTA MOTOR SALES, U.S.A., INC.

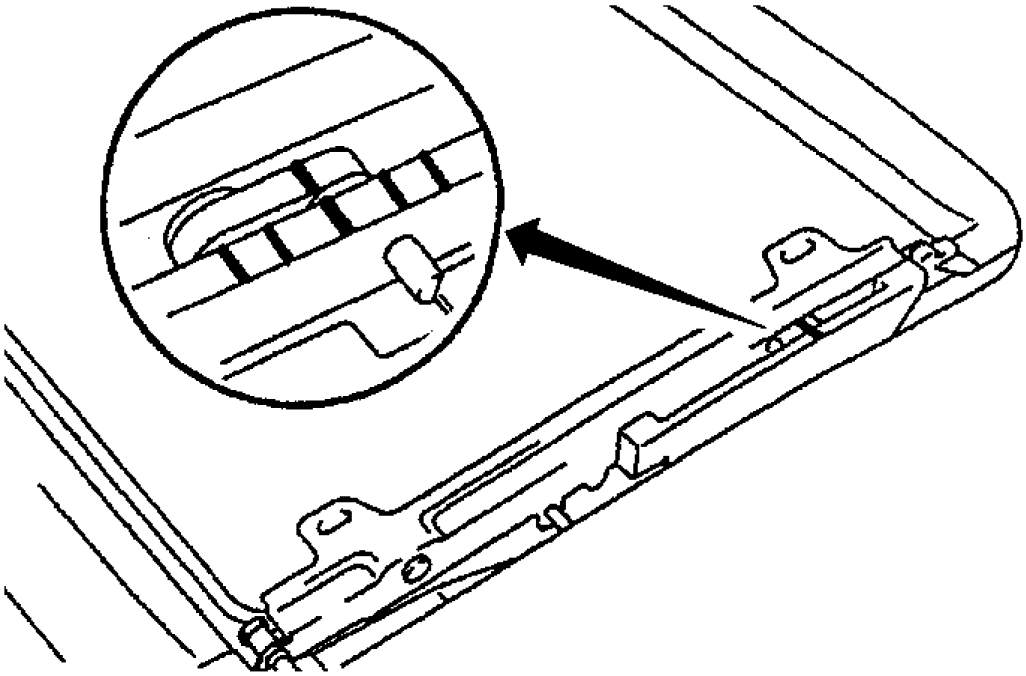

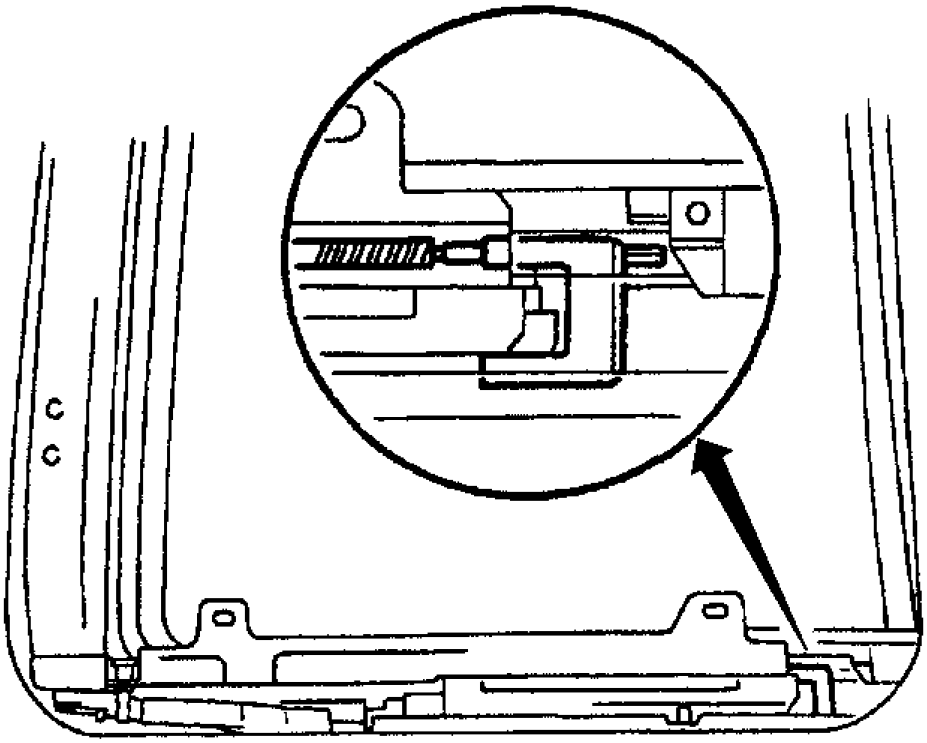

G00020963

Fig. 45: Aligning Drive Cable (1999 Celica)
Courtesy of TOYOTA MOTOR SALES, U.S.A., INC.

Removal (2000 Celica)

1. Close sun roof. Turn ignition off. Remove door scuff plates. See **Fig. 46** . Remove package tray trim. Remove 4 bolts and rear seatback. Remove rear seat cushion. Remove side and center hinges. Remove seatback lock striker. Remove luggage compartment tray. Remove luggage compartment mat. Remove 2 bolts, 2 hooks, 3 clips and rear deck trim cover.
2. Remove deck trim side panel. Remove rear seat outer belt floor anchors. Remove rear quarter trim panel. Remove front seat outer belt shoulder anchor. Remove coat hook and rear pillar upper trim. Remove front pillar trim. Remove kick panels. Remove front door opening trims. Remove map light cover and map light assembly. Remove sun roof opening trim. Remove visors and holders. Remove 5 clips and headlining.
3. Remove sun roof glass mounting nuts. See **Fig. 47** . Pull upward on sun roof glass and remove. Remove dome light bracket. Remove sun roof motor. Remove 4 drain hoses. Remove 12 bolts, 6 brackets, 4 nuts and sun roof housing.

Disassembly & Reassembly

Remove sunshade stoppers. Remove sunshade trim. Remove 6 screws and front housing frame. Remove sun roof drip channels. Pull drive cables rearward and remove. To reassemble, adjust drive cables to a completely closed and tilted down position. Slide both cables forward or backward to align marks. See **Fig. 49** . To complete reassembly, reverse disassembly procedure.

Installation

Ensure rear seat outer belt floor anchors are installed as shown. See **Fig. 48** . Tighten nuts and bolt to specification. See **TORQUE SPECIFICATIONS** . To complete installation, reverse removal procedure.

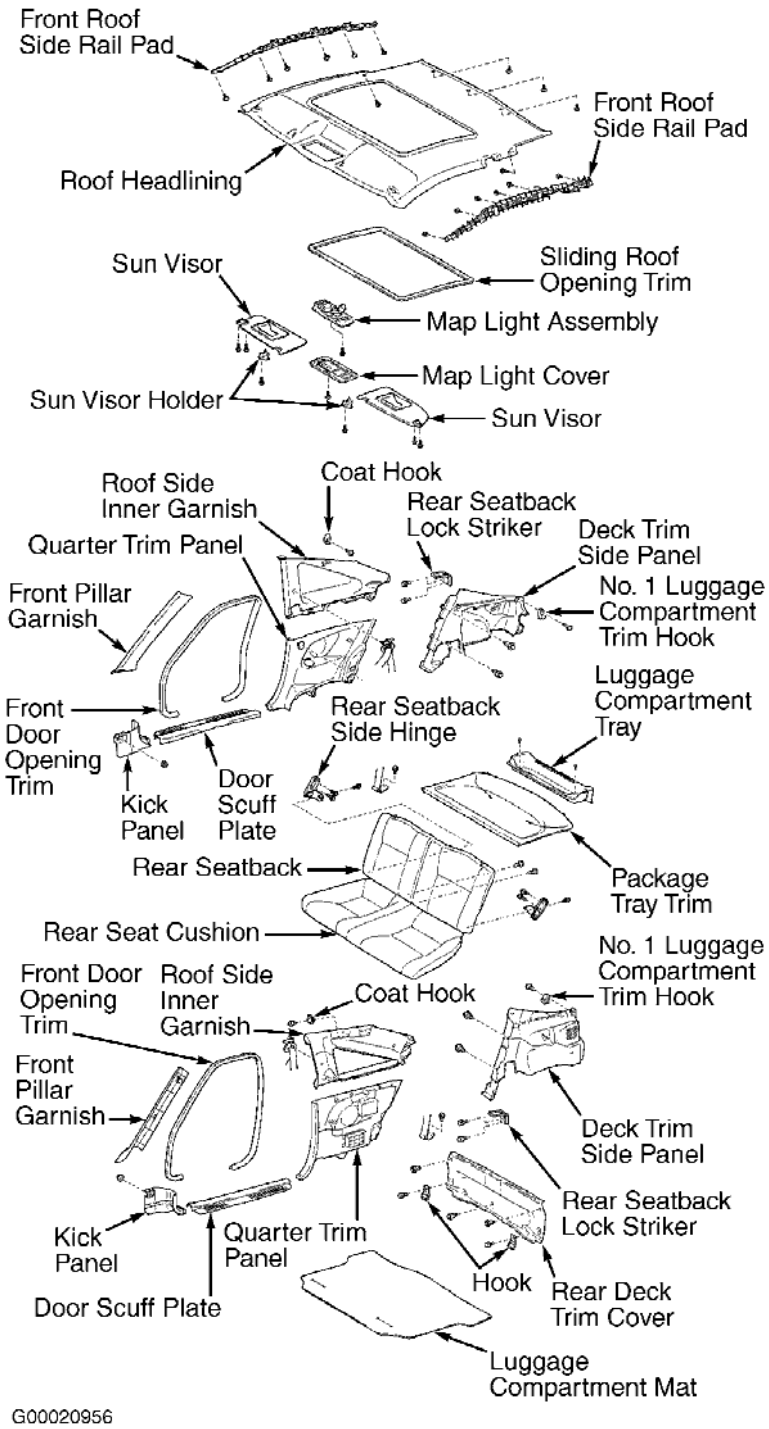

Fig. 46: Removing Headlining (2000 Celica)
Courtesy of TOYOTA MOTOR SALES, U.S.A., INC.

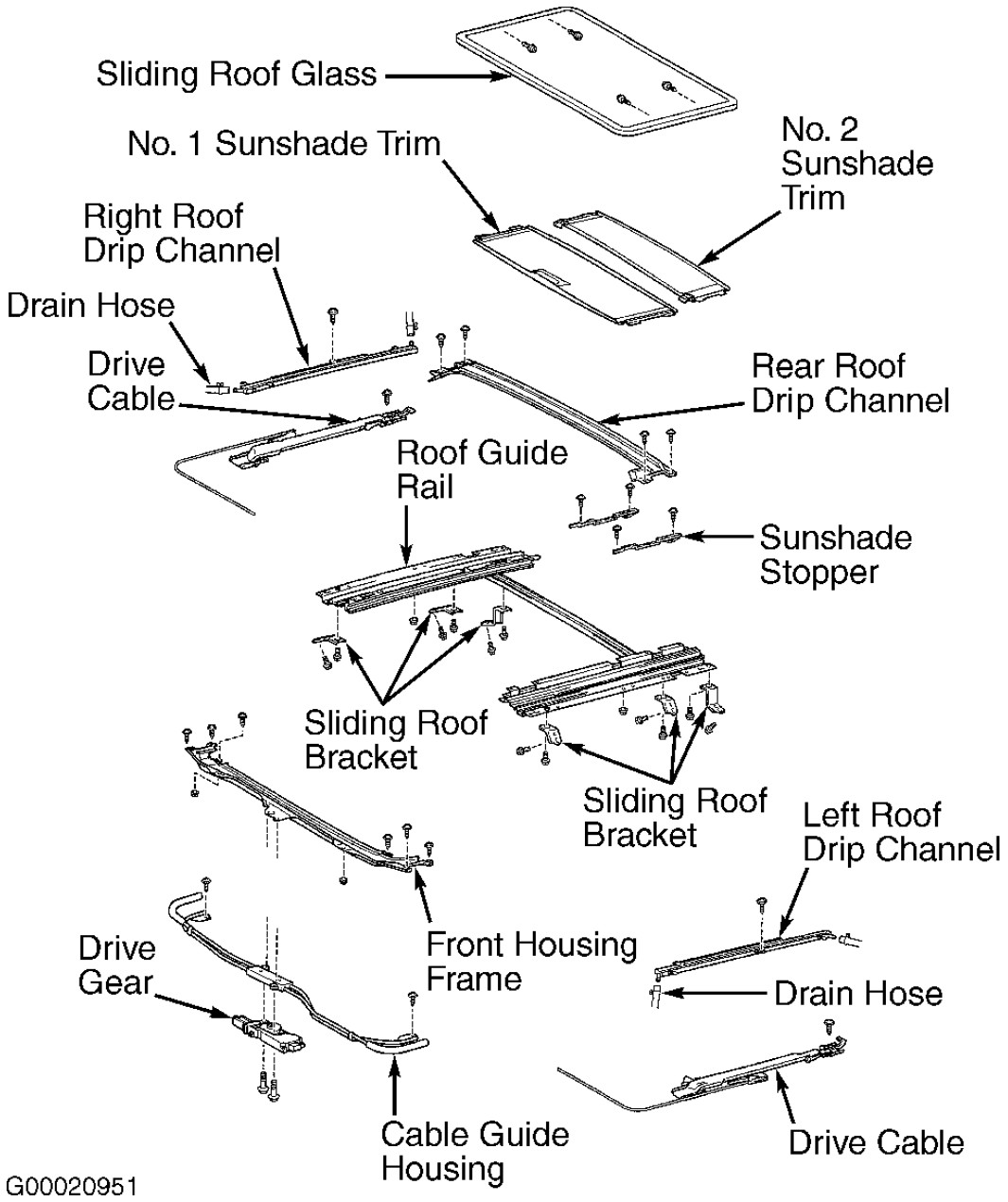

Fig. 47: Exploded View Of Sun Roof Assembly (2000 Celica)
Courtesy of TOYOTA MOTOR SALES, U.S.A., INC.

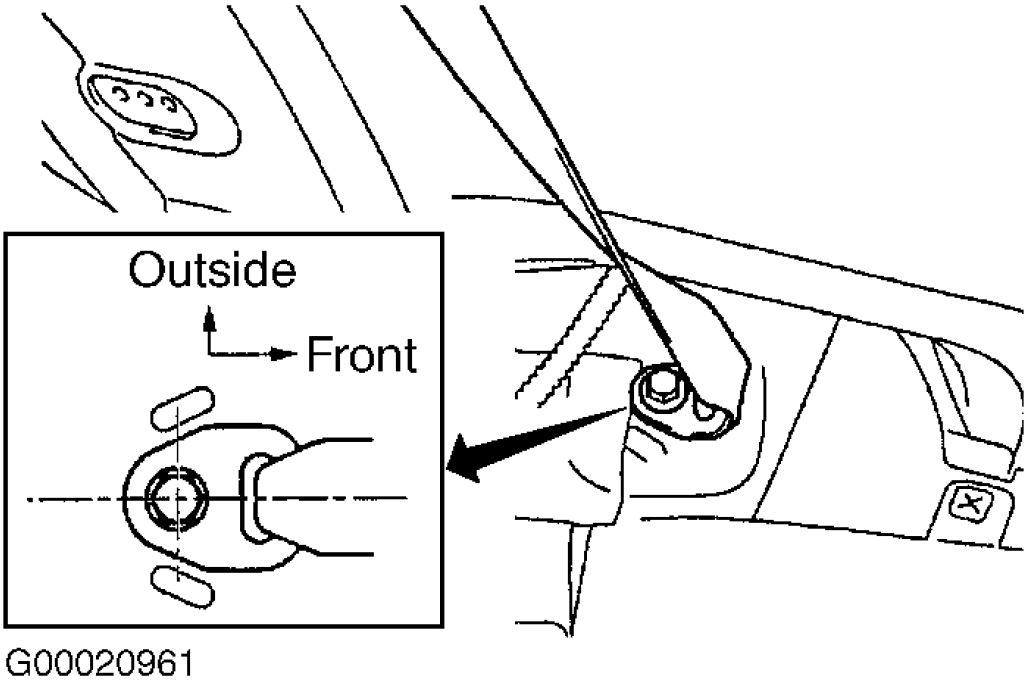

Fig. 48: Installing Rear Seat Outer Belt Floor Anchors (2000 Celica)
Courtesy of TOYOTA MOTOR SALES, U.S.A., INC.

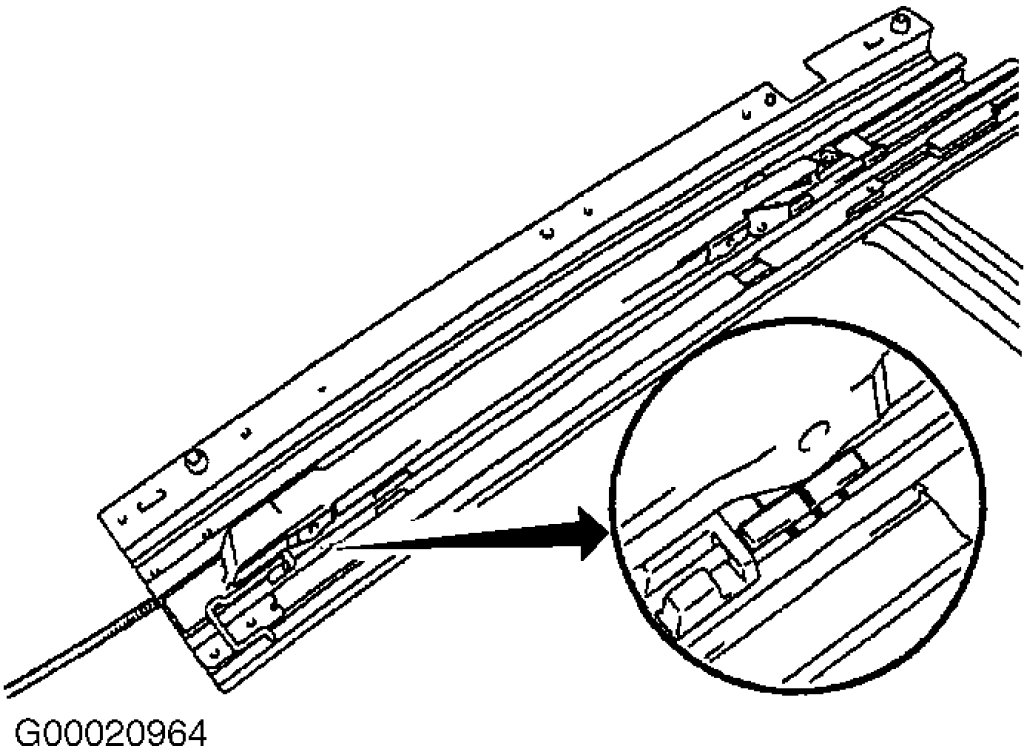

Fig. 49: Aligning Drive Cable (2000 Celica)
Courtesy of TOYOTA MOTOR SALES, U.S.A., INC.

Removal (Corolla)

1. Close sun roof. Turn ignition off. Pull rear seat center belt through seat cushion slit. Remove 2 lock hooks. Remove rear seat cushion. Remove 3 bolts and rear seatback. Remove rear view mirror. Remove front door scuff plates. See **Fig. 50** . Remove front kick panels. Remove center lower pillar trim. Remove rear door scuff plates. Remove front door opening trim. Remove rear door opening trim.
2. Pry front pillar trim off and pull up to remove. Remove front and rear shoulder belt anchor bolts. Remove center upper pillar trim. Push on front corners and lift up on centrally mounted brakelight cover. Remove centrally mounted brakelight. Remove rear pillar trim.
3. Remove package tray tether anchor covers and tether anchors. Remove dome light cover and dome light. Remove map light. Remove sun roof opening trim. Remove sun visors and holders. Remove front assist grips. Remove 3 clips and headlining.
4. Using a Torx wrench, remove 4 screws and carefully remove sun roof glass. See **Fig. 51** . Unplug and remove drive motor assembly. Disconnect 4 drain hoses from sun roof housing. Remove 8 Torx screws and 4 brackets. Remove 6 nuts and sun roof housing assembly.

Disassembly & Reassembly

1. Remove screws and sun roof panel stoppers. Remove sunshade trim. Remove rear sun roof drip channel. Remove screws and guide rail stoppers. Slide drive cable rearward and remove it. Remove sun roof wind deflector panel. Remove 2 screws and guide blocks. Remove 6 screws and sun roof housing.
2. To reassemble, adjust drive cables to a completely closed and tilted down position. Slide both cables forward or backwards to align marks. See **Fig. 52** . To complete reassembly, reverse disassembly procedure.

Installation

Prior to installing drive motor, remove cam plate cover from sun roof drive motor. See **Fig. 40** . Turn drive gear until marks align, indicating a full closed position. Reinstall cam plate cover. Ensure sun roof is properly aligned. See **ADJUSTMENTS** . Tighten nuts and bolt to specification. See **TORQUE SPECIFICATIONS** . To complete installation, reverse removal procedure.

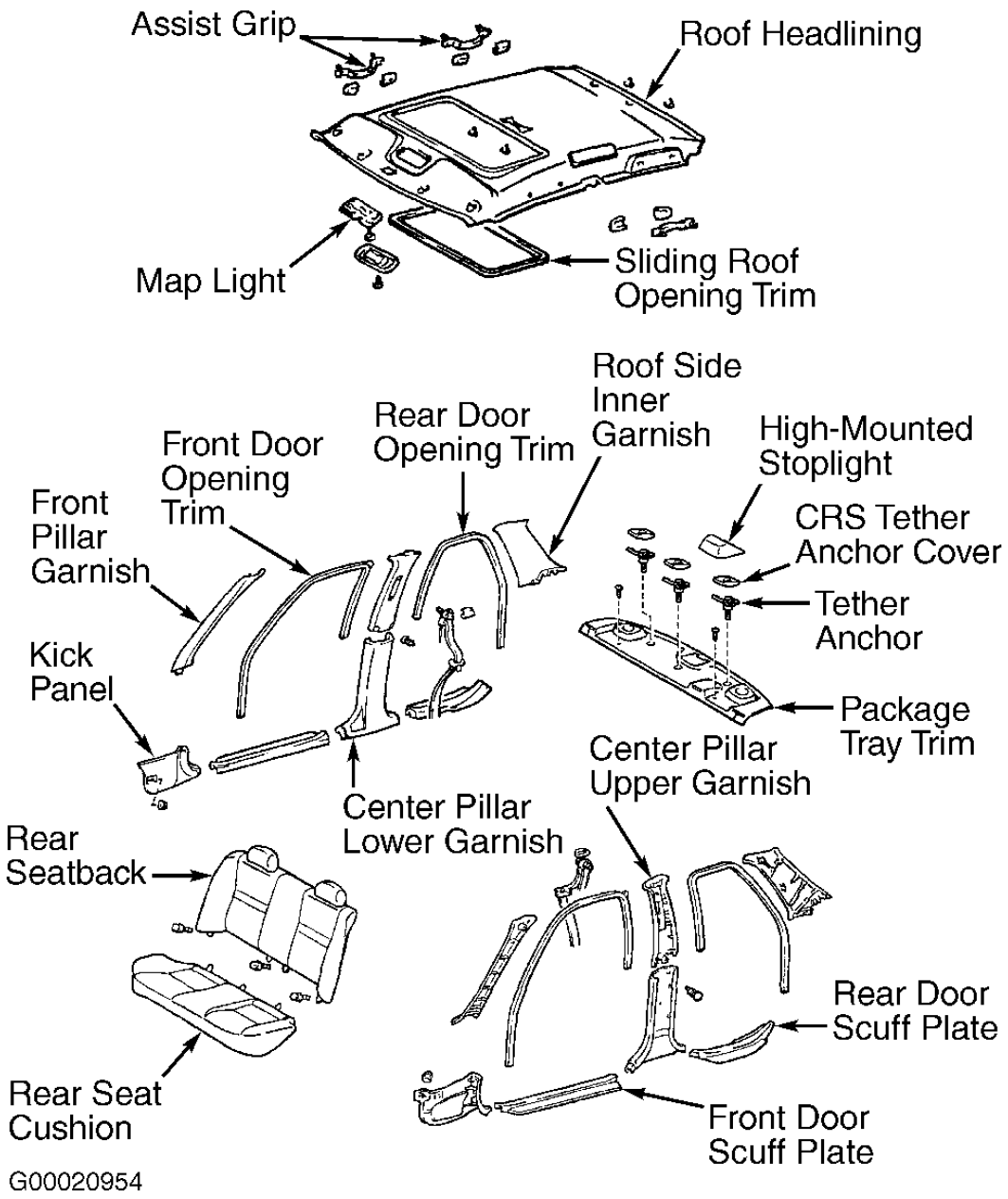

Fig. 50: Removing Headlining (Corolla)
Courtesy of TOYOTA MOTOR SALES, U.S.A., INC.

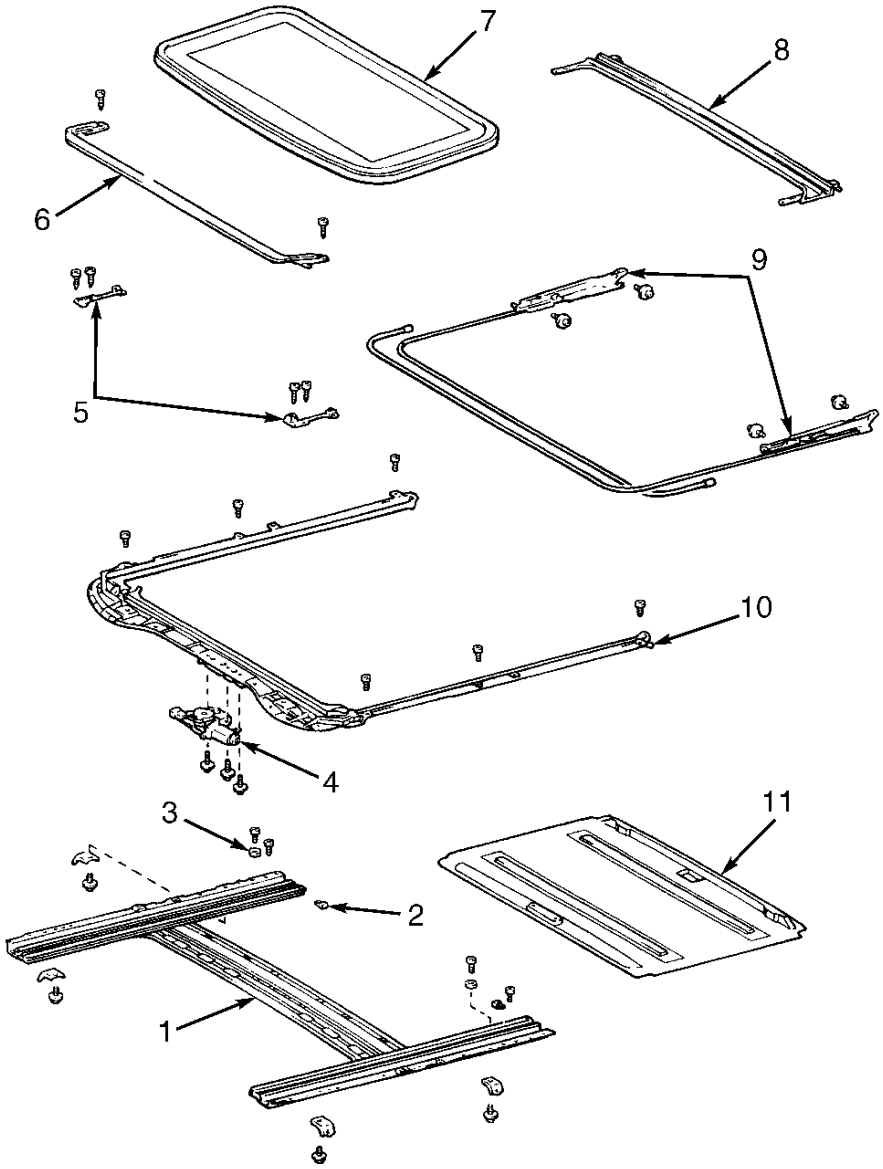

1. Roof Rail
2. Sunshade Trim Stopper
3. Sun Roof Panel Stopper
4. Sun Roof Motor
5. Guide Block
6. Wind Deflector
7. Sun Roof Glass
8. Drip Channel
9. Drive Cable
10. Sun Roof Housing
11. Sunshade Trim

G98F10970

Fig. 51: Exploded View Of Sun Roof Assembly (Corolla)
Courtesy of TOYOTA MOTOR SALES, U.S.A., INC.

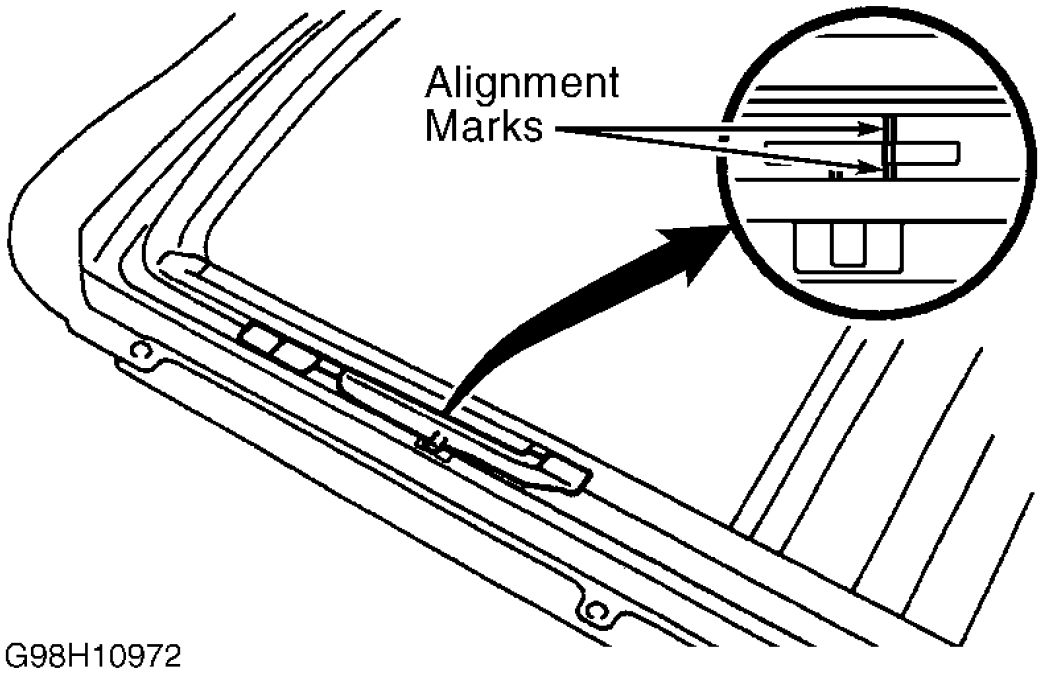

Fig. 52: Aligning Drive Cable (Corolla & RAV4 2-Door)
Courtesy of TOYOTA MOTOR SALES, U.S.A., INC.

Removal & Installation (Land Cruiser)

1. Close sun roof. Turn ignition off. Remove roof headlining rear trim. Remove third row seats and striker plates (if equipped). See **Fig. 53** . On all models, remove rear mat set plate. On vehicles equipped with cargo compartment cover, remove cover. On vehicles equipped with third row seats, remove rear mat. Remove third row rear seat shoulder belt floor anchor. On all models, remove rear door scuff plates. Remove rear door opening trim.
2. Remove jack cover located in left quarter trim. Carefully remove left and right quarter trim panels by releasing clips along outer edges. On vehicles equipped with third row seats, remove seat shoulder belt outer anchor. On all models, remove second row seat shoulder belt outer anchor. On vehicles equipped with third row seats, remove rear assist grips.
3. On all models, remove cargo compartment upper trim. Remove front door scuff plates. Remove kick panels. Remove front door opening trim. Remove front assist grips. Remove front pillar upper trim. Remove center pillar lower trim. Remove front seat shoulder belt outer anchor. Remove center assist grips.
4. Remove sun visors and holders. Remove, dome light cover and dome light. Remove map light cover and map light. Remove overhead console. Remove sun roof opening trim moldings. Release 7 clips and remove roof headlining. Remove side trim plates. Remove sun roof mounting nuts and shims. See **Fig. 54** . Pull upward on sun roof glass and remove.

5. Ensure sun roof is closed. Remove 2 bolts and sun roof motor assembly. Remove 4 drain hoses and disconnect dome light wire harness clamps. Remove 8 bolts, 2 nuts and sun roof housing.

Disassembly & Reassembly

1. Remove rear sun roof drip channel. Remove screws and sun roof panel stoppers. Remove sunshade trim. Remove screws and guide rail stoppers. Slide drive cable rearward and remove it. Remove sun roof wind deflector panel. Remove 2 screws and guide blocks. Remove 6 screws and sun roof housing. Remove drive cable guide casing.
2. To reassemble, adjust drive cables to a completely closed and tilted down position. Slide both cables forward or backward to align marks. See **Fig. 55** . To complete reassembly, reverse disassembly procedure.

Installation

Prior to installing drive motor, remove cam plate cover from drive motor. Turn drive gear until marks align, indicating a full closed position. See **Fig. 56** . Reinstall cam plate cover. Tighten nuts and bolt to specification. See **TORQUE SPECIFICATIONS** . To complete installation, reverse removal procedure.

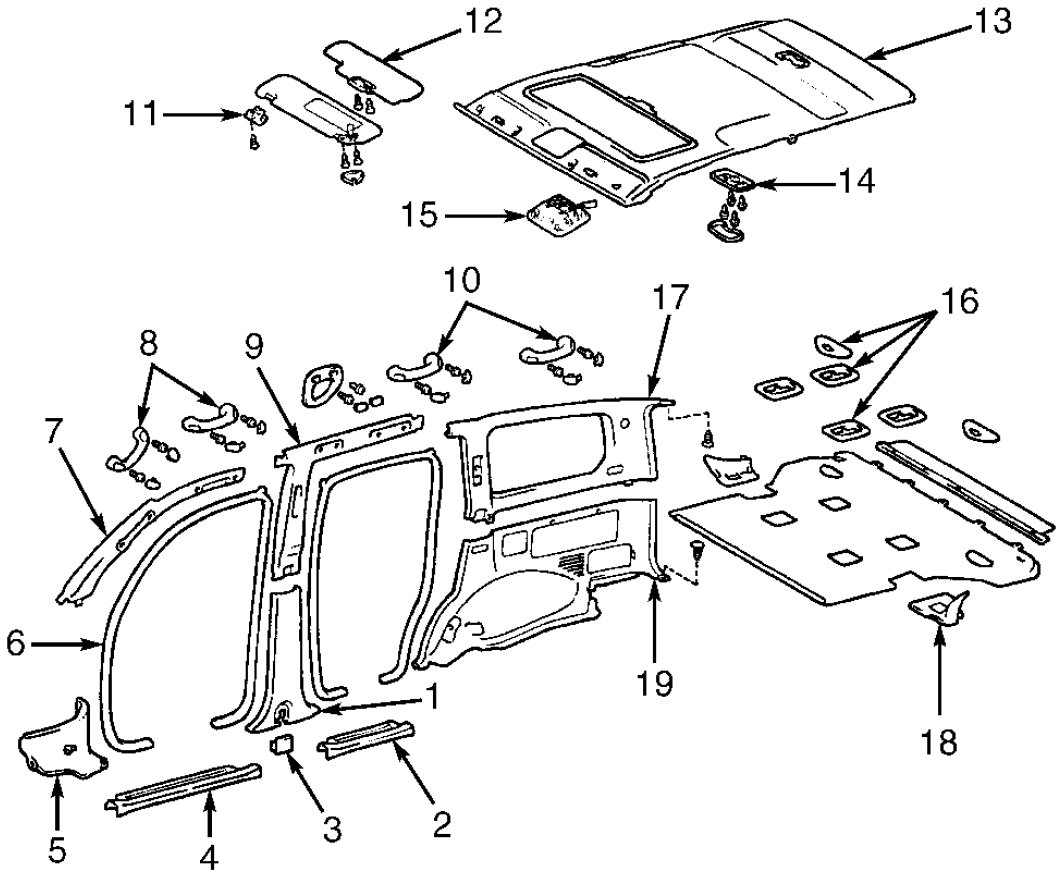

1. Center Pillar Lower Trim
2. Rear Door Scuff Plate
3. Trim Cover
4. Front Door Scuff Plate
5. Kick Panel
6. Front Door Opening Trim
7. Front Pillar Trim
8. Assist Grips
9. Center Pillar Upper Trim
10. Assist Grips
11. Sun Visor Holder
12. Sun Visor
13. Headliner
14. Map Light
15. Overhead Console
16. Striker Plate
17. Rear Pillar Trim
18. Striker Plate
19. Quarter Trim Panel

G98C10985

Fig. 53: Removing Headlining (Land Cruiser)
Courtesy of TOYOTA MOTOR SALES, U.S.A., INC.

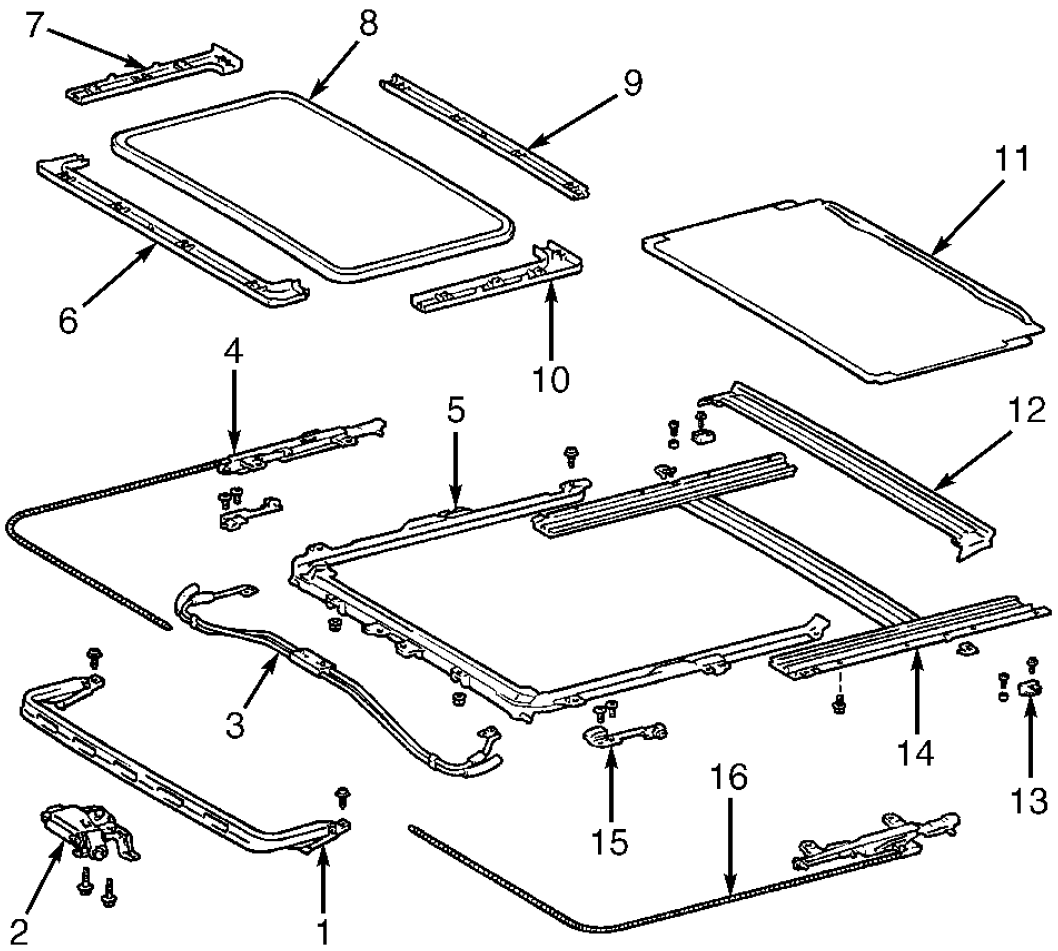

1. Wind Deflector
2. Sun Roof Motor
3. Cable Guide Casing
4. Drive Cable
5. Sun Roof Housing
6. Side Trim
7. Front Trim
8. Sun Roof Glass
9. Rear Trim
10. Side Trim
11. Sunshade Trim
12. Drip Channel
13. Sun Roof Panel Stopper
14. Sun Roof Guide Rail
15. Guide Block
16. Drive Cable

G98D10986

Fig. 54: Exploded View Of Sun Roof Assembly (Land Cruiser)
Courtesy of TOYOTA MOTOR SALES, U.S.A., INC.

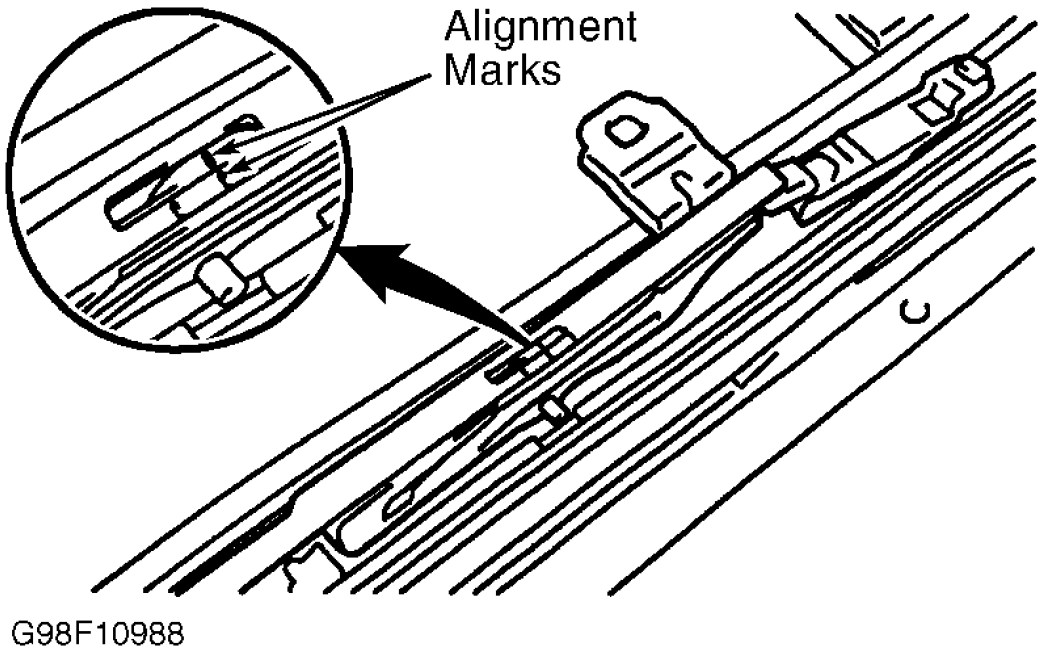

Fig. 55: Aligning Drive Cable (Land Cruiser)
Courtesy of TOYOTA MOTOR SALES, U.S.A., INC.

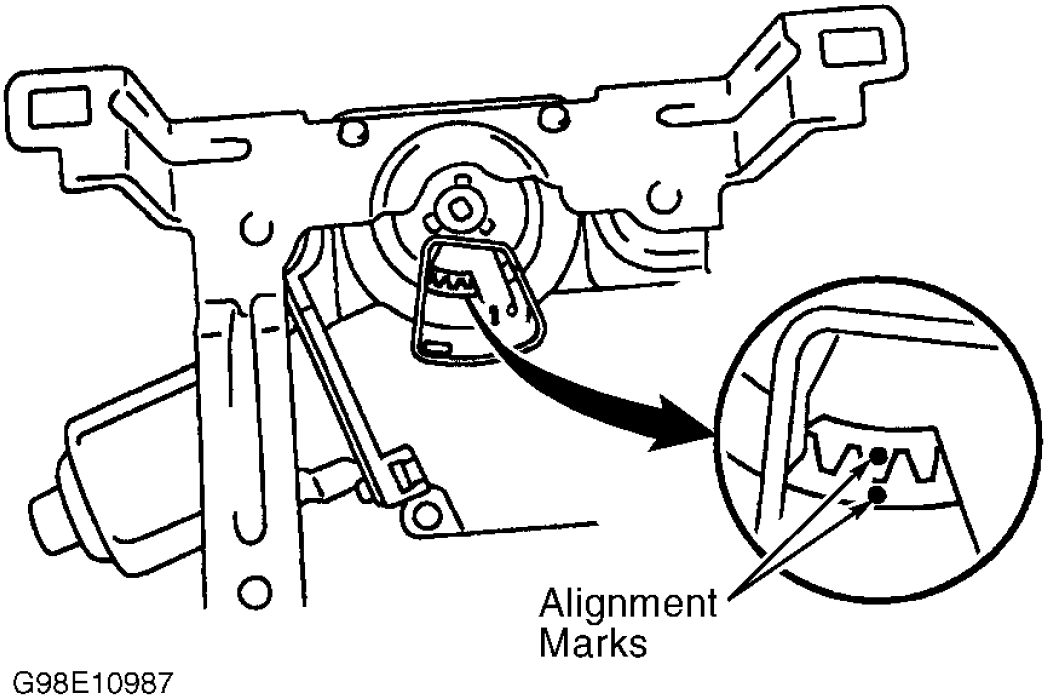

Fig. 56: Aligning Sun Roof Drive Gear (Land Cruiser)
Courtesy of TOYOTA MOTOR SALES, U.S.A., INC.

Removal (RAV4 2-Door)

1. Close sun roof. Turn ignition off. Remove rear seat track covers. Remove 2 bolts. Pull seat cushion band, release seat lock from body striker and remove rear seat. Remove rear floor finish plate. See **Fig. 58** . Remove dome light cover and light. Remove assist grips. Remove door scuff plates. Remove sun visors and holders.
2. Remove rear view mirror. Remove map light cover and map light. Remove front and rear outer seat belt floor anchor bolts. Remove 4 rear quarter trim panel bolts. Remove rear quarter trim panels. Remove front and rear seat outer seat belt shoulder anchor bolts. Remove roof side trim panels. Remove roof headlining rear trim. Remove front seat outer seat belt should anchor bolt.
3. Remove front center and rear upper trim panels. Remove roof headlining. Remove 4 Torx screws securing sun roof glass. Pull upward on sun roof glass to remove. Remove 3 bolts and sun roof motor assembly. See **Fig. 57** . Remove 4 drain hoses. Remove 12 bolts and 6 brackets. Remove 4 nuts and sun roof housing assembly.

Disassembly & Reassembly

1. Remove screws and sun roof panel stoppers. Remove sunshade trim. Remove rear sun roof drip channel. Remove screws and guide rail stoppers. Slide drive cable rearward and remove it. Remove sun roof wind

deflector panel. Remove 2 screws and guide blocks. Remove 6 screws and sun roof housing.

2. To reassemble, adjust drive cables to a completely closed and tilted down position. Slide both cables forward or backward to align marks. See **Fig. 52** . To complete reassembly, reverse disassembly procedure.

Installation

Apply adhesive to bolts securing gear side of sun roof motor assembly. Prior to installing drive motor, remove cam plate cover from sun roof drive motor. See **Fig. 40** . Turn drive gear until marks align, indicating a full closed position. Reinstall cam plate cover. Ensure sun roof is properly aligned. See **ADJUSTMENTS** . Tighten nuts and bolt to specification. See **TORQUE SPECIFICATIONS** . To complete installation, reverse removal procedure.

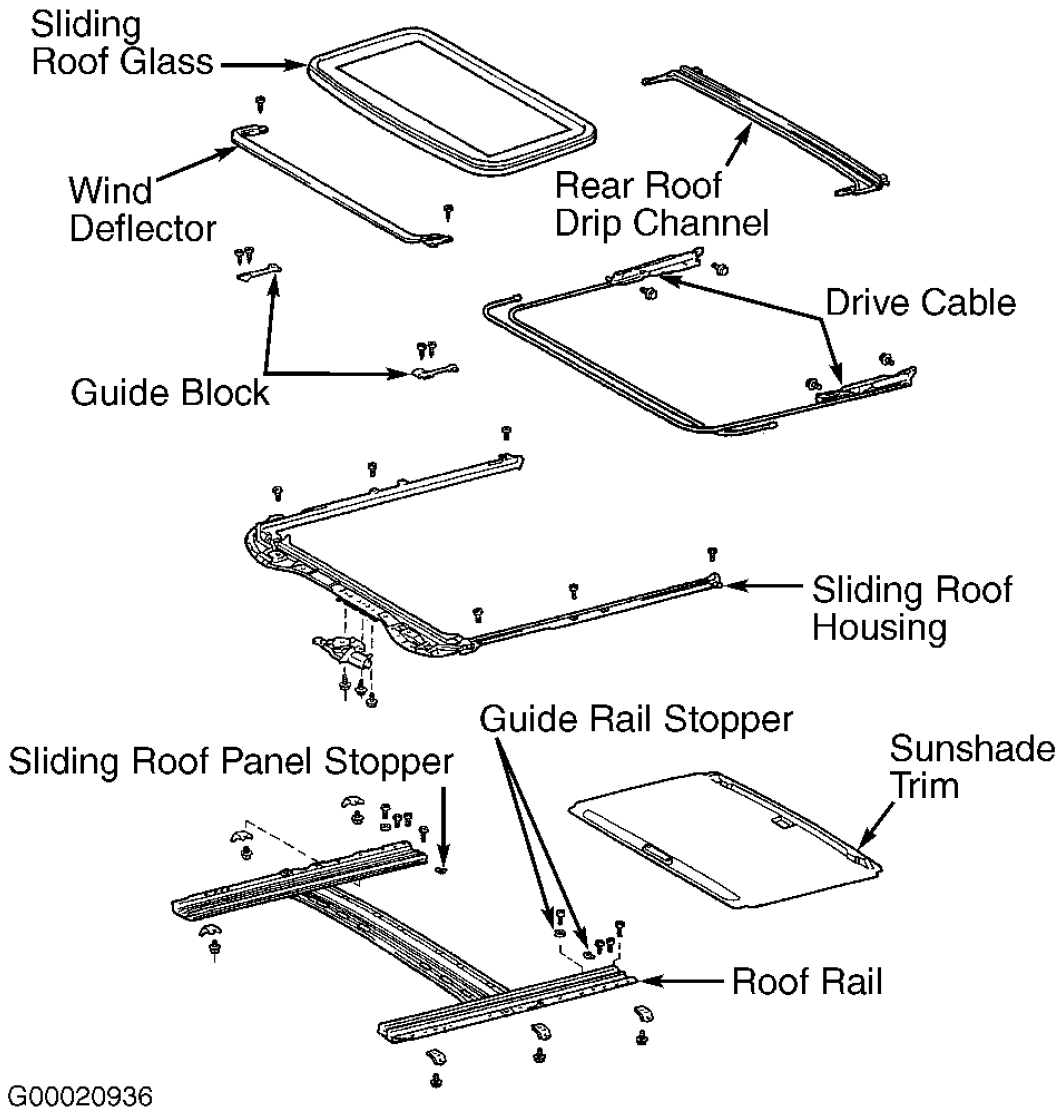

Fig. 57: Exploded View Of Sun Roof Assembly (RAV4 2-Door)
Courtesy of TOYOTA MOTOR SALES, U.S.A., INC.

Removal (RAV4 4-Door)

1. Close sun roof. Turn ignition off. Release seat lock from body striker by pulling seat cushion lock lever. Remove 2 rear and front side bolts. Remove rear seat. Remove rear floor finish plate. See **Fig. 58** . Remove rear door scuff plates. Remove dome light cover and light. Remove assist grips. Remove front door scuff plates. Remove sun visors and holders.
2. Remove rear view mirror. Remove map light cover and map light. Remove rear outer seat belt floor anchor bolt. Remove rear quarter trim panels. Remove rear seat outer seat belt shoulder anchor bolt. Remove roof side trim panels. Remove roof headlining rear trim. Remove front seat outer seat belt

shoulder anchor bolt.

3. Remove center pillar lower trim panels. Pull center pillar lower trim panels up to remove. Remove center pillar upper trim panels. Remove front pillar trim panels. Remove 4 clips and roof headlining. Remove sun roof side trim panels. Remove 6 nuts and 4 shims. See **Fig. 59** . Pull upward on sun roof glass to remove. Remove front and rear sun roof trim panels.
4. Remove control relay. Remove 3 bolts and sun roof motor assembly. Remove drip channel. Remove 2 screws from arms and 2 screws from panel and wind deflector. Remove wind deflector. Slide drive cables back. Disconnect 4 hoses. Remove 10 bolts, 4 nuts and sun roof housing.

Disassembly & Reassembly

1. Remove 2 screws and sun roof panel stoppers. Pull sunshade trim back to remove. Remove 2 screws and cable guide casings. Remove sun roof front stopper. Remove 2 screws and drive cable guide block. Pull drive cables from guide rails.
2. To reassemble, adjust drive cables to a completely closed and tilted down position. Slide both cables forward or backward to align marks. See **Fig. 60** . Use butyl tape to cover cut in weatherstrip, between cable guide casings and guide rails. To complete reassembly, reverse disassembly procedure.

Installation

Apply adhesive to bolts securing gear side of sun roof motor assembly. Prior to installing drive motor, remove cam plate cover from sun roof drive motor. See **Fig. 31** . Remove large screw, washers and shims. Turn drive gear using screwdriver until marks align, indicating a full closed position. Reinstall cam plate cover. Tighten nuts and bolt to specification. See **TORQUE SPECIFICATIONS** . To complete installation, reverse removal procedure.

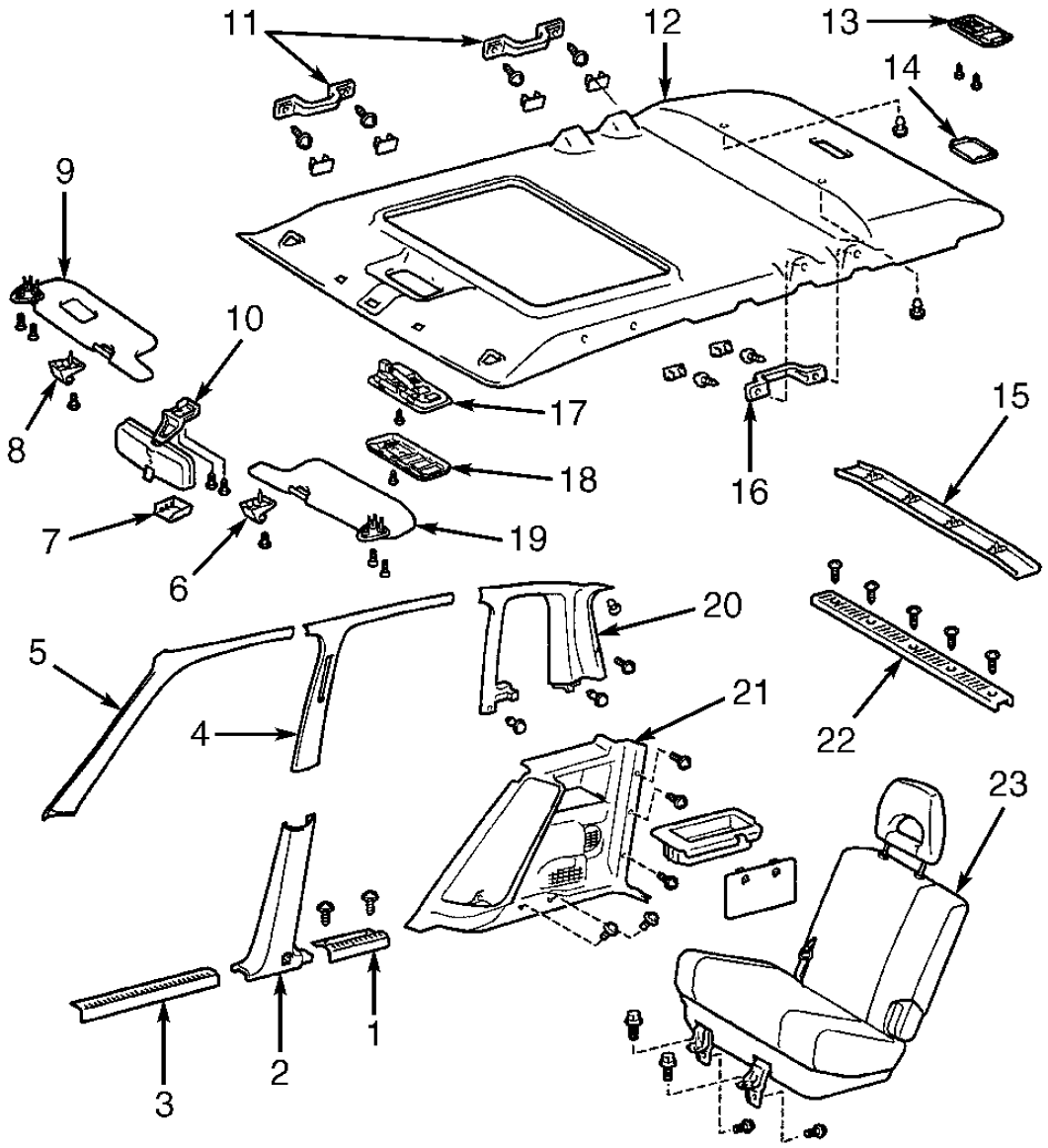

1. Rear Door Scuff Plate
2. Center Pillar Lower Trim
3. Front Door Scuff Plate
4. Center Pillar Upper Trim
5. Front Pillar Trim
6. Sun Visor Holder
7. Rearview Mirror Cover
8. Sun Visor Holder
9. Sun Visor
10. Rearview Mirror
11. Assist Grip
12. Headliner
13. Rear Interior Light
14. Interior Light Cover
15. Roof Headliner Rear Trim
16. Assist Grip
17. Front Interior Light
18. Interior Light Cover
19. Sun Visor
20. Roof Side Trim Panel
21. Rear Quarter Trim Panel
22. Rear Floor Finish Plate
23. Rear Seat

Fig. 58: Removing Headlining (RAV4 4-Door Shown; 2-Door Is Similar)
Courtesy of TOYOTA MOTOR SALES, U.S.A., INC.

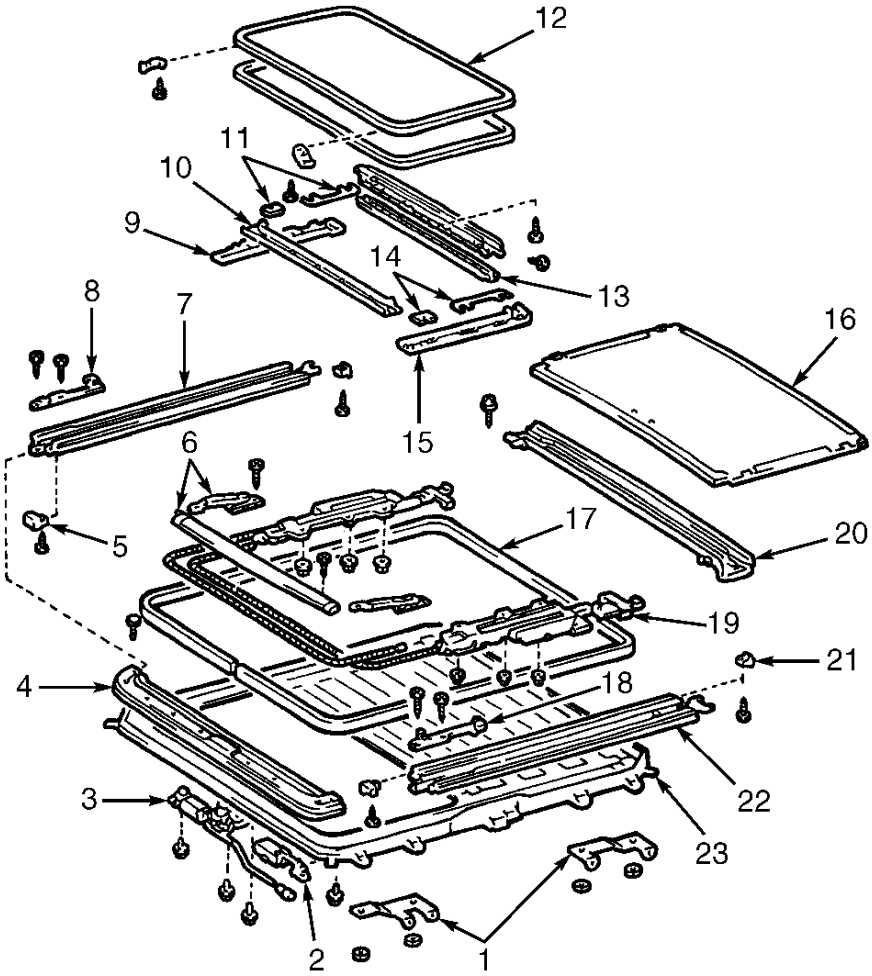

1. Mounting Bracket
2. Control Relay
3. Sun Roof Motor
4. Cable Guide Casing
5. Front Stopper
6. Wind Deflector
7. Guide Rail
8. Guide Block
9. Side Trim
10. Front Trim
11. Shims
12. Sun Roof Glass
13. Rear Trim
14. Shims
15. Side Trim
16. Sunshade Trim
17. Weatherstrip
18. Guide Block
19. Drive Cable
20. Drip Channel
21. Sun Roof Panel Stopper
22. Guide Rail
23. Sun Roof Housing

G98G10989

Fig. 59: Exploded View Of Sun Roof Assembly (RAV4 4Door)

Courtesy of TOYOTA MOTOR SALES, U.S.A., INC.

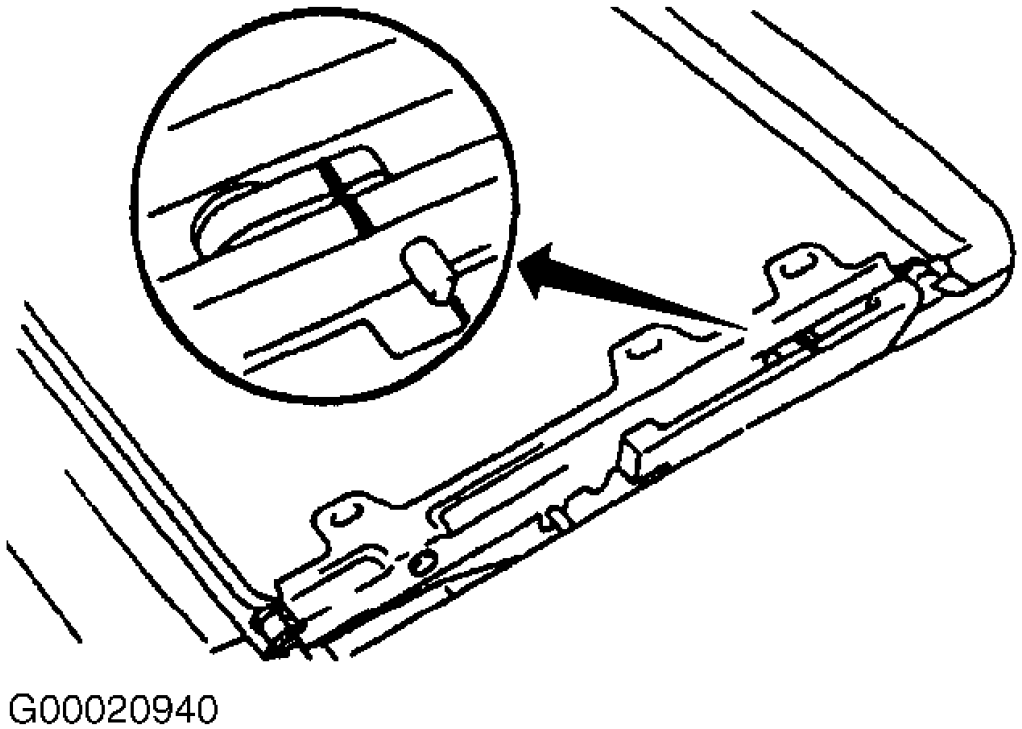

Fig. 60: Aligning Drive Cable (RAV4 4-Door)
Courtesy of TOYOTA MOTOR SALES, U.S.A., INC.

Removal (Sienna 4-Door)

1. Close sun roof. Turn ignition off. Remove second row seats. Remove third row seats (if equipped). Remove liftback door scuff plate. See **Fig. 61** . Remove rear speaker cover and rear quarter trim panel cover. Remove seat belt bezel from rear quarter trim panel. Remove luggage room light. Carefully remove left and right quarter trim panels by removing 4 screws and releasing clips along outer edges. Remove "D" pillar trim. Remove second row seat shoulder belt outer anchor bolt and "C" pillar trim.
2. Remove quarter trim front panel. Disconnect power connectors and heater control cable. Remove slide door scuff plate. Remove roof side rail trim. Remove front door scuff plates. Remove kick panels. Remove front door opening trim. Remove front pillar trim. Disconnect tweeter speaker (if equipped).
3. Remove front seat shoulder belt outer floor anchor bolt. Remove center pillar lower trim. Remove front seat shoulder belt seat shoulder belt outer anchor bolt. Remove coat hooks. Remove assist grips. Remove sun visors and holders. Remove sun roof opening trim moldings. Remove overhead console. Remove dome light cover and dome lights. Release 4 clips and remove roof headlining.
4. Remove sun roof side trim. Using a Torx wrench, remove 4 sun roof mounting bolts. See **Fig. 62** . Pull

upward on sun roof glass and remove. Remove 3 bolts and sun roof motor assembly. Disconnect 4 drain hoses. Remove 8 bolts and 4 brackets. Remove 6 nuts and sun roof housing.

Removal (Sienna 5-Door)

1. Close sun roof. Turn ignition off. Remove second row seats. Remove third row seats (if equipped). Remove liftback door scuff plate. See **Fig. 61** . Remove slide door scuff plate. Remove rear speaker cover. On left side remove rear quarter trim panel cover. On right side remove air inlet grille. On both sides, remove seat belt bezel from rear quarter trim panel. Remove luggage room light. Remove slide door courtesy lights. Carefully remove left and right quarter trim panels by removing 2 screws, and releasing clips along outer edges. Remove "D" pillar trim. Remove second row seat shoulder belt outer anchor bolt and "C" pillar trim.
2. Remove roof side rail trim. Remove front door scuff plates. Remove kick panels. Remove front door opening trim. Remove front pillar trim. Disconnect tweeter speaker (if equipped).
3. Remove front seat shoulder belt outer floor anchor bolt. Remove center pillar lower trim. Remove front seat shoulder belt seat shoulder belt outer anchor bolt. Remove coat hooks. Remove assist grips. Remove sun visors and holders. Remove sun roof opening trim moldings. Remove overhead console. Remove dome light cover and dome lights. Remove heater control panel. Release 4 clips and remove roof headlining.
4. Remove sun roof side trim. Using a Torx wrench, remove 4 sun roof mounting bolts. See **Fig. 62** . Pull upward on sun roof glass and remove. Remove 3 bolts and sun roof motor assembly. Disconnect 4 drain hoses. Remove 8 bolts and 4 brackets. Remove 6 nuts and sun roof housing.

Disassembly & Reassembly

1. Remove screws and sun roof panel stoppers. Remove sunshade trim. Remove rear sun roof drip channel. Remove 4 screws and rear frame. Remove screws and guide rail stoppers. Slide drive cable rearward and remove it. Remove sun roof wind deflector panel. Remove 2 screws and guide blocks. Remove 6 screws and sun roof housing.
2. To reassemble, adjust drive cables to a completely closed and tilted down position. Slide both cables forward or backward to align marks. See **Fig. 30** . To complete reassembly, reverse disassembly procedure.

Installation

Prior to installing drive motor, remove cam plate cover from drive motor. Turn drive gear until marks align, indicating a full closed position. See **Fig. 40** . Reinstall cam plate cover. Tighten nuts and bolt to specification. See **TORQUE SPECIFICATIONS** . To complete installation, reverse removal procedure.

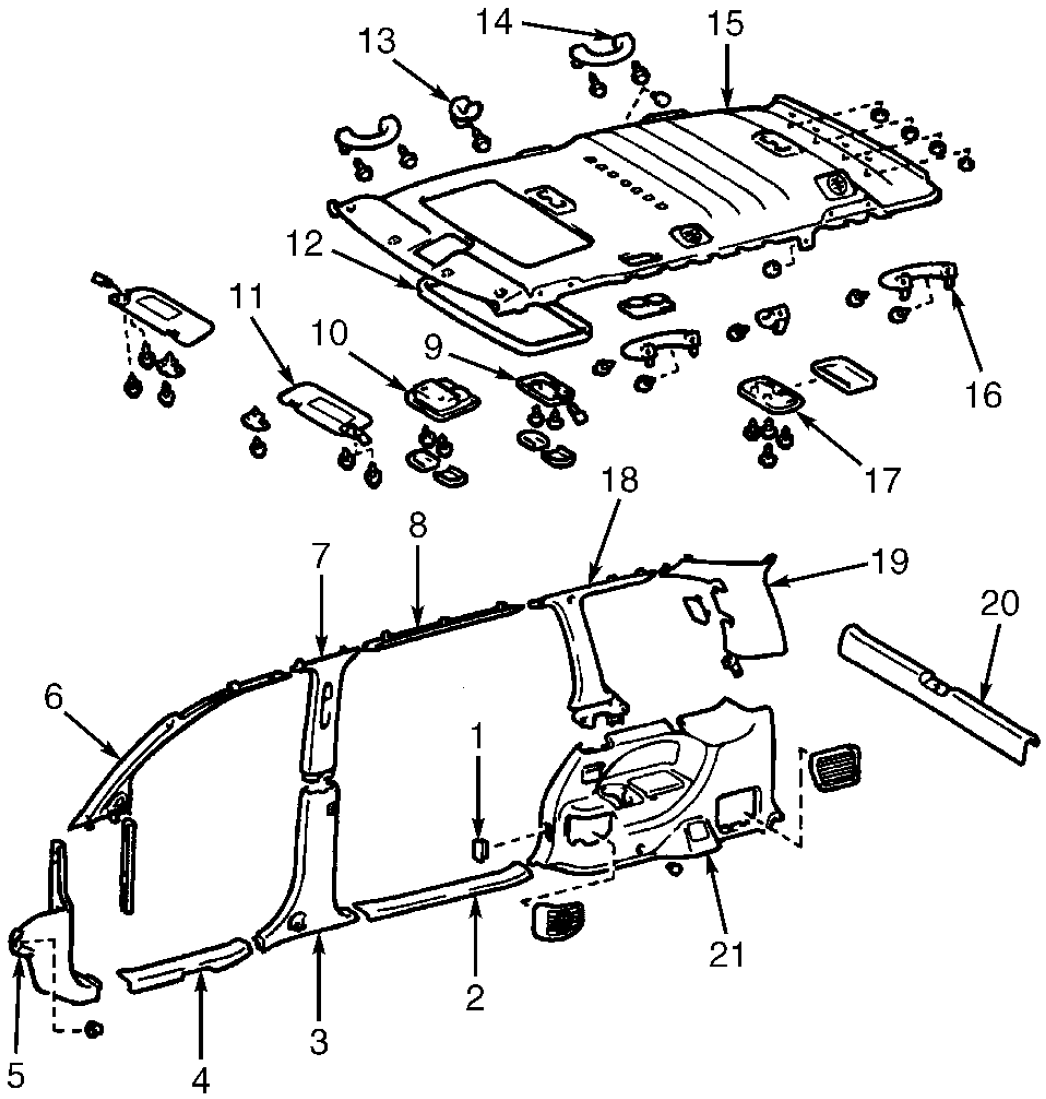

1. Courtesy Light
2. Sliding Door Scuff Plate
3. Center Pillar Lower Trim
4. Front Door Scuff Plate
5. Kick Panel
6. Front Pillar Trim
7. Center Pillar Upper Trim
8. Roof Trim Panel
9. Front Interior Light
10. Overhead Console
11. Sun Visor
12. Sun Roof Opening Trim
13. Coat Hook
14. Assist Grip
15. Headliner
16. Assist Grip
17. Rear Interior Light
18. Rear Window Side Trim
19. Rear Pillar Trim
20. Back Door Scuff Plate
21. Quarter Trim Panel

G98A10991

Fig. 61: Removing Headlining (Sienna)
Courtesy of TOYOTA MOTOR SALES, U.S.A., INC.

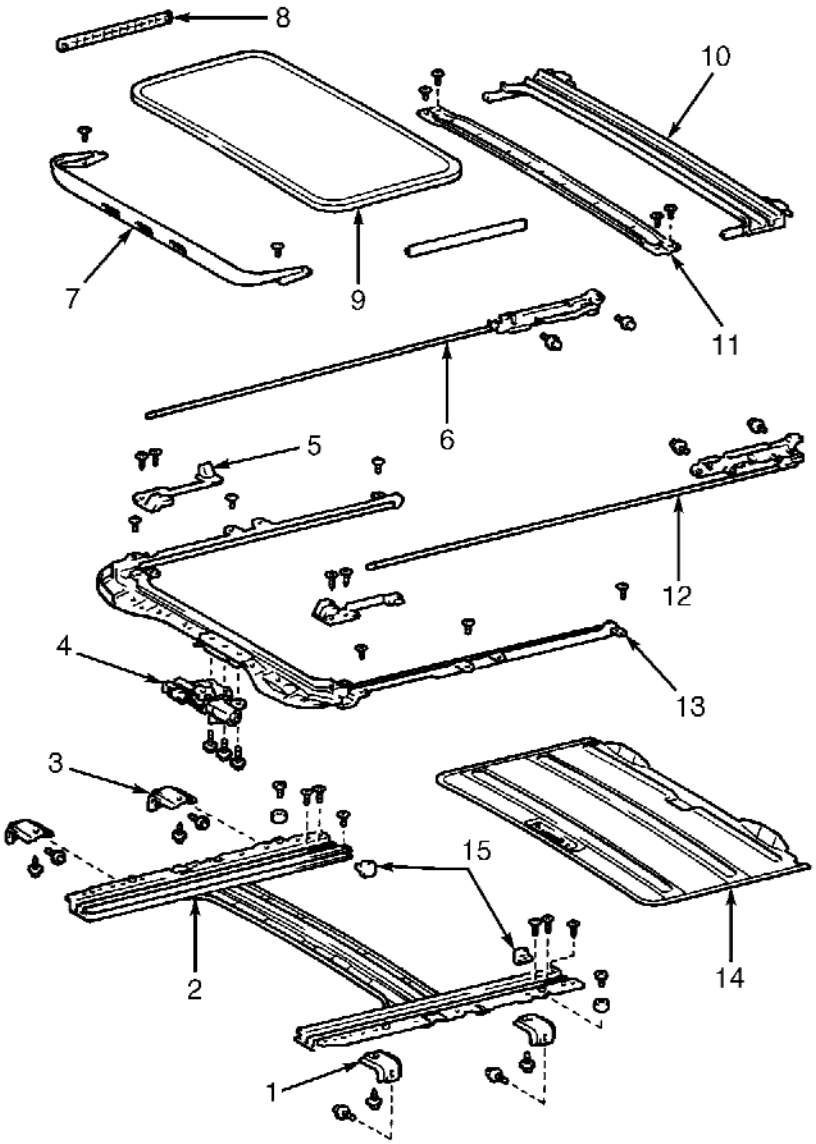

1. Mounting Bracket
2. Roof Rail
3. Mounting Bracket
4. Sun Roof Motor
5. Guide Bracket
6. Drive Cable
7. Wind Deflector
8. Side Trim
9. Sun Roof Glass
10. Drip Channel
11. Rear Frame
12. Drive Cable
13. Sun Roof Housing
14. Sunshade Trim
15. Sun Roof Panel Stopper

G98B10992

Fig. 62: Exploded View Of Sun Roof Assembly (Sienna)

Courtesy of TOYOTA MOTOR SALES, U.S.A., INC.

Removal (4Runner)

1. Close sun roof. Turn ignition off. Remove dome lights, rear header trim panel and liftback door scuff plate. See **Fig. 63** . Remove rear door scuff plate and rear seat side trim. On right side, remove electrical outlet. Remove luggage compartment cover, holder and hook (if equipped). Remove front seat belt shoulder floor anchor bolt.
2. Remove deck side trim. Disconnect connector and pass seat belts through deck side trim. Remove front door scuff plates. Remove center pillar lower trim. Remove front seat belt shoulder anchor bolt. Remove center pillar upper trim panel. Remove assist grips, and front pillar trim panel. Remove map light lens and map light assembly. Remove rear view mirror and sun visors. Release 6 clips, and remove roof headlining.
3. Disconnect 4 drain hoses, and connectors from sun roof housing. See **Fig. 64** . Remove 2 nuts, 8 bolts and housing assembly.

Disassembly & Reassembly

1. Remove sun shade trim. Remove side trim panel. Remove sun roof mounting nuts and glass. Remove drip channel. Remove control relay, and sun roof motor assembly. Remove wind deflector. Remove sun roof housing. Remove drive rail.
2. Remove screws and sun roof panel stoppers. Remove sunshade trim. Remove side trim. Remove 4 nuts and sun roof glass. Remove rear sun roof drip channel. Remove control relay.
3. Remove 3 bolts and sun roof motor. Remove sun roof wind deflector panel. Remove screws and guide rail stoppers. Remove 6 screws and sun roof housing. Slide drive cable forward and remove it. To reassemble, adjust drive cables to a completely closed and tilted down position. Slide both cables forward or backwards to align marks. See **Fig. 65** . To complete reassembly, reverse disassembly procedure.

Installation

Prior to installing drive motor, remove cam plate cover from drive motor. See **Fig. 66** . Using screwdriver, turn drive gear until marks align, indicating a full closed position. Reinstall cam plate cover. Tighten nuts and bolt to specification. See **TORQUE SPECIFICATIONS** . To complete installation, reverse removal procedure.

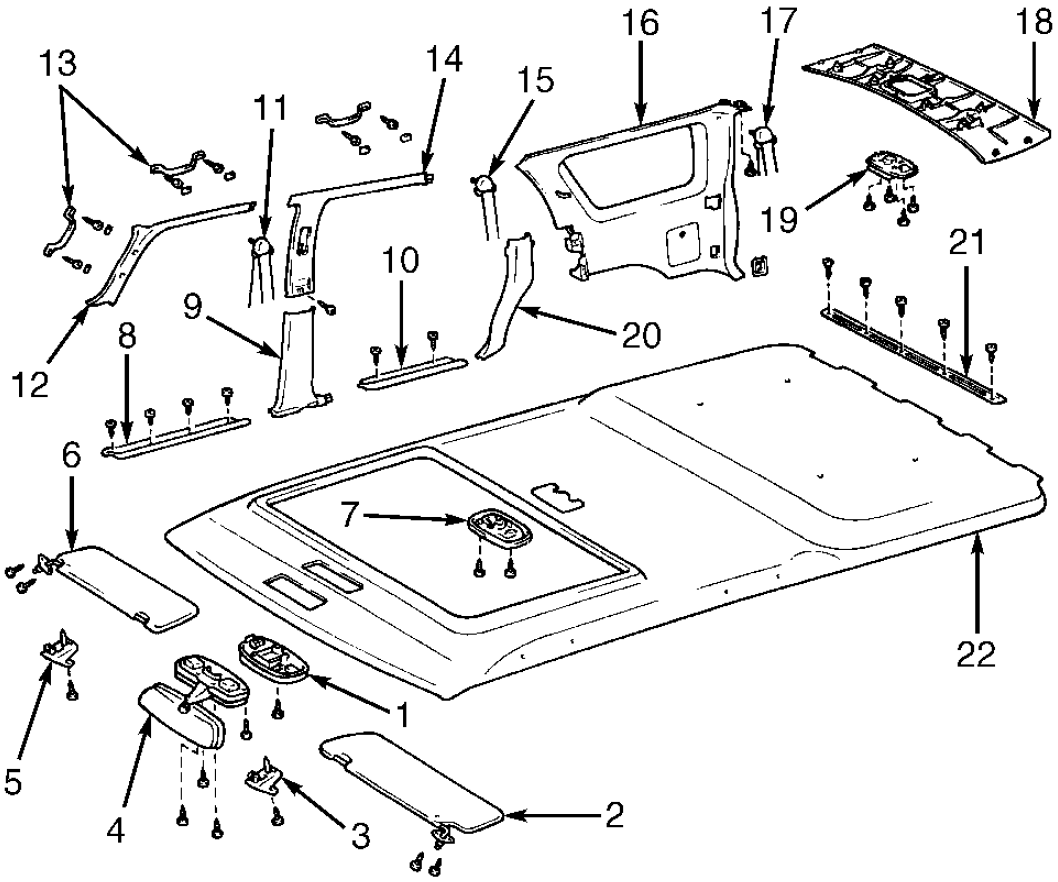

1. Sun Roof Switch
2. Sun Visor
3. Sun Visor Holder
4. Rearview Mirror
5. Sun Visor Holder
6. Sun Visor
7. Front Interior Light
8. Front Door Scuff Plate
9. Center Pillar Lower Trim
10. Rear Door Scuff Plate
11. Seat Belt Anchor Bolt
12. Front Pillar Trim
13. Assist Grip
14. Center Pillar Upper Trim
15. Seat Belt Anchor Bolt
16. Deck Side Trim
17. Seat Belt Anchor Bolt
18. Rear Header Trim
19. Rear Interior Light
20. Rear Seat Side Trim
21. Back Door Scuff Plate
22. Headliner

G98J10974

Fig. 63: Removing Headlining (4Runner)
Courtesy of TOYOTA MOTOR SALES, U.S.A., INC.

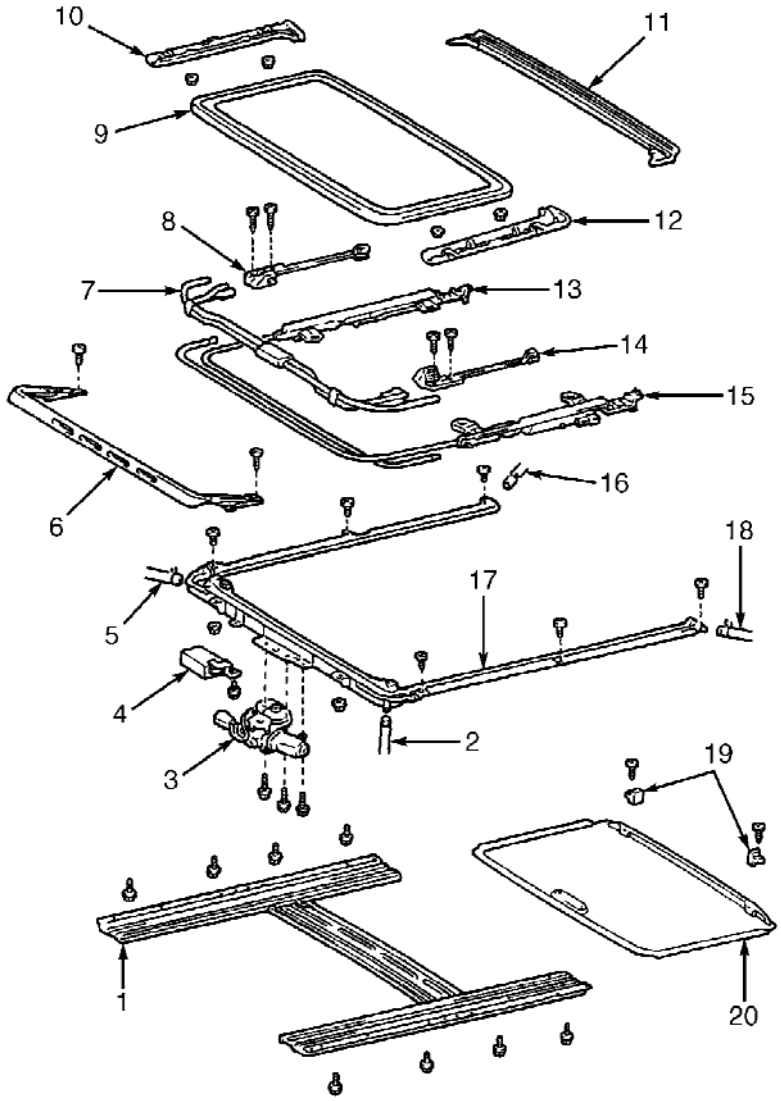

1. Sliding Roof Rail
2. Drain Hose
3. Sun Roof Motor
4. Control Relay
5. Drain Hose
6. Wind Deflector
7. Casing Pipe
8. Casing Pipe Stopper
9. Sun Roof Glass
10. Side Trim
11. Drip Channel
12. Side Channel
13. Drive Rail
14. Casing Pipe Stopper
15. Drive Rail
16. Drain Hose
17. Sun Roof Housing
18. Drain Hose
19. Sunshade Trim Stopper
20. Sunshade Trim

G98A10975

Fig. 64: Exploded View Of Sun Roof Assembly (4Runner)
Courtesy of TOYOTA MOTOR SALES, U.S.A., INC.

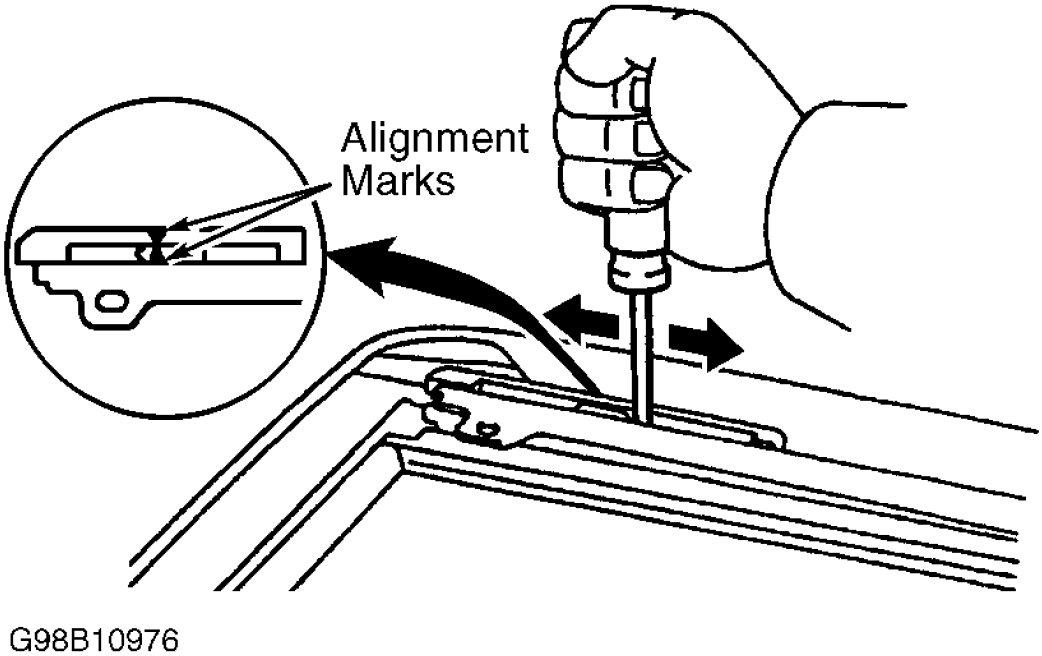

Fig. 65: Aligning Drive Cable (4Runner)
Courtesy of TOYOTA MOTOR SALES, U.S.A., INC.

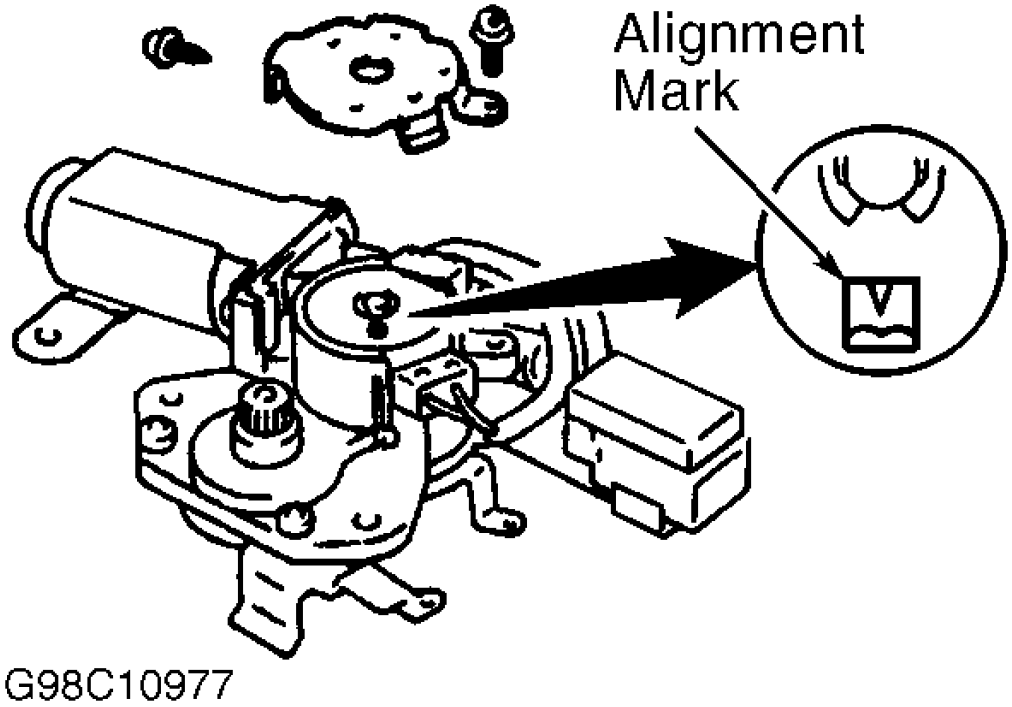

Fig. 66: Aligning Sun Roof Drive Gear (4Runner)
Courtesy of TOYOTA MOTOR SALES, U.S.A., INC.

TORQUE SPECIFICATIONS

TORQUE SPECIFICATIONS

Application (1)	**Ft. Lbs. (N.m)**
Seat Belt Anchor Bolts	32 (43)
	INCH Lbs. (N.m)
Sun Roof Glass Screws	36 (4)
Sun Roof Motor Assembly Bolts	48 (5)
Sun Roof Mounting Bolts	49 (6)
(1) Use Loctite on all bolts.	

WIRING DIAGRAMS

1999 Toyota RAV4

1999-2000 ACCESSORIES & EQUIPMENT Power Sun Roofs

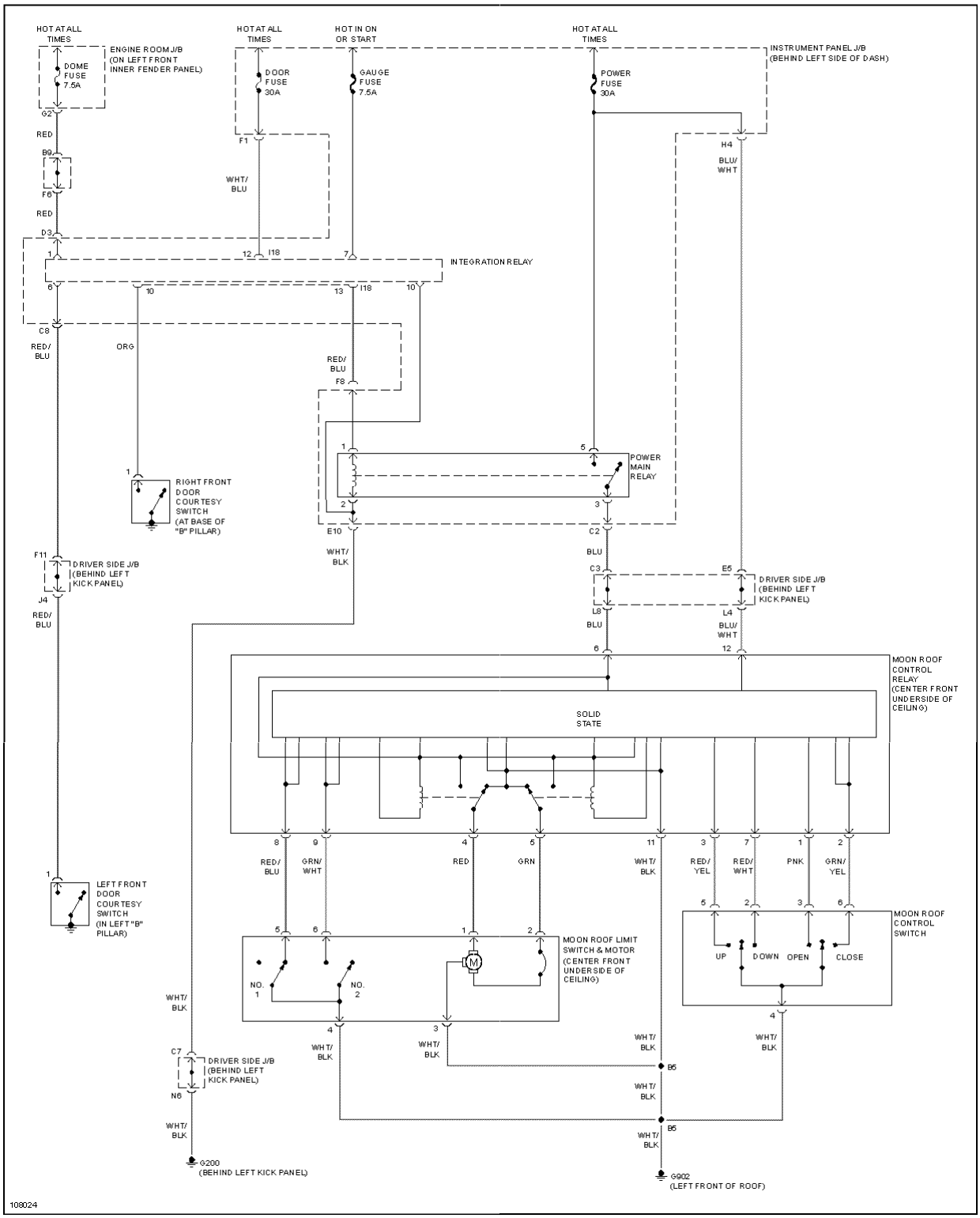

Fig. 67: Power Sun Roof System Wiring Diagram (1999 Avalon)

1999 Toyota RAV4

1999-2000 ACCESSORIES & EQUIPMENT Power Sun Roofs

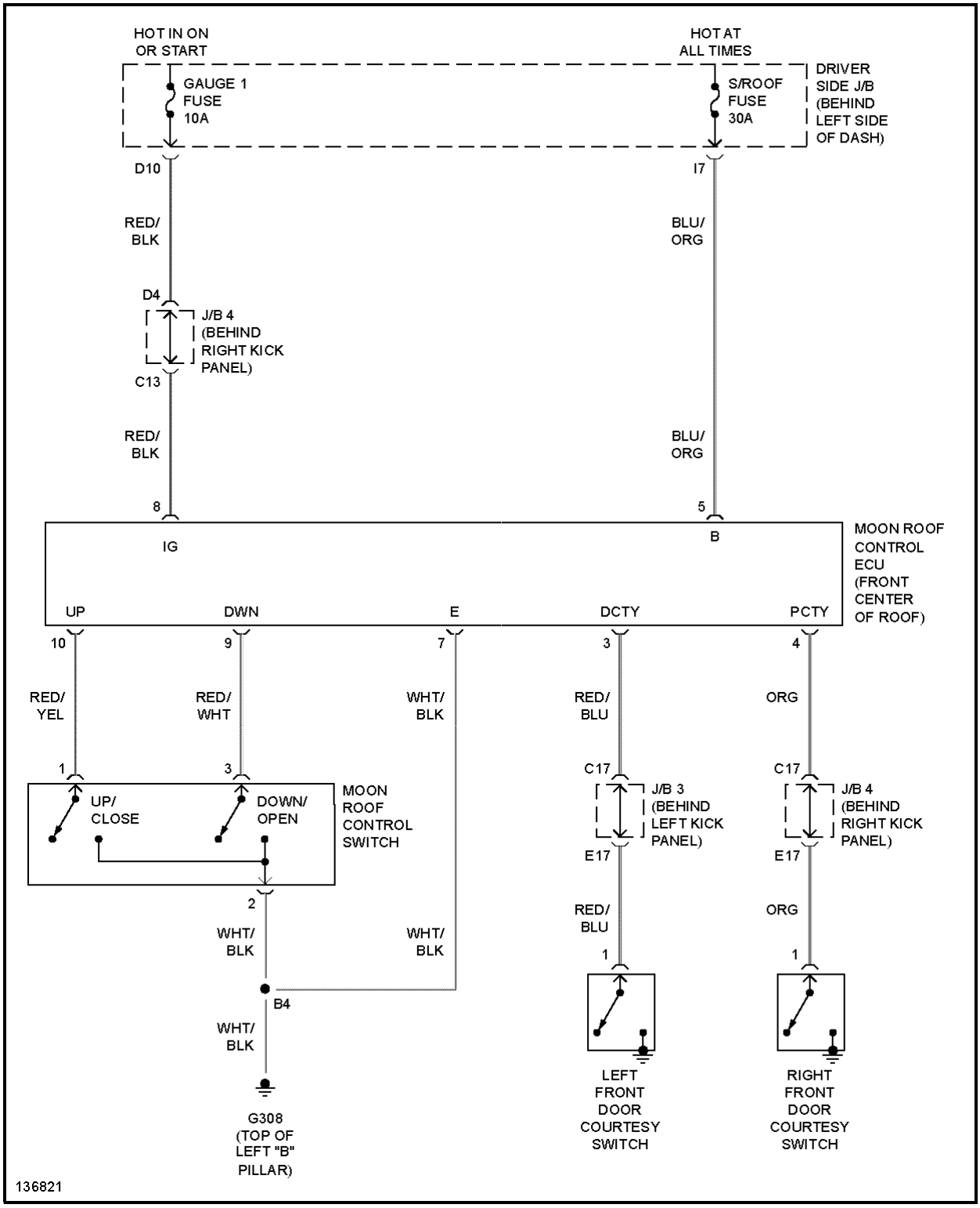

Fig. 68: Power Sun Roof System Wiring Diagram (2000 Avalon)

1999 Toyota RAV4

1999-2000 ACCESSORIES & EQUIPMENT Power Sun Roofs

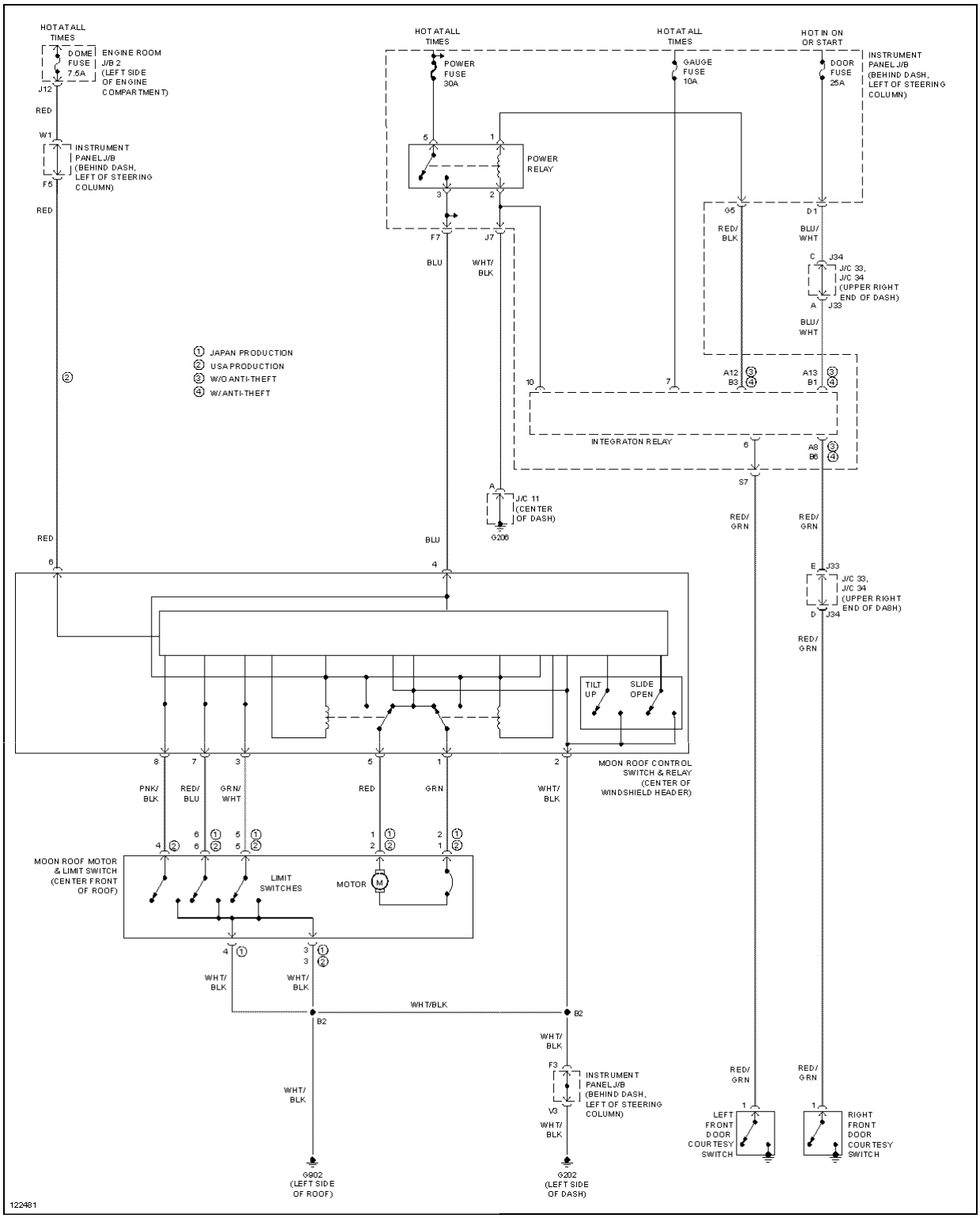

Fig. 69: Power Sun Roof System Wiring Diagram (1999-2000 Camry)

1999 Toyota RAV4

1999-2000 ACCESSORIES & EQUIPMENT Power Sun Roofs

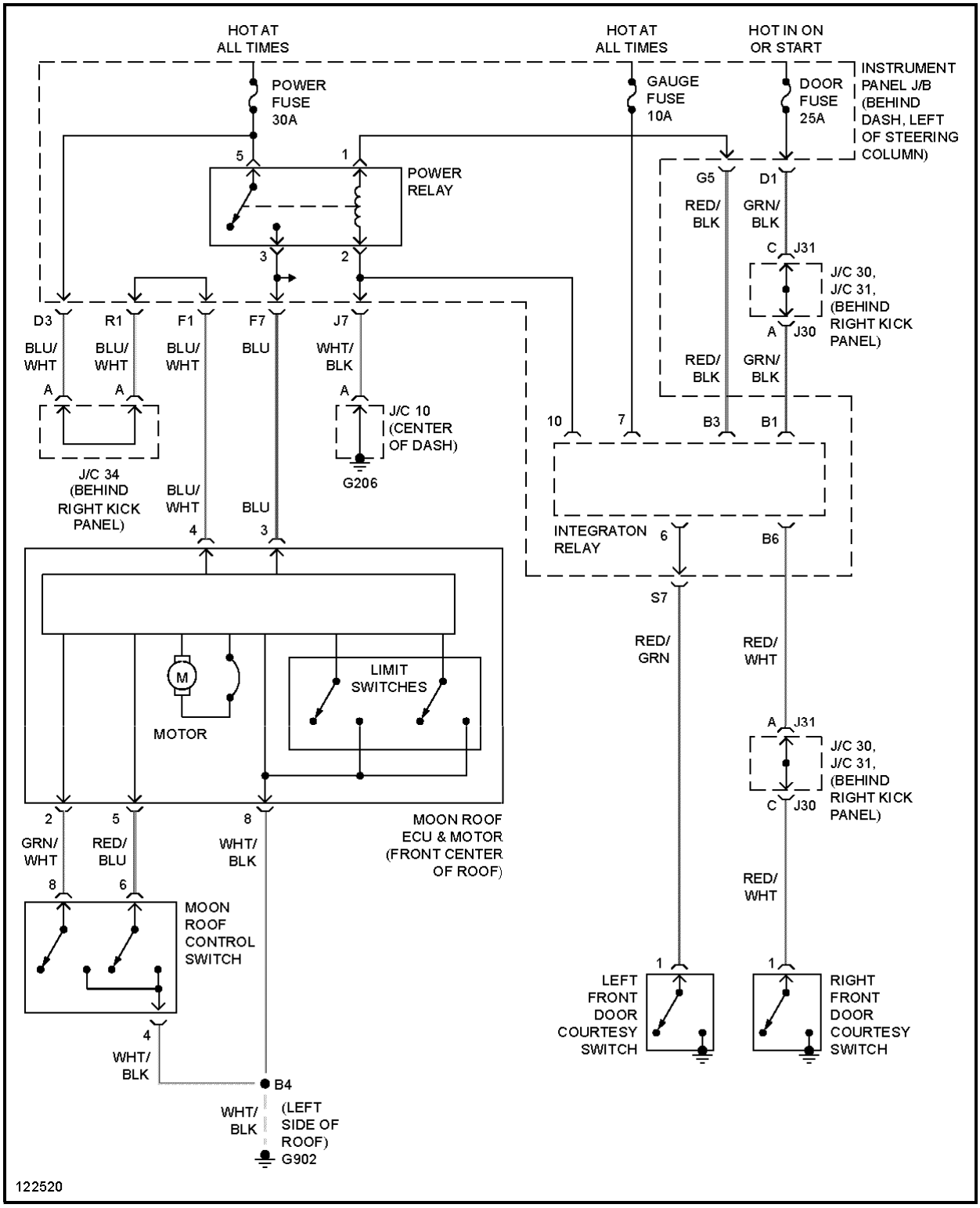

Fig. 70: Power Sun Roof System Wiring Diagram (1999-2000 Camry Solara)

1999 Toyota RAV4

1999-2000 ACCESSORIES & EQUIPMENT Power Sun Roofs

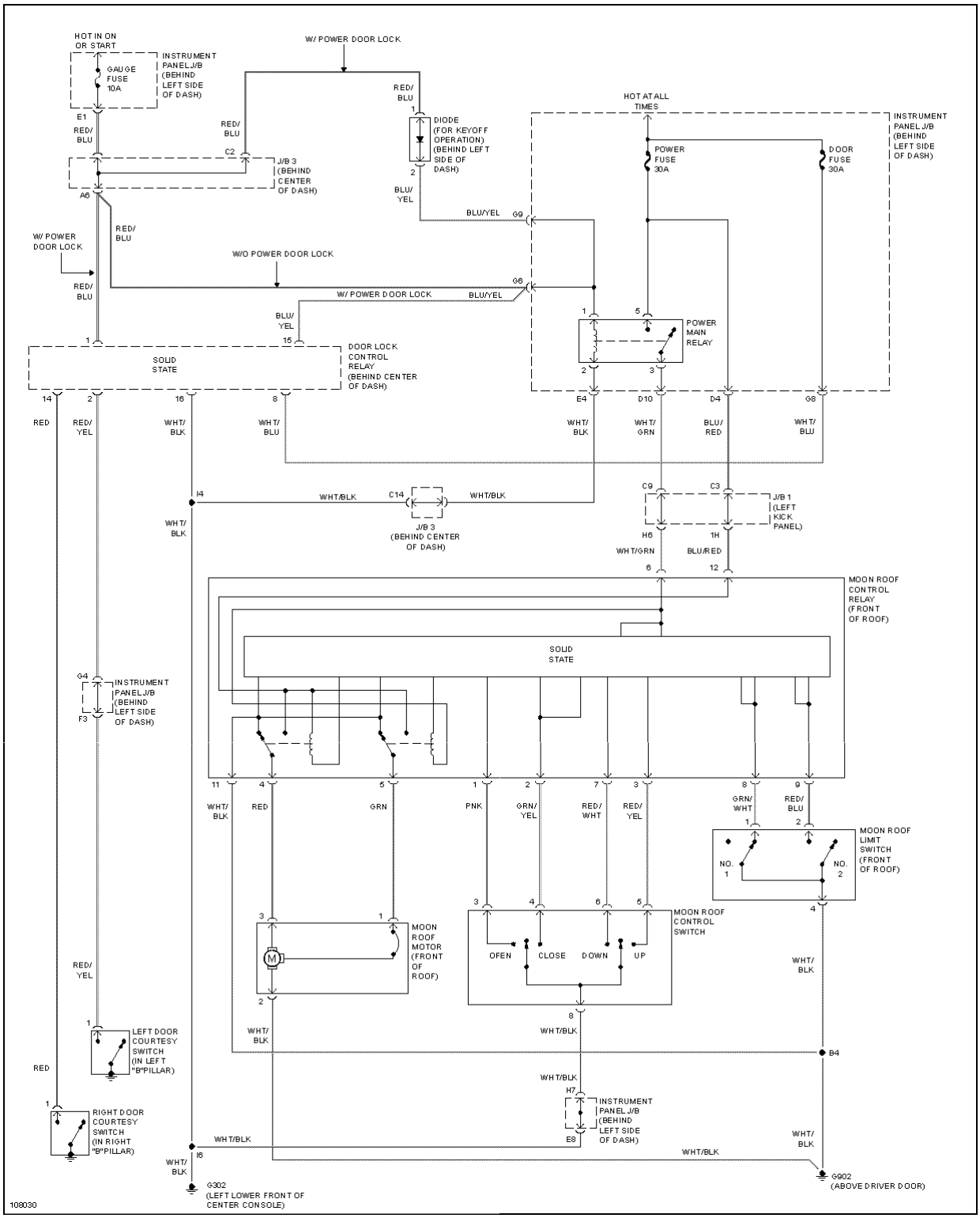

Fig. 71: Power Sun Roof System Wiring Diagram (1999 Celica)

1999 Toyota RAV4

1999-2000 ACCESSORIES & EQUIPMENT Power Sun Roofs

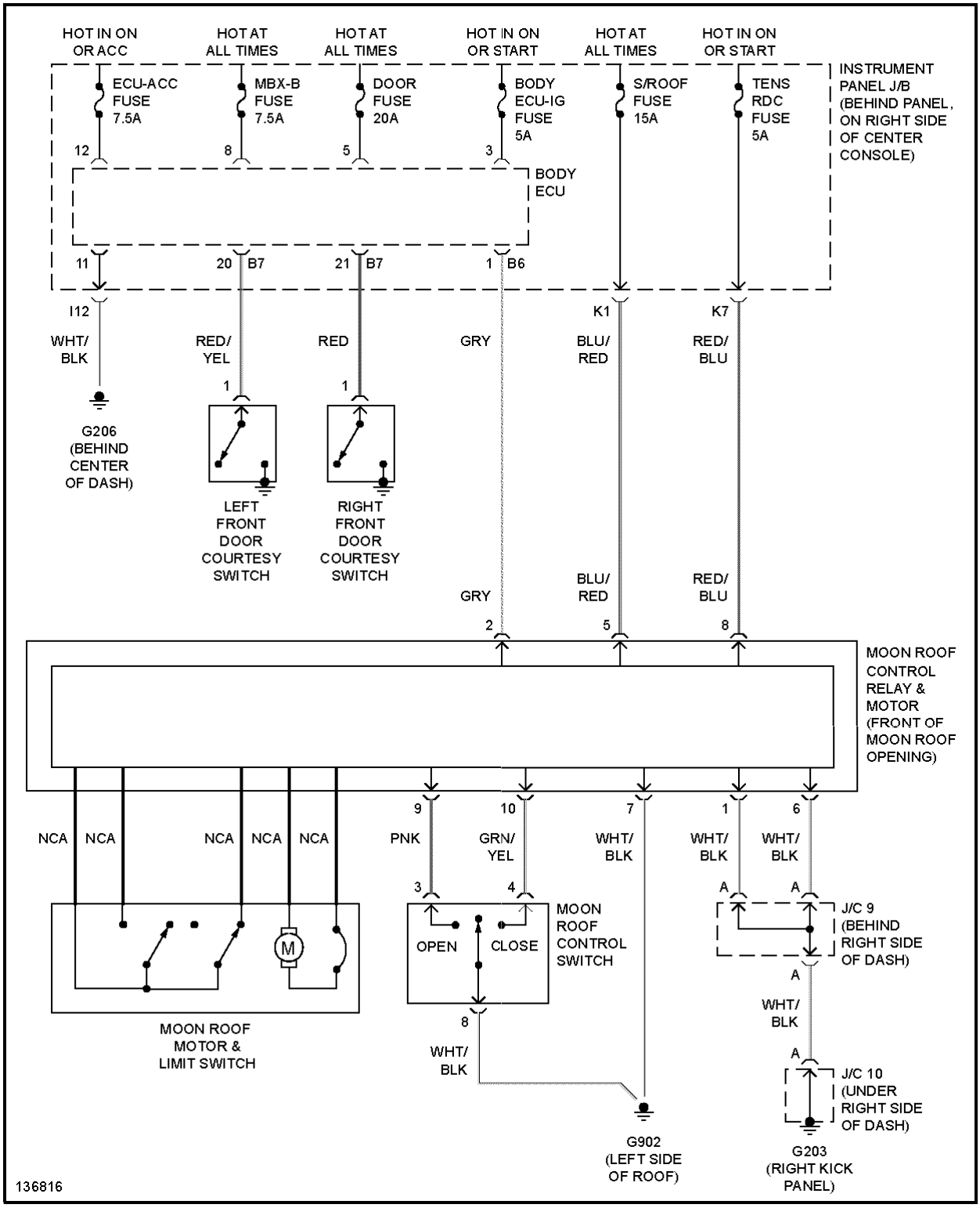

Fig. 72: Power Sun Roof System Wiring Diagram (2000 Celica)

1999 Toyota RAV4

1999-2000 ACCESSORIES & EQUIPMENT Power Sun Roofs

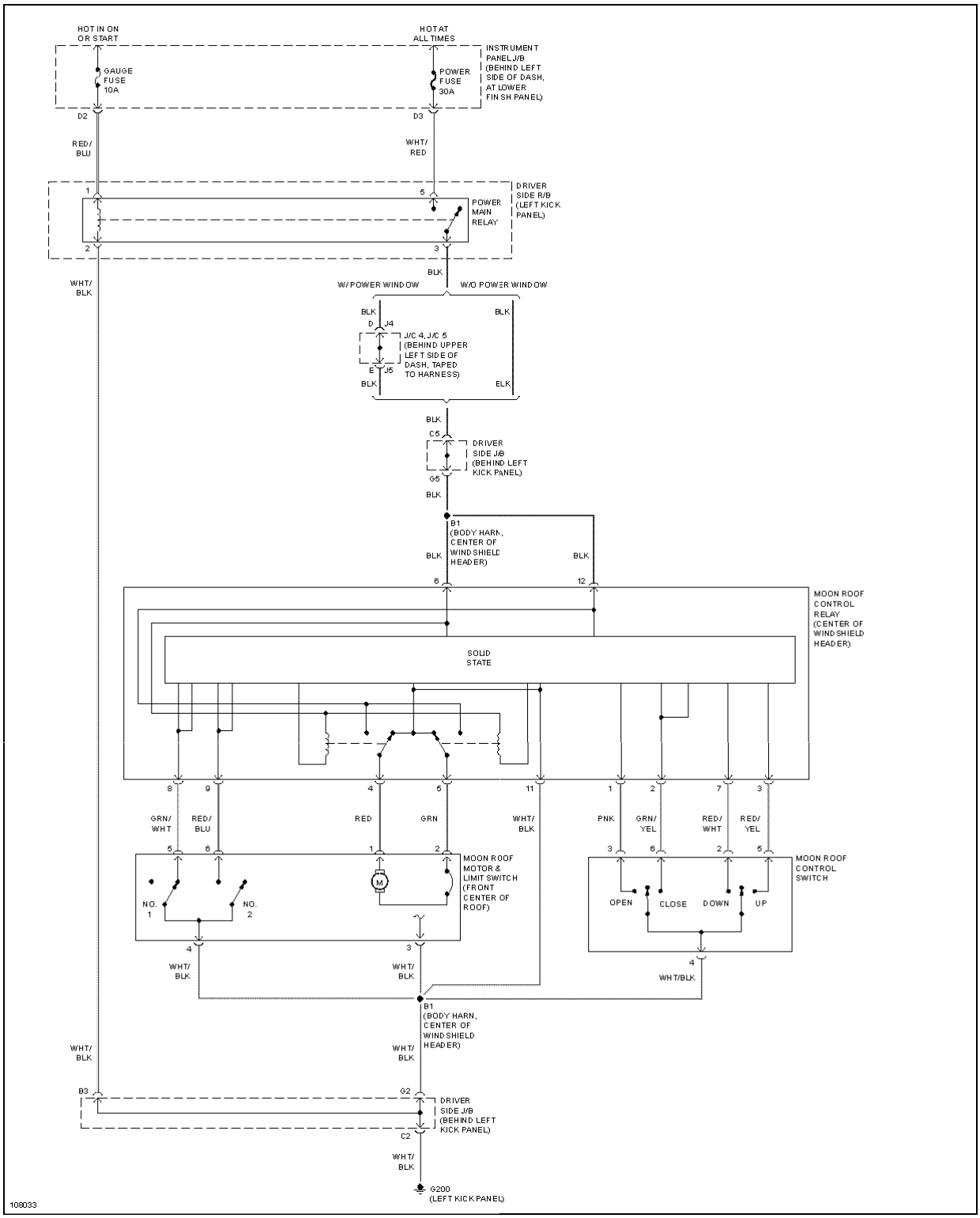

Fig. 73: Power Sun Roof System Wiring Diagram (1999-2000 Corolla)

1999 Toyota RAV4

1999-2000 ACCESSORIES & EQUIPMENT Power Sun Roofs

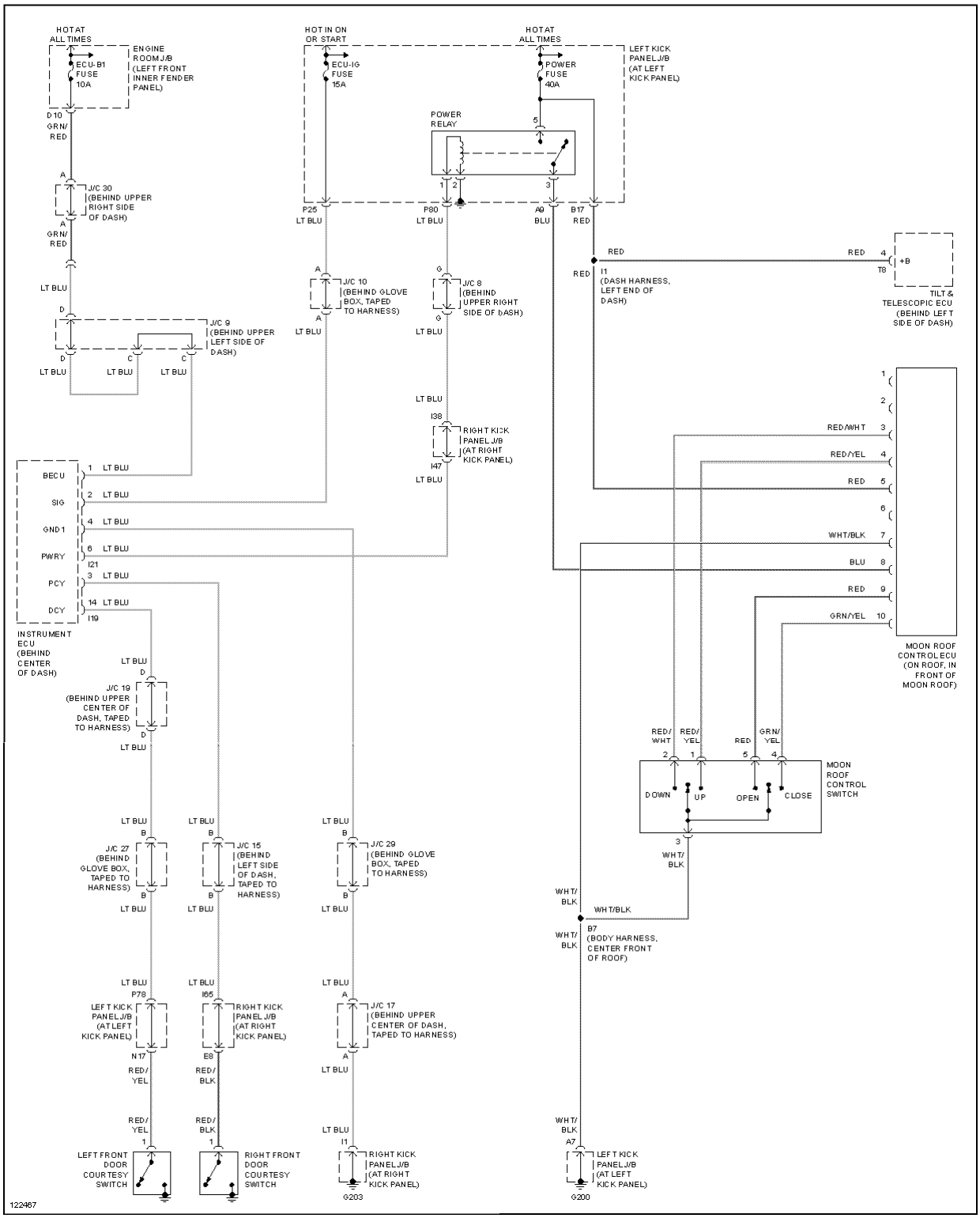

Fig. 74: Power Sun Roof System Wiring Diagram (1999 Land Cruiser)

1999 Toyota RAV4

1999-2000 ACCESSORIES & EQUIPMENT Power Sun Roofs

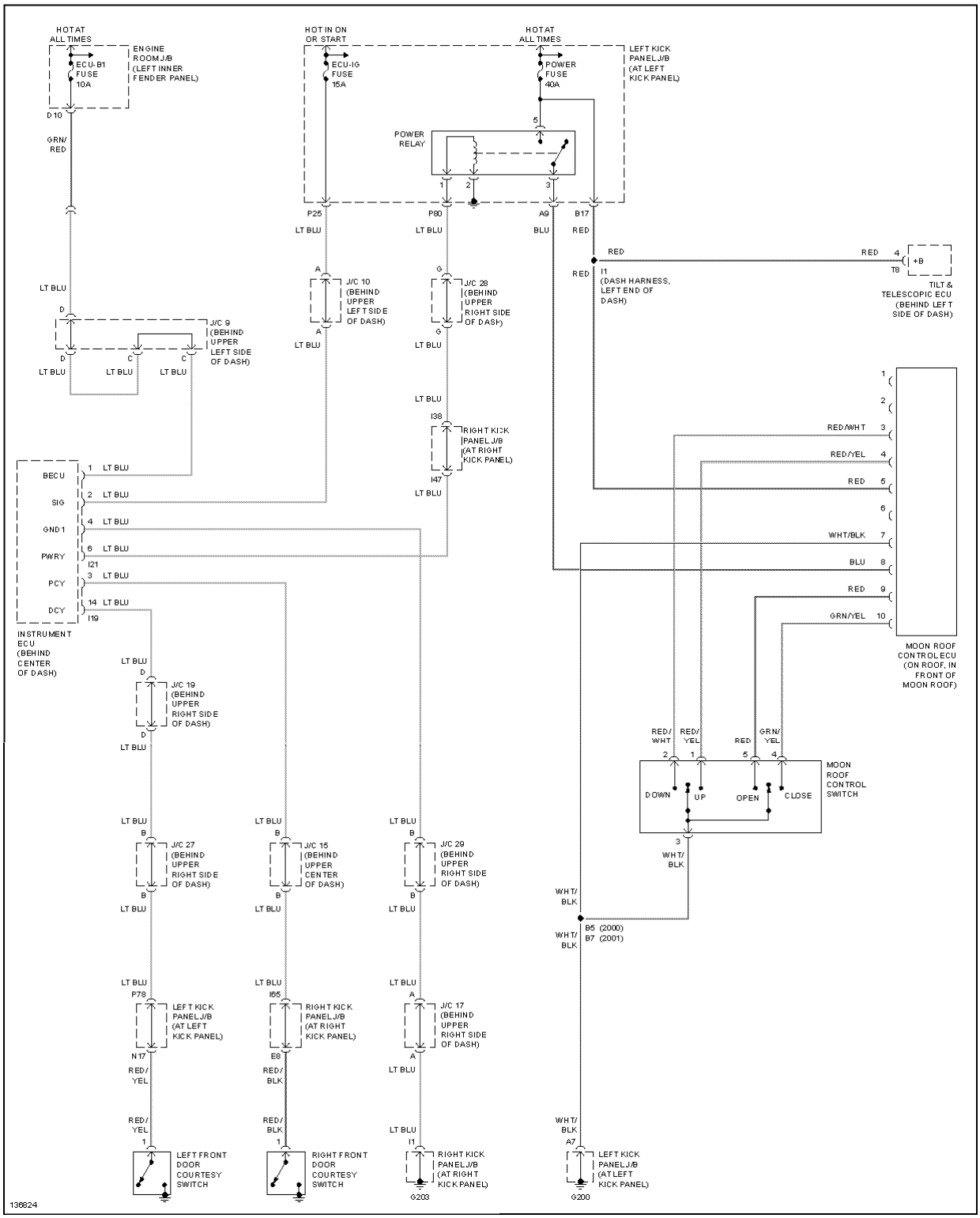

Fig. 75: Power Sun Roof System Wiring Diagram (2000 Land Cruiser)

1999 Toyota RAV4

1999-2000 ACCESSORIES & EQUIPMENT Power Sun Roofs

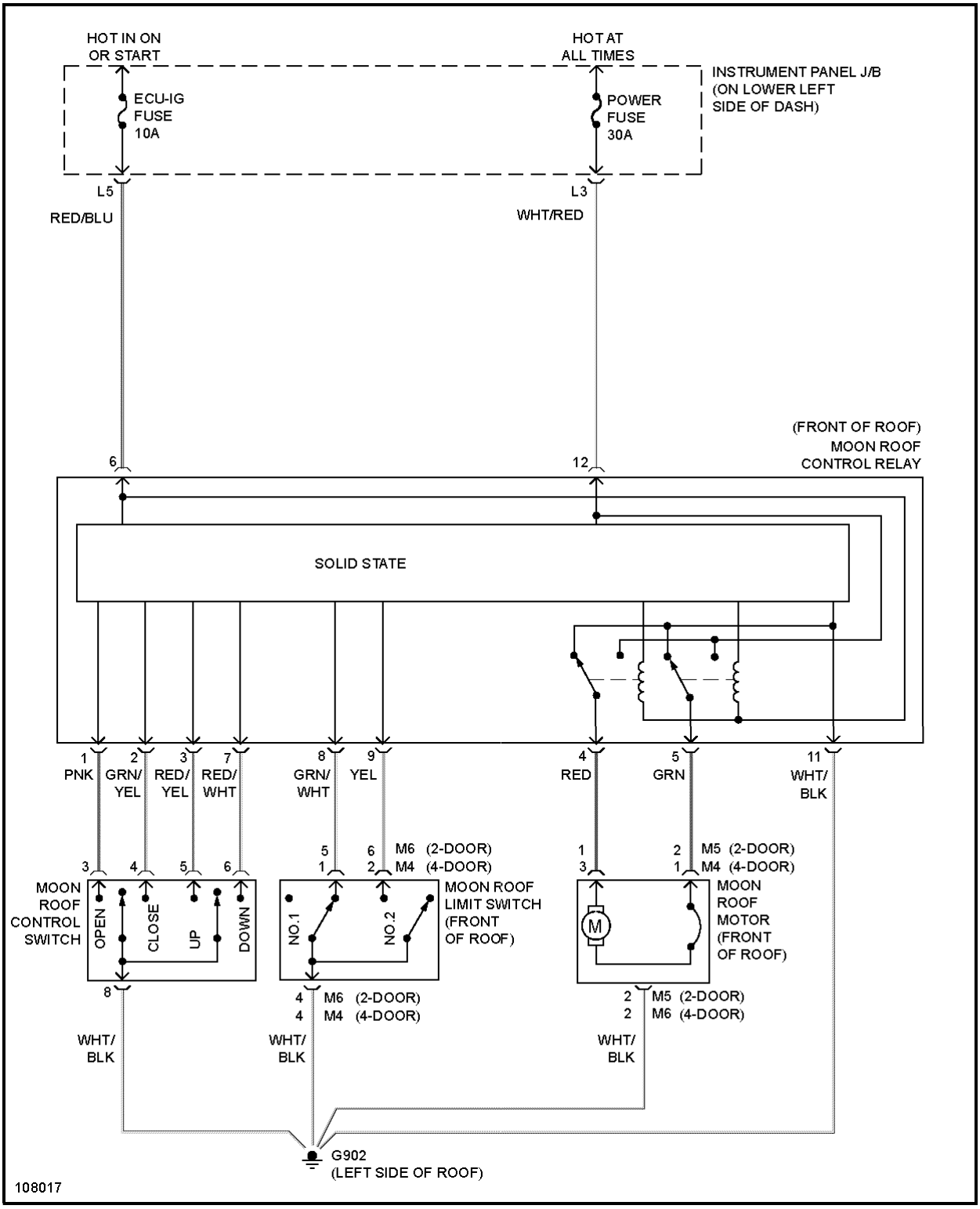

Fig. 76: Power Sun Roof System Wiring Diagram (1999-2000 RAV4)

1999 Toyota RAV4

1999-2000 ACCESSORIES & EQUIPMENT Power Sun Roofs

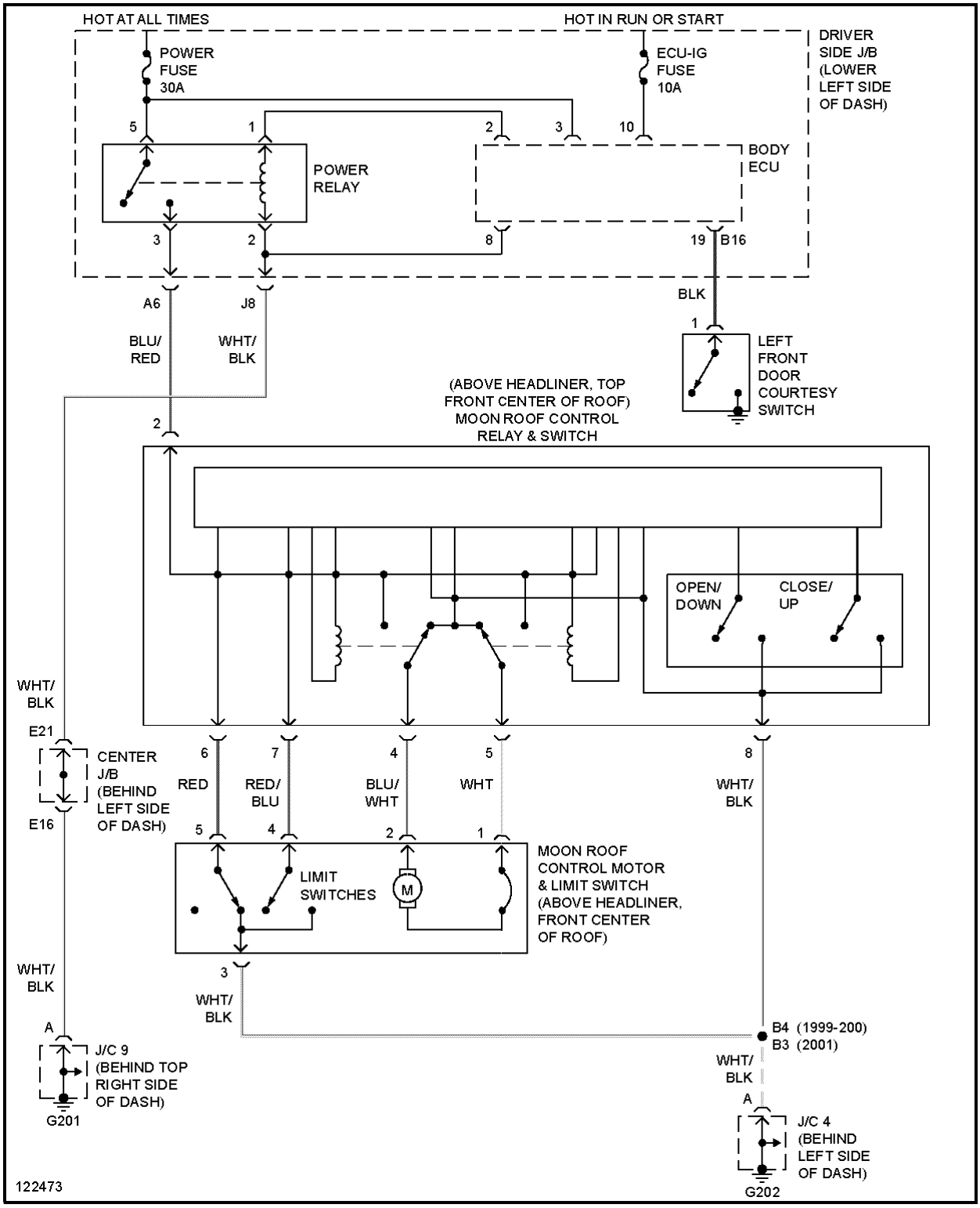

Fig. 77: Power Sun Roof System Wiring Diagram (1999-2000 4Runner)

1999 Toyota RAV4

1999-2000 ACCESSORIES & EQUIPMENT Power Sun Roofs

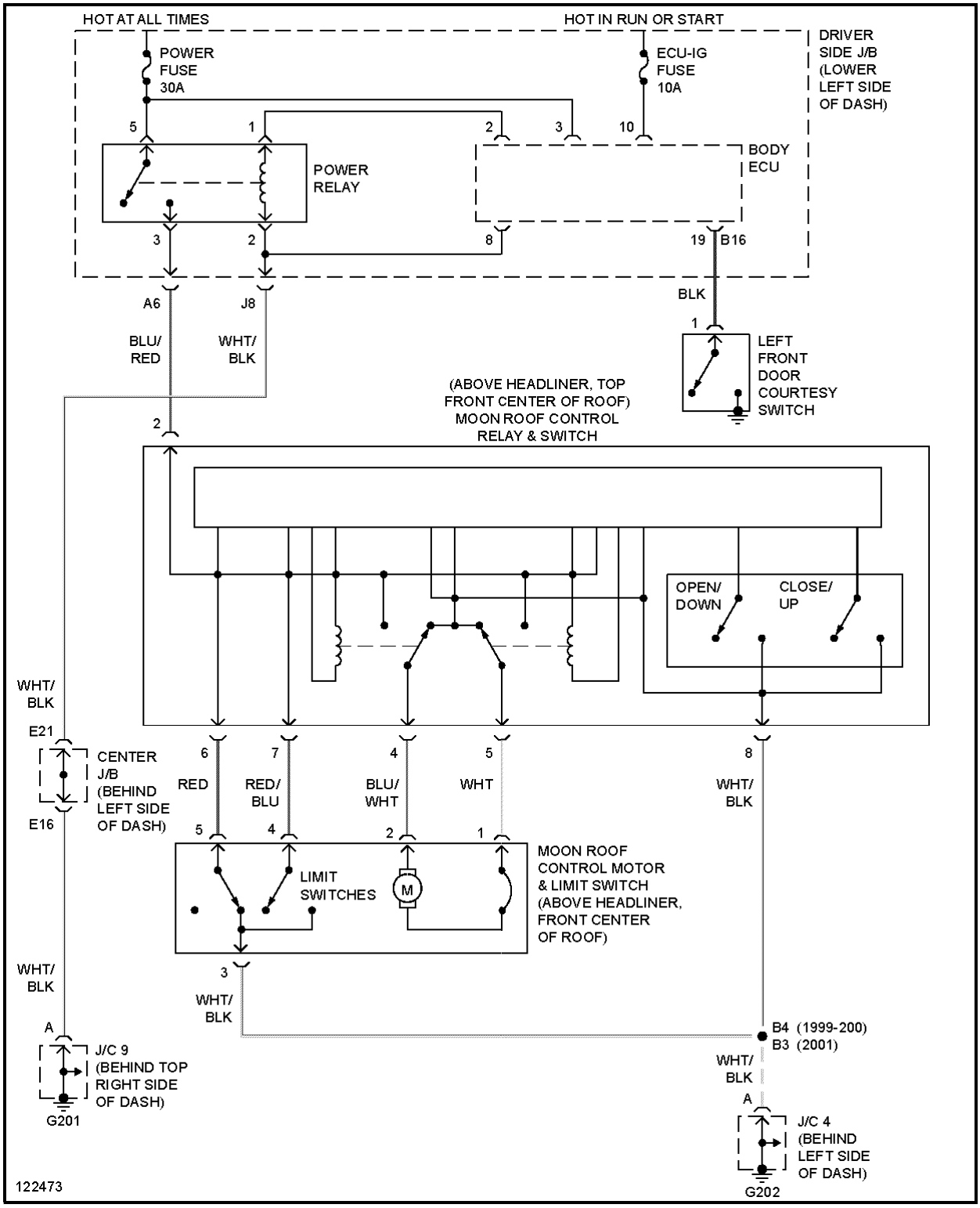

Fig. 78: Power Sun Roof System Wiring Diagram (1999-2000 Sienna)