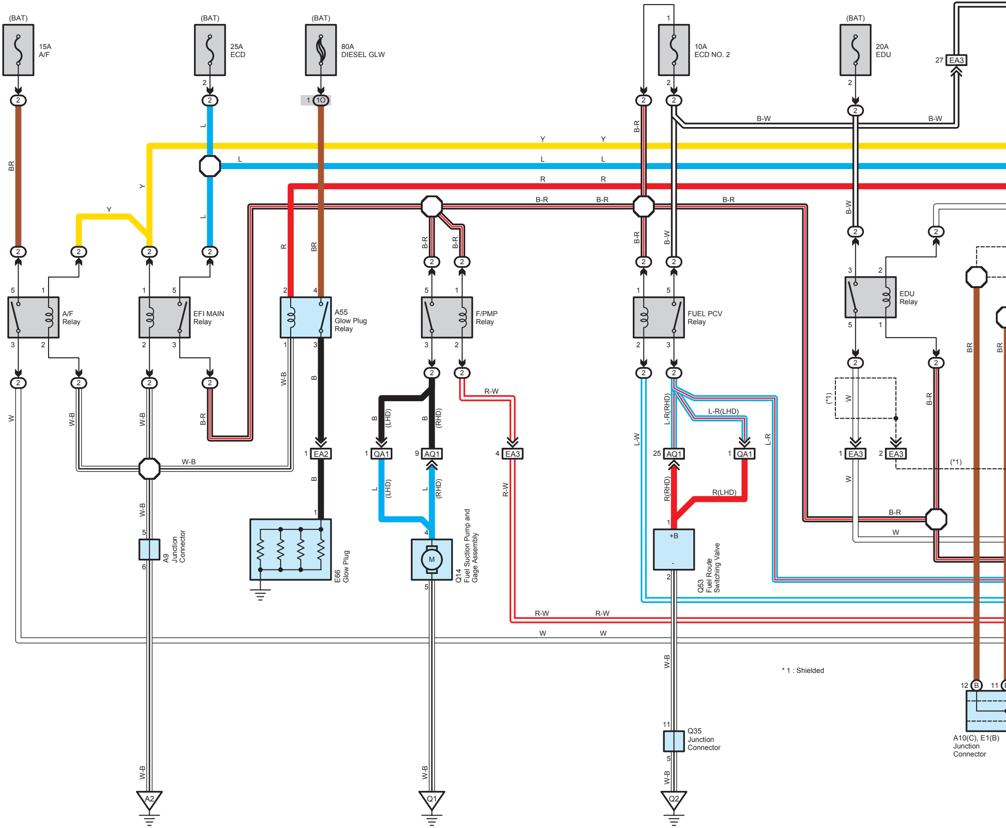
(BAT)
15A
A/F
(BAT)
25A
ECD
(BAT)
80A
DIESEL GLW
10A
ECD NO. 2
(BAT)
20A
EDU
27
EA3
B-W
Y
L
R
B-R
BR
W-B
W
L-W
L-R(RHD)
L-R(LHD)
R(RHD)
R(LHD)
R-W
B
(LHD)
(RHD)
(*1)
A/F
Relay
EFI MAIN
Relay
A55
Glow Plug
Relay
F/PMP
Relay
FUEL PCV
Relay
EDU
Relay
EA2
QA1
AQ1
EA3
A9
Junction
Connector
E66
Glow Plug
M
Q14
Fuel Suction Pump and
Gage Assembly
+B
-
Q53
Fuel Route
Switching Valve
Q35
Junction
Connector
A10(C), E1(B)
Junction
Connector
* 1 : Shielded
A2
Q1
Q2

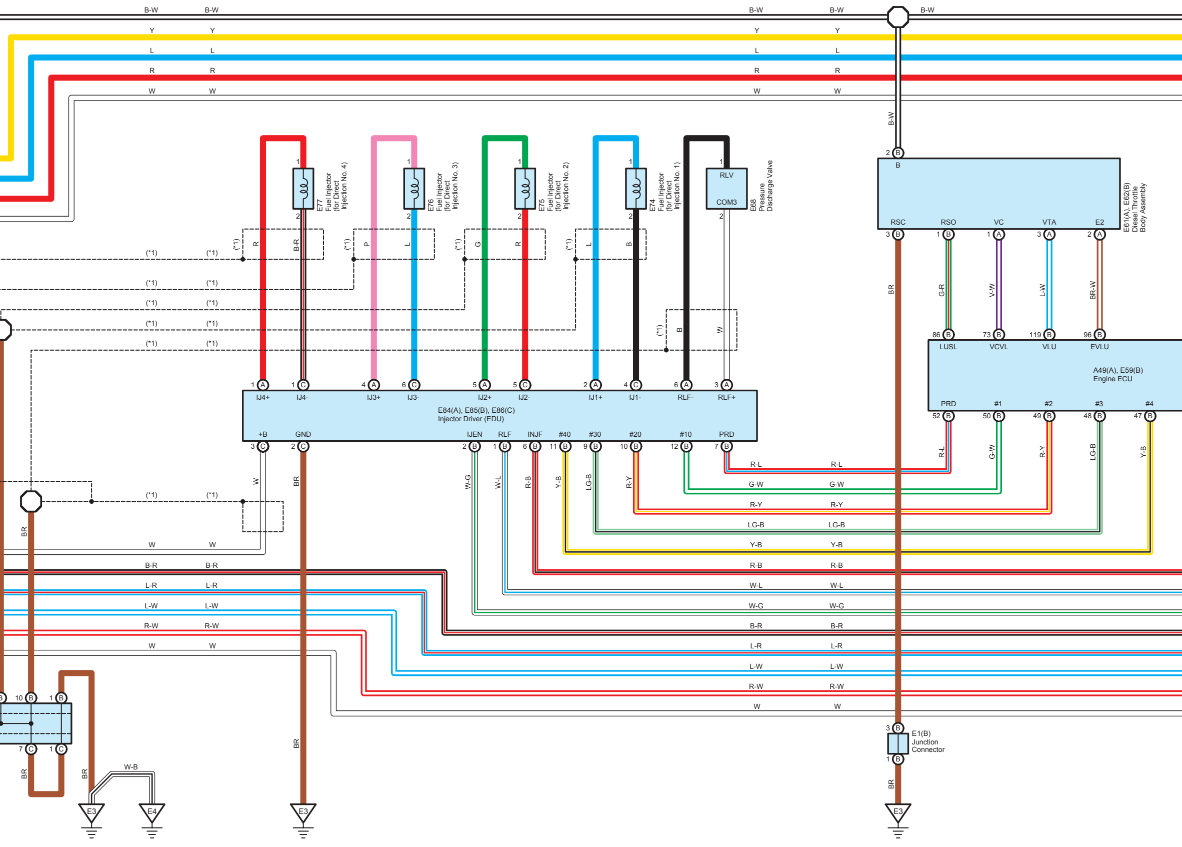
B-W
Y
L
R
W
E77 Fuel Injector (for Direct Injection No. 4)
E76 Fuel Injector (for Direct Injection No. 3)
E75 Fuel Injector (for Direct Injection No. 2)
E74 Fuel Injector (for Direct Injection No. 1)
E68 Pressure Discharge Valve
RLV
COM3
(*1)
B-R
P
G
E84(A), E85(B), E86(C) Injector Driver (EDU)
IJ4+
IJ4-
IJ3+
IJ3-
IJ2+
IJ2-
IJ1+
IJ1-
RLF-
RLF+
+B
GND
IJEN
RLF
INJF
#40
#30
#20
#10
PRD
E61(A), E62(B) Diesel Throttle Body Assembly
RSC
RSO
VC
VTA
E2
BR
G-R
V-W
L-W
BR-W
A49(A), E59(B) Engine ECU
LUSL
VCVL
VLU
EVLU
#1
#2
#3
#4
R-L
G-W
R-Y
LG-B
Y-B
R-B
W-L
W-G
L-R
R-W
W-B
E1(B) Junction Connector
E3
E4

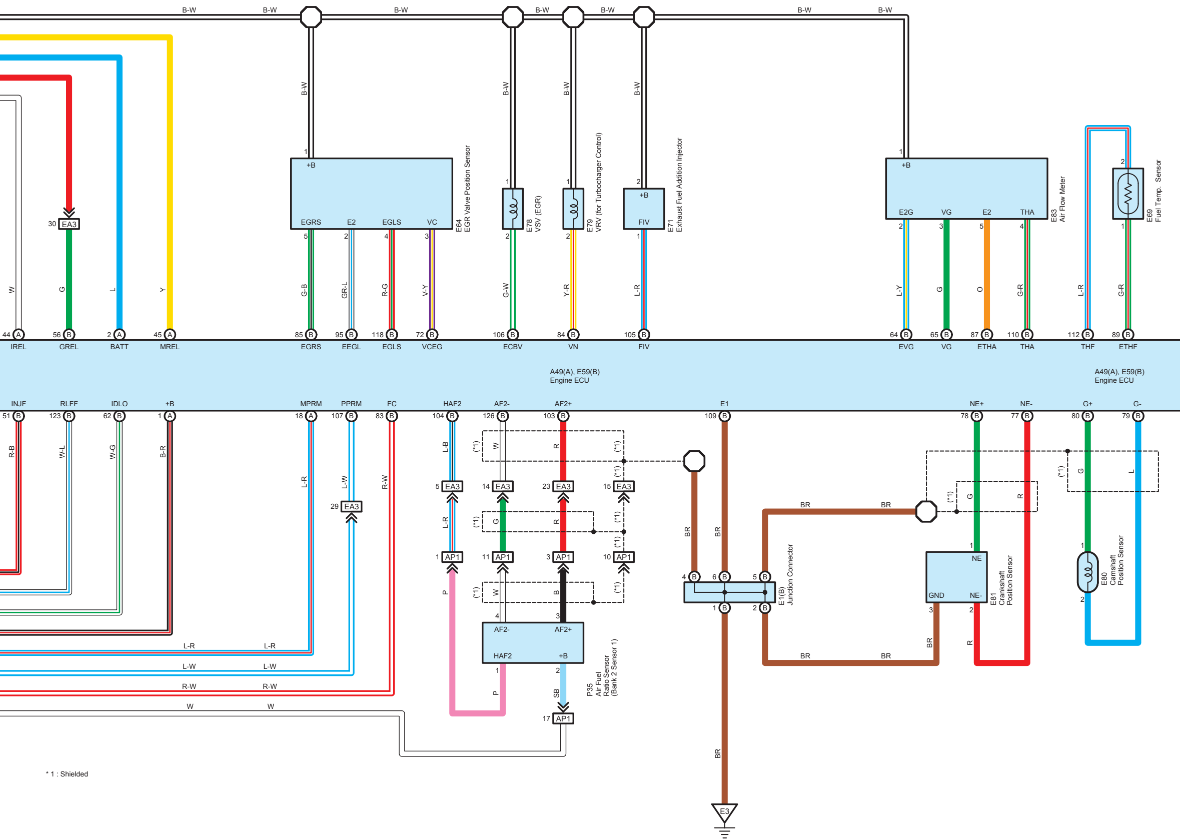
B-W
B-W
B-W
B-W
B-W
B-W
B-W
+B
EGRS
E2
EGLS
VC
E64
EGR Valve Position Sensor
E78
VSV (EGR)
E79
VRV (for Turbocharger Control)
+B
FIV
E71
Exhaust Fuel Addition Injector
+B
E2G
VG
E2
THA
E83
Air Flow Meter
E69
Fuel Temp. Sensor
30 EA3
W
G
L
Y
G-B
GR-L
R-G
V-Y
G-W
Y-R
L-R
L-Y
G
O
G-R
L-R
G-R
44 A IREL
56 B GREL
2 A BATT
45 A MREL
85 B EGRS
95 B EEGL
118 B EGLS
72 B VCEG
106 B ECBV
84 B VN
105 B FIV
64 B EVG
65 B VG
87 B ETHA
110 B THA
112 B THF
89 B ETHF
A49(A), E59(B)
Engine ECU
A49(A), E59(B)
Engine ECU
INJF 51 B
RLFF 123 B
IDLO 62 B
+B 1 A
MPRM 18 A
PPRM 107 B
FC 83 B
HAF2 104 B
AF2- 126 B
AF2+ 103 B
E1 109 B
NE+ 78 B
NE- 77 B
G+ 80 B
G- 79 B
R-B
W-L
W-G
B-R
L-R
L-W
R-W
L-B
W
R
(*1)
5 EA3
14 EA3
23 EA3
15 EA3
29 EA3
L-R
G
R
1 AP1
11 AP1
3 AP1
10 AP1
P
W
B
AF2-
AF2+
HAF2
+B
P
SB
17 AP1
P35
Air Fuel
Ratio Sensor
(Bank 2 Sensor 1)
L-R
L-R
L-W
L-W
R-W
R-W
W
W
BR
BR
BR
E1(B)
Junction Connector
BR
BR
BR
BR
NE
GND
NE-
E81
Crankshaft
Position Sensor
G
R
BR
R
G
L
E80
Camshaft
Position Sensor
BR
E3

* 1 : Shielded

* 1 : Shielded

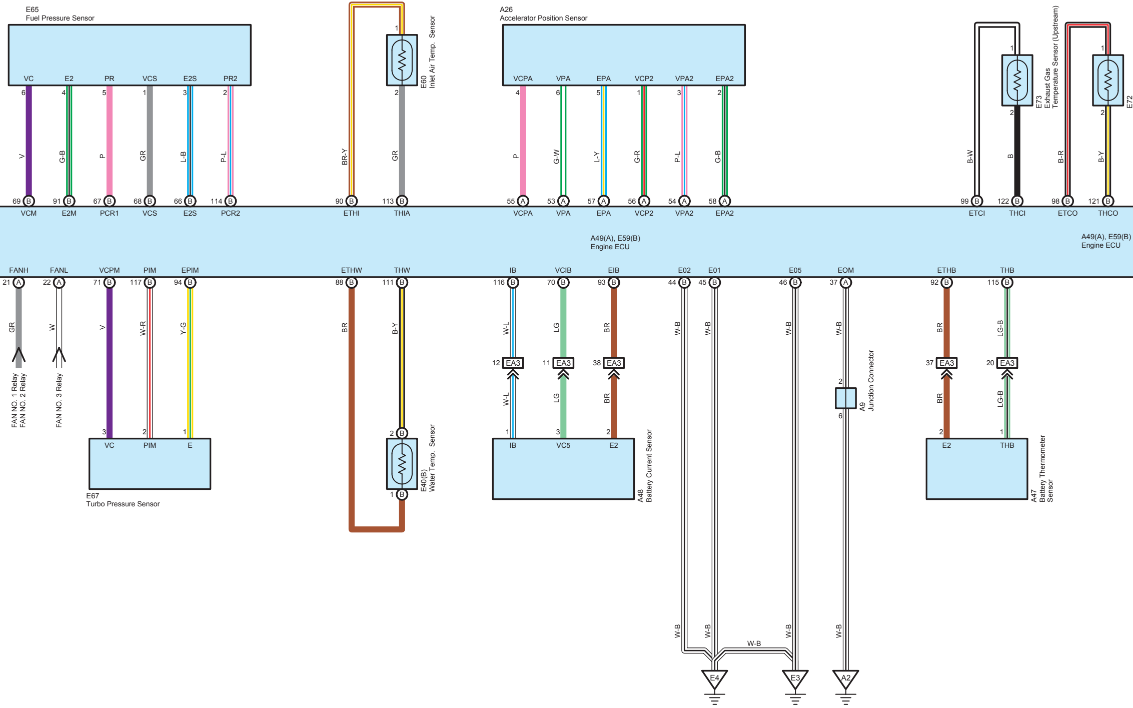
E65
Fuel Pressure Sensor
VC
E2
PR
VCS
E2S
PR2
6
4
5
1
3
2
V
G-B
P
GR
L-B
P-L
69 B
91 B
67 B
68 B
66 B
114 B
VCM
E2M
PCR1
VCS
E2S
PCR2
BR-Y
GR
1
2
E60
Inlet Air Temp. Sensor
90 B
113 B
ETHI
THIA
A26
Accelerator Position Sensor
VCPA
VPA
EPA
VCP2
VPA2
EPA2
4
6
5
1
3
2
P
G-W
L-Y
G-R
P-L
G-B
55 A
53 A
57 A
56 A
54 A
58 A
VCPA
VPA
EPA
VCP2
VPA2
EPA2
E73
Exhaust Gas
Temperature Sensor (Upstream)
E72
1
2
1
2
B-W
B
B-R
B-Y
99 B
122 B
98 B
121 B
ETCI
THCI
ETCO
THCO
A49(A), E59(B)
Engine ECU
A49(A), E59(B)
Engine ECU
FANH
FANL
VCPM
PIM
EPIM
21 A
22 A
71 B
117 B
94 B
GR
W
V
W-R
Y-G
FAN NO. 1 Relay
FAN NO. 2 Relay
FAN NO. 3 Relay
3
2
1
VC
PIM
E
E67
Turbo Pressure Sensor
ETHW
THW
88 B
111 B
BR
B-Y
2 B
1 B
E40(B)
Water Temp. Sensor
IB
VCIB
EIB
116 B
70 B
93 B
W-L
LG
BR
12 EA3
11 EA3
38 EA3
W-L
LG
BR
1
3
2
IB
VC5
E2
A48
Battery Current Sensor
E02
E01
E05
EOM
44 B
45 B
46 B
37 A
W-B
W-B
W-B
W-B
2
6
A9
Junction Connector
W-B
W-B
W-B
W-B
W-B
E4
E3
A2
ETHB
THB
92 B
115 B
BR
LG-B
37 EA3
20 EA3
BR
LG-B
2
1
E2
THB
A47
Battery Thermometer
Sensor

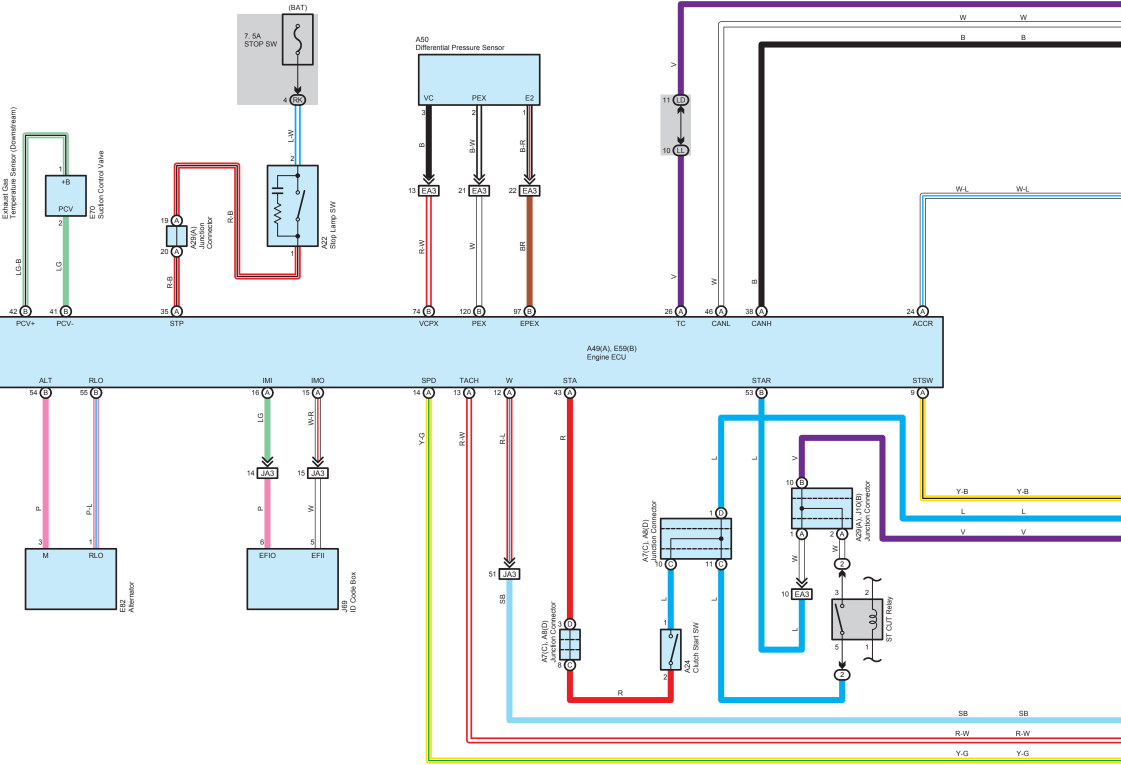
(BAT)
7. 5A
STOP SW
4 RK
L-W
2
A22
Stop Lamp SW
1
R-B
19 A
20 A
A29(A)
Junction
Connector
R-B
Exhaust Gas
Temperature Sensor (Downstream)
1
+B
PCV
2
E70
Suction Control Valve
LG-B
LG
A50
Differential Pressure Sensor
VC
PEX
E2
3
2
1
B
B-W
B-R
13 EA3
21 EA3
22 EA3
R-W
W
BR
V
11 LD
10 LL
V
W
B
V V
W W
B B
W-L W-L
42 B
41 B
35 A
74 B
120 B
97 B
26 A
46 A
38 A
24 A
PCV+
PCV-
STP
VCPX
PEX
EPEX
TC
CANL
CANH
ACCR
A49(A), E59(B)
Engine ECU
ALT
RLO
IMI
IMO
SPD
TACH
W
STA
STAR
STSW
54 B
55 B
16 A
15 A
14 A
13 A
12 A
43 A
53 B
9 A
P
P-L
3
1
M
RLO
E82
Alternator
LG
W-R
14 JA3
15 JA3
P
W
6
5
EFIO
EFII
J69
ID Code Box
Y-G
R-W
R-L
R
51 JA3
SB
L
L
V
10 B
1 D
A7(C), A8(D)
Junction Connector
10 C
11 C
1 A
2 A
A29(A), J10(B)
Junction Connector
W
W
2
10 EA3
L
L
L
3
2
ST CUT Relay
5
1
2
1
A24
Clutch Start SW
2
3 D
8 C
A7(C), A8(D)
Junction Connector
R
Y-B Y-B
L L
V V
SB SB
R-W R-W
Y-G Y-G

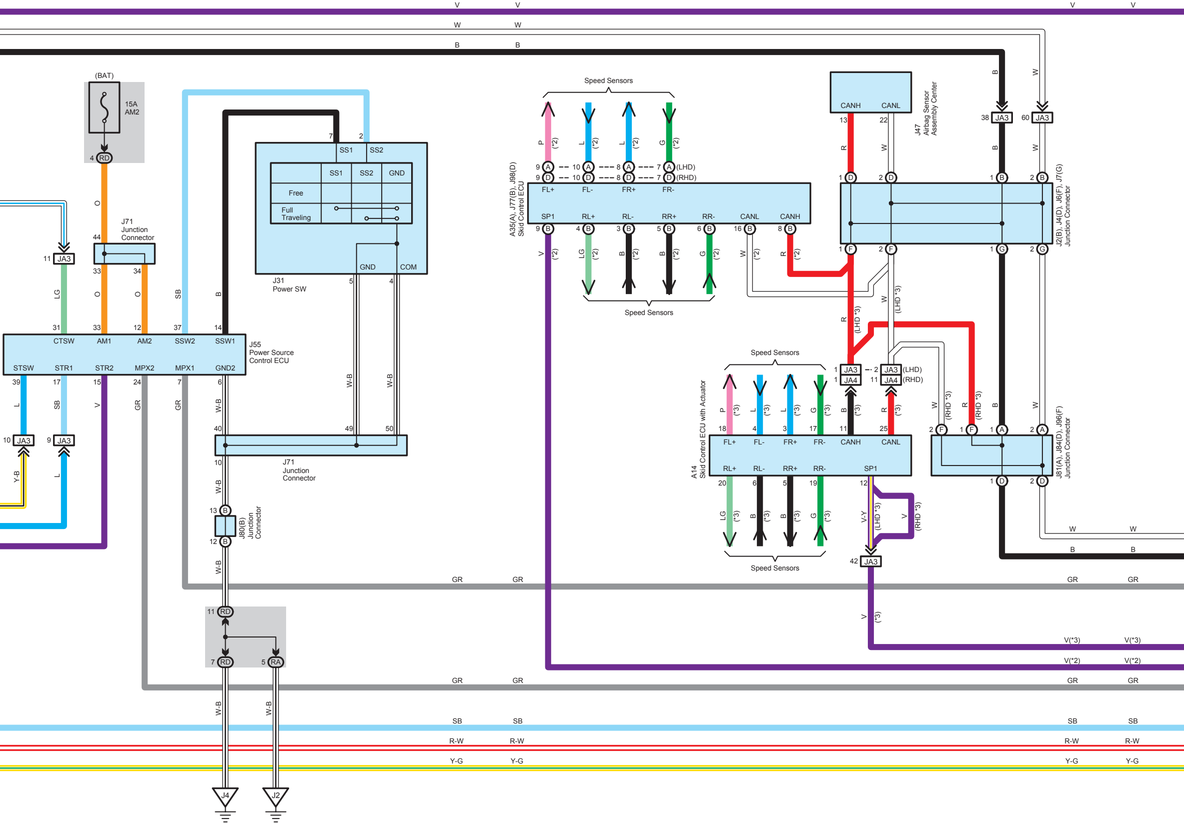

V
W
B
(BAT)
15A
AM2
4 RD
O
J71
Junction
Connector
44
11 JA3
33
34
LG
O
O
SB
B
31
33
12
37
14
CTSW
AM1
AM2
SSW2
SSW1
STSW
STR1
STR2
MPX2
MPX1
GND2
J55
Power Source
Control ECU
39
17
15
24
7
6
L
SB
V
GR
GR
W-B
10 JA3
9 JA3
Y-B
L
7
2
SS1
SS2
SS1
SS2
GND
Free
Full
Traveling
GND
COM
J31
Power SW
5
4
W-B
W-B
40
49
50
10
J71
Junction
Connector
W-B
13 B
12 B
J80(B)
Junction
Connector
W-B
11 RD
7 RD
5 RA
W-B
W-B
J4
J2
Speed Sensors
P (*2)
L (*2)
L (*2)
G (*2)
9 A
10 A
8 A
7 A (LHD)
9 D
10 D
8 D
7 D (RHD)
FL+
FL-
FR+
FR-
SP1
RL+
RL-
RR+
RR-
CANL
CANH
A35(A), J77(B), J98(D)
Skid Control ECU
9 B
4 B
3 B
5 B
6 B
16 B
8 B
V (*2)
LG (*2)
B (*2)
B (*2)
G (*2)
W (*2)
R (*2)
Speed Sensors
CANH
CANL
13
22
R
W
J47
Airbag Sensor
Assembly Center
B
W
38 JA3
60 JA3
B
W
1 D
2 D
1 B
2 B
1 F
2 F
1 G
2 G
J2(B), J4(D), J6(F), J7(G)
Junction Connector
R (LHD *3)
W (LHD *3)
1 JA3
2 JA3 (LHD)
1 JA4
11 JA4 (RHD)
Speed Sensors
P (*3)
L (*3)
L (*3)
G (*3)
B (*3)
R (*3)
18
4
3
17
11
25
FL+
FL-
FR+
FR-
CANH
CANL
RL+
RL-
RR+
RR-
SP1
A14
Skid Control ECU with Actuator
20
6
5
19
12
LG (*3)
B (*3)
B (*3)
G (*3)
V-Y (LHD *3)
V (RHD *3)
Speed Sensors
42 JA3
V (*3)
W (RHD *3)
R (RHD *3)
B
W
2 F
1 F
1 A
2 A
1 D
2 D
J81(A), J84(D), J96(F)
Junction Connector
W
B
GR
V(*3)
V(*2)
GR
SB
R-W
Y-G

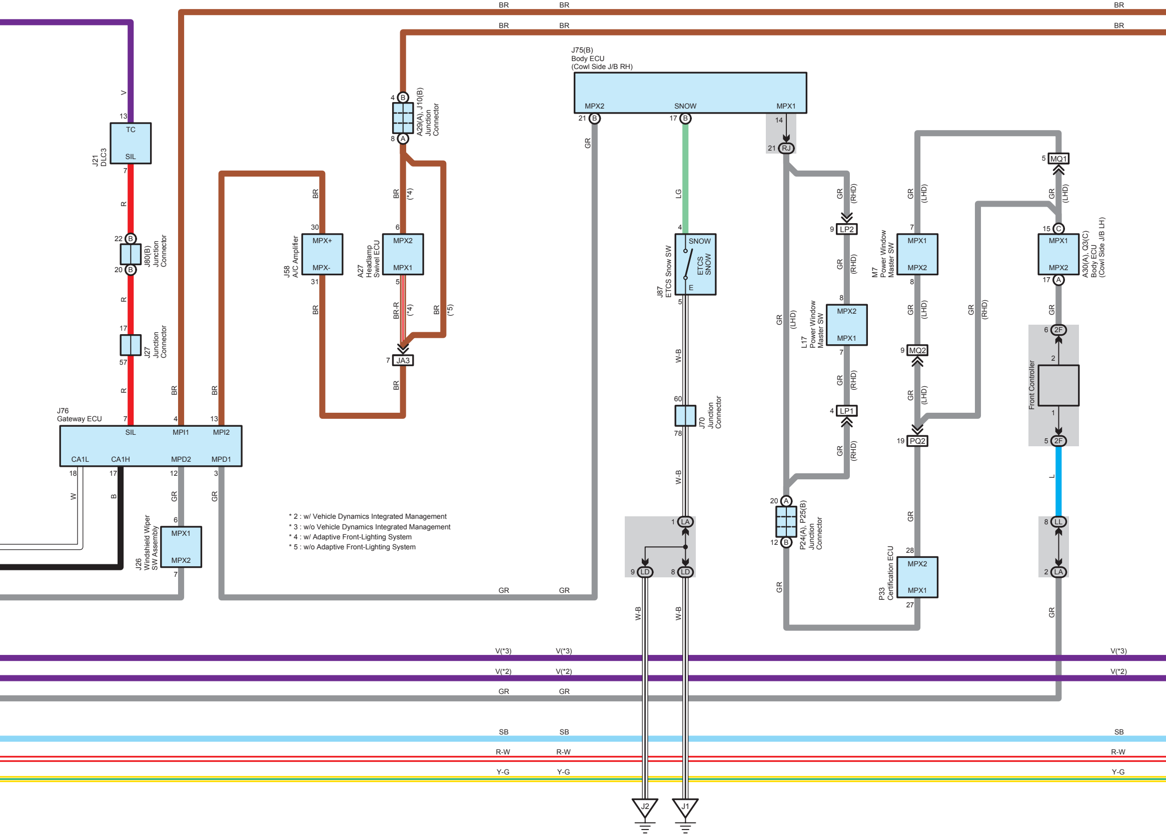
J75(B)
Body ECU
(Cowl Side J/B RH)
MPX2
SNOW
MPX1
J21
DLC3
TC
SIL
J80(B)
Junction
Connector
J27
Junction
Connector
J76
Gateway ECU
SIL
MPI1
MPI2
CA1L
CA1H
MPD2
MPD1
J26
Windshield Wiper
SW Assembly
MPX1
MPX2
J58
A/C Amplifier
MPX+
MPX-
A27
Headlamp
Swivel ECU
MPX2
MPX1
A29(A), J10(B)
Junction
Connector
JA3
J87
ETCS Snow SW
SNOW
ETCS
SNOW
E
J70
Junction
Connector
LA
LD
LD
J2
J1
LP2
LP1
L17
Power Window
Master SW
MPX2
MPX1
P24(A), P25(B)
Junction
Connector
RJ
M7
Power Window
Master SW
MPX1
MPX2
MQ2
PQ2
P33
Certification ECU
MPX2
MPX1
MQ1
A30(A), Q3(C)
Body ECU
(Cowl Side J/B LH)
MPX1
MPX2
2F
Front Controller
2F
LL
LA
(RHD)
(LHD)
(*4)
(*5)
V
R
W
B
BR
BR-R
GR
LG
W-B
L
V(*3)
V(*2)
SB
R-W
Y-G

* 2 : w/ Vehicle Dynamics Integrated Management
* 3 : w/o Vehicle Dynamics Integrated Management
* 4 : w/ Adaptive Front-Lighting System
* 5 : w/o Adaptive Front-Lighting System

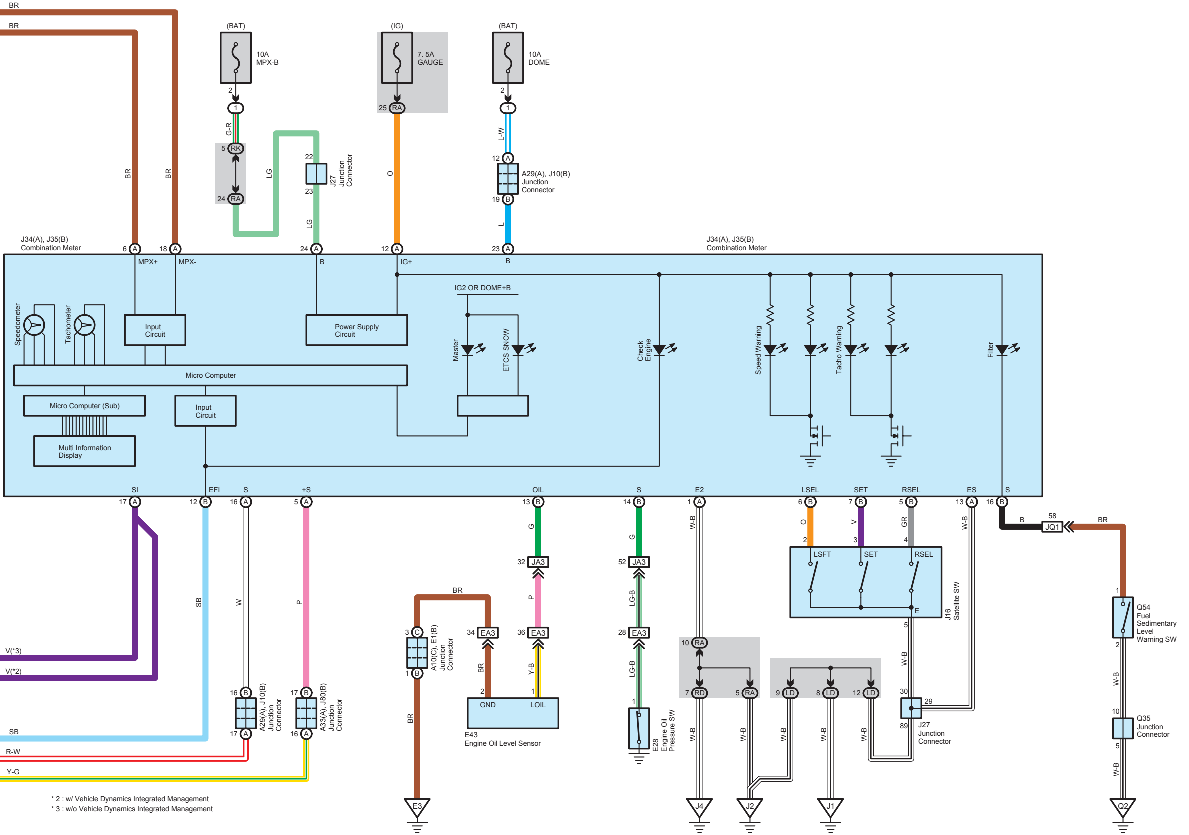
BR
BR
(BAT)
10A
MPX-B
(IG)
7. 5A
GAUGE
(BAT)
10A
DOME
2
1
G-R
5 RK
24 RA
LG
22
23
J27
Junction
Connector
LG
25 RA
O
2
1
L-W
12 A
A29(A), J10(B)
Junction
Connector
19 B
L
BR
BR
J34(A), J35(B)
Combination Meter
6 A
18 A
24 A
12 A
23 A
J34(A), J35(B)
Combination Meter
MPX+
MPX-
B
IG+
B
IG2 OR DOME+B
Speedometer
Tachometer
Input
Circuit
Power Supply
Circuit
Master
ETCS SNOW
Check
Engine
Speed Warning
Tacho Warning
Filter
Micro Computer
Micro Computer (Sub)
Input
Circuit
Multi Information
Display
SI
EFI
S
+S
OIL
S
E2
LSEL
SET
RSEL
ES
S
17 A
12 B
16 A
5 A
13 B
14 B
1 A
6 B
7 B
5 B
13 A
16 B
B
58
JQ1
BR
G
G
W-B
O
V
GR
W-B
32 JA3
52 JA3
2
3
4
LSFT
SET
RSEL
E
J16
Satellite SW
1
Q54
Fuel
Sedimentary
Level
Warning SW
2
W-B
BR
P
LG-B
5
W-B
3 C
1 B
A10(C), E1(B)
Junction
Connector
34 EA3
36 EA3
28 EA3
BR
Y-B
LG-B
2
1
GND
LOIL
E43
Engine Oil Level Sensor
1
E28
Engine Oil
Pressure SW
10 RA
7 RD
5 RA
9 LD
8 LD
12 LD
30
29
89
J27
Junction
Connector
10
Q35
Junction
Connector
5
W-B
SB
W
P
V(*3)
V(*2)
16 B
17 A
A29(A), J10(B)
Junction
Connector
17 B
16 A
A33(A), J80(B)
Junction
Connector
SB
R-W
Y-G
BR
W-B
W-B
W-B
W-B
W-B
E3
J4
J2
J1
Q2

* 2 : w/ Vehicle Dynamics Integrated Management
* 3 : w/o Vehicle Dynamics Integrated Management