2004 Buick Rendezvous Owner Manual

Seats and Restraint Systems 1-1
Front Seats 1-3
Rear Seats 1-9
Safety Belts 1-22
Child Restraints 1-47
Air Bag Systems 1-72
Restraint System Check 1-82

Features and Controls 2-1
Keys 2-3
Doors and Locks 2-8
Windows 2-13
Theft-Deterrent Systems 2-15
Starting and Operating Your Vehicle 2-19
Mirrors 2-32
OnStar® System 2-33
HomeLink® Transmitter 2-35
Storage Areas 2-39
Sunroof 2-48
Vehicle Personalization 2-49

Instrument Panel 3-1
Instrument Panel Overview 3-4
Climate Controls 3-28
Warning Lights, Gages and Indicators 3-39
Message Center 3-50
Driver Information Center (DIC) 3-60
Audio System(s) 3-73

Driving Your Vehicle 4-1
Your Driving, the Road, and Your Vehicle 4-2
Towing 4-33

Service and Appearance Care 5-1
Service 5-3
Fuel 5-4
Checking Things Under the Hood 5-10
All-Wheel Drive 5-48
Bulb Replacement 5-50
Windshield Wiper Blade Replacement 5-55
Tires 5-57
Appearance Care 5-99
Vehicle Identification 5-107
Electrical System 5-108
Capacities and Specifications 5-115

Maintenance Schedule 6-1
Maintenance Schedule 6-2

Customer Assistance Information 7-1
Customer Assistance Information 7-2
Reporting Safety Defects 7-11

Index 1

GENERAL MOTORS, GM, the GM Emblem, BUICK, the BUICK Emblem and the name RENDEZVOUS are registered trademarks of General Motors Corporation.

This manual includes the latest information at the time it was printed. We reserve the right to make changes after that time without further notice. For vehicles first sold in Canada, substitute the name “General Motors of Canada Limited” for Buick Motor Division whenever it appears in this manual.

Please keep this manual in your vehicle, so it will be there if you ever need it when you’re on the road. If you sell the vehicle, please leave this manual in it so the new owner can use it.

Canadian Owners

You can obtain a French copy of this manual from your dealer or from:

Helm, Incorporated
P.O. Box 07130
Detroit, MI 48207

About Driving Your Vehicle

As with other vehicles of this type, failure to operate this vehicle correctly may result in loss of control or an accident. See *Your Driving, the Road, and Your Vehicle on page 4-2*.

How to Use This Manual

Many people read their owner’s manual from beginning to end when they first receive their new vehicle. If you do this, it will help you learn about the features and controls for your vehicle. In this manual, you will find that pictures and words work together to explain things.

Litho in U.S.A.
Part No. 10337755 A First Edition

©Copyright General Motors Corporation 05/30/03
All Rights Reserved

Index

A good place to look for what you need is the Index in back of the manual. It is an alphabetical list of what is in the manual, and the page number where you will find it.

Safety Warnings and Symbols

You will find a number of safety cautions in this book. We use a box and the word CAUTION to tell you about things that could hurt you if you were to ignore the warning.

⚠ CAUTION:

These mean there is something that could hurt you or other people.

In the caution area, we tell you what the hazard is. Then we tell you what to do to help avoid or reduce the hazard. Please read these cautions. If you don't, you or others could be hurt.

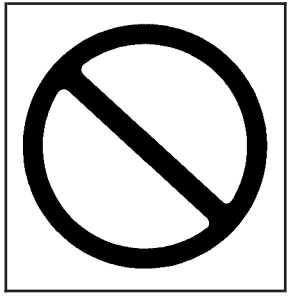

You will also find a circle with a slash through it in this book. This safety symbol means "Don't," "Don't do this" or "Don't let this happen."

Vehicle Damage Warnings

Also, in this book you will find these notices:

Notice: **These mean there is something that could damage your vehicle.**

A notice will tell you about something that can damage your vehicle. Many times, this damage would not be covered by your warranty, and it could be costly. But the notice will tell you what to do to help avoid the damage.

When you read other manuals, you might see CAUTION and NOTICE warnings in different colors or in different words.

You'll also see warning labels on your vehicle. They use the same words, CAUTION or NOTICE.

Vehicle Symbols

Your vehicle has components and labels that use symbols instead of text. Symbols, used on your vehicle, are shown along with the text describing the operation or information relating to a specific component, control, message, gage or indicator.

If you need help figuring out a specific name of a component, gage or indicator, reference the following topics:

- Seats and Restraint Systems in Section 1
- Features and Controls in Section 2
- Instrument Panel Overview in Section 3
- Climate Controls in Section 3
- Warning Lights, Gages and Indicators in Section 3
- Audio System(s) in Section 3
- Engine Compartment Overview in Section 5

These are some examples of vehicle symbols you may find on your vehicle:

CAUTION POSSIBLE INJURY	LATCH BOTH LAP AND SHOULDER BELTS TO PROTECT OCCUPANT DO NOT TWIST SAFETY BELT WHEN ATTACHING		MASTER LIGHTING SWITCH	ENGINE COOLANT TEMP	FUSE BOX ACCESS
PROTECT EYES BY SHIELDING	FASTEN SEAT BELTS	AIR BAG	TURN SIGNALS	BATTERY CHARGING SYSTEM	ENGINE COOLANT FAN
CAUSTIC BATTERY ACID COULD CAUSE BURNS	MOVE SEAT FULLY REARWARD SECURE CHILD SEAT	DO NOT INSTALL A REAR-FACING CHILD RESTRAINT IN THIS SEATING POSITION	PARKING LAMPS	BRAKE	FUEL
AVOID SPARKS OR FLAMES	PULL BELT OUT COMPLETELY THEN SECURE CHILD SEAT	DO NOT INSTALL A FORWARD-FACING CHILD RESTRAINT IN THIS SEATING POSITION	HAZARD WARNING FLASHER	COOLANT	OWNER'S MANUAL
SPARK OR FLAME COULD EXPLODE BATTERY	POWER WINDOW	DOOR LOCK UNLOCK	DAYTIME RUNNING LAMPS	ENGINE OIL PRESSURE	SERVICE
			FOG LAMPS	ANTI-LOCK BRAKES	SERVICE MANUAL

NOTES

Section 1 Seats and Restraint Systems

Front Seats 1-3
Manual Passenger Seat 1-3
Four-Way Manual Driver Seat 1-3
Six-Way Power Seats 1-5
Manual Lumbar 1-5
Heated Seats 1-6
Reclining Seatbacks 1-6
Head Restraints 1-8

Rear Seats 1-9
Rear Seat Operation 1-9
Split Bench Seats 1-9
Captain Chairs 1-14
Stowable Seat 1-18

Safety Belts 1-22
Safety Belts: They Are for Everyone 1-22
Questions and Answers About Safety Belts 1-26
How to Wear Safety Belts Properly 1-27
Driver Position 1-28
Safety Belt Use During Pregnancy 1-36
Right Front Passenger Position 1-37
Rear Seat Passengers 1-38
Center Rear Passenger Position 1-42
Rear Safety Belt Comfort Guides for Children and Small Adults 1-44
Safety Belt Pretensioners 1-46
Safety Belt Extender 1-46

Child Restraints 1-47
Older Children 1-47
Infants and Young Children 1-50
Child Restraint Systems 1-53
Where to Put the Restraint 1-56
Top Strap 1-57
Top Strap Anchor Location 1-58
Lower Anchorages and Top Tethers for Children (LATCH System) 1-62
Securing a Child Restraint Designed for the LATCH System 1-64
Securing a Child Restraint in a Rear Outside Seat Position 1-64
Securing a Child Restraint in a Center Rear Seat Position 1-67
Securing a Child Restraint in the Right Front Seat Position 1-69

Section 1 Seats and Restraint Systems

Air Bag Systems 1-72
Where Are the Air Bags? 1-75
When Should an Air Bag Inflate? 1-77
What Makes an Air Bag Inflate? 1-78
How Does an Air Bag Restrain? 1-79
What Will You See After an Air Bag Inflates? ...1-80
Servicing Your Air Bag-Equipped Vehicle 1-82

Restraint System Check 1-82
Checking Your Restraint Systems 1-82
Replacing Restraint System Parts After a Crash 1-83

Front Seats

Manual Passenger Seat

Pull up on the lever, located on the front of the seat, to unlock and move the seat.

Slide the seat to where you want it and release the lever. To make sure the seat is locked into place, try to move the seat back and forth with your body.

Four-Way Manual Driver Seat

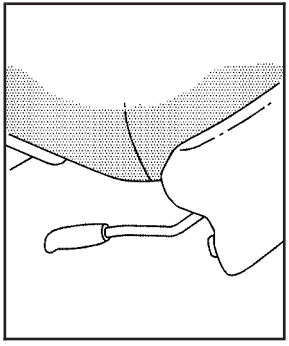

Use the lever located on the front left side of the seat to adjust the seat forward or rearward.

Pull up the lever to unlock the seat. Slide the seat to where you want it and release the lever.

To make sure the seat is locked into place, try to move the seat back and forth with your body.

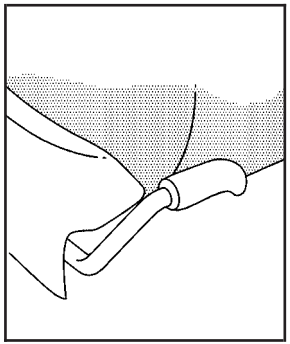

To raise the seat, pull up on the lever located on the front right side of the seat.

To lower the seat, push the lever down. Adjust the seat and release the lever.

⚠ CAUTION:

You can lose control of the vehicle if you try to adjust a manual driver's seat while the vehicle is moving. The sudden movement could startle and confuse you, or make you push a pedal when you don't want to. Adjust the driver's seat only when the vehicle is not moving.

Six-Way Power Seats

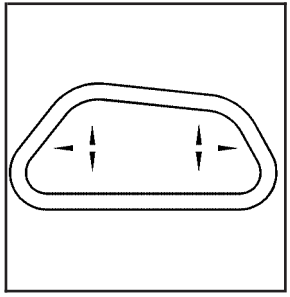

Your vehicle may have this feature. If it does, the six-way power seat control is located on the outboard sides of the driver's and front passenger's seats.

- Move the front of the control up or down to adjust the front portion of the cushion up or down.
- Move the rear of the control up or down to adjust the rear portion of the cushion up or down.
- Lift up or push down on the whole control to move the entire seat up or down.
- To move the whole seat forward or rearward, slide the control forward or rearward.

Manual Lumbar

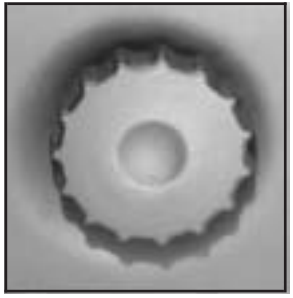

The knob that controls this feature is located on the outboard sides of the driver's and front passenger's seats.

Turn the knob toward the front of the vehicle to increase lumbar support. Turn the knob toward the rear of the vehicle to decrease lumbar support.

Heated Seats

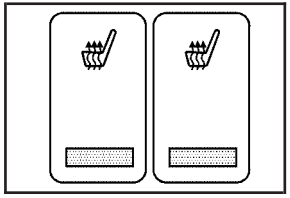

Your vehicle may have heated seats. If it does, the heated seat switches are located in the instrument panel switchbank.

This feature will quickly heat the seat cushions and lower back of the driver's and front passenger's seat. The left switch is for the driver's seat and the right switch is for the front passenger's seat.

Press the top of the switch to turn the heater on. Press the bottom of the switch to turn the heater off. The heated seat switch will turn off when the ignition is turned to OFF and will resume operation when the ignition is turned to ON, unless the switch is turned off.

Reclining Seatbacks

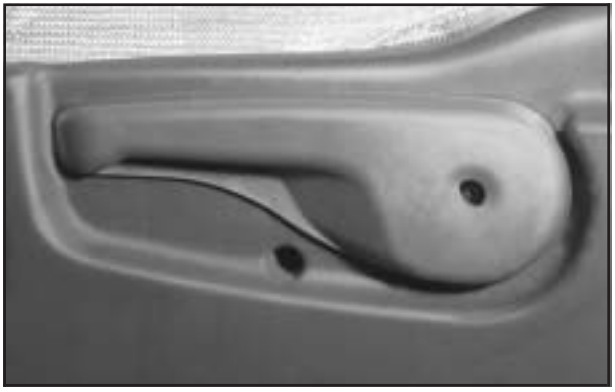

To adjust a seatback, pull up on the lever located on the outboard side of the driver's or front passenger's seats. Release the lever to lock the seatback where you want it. Push and pull on the seat to make sure it's locked into position. Pull up on the lever, and the seat will go to its original upright position.

But don’t have a seatback reclined if your vehicle is moving.

⚠ CAUTION:

Sitting in a reclined position when your vehicle is in motion can be dangerous. Even if you buckle up, your safety belts can’t do their job when you’re reclined like this.

The shoulder belt can’t do its job because it won’t be against your body. Instead, it will be in front of you. In a crash you could go into it, receiving neck or other injuries.

The lap belt can’t do its job either. In a crash the belt could go up over your abdomen. The belt forces would be there, not at your pelvic bones. This could cause serious internal injuries.

For proper protection when the vehicle is in motion, have the seatback upright. Then sit well back in the seat and wear your safety belt properly.

Head Restraints

Adjust your head restraint so that the top of the restraint is closest to the top of your head. This position reduces the chance of a neck injury in a crash.

The front seat head restraints are adjustable. Slide the head restraint up or down to adjust it.

The rear seat head restraints in your vehicle may be adjustable. They work the same as the front seat head restraints.

Rear Seats

Rear Seat Operation

The rear seats in your vehicle have seat operating features to adjust, fold, remove and reinstall the seats. By using the seat operating procedures, in the correct order, you can easily remove the seats from your vehicle.

When you put the seats back in the vehicle, be sure to follow the label on the back of the seat for proper location.

Split Bench Seats

If your vehicle has the split bench seat, the seatbacks can be folded forward or reclined individually and the sections can be flipped forward or removed individually.

Folding or Reclining the Seatbacks

⚠ CAUTION:

If the seatback isn't locked, it could move forward in a sudden stop or crash. That could cause injury to the person sitting there. Always press rearward on the seatback to be sure it is locked.

Base-Level

To recline the seatback on base-level split bench seats, lift up on the recliner lever located on the outboard side of the seatback.

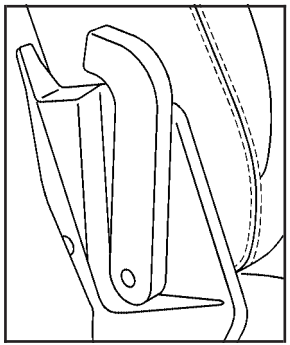

Up-Level

To recline the seatback on up-level split bench seats, push forward on the recliner lever located on the outboard side of the seatback.

Move the seatback to the desired position.

It is easier to raise or lower the seatback if you lean forward and take the weight off the seatback.

The seatbacks on each section also fold forward to put items behind the seats.

Lift up or push forward on the recliner lever and fold the seatback forward. The seatback will lock into place when you push it back to the upright position.

After raising a seatback to an upright position, push and pull on the seatback to check that it is locked upright.

Removing the Split Bench Seat

Each section of the split bench seat can be flipped forward or removed individually.

1. Unlatch the shoulder belt from the lap-belt.
2. Make sure that the seatback is in the upright position.
3. Lift up or push forward on the seatback recliner lever to fold the seatback forward.

Base-Level

4. For base-level split bench seats, pull the lever at the base of the seat on the outboard side to release the rear latches from the floor pins and flip the seat forward.

   For up-level split bench seats, continue pushing forward on the recliner lever to release the rear latches from the floor pins and flip the seat forward.

   The seat can stay in this position or it can be removed from the vehicle by following the next steps.

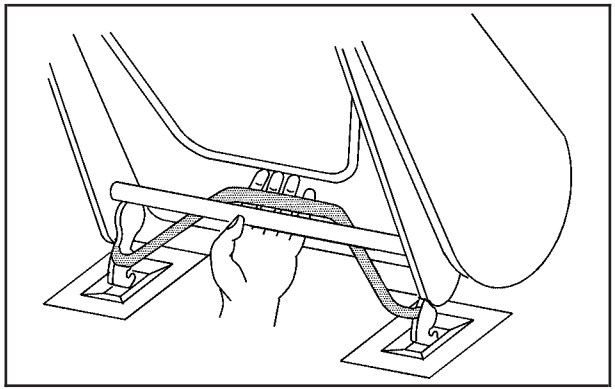

5. To release the front latches, squeeze the angled latch release bar toward the straight crossbar.
6. Remove the seat by rocking it slightly toward the rear of the vehicle and then pulling it out.

Repeat these steps for the other section of the split bench seat.

Replacing the Split Bench Seat

⚠ CAUTION:

If the seatback isn't locked, it could move forward in a sudden stop or crash. That could cause injury to the person sitting there. Always press rearward on the seatback to be sure it is locked.

⚠ CAUTION:

A seat that isn't locked into place properly can move around in a collision or sudden stop. People in the vehicle could be injured. Be sure to lock the seat into place properly when installing it.

⚠ CAUTION:

A safety belt that is improperly routed, not properly attached, or twisted won't provide the protection needed in a crash. The person wearing the belt could be seriously injured. After installing the seat, always check to be sure that the safety belts are properly routed and attached, and are not twisted.

Make sure that the seatback is in the folded forward position and that the safety belts are on the correct section of the seat.

Don't put the sections of the bench seat in so that they face rearward because they won't latch that way.

The split bench seat sections have seat position labels, located on the back of each section, showing where the section must go.

The seat must be placed in the proper location for the legs to attach correctly.

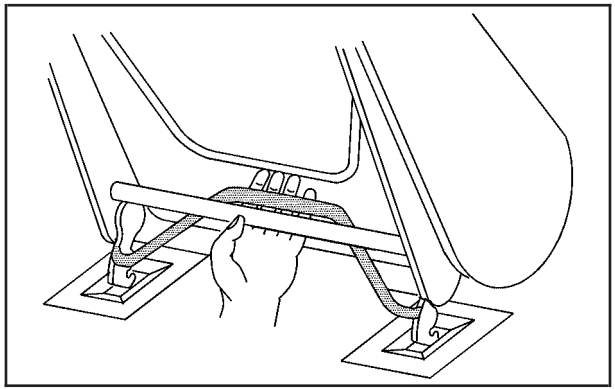

1. Squeeze the angled latch release bar toward the straight crossbar while placing the front hooks of the bench seat onto the front two floor pins.

2. Make sure that the bench seat is angled so that the front hooks clear the floor pins. If the front legs are not attached correctly, the rear legs will not attach to the rear set of floor pins.

3. Firmly push the rear hooks onto the rear floor pins by pushing down on the rear of the seat.
4. Try to raise the seat to check that it is locked down.
5. Lift the seatback recliner lever and raise the seatback until it locks upright.
6. Push and pull on the seatback to check that it is locked upright.
7. Attach the lap belt.

Captain Chairs

If your vehicle has captain's chairs, the chairs and seatbacks can be adjusted forward or rearward.

Adjusting the Captain's Chairs (Second Row)

To adjust he second row captain's chairs, use the adjustment bar located below the front of each seat.

Lift up the lever to slide the seat forward or rearward. Release the lever. Push and pull on the seat to make sure it is locked into place.

Folding or Reclining the Seatbacks

⚠ CAUTION:

If the seatback isn't locked, it could move forward in a sudden stop or crash. That could cause injury to the person sitting there. Always press rearward on the seatback to be sure it is locked.

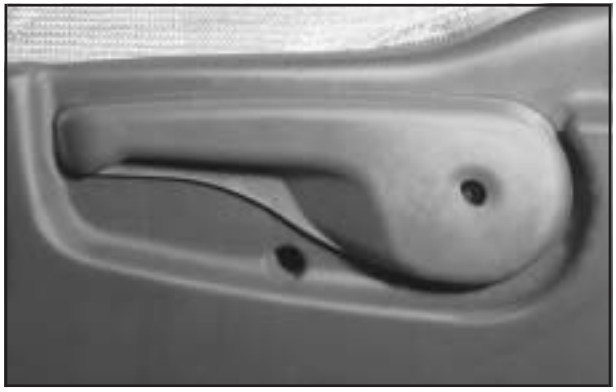

To recline the seatback, lift up on the recliner lever located on the outboard side of the seatback. Use the recliner lever to move the seatback to the desired position.

It is easier to raise or lower the seatback if you lean forward and take the weight off the seatback.

The seatbacks on the second row captain's chairs fold forward the same way.

After raising a seatback to an upright position, push and pull on the seatback to check that it is locked upright.

Removing the Captain's Chairs

1. Make sure that the seatback is in the upright position.
2. Lift the seatback recliner lever to fold the seatback forward.

3. Pull up on the lever, located at the base on the outboard side of the seat, to release the rear latches from the floor pins.

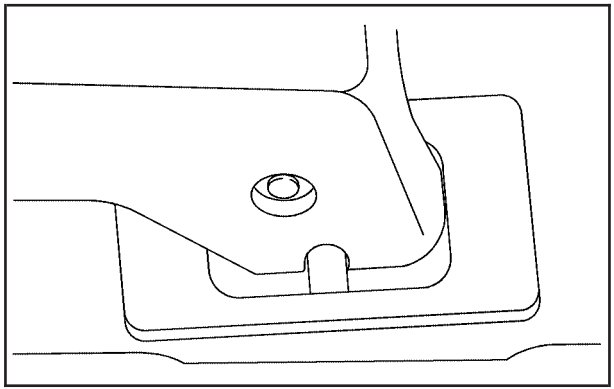

4. The seat can then be lifted off the front floor pins.
5. Remove the seat by rocking it slightly toward the rear of the vehicle and then pulling it out.

Repeat these steps for the other captain's chair.

Replacing the Captain's Chairs

⚠ CAUTION:

If the seatback isn't locked, it could move forward in a sudden stop or crash. That could cause injury to the person sitting there. Always press rearward on the seatback to be sure it is locked.

⚠ CAUTION:

A seat that isn't locked into place properly can move around in a collision or sudden stop. People in the vehicle could be injured. Be sure to lock the seat into place properly when installing it.

⚠ CAUTION:

A safety belt that is improperly routed, not properly attached, or twisted won't provide the protection needed in a crash. The person wearing the belt could be seriously injured. After installing the seat, always check to be sure that the safety belts are properly routed and attached, and are not twisted.

Make sure that the seatback is in the folded forward position and that the safety belts are on the correct side of the chair.

Don't put the chairs in so that they face rearward because they won't latch that way.

The captain's chairs have seat position labels, located on the back of each section, showing where the section must go.

The seat must be placed in the proper location for the legs to attach correctly.

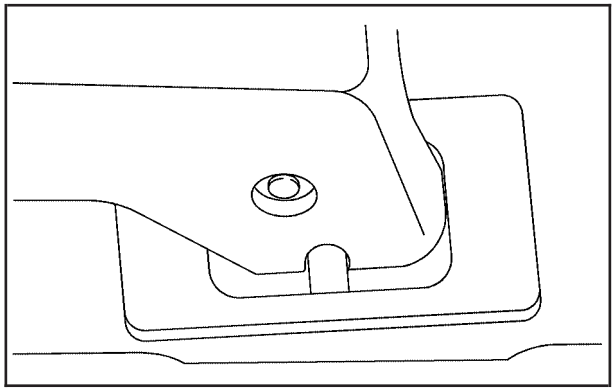

1. Hook the front latches over the front floor pins.

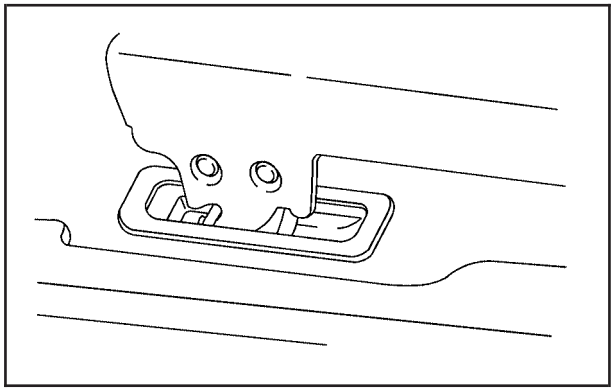

2. Push the rear of the seat down to lock the rear latches onto the rear set of floor pins.
3. Push and pull on the seat to check that it is properly attached.

Stowable Seat

The stowable seat is a two passenger bench seat and comes with the rear convenience center. See *Rear Convenience Center on page 2-44* for more information. The stowable seat can be removed and replaced or, with the seatback folded, it can lie flat with the convenience center.

Folding the Seatback

⚠ CAUTION:

If the seatback isn't locked, it could move forward in a sudden stop or crash. That could cause injury to the person sitting there. Always press rearward on the seatback to be sure it is locked.

To fold the seatback down, pull up on the lever located on the back of the seat. Push down on the seatback until it is locked into place.

Push and pull on the seatback to make sure that it is locked into place.

To raise the seatback, do one of the following:

- From the rear of the vehicle, pull up on the lever to release the seatback. Then pull the strap, located on the right side of the seat, to pull the seatback up. The seatback has a pocket to stow the strap on the side of the seatback when not in use, or
- from the passenger's side door, pull up on the lever to release the seatback. Then push up on the seatback to raise the seat.

Push and pull on the seatback to make sure that it is locked into the upright position.

Removing the Stowable Seat

1. Remove the convenience center, if it is in the vehicle. See *Rear Convenience Center on page 2-44* for more information.
2. Make sure all items are off the stowable seat.
3. If the seatback is down, put the seatback in its upright position before removing the seat. See "Folding the Seatback" listed previously.
4. From the front of the bench seat, remove the two nuts from the brackets, located on the floor on each side.
5. From behind the bench seat, fold the seatback down.
6. Remove the rear nuts located on the floor on each side.
7. Remove the seat by rocking it slightly toward the rear of the vehicle and then pulling it out through the rear of the vehicle. This should be done in one motion.
8. Put the nuts back onto the screws so the nuts do not get misplaced.

Replacing the Stowable Seat

⚠ CAUTION:

If the seatback isn't locked, it could move forward in a sudden stop or crash. That could cause injury to the person sitting there. Always press rearward on the seatback to be sure it is locked.

⚠ CAUTION:

A seat that isn't locked into place properly can move around in a collision or sudden stop. People in the vehicle could be injured. Be sure to lock the seat into place properly when installing it.

⚠ CAUTION:

A safety belt that is improperly routed, not properly attached, or twisted won't provide the protection needed in a crash. The person wearing the belt could be seriously injured. After installing the seat, always check to be sure that the safety belts are properly routed and attached, and are not twisted.

Do not put the stowable seat in so that it faces rearward. The stowable seat has to go in before the rear convenience center. See *Rear Convenience Center on page 2-44* for more information.

The stowable seat has seat position labels, located on the back of the seat, showing where the seat must go.

The seat must be placed in the proper location for the legs to attach correctly.

Make sure that the seatback is folded forward before beginning this procedure.

1. Remove the nuts from the screws.
2. Place the stowable seat on the vehicle floor so that the brackets are placed over the screws.
3. Reinstall the nuts back onto the screws. Torque to approximately 18 lb ft (25 N•m).
4. Try to raise the seat to make sure that it is locked down.
5. Raise the seatback to its upright position.

   Push and pull on the seatback to make sure that it is locked into place.

Safety Belts

Safety Belts: They Are for Everyone

This part of the manual tells you how to use safety belts properly. It also tells you some things you should not do with safety belts.

⚠ CAUTION:

Don't let anyone ride where he or she can't wear a safety belt properly. If you are in a crash and you're not wearing a safety belt, your injuries can be much worse. You can hit things inside the vehicle or be ejected from it. You can be seriously injured or killed. In the same crash, you might not be, if you are buckled up. Always fasten your safety belt, and check that your passengers' belts are fastened properly too.

⚠ CAUTION:

It is extremely dangerous to ride in a cargo area, inside or outside of a vehicle. In a collision, people riding in these areas are more likely to be seriously injured or killed. Do not allow people to ride in any area of your vehicle that is not equipped with seats and safety belts. Be sure everyone in your vehicle is in a seat and using a safety belt properly.

Your vehicle has a light that comes on as a reminder to buckle up. See *Safety Belt Reminder Light on page 3-43*.

In most states and in all Canadian provinces, the law says to wear safety belts. Here's why: *They work*.

You never know if you'll be in a crash. If you do have a crash, you don't know if it will be a bad one.

A few crashes are mild, and some crashes can be so serious that even buckled up, a person wouldn't survive. But most crashes are in between. In many of them, people who buckle up can survive and sometimes walk away. Without belts they could have been badly hurt or killed.

After more than 30 years of safety belts in vehicles, the facts are clear. In most crashes buckling up does matter... a lot!

Why Safety Belts Work

When you ride in or on anything, you go as fast as it goes.

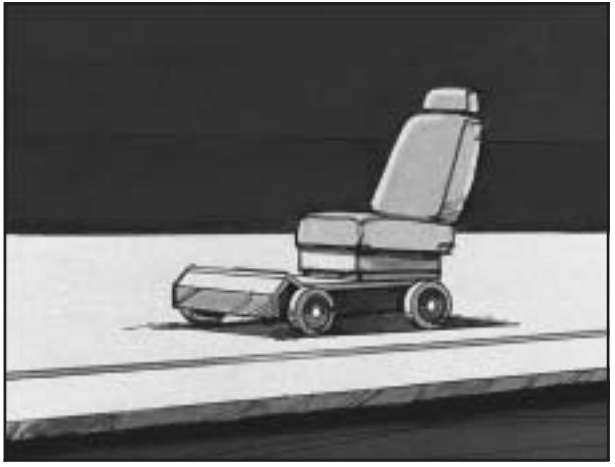

Take the simplest vehicle. Suppose it's just a seat on wheels.

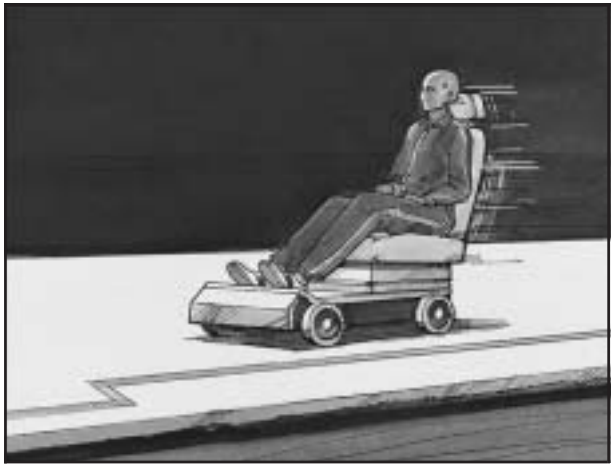

Put someone on it.

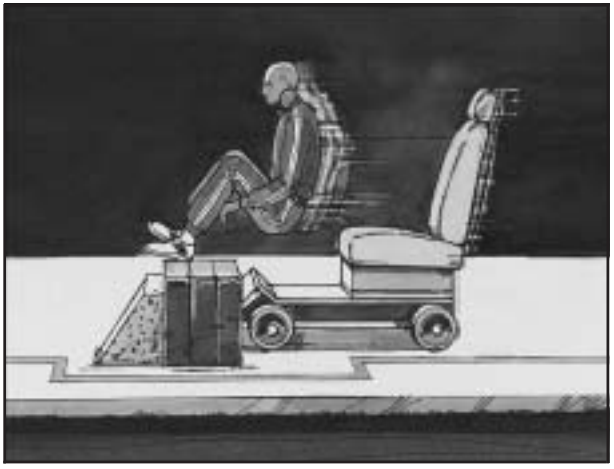

Get it up to speed. Then stop the vehicle. The rider doesn't stop.

The person keeps going until stopped by something. In a real vehicle, it could be the windshield...

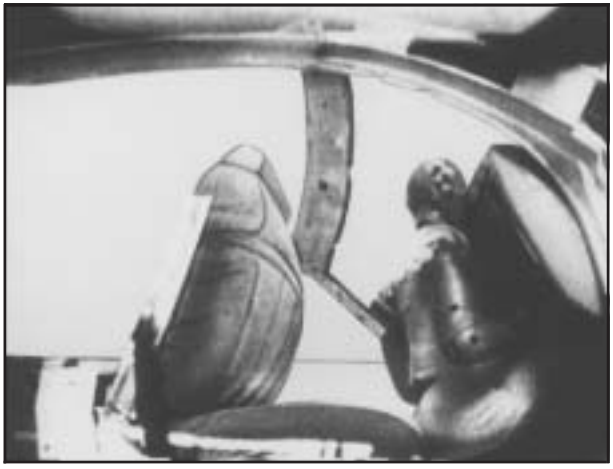

or the instrument panel...

or the safety belts!

With safety belts, you slow down as the vehicle does. You get more time to stop. You stop over more distance, and your strongest bones take the forces. That's why safety belts make such good sense.

Questions and Answers About Safety Belts

Q: Won't I be trapped in the vehicle after an accident if I'm wearing a safety belt?

A: You *could* be – whether you're wearing a safety belt or not. But you can unbuckle a safety belt, even if you're upside down. And your chance of being conscious during and after an accident, so you *can* unbuckle and get out, is *much* greater if you are belted.

Q: If my vehicle has air bags, why should I have to wear safety belts?

A: Air bags are in many vehicles today and will be in most of them in the future. But they are supplemental systems only; so they work *with* safety belts – not instead of them. Every air bag system ever offered for sale has required the use of safety belts. Even if you're in a vehicle that has air bags, you still have to buckle up to get the most protection. That's true not only in frontal collisions, but especially in side and other collisions.

Q: If I'm a good driver, and I never drive far from home, why should I wear safety belts?

A: You may be an excellent driver, but if you're in an accident – even one that isn't your fault – you and your passengers can be hurt. Being a good driver doesn't protect you from things beyond your control, such as bad drivers.

Most accidents occur within 25 miles (40 km) of home. And the greatest number of serious injuries and deaths occur at speeds of less than 40 mph (65 km/h).

Safety belts are for everyone.

How to Wear Safety Belts Properly

This part is only for people of adult size.

Be aware that there are special things to know about safety belts and children. And there are different rules for smaller children and babies. If a child will be riding in your vehicle, see *Older Children on page 1-47* or *Infants and Young Children on page 1-50*. Follow those rules for everyone's protection.

First, you'll want to know which restraint systems your vehicle has.

We'll start with the driver position.

Driver Position

This part describes the driver's restraint system.

Lap-Shoulder Belt

The driver has a lap-shoulder belt. Here is how to wear it properly.

1. Close and lock the door.
2. Adjust the seat so you can sit up straight. To see how, see "Seats" in the Index.

3. Pick up the latch plate and pull the belt across you. Do not let it get twisted.

   The shoulder belt may lock if you pull the belt across you very quickly. If this happens, let the belt go back slightly to unlock it. Then pull the belt across you more slowly.

4. Push the latch plate into the buckle until it clicks.

   Pull up on the latch plate to make sure it is secure. If the belt is not long enough, see *Safety Belt Extender on page 1-46*.

   Make sure the release button on the buckle is positioned so you would be able to unbuckle the safety belt quickly if you ever had to.

5. To make the lap part tight, pull down on the buckle end of the belt as you pull up on the shoulder belt.

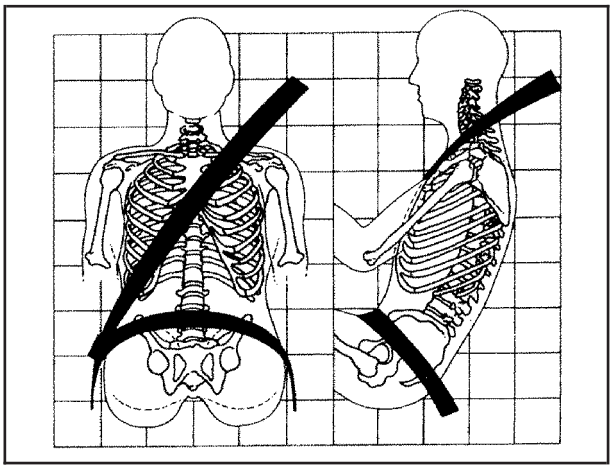

The lap part of the belt should be worn low and snug on the hips, just touching the thighs. In a crash, this applies force to the strong pelvic bones. And you would be less likely to slide under the lap belt. If you slid under it, the belt would apply force at your abdomen. This could cause serious or even fatal injuries. The shoulder belt should go over the shoulder, across the chest. These parts of the body are best able to take belt restraining forces.

The safety belt locks if there is a sudden stop or crash, or if you pull the belt very quickly out of the retractor.

Shoulder Belt Height Adjuster

Before you begin to drive, move the shoulder belt adjuster to the height that is right for you.

To move it down, push down on the button and move the height adjuster to the desired position. You can move the adjuster up just by pushing up on the shoulder belt guide. After you move the adjuster to where you want it, try to move it down without pushing the button down to make sure it has locked into position.

Adjust the height so that the shoulder portion of the belt is centered on your shoulder. The belt should be away from your face and neck, but not falling off your shoulder.

Q: What's wrong with this?

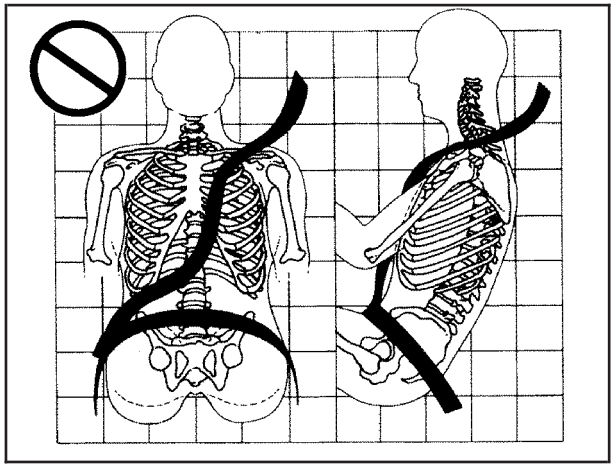

A: The shoulder belt is too loose. It will not give nearly as much protection this way.

⚠ CAUTION:

You can be seriously hurt if your shoulder belt is too loose. In a crash, you would move forward too much, which could increase injury. The shoulder belt should fit against your body.

Q: What's wrong with this?

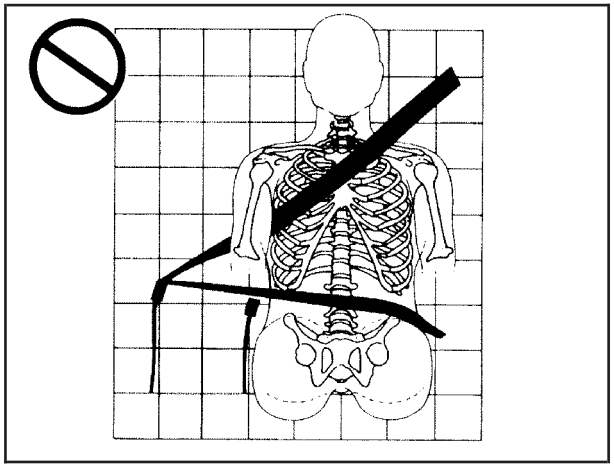

A: The belt is buckled in the wrong place.

⚠ CAUTION:

You can be seriously injured if your belt is buckled in the wrong place like this. In a crash, the belt would go up over your abdomen. The belt forces would be there, not at the pelvic bones. This could cause serious internal injuries. Always buckle your belt into the buckle nearest you.

Q: What's wrong with this?

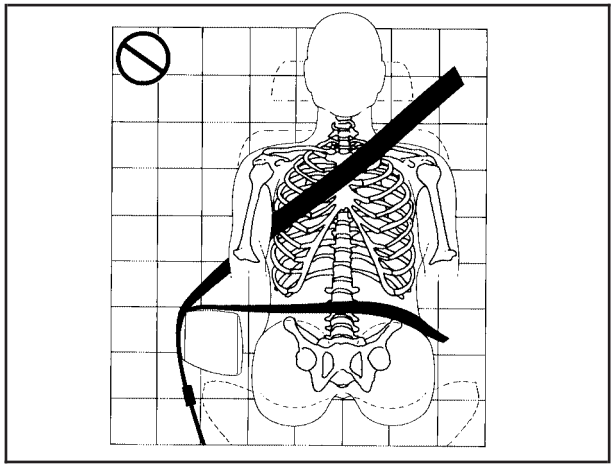

A: The belt is over an armrest.

⚠ CAUTION:

You can be seriously injured if your belt goes over an armrest like this. The belt would be much too high. In a crash, you can slide under the belt. The belt force would then be applied at the abdomen, not at the pelvic bones, and that could cause serious or fatal injuries. Be sure the belt goes under the armrests.

Q: What's wrong with this?

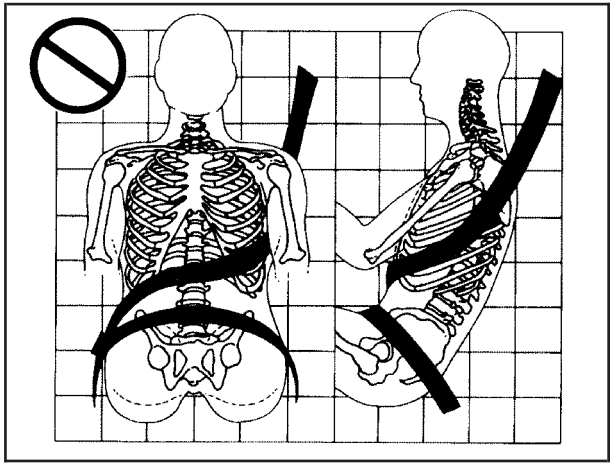

A: The shoulder belt is worn under the arm. It should be worn over the shoulder at all times.

⚠ CAUTION:

You can be seriously injured if you wear the shoulder belt under your arm. In a crash, your body would move too far forward, which would increase the chance of head and neck injury. Also, the belt would apply too much force to the ribs, which aren't as strong as shoulder bones. You could also severely injure internal organs like your liver or spleen.

Q: What's wrong with this?

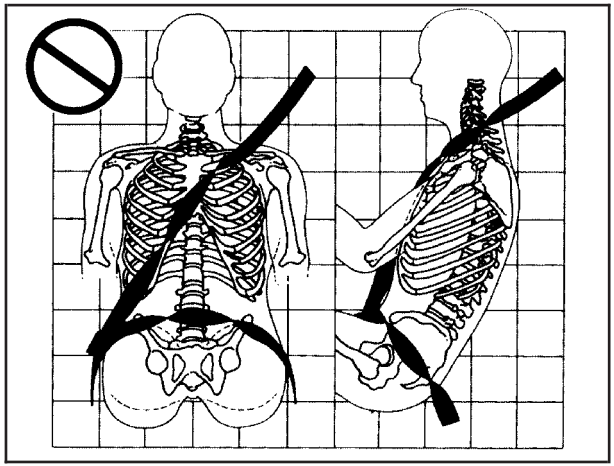

A: The belt is twisted across the body.

⚠ CAUTION:

You can be seriously injured by a twisted belt. In a crash, you wouldn't have the full width of the belt to spread impact forces. If a belt is twisted, make it straight so it can work properly, or ask your dealer to fix it.

To unlatch the belt, just push the button on the buckle. The belt should go back out of the way.

Before you close the door, be sure the belt is out of the way. If you slam the door on it, you can damage both the belt and your vehicle.

Safety Belt Use During Pregnancy

Safety belts work for everyone, including pregnant women. Like all occupants, they are more likely to be seriously injured if they don't wear safety belts.

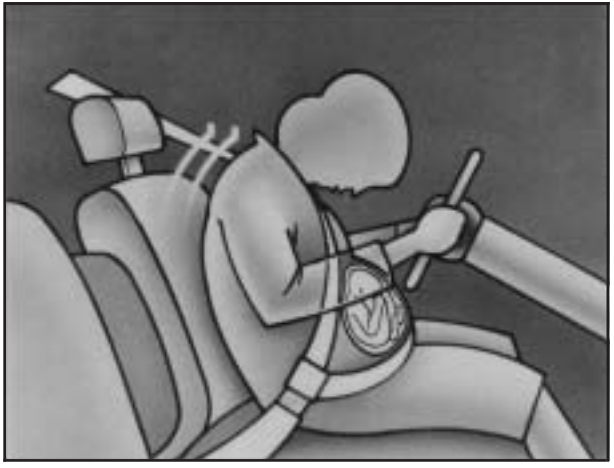

A pregnant woman should wear a lap-shoulder belt, and the lap portion should be worn as low as possible, below the rounding, throughout the pregnancy.

The best way to protect the fetus is to protect the mother. When a safety belt is worn properly, it's more likely that the fetus won't be hurt in a crash. For pregnant women, as for anyone, the key to making safety belts effective is wearing them properly.

Right Front Passenger Position

To learn how to wear the right front passenger's safety belt properly, see *Driver Position on page 1-28*.

The right front passenger's safety belt works the same way as the driver's safety belt – except for one thing. If the belt stops before it reaches the buckle, tilt the latch plate and keep pulling until you can buckle the belt.

Rear Seat Passengers

It's very important for rear seat passengers to buckle up! Accident statistics show that unbelted people in the rear seat are hurt more often in crashes than those who are wearing safety belts.

Rear passengers who aren't safety belted can be thrown out of the vehicle in a crash. And they can strike others in the vehicle who are wearing safety belts.

Rear Seat Outside Passenger Positions

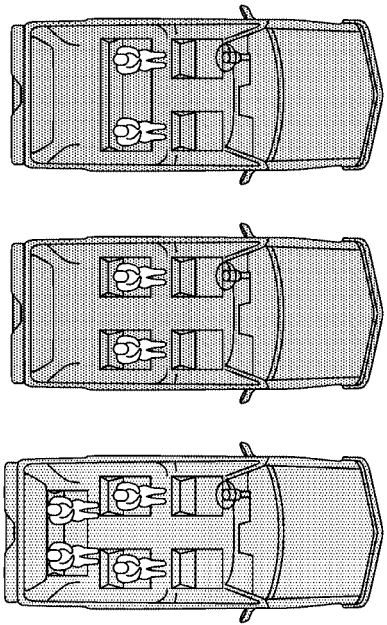

Lap-Shoulder Belt

The positions next to the windows have lap-shoulder belts. Here's how to wear one properly.

1. Pick up the latch plate and pull the belt across you. Don't let it get twisted.

   The shoulder belt may lock if you pull the belt across you very quickly. If this happens, let the belt go back slightly to unlock it. Then pull the belt across you more slowly.

2. Push the latch plate into the buckle until it clicks.

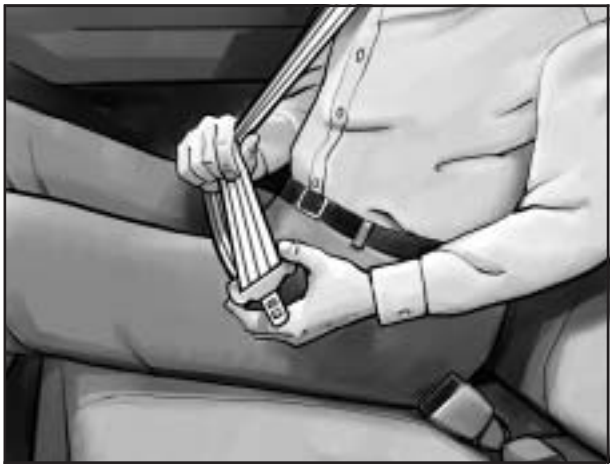

   If the belt stops before it reaches the buckle, tilt the latch plate and keep pulling until you can buckle it.

   Pull up on the latch plate to make sure it is secure.

   If the belt is not long enough, see *Safety Belt Extender on page 1-46*.

   Make sure the release button on the buckle is positioned so you would be able to unbuckle the safety belt quickly if you ever had to.

3. To make the lap part tight, pull down on the buckle end of the belt as you pull up on the shoulder part.

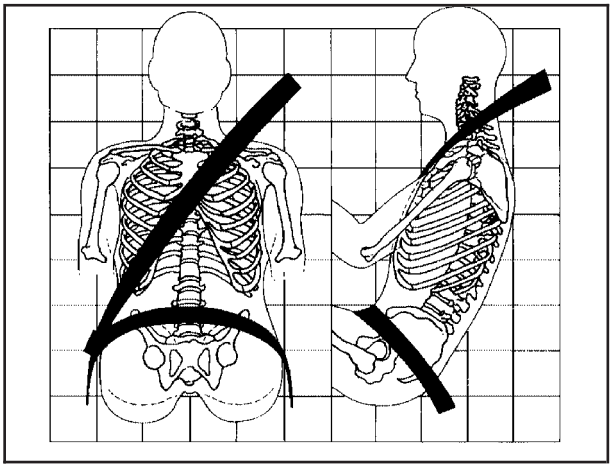

The lap part of the belt should be worn low and snug on the hips, just touching the thighs. In a crash, this applies force to the pelvic bones. And you'd be less likely to slide under the lap belt. If you slid under it, the belt would apply force at your abdomen. This could cause serious or even fatal injuries. The shoulder belt should go over the shoulder and across the chest. These parts of the body are best able to take belt restraining forces.

The safety belt locks if there's a sudden stop or a crash, or if you pull the belt very quickly out of the retractor.

Each position next to the windows in the second row has a shoulder belt height adjuster. Move the shoulder belt adjuster to the height that is right for you.

To move it down, push down on the button and move the height adjuster to the desired position. You can move the height adjuster up just by pushing up on the shoulder belt guide. After you move the adjuster to where you want it, try to move it down without pushing the button down to make sure it has locked into position.

Adjust the height so that the shoulder portion of the belt is centered on your shoulder. The belt should be away from your face and neck, but not falling off your shoulder.

⚠ CAUTION:

You can be seriously hurt if your shoulder belt is too loose. In a crash, you would move forward too much, which could increase injury. The shoulder belt should fit against your body.

To unlatch the belt, just push the button on the buckle.

Center Rear Passenger Position

Lap-Shoulder Belt

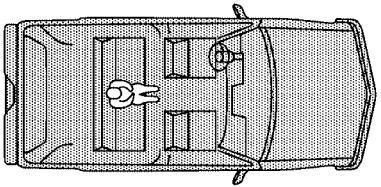

If your vehicle has a bench seat, someone can sit in the center position.

When you sit in the center seating position, you have a lap safety belt, which has no retractor. You also have a shoulder belt, which has a retractor. In order to have the protection of the shoulder belt, you must first connect it to the lap belt.

1. Remove the shoulder belt from its stowage location in the roof and pull it all the way down to the lap belt.

2. Insert the metal knob on the shoulder belt into the keyhole on the lap belt buckle as shown. Be sure to slide the shoulder belt part into the keyhole until it locks into place.

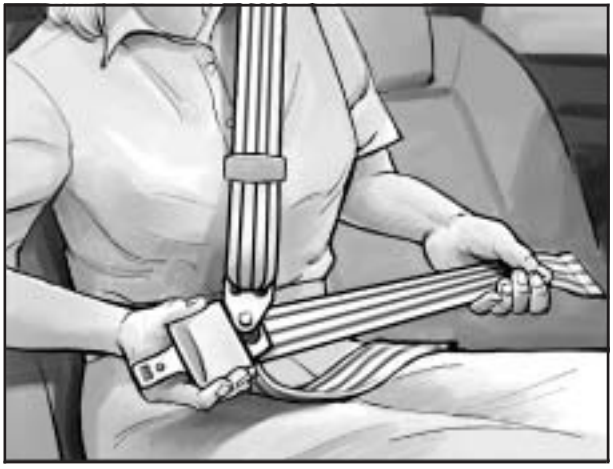

3. To make the lap belt longer, tilt the latch plate and pull it along the belt.

To make the belt shorter, pull its free end as shown until the belt is snug

4. Buckle, position and release the lap-shoulder belt the same way as the other lap-shoulder belts. If the belt isn't long enough, see *Safety Belt Extender on page 1-46*.

Make sure the release button on the buckle is positioned so you would be able to unbuckle the safety belt quickly if you ever had to.

Rear Safety Belt Comfort Guides for Children and Small Adults

Rear safety belt comfort guides will provide added safety belt comfort for older children who have outgrown booster seats and for small adults. When installed on a shoulder belt, the comfort guide better positions the belt away from the neck and head.

There is a guide available for the center passenger position in the second row rear seat. To provide added safety belt comfort for children who have outgrown child restraints and booster seats and for smaller adults, the comfort guides may be installed on the shoulder belts. Here is how to install a comfort guide and use the safety belt:

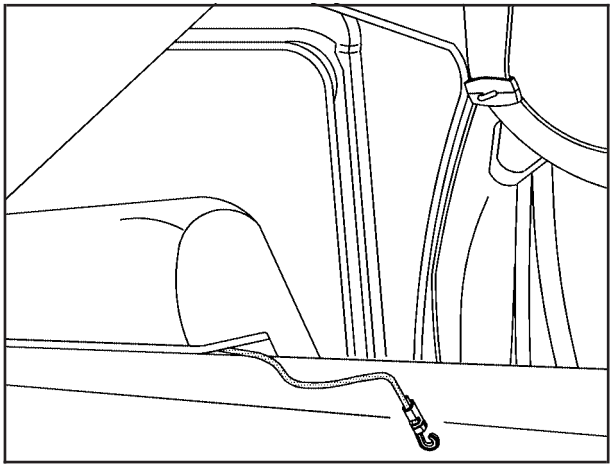

Second Row Center Position

For second row center position do the following:

1. Remove the elastic cord from under the head restraint of the second row driver's side position.

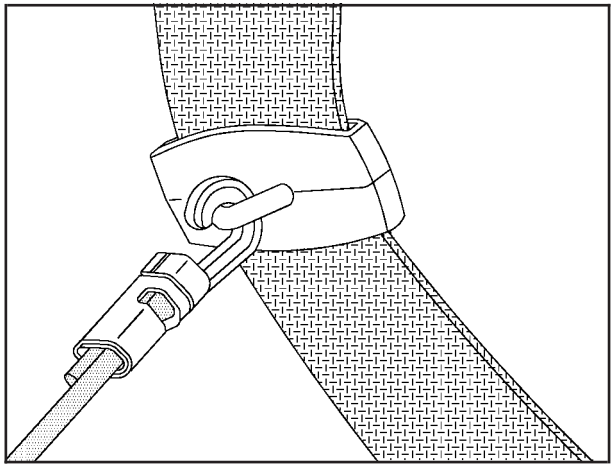

2. Attach the elastic cord to the comfort guide on the center passenger shoulder belt.

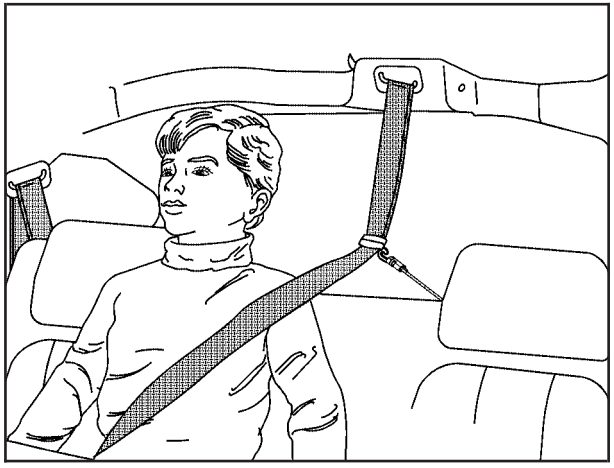

3. Be sure that the belt is not twisted and it lies flat. The guide must be on top of the belt.
4. Buckle, position and release the safety belt as described in *Center Rear Passenger Position on page 1-42*. Make sure that the shoulder belt crosses the shoulder.

To remove and store the elastic cord, remove it from the comfort guide. The elastic cord will go back under the head restraint.

Safety Belt Pretensioners

Your vehicle has safety belt pretensioners. Although you cannot see them, they are located on the retractor part of the safety belts for the driver and right front passenger. They help the safety belts reduce a person's forward movement in a moderate to severe crash in which the front of the vehicle hits something.

Pretensioners work only once. If they activate in a crash, you'll need to get new ones, and probably other new parts for your safety belt system. See *Replacing Restraint System Parts After a Crash on page 1-83*.

Safety Belt Extender

If the vehicle's safety belt will fasten around you, you should use it.

But if a safety belt isn't long enough to fasten, your dealer will order you an extender. It's free. When you go in to order it, take the heaviest coat you will wear, so the extender will be long enough for you. The extender will be just for you, and just for the seat in your vehicle that you choose. Don't let someone else use it, and use it only for the seat it is made to fit. To wear it, just attach it to the regular safety belt.

Child Restraints

Older Children

Older children who have outgrown booster seats should wear the vehicle's safety belts.

Q: What is the proper way to wear safety belts?

A: If possible, an older child should wear a lap-shoulder belt and get the additional restraint a shoulder belt can provide. The shoulder belt should not cross the face or neck. The lap belt should fit snugly below the hips, just touching the top of the thighs. It should never be worn over the abdomen, which could cause severe or even fatal internal injuries in a crash.

Accident statistics show that children are safer if they are restrained in the rear seat.

In a crash, children who are not buckled up can strike other people who are buckled up, or can be thrown out of the vehicle. Older children need to use safety belts properly.

⚠ CAUTION:

Never do this.

Here two children are wearing the same belt. The belt can't properly spread the impact forces. In a crash, the two children can be crushed together and seriously injured. A belt must be used by only one person at a time.

Q: What if a child is wearing a lap-shoulder belt, but the child is so small that the shoulder belt is very close to the child's face or neck?

A: If the child is sitting in a seat next to a window, move the child toward the center of the vehicle. If the child is sitting in the center rear seat passenger position, move the child toward the safety belt buckle. In either case, be sure that the shoulder belt still is on the child's shoulder, so that in a crash the child's upper body would have the restraint that belts provide.

If the child is sitting in a rear seat, see *Rear Safety Belt Comfort Guides for Children and Small Adults on page 1-44*.

⚠ CAUTION:

Never do this.

Here a child is sitting in a seat that has a lap-shoulder belt, but the shoulder part is behind the child. If the child wears the belt in this way, in a crash the child might slide under the belt. The belt's force would then be applied right on the child's abdomen. That could cause serious or fatal injuries.

The lap portion of the belt should be worn low and snug on the hips, just touching the child's thighs. This applies belt force to the child's pelvic bones in a crash.

Infants and Young Children

Everyone in a vehicle needs protection! This includes infants and all other children. Neither the distance traveled nor the age and size of the traveler changes the need, for everyone, to use safety restraints. In fact, the law in every state in the United States and in every Canadian province says children up to some age must be restrained while in a vehicle.

Every time infants and young children ride in vehicles, they should have the protection provided by appropriate restraints. Young children should not use the vehicle's adult safety belts alone, unless there is no other choice. Instead, they need to use a child restraint.

⚠ CAUTION:

People should never hold a baby in their arms while riding in a vehicle. A baby doesn't weigh much — until a crash. During a crash a baby will become so heavy it is not possible to hold

CAUTION: (Continued)

CAUTION: (Continued)

it. For example, in a crash at only 25 mph (40 km/h), a 12-lb. (5,5 kg) baby will suddenly become a 240-lb. (110 kg) force on a person's arms. A baby should be secured in an appropriate restraint.

⚠ CAUTION:

Children who are up against, or very close to, any air bag when it inflates can be seriously injured or killed. Air bags plus lap-shoulder belts offer outstanding protection for adults and older children, but not for young children and infants. Neither the vehicle's safety belt system nor its air bag system is designed for them. Young children and infants need the protection that a child restraint system can provide.

Q: What are the different types of add-on child restraints?

A: Add-on child restraints, which are purchased by the vehicle's owner, are available in four basic types. Selection of a particular restraint should take into consideration not only the child's weight, height and age but also whether or not the restraint will be compatible with the motor vehicle in which it will be used.

For most basic types of child restraints, there are many different models available. When purchasing a child restraint, be sure it is designed to be used in a motor vehicle. If it is, the restraint will have a label saying that it meets federal motor vehicle safety standards.

The restraint manufacturer's instructions that come with the restraint state the weight and height limitations for a particular child restraint. In addition, there are many kinds of restraints available for children with special needs.

⚠ CAUTION:

Newborn infants need complete support, including support for the head and neck. This is necessary because a newborn infant's neck is weak and its head weighs so much compared with the rest of its body. In a crash, an infant in a rear-facing seat settles into the restraint, so the crash forces can be distributed across the strongest part of an infant's body, the back and shoulders. Infants always should be secured in appropriate infant restraints.

⚠ CAUTION:

The body structure of a young child is quite unlike that of an adult or older child, for whom the safety belts are designed. A young child's hip bones are still so small that the vehicle's regular safety belt may not remain low on the hip bones, as it should. Instead, it may settle up around the child's abdomen. In a crash, the belt would apply force on a body area that's unprotected by any bony structure. This alone could cause serious or fatal injuries. Young children always should be secured in appropriate child restraints.

Child Restraint Systems

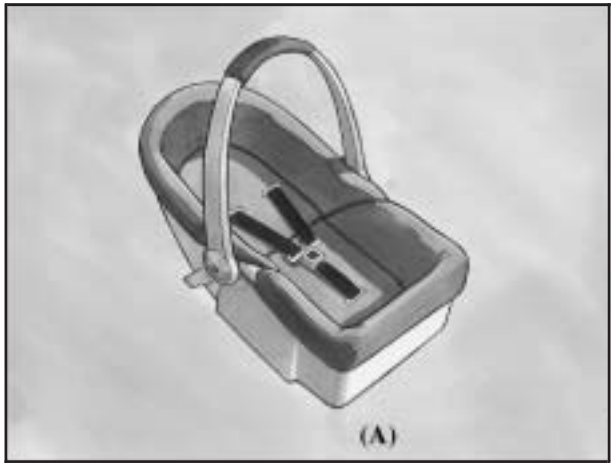

An infant car bed (A), a special bed made for use in a motor vehicle, is an infant restraint system designed to restrain or position a child on a continuous flat surface. Make sure that the infant's head rests toward the center of the vehicle.

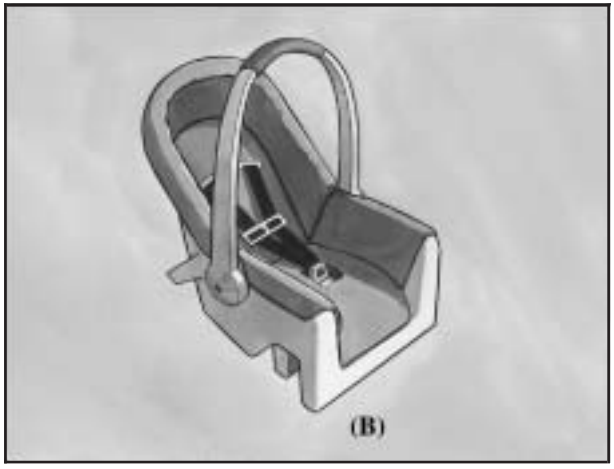

A rear-facing infant seat (B) provides restraint with the seating surface against the back of the infant. The harness system holds the infant in place and, in a crash, acts to keep the infant positioned in the restraint.

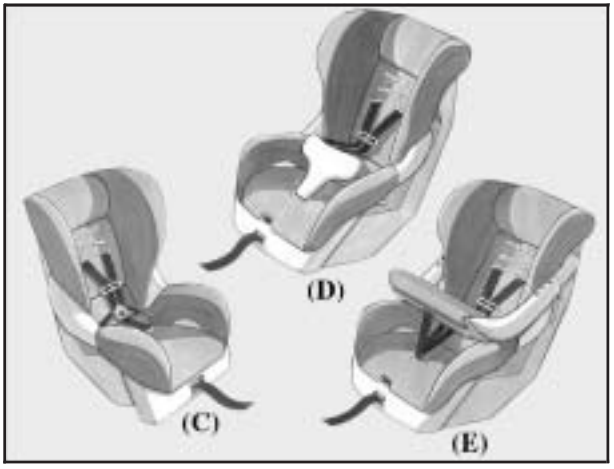

A forward-facing child seat (C-E) provides restraint for the child's body with the harness and also sometimes with surfaces such as T-shaped or shelf-like shields.

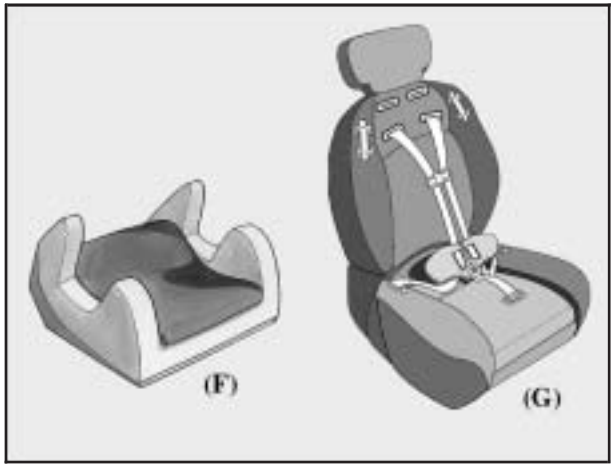

A booster seat (F-G) is a child restraint designed to improve the fit of the vehicle's safety belt system. Some booster seats have a shoulder belt positioner, and some high-back booster seats have a five-point harness. A booster seat can also help a child to see out the window.

Q: How do child restraints work?

A: A child restraint system is any device designed for use in a motor vehicle to restrain, seat, or position children. A built-in child restraint system is a permanent part of the motor vehicle. An add-on child restraint system is a portable one, which is purchased by the vehicle's owner.

For many years, add-on child restraints have used the adult belt system in the vehicle. To help reduce the chance of injury, the child also has to be secured within the restraint. The vehicle's belt system secures the add-on child restraint in the vehicle, and the add-on child restraint's harness system holds the child in place within the restraint.

One system, the three-point harness, has straps that come down over each of the infant's shoulders and buckle together at the crotch. The five-point harness system has two shoulder straps, two hip straps and a crotch strap. A shield may take the place of hip straps. A T-shaped shield has shoulder straps that are attached to a flat pad which rests low against the child's body. A shelf- or armrest-type shield has straps that are attached to a wide, shelf-like shield that swings up or to the side.

When choosing a child restraint, be sure the child restraint is designed to be used in a vehicle. If it is, it will have a label saying that it meets federal motor vehicle safety standards.

Then follow the instructions for the restraint. You may find these instructions on the restraint itself or in a booklet, or both. These restraints use the belt system in your vehicle, but the child also has to be secured within the restraint to help reduce the chance of personal injury. When securing an add-on child restraint, refer to the instructions that come with the restraint which may be on the restraint itself or in a booklet, or both, and to this manual. The child restraint instructions are important, so if they are not available, obtain a replacement copy from the manufacturer.

Where to Put the Restraint

Accident statistics show that children are safer if they are restrained in the rear rather than the front seat. We, therefore, recommend that child restraints be secured in a rear seat, including an infant riding in a rear-facing infant seat, a child riding in a forward-facing child seat and an older child riding in a booster seat. *Never* put a rear-facing child restraint in the front passenger seat. Here's why:

⚠ CAUTION:

A child in a rear-facing child restraint can be seriously injured or killed if the right front passenger's air bag inflates. This is because the back of the rear-facing child restraint would be very close to the inflating air bag. Always secure a rear-facing child restraint in a rear seat.

If you secure a forward-facing child restraint in the right front seat, always move the front passenger seat as far back as it will go. It is better to secure the child restraint in a rear seat.

Wherever you install it, be sure to secure the child restraint properly.

Keep in mind that an unsecured child restraint can move around in a collision or sudden stop and injure people in the vehicle. Be sure to properly secure any child restraint in your vehicle – even when no child is in it.

Top Strap

Some child restraints have a top strap, or “top tether.” It can help restrain the child restraint during a collision. For it to work, a top strap must be properly anchored to the vehicle. Some top strap-equipped child restraints are designed for use with or without the top strap being anchored. Others require the top strap always to be anchored. Be sure to read and follow the instructions for your child restraint. If yours requires that the top strap be anchored, don’t use the restraint unless it is anchored properly.

If the child restraint does not have a top strap, one can be obtained, in kit form, for many child restraints. Ask the child restraint manufacturer whether or not a kit is available.

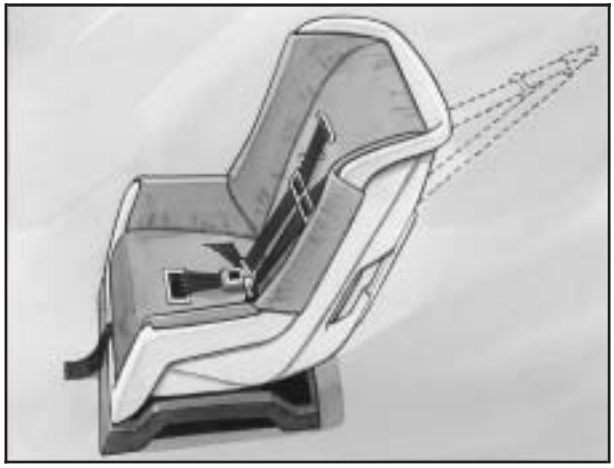

In Canada, the law requires that forward-facing child restraints have a top strap, and that the strap be anchored. In the United States, some child restraints also have a top strap. If your child restraint has a top strap, it should be anchored.

Anchor the top strap to one of the following anchor points. Be sure to use an anchor point located on the same side of the vehicle as the seating position where the child restraint will be placed. If you have an adjustable head restraint, route the top strap under it.

If you're using a top strap-equipped child restraint in the second row center bench seat and need to temporarily transport a flat tire for repair, move the child restraint to a rear seat outboard position. See *Securing a Child Restraint in a Rear Outside Seat Position on page 1-64* for more on this, including important safety information.

Once you have the top strap anchored, you'll be ready to secure the child restraint itself. Tighten the top strap when and as the child restraint manufacturer's instructions say.

Top Strap Anchor Location

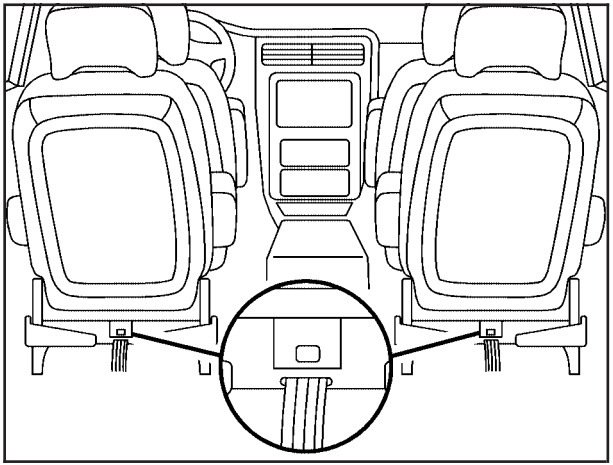

Captain's Chairs

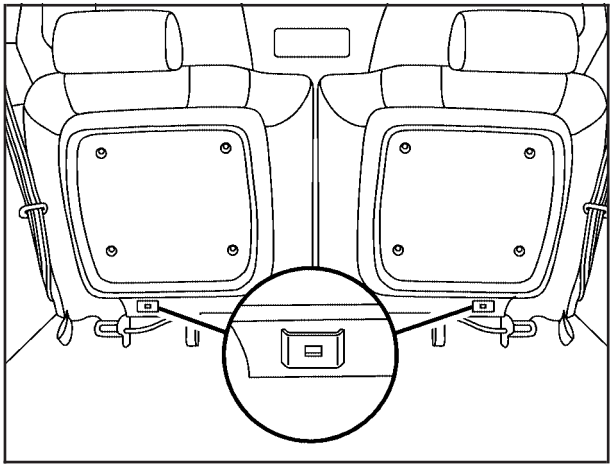

Second Row Outside Position Bench Seat

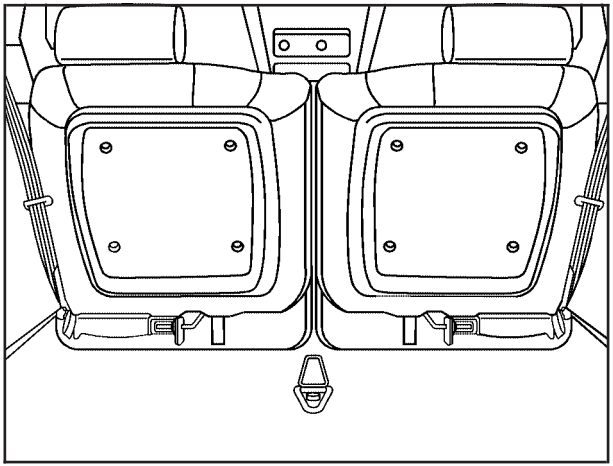

Second Row Center Position Bench Seat without Third Row Seat

Your vehicle has top strap anchors already installed for the rear seating positions. An anchor bar for a top strap is located at the rear of the seat cushion for each second row outboard seating position. The anchor bar for the center position bench seat is located on the floor behind the second row seats. If the vehicle has the extended rear convenience center, you need to remove a plastic plug and look under the convenience center to find the anchor bar for the center position bench seat.

Do not use a child restraint with a top strap in the right front passenger's position, because there is no place to anchor the top strap.

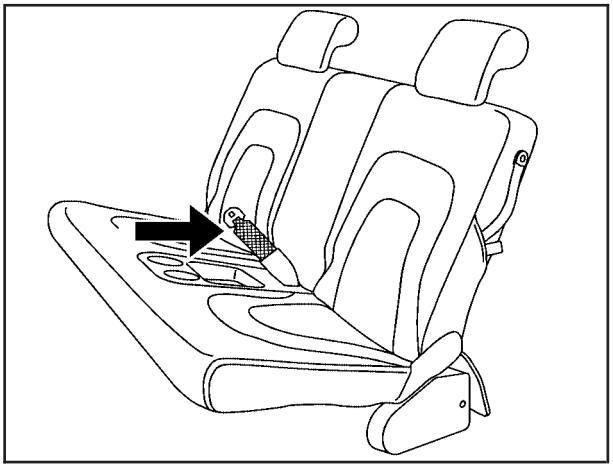

Second Row Center Position Bench Seat with Third Row Seat

If the vehicle has a third row seat and the seatback is upright, there is an anchor strap located between the third row seatback and cushion to anchor the child restraint for the second row center position bench seat.

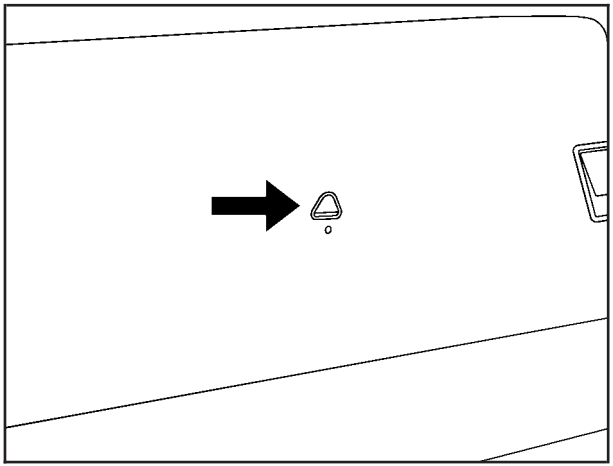

Second Row Center Position Bench Seat with Third Row Seat Folded Down

If the vehicle has a third row seat and the seatback is folded, there is an anchor on the back of the third row seat for the second row center position bench seat.

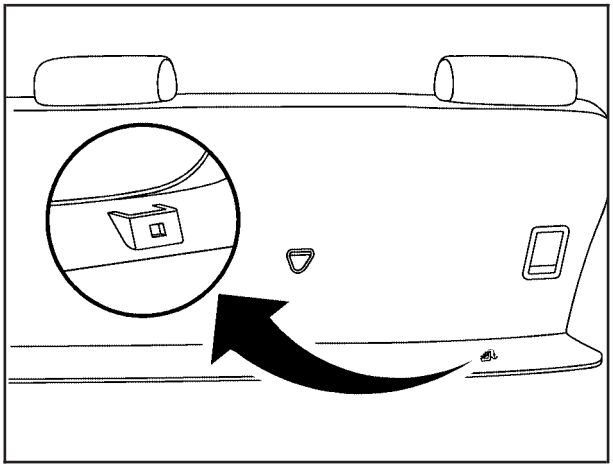

Third Row Passenger's Side Outside Position

There is also a top strap anchor for third row passenger's side outside position. Locate the anchor symbol on the flap of carpet behind the seat. Lift up the carpet to access the anchor.

Lower Anchorages and Top Tethers for Children (LATCH System)

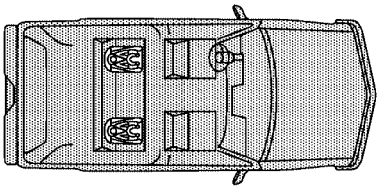

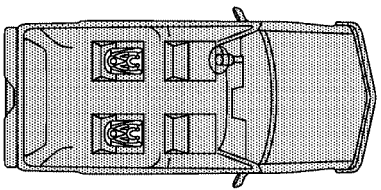

Your vehicle has the LATCH system. You will find anchors (A) in the second row outside passenger positions.

This system, designed to make installation of child restraints easier, does not use the vehicle's safety belts. Instead, it uses vehicle anchors (A, B) and child restraint attachments to secure the restraints. Some restraints also use another vehicle anchor to secure a top tether strap (C).

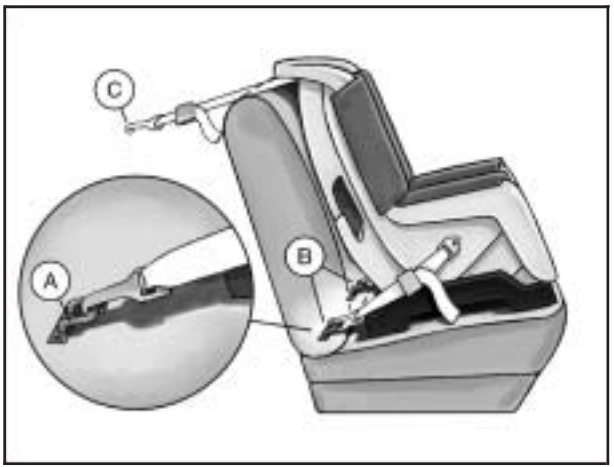

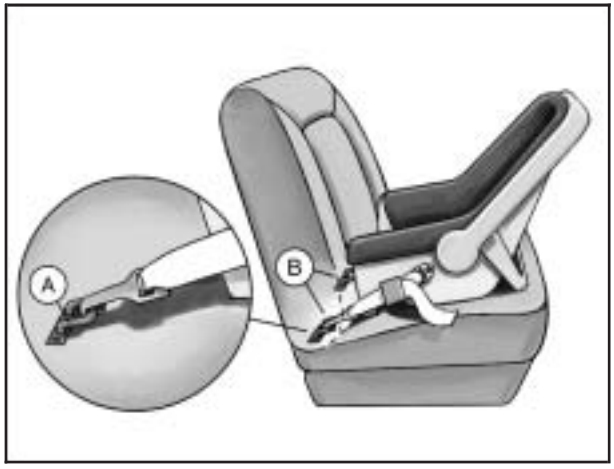

In order to use the LATCH system in your vehicle, you need a child restraint designed for that system.

To assist you in locating the lower anchors for this child restraint system, each seating position with the LATCH system has a label on the seatback.

The labels are located at each lower anchor position, near the base of the second row outside passenger positions.

⚠ CAUTION:

If a LATCH-type child restraint isn't attached to its anchorage points, the restraint won't be able to protect a child sitting there. In a crash, the child could be seriously injured or killed. Make sure that a LATCH-type child restraint is properly installed using the anchorage points, or use the vehicle's safety belts to secure the restraint. See ″Securing a Child Restraint in a Rear Outside Seat Position″ in the Index for information on how to secure a child restraint in your vehicle using the vehicle's safety belts.

Securing a Child Restraint Designed for the LATCH System

1. Find the anchors for the seating position you want to use, where the bottom of the seatback meets the back of the seat cushion.
2. Put the child restraint on the seat.
3. Attach the anchor points on the child restraint to the anchors in the vehicle. The child restraint instructions will show you how.
4. If the child restraint is forward-facing, attach the top strap to the top strap anchor. See *Top Strap on page 1-57*. Tighten the top strap according to the child restraint instructions.
5. Push and pull the child restraint in different directions to be sure it is secure.

To remove the child restraint, simply unhook the top strap from the top tether anchor and then disconnect the anchor points.

Securing a Child Restraint in a Rear Outside Seat Position

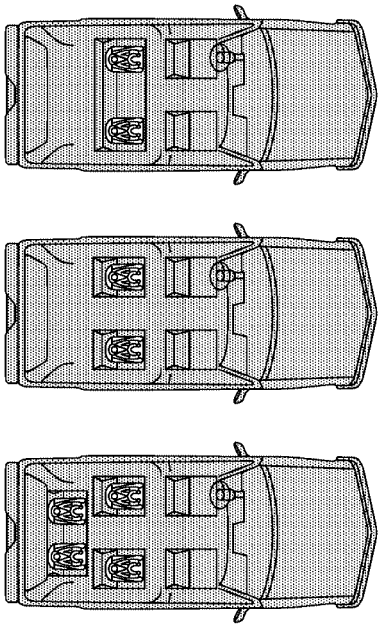

If your child restraint is equipped with the LATCH system, see *Lower Anchorages and Top Tethers for Children (LATCH System) on page 1-62*. See *Top Strap on page 1-57* if the child restraint has one.

If your child restraint does not have the LATCH system, you will be using the lap-shoulder belt to secure the child restraint in this position. Be sure to follow the instructions that came with the child restraint. Secure the child in the child restraint when and as the instructions say.

1. Put the restraint on the seat
2. Pick up the latch plate, and run the lap and shoulder portions of the vehicle's safety belt through or around the restraint. The child restraint instructions will show you how.

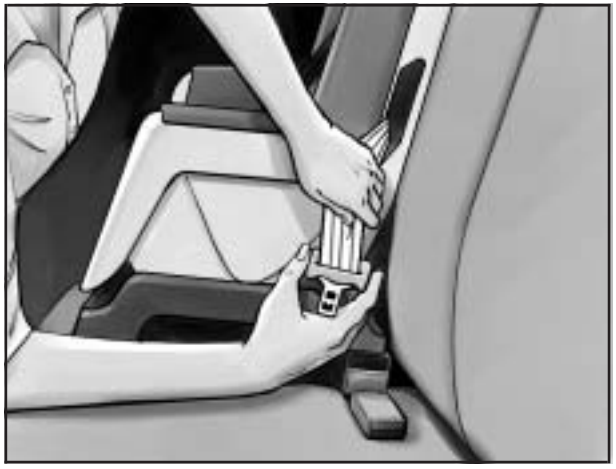

Tilt the latch plate to adjust the belt if needed.

3. Buckle the belt. Make sure the release button is positioned so you would be able to unbuckle the safety belt quickly if you ever had to.

4. To tighten the belt, pull up on the shoulder belt while you push down on the child restraint. If you are using a forward-facing child restraint, you may find it helpful to use your knee to push down on the child restraint as you tighten the belt.
5. Push and pull the child restraint in different directions to be sure it is secure.

To remove the child restraint, just unbuckle the vehicle's safety belt and let it go back all the way. The safety belt will move freely again and be ready to work for an adult or larger child passenger.

Securing a Child Restraint in a Center Rear Seat Position

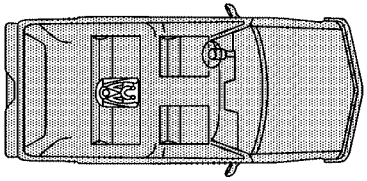

If your child restraint is equipped with the LATCH system, see *Lower Anchorages and Top Tethers for Children (LATCH System) on page 1-62*. See *Top Strap on page 1-57* if the child restraint has one.

If your child restraint does not have the LATCH system, you will be using the lap-shoulder belt to secure the child restraint in the center rear seating position.

To secure a child restraint in this position, you'll use only the lap part of the belt. Disconnect the shoulder part of the belt and store it before securing child restraint. See *Center Rear Passenger Position on page 1-42*.

If you're using a top strap-equipped child restraint in the center rear seat and need to temporarily transport a flat tire for repair, move the child restraint to a rear seat outboard position. See *Securing a Child Restraint in a Rear Outside Seat Position on page 1-64* for more on this, including important safety information.

Be sure to follow the instructions that came with the child restraint. Secure the child in the child restraint when and as the instructions say.

1. Make the belt as long as possible by tilting the latch plate and pulling it along the belt.
2. Put the restraint on the seat.
3. Run the vehicle's safety belt through or around the restraint. The child restraint instructions will show you how.

4. Buckle the belt. Make sure the release button is positioned so you would be able to unbuckle the safety belt quickly if you ever had to.
5. To tighten the belt, pull its free end while you push down on the child restraint. If you're using a forward-facing child restraint, you may find it helpful to use your knee to push the child restraint as you tighten the belt.
6. Push and pull the child restraint in different directions to be sure it is secure.

To remove the child restraint, just unbuckle the vehicle's safety belt. When you remove the child restraint, be sure to reconnect the lap and shoulder parts of the belt so they will be ready to work for an adult or larger child passenger.

Securing a Child Restraint in the Right Front Seat Position

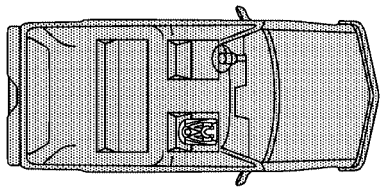

If your child restraint is equipped with the LATCH system, see *Lower Anchorages and Top Tethers for Children (LATCH System) on page 1-62*. See *Top Strap on page 1-57* if the child restraint has one.

Your vehicle has a front passenger air bag. *Never* put a rear facing child restraint in this seat. Here is why:

⚠ CAUTION:

A child in a rear-facing child restraint can be seriously injured or killed if the front passenger's air bag inflates. This is because

CAUTION: (Continued)

CAUTION: (Continued)

the back of the rear-facing child restraint would be very close to the inflating air bag. Always secure a rear-facing child restraint in a rear seat.

A rear seat is a safer place to secure a forward-facing child restraint. If you need to secure a forward-facing child restraint in the right front seat, you will be using the lap-shoulder belt. Be sure to follow the instructions that came with the child restraint. Secure the child in the child restraint when and as the instructions say.

1. Because your vehicle has a right front passenger's air bag, always move the seat as far back as it will go before securing a forward-facing child restraint. See *Manual Passenger Seat on page 1-3*.
2. Put the restraint on the seat.
3. Pick up the latch plate, and run the lap and shoulder portions of the vehicle's safety belt through or around the restraint. The child restraint instructions will show you how.

   Tilt the latch plate to adjust the belt if needed.

4. Buckle the belt. Make sure the release button is positioned so you would be able to unbuckle the safety belt quickly if you ever had to.

5. To tighten the belt, pull up on the shoulder belt while you push down on the child restraint. You may find it helpful to use your knee to push down on the child restraint as you tighten the belt.
6. Push and pull the child restraint in different directions to be sure it is secure.

To remove the child restraint, just unbuckle the vehicle's safety belt and let it go back all the way. The safety belt will move freely again and be ready to work for an adult or larger child passenger.

Air Bag Systems

This part explains the frontal and side impact air bag systems.

Your vehicle has air bags – a frontal air bag for the driver and another frontal air bag for the right front passenger. Your vehicle may also have a side impact air bag. Side impact air bags are available for the driver and right front passenger.

If your vehicle has a side impact air bag for the driver and/or the right front passenger, the words AIR BAG will appear on the air bag covering on the side of the seatback closest to the door.

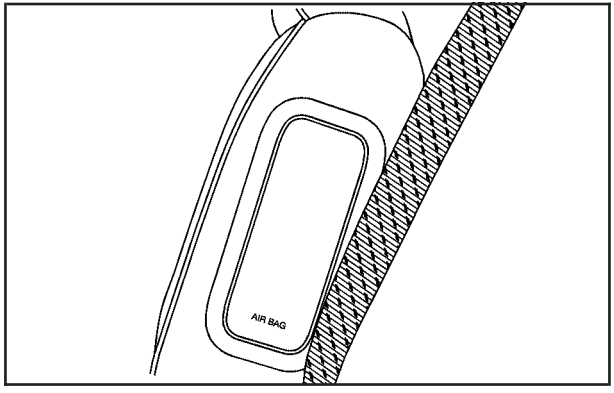

Frontal air bags are designed to help reduce the risk of injury from the force of an inflating frontal air bag. But these air bags must inflate very quickly to do their job and comply with federal regulations.

Here are the most important things to know about the air bag systems:

⚠ CAUTION:

You can be severely injured or killed in a crash if you aren't wearing your safety belt – even if you have air bags. Wearing your safety belt during a crash helps reduce your chance of hitting things inside the vehicle or being ejected from it. Air bags are designed to work with safety belts but don't replace them.

CAUTION: (Continued)

CAUTION: (Continued)

Frontal air bags for the driver and right front passenger are designed to deploy only in moderate to severe frontal and near frontal crashes. They aren't designed to inflate at all in rollover, rear or low-speed frontal crashes, or in many side crashes. And, for some unrestrained occupants, frontal air bags may provide less protection in frontal crashes than more forceful air bags have provided in the past.

The side impact air bags for the driver and right front passenger are designed to inflate only in moderate to severe crashes where something hits the side of your vehicle. They aren't designed to inflate in frontal, in rollover or in rear crashes.

Everyone in your vehicle should wear a safety belt properly – whether or not there's an air bag for that person.

⚠ CAUTION:

Both frontal and side impact air bags inflate with great force, faster than the blink of an eye. If you're too close to an inflating air bag, as you would be if you were leaning forward, it could seriously injure you. Safety belts help keep you in position for air bag inflation before and during a crash. Always wear your safety belt, even with frontal air bags. The driver should sit as far back as possible while still maintaining control of the vehicle. Front occupants should not lean on or sleep against the door.

⚠ CAUTION:

Anyone who is up against, or very close to, any air bag when it inflates can be seriously injured or killed. Air bags plus lap-shoulder belts offer the best protection for adults, but not for young children and infants. Neither the vehicle's safety belt system nor its air bag system is designed for them. Young children and infants need the protection that a child restraint system can provide. Always secure children properly in your vehicle. To read how, see the part of this manual called "Older Children" or "Infants and Young Children."

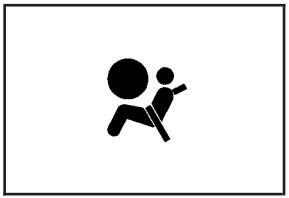

There is an air bag readiness light on the instrument panel cluster, which shows the air bag symbol.

The system checks the air bag electrical system for malfunctions. The light tells you if there is an electrical problem. See *Air Bag Readiness Light on page 3-43* for more information.

Where Are the Air Bags?

The driver's frontal air bag is in the middle of the steering wheel.

The right front passenger's frontal air bag is in the instrument panel on the passenger's side.

If your vehicle has one, the driver's side impact air bag is in the side of the driver's seatback closest to the door.

If your vehicle has one, the right front passenger's side impact air bag is in the side of the passenger's seatback closest to the door.

⚠ CAUTION:

If something is between an occupant and an air bag, the bag might not inflate properly or it might force the object into that person causing severe injury or even death. The path of an inflating air bag must be kept clear. Don't put anything between an occupant and an air bag, and don't attach or put anything on the steering wheel hub or on or near any other air bag covering. Don't let seat covers block the inflation path of a side impact air bag.

When Should an Air Bag Inflate?

The driver's and right front passenger's frontal air bags are designed to inflate in moderate to severe frontal or near-frontal crashes. But they are designed to inflate only if the impact speed is above the system's designed "threshold level."

In addition, your vehicle has "dual stage" frontal air bags, which adjust the amount of restraint according to crash severity. For moderate frontal impacts, these air bags inflate at a level less than full deployment. For more severe frontal impacts, full deployment occurs. If the front of your vehicle goes straight into a wall that doesn't move or deform, the threshold level for the reduced deployment is about 12 to 18 mph (19 to 29 km/h), and the threshold level for a full deployment is about 18 to 24 mph (29 to 38.5 km/h). The threshold level can vary, however, with specific vehicle design, so that it can be somewhat above or below this range.

If your vehicle strikes something that will move or deform, such as a parked car, the threshold level will be higher. The driver's and right front passenger's frontal air bags are not designed to inflate in rollovers, rear impacts, or in many side impacts because inflation would not help the occupant.

Your vehicle may or may not have a side impact air bag. See *Air Bag Systems on page 1-72*. Side impact air bags are designed to inflate in moderate to severe side crashes. A side impact air bag will inflate if the crash severity is above the system's designed "threshold level." The threshold level can vary with specific vehicle design. Side impact air bags are not designed to inflate in frontal or near-frontal impacts, rollovers or rear impacts, because inflation would not help the occupant. A side impact air bag will only deploy on the side of the vehicle that is struck.

In any particular crash, no one can say whether an air bag should have inflated simply because of the damage to a vehicle or because of what the repair costs were.

For frontal air bags, inflation is determined by the angle of the impact and how quickly the vehicle slows down in frontal and near-frontal impacts. For side impact air bags, inflation is determined by the location and severity of the impact.

What Makes an Air Bag Inflate?

In an impact of sufficient severity, the air bag sensing system detects that the vehicle is in a crash. For both frontal and side impact air bags, the sensing system triggers a release of gas from the inflator, which inflates the air bag. The inflator, the air bag and related hardware are all part of the air bag modules. Frontal air bag modules are located inside the steering wheel and instrument panel. For vehicles with side impact air bags, the air bag modules are located in the seatback closest to the driver's and/or right front passenger's door.

How Does an Air Bag Restrain?

In moderate to severe frontal or near frontal collisions, even belted occupants can contact the steering wheel or the instrument panel. In moderate to severe side collisions, even belted occupants can contact the inside of the vehicle. The air bag supplements the protection provided by safety belts. Air bags distribute the force of the impact more evenly over the occupant's upper body, stopping the occupant more gradually. But the frontal air bags would not help you in many types of collisions, including rollovers, rear impacts, and many side impacts, primarily because an occupant's motion is not toward the air bag. Side impact air bags would not help you in many types of collisions, including frontal or near frontal collisions, rollovers, and rear impacts, primarily because an occupant's motion is not toward those air bags. Air bags should never be regarded as anything more than a supplement to safety belts, and then only in moderate to severe frontal or near-frontal collisions for the driver's and right front passenger's frontal air bags, and only in moderate to severe side collisions for vehicles with a driver's and right front passenger's side impact air bag.

What Will You See After an Air Bag Inflates?

After the air bag inflates, it quickly deflates, so quickly that some people may not even realize the air bag inflated. Some components of the air bag module will be hot for a short time. These components include the steering wheel hub for the driver's frontal air bag and the instrument panel for the right front passenger's frontal air bag. For vehicles with side impact air bags, the side of the seatback closest to the driver's and/or right front passenger's door will be hot. The parts of the bag that come into contact with you may be warm, but not too hot to touch. There will be some smoke and dust coming from the vents in the deflated air bags. Air bag inflation doesn't prevent the driver from seeing or being able to steer the vehicle, nor does it stop people from leaving the vehicle.

⚠ CAUTION:

When an air bag inflates, there is dust in the air. This dust could cause breathing problems for people with a history of asthma or other breathing trouble. To avoid this, everyone in the vehicle should get out as soon as it is safe to do so. If you have breathing problems but can't get out of the vehicle after an air bag inflates, then get fresh air by opening a window or a door. If you experience breathing problems following an air bag deployment, you should seek medical attention.

In many crashes severe enough to inflate an air bag, windshields are broken by vehicle deformation. Additional windshield breakage may also occur from the right front passenger air bag.

- Air bags are designed to inflate only once. After an air bag inflates, you'll need some new parts for your air bag system. If you don't get them, the air bag system won't be there to help you in another crash. A new system will include air bag modules and possibly other parts. The service manual for your vehicle covers the need to replace other parts.
- Your vehicle is equipped with two electronic frontal sensors, which help the sensing system distinguish between a moderate frontal impact and a more severe frontal impact. Your vehicle is also equipped with a crash sensing and diagnostic module, which records information about the frontal air bag system. The module records information about the readiness of the system, when the system commands air bag inflation and driver's safety belt usage at deployment. The module also records speed, engine RPM, brake and throttle data.
- Let only qualified technicians work on your air bag systems. Improper service can mean that an air bag system won't work properly. See your dealer for service.

Notice: **If you damage the covering for the driver's or the right front passenger's air bag, or the air bag covering on the driver's and right front passenger's seatback, the bag may not work properly. You may have to replace the air bag module in the steering wheel, both the air bag module and the instrument panel for the right front passenger's air bag, or both the air bag module and seatback for the driver's and right front passenger's side impact air bag. Do not open or break the air bag coverings.**

Servicing Your Air Bag-Equipped Vehicle

Air bags affect how your vehicle should be serviced. There are parts of the air bag systems in several places around your vehicle. Your dealer and the service manual have information about servicing your vehicle and the air bag systems. To purchase a service manual, see *Service Publications Ordering Information on page 7-12*.

⚠ CAUTION:

For up to 10 seconds after the ignition key is turned off and the battery is disconnected, an air bag can still inflate during improper service. You can be injured if you are close to an air bag when it inflates. Avoid yellow connectors. They are probably part of the air bag system. Be sure to follow proper service procedures, and make sure the person performing work for you is qualified to do so.

The air bag systems do not need regular maintenance.

Restraint System Check

Checking Your Restraint Systems

Now and then, make sure the safety belt reminder light and all your belts, buckles, latch plates, retractors and anchorages are working properly. Look for any other loose or damaged safety belt system parts. If you see anything that might keep a safety belt system from doing its job, have it repaired.

Torn or frayed safety belts may not protect you in a crash. They can rip apart under impact forces. If a belt is torn or frayed, get a new one right away.

Also look for any opened or broken air bag covers, and have them repaired or replaced. (The air bag system does not need regular maintenance.)

Replacing Restraint System Parts After a Crash

⚠ CAUTION:

A crash can damage the restraint systems in your vehicle. A damaged restraint system may not properly protect the person using it, resulting in serious injury or even death in a crash. To help make sure your restraint systems are working properly after a crash, have them inspected and any necessary replacements made as soon as possible.

If you have had a crash, do you need new belts or LATCH system parts?

After a very minor collision, nothing may be necessary. But if the belts were stretched, as they would be if worn during a more severe crash, then you need new parts.

If the LATCH system was being used during a more severe crash, you may need new LATCH system parts.

If belts are cut or damaged, replace them. Collision damage also may mean you will need to have LATCH system, safety belt or seat parts repaired or replaced. New parts and repairs may be necessary even if the belt or LATCH system was not being used at the time of the collision.

If an air bag inflates, you will need to replace air bag system parts. See the part on the air bag system earlier in this section.

If the frontal air bags inflate you will also need to replace the driver and front passenger's safety belt retractor assembly. Be sure to do so. Then the new buckle assembly will be there to help protect you in a collision.

After a crash you may need to replace the driver and front passenger's safety belt retractor assemblies, even if the frontal air bags have not deployed. The driver and front passenger's safety belt retractor assemblies contain the safety belt pretensioners. Have your safety belt pretensioners checked if your vehicle has been in a collision, or if your air bag readiness light stays on after you start your vehicle or while you are driving. See *Air Bag Readiness Light on page 3-43*.

NOTES

Section 2 Features and Controls

Keys 2-3
Remote Keyless Entry System 2-4
Remote Keyless Entry System Operation 2-5

Doors and Locks 2-8
Door Locks 2-8
Power Door Locks 2-9
Delayed Locking 2-9
Programmable Automatic Door Locks 2-10
Rear Door Security Locks 2-10
Lockout Protection 2-11
Leaving Your Vehicle 2-11
Liftgate 2-11

Windows 2-13
Power Windows 2-14
Sun Visors 2-15

Theft-Deterrent Systems 2-15
Content Theft-Deterrent 2-15
PASS-Key® III 2-17
PASS-Key® III Operation 2-17

Starting and Operating Your Vehicle 2-19
New Vehicle Break-In 2-19
Ignition Positions 2-20
Starting Your Engine 2-21
Engine Coolant Heater 2-22
Automatic Transaxle Operation 2-23
Parking Brake 2-26
Shifting Into Park (P) 2-27
Shifting Out of Park (P) 2-29
Parking Over Things That Burn 2-30
Engine Exhaust 2-30
Running Your Engine While
You Are Parked 2-31

Mirrors 2-32
Manual Rearview Mirror 2-32
Outside Power Mirror 2-32
Outside Curb View Assist Mirror 2-32
Outside Convex Mirror 2-33
Outside Heated Mirrors 2-33

OnStar® System 2-33

HomeLink® Transmitter 2-35
Programming the HomeLink® Transmitter 2-35
Storage Areas 2-39
Glove Box 2-39
Cupholder(s) 2-39
Cell Phone Storage Area 2-39
Overhead Console 2-39
Floor Console Storage Area 2-40
Front Armrest Storage Area 2-40
Rear Storage Area 2-40
Roof Rack System 2-41
Convenience Net 2-44
Cargo Cover 2-44
Rear Convenience Center 2-44
Sunroof 2-48
Vehicle Personalization 2-49
Memory Seat 2-49

Keys

⚠ CAUTION:

Leaving children in a vehicle with the ignition key is dangerous for many reasons. A child or others could be badly injured or even killed.

They could operate the power windows or other controls or even make the vehicle move.

Do not leave the keys in a vehicle with children.

Your vehicle's key can be used for the ignition as well as the driver's door lock, the floor console, and the glovebox. If you need a new key, contact your dealer, who can obtain the correct key code.

Your vehicle has the PASS-Key® III vehicle theft system. The key has a transponder in the key head that matches a decoder in the vehicle's steering column. If a replacement key or any additional key is needed, you must purchase this key from your dealer. The key will have PK3® stamped on it. Keep the bar code tag that came with the original keys. Give this tag to your dealer if you need a new key made.

Any new PASS-Key® III key must be programmed before it will start your vehicle. See *PASS-Key® III on page 2-17* for more information on programming your new key.

Notice: **If you ever lock your keys in your vehicle, you may have to damage the vehicle to get in. Be sure you have spare keys.**

If you ever do get locked out of your vehicle, see *Roadside Assistance Program on page 7-6* for more information.

If your vehicle is equipped with the OnStar® system with an active subscription and you lock your keys inside the vehicle, OnStar® may be able to send a command to unlock your vehicle. See *OnStar® System on page 2-33* for more information.

Remote Keyless Entry System

If equipped, the keyless entry system operates on a radio frequency subject to Federal Communications Commission (FCC) Rules and with Industry Canada.

This device complies with Part 15 of the FCC Rules. Operation is subject to the following two conditions:

1. This device may not cause interference, and
2. This device must accept any interference received, including interference that may cause undesired operation of the device.

This device complies with RSS-210 of Industry Canada. Operation is subject to the following two conditions:

1. This device may not cause interference, and
2. This device must accept any interference received, including interference that may cause undesired operation of the device.

Changes or modifications to this system by other than an authorized service facility could void authorization to use this equipment.

At times you may notice a decrease in range. This is normal for any remote keyless entry system. If the transmitter does not work or if you have to stand closer to your vehicle for the transmitter to work, try this:

- Check the distance. You may be too far from your vehicle. You may need to stand closer during rainy or snowy weather.
- Check the location. Other vehicles or objects may be blocking the signal. Take a few steps to the left or right, hold the transmitter higher, and try again.
- Check to determine if battery replacement is necessary. See “Battery Replacement” under *Remote Keyless Entry System Operation on page 2-5*.
- If you are still having trouble, see your dealer or a qualified technician for service.

Remote Keyless Entry System Operation

With this feature, you can lock and unlock your doors from about 3 feet (1 m) up to 30 feet (9 m) away using the remote keyless entry transmitter supplied with your vehicle.

UNLOCK: Press UNLOCK to unlock only the driver’s door. If you press UNLOCK again within five seconds, the passengers’ doors and the liftgate will unlock. See “Liftgate Release” under *Liftgate on page 2-11* for more information.

The UNLOCK button on the remote keyless entry transmitter will disarm the content theft-deterrent system. See *Content Theft-Deterrent on page 2-15* for more information.

If you would like to program the way the headlamps and parking lamps operate with remote unlock confirmation, and your vehicle is equipped with the Driver Information Center (DIC), see *DIC Vehicle Personalization on page 3-64*.

LOCK: To lock all doors, press LOCK.

The LOCK button on the remote keyless entry transmitter will arm the content theft-deterrent system. See *Content Theft-Deterrent on page 2-15* for more information.

If you would like to program the way the headlamps, parking lamps and horn operate with remote lock confirmation, and your vehicle is equipped with the Driver Information Center (DIC), see *DIC Vehicle Personalization on page 3-64*.

REAR: To unlock the liftgate, press REAR. See *Liftgate on page 2-11* for more information.

Remote Alarm

: Press the button with the horn symbol to make the headlamps and parking lamps flash and the horn sound. This will allow you to attract attention, if needed.

Press the button with the horn symbol again to stop the alarm from sounding, or the alarm will turn off after 90 seconds.

Matching Transmitter(s) to Your Vehicle

Each remote keyless entry transmitter is coded to prevent another transmitter from unlocking your vehicle. If a transmitter is lost or stolen, a replacement can be purchased through your dealer. Remember to bring any remaining transmitters with you when you go to your dealer. When the dealer matches the replacement transmitter to your vehicle, any remaining transmitters must also be matched. Once your dealer has coded the new transmitter, the lost transmitter will not unlock your vehicle. Each vehicle can have a maximum of four transmitters matched to it.

See your dealer to match transmitters to another vehicle.

Battery Replacement

Under normal use, the battery in your remote keyless entry transmitter should last about three years.

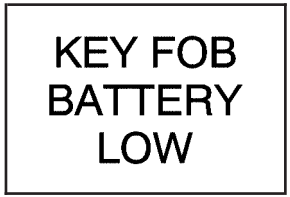

United States

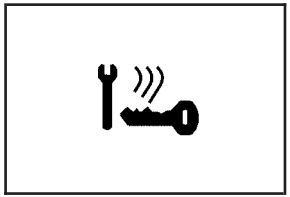

Canada

You can tell the battery is weak if the KEY FOB BATTERY LOW message appears in the message center. If you get this message, the battery in the key fob needs to be replaced.

Notice: **When replacing the battery, use care not to touch any of the circuitry. Static from your body transferred to these surfaces may damage the transmitter.**

1. Insert a flat object, such as a coin, into the slot on the side of the transmitter and twist to separate the halves.
2. Gently pry the battery out of the transmitter. Do not use the metal flanges to “pop out” the battery.
3. Replace the battery.
4. Reassemble the transmitter. Make sure the halves are snapped together tightly so water will not get in.
5. Press and hold the LOCK and UNLOCK buttons for seven seconds to synchronize the transmitter.
6. Check the transmitter operation.

Doors and Locks

Door Locks

⚠ CAUTION:

Unlocked doors can be dangerous.

- **Passengers — especially children — can easily open the doors and fall out of a moving vehicle. When a door is locked, the handle will not open it. You increase the chance of being thrown out of the vehicle in a crash if the doors are not locked. So, wear safety belts properly and lock the doors whenever you drive.**
- **Young children who get into unlocked vehicles may be unable to get out. A child can be overcome by extreme heat and can suffer permanent injuries or even death from heat stroke. Always lock your vehicle whenever you leave it.**
- **Outsiders can easily enter through an unlocked door when you slow down or stop your vehicle. Locking your doors can help prevent this from happening.**

There are several ways to lock and unlock your vehicle.

From the outside, use your key or the remote keyless entry transmitter.

To unlock the driver's door from the outside with the key, insert the key and turn it toward the front of the vehicle. To lock the driver's door from the outside with your key, insert the key and turn it toward the rear of the vehicle.

To unlock either manual locking front door from the inside, pull back on the manual lever. To lock either front door from the inside, push the manual lever forward.

Power Door Locks

The power door lock switch is located on the driver's and front passenger's doors next to the door handle.

Press the front of the switch to lock all doors, or press the back of the switch to unlock all doors.

The rear doors do not have power door lock switches. Instead, each rear door has a manual lever that works only that door's lock.

If your vehicle has the content theft-deterrent system, the power door lock switch may cause the system to arm. See *Content Theft-Deterrent on page 2-15* for more information.

Delayed Locking

With the delayed locking feature, the doors will not lock immediately when locking the doors using the power door lock switch or when LOCK on the remote keyless entry transmitter is pressed while any door is open. Instead, three chimes will be heard to indicate that the delayed locking feature is in operation. Five seconds after all doors are closed, the doors will lock automatically.

If the ignition is in ON or ACCESSORY, this feature will not lock the doors.

If your vehicle is equipped with the Driver Information Center (DIC), see *DIC Vehicle Personalization on page 3-64* to program the delayed locking feature.

Programmable Automatic Door Locks

All of the doors will automatically lock when all doors are closed, the engine is running and the shift lever is shifted out of PARK (P). All of the doors will automatically unlock when the shift lever is shifted into PARK (P).

With the automatic door lock feature, you can still lock or unlock the doors at any time, either manually, with the power door lock switches or by pressing LOCK on the remote keyless entry transmitter. See *Remote Keyless Entry System Operation on page 2-5* for more information.

If your vehicle is equipped with the Driver Information Center (DIC), see *DIC Vehicle Personalization on page 3-64* to program the automatic door lock feature.

Rear Door Security Locks

Your vehicle is equipped with rear door security locks that help prevent passengers from opening the rear doors on your vehicle from the inside. To use one of these locks do the following:

1. Open one of the rear doors.

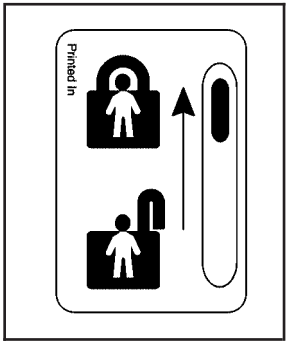

2. On the inside of the rear door will be a lock. Push the lever up to engage the safety lock.
3. Close the door.
4. Repeat Steps 1 through 3 for the other rear door lock.

The rear doors on your vehicle cannot be opened from inside the vehicle when this feature is in use. If you want to open the rear door when the security lock is on, unlock the door from the inside and then open the door from the outside.

Canceling the Rear Door Security Locks

1. Unlock and open the rear door from the outside.
2. Push the lever down to disengage the safety lock.
3. Close the door.
4. Repeat Steps 1 through 3 for the other rear door lock.

The rear door locks will now work normally.

Lockout Protection

The lockout protection feature may prevent you from locking your key in your vehicle. Pressing the power door lock switch will lock all doors, then unlock the driver's door, if the key is in the ignition when a door is opened.

If you leave the key in your vehicle but not in the ignition or if you use the manual door lock, you could still lock the key in the vehicle. Always remember to take the key with you.

Leaving Your Vehicle

If you are leaving the vehicle, take your key, open your door and set the locks from the inside. Then get out and close the door.

Liftgate

⚠ CAUTION:

It can be dangerous to drive with the liftgate open because carbon monoxide (CO) gas can come into your vehicle. You can't see or smell CO. It can cause unconsciousness and even death. If you must drive with the liftgate open or if electrical wiring or other cable connections must pass through the seal between the body and the liftgate:

- **Make sure all other windows are shut.**
- **Turn the fan on your heating or cooling system to its highest speed and select the control setting that will force outside air into your vehicle. See "Climate Control System" in the Index.**
- **If you have air outlets on or under the instrument panel, open them all the way. See "Engine Exhaust" in the Index.**

Liftgate Release

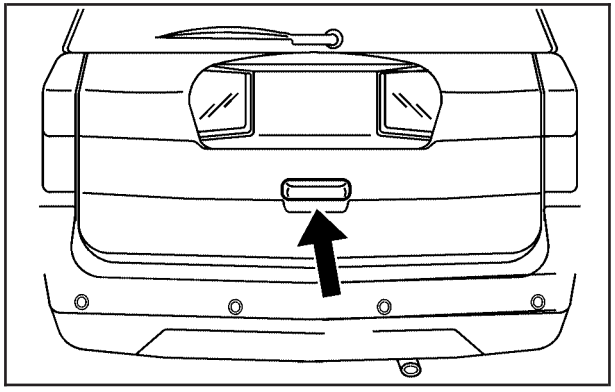

Liftgate Handle

Your vehicle is equipped with a liftgate release touchpad, located on the inner side of the liftgate handle.

To open the liftgate using the touchpad, do the following:

1. Put the vehicle in PARK (P).
2. Unlock all of the doors.
3. Lift up on the liftgate handle.

If your vehicle has a remote keyless entry transmitter, you may unlock the liftgate by pressing the REAR button on the transmitter, then open the liftgate manually by lifting up on the liftgate handle.

Windows

⚠ CAUTION:

Leaving children in a vehicle with the windows closed is dangerous. A child can be overcome by the extreme heat and can suffer permanent injuries or even death from heat stroke. Never leave a child alone in a vehicle, especially with the windows closed in warm or hot weather.

Power Windows

Switches on the driver's door armrest control each of the windows when the ignition is in ON, ACCESSORY, or when retained accessory power is active. See "Retained Accessory Power (RAP)" under *Ignition Positions on page 2-20* for more information. In addition, each passenger's door has a window switch.

The driver's power window switch has two down positions. Push the rear of the switch to the first position to lower the window normally.

Press the rear of any passenger window switch and that window will open. Press the front of any switch to close the window.

Express-Down Window

The driver's window switch also has an express-down feature. This switch is labeled AUTO. To activate the express-down feature, push the rear of the driver's window switch to the second position, then release it. The window will lower completely.

To stop the window while it is lowering, press the front of the switch. To raise the window, press and hold the front of the switch.

Window Lock Out

The driver's window controls also include a lock-out switch. Press the right side of the WDO LOCK switch to stop rear passengers from lowering their window. The driver can still control all of the windows with the lock on. Press the other side of the WDO LOCK switch for normal window operation.

Sun Visors

To block out glare you can swing down the visors. You can also remove them from the center mount and swing them to the side. There may be an extension on the inboard side of the sun visors. Pull the extension out to block out glare.

Visor Vanity Mirror

Pull down the sun visor. Flip up the cover to expose the vanity mirror.

Lighted Visor Vanity Mirrors

Pull down the sun visor. Flip up the cover to expose the vanity mirror. The lamps will come on when you open the cover.

Theft-Deterrent Systems

Vehicle theft is big business, especially in some cities. Although your vehicle has a number of theft-deterrent features, we know that nothing we put on it can make it impossible to steal.

Content Theft-Deterrent

Your vehicle may have a theft-deterrent alarm system.

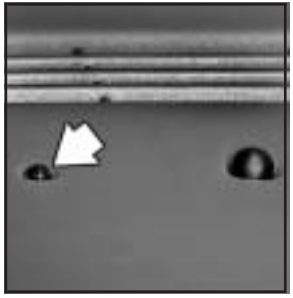

A light located on top of your instrument panel will flash slowly to let you know that the system has been armed.

While armed, the doors will not unlock with the power door lock switch.

Once armed, the alarm will go off if someone tries to enter the vehicle without the optional remote keyless entry transmitter or the key or tries to turn the ignition on without using the correct key. The horn will sound and the headlamps and parking lamps will flash any time the alarm sounds.

See “Liftgate Release” under *Liftgate on page 2-11* for more information on how to open the liftgate when the content theft-deterrent system is armed.

Arming with the Power Lock Switch

Your alarm system will arm when you use either power door lock switch to lock the doors while any door or the liftgate is open and the key is removed from the ignition. The security light will start flashing to let you know the system is armed.

Within five seconds after the security light begins to flash, any door can be manually unlocked and opened, without sounding the alarm. A door unlocked manually will remain unlocked until locked again.

Arming with the Remote Keyless Entry Transmitter

Your alarm system will arm when you press LOCK once on your remote keyless entry transmitter to lock the doors. The security light will come on for 30 seconds and then start flashing to let you know the system is armed.

Within the 30 second delay after the security light comes on, and an additional five seconds after the light begins to flash, any door can be manually unlocked and opened, without sounding the alarm.

If LOCK is pressed on your remote keyless entry transmitter twice within five seconds, any door can be manually unlocked and opened within five seconds after the security light begins to flash, without sounding the alarm. A door unlocked manually will remain unlocked until locked again.

Disarming with Your Key

Your alarm system will disarm when you use your key to unlock the driver's door. The security light will stop flashing to let you know the system is no longer armed.

Disarming with the Remote Keyless Entry Transmitter

Your alarm system will disarm when you press UNLOCK on your remote keyless entry transmitter to unlock the doors. The security light will stop flashing to let you know the system in no longer armed.

PASS-Key® III

Your PASS-Key® III system operates on a radio frequency subject to Federal Communications Commission (FCC) Rules and with Industry Canada.

This device complies with Part 15 of the FCC Rules. Operation is subject to the following two conditions:

1. this device may not cause harmful interference, and
2. this device must accept any interference received, including interference that may cause undesired operation.

This device complies with RSS-210 of Industry Canada. Operation is subject to the following two conditions:

1. this device may not cause interference, and
2. this device must accept any interference received, including interference that may cause undesired operation of the device.

Changes or modifications to this system by other than an authorized service facility could void authorization to use this equipment.

PASS-Key® III uses a radio frequency transponder in the key that matches a decoder in your vehicle.

PASS-Key® III Operation

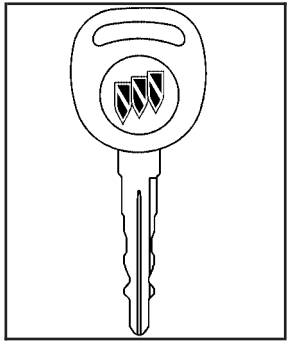

Your vehicle is equipped with the PASS-Key® III (Personalized Automotive Security System) theft-deterrent system. PASS-Key® III is a passive theft deterrent system. This means you don't have to do anything different to arm or disarm the system. It works when you insert or remove the key from the ignition.

When the PASS-Key® III system senses that someone is using the wrong key, it shuts down the vehicle's starter and fuel systems. The starter will not work and fuel will stop being delivered to the engine. Anyone using a trial-and-error method to start the vehicle will be discouraged because of the high number of electrical key codes.

When trying to start the vehicle if the engine does not start and the SECURITY message comes on, the key may have a damaged transponder. Turn the ignition off and try again.

If the engine still does not start, and the key appears to be undamaged, try another ignition key. At this time, you may also want to check the fuse. See *Fuses and Circuit Breakers on page 5-109*. If the engine still does not start with the other key, your vehicle needs service. If your vehicle does start, the first key may be faulty. See your dealer who can service the PASS-Key® III to have a new key made.

It is possible for the PASS-Key® III decoder to program the transponder value of a new or replacement key. Up to 10 additional keys may be programmed for the vehicle. This procedure is for programming additional keys only. If all the currently programmed keys are lost or do not operate, you must see your dealer or a locksmith who can service PASS-Key® III to have keys made and programmed to the system.

See your dealer who can service PASS-Key® III to get a new key blank that is a cut exactly as the ignition key that operates the system.

Canadian Owners: If you lose or damage your keys, only a GM dealer can service PASS-Key® III to have new keys made. To program additional keys you will need two current driver's keys (black in color). You must add a step to the following procedure. After Step 3 repeat Steps 1 through 3 with the second current driver's key. Then continue with Step 4.

To program the new PK3® key do the following:

1. Verify the new key has PK3® stamped on it.
2. Insert the original key in the ignition and start the engine. If the engine will not start, see your dealer for service.
3. After the engine has started, turn the key to OFF, and remove the key.
4. Insert the key to be programmed and turn it to ON within 10 seconds of removing the previous key.
5. The SECURITY message will turn off once the key has been programmed. It may not be apparent that the SECURITY message went on due to how quickly the key is programmed.
6. Repeat Steps 1 through 4 if additional keys are to be programmed.

If you are ever driving and the SECURITY message comes on and stays on, you will be able to restart your engine if you turn it off. Your PASS-Key® III system, however, is not working properly and must be serviced by your dealer. Your vehicle is not protected by the PASS-Key® III system at this time.

If you lose or damage a PASS-Key® III key, see your dealer who can service PASS-Key® III to have a new key made.

Starting and Operating Your Vehicle

New Vehicle Break-In

Notice: **Your vehicle does not need an elaborate "break-in." But it will perform better in the long run if you follow these guidelines:**

- **If you have all-wheel drive, keep your speed at 55 mph (88 km/h) or less for the first 500 miles (805 km).**
- **Do not drive at any one speed — fast or slow — for the first 500 miles (805 km). Do not make full-throttle starts.**
- **Avoid making hard stops for the first 200 miles (322 km) or so. During this time your new brake linings are not yet broken in. Hard stops with new linings can mean premature wear and earlier replacement. Follow this breaking-in guideline every time you get new brake linings.**
- **Do not tow a trailer during break-in. See *Towing a Trailer on page 4-42* for more information.**

Ignition Positions

With the key in the ignition, you can turn the key to four different positions.

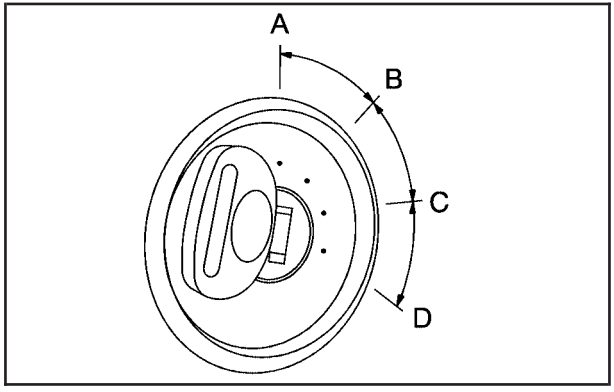

A (OFF): This is the only position in which you can remove the key. This position locks the steering wheel, ignition and transaxle.

Notice: **If your key seems stuck in OFF and you can't turn it, be sure you are using the correct key; if so, is it all the way in? If it is, then turn the steering wheel left and right while you turn the key hard. Turn the key only with your hand. Using a tool to force it could break the key or the ignition switch. If none of these works, then your vehicle needs service.**

B (ACCESSORY): This position allows you to use things like the radio and the windshield wipers while the engine is off. This position will allow you to turn off the engine, but still turn the steering wheel. Use ACCESSORY if you must have your vehicle in motion while the engine is off, for example, if your vehicle is being pushed or towed.

C (ON): This is the position that the switch returns to after you start your engine and release the key. The switch stays in ON when the engine is running. But even when the engine is not running, you can use ON to operate your electrical power accessories, and to display some instrument panel warning lights.

D (START): This position starts the engine. When the engine starts, release the key. The ignition switch will return to ON for normal driving.

If the engine is not running, ACCESSORY and ON are positions that allow you to operate your electrical accessories, such as the radio.

Retained Accessory Power (RAP)

With RAP, the power windows, the audio system, the sunroof and the Automatic Level Control will continue to work up to 10 minutes after the ignition key is turned to OFF and none of the doors are opened.

Starting Your Engine

Move your shift lever to PARK (P) or NEUTRAL (N). Your engine won't start in any other position – that's a safety feature. To restart when you're already moving, use NEUTRAL (N) only.

Notice: **Shifting into PARK (P) with the vehicle moving could damage the transaxle. Shift to PARK (P) only when your vehicle is stopped.**

1. With your foot off the accelerator pedal, turn your ignition key to START. When the engine starts, let go of the key. The idle speed will go down as your engine warms up.

Notice: **Holding your key in START for longer than 15 seconds at a time will cause your battery to be drained much sooner. And the excessive heat can damage your starter motor. Wait about 15 seconds between each try to help avoid draining your battery or damaging your starter.**

2. If the engine doesn't start in 10 seconds, push the accelerator pedal about one-quarter of the way down while you turn the key to START. Do this until the engine starts. As soon as it does, let go of the key.
3. If your engine still won't start (or starts but then stops), it could be flooded with too much gasoline. Try pushing your accelerator pedal all the way to the floor and holding it there as you hold the key in START for a maximum of 15 seconds. This clears the extra gasoline from the engine. If the engine still won't start or starts briefly but then stops again, repeat Step 1 or 2, depending on the temperature. When the engine starts, release the key and the accelerator pedal.

Notice: **Your engine is designed to work with the electronics in your vehicle. If you add electrical parts or accessories, you could change the way the engine operates. Before adding electrical equipment, check with your dealer. If you do not, your engine might not perform properly.**

Engine Coolant Heater

Your vehicle may have an engine coolant heater. In very cold weather, 0°F (–18°C) or colder, the engine coolant heater can help. You'll get easier starting and better fuel economy during engine warm-up. Usually, the coolant heater should be plugged in a minimum of four hours prior to starting your vehicle. At temperatures above 32°F (0°C), use of the coolant heater is not required.

To Use the Engine Coolant Heater

1. Turn off the engine.
2. Open the hood and unwrap the electrical cord. The electrical cord is located on the driver's side of the engine compartment.
3. Plug it into a normal, grounded 110-volt AC outlet.

⚠ CAUTION:

Plugging the cord into an ungrounded outlet could cause an electrical shock. Also, the wrong kind of extension cord could overheat and cause a fire. You could be seriously injured. Plug the cord into a properly grounded three-prong 110-volt AC outlet. If the cord will not reach, use a heavy-duty three-prong extension cord rated for at least 15 amps.

4. Before starting the engine, be sure to unplug and store the cord as it was before to keep it away from moving engine parts. If you don't, it could be damaged.

How long should you keep the coolant heater plugged in? The answer depends on the outside temperature, the kind of oil you have, and some other things. Instead of trying to list everything here, we ask that you contact your dealer in the area where you'll be parking your vehicle. The dealer can give you the best advice for that particular area.

Automatic Transaxle Operation

P R N D 3 2 1

Maximum engine speed is limited when you're in PARK (P) or NEUTRAL (N), to protect driveline components from improper operation.

There are several different positions for your shift lever.

PARK (P): This gear position locks your front wheels. It is the best position to use when you start your engine because your vehicle cannot move easily.

Ensure the shift lever is fully in PARK (P) before starting the engine. Your vehicle has an automatic transaxle shift lock control system. You must fully apply your regular brakes *before* you can shift from PARK (P) when the ignition key is in RUN. As you step on the brake pedal, while in PARK (P), you may hear a click from the solenoid of the system. This ensures that the system is operating properly.

If you cannot shift out of PARK (P), ease pressure on the shift lever – push the shift lever all the way into PARK (P) as you maintain brake application. Then move the shift lever into the gear you wish. See *Shifting Out of Park (P) on page 2-29* for more information.

⚠ CAUTION:

It is dangerous to get out of your vehicle if the shift lever is not fully in PARK (P) with the parking brake firmly set. Your vehicle can roll.

Do not leave your vehicle when the engine is running unless you have to. If you have left the engine running, the vehicle can move suddenly. You or others could be injured. To be sure your vehicle will not move, even when you are on fairly level ground, always set your parking brake and move the shift lever to PARK (P). See *Shifting Into Park (P) on page 2-27*. If you are pulling a trailer, see *Towing a Trailer on page 4-42*.

REVERSE (R): Use this gear to back up.

Notice: **Shifting to REVERSE (R) while your vehicle is moving forward could damage the transaxle. The repairs would not be covered by your warranty. Shift to REVERSE (R) only after your vehicle is stopped.**

To rock your vehicle back and forth to get out of snow, ice or sand without damaging your transaxle, see If *You Are Stuck: In Sand, Mud, Ice or Snow on page 4-32*.

NEUTRAL (N): In this position, your engine does not connect with the wheels. To restart when you are already moving, use NEUTRAL (N) only. Also, use NEUTRAL (N) when your vehicle is being towed.

⚠ CAUTION:

Shifting into a drive gear while your engine is running at high speed is dangerous. Unless your foot is firmly on the brake pedal, your vehicle could move very rapidly. You could lose control and hit people or objects. Do not shift into a drive gear while your engine is running at high speed.

Notice: **Shifting out of PARK (P) or NEUTRAL (N) with the engine racing may damage the transaxle. The repairs would not be covered by your warranty. Be sure the engine is not racing when shifting your vehicle.**

AUTOMATIC OVERDRIVE (D): This position is for normal driving. If you need more power for passing, and you are:

- Going less than 35 mph (55 km/h), push your accelerator pedal about halfway down.
- Going about 35 mph (55 km/h) or more, push the accelerator all the way down.

You will shift down to the next gear and have more power.

Notice: **Driving your vehicle if you notice that it is moving slowly or not shifting gears as you increase speed may damage the transaxle. Have your vehicle serviced right away. You can drive in SECOND (2) when you are driving less than 35 mph (55 km/h) and AUTOMATIC OVERDRIVE (D) for higher speeds until then.**

Warm-Up Shift

Your vehicle has a computer controlled transaxle designed to warm up the engine faster when the outside temperature is 35°F (2°C) or colder. You may notice that the transaxle will shift at a higher vehicle speed until the engine is warmed up. This is a normal condition designed to provide heat to the passenger compartment and defrost the windows more quickly.

THIRD (3): This position is also used for normal driving, but it offers more power and lower fuel economy than AUTOMATIC OVERDRIVE (D).

Here are some times you might choose THIRD (3) instead of AUTOMATIC OVERDRIVE (D):

- When driving on hilly, winding roads
- When towing a trailer, so there is less shifting between gears
- When going down a steep hill

SECOND (2): This position gives you more power, but lower fuel economy than THIRD (3). You can use SECOND (2) on hills. It can help control your speed as you go down steep mountain roads, but then you would also want to use your brakes off and on.

Notice: **Driving in SECOND (2) for more than 25 miles (40 km) or at speeds over 55 mph (90 km/h) may damage the transaxle. Also, shifting into SECOND (2) at speeds above 65 mph (105 km/h) can cause damage. Drive in THIRD (3) or AUTOMATIC OVERDRIVE (D) instead of SECOND (2).**

Notice: **If your vehicle seems to start up rather slowly, or if it seems not to shift gears as you go faster, something may be wrong with a transaxle system sensor. If you drive very far that way, your vehicle can be damaged. So, if this happens, have your vehicle serviced right away. Until then, you can use SECOND (2) when you are driving less than 35 mph (55 km/h) and THIRD (3) for higher speeds.**

FIRST (1): This position gives you even more power, but lower fuel economy than SECOND (2). You can use it on very steep hills, or in deep snow or mud. If the shift lever is put in FIRST (1), the transaxle will not downshift into first gear until the vehicle is going slow enough.

Notice: **Spinning the tires or holding the vehicle in one place on a hill using only the accelerator pedal may damage the transaxle. If you are stuck, do not spin the tires. When stopping on a hill, use the brakes to hold the vehicle in place.**

Parking Brake

The parking brake is located on the driver's side under the instrument panel.

To set the parking brake, hold the regular brake pedal down with your right foot and push down on the parking brake pedal with your left foot.

If the ignition is on, the brake system warning light will come on. See *Brake System Warning Light on page 3-44*.

To release the parking brake, hold the regular brake pedal down with your right foot while you push down on the parking brake pedal with your left foot. (To release the tension on the parking brake cable, you will need to apply about the same amount of pressure to the parking brake pedal as you did when you set the parking brake.) When you remove your foot from the parking brake pedal, it will pop up to the released position.

Notice: **Driving with the parking brake on can overheat the brake system and cause premature wear or damage to brake system parts. Verify that the parking brake is fully released and the brake warning light is off before driving.**

If you are towing a trailer and are parking on any hill, see *Towing a Trailer on page 4-42*. That section shows what to do first to keep the trailer from moving.

Shifting Into Park (P)

⚠ CAUTION:

It can be dangerous to get out of your vehicle if the shift lever is not fully in PARK (P) with the parking brake firmly set. Your vehicle can roll. If you have left the engine running, the vehicle can move suddenly. You or others could be injured. To be sure your vehicle will not move, even when you are on fairly level ground, use the steps that follow. If you are pulling a trailer, see *Towing a Trailer on page 4-42*.

1. Hold the brake pedal down with your right foot and set the parking brake with your left foot.

2. To move the shift lever into PARK (P), do the following:

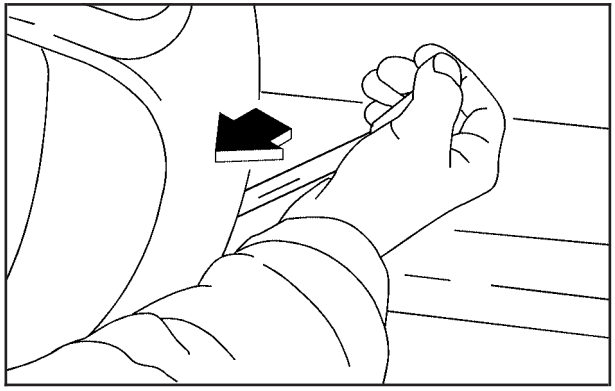

2.1. Pull the lever toward you.

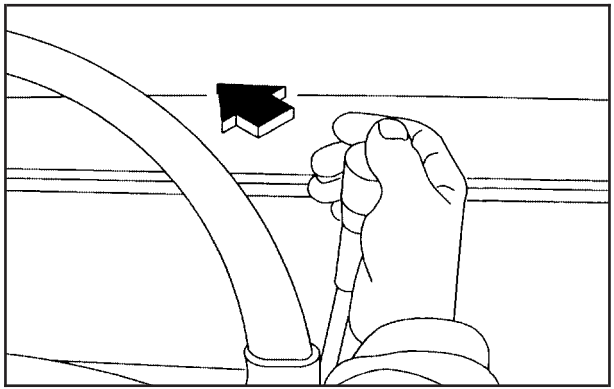

2.2. Move the lever up as far as it will go.

3. Turn the ignition key to LOCK.
4. Remove the key and take it with you. If you can leave your vehicle with the ignition key in your hand, your vehicle is in PARK (P).

Leaving Your Vehicle With the Engine Running

⚠ CAUTION:

It can be dangerous to leave your vehicle with the engine running. Your vehicle could move suddenly if the shift lever is not fully in PARK (P) with the parking brake firmly set. And, if you leave the vehicle with the engine running, it could overheat and even catch fire. You or others could be injured. Do not leave your vehicle with the engine running.

If you have to leave your vehicle with the engine running, be sure your vehicle is in PARK (P) and your parking brake is firmly set before you leave it. After you have moved the shift lever into PARK (P), hold the regular brake pedal down. Then, see if you can move the shift lever away from PARK (P) without first pulling it toward you. If you can, it means that the shift lever was not fully locked into PARK (P).

Torque Lock

If you are parking on a hill and you do not shift your transaxle into PARK (P) properly, the weight of the vehicle may put too much force on the parking pawl in the transaxle. You may find it difficult to pull the shift lever out of PARK (P). This is called torque lock.
To prevent torque lock, set the parking brake and then shift into PARK (P) properly before you leave the driver's seat. To find out how, see *Shifting Into Park (P) on page 2-27*.

When you are ready to drive, move the shift lever out of PARK (P) *before* you release the parking brake.

If torque lock does occur, you may need to have another vehicle push yours a little uphill to take some of the pressure from the parking pawl in the transaxle, so you can pull the shift lever out of PARK (P).

Shifting Out of Park (P)

Your vehicle has an automatic transaxle shift lock control system which locks the shift lever in PARK (P) when the ignition is in the OFF position. In addition, you must fully *apply* your regular brakes *before* you can shift from PARK (P), when the ignition is in the ON position. See *Automatic Transaxle Operation on page 2-23*.

If you cannot shift out of PARK (P), ease pressure on the shift lever and push the shift lever all the way up into PARK (P) as you maintain brake application. Then move the shift lever into the gear you want.

If you ever hold the brake pedal down but still can't shift out of PARK (P), try this:

1. Turn the ignition key to OFF.
2. Apply and hold the brake until the end of Step 4.
3. Shift the transaxle to NEUTRAL (N).
4. Start the vehicle and then shift to the gear you want.
5. Have the system fixed as soon as you can.

Parking Over Things That Burn

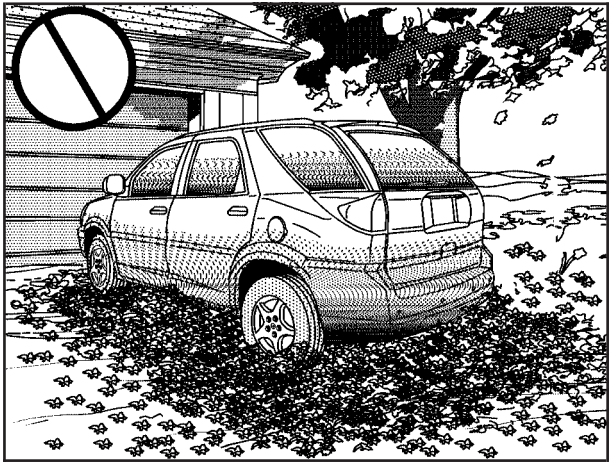

⚠ CAUTION:

Things that can burn could touch hot exhaust parts under your vehicle and ignite. Do not park over papers, leaves, dry grass or other things that can burn.

Engine Exhaust

⚠ CAUTION:

Engine exhaust can kill. It contains the gas carbon monoxide (CO), which you can not see or smell. It can cause unconsciousness and death.

You might have exhaust coming in if:

- **Your exhaust system sounds strange or different.**
- **Your vehicle gets rusty underneath.**
- **Your vehicle was damaged in a collision.**
- **Your vehicle was damaged when driving over high points on the road or over road debris.**
- **Repairs were not done correctly.**
- **Your vehicle or exhaust system had been modified improperly.**

If you ever suspect exhaust is coming into your vehicle:

- **Drive it only with all the windows down to blow out any CO; and**
- **Have your vehicle fixed immediately.**

Running Your Engine While You Are Parked

It is better not to park with the engine running. But if you ever have to, here are some things to know.

⚠ CAUTION:

Idling the engine with the climate control system off could allow dangerous exhaust into your vehicle. See the earlier Caution under *Engine Exhaust on page 2-30*.

Also, idling in a closed-in place can let deadly carbon monoxide (CO) into your vehicle even if the climate control fan is at the highest setting. One place this can happen is a garage. Exhaust — with CO — can come in easily. NEVER park in a garage with the engine running.

Another closed-in place can be a blizzard. See *Winter Driving on page 4-28*.

⚠ CAUTION:

It can be dangerous to get out of your vehicle if the shift lever is not fully in PARK (P) with the parking brake firmly set. Your vehicle can roll. Do not leave your vehicle when the engine is running unless you have to. If you have left the engine running, the vehicle can move suddenly. You or others could be injured. To be sure your vehicle will not move, even when you are on fairly level ground, always set your parking brake and move the shift lever to PARK (P).

Follow the proper steps to be sure your vehicle will not move. See *Shifting Into Park (P) on page 2-27*.

If you are pulling a trailer, see *Towing a Trailer on page 4-42*.

Mirrors

Manual Rearview Mirror

To reduce glare from lights behind you, pull the lever toward you to for the night position. To return the mirror to the day position, push the lever away from you.

The mirror's two outer buttons operate the lights on the bottom sides of the mirror.

Outside Power Mirror

The power mirror controls are located on the driver's door armrest.

To choose either the left or right outside mirror, press the selector switch. Press any of the four arrows located on the control pad to move the mirrors in the desired direction.

Adjust each mirror so you can see the side of your vehicle and the area behind your vehicle.

Outside Curb View Assist Mirror

If your vehicle has this feature, the passenger's outside rearview mirror will tilt towards the curb when the vehicle is shifted into REVERSE (R) and return to its previous position when the vehicle is shifted out of REVERSE (R). See *DIC Vehicle Personalization on page 3-64* for information on how to turn this feature on and off.

Outside Convex Mirror

Your passenger's side mirror is convex. A convex mirror's surface is curved so you can see more from the driver's seat.

⚠ CAUTION:

A convex mirror can make things (like other vehicles) look farther away than they really are. If you cut too sharply into the right lane, you could hit a vehicle on your right. Check your inside mirror or glance over your shoulder before changing lanes.

Outside Heated Mirrors

If your vehicle has this feature, the outside rearview mirrors are heated when you activate the rear window defogger. See "Rear Window Defogger" under *Climate Control System on page 3-28*.

OnStar® System

OnStar® uses global positioning system (GPS) satellite technology, wireless communications, and call centers to provide you with a wide range of safety, security, information and convenience services.

A complete OnStar® user's guide and the terms and conditions of the OnStar® Subscription Service Agreement are included in your vehicle's glove box literature. For more information, visit www.onstar.com, contact OnStar® at 1-888-4-ONSTAR (1-888-466-7827), or press the blue OnStar® button to speak to an OnStar® advisor 24 hours a day, 7 days a week.

A completed Subscription Service Agreement is required prior to delivery of OnStar® services and prepaid calling minutes are also required for OnStar® Personal Calling and OnStar® Virtual Advisor use. Terms and conditions of the Subscription Service Agreement can be found at www.onstar.com.

OnStar® Services

One of the following plans is normally included for a specific duration with each vehicle equipped with OnStar®. You can upgrade or extend your OnStar® service plan to meet your needs.

Safe and Sound Plan

- Automatic Notification of Air Bag Deployment
- Emergency Services
- Roadside Assistance
- Stolen Vehicle Assistance
- AccidentAssist
- Remote Door Unlock
- Remote Diagnostics
- Online Concierge

Directions and Connections Plan

- All Safe and Sound Plan services
- Route Support
- RideAssist
- Information and Convenience Services

Luxury and Leisure Plan

- All Directions and Connections Plan services
- Personal Concierge

OnStar® Personal Calling

With OnStar® Personal Calling, you have a safer way to stay connected while driving. It's a hands-free wireless phone that's integrated into your vehicle. You can place calls nationwide using voice-activated dialing with no contracts and no additional roaming charges. To find out more about OnStar® Personal Calling, refer to the OnStar® user's guide in your vehicle's glove box, or call OnStar® at 1-888-4-ONSTAR (1-888-466-7827).

OnStar® Virtual Advisor

With OnStar® Virtual Advisor you can listen to the news, entertainment and informative topics, such as traffic and weather reports. You are able to listen and reply to your e-mail through your vehicle's speakers.

HomeLink® Transmitter

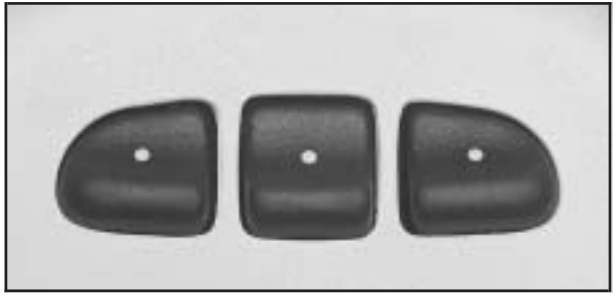

HomeLink, a combined universal transmitter and receiver, provides a way to replace up to three hand–held transmitters used to activate devices such as gate operators, garage door openers, entry door locks, security systems and home lighting. Additional HomeLink information can be found on the internet at www.homelink.com or by calling 1–800–355–3515.

If your vehicle is equipped with the HomeLink® transmitter, it complies with Part 15 of the FCC Rules. Operation is subject to the following two conditions: (1) this device may not cause harmful interference, and (2) this device must accept any interference received, including interference that may cause undesired operation.

This device complies with RSS-210 of Industry Canada. Operation is subject to the following two conditions: (1) this device may not cause interference, and (2) this device must accept any interference, including interference that may cause undesired operation of the device.

Changes and modifications to this system by other than an authorized service facility could void authorization to use this equipment.

Programming the HomeLink® Transmitter

Do not use the HomeLink® Transmitter with any garage door opener that does not have the “stop and reverse” feature. This includes any garage door opener model manufactured before April 1, 1982. If you have a newer garage door opener with rolling codes, please be sure to follow steps 6 through 8 to complete the programming of your HomeLink® Transmitter.

Read the instructions completely before attempting to program the HomeLink® Transmitter. Because of the steps involved, it may be helpful to have another person available to assist you in programming the transmitter.

Keep the original transmitter for use in other vehicles as well as for future HomeLink® programming. It is also recommended that upon the sale of the vehicle, the programmed HomeLink® buttons should be erased for security purposes. Refer to “Erasing HomeLink® Buttons” or, for assistance, contact HomeLink® on the internet at: www.homelink.com or by calling 1-800-355-3515.

Be sure that people and objects are clear of the garage door or gate operator you are programming. When programming a garage door, it is advised to park outside of the garage.

It is recommended that a new battery be installed in your hand-held transmitter for quicker and more accurate transmission of the radio frequency.

Your vehicle’s engine should be turned off while programming the transmitter. Follow these steps to program up to three channels:

1. Press and hold down the two outside buttons, releasing only when the indicator light begins to flash, after 20 seconds. Do not hold down the buttons for longer than 30 seconds and do not repeat this step to program a second and/or third transmitter to the remaining two HomeLink® buttons.
2. Position the end of your hand-held transmitter about 1 to 3 inches (3 to 8 cm) away from the HomeLink® buttons while keeping the indicator light in view.
3. Simultaneously press and hold both the desired button on HomeLink® and the hand-held transmitter button. Do not release the buttons until Step 4 has been completed.

   Some entry gates and garage door openers may require you to substitute Step 3 with the procedure noted in “Gate Operator and Canadian Programming” later in this section.
4. The indicator light will flash slowly at first and then rapidly after HomeLink® successfully receives the frequency signal from the hand-held transmitter. Release both buttons.
5. Press and hold the newly-trained HomeLink® button and observe the indicator light.

   If the indicator light stays on constantly, programming is complete and your device should activate when the HomeLink® button is pressed and released.

   To program the remaining two HomeLink® buttons, begin with Step 2 under “Programming HomeLink®.” Do not repeat Step 1 as this will erase all of the programmed channels.

   If the indicator light blinks rapidly for two seconds and then turns to a constant light, continue with Steps 6 through 8 following to complete the programming of a rolling-code equipped device (most commonly, a garage door opener).

6. Locate in the garage, the garage door opener receiver (motor-head unit). Locate the “Learn” or “Smart” button. This can usually be found where the hanging antenna wire is attached to the motor-head unit.
7. Firmly press and release the “Learn” or “Smart” button. The name and color of the button may vary by manufacturer.

   You will have 30 seconds to start Step 8.
8. Return to the vehicle. Firmly press and hold the programmed HomeLink® button for two seconds, then release. Repeat the press/hold/release sequence a second time, and depending on the brand of the garage door opener (or other rolling code device), repeat this sequence a third time to complete the programming.

   HomeLink® should now activate your rolling-code equipped device.

To program the remaining two HomeLink® buttons, begin with Step 2 of “Programming HomeLink®.” Do not repeat Step 1.

Gate Operator and Canadian Programming

Canadian radio-frequency laws require transmitter signals to “time out” or quit after several seconds of transmission. This may not be long enough for HomeLink® to pick up the signal during programming. Similarly, some U.S. gate operators are manufactured to “time out” in the same manner.

If you live in Canada, or you are having difficulty programming a gate operator by using the “Programming HomeLink®” procedures (regardless of where you live), replace Step 3 under “Programming HomeLink®” with the following:

Continue to press and hold the HomeLink® button while you press and release every two seconds (cycle) your hand-held transmitter until the frequency signal has been successfully accepted by HomeLink®. The indicator light will flash slowly at first and then rapidly. Proceed with Step 4 under “Programming HomeLink®” to complete.

Using HomeLink®

Press and hold the appropriate HomeLink® button for at least half of a second. The indicator light will come on while the signal is being transmitted.

Erasing HomeLink® Buttons

To erase programming from the three buttons do the following:

1. Press and hold down the two outside buttons until the indicator light begins to flash, after 20 seconds.
2. Release both buttons. Do not hold for longer than 30 seconds.

HomeLink® is now in the train (learning) mode and can be programmed at any time beginning with Step 2 under “Programming HomeLink®.”

Individual buttons can not be erased, but they can be reprogrammed. See “Reprogramming a Single HomeLink® Button” next.

Reprogramming a Single HomeLink® Button

To program a device to HomeLink® using a HomeLink® button previously trained, follow these steps:

1. Press and hold the desired HomeLink® button. Do not release the button.
2. The indicator light will begin to flash after 20 seconds. While still holding the HomeLink® button, proceed with Step 2 under “Programming HomeLink®.”

Resetting Defaults

To reset HomeLink® to default settings do the following:

1. Hold down the two outside buttons for about 20 seconds until the indicator light begins to flash.
2. Continue to hold both buttons until the HomeLink® indicator light turns off.
3. Release both buttons.

For questions or comments, contact HomeLink® at 1-800-355-3515, or on the internet at www.homelink.com.

Storage Areas

Glove Box

If the glove box has a lock, put your key into the lock and turn the key counterclockwise. To open the glovebox, pull the latch release.

The glove box door has a detent to prevent the door from lowering too far. Open the glove box until the door is partway open, then pull the door down if you need it fully opened.

To close the glove box, the door must be pushed up past the detent. To lock the glovebox, put your key into the lock and turn the key clockwise.

Cupholder(s)

There are two cupholders located in the floor console.

The cupholders have liners that remove for larger beverage items. Remove the liners by lifting them out.

Your vehicle has cupholders located in the rear seat armrests if it has a split folding rear seat. If your vehicle has captain's chairs, there are cupholders on the sides of the seats. If your vehicle has a stowable seat, there are cupholders in the center of the seat.

Cell Phone Storage Area

Your vehicle has a cell phone storage compartment located on the floor console storage closest to the driver's seat. Lift the lid to use the storage compartment. The compartment has an accessory power outlet for charging the cell phone.

Overhead Console

If your vehicle has an overhead console it may contain compartments for storage and sunglasses and HomeLink® Transmitter buttons.

If your vehicle has the OnStar® System, the OnStar® buttons will replace the storage compartment. See *OnStar® System on page 2-33* for more information.

If your vehicle has a sunroof, the mini console contains the HomeLink® Transmitter buttons and the OnStar® buttons.

Storage Compartment

To open the storage compartment, located at the front of the overhead console, press the release latch forward. Then pull the compartment down to the full open position.

Sunglasses Storage Compartment

To open the sunglasses storage compartment in the overhead console, press the release button. Then pull the compartment down to the full open position.

Floor Console Storage Area

The floor console storage contains two cupholders, an ashtray and a cellular phone storage compartment with a cigarette lighter/accessory power outlet.

Below the floor console storage is a purse storage area with two integrated convenience nets.

Front Armrest Storage Area

Your vehicle has a front armrest storage compartment which contains two storage compartments.

To unlock the front armrest storage compartment, put your key into the lock and turn the key counterclockwise. To open the armrest, squeeze the lever while lifting the top to open it.

To close the armrest, push the lid down until you hear a click. To lock the armrest, put your key into the lock and turn the key clockwise.

Rear Storage Area

There are four small storage compartments in the rear of your vehicle. One is on the passenger's side, two are on the driver's side and one is on the floor by the tailgate. To remove the covers, lift up on the tabs. If your vehicle has the 10-speaker system, the compartment on the passenger's side and the long compartment on the driver's side will be equipped with speakers.

Roof Rack System

⚠ CAUTION:

If you try to carry something on top of your vehicle that is longer or wider than the luggage carrier — like paneling, plywood, a mattress and so forth — the wind can catch it as you drive along. This can cause you to lose control. What you are carrying could be violently torn off, and this could cause you or other drivers to have a collision, and of course damage your vehicle. You may be able to carry something like this inside. But, never carry something longer or wider than the luggage carrier on top of your vehicle.

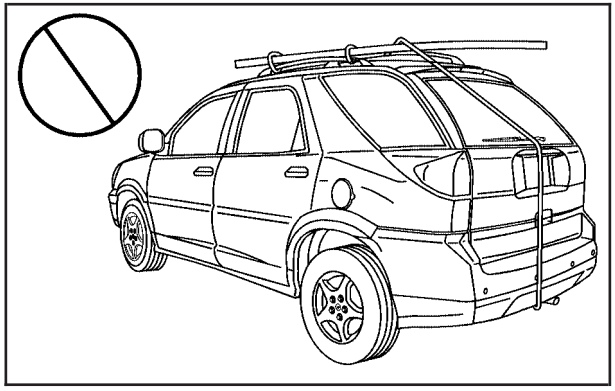

If you have the luggage carrier, you can load things on top of your vehicle. If you do load things on the top of your vehicle, you must load them on the luggage carrier crossrails.

Notice: **Damage may be caused to the roof of your vehicle if anything is placed directly on the roof.**

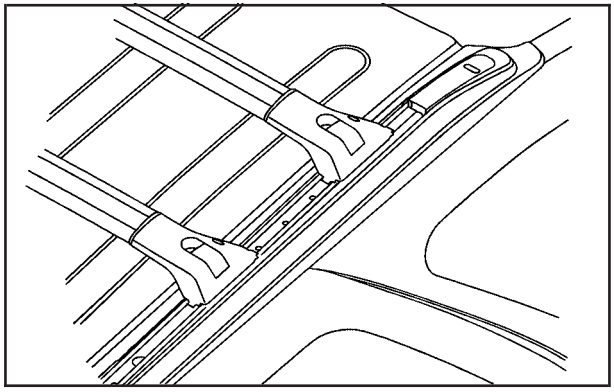

Notice: **Loading cargo on the luggage carrier that weighs more than 220 lbs (100 kg) or hangs over the rear or sides of the vehicle may damage your vehicle. Load cargo so that it rests on the slats as far forward as possible and against the side rails, making sure to fasten it securely.**

When you carry cargo on the luggage carrier of a proper size and weight, put it on the slats and distribute the weight evenly. Then slide the crossrail up against the rear of the load to keep it from moving. You can then tie it down. Cargo containers must be loaded on the crossrails only.

Don't exceed the maximum vehicle capacity when loading your vehicle. For more information on vehicle capacity and loading, see *Loading Your Vehicle on page 0-0*.

To prevent damage or loss of cargo as you're driving, check now and then to make sure the luggage carrier and cargo are still securely fastened.

Loading things onto the luggage carrier can interfere with the performance of your XM™ Satellite Radio System.

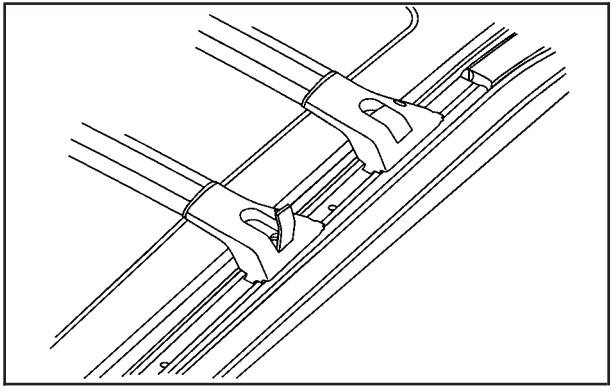

Your luggage carrier has release levers within the end of each crossrail support.

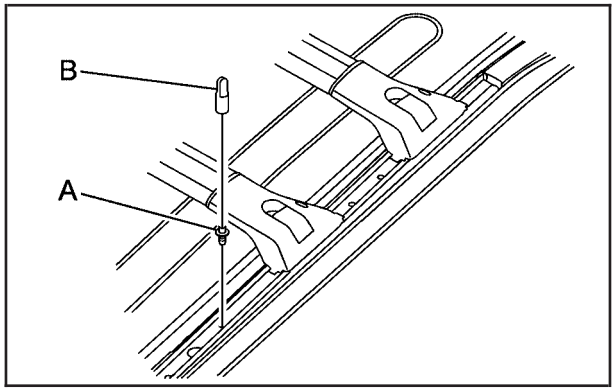

To adjust the crossrail(s), the sunroof stop (A) must be removed.

To remove the sunroof stop, do the following:

1. Find the tool (B) located in a bag in the glovebox labeled “tool kit-acsry”.
2. Use the tool to remove the screw located in the side rail assembly in front of the front crossrail.
3. Repeat for the other side.
4. Put the tool and the screws back in the plastic bag in the glove box.

To adjust the crossrails, lift the release levers on each side to unlock them. Slide the crossrails forward or backward, as needed, to accommodate loads of various sizes.

After repositioning the crossrails, push the release lever down. This will lock the crossrails in place.

Notice: **Opening the sunroof when the luggage rack crossrails are not in the full-rear position could cause damage to the sunroof or luggage rack. Verify the luggage rack crossrails are in the full-rear position before opening the sunroof.**

When you are done using the crossrails you must replace the sunroof stop.

To replace the sunroof stop, do the following:

1. Put the crossrails in the full rear position.
2. Using the tool, put the screws back into each side rail assembly. Make sure the screws are in the first hole in front of the crossrail.

Convenience Net

Your vehicle may have a convenience net. The convenience net is designed to help keep small loads, like grocery bags, from falling over. Install the convenience net at the rear of your vehicle, just inside the liftgate/tailgate opening.

Attach both the upper and lower hooks to the loops on either side of the liftgate opening. The label on the net should be in the upper left corner.

The convenience net has a maximum capacity of 100 lbs. (45 kg). It is not designed to hold larger, heavier loads. Store such loads on the floor of your vehicle, as far forward as you can.

When not in use, it is recommended that you take down the rear convenience net to extend its life and retain its elasticity, and to keep the rear exit clear. Store the net in one of the storage compartments.

Cargo Cover

If your vehicle has a cargo cover, you can use it to cover items in the rear of the vehicle. Remove the cover from its pouch and place the loops found on each corner of the cover, over the four pegs in each corner of the rear if the vehicle. When it is not in use, fold up the cover and return it to the pouch.

Rear Convenience Center

⚠ CAUTION:

If any removable convenience item is not secured properly, it can move around in a collision or sudden stop. People in the vehicle could be injured. Be sure to secure any such item properly.

Your vehicle may have a rear convenience center. The rear convenience center can be used to organize and store items in your vehicle.

The extended rear convenience center, without the optional third row stowable seat, has a forward bin and rear bin. The rear convenience center, with the optional third row stowable seat, contains one storage bin.

To use the convenience center, remove the carpeted mat and lift the handle(s) on the top of the lid to open the storage bin.

The extended rear convenience center has a maximum weight capacity of 400 lbs. (181.6 kg) on top.

The shorter rear convenience center that comes with the optional third row stowable seat has a maximum weight capacity of 100 lbs. (45.4 kg) on top.

Removing the Extended Rear Convenience Center

1. Make sure that all items have been removed from the top and the inside of the rear convenience center.
2. Remove the carpeted mat from the vehicle.
3. Lift the handle(s) on the top of the lid to open the rear storage bin. The center lid will also need to be opened.
4. Remove the two nuts from inside the rear storage bin. The nuts are located in the bottom of the bin.
5. Lift the rear storage bin and remove it from the rear of the vehicle.
6. Remove the two nuts inside the forward storage bin. These nuts are located along the bottom of the center divider wall.
7. Lift the forward storage bin and remove it from the rear of the vehicle.

Replacing the Extended Rear Convenience Center

1. Make sure that all items have been removed from the rear of the vehicle.
2. Remove the carpeted mat from the vehicle.

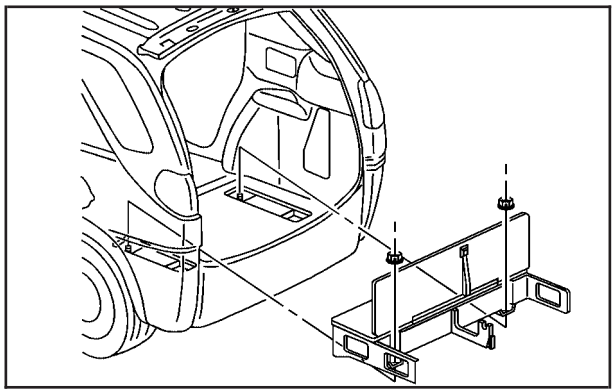

3. Lift the forward bin into the back of the vehicle. Place the mounting brackets onto the forward mounting bolts on the floor of the vehicle.
4. Put the nuts back onto the mounting bolts and tighten.

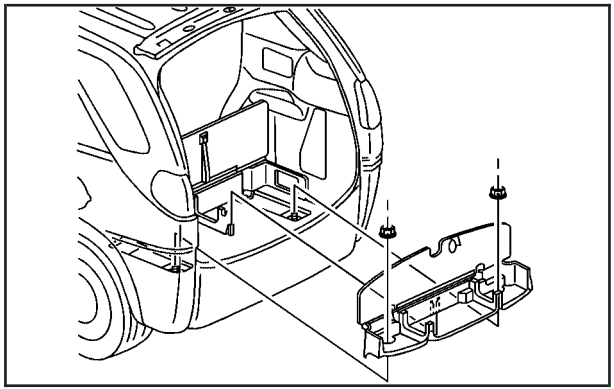

5. Lift the rear bin into the back of the vehicle. Place the rear bin over the center T-shaped wall on the forward bin. Push down to secure. Align the rear bin over the rear mounting bolts.
6. Put the nuts back onto the mounting bolts and tighten.
7. Push and pull on the rear storage system to make sure that it is locked into place properly.

Removing the Rear Convenience Center on Vehicles with the Third Row Stowable Seat

1. Make sure that all items have been removed from the top and the inside of the rear convenience center.
2. Lift the handle(s) on the top of the lid to open the storage bin.
3. Remove the two nuts from inside the storage bin. The nuts are located in the bottom of the bin.

   If you are only removing the convenience center and not the stowable seat, you must replace these nuts once the bin is removed to secure the seat.
4. Lift the storage bin and remove it from the rear of the vehicle.

Replacing the Rear Convenience Center on Vehicles with the Third Row Stowable Seat

1. Make sure that all items have been removed from the rear of the vehicle.

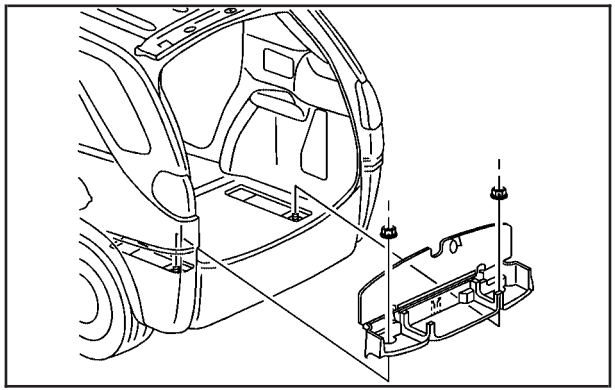

2. Lift the bin into the back of the vehicle. Align the bin over the rear mounting bolts.
3. Put the nuts back onto the mounting bolts and tighten.
4. Push and pull on the rear storage system to make sure that it is locked into place properly.

Sunroof

If your vehicle has a sunroof, the switch is located between the sun visors.

The sunroof switch will only work when the ignition is on or when the ignition is off and retained accessory power is active. See “Retained Accessory Power” under *Ignition Positions on page 2-20* for more information.

Notice: **Opening the sunroof when the luggage rack crossrails are not in the full-rear position could cause damage to the sunroof or luggage rack. Verify the luggage rack crossrails are in the full-rear position before opening the sunroof.**

When vent opening the sunroof, the sunshade must be opened by hand. Press the rear of the switch to vent open the glass panel.

Press the rear of the switch a second time and release it to express-open the glass panel. The glass panel and sunshade will fully open. When the glass panel is express opening, pressing the switch in either direction will stop it. If you press and hold the rear of the switch, the express-open operation will be overridden.

To close the glass panel, press and hold the front of the switch until the glass panel stops.

Vehicle Personalization

Memory Seat

If your vehicle has this feature, the controls are located on the driver's door panel and are used to store and recall the driver's seat position and outside rearview mirror position.

To store a seat position, do the following:

1. Adjust the driver's seat and the outside rearview mirrors to the position you would like for driving.
2. Press and hold memory button 1 for more than three seconds.

A double beep will sound when the memory seat and mirror position have been stored.

To store the seat and outside rearview mirror positions for a second driver, follow the previous steps, but press button 2 instead.

To recall your stored positions, your vehicle must be in PARK (P). Push and release the memory button (1 or 2) corresponding to the desired driving position. The seat and the outside rearview mirrors will move to the position previously stored for the identified driver. You will hear one beep.

To store an exit position for each driver, do the following:

1. Move the seat to the desired exit position.
2. Hold the button with the exit symbol, located below the memory buttons, for more than three seconds.

The exit position stored will be for the most recently selected driving position (1 or 2). A double beep will sound when the exit position is stored.

To use the exit feature, your vehicle must be in PARK (P). Push and release the button with the exit symbol and the seat will move to the exit position stored for the most recently selected driver. You will hear one beep.

To stop recall movement of the seat at any time, press one of the three memory buttons or one of the power seat controls located on the outboard side of the driver's seat.

If your vehicle is equipped with a Driver Information Center (DIC), you can use it to program certain functions of the memory seats. See *DIC Vehicle Personalization on page 3-64*.

NOTES

Section 3 Instrument Panel

Instrument Panel Overview 3-4
Hazard Warning Flashers 3-6
Other Warning Devices 3-7
Horn 3-7
Tilt Wheel 3-7
Turn Signal/Multifunction Lever 3-8
Exterior Lamps 3-14
Interior Lamps 3-16
Instrument Panel Switchbank 3-21
Head-Up Display (HUD) 3-21
Ultrasonic Rear Parking Assist (URPA) 3-24
Accessory Power Outlets 3-27
Ashtrays and Cigarette Lighter 3-28

Climate Controls 3-28
Climate Control System 3-28
Dual Climate Control System 3-32
Dual Automatic Climate Control System 3-35
Outlet Adjustment 3-38

Warning Lights, Gages and Indicators 3-39
Instrument Panel Cluster 3-40
Speedometer and Odometer 3-41
Tachometer 3-42
Safety Belt Reminder Light 3-43
Air Bag Readiness Light 3-43
Brake System Warning Light 3-44
Anti-Lock Brake System Warning Light 3-45
Traction Control System (TCS) Warning Light ...3-45
Engine Coolant Temperature Gage 3-46
Malfunction Indicator Lamp 3-46
Fuel Gage 3-49

Message Center 3-50
Service Traction System Warning Message 3-50
Traction Active Message 3-51
Engine Coolant Temperature Warning Message 3-51
Charging System Indicator Message 3-52
Low Oil Pressure Message 3-52
Change Engine Oil Message 3-53
Low Tire Message 3-54
Door Ajar Warning Message 3-54
Rear Hatch Ajar Warning Message 3-54
PASS-Key® III Security Message 3-55
All-Wheel Drive Disable Warning Message 3-55
Low Washer Fluid Warning Message 3-56
Low Fuel Warning Message 3-56
Low Brake Fluid Warning Message 3-57

Section 3 Instrument Panel

Service Vehicle Soon Message 3-57
Program Mode Message 3-58
Remote Keyless Entry Transmitter Battery Low Warning Message 3-58
Parking Lamp Warning Message 3-59
Highbeam Out Warning Message 3-59

Driver Information Center (DIC) 3-60
DIC Controls and Displays 3-62
DIC Vehicle Personalization 3-64

Audio System(s) 3-73
Setting the Time 3-73
Radio with CD 3-74
Radio with Cassette and CD 3-85
Radio with Six-Disc CD 3-98
Navigation/Radio System 3-112
Rear Seat Entertainment System 3-113
Rear Seat Audio (RSA) 3-126
Theft-Deterrent Feature 3-128
Audio Steering Wheel Controls 3-129
DVD Distortion 3-129
Understanding Radio Reception 3-130
Care of Your Cassette Tape Player 3-130
Care of Your CDs and DVDs 3-131
Care of Your CD and DVD Player 3-131
Cleaning Your DVD Player 3-131
Integrated Windshield Antenna 3-132
XM™ Satellite Radio Antenna System (48 Contiguous US States) 3-132

NOTES

Instrument Panel Overview

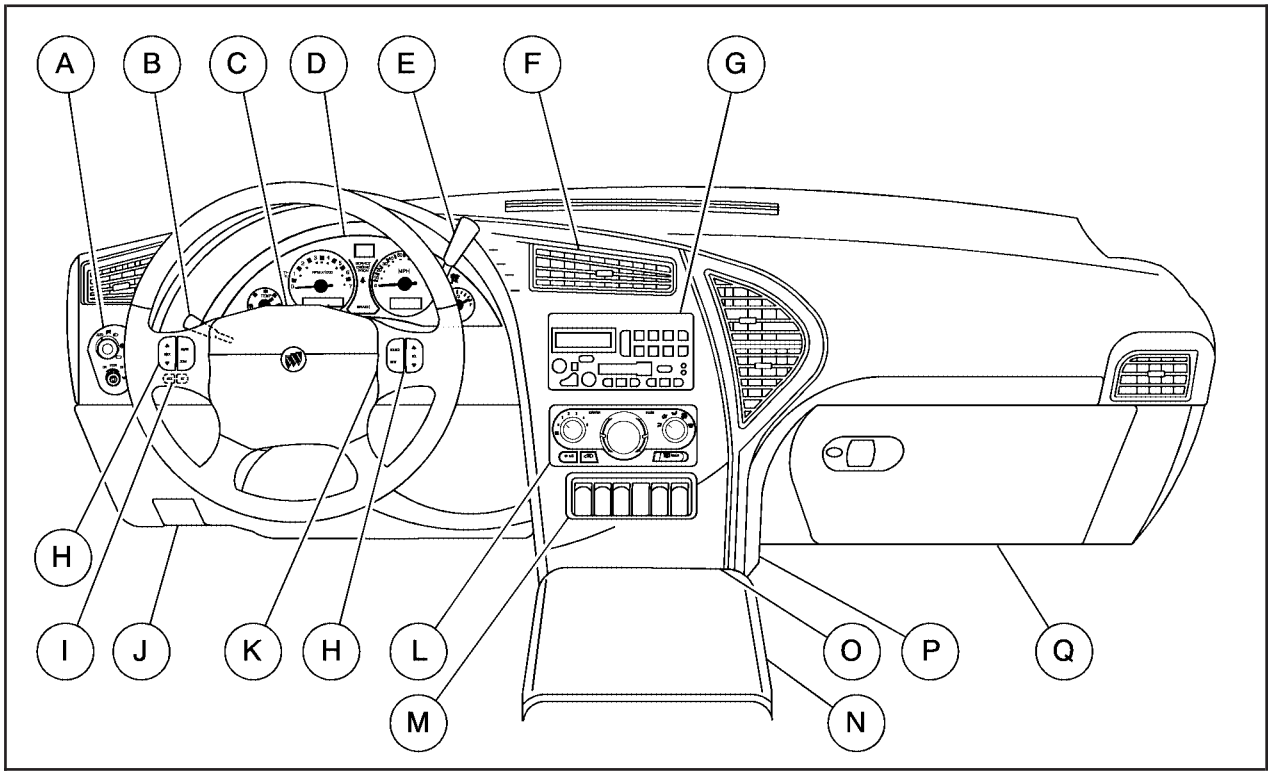

The main components of the instrument panel are the following:

A. Exterior/Interior Lamps Control. See *Exterior Lamps on page 3-14* and *Interior Lamps on page 3-16*.

B. Turn Signal/Multifunction Lever. See *Turn Signal/Multifunction Lever on page 3-8*.

C. Hazard Warning Flasher Switch. See *Hazard Warning Flashers on page 3-6*.

D. Instrument Panel Cluster. See *Instrument Panel Cluster on page 3-40*.

E. Shift Lever. See *Automatic Transaxle Operation on page 2-23*.

F. Instrument Panel Outlets. See *Outlet Adjustment on page 3-38*.

G. Audio System. See *Audio System(s) on page 3-73*.

H. Audio Steering Wheel Controls. See *Audio Steering Wheel Controls on page 3-129*.

I. Head-Up Display Switch and Driver Information Center (DIC) Controls. See *Head-Up Display (HUD) on page 3-21* and *DIC Controls and Displays on page 3-62*.

J. Hood Release. See *Hood Release on page 5-11*.

K. Ignition Switch. See *Ignition Positions on page 2-20*.

L. Climate Controls. See *Climate Control System on page 3-28*, *Dual Climate Control System on page 3-32* or *Dual Automatic Climate Control System on page 3-35*.

M. Instrument Panel Switchbank. See *Instrument Panel Switchbank on page 3-21*.

N. Front Armrest Storage. See *Front Armrest Storage Area on page 2-40*.

O. Ashtray/Cigarette Lighter/Accessory Power Outlet/Cell Phone Storage/Purse Storage/Cupholders. See *Ashtrays and Cigarette Lighter on page 3-28*, *Accessory Power Outlets on page 3-27*, *Cell Phone Storage Area on page 2-39*, *Floor Console Storage Area on page 2-40* and *Cupholder(s) on page 2-39*.

P. Floor Console Fuse Block. See *Fuses and Circuit Breakers on page 5-109*.

Q. Glove Box. See *Glove Box on page 2-39*.

Hazard Warning Flashers

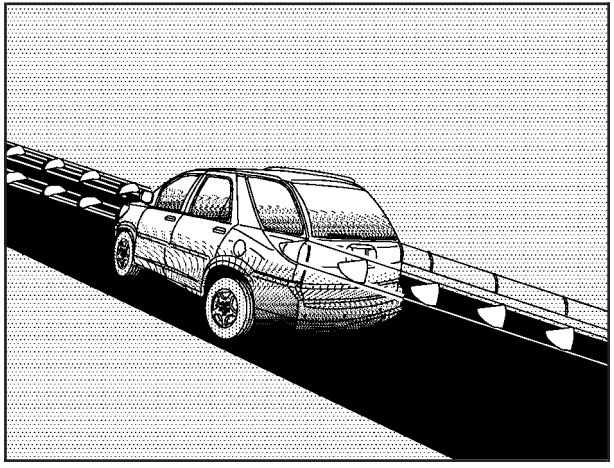

Your hazard warning flashers let you warn others. They also let police know you have a problem. Your front and rear turn signal lamps will flash on and off.

The hazard warning flasher button is located on top of the steering column.

Your hazard warning flashers work no matter what position your key is in, and even if the key isn't in.

Press the button to make the front and rear turn signal lamps flash on and off. Press the button again to turn the flashers off.

When the hazard warning flashers are on, the turn signals won't work.

Other Warning Devices

If you carry reflective triangles, you can set one up at the side of the road about 300 feet (100 m) behind your vehicle.

Horn

You can sound the horn by pressing the center of your steering wheel.

Tilt Wheel

A tilt wheel allows you to adjust the steering wheel before you drive. You can raise it to the highest level to give your legs more room when you exit and enter the vehicle.

The lever that allows you to tilt the steering wheel is located on the left side of the steering column.

To tilt the wheel, hold the steering wheel and pull the lever.

Then move the steering wheel to a comfortable position and release the lever to lock the wheel in place.

Turn Signal/Multifunction Lever

The lever on the left side of the steering column includes the following:

- Turn and Lane-Change Signals
- Headlamp High/Low-Beam Changer
- Flash-to-Pass
- Windshield Wipers
- Windshield Washer
- Cruise Control

Turn and Lane-Change Signals

The turn signal has two upward (for right) and two downward (for left) positions. These positions allow you to signal a turn or a lane change.

To signal a turn, move the lever all the way up or down. When the turn is finished, the lever will return automatically.

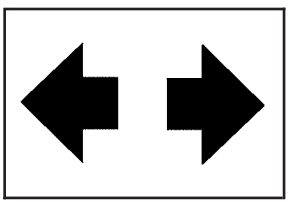

An arrow on the instrument panel cluster and the HUD display will flash in the direction of the turn or lane change.

To signal a lane change, just raise or lower the lever until the arrow starts to flash. Hold it there until you complete your lane change. The lever will return by itself when you release it.

As you signal a turn or a lane change, if the arrow flashes faster than normal, a signal bulb may be burned out and other drivers will not see your turn signal.

If a bulb is burned out, replace it to help avoid an accident. If the arrows do not go on at all when you signal a turn, check for burned-out bulbs and check the fuse. See *Fuses and Circuit Breakers on page 5-109*.

If you have a trailer towing option with added wiring for the trailer lamps, the signal indicator will flash at a normal rate even if a turn signal bulb is burned out. Check the front and rear turn signal lamps regularly to make sure they are working.

Turn Signal On Chime

If either turn signal is left on for more than 3/4 mile (1,2 km), a chime will sound to let the driver know to turn it off.

If you need to leave the signal on for more than 3/4 mile (1,2 km), turn off the signal and then turn it back on.

Headlamp High/Low-Beam Changer

To change the headlamps from low to high, push the turn signal lever away from you. Then release it. To change the headlamps from high to low, pull the lever toward you.

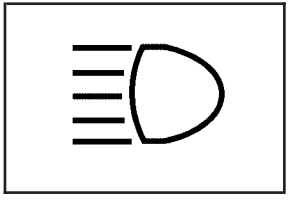

When the high beams are on, this light on the instrument panel cluster and the HUD display, will also be on.

Flash-to-Pass

When the headlamps are off, pull the lever toward you to momentarily switch on the high beams. This will signal that you are going to pass. When you release the lever, they will turn off.

Windshield Wipers

WIPER: Turn the band marked WIPER to control the windshield wipers.

MIST: For a single wiping cycle, turn the band to MIST. Hold it there until the wipers start, then let go. The wipers will stop after one cycle. If you want more cycles, hold the band on MIST longer.

Delay: For delayed wiping cycles, you can set the wiper speed for a long or short delay between wipes. This can be very useful in light rain or snow. Turn the band to choose the delay time. The closer to LO, the shorter the delay time.

LO: For steady wiping cycles at low speed, turn the band away from you to the LO position.

HI: For high-speed wiping, turn the band away from you to the HI position.

OFF: To stop the wipers, turn the band to OFF.

Remember that damaged wiper blades may prevent you from seeing well enough to drive safely. To avoid damage, be sure to clear ice and snow from the wiper blades before using them. If they are frozen to the windshield, carefully loosen or thaw them. If your blades do become damaged, get new blades or blade inserts.

Heavy snow or ice can overload your wipers. A circuit breaker will stop them until the motor cools. Clear away snow or ice to prevent an overload.

Windshield Washer

: To wash your windshield, push and hold the paddle with the windshield washer symbol. The washers and wipers will operate. When you release the paddle, the washers will stop, and the wipers will continue to operate for two cycles, unless your wipers were already on. In that case, the wipers will resume the wiper speed you selected earlier.

⚠ CAUTION:

In freezing weather, do not use your washer until the windshield is warmed. Otherwise the washer fluid can form ice on the windshield, blocking your vision.

Rear Window Washer/Wiper

The rear window washer/wiper switch is located in the instrument panel switchbank.

Push the wiper symbol on the top of the switch to turn on the intermittent wiper. To turn off the wiper, gently push the bottom of the switch.

To wash and wipe the rear window, push in the washer symbol on the bottom of the switch. Washer fluid will spray as long as the switch is held in. When the switch is released, the wiper will continue to cycle three more times. There is only one washer fluid reservoir for the front and rear windshield wipers. See *Windshield Washer Fluid on page 5-37*.

To wash the rear window while the rear wiper is already on, push the bottom of the switch. Push in the top of the switch to continue the intermittent wiper cycle after the washing cycle is completed.

Cruise Control

⚠ CAUTION:

- **Cruise control can be dangerous where you can not drive safely at a steady speed. So, do not use your cruise control on winding roads or in heavy traffic.**
- **Cruise control can be dangerous on slippery roads. On such roads, fast changes in tire traction can cause needless wheel spinning, and you could lose control. Do not use cruise control on slippery roads.**

If your vehicle is in cruise control when the traction control system begins to limit wheel spin, the cruise control will automatically disengage. See *Traction Control System (TCS) on page 4-11*. When road conditions allow you to safely use it again, you may turn the cruise control back on.

Setting Cruise Control

⚠ CAUTION:

If you leave your cruise control on when you are not using cruise, you might hit a button and go into cruise when you do not want to. You could be startled and even lose control. Keep the cruise control switch off until you want to use cruise control.

1. Move the cruise control switch, located on the turn signal/multifunction lever, to ON.
2. Get up to the speed you want.
3. Press the SET button at the end of the lever and release it.
4. Take your foot off the accelerator pedal.

Resuming a Set Speed

Suppose you set your cruise control at a desired speed and then you apply the brake. This, of course, shuts off the cruise control. But you do not need to reset it. Once you are going about 25 mph (40 km/h) or more, you can move the cruise control switch from ON to resume/accelerate (R/A) briefly.

You will go right back up to your chosen speed and stay there.

If you hold the switch at R/A, the vehicle will keep going faster until you release the switch or apply the brake. So unless you want to go faster, don't hold the switch at R/A.

Increasing Speed While Using Cruise Control

There are two ways to increase speed while using cruise control:

- Use the accelerator pedal to get to the higher speed. Press the SET button at the end of the lever, then release the button and the accelerator pedal. You will now cruise at the higher speed.
- Move the cruise switch from ON to R/A. Hold it there until you get up to the speed you want, and then release the switch. To increase your speed in very small amounts, move the switch to R/A briefly and then release it. Each time you do this, your vehicle will go about 1 mph (1,6 km/h) faster.

The accelerate feature will work whether or not you have set an initial cruise control speed.

Reducing Speed While Using Cruise Control

There are two ways to reduce speed while using cruise control:

- Press the SET button at the end of the lever until you reach the lower speed you want, then release it.
- To slow down in very small amounts, press the SET button briefly. Each time you do this, you will go about 1 mph (1.6 km/h) slower.

Passing Another Vehicle While Using Cruise Control

Use the accelerator pedal to increase your speed. When you take your foot off the pedal, your vehicle will slow down to the cruise control speed you set earlier.

Using Cruise Control on Hills

How well your cruise control will work on hills depends upon your speed, load and the steepness of the hills. When going up steep hills, you may have to step on the accelerator pedal to maintain your speed. When going downhill, you may have to brake or shift to a lower gear to keep your speed down. Of course, applying the brake takes you out of cruise control. Many drivers find this to be too much trouble and do not use cruise control on steep hills.

Ending Cruise Control

There are two ways to turn off the cruise control:

- Step lightly on the brake pedal
- Move the cruise control switch to OFF

Erasing Speed Memory

When you turn off the cruise control or the ignition, your cruise control set speed memory is erased.

Exterior Lamps

The control on the left side of the steering column operates the exterior lamps.

The exterior lamp control has three positions:

AUTO (Automatic Headlamp Control/Off): Turning the control to this position will activate the automatic headlamps when it is dark enough outside and turn off all lamps and lights during the day except for the Daytime Running Lamps (DRL).

(Parking Lamps): Turning the control to this position turns on the parking lamps together with the following:

- Taillamps
- Instrument Panel Lights

(Headlamps): Turning the control to this position turns on the headlamps together with the previously listed lamps and lights.

Lamps on Reminder

If the driver's door is opened and you turn the ignition to OFF while leaving the lamps on, you will hear a warning chime.

Daytime Running Lamps (DRL)

Daytime Running Lamps (DRL) can make it easier for others to see the front of your vehicle during the day. DRL can be helpful in many different driving conditions, but they can be especially helpful in the short periods after dawn and before sunset. Fully functional daytime running lamps are required on all vehicles first sold in Canada.

A light sensor on top of the instrument panel makes the DRL work, so be sure it is not covered. The DRL system will make your reduced intensity high-beam headlamps come on in daylight when the following conditions are met:

- The ignition is on
- The exterior lamps control is in AUTO
- The shift lever is not in PARK (P)

When the DRL are on, only your reduced intensity high-beam headlamps will be on. Your instrument panel will not be lit up.

When it is dark enough outside, the exterior lamps will come on automatically. When it is bright enough outside, the exterior lamps will go out and the DRL will turn on. Of course, you may still turn on the headlamps any time you need to.

As with any vehicle, you should turn on the regular headlamp system when you need it.

Automatic Headlamp System

When the exterior lamps control is turned to AUTO, the headlamps and parking lamps will come on automatically when it is dark enough outside.

The lamps will come on automatically if the following conditions are met:

- It is dark enough outside
- The ignition is in ON
- The parking brake is released
- The exterior lamps control is in the AUTO position

Fog Lamps

The fog lamp button is located on the exterior lamp control.

Push the FOG PUSH button to turn the fog lamps on. The FOG light, located next to the fog lamp button, will come on to indicate when the fog lamps are on. To turn off the fog lamps, press the fog lamp button or turn the ignition off.

If you turn on the fog lamps while the DRL are on, the parking lamps will turn on automatically.

Your fog lamps will go off when you switch to high beams. When you return to low beam, the fog lamps will come back on. Using your high beams in fog is not recommended.

Interior Lamps

Your interior lamps control is located below the exterior lamps control.

Instrument Panel Brightness

Press the knob to extend it. Turn the knob to adjust the instrument panel brightness. Press the knob in when not in use.

Interior Lamps Control

OFF: Turn the control to this position to turn off the interior lamps.

DOOR: Turn the control to this position to turn on the interior lamps while any door is opened and while the ignition key is removed from the ignition.

ON: Turn the control to this position to turn on the interior lamps.

Headlamp Exit Delay

If your vehicle has headlamp exit delay, it will keep the headlamps and parking lamps on at night for 30 seconds if the following conditions are met:

- The ignition is turned to OFF
- The exterior lamp control is in the AUTO position
- LOCK is pressed on the remote keyless entry transmitter
- It is dark enough outside

After 30 seconds, the headlamps and parking lamps will turn off.

The lamps will turn off before the 30 seconds if the following conditions are met:

- The ignition is turned to ON
- The exterior lamp control is turned out of the AUTO position

If your vehicle is equipped with the Driver Information Center (DIC), see *DIC Vehicle Personalization on page 3-64* to program the headlamp exit delay feature.

Entry Lighting

If your vehicle has entry lighting, the interior of your vehicle will illuminate for 25 seconds so you can see inside your vehicle before you enter. To activate entry lighting, do one of the following:

- Unlock a door using the key when the interior lamp control is in the DOOR position, and when the ignition is in OFF
- Press UNLOCK on the remote keyless entry transmitter when the interior lamp control is in the DOOR position, and when the ignition is in OFF

After 25 seconds, the interior lamps will fade out.

The lamps will turn off before 25 seconds if you do one of the following:

- Press LOCK on the remote keyless entry transmitter
- Press the front of the power door lock switch
- Turn the ignition to ON

When any door is opened, entry lighting is cancelled. The interior lamps will stay on while any door or the liftgate is open, and fade out when all the doors are closed.

Delayed Lighting

If your vehicle has delayed lighting, it will continue to illuminate the interior for 25 seconds after all doors have been closed. The lamps will continue to illuminate when the following conditions are met:

- A door is opened then closed
- The interior lamp control is in the DOOR position
- The ignition is in OFF

After 25 seconds, the interior lamps will fade out.

The lamps will fade out before the 25 seconds if you do one of the following:

- Turn the ignition to ON
- Press LOCK on the remote keyless entry transmitter
- Press the front of the power door lock switch

If your vehicle is equipped with the Driver Information Center (DIC), you can program this feature on or off. See *DIC Vehicle Personalization on page 3-64*.

Exit Lighting

If your vehicle is equipped with exit lighting, the interior lamps will come on for about 30 seconds whenever you remove the key from the ignition if the following conditions are met:

- The vehicle is in PARK (P)
- The key is out of the ignition
- The interior lamp control is in the DOOR position
- All of the doors are closed

After 30 seconds, the interior lamps will fade out.

The interior lamps will fade out before 30 seconds if you do one of the following:

- Turn the ignition to ON
- Press LOCK on the remote keyless entry transmitter
- Press the front of the power door lock switch

If your vehicle is equipped with the Driver Information Center (DIC), you can program this feature on or off. See *DIC Vehicle Personalization on page 3-64*.

Perimeter Lighting

If your vehicle has perimeter lighting, it will turn on the headlamps and parking lamps for 25 seconds when the following conditions are met:

- The ignition is turned to OFF
- The exterior lamp control is in the AUTO position
- UNLOCK is pressed on the remote keyless entry transmitter
- It is dark enough outside

After 25 seconds, the headlamps and parking lamps will turn off.

The lamps will turn off before the 25 seconds if you do one of the following:

- Turn the ignition to ON
- Turn the exterior lamp control out of the AUTO position

If your vehicle is equipped with the Driver Information Center (DIC), you can program this feature on or off. See “Remote Lock Feedback” under *DIC Vehicle Personalization on page 3-64*.

Front Reading Lamps

There are two reading lamps located on the rearview mirror.

To turn either reading lamp on or off, press the button located next to each lamp. These lamps will come on each time you open the doors, if the interior lamp control is in the ON or DOOR position.

Rear Reading Lamps

There are two reading lamps with coat hooks above the rear doors.

To turn on or off either reading lamp, press the lens of the lamp.

Cargo Lamp

The cargo lamp is located in the rear of the vehicle, above the liftgate opening. It comes on automatically each time you open the doors, if the interior lamp control is in the DOOR position.

There are two reading lamps located on the cargo lamp. To turn either reading lamp on or off, press the button located next to the lamp.

Battery Run-Down Protection

Your vehicle has a feature to help prevent you from draining the battery, in case you accidentally leave the interior or exterior lamps on. If the interior lamps are left on while the ignition is in OFF, they will automatically turn off after 10 minutes. If the exterior lamps are left on while the ignition is in OFF with all doors and the liftgate closed, they will automatically turn off after 10 minutes.

If your vehicle has less than 14 miles (24 km) on the odometer, the battery saver will turn off the lamps after only three minutes.

If the interior lamps are turned off as a result of the battery saver feature, they may be turned back on by turning the interior lamp control to OFF and then back to ON. The battery saver will not turn the interior lamps off automatically after doing this. They will have to be turned off manually.

Instrument Panel Switchbank

There is an instrument panel switchbank located below the comfort controls. It contains switches or blanks that will vary with the options that are on your vehicle.

The switches you may have are:

- Rear Window Wiper/Washer. See *Turn Signal/Multifunction Lever on page 3-8*.
- Traction Disable. See *Traction Control System (TCS) on page 4-11*.
- Park Aid Disable. See *Ultrasonic Rear Parking Assist (URPA) on page 3-24*.
- Heated Seats. See *Heated Seats on page 1-6*.

Head-Up Display (HUD)

⚠ CAUTION:

If the HUD image is too bright, or too high in your field of view, it may take you more time to see things you need to see when it is dark outside. Be sure to keep the HUD image dim and placed low in your field of view.

If your vehicle has the HUD, it can display the speedometer reading in English or metric. The current audio system information, as well as Rear Seat Entertainment system information, may also be displayed and will appear as an image focused out toward the front of your vehicle.

The HUD is capable of displaying English or French. See *DIC Controls and Displays on page 3-62* to change the display from English to metric.

The Head-Up Display also displays the following lights and messages when they appear on the instrument panel cluster:

- Turn Signal Indicators. See *Turn Signal/Multifunction Lever on page 3-8*.
- High-Beam Indicator. See *Turn Signal/Multifunction Lever on page 3-8*.
- Low-Fuel Warning Message. See *Low Fuel Warning Message on page 3-56*.

The Head-Up Display also displays a CHECK GAGES icon. The following messages could appear on the instrument panel cluster when CHECK GAGES appears:

- Engine Coolant Temperature Warning. See *Engine Coolant Temperature Warning Message on page 3-51*.
- Low Oil Pressure. See *Low Oil Pressure Message on page 3-52*.
- Charging System Indicator. See *Charging System Indicator Message on page 3-52*.
- Low Brake Fluid Warning. See *Low Brake Fluid Warning Message on page 3-57*.

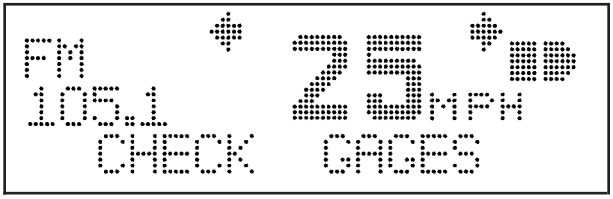

Under warning conditions, the CHECK GAGES icon will illuminate in the HUD. Look at the instrument panel cluster for more information.

Notice: **If you try to use the HUD image as a parking aid, you may misjudge the distance and damage your vehicle. Do not use the HUD image as a parking aid.**

The HUD controls are located to the left of the steering wheel on the instrument panel.

When the HUD is on, the speedometer reading will always be displayed. The current audio system information will only be displayed for three seconds after the radio, tape or CD track status changes. This will happen whenever one of the radio controls is pressed, either on the radio or on the audio steering wheel controls, if equipped.

To adjust the HUD so you can see it properly, do the following:

1. Start your engine and turn the dimmer knob to the desired HUD image brightness.

   The brightness of the HUD image is determined by the ambient light conditions in the direction your vehicle is facing and where you have the HUD dimmer knob set. If you are facing a dark object or a heavily shaded area, your HUD may anticipate that you are entering a dark area and may begin to dim.

2. Adjust the driver's seat. If you change your seat position, you may have to readjust your HUD.

3. Press the UP or DN buttons until the HUD image is easy to see and then press the DN button until the HUD image is as low as possible, but remains in full view straight ahead near the front bumper.

   The HUD image can only be adjusted up and down, not side-to-side.

4. To turn the image off, turn the dimmer knob counterclockwise until it stops.

If the sun comes out or it becomes cloudy, you may need to adjust the HUD brightness again using the dimmer knob. Polarized sunglasses could make the HUD image harder to see.

When you first start the vehicle the display will show BUICK and the Buick logo for a few seconds. If it is cold outside, this display may stay on for up to a minute.

Clean the inside of the windshield as needed to remove any dirt or film that reduces the sharpness or clarity of the HUD image.

To clean the HUD, spray household glass cleaner on a soft, clean cloth. Wipe the HUD lens gently, then dry it. Do not spray cleaner directly on the lens because the cleaner could leak into the unit.

If the ignition is on and you cannot see the HUD image, check to see if one of the following conditions exist:

- The HUD unit is covered
- The HUD dimmer knob is adjusted incorrectly
- The HUD image is not adjusted to the proper height
- Ambient light in the direction your vehicle is facing, is low
- A fuse is blown. See *Fuses and Circuit Breakers on page 5-109*.

If you ever have to have your windshield replaced, be sure to get one that is designed for the HUD or your HUD image may look blurred and out of focus.

Ultrasonic Rear Parking Assist (URPA)

The Ultrasonic Rear Parking Assist (URPA) system is designed to help you park, while the vehicle is in REVERSE (R). It operates only at very low speeds, less than 3 mph (5 km/h). URPA can help make parking easier and to help you avoid colliding with objects such as parked vehicles. The URPA system can detect objects up to 5 feet (1.5 m) behind the vehicle, and tell you how close these objects are from your rear bumper.

Your vehicle's URPA operates when the shift lever is moved into REVERSE (R) and the vehicle speed is less than 3 mph (5 km/h). Four ultrasonic sensors located at the rear bumper are used to detect the distance to the object. The URPA display is located inside the vehicle, near the rear window. It has three color-coded lights used to provide distance and system information to the driver.

⚠ CAUTION:

Even with the Ultrasonic Rear Park Assist system, the driver must check carefully before backing up. The system does not operate above typical backing speeds of 3 mph (5 km/h) while parking. And, the system does not detect objects that are more than 5 feet (1.5 meters) behind the vehicle.

So, unless you check carefully behind you before and when you back up, you could strike children, pedestrians, bicyclists or pets behind you, and they could be injured or killed.

Whether or not you are using Rear Park Assist, always check carefully behind your vehicle before you back up and then watch closely as you do.

URPA can be turned off by pressing the rear park aid disable switch located in the instrument panel switchbank. When the system is disabled, an indicator light will glow on the switch. You will not see any lights on the rear display if the switch is in the off position.

How the System Works

Unless disabled, the URPA will turn on automatically when the shift lever is moved into REVERSE (R). When the system turns on, the three lights on the display will illuminate for one and a half seconds to let you know that the system is working. If your vehicle is moving in REVERSE (R) at a speed greater than 3 mph (5 km/h), the red light will flash to remind you that the system does not work at speed greater than 3 mph (5 km/h).

If an object is detected at a REVERSE (R) speed of less than 3 mph (5 km/h), one of the following will occur:

Description	English	Metric
amber light	5 ft.	1,5 m
amber/amber lights	40 in.	1,0 m
amber/amber/red lights & continuous chime	20 in.	0,5 m
amber/amber/red lights flashing & continuous chime	1 ft	0,3 m

A chime will sound the first time an object is detected between 20 inches (0.5 m) and 5 feet (1.5 m) away.

URPA cannot detect objects that are above liftgate level. In order for the rear sensors to recognize an object, it must be within detection range behind the vehicle.

When the System Does Not Seem to Work Properly

The light may flash red when the vehicle is in REVERSE (R) if the ultrasonic sensors are not kept clean. So be sure to keep your rear bumper free of mud, dirt, snow, ice, and slush. Other conditions that may affect system performance include things like the vibrations from a jackhammer or the compression of air brakes on a very large truck. If after cleaning the rear bumper and then driving forward at least 15 mph (25 km/h), the display continues to flash red, see your dealer.

If a trailer was attached to your vehicle, or a bicycle or an object was on the back of, or hanging out of your liftgate during your last drive cycle, the light may also flash red. The light will continue to flash whenever in REVERSE (R) until your vehicle is driven forward at least 15 mph (25 km/h) without any obstructions behind the vehicle.

For cleaning instructions, see *Cleaning the Outside of Your Vehicle on page 5-103*.

Accessory Power Outlets

With accessory power outlets you can plug in electrical equipment such as a cellular telephone or CB radio.

There is one front power outlet/cigarette lighter located on the floor console in the cell phone storage compartment.

There are also two rear power outlets. One is located in the rear of the floor console below the vents. The other is located in the rear of the vehicle on the driver's side behind the access door.

Pull the cover down to use an accessory power outlet. When not in use, always cover the accessory power outlets with the protective cap.

Notice: **Leaving electrical equipment on for extended periods will drain the battery. Always turn off electrical equipment when not in use and do not plug in equipment that exceeds the maximum amperage rating.**

Certain electrical accessories may not be compatible with the accessory power outlet and could result in blown vehicle or adapter fuses. If you experience a problem, see your dealer for additional information on the accessory power outlets.

Notice: **Adding any electrical equipment to your vehicle may damage it or keep other components from working as they should. The repairs would not be covered by your warranty. Check with your dealer before adding electrical equipment.**

When adding electrical equipment, be sure to follow the proper installation instructions included with the equipment.

Notice: **Improper use of the power outlet can cause damage not covered by your warranty. Do not hang any type of accessory or accessory bracket from the plug because the power outlets are designed for accessory power plugs only.**

Ashtrays and Cigarette Lighter

The ashtray is located on the floor console closest to the instrument panel. Lift the lid to expose the ashtray. To remove the ashtray, lift it up.

The cigarette lighter is located on the floor console in the cell phone storage compartment closest to the driver's seat. Lift the lid to expose the cigarette lighter.

To use the lighter, push it in all the way and let go. When it is ready, it will pop back out by itself.

Notice: **Holding a cigarette lighter in while it is heating will not allow the lighter to back away from the heating element when it is hot. Damage from overheating may occur to the lighter or heating element, or a fuse could be blown. Do not hold a cigarette lighter in while it is heating.**

Notice: **If you put papers or other flammable items in the ashtray, hot cigarettes or other smoking materials could ignite them and possibly damage your vehicle. Never put flammable items in the ashtray.**

Climate Controls

Climate Control System

With this system you can control the heating, cooling, and ventilation for your vehicle.

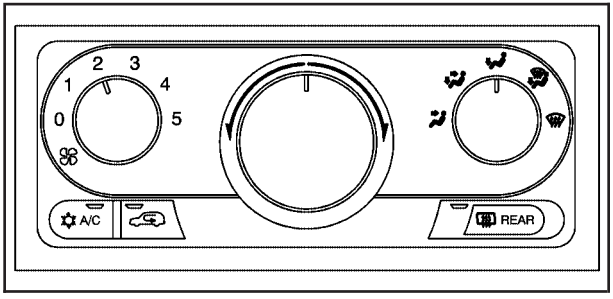

Operation

Turn the right knob clockwise or counterclockwise to direct the airflow inside your vehicle.

To change the current mode, select one of the following:

(Vent): This mode directs air to the instrument panel outlets.

(Bi-Level): This mode directs half of the air to the instrument panel outlets, then directs the remaining air to the floor outlets. Cooler air is directed to the upper outlets and warmer air to the floor outlets.

(Floor): This mode directs most of the air to the floor outlets. Use this mode to send air to the rear of the vehicle. Keep the area under the front seats free of objects that could obstruct airflow to the rear of the vehicle.

The right knob can also be used to select defog or defrost mode. For more information, see “Defogging and Defrosting” later in this section.

(Fan): Turn the left knob clockwise or counterclockwise to increase or decrease the fan speed. Turn the knob to 0 to turn off the fan. The fan must be turned on for the air conditioning compressor to operate.

(Recirculation): This mode keeps outside air from coming in the vehicle. It can be used to prevent outside air and odors from entering your vehicle or help heat or cool the air inside your vehicle more quickly. Press this button to turn the recirculation mode on or off. When the button is pressed, an indicator light will come on. The air-conditioning compressor also comes on. The recirculation mode can be used with vent and bi-level modes, but it cannot be used with floor, defog, defrost or outside air modes.

Temperature Control: Turn the center knob clockwise or counterclockwise to increase or decrease the air temperature inside your vehicle.

A/C (Air Conditioning): Press this button to turn the air-conditioning system on or off. When A/C is pressed, an indicator light in the button will come on to let you know that air conditioning is activated.

You may notice a slight change in engine performance when the air-conditioning compressor shuts off and turns on again. This is normal. The system is designed to make adjustments to help with fuel economy while still maintaining the selected temperature.

On hot days, open the windows to let hot inside air escape; then close them. This helps to reduce the time it takes for your vehicle to cool down. It also helps the system to operate more efficiently.

For quick cool down on hot days, do the following:

1. Select the vent mode.
2. Select the coolest temperature.
3. Select the highest fan speed.
4. Select A/C.
5. Select the recirculation mode.

Using these settings together for long periods of time may cause the air inside of your vehicle to become too dry. To prevent this from happening, after the air inside of your vehicle has cooled, turn the recirculation mode off.

The air-conditioning system removes moisture from the air, so you may sometimes notice a small amount of water dripping underneath your vehicle while idling or after turning off the engine. This is normal.

Defogging and Defrosting

Fog on the inside of windows is a result of high humidity, or moisture, condensing on the cool window glass. This can be minimized if the climate controls system is used properly. There are two modes to clear fog or frost from your windshield. Use the defog mode to clear the windows of fog or moisture and warm the passengers. Use the defrost mode to remove fog or frost from the windshield more quickly.

Turn the right knob to select the defog or defrost mode.

(Defog): This mode directs air to the windshield and the floor outlets. When you select this mode, the system turns off recirculation and runs the air-conditioning compressor unless the outside temperature is at or below freezing. The recirculation mode cannot be selected while in the defog mode.

(Defrost): Pressing this button directs most of the air to the windshield and the side window outlets, with some air directed to the floor outlets. In this mode, the system will automatically turn off recirculation and run the air-conditioning compressor, unless the outside temperature is at or below freezing. Recirculation cannot be selected while in the defrost mode.

Do not drive the vehicle until all the windows are clear.

Rear Window Defogger

The rear window defogger uses a warming grid to remove fog from the rear window.

REAR: Press this button to turn the rear window defogger on or off. An indicator light in the button will come on to let you know that the rear window defogger is activated.

The rear window defogger will turn off approximately 10 minutes after the button is pressed. If turned on again, the defogger will only run for approximately five minutes before turning off. The defogger can also be turned off by pressing the button again or by turning off the engine.

Notice: **Don't use anything sharp on the inside of the rear window. If you do, you could cut or damage the warming grid, and the repairs wouldn't be covered by your warranty. Do not attach a temporary vehicle license, tape, a decal or anything similar to the defogger grid.**

Dual Climate Control System

Your vehicle may have a dual climate control system. With this system you can control the heating, cooling, and ventilation for your vehicle.

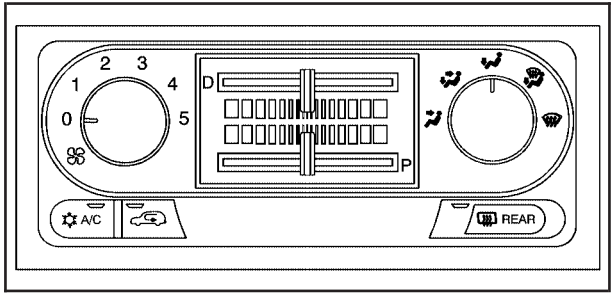

Operation

Turn the right knob clockwise or counterclockwise to direct the airflow inside your vehicle.

To change the current mode, select one of the following:

(Vent): This mode directs air to the instrument panel outlets.

(Bi-Level): This mode directs half of the air to the instrument panel outlets, then directs the remaining air to the floor outlets. Cooler air is directed to the upper outlets and warmer air to the floor outlets.

(Floor): This mode directs most of the air to the floor outlets. Use this mode to send air to the rear of the vehicle. Keep the area under the front seats free of objects that could obstruct airflow to the rear of the vehicle.

The right knob can also be used to select defog or defrost mode. For more information, see “Defogging and Defrosting” later in this section.

(Fan): Turn the left knob clockwise or counterclockwise to increase or decrease the fan speed. Turn the knob counterclockwise until it stops to turn off the fan. The fan must be turned on for the air conditioning compressor to operate.

(Outside Air): Press this button to turn the outside air mode on or off. When this mode is on, outside air will circulate throughout your vehicle. When this mode is on, an indicator light in the button will come on to let you know that it is activated. The outside air mode can be used with all modes, but it cannot be used with the recirculation mode.

(Recirculation): This mode keeps outside air from coming in the vehicle. It can be used to prevent outside air and odors from entering your vehicle or help heat or cool the air inside your vehicle more quickly. Press this button to turn the recirculation mode on or off. When the button is pressed, an indicator light will come on. The air-conditioning compressor also comes on. The recirculation mode can be used with vent and bi-level modes, but it cannot be used with floor, defog, defrost or outside air modes.

Temperature Control: Use the driver's and passenger's temperature levers to increase or decrease the air temperature inside your vehicle.

A/C (Air Conditioning): Press this button to turn the air-conditioning system on or off. When A/C is pressed, an indicator light in the button will come on to let you know that air conditioning is activated.

You may notice a slight change in engine performance when the air-conditioning compressor shuts off and turns on again. This is normal. The system is designed to make adjustments to help with fuel economy while still maintaining the selected temperature.

On hot days, open the windows to let hot inside air escape; then close them. This helps to reduce the time it takes for your vehicle to cool down. It also helps the system to operate more efficiently.

For quick cool down on hot days, do the following:

1. Select the vent mode.
2. Select the coolest temperature.
3. Select the highest fan speed.
4. Select A/C.
5. Select the recirculation mode.

Using these settings together for long periods of time may cause the air inside of your vehicle to become too dry. To prevent this from happening, after the air inside of your vehicle has cooled, turn the recirculation mode off.

The air-conditioning system removes moisture from the air, so you may sometimes notice a small amount of water dripping underneath your vehicle while idling or after turning off the engine. This is normal.

Defogging and Defrosting

Fog on the inside of windows is a result of high humidity, or moisture, condensing on the cool window glass. This can be minimized if the climate controls system is used properly. There are two modes to clear fog or frost from your windshield. Use the defog mode to clear the windows of fog or moisture and warm the passengers. Use the defrost mode to remove fog or frost from the windshield more quickly.

Turn the right knob to select the defog or defrost mode.

(Defog): This mode directs air to the windshield and the floor outlets. When you select this mode, the system turns off recirculation and runs the air-conditioning compressor unless the outside temperature is at or below freezing. The recirculation mode cannot be selected while in the defog mode.

(Defrost): This mode directs most of the air to the windshield and the side window outlets, with some air directed to the floor outlets. In this mode, the system will automatically turn off recirculation and run the air-conditioning compressor, unless the outside temperature is at or below freezing. Recirculation cannot be selected while in the defrost mode.

Do not drive the vehicle until all the windows are clear.

Rear Window Defogger

The rear window defogger uses a warming grid to remove fog from the rear window.

REAR: Press this button to turn the rear window defogger on or off. An indicator light in the button will come on to let you know that the rear window defogger is activated.

The rear window defogger will turn off approximately 10 minutes after the button is pressed. If turned on again, the defogger will only run for approximately five minutes before turning off. The defogger can also be turned off by pressing the button again or by turning off the engine.

Notice: **Don't use anything sharp on the inside of the rear window. If you do, you could cut or damage the warming grid, and the repairs wouldn't be covered by your warranty. Do not attach a temporary vehicle license, tape, a decal or anything similar to the defogger grid.**

Dual Automatic Climate Control System

Your vehicle may have the dual automatic climate control system. With this system you can control the heating, cooling, and ventilation for your vehicle.

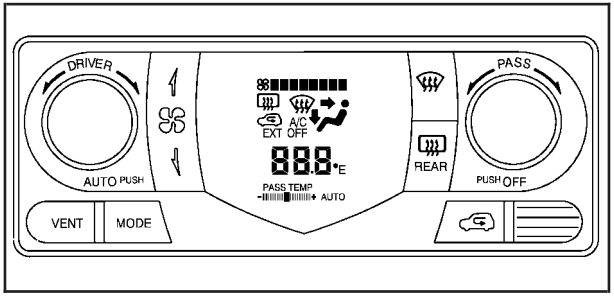

Automatic Operation

AUTO (Automatic): When the driver's temperature knob is pressed to select AUTO and the temperature is set, the system will automatically control the inside temperature, the air delivery and the fan speed. AUTO will also appear on the display.

To place the entire system in automatic mode, do the following:

1. Press the driver's temperature knob to turn the system on.
2. Adjust the temperature to a comfortable setting.

   Choosing the coldest or warmest temperature will not cause the system to heat or cool any faster.

   In cold weather, the system will start at reduced fan speeds to avoid blowing cold air into your vehicle until warmer air is available. Then, as the air warms, it will be delivered through the instrument panel outlets. The length of time needed for warm up will depend on the outside temperature and the length of time that has elapsed since your vehicle was last driven.
3. Wait for the system to regulate. This may take from 10 to 30 minutes. Then adjust the temperature as necessary.
4. To turn the system off, press the passenger's knob.

Manual Operation

MODE: Press this button to manually change the direction of airflow in your vehicle; keep pressing the button until the desired mode appears on the display.

To change the current mode, select one of the following:

(Vent): This mode directs air to the instrument panel outlets.

(Bi-Level): This mode directs approximately half of the air to the instrument panel outlets, then directs the remaining air to the floor outlets and the defroster and side window outlets. Cooler air is directed to the upper outlets and warmer air to the floor outlets.

(Floor): This mode directs most of the air to the floor outlets. Use this mode to send air to the rear of the vehicle. Keep the area under the front seats free of objects that could obstruct airflow to the rear of the vehicle.

The MODE button can also be used to select defog or defrost mode. For more information, see “Defogging and Defrosting” later in this section.

(Fan): Press this button to increase to decrease the fan speed; keep pressing the up or down arrow until the desired fan speed appears on the display.

VENT: Press this button to turn the outside air mode on or off. When this mode is on, outside air will be circulated throughout your vehicle. VENT can be used with all modes, but it cannot be used with the recirculation mode.

(Recirculation): This mode keeps outside air from coming in the vehicle. It can be used to prevent outside air and odors from entering your vehicle or help heat or cool the air inside your vehicle more quickly. Press this button to turn the recirculation mode on or off. When the button is pressed, an indicator light will come on. The air-conditioning compressor also comes on. The recirculation mode can be used with vent and bi-level modes, but it cannot be used with floor, defog, defrost or outside air modes.

Temperature Control: Use the DRIVER knob to increase or decrease the air temperature inside your vehicle. If the front passenger would like the temperature to be warmer or cooler, use the PASS knob to adjust the passenger’s temperature.

Air Conditioning: The air-conditioning compressor will automatically come on when a temperature cooler than the interior temperature is chosen using the temperature knobs.

You may notice a slight change in engine performance when the air-conditioning compressor shuts off and turns on again. This is normal. The system is designed to make adjustments to help with fuel economy while still maintaining the selected temperature.

On hot days, open the windows to let hot inside air escape; then close them. This helps to reduce the time it takes for your vehicle to cool down. It also helps the system to operate more efficiently.

For quick cool down on hot days, do the following:

1. Select the vent mode.
2. Select the recirculation mode.
3. Select the coolest temperature.
4. Select the highest fan speed.

Using these settings together for long periods of time may cause the air inside of your vehicle to become too dry. To prevent this from happening, after the air inside of your vehicle has cooled, turn the recirculation mode off.

The air-conditioning system removes moisture from the air, so you may sometimes notice a small amount of water dripping underneath your vehicle while idling or after turning off the engine. This is normal.

Defogging and Defrosting

Fog on the inside of windows is a result of high humidity, or moisture, condensing on the cool window glass. This can be minimized if the climate controls system is used properly. There are two modes to clear fog or frost from your windshield. Use the defog mode to clear the windows of fog or moisture and warm the passengers. Use the defrost mode to remove fog or frost from the windshield more quickly.

Use the MODE button to select the defog mode.

(Defog): This mode directs air to the windshield and the floor outlets. When you select this mode, the system turns off recirculation and runs the air-conditioning compressor unless the outside temperature is at or below freezing. The recirculation mode cannot be selected while in the defog mode.

Press the defrost button to select defrost.

(Defrost): Pressing this button directs most of the air to the windshield and the side window outlets, with some air directed to the floor outlets. In this mode, the system will automatically turns off recirculation and run the air-conditioning compressor, unless the outside temperature is at or below freezing. Recirculation cannot be selected while in the defrost mode.

Do not drive the vehicle until all the windows are clear.

Rear Window Defogger

The rear window defogger uses a warming grid to remove fog from the rear window.

REAR: Press this button to turn the rear window defogger on or off. An indicator light in the button will come on to let you know that the rear window defogger is activated.

The rear window defogger will turn off approximately 10 minutes after the button is pressed. If turned on again, the defogger will only run for approximately five minutes before turning off. The defogger can also be turned off by pressing the button again or by turning off the engine.

If your vehicle has heated outside rearview mirrors, the mirrors will heat to help clear fog or frost from the surface of the mirror when the rear window defog button is pressed.

Notice: **Don't use anything sharp on the inside of the rear window. If you do, you could cut or damage the warming grid, and the repairs wouldn't be covered by your warranty. Do not attach a temporary vehicle license, tape, a decal or anything similar to the defogger grid.**

Outlet Adjustment

Use the knob located in the center of the outlet, to change the direction of the air flow.

Operation Tips

- Clear away any ice, snow or leaves from the air inlets on the hood that may block the flow of air into your vehicle.
- Use of non-GM approved hood deflectors may adversely affect the performance of the system.
- Keep the path under the front seats clear of objects to help circulate the air inside your vehicle more effectively.

Warning Lights, Gages and Indicators

This part describes the warning lights and gages that may be on your vehicle. The pictures will help you locate them.

Warning lights and gages can signal that something is wrong before it becomes serious enough to cause an expensive repair or replacement. Paying attention to your warning lights and gages could also save you or others from injury.

Warning lights come on when there may be or is a problem with one of your vehicle's functions. As you will see in the details on the next few pages, some warning lights come on briefly when you start the engine just to let you know they're working. If you are familiar with this section, you should not be alarmed when this happens.

Gages can indicate when there may be or is a problem with one of your vehicle's functions. Often gages and warning lights work together to let you know when there's a problem with your vehicle.

When one of the warning lights comes on and stays on when you are driving, or when one of the gages shows there may be a problem, check the section that tells you what to do about it. Please follow this manual's advice. Waiting to do repairs can be costly – and even dangerous. So please get to know your warning lights and gages. They're a big help.

Your vehicle also has a message center that works along with the warning lights and gages. See *Message Center on page 3-50*.

Instrument Panel Cluster

Your instrument panel cluster is designed to let you know at a glance how your vehicle is running. You'll know how fast you're going, how much fuel you're using, and many other things you'll need to drive safely and economically. The indicator warning lights and gages are explained on the following pages.

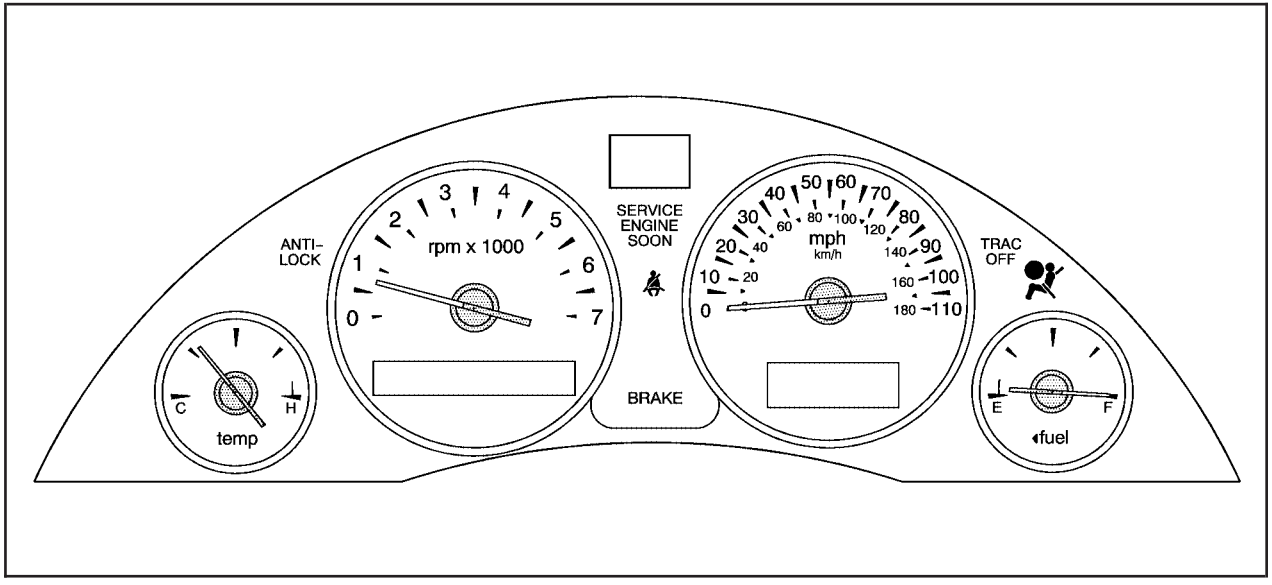

United States up-level shown, United States base-level and Canadian similar

Speedometer and Odometer

Your speedometer lets you see your speed in both miles per hour (mph) and kilometers per hour (km/h). Your odometer shows how far your vehicle has been driven, in either miles (used in the United States) or kilometers (used in Canada). However, a Canadian odometer will remain in metric units only.

Your vehicle has a tamper-resistant odometer.

You may wonder what happens if your vehicle needs a new odometer installed. If the new one can be set to the mileage total of the old odometer, then that will be done. If it can't, then it's set at zero and a label must be put on the driver's door to show the old mileage reading when the new odometer was installed.

If your vehicle is equipped with the Driver Information Center (DIC), you may toggle the odometer to display either miles, available only in the United States, or kilometers. See *Driver Information Center (DIC) on page 3-60*.

Trip Odometer

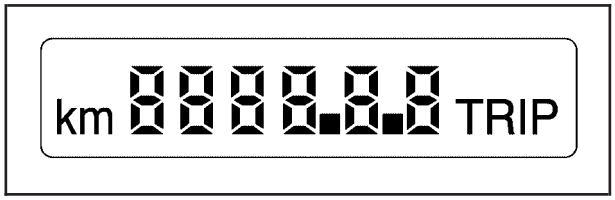

In addition to the standard odometer, the cluster can also display a trip odometer. The display can be toggled between the odometer and the trip odometer by quickly pressing and releasing the trip/reset button located to the right of the temperature gage. The trip odometer will continue to keep track of miles or kilometers driven even if they are not currently displayed. A Canadian trip odometer will remain in metric units only. To reset the trip odometer to zero (0), push and hold the trip/reset button for at least one and a half seconds, but less than three seconds. The trip odometer that is showing in the display will be reset.

Retro-Active Reset

The trip odometer has a feature called retro-active reset. This feature can be used to set the trip odometer to the number of miles or kilometers driven since the ignition was last turned on. This can be used if you forget to reset your trip odometer at the beginning of a trip. To use the retro-active reset feature, push and hold the trip/reset button for at least three seconds. The trip odometer will then display the number of miles or kilometers driven since the ignition was last turned on and you began driving. (If you use the retro-active reset feature after you have started the vehicle, but before you begin moving, the display will show the number of miles or kilometers you drove during the last ignition cycle.) Once you begin driving, the trip odometer will accumulate mileage. For example, if you have driven 5.0 miles (8,0 km) since you started your vehicle, and then activate the retro-active reset feature, the display will show 5.0 miles (8,0 km). As you drive, the display will then increase to 5.1 miles (8,2 km), 5.2 miles (8,4 km), etc.

Tachometer

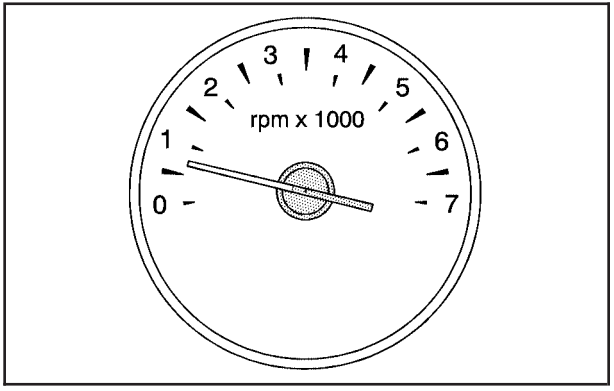

The tachometer displays the engine speed in revolutions per minute (rpm).

Notice: **If you operate the engine with the tachometer in the shaded warning area, your vehicle could be damaged, and the damages would not be covered by your warranty. Do not operate the engine with the tachometer in the shaded warning area.**

Safety Belt Reminder Light

When the key is turned to ON or START, a chime will come on for several seconds to remind people to fasten their safety belts.

The safety belt light will also come on and stay on for several seconds. If the driver's belt is already buckled, neither the chime nor the light will come on.

Air Bag Readiness Light

There is an air bag readiness light on the instrument panel, which shows the air bag symbol. The system checks the air bag's electrical system for malfunctions. The light tells you if there is an electrical problem. The system check includes the air bag sensor, the air bag modules, the wiring, diagnostic module, and safety belt pretensioners. For more information on the air bag system, see *Air Bag Systems on page 1-72*. For more information on safety belt pretensioners, see *Safety Belt Pretensioners on page 1-46*.

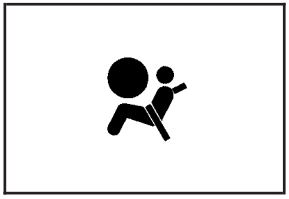

This light will come on when you start your vehicle, and it will flash for a few seconds. Then the light should go out. This means the system is ready.

If the air bag readiness light stays on after you start the vehicle or comes on when you are driving, your air bag system or safety belt pretensioners may not work properly. Have your vehicle serviced right away.

⚠ CAUTION:

If the air bag readiness light stays on after you start your vehicle, it means the air bag system may not be working properly. The air bags in your vehicle may not inflate in a crash, or they could even inflate without a crash. To help avoid injury to yourself or others, have your vehicle serviced right away if the air bag readiness light stays on after you start your vehicle.

The air bag readiness light should flash for a few seconds when you turn the ignition key to ON. If the light doesn't come on then, have it fixed so it will be ready to warn you if there is a problem.

Brake System Warning Light

When the ignition is on, the brake system warning light will come on when you set your parking brake. The light will stay on if your parking brake doesn't release fully. If it stays on after your parking brake is fully released, it means you have a brake problem.

Your vehicle's hydraulic brake system is divided into two parts. If one part isn't working, the other part can still work and stop you. For good braking, though, you need both parts working well.

If the warning light comes on, there could be a brake problem. Have your brake system inspected right away.

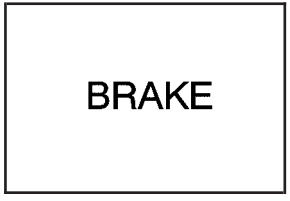

United States

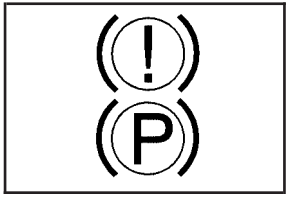

Canada

This light should come on briefly when you turn the ignition key to ON. If it doesn't come on then, have it fixed so it will be ready to warn you if there's a problem.

If the light comes on while you are driving, pull off the road and stop carefully. You may notice that the pedal is harder to push. Or, the pedal may go closer to the floor. It may take longer to stop. If the light is still on, have the vehicle towed for service. See *Anti-Lock Brake System Warning Light on page 3-45* and *Towing Your Vehicle on page 4-33*.

⚠ CAUTION:

Your brake system may not be working properly if the brake system warning light is on. Driving with the brake system warning light on can lead to an accident. If the light is still on after you have pulled off the road and stopped carefully, have the vehicle towed for service.

Anti-Lock Brake System Warning Light

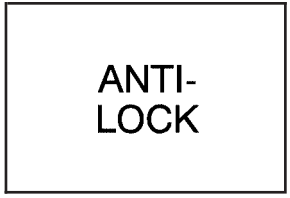

United States

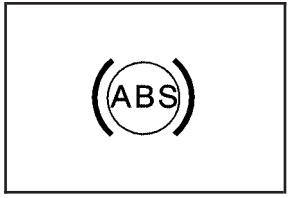

Canada

Your vehicle may have an anti-lock brake system warning light. If it does, the light should come on for a few seconds when you turn the ignition key to ON. If the anti-lock brake system warning light stays on longer than normal after you've started your engine, turn the ignition off. Or, if the light comes on and stays on when you're driving, stop as soon as possible and turn the ignition off. Then start the engine again to reset the system. If the light still stays on, or comes on again while you're driving, the anti-lock brake system needs service and you don't have anti-lock brakes.

The anti-lock brake system warning light should come on briefly when you turn the ignition key to ON. If the light doesn't come on then, have it fixed so it will be ready to warn you if there is a problem.

Traction Control System (TCS) Warning Light

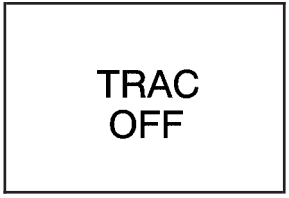

United States

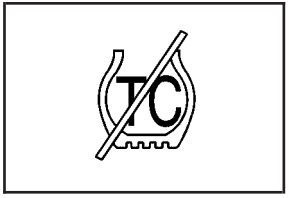

Canada

Your vehicle may have a traction control system warning light. The traction control system warning light may come on for the following reasons:

- If you turn the system off by pressing the TRAC OFF button located in the instrument panel switchbank the warning light will come on and stay on. To turn the system back on, press the button again. The warning light should go off. See *Traction Control System (TCS) on page 4-11* for more information.
- If there's an engine-related and brake system problem that is specifically related to traction control, the traction control system will turn off and the warning light will come on.

If the traction control system warning light comes on and stays on for an extended period of time when the system is turned on, your vehicle needs service.

Engine Coolant Temperature Gage

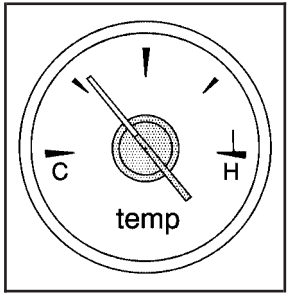

United States

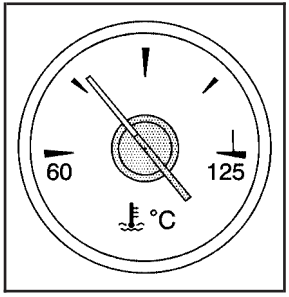

Canada

This gage shows the engine coolant temperature. If the gage pointer moves into the red area, your engine is too hot!

It means that your engine coolant has overheated. If you have been operating your vehicle under normal driving conditions, you should pull off the road, stop your vehicle and turn off the engine as soon as possible.

See *Engine Overheating on page 5-26*.

Malfunction Indicator Lamp

Service Engine Soon Light in the United States or Check Engine Light in Canada

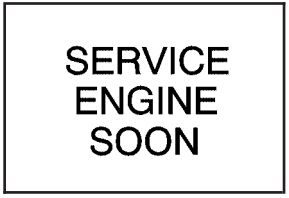

United States

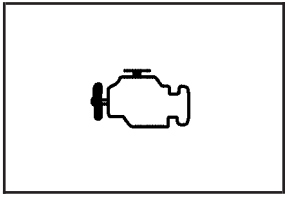

Canada

Your vehicle is equipped with a computer which monitors operation of the fuel, ignition and emission control systems.

This system is called OBD II (On-Board Diagnostics-Second Generation) and is intended to assure that emissions are at acceptable levels for the life of the vehicle, helping to produce a cleaner environment. The SERVICE ENGINE SOON or CHECK ENGINE light comes on to indicate that there is a problem and service is required. Malfunctions often will be indicated by the system before any problem is apparent. This may prevent more serious damage to your vehicle. This system is also designed to assist your service technician in correctly diagnosing any malfunction.

Notice: **If you keep driving your vehicle with this light on, after a while, your emission controls may not work as well, your fuel economy may not be as good and your engine may not run as smoothly. This could lead to costly repairs that may not be covered by your warranty.**

Notice: **Modifications made to the engine, transaxle, exhaust, intake or fuel system of your vehicle or the replacement of the original tires with other than those of the same Tire Performance Criteria (TPC) can affect your vehicle's emission controls and may cause this light to come on. Modifications to these systems could lead to costly repairs not covered by your warranty. This may also result in a failure to pass a required Emission Inspection/Maintenance test.**

This light should come on, as a check to show you it is working, when the ignition is on and the engine is not running. If the light does not come on, have it repaired. This light will also come on during a malfunction in one of two ways:

- **Light Flashing** — A misfire condition has been detected. A misfire increases vehicle emissions and may damage the emission control system on your vehicle. Diagnosis and service may be required.
- **Light On Steady** — An emission control system malfunction has been detected on your vehicle. Diagnosis and service may be required.

If the Light Is Flashing

The following may prevent more serious damage to your vehicle:

- Reducing vehicle speed.
- Avoiding hard accelerations.
- Avoiding steep uphill grades.
- If you are towing a trailer, reduce the amount of cargo being hauled as soon as it is possible.

If the light stops flashing and remains on steady, see “If the Light Is On Steady” following.

If the light continues to flash, when it is safe to do so, *stop the vehicle.* Find a safe place to park your vehicle. Turn the key off, wait at least 10 seconds and restart the engine. If the light remains on steady, see “If the Light Is On Steady” following. If the light is still flashing, follow the previous steps, and see your dealer for service as soon as possible.

If the Light Is On Steady

You may be able to correct the emission system malfunction by considering the following:

Did you recently put fuel into your vehicle?

If so, reinstall the fuel cap, making sure to fully install the cap. See *Filling Your Tank on page 5-7*. The diagnostic system can determine if the fuel cap has been left off or improperly installed. A loose or missing fuel cap will allow fuel to evaporate into the atmosphere. A few driving trips with the cap properly installed should turn the light off.

Did you just drive through a deep puddle of water?

If so, your electrical system may be wet. The condition will usually be corrected when the electrical system dries out. A few driving trips should turn the light off.

Have you recently changed brands of fuel?

If so, be sure to fuel your vehicle with quality fuel. See *Gasoline Octane on page 5-4*. Poor fuel quality will cause your engine not to run as efficiently as designed. You may notice this as stalling after start-up, stalling when you put the vehicle into gear, misfiring, hesitation on acceleration or stumbling on acceleration. (These conditions may go away once the engine is warmed up.) This will be detected by the system and cause the light to turn on.

If you experience one or more of these conditions, change the fuel brand you use. It will require at least one full tank of the proper fuel to turn the light off.

If none of the above steps have made the light turn off, your dealer can check the vehicle. Your dealer has the proper test equipment and diagnostic tools to fix any mechanical or electrical problems that may have developed.

Emissions Inspection and Maintenance Programs

Some state/provincial and local governments have or may begin programs to inspect the emission control equipment on your vehicle. Failure to pass this inspection could prevent you from getting a vehicle registration.

Here are some things you need to know in order to help your vehicle pass an inspection:

Your vehicle will not pass this inspection if the SERVICE ENGINE SOON or CHECK ENGINE light is on or not working properly.

Your vehicle will not pass this inspection if the OBD (on-board diagnostic) system determines that critical emission control systems have not been completely diagnosed by the system. The vehicle would be considered not ready for inspection. This can happen if you have recently replaced your battery or if your battery has run down. The diagnostic system is designed to evaluate critical emission control systems during normal driving. This may take several days of routine driving. If you have done this and your vehicle still does not pass the inspection for lack of OBD system readiness, your GM dealer can prepare the vehicle for inspection.

Fuel Gage

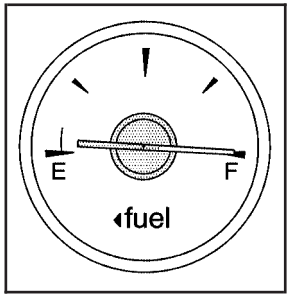

United States

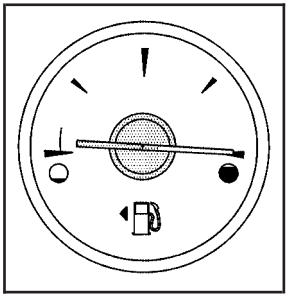

Canada

When the indicator nears empty, you still have a little fuel left, but you should get more soon.

If your fuel is low, the warning message in the message center will come on. See *Low Fuel Warning Message on page 3-56*.

Your fuel gage tells you about how much fuel you have left when the ignition is on.

Here are four things that some owners ask about. All these things are normal and do not indicate that anything is wrong with the fuel gage.

- At the gas station, the gas pump shuts off before the gage reads full.
- It takes a little more (or less) fuel to fill up than the gage reads. For example, the gage reads half full, but it took more (or less) than half of the tank's capacity to fill it.
- The gage pointer may move while cornering, braking or speeding up.
- The gage may not indicate empty when the ignition is turned off.

Message Center

The message center is located at the top of the instrument panel cluster in between the tachometer and speedometer. It gives you important safety and maintenance facts.

Service Traction System Warning Message

United States

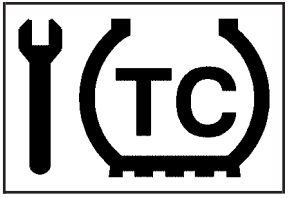

Canada

If your vehicle has the traction control system and this message is displayed when you're driving, there may be a problem with your traction control system. Your vehicle may need service.

When this message is displayed, the traction control system will not limit wheel spin. Adjust your driving accordingly.

If there's an engine-related and brake system problem that is specifically related to traction control, the traction control system will turn off and the warning message will come on.

If the traction control system warning message comes on and stays on for an extended period of time when the system is turned on, your vehicle needs service.

Traction Active Message

United States

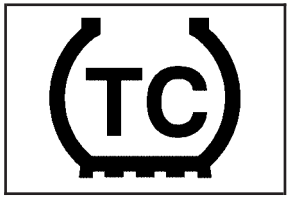

Canada

If your vehicle has the traction control system, the TRACTION ACTIVE message will appear when the traction control system is limiting wheel spin. You may feel or hear the system working, but this is normal.

Slippery road conditions may exist if this message appears, so adjust your driving accordingly.
The message will stay on for a few seconds after the traction control system stops limiting wheel spin.

Engine Coolant Temperature Warning Message

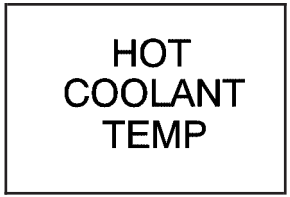

United States

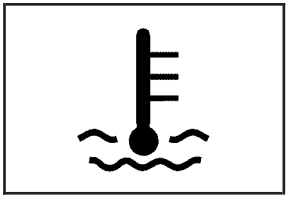

Canada

This message will come on when your engine gets too hot.

If this message comes on, it means that your engine coolant has overheated. If you have been operating your vehicle under normal driving conditions, you should pull off the road, stop your vehicle and turn off the engine as soon as possible.

See *Engine Overheating on page 5-26*.

Charging System Indicator Message

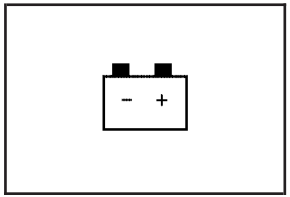

The charging system battery symbol will come on in the message center when you turn on the ignition as a check to show you it is working.

It will remain on as long as the engine is not running. It should go out once the engine is running. If it stays on, or comes on while you are driving, you may have a problem with the charging system. It could indicate that you have problems with a generator drive belt, or another electrical problem. Have it checked right away. Driving while this indicator appears in the message center could drain your battery.

If you must drive a short distance with the message on, be certain to turn off all your accessories, such as the radio and air conditioner.

Low Oil Pressure Message

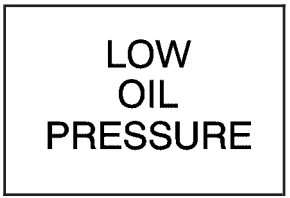

United States

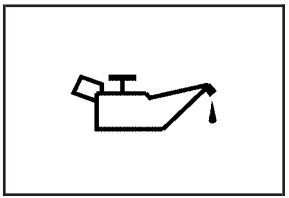

Canada

Your vehicle is equipped with a low oil pressure warning message.

Your oil pressure message lets you know when you may have a problem with your engine oil pressure.

When the engine is running and this message appears, the engine oil level may be too low. There may also be another problem causing low oil pressure.

⚠ CAUTION:

Do not keep driving if the oil pressure is low. If you do, your engine can become so hot that it catches fire. You or others could be burned. Check your oil as soon as possible and have your vehicle serviced.

Notice: **Lack of proper engine oil maintenance may damage the engine. The repairs would not be covered by your warranty. Always follow the maintenance schedule in this manual for changing engine oil.**

Change Engine Oil Message

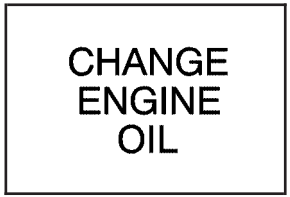

United States

Canada

If this message comes on and stays on after you started the engine, have the oil changed.

For additional information on when to change the oil and resetting the system, see *Engine Oil on page 5-14*.

Low Tire Message

United States

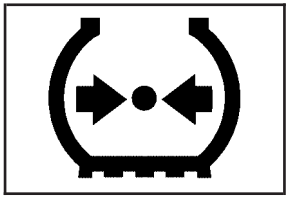

Canada

Your vehicle may have the check tire pressure system which can alert you to a large change in the pressure of one tire. After the system has been properly calibrated, the low tire pressure message will come on and a chime will sound if a pressure difference, or low pressure, is detected in one tire.

The message will stay on until you turn off the ignition or reset (calibrate) the system. See *Check Tire Pressure System on page 5-65*.

If the anti-lock brake system warning light comes on, the check tire pressure system may not be working properly. See your dealer for service. Also, see *Anti-Lock Brake System Warning Light on page 3-45*.

Door Ajar Warning Message

United States

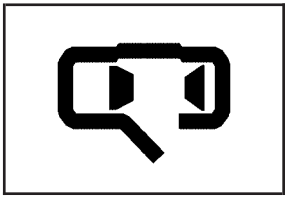

Canada

This message will come on when the ignition is turned to ON or START and the driver's or passenger's door is open.

Rear Hatch Ajar Warning Message

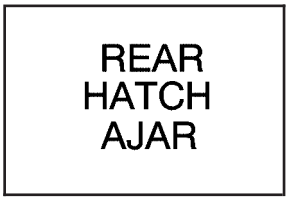

United States

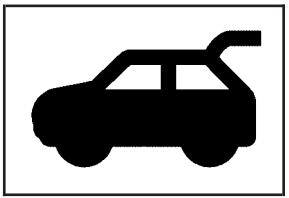

Canada

This message will come on when the ignition is turned to ON or START and the liftgate is open.

PASS-Key® III Security Message

United States

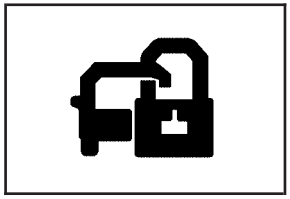

Canada

If you are ever driving and this message comes on and stays on, you will be able to restart your engine if you turn it off.

Your PASS-Key® III system, however, is not working properly and must be serviced by your dealer. Your vehicle is not protected by the PASS-Key® III system at this time. See *PASS-Key® III on page 2-17* for more information.

All-Wheel Drive Disable Warning Message

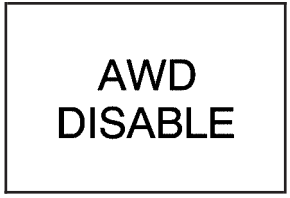

United States

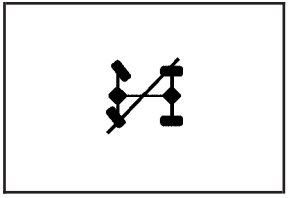

Canada

Your vehicle may have this message. If it does, it will come on when there is a spare tire on the vehicle, or when the anti-lock brake system warning light comes on, or when the rear differential fluid is overheating. This message will go out when the differential fluid cools.

The all-wheel drive system will be disabled until the compact spare tire is replaced by a full-size tire. If the warning message is still on after putting on the full-size tire, you need to reset the warning message. To reset the warning message, turn the ignition off and then back on again. If the message stays on, see your dealer right away. See *All-Wheel Drive (AWD) System on page 4-12* for more information.

Low Washer Fluid Warning Message

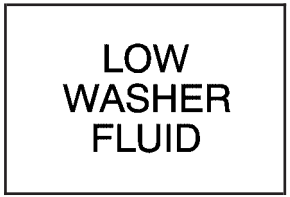

United States

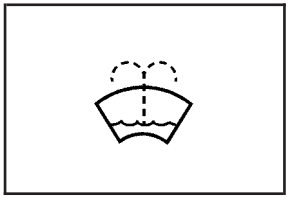

Canada

If your washer fluid is low, the warning message will come on and stay on until you add washer fluid. See *Windshield Washer Fluid on page 5-37* for adding washer fluid instructions.

If the warning message is still on after adding fluid, you need to reset the warning message. To reset the warning message, turn the ignition off and then back on. If the message stays on, see your dealer.

Low Fuel Warning Message

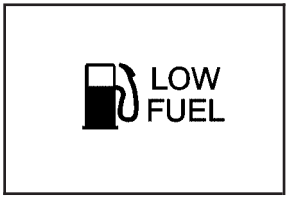

United States

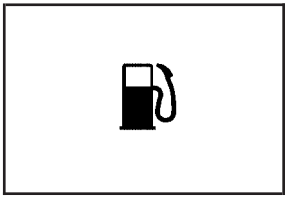

Canada

If your fuel is low, the warning message will come on and stay on until you add fuel.

If the warning message is still on after adding fuel, you need to reset the warning message. To reset the warning message, turn the ignition off and then back on. If the message stays on, see your dealer.

Low Brake Fluid Warning Message

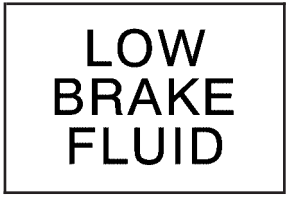

United States

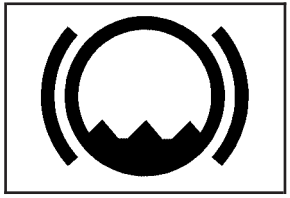

Canada

If your brake fluid is low, the warning message will come on and stay on until you add brake fluid. The brake system warning light will also be illuminated.

If this message appears, the brakes need attention. You should have your vehicle serviced immediately. See *Brake System Warning Light on page 3-44* and *Brakes on page 5-38*.

If the warning message is still on after adding fluid, you may need to reset the warning message. To reset the warning message, turn the ignition off and then back on. If the message stays on, see your dealer right away.

Service Vehicle Soon Message

United States

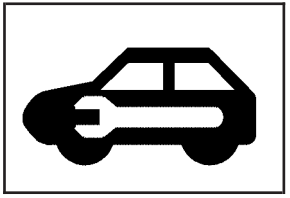

Canada

This light will come on if your vehicle has certain non-emission related problems.

For example, if the entire electrical system fails to send and receive messages from the vehicle's components, this message will come on.

These problems may not be obvious and may affect vehicle performance or durability. Consult a qualified dealership for necessary repairs to maintain top vehicle performance.

Program Mode Message

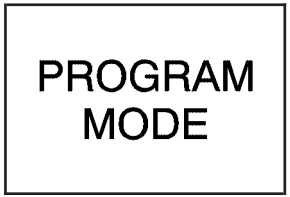

United States

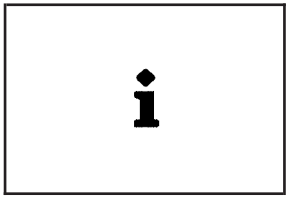

Canada

If you receive this message, your vehicle is in program mode. If your vehicle is equipped with the Driver Information Center (DIC), you are ready to begin programming your vehicle's customization features. See *DIC Vehicle Personalization on page 3-64* for more information.

Remote Keyless Entry Transmitter Battery Low Warning Message

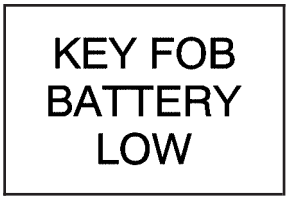

United States

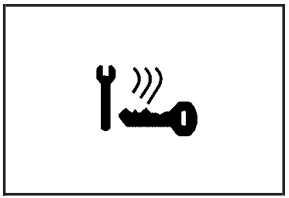

Canada

If you receive this message, the battery in the remote keyless entry needs to be replaced. See "Battery Replacement" under *Remote Keyless Entry System Operation on page 2-5* for instructions.

Parking Lamp Warning Message

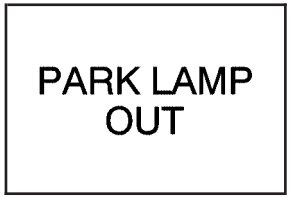

United States

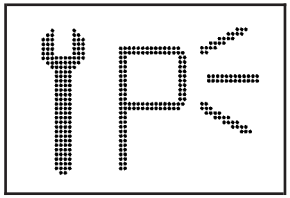

Canada

If you receive this message, one or both of the vehicle's parking lamp bulbs needs replacement. See *Bulb Replacement on page 5-50* for bulb replacement instructions.

Highbeam Out Warning Message

United States

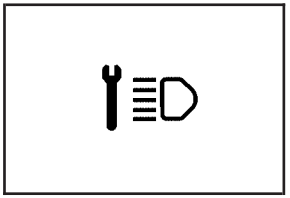

Canada

If you receive this message, one or both of the vehicle's high-beam headlamp bulbs needs replacement. See *Bulb Replacement on page 5-50* for more information.

Driver Information Center (DIC)

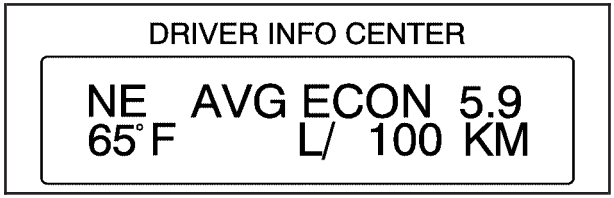

If your vehicle is equipped with the Driver Information Center (DIC), the display is located on the instrument panel cluster in the tachometer gage. The DIC will show information about the vehicle and the surroundings.

The DIC is capable of displaying English or French. See *DIC Controls and Displays on page 3-62* to change the display from English to metric.

The DIC contains a compass display to show you which direction the vehicle is driving.

Compass Variance

Compass variance is the difference between magnetic north and geographic north. In some areas of the country, the difference is great enough to cause the compass to give false readings. If this occurs, the compass must be set.

Automatic Compass Calibration

The compass is self-calibrating, which eliminates the need to manually set the compass. When the vehicle is new, the calibration process may not be complete. In these cases, the calibration symbol C will be displayed where the compass reading is normally displayed.

To calibrate the compass, in an area free from large metal objects, make three 360 degree turns. The calibration symbol will turn off and the compass reading will be displayed.

Manual Compass Calibration

If the compass appears erratic and the calibration symbol does not appear, you must manually put the compass into the calibration mode. To get into this mode, do the following:

1. Turn the ignition on and cycle the DIC to the compass/temperature mode.
2. Press and hold the SET button for longer than three seconds.

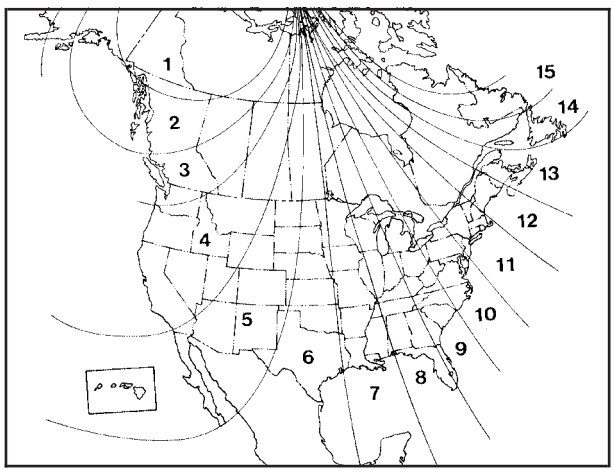

ZONE # PRESS & HOLD SET TO CHANGE: This display mode will be displayed when you are manually calibrating the system. The current zone number for compass variance will be displayed in place of the # symbol. Use the SET button to select the zone number from the graphic shown to select the current area of the country that you are driving in.

PRESS SET TO CALIBRATE COMPASS: After selecting your zone, press the MODE button and this will be displayed on the DIC. Press the SET button and complete three 360 degree turns in an area free from large metal objects.

The following two messages will toggle in the display until you calibrate the compass:

- DRIVE VEHICLE IN CIRCLE
- CALIBRATING COMPASS

When calibration is complete, the display will return to its normal mode.

DIC Controls and Displays

When the ignition is turned to ON or START, the DIC will display the following:

BUICK: BUICK will be displayed for three seconds.

DRIVER #: This message will be displayed for another three seconds after BUICK appears in the display. This display lets the driver know which driver's remote keyless entry transmitter is being used and the driver's customization features.

The DIC controls are located to the left of the steering column on the instrument panel.

The DIC will be in the last mode displayed when the engine was turned off. To select a different mode, press MODE. The display will cycle through its options at each press of MODE.

MODE: This button lets you cycle through the options on the display.

SET: This button is used to select and set the options to your preference.

The DIC will always display the compass reading and the outside temperature. If the temperature is below 38°F (3°C), the temperature reading will toggle between displaying the temperature and the word ICE for two minutes.

AVG ECONOMY (Average Economy): Average fuel economy is viewed as a long term approximation of your overall driving conditions. To learn the average fuel economy from a new starting point, press and hold the SET button while the average fuel economy is displayed on the DIC. The average fuel economy will set to zero.

INST ECONOMY (Instant Economy): Instant fuel economy varies with your driving conditions, such as acceleration, braking and the grade of the road being traveled.

FUEL RANGE: The fuel range is an estimated distance that your vehicle can travel on the remaining fuel. The fuel economy used to calculate the range is based on your driving history since the last reset of the average speed.

FUEL USED: The fuel used display will show you how much fuel has been used since the last time it was reset. To reset the fuel used to zero, press and hold the SET button while the fuel used is displayed on the DIC and until the display goes to zero.

AVG SPEED (Average Speed): The average speed display will show your average speed from when you first started your vehicle. To reset the average speed, press and hold the SET button while the average speed is displayed on the DIC and until the speed resets to your current speed.

OIL LIFE LEFT HOLD SET TO RESET: This message displays the current percentage of the GM Oil Life System. Be careful not to reset this display other than when the oil has been changed. See “How to Reset the System” under *Engine Oil on page 5-14* for more information.

TIRE PRESSURE: The check tire pressure system can alert you to a large change in the pressure of one tire. You must begin driving before the system will detect a low tire pressure. See *Check Tire Pressure System on page 5-65*.

USE SET TO SELECT ENGLISH METRIC: You can use this display to select English or metric. Press the SET button to toggle between English or metric. The DIC, the odometer, the trip odometer and head-up display will change. A Canadian odometer and trip odometer will remain in metric units only.

OFF: No driver information will be displayed in this mode. If the DIC is left in this mode for more than three seconds, the display will turn off. Press the MODE button to start the DIC.

DIC Vehicle Personalization

The DIC is used to program the choices of two drivers. The drivers are recognized as DRIVER 1 or DRIVER 2 in the DIC display. You will let the DIC know which driver you are by using your remote keyless entry transmitter. Each remote keyless entry transmitter was pre-programmed to belong to DRIVER 1 or DRIVER 2. Each transmitter may be programmed differently for each driver's preferences.

After you press the LOCK button on your transmitter and the ignition key is in ON, the DIC will display the identified driver number. The vehicle will also recall the vehicle customization features that were last programmed to correspond to your transmitter.

If you unlock your vehicle using your key instead of your transmitter, the DIC will not change drivers and your vehicle will recall the information from the last transmitter used.

Entering Programming Mode

To program features, your vehicle must be in the programming mode. Do the following:

1. Turn the ignition key to ON with the vehicle in PARK (P).
2. Press and release the MODE button, scrolling through the DIC messages, until PERSONALIZATION PRESS SET TO BEGIN is displayed.
3. Press the SET button and TO SELECT DRIVER PRESS REMOTE LOCK will appear. Press the LOCK button on the remote keyless entry. This identifies which remote keyless entry transmitter is being programmed by displaying PERSONALIZATION FOR DRIVER 1 or DRIVER 2.

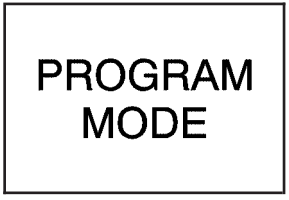

United States

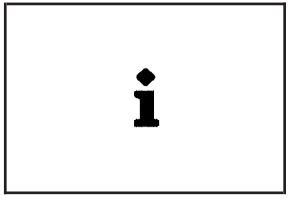

Canada

4. The program mode message will appear in the message center as an indication that your vehicle is ready to begin programming.
5. Follow the instructions given by the DIC.

Headlamp Exit Delay

This feature allows you to customize the headlamps and parking lamps. This feature can be programmed to one of the following modes:

OFF: The headlamps and parking lamps will not turn on at the same instant that the ignition is turned to OFF.

15: The headlamps and parking lamps will stay on for 15 seconds when the ignition is turned to OFF.

30: The headlamps and parking lamps will stay on for 30 seconds when the ignition is turned to OFF.

60: The headlamps and parking lamps will stay on for 60 seconds when the ignition is turned to OFF.

Your vehicle was originally programmed to 30 second mode. The mode may have been changed since then. To determine the current mode, or to change the mode, do the following:

1. Follow the instructions for “Entering Programming Mode” listed previously.
2. Press the MODE button until HEADLAMP EXIT DELAY appears in the DIC.
3. Press the SET button until the arrow is before the mode you prefer.

The mode you selected is now set. You can either exit programming mode by following the instructions later in this section or program the next feature available on your vehicle.

Interior Lighting Delay

The interior lighting delay feature can be programmed to one of the following modes:

OFF: This feature will not illuminate the interior of your vehicle when all of the doors are closed.

ON: This feature will continue to illuminate the interior lamps for 25 seconds after all doors have been closed so that you can find your ignition and buckle your safety belt at night.

Interior lighting delay will not occur while the ignition is in ON. After 25 seconds, the interior lamps will fade out. The lamps will fade out before the 25 seconds if one of the following occurs:

- The ignition is turned to ON
- All doors are locked using the remote keyless entry transmitter
- There is no occupant activity detected for an illumination period of 25 seconds

Your vehicle was originally programmed to ON. The mode may have been changed since then. To determine the current mode, or to change the mode, do the following:

1. Follow the instructions for “Entering Programming Mode” listed previously.
2. Press the MODE button until INTERIOR LIGHTING DELAY appears on the DIC.
3. Press the SET button until the arrow is before ON or OFF.

The mode you selected is now set. You can either exit programming mode by following the instructions later in this section or program the next feature available on your vehicle.

Interior Lighting On

The interior lighting on feature can be programmed to one of the following modes:

KEY OUT: The interior lamps will come on for about 25 seconds whenever you remove the key from the ignition.

DOOR: The interior lamps will come on for about 25 seconds when any door is opened.

Interior lighting on will not occur while the ignition is in ON. After 25 seconds, the interior lamps will fade out. The lamps will fade out before the 25 seconds if one of the following occurs:

- The ignition is turned to ON
- LOCK is pressed on the remote keyless entry transmitter
- There is no occupant activity detected for an illumination period of 25 seconds

Your vehicle was originally programmed to DOOR. The mode may have been changed since then. To determine the current mode, or to change the mode, do the following:

1. Follow the instructions for “Entering Programming Mode” listed previously.
2. Press the MODE button until INTERIOR LIGHTING ON appears on the DIC.
3. Press the SET button until the arrow is before KEY OUT or DOOR.

The mode you selected is now set. You can either exit programming mode by following the instructions later in this section or program the next feature available on your vehicle.

Auto Door Lock/Unlock

The doors will automatically lock when the vehicle is shifted out of PARK (P). For automatic unlocking, you can program your vehicle to one of the following modes:

OFF: When the shift lever is put in PARK (P), your doors will not unlock automatically.

DRIVER: When the shift lever is put in PARK (P), only your driver's door will unlock.

ALL: When the shift lever is put in PARK (P), all doors will unlock.

Your vehicle was originally programmed to ALL. The mode may have been changed since then. To determine the current mode, or to change the mode, do the following:

1. Follow the instructions for "Entering Programming Mode" listed previously.
2. Make sure that the AUTO DOOR LOCK feature is programmed to ON.
3. Press the MODE button until AUTO DOOR UNLOCK appears on the DIC.
4. Press the SET button until the arrow is before OFF, DRIVER or ALL.

If the auto door unlock feature has been programmed to DRIVER or ALL, the automatic door unlock feature can also be programmed to one of the following modes:

PARK: Unlock when the shift lever is put in PARK (P).

KEY OUT: Unlock when the ignition key is removed.

Your vehicle was originally programmed to PARK. The mode may have been changed since then. To determine the current mode, or to change the mode, do the following:

1. Follow the instructions for "Entering Programming Mode" listed previously.
2. Follow the instructions for programming AUTO DOOR UNLOCK to DRIVER or ALL listed previously.
3. Press the MODE button until AUTO DOOR UNLOCK/PARK KEYOUT appears on the DIC.
4. Press the SET button until the arrow is before PARK or KEY OUT.

The mode you selected is now set. You can either exit programming mode by following the instructions later in this section or program the next feature available on your vehicle.

Delayed Locking

The delayed locking feature can be programmed to one of the following modes:

ON: Lock your vehicle using the power door lock switch or the remote keyless entry transmitter while any door is opened, you will hear three chimes and the doors will not lock. Five seconds after the last door is closed, all doors will lock.

Once delayed locking is programmed to ON, you can do the following:

- Cancel the delayed locking by pressing unlock using the power door lock switch or by fully inserting the key in the ignition
- Override the delayed locking feature by pressing lock immediately using the power door lock switch
- Let the delayed locking feature complete the locking of the vehicle

OFF: The doors will always lock immediately when you lock the doors using the power door lock switch or press LOCK on the remote keyless entry transmitter.

Your vehicle was originally programmed to ON. The mode may have been changed since then. To determine the current mode, or to change the mode, do the following:

1. Follow the instructions for “Entering Programming Mode” listed previously.
2. Press the MODE button until DELAYED LOCKING appears on the DIC.
3. Press the SET button until the arrow is before ON or OFF.

The mode you selected is now set. You can either exit programming mode by following the instructions later in this section or program the next feature available on your vehicle.

Remote Door Unlock

The remote door unlock feature can be programmed to one of the following modes:

DRIVER/ALL: With the first press of UNLOCK on the remote keyless entry transmitter, the driver's door will unlock, and with the second press of UNLOCK, within five seconds of the first press, all passenger's doors will unlock.

ALL: All doors will unlock with every press of UNLOCK on the remote keyless entry transmitter.

Your vehicle was originally programmed to ALL. The mode may have been changed since then. To determine the current mode, or to change the mode, do the following:

1. Follow the instructions for "Entering Programming Mode" listed previously.
2. Press the MODE button until REMOTE DOOR UNLOCK appears on the DIC.
3. Press the SET button until the arrow is before DRIVER/ALL or ALL.

The mode you selected is now set. You can either exit programming mode by following the instructions later in this section or program the next feature available on your vehicle.

Unlock Feedback

The unlock feedback feature can be programmed to one of the following modes:

LIGHTS: This mode does the following:

- During the day, when the ignition is in OFF and UNLOCK on the remote keyless entry transmitter is pressed, the headlamps and parking lamps will flash.
- During the night, when the ignition is in OFF, the headlamps and parking lamps will be activated for 30 seconds when UNLOCK is pressed on the remote keyless entry transmitter. If you would like to change the amount of time the lamps stay on, change the headlamp exit delay feature.

OFF: The headlamps and parking lamps will not flash when UNLOCK is pressed on the remote keyless entry transmitter.

Your vehicle was originally programmed to LIGHTS. The mode may have been changed since then. To determine the current mode, or to change the mode, do the following:

1. Follow the instructions for "Entering Programming Mode" listed previously.

2. Follow the instructions for programming HEADLAMP EXIT DELAY earlier in this section, to make sure which mode it is programmed to.
3. Press the SET button until UNLOCK FEEDBACK appears on the DIC.
4. Press the MODE button until the arrow is before LIGHTS or OFF.
5. Press the SET button once you have determined which mode you prefer.

The mode you selected is now set. You can either exit programming mode by following the instructions later in this section or program the next feature available on your vehicle.

Lock Feedback

The lock feedback feature can be programmed to one of the following modes:

OFF: When LOCK is pressed on the remote keyless entry transmitter, the headlamps and parking lamps will not flash and the horn will not sound.

LIGHTS: When LOCK is pressed on the remote keyless entry transmitter, the headlamps and parking lamps will flash briefly.

LIGHTS and HORN: When LOCK is pressed a second time on the remote keyless entry transmitter within five seconds, the headlamps and parking lamps will flash briefly and the horn will sound.

Your vehicle was originally programmed to LIGHTS and HORN. The mode may have been changed since then. To determine the current mode, or to change the mode, do the following:

1. Follow the instructions for “Entering Programming Mode” listed previously.
2. Press the MODE button until LOCK FEEDBACK appears on the DIC.
3. Press the SET button until the arrow is before OFF, LIGHTS or LIGHTS and HORN.

The mode you selected is now set. You can either exit programming mode by following the instructions later in this section or program the next feature available on your vehicle.

Seat Recall

The seat recall feature can be programmed to one of the following modes:

ON: The previously programmed memory seat position will be recalled when the UNLOCK button is pressed on the remote keyless entry transmitter.

OFF: No memory seat position will be recalled when you press the UNLOCK button on the remote keyless entry transmitter.

To determine the mode to which your vehicle is programmed or to program your vehicle to a different mode, do the following:

1. Follow the instructions for “Entering Programming Mode” listed previously.
2. Press the MODE button until SEAT RECALL appears on the DIC.
3. Press the SET button until the arrow is before ON or OFF.

If the seat recall feature has been programmed to ON, the seat recall feature can also be programmed to one of the following modes:

MEMORY: The position recalled will be the memory driving position.

EXIT: The position recalled will be the previously programmed exit position.

To determine the mode to which your vehicle is programmed or to program your vehicle to a different mode, do the following:

1. Follow the instructions for “Entering Programming Mode” listed previously.
2. Follow the instructions for programming SEAT RECALL to ON listed previously.
3. Press the MODE button until RECALL POSITION appears on the DIC.
4. Press the SET button until the arrow is before MEMORY or EXIT.

The mode you selected is now set. You can either exit programming mode by following the instructions later in this section or program the next feature available on your vehicle.

Tilt Mirror

The tilt mirror feature can be programmed to one of the following modes:

ON: The passengers side outside rearview mirror will tilt down towards the curb when the vehicle is shifted to REVERSE (R) and returns to its previous position when the vehicle is shifted out of REVERSE (R).

OFF: The mirror will not tilt.

To determine the mode to which your vehicle is programmed or to program your vehicle to a different mode, do the following:

1. Follow the instructions for “Entering Programming Mode” listed previously.
2. Press the MODE button until TILT appears on the DIC.
3. Press the SET button until the arrow is before ON or OFF.

The mode you selected is now set. You can exit programming mode by following the instructions next in this section.

Exiting Programming Mode

To exit programming mode, do one of the following:

- Shift out of PARK (P).
- Turn the ignition key out of ON.
- Do not program any commands for one minute while in the programming mode.

The programming mode message will turn off to let you know that you are no longer in the programming mode.

Once you have reached the end of the personalization features, PERSONALIZATION SELECTION DONE will appear briefly. Then PRESS SET TO EXIT MODE TO CONTINUE will appear. Pressing SET will exit you out of the DIC. Pressing MODE will take you to the beginning of personalization.

Audio System(s)

Notice: **Before you add any sound equipment to your vehicle – like a tape player, CB radio, mobile telephone or two-way radio – be sure you can add what you want. If you can, it's very important to do it properly. Added sound equipment may interfere with the operation of your vehicle's engine, radio or other systems, and even damage them. Your vehicle's systems may interfere with the operation of sound equipment that has been added improperly.**

So, before adding sound equipment, check with your dealer and be sure to check federal rules covering mobile radio and telephone units.

Your audio system has been designed to operate easily and to give years of listening pleasure. You will get the most enjoyment out of it if you acquaint yourself with it first. Figure out which radio you have in your vehicle, find out what your audio system can do and how to operate all of its controls to be sure you're getting the most out of the advanced engineering that went into it.

Your vehicle has a feature called Retained Accessory Power (RAP). With RAP, you can play your audio system even after the ignition is turned off. See "Retained Accessory Power (RAP)" under *Ignition Positions on page 2-20*.

Setting the Time

Press and hold H until the correct hour appears on the display. AM will appear for morning hours. Press and hold M until the correct minute appears on the display. The time may be set with the ignition on or off.

To synchronize the time with an FM station broadcasting Radio Data System (RDS) information, press and hold H and M at the same time until TIME UPDATED appears on the display. If the time is not available from the station, NO UPDATE will appear on the display.

RDS time is broadcast once a minute. Once you have tuned to an RDS broadcast station, it may take a few minutes for your time to update.

Radio with CD

Radio Data System (RDS)

Your audio system is equipped with a Radio Data System (RDS). RDS features are available for use only on FM stations that broadcast RDS information.

With RDS, your radio can do the following:

- Seek to stations broadcasting the selected type of programming
- Receive announcements concerning local and national emergencies
- Display messages from radio stations
- Seek to stations with traffic announcements

This system relies upon receiving specific information from these stations and will only work when the information is available. In rare cases, a radio station may broadcast incorrect information that will cause the radio features to work improperly. If this happens, contact the radio station.

While you are tuned to an RDS station, the station name or the call letters will appear on the display instead of the frequency. RDS stations may also provide the time of day, a program type (PTY) for current programming, and the name of the program being broadcast.

XM™ Satellite Radio Service (48 Contiguous US States)

XM™ is a continental U.S. based satellite radio service that offers 100 coast to coast channels including music, news, sports, talk, and children's programming. XM™ provides digital quality audio and text information, including song title and artist name. A service fee is required in order to receive the XM™ service. For more information, contact XM™ at www.xmradio.com or call 1-800-852-XMXM (9696).

Playing the Radio

PWR (Power): Push this knob to turn the system on and off.

VOL (Volume): Turn this knob to increase or to decrease the volume.

SCV (Speed-Compensated Volume): With SCV, your audio system adjusts automatically to make up for road and wind noise as you drive. To get to SCV, push the TUNE/AUDIO knob repeatedly until SPEED VOL is displayed. Turn the TUNE/AUDIO knob to select MIN, MED, or MAX. Each higher choice allows for more volume compensation at faster vehicle speeds. Then, as you drive, SCV automatically increases the volume, as necessary, to overcome noise at any speed. The volume level should always sound the same to you as you drive. If you don't want to use SCV, select OFF.

DISP (Display): Press this button to display the time when the ignition is turned off.

For XM™ (48 contiguous US states, if equipped), press this button while in XM™ mode to retrieve four different categories of information related to the current song or channel: Artist, Song Title, Category or PTY, Channel Number/Channel Name.

To change the default on the display, press this button until you see the display you want, then hold the button until the display flashes. The selected display will now be the default.

Finding a Station

BAND: Press this button to switch between FM1, FM2, or AM, or XM1 or XM2 (48 contiguous US states, if equipped). The display will show your selection.

TUNE: Turn this knob to select radio stations.

⊲ **SEEK** ⊳ **:** Press the right or the left arrow to go to the next or to the previous station and stay there.

To scan stations, press and hold either SEEK arrow for two seconds until SCAN appears on the display. The radio will go to a station, play for a few seconds, then go on to the next station. Press either SEEK arrow again to stop scanning.

To scan preset stations, press and hold either SEEK arrow for more than four seconds until PSCAN and the preset number appear on the display. You will hear a double beep. The radio will go to the first preset station stored on your pushbuttons, play for a few seconds, then go on to the next preset station. Press either SEEK arrow again to stop scanning presets.

The radio will seek and scan only to stations that are in the selected band and only to those with a strong signal.

Setting Preset Stations

The six numbered pushbuttons let you return to your favorite stations. You can set up to 30 stations (six FM1, six FM2 and six AM, six XM1 and six XM2 (48 contiguous US states, if equipped), by performing the following steps:

1. Turn the radio on.
2. Press BAND to select FM1, FM2, or AM, or XM1 or XM2.
3. Tune in the desired station.
4. Press EQ to select the EQ setting. It will be stored with the preset station.
5. Press and hold one of the six numbered pushbuttons until you hear a beep. Whenever you press that numbered pushbutton, the station you set will return and the equalization that you selected will be automatically stored for that pushbutton.
6. Repeat the steps for each pushbutton.

Setting the Tone (Bass/Treble)

AUDIO: Push and release this knob until BASS, MID, or TREBLE appears on the display. Then turn the AUDIO knob to increase or to decrease. If a station is weak or noisy, you may want to decrease the treble.

To adjust bass, midrange, or treble to the middle position, select BASS, MID, or TREBLE. Then push and hold AUDIO for more than two seconds until you hear a beep. BASS and a zero, MID and a zero, or TREBLE and a zero will appear on the display.

To adjust both tone controls and both speaker controls to the middle position, end out of audio mode by waiting five seconds without making any changes. Then push and hold AUDIO for more than two seconds until you hear a beep. ALL CENTERED will appear on the display.

EQ (Equalizer): Press this button to select customized bass, midrange, and treble equalization settings.

Adjusting the Speakers (Balance/Fade)

AUDIO: To adjust the balance between the right and the left speakers, push and release AUDIO until BAL appears on the display. Then turn the AUDIO knob to move the sound toward the right or the left speakers. A bar graph with indicators will show how the sound is balanced.

To adjust the fade between the front and the rear speakers, push and release AUDIO until FADE appears on the display. Then turn the AUDIO knob to move the sound toward the front or the rear speakers. A bar graph with indicators will show how the sound is balanced.

To adjust balance or fade to the middle position, select BAL or FADE. Then push and hold AUDIO for more than two seconds until you hear a beep. The indicator will be centered on the display.

To adjust both tone controls and both speaker controls to the middle position, end out of audio mode by waiting five seconds without making any changes. Then press and hold AUDIO for more than two seconds until you hear a beep. ALL CENTERED will appear on the display.

Finding a Program Type (PTY) Station (RDS and XM™)

To select and find a desired PTY perform the following:

1. Press P-TYP to activate program type select mode. The PTY symbol will appear on the display.
2. Turn the AUDIO knob to select a PTY.
3. Once the desired PTY is displayed, press either SEEK arrow to select the PTY and take you to the PTY's first station.
4. If you want to go to another station within that PTY and P-TYPE is displayed, press either SEEK arrow once. If the PTY is not displayed, press either SEEK arrow twice to display the PTY and then to go to another station.
5. Press P-TYP to exit program type select mode.

   If PTY times out and is no longer on the display, go back to Step 1.

If both PTY and TRAF are on, the radio will search for stations with the selected PTY and traffic announcements.

SCAN: You can scan the stations within a PTY by performing the following:

1. Press P-TYP to activate program type select mode. The PTY symbol will appear on the display.
2. Turn the AUDIO knob to select a PTY.
3. Once the desired PTY is displayed, press and hold either SEEK arrow, and the radio will begin scanning the stations in the PTY.
4. Press and hold either SEEK arrow to stop at a station.

If both P-TYP and TRAF are on, the radio will search for stations with the selected PTY and traffic announcements.

BAND (Alternate Frequency): Alternate frequency allows the radio to switch to a stronger station with the same program type. To turn alternate frequency on press and hold BAND for two seconds. AF ON will appear on the display. The radio may switch to stronger stations.

To turn alternate frequency off press and hold BAND again for two seconds. AF OFF will appear on the display. The radio will not switch to other stations.

This function does not apply for XM™ Satellite Radio Service.

RDS Messages

ALERT!: Alert warns of local or national emergencies. When an alert announcement comes on the current radio station, ALERT! will appear on the display. You will hear the announcement, even if the volume is muted or a CD is playing. If a CD is playing, play will stop during the announcement. You will not be able to turn off alert announcements.

ALERT! will not be affected by tests of the emergency broadcast system. This feature is not supported by all RDS stations.

INFO (Information): If the current station has a message, INFO will appear on the display. Press this button to see the message. The message may display the artist, song title, call in phone numbers, etc.

If the whole message is not displayed, parts of the message will appear every three seconds. To scroll through the message at your own speed, press the INFO button repeatedly. A new group of words will appear on the display with each press. Once the complete message has been displayed, INFO will disappear from the display until another new message is received. The old message can be displayed by pressing the INFO button. you can view an old message until a new message is received or a different station is tuned to.

TRAF (Traffic): If TRAF appears on the display, the tuned station broadcasts traffic announcements. To receive the traffic announcement from the tuned station, press this button. Brackets will be displayed around TRAF and when a traffic announcement comes on the tuned radio station you will hear it.

If the current tuned station does not broadcast traffic announcements, press this button and the radio will seek to a station that does. When the radio finds a station that broadcasts traffic announcements, it will stop and brackets will be displayed around TRAF. When a traffic announcement comes on the tuned radio station you will hear it. If no station is found, NO TRAFFIC will appear on the display.

If the brackets are on the display and TRAF is not, you can then press the TRAF button to remove the brackets or use the TUNE knob or the SEEK arrows to go to a station that supports traffic announcements. If no station is found, NO TRAFFIC will appear on the display.

Your radio will play the traffic announcements even if the volume is low. Your radio will interrupt the play of a CD if the last tuned station broadcasts traffic announcements.

This function does not apply to XM™ Satellite Radio Service.

Radio Messages

CAL (CALIBRATE): Your audio system has been calibrated for your vehicle from the factory. If CAL appears on the display it means that your radio has not been configured properly for your vehicle and must be returned to the dealership for service.

XM™ Radio Messages

Radio Display Message	Condition	Action Required
XL (Explicit Language Channels)	XL on the radio display, after the channel name, indicates content with explicit language.	These channels, or any others, can be blocked at a customer's request, by calling 1-800-852-XMXM (9696).
Updating	Updating encryption code	The encryption code in your receiver is being updated, and no action is required. This process should take no longer than 30 seconds.
No Signal	Loss of signal	Your system is functioning correctly, but you are in a location that is blocking the XM signal. When you move into an open area, the signal should return.
Loading XM	Acquiring channel audio (after 4 second delay)	Your radio system is acquiring and processing audio and text data. No action is needed. This message should disappear shortly.
CH Off Air	Channel not in service	This channel is not currently in service. Tune to another channel.

XM™ Radio Messages (cont'd)

Radio Display Message	Condition	Action Required
CH Unavail	Channel no longer available	This previously assigned channel is no longer assigned. Tune to another station. If this station was one of your presets, you may need to choose another station for that preset button.
No Info	Artist Name/Feature not available	No artist information is available at this time on this channel. Your system is working properly.
No Info	Song/Program Title not available	No song title information is available at this time on this channel. Your system is working properly.
No Info	Category Name not available	No category information is available at this time on this channel. Your system is working properly.
No Info	No Text/Informational message available	No text or informational messages are available at this time on this channel. Your system is working properly.
Not Found	No channel available for the chosen category	There are no channels available for the category you selected. Your system is working properly.
XM Locked	Theft lock active	The XM receiver in your vehicle may have previously been in another vehicle. For security purposes, XM receivers cannot be swapped between vehicles. If you receive this message after having your vehicle serviced, check with the servicing facility.

XM™ Radio Messages (cont'd)

Radio Display Message	Condition	Action Required
Radio ID	Radio ID label (channel 0)	If you tune to channel 0, you will see this message alternating with your XM Radio 8 digit radio ID label. This label is needed to activate your service.
Unknown	Radio ID not known (should only be if hardware failure)	If you receive this message when you tune to channel 0, you may have a receiver fault. Consult with your dealer.
Chk XMRcvr	Hardware failure	If this message does not clear within a short period of time, your receiver may have a fault. Consult with your retail location.

Playing a CD

With the ignition on, insert a CD partway into the slot, label side up. The player will pull it in and the CD should begin playing. If you want to insert a CD while the ignition or the radio is off, first press the eject or DISP button.

When the CD is inserted, the CD symbol will be displayed. As each new track starts to play, the track number will appear on the display.

If you turn off the ignition or radio with a CD in the player, it will stay in the player. When you turn on the ignition or radio, the CD will start playing where it stopped, if it was the last selected audio source.

The CD player can play the smaller 8 cm single CDs with an adapter ring. Full-size CDs and the smaller CDs are loaded in the same manner.

If playing a CD-R the sound quality may be reduced due to CD-R quality, the method of recording, the quality of the music that has been recorded, and the way the CD-R has been handled. You may experience an increase in skipping, difficulty in finding tracks, and/or difficulty in loading and ejecting. If these problems occur try a known good CD.

Do not add paper labels to CDs, they could get caught in the CD player.

Do not play 3 inch CDs without a standard adapter CD.

If an error appears on the display, see “CD Messages” later in this section.

1◁◁ (Reverse): Press and hold this pushbutton to quickly reverse within a track. You will hear sound at a reduced volume. Release the pushbutton to play the passage. The display will show the elapsed time of the track.

2 ▷▷ (Forward): Press and hold this pushbutton to quickly advance within a track. You will hear sound at a reduced volume. Release the pushbutton to play the passage. The display will show the elapsed time of the track.

4 RDM (Random): Press this pushbutton to hear the tracks in random, rather than sequential, order. Press RDM again to turn off random play.

DISP (Display): Press this button to see which track is playing. Press it again within five seconds to see how long it has been playing. To change the default on the display (track or elapsed time), press this button until you see the display you want, then hold the button until the display flashes. The selected display will now be the default.

⏮ **SEEK** ⏭ **:** Press the left arrow to go to the start of the current track if more than eight seconds have played. Press the right arrow to go to the next track. If you hold the arrow or press it more than once, the player will continue moving backward or forward through the CD.

To scan the CD, press and hold either SEEK arrow for two seconds until SCAN appears on the display. You will hear a beep. The CD will go to the next track, play for a few seconds, then go on to the next track. The CD will only scan forward. Press either SEEK arrow again to stop scanning.

BAND: Press this button to listen to the radio when a CD is playing. The inactive CD will remain safely inside the radio for future listening.

CD: Press this button to play a CD when listening to the radio.

⏏ **(Eject):** Press this button to eject a CD. Eject may be activated with either the ignition or radio off. CDs may be loaded with the radio and ignition off if this button is pressed first.

CD Messages

CHECK CD: If this message appears on the display, it could be for one of the following reasons:

- It is very hot. When the temperature returns to normal, the CD should play.
- You are driving on a very rough road. When the road becomes smoother, the CD should play.
- The CD is dirty, scratched, wet, or upside down.
- The air is very humid. If so, wait about an hour and try again.
- There may have been a problem while burning the CD.
- The label may be caught in the CD player.

If the CD is not playing correctly, for any other reason, try a known good CD.

If any error occurs repeatedly or if an error cannot be corrected, contact your dealer. If your radio displays an error number, write it down and provide it to your dealer when reporting the problem.

Listening to a DVD

Your vehicle may have a Rear Seat Entertainment System. If your vehicle has this system and a DVD is playing, the DVD symbol will appear on the radio display indicating that the DVD is available and can be listened through your vehicles speakers. To listen to the DVD, press the CD button until RSE appears on the radio display. The current source will stop and the DVD sound will come through the speakers. To stop listening to the DVD press the CD button, if a CD is loaded, or press the BAND button to select a different source.

When the RSE system is turned off the radio will display RSE OFF and the radio will return to the last radio source that you were listening to.

Radio with Cassette and CD

Radio Data System (RDS)

Your audio system is equipped with a Radio Data System (RDS). RDS features are available for use only on FM stations that broadcast RDS information.

With RDS, your radio can do the following:

- Seek to stations broadcasting the selected type of programming
- Receive announcements concerning local and national emergencies
- Display messages from radio stations
- Seek to stations with traffic announcements

This system relies upon receiving specific information from these stations and will only work when the information is available. In rare cases, a radio station may broadcast incorrect information that will cause the radio features to work improperly. If this happens, contact the radio station.

While you are tuned to an RDS station, the station name or the call letters will appear on the display instead of the frequency. RDS stations may also provide the time of day, a program type (PTY) for current programming, and the name of the program being broadcast.

XM™ Satellite Radio Service (48 Contiguous US States)

XM™ is a continental U.S. based satellite radio service that offers 100 coast to coast channels including music, news, sports, talk, and children's programming. XM™ provides digital quality audio and text information, including song title and artist name. A service fee is required in order to receive the XM™ service. For more information, contact XM™ at www.xmradio.com or call 1-800-852-XMXM (9696).

Playing the Radio

PWR (Power): Push this knob to turn the system on and off.

VOL (Volume): Turn this knob to increase or to decrease the volume.

SCV (Speed-Compensated Volume): With SCV, your audio system adjusts automatically to make up for road and wind noise as you drive. To get to SCV, press the TUNE/AUDIO knob repeatedly until SPEED VOL is displayed. Turn the TUNE/AUDIO knob to select MIN, MED, or MAX. Each higher choice allows for more volume compensation at faster vehicle speeds. Then, as you drive, SCV automatically increases the volume, as necessary, to overcome noise at any speed. The volume level should always sound the same to you as you drive. If you don't want to use SCV, select OFF.

DISP (Display): Press this button to display the time when the ignition is turned off.

For XM™ (48 contiguous US states, if equipped), press this button while in XM™ mode to retrieve four different categories of information related to the current song or channel: Artist, Song Title, Category or PTY, Channel Number/Channel Name.

To change the default on the display, press this button until you see the display you want, then hold the button until the display flashes. The selected display will now be the default.

Finding a Station

BAND: Press this button to switch between FM1, FM2, or AM, or XM1 or XM2 (48 contiguous US states, if equipped). The display will show your selection.

TUNE: Turn this knob to select a radio station.

⊲ **SEEK** ⊳ **:** Press the right or the left arrow to go to the next or to the previous station and stay there.

To scan stations, press and hold either SEEK arrow for two seconds until SCAN appears on the display. The radio will go to a station, play for a few seconds, then go on to the next station. Press either SEEK arrow again to stop scanning.

To scan preset stations, press and hold either SEEK arrow for more than four seconds until SCAN and the preset number appear on the display. You will hear a double beep. The radio will go to the first preset station stored on your pushbuttons, play for a few seconds, then go on to the next preset station. Press either SEEK arrow again to stop scanning presets.

The radio will seek and scan only to the stations that are in the selected band and only to those with a strong signal.

Setting Preset Stations

The six numbered pushbuttons let you return to your favorite stations. You can set up to 30 stations (six FM1, six FM2, and six AM, six XM1 and six XM2 (48 contiguous US states, if equipped), by performing the following steps:

1. Turn the radio on.
2. Press BAND to select FM1, FM2, or AM, or XM1 or XM2.
3. Tune in the desired station.
4. Press EQ to select the EQ setting. It will be stored with the preset station.
5. Press and hold one of the six numbered pushbuttons until you hear a beep. Whenever you press that numbered pushbutton, the station you set will return and the equalization that you selected will be automatically stored for that pushbutton.
6. Repeat the steps for each pushbutton.

Setting the Tone (Bass/Treble)

AUDIO: Push and release this knob until BASS, MID, or TREBLE appears on the display. Then turn the AUDIO knob to increase or to decrease. If a station is weak or noisy, you may want to decrease the treble.

To adjust bass, midrange, or treble to the middle position, select BASS, MID, or TREBLE. Then push and hold AUDIO for more than two seconds until you hear a beep. BASS and a zero, MID and a zero, or TREBLE and a zero will appear on the display.

To adjust both tone controls and both speaker controls to the middle position, end out of audio mode by waiting five seconds without making any changes. Then push and hold AUDIO for more than two seconds until you hear a beep. ALL CENTERED will appear on the display.

EQ (Equalizer): Press this button to select customized bass, midrange, and treble equalization settings.

Adjusting the Speakers (Balance/Fade)

AUDIO: To adjust the balance between the right and the left speakers, push and release AUDIO until BAL appears on the display. Then turn the AUDIO knob to move the sound toward the right or the left speakers. A bar graph with indicators will show how the sound is balanced.

To adjust the fade between the front and the rear speakers, push and release AUDIO until FADE appears on the display. Then turn the AUDIO knob to move the sound toward the front or the rear speakers. A bar graph with indicators will show how the sound is balanced.

To adjust balance or fade to the middle position, select BAL or FADE. Then push and hold AUDIO for more than two seconds until you hear a beep. The indicator will be centered on the display.

To adjust both tone controls and both speaker controls to the middle position, end out of audio mode by waiting five seconds without making any changes. Then press and hold AUDIO for more than two seconds until you hear a beep. ALL CENTERED will appear on the display.

Finding a Program Type (PTY) Station (RDS and XM™)

To select and find a desired PTY perform the following:

1. Press P-TYP to activate program type select mode. The P-TYPE symbol will appear on the display.
2. Turn the AUDIO knob to select a PTY.
3. Once the desired PTY is displayed, press either SEEK arrow to select the PTY and take you to the PTY's first station.
4. If you want to go to another station within that PTY and the PTY is displayed, press either SEEK arrow once. If the PTY is not displayed, press either SEEK arrow twice to display the PTY and then to go to another station.
5. Press P-TYP to exit program type select mode.

   If PTY times out and is no longer on the display, go back to Step 1.

If both P-TYP and TRAF are on, the radio will search for stations with the selected PTY and traffic announcements.

SCAN: You can scan he stations within a PTY by performing the following:

1. Press P-TYP to activate program type select mode. The P-TYPE symbol will appear on the display.
2. Turn the AUDIO knob to select a PTY.
3. Once the desired PTY is displayed, press and hold either SEEK arrow, and the radio will begin scanning the stations in the PTY.
4. Press and hold either SEEK arrow to stop at a station.

If both P-TYP and TRAF are on, the radio will scan for stations with the selected PTY and traffic announcements.

BAND (Alternate Frequency): Alternate frequency allows the radio to switch to a stronger station with the same program type. To turn alternate frequency on press and hold BAND for two seconds. AF ON will appear on the display. The radio may switch to stronger stations.

To turn alternate frequency off press and hold BAND for two seconds. AF OFF will appear on the display. The radio will not switch to other stations.

This function does not apply for XM™ Satellite Radio Service.

RDS Messages

ALERT!: Alert warns of local or national emergencies. When an alert announcement comes on the current radio station, ALERT! will appear on the display. You will hear the announcement, even if the volume is muted or a cassette tape or CD is playing. If a cassette tape or CD is playing, play will stop during the announcement. You will not be able to turn off alert announcements.

ALERT! will not be affected by tests of the emergency broadcast system. This feature is not supported by all RDS stations.

INFO (Information): If the current station has a message, INFO will appear on the display. Press this button to see the message. The message may display the artist, song title, call in phone numbers, etc.

If the whole message is not displayed, parts of the message will appear every three seconds. To scroll through the message at your own speed, press the INFO button repeatedly. A new group of words will appear on the display with each press. Once the complete message has been displayed, INFO will disappear from the display until another new message is received. The old message can be displayed by pressing the INFO button. You can view an old message until a new message is received or a different station is tuned to.

TRAF (Traffic): If TRAF appears on the display, the tuned station broadcasts traffic announcements. To receive the traffic announcement from the tuned station, press this button. Brackets will be displayed around TRAF and when a traffic announcement comes on the tuned radio station you will hear it.

If the current tuned station does not broadcast traffic announcements, press this button and the radio will seek to a station that does. When the radio finds a station that broadcasts traffic announcements, the radio will stop and brackets will be displayed around TRAF. When a traffic announcement comes on the tuned radio station you will hear it. If no station is found, NO TRAFFIC will appear on the display.

If the brackets are on the display and TRAF is not, you can then press the TRAF button to remove the brackets or use the TUNE knob or the SEEK arrows to go to a station that supports traffic announcements. If no station is found, NO TRAFFIC will appear on the display.

Your radio will play the traffic announcements even if the volume is low. Your radio will interrupt the play of a cassette tape or CD if the last tuned station broadcasts traffic announcements.

This function does not apply to XM™ Satellite Radio Service.

Radio Messages

CAL (CALIBRATE): Your audio system has been calibrated for your vehicle from the factory. If CAL appears on the display it means that your radio has not been configured properly for your vehicle and must be returned to the dealership for service.

XM™ Radio Messages

Radio Display Message	Condition	Action Required
XL (Explicit Language Channels)	XL on the radio display, after the channel name, indicates content with explicit language.	These channels, or any others, can be blocked at a customer's request, by calling 1-800-852-XMXM (9696).
Updating	Updating encryption code	The encryption code in your receiver is being updated, and no action is required. This process should take no longer than 30 seconds.
No Signal	Loss of signal	Your system is functioning correctly, but you are in a location that is blocking the XM signal. When you move into an open area, the signal should return.
Loading XM	Acquiring channel audio (after 4 second delay)	Your radio system is acquiring and processing audio and text data. No action is needed. This message should disappear shortly.
CH Off Air	Channel not in service	This channel is not currently in service. Tune to another channel.

XM™ Radio Messages (cont'd)

Radio Display Message	Condition	Action Required
CH Unavail	Channel no longer available	This previously assigned channel is no longer assigned. Tune to another station. If this station was one of your presets, you may need to choose another station for that preset button.
No Info	Artist Name/Feature not available	No artist information is available at this time on this channel. Your system is working properly.
No Info	Song/Program Title not available	No song title information is available at this time on this channel. Your system is working properly.
No Info	Category Name not available	No category information is available at this time on this channel. Your system is working properly.
No Info	No Text/Informational message available	No text or informational messages are available at this time on this channel. Your system is working properly.
Not Found	No channel available for the chosen category	There are no channels available for the category you selected. Your system is working properly.
XM Locked	Theft lock active	The XM receiver in your vehicle may have previously been in another vehicle. For security purposes, XM receivers cannot be swapped between vehicles. If you receive this message after having your vehicle serviced, check with the servicing facility.
Radio ID	Radio ID label (channel 0)	If you tune to channel 0, you will see this message alternating with your XM Radio 8 digit radio ID label. This label is needed to activate your service.

XM™ Radio Messages (cont'd)

Radio Display Message	Condition	Action Required
Unknown	Radio ID not known (should only be if hardware failure)	If you receive this message when you tune to channel 0, you may have a receiver fault. Consult with your dealer.
Chk XMRcvr	Hardware failure	If this message does not clear within a short period of time, your receiver may have a fault. Consult with your retail location.

Playing a Cassette Tape

The longer side with the tape visible should face to the right. If the ignition and the radio are on, the tape can be inserted and will begin playing. If you hear nothing or hear a garbled sound, the tape may not be in squarely. Press the eject button to remove the tape and start over.

While the tape is playing, use the VOLUME and AUDIO controls just as you do for the radio. The display will show an arrow to show which side of the tape is playing.

If you want to insert a tape while the ignition or radio is off, first press the eject or DISP button. Cassette tape adapter kits for portable CD players will work in your cassette tape player.

Your tape bias is set automatically.

If an error appears on the display, see "Cassette Tape Messages" later in this section.

1◁◁ (Reverse): Press this pushbutton to reverse the tape rapidly. The radio will play while the tape reverses. Press this pushbutton again to return to playing speed.

2 ▷▷ (Forward): Press this pushbutton to advance quickly to another part of the tape. The radio will play while the tape advances. Press this pushbutton again to return to playing speed.

6 SIDE: Press this pushbutton to play the other side of the tape.

⏮ **SEEK** ⏭ **:** Your tape must have at least three seconds of silence between each selection for seek to work. Press the left or the right arrow to go to the previous or to the next selection on the tape. SEEK and a negative or positive number will be displayed. Pressing the left or right arrow multiple times will increase the number of selections to be searched up to -5 or +5. If -5 or +5 is shown on the display the cassette tape player will fast forward or rewind through the four selections and stop at the fifth selection.

To scan cassette tape selections, press and hold either SEEK arrow for two seconds until SCAN appears on the display. You will hear a beep. The tape will go to the next selection, play for a few seconds, then go on to the next selection. The cassette tape will only scan forward. Press either SEEK arrow again to stop scanning.

BAND: Press this button to listen to the radio when a cassette tape or CD is playing. The inactive cassette or CD will remain safely inside the radio for future listening.

CD TAPE: Press this button to play a cassette tape or a CD when listening to the radio.

⏏ **(Eject):** Press this button to eject a tape. Eject may be activated with either the ignition or radio off. CDs may be loaded with the ignition or radio off if this button is pressed first.

Cassette Tape Messages

If an error message appears on the display, it could be for one of the following reasons:

- **TIGHT TAPE:** The tape is tight and the player cannot turn the tape hubs. Remove the tape. Hold the tape with the open end down and try to turn the right hub counterclockwise with a pencil. Turn the tape over and repeat. If the hubs do not turn easily, your tape may be damaged and should not be used in the player. Try a new tape to make sure your player is working properly.
- **BROKEN TAPE:** The tape is broken. Try a new tape.

CLEAN PLAYER: If this message appears on the display, the cassette tape player needs to be cleaned. It will still play tapes, but you should clean it as soon as possible to prevent damage to the tapes and player. See *Care of Your Cassette Tape Player on page 3-130*.

If any error occurs repeatedly or if an error cannot be corrected, contact your dealer. If your radio displays an error number, write it down and provide it to your dealers when reporting the problem.

CD Adapter Kits

It is possible to use a portable CD player with your cassette tape player after activating the bypass feature on your tape player.

To activate the bypass feature, use the following steps:

1. Turn the ignition on.
2. Turn the radio off.
3. Insert the adapter into the cassette slot.
4. Press and hold the CD TAPE button until READY appears on the display.

The override feature will remain active until the eject button is pressed.

Playing a CD

With the ignition on, insert a CD partway into the slot, label side up. The player will pull it in and the CD should begin playing. If you want to insert a CD while the ignition or the radio is off, first press the eject or DISP button.

When the CD is inserted, the CD symbol will appear on the display. As each new track starts to play, the track number will appear on the display.

If you turn off the ignition or radio with a CD in the player, it will stay in the player. When you turn on the ignition or radio, the CD will start playing where it stopped, if it was the last selected audio source.

The CD player can play the smaller 8 cm single CDs with an adapter ring. Full-size CDs and the smaller CDs are loaded in the same manner.

If playing a CD-R the sound quality may be reduced due to CD-R quality, the method of recording, the quality of the music that has been recorded, and the way the CD-R has been handled. You may experience an increase in skipping, difficulty in finding tracks, and/or difficulty in loading and ejecting. If these problems occur try a known good CD.

Do not add paper labels to CDs, they could get caught in the CD player.

Do not play 3 inch CDs without a standard adapter CD.

If an error appears on the display, see “CD Messages” later in this section.

1◁◁ (Reverse): Press and hold this pushbutton to quickly reverse within a track. You will hear sound at a reduced volume. Release the pushbutton to play the passage. The display will show the elapsed time of the track.

2 ▷▷ (Forward): Press and hold this pushbutton to quickly advance within a track. You will hear sound at a reduced volume. Release the pushbutton to play the passage. The display will show the elapsed time of the track.

4 RDM (Random): Press this pushbutton to hear the tracks in random, rather than sequential, order. Press RDM again to turn off random play.

DISP (Display): Press this button to see which track is playing. Press it again within five seconds to see how long it has been playing. To change the default on the display (track or elapsed time), press this button until you see the display you want, then hold the button until the display flashes. The selected display will now be the default.

⊲ SEEK ⊳ : Press the left arrow to go to the start of the current track if more than eight seconds have played. Press the right arrow to go to the next track. If you hold the arrow or press it more than once, the player will continue moving backward or forward through the CD.

To scan CD tracks, press and hold either SEEK arrow for two seconds until SCAN appears on the display. You will hear a beep. The CD will go to the next track, play for a few seconds, then go on to the next track. The CD will only scan forward. Press either SEEK arrow again to stop scanning.

BAND: Press this button to listen to the radio when a cassette tape or CD is playing. The inactive cassette or CD will remain safely inside the radio for future listening.

CD TAPE: Press this button to play a cassette tape or a CD when listening to the radio.

⏏ (Eject): Press this button to eject a CD. Eject may be activated with either the ignition or radio off. CDs may be loaded with the ignition and radio off if this button is pressed first.

CD Messages

CHECK CD: If this message appears on the display, it could be for one of the following reasons:

- It is very hot. When the temperature returns to normal, the CD should play.
- You are driving on a very rough road. When the road becomes smoother, the CD should play.
- The CD is dirty, scratched, wet, or upside down.
- The air is very humid. If so, wait about an hour and try again.
- There may have been a problem while burning the CD.
- The label may be caught in the CD player.

If the CD is not playing correctly, for any other reason, try a known good CD.

If any error occurs repeatedly or if an error cannot be corrected, contact your dealer. If your radio displays an error number, write it down and provide it to your dealer when reporting the problem.

Listening to a DVD

Your vehicle may have a Rear Seat Entertainment System. If your vehicle has this system and a DVD is playing, the DVD symbol will appear on the radio display indicating that the DVD is available and can be listened through your vehicles speakers. To listen to the DVD, press the CD TAPE button until RSE appears on the radio display. The current source will stop and the DVD sound will come through the speakers. To stop listening to the DVD press the CD TAPE button, if a CD is loaded, or press the BAND button to select a different source.

When the RSE system is turned off the radio will display RSE OFF and the radio will return to the last radio source that you were listening to.

Radio with Six-Disc CD

Radio Data System (RDS)

Your audio system is equipped with a Radio Data System (RDS). RDS features are available for use only on FM stations that broadcast RDS information.

With RDS, your radio can do the following:

- Seek to stations broadcasting the selected type of programming
- Receive announcements concerning local and national emergencies
- Display messages from radio stations
- Seek to stations with traffic announcements

This system relies upon receiving specific information from these stations and will only work when the information is available. In rare cases, a radio station may broadcast incorrect information that will cause the radio features to work improperly. If this happens, contact the radio station.

While you are tuned to an RDS station, the station name or the call letters will appear on the display instead of the frequency. RDS stations may also provide the time of day, a program type (PTY) for current programming, and the name of the program being broadcast.

XM™ Satellite Radio Service (48 Contiguous US States)

XM™ is a continental U.S. based satellite radio service that offers 100 coast to coast channels including music, news, sports, talk, and children's programming. XM™ provides digital quality audio and text information, including song title and artist name. A service fee is required in order to receive the XM™ service. For more information, contact XM™ at www.xmradio.com or call 1-800-852-XMXM (9696).

Playing the Radio

PWR (Power): Push this knob to turn the system on and off.

VOLUME: Turn this knob to increase or to decrease volume.

AUTO VOL (Automatic Volume): Your system has a feature called automatic volume. With this feature, your audio system adjusts automatically to make up for road and wind noise as you drive.

Set the volume at the desired level. Press this button to select MIN, MED, or MAX. Each higher setting will allow for more volume compensation at faster vehicle speeds. Then, as you drive, automatic volume increases the volume, as necessary, to overcome noise at any speed. The volume level should always sound the same to you as you drive. If you don't want to use automatic volume, select OFF.

RCL (Recall): Press this knob to switch the display between the radio station frequency and the time. Pressing this knob with the ignition off will display the time.

For XM™ (48 contiguous US states, if equipped), press the RCL knob while in XM™ mode to retrieve four different categories of information related to the current song or channel: Artist, Song Title, Category or PTY, Channel Number/Channel Name.

To change the default on the display, press the RCL knob until you see the display you want, then hold the knob until the display flashes. The selected display will now be the default.

Finding a Station

BAND: Press this button to switch between FM1, FM2, AM, or XM1 or XM2 (48 contiguous US states, if equipped). The display will show your selection.

TUNE: Turn this knob to select radio stations.

⊲ **SEEK** ⊳ **:** Press the right or the left arrow to go to the next or to the previous station and stay there.

The radio will seek only to stations that are in the selected band and only to those with a strong signal.

⊲ **SCAN** ⊳ **:** Press and hold either SCAN arrow for two seconds until SC appears on the display and you hear a beep. The radio will go to a station, play for a few seconds, then go on to the next station. Press either SCAN arrow again to stop scanning.

To scan preset stations, press and hold either SCAN arrow for more than four seconds. PRESET SCAN will appear on the display. You will hear a double beep. The radio will go to the first preset station stored on your pushbuttons, play for a few seconds, then go on to the next preset station. Press either SCAN arrow again to stop scanning presets.

The radio will scan only to stations that are in the selected band and only to those with a strong signal.

Setting Preset Stations

The six numbered pushbuttons let you return to your favorite stations. You can set up to 30 stations (six FM1, six FM2, and six AM, six XM1 and six XM2 (48 contiguous US states, if equipped), by performing the following steps:

1. Turn the radio on.
2. Press BAND to select FM1, FM2, AM, or XM1 or XM2.
3. Tune in the desired station.
4. Press AUTO EQ to select the equalization.
5. Press and hold one of the six numbered pushbuttons until you hear a beep. Whenever you press that numbered pushbutton, the station you set will return and the equalization that you selected will be automatically stored for that pushbutton.
6. Repeat the steps for each pushbutton.

Setting the Tone (Bass/Treble)

AUDIO: Push the AUDIO knob until BASS, MID, or TREB appears on the display. Turn the knob to increase or to decrease. If a station is weak or noisy, you may want to decrease the treble.

To adjust bass, midrange, or treble to the middle position, select BASS, MID, or TREB and push and hold the AUDIO knob. The radio will produce one beep and adjust the display level to zero.

To adjust all tone and speaker controls to the middle position, push and hold the AUDIO knob when no tone or speaker control is displayed. The radio will produce one beep and CENTERED will appear on the display.

AUTO EQ (Automatic Equalization): Press this button to select customized bass, midrange, and treble equalization settings designed for country, jazz, talk, pop, rock, and classical.

To return to the manual mode (CUSTOM), press the AUTO EQ button until CUSTOM appears on the display. Then you will be able to manually adjust the bass, midrange, and treble using the AUDIO knob.

Adjusting the Speakers (Balance/Fade)

AUDIO: To adjust the balance between the right and the left speakers, push the AUDIO knob until BAL appears on the display. Turn the knob to move the sound toward the right or the left speakers.

To adjust the fade between the front and rear speakers, push and hold the AUDIO knob until FAD appears on the display. Turn the knob to move the sound toward the front or the rear speakers.

To adjust the balance and the fade to the middle position, select balance or fade and push and hold the AUDIO knob. The radio will beep once and will adjust the display level to the middle position.

To adjust all tone and speaker controls to the middle position, push and hold the AUDIO knob when no tone or speaker controls are displayed. The radio will produce one beep and CENTERED will appear on the display.

Finding a Program Type (PTY) Station (RDS and XM™)

To select and find a desired PTY perform the following:

1. Press the P-TYPE button to activate program type select mode. P-TYPE and the last selected PTY will appear on the display.
2. Turn the P-TYPE knob to select a PTY.
3. Once the desired PTY is displayed, press either SEEK arrow to select the PTY and take you to the PTY's first station.
4. If you want to go to another station within that PTY and the PTY is displayed, press either SEEK arrow once. If the PTY is not displayed, press either SEEK arrow twice to display the PTY and then to go to another station.
5. Press P-TYPE to exit program type select mode.

   If PTY times out and is no longer on the display, go back to Step 1.

If both P-TYPE and TRAF are on, the radio will search for stations with the selected PTY and traffic announcements.

To use the PTY interrupt feature, press and hold the P-TYPE button until you hear a beep on the PTY you want to interrupt with. When selected, an asterisk will appear beside that PTY on the display. You may select multiple interrupts if desired. When you are listening to a CD, the last selected RDS station will interrupt play if that selected program type format is broadcast.

SCAN: You can scan the stations within a PTY by performing the following:

1. Press the P-TYPE button to activate program type select mode. P-TYPE and the last selected PTY will appear on the display.
2. Turn the P-TYPE knob to select a PTY.
3. Once the desired PTY is displayed, press and hold either SCAN arrow, and the radio will begin scanning the stations in the PTY.
4. Press either SCAN arrow to stop at a station.

If both P-TYPE and TRAF are on, the radio will scan for stations with the selected PTY and traffic announcements.

BAND (Alternate Frequency): Alternate frequency allows the radio to switch to a stronger station with the same program type. To turn alternate frequency on press and hold BAND for two seconds. AF ON will appear on the display. The radio may switch to stronger stations.

To turn alternate frequency off press and hold BAND again for two seconds. AF OFF will appear on the display. The radio will not switch to other stations. When you turn the ignition off and then on again, the alternate frequency feature will automatically be turned on.

This function does not apply for XM™ Satellite Radio Service.

Setting Preset PTYs (RDS Only)

The six numbered pushbuttons let you return to your favorite PTYs. These buttons have factory PTY presets. You can set up to 12 PTYs (six FM1 and six FM2) by performing the following steps:

1. Press BAND to select FM1 or FM2.
2. Press the P-TYPE button to activate program type select mode. P-TYPE and the last selected PTY will appear on the display.
3. Turn the P-TYPE knob to select a PTY.

4. Press and hold one of the six numbered pushbuttons until you hear a beep. Whenever you press that numbered pushbutton, the PTY you set will return.
5. Repeat the steps for each pushbutton.

RDS Messages

ALERT!: Alert warns of local or national emergencies. When an alert announcement comes on the current radio station, ALERT! will appear on the display. You will hear the announcement, even if the volume is muted or a CD is playing. If a CD is playing, play will stop during the announcement. You will not be able to turn off alert announcements.

ALERT! will not be affected by tests of the emergency broadcast system. This feature is not supported by all RDS stations.

INFO (Information): If the current station has a message, INFO will appear on the display. Press this button to see the message. The message may display the artist, song title, call in phone numbers, etc.

If the whole message is not displayed, parts of the message will appear every three seconds. To scroll through the message at your own speed, press the INFO button repeatedly. A new group of words will appear on the display with each press. Once the complete message has been displayed, INFO will disappear from the display until another new message is received. The old message can be displayed by pressing the INFO button. You can view an old message until a new message is received or a different station is tuned to.

TRAF (Traffic): If TRAF appears on the display, the tuned station broadcasts traffic announcements. To receive the traffic announcement from the tuned station, press this button. Brackets will be displayed around TRAF and when a traffic announcement comes on the tuned radio station you will hear it.

If the current tuned station does not broadcast traffic announcements, press the TRAF button and the radio will seek to a station that does. When the radio finds a station that broadcasts traffic announcements, the radio will stop and brackets will be displayed around TRAF. When a traffic announcement comes on the tuned radio station you will hear it. If no station is found, NO TRAFFIC will appear on the display.

If the brackets are on the display and TRAF is not, you can then press the TRAF button to remove the brackets or use the TUNE knob or the SEEK arrows to go to a station that supports traffic announcements. If no station is found, NO TRAFFIC will appear on the display.

Your radio will play the traffic announcement if the volume is low. Your radio will interrupt the play of a CD if the last tuned station broadcasts traffic announcements and the brackets are displayed.

This function does not apply to XM™ Satellite Radio Service.

Radio Messages

CAL ERR (Calibration Error): This message is displayed when the radio has not been calibrated properly for the vehicle. You must return to the dealership for service.

LOCKED: This message is displayed when the THEFTLOCK® system has locked up. You must return to the dealership for service.

XM™ Radio Messages

Radio Display Message	Condition	Action Required
XL (Explicit Language Channels)	XL on the radio display, after the channel name, indicates content with explicit language.	These channels, or any others, can be blocked at a customer's request, by calling 1-800-852-XMXM (9696).
Updating	Updating encryption code	The encryption code in your receiver is being updated, and no action is required. This process should take no longer than 30 seconds.
No Signal	Loss of signal	Your system is functioning correctly, but you are in a location that is blocking the XM signal. When you move into an open area, the signal should return.

XM™ Radio Messages (cont'd)

Radio Display Message	Condition	Action Required
Loading XM	Acquiring channel audio (after 4 second delay)	Your radio system is acquiring and processing audio and text data. No action is needed. This message should disappear shortly.
CH Off Air	Channel not in service	This channel is not currently in service. Tune to another channel.
CH Unavail	Channel no longer available	This previously assigned channel is no longer assigned. Tune to another station. If this station was one of your presets, you may need to choose another station for that preset button.
No Info	Artist Name/Feature not available	No artist information is available at this time on this channel. Your system is working properly.
No Info	Song/Program Title not available	No song title information is available at this time on this channel. Your system is working properly.
No Info	Category Name not available	No category information is available at this time on this channel. Your system is working properly.
No Info	No Text/Informational message available	No text or informational messages are available at this time on this channel. Your system is working properly.
Not Found	No channel available for the chosen category	There are no channels available for the category you selected. Your system is working properly.

XM™ Radio Messages (cont'd)

Radio Display Message	Condition	Action Required
XM Locked	Theft lock active	The XM receiver in your vehicle may have previously been in another vehicle. For security purposes, XM receivers cannot be swapped between vehicles. If you receive this message after having your vehicle serviced, check with the servicing facility.
Radio ID	Radio ID label (channel 0)	If you tune to channel 0, you will see this message alternating with your XM Radio 8 digit radio ID label. This label is needed to activate your service.
Unknown	Radio ID not known (should only be if hardware failure)	If you receive this message when you tune to channel 0, you may have a receiver fault. Consult with your dealer.
Chk XMRcvr	Hardware failure	If this message does not clear within a short period of time, your receiver may have a fault. Consult with your retail location.

Playing a CD

The CD player can play the smaller 8 cm single CDs with an adapter ring. Full-size CDs and the smaller CDs are loaded in the same manner.

If playing a CD-R the sound quality may be reduced due to CD-R quality, the method of recording, the quality of the music that has been recorded, and the way the CD-R has been handled. You may experience an increase in skipping, difficulty in finding tracks, and/or difficulty in loading and ejecting. If these problems occur try a known good CD.

Do not add paper labels to CDs, they could get caught in the CD player.

Do not play 3 inch CDs without a standard adapter CD.

If an error appears on the display, see “CD Messages” later in this section.

LOAD CD ⏏ : Press the LOAD side of this button to load CDs into the CD player. This CD player will hold up to six CDs.

To insert one CD, do the following:

1. Turn the ignition on.
2. Press and release the LOAD side of the LOAD CD button.
3. Wait for the light, located to the right of the slot, to turn green.
4. Load a CD. Insert the CD partway into the slot, label side up. The player will pull the CD in.

When a CD is inserted, the CD symbol will be displayed. If you select an equalization setting for your CD, it will be activated each time you play a CD.

The CD will begin to play automatically. As each new track starts to play, the track number will appear on the display.

To insert multiple CDs, do the following:

1. Turn the ignition on.
2. Press and hold the LOAD side of the LOAD CD button for two seconds.

   You will hear a beep and the light, located to the right of the slot, will begin to flash.
3. Once the light stops flashing and turns green, load a CD. Insert the CD partway into the slot, label side up. The player will pull the CD in.
4. Once the CD is loaded, the light will begin flashing again. Press the LOAD button again. Once the light turns green, load the next disc. Repeat this procedure for each disc. The CD player takes up to six CDs. Do not try to load more than six.

To load more than one CD but less than six, complete Steps 1 through 3. When you have finished loading CDs, the radio will begin to play the last CD loaded.

When a CD is inserted, the CD symbol will be displayed. If more than one CD has been loaded, a number for each CD will be displayed. If you select an equalization setting for your CD, it will be activated each time you play a CD.

As each new track starts to play, the track number will appear on the display.

Playing a Specific Loaded CD

For every CD loaded, a number will appear on the display. To play a specific CD, first press the CD AUX button, then press the numbered pushbutton that corresponds to the CD you want to play. A small bar will appear under the CD number that is playing, and the track number will appear.

If an error appears on the display, see “CD Messages” later in this section.

LOAD CD ⏏ (Eject): Press the CD eject side of this button to eject a CD(s). You will hear a beep and the light will flash to let you know when a CD is being ejected.

REMOVE CD will be displayed. You can now remove the CD. If the CD is not removed, after 25 seconds, the CD will be automatically pulled back into the receiver. If you try to push the CD back into the receiver, before the 25 second time period is complete, the receiver will sense an error and will try to eject the CD several times before stopping.

Do not repeatedly press the CD eject button to eject a CD after you have tried to push it in manually. The receivers 25-second eject timer will reset at each press of eject, which will cause the receiver to not eject the CD until the 25-second time period has elapsed.

Once the player stops and the CD is ejected, remove the CD. After removing the CD, push the PWR knob off and then on again. This will clear the CD-sensing feature and enable CDs to be loaded into the player again.

≪ REV (Reverse): Press and hold this button to reverse quickly within a track. You will hear sound at a reduced volume. Release the button to play the passage. The display will show the elapsed time of the track.

FWD ≫ (Forward): Press and hold this button to advance quickly within a track. You will hear sound at a reduced volume. Release the button to play the passage. The display will show the elapsed time of the track.

RPT (Repeat): With repeat, you can repeat one track or an entire CD. To use repeat, do the following:

- To repeat the track you are listening to, press and release the RPT button. RPT will appear on the display. Press RPT again to turn off repeat play.
- To repeat the CD you are listening to, press and hold the RPT button for two seconds. RPT will appear on the display. Press RPT again to turn off repeat play.

RDM (Random): With random, you can listen to the tracks in random, rather than sequential, order, on one CD or on all of the CDs. To use random, do one of the following:

- To play the tracks on the CD you are listening to in random order, press and release the RDM button. RANDOM ONE will appear on the display. Press RDM again to turn off random play.
- To play the tracks on all of the CDs that are loaded in random order, press and hold RDM for more than two seconds. You will hear a beep and RANDOM ALL will appear on the display. Press RDM again to turn off random play.

AUTO EQ (Automatic Equalization): Press AUTO EQ to select the desired equalization setting while playing a CD. The equalization will be automatically set whenever you play a CD. For more information on AUTO EQ, see “AUTO EQ” listed previously in this section.

⊢ SEEK ⊣ : Press the left arrow to go to the start of the current track, if more than ten seconds have passed. Press the right arrow to go to the next track. If you hold an arrow or press it more than once, the player will continue moving backward or forward through the CD.

⊢ SCAN ⊣ : To scan one CD, press and hold either SCAN arrow for more than two seconds until SCAN appears on the display and you hear a beep. Use this feature to listen to 10 seconds of each track of the currently selected CD. Press either SCAN arrow again, to stop scanning.

To scan all loaded CDs, press and hold either SCAN arrow for more than four seconds until CD SCAN appears on the display and you hear a beep. Use this feature to listen to 10 seconds of the first track of each CD loaded. Press either SCAN arrow again, to stop scanning.

RCL (Recall): Press this knob to see how long the current track has been playing. To change the default on the display (track and elapsed time), press the knob until you see the display you want, then hold the knob until the display flashes. The selected display will now be the default.

BAND: Press this button to play the radio when a CD(s) is playing. the inactive CD will remain safely inside the radio for future listening.

CD AUX (Auxiliary): Press this button to play a CD when listening to the radio.

Using Song List Mode

The six-disc CD changer has a feature called song list. This feature is capable of saving 20 track selections.

To save tracks into the song list feature, perform the following steps:

1. Turn the CD player on and load it with at least one CD. See “LOAD CD” listed previously in this section for more information.
2. Check to see that the CD changer is not in song list mode. S-LIST should not appear in the display. If S-LIST is present, press the SONG LIST button to turn it off.
3. Select the desired CD by pressing the numbered pushbutton and then use the SEEK SCAN right arrow button to locate the track that you want to save. The track will begin to play.
4. Press and hold the SONG LIST button to save the track into memory. When SONG LIST is pressed a beep will be heard immediately. After two seconds of continuously pressing SONG LIST, two beeps will sound to confirm that the track has been saved.
5. Repeat Steps 3 and 4 for saving other selections.

S-LIST FULL will appear on the display if you try to save more than 20 selections.

To play the song list, press the SONG LIST button. One beep will be heard and S-LIST will appear on the display. The recorded tracks will begin to play in the order that they were saved.

You may seek through the song list by using the SEEK SCAN arrows. Seeking past the last saved track will return you to the first saved track.

To delete tracks from the song list, perform the following steps:

1. Turn the CD player on.
2. Press the SONG LIST button to turn song list on. S-LIST will appear on the display.
3. Press the SEEK SCAN arrows to select the desired track to be deleted.

4. Press and hold the SONG LIST button for two seconds. When SONG LIST is pressed, a beep will be heard immediately. After two seconds of continuously pressing the SONG LIST button, two beeps will be heard to confirm that the track has been deleted.

After a track has been deleted, the remaining tracks are moved up the list. When another track is added to the song list, the track will be added to the end of the list.

To delete the entire song list, perform the following steps:

1. Turn the CD player on.
2. Press the SONG LIST button to turn song list on. S-LIST will appear on the display.
3. Press and hold the SONG LIST button for more than four seconds. A beep will be heard, followed by two beeps after two seconds and a final beep will be heard after four seconds. S-LIST EMPTY will appear on the display indicating that the song list has been deleted.

If a CD is ejected, and the song list contains saved tracks from that CD, those tracks are automatically deleted from the song list. Any tracks saved to the song list again are added to the bottom of the list.

To end song list mode, press the SONG LIST button. One beep will be heard and S-LIST will be removed from the display.

CD Messages

CHECK CD: If this message appears on the display, it could be for one of the following reasons:

- It is very hot. When the temperature returns to normal, the CD should play.
- You are driving on a very rough road. When the road becomes smoother, the CD should play.
- The CD is dirty, scratched, wet, or upside down.
- The air is very humid. If so, wait about an hour and try again.
- There may have been a problem while burning the CD.
- The label may be caught in the CD player.

If the CD is not playing correctly, for any other reason, try a known good CD.

If any error occurs repeatedly or if an error cannot be corrected, contact your dealer. If your radio displays an error message, write it down and provide it to your dealer when reporting the problem.

Listening to a DVD

Your vehicle may have a Rear Seat Entertainment System. If your vehicle has this system and a DVD is playing, the DVD symbol will appear on the radio display indicating that the DVD is available and can be listened through your vehicles speakers. To listen to the DVD, press the CD AUX button until RSE appears on the radio display. The current source will stop and the DVD sound will come through the speakers. To stop listening to the DVD press the CD AUX button, if a CD is loaded, or press the BAND button to select a different source.

When the RSE system is turned off, the radio will display RSE OFF and the radio will return to the last radio source that you were listening to.

Navigation/Radio System

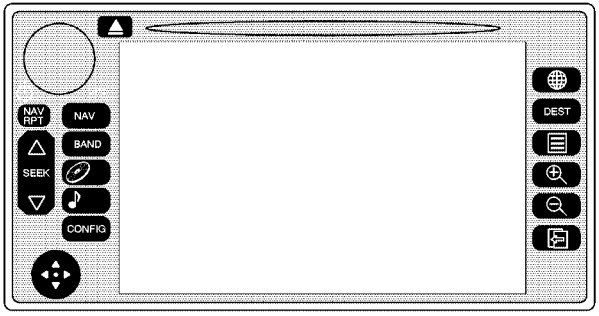

Navigation/Radio Display and Controls

If your vehicle has the navigation system, the display screen is located in the center of the instrument panel.

The navigation radio system includes digital sound processing (DSP), Radio Data System (RDS) with program “type” selections (PTY) that will seek out the kind of music you want to listen to, and XM™ Satellite Radio Service capabilities (48 contiguous US States). The radio system can also communicate with your navigation system to broadcast announcements on traffic, weather, and emergency alert communications. For information on how to use this system, see the “Navigation System” manual.

Rear Seat Entertainment System

Your vehicle may have a Digital Versatile Disc (DVD) system. The Rear Seat Entertainment (RSE) includes a DVD player, a video display screen, two sets of cordless headphones, and a remote control.

Before You Drive

The RSE is designed for rear seat passengers only. The driver cannot safely view the video screen while driving and should not try to do so.

Your DVD system is designed to be inoperable when the vehicle is exposed to extremely low or high temperatures, in order to protect your system from damage. Operate your DVD system under normal or comfortable cabin temperature ranges.

Headphones

The entertainment system includes two cordless headphones.

The cordless headphones have an ON/OFF switch and a volume control. To use the headphones turn the switch to ON. An indicator light on the headphones will illuminate. If the light does not illuminate, the batteries may need to be replaced. See “Battery Replacement” later in this section for more information. Switch the headphones to OFF when not in use.

The transmitters are located below the overhead RSE control panel. The headphones will shut off automatically to save the battery power if the DVD system is shut off, or if the headphones are out of range of the transmitters for more than three minutes. If you move too far forward or step out of the vehicle, the headphones will lose the audio signal.

To adjust the volume on the cordless headphones, use the volume control.

You can listen to the entertainment system through the wired headphone jacks on the RSA system (if equipped) when the following occurs:

- The RSA system is on
- A DVD or auxiliary device is playing
- RSE is displayed on the front audio system by pressing the TAPE/CD button on the RSA system.

Notice: **Do not store the headphones in heat or direct sunlight. This could damage the headphones and repairs would not be covered by your warranty. Keep the headphones stored in a cool, dry place.**

If there is a decreased audio signal during CD or DVD play, you may hear a low “hissing” noise through the speakers and/or headphones. If the hissing sound in the wireless headphones seems excessive, make sure that the headphone batteries are fully charged. Some amount of hissing is normal.

Battery Replacement

To change the batteries, do the following:

1. Loosen the screw on the battery compartment door located on the left side of the headphone earpiece.
2. Replace the two AAA batteries in the compartment. Make sure that they are installed correctly using the diagram on the inside of the battery compartment.
3. Tighten the screw on the battery compartment door.

If the headphones are to be stored for a long period of time, remove the batteries, and keep them in a cool, dry place.

Stereo RCA Jacks

The RCA jacks are located behind the video screen on the DVD console. The RCA jacks allow you to connect audio and video signals from an auxiliary device such as a camcorder or a video game unit to your RSE. The yellow RCA jack is used for video, the red RCA jack for right audio, and the white RCA jack for left audio inputs. The system requires standard RCA cables (not included) to connect your auxiliary device to the RCA jacks. Refer to the manufacturer’s instructions for proper usage.

To use the auxiliary audio and video inputs on the entertainment system, connect an external auxiliary device such as a camcorder to the RCA jacks and turn on both the auxiliary device power and the power on the front of the RSE player.

If a disc is present when the RSE power is turned on, the player will automatically begin playing the disc and the user will need to press the SRCE button on the remote control or on the DVD player faceplate to toggle the system between the DVD player and the auxiliary device. See “DVD Player”, and “Remote Control” later in this section for more information.

Audio Speakers

Audio from the DVD player or auxiliary devices can be heard through the following possible sources:

- Wireless Headphones
- Vehicle's Speakers
- Rear Seat Audio (RSA) Jacks (if equipped). Plug the wired headphones (not included) into the jacks on the RSA system.

Only one audio source can be heard through the vehicles speakers at a time.

You can listen to the entertainment system or an auxiliary device through all of the vehicles speakers when the following occurs:

- The RSA system (if equipped) is off
- A DVD or auxiliary device is playing
- The front audio system is on and either the CD, the CD TAPE, or the CD AUX button is pressed to enable the entertainment system.

The front audio system will display RSE when the entertainment system is on and RSE OFF when it is off.

To turn the vehicles speakers on and off, press either the CD, the CD TAPE, or the CD AUX button on the front audio system. The audio from the entertainment system can be heard through both the wireless headphones and the vehicles speakers at the same time.

The volume on the audio system may vary when switching between a radio station, CD, DVD, cassette, or auxiliary device.

If there is a decreased audio signal during CD or DVD play, you may hear a low "hissing" noise through the speakers and/or headphones. If the hissing sound in the wireless headphones seems excessive, make sure that the headphone batteries are fully charged. Some amount of hissing is normal.

Video Screen

The video screen is located in the overhead console.

To use the video screen, do the following:

1. Push forward on the release button and the screen will fold down.
2. Push the screen away from you and adjust its position as desired.

When the video screen is not in use, push it up into its stowed and latched position.

The DVD player and display will continue to operate when the video screen is in either the up or down positions.

The video screen contain the transmitters for the cordless headphones and the receiver for the remote control. If the screen is in the closed position, the signals will not be available for the operation of the headphones or the remote control.

Notice: **Avoid directly touching the video screen, as damage may occur. See "Tips and Trouble" later for more information.**

DVD Player

The DVD player is located in the overhead console.

The DVD player can be controlled by the buttons on the DVD player, and/or by the buttons on the remote control. See "Remote Control" later in this section for more information.

The DVD player is only compatible with DVDs of the appropriate region code for the country that the vehicle was sold in. On some DVD jackets, you will see the region displayed. Standard audio CDs can also be played by the DVD player. The video screen will default to off when an audio CD is played.

If an error message appears on the video screen, see "DVD Messages" later in this section.

DVD Player Buttons

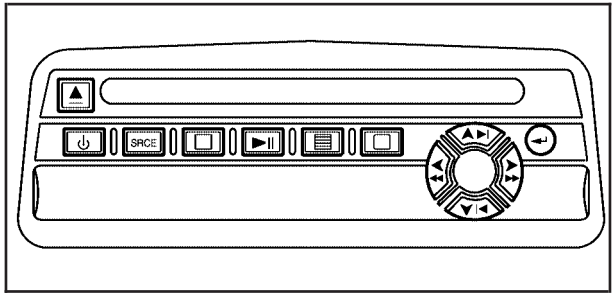

⏏ **(Eject):** Press this button to eject a DVD or CD.

SRCE (Source): Press this button to toggle the system between the DVD player and an auxiliary source.

(Main Menu): Press this button to view the media menu. The media menu is different on every DVD. Use the up, down, right, and left arrow buttons to move the cursor around the media menu. After making a selection press enter. This button only operates when using a DVD.

⏻ **(Power):** Press this button to turn the DVD player on and off.

(Power Light): Shows if power is on or off.

□ **(Stop):** Press this button to stop playing, rewinding, or fast forwarding. Press this button twice to return to the beginning of the DVD.

►‖ **(Play/Pause):** Press this button to start play of a DVD or CD. Press this button while a DVD or CD is playing to pause it. Press it again to continue play of a DVD or CD.

(Display Control Button): Press these buttons to adjust color, tint, brightness, contrast, and display mode (normal, full, or zoom). The dynamic range compression feature can be used to reduce the loud audio produced by some DVDs and to improve the audio quality.

▲ ►|, ▼ |◄, ◄ ◄◄, ► ►► **(Directional Control Circle):** Press these buttons to move through menu choices, or to move forward or back in a movie. These controls can be used to move forward or backward through a CD.

◄┘ **(Enter):** Press this button to select choices highlighted in any menu.

Parental Control Button: This button is located behind the video screen, next to the auxiliary jacks, near the driver of the vehicle. Press this button while a DVD or CD is playing to freeze the video and mute the audio. The video screen will display Parental Control On and the power indicator light on the DVD player will flash. It will also disable all other button operations from the remote control and the DVD player, with the exception of the eject button. The driver will then be able to gain the attention of the rear seat passengers. Press this button again to restore normal operation of the DVD player and remote control.

This button may also be used to turn the DVD player power on and automatically resume play if the vehicle is in an enabled power mode.

Playing a Disc

To play a disc, gently insert the disc, label side up, into the loading slot. The DVD player will continue loading the disc and the player will automatically start if the vehicle is in run, accessory, or RAP.

If a disc is already in the player, make sure that the DVD player is on, then press the play/pause button on the player faceplate or on the remote control.

Some DVDs will not allow you to fast forward or skip the copyright information or previews. Some DVDs will begin playing after the previews have finished. If the DVD does not begin playing at the main title, refer to the on-screen instructions.

Stopping and Resuming Playback

To stop playing a disc, press and release the stop button on the DVD player faceplate or the remote control.

To resume playback, press the play/pause button on the DVD player faceplate or the remote control. As long as the disc has not been ejected, and the stop button has not been pressed twice on the remote control or the DVD player faceplate, the movie should resume play from where it was last stopped.

If the disc has been ejected, or if the stop button has been pressed twice on the remote control or the DVD player faceplate, the disc will resume play at the beginning of the disc.

Ejecting a Disc

Press the eject button on the DVD player faceplate to eject the disc. There is not an eject button on the remote control.

If a disc is ejected from the player, but not removed, the DVD player will reload the disc after a short period of time. the disc will be stored in the DVD player. The DVD player will not resume play of the disc automatically.

DVD Messages

The following errors may be displayed on the video screen.

Disc Format Error: This message will be displayed if a disc is inserted upside down, if the disc is not readable, or if the disc format is not compatible with the DVD player.

Disc Play Error: This message will be displayed if the mechanism can not play the disc. Scratched or damaged discs will cause this error.

Region Code Error: This message will be displayed if the region code of the DVD is not compatible with the region code of the DVD player.

Load/Eject Error: This message will be displayed if the disc is not properly loaded or ejected.

No Disc: This message will be displayed when the play button is pressed without a disc in the player.

Remote Control

To use the remote control, aim it at the transmitter window below the video screen and press the desired button. Direct sunlight or very bright light may affect the ability of the transmitter to receive signals from the remote control. Be sure the remote control's batteries are not weak or discharged. Objects blocking the line of sight will affect the function of the remote control.

Notice: **Storing the remote control in a hot area or in direct sunlight may damage it, and the repairs would not be covered by your warranty. Store the remote control stored in a cool, dry place.**

Remote Control Buttons

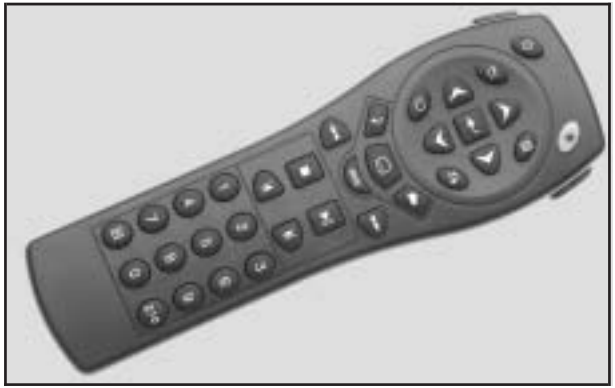

⏻ **(Power):** Press this button to turn the DVD player on or off.

(Title): Press this button to go back to the title screen, if there is one.

▲, ▼, ◀, ▶ **(Directional Arrows):** Press these buttons to move through DVD menus. The up arrow will skip to the next chapter or track, the down arrow will take you to the beginning of the current chapter or track. Press the down arrow twice to take you to the previous chapter or track. The right arrow will fast forward and the left arrow will reverse through a chapter or track.

(Display Control Button): Press this button to adjust color, tint, brightness, contrast, and display mode (normal, full, or zoom). The dynamic range compression feature can be used to reduce the loud audio produced by some DVDs, and to improve the audio quality.

♪ **(Sound):** This button moves to the next language or commentary. Press this button to call-up a menu that will operate only when a DVD is playing. The format and content of this function will vary from disc to disc.

◀◀ **(Rewind):** Press this button to reverse the DVD. To stop reversing, press this button again. This button may not work when the DVD is playing the copyright information or the previews.

SRCE (Source): Press this button to toggle the system between the DVD player and an auxiliary source.

■ **(Stop):** Press this button to stop playing, rewinding, or fast forwarding a DVD or CD. Press this button twice to return to the beginning of the DVD.

|◀ **(Prior Chapter/Track):** Press this button to go to the beginning of the current chapter or track. Press this button again to return to the previous chapter or track. This button may not work when the DVD is playing the copyright information or previews.

1 through 0 (Numeric Keypad): The numeric keypad provides you with the capability of direct chapter title and track number selection.

≥10 (Double Digit Entries): Press this button, located on the bottom right of the numeric key pad, to select chapter, title, and track numbers greater than 9. Press this button before selecting the number.

(Clear): Press this button, located on the bottom left of the numeric key pad, within three seconds after inputting a numeric selection, to clear all numeric inputs.

(Backlight): This button turns on backlighting on the remote.

(Main Menu): Press this button to view the media menu. The media menu is different on every disc. Use the up, down, right, and left arrow buttons to move the cursor around the media menu. After making a selection, press the enter button.

(Enter): Press this button to select choices highlighted in any menu.

(Return): Press this button to take you back one step in any menu. Press this button to exit the current menu and to move to the previous menu. This button will operate only when a DVD is playing and/or a menu is active.

(Camera): This button changes camera angles on DVDs that have this feature. Press this button to call-up a menu that will operate only when a DVD is being played. The format and content of this function will vary from disc to disc.

(Subtitles): This button turns on subtitles and moves through subtitle options (English, Spanish, French, etc., if available). Press this button to call-up a menu that will operate only when a DVD is being played. The format and content of this function will vary from disc to disc.

(Fast Forward): Press this button to fast forward the DVD. To stop fast forwarding, press this button again. This button may not work when the DVD is playing the copyright information or the previews.

(Play/Pause): Press this button to start play of a DVD or CD. Press this button while a DVD is playing to pause it. Press it again to continue playing the DVD or CD.

(Next Chapter/Track): Press this button to go to the beginning of the next chapter or track. This button may not work when the DVD is playing the copyright information or the previews.

Setup Menu

To access the setup menu, ensure that a DVD is in the player and the video is stopped. Press the main menu button. Once the menu is activated, use the directional arrows and the enter button to navigate the screen.

The setup menu allows the user to select default preferences for Menu Language, Subtitle Language, Audio Language, TV Aspect, TV Mode, and Dynamic Range Compression.

Not all DVDs support all the feature defaults in the setup menus. In the event a particular feature is not supported, defaults will be provided by the DVD media.

Exit the setup menu by pressing the return button on the remote control or the DVD player. If you make changes to the system setup defaults, the disc will resume play from its beginning and not where it previously left off.

Battery Replacement

To change the remote control batteries, do the following:

1. Unclip the battery door located on the back of the remote control.
2. Replace the two AA batteries in the compartment. Make sure that they are installed correctly, using the diagram on the inside of the battery compartment.

If the remote control is to be stored for a long period of time, remove the batteries and keep them in a cool, dry place.

Tips and Trouble

Problem	Recommended Action
No power.	The ignition may not be in run, accessory or RAP. The parental control button might have been pressed. (The power indicator light will flash).
Disc will not play.	The system might be off. The parental control button might have been pressed. (The power indicator light will flash). The system might be in auxiliary source mode. Press the SRCE button to toggle between the DVD player and the auxiliary source. The disc is upside down or is not compatible.

Problem	Recommended Action
No sound.	The volume on the headphones could be too low. Adjust the volume on the right earpiece on the cordless headphones. If the DVD system is being heard through the vehicle speakers, adjust the volume from the radio. The radio must have the RSE channel enabled by using the CD/AUX or the TAPE/CD button.
The picture is distorted during fast forward or reverse.	This is normal for this operation.
The picture does not fill the screen. There are black borders on the top and bottom or on both sides or it looks stretched out.	Quickly press and release the display control button on the remote control or the DVD player and choose Display Mode. Then select Full. This will fill the screen. If there are borders on the top and bottom, the movie may have been made that way for a standard screen.
I ejected the disc and tried to take it out, but it was pulled back into the slot.	Eject the disc again.

Problem	Recommended Action
The language in the audio or on the screen is wrong.	Press the main menu button on the DVD player or the remote control and change the audio or language selection on the DVD menu.
The remote control does not work.	Point the remote control directly at the transmitter window. The batteries could be weak or put in wrong. The parental control button might have been pressed. (The power indicator light will flash.)
How do I get subtitles on or off?	Press the subtitle button on the remote control to go to the DVDs main menu. Then follow the screen prompts.
After stopping the player, I push the play button but sometimes the DVD starts where I left off, and sometimes at the beginning.	Press the stop button on the remote control to resume where the DVD left off. Press the stop button twice to start the DVD at the beginning. If the power is off and the DVD is still in the player, press the play button.

Problem	Recommended Action
The DVD is playing but there is no picture or sound. The auxiliary source is running but there is no picture or sound.	Press and release the SRCE button on the remote control or the DVD player to get to auxiliary input. Check to make sure that the auxiliary source is connected to the inputs properly.
The audio or video skips or jumps.	The DVD could be dirty or scratched. Try cleaning the DVD.
When I return to the DVD from the system menu, sometimes it plays from the beginning and sometimes from where it left off.	If the stop button was pressed once, it resumes play from where it left off. If the stop button was pressed twice, it will start at the beginning of the DVD. However, if a change was made to the menu the DVD will start from where it left off, even if the stop button was only pressed once.

Problem	Recommended Action
The fast forward, reverse, previous and next functions do not work.	Some commands that do one thing for DVDs will not always work or perform the same function for audio, CDs or games. These functions may also be disabled when the DVD is playing the copyright information or previews.
My disc is stuck in the player. The eject button does not work.	Press the eject button on the DVD player. Turn the power off, then on again, then press the eject button on the DVD player. Do not attempt to force or remove the disc from the player. If the problem persists, return to your dealer for further assistance.
I lost the remote control and/or the headphones.	Contact your dealer for assistance.
What is the best way to clean the screen?	Wipe the video screen with a soft cloth that is slightly damp with water.

Problem	Recommended Action
Sometimes the cordless headphone audio cuts out or buzzes for a moment, then it comes back.	This could be caused by interference from cell towers or by using your cellular telephone or other radio transmitter device in the vehicle.
DVD System inoperable.	In severe or extreme temperatures your DVD system might not be operable. Temperatures below –4°F (–20°C) or above 140°F (60°C) could damage your DVD system. Operate your DVD system under normal or comfortable cabin temperature ranges.
The cordless headphones have audio distortion.	Verify that the headphones are facing to the front of the vehicle (left and right sides are indicated on the headphones to ensure that the signal is received properly.
In auxiliary mode, the picture moves or scrolls.	Check the signal coming from the auxiliary device and make sure that the connection and the signal are good.

Rear Seat Audio (RSA)

This feature allows rear seat passengers to listen to and control any of the music sources: radio, cassette tapes, and CDs. However, the rear seat passengers can only control the music sources that the front seat passengers are not listening to. For example, rear seat passengers may listen to a cassette tape or CD through headphones, while the driver listens to the radio through the front speakers. The rear seat passengers have control of the volume for each set of headphones.

Thefront seat audio controls always have priority over the RSA controls. If the front seat passengers switch the source for the main radio to a remote source, the RSA will play the same remote source. The rear speakers will be muted when the RSA power is turned on. You may operate the RSA functions even when the main radio is off.

If your vehicle has the rear seat entertainment (RSE) system and the system is on, the rear seat passengers can listen to the DVDs through the wired headphone jacks on the RSA system. The RSE system cannot be controlled with the RSA system.

Primary Radio Controls

The following function is controlled by the knob on the main radio:

PWR (Power): Push this knob twice to turn RSA off.

Rear Seat Audio (RSA) Controls

The following functions are controlled by the RSA system buttons:

PWR (Power): Press this button to turn RSA on or off.

VOL (Volume): Press this knob lightly so it extends. Turn the knob to increase or to decrease volume. Push the knob back into its stored position when you're not using it. The upper VOL knob controls the upper headphone and the lower VOL knob controls the lower headphone.

BAND: Press this button to switch between FM1, FM2, or AM, or XM1 or XM2 (48 contiguous US states, if equipped). If the front passengers are already listening to the radio, the RSA controller will not switch between the bands or change the frequency. Press this button to listen to the radio when a cassette tape or a CD is playing. The inactive cassette or CD will remain safely inside the radio for future listening.

△ **SEEK** ▽**:** While listening to the radio, press the up or the down arrow to tune to the next or the previous station and stay there. The SEEK button is inactive if the front radio is in use.

While listening to a cassette tape, press the up or the down arrow to hear the next or the previous selection. The SEEK button is inactive if the tape mode on the front radio is in use.

While listening to a CD, press the up arrow to hear the next track on the CD. Press the down arrow to go to the start of the current track if more than eight seconds have played. The SEEK button is inactive if the CD mode on the front radio is in use.

To scan stations, press and hold either SEEK arrow until the radio goes into scan mode. The radio will scan to a station, play for a few seconds, then go on to the next station. Press either SEEK arrow again to stop scanning. The scan function is inactive if the front radio is in use.

P.SET PROG (Preset Program): The front passengers must be listening to something different for each of these functions to work:

- Press this button to scan through the preset radio stations set on the pushbuttons on the main radio. The radio will go to a preset station stored on your pushbuttons, play for a few seconds, then go on to the next preset station. Press this button again to stop scanning presets.
- When a cassette tape is playing, press this button to go to the other side of the tape.
- When a CD is playing, press this button to select a disc.

TAPE CD: Press this button to switch between playing a cassette tape, a CD, or a DVD (if equipped) when listening to the radio. The inactive tape or CD will remain safely inside the radio for future listening.

Theft-Deterrent Feature

THEFTLOCK® is designed to discourage theft of your radio. It works by using a secret code to disable all radio functions whenever battery power is removed and the radio is placed in a different vehicle. This feature requires no user input to be activated. It is automatically armed when it is put into the vehicle for the first time.

When the ignition is turned off, the blinking red light indicates that THEFTLOCK® is armed.

If THEFTLOCK® is activated, your radio will not operate if stolen. The radio will display LOCKED and a red LED indicator light will come on above the key symbol to indicate a locked condition. If this occurs, the radio will need to be returned to the dealer.

Audio Steering Wheel Controls

If your vehicle has this feature, you can control certain radio functions using the buttons on your steering wheel.

SOURCE: Press this button to play a cassette tape, CD, or a DVD (if equipped) when listening to the radio. If a cassette tape, and CD, and/or DVD are loaded, the system will go to the tape play first.

MUTE: Press this button to silence the system. Press it again, or any other radio button, to turn on the sound.

▲ **VOL** ▼ **(Volume):** Press the up or down arrow to increase or decrease volume.

▲ **SEEK** ▼**:** Press the up arrow to seek to the next station and the down arrow to seek to the previous station. The sound will mute while seeking. When playing a cassette tape or a CD, press the up arrow to hear the next selection.

BAND: Press this button to choose FM1, FM2, AM, or XM1 or XM2 (48 contiguous US states, if equipped).

SCAN: Press this button to scan your radio preset stations. The radio will scan to the first preset station stored on your pushbuttons, play for a few seconds, then go on to the next preset station. The radio will scan preset stations that are in the selected band and only to those with a strong signal. Press this button again to stop scanning.

DVD Distortion

You may experience video distortion when operating cellular phones, scanners, CB radios, Global Position Systems (GPS)*, two-way radios, mobile fax, or walkie talkies.

It may be necessary to turn off the DVD player when operating one of these devices in or near the vehicle.

*Excludes the OnStar® System.

Understanding Radio Reception

AM

The range for most AM stations is greater than for FM, especially at night. The longer range, however, can cause stations to interfere with each other. AM can pick up noise from things like storms and power lines. Try reducing the treble to reduce this noise.

FM Stereo

FM stereo will give you the best sound, but FM signals will reach only about 10 to 40 miles (16 to 65 km). Tall buildings or hills can interfere with FM signals, causing the sound to come and go.

XM™ Satellite Radio Service (48 Contiguous US States)

XM™ Satellite Radio gives you digital radio reception from coast to coast. Just as with FM, tall buildings or hills can interfere with satellite radio signals, causing the sound to come and go. Your radio may display NO SIGNAL to indicate interference.

Care of Your Cassette Tape Player

A tape player that is not cleaned regularly can cause reduced sound quality, ruined cassettes, or a damaged mechanism. Cassette tapes should be stored in their cases away from contaminants, direct sunlight, and extreme heat. If they are not, they may not operate properly or they may cause failure of the tape player.

Your tape player should be cleaned regularly after every 50 hours of use. Your radio may display CLEAN PLAYER to indicate that you have used your tape player for 50 hours without resetting the tape clean timer. If this message appears on the display, your cassette tape player needs to be cleaned. It will still play tapes, but you should clean it as soon as possible to prevent damage to your tapes and player. If you notice a reduction in sound quality, try a known good cassette to see if the tape or the tape player is at fault. If this other cassette has no improvement in sound quality, clean the tape player.

For best results, use a scrubbing action, non-abrasive cleaning cassette with pads which scrub the tape head as the hubs of the cleaner cassette turn. The recommended cleaning cassette is available through your dealership.

The cut tape detection feature of your cassette tape player may identify the cleaning cassette tape as a damaged tape, in error. If the cleaning cassette ejects, insert the cassette at least three times to ensure thorough cleaning.

You may also choose a non-scrubbing action, wet-type cleaner which uses a cassette with a fabric belt to clean the tape head. This type of cleaning cassette will not eject on its own. A non-scrubbing action cleaner may not clean as thoroughly as the scrubbing type cleaner. The use of a non-scrubbing action, dry-type cleaning cassette is not recommended.

After you clean the player, press and hold the eject button for five seconds to reset the CLEAN PLAYER indicator. The radio will display --- to show the indicator was reset.

Cassettes are subject to wear and the sound quality may degrade over time. Always make sure the cassette tape is in good condition before you have your tape player serviced.

Care of Your CDs and DVDs

Handle discs carefully. Store them in their original cases or other protective cases and away from direct sunlight and dust. If the surface of a disc is soiled, dampen a clean, soft cloth in a mild, neutral detergent solution and clean it, wiping from the center to the edge.

Be sure never to touch the side without writing when handling discs. Pick up discs by grasping the outer edges or the edge of the hole and the outer edge.

Care of Your CD and DVD Player

The use of CD lens cleaner discs is not advised, due to the risk of contaminating the lens of the CD optics with lubricants internal to the CD mechanism.

Cleaning Your DVD Player

When cleaning the outside DVD cabinet face and buttons, use only a clean cloth dampened with clean water.

Integrated Windshield Antenna

The antenna in your vehicle is a very thin, metal layer in the windshield. If you look near the edges of the windshield, you can see the outline of the antenna. The connector is at the top of the windshield, where the headliner ends.

If you experience difficulty with remote transmitters, such as a garage door opener, try pointing the device through the very top of the windshield.

XM™ Satellite Radio Antenna System (48 Contiguous US States)

Your XM™ Satellite Radio antenna is located on the roof of your vehicle. Keep this antenna clear of snow and ice build up for clear radio reception.

The performance of your XM™ system may be affected if your sunroof is open.

Loading items onto the roof of your vehicle can interfere with the performance of your XM™ system. Make sure that the XM™ satellite antenna is not obstructed.

Section 4 Driving Your Vehicle

Your Driving, the Road, and Your Vehicle 4-2
Driver Behavior 4-2
Driving Environment 4-2
Vehicle Design 4-3
Defensive Driving 4-3
Drunken Driving 4-4
Control of a Vehicle 4-7
Braking 4-7
Traction Control System (TCS) 4-11
All-Wheel Drive (AWD) System 4-12
Steering 4-13
Off-Road Recovery 4-15
Passing 4-15
Loss of Control 4-17
Driving at Night 4-18
Driving in Rain and on Wet Roads 4-20
City Driving 4-23
Freeway Driving 4-24
Before Leaving on a Long Trip 4-25
Highway Hypnosis 4-26
Hill and Mountain Roads 4-26
Winter Driving 4-28
If You Are Stuck: In Sand, Mud, Ice or Snow ...4-32
Towing 4-33
Towing Your Vehicle 4-33
Recreational Vehicle Towing 4-34
Loading Your Vehicle 4-36
Towing a Trailer 4-42

Your Driving, the Road, and Your Vehicle

Whenever we drive, we are taking on an important responsibility. This is true for any motor vehicle — passenger car, van, truck, sport utility. Driver behavior, the driving environment, and the vehicle's design all affect how well a vehicle performs. But statistics show that the most important factor, by far, is how we drive.

Knowing how these three factors work together can help you understand how your vehicle handles and what you can do to avoid many types of crashes, including a rollover crash.

Driver Behavior

The single most important thing is this: everyone in the vehicle, including the driver, should buckle up. See *Safety Belts: They Are for Everyone on page 1-22*. In fact, most serious injuries and fatalities to unbelted occupants can be reduced or prevented by the use of safety belts. In a rollover crash, an unbelted person is significantly more likely to die than a person wearing a seat belt. In addition, avoiding excessive speed, sudden or abrupt turns and drunken or aggressive driving can help make trips safer and avoid the possibility of a crash, especially a rollover crash. This section provides many useful tips to help you drive more safely.

Driving Environment

You can also help avoid a rollover or other type of crash by being prepared for driving in inclement weather, at night, or during other times where visibility or traction may be limited (such as on curves, slippery roads or hilly terrain). Unfamiliar surroundings can also have hidden hazards.

To help you learn more about driving in different conditions, this section contains information about city, freeway and off-road driving, as well as other hints for driving in various weather conditions.

Vehicle Design

According to the U.S. Department of Transportation, utility vehicles have a significantly higher rollover rate than other types of vehicles. Utility vehicles do have higher ground clearance and a narrower track or shorter wheelbase than passenger cars, to make them more capable for off-road driving. Specific design characteristics like these give the driver a better view of the road, but also give utility vehicles a higher center of gravity than other types of vehicles. This means that you should not expect a utility vehicle to handle the same way a vehicle with a lower center of gravity, like a car, would in similar situations.

But driver behavior factors are far more often the cause of a utility vehicle rollover than are environmental or vehicle factors. Safe driver behavior and understanding the environment in which you will be driving can help avoid a rollover crash in any type of vehicle, including utility vehicles.

Defensive Driving

The best advice anyone can give about driving is: Drive defensively.

Please start with a very important safety device in your vehicle: Buckle up. See *Safety Belts: They Are for Everyone on page 1-22*.

Defensive driving really means “be ready for anything.” On city streets, rural roads or freeways, it means “always expect the unexpected.”

Assume that pedestrians or other drivers are going to be careless and make mistakes. Anticipate what they might do. Be ready for their mistakes.

Rear-end collisions are about the most preventable of accidents. Yet they are common. Allow enough following distance. It is the best defensive driving maneuver, in both city and rural driving. You never know when the vehicle in front of you is going to brake or turn suddenly.

Defensive driving requires that a driver concentrate on the driving task. Anything that distracts from the driving task — such as concentrating on a cellular telephone call, reading, or reaching for something on the floor — makes proper defensive driving more difficult and can even cause a collision, with resulting injury. Ask a passenger to help do things like this, or pull off the road in a safe place to do them yourself. These simple defensive driving techniques could save your life.

Drunken Driving

Death and injury associated with drinking and driving is a national tragedy. It is the number one contributor to the highway death toll, claiming thousands of victims every year.

Alcohol affects four things that anyone needs to drive a vehicle:

- Judgment
- Muscular Coordination
- Vision
- Attentiveness.

Police records show that almost half of all motor vehicle-related deaths involve alcohol. In most cases, these deaths are the result of someone who was drinking and driving. In recent years, more than 16,000 annual motor vehicle-related deaths have been associated with the use of alcohol, with more than 300,000 people injured.

Many adults — by some estimates, nearly half the adult population — choose never to drink alcohol, so they never drive after drinking. For persons under 21, it is against the law in every U.S. state to drink alcohol. There are good medical, psychological and developmental reasons for these laws.

The obvious way to eliminate the leading highway safety problem is for people never to drink alcohol and then drive. But what if people do? How much is “too much” if someone plans to drive? It is a lot less than many might think. Although it depends on each person and situation, here is some general information on the problem.

The Blood Alcohol Concentration (BAC) of someone who is drinking depends upon four things:

- The amount of alcohol consumed
- The drinker’s body weight
- The amount of food that is consumed before and during drinking
- The length of time it has taken the drinker to consume the alcohol.

According to the American Medical Association, a 180 lb (82 kg) person who drinks three 12 ounce (355 ml) bottles of beer in an hour will end up with a BAC of about 0.06 percent. The person would reach the same BAC by drinking three 4 ounce (120 ml) glasses of wine or three mixed drinks if each had 1-1/2 ounces (45 ml) of liquors like whiskey, gin or vodka.

It is the amount of alcohol that counts. For example, if the same person drank three double martinis (3 ounces or 90 ml of liquor each) within an hour, the person's BAC would be close to 0.12 percent. A person who consumes food just before or during drinking will have a somewhat lower BAC level.

There is a gender difference, too. Women generally have a lower relative percentage of body water than men. Since alcohol is carried in body water, this means that a woman generally will reach a higher BAC level than a man of her same body weight will when each has the same number of drinks.

The law in an increasing number of U.S. states, and throughout Canada, sets the legal limit at 0.08 percent. In some other countries, the limit is even lower. For example, it is 0.05 percent in both France and Germany. The BAC limit for all commercial drivers in the United States is 0.04 percent.

The BAC will be over 0.10 percent after three to six drinks (in one hour). Of course, as we have seen, it depends on how much alcohol is in the drinks, and how quickly the person drinks them.

But the ability to drive is affected well below a BAC of 0.10 percent. Research shows that the driving skills of many people are impaired at a BAC approaching 0.05 percent, and that the effects are worse at night. All drivers are impaired at BAC levels above 0.05 percent. Statistics show that the chance of being in a collision increases sharply for drivers who have a BAC of 0.05 percent or above. A driver with a BAC level of 0.06 percent has doubled his or her chance of having a collision. At a BAC level of 0.10 percent, the chance of this driver having a collision is 12 times greater; at a level of 0.15 percent, the chance is 25 times greater!

The body takes about an hour to rid itself of the alcohol in one drink. No amount of coffee or number of cold showers will speed that up. “I will be careful” is not the right answer. What if there is an emergency, a need to take sudden action, as when a child darts into the street? A person with even a moderate BAC might not be able to react quickly enough to avoid the collision.

There is something else about drinking and driving that many people do not know. Medical research shows that alcohol in a person’s system can make crash injuries worse, especially injuries to the brain, spinal cord or heart. This means that when anyone who has been drinking — driver or passenger — is in a crash, that person’s chance of being killed or permanently disabled is higher than if the person had not been drinking.

⚠ CAUTION:

Drinking and then driving is very dangerous. Your reflexes, perceptions, attentiveness and judgment can be affected by even a small amount of alcohol. You can have a serious — or even fatal — collision if you drive after drinking. Please do not drink and drive or ride with a driver who has been drinking. Ride home in a cab; or if you are with a group, designate a driver who will not drink.

Control of a Vehicle

You have three systems that make your vehicle go where you want it to go. They are the brakes, the steering and the accelerator. All three systems have to do their work at the places where the tires meet the road.

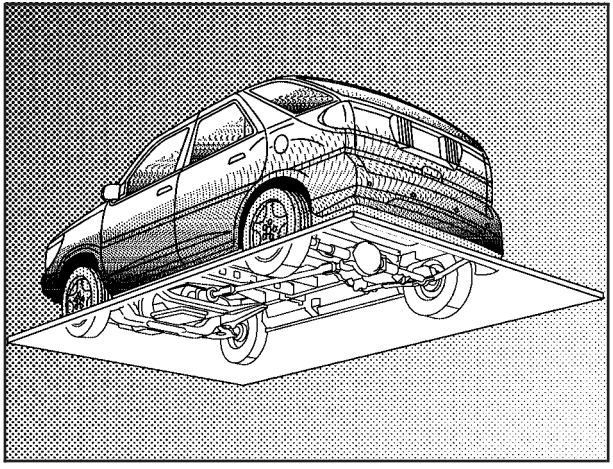

Sometimes, as when you are driving on snow or ice, it is easy to ask more of those control systems than the tires and road can provide. That means you can lose control of your vehicle. Also see *Traction Control System (TCS) on page 4-11*.

Braking

Braking action involves *perception time* and *reaction time.*

First, you have to decide to push on the brake pedal. That is *perception time.* Then you have to bring up your foot and do it. That is *reaction time.*

Average *reaction time* is about 3/4 of a second. But that is only an average. It might be less with one driver and as long as two or three seconds or more with another. Age, physical condition, alertness, coordination and eyesight all play a part. So do alcohol, drugs and frustration. But even in 3/4 of a second, a vehicle moving at 60 mph (100 km/h) travels 66 feet (20 m). That could be a lot of distance in an emergency, so keeping enough space between your vehicle and others is important.

And, of course, actual stopping distances vary greatly with the surface of the road (whether it is pavement or gravel); the condition of the road (wet, dry, icy); tire tread; the condition of your brakes; the weight of the vehicle and the amount of brake force applied.

Avoid needless heavy braking. Some people drive in spurts — heavy acceleration followed by heavy braking — rather than keeping pace with traffic. This is a mistake. Your brakes may not have time to cool between hard stops. Your brakes will wear out much faster if you do a lot of heavy braking. If you keep pace with the traffic and allow realistic following distances, you will eliminate a lot of unnecessary braking. That means better braking and longer brake life.

If your engine ever stops while you are driving, brake normally but do not pump your brakes. If you do, the pedal may get harder to push down. If your engine stops, you will still have some power brake assist. But you will use it when you brake. Once the power assist is used up, it may take longer to stop and the brake pedal will be harder to push.

Anti-lock Brake System (ABS)

Your vehicle may have anti-lock brakes. ABS is an advanced electronic braking system that will help prevent a braking skid.

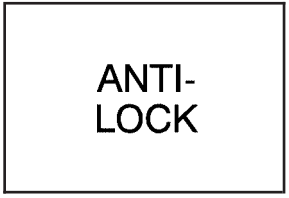

United States

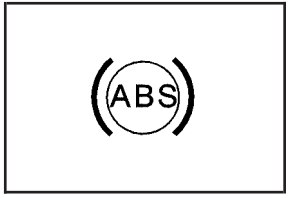

Canada

If your vehicle has anti-lock brakes, this warning light on the instrument panel will come on briefly when you start your vehicle.

When you start your engine, or when you begin to drive away, your anti-lock brake system will check itself. You may hear a momentary motor or clicking noise while this test is going on, and you may even notice that your brake pedal moves or pulses a little. This is normal.

Let us say the road is wet and you are driving safely. Suddenly, an animal jumps out in front of you. You slam on the brakes and continue braking. Here is what happens with ABS:

A computer senses that wheels are slowing down. If one of the wheels is about to stop rolling, the computer will separately work the brakes at each wheel.

The anti-lock system can change the brake pressure faster than any driver could. The computer is programmed to make the most of available tire and road conditions. This can help you steer around the obstacle while braking hard.

As you brake, your computer keeps receiving updates on wheel speed and controls braking pressure accordingly.

Remember: Anti-lock does not change the time you need to get your foot up to the brake pedal or always decrease stopping distance. If you get too close to the vehicle in front of you, you will not have time to apply your brakes if that vehicle suddenly slows or stops. Always leave enough room up ahead to stop, even though you have anti-lock brakes.

Using Anti-Lock

Do not pump the brakes. Just hold the brake pedal down firmly and let anti-lock work for you. You may feel a slight brake pedal pulsation or notice some noise, but this is normal.

Braking in Emergencies

At some time, nearly every driver gets into a situation that requires hard braking.

If you have anti-lock, you can steer and brake at the same time. However, if you do not have anti-lock, your first reaction — to hit the brake pedal hard and hold it down — may be the wrong thing to do. Your wheels can stop rolling. Once they do, the vehicle can not respond to your steering. Momentum will carry it in whatever direction it was headed when the wheels stopped rolling. That could be off the road, into the very thing you were trying to avoid, or into traffic.

If you do not have anti-lock, use a “squeeze” braking technique. This will give you maximum braking while maintaining steering control. You can do this by pushing on the brake pedal with steadily increasing pressure.

In an emergency, you will probably want to squeeze the brakes hard without locking the wheels. If you hear or feel the wheels sliding, ease off the brake pedal. This will help you retain steering control. If you *do* have anti-lock, it is different. See “Anti-Lock Brake System” in this section.

In many emergencies, steering can help you more than even the very best braking.

Traction Control System (TCS)

Your vehicle may have a traction control system that limits wheel spin. This is especially useful in slippery road conditions. The system operates only if it senses that one or both of the front wheels are spinning or beginning to lose traction. When this happens, the system works the front brakes and reduces engine power to limit wheel spin.

The TRACTION ACTIVE message will come on when the traction control system is limiting wheel spin. See *Traction Active Message on page 3-51*. You may feel or hear the system working, but this is normal.

If your vehicle is in cruise control when the traction control system begins to limit wheel spin, the cruise control will automatically disengage. When road conditions allow you to safely use it again, you may reengage the cruise control. See “Cruise Control” under *Turn Signal/Multifunction Lever on page 3-8*.

United States

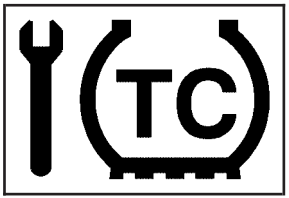

Canada

If this message comes on and stays on or comes on while you are driving, there’s a problem with your traction control system.

See *Service Traction System Warning Message on page 3-50*. When this warning message is on, the TRAC OFF light will come on to remind you that the system will not limit wheel spin. Adjust your driving accordingly.

The traction control system automatically comes on whenever you start your vehicle. To limit wheel spin, especially in slippery road conditions, you should always leave the system on. But you can turn the traction control system off if you ever need to. You should turn the system off if your vehicle ever gets stuck in sand, mud or snow and rocking the vehicle is required. See *If You Are Stuck: In Sand, Mud, Ice or Snow on page 4-32*.

To turn the system off, press the TRAC OFF button located on the instrument panel switchbank.

If the system is limiting wheel spin when you press the button, the message will go off, but the system will not turn off until there is no longer a current need to limit wheel spin. The TRAC OFF light will come on to remind you the system is off. You can turn the system back on at any time by pressing the button again. The traction control system warning message should go off.

All-Wheel Drive (AWD) System

If your vehicle has all-wheel drive (AWD), the AWD system operates automatically without any action required by the driver. If the front drive wheels begin to slip, the rear wheels will automatically begin to drive the vehicle as required. There may be a slight engagement noise during hard use but this is normal.

During heavy AWD applications, the engine torque may be reduced to protect AWD system components. If the vehicle is exposed to extended heavy AWD usage, the AWD system will shut itself off to protect the system from overheating. When the system cools down, the AWD system will activate itself again automatically; this cool-down can take up to 20 minutes depending on outside temperature and vehicle use. See *All-Wheel Drive Disable Warning Message on page 3-55*.

Steering

Power Steering

If you lose power steering assist because the engine stops or the system is not functioning, you can steer but it will take much more effort.

Steering Tips

Driving on Curves

It is important to take curves at a reasonable speed.

A lot of the “driver lost control” accidents mentioned on the news happen on curves. Here is why:

Experienced driver or beginner, each of us is subject to the same laws of physics when driving on curves. The traction of the tires against the road surface makes it possible for the vehicle to change its path when you turn the front wheels. If there is no traction, inertia will keep the vehicle going in the same direction. If you have ever tried to steer a vehicle on wet ice, you will understand this.

The traction you can get in a curve depends on the condition of your tires and the road surface, the angle at which the curve is banked, and your speed. While you are in a curve, speed is the one factor you can control.

Suppose you are steering through a sharp curve. Then you suddenly apply the brakes. Both control systems — steering and braking — have to do their work where the tires meet the road. Unless you have four-wheel anti-lock brakes, adding the hard braking can demand too much of those places. You can lose control.

The same thing can happen if you are steering through a sharp curve and you suddenly accelerate. Those two control systems — steering and acceleration — can overwhelm those places where the tires meet the road and make you lose control. See *Traction Control System (TCS) on page 4-11*.

What should you do if this ever happens? Ease up on the brake or accelerator pedal, steer the vehicle the way you want it to go, and slow down.

Speed limit signs near curves warn that you should adjust your speed. Of course, the posted speeds are based on good weather and road conditions. Under less favorable conditions you will want to go slower.

If you need to reduce your speed as you approach a curve, do it before you enter the curve, while your front wheels are straight ahead.

Try to adjust your speed so you can “drive” through the curve. Maintain a reasonable, steady speed. Wait to accelerate until you are out of the curve, and then accelerate gently into the straightaway.

Steering in Emergencies

There are times when steering can be more effective than braking. For example, you come over a hill and find a truck stopped in your lane, or a car suddenly pulls out from nowhere, or a child darts out from between parked cars and stops right in front of you. You can avoid these problems by braking — if you can stop in time. But sometimes you can not; there is not room. That is the time for evasive action — steering around the problem.

Your vehicle can perform very well in emergencies like these. First apply your brakes.

See *Braking on page 4-7*. It is better to remove as much speed as you can from a possible collision. Then steer around the problem, to the left or right depending on the space available.

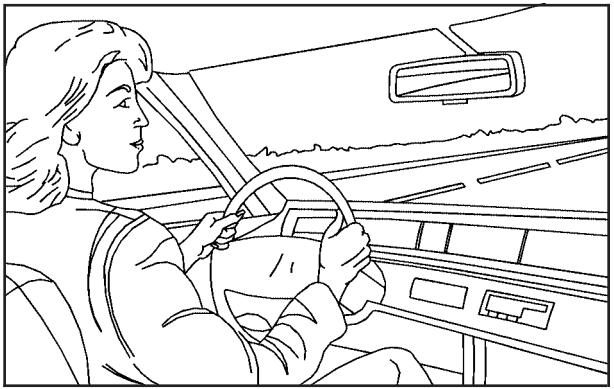

An emergency like this requires close attention and a quick decision. If you are holding the steering wheel at the recommended 9 and 3 o'clock positions, you can turn it a full 180 degrees very quickly without removing either hand. But you have to act fast, steer quickly, and just as quickly straighten the wheel once you have avoided the object.

The fact that such emergency situations are always possible is a good reason to practice defensive driving at all times and wear safety belts properly.

Off-Road Recovery

You may find that your right wheels have dropped off the edge of a road onto the shoulder while you're driving.

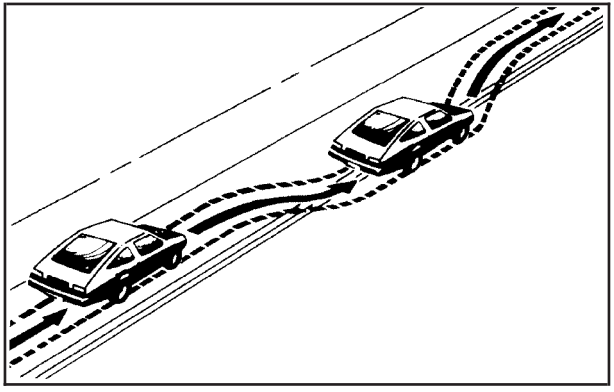

If the level of the shoulder is only slightly below the pavement, recovery should be fairly easy. Ease off the accelerator and then, if there is nothing in the way, steer so that your vehicle straddles the edge of the pavement. You can turn the steering wheel up to one-quarter turn until the right front tire contacts the pavement edge. Then turn your steering wheel to go straight down the roadway.

Passing

The driver of a vehicle about to pass another on a two-lane highway waits for just the right moment, accelerates, moves around the vehicle ahead, then goes back into the right lane again. A simple maneuver?

Not necessarily! Passing another vehicle on a two-lane highway is a potentially dangerous move, since the passing vehicle occupies the same lane as oncoming traffic for several seconds. A miscalculation, an error in judgment, or a brief surrender to frustration or anger can suddenly put the passing driver face to face with the worst of all traffic accidents — the head-on collision.

So here are some tips for passing:

- "Drive ahead." Look down the road, to the sides and to crossroads for situations that might affect your passing patterns. If you have any doubt whatsoever about making a successful pass, wait for a better time.
- Watch for traffic signs, pavement markings and lines. If you can see a sign up ahead that might indicate a turn or an intersection, delay your pass. A broken center line usually indicates it is all right to pass (providing the road ahead is clear). Never cross a solid line on your side of the lane or a double solid line, even if the road seems empty of approaching traffic.

- Do not get too close to the vehicle you want to pass while you are awaiting an opportunity. For one thing, following too closely reduces your area of vision, especially if you are following a larger vehicle. Also, you will not have adequate space if the vehicle ahead suddenly slows or stops. Keep back a reasonable distance.
- When it looks like a chance to pass is coming up, start to accelerate but stay in the right lane and do not get too close. Time your move so you will be increasing speed as the time comes to move into the other lane. If the way is clear to pass, you will have a “running start” that more than makes up for the distance you would lose by dropping back. And if something happens to cause you to cancel your pass, you need only slow down and drop back again and wait for another opportunity.
- If other vehicles are lined up to pass a slow vehicle, wait your turn. But take care that someone is not trying to pass you as you pull out to pass the slow vehicle. Remember to glance over your shoulder and check the blind spot.
- Check your mirrors, glance over your shoulder, and start your left lane change signal before moving out of the right lane to pass. When you are far enough ahead of the passed vehicle to see its front in your inside mirror, activate your right lane change signal and move back into the right lane. (Remember that your right outside mirror is convex. The vehicle you just passed may seem to be farther away from you than it really is.)
- Try not to pass more than one vehicle at a time on two-lane roads. Reconsider before passing the next vehicle.
- Do not overtake a slowly moving vehicle too rapidly. Even though the brake lamps are not flashing, it may be slowing down or starting to turn.
- If you are being passed, make it easy for the following driver to get ahead of you. Perhaps you can ease a little to the right.

Loss of Control

Let us review what driving experts say about what happens when the three control systems (brakes, steering and acceleration) do not have enough friction where the tires meet the road to do what the driver has asked.

In any emergency, do not give up. Keep trying to steer and constantly seek an escape route or area of less danger.

Skidding

In a skid, a driver can lose control of the vehicle. Defensive drivers avoid most skids by taking reasonable care suited to existing conditions, and by not “overdriving” those conditions. But skids are always possible.

The three types of skids correspond to your vehicle’s three control systems. In the braking skid, your wheels are not rolling. In the steering or cornering skid, too much speed or steering in a curve causes tires to slip and lose cornering force. And in the acceleration skid, too much throttle causes the driving wheels to spin.

A cornering skid is best handled by easing your foot off the accelerator pedal.

If you have the Traction Control System, remember: It helps avoid only the acceleration skid. If you do not have this system, or if the system is off, then an acceleration skid is also best handled by easing your foot off the accelerator pedal.

If your vehicle starts to slide, ease your foot off the accelerator pedal and quickly steer the way you want the vehicle to go. If you start steering quickly enough, your vehicle may straighten out. Always be ready for a second skid if it occurs.

Of course, traction is reduced when water, snow, ice, gravel or other material is on the road. For safety, you will want to slow down and adjust your driving to these conditions. It is important to slow down on slippery surfaces because stopping distance will be longer and vehicle control more limited.

While driving on a surface with reduced traction, try your best to avoid sudden steering, acceleration or braking (including engine braking by shifting to a lower gear). Any sudden changes could cause the tires to slide. You may not realize the surface is slippery until your vehicle is skidding. Learn to recognize warning clues — such as enough water, ice or packed snow on the road to make a “mirrored surface” — and slow down when you have any doubt.

If you have the anti-lock braking system, remember: It helps avoid only the braking skid. If you do not have anti-lock, then in a braking skid (where the wheels are no longer rolling), release enough pressure on the brakes to get the wheels rolling again. This restores steering control. Push the brake pedal down steadily when you have to stop suddenly. As long as the wheels are rolling, you will have steering control.

Driving at Night

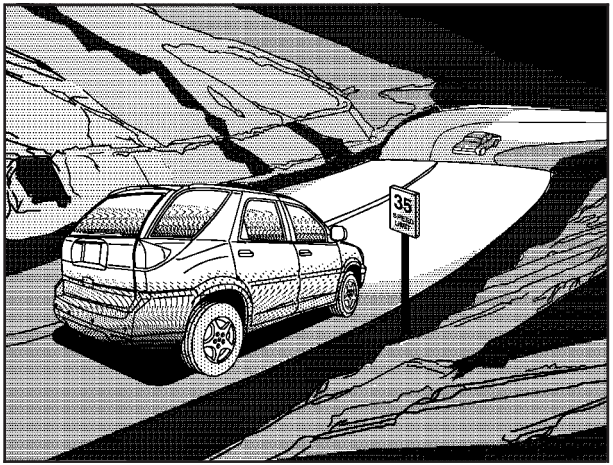

Night driving is more dangerous than day driving. One reason is that some drivers are likely to be impaired — by alcohol or drugs, with night vision problems, or by fatigue.

Here are some tips on night driving.

- Drive defensively.
- Do not drink and drive.
- Adjust your inside rearview mirror to reduce the glare from headlamps behind you.
- Since you can not see as well, you may need to slow down and keep more space between you and other vehicles.
- Slow down, especially on higher speed roads. Your headlamps can light up only so much road ahead.
- In remote areas, watch for animals.
- If you are tired, pull off the road in a safe place and rest.

No one can see as well at night as in the daytime. But as we get older these differences increase. A 50-year-old driver may require at least twice as much light to see the same thing at night as a 20-year-old.

What you do in the daytime can also affect your night vision. For example, if you spend the day in bright sunshine you are wise to wear sunglasses. Your eyes will have less trouble adjusting to night. But if you are driving, do not wear sunglasses at night. They may cut down on glare from headlamps, but they also make a lot of things invisible.

You can be temporarily blinded by approaching headlamps. It can take a second or two, or even several seconds, for your eyes to re-adjust to the dark. When you are faced with severe glare (as from a driver who does not lower the high beams, or a vehicle with misaimed headlamps), slow down a little. Avoid staring directly into the approaching headlamps.

Keep your windshield and all the glass on your vehicle clean — inside and out. Glare at night is made much worse by dirt on the glass. Even the inside of the glass can build up a film caused by dust. Dirty glass makes lights dazzle and flash more than clean glass would, making the pupils of your eyes contract repeatedly.

Remember that your headlamps light up far less of a roadway when you are in a turn or curve. Keep your eyes moving; that way, it is easier to pick out dimly lighted objects. Just as your headlamps should be checked regularly for proper aim, so should your eyes be examined regularly. Some drivers suffer from night blindness — the inability to see in dim light — and are not even aware of it.

Driving in Rain and on Wet Roads

Rain and wet roads can mean driving trouble. On a wet road, you can not stop, accelerate or turn as well because your tire-to-road traction is not as good as on dry roads. And, if your tires do not have much tread left, you will get even less traction. It is always wise to go slower and be cautious if rain starts to fall while you are driving. The surface may get wet suddenly when your reflexes are tuned for driving on dry pavement.

The heavier the rain, the harder it is to see. Even if your windshield wiper blades are in good shape, a heavy rain can make it harder to see road signs and traffic signals, pavement markings, the edge of the road and even people walking.

It is wise to keep your wiping equipment in good shape and keep your windshield washer tank filled with washer fluid. Replace your windshield wiper inserts when they show signs of streaking or missing areas on the windshield, or when strips of rubber start to separate from the inserts.

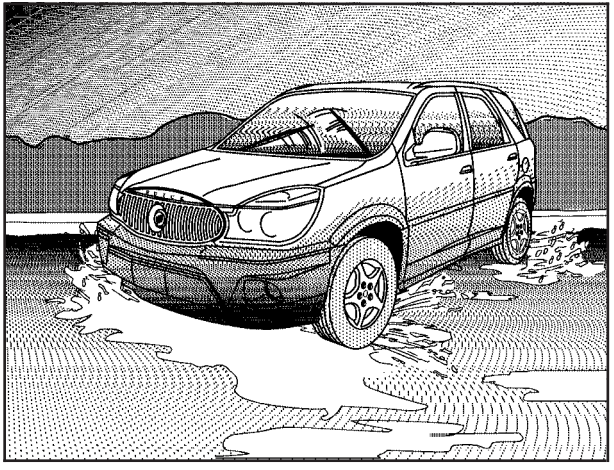

Driving too fast through large water puddles or even going through some car washes can cause problems, too. The water may affect your brakes. Try to avoid puddles. But if you can not, try to slow down before you hit them.

⚠ CAUTION:

Wet brakes can cause accidents. They will not work as well in a quick stop and may cause pulling to one side. You could lose control of the vehicle.

After driving through a large puddle of water or a car wash, apply your brake pedal lightly until your brakes work normally.

Hydroplaning

Hydroplaning is dangerous. So much water can build up under your tires that they can actually ride on the water. This can happen if the road is wet enough and you are going fast enough. When your vehicle is hydroplaning, it has little or no contact with the road.

Hydroplaning does not happen often. But it can if your tires do not have much tread or it the pressure in one or more is low. It can happen if a lot of water is standing on the road. If you can see reflections from trees, telephone poles or other vehicles, and raindrops “dimple” the water’s surface, there could be hydroplaning.

Hydroplaning usually happens at higher speeds. There just is not a hard and fast rule about hydroplaning. The best advice is to slow down when it is raining.

Driving Through Deep Standing Water

Notice: **If you drive too quickly through deep puddles or standing water, water can come in through your engine's air intake and badly damage your engine. Never drive through water that is slightly lower than the underbody of your vehicle. If you can not avoid deep puddles or standing water, drive through them very slowly.**

Driving Through Flowing Water

⚠ CAUTION:

Flowing or rushing water creates strong forces. If you try to drive through flowing water, as you might at a low water crossing, your vehicle can be carried away. As little as

CAUTION: (Continued)

CAUTION: (Continued)

six inches of flowing water can carry away a smaller vehicle. If this happens, you and other vehicle occupants could drown. Do not ignore police warning signs, and otherwise be very cautious about trying to drive through flowing water.

Some Other Rainy Weather Tips

- Besides slowing down, allow some extra following distance. And be especially careful when you pass another vehicle. Allow yourself more clear room ahead, and be prepared to have your view restricted by road spray.
- Have good tires with proper tread depth. See *Tires on page 5-57*.

City Driving

One of the biggest problems with city streets is the amount of traffic on them. You will want to watch out for what the other drivers are doing and pay attention to traffic signals.

Here are ways to increase your safety in city driving:

- Know the best way to get to where you are going. Get a city map and plan your trip into an unknown part of the city just as you would for a cross-country trip.
- Try to use the freeways that rim and crisscross most large cities. You will save time and energy. See *Freeway Driving on page 4-24*.
- Treat a green light as a warning signal. A traffic light is there because the corner is busy enough to need it. When a light turns green, and just before you start to move, check both ways for vehicles that have not cleared the intersection or may be running the red light.

Freeway Driving

Mile for mile, freeways (also called thruways, parkways, expressways, turnpikes or superhighways) are the safest of all roads. But they have their own special rules.

The most important advice on freeway driving is: Keep up with traffic and keep to the right. Drive at the same speed most of the other drivers are driving. Too-fast or too-slow driving breaks a smooth traffic flow. Treat the left lane on a freeway as a passing lane.

At the entrance, there is usually a ramp that leads to the freeway. If you have a clear view of the freeway as you drive along the entrance ramp, you should begin to check traffic. Try to determine where you expect to blend with the flow. Try to merge into the gap at close to the prevailing speed. Switch on your turn signal, check your mirrors and glance over your shoulder as often as necessary. Try to blend smoothly with the traffic flow.

Once you are on the freeway, adjust your speed to the posted limit or to the prevailing rate if it is slower. Stay in the right lane unless you want to pass.

Before changing lanes, check your mirrors. Then use your turn signal.

Just before you leave the lane, glance quickly over your shoulder to make sure there is not another vehicle in your “blind” spot.

Once you are moving on the freeway, make certain you allow a reasonable following distance. Expect to move slightly slower at night.

When you want to leave the freeway, move to the proper lane well in advance. If you miss your exit, do not, under any circumstances, stop and back up. Drive on to the next exit.

The exit ramp can be curved, sometimes quite sharply. The exit speed is usually posted.

Reduce your speed according to your speedometer, not to your sense of motion. After driving for any distance at higher speeds, you may tend to think you are going slower than you actually are.

Before Leaving on a Long Trip

Make sure you are ready. Try to be well rested. If you must start when you are not fresh — such as after a day's work — do not plan to make too many miles that first part of the journey. Wear comfortable clothing and shoes you can easily drive in.

Is your vehicle ready for a long trip? If you keep it serviced and maintained, it is ready to go. If it needs service, have it done before starting out. Of course, you will find experienced and able service experts in GM dealerships all across North America. They will be ready and willing to help if you need it.

Here are some things you can check before a trip:

- *Windshield Washer Fluid:* Is the reservoir full? Are all windows clean inside and outside?
- *Wiper Blades:* Are they in good shape?
- *Fuel, Engine Oil, Other Fluids:* Have you checked all levels?
- *Lamps:* Are they all working? Are the lenses clean?
- *Tires:* They are vitally important to a safe, trouble-free trip. Is the tread good enough for long-distance driving? Are the tires all inflated to the recommended pressure?
- *Weather Forecasts:* What is the weather outlook along your route? Should you delay your trip a short time to avoid a major storm system?
- *Maps:* Do you have up-to-date maps?

Highway Hypnosis

Is there actually such a condition as “highway hypnosis”? Or is it just plain falling asleep at the wheel? Call it highway hypnosis, lack of awareness, or whatever.

There is something about an easy stretch of road with the same scenery, along with the hum of the tires on the road, the drone of the engine, and the rush of the wind against the vehicle that can make you sleepy. Do not let it happen to you! If it does, your vehicle can leave the road in *less than a second,* and you could crash and be injured.

What can you do about highway hypnosis? First, be aware that it can happen.

Then here are some tips:

- Make sure your vehicle is well ventilated, with a comfortably cool interior.
- Keep your eyes moving. Scan the road ahead and to the sides. Check your mirrors and your instruments frequently.
- If you get sleepy, pull off the road into a rest, service or parking area and take a nap, get some exercise, or both. For safety, treat drowsiness on the highway as an emergency.

Hill and Mountain Roads

Driving on steep hills or mountains is different from driving in flat or rolling terrain.

If you drive regularly in steep country, or if you are planning to visit there, here are some tips that can make your trips safer and more enjoyable.

- Keep your vehicle in good shape. Check all fluid levels and also the brakes, tires, cooling system and transaxle. These parts can work hard on mountain roads.
- Know how to go down hills. The most important thing to know is this: let your engine do some of the slowing down. Shift to a lower gear when you go down a steep or long hill.

⚠ CAUTION:

If you do not shift down, your brakes could get so hot that they would not work well. You would then have poor braking or even none going down a hill. You could crash. Shift down to let your engine assist your brakes on a steep downhill slope.

⚠ CAUTION:

Coasting downhill in NEUTRAL (N) or with the ignition off is dangerous. Your brakes will have to do all the work of slowing down. They could get so hot that they would not work well. You would then have poor braking or even none going down a hill. You could crash. Always have your engine running and your vehicle in gear when you go downhill.

- Know how to go uphill. You may want to shift down to a lower gear. The lower gears help cool your engine and transaxle, and you can climb the hill better.
- Stay in your own lane when driving on two-lane roads in hills or mountains. Do not swing wide or cut across the center of the road. Drive at speeds that let you stay in your own lane.
- As you go over the top of a hill, be alert. There could be something in your lane, like a stalled car or an accident.

- You may see highway signs on mountains that warn of special problems. Examples are long grades, passing or no-passing zones, a falling rocks area or winding roads. Be alert to these and take appropriate action.

Winter Driving

Here are some tips for winter driving:

- Have your vehicle in good shape for winter.
- You may want to put winter emergency supplies in your vehicle.

Include an ice scraper, a small brush or broom, a supply of windshield washer fluid, a rag, some winter outer clothing, a small shovel, a flashlight, a red cloth and a couple of reflective warning triangles. And, if you will be driving under severe conditions, include a small bag of sand, a piece of old carpet or a couple of burlap bags to help provide traction. Be sure you properly secure these items in your vehicle.

Driving on Snow or Ice

Most of the time, those places where your tires meet the road probably have good traction.

However, if there is snow or ice between your tires and the road, you can have a very slippery situation. You'll have a lot less traction or "grip" and will need to very careful.

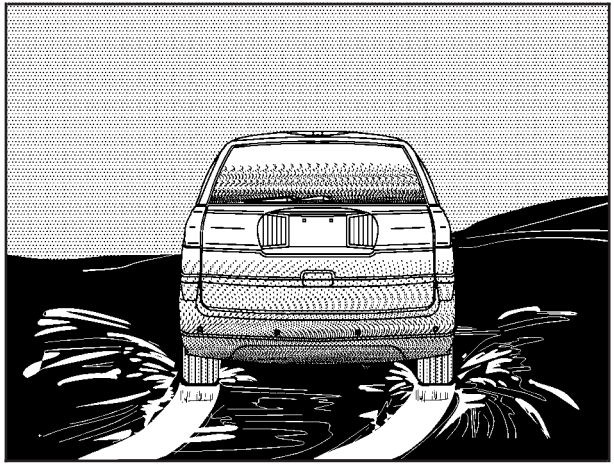

What's the worst time for this? "Wet ice." Very cold snow or ice can be slick and hard to drive on. But wet ice can be even more trouble because it may offer the least traction of all. You can get wet ice when it's about freezing (32°F; 0°C) and freezing rain begins to fall. Try to avoid driving on wet ice until salt and sand crews can get there.

Whatever the condition – smooth ice, packed, blowing or loose snow – drive with caution.

If you have traction control, keep the system on. It will improve your ability to accelerate when driving on a slippery road. But you can turn the traction system off if your vehicle ever gets stuck in sand, mud, ice or snow. See *If You Are Stuck: In Sand, Mud, Ice or Snow on page 4-32*. Even though your vehicle has a traction system, you'll want to slow down and adjust your driving to the road conditions. See *Traction Control System (TCS) on page 4-11*.

If you don't have a traction system, accelerate gently. Try not to break the fragile traction. If you accelerate too fast, the drive wheels will spin and polish the surface under the tires even more.

Unless you have the anti-lock braking system, you'll want to brake very gently, too. (If you do have anti-lock, see *Braking on page 4-7*. This system improves your vehicle's stability when you make a hard stop on a slippery road.) Whether you have the anti-lock braking system or not, you'll want to begin stopping sooner than you would on dry pavement. Without anti-lock brakes, if you feel your vehicle begin to slide, let up on the brakes a little. Push the brake pedal down steadily to get the most traction you can.

Remember, unless you have anti-lock, if you brake so hard that your wheels stop rolling, you'll just slide. Brake so your wheels always keep rolling and you can still steer.

- Whatever your braking system, allow greater following distance on any slippery road.
- Watch for slippery spots. The road might be fine until you hit a spot that's covered with ice. On an otherwise clear road, ice patches may appear in shaded areas where the sun can't reach: around clumps of trees, behind buildings or under bridges. Sometimes the surface of a curve or an overpass may remain icy when the surrounding roads are clear. If you see a patch of ice ahead of you, brake before you are on it. Try not to brake while you're actually on the ice, and avoid sudden steering maneuvers.

If You're Caught in a Blizzard

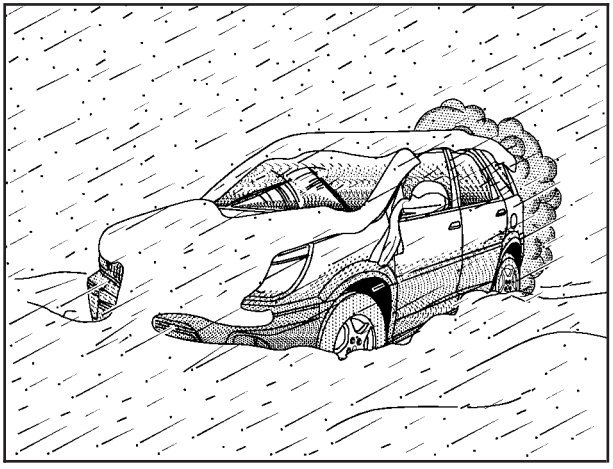

If you are stopped by heavy snow, you could be in a serious situation. You should probably stay with your vehicle unless you know for sure that you are near help and you can hike through the snow. Here are some things to do to summon help and keep yourself and your passengers safe:

- Turn on your hazard flashers.
- Tie a red cloth to your vehicle to alert police that you've been stopped by the snow.

- Put on extra clothing or wrap a blanket around you. If you have no blankets or extra clothing, make body insulators from newspapers, burlap bags, rags, floor mats – anything you can wrap around yourself or tuck under your clothing to keep warm.

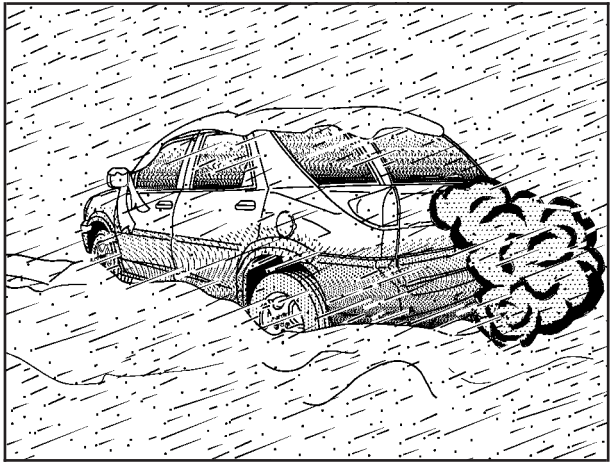

You can run the engine to keep warm, but be careful.

⚠ CAUTION:

Snow can trap exhaust gases under your vehicle. This can cause deadly CO (carbon monoxide) gas to get inside. CO could overcome you and kill you. You can not see it or smell it, so you might not know it is in your vehicle. Clear away snow from around the base of your vehicle, especially any that is blocking your exhaust pipe. And check around again from time to time to be sure snow does not collect there.

Open a window just a little on the side of the vehicle that is away from the wind. This will help keep CO out.

Run your engine only as long as you must. This saves fuel. When you run the engine, make it go a little faster than just idle. That is, push the accelerator slightly. This uses less fuel for the heat that you get and it keeps the battery charged. You will need a well-charged battery to restart the vehicle, and possibly for signaling later on with your headlamps. Let the heater run for a while.

Then, shut the engine off and close the window almost all the way to preserve the heat. Start the engine again and repeat this only when you feel really uncomfortable from the cold. But do it as little as possible. Preserve the fuel as long as you can. To help keep warm, you can get out of the vehicle and do some fairly vigorous exercises every half hour or so until help comes.

If You Are Stuck: In Sand, Mud, Ice or Snow

In order to free your vehicle when it is stuck, you will need to spin the wheels, but you don't want to spin your wheels too fast. The method known as "rocking" can help you get out when you're stuck, but you must use caution.

⚠ CAUTION:

If you let your tires spin at high speed, they can explode, and you or others could be injured. And, the transaxle or other parts of the vehicle can overheat. That could cause an engine compartment fire or other damage. When you are stuck, spin the wheels as little as possible. Do not spin the wheels above 35 mph (55 km/h) as shown on the speedometer.

Notice: **Spinning your wheels can destroy parts of your vehicle as well as the tires. If you spin the wheels too fast while shifting your transaxle back and forth, you can destroy your transaxle. See "Rocking Your Vehicle To Get It Out."**

For information about using tire chains on your vehicle, see *Tire Chains on page 5-74*.

Rocking Your Vehicle To Get It Out

First, turn your steering wheel left and right. That will clear the area around your front wheels. If your vehicle has traction control, you should turn your traction control system off. See *Traction Control System (TCS) on page 4-11*. Then shift back and forth between REVERSE (R) and a forward gear, spinning the wheels as little as possible. Release the accelerator pedal while you shift, and press lightly on the accelerator pedal when the transaxle is in gear. By slowly spinning your wheels in the forward and reverse directions, you will cause a rocking motion that may free your vehicle. If that doesn't get you out after a few tries, you may need to be towed out. If you do need to be towed out, see "Towing Your Vehicle" following.

Towing

Towing Your Vehicle

Consult your dealer or a professional towing service if you need to have your disabled vehicle towed. See *Roadside Assistance Program on page 7-6*.

If you want to tow your vehicle behind another vehicle for recreational purposes (such as behind a motorhome), see "Recreational Vehicle Towing" following.

Recreational Vehicle Towing

Recreational vehicle towing means towing your vehicle behind another vehicle – such as behind a motorhome. The two most common types of recreational vehicle towing are known as “dinghy towing” (towing your vehicle with all four wheels on the ground) and “dolly towing” (towing your vehicle with two wheels on the ground and two wheels up on a device know as a “dolly”).

With the proper preparation and equipment, many vehicles can be towed in these ways. See “Dinghy Towing” and “Dolly Towing,” following.

Here are some important things to consider before you do recreational vehicle towing:

- What’s the towing capacity of the towing vehicle? Be sure you read the tow vehicle manufacturer’s recommendations.
- How far will you tow? Some vehicles have restrictions on how far and how long they can tow.
- Do you have the proper towing equipment? See your dealer or trailering professional for additional advice and equipment recommendations.
- Is your vehicle ready to be towed? Just as you would prepare your vehicle for a long trip, you’ll want to make sure your vehicle is prepared to be towed. See *Before Leaving on a Long Trip on page 4-25*.

Dinghy Towing

Your vehicle was not designed to be towed with all of its wheels on the ground. If you have a two-wheel-drive vehicle, it can be towed with two of its wheels on the ground. See “Dolly Towing” following. If you have an all-wheel-drive vehicle, it cannot be towed with any of its wheels on the ground. It can be towed with car carrier equipment.

Notice: **Towing an all-wheel-drive vehicle with all four wheels on the ground, or even with only two of its wheels on the ground, will damage drivetrain components. Do not tow an all-wheel-drive vehicle if any of its wheels will be on the ground.**

Dolly Towing

If you have a two-wheel-drive vehicle, it can be towed with two of its wheels on the ground. To dolly tow your vehicle, do the following:

1. Put the front wheels on a dolly.
2. Put the vehicle in PARK (P).
3. Set the parking brake and then remove the key.
4. Clamp the steering wheel in a straight-ahead position with a clamping device designed for towing.
5. Release the parking brake.

If you have an all-wheel-drive vehicle, it cannot be towed with any of its wheels on the ground. It can be towed with car carrier equipment.

Notice: **Towing an all-wheel-drive vehicle with all four wheels on the ground, or even with only two of its wheels on the ground, will damage drivetrain components. Do not tow an all-wheel-drive vehicle if any of its wheels will be on the ground.**

Loading Your Vehicle

It is very important to know how much weight your vehicle can carry. This weight is called the vehicle capacity weight and includes the weight of all occupants, cargo, and all nonfactory-installed options. Two labels on your vehicle show how much weight it may properly carry, the Tire and Loading Information label and the Certification/Tire label.

⚠ CAUTION:

Do not load your vehicle any heavier than the GVWR, or either the maximum front or rear GAWR. If you do, parts on your vehicle can break, and it can change the way your vehicle handles. These could cause you to lose control and crash. Also, overloading can shorten the life of your vehicle.

Tire and Loading Information Label

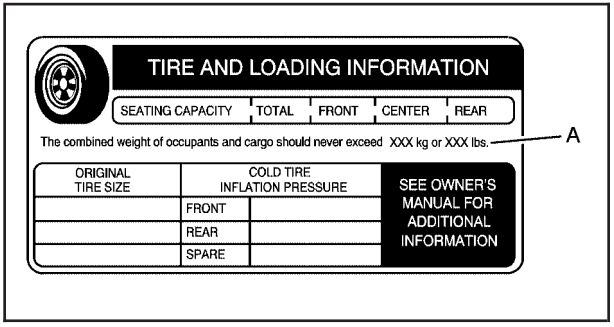

A. Vehicle Capacity Weight

The Tire and Loading Information label is attached to the center pillar, near the driver's door latch. Vehicles without a center pillar will have the Tire and Loading Information label attached to the driver's door edge. This label lists the number of people that can be in your vehicle and the total weight it can carry. This weight is called the vehicle capacity weight.

The Tire and Loading Information label also tells you the size and recommended inflation pressure for the original equipment tires on your vehicle. For more information on tires and inflation, see *Tires on page 5-57* and *Inflation - Tire Pressure on page 5-64*.

If your vehicle does not have the Tire and Loading Information label, the Certification/Tire label shows the tire size and recommended inflation pressures needed to obtain the Gross Vehicle Weight Rating (GVWR) and the Gross Axle Weight Rating (GAWR) for the front and rear axles. See “Certification/Tire Label” later in this section.

Steps for Determining Correct Load Limit

1. Locate the statement “The combined weight of occupants and cargo should never exceed XXX pounds” on your vehicle placard.
2. Determine the combined weight of the driver and passengers that will be riding in your vehicle.
3. Subtract the combined weight of the driver and passengers from XXX kilograms or XXX pounds.
4. The resulting figure equals the available amount of cargo and luggage load capacity. For example, if the “XXX” amount equals 1400 lbs. and there will be five 150 lb. passengers in your vehicle, the amount of available cargo and luggage load capacity is 650 lbs. (1400 – 750 (5 x 150) = 650 lbs.).
5. Determine the combined weight of luggage and cargo being loaded on the vehicle. That weight may not safely exceed the available cargo and luggage load capacity calculated in Step 4.
6. If your vehicle will be towing a trailer, the load from your trailer will be transferred to your vehicle. Consult this manual to determine how this reduces the available cargo and luggage load capacity for your vehicle.

See *Towing a Trailer on page 4-42* for important information on towing a trailer, towing safety rules, and trailering tips.

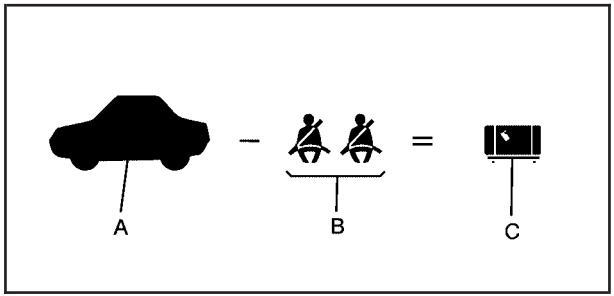

Example 1

Loading Your Vehicle

Item	Description	Total
A	Vehicle Capacity Weight for Example 1 =	1,000 lbs (453 kg)
B	Subtract Occupant Weight 150 lbs (68 kg) × 2 =	300 lbs (136 kg)
C	Available Occupant and Cargo Weight =	700 lbs. (317 kg)

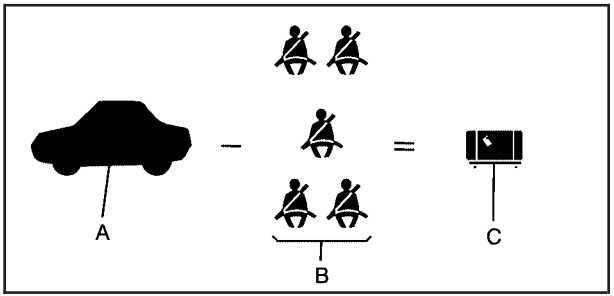

Example 2

Loading Your Vehicle

Item	Description	Total
A	Vehicle Capacity Weight for Example 2 =	1,000 lbs (453 kg)
B	Subtract Occupant Weight 150 lbs (68 kg) × 5 =	750 lbs (340 kg)
C	Available Cargo Weight =	250 lbs. (113 kg)

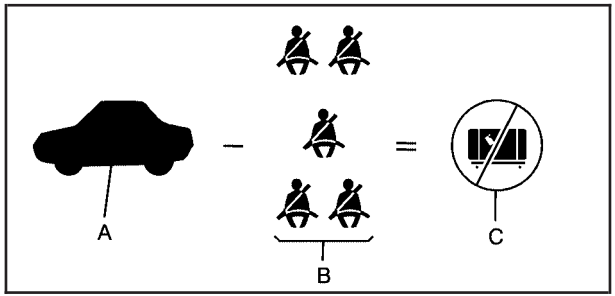

Example 3

Loading Your Vehicle

Item	Description	Total
A	Vehicle Capacity Weight for Example 3 =	1,000 lbs (453 kg)
B	Subtract Occupant Weight 200 lbs (91 kg) × 5 =	1,000 lbs (453 kg)
C	Available Cargo Weight =	0 lbs (0 kg)

Refer to your vehicle's tire and loading information label for specific information about your vehicle's capacity weight and seating positions. The combined weight of the driver, passengers, and cargo should never exceed your vehicle's capacity weight.

Certification/Tire Label

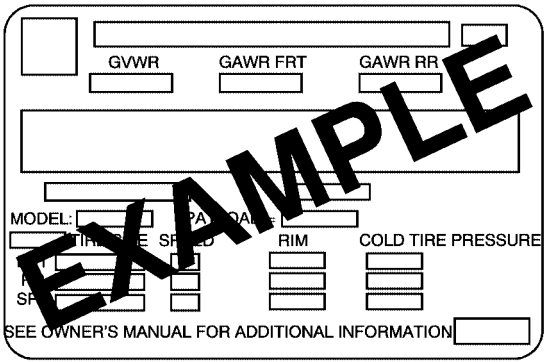

The Certification/Tire Label is found on the rear edge of the driver's door.

The label shows the size of your original tires and the inflation pressures needed to obtain the gross weight capacity of your vehicle. This is called the Gross Vehicle Weight Rating (GVWR). The GVWR includes the weight of the vehicle, all occupants, fuel, and cargo.

The Certification/Tire Label also tells you the maximum weights for the front and rear axles, called the Gross Axle Weight Rating (GAWR). To find out the actual loads on your front and rear axles, you need to go to a weigh station and weigh your vehicle. Your dealer can help you with this. Be sure to spread out your load equally on both sides of the centerline.

Never exceed the GVWR for your vehicle or the GAWR for either the front or rear axle.

⚠ CAUTION:

Do not load your vehicle any heavier than the GVWR, or either the maximum front or rear GAWR. If you do, parts on your vehicle can break, and it can change the way your vehicle handles. These could cause you to lose control and crash. Also, overloading can shorten the life of your vehicle.

Notice: **Loading objects that weigh over 400 lbs (181 kg) onto the sliding rear convenience tray may cause damage. Repairs would not be covered by your warranty. Do not load heavy objects on the sliding rear convenience tray.**

If you put things inside your vehicle – like suitcases, tools, packages, or anything else – they will go as fast as the vehicle goes. If you have to stop or turn quickly, or if there is a crash, they will keep going.

⚠ CAUTION:

Things you put inside your vehicle can strike and injure people in a sudden stop or turn, or in a crash.

- **Put things in the cargo area of your vehicle. Try to spread the weight evenly.**
- **Never stack heavier things, like suitcases, inside the vehicle so that some of them are above the tops of the seats.**
- **Don't leave an unsecured child restraint in your vehicle.**
- **When you carry something inside the vehicle, secure it whenever you can.**
- **Don't leave a seat folded down unless you need to.**

Automatic Level Control

On vehicles equipped with automatic level control, the rear of the vehicle is automatically kept level as you load or unload your vehicle. However, you should still not exceed the GVWR or the GAWR. See *Loading Your Vehicle on page 4-36*.

You may hear the compressor operating when you load or unload your vehicle, and periodically as the system self-adjusts. This is normal. The compressor should operate for brief periods of time. If the sound continues for an extended period of time, your vehicle needs service.

Using heavier suspension components to get added durability might not change your weight ratings. Ask your dealer to help you load your vehicle the right way.

Towing a Trailer

⚠ CAUTION:

If you don't use the correct equipment and drive properly, you can lose control when you pull a trailer. For example, if the trailer is too heavy, the brakes may not work well — or even at all. You and your passengers could be seriously injured. Pull a trailer only if you have followed all the steps in this section. Ask your dealer for advice and information about towing a trailer with your vehicle.

Notice: **Pulling a trailer improperly can damage your vehicle and result in costly repairs that would not be covered by your warranty. Always follow the instructions in this section and check with your dealer for more information about towing a trailer with your vehicle.**

Your vehicle can tow a trailer. To identify what the vehicle trailering capacity is for your vehicle, you should read the information in “Weight of the Trailer” that appears later in this section. But trailering is different than just driving your vehicle by itself. Trailering means changes in handling, acceleration, braking, durability, and fuel economy. Successful, safe trailering takes correct equipment, and it has to be used properly.

That is the reason for this section. In it are many time-tested, important trailering tips and safety rules. Many of these are important for your safety and that of your passengers. So please read this section carefully before you pull a trailer.

Load-pulling components such as the engine, transaxle, wheel assemblies and tires are forced to work harder against the drag of the added weight. The engine is required to operate at relatively higher speeds and under greater loads, generating extra heat. The trailer also adds considerably to wind resistance, increasing the pulling requirements.

If You Do Decide To Pull A Trailer

If you do, here are some important points:

- There are many different laws, including speed limit restrictions, having to do with trailering. Make sure your rig will be legal, not only where you live but also where you will be driving. A good source for this information can be state or provincial police.
- Consider using a sway control. See “Hitches” later in this section.
- Do not tow a trailer at all during the first 500 miles (800 km) your new vehicle is driven. Your engine, axle or other parts could be damaged.
- Then, during the first 500 miles (800 km) that you tow a trailer, do not drive over 50 mph (80 km/h) and do not make starts at full throttle. This helps your engine and other parts of your vehicle wear in at the heavier loads.
- You can use THIRD (3) (or, as you need to, a lower gear) when towing a trailer. Operating your vehicle in THIRD (3) when towing a trailer will minimize heat buildup and extend the life of your transaxle.

Three important considerations have to do with weight:

- Weight of the trailer.
- Weight of the trailer tongue.
- Weight on your vehicle’s tires.

Weight of the Trailer

How heavy can a trailer safely be?

It should never weigh more than 1,400 lbs. (630 kg) with up to five occupants in the vehicle or more than 2,000 lbs. (900 kg) with up to two occupants. If you have the optional trailer towing package, your vehicle

can tow up to 2,900 lbs. (1 300 kg) with up to five occupants or up to 3,500 lbs. (1 575 kg) with up to two occupants. But even that can be too heavy.

It depends on how you plan to use your rig. For example, speed, altitude, road grades, outside temperature and how much your vehicle is used to pull a trailer are all important. And, it can also depend on any special equipment that you have on your vehicle.

You can ask your dealer for our trailering information or advice, or you can write us at:

Buick Customer Assistance Center
P.O. Box 33136
Detroit, MI 48232-5136

In Canada, write to:

General Motors of Canada Limited
Customer Communication Centre, 163-005
1908 Colonel Sam Drive
Oshawa, Ontario L1H 8P7

Weight of the Trailer Tongue

The tongue load (A) of any trailer is an important weight to measure because it affects the total or gross weight of your vehicle. The Gross Vehicle Weight (GVW) includes the curb weight of the vehicle, any cargo you may carry in it, and the people who will be riding in the vehicle. If you have a lot of options, equipment, passengers, or cargo in the vehicle, it will reduce the tongue weight your vehicle can carry, which will also reduce the trailer weight your vehicle can tow. And if you will tow a trailer, you must add the tongue load to the GVW because your vehicle will be carrying that weight, too. See *Loading Your Vehicle on page 4-36* for more information about your vehicle's maximum load capacity.

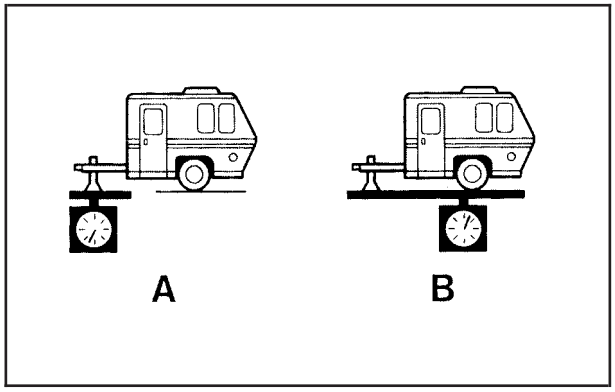

If you are using a weight-carrying or weight distributing hitch, the trailer tongue weight (A) should be 10 percent to 15 percent of the total loaded trailer weight (B). Do not exceed the maximum allowable tongue weight for your vehicle.

After you have loaded your trailer, weigh the trailer and then the tongue, separately, to see if the weights are proper. If they are not, you may be able to get them right simply by moving some items around in the trailer.

Total Weight on Your Vehicle's Tires

Be sure your vehicle's tires are inflated to the upper limit for cold tires. You will find these numbers on the Certification/Tire Label at the rear edge of the driver's door, or see *Loading Your Vehicle on page 4-36*. Do not go over the GVW limit for your vehicle, including the weight of the trailer tongue.

Hitches

It is important to have the correct hitch equipment. Crosswinds, large trucks going by, and rough roads are a few reasons why you will need the right hitch. Here are some rules to follow:

- If you will be pulling a trailer that, when loaded, will weigh more than 2,000 lbs. (900 kg), use a properly mounted, weight-carrying hitch and sway control of the proper size. This equipment is very important for proper vehicle loading and good handling while driving.
- Will you have to make any holes in the body of your vehicle when you install a trailer hitch?

  If you do, remember to seal the holes when you remove the hitch. If you do not seal them, deadly carbon monoxide (CO) from your exhaust can get into your vehicle. See *Engine Exhaust on page 2-30*. Dirt and water can, too.

Safety Chains

You should always attach chains between your vehicle and your trailer. Cross the safety chains under the tongue of the trailer to help prevent the tongue from contacting the road if it becomes separated from the hitch. Instructions about safety chains may be provided by the hitch manufacturer or by the trailer manufacturer. Follow the manufacturer's recommendation for attaching safety chains and do not attach them to the bumper. Always leave just enough slack so you can turn with your rig. Never allow safety chains to drag on the ground.

Trailer Brakes

If your trailer weighs more than 1,000 lbs. (450 kg) loaded, then it needs its own brakes – and they must be adequate. Be sure to read and follow the instructions for the trailer brakes so you'll be able to install, adjust and maintain them properly.

Because your vehicle may have anti-lock brakes, do not try to tap into your vehicle's brake system. If you do, both brake systems will not work well, or at all.

Driving with a Trailer

⚠ CAUTION:

If you have a rear-most window open and you pull a trailer with your vehicle, carbon monoxide (CO) could come into your vehicle. You can't see or smell CO. It can cause unconsciousness or death. See "Engine Exhaust" in the Index. To maximize your safety when towing a trailer:

- **Have your exhaust system inspected for leaks, and make necessary repairs before starting on your trip.**
- **Keep the rear-most windows closed.**
- **If exhaust does come into your vehicle through a window in the rear or another opening, drive with your front, main heating or cooling system on and with the fan on any speed. This will bring fresh, outside air into your vehicle. Do not use the climate control setting for maximum air because it only recirculates the air inside your vehicle. See "Climate Controls" in the Index.**

Towing a trailer requires a certain amount of experience. Before setting out for the open road, you will want to get to know your rig. Acquaint yourself with the feel of handling and braking with the added weight of the trailer. And always keep in mind that the vehicle you are driving is now a good deal longer and not nearly as responsive as your vehicle is by itself.

Before you start, check all trailer hitch parts and attachments, safety chains, electrical connector, lamps, tires and mirror adjustment. If the trailer has electric brakes, start your vehicle and trailer moving and then apply the trailer brake controller by hand to be sure the brakes are working. This lets you check your electrical connection at the same time.

During your trip, check occasionally to be sure that the load is secure, and that the lamps and any trailer brakes are still working.

Following Distance

Stay at least twice as far behind the vehicle ahead as you would when driving your vehicle without a trailer. This can help you avoid situations that require heavy braking and sudden turns.

Passing

You will need more passing distance up ahead when you are towing a trailer. And, because you are a good deal longer, you will need to go much farther beyond the passed vehicle before you can return to your lane.

Backing Up

Hold the bottom of the steering wheel with one hand. Then, to move the trailer to the left, just move that hand to the left. To move the trailer to the right, move your hand to the right. Always back up slowly and, if possible, have someone guide you.

Making Turns

Notice: **Making very sharp turns while trailering could cause the trailer to come in contact with the vehicle. Your vehicle could be damaged. Avoid making very sharp turns while trailering.**

When you are turning with a trailer, make wider turns than normal. Do this so your trailer will not strike soft shoulders, curbs, road signs, trees or other objects. Avoid jerky or sudden maneuvers. Signal well in advance.

Turn Signals When Towing a Trailer

When you tow a trailer, your vehicle has to have extra wiring.

The arrows on your instrument panel will flash whenever you signal a turn or lane change. Properly hooked up, the trailer lamps will also flash, telling other drivers you are about to turn, change lanes or stop.

When towing a trailer, the arrows on your instrument panel will flash for turns even if the bulbs on the trailer are burned out. Thus, you may think drivers behind you are seeing your signal when they are not. It is important to check occasionally to be sure the trailer bulbs are still working.

Driving On Grades

Reduce speed and shift to a lower gear before you start down a long or steep downgrade. If you do not shift down, you might have to use your brakes so much that they would get hot and no longer work well.

If you are towing a trailer that weighs more than 1,000 lbs. (450 kg), drive in THIRD (3) instead of AUTOMATIC OVERDRIVE (D) (or as you need to, a lower gear). This will minimize heat build-up and extend the life of your transaxle.

Parking on Hills

⚠ CAUTION:

You really should not park your vehicle, with a trailer attached, on a hill. If something goes wrong, your rig could start to move. People can be injured, and both your vehicle and the trailer can be damaged.

But if you ever have to park your rig on a hill, do the following:

1. Apply your regular brakes, but do not shift into PARK (P) yet.
2. Have someone place chocks under the trailer wheels.
3. When the wheel chocks are in place, release the regular brakes until the chocks absorb the load.
4. Reapply the regular brakes. Then apply your parking brake, and then shift to PARK (P).
5. Release the regular brakes.

When You Are Ready to Leave After Parking on a Hill

1. Apply your regular brakes and hold the pedal down while you:
   - Start your engine.
   - Shift into a gear.
   - Release the parking brake.
2. Let up on the brake pedal.
3. Drive slowly until the trailer is clear of the chocks.
4. Stop and have someone pick up and store the chocks.

Maintenance When Trailer Towing

Your vehicle will need service more often when you are pulling a trailer. See the Maintenance Schedule for more on this. Things that are especially important in trailer operation are automatic transaxle fluid, engine oil, belts, cooling system and brake system. Each of these is covered in this manual, and the Index will help you find them quickly. If you are trailering, it is a good idea to review these sections before you start your trip.

Check periodically to see that all hitch nuts and bolts are tight.

Trailer Wiring Harness

Your vehicle may have a trailer wiring harness located at the rear of your vehicle. To use the trailer wiring harness, you need a converter kit. Contact your dealer for more information.

Section 5 Service and Appearance Care

Service 5-3
Doing Your Own Service Work 5-3
Adding Equipment to the Outside of Your Vehicle 5-4

Fuel 5-4
Gasoline Octane 5-4
Gasoline Specifications 5-5
California Fuel 5-5
Additives 5-6
Fuels in Foreign Countries 5-6
Filling Your Tank 5-7
Filling a Portable Fuel Container 5-9

Checking Things Under the Hood 5-10
Hood Release 5-11
Engine Compartment Overview 5-12
Engine Oil 5-14
Engine Air Cleaner/Filter 5-19
Automatic Transaxle Fluid 5-21
Engine Coolant 5-23
Radiator Pressure Cap 5-25
Engine Overheating 5-26
Cooling System 5-29
Power Steering Fluid 5-36
Windshield Washer Fluid 5-37
Brakes 5-38
Battery 5-42
Jump Starting 5-43

All-Wheel Drive 5-48

Bulb Replacement 5-50
Halogen Bulbs 5-50
Headlamps 5-50
Front Turn Signal, Sidemarker and Parking Lamps 5-52
Taillamps, Turn Signal, and Stoplamps 5-52
Taillamps and Back-Up Lamps 5-53
Replacement Bulbs 5-54

Windshield Wiper Blade Replacement 5-55

Tires 5-57
Inflation - Tire Pressure 5-64
Check Tire Pressure System 5-65
Tire Inspection and Rotation 5-67
When It Is Time for New Tires 5-69
Buying New Tires 5-70
Uniform Tire Quality Grading 5-71
Wheel Alignment and Tire Balance 5-72
Wheel Replacement 5-72
Tire Chains 5-74
Accessory Inflator 5-74

Section 5 Service and Appearance Care

If a Tire Goes Flat 5-76
Changing a Flat Tire 5-77
Compact Spare Tire 5-98

Appearance Care 5-99
Cleaning the Inside of Your Vehicle 5-99
Care of Safety Belts 5-102
Weatherstrips 5-102
Cleaning the Outside of Your Vehicle 5-103
Sheet Metal Damage 5-105
Finish Damage 5-105
Underbody Maintenance 5-105
Chemical Paint Spotting 5-106
Vehicle Care/Appearance Materials 5-106

Vehicle Identification 5-107
Vehicle Identification Number (VIN) 5-107
Service Parts Identification Label 5-108

Electrical System 5-108
Add-On Electrical Equipment 5-108
Headlamp Wiring 5-108
Windshield Wiper Fuses 5-109
Power Windows and Other Power Options 5-109
Fuses and Circuit Breakers 5-109

Capacities and Specifications 5-115

Service

Your dealer knows your vehicle best and wants you to be happy with it. We hope you will go to your dealer for all your service needs. You will get genuine GM parts and GM-trained and supported service people.

We hope you will want to keep your GM vehicle all GM. Genuine GM parts have one of these marks:

ACDelco®

GM Parts®

GM® Goodwrench

GM® Accessories

Doing Your Own Service Work

If you want to do some of your own service work, you will want to use the proper service manual. It tells you much more about how to service your vehicle than this manual can. To order the proper service manual, see *Service Publications Ordering Information on page 7-12*.

Your vehicle has an air bag system. Before attempting to do your own service work, see *Servicing Your Air Bag-Equipped Vehicle on page 1-82*.

You should keep a record with all parts receipts and list the mileage and the date of any service work you perform. See *Maintenance Record on page 6-14*.

⚠ CAUTION:

You can be injured and your vehicle could be damaged if you try to do service work on a vehicle without knowing enough about it.

- **Be sure you have sufficient knowledge, experience, the proper replacement parts and tools before you attempt any vehicle maintenance task.**

CAUTION: (Continued)

CAUTION: (Continued)

- **Be sure to use the proper nuts, bolts and other fasteners. “English” and “metric” fasteners can be easily confused. If you use the wrong fasteners, parts can later break or fall off. You could be hurt.**

Adding Equipment to the Outside of Your Vehicle

Things you might add to the outside of your vehicle can affect the airflow around it. This may cause wind noise and affect windshield washer performance. Check with your dealer before adding equipment to the outside of your vehicle.

Fuel

Use of the recommended fuel is an important part of the proper maintenance of your vehicle.

Gasoline Octane

Use regular unleaded gasoline with a posted octane of 87 or higher. If the octane is less than 87, you may get a heavy knocking noise when you drive. If this occurs, use a gasoline rated at 87 octane or higher as soon as possible. Otherwise, you might damage your engine. A little pinging noise when you accelerate or drive uphill is considered normal. This does not indicate a problem exists or that a higher-octane fuel is necessary. If you are using 87 octane or higher-octane fuel and hear heavy knocking, your engine needs service.

Gasoline Specifications

It is recommended that gasoline meet specifications which were developed by automobile manufacturers around the world and contained in the World-Wide Fuel Charter which is available from the Alliance of Automobile Manufacturers at www.autoalliance.org. Gasoline meeting these specifications could provide improved driveability and emission control system performance compared to other gasoline.

Canada Only

In Canada, look for the “Auto Makers’ Choice” label on the pump.

California Fuel

If your vehicle is certified to meet California Emission Standards (see the underhood emission control label), it is designed to operate on fuels that meet California specifications. If this fuel is not available in states adopting California emissions standards, your vehicle will operate satisfactorily on fuels meeting federal specifications, but emission control system performance may be affected. The malfunction indicator lamp may turn on (see *Malfunction Indicator Lamp on page 3-46*) and your vehicle may fail a smog-check test. If this occurs, return to your authorized GM dealer for diagnosis. If it is determined that the condition is caused by the type of fuel used, repairs may not be covered by your warranty.

Additives

To provide cleaner air, all gasolines in the United States are now required to contain additives that will help prevent engine and fuel system deposits from forming, allowing your emission control system to work properly. You should not have to add anything to your fuel. However, some gasolines contain only the minimum amount of additive required to meet U.S. Environmental Protection Agency regulations. General Motors recommends that you buy gasolines that are advertised to help keep fuel injectors and intake valves clean. If your vehicle experiences problems due to dirty injectors or valves, try a different brand of gasoline.

Gasolines containing oxygenates, such as ethers and ethanol, and reformulated gasolines may be available in your area to contribute to clean air. General Motors recommends that you use these gasolines, particularly if they comply with the specifications described earlier.

Notice: **Your vehicle was not designed for fuel that contains methanol. Do not use fuel containing methanol. It can corrode metal parts in your fuel system and also damage the plastic and rubber parts. That damage would not be covered under your warranty.**

Some gasolines that are not reformulated for low emissions may contain an octane-enhancing additive called methylcyclopentadienyl manganese tricarbonyl (MMT); ask the attendant where you buy gasoline whether the fuel contains MMT. General Motors does not recommend the use of such gasolines. Fuels containing MMT can reduce the life of spark plugs and the performance of the emission control system may be affected. The malfunction indicator lamp may turn on. If this occurs, return to your authorized GM dealer for service.

Fuels in Foreign Countries

If you plan on driving in another country outside the United States or Canada, the proper fuel may be hard to find. Never use leaded gasoline or any other fuel not recommended in the previous text on fuel. Costly repairs caused by use of improper fuel would not be covered by your warranty.

To check the fuel availability, ask an auto club, or contact a major oil company that does business in the country where you will be driving.

Filling Your Tank

⚠ CAUTION:

Fuel vapor burns violently and a fuel fire can cause bad injuries. To help avoid injuries to you and others, read and follow all the instructions on the pump island. Turn off your engine when you are refueling. Do not smoke if you are near fuel or refueling your vehicle. Keep sparks, flames and smoking materials away from fuel. Do not leave the fuel pump unattended when refueling your vehicle — this is against the law in some places. Keep children away from the fuel pump; never let children pump fuel.

The fuel cap is located on the driver's side of the vehicle.

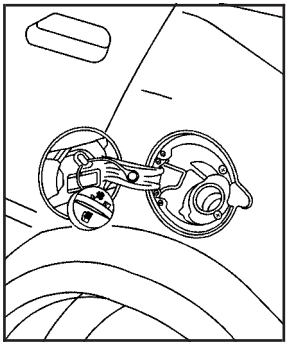

While refueling, hang the fuel cap inside the fuel door by placing the fuel cap tether in the hanger.

To remove the fuel cap, turn it slowly to the left (counterclockwise). The fuel cap has spring in it; if you let go of the cap too soon, it will spring back to the right.

⚠ CAUTION:

If you spill fuel and then something ignites it, you could be badly burned. Fuel can spray out on you if you open the fuel cap too quickly. This spray can happen if your tank is nearly full, and is more likely in hot weather. Open the fuel cap slowly and wait for any “hiss” noise to stop. Then unscrew the cap all the way.

Be careful not to spill fuel. Don’t top off or overfill your tank, and wait a few seconds after you’ve finished pumping before you remove the nozzle. Clean fuel from painted surfaces as soon as possible. See *Cleaning the Outside of Your Vehicle on page 5-103*.

When you put the fuel cap back on, turn it to the right (clockwise) until you hear a clicking sound. Make sure you fully install the cap. The diagnostic system can determine if the fuel cap has been left off or improperly installed. This would allow fuel to evaporate into the atmosphere. See *Malfunction Indicator Lamp on page 3-46*.

⚠ CAUTION:

If a fire starts while you are refueling, do not remove the nozzle. Shut off the flow of fuel by shutting off the pump or by notifying the station attendant. Leave the area immediately.

The malfunction indicator lamp (SERVICE ENGINE SOON or CHECK ENGINE light) will come on if the fuel cap is not properly installed.

Notice: **If you need a new fuel cap, be sure to get the right type. Your dealer can get one for you. If you get the wrong type, it may not fit properly. This may cause your malfunction indicator lamp to light and may damage your fuel tank and emissions system. See "Malfunction Indicator Lamp" in the Index.**

Filling a Portable Fuel Container

⚠ CAUTION:

Never fill a portable fuel container while it is in your vehicle. Static electricity discharge from the container can ignite the gasoline vapor. You can be badly burned and your vehicle damaged if this occurs. To help avoid injury to you and others:

- **Dispense gasoline only into approved containers.**
- **Do not fill a container while it is inside a vehicle, in a vehicle's trunk, pickup bed or on any surface other than the ground.**
- **Bring the fill nozzle in contact with the inside of the fill opening before operating the nozzle. Contact should be maintained until the filling is complete.**
- **Do not smoke while pumping gasoline.**

Checking Things Under the Hood

⚠ CAUTION:

An electric fan under the hood can start up and injure you even when the engine is not running. Keep hands, clothing and tools away from any underhood electric fan.

⚠ CAUTION:

Things that burn can get on hot engine parts and start a fire. These include liquids like fuel, oil, coolant, brake fluid, windshield washer and other fluids, and plastic or rubber. You or others could be burned. Be careful not to drop or spill things that will burn onto a hot engine.

Hood Release

To open the hood, do the following:

1. Pull the hood release handle, located under the instrument panel on the driver's side of the vehicle.
2. At the front of the vehicle, pull up on the center of the hood, and push the secondary hood release to the right.
3. Lift the hood.
4. Pull forward on the hood prop to release it from its storage clip.
5. Put the end of the hood prop into the slot in the underside of the hood.

Before closing the hood, be sure all filler caps are on properly. To close the hood, do the following:

1. Lift the hood to relieve pressure on the hood prop.
2. Remove the hood prop from the slot in the hood.
3. Return the hood prop to its storage clip.
4. Let the hood down and close it firmly.

Engine Compartment Overview

When you lift the hood, you'll see these items:

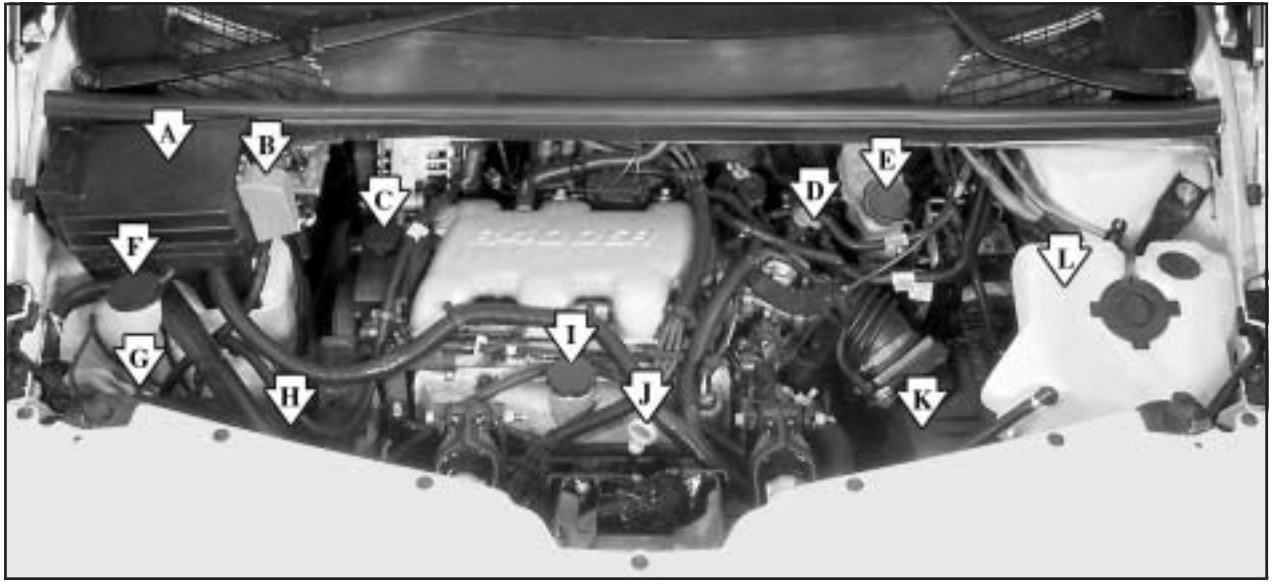

A. Underhood Fuse Block. See *Fuses and Circuit Breakers on page 5-109*.

B. Remote Positive (+) Terminal. See *Jump Starting on page 5-43*.

C. Power Steering Fluid Reservoir. See *Power Steering Fluid on page 5-36*.

D. Automatic Transaxle Fluid Dipstick. See *Automatic Transaxle Fluid on page 5-21*.

E. Brake Master Cylinder. See *Brakes on page 5-38*.

F. Windshield Washer Fluid Reservoir. See *Windshield Washer Fluid on page 5-37*.

G. Battery. See *Battery on page 5-42*.

H. Radiator Pressure Cap. See *Radiator Pressure Cap on page 5-25*.

I. Engine Oil Fill Cap. See *Engine Oil on page 5-14*.

J. Engine Oil Dipstick. See *Engine Oil on page 5-14*.

K. Engine Air Cleaner/Filter. See *Engine Air Cleaner/Filter on page 5-19*.

L. Coolant Recovery Tank. See *Engine Coolant on page 5-23*.

Engine Oil

Checking Engine Oil

It is a good idea to check your engine oil every time you get fuel. In order to get an accurate reading, the oil must be warm and the vehicle must be on level ground.

The engine oil dipstick handle is a yellow loop. See *Engine Compartment Overview on page 5-12* for the location of the engine oil dipstick.

Turn off the engine and give the oil several minutes to drain back into the oil pan. If you don't, the oil dipstick might not show the actual level.

Pull out the dipstick and clean it with a paper towel or cloth, then push it back in all the way. Remove it again, keeping the tip down, and check the level.

When to Add Engine Oil

If the oil is at or below the cross-hatched area at the tip of the dipstick, then you will need to add at least one quart of oil. But you must use the right kind. This section explains what kind of oil to use. For engine oil crankcase capacity, see *Capacities and Specifications on page 5-115*.

Notice: **Do not add too much oil. If your engine has so much oil that the oil level gets above the cross-hatched area that shows the proper operating range, your engine could be damaged.**

See *Engine Compartment Overview on page 5-12* for the location of the engine oil fill cap.

Be sure to add enough oil to put the level somewhere in the proper operating range in the cross-hatched area. Push the dipstick all the way back in when you are through.

What Kind of Engine Oil to Use

Look for two things:

- GM6094M

  Your vehicle's engine requires oil meeting GM Standard GM6094M. You should look for and use only an oil that meets GM Standard GM6094M.

- SAE 5W-30

  As shown in the viscosity chart, SAE 5W-30 is best for your vehicle. However, if it is going to be 0°F (–18°C) or above and SAE 5W-30 is not available, you may use SAE 10W-30.

  These numbers on an oil container show its viscosity, or thickness. Do not use other viscosity oils such as SAE 20W-50.

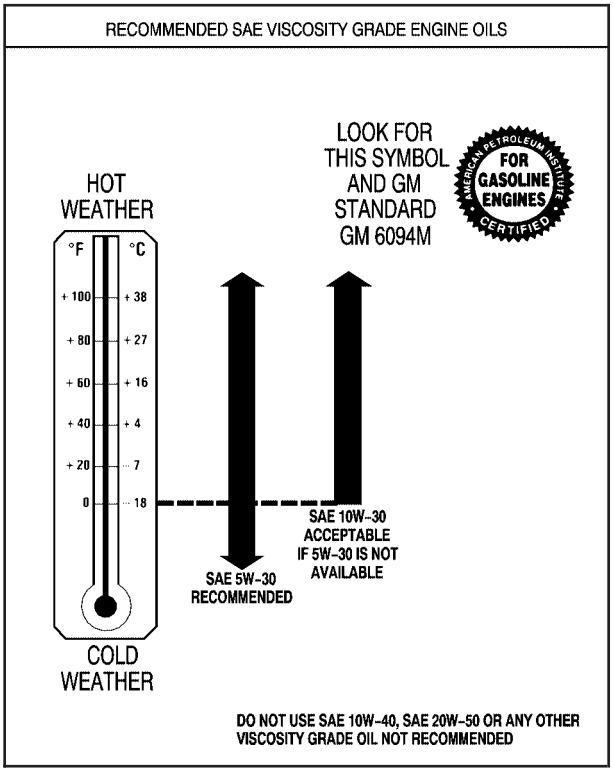

Oils meeting these requirements should also have the starburst symbol on the container. This symbol indicates that the oil has been certified by the American Petroleum Institute (API).

You should look for this information on the oil container, and use *only* those oils that are identified as meeting GM Standard GM6094M and have the starburst symbol on the front of the oil container.

Notice: **Use only engine oil identified as meeting GM Standard GM6094M and showing the American Petroleum Institute Certified For Gasoline Engines starburst symbol. Failure to use the recommended oil can result in engine damage not covered by your warranty.**

GM Goodwrench® oil meets all the requirements for your vehicle.

If you are in an area of extreme cold, where the temperature falls below –20°F (–29°C), it is recommended that you use either an SAE 5W-30 synthetic oil or an SAE 0W-30 oil. Both will provide easier cold starting and better protection for your engine at extremely low temperatures.

Engine Oil Additives

Do not add anything to your oil. The recommended oils with the starburst symbol that meet GM Standard GM6094M are all you will need for good performance and engine protection.

When to Change Engine Oil (GM Oil Life System)

Your vehicle has a computer system that lets you know when to change the engine oil and filter. This is based on engine revolutions and engine temperature, and not on mileage. Based on driving conditions, the mileage at which an oil change will be indicated can vary considerably. For the oil life system to work properly, you must reset the system every time the oil is changed.

When the system has calculated that oil life has been diminished, it will indicate that an oil change is necessary. A CHANGE ENGINE OIL message will come on. Change your oil as soon as possible within the next two times you stop for fuel. It is possible that, if you are driving under the best conditions, the oil life system may not indicate that an oil change is necessary for over a year. However, your engine oil and filter must be changed at least once a year and at this time the system must be reset. Your dealer has GM-trained service people who will perform this work using genuine GM parts and reset the system. It is also important to check your oil regularly and keep it at the proper level.

If the system is ever reset accidentally, you must change your oil at 3,000 miles (5 000 km) since your last oil change. Remember to reset the oil life system whenever the oil is changed.

How to Reset the CHANGE ENGINE OIL Message

The GM Oil Life System calculates when to change your engine oil and filter based on vehicle use. Anytime your oil is changed, reset the system so it can calculate when the next oil change is required. If a situation occurs where you change your oil prior to a CHANGE ENGINE OIL message being turned on, reset the system.

If your vehicle does not have the optional Driver Information Center (DIC), do the following:

1. Turn the ignition to ON, with the engine off.
2. Fully press and release the accelerator pedal slowly three times within five seconds.
3. Turn the key to OFF.

   If the CHANGE ENGINE OIL message comes back on when you start your vehicle, the engine oil life system has not reset. Repeat the procedure.

If your vehicle has the optional DIC, do the following:

1. Turn the ignition to ON, with the engine off.
2. Press the MODE button until the DIC reads OIL LIFE LEFT/HOLD SET TO RESET.
3. Press and hold the SET button until 100% is displayed.

   You will hear three chimes and the CHANGE ENGINE OIL message will go off.
4. Turn the key to OFF.

If the CHANGE ENGINE OIL message comes back on when you start your vehicle, the engine oil life system has not reset. Repeat the procedure.

What to Do with Used Oil

Used engine oil contains certain elements that may be unhealthy for your skin and could even cause cancer. Do not let used oil stay on your skin for very long. Clean your skin and nails with soap and water, or a good hand cleaner. Wash or properly dispose of clothing or rags containing used engine oil. See the manufacturer's warnings about the use and disposal of oil products.

Used oil can be a threat to the environment. If you change your own oil, be sure to drain all the oil from the filter before disposal. Never dispose of oil by putting it in the trash, pouring it on the ground, into sewers, or into streams or bodies of water. Instead, recycle it by taking it to a place that collects used oil. If you have a problem properly disposing of your used oil, ask your dealer, a service station or a local recycling center for help.

Engine Air Cleaner/Filter

See *Engine Compartment Overview on page 5-12* for the location of the engine air cleaner/filter.

When to Inspect the Engine Air Cleaner/Filter

Inspect the air cleaner/filter at every oil change and replace it at the first oil change after 25,000 miles (40 000 km). See *Scheduled Maintenance on page 6-4* for more information.

How to Inspect the Engine Air Cleaner/Filter

To inspect the air cleaner/filter, remove the filter from the vehicle and lightly shake the filter to release loose dust and dirt. If the filter remains caked with dirt, a new filter is required.

To inspect or replace the air cleaner/filter, do the following:

1. Remove the two clamps on the duct.
2. Remove the duct.
3. Unlatch the two hooks on top of the engine air cleaner/filter housing.
4. Remove and replace the engine air cleaner/filter.
5. Align the tabs located on the bottom of the panel with the slots at the bottom of the housing.
6. Latch the hooks to secure the panel in place. If the panel moves easily, check that the tabs are seated correctly in the slots.
7. Put the duct back on and reinstall the clamps.

⚠ CAUTION:

Operating the engine with the air cleaner/filter off can cause you or others to be burned. The air cleaner not only cleans the air, it helps to stop flame if the engine backfires. If it is not there and the engine backfires, you could be burned. Do not drive with it off, and be careful working on the engine with the air cleaner/filter off.

Notice: **If the air cleaner/filter is off, a backfire can cause a damaging engine fire. And, dirt can easily get into your engine, which will damage it. Always have the air cleaner/filter in place when you're driving.**

Automatic Transaxle Fluid

When to Check and Change Automatic Transaxle Fluid

A good time to check your automatic transaxle fluid level is when the engine oil is changed.

Change both the fluid and filter every 50,000 miles (83 000 km) if the vehicle is mainly driven under one or more of these conditions:

- In heavy city traffic where the outside temperature regularly reaches 90°F (32°C) or higher
- In hilly or mountainous terrain
- When doing frequent trailer towing
- Uses such as found in taxi, police or delivery service

If you do not use your vehicle under any of these conditions, change the fluid and filter at 100,000 miles (166 000 km). See *Scheduled Maintenance on page 6-4* for more information.

How to Check Automatic Transaxle Fluid

Because this operation can be a little difficult, you may choose to have this done at the dealership service department.

If you do it yourself, be sure to follow all the instructions here, or you could get a false reading on the dipstick.

Notice: **Too much or too little fluid can damage the transaxle. Too much can mean that some of the fluid could come out and fall on hot engine or exhaust system parts, starting a fire. Too little fluid could cause the transaxle to overheat. Be sure to get an accurate reading if you check the transaxle fluid.**

Wait at least 30 minutes before checking the transaxle fluid level if you have been driving:

- When outside temperatures are above 90°F (32°C)
- At high speed for quite a while
- In heavy traffic, especially in hot weather

To get the right reading, the fluid should be at normal operating temperature, which is 180°F to 200°F (82°C to 93°C).

Get the vehicle warmed up by driving about 15 miles (24 km) when outside temperatures are above 50°F (10°C). If it is colder than 50°F (10°C), you may have to drive longer.

Checking the Fluid Level

To prepare your vehicle, do the following:

1. Park your vehicle on a level place and keep the engine running.
2. With the parking brake applied, place the shift lever in PARK (P).
3. With your foot on the brake pedal, move the shift lever through each gear range, pausing for about three seconds in each range. Then, position the shift lever in PARK (P).
4. Let the engine run at idle for three to five minutes.

Then, without shutting off the engine, do the following:

The dipstick is located toward the back of the engine compartment, next to the brake master cylinder.

The dipstick handle is a bright red loop. See *Engine Compartment Overview on page 5-12* for more information on location.

1. Pull out the dipstick and wipe it with a clean rag or paper towel.
2. Push it back in all the way, wait three seconds and then pull it back out again.

3. Check both sides of the dipstick, and read the lower level. The fluid level must be in the cross-hatched area.
4. If the fluid level is in the acceptable range, push the dipstick back in all the way.

How to Add Automatic Transaxle Fluid

Refer to the Maintenance Schedule to determine what kind of transaxle fluid to use. See *Recommended Fluids and Lubricants on page 6-12*.

If the fluid level is low, add only enough of the proper fluid to bring the level into the cross-hatched area on the dipstick.

1. Pull out the dipstick.
2. Using a long-neck funnel, add enough fluid at the dipstick hole to bring it to the proper level.

   It does not take much fluid, generally less than one pint (0.5 L). *Do not overfill.*

Notice: **We recommend you use only fluid labeled DEXRON® -III, because fluid with that label is made especially for your automatic transmission. Damage caused by fluid other than DEXRON® -III is not covered by your new vehicle warranty.**

3. After adding fluid, recheck the fluid level as described under “How to Check Automatic Transaxle Fluid”.
4. When the correct fluid level is obtained, push the dipstick back in all the way.

Engine Coolant

The cooling system in your vehicle is filled with DEX-COOL® engine coolant. This coolant is designed to remain in your vehicle for 5 years or 150,000 miles (240 000 km), whichever occurs first, if you add only DEX-COOL® extended life coolant.

The following explains your cooling system and how to add coolant when it is low. If you have a problem with engine overheating, see *Engine Overheating on page 5-26*.

A 50/50 mixture of clean, drinkable water and DEX-COOL® coolant will:

- Give freezing protection down to –34°F (–37°C)
- Give boiling protection up to 265°F (129°C)
- Protect against rust and corrosion
- Help keep the proper engine temperature
- Let the warning messages and gages work as they should

Notice: **Using coolant other than DEX-COOL® may cause premature engine, heater core or radiator corrosion. In addition, the engine coolant may require changing sooner, at 30,000 miles (50 000 km) or 24 months, whichever occurs first. Any repairs would not be covered by your warranty. Always use DEX-COOL®(silicate-free) coolant in your vehicle.**

What Coolant to Use

Use a mixture of one-half *clean, drinkable water* and one-half DEX-COOL® coolant which won't damage aluminum parts. If you use this coolant mixture, you don't need to add anything else.

⚠ CAUTION:

Adding only plain water to your cooling system can be dangerous. Plain water, or some other liquid such as alcohol, can boil before the proper coolant mixture will. Your vehicle's coolant warning system is set for the proper coolant mixture. With plain water or the wrong mixture, your engine could get too hot but you would not get the overheat warning. Your engine could catch fire and you or others could be burned. Use a 50/50 mixture of clean, drinkable water and DEX-COOL® coolant.

Notice: **If you use an improper coolant mixture, your engine could overheat and be badly damaged. The repair cost wouldn't be covered by your warranty. Too much water in the mixture can freeze and crack the engine, radiator, heater core and other parts.**

If you have to add coolant more than four times a year, have your dealer check your cooling system.

Notice: **If you use the proper coolant, you don't have to add extra inhibitors or additives which claim to improve the system. These can be harmful.**

Checking Coolant

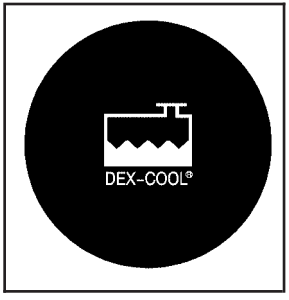

The coolant recovery tankr is located on the driver's side of the vehicle, above the engine air cleaner/filter. See *Engine Compartment Overview on page 5-12* for more information on location.

The vehicle must be on a level surface. When your engine is cold, the coolant level should be at the FULL COLD mark, or a little higher. When your engine is warm, the level should be above the FULL COLD mark or a little higher.

Adding Coolant

If you need more coolant, add the proper DEX-COOL® coolant mixture *at the coolant recovery tank.*

⚠ CAUTION:

Turning the radiator pressure cap when the engine and radiator are hot can allow steam and scalding liquids to blow out and burn you badly. With the coolant recovery tank, you will almost never have to add coolant at the radiator. Never turn the radiator pressure cap — even a little — when the engine and radiator are hot.

Add coolant mixture at the recovery tank, but be careful not to spill it.

⚠ CAUTION:

You can be burned if you spill coolant on hot engine parts. Coolant contains ethylene glycol, and it will burn if the engine parts are hot enough. Don't spill coolant on a hot engine.

Occasionally check the coolant level in the radiator. For information on how to add coolant to the radiator, see *Cooling System on page 5-29*.

Radiator Pressure Cap

Notice: **The radiator cap on your vehicle is a pressure-type cap and must be tightly installed to prevent coolant loss and possible engine damage from overheating. Be sure the arrows on the cap line up with the overflow tube on the radiator filler neck.**

The radiator pressure cap is located at the front of the engine compartment on the passenger's side of the vehicle. See *Engine Compartment Overview on page 5-12* for more information on location.

Engine Overheating

You will find an engine coolant temperature gage on your vehicle's instrument panel. See *Engine Coolant Temperature Gage on page 3-46*. You also have an engine coolant temperature warning message on your instrument panel. See *Engine Coolant Temperature Warning Message on page 3-51*.

Overheated Engine Protection Operating Mode

This emergency operating mode allows your vehicle to be driven to a safe place in an emergency situation. If an overheated engine condition exists, an overheat protection mode which alternates firing groups of cylinders helps prevent engine damage. In this mode, you will notice a significant loss in power and engine performance. The temperature gage will indicate an overheat condition exists. Driving extended miles (km) and/or towing a trailer in the overheat protection mode should be avoided.

Notice: **After driving in the overheated engine protection operating mode, to avoid engine damage, allow the engine to cool before attempting any repair. The engine oil will be severely degraded. Repair the cause of coolant loss, change the oil and reset the oil life system. See "Engine Oil" in the Index.**

If Steam Is Coming From Your Engine

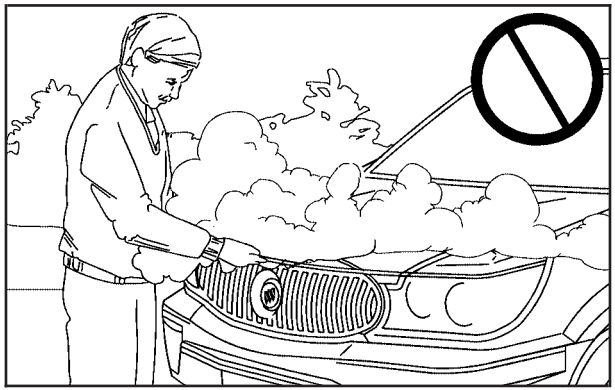

⚠ CAUTION:

Steam from an overheated engine can burn you badly, even if you just open the hood. Stay away from the engine if you see or hear steam coming from it. Just turn it off and get everyone away from the vehicle until it cools down. Wait until there is no sign of steam or coolant before you open the hood.

If you keep driving when your engine is overheated, the liquids in it can catch fire. You or others could be badly burned. Stop your engine if it overheats, and get out of the vehicle until the engine is cool.

See “Overheated Engine Protection Operating Mode” in the Index for information on driving to a safe place in an emergency.

Notice: **If your engine catches fire because you keep driving with no coolant, your vehicle can be badly damaged. The costly repairs would not be covered by your warranty. See “Overheated Engine Protection Operating Mode” in the Index for information on driving to a safe place in an emergency.**

If No Steam Is Coming From Your Engine

If you get an engine overheat warning but see or hear no steam, the problem may not be too serious. Sometimes the engine can get a little too hot when you:

- Climb a long hill on a hot day
- Stop after high-speed driving
- Idle for long periods in traffic
- Tow a trailer

If you get the overheat warning with no sign of steam, try this for a minute or so:

1. If your air conditioner is on, turn it off.
2. Turn on your heater to full hot at the highest fan speed and open the window as necessary.
3. If you're in a traffic jam, shift to NEUTRAL (N); otherwise, shift to the highest gear while driving – AUTOMATIC OVERDRIVE (D).

If you no longer have the overheat warning, you can drive. Just to be safe, drive slower for about 10 minutes. If the warning doesn't come back on, you can drive normally.

If the warning continues, pull over, stop, and park your vehicle right away.

If there's still no sign of steam, idle the engine for three minutes while you're parked. If you still have the warning, *turn off the engine and get everyone out of the vehicle* until it cools down. Also, see "Overheated Engine Protection Operating Mode" listed previously in this section.

You may decide not to lift the hood but to get service help right away.

Cooling System

When you decide it is safe to lift the hood, here's what you will see:

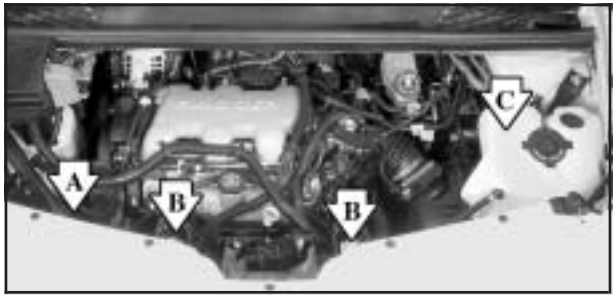

A. Radiator Pressure Cap
B. Electric Engine Cooling Fans
C. Coolant Recovery Tank

⚠ CAUTION:

An electric engine cooling fan under the hood can start up even when the engine is not running and can injure you. Keep hands, clothing and tools away from any underhood electric fan.

If the coolant inside the coolant recovery tank is boiling, do not do anything else until it cools down. The vehicle should be parked on a level surface.

The coolant level should be at or above the full cold mark. If it is not, you may have a leak at the pressure cap or in the radiator hoses, heater hoses, radiator, water pump or somewhere else in the cooling system.

⚠ CAUTION:

Heater and radiator hoses, and other engine parts, can be very hot. Do not touch them. If you do, you can be burned.

Do not run the engine if there is a leak. If you run the engine, it could lose all coolant. That could cause an engine fire, and you could be burned. Get any leak fixed before you drive the vehicle.

If there seems to be no leak, with the engine on, check to see if the electric engine cooling fans are running. If the engine is overheating, both fans should be running. If they are not, your vehicle needs service.

Notice: **Engine damage from running your engine without coolant isn't covered by your warranty. See "Overheated Engine Protection Operating Mode" in the Index for information on driving to a safe place in an emergency.**

Notice: **Using coolant other than DEX-COOL® may cause premature engine, heater core or radiator corrosion. In addition, the engine coolant may require changing sooner, at 30,000 miles (50 000 km) or 24 months, whichever occurs first. Any repairs would not be covered by your warranty. Always use DEX-COOL®(silicate-free) coolant in your vehicle.**

How to Add Coolant to the Coolant Recovery Tank

If you have not found a problem yet, but the coolant level is not at or above the full cold mark, add a 50/50 mixture of *clean, drinkable water* and DEX-COOL® engine coolant at the coolant recovery tank. See *Engine Coolant on page 5-23* for more information.

⚠ CAUTION:

Adding only plain water to your cooling system can be dangerous. Plain water, or some other liquid such as alcohol, can boil before the proper coolant mixture will. Your vehicle's coolant warning system is set for the proper coolant mixture. With plain water or the wrong mixture, your engine could get too hot but you would not get the overheat warning. Your engine could catch fire and you or others could be burned. Use a 50/50 mixture of clean, drinkable water and DEX-COOL® coolant.

Notice: **In cold weather, water can freeze and crack the engine, radiator, heater core and other parts. Use the recommended coolant and the proper coolant mixture.**

⚠ CAUTION:

You can be burned if you spill coolant on hot engine parts. Coolant contains ethylene glycol and it will burn if the engine parts are hot enough. Do not spill coolant on a hot engine.

When the coolant in the coolant recovery tank is at or above the full cold mark, start your vehicle.

If the overheat warning continues, there is one more thing you can try. You can add the proper coolant mixture directly to the radiator, but be sure the cooling system is cool before you do it.

⚠ CAUTION:

Steam and scalding liquids from a hot cooling system can blow out and burn you badly. They are under pressure, and if you turn the radiator pressure cap — even a little — they can come out at high speed. Never turn the cap when the cooling system, including the radiator pressure cap, is hot. Wait for the cooling system and radiator pressure cap to cool if you ever have to turn the pressure cap.

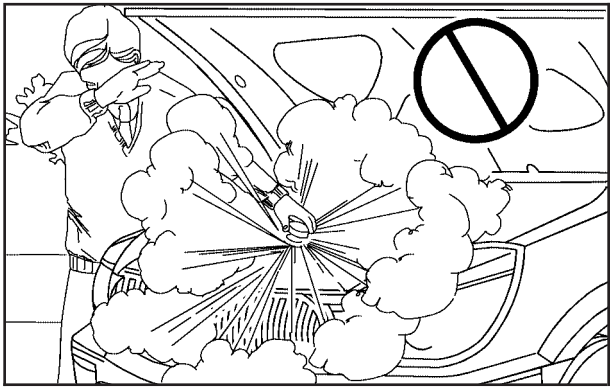

How to Add Coolant to the Radiator

Notice: **Your engine has a specific radiator fill procedure. Failure to follow this procedure could cause your engine to overheat and be severely damaged.**

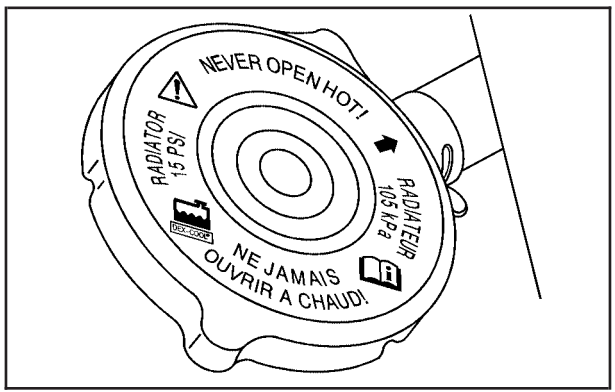

1. You can remove the radiator pressure cap when the cooling system, including the radiator pressure cap and upper radiator hose, is no longer hot. Turn the pressure cap slowly counterclockwise until it first stops. Do not press down while turning the pressure cap.

   If you hear a hiss, wait for that to stop. A hiss means there is still some pressure left.

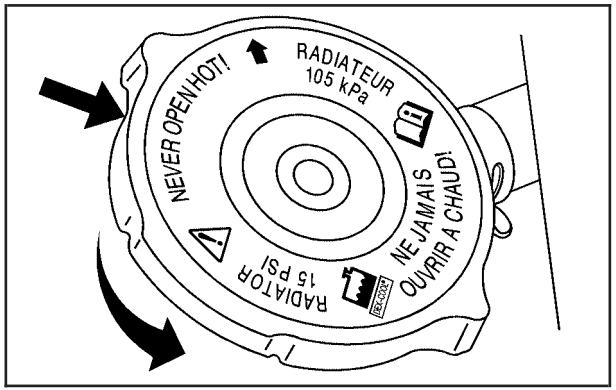

2. Then keep turning the pressure cap, but now push down as you turn it. Remove the pressure cap.

⚠ CAUTION:

You can be burned if you spill coolant on hot engine parts. Coolant contains ethylene glycol and it will burn if the engine parts are hot enough. Do not spill coolant on a hot engine.

Housing

Bypass Tube

3. After the engine cools, open the coolant air bleed valves.

   There are two bleed valves. One is located on the thermostat housing. The other is located on the thermostat bypass tube.

4. Fill the radiator with the proper DEX-COOL® coolant mixture, up to the base of the filler neck. See *Engine Coolant on page 5-23* for more information about the proper coolant mixture.

   If you see a stream of coolant coming from an air bleed valve, close the valve. Otherwise, close the valves after the radiator is filled.

5. Rinse or wipe any spilled coolant from the engine and the compartment.

6. Start the engine and let it run until you can feel the upper radiator hose getting hot. Watch out for the engine cooling fans.
7. By this time, the coolant level inside the radiator filler neck may be lower. If the level is lower, add more of the proper DEX-COOL® coolant mixture through the filler neck until the level reaches the base of the filler neck.

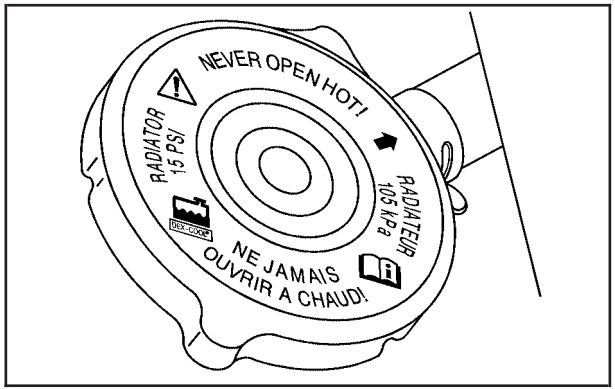

8. Then replace the pressure cap. At any time during this procedure if coolant begins to flow out of the filler neck, reinstall the pressure cap. Be sure the arrows on the pressure cap line up like this.

9. Then fill the coolant recovery tank to the FULL COLD mark.
10. Put the cap back on the coolant recovery tank.

Power Steering Fluid

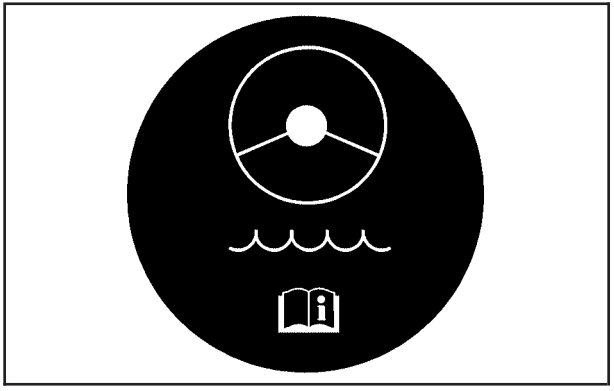

The power steering fluid reservoir is located to the right of the windshield washer fluid reservoir, at the back of the engine compartment.

When to Check Power Steering Fluid

It is not necessary to regularly check power steering fluid unless you suspect there is a leak in the system or you hear an unusual noise. A fluid loss in this system could indicate a problem. Have the system inspected and repaired. See *Engine Compartment Overview on page 5-12* for reservoir location.

How to Check Power Steering Fluid

To check the power steering fluid, do the following:

1. Turn the engine off and let the engine compartment cool down.
2. Wipe the cap and the top of the reservoir clean, and then unscrew the cap.
3. Wipe the dipstick with a clean rag, then remove the cap again and look at the fluid level on the dipstick.
4. Replace the cap and completely tighten it.

When the engine compartment is hot, the level should be at the H (hot) mark. When it is cold, the level should be at the C (cold) mark. If the fluid is at the ADD mark, you should add fluid.

What Power Steering Fluid to Use

To determine what kind of fluid to use, see *Recommended Fluids and Lubricants on page 6-12*. Always use the proper fluid. Failure to use the proper fluid can cause leaks and damage hoses and seals.

Windshield Washer Fluid

What Washer Fluid to Use

When you need windshield washer fluid, be sure to read the manufacturer's instructions before use. If you will be operating your vehicle in an area where the temperature may fall below freezing, use a fluid that has sufficient protection against freezing. See *Engine Compartment Overview on page 5-12* for reservoir location.

Adding Washer Fluid

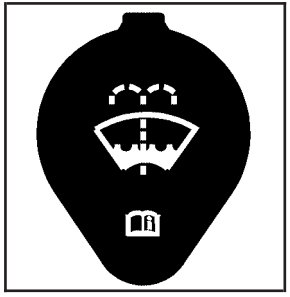

Open the cap with the washer symbol on it. Add washer fluid until the tank is full.

Notice:

- **When using concentrated washer fluid, follow the manufacturer's instructions for adding water.**
- **Don't mix water with ready-to-use washer fluid. Water can cause the solution to freeze and damage your washer fluid tank and other parts of the washer system. Also, water doesn't clean as well as washer fluid.**
- **Fill your washer fluid tank only three-quarters full when it's very cold. This allows for expansion if freezing occurs, which could damage the tank if it is completely full.**
- **Don't use engine coolant (antifreeze) in your windshield washer. It can damage your washer system and paint.**

Brakes

Brake Fluid

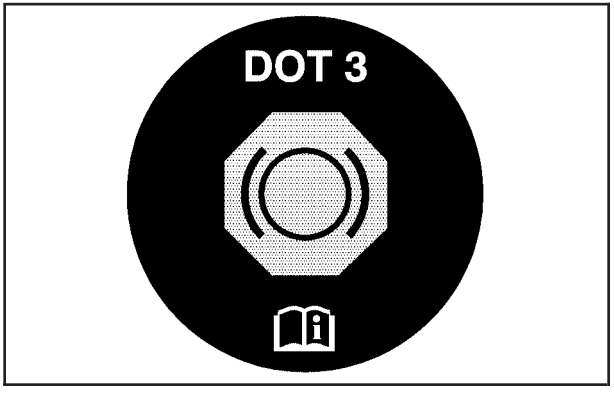

Your brake master cylinder reservoir is filled with DOT-3 brake fluid. See *Engine Compartment Overview on page 5-12* for the location of the reservoir.

There are only two reasons why the brake fluid level in the reservoir might go down. The first is that the brake fluid goes down to an acceptable level during normal brake lining wear. When new linings are put in, the fluid level goes back up. The other reason is that fluid is leaking out of the brake system. If it is, you should have your brake system fixed since a leak means that sooner or later your brakes will not work well, or will not work at all.

So, it is not a good idea to “top off” your brake fluid. Adding brake fluid will not correct a leak. If you add fluid when your linings are worn, then you will have too much fluid when you get new brake linings. You should add (or remove) brake fluid, as necessary, only when work is done on the brake hydraulic system.

⚠ CAUTION:

If you have too much brake fluid, it can spill on the engine. The fluid will burn if the engine is hot enough. You or others could be burned, and your vehicle could be damaged. Add brake fluid only when work is done on the brake hydraulic system.

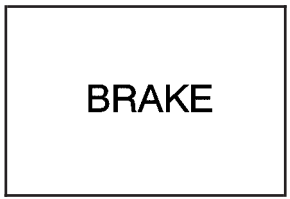

United States

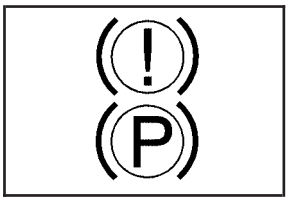

Canada

When your brake fluid falls to a low level, your brake warning light will come on. See *Brake System Warning Light on page 3-44*.

What to Add

When you do need brake fluid, use only DOT-3 brake fluid. Use new brake fluid from a sealed container only. See *Recommended Fluids and Lubricants on page 6-12*.

Always clean the brake fluid reservoir cap and the area around the cap before removing it. This will help keep dirt from entering the reservoir.

⚠ CAUTION:

With the wrong kind of fluid in your brake system, your brakes may not work well, or they may not even work at all. This could cause a crash. Always use the proper brake fluid.

Notice:

- **Using the wrong fluid can badly damage brake system parts. For example, just a few drops of mineral-based oil, such as engine oil, in your brake system can damage brake system parts so badly that they will have to be replaced. Do not let someone put in the wrong kind of fluid.**
- **If you spill brake fluid on your vehicle's painted surfaces, the paint finish can be damaged. Be careful not to spill brake fluid on your vehicle. If you do, wash it off immediately. See *Appearance Care on page 5-99*.**

Brake Wear

Your vehicle has four-wheel disc brakes.

Disc brake pads have built-in wear indicators that make a high-pitched warning sound when the brake pads are worn and new pads are needed. The sound may come and go or be heard all the time your vehicle is moving (except when you are pushing on the brake pedal firmly).

⚠ CAUTION:

The brake wear warning sound means that soon your brakes will not work well. That could lead to an accident. When you hear the brake wear warning sound, have your vehicle serviced.

Notice: **Continuing to drive with worn-out brake pads could result in costly brake repair.**

Some driving conditions or climates may cause a brake squeal when the brakes are first applied or lightly applied. This does not mean something is wrong with your brakes.

Properly torqued wheel nuts are necessary to help prevent brake pulsation. When tires are rotated, inspect brake pads for wear and evenly tighten wheel nuts in the proper sequence to GM torque specifications.

Brake linings should always be replaced as complete axle sets.

Brake Pedal Travel

See your dealer if the brake pedal does not return to normal height, or if there is a rapid increase in pedal travel. This could be a sign of brake trouble.

Brake Adjustment

Every time you apply the brakes, with or without the vehicle moving, your brakes adjust for wear.

Replacing Brake System Parts

The braking system on a vehicle is complex. Its many parts have to be of top quality and work well together if the vehicle is to have really good braking. Your vehicle was designed and tested with top-quality GM brake parts. When you replace parts of your braking system — for example, when your brake linings wear down and you need new ones put in — be sure you get new approved GM replacement parts. If you do not, your brakes may no longer work properly. For example, if someone puts in brake linings that are wrong for your vehicle, the balance between your front and rear brakes can change — for the worse. The braking performance you have come to expect can change in many other ways if someone puts in the wrong replacement brake parts.

Battery

Your new vehicle comes with a maintenance free ACDelco® battery. When it is time for a new battery, get one that has the replacement number shown on the original battery's label. We recommend an ACDelco® battery. See *Engine Compartment Overview on page 5-12* for battery location.

Warning: Battery posts, terminals and related accessories contain lead and lead compounds, chemicals known to the State of California to cause cancer and reproductive harm. Wash hands after handling.

Vehicle Storage

If you are not going to drive your vehicle for 25 days or more, remove the black, negative (–) cable from the battery. This will help keep your battery from running down.

⚠ CAUTION:

Batteries have acid that can burn you and gas that can explode. You can be badly hurt if you are not careful. See *Jump Starting on page 5-43* for tips on working around a battery without getting hurt.

Contact your dealer to learn how to prepare your vehicle for longer storage periods.

Also, for your audio system, see *Theft-Deterrent Feature on page 3-128*.

Jump Starting

If your battery has run down, you may want to use another vehicle and some jumper cables to start your vehicle. Be sure to follow the steps below to do it safely.

⚠ CAUTION:

Batteries can hurt you. They can be dangerous because:

- **They contain acid that can burn you.**
- **They contain gas that can explode or ignite.**
- **They contain enough electricity to burn you.**

If you do not follow these steps exactly, some or all of these things can hurt you.

Notice: **Ignoring these steps could result in costly damage to your vehicle that wouldn't be covered by your warranty.**

Trying to start your vehicle by pushing or pulling it won't work, and it could damage your vehicle.

1. Check the other vehicle. It must have a 12-volt battery with a negative ground system.

Notice: **If the other vehicle's system is not a 12-volt system with a negative ground, both vehicles can be damaged. Only use vehicles with 12-volt systems with negative grounds to jump start your vehicle.**

2. Get the vehicles close enough so the jumper cables can reach, but be sure the vehicles aren't touching each other. If they are, it could cause a ground connection you don't want. You wouldn't be able to start your vehicle, and the bad grounding could damage the electrical systems.

   To avoid the possibility of the vehicles rolling, set the parking brake firmly on both vehicles involved in the jump starting procedure. Put an automatic transaxle in PARK (P) or a manual transaxle in NEUTRAL before setting the parking brake.

Notice: **If you leave your radio or other accessories on during the jump starting procedure, they could be damaged. The repairs would not be covered by your warranty. Always turn off your radio and other accessories when jump starting your vehicle.**

3. Turn off the ignition on both vehicles. Unplug unnecessary accessories plugged into the cigarette lighter or in the accessory power outlet(s). Turn off the radios and all lamps that aren't needed. This will avoid sparks and help save both batteries. And it could save your radio!

4. Open the hoods and locate the batteries. Find the positive (+) and negative (–) terminals on each vehicle.

   You will not need to access your battery for jump starting. Your vehicle has a remote positive (+) jump starting terminal for that purpose. The terminal is located under a tethered cap at the front of the underhood fuse and relay center. See *Engine Compartment Overview on page 5-12* for more information on location.

   Flip the cap up to access the remote positive (+) terminal. You should always use the remote positive (+) terminal instead of the positive (+) terminal on the battery.

⚠ CAUTION:

An electric fan can start up even when the engine is not running and can injure you. Keep hands, clothing and tools away from any underhood electric fan.

⚠ CAUTION:

Using a match near a battery can cause battery gas to explode. People have been hurt doing this, and some have been blinded. Use a flashlight if you need more light.

Be sure the battery has enough water. You do not need to add water to the ACDelco® battery installed in your new vehicle. But if a battery has filler caps, be sure the right amount of fluid is there. If it is low, add water to take care of that first. If you do not, explosive gas could be present.

Battery fluid contains acid that can burn you. Do not get it on you. If you accidentally get it in your eyes or on your skin, flush the place with water and get medical help immediately.

⚠ CAUTION:

Fans or other moving engine parts can injure you badly. Keep your hands away from moving parts once the engine is running.

5. Check that the jumper cables don't have loose or missing insulation. If they do, you could get a shock. The vehicles could be damaged too.

   Before you connect the cables, here are some basic things you should know. Positive (+) will go to positive (+) or to a remote positive (+) terminal if the vehicle has one. Negative (–) will go to a heavy, unpainted metal engine part or to a remote negative (–) terminal if the vehicle has one.

   Don't connect positive (+) to negative (–) or you'll get a short that would damage the battery and maybe other parts too. And don't connect the negative (–) cable to the negative (–) terminal on the dead battery because this can cause sparks.

6. Connect the red positive (+) cable to the positive (+) terminal of the dead battery. Use a remote positive (+) terminal if the vehicle has one.

7. Don't let the other end touch metal. Connect it to the positive (+) terminal of the good battery. Use a remote positive (+) terminal if the vehicle has one.

8. Now connect the black negative (–) cable to the negative (–) terminal of the good battery. Use a remote negative (–) terminal if the vehicle has one.

   Don't let the other end touch anything until the next step. The other end of the negative (–) cable *doesn't* go to the dead battery. It goes to a heavy, unpainted metal engine part or to a remote negative (–) terminal on the vehicle with the dead battery.

9. Connect the other end of the negative (–) cable at least 18 inches (45 cm) away from the dead battery, but not near engine parts that move. The electrical connection is just as good there, and the chance of sparks getting back to the battery is much less.

10. Now start the vehicle with the good battery and run the engine for a while.

11. Try to start the vehicle that had the dead battery. If it won't start after a few tries, it probably needs service.

Notice: **If the jumper cables are removed in the wrong order, electrical shorting may occur and damage the vehicle. The repairs would not be covered by your warranty. Remove the jumper cables in the correct order, making sure that the cables do not touch each other or other metal.**

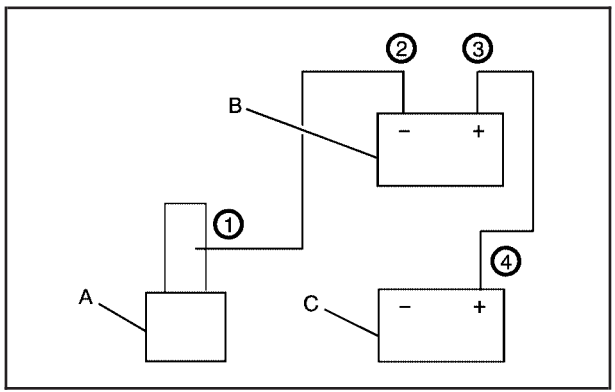

Jumper Cable Removal

A. Heavy, Unpainted Metal Engine Part or Remote Negative (–) Terminal

B. Good Battery or Remote Positive (+) and Remote Negative (–) Terminals

C. Dead Battery or Remote Positive (+) Terminal

To disconnect the jumper cables from both vehicles, do the following:

1. Disconnect the black negative (–) cable from the vehicle that had the dead battery.
2. Disconnect the black negative (–) cable from the vehicle with the good battery.
3. Disconnect the red positive (+) cable from the vehicle with the good battery.
4. Disconnect the red positive (+) cable from the other vehicle.
5. Return the remote positive (+) terminal cover to its original position.

All-Wheel Drive

If you have an all-wheel-drive vehicle, be sure to perform the lubricant checks described in this section. However, they have two additional systems that need lubrication.

Transfer Case (Power Transfer Unit)

When to Check Lubricant

Refer to the Maintenance Schedule to determine how often to check the lubricant. See *Scheduled Maintenance on page 6-4*.

How to Check Lubricant

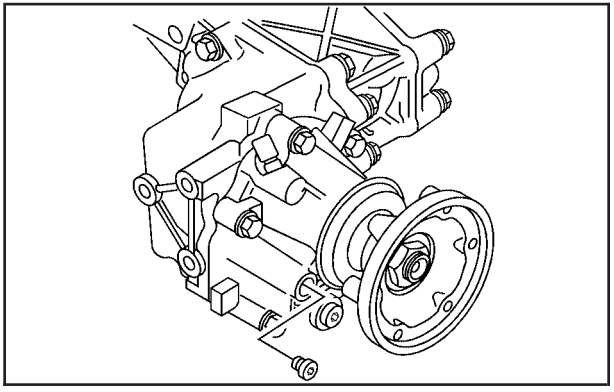

To get an accurate reading, the vehicle should be on a level surface.

If the level is below the bottom of the filler plug hole, you'll need to add some lubricant. Add enough lubricant to raise the level to the bottom of the filler plug hole.

What to Use

Refer to the Maintenance Schedule to determine what kind of lubricant to use. See *Recommended Fluids and Lubricants on page 6-12*.

Carrier Assembly-Differential (Rear Drive Module)

When to Check and Change Lubricant

Refer to the Maintenance Schedule to determine how often to check the lubricant and when to change it. See *Scheduled Maintenance on page 6-4*.

How to Check Lubricant

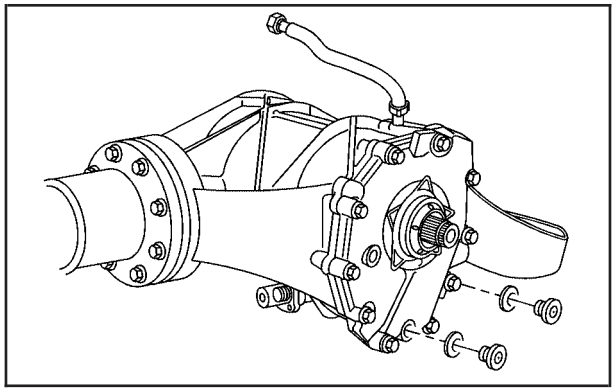

To get an accurate reading, the vehicle should be on a level surface.

If the level is below the bottom of the filler plug hole, you'll need to add some lubricant. Add enough lubricant to raise the level to the bottom of the filler plug hole. A fluid loss could indicate a problem; check and have it repaired, if needed.

What to Use

Refer to the Maintenance Schedule to determine what kind of lubricant to use. See *Recommended Fluids and Lubricants on page 6-12*.

Bulb Replacement

For the type of bulbs, see *Replacement Bulbs on page 5-54*.

For any bulb changing procedure not listed in this section, contact your dealer.

Halogen Bulbs

⚠ CAUTION:

Halogen bulbs have pressurized gas inside and can burst if you drop or scratch the bulb. You or others could be injured. Be sure to read and follow the instructions on the bulb package.

Headlamps

1. Open the hood.

2. Push in on the headlamp panel and lift up the headlamp retaining clip partway, but do not remove.
3. Undo the wing stud on the upper, outboard side of the lamp assembly.
4. Unsnap the headlamp assembly by pulling it forward, away from the vehicle.
5. Disconnect the electrical connector by pulling back on the locking tab, located on the electrical connector, to separate the two connectors.

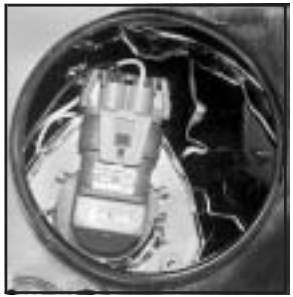

6. Turn the bulb socket one-quarter of a turn clockwise.

7. Pull the bulb assembly out from the lamp housing.

8. Unhook the electrical connector by lifting up the gray tabs and separate the connector from the bulb base.
9. Install the new bulb into the electrical connector. Push the bulb firmly enough so that the gray tabs hook over the tab on the bulb.

10. Put the bulb assembly back into the lamp housing and turn the bulb socket one-quarter of a turn counterclockwise.
11. Align the retaining clips on the back of the headlamp with the rectangular holes in the mounting panel.
12. Push firmly on both ends of the headlamp to snap it into position.
13. Push the retaining clip down to its original position.
14. Reinstall the wing stud.

Front Turn Signal, Sidemarker and Parking Lamps

To replace the front turn signal, parking or sidemarker lamp bulbs, follow the headlamp bulb replacement procedure and replace the appropriate bulb.

Taillamps, Turn Signal, and Stoplamps

1. Open the liftgate.

2. Remove the two screws on the inboard taillamp panel.
3. Pull the lamp directly rearward from the vehicle.
4. Turn the bulb socket one-quarter of a turn counterclockwise.
5. Pull the bulb assembly out from the lamp housing.
6. Unhook the electrical connector by lifting up the tabs and separate the connector from the bulb base.

7. Install the new bulb into the electrical connector. Push the bulb firmly enough so that the tabs hook over the tab on the bulb.
8. Put the bulb assembly back into the lamp housing and turn the bulb socket one-quarter of a turn clockwise.
9. Reinstall the lamp to its pocket by lining up the mounting pin and pushing forward to set the position.
10. Reinstall the screws removed in Step 2.
11. Close the liftgate.

Taillamps and Back-Up Lamps

This procedure is for the liftgate-mounted taillamps and back-up lamps.

1. Open the liftgate.
2. Remove the panel inside the liftgate by lifting the tabs and pulling the panel off.

3. Remove the seven wing nuts and the four outboard nuts (two at each end).
4. Gently lower the liftgate.
5. Pull the lamp applique directly rearward from the vehicle.

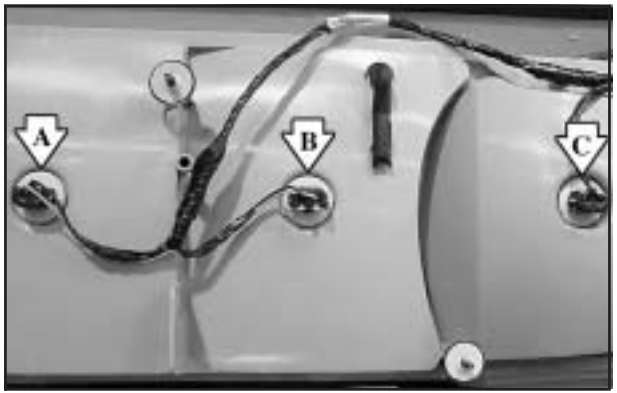

A. Outboard Taillamp
B. Center Taillamp
C. Inboard Back-Up Lamp

6. Turn the bulb socket one-quarter of a turn counterclockwise.
7. Pull the bulb assembly out from the lamp housing.
8. Pull the bulb out of the base.
9. Install the new bulb into the electrical connector. Push the bulb firmly enough so that the tabs hook over the tab on the bulb.
10. Put the bulb assembly back into the lamp housing and turn the bulb socket one-quarter of a turn clockwise.
11. Replace the applique on the liftgate.
12. Gently lift the liftgate.
13. Reinstall the seven wing nuts and the four outboard nuts.
14. Reinstall the panel inside the liftgate by connecting the tabs.
15. Close the liftgate.

Replacement Bulbs

For any bulb not listed here contact your dealer.

Lamp	Bulb Number
Front Turn Signal/Parking Lamps	3457K
Headlamps High-Beam	9005
Headlamps Low-Beam	9006
Liftgate-Mounted Back-Up Lamps	921
Liftgate-Mounted Taillamps	161
Rear Outboard Stop/Tail/Turn	3057K
Sidemarker Lamps	168

Windshield Wiper Blade Replacement

Windshield wiper blades should be inspected at least twice a year for wear or cracking. See “Wiper Blade Check” under *Owner Checks and Services on page 6-8* for more information.

Replacement blades come in different types and are removed in different ways. For proper type and length, see *Normal Maintenance Replacement Parts on page 6-13*.

Here’s how to replace the windshield wiper blades:

1. Turn the wipers on to the lowest intermittent setting.
2. Turn off the ignition while the wipers are at the outer positions of the wipe pattern. The blades are more accessible for removal/replacement while in this position.
3. Pull the windshield wiper arm away from the windshield.

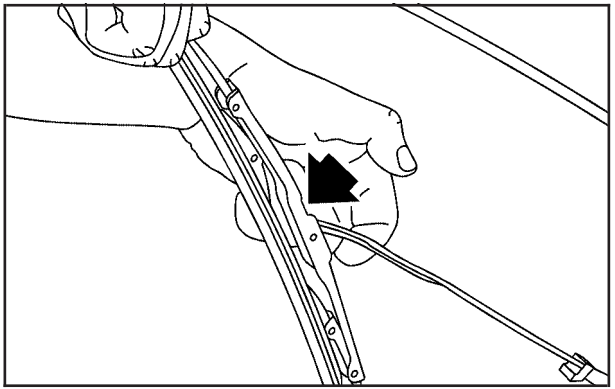

4. Pull up the release clip, located at the connecting point of the blade and the arm. Then, pull the blade assembly down toward the glass to remove it from the wiper arm.

5. Push the new wiper blade securely on the wiper arm until you hear the release clip “click” into place.
6. Push the release clip, from Step 4, down to secure the wiper blade into place.

To replace the backglass mounted wiper blade, do the following:

1. Turn the rear wiper off.
2. Pull the wiper away from the backglass.
3. Pull up the release clip, located at the connecting point of the blade and the arm. Then, pull the blade assembly down toward the glass to remove it from the wiper arm.
4. Push the new wiper blade securely on the wiper arm until you hear the release clip “click” into place.
5. Push the release clip, from Step 3, down to secure the wiper blade into place.

Tires

Your new vehicle comes with high-quality tires made by a leading tire manufacturer. If you ever have questions about your tire warranty and where to obtain service, see your GM Warranty booklet for details. For additional information refer to the tire manufacturer's booklet included with your vehicle's Owner's Manual.

⚠ CAUTION:

Poorly maintained and improperly used tires are dangerous.

- **Overloading your tires can cause overheating as a result of too much friction. You could have an air-out and a serious accident. See "Loading Your Vehicle" in the Index.**

CAUTION: (Continued)

CAUTION: (Continued)

- **Underinflated tires pose the same danger as overloaded tires. The resulting accident could cause serious injury. Check all tires frequently to maintain the recommended pressure. Tire pressure should be checked when your tires are cold.**
- **Overinflated tires are more likely to be cut, punctured or broken by a sudden impact — such as when you hit a pothole. Keep tires at the recommended pressure.**
- **Worn, old tires can cause accidents. If your tread is badly worn, or if your tires have been damaged, replace them.**

Tire Sidewall Labeling

Useful information about a tire is molded into it's sidewall. The examples below show a typical passenger car tire and a compact spare tire sidewall.

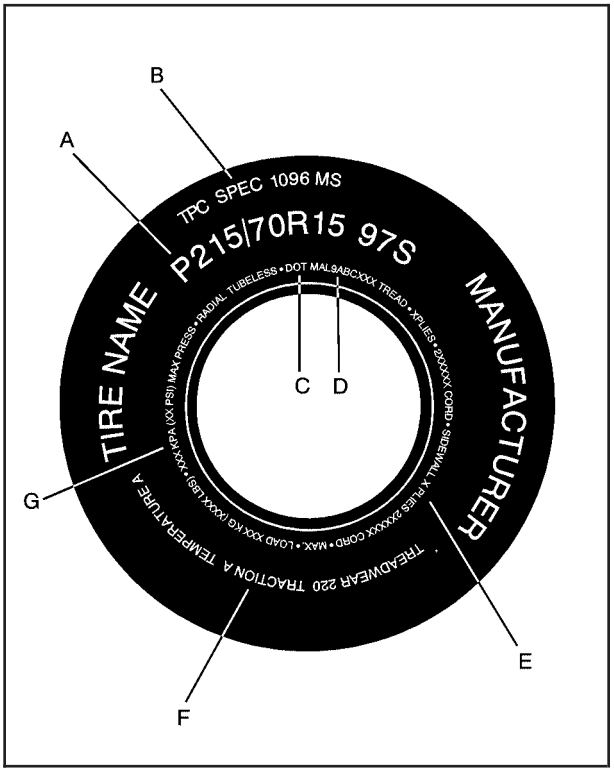

Passenger Car Tire Example

(A) Tire Size: The tire size code is a combination of letters and numbers used to define a particular tire's width, height, aspect ratio, construction type and service description. See the "Tire Size" illustration later in this section for more detail.

(B) Tire Performance Criteria Specification (TPC Spec): Original equipment tires designed to GM's specific tire performance criteria have a TPC specification code molded onto the sidewall. GM's TPC specifications meet or exceed all federal safety guidelines.

(C) Department of Transportation (DOT): The Department of Transportation (DOT) code indicates that the tire is in compliance with the U.S. Department of Transportation Motor Vehicle Safety Standards.

(D) Tire Identification Number (TIN): The letters and numbers following DOT code are the Tire Identification Number (TIN). The TIN shows the manufacturer and plant code, tire size, and date the tire was manufactured. The TIN is molded onto both sides of the tire, although only one side may have the date of manufacture.

(E) Tire Ply Material: The type of cord and number of plies in the sidewall and under the tread.

(F) Uniform Tire Quality Grading (UTQG): Tire manufacturers are required to grade tires based on three performance factors: treadwear, traction and temperature resistance. For more information see *Uniform Tire Quality Grading on page 5-71*.

(G) Maximum Cold Inflation Load Limit: Maximum load that can be carried and the maximum pressure needed to support that load. For more information on recommended tire pressure see *Inflation - Tire Pressure on page 5-64* and *Loading Your Vehicle on page 4-36*.

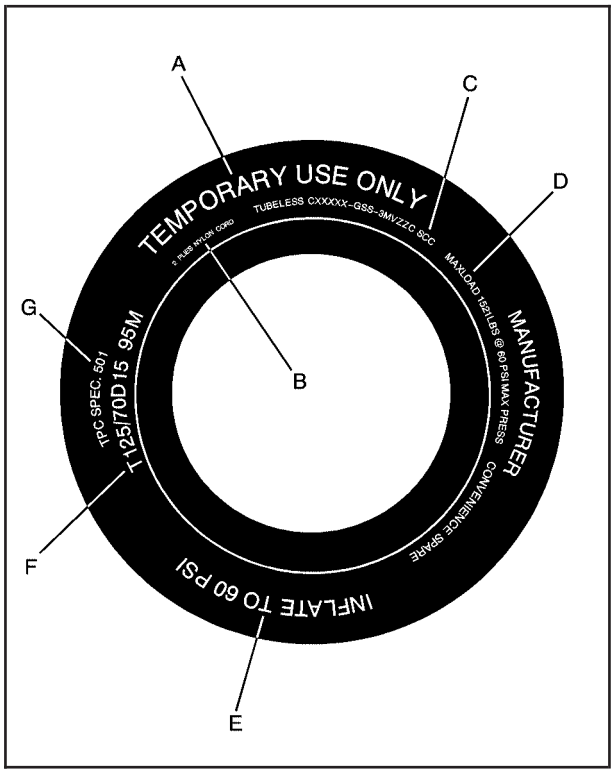

Compact Spare Tire Example

(A) Temporary Use Only: The compact spare tire or temporary use tire has a tread life of approximately 3,000 miles (5 000 km) and should not be driven at speeds over 65 mph (105 km/h). The compact spare tire is for emergency use when a regular road tire has lost air and gone flat. See *Compact Spare Tire on page 5-98* and *If a Tire Goes Flat on page 5-76*.

(B) Tire Ply Material: The type of cord and number of plies in the sidewall and under the tread.

(C) Tire Identification Number (TIN): The Tire Identification Number (TIN). The TIN shows the manufacturer and plant code, tire size, and date the tire was manufactured. The TIN is molded onto both sides of the tire, although only one side may have the date of manufacture.

(D) Maximum Cold Inflation Load Limit: Maximum load that can be carried and the maximum pressure needed to support that load. See *Compact Spare Tire on page 5-98* and *Loading Your Vehicle on page 4-36*.

(E) Tire Inflation: The temporary use tire or compact spare tire should be inflated to 60 psi (420 kPa). For more information on tire pressure and inflation see *Inflation - Tire Pressure on page 5-64*.

(F) Tire Size: A combination of letters and numbers define a tire's width, height, aspect ratio, construction type and service description. The letter "T" as the first character in the tire size means the tire is for temporary use only.

(G) Tire Performance Criteria Specification (TPC Spec): Original equipment tires designed to GM's specific tire performance criteria have a TPC specification code molded onto the sidewall. GM's TPC specifications meet or exceed all federal safety guidelines.

Tire Size

The following illustration shows an example of a typical passenger car tire size.

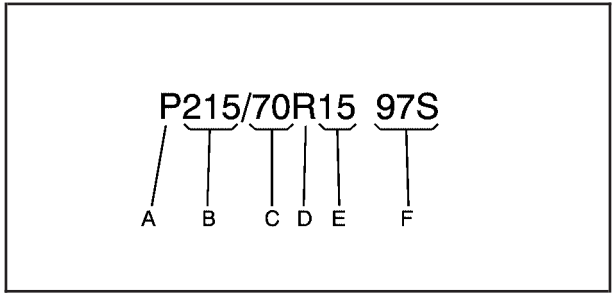

(A) P-Metric Tire: The United States version of a metric tire sizing system. The letter "P" as the first character in the tire size means a passenger vehicle tire engineered to standards set by the U. S. Tire and Rim Association.

(B) Tire Width: The three-digit number indicates the tire section width in millimeters from sidewall to sidewall.

(C) Aspect Ratio: A two-digit number that indicates the tire height-to-width measurements. For example, if the tire size aspect ratio is "70," as shown in item "C" of the illustration, it would mean that the tire's sidewall is 70% as high as it is wide.

(D) Construction Code: A letter code is used to indicate the type of ply construction in the tire. The letter "R" means radial ply construction; the letter "D" means diagonal or bias ply construction; and the letter "B" means belted-bias ply construction.

(E) Rim Diameter: Diameter of the wheel in inches.

(F) Service Description: These characters represent the load range and the speed rating of a tire. The load range represents the load carrying capacity a tire is certified to carry. The load index can range from 1 to 279. The speed rating is the maximum speed a tire is certified to carry a load. Speed ratings range from "A" to "Z".

Tire Terminology and Definitions

Air Pressure: The amount of air inside the tire pressing outward on each square inch of the tire. Air pressure is expressed in pounds per square inch (psi) or kilopascal (kPa).

Accessory Weight: This means the combined weight of optional accessories. Some examples of optional accessories are, automatic transmission, power steering, power brakes, power windows, power seats, and air conditioning.

Aspect Ratio: The relationship of a tire's height to its width.

Belt: A rubber coated layer of cords that is located between the plies and the tread. Cords may be made from steel or other reinforcing materials.

Bead: The tire bead contains steel wires wrapped by steel cords that hold the tire onto the rim.

Bias Ply Tire: A pneumatic tire in which the plies are laid at alternate angles substantially less than 90 degrees to the centerline of the tread.

Cold Inflation Pressure: The amount of air pressure in a tire, measured in pounds per square inch (psi) before a tire has built up heat from driving. See *Inflation - Tire Pressure on page 5-64*.

Curb Weight: This means the weight of a motor vehicle with standard and optional equipment including the maximum capacity of fuel, oil and coolant, but without passengers and cargo.

DOT Markings: A code molded into the sidewall of a tire signifying that the tire is in compliance with the U.S. Department of Transportation motor vehicle safety standards. The DOT code includes the Tire Identification Number (TIN), an alphanumeric designator which can also identify the tire manufacturer, production plant, brand and date of production.

GVWR: Gross Vehicle Weight Rating, see *Loading Your Vehicle on page 4-36*.

GAWR FRT: Gross Axle Weight Rating for the front axle, see *Loading Your Vehicle on page 4-36*.

GAWR RR: Gross Axle Weight Rating for the rear axle, see *Loading Your Vehicle on page 4-36*.

Intended Outboard Sidewall: The side of an asymmetrical tire that must always face outward when mounted on a vehicle.

Kilopascal (kPa): The metric unit for air pressure. There are 6.9 kPa's to one psi.

Light Truck (LT-Metric) Tire: A tire used on light duty trucks and some multipurpose passenger vehicles.

Load Index: An assigned number ranging from 1 to 279 that corresponds to the load carrying capacity of a tire.

Maximum Inflation Pressure: The maximum air pressure to which a cold tire may be inflated. The maximum air pressure is molded onto the sidewall.

Maximum Load Rating: The load rating for a tire at the maximum permissible inflation pressure for that tire.

Maximum Loaded Vehicle Weight: The sum of curb weight; accessory weight; vehicle capacity weight; and production options weight.

Normal Occupant Weight: The number of occupants a vehicle is designed to seat multiplied by 150 pounds (68 kg). See *Loading Your Vehicle on page 4-36*.

Occupant Distribution: Designated seating positions.

Outward Facing Sidewall: The side of a asymmetrical tire that has a particular side that faces outward when mounted on a vehicle. The side of the tire that contains a whitewall, bears white lettering or bears manufacturer, brand and or model name molding that is higher or deeper than the same moldings on the other sidewall of the tire.

Passenger (P-Metric) Tire: A tire used on passenger cars and some light duty trucks and multipurpose vehicles.

Recommended Inflation Pressure: Vehicle manufacturer's recommended tire inflation pressure and shown on the tire placard. See *Inflation - Tire Pressure on page 5-64* and *Loading Your Vehicle on page 4-36*.

Radial Ply tire: A pneumatic tire in which the ply cords that extend to the beads are laid at 90 degrees to the centerline of the tread.

Rim: A metal support for a tire and upon which the tire beads are seated.

Sidewall: The portion of a tire between the tread and the bead.

Speed Rating: An alphanumeric code assigned to a tire indicating the maximum speed at which a tire can operate.

Traction: The friction between the tire and the road surface. The amount of grip provided.

Tread: The portion of a tire that comes into contact with the road.

Treadwear Indicators: Narrow bands, sometimes called "wear bars," that show across the tread of a tire when only 2/32 inch of tread remains. See *When It Is Time for New Tires on page 5-69*.

UTQGS: Uniform Tire Quality Grading Standards, a tire information system that provides consumers with ratings for a tire's traction, temperature and treadwear. Ratings are determined by tire manufacturers using government testing procedures. The ratings are molded into the sidewall of the tire. See *Uniform Tire Quality Grading on page 5-71*.

Vehicle Capacity Weight: The number of designated seating positions multiplied by 150 lbs. (68 kg) plus the rated cargo load. See *Loading Your Vehicle on page 4-36*.

Vehicle Maximum Load on the Tire: Load on an individual tire due to curb weight, accessory weight, occupant weight and cargo weight.

Vehicle Placard: A label permanently attached to a vehicle showing the original equipment tire size and recommended inflation pressure. See *Loading Your Vehicle on page 4-36*.

Inflation - Tire Pressure

The tire and loading information label, shows the correct inflation pressures for your tires when they're cold. "Cold" means your vehicle has been sitting for at least three hours or driven no more than 1 mile (1.6 km). See *Loading Your Vehicle on page 4-36*, for the location of your vehicle's tire and loading information label.

Notice: **Don't let anyone tell you that underinflation or overinflation is all right. It's not. If your tires don't have enough air (underinflation), you can get the following:**

- **Too much flexing**
- **Too much heat**
- **Tire overloading**
- **Bad wear**
- **Bad handling**
- **Bad fuel economy**

If your tires have too much air (overinflation), you can get the following:

- **Unusual wear**
- **Bad handling**
- **Rough ride**
- **Needless damage from road hazards**

When to Check

Check your tires once a month or more.

Don't forget your compact spare tire. It should be at 60 psi (420 kPa).

How to Check

Use a good quality pocket-type gage to check tire pressure. You can't tell if your tires are properly inflated simply by looking at them. Radial tires may look properly inflated even when they're underinflated. Check the tire's inflation pressure when the tires are cold. Cold means your vehicle has been sitting for at least three hours or driven no more than 1 mile (1.6 km).

Remove the valve cap from the tire valve stem. Press the tire gage firmly onto the valve to get a pressure measurement. If the cold tire inflation pressure matches the recommended pressure on the Tire and Loading Information label, no further adjustment is necessary. If the inflation pressure is low, add air until you reach the recommended amount.

If you overfill the tire, release air by pushing on the metal stem in the center of the tire valve. Recheck the tire pressure with the tire gage.

Be sure to put the valve caps back on the valve stems. They help prevent leaks by keeping out dirt and moisture.

Check Tire Pressure System

Your vehicle may have a check tire pressure system that can alert you to a large change in the pressure of one tire. The system won't alert you before you drive that a tire is low or flat. You must begin driving before the system will work properly.

The LOW TIRE PRESSURE HOLD SET TO RESET message will appear on the Driver Information Center (DIC) and the LOW TIRE PRESSURE message will come on the message center if pressure difference, or low pressure, is detected in one tire. In the following conditions, the LOW TIRE PRESSURE message may not come on even if the tire pressure is low, or it may come on when the tire pressure is actually normal:

- More than one tire is low
- Only one tire is replaced with a new tire during service
- The vehicle is moving faster than 70 mph (113 km/h)
- The system is not yet calibrated
- The tire treadwear is uneven
- The compact spare tire is installed
- Tire chains are being used
- The vehicle is being driven on a rough or frozen road

If the anti-lock brake system warning light comes on, the check tire pressure system may not be working properly. See your dealer for service. Also, see *Anti-Lock Brake System Warning Light on page 3-45*.

The check tire pressure system detects differences in tire rotation speeds that are caused by changes in tire pressure. The system can alert you about a low tire – but it does not replace normal tire maintenance. See *Tires on page 5-57*.

When the LOW TIRE PRESSURE HOLD SET TO RESET message appears on the Driver Information Center and the LOW TIRE PRESSURE message comes on the message center, you should stop as soon as you can and check all your tires for damage. If a tire is flat, see *If a Tire Goes Flat on page 5-76*. Also check the tire pressure in all four tires as soon as you can. See *Inflation - Tire Pressure on page 5-64*.

Any time you adjust a tire's pressure or have one or more tires repaired or replaced, you'll need to reset, or calibrate, the check tire pressure system. You'll also need to reset the system whenever you rotate the tires, buy new tires and install or remove the compact spare.

Do not reset the check tire pressure system without first correcting the cause of the problem and checking and adjusting the pressure in all four tires. If you reset the system when the tire pressures are incorrect, the check tire pressure system will not work properly and may not alert you when a tire is low or high.

To reset the system, do the following:

1. With the engine off, turn the ignition to ON.
2. Press the MODE button until the DIC reads LOW TIRE PRESSURE HOLD SET TO RESET.
3. Press and hold the SET button until you hear a chime, and TIRE PRESSURE RESET is displayed.

You will hear three chimes, then the LOW TIRE PRESSURE message will go off and the DIC will return to TIRE PRESSURE NORMAL. If the LOW TIRE PRESSURE message comes back on, the check tire pressure system has not reset. Repeat the procedure.

The system completes the calibration process during driving. The system learns the pressure at each tire throughout the operating speed range of your vehicle. The system normally takes between 30 and 60 minutes of driving to learn the tire pressures. The system normally takes 10 to 20 minutes of driving in each speed range to learn tire pressures. The speed ranges are 20 to 40 mph (32 to 64 km/h), 40 to 60 mph (64 to 96 km/h), and above 60 mph (96 km/h). This time may be longer depending on your individual driving habits. The learning process does not need to be completed during a single trip. Once learned, the system will remember the tire pressure until the system is reset.

Tire Inspection and Rotation

Tires should be rotated every 5,000 to 8,000 miles (8 000 to 13 000 km).

Any time you notice unusual wear, rotate your tires as soon as possible and check wheel alignment. Also check for damaged tires or wheels. See *When It Is Time for New Tires on page 5-69* and *Wheel Replacement on page 5-72* for more information.

Make sure the spare tire is stored securely. Push, pull, and then try to rotate or turn the tire, If it moves, use the folding wrench to tighten the cable. See “Storing a Flat or Spare Tire and Tools” in *Changing a Flat Tire on page 5-77*.

The purpose of regular rotation is to achieve more uniform wear for all tires on the vehicle. The first rotation is the most important. See *Scheduled Maintenance on page 6-4*, for scheduled rotation intervals.

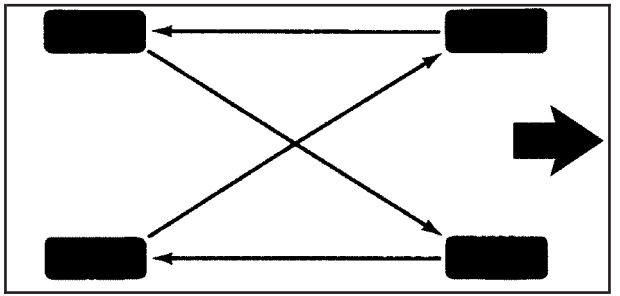

When rotating your tires, always use the correct rotation pattern shown here.

Don't include the compact spare tire in your tire rotation.

After the tires have been rotated, adjust the front and rear inflation pressures as shown on the Certification/Tire label or the Tire and Loading Information label.

Reset the check tire pressure system, if equipped. See *Check Tire Pressure System on page 5-65*.

Make certain that all wheel nuts are properly tightened. See "Wheel Nut Torque" under *Capacities and Specifications on page 5-115*.

⚠ CAUTION:

Rust or dirt on a wheel, or on the parts to which it is fastened, can make wheel nuts become loose after a time. The wheel could come off and cause an accident. When you change a wheel, remove any rust or dirt from places where the wheel attaches to the vehicle. In an emergency, you can use a cloth or a paper towel to do this; but be sure to use a scraper or wire brush later, if you need to, to get all the rust or dirt off. See "Changing a Flat Tire" in the Index.

When It Is Time for New Tires

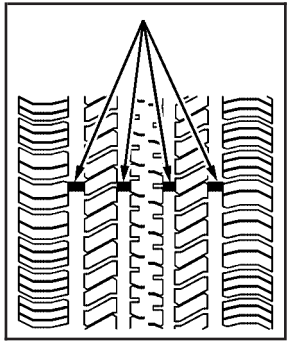

One way to tell when it's time for new tires is to check the treadwear indicators, which will appear when your tires have only 1/16 inch (1.6 mm) or less of tread remaining.

You need a new tire if any of the following statements are true:

- You can see the indicators at three or more places around the tire.
- You can see cord or fabric showing through the tire's rubber.
- The tread or sidewall is cracked, cut or snagged deep enough to show cord or fabric.
- The tire has a bump, bulge or split.
- The tire has a puncture, cut or other damage that can't be repaired well because of the size or location of the damage.

Buying New Tires

To find out what kind and size of tires you need, look at the tire and loading information label. For an example of this label and its location, see *Loading Your Vehicle on page 4-36*.

The tires installed on your vehicle when it was new had a Tire Performance Criteria Specification (TPC Spec) number on each tire's sidewall. When you get new tires, get ones with that same TPC Spec number. That way your vehicle will continue to have tires that are designed to give proper endurance, handling, speed rating, load range, traction, ride and other things during normal service on your vehicle. If your tires have an all-season tread design, the TPC number will be followed by an "MS" (for mud and snow).

If you ever replace your tires with those not having a TPC Spec number, make sure they are the same size, load range, speed rating and construction type (bias, bias-belted or radial) as your original tires.

⚠ CAUTION:

Mixing tires could cause you to lose control while driving. If you mix tires of different sizes or types (radial and bias-belted tires), the vehicle may not handle properly, and you could have a crash. Using tires of different sizes may also cause damage to your vehicle. Be sure to use the same size and type tires on all wheels. It's all right to drive with your compact spare temporarily, it was developed for use on your vehicle. See "Compact Spare Tire" in the index.

⚠ CAUTION:

If you use bias-ply tires on your vehicle, the wheel rim flanges could develop cracks after many miles of driving. A tire and/or wheel could fail suddenly, causing a crash. Use only radial-ply tires with the wheels on your vehicle.

Uniform Tire Quality Grading

Quality grades can be found where applicable on the tire sidewall between tread shoulder and maximum section width. For example:

Treadwear 200 Traction AA Temperature A

The following information relates to the system developed by the United States National Highway Traffic Safety Administration, which grades tires by treadwear, traction and temperature performance. (This applies only to vehicles sold in the United States.) The grades are molded on the sidewalls of most passenger car tires. The Uniform Tire Quality Grading system does not apply to deep tread, winter-type snow tires, space-saver or temporary use spare tires, tires with nominal rim diameters of 10 to 12 inches (25 to 30 cm), or to some limited-production tires.

While the tires available on General Motors passenger cars and light trucks may vary with respect to these grades, they must also conform to federal safety requirements and additional General Motors Tire Performance Criteria (TPC) standards.

Treadwear

The treadwear grade is a comparative rating based on the wear rate of the tire when tested under controlled conditions on a specified government test course. For example, a tire graded 150 would wear one and a half (1.5) times as well on the government course as a tire graded 100. The relative performance of tires depends upon the actual conditions of their use, however, and may depart significantly from the norm due to variations in driving habits, service practices and differences in road characteristics and climate.

Traction – AA, A, B, C

The traction grades, from highest to lowest, are AA, A, B, and C. Those grades represent the tire's ability to stop on wet pavement as measured under controlled conditions on specified government test surfaces of asphalt and concrete. A tire marked C may have poor traction performance. Warning: The traction grade assigned to this tire is based on straight-ahead braking traction tests, and does not include acceleration, cornering, hydroplaning, or peak traction characteristics.

Temperature – A, B, C

The temperature grades are A (the highest), B, and C, representing the tire's resistance to the generation of heat and its ability to dissipate heat when tested under controlled conditions on a specified indoor laboratory test wheel. Sustained high temperature can cause the material of the tire to degenerate and reduce tire life, and excessive temperature can lead to sudden tire failure. The grade C corresponds to a level of performance which all passenger car tires must meet under the Federal Motor Vehicle Safety Standard No. 109. Grades B and A represent higher levels of performance on the laboratory test wheel than the minimum required by law.

Warning: The temperature grade for this tire is established for a tire that is properly inflated and not overloaded. Excessive speed, underinflation, or excessive loading, either separately or in combination, can cause heat buildup and possible tire failure.

Wheel Alignment and Tire Balance

The wheels on your vehicle were aligned and balanced carefully at the factory to give you the longest tire life and best overall performance.

Scheduled wheel alignment and wheel balancing are not needed. However, if you notice unusual tire wear or your vehicle pulling one way or the other, the alignment may need to be reset. If you notice your vehicle vibrating when driving on a smooth road, your wheels may need to be rebalanced.

Wheel Replacement

Replace any wheel that is bent, cracked or badly rusted or corroded. If wheel nuts keep coming loose, the wheel, wheel bolts and wheel nuts should be replaced. If the wheel leaks air, replace it (except some aluminum wheels, which can sometimes be repaired). See your dealer if any of these conditions exist.

Your dealer will know the kind of wheel you need.

Each new wheel should have the same load-carrying capacity, diameter, width, offset and be mounted the same way as the one it replaces.

If you need to replace any of your wheels, wheel bolts or wheel nuts, replace them only with new GM original equipment parts. This way, you will be sure to have the right wheel, wheel bolts and wheel nuts for your vehicle.

⚠ CAUTION:

Using the wrong replacement wheels, wheel bolts or wheel nuts on your vehicle can be dangerous. It could affect the braking and handling of your vehicle, make your tires lose air and make you lose control. You could have a collision in which you or others could be injured. Always use the correct wheel, wheel bolts and wheel nuts for replacement.

Notice: **The wrong wheel can also cause problems with bearing life, brake cooling, speedometer or odometer calibration, headlamp aim, bumper height, vehicle ground clearance and tire or tire chain clearance to the body and chassis.**

See *Changing a Flat Tire on page 5-77* for more information.

Used Replacement Wheels

⚠ CAUTION:

Putting a used wheel on your vehicle is dangerous. You can't know how it's been used or how far it's been driven. It could fail suddenly and cause a crash. If you have to replace a wheel, use a new GM original equipment wheel.

Tire Chains

⚠ CAUTION:

Don't use tire chains. There's not enough clearance. Tire chains used on a vehicle without the proper amount of clearance can cause damage to the brakes, suspension or other vehicle parts. The area damaged by the tire chains could cause you to lose control of your vehicle and you or others may be injured in a crash. Use another type of traction device only if its manufacturer recommends it for use on your vehicle and tire size combination and road conditions. Follow that manufacturer's instructions. To help avoid damage to your vehicle, drive slowly, readjust or remove the device if it's contacting your vehicle, and don't spin your wheels. If you do find traction devices that will fit, install them on the front tires for front-wheel-drive vehicles. If your vehicle has all-wheel drive, install traction devices on either the front tires or all four tires, but never on the rear tires only

Accessory Inflator

Your vehicle may have an accessory inflator. With it, you can inflate things like air mattresses and basketballs, and you can also use it to bring your tires up to the proper pressure.

The accessory inflator is located in the rear compartment on the driver's side. To remove the cover, pull the tab on the cover and pull it off.

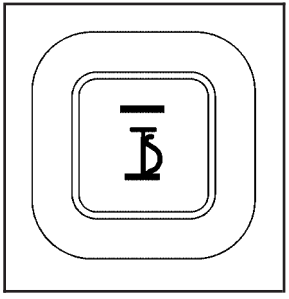

This is the symbol on the accessory inflator switch.

There may be an accessory inflator kit stored in the glove box. It includes a 20-foot (6 m) hose with an air pressure gage and nozzle adapters.

⚠ CAUTION:

Inflating something too much can make it explode, and you or others could be injured. Be sure to read the inflator instructions, and inflate any object only to its recommended pressure.

To use your accessory inflator system, do the following:

1. Turn the ignition to ACCESSORY or ON.
2. Attach the appropriate nozzle adapter, if required, to the end of the hose that has the pressure gage.
3. Attach that end of the hose to the object you wish to inflate.
4. Remove the protective cap covering the outlet.
5. Attach the other end of the hose to the outlet.
6. Press the accessory inflator switch. The light in the switch will come on to show the system is working.

If the accessory inflator system does not turn on or the light does not come on, the fuse may be blown or installed incorrectly. See *Fuses and Circuit Breakers on page 5-109* or see your dealer for service.

Your accessory inflator will automatically shut off after about 10 minutes. The light in the switch will blink. After about one minute you can use the system again. Press the inflator switch and the indicator light will come on.

Notice: **If you run the accessory inflator longer than 30 minutes at a time, you could damage the inflator. The repairs would not be covered by your warranty. Run the inflator for short periods of time only.**

After running the accessory inflator for 30 minutes, wait at least 10 minutes before restarting the accessory inflator.

To turn off the inflator, do the following:

1. Press the switch and detach the hose, first from the inflated object, then from the outlet.
2. Put the protective cap back on.
3. Place the inflator kit tools in the pouch, and store in the glove box.

To put the cover back on, line up the tabs at the back of the cover and put it in place. Push down the tab to secure the cover.

If a Tire Goes Flat

It's unusual for a tire to "blowout" while you're driving, especially if you maintain your tires properly. If air goes out of a tire, it's much more likely to leak out slowly. But if you should ever have a "blowout," here are a few tips about what to expect and what to do:

If a front tire fails, the flat tire will create a drag that pulls the vehicle toward that side. Take your foot off the accelerator pedal and grip the steering wheel firmly. Steer to maintain lane position, and then gently brake to a stop well out of the traffic lane.

A rear blowout, particularly on a curve, acts much like a skid and may require the same correction you'd use in a skid. In any rear blowout, remove your foot from the accelerator pedal. Get the vehicle under control by steering the way you want the vehicle to go. It may be very bumpy and noisy, but you can still steer. Gently brake to a stop, well off the road if possible.

⚠ CAUTION:

Lifting a vehicle and getting under it to do maintenance or repairs is dangerous without the appropriate safety equipment and training. The jack provided with your vehicle is designed only for changing a flat tire. If it is used for anything else, you or others could be badly injured or killed if the vehicle slips off the jack. Use the jack provided with your vehicle only for changing a flat tire.

If a tire goes flat, the next part shows how to use your jacking equipment to change a flat tire safely.

Changing a Flat Tire

If a tire goes flat, avoid further tire and wheel damage by driving slowly to a level place. Turn on your hazard warning flashers.

⚠ CAUTION:

Changing a tire can cause an injury. The vehicle can slip off the jack and roll over you or other people. You and they could be badly injured. Find a level place to change your tire. To help prevent the vehicle from moving:

1. **Set the parking brake firmly.**
2. **Put the shift lever in PARK (P).**
3. **Turn off the engine.**

To be even more certain the vehicle won't move, you can put blocks at the front and rear of the tire farthest away from the one being changed. That would be the tire on the other side of the vehicle, at the opposite end.

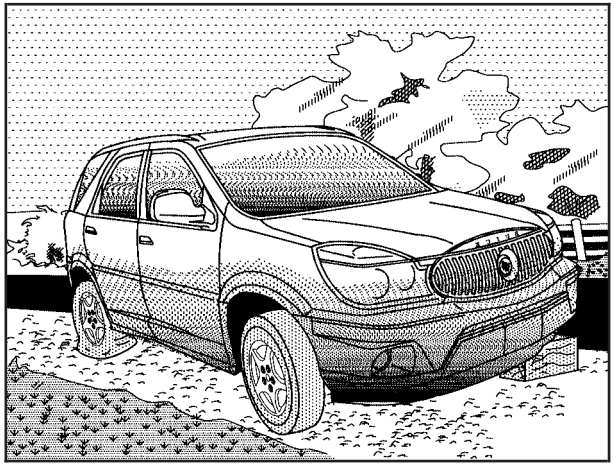

The following steps will tell you how to use the jack and change a tire.

Removing the Spare Tire and Tools

The equipment you will need is located in the storage compartment on the passenger's side, at the rear of the vehicle.

1. Open the jack storage compartment by lifting up the tab and pulling the cover off.

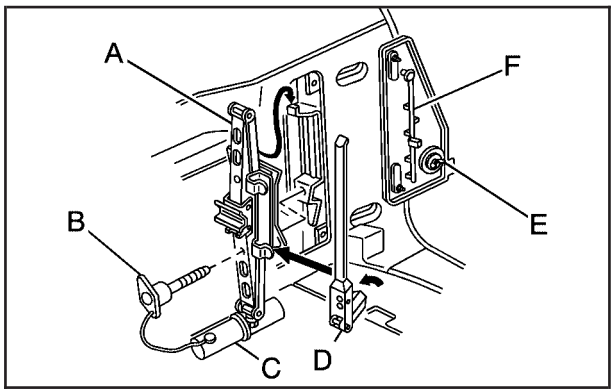

A. Jack
B. Wing Bolt
C. Jacking Instructions
D. Folding Wrench
E. Wing Nut
F. J-Hook

2. Remove the jack and jacking tools by turning the wing bolt counterclockwise.
3. Separate the jack by lifting up the jack from the bracket tab and remove the folding wrench from the jack.

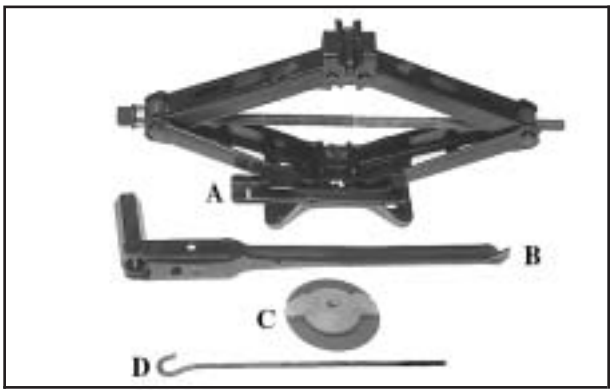

The tools you will be using include the jack (A), folding wrench (B), wing nut (C), and J-hook (D).

Removing the Spare Tire (Vehicles without the Rear Convenience Center)

The compact spare tire is located under the vehicle, behind the rear bumper. Use the spare tire hoist to raise, lower and store the compact spare tire. See *Compact Spare Tire on page 5-98* for more information about the compact spare.

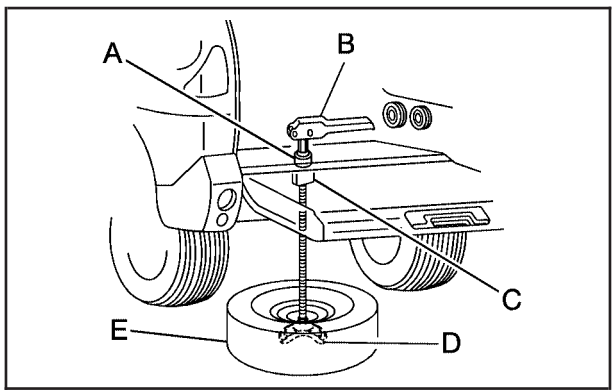

A. Hoist Shaft
B. Folding Wrench
C. Hoist Assembly
D. Retainer
E. Compact Spare Tire

1. Flip the rear cargo area carpet cut out to expose the hoist shaft.
2. Attach the folding wrench into the hoist shaft.
3. Turn the folding wrench counterclockwise to lower the spare tire to the ground. Continue turning the wrench until the spare tire can be pulled out from under the vehicle.

4. To remove the spare tire from the cable, tilt the retainer and slip it through the wheel opening.

5. After removing the spare tire, turn the wrench clockwise to raise the cable back up.

   Do not store a full-size or a flat road tire under the vehicle. See “Storing a Flat or Spare Tire and Tools” later in this section.

To continue changing the flat tire see “Removing the Flat Tire and Installing the Spare Tire” later in this section.

If the spare tire will not lower, the secondary latch may be engaged causing the tire not to lower.

Do the following to check the cable:

1. Check under the vehicle to see if the cable is visible.
2. If it is not visible, see “Secondary Latch System” later in this section.

   If it is visible, first try to tighten the cable by turning the folding wrench clockwise until you hear two clicks or feel it skip twice. You cannot over-tighten the cable.
3. Then loosen the cable by turning the wrench counterclockwise three or four turns.
4. If the spare tire has not lowered, tighten the cable all the way and then loosen it at least two times.

   If the spare tire did lower to the ground, continue with Step 4 under “Removing the Spare Tire (Vehicles without the Rear Convenience Center)” earlier in this section.
5. If you still cannot lower the spare tire to the ground, see “Secondary Latch System” later in this section.

Removing the Spare Tire (Vehicles with the Rear Convenience Center)

The compact spare tire is located under the vehicle, ahead of the rear bumper. See *Compact Spare Tire on page 5-98* for more information about the compact spare.

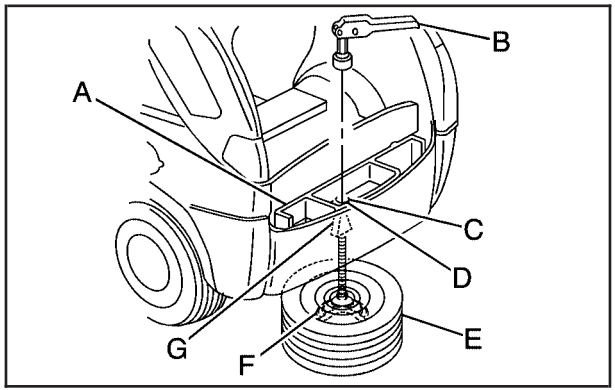

A. Rear Convenience Center
B. Folding Wrench
C. Storage Compartment Cap Hole
D. Hoist Shaft
E. Compact Spare Tire
F. Retainer
G. Hoist Shaft Assembly

1. Open the storage compartment door of the convenience center that is nearest the liftgate and remove the cap on the bottom of the storage compartment.
2. Flip the cut out carpet that is located through the hole of the storage compartment.

3. Attach the folding wrench into the hoist shaft.
4. Turn the folding wrench counterclockwise to lower the spare tire to the ground. Continue turning the wrench until the spare tire can be pulled out from under the vehicle.

5. To remove the spare tire from the cable, tilt the retainer and slip it through the wheel opening.
6. After removing the spare tire, turn the wrench clockwise to raise the cable back up.

   Do not store a full-size or a flat road tire under the vehicle. See “Storing a Flat or Spare Tire and Tools” later in this section.

To continue changing the flat tire see “Removing the Flat Tire and Installing the Spare Tire” later in this section.

If the spare tire will not lower, the secondary latch may be engaged causing the tire not to lower. Do the following to check the cable:

1. Check under the vehicle to see if the cable is visible.
2. If it is not visible, see “Secondary Latch System” following.

   If it is visible, first try to tighten the cable by turning the folding wrench clockwise until you hear two clicks or feel it skip twice. You cannot over-tighten the cable.
3. Then loosen the cable by turning the wrench counterclockwise three or four turns.
4. If the spare tire has not lowered, tighten the cable all the way and then loosen it at least two times.

   If the spare tire did lower to the ground, continue with Step 5 under “Removing the Spare Tire (Vehicles with the Rear Convenience Center)” earlier in this section.
5. If you still cannot lower the spare tire to the ground, see “Secondary Latch System” following.

Secondary Latch System

Your vehicle has an underbody mounted tire hoist assembly equipped with a secondary latch system. It is designed to stop the compact spare tire from suddenly falling off your vehicle if the cable holding the spare tire is damaged. For the secondary latch to work, the tire must be stowed with the valve stem pointing down. See “Storing the Spare Tire and Tools” later in this section for instructions on storing the spare tire correctly.

⚠ CAUTION:

Before beginning this procedure read all the instructions. Failure to read and follow the instructions could damage the hoist assembly and you and others could get hurt. Read and follow the instructions listed below.

To release the spare tire from the secondary latch, do the following:

⚠ CAUTION:

Someone standing too close during the procedure could be injured by the jack. If the spare tire does not slide off the jack completely, make sure no one is behind you or on either side of you as you pull the jack out from the spare.

1. If the cable is not visible, start this procedure at Step 3.

2. Turn the wrench counterclockwise until approximately 6 inches (15 cm) of cable is exposed.
3. Attach the folding wrench to the jack and raise the jack at least 10 turns.
4. Place the jack under the vehicle, ahead of the rear bumper. Position the center lift point of the jack under the center of the spare tire.

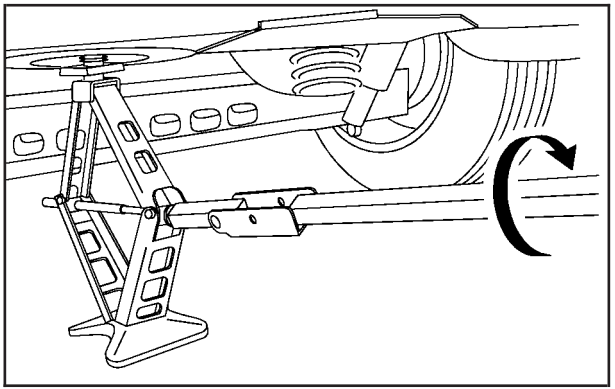

5. Turn the folding wrench clockwise to raise the jack until it lifts the secondary latch spring.
6. Keep raising the jack until the spare tire stops moving upward and is held firmly in place, this lets you know that the secondary latch has released.

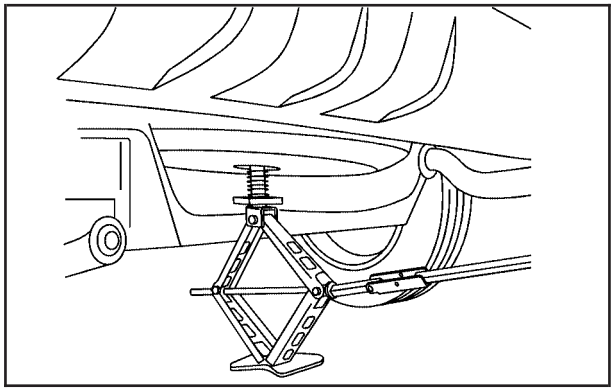

7. Lower the jack by turning the folding wrench counterclockwise. Keep lowering the jack until the spare tire is resting on the folding wrench.

8. Grasp the spare tire with both hands and pull it out from under the vehicle.
9. Reach under the vehicle and remove the folding wrench and jack.
10. When the spare tire has been completely lowered, tilt the retainer and slip it through the wheel opening.
11. If the cable is hanging, turn the wrench clockwise to raise the cable back up.

Have the hoist assembly inspected as soon as you can. You will not be able to store a spare tire using the hoist assembly until it has been repaired or replaced.

Removing the Flat Tire and Installing the Spare Tire

1. If there is a wheel cover, loosen the plastic nut caps with the wheel wrench. They will not come off. Then, using the flat end of the wheel wrench, pry along the edge of the cover until it comes off. Be careful; the edges may be sharp. Do not try to remove the cover with your bare hands.

   If your vehicle has aluminum wheels, remove the wheel nut caps using the wheel wrench.

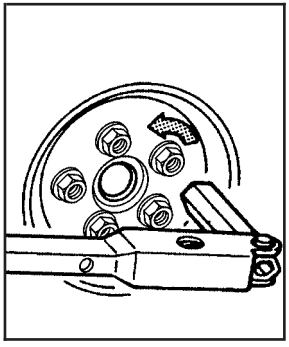

2. Loosen the wheel nuts - but do not remove them - using the folding wrench. Turn the handle about 180 degrees, then flip the handle back to the starting position. This avoids taking the wrench off the lug nut for each turn.

   For wheels with a wheel lock key, use the wheel lock key between the lock nut and folding wrench. The key is supplied in the front passenger door pocket.

Notice: **If your vehicle has wheel locks and you use an impact wrench to remove the wheel nuts, you could damage the lock nut or wheel lock key. Do not use an impact wrench to remove the wheel nuts if your vehicle has wheel locks.**

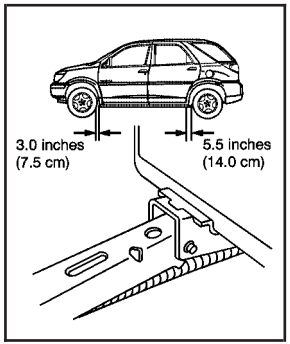

3. Near each wheel, there is a notch in the vehicle's body. Position the jack and raise the jack head until it fits firmly into the notch in the vehicle's frame nearest the flat tire.

Notice: **If you use a jack to raise the vehicle without positioning it correctly, you could damage your vehicle. When raising your vehicle on a jack, avoid contact with the rear axle control arms.**

Do not raise the vehicle yet. Put the compact spare tire near you.

⚠ CAUTION:

Getting under a vehicle when it is jacked up is dangerous. If the vehicle slips off the jack you could be badly injured or killed. Never get under a vehicle when it is supported only by a jack.

⚠ CAUTION:

Raising your vehicle with the jack improperly positioned can damage the vehicle and even make the vehicle fall. To help avoid personal injury and vehicle damage, be sure to fit the jack lift head into the proper location before raising the vehicle.

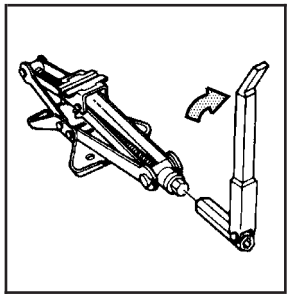

4. Attach the folding wrench to the jack, and turn the wrench clockwise to raise the jack head 3 inches (7.6 cm).

5. Raise the vehicle by turning the folding wrench clockwise in the jack. Raise the vehicle far enough off the ground so that there is enough room for the spare tire to fit under the wheel well.
6. Remove all the wheel nuts and take off the flat tire.

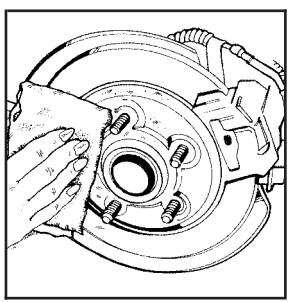

7. Remove any rust or dirt from the wheel bolts, mounting surfaces and spare wheel.

⚠ CAUTION:

Rust or dirt on the wheel, or on the parts to which it is fastened, can make the wheel nuts become loose after a time. The wheel could come off and cause an accident. When you change a wheel, remove any rust or dirt from the places where the wheel attaches to the vehicle. In an emergency, you can use a cloth or a paper towel to do this; but be sure to use a scraper or wire brush later, if you need to, to get all the rust or dirt off.

⚠ CAUTION:

Never use oil or grease on studs or nuts. If you do, the nuts might come loose. Your wheel could fall off, causing a serious accident.

8. Install the spare tire and put the wheel nuts back on with the rounded end of the nuts toward the wheel. Tighten each nut by hand until the wheel is held against the hub.

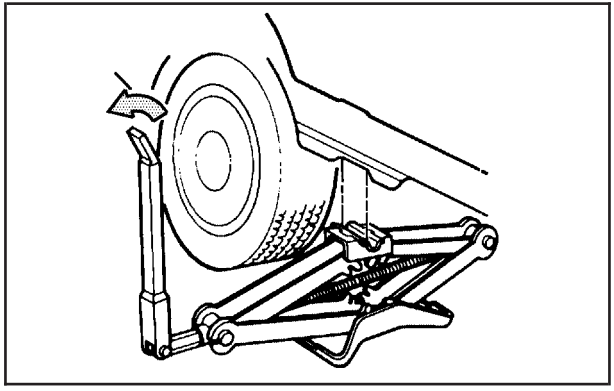

9. Lower the vehicle by attaching the folding wrench to the jack and turning the wrench counterclockwise. Lower the jack completely.

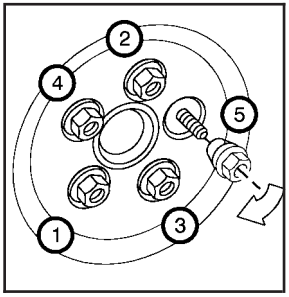

10. Tighten the wheel nuts firmly in a crisscross sequence, as shown.

⚠ CAUTION:

Incorrect wheel nuts or improperly tightened wheel nuts can cause the wheel to become loose and even come off. This could lead to an accident. Be sure to use the correct wheel nuts. If you have to replace them, be sure to get new GM original equipment wheel nuts. Stop somewhere as soon as you can and have the nuts tightened with a torque wrench to 100 lb-ft (140 N•m).

Notice: **Improperly tightened wheel nuts can lead to brake pulsation and rotor damage. To avoid expensive brake repairs, evenly tighten the wheel nuts in the proper sequence and to the proper torque specification.**

11. Do not try to put a wheel cover on the compact spare tire. It will not fit. Store the wheel cover securely in the rear of the vehicle until you have the flat tire repaired or replaced.

Notice: **Wheel covers will not fit on your compact spare. If you try to put a wheel cover on the compact spare, you could damage the cover or the spare.**

Storing a Flat or Spare Tire and Tools

⚠ CAUTION:

Storing a jack, a tire, or other equipment in the passenger compartment of the vehicle could cause injury. In a sudden stop or collision, loose equipment could strike someone. Store all these in the proper place.

⚠ CAUTION:

The underbody-mounted spare tire needs to be stored with the valve stem pointing down. If the spare tire is stored with the valve stem pointing upwards, its secondary latch won't work properly and the spare tire could loosen and suddenly fall from your vehicle. If this happened when your vehicle was being driven, the tire might contact a person or another vehicle, causing injury and, of course, damage to itself as well. Be sure the underbody-mounted spare tire is stored with its valve stem pointing down.

Storing the Spare Tire and Tools

1. Lay the compact spare tire on the ground at the rear of the vehicle. Position the compact spare tire so that the valve stem is pointed down facing the rear of the vehicle.
2. Lower the cable to the ground. See “Removing the Spare Tire (Vehicles without the Rear Convenience Center)” or “Removing the Spare Tire (Vehicles with the Rear Convenience Center)” earlier in this section.
3. Tilt the retainer downward and slip it through the center hole of the spare tire.

   Make sure the retainer is fully seated across the underside of the wheel.
4. Attach the folding wrench to the hoist shaft.
5. Turn the folding wrench clockwise to lift the spare tire.
6. When the tire reaches the stabilizer bar, move the tire over the bar, then continue to turn the folding wrench clockwise to lift the spare tire.
7. When the tire is almost in the stored position, turn the tire so that the valve stem is towards the rear of the vehicle.

   This will help when you check and maintain tire pressure in the spare.
8. Raise the tire fully against the underside of the vehicle. Continue turning the folding wrench until you feel more than two clicks. This indicates that the compact spare tire is secure and the cable is tight. The spare tire hoist cannot be overtightened.

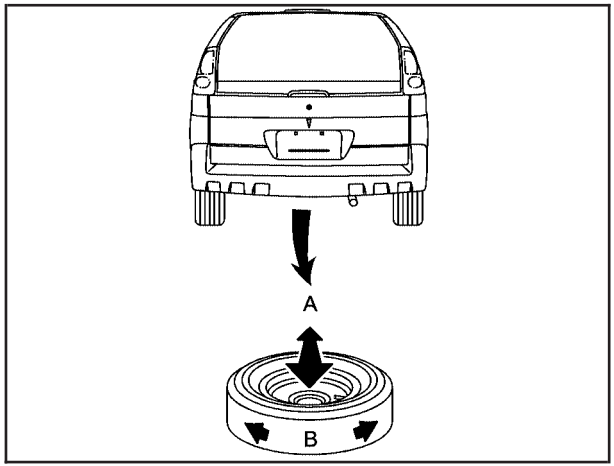

A. Push and Pull
B. Turn Tire

9. Make sure the tire is stored securely. Push, pull, and then try to turn the tire. If the tire moves, use the folding wrench to tighten the cable.

Put back all tools as they were stored in the jack storage compartment and put the compartment cover back on.

To put the cover back on, slip the tabs on the side of the cover into the cover opening. Push the cover in place and push down the tabs on the cover so that it rests in the groove. This secures the cover in place.

When you replace the compact spare with a full-size tire, reinstall the bolt-on wheel covers or the center cap, which ever your vehicle has. Tighten them hand tight over the wheel nuts, using the folding wrench.

Storing the Flat Tire (Vehicles without the Stowable Seat and without the Rear Convenience Center)

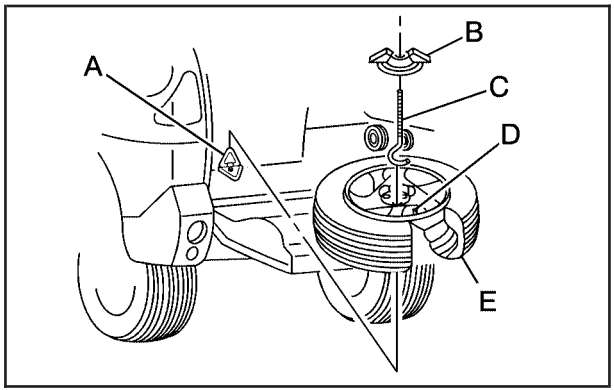

A. D-Ring
B. Wing Nut
C. J-Hook
D. Valve Stem
E. Full-Size Tire

1. Flip up the D-ring located in the rear cargo area.
2. Lay the tire in the rear cargo area of the vehicle with the valve stem up with the center hole of the tire over the D-ring.

   For vehicles with aluminum wheels, remove the center cap by tapping the back of the cap with the folding wrench.
3. Remove the J-hook and the wing nut from the back of the jack access door. Assemble the wing nut and the J-hook.
4. Install the wing nut and the J-hook to the D-ring through the center hole of the tire.
5. Tighten the wing nut to secure the tire to the floor.

   Push and pull on the tire to make sure the tire is secure and does not move.
6. Put back all tools as they were stored in the jack storage compartment and put the compartment cover back on.

   Slip the tabs on the side of the compartment cover into the cover opening. Push the cover in place and push down the tabs on the cover so that it rests in the groove. This secures the cover in place.

Storing the Flat Tire (Vehicles with the Rear Convenience Center)

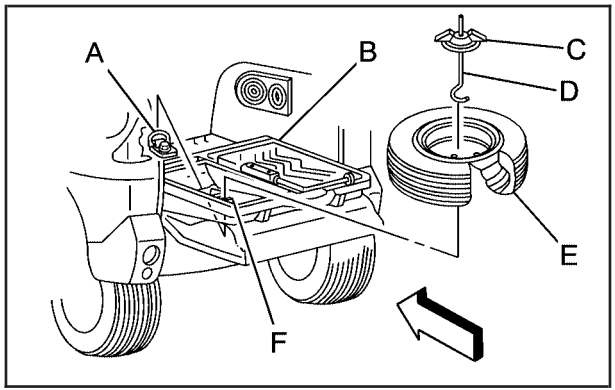

A. D-Ring
B. Rear Convenience Center
C. Wing Nut
D. J-Hook
E. Full-Size Tire
F. Cap on Bottom of Storage Compartment

1. Open the center storage compartment door of the rear convenience center.
2. Remove the cap on the bottom of the storage compartment and flip the D-ring up.
3. Lay the tire on top of the center storage compartment with the valve stem down. Make sure you can see the D-ring through the center hole of the tire.
4. Remove the J-hook and the wing nut from the back of the jack access door. Assemble the wing nut and the J-hook.
5. Install the wing nut and the J-hook to the D-ring through the center hole of the tire.
6. Tighten the wing nut to secure the tire to the floor.

   Push and pull on the tire to make sure the tire is secure and does not move.
7. Put back all tools as they were stored in the jack storage compartment and put the compartment cover back on.

   Slip the tabs on the side of the compartment cover into the cover opening. Push the cover in place and push down the tabs on the cover so that it rests in the groove. This secures the cover in place.

Storing the Flat Tire (Vehicles with the Stowable Seat)

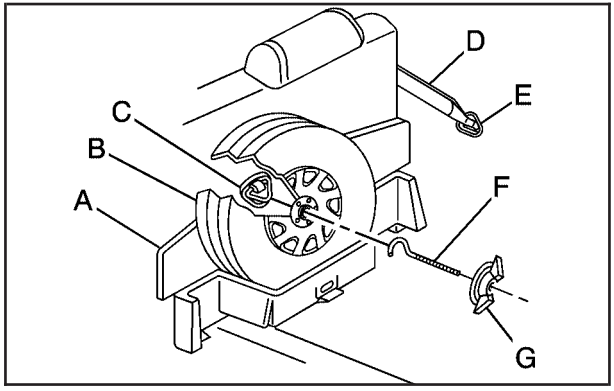

A. Rear Convenience Center
B. Full-Size Tire
C. D-Ring
D. Stowable Seat Strap
E. Cargo Net Hook
F. J-Hook
G. Wing Nut

1. If the seatback is not in an upright position, move it to an upright position.
2. There is a strap attached to each side of the stowable seat. Hook the straps to the cargo net hook in the rear of the vehicle.
3. Flip the D-ring so it is pointing outward.
4. Open the convenience center cover.
5. Stand the full-size tire up, in the tray against the back of the seat with the valve stem pointing out.
6. Remove the J-hook and the wing nut from the back of the jack access door. Assemble the wing nut and the J-hook.
7. Install the wing nut and the J-hook to the D-ring through the center hole of the tire.
8. Tighten the wing nut to secure the tire to the seatback.

   Push and pull on the tire to make sure the tire is secure and does not move.
9. Put back all tools as they were stored in the jack storage compartment and put the compartment cover back on.

   Slip the tabs on the side of the compartment cover into the cover opening. Push the cover in place and push down the tabs on the cover so that it rests in the groove. This secures the cover in place.

Storing the Flat Tire with the Stowable Seatback Folded Flat

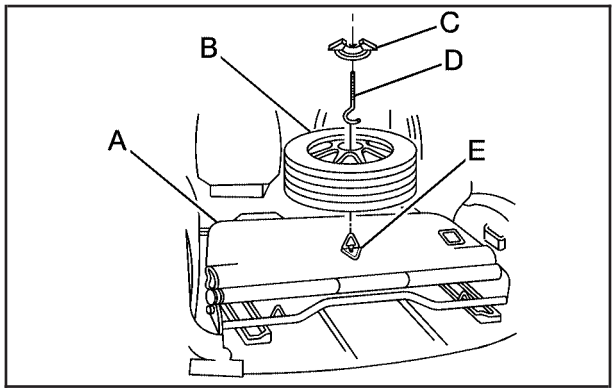

A. Stowable Seat
B. Full-Size Tire
C. Wing Nut
D. J-Hook
E. D-Ring

1. Fold the seatback down and flip the D-ring up.
2. Lay the tire on the seatback with the valve stem pointing up with the center hole of the tire over the D-ring.
3. Remove the J-hook and the wing nut from the back of the jack access door. Assemble the wing nut and the J-hook.
4. Install the wing nut and the J-hook to the D-ring through the center hole of the tire.
5. Tighten the wing nut to secure the tire to the seatback.
6. Push and pull on the tire to make sure the tire is secure and does not move.
7. Put back all tools as they were stored in the jack storage compartment and put the compartment cover back on.

   Slip the tabs on the side of the compartment cover into the cover opening. Push the cover in place and push down the tabs on the cover so that it rests in the groove. This secures the cover in place.

Compact Spare Tire

Although the compact spare tire was fully inflated when your vehicle was new, it can lose air after a time. Check the inflation pressure regularly. It should be 60 psi (420 kPa).

After installing the compact spare on your vehicle, you should stop as soon as possible and make sure your spare tire is correctly inflated. The compact spare is made to perform well at speeds up to 65 mph (105 km/h) for distances up to 3,000 miles (5 000 km), so you can finish your trip and have your full-size tire repaired or replaced where you want. Of course, it's best to replace your spare with a full-size tire as soon as you can. Your spare will last longer and be in good shape in case you need it again.

Notice: **When the compact spare is installed, don't take your vehicle through an automatic car wash with guide rails. The compact spare can get caught on the rails. That can damage the tire and wheel, and maybe other parts of your vehicle.**

Don't use your compact spare on other vehicles.

And don't mix your compact spare tire or wheel with other wheels or tires. They won't fit. Keep your spare tire and its wheel together.

Notice: **Tire chains won't fit your compact spare. Using them can damage your vehicle and can damage the chains too. Don't use tire chains on your compact spare.**

All-Wheel Drive

After installing a compact spare tire on a vehicle with all-wheel drive you will need to drive with light to moderate acceleration, for 10 seconds, in a straight line. This action will allow the vehicle to detect the compact spare tire and disable the all-wheel drive system. The AWD DISABLE message will come on the instrument panel cluster indicating that the all-wheel drive system is off. You may detect a slight pull during this time, but this is normal.

Notice: **You may damage your vehicle's all-wheel drive system if your vehicle is driven for an extended period with a compact spare tire installed and the all-wheel drive system in operation. See "All-Wheel Drive System" and "AWD Disable Warning Message" in the Index for more information.**

Appearance Care

Remember, cleaning products can be hazardous. Some are toxic. Others can burst into flames if you strike a match or get them on a hot part of the vehicle. Some are dangerous if you breathe their fumes in a closed space. When you use anything from a container to clean your vehicle, be sure to follow the manufacturer's warnings and instructions. And always open your doors or windows when you are cleaning the inside.

Never use these to clean your vehicle:

- Gasoline
- Benzene
- Naphtha
- Carbon Tetrachloride
- Acetone
- Paint Thinner
- Turpentine
- Lacquer Thinner
- Nail Polish Remover

They can all be hazardous — some more than others — and they can all damage your vehicle, too.

Do not use any of these unless this manual says you can. In many uses, these will damage your vehicle:

- Alcohol
- Laundry Soap
- Bleach
- Reducing Agents

Cleaning the Inside of Your Vehicle

Use a vacuum cleaner often to get rid of dust and loose dirt. Wipe vinyl, leather, plastic and painted surfaces with a clean, damp cloth.

Cleaning Fabric/Carpet

Your dealer has cleaners for the cleaning of fabric and carpet. They will clean normal spots and stains very well.

You can get GM-approved cleaning products from your dealer. See *Vehicle Care/Appearance Materials on page 5-106*.

Here are some cleaning tips:

- Always read the instructions on the cleaner label.
- Clean up stains as soon as you can — before they set.
- Carefully scrape off any excess stain.
- Use a clean cloth or sponge, and change to a clean area often. A soft brush may be used if stains are stubborn.
- If a ring forms on fabric after spot cleaning, clean the entire area immediately or it will set.

Using Cleaner on Fabric

1. Vacuum and brush the area to remove any loose dirt.
2. Always clean a whole trim panel or section. Mask surrounding trim along stitch or welt lines.
3. Follow the directions on the container label.
4. Apply cleaner with a clean sponge. Do not saturate the material and do not rub it roughly.
5. As soon as you have cleaned the section, use a sponge to remove any excess cleaner.
6. Wipe cleaned area with a clean, water-dampened towel or cloth.
7. Wipe with a clean cloth and let dry.

Special Fabric Cleaning Problems

Stains caused by such things as catsup, coffee (black), egg, fruit, fruit juice, milk, soft drinks, vomit, urine and blood can be removed as follows:

1. Carefully scrape off excess stain, then sponge the soiled area with cool water.
2. If a stain remains, follow the cleaning instructions described earlier.
3. If an odor lingers after cleaning vomit or urine, treat the area with a water and baking soda solution: 1 teaspoon (5 ml) of baking soda to 1 cup (250 ml) of lukewarm water.
4. Let dry.

Stains caused by candy, ice cream, mayonnaise, chili sauce and unknown stains can be removed as follows:

1. Carefully scrape off excess stain.
2. Clean with cool water and allow to dry completely.
3. If a stain remains, follow the cleaner instructions described earlier.

Cleaning Vinyl

Use warm water and a clean cloth.

- Rub with a clean, damp cloth to remove dirt. You may have to do this more than once.
- Things like tar, asphalt and shoe polish will stain if you do not get them off quickly. Use a clean cloth and vinyl cleaner. See your dealer for this product.

Cleaning Leather

Use a soft cloth with lukewarm water and a mild soap or saddle soap and wipe dry with a soft cloth. Then, let the leather dry naturally. Do not use heat to dry.

- For stubborn stains, use a leather cleaner.
- *Never* use oils, varnishes, solvent-based or abrasive cleaners, furniture polish or shoe polish on leather.
- Soiled or stained leather should be cleaned immediately. If dirt is allowed to work into the finish, it can harm the leather.

Cleaning the Top of the Instrument Panel

Use only mild soap and water to clean the top surfaces of the instrument panel. Sprays containing silicones or waxes may cause annoying reflections in the windshield and even make it difficult to see through the windshield under certain conditions.

Cleaning Interior Plastic Components

Use only a mild soap and water solution on a soft cloth or sponge. Commercial cleaners may affect the surface finish.

Cleaning Glass Surfaces

Glass should be cleaned often. GM Glass Cleaner or a liquid household glass cleaner will remove normal tobacco smoke and dust films on interior glass. See *Vehicle Care/Appearance Materials on page 5-106*.

Notice: **If you use abrasive cleaners when cleaning glass surfaces on your vehicle, you could scratch the glass and/or cause damage to the rear window defogger and the integrated radio antenna. When cleaning the glass on your vehicle, use only a soft cloth and glass cleaner.**

Care of Safety Belts

Keep belts clean and dry.

⚠ CAUTION:

Do not bleach or dye safety belts. If you do, it may severely weaken them. In a crash, they might not be able to provide adequate protection. Clean safety belts only with mild soap and lukewarm water.

Weatherstrips

Silicone grease on weatherstrips will make them last longer, seal better, and not stick or squeak. Apply silicone grease with a clean cloth at least every six months. During very cold, damp weather more frequent application may be required. See *Recommended Fluids and Lubricants on page 6-12*.

Cleaning the Outside of Your Vehicle

The paint finish on your vehicle provides beauty, depth of color, gloss retention and durability.

Washing Your Vehicle

The best way to preserve your vehicle's finish is to keep it clean by washing it often with lukewarm or cold water.

Don't wash your vehicle in the direct rays of the sun. Use a car washing soap. Don't use strong soaps or chemical detergents. Be sure to rinse the vehicle well, removing all soap residue completely. You can get GM-approved cleaning products from your dealer. See *Vehicle Care/Appearance Materials on page 5-106*. Don't use cleaning agents that are petroleum based, or that contain acid or abrasives. All cleaning agents should be flushed promptly and not allowed to dry on the surface, or they could stain. Dry the finish with a soft, clean chamois or an all-cotton towel to avoid surface scratches and water spotting.

High pressure car washes may cause water to enter your vehicle.

Cleaning Exterior Lamps/Lenses

Use only lukewarm or cold water, a soft cloth and a car washing soap to clean exterior lamps and lenses. Follow instructions under "Washing Your Vehicle."

Finish Care

Occasional waxing or mild polishing of your vehicle by hand may be necessary to remove residue from the paint finish. You can get GM-approved cleaning products from your dealer. See *Vehicle Care/Appearance Materials on page 5-106*.

If your vehicle has a "basecoat/clearcoat" paint finish. The clearcoat gives more depth and gloss to the colored basecoat. Always use waxes and polishes that are non-abrasive and made for a basecoat/clearcoat paint finish.

Notice: **Machine compounding or aggressive polishing on a basecoat/clearcoat paint finish may damage it. Use only non-abrasive waxes and polishes that are made for a basecoat/clearcoat paint finish on your vehicle.**

Foreign materials such as calcium chloride and other salts, ice melting agents, road oil and tar, tree sap, bird droppings, chemicals from industrial chimneys, etc., can damage your vehicle's finish if they remain on painted surfaces. Wash the vehicle as soon as possible. If necessary, use non-abrasive cleaners that are marked safe for painted surfaces to remove foreign matter.

Exterior painted surfaces are subject to aging, weather and chemical fallout that can take their toll over a period of years. You can help to keep the paint finish looking new by keeping your vehicle garaged or covered whenever possible.

Cleaning the Windshield, Backglass and Wiper Blades

If the windshield is not clear after using the windshield washer, or if the wiper blade chatters when running, wax, sap or other material may be on the blade or windshield.

Clean the outside of the windshield with a full-strength glass cleaning liquid. The windshield is clean if beads do not form when you rinse it with water.

Grime from the windshield will stick to the wiper blades and affect their performance. Clean the blade by wiping vigorously with a cloth soaked in full-strength windshield washer solvent. Then rinse the blade with water.

Check the wiper blades and clean them as necessary; replace blades that look worn.

Cleaning Aluminum or Chrome-Plated Wheels

Your vehicle may be equipped with either aluminum or chrome-plated wheels.

Keep your wheels clean using a soft clean cloth with mild soap and water. Rinse with clean water. After rinsing thoroughly, dry with a soft clean towel. A wax may then be applied.

The surface of these wheels is similar to the painted surface of your vehicle. Don't use strong soaps, chemicals, abrasive polishes, abrasive cleaners, cleaners with acid, or abrasive cleaning brushes on them because you could damage the surface. Do not use chrome polish on aluminum wheels.

Use chrome polish only on chrome-plated wheels, but avoid any painted surface of the wheel, and buff off immediately after application.

Don't take your vehicle through an automatic car wash that has silicone carbide tire cleaning brushes. These brushes can also damage the surface of these wheels.

Cleaning Tires

To clean your tires, use a stiff brush with tire cleaner.

Notice: **Using petroleum-based tire dressing products on your vehicle may damage the paint finish and/or tires. When applying a tire dressing, always wipe off any overspray from all painted surfaces on your vehicle.**

Sheet Metal Damage

If your vehicle is damaged and requires sheet metal repair or replacement, make sure the body repair shop applies anti-corrosion material to parts repaired or replaced to restore corrosion protection.

Original manufacturer replacement parts will provide the corrosion protection while maintaining the warranty.

Finish Damage

Any stone chips, fractures or deep scratches in the finish should be repaired right away. Bare metal will corrode quickly and may develop into major repair expense.

Minor chips and scratches can be repaired with touch-up materials avaliable from your dealer. Larger areas of finish damage can be corrected in your dealer's body and paint shop.

Underbody Maintenance

Chemicals used for ice and snow removal and dust control can collect on the underbody. If these are not removed, corrosion and rust can develop on the underbody parts such as fuel lines, frame, floor pan and exhaust system even though they have corrosion protection.

At least every spring, flush these materials from the underbody with plain water. Clean any areas where mud and debris can collect. Dirt packed in close areas of the frame should be loosened before being flushed. Your dealer or an underbody car washing system can do this for you.

Chemical Paint Spotting

Some weather and atmospheric conditions can create a chemical fallout. Airborne pollutants can fall upon and attack painted surfaces on your vehicle. This damage can take two forms: blotchy, ring-shaped discolorations, and small, irregular dark spots etched into the paint surface.

Although no defect in the paint job causes this, GM will repair, at no charge to the owner, the surfaces of new vehicles damaged by this fallout condition within 12 months or 12,000 miles (20 000 km) of purchase, whichever occurs first.

Vehicle Care/Appearance Materials

See your GM dealer for more information on purchasing the following products.

Description	Usage
Polishing Cloth Wax-Treated	Interior and exterior polishing cloth.
Tar and Road Oil Remover	Removes tar, road oil and asphalt.
Chrome Cleaner and Polish	Use on chrome or stainless steel.
White Sidewall Tire Cleaner	Removes soil and black marks from whitewalls.
Vinyl Cleaner	Cleans vinyl tops, upholstery and convertible tops.
Glass Cleaner	Removes dirt, grime, smoke and fingerprints.
Chrome and Wire Wheel Cleaner	Removes dirt and grime from chrome wheels and wire wheel covers.
Finish Enhancer	Removes dust, fingerprints, and surface contaminants. Spray on wipe off.
Swirl Remover Polish	Removes swirl marks, fine scratches and other light surface contamination.
Cleaner Wax	Removes light scratches and protects finish.

Description	Usage
Foaming Tire Shine Low Gloss	Cleans, shines and protects in one easy step, no wiping necessary.
Wash Wax Concentrate	Medium foaming shampoo. Cleans and lightly waxes. Biodegradable and phosphate free.
Spot Lifter	Quickly and easily removes spots and stains from carpets, vinyl and cloth upholstery.
Odor Eliminator	Odorless spray odor eliminator used on fabrics, vinyl, leather and carpet.
See your General Motors parts department for these products. See *Recommended Fluids and Lubricants on page 6-12*.	

Vehicle Identification

Vehicle Identification Number (VIN)

This is the legal identifier for your vehicle. It appears on a plate in the front corner of the instrument panel, on the driver's side. You can see it if you look through the windshield from outside your vehicle. The VIN also appears on the Vehicle Certification and Service Parts labels and the certificates of title and registration.

Engine Identification

The 8th character in your VIN is the engine code. This code will help you identify your engine, specifications and replacement parts.

Service Parts Identification Label

You will find this label on the inside of the access panel located on the driver's side of the rear of the vehicle. It is very helpful if you ever need to order parts.

On this label, you will find the following:

- VIN
- Model designation
- Paint information
- A list of all production options and special equipment

Be sure that this label is not removed from the vehicle.

Electrical System

Add-On Electrical Equipment

Notice: **Don't add anything electrical to your vehicle unless you check with your dealer first. Some electrical equipment can damage your vehicle and the damage wouldn't be covered by your warranty. Some add-on electrical equipment can keep other components from working as they should.**

Your vehicle has an air bag system. Before attempting to add anything electrical to your vehicle, see *Servicing Your Air Bag-Equipped Vehicle on page 1-82*.

Headlamp Wiring

The headlamp wiring is protected by internal fuses in the fuse block. An electrical overload will cause the lamps to go off and remain off. If this happens, have your headlamp wiring checked right away.

Windshield Wiper Fuses

The windshield wiper motor is protected by an internal circuit breaker and a fuse. If the motor overheats due to heavy snow, etc., the wiper will stop until the motor cools. If the overload is caused by some electrical problem, be sure to get it fixed.

Power Windows and Other Power Options

Circuit breakers in the floor console fuse block protect the power windows and other power accessories. When the current load is too heavy, the circuit breaker opens and closes, protecting the circuit until the problem is fixed.

Fuses and Circuit Breakers

The wiring circuits in your vehicle are protected from short circuits by a combination of fuses, circuit breakers and fusible thermal links.

Look at the silver-colored band inside the fuse. If the band is broken or melted, replace the fuse. Be sure you replace a bad fuse with a new one of the identical size and rating.

If you ever have a problem on the road and do not have a spare fuse, you can borrow one that has the same amperage. Just pick a feature of your vehicle that you can get along without – like the radio or cigarette lighter - and use its fuse, if it is the right amperage. Replace it as soon as you can.

There are two fuse blocks in your vehicle: the floor console fuse block and the underhood fuse and relay center.

Floor Console Fuse Block

The floor console fuse block is located to the left of the glove box near the floor.

Pull the door open to access the fuse block.

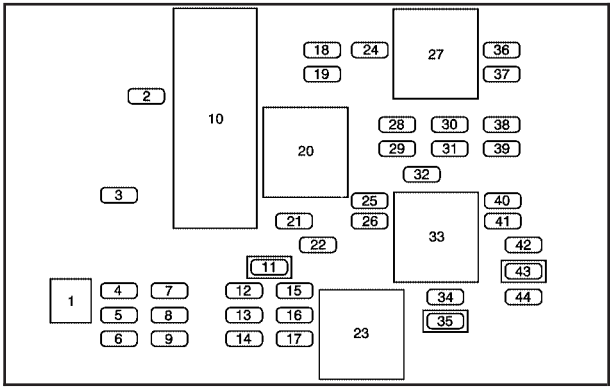

Fuse	Usage
1	Empty
2	Steering Wheel Radio Controls
3	Power Door Locks
4	Empty
5	Empty
6	Empty
7	Empty
8	Empty
9	Empty
10	Turn Signal and Hazard Lamp Flashers

Fuse	Usage
11	Power Seats
12	Electronic Level Control (ELC) Compressor
13	Liftgate and Endgate
14	Rear Auxiliary Power Outlet
15	Electronic Level Control (ELC) Compressor Relay and Height Sensor
16	Heated Mirrors
17	Power Mirrors
18	Ignition 1 Module
19	Turn Signal Switch
21	Rear Defogger
22	Air Bag Module
24	TCC Switch
25	HVAC Blower Motor
26	HVAC Mode and Temperature Motors and Head-Up Display
28	Not Used
29	Windshield Wipers and Washer
30	Instrument Panel Cluster, Body Control Module (BCM), PASS-Key® III
31	Park Lock Ignition Key Solenoid

Fuse	Usage
32	Rear Window Wiper/Washer
34	Power Sunroof
35	Power Windows
36	Map Lamps, Courtesy Lamps and Instrument Panel Lights
37	Radio
38	UQ3 Radio Amplifier
39	Head-Up Display
40	Hazard Flashers
41	Instrument Panel Cluster, Climate Control, Security LED and Remote Keyless Entry Mode
42	PASS-Key® III
44	Body Control Module (BCM)

Relay	Usage
20	Rear Defogger Relay
23	Ignition Relay
27	Accessory Relay
33	Retained Accessory Power Relay
43	Accessory Diode

Underhood Fuse Block

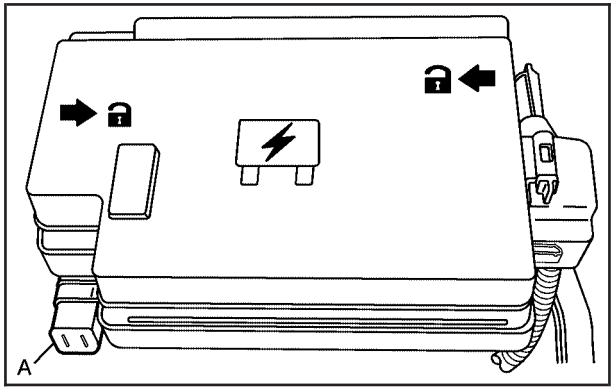

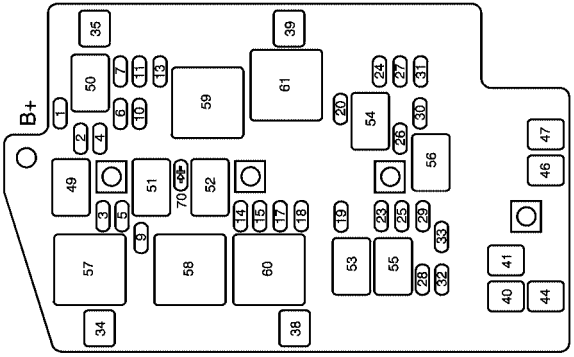

This fuse block is located in the engine compartment, on the passenger's side of the vehicle. See *Engine Compartment Overview on page 5-12* for more information on location.

The back-up lamp relay (A) is located to the left of the underhood fuse block.

To remove the cover, press the two tabs in and lift up the cover.

Fuse	Usage
1	Fuel Pump
2	Air Conditioning Compressor Clutch
3	Horn
4	Engine Controls-Emissions and Sensors
5	Power Control Module (PCM)-Battery Power
6	Anti-Lock Brakes (ABS) Control Module
7	Transaxle Solenoids
9	Anti-lock Brake System (ABS) Solenoid Valves
10	Oxygen Sensors-Emissions Control
11	Injectors
13	Engine Controls
14	Daytime Running Lamps (DRL)
15	Passenger's Low-Beam Headlamp
17	Driver's Low-Beam Headlamp
18	Driver's High-Beam Headlamp
19	Ignition Switch Battery Power

Fuse	Usage
20	Parking Lamps-Front and Rear
23	Passenger's High-Beam Headlamp
24	Vent Solenoids
25	DVD
26	Front Fog Lamps
27	Ignition Relay, Neutral Start Switch, Powertrain Control Module (PCM)
28	Body Control Module-Battery Power
29	S Band, Remote Digital Radio Receiver
30	All-Wheel Drive (AWD) Module
31	Cruise Control
32	Front Power Outlets/Lights, OnStar®
33	Automatic Transaxle Shift Lock Control System
35	Starter Solenoid Battery Fuse
36	Anti-lock Brake System (ABS) Motor
39	Engine Cooling Fan
40	Engine Cooling Fan

Fuse	Usage
41	Main Battery Fuse for Retained Accessory Power Relay and Accessory Relay
42	Main Battery Fuse for Heated Seats, Air
45	Main Battery Fuse for Power Outlets, Level Control, Power Seats and Mirrors and Body Computer
47	Main Battery Fuse for Climate Control Blower and Ignition 3 Relay
48	Main Battery Fuse for Ignition Switch, Radio, Heads-Up Display, Remote Keyless Entry (RKE), Instrument Cluster, Air Conditioning and Body Computer
70	Diode for Air Conditioning Compressor Clutch

Relay	Usage
A	Back-Up Lamps
50	Horn
51	Fuel Pump
52	Air Conditioning Clutch
53	Daytime Running Lamps (DRL)
54	Low-Beam Headlamps
55	Parking Lamps
56	High-Beam Headlamps
57	Fog Lamps
58	Starter Relay
59	Cooling Fan
60	Ignition 1 Relay
61	Cooling Fan
62	Cooling Fan
63	Empty

Capacities and Specifications

The following approximate capacities are given in English and metric conversions. Refer to *Recommended Fluids and Lubricants on page 6-12* for more information.

Application	Capacities	
	English	Metric
Air Conditioning Refrigerant (R134a)	1.7 lbs.	0.8 kg
Automatic Transaxle Pan Removal and Replacement Complete Overhaul	7.4 quarts 10.0 quarts	7.0 L 9.5 L
AWD Automatic Transaxle Pan Removal and Replacement Complete Overhaul	8.7 quarts 10.8 quarts	8.3 L 10.3 L
Cooling System with A/C	9.6 quarts	9.1 L
Engine Oil with Filter	4.0 quarts	3.8 L
Fuel Capacity	18.0 gallons	68.1 L
Rear Differential Fluid Capacity	2.1 quarts	1.9 L
Transfer Case Fluid Capacity	0.6 pints	290 ml
Wheel Nut Torque	100 lb ft	140 N•m

Engine Specifications

Engine	VIN Code	Transaxle	Spark Plug Gap
V6	E	Automatic	0.060 inches (1.52 mm)

Section 6 Maintenance Schedule

Maintenance Schedule 6-2
Introduction 6-2
Maintenance Requirements 6-2
Your Vehicle and the Environment 6-2
Using Your Maintenance Schedule 6-2
Scheduled Maintenance 6-4
Additional Required Services 6-6
Maintenance Footnotes 6-7
Owner Checks and Services 6-8
At Each Fuel Fill 6-8
At Least Once a Month 6-9
At Least Once a Year 6-9
Recommended Fluids and Lubricants 6-12
Normal Maintenance Replacement Parts 6-13
Engine Drive Belt Routing 6-13
Maintenance Record 6-14

Maintenance Schedule

Introduction

Important: Keep engine oil at the proper level and change as recommended.

Have you purchased the GM Protection Plan? The Plan supplements your new vehicle warranties. See your Warranty and Owner Assistance booklet or your dealer for details.

Maintenance Requirements

Notice: **Maintenance intervals, checks, inspections, replacement parts and recommended fluids and lubricants as prescribed in this manual are necessary to keep your vehicle in good working condition. Any damage caused by failure to follow scheduled maintenance may not be covered by warranty.**

Your Vehicle and the Environment

Proper vehicle maintenance not only helps to keep your vehicle in good working condition, but also helps the environment. All recommended maintenance is important. Improper vehicle maintenance can even affect the quality of the air we breathe. Improper fluid levels or the wrong tire inflation can increase the level of emissions from your vehicle. To help protect our environment, and to keep your vehicle in good condition, be sure to maintain your vehicle properly.

Using Your Maintenance Schedule

We at General Motors want to help you keep your vehicle in good working condition. But we do not know exactly how you will drive it. You may drive very short distances only a few times a week. Or you may drive long distances all the time in very hot, dusty weather. You may use your vehicle in making deliveries. Or you may drive it to work, to do errands or in many other ways.

Because of all the different ways people use their vehicles, maintenance needs vary. You may need more frequent checks and replacements. So please read the following and note how you drive. If you have any questions on how to keep your vehicle in good condition, see your GM Goodwrench dealer.

This schedule is for vehicles that:

- carry passengers and cargo within recommended limits. You will find these limits on the tire and loading information label. See *Loading Your Vehicle on page 4-36*.
- are driven on reasonable road surfaces within legal driving limits.
- use the recommended fuel. See *Gasoline Octane on page 5-4*.

The services in *Scheduled Maintenance on page 6-4* should be performed when indicated. See *Additional Required Services on page 6-6* and *Maintenance Footnotes on page 6-7* for further information.

⚠ CAUTION:

Performing maintenance work on a vehicle can be dangerous. In trying to do some jobs, you can be seriously injured. Do your own maintenance work only if you have the required know-how and the proper tools and equipment for the job. If you have any doubt, see your GM Goodwrench dealer to have a qualified technician do the work.

Some maintenance services can be complex. So, unless you are technically qualified and have the necessary equipment, you should have your GM Goodwrench dealer do these jobs.

When you go to your GM Goodwrench dealer for your service needs, you will know that GM-trained and supported service technicians will perform the work using genuine GM parts.

If you want to get service information, see *Service Publications Ordering Information on page 7-12*.

Owner Checks and Services on page 6-8 tells you what should be checked, when to check it and what you can easily do to help keep your vehicle in good condition.

The proper replacement parts, fluids and lubricants to use are listed in *Recommended Fluids and Lubricants on page 6-12* and *Normal Maintenance Replacement Parts on page 6-13*. When your vehicle is serviced, make sure these are used. All parts should be replaced and all necessary repairs done before you or anyone else drives the vehicle. We recommend the use of genuine GM parts.

Scheduled Maintenance

When the CHANGE ENGINE OIL message comes on, it means that service is required for your vehicle. Have your vehicle serviced as soon as possible within the next 600 miles (1 000 km). It is possible that, if you are driving under the best conditions, the engine oil life system may not indicate that vehicle service is necessary for over a year. However, your engine oil and filter must be changed at least once a year and at this time the system must be reset. Your GM Goodwrench dealer has GM-trained service technicians who will perform this work using genuine GM parts and reset the system.

If the engine oil life system is ever reset accidentally, you must service your vehicle within 3,000 miles (5 000 km) since your last service. Remember to reset the oil life system whenever the oil is changed. See *Engine Oil on page 5-14* for information on the Engine Oil Life System and resetting the system.

When the CHANGE ENGINE OIL message appears, certain services, checks and inspections are required. Required services are described in the following for "Maintenance I" and "Maintenance II." Generally, it is recommended that your first service be Maintenance I, your second service be Maintenance II and that you alternate Maintenance I and Maintenance II thereafter. However, in some cases, Maintenance II may be required more often.

Maintenance I — Use Maintenance I if the CHANGE ENGINE OIL message comes on within ten months since vehicle was purchased or Maintenance II was performed.

Maintenance II — Use Maintenance II if the previous service performed was Maintenance I. Always use Maintenance II whenever the message comes on ten months or more since the last service or if the message has not come on at all for one year.

Service	Maintenance I	Maintenance II
Change engine oil and filter. Reset oil life system. See *Engine Oil on page 5-14*. *An Emission Control Service.*	•	•
Visually check for any leaks or damage. *See footnote (j).*	•	•
Inspect engine air cleaner filter. If necessary, replace filter. See *Engine Air Cleaner/Filter on page 5-19*. *An Emission Control Service. See footnote †.*	•	•
Rotate tires and check inflation pressures and wear. See *Tires on page 5-57*.	•	•
Inspect brake system. *See footnote (a).*	•	•
Check engine coolant and windshield washer fluid levels and add fluid as needed.	•	•
Perform any needed additional services. See “Additional Required Services” in this section.	•	•
Inspect suspension and steering components. *See footnote (b).*		•
Inspect engine cooling system. *See footnote (c).*		•
Inspect wiper blades. *See footnote (d).*		•
Inspect restraint system components. *See footnote (e).*		•
Lubricate body components. *See footnote (f).*		•
Check transaxle fluid level and add fluid as needed.		•
Inspect throttle system. *See footnote (j).*		•

Additional Required Services

The following services should be performed at the first maintenance service (I or II) after the indicated miles (kilometers) shown for each item.

Service	25,000 (41 500)	50,000 (83 000)	75,000 (125 000)	100,000 (166 000)	125,000 (207 500)	150,000 (240 000)
Inspect fuel system for damage or leaks.	•	•	•	•	•	•
Inspect exhaust system for loose or damaged components.	•	•	•	•	•	•
Replace engine air cleaner filter. See *Engine Air Cleaner/Filter on page 5-19*. *An Emission Control Service.*	•	•	•	•	•	•
Change automatic transaxle fluid and filter (severe service). *See footnote (h).*		•		•		•
Change automatic transaxle fluid and filter (normal service).				•		
Replace spark plugs and inspect spark plug wires. *An Emission Control Service.*				•		
Engine cooling system service (or every 5 years, whichever occurs first). *An Emission Control Service. See footnote (i).*						•
Inspect engine accessory drive belt. *An Emission Control Service.*						•

Maintenance Footnotes

† *The U.S. Environmental Protection Agency or the California Air Resources Board has determined that the failure to perform this maintenance item will not nullify the emission warranty or limit recall liability prior to the completion of the vehicle's useful life. We, however, urge that all recommended maintenance services be performed at the indicated intervals and the maintenance be recorded.*

(a) *Visually inspect brake lines and hoses for proper hook-up, binding, leaks, cracks, chafing, etc. Inspect disc brake pads for wear and rotors for surface condition. Inspect other brake parts, including calipers, parking brake, etc. Check parking brake adjustment.*

(b) *Visually inspect front and rear suspension and steering system for damaged, loose or missing part or signs of wear. Inspect power steering lines and hoses for proper hook-up, binding, leaks, cracks, chafing, etc.*

(c) *Visually inspect hoses and have them replaced if they are cracked, swollen or deteriorated. Inspect all pipes, fittings and clamps; replace with genuine GM parts as needed. To help ensure proper operation, a pressure test of the cooling system and pressure cap and cleaning the outside of the radiator and air conditioning condenser is recommended at least once a year.*

(d) *Visually inspect wiper blades for wear or cracking. Replace blade inserts that appear worn or damaged or that streak or miss areas of the windshield.*

(e) *Make sure the safety belt reminder light and all your belts, buckles, latch plates, retractors and anchorages are working properly. Look for any other loose or damaged safety belt system parts. If you see anything that might keep a safety belt system from doing its job, have it repaired. Have any torn or frayed safety belts replaced. Also look for any opened or broken air bag coverings, and have them repaired or replaced. (The air bag system does not need regular maintenance.)*

(f) *Lubricate all key lock cylinders, hood latch assemblies, secondary latches, pivots, spring anchor and release pawl, hood and door hinges, rear folding seats and liftgate hinges. More frequent lubrication may be required when exposed to a corrosive environment. Applying silicone grease on weatherstrips with a clean cloth will make them last longer, seal better and not stick or squeak.*

(g) *Check system for interference or binding and for damaged or missing parts. Replace parts as needed. Replace any components that have high effort or excessive wear. Do not lubricate accelerator or cruise control cables.*

(h) *Change automatic transaxle fluid and filter if the vehicle is mainly driven under one or more of these conditions:*

- *In heavy city traffic where the outside temperature regularly reaches 90°F (32°C) or higher.*
- *In hilly or mountainous terrain.*
- *When doing frequent trailer towing.*
- *Uses such as found in taxi, police or delivery service.*

(i) *Drain, flush and refill cooling system. See Engine Coolant on page 5-23* for what to use. Inspect hoses. Clean radiator, condenser, pressure cap and filler neck. Pressure test the cooling system and pressure cap.

(j) *A fluid loss in any vehicle system could indicate a problem. Have the system inspected and repaired and the fluid level checked. Add fluid if needed.*

Owner Checks and Services

These owner checks and services should be performed at the intervals specified to help ensure the safety, dependability and emission control performance of your vehicle. Your GM Goodwrench dealer can assist you with these checks and services.

Be sure any necessary repairs are completed at once. Whenever any fluids or lubricants are added to your vehicle, make sure they are the proper ones, as shown in *Recommended Fluids and Lubricants on page 6-12*.

At Each Fuel Fill

It is important to perform these underhood checks at each fuel fill.

Engine Oil Level Check

Check the engine oil level and add the proper oil if necessary. See *Engine Oil on page 5-14* for further details.

Notice: **It is important to check your oil regularly and keep it at the proper level. Failure to keep your engine oil at the proper level can cause damage to your engine not covered by your warranty.**

Engine Coolant Level Check

Check the engine coolant level and add DEX-COOL® coolant mixture if necessary. See *Engine Coolant on page 5-23* for further details.

Windshield Washer Fluid Level Check

Check the windshield washer fluid level in the windshield washer tank and add the proper fluid if necessary.

At Least Once a Month

Tire Inflation Check

Visually inspect your tires and make sure tires are inflated to the correct pressures. Don't forget to check your spare tire. See *Tires on page 5-57* for further details. Check to make sure the spare tire is stored securely. Push, pull and then try to rotate or turn the spare tire. If it moves, tighten it. See *Changing a Flat Tire on page 5-77*.

At Least Once a Year

Starter Switch Check

⚠ CAUTION:

When you are doing this inspection, the vehicle could move suddenly. If the vehicle moves, you or others could be injured.

1. Before you start, be sure you have enough room around the vehicle.
2. Firmly apply both the parking brake and the regular brake. See *Parking Brake on page 2-26* if necessary.

   Do not use the accelerator pedal, and be ready to turn off the engine immediately if it starts.
3. Try to start the engine in each gear. The starter should work only in PARK (P) or NEUTRAL (N). If the starter works in any other position, contact your GM Goodwrench dealer for service.

Automatic Transaxle Shift Lock Control System Check

⚠ CAUTION:

When you are doing this inspection, the vehicle could move suddenly. If the vehicle moves, you or others could be injured.

1. Before you start, be sure you have enough room around the vehicle. It should be parked on a level surface.
2. Firmly apply the parking brake. See *Parking Brake on page 2-26* if necessary.

   Be ready to apply the regular brake immediately if the vehicle begins to move.
3. With the engine off, turn the key to the RUN position, but don't start the engine. Without applying the regular brake, try to move the shift lever out of PARK (P) with normal effort. If the shift lever moves out of PARK (P), contact your GM Goodwrench dealer for service.

Ignition Transaxle Lock Check

While parked, and with the parking brake set, try to turn the ignition key to LOCK in each shift lever position.

- The key should turn to LOCK only when the shift lever is in PARK (P).
- The key should come out only in LOCK.

Contact your GM Goodwrench dealer if service is required.

Parking Brake and Automatic Transaxle Park (P) Mechanism Check

⚠ CAUTION:

When you are doing this check, your vehicle could begin to move. You or others could be injured and property could be damaged. Make sure there is room in front of your vehicle in case it begins to roll. Be ready to apply the regular brake at once should the vehicle begin to move.

Park on a fairly steep hill, with the vehicle facing downhill. Keeping your foot on the regular brake, set the parking brake.

- To check the parking brake's holding ability: With the engine running and transaxle in NEUTRAL (N), slowly remove foot pressure from the regular brake pedal. Do this until the vehicle is held by the parking brake only.
- To check the PARK (P) mechanism's holding ability: With the engine running, shift to PARK (P). Then release the parking brake followed by the regular brake.

Contact your GM Goodwrench dealer if service is required.

Underbody Flushing Service

At least every spring, use plain water to flush any corrosive materials from the underbody. Take care to clean thoroughly any areas where mud and other debris can collect.

Recommended Fluids and Lubricants

Fluids and lubricants identified below by name, part number or specification may be obtained from your dealer.

Usage	Fluid/Lubricant
Engine Oil	Engine oil which meets GM Standard GM6094M and displays the American Petroleum Institute Certified for Gasoline Engines starburst symbol. To determine the proper viscosity for your vehicle's engine, see *Engine Oil on page 5-14*.
Engine Coolant	50/50 mixture of clean, drinkable water and use only DEX-COOL® Coolant. See *Engine Coolant on page 5-23*.
Hydraulic Brake System	Delco Supreme 11 Brake Fluid or equivalent DOT-3 brake fluid.
Windshield Washer Solvent	GM Optikleen® Washer Solvent.
Power Steering System	GM Power Steering Fluid (GM Part No. U.S. 89021184, in Canada 89021186).
Automatic Transaxle	DEXRON®-III Automatic Transmission Fluid.

Usage	Fluid/Lubricant
Key Lock Cylinders	Multi-Purpose Lubricant, Superlube (GM Part No. U.S. 12346241, in Canada 10953474).
Carrier Assembly — Differential (Rear Drive Module) and Transfer Case (Power Transfer Unit)	VERSATRAK™ Fluid (GM Part No. U.S. 12378514, in Canada 88901045).
Hood Latch Assembly, Secondary Latch, Pivots, Spring Anchor and Release Pawl	Lubriplate Lubricant Aerosol (GM Part No. U.S. 12346293, in Canada 992723) or lubricant meeting requirements of NLGI #2, Category LB or GC-LB.
Hood and Door Hinges, Rear Folding Seat	Multi-Purpose Lubricant, Superlube (GM Part No. U.S. 12346241, in Canada 10953474).
Weatherstrip Conditioning	Dielectric Silicone Grease (GM Part No. U.S. 12345579, in Canada 992887).

Normal Maintenance Replacement Parts

Part	GM® Part Number	ACDelco® Part Number
Engine Air Cleaner/Filter	25099149	A1208C
Engine Oil Filter	25010792	PF47
Spark Plugs	12568387	41–101
Windshield Wiper Blades Driver's Side Length Passenger's Side Length Type	 24.0 inches (60.0 cm) 22.0 inches (55.0 cm) Shepherd's Hook	

Engine Drive Belt Routing

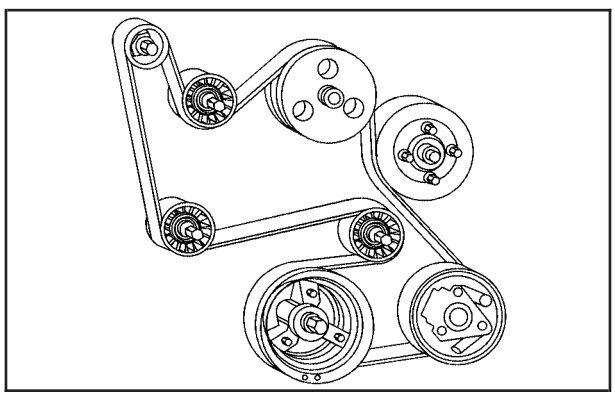

Maintenance Record

After the scheduled services are performed, record the date, odometer reading, who performed the service and the type of services performed in the boxes provided. See *Maintenance Requirements on page 6-2* in this section.
Any additional information from *Owner Checks and Services on page 6-8* can be added on the following record pages. Also, you should retain all maintenance receipts.

Maintenance Record

Date	Odometer Reading	Serviced By	Maintenance I or Maintenance II	Services Performed

Maintenance Record (cont'd)

Date	Odometer Reading	Serviced By	Maintenance I or Maintenance II	Services Performed

Maintenance Record (cont'd)

Date	Odometer Reading	Serviced By	Maintenance I or Maintenance II	Services Performed

Section 7 Customer Assistance Information

Customer Assistance Information 7-2
Customer Satisfaction Procedure 7-2
Online Owner Center 7-4
Customer Assistance for Text Telephone (TTY) Users 7-4
Customer Assistance Offices 7-5
GM Mobility Program for Persons with Disabilities 7-6
Roadside Assistance Program 7-6
Courtesy Transportation 7-8
Vehicle Data Collection and Event Data Records 7-10
Reporting Safety Defects 7-11
Reporting Safety Defects to the United States Government 7-11
Reporting Safety Defects to the Canadian Government 7-11
Reporting Safety Defects to General Motors 7-11
Service Publications Ordering Information 7-12

Customer Assistance Information

Customer Satisfaction Procedure

Your satisfaction and goodwill are important to your dealer and to Buick. Normally, any concerns with the sales transaction or the operation of your vehicle will be resolved by your dealer's sales or service departments. Sometimes, however, despite the best intentions of all concerned, misunderstandings can occur. If your concern has not been resolved to your satisfaction, the following steps should be taken:

STEP ONE: Discuss your concern with a member of dealership management. Normally, concerns can be quickly resolved at that level. If the matter has already been reviewed with the sales, service or parts manager, contact the owner of the dealership or the general manager.

STEP TWO: If after contacting a member of dealership management, it appears your concern cannot be resolved by the dealership without further help, contact the Buick Customer Assistance Center by calling 1-800-521-7300. In Canada, contact GM of Canada Customer Communication Centre in Oshawa by calling 1-800-263-3777 (English) or 1-800-263-7854 (French).

We encourage you to call the toll-free number in order to give your inquiry prompt attention. Please have the following information available to give the Customer Assistance Representative:

- Vehicle Identification Number (This is available from the vehicle registration or title, or the plate at the top left of the instrument panel and visible through the windshield.)
- Dealership name and location
- Vehicle delivery date and present mileage

When contacting Buick, please remember that your concern will likely be resolved at a dealer's facility. That is why we suggest you follow Step One first if you have a concern.

STEP THREE: Both General Motors and your dealer are committed to making sure you are completely satisfied with your new vehicle. However, if you continue to remain unsatisfied after following the procedure outlined in Steps One and Two, you should file with the BBB Auto Line Program to enforce any additional rights you may have. Canadian owners refer to your Warranty and Owner Assistance Information booklet for information on the Canadian Motor Vehicle Arbitration Plan (CAMVAP).

The BBB Auto Line Program is an out of court program administered by the Council of Better Business Bureaus to settle automotive disputes regarding vehicle repairs or the interpretation of the New Vehicle Limited Warranty. Although you may be required to resort to this informal dispute resolution program prior to filing a court action, use of the program is free of charge and your case will generally be heard within 40 days. If you do not agree with the decision given in your case, you may reject it and proceed with any other venue for relief available to you.

You may contact the BBB Auto Line Program using the toll-free telephone number or write them at the following address:

BBB Auto Line Program
Council of Better Business Bureaus, Inc.
4200 Wilson Boulevard
Suite 800
Arlington, VA 22203-1804

Telephone: 1-800-955-5100

This program is available in all 50 states and the District of Columbia. Eligibility is limited by vehicle age, mileage and other factors. General Motors reserves the right to change eligibility limitations and/or discontinue its participation in this program.

Online Owner Center

The Owner Center is a resource for your GM ownership needs. You can find your specific vehicle information all in one place.

The Owner Center allows you to:

- Get e-mail service reminders.
- Access information about your specific vehicle, including tips and videos and an electronic version of this owner's manual. (United States only)
- Keep track of your vehicle's service history and maintenance schedule.
- Find GM dealers for service nationwide.
- Receive special promotions and privileges only available to members. (United States only)

Refer to the web for updated information.

To register your vehicle, visit www.MyGMLink.com. (United States) or My GM Canada within www.gmcanada.com (Canada).

Customer Assistance for Text Telephone (TTY) Users

To assist customers who are deaf, hard of hearing, or speech-impaired and who use Text Telephones (TTYs), Buick has TTY equipment available at its Customer Assistance Center. Any TTY user can communicate with Buick by dialing: 1-800-83-BUICK. (TTY users in Canada can dial 1-800-263-3830.)

Customer Assistance Offices

Buick encourages customers to call the toll-free number for assistance. If a U.S. customer wishes to write to Buick, the letter should be addressed to Buick's Customer Assistance Center.

United States – Customer Assistance

Buick Customer Assistance Center
P.O. Box 33136
Detroit, MI 48232-5136

1-800-521-7300
1-800-832-8425 (For Text Telephone devices (TTYs))
Roadside Assistance: 1-800-252-1112
Fax Number: 313-381-0022

From Puerto Rico:
1-800-496-9992 (English)
1-800-496-9993 (Spanish)
Fax Number: 313-381-0022

From U.S. Virgin Islands
1-800-496-9994
Fax Number: 313-381-0022

Canada – Customer Assistance

General Motors of Canada Limited
Customer Communication Centre, 163-005
1908 Colonel Sam Drive
Oshawa, Ontario L1H 8P7

1-800-263-3777 (English)
1-800-263-7854 (French)
1-800-263-3830 (For Text Telephone devices (TTYs))
Roadside Assistance: 1-800-268-6800

Overseas – Customer Assistance

Please contact the local General Motors Business Unit.

Mexico, Central America and Caribbean Islands/Countries (Except Puerto Rico and U.S. Virgin Islands) – Customer Assistance

General Motors de Mexico, S. de R.L. de C.V.
Customer Assistance Center
Paseo de la Reforma # 2740
Col. Lomas de Bezares
C.P. 11910, Mexico, D.F.
01-800-508-0000
Long Distance: 011-52-53 29 0 800

GM Mobility Program for Persons with Disabilities

This program, available to qualified applicants, can reimburse you up to $1,000 toward eligible aftermarket driver or passenger adaptive equipment you may require for your vehicle (hand controls, wheelchair/scooter lifts, etc.).

This program can also provide you with free resource information, such as area driver assessment centers and mobility equipment installers. The offer is available for a limited period of time from the date of vehicle purchase/lease. For more details, or to determine your vehicle's eligibility, see your GM dealer or call the GM Mobility Assistance Center at 1-800-323-9935. Text telephone (TTY) users, call 1-800-833-9935.

GM of Canada also has a Mobility Program. Call 1-800-GM-DRIVE (463-7483) for details. All TTY users call 1-800-263-3830.

Roadside Assistance Program

Buick Motor Division is proud to offer Buick Premium Roadside Assistance to customers for vehicles covered under the 3 year/36,000 mile (60 000 km) new car warranty (whichever occurs first).

Our commitment to Buick owners has always included superior service through our network of Buick dealers. Buick Premium Roadside Assistance provides an extra measure of convenience and security.

Buick's Roadside Assistance toll-free number is staffed by a team of technically trained advisors, who are available 24 hours a day, 365 days a year.

We take anxiety out of uncertain situations by providing minor repair information over the phone or making arrangements to tow your vehicle to the nearest Buick dealer.

We will provide the following services for 3 years/36,000 miles (60 000 km), at no expense to you:

- Fuel delivery
- Lock-out service (identification required)
- Tow to nearest dealership for warranty service
- Change a flat tire
- Jump starts

We have quick, easy access to telephone numbers of the following additional services depending on your needs:

- Hotels
- Glass replacement
- Tire repair facilities
- Rental vehicle or taxis
- Airports or train stations
- Police, fire department or hospitals

In many instances, mechanical failures are covered under Buick's comprehensive warranty. However, when other services are utilized, our advisors will explain any payment obligations you might incur.

For prompt and efficient assistance when calling, please provide the following information to give the advisor:

- Location of vehicle
- Telephone number of your location
- Vehicle model, year and color
- Mileage of vehicle
- Vehicle Identification Number (VIN)
- Vehicle license plate number

Buick reserves the right to limit services or reimbursement to an owner or driver when, in Buick's judgement, the claims become excessive in frequency or type of occurrence.

While we hope you never have the occasion to use our service, it is added security while traveling for you and your family. Remember, we're only a phone call away. Buick Roadside Assistance: 1-800-252-1112, text telephone (TTY) users, call 1-888-889-2438.

Canadian Roadside Assistance

Vehicles purchased in Canada have an extensive Roadside Assistance program accessible from anywhere in Canada or the United States. Please refer to the Warranty and Owner Assistance Information book.

Courtesy Transportation

Buick has always exemplified quality and value in its offering of motor vehicles. To enhance your ownership experience, we and our participating dealers are proud to offer Courtesy Transportation, a customer support program for new vehicles.

The Courtesy Transportation program is offered to retail purchase/lease customers in conjunction with the Bumper-to-Bumper coverage provided by the New Vehicle Limited Warranty. Several transportation options are available when warranty repairs are required. This will reduce your inconvenience during warranty repairs.

Plan Ahead When Possible

When your vehicle requires warranty service, you should contact your dealer and request an appointment. By scheduling a service appointment and advising your service consultant of your transportation needs, your dealer can help minimize your inconvenience.

If your vehicle cannot be scheduled into the service department immediately, keep driving it until it can be scheduled for service, unless, of course, the problem is safety-related. If it is, please call your dealership, let them know this, and ask for instructions.

If the dealer requests that you simply drop the vehicle off for service, you are urged to do so as early in the work day as possible to allow for same day repair.

Transportation Options

Warranty service can generally be completed while you wait. However, if you are unable to wait Buick helps minimize your inconvenience by providing several transportation options. Depending on the circumstances, your dealer can offer you one of the following:

Shuttle Service

Participating dealers can provide you with shuttle service to get to your destination with minimal interruption of your daily schedule. This includes a one way or round trip shuttle ride to a destination up to 10 miles from the dealership.

Public Transportation or Fuel Reimbursement

If your vehicle requires overnight warranty repairs, reimbursement (five days maximum) may be available for the use of public transportation such a s taxi or bus. In addition, should you arrange transportation through a friend or relative, reimbursement for reasonable fuel expenses (five day maximum) may be available. Claim amounts should reflect actual costs and be supported by original receipts.

Courtesy Rental Vehicle

Your dealer may arrange to provide you with a courtesy rental vehicle or reimburse you for a rental vehicle you obtained if your vehicle is kept for a warranty repair. Reimbursement will be limited to a maximum of $30 a day and must be supported by receipts. This requires that you sign and complete a rental agreement and meet state, local and rental vehicle provider requirements. Requirements vary and may include minimum age requirements, insurance coverage, credit card, etc. You are responsible for taxes, levies, usage fees, excessive mileage or rental usage beyond the completion of the repair.

Generally it is not possible to provide a like-vehicle as a courtesy rental.

Additional Program Information

Courtesy Transportation is available during the Bumper-to-Bumper warranty coverage period, but it *is not* part of the New Vehicle Limited Warranty. A separate booklet entitled Warranty and Owner Assistance Information furnished with each new vehicle provides detailed warranty coverage information.

Courtesy Transportation is available only at participating dealers and all program options, such as shuttle service, may not be available at every dealer. Please contact your dealer for specific information about availability. All Courtesy Transportation arrangements will be administered by appropriate dealer personnel.

Canadian Vehicles: For warranty repairs during the Complete Vehicle Coverage period of the General Motors of Canada New Vehicle Limited Warranty, alternative transportation may be available under the Courtesy Transportation Program. Please consult your dealer for details.

General Motors reserves the right to unilaterally modify, change or discontinue Courtesy Transportation at any time and to resolve all questions of claim eligibility pursuant to the terms and conditions described herein at its sole discretion.

Vehicle Data Collection and Event Data Records

Your vehicle, like other modern motor vehicles, has a number of sophisticated computer systems that monitor and control several aspects of the vehicle's performance. Your vehicle uses on-board vehicle computers to monitor emission control components to optimize fuel economy, to monitor conditions for airbag deployment and, if so equipped, to provide anti-lock braking and to help the driver control the vehicle in difficult driving situations. Some information may be stored during regular operations to facilitate repair of detected malfunctions; other information is stored only in a crash or near crash event by computer systems commonly called event data recorders (EDR).

In a crash or near crash event, computer systems, such as the Airbag Sensing and Diagnostic Module (SDM) in your vehicle may record information about the condition of the vehicle and how it was operated, such as engine speed, brake applications, throttle position, vehicle speed, seat belt usage, airbag readiness, airbag performance data, and the severity of a collision. This information has been used to improve vehicle crash performance and may be used to improve crash performance of future vehicles and driving safety.

Unlike the data recorders on many airplanes, these on-board systems do not record sounds, such as conversation of vehicle occupants.

To read this information, special equipment is needed and access to the vehicle or the SDM is required. GM will not access information about a crash event or share it with others other than

- with the consent of the vehicle owner or, if the vehicle is leased, with the consent of the lessee,
- in response to an official request of police or similar government office,
- as part of GM's defense of litigation through the discovery process, or
- as required by law.

In addition, once GM collects or receives data, GM may

- use the data for GM research needs,
- make it available for research where appropriate confidentiality is to be maintained and need is shown, or
- share summary data which is not tied to a specific vehicle with non-GM organizations for research purposes.

Reporting Safety Defects

Reporting Safety Defects to the United States Government

If you believe that your vehicle has a defect which could cause a crash or could cause injury or death, you should immediately inform the National Highway Traffic Safety Administration (NHTSA), in addition to notifying General Motors.

If NHTSA receives similar complaints, it may open an investigation, and if it finds that a safety defect exists in a group of vehicles, it may order a recall and remedy campaign. However, NHTSA cannot become involved in individual problems between you, your dealer or General Motors.

To contact NHTSA, you may either call the Auto Safety Hotline toll-free at 1-800-424-9393 (or 366-0123 in the Washington, D.C. area) or write to:

NHTSA, U.S. Department of Transportation
Washington, D.C. 20590

You can also obtain other information about motor vehicle safety from the hotline.

Reporting Safety Defects to the Canadian Government

If you live in Canada, and you believe that your vehicle has a safety defect, you should immediately notify Transport Canada, in addition to notifying General Motors of Canada Limited. You may write to:

Transport Canada
330 Sparks Street
Tower C
Ottawa, Ontario K1A 0N5

Reporting Safety Defects to General Motors

In addition to notifying NHTSA (or Transport Canada) in a situation like this, we certainly hope you'll notify us.

Please call us at 1-800-521-7300, or write:

Buick Customer Assistance Center
P.O. Box 33136
Detroit, MI 48232-5136

In Canada, please call us at 1-800-263-3777 (English) or 1-800-263-7854 (French). Or, write:

General Motors of Canada Limited
Customer Communication Centre, 163-005
1908 Colonel Sam Drive
Oshawa, Ontario L1H 8P7

Service Publications Ordering Information

Service Manuals

Service Manuals have the diagnosis and repair information on engines, transmission, axle, suspension, brakes, electrical, steering, body, etc.

RETAIL SELL PRICE: $120.00

Transmission, Transaxle, Transfer Case Unit Repair Manual

This manual provides information on unit repair service procedures, adjustments, and specifications for GM transmissions, transaxles, and transfer cases.

RETAIL SELL PRICE: $50.00

Service Bulletins

Service Bulletins give technical service information needed to knowledgeably service General Motors cars and trucks. Each bulletin contains instructions to assist in the diagnosis and service of your vehicle.

In Canada, information pertaining to Product Service Bulletins can be obtained by contacting your General Motors dealer or by calling 1-800-GM-DRIVE (1-800-463-7483).

Owner's Information

Owner publications are written specifically for owners and intended to provide basic operational information about the vehicle. The owner's manual will include the Maintenance Schedule for all models.

In-Portfolio: Includes a Portfolio, Owner's Manual, and Warranty Booklet.

RETAIL SELL PRICE: $35.00

Without Portfolio: Owner's Manual only.

RETAIL SELL PRICE: $25.00

Current and Past Model Order Forms

Service Publications are available for current and past model GM vehicles. To request an order form, please specify year and model name of the vehicle.

ORDER TOLL FREE: 1-800-551-4123 Monday-Friday 8:00 AM - 6:00 PM Eastern Time

For Credit Card Orders Only
(VISA-MasterCard-Discover), visit Helm, Inc. on the World Wide Web at: www.helminc.com

Or you can write to:

Helm, Incorporated
P. O. Box 07130
Detroit, MI 48207

Prices are subject to change without notice and without incurring obligation. Allow ample time for delivery.

Note to Canadian Customers: All listed prices are quoted in U.S. funds. Canadian residents are to make checks payable in U.S. funds.

NOTES

A

About Driving Your Vehicle 4-2
Accessory Inflator 5-74
Accessory Power Outlets 3-27
Adding Washer Fluid 5-38
Additional Program Information 7-9
Additives, Fuel 5-6
Add-On Electrical Equipment 5-108
Adjusting the Captain's Chairs
(Second Row) 1-14
Adjusting the Speakers
(Balance/Fade) 3-77, 3-88, 3-101
Air Bag
Readiness Light 3-43
Air Bag Systems 1-72
How Does an Air Bag Restrain? 1-79
Servicing Your Air Bag-Equipped Vehicle 1-82
What Makes an Air Bag Inflate? 1-78
What Will You See After an Air Bag Inflates? 1-80
When Should an Air Bag Inflate? 1-77
Where Are the Air Bags? 1-75
Air Cleaner/Filter, Engine 5-19
Airbag Sensing and Diagnostic
Module (SDM) 7-10
All-Wheel Drive 5-48, 5-98
All-Wheel Drive Disable Warning Message 3-55
All-Wheel-Drive (AWD) System 4-12
AM 3-130
Antenna, Integrated Windshield 3-132
Antenna, XM™ Satellite Radio Antenna System ... 3-132
Anti-lock Brake System (ABS) 4-8
Anti-Lock Brake System Warning Light 3-45
Appearance Care 5-99
Care of Safety Belts 5-102
Chemical Paint Spotting 5-106
Cleaning the Inside of Your Vehicle 5-99
Cleaning the Outside of Your Vehicle 5-103
Finish Damage 5-105
Sheet Metal Damage 5-105
Underbody Maintenance 5-105
Vehicle Care/Appearance Materials 5-106
Weatherstrips 5-102
Arming with the Power Lock Switch 2-16
Arming with the Remote Keyless Entry
Transmitter 2-16
Ashtrays 3-28
Audio Speakers 3-115
Audio System(s) 3-73
Audio Steering Wheel Controls 3-129
Care of Your Cassette Tape Player 3-130
Care of Your CD and DVD Player 3-131
Care of Your CDs and DVDs 3-131
Integrated Windshield Antenna 3-132
Navigation/Radio System 3-112
Radio with Cassette and CD 3-85
Radio with CD 3-74

Audio System(s) (cont.)
Radio with Six-Disc CD 3-98
Rear Seat Audio (RSA) 3-126
Setting the Time 3-73
Theft-Deterrent Feature 3-128
Understanding Radio Reception 3-130
XM™ Satellite Radio Antenna System 3-132
Auto Door Lock/Unlock 3-67
Automatic Headlamp System 3-15
Automatic Level Control 4-42
Automatic Operation 3-35
Automatic Transaxle
Fluid 5-21
Operation 2-23

B

Backing Up 4-48
Battery 5-42
Battery Replacement 2-7
Battery Run-Down Protection 3-20
Before Leaving on a Long Trip 4-25
Before You Drive 3-113
Bench Seat, Split 1-9
Brake
Low Fluid Warning Message 3-57
Parking 2-26
System Warning Light 3-44
Brake Fluid 5-38
Brake Wear 5-41
Brakes 5-38
Braking 4-7
Braking in Emergencies 4-10
Break-In, New Vehicle 2-19
Bulb Replacement 5-50
Front Turn Signal, Sidemarker and Parking
Lamps 5-52
Halogen Bulbs 5-50
Headlamps 5-50
Replacement Bulbs 5-54
Taillamps and Back-Up Lamps 5-53
Taillamps, Turn Signal, and Stoplamps 5-52
Buying New Tires 5-70

C

California Fuel 5-5
Canada – Customer Assistance 7-5
Canadian Owners ii
Canadian Roadside Assistance 7-7
Canceling the Rear Door Security Locks 2-11
Capacities and Specifications 5-115
Captain Chairs, Rear 1-14
Carbon Monoxide 4-28, 4-42, 2-11, 2-30
Care of
Safety Belts 5-102
Your Cassette Tape Player 3-130
Your CD and DVD Player 3-131

Care of (cont.)
Your CDs and DVDs 3-131
Cargo Cover 2-44
Cargo Lamp 3-20
Carrier Assembly-Differential
(Rear Drive Module) 5-49
Cassette Tape Messages 3-94
CD Adapter Kits 3-95
CD Messages 3-84, 3-97, 3-111
Cell Phone Storage Area 2-39
Center Rear Passenger Position, Safety Belts 1-42
Chains, Tires 5-74
Change Engine Oil Message 3-53
Charging System Indicator Message 3-52
Check
Engine Light 3-46
Tire Pressure System 5-65
Checking Coolant 5-24
Checking Engine Oil 5-14
Checking Things Under the Hood 5-10
Checking Your Restraint Systems 1-82
Chemical Paint Spotting 5-106
Child Restraints
Child Restraint Systems 1-53
Infants and Young Children 1-50
Lower Anchorages and Top Tethers for
Children (LATCH System) 1-62
Older Children 1-47
Child Restraints (cont.)
Securing a Child Restraint Designed for the
LATCH System 1-64
Securing a Child Restraint in a Center Rear
Seat Position 1-67
Securing a Child Restraint in a Rear Outside
Seat Position 1-64
Securing a Child Restraint in the Right Front
Seat Position 1-69
Top Strap 1-57
Top Strap Anchor Location 1-58
Where to Put the Restraint 1-56
Cigarette Lighter 3-28
Cleaning
Inside of Your Vehicle 5-99
Outside of Your Vehicle 5-103
Underbody Maintenance 5-105
Weatherstrips 5-102
Your DVD Player 3-131
Cleaning Aluminum or Chrome-Plated Wheels ... 5-104
Cleaning Exterior Lamps/Lenses 5-103
Cleaning Fabric/Carpet 5-100
Cleaning Glass Surfaces 5-102
Cleaning Interior Plastic Components 5-102
Cleaning Leather 5-101
Cleaning the Top of the Instrument Panel 5-102
Cleaning the Windshield, Backglass and Wiper
Blades 5-104

Cleaning Tires 5-105
Cleaning Vinyl 5-101
Climate Control System 3-28
  Dual 3-32
  Dual Automatic 3-35
  Outlet Adjustment 3-38
Compact Spare Tire 5-98
Compass Variance 3-60
Content Theft-Deferrent 2-15
Control of a Vehicle 4-7
Convenience Center, Rear 2-44
Convenience Net 2-44
Coolant
  Engine Temperature Gage 3-46
  Engine Temperature Warning Message 3-51
  Heater, Engine 2-22
Cooling System 5-29
Cruise Control 3-11
Cupholder(s) 2-39
Current and Past Model Order Forms 7-13
Customer Assistance Information
  Courtesy Transportation 7-8
  Customer Assistance for Text Telephone
    (TTY) Users 7-4
  Customer Assistance Offices 7-5
  Customer Satisfaction Procedure 7-2
  GM Mobility Program for Persons
    with Disabilities 7-6
Customer Assistance Information (cont.)
  Reporting Safety Defects to General Motors 7-11
  Reporting Safety Defects to the Canadian
    Government 7-11
  Reporting Safety Defects to the United States
    Government 7-11
  Roadside Assistance Program 7-6
  Service Publications Ordering Information 7-12

D

Daytime Running Lamps (DRL) 3-15
Defensive Driving 4-3
Defogging and Defrosting 3-30, 3-34, 3-37
Delayed Lighting 3-18
Delayed Locking 2-9, 3-68
Dinghy Towing 4-34
Disarming with the Remote Keyless Entry
  Transmitter 2-16
Disarming with Your Key 2-16
Doing Your Own Service Work 5-3
Dolly Towing 4-35
Door
  Ajar Warning Message 3-54
  Delayed Locking 2-9
  Locks 2-8
  Power Door Locks 2-9

Door (cont.)
Programmable Automatic Door Locks 2-10
Rear Door Security Locks 2-10
Driver
Four-Way Manual Seat 1-3
Position, Safety Belt 1-28
Driver Behavior 4-2
Driver Information Center (DIC) 3-60
DIC Controls and Displays 3-62
DIC Vehicle Personalization 3-64
Driving
At Night 4-18
City 4-23
Defensive 4-3
Drunken 4-4
Environment 4-2
Freeway 4-24
Hill and Mountain Roads 4-26
In Rain and on Wet Roads 4-20
Winter 4-28
Driving On Grades 4-49
Driving on Snow or Ice 4-29
Driving Through Deep Standing Water 4-22
Driving Through Flowing Water 4-22
Driving with a Trailer 4-47
Dual Automatic Climate Control System 3-35
Dual Climate Control System 3-32
DVD
Cleaning Your DVD Player 3-131
Distortion 3-129
Rear Seat Entertainment System 3-113
DVD Messages 3-119
DVD Player 3-116

E

Electrical System
Add-On Equipment 5-108
Fuses and Circuit Breakers 5-109
Headlamp Wiring 5-108
Power Windows and Other Power Options 5-109
Windshield Wiper Fuses 5-109
Emissions Inspection and Maintenance
Programs 3-49
Engine
Air Cleaner/Filter 5-19
Battery 5-42
Change Oil Message 3-53
Check and Service Engine Soon Light 3-46
Coolant 5-23
Coolant Heater 2-22
Coolant Temperature Gage 3-46
Coolant Temperature Warning Message 3-51

Engine (cont.)
Drive Belt Routing 6-13
Engine Compartment Overview 5-12
Exhaust 2-30
Oil 5-14
Overheating 5-26
Starting 2-21
Engine Oil Additives 5-17
Engine Specifications 5-116
Entering Programming Mode 3-64
Entertainment System
Cleaning Your DVD Player 3-131
DVD Distortion 3-129
Entry Lighting 3-18
Erasing HomeLink® Buttons 2-38
Event Data Records (EDR) 7-10
Exit Lighting 3-19
Exiting Programming Mode 3-72
Express-Down Window 2-14
Extender, Safety Belt 1-46
Exterior Lamps 3-14

F

Filter
Engine Air Cleaner 5-19
Finding a Program Type (PTY)
Station (RDS and XM™) 3-77, 3-89, 3-101
Finding a Station 3-75, 3-87, 3-99
Finish Care 5-103
Finish Damage 5-105
Flash-to-Pass 3-9
Flat Tire 5-76
Flat Tire, Changing 5-77
Floor Console Fuse Block 5-110
Fluid
Automatic Transaxle 5-21
Power Steering 5-36
Windshield Washer 5-37
FM Stereo 3-130
Fog Lamps 3-16
Folding or Reclining the Seatbacks 1-9, 1-14
Folding the Seatback 1-18

Following Distance 4-48
Four-Way Manual Driver Seat 1-3
Front Armrest Storage Area 2-40
Front Console Storage Area 2-40
Front Reading Lamps 3-20
Fuel 5-4
  Additives 5-6
  California Fuel 5-5
  Filling a Portable Fuel Container 5-9
  Filling Your Tank 5-7
  Fuels in Foreign Countries 5-6
  Gage 3-49
  Gasoline Octane 5-4
  Gasoline Specifications 5-5
  Low Warning Message 3-56
Fuses
  Fuses and Circuit Breakers 5-109
  Windshield Wiper 5-109

G

Gage
  Engine Coolant Temperature 3-46
  Fuel 3-49
  Speedometer 3-41
  Tachometer 3-42
Garage Door Opener 2-35
Gasoline
  Octane 5-4
  Specifications 5-5
Gate Operator and Canadian Programming 2-37
Glove Box 2-39
GM Mobility Program for Persons with
  Disabilities 7-6

H

Hatch Ajar Warning Message 3-54
Hazard Warning Flashers 3-6
Head Restraints 1-8
Headlamp Exit Delay 3-17, 3-65
Headlamp High/Low-Beam Changer 3-9
Headlamp Wiring 5-108
Headlamps 5-50
  Bulb Replacement 5-50
  Front Turn Signal, Sidemarker and Parking
    Lamps 5-52
  Halogen Bulbs 5-50
Headphones 3-113
Head-Up Display (HUD) 3-21
Heated Seats 1-6
Highbeam Out Warning Message 3-59
Highway Hypnosis 4-26
Hill and Mountain Roads 4-26

Hitches 4-46
HomeLink® Transmitter 2-35
HomeLink® Transmitter, Programming 2-35
Hood
  Checking Things Under 5-10
  Release 5-11
Horn 3-7
How the System Works 3-26
How to Add Automatic Transaxle Fluid 5-23
How to Add Coolant to the Coolant
  Recovery Tank 5-31
How to Add Coolant to the Radiator 5-33
How to Check 5-65
How to Check Automatic Transaxle Fluid 5-21
How to Check Power Steering Fluid 5-37
How to Inspect the Engine Air Cleaner/Filter 5-20
How to Use This Manual ii
How to Wear Safety Belts Properly 1-27
Hydroplaning 4-21

I

If No Steam Is Coming From Your Engine 5-28
If Steam Is Coming From Your Engine 5-27
If the Light Is Flashing 3-48
If the Light Is On Steady 3-48
If You Are Stuck in Sand, Mud, Ice or Snow 4-32
If You Do Decide To Pull A Trailer 4-43
If You're Caught in a Blizzard 4-30
Ignition Positions 2-20
Infants and Young Children, Restraints 1-50
Inflation - Tire Pressure 5-64
Instrument Panel
  Cluster 3-40
  Overview 3-4
  Switchbank 3-21
Instrument Panel Brightness 3-16
Integrated Windshield Antenna 3-132
Interior Lamps 3-16
Interior Lamps Control 3-17
Interior Lighting Delay 3-65
Interior Lighting On 3-66

J

Jump Starting 5-43

K

Keyless Entry System 2-4
Keys 2-3

L

Lamps
- Exterior 3-14
- Interior 3-16

Lamps on Reminder 3-14
Lap-Shoulder Belt 1-28, 1-39, 1-42
LATCH System
- Child Restraints 1-62
- Securing a Child Restraint Designed for the LATCH System 1-64

Leaving Your Vehicle 2-11
Leaving Your Vehicle With the Engine Running ... 2-28
Liftgate 2-11
Liftgate Release 2-12
Light
- Air Bag Readiness 3-43
- Anti-Lock Brake System Warning 3-45
- Brake System Warning 3-44
- Malfunction Indicator 3-46
- Safety Belt Reminder 3-43
- TCS Warning Light 3-45
- Traction Control System (TCS) Warning 3-45

Lighted Visor Vanity Mirrors 2-15
Listening to a DVD 3-85, 3-97, 3-112
Loading Your Vehicle 4-36
Lock Feedback 3-70
Lockout Protection 2-11
Locks
- Delayed Locking 2-9
- Door 2-8
- Leaving Your Vehicle 2-11
- Lockout Protection 2-11
- Power Door 2-9
- Programmable Automatic Door Locks 2-10
- Rear Door Security Locks 2-10

Loss of Control 4-17
Low Brake Fluid Warning Message 3-57
Low Fuel Warning Message 3-56
Low Oil Pressure Message 3-52
Low Tire Message 3-54
Low Washer Fluid Warning Message 3-56
Lumbar
- Manual Controls 1-5

M

Maintenance Schedule
- Additional Required Services 6-6
- At Each Fuel Fill 6-8
- At Least Once a Month 6-9
- At Least Once a Year 6-9
- Introduction 6-2

Maintenance Schedule (cont.)
Maintenance Footnotes 6-7
Maintenance Record 6-14
Maintenance Requirements 6-2
Normal Maintenance Replacement Parts 6-13
Owner Checks and Services 6-8
Recommended Fluids and Lubricants 6-12
Scheduled Maintenance 6-4
Using Your 6-2
Your Vehicle and the Environment 6-2
Maintenance When Trailer Towing 4-50
Making Turns 4-48
Malfunction Indicator Light 3-46
Manual Lumbar Controls 1-5
Manual Operation 3-36
Manual Passenger Seat 1-3
Matching Transmitter(s) to Your Vehicle 2-6
Memory Seat 2-49
Message
All-Wheel Drive Disable Warning 3-55
Center 3-50
Change Engine Oil 3-53
Charging System Indicator 3-52
Door Ajar Warning 3-54
Engine Coolant Temperature Warning 3-51
Highbeam Out Warning 3-59
Message (cont.)
Low Brake Fluid Warning 3-57
Low Fuel Warning 3-56
Low Oil Pressure 3-52
Low Tire 3-54
Low Washer Fluid Warning 3-56
Park Lamp Warning 3-59
PASS-Key® III Security 3-55
Program Mode 3-58
Rear Hatch Ajar Warning 3-54
Remote Keyless Entry Transmitter Battery
Low Warning 3-58
Service Traction System Warning 3-50
Service Vehicle Soon 3-57
Traction Active 3-51
Mexico, Central America and Caribbean Islands/
Countries (Except Puerto Rico and U.S. Virgin
Islands) – Customer Assistance 7-5
Mirrors
Manual Rearview Mirror 2-32
Outside Convex Mirror 2-33
Outside Curb View Assist Mirror 2-32
Outside Heated Mirrors 2-33
Outside Power Mirror 2-32
MyGMLink.com 7-4

N

Navigation/Radio System 3-112
New Vehicle Break-In 2-19
Normal Maintenance Replacement Parts 6-13

O

Odometer 3-41
Off-Road Recovery 4-15
Oil
  Engine 5-14
  Pressure Message 3-52
Older Children, Restraints 1-47
Online Owner Center 7-4
OnStar® Personal Calling 2-34
OnStar® Services 2-34
OnStar® System 2-33
OnStar® Virtual Advisor 2-34
Operation 3-29, 3-32
Operation Tips 3-38
Other Warning Devices 3-7
Outlet Adjustment 3-38
Outside
  Convex Mirror 2-33
  Curb View Assist Mirror 2-32
Outside (cont.)
  Heated Mirrors 2-33
  Power Mirror 2-32
Overhead Console 2-39
Overheated Engine Protection Operating Mode ... 5-26
Overseas – Customer Assistance 7-5
Owner Checks and Services 6-8
Owners, Canadian ii
Owner's Information 7-12

P

Park Aid 3-24
Park Lamp Warning Message 3-59
Park (P)
  Shifting Into 2-29
  Shifting Out of 2-29
Parking
  Assist 3-24
  Brake 2-26
  Over Things That Burn 2-30
Parking on Hills 4-49
Passing 4-49, 4-48
PASS-Key® III 2-17
PASS-Key® III Operation 2-17
PASS-Key® III Security Message 3-55

Perimeter Lighting 3-19
Plan Ahead When Possible 7-8
Playing a Cassette Tape 3-93
Playing a CD 3-83, 3-95, 3-107
Playing a Specific Loaded CD 3-108
Playing the Radio 3-75, 3-86, 3-99
Power
  Accessory Outlets 3-27
  Door Locks 2-9
  Electrical System 5-109
  Six-Way Seats 1-5
  Steering Fluid 5-36
  Windows 2-14
Power Steering 4-13
Pretensioners, Safety Belt 1-46
Primary Radio Controls 3-126
Program Mode Message 3-58
Programmable Automatic Door Locks 2-10
Programming the HomeLink® Transmitter 2-35

Q

Questions and Answers About Safety Belts 1-26

R

Radiator Pressure Cap 5-25
Radio Data System (RDS) 3-74, 3-85, 3-98
Radio Messages 3-80, 3-91, 3-104
Radios 3-73
  Care of Your Cassette Tape Player 3-130
  Care of Your CD and DVD Player 3-131
  Care of Your CDs and DVDs 3-131
  Navigation/Radio System 3-112
  Radio with Cassette and CD 3-85
  Radio with CD 3-74
  Radio with Six-Disc CD 3-98
  Rear Seat Audio 3-126
  Setting the Time 3-73
  Theft-Deterrent 3-128
  Understanding Reception 3-130
RDS Messages 3-78, 3-90, 3-103
Rear Hatch Ajar Warning Message 3-54
Rear Reading Lamps 3-20
Rear Safety Belt Comfort Guides 1-44
Rear Seat Audio (RSA) 3-126
Rear Seat Audio (RSA) Controls 3-127
Rear Seat Entertainment System 3-113

Rear Seat Operation 1-9
Rear Seat Outside Passenger Positions 1-38
Rear Seat Passengers, Safety Belts 1-38
Rear Storage Area 2-40
Rear Window Defogger 3-31, 3-34, 3-38
Rearview Mirrors 2-32
Reclining Seatbacks 1-6
Recommended Fluids and Lubricants 6-12
Recreational Vehicle Towing 4-34
Remote Alarm 2-6
Remote Control 3-119
Remote Door Unlock 3-69
Remote Keyless Entry System 2-4
Remote Keyless Entry System Operation 2-5
Remote Keyless Entry Transmitter Battery Low
  Warning Message 3-58
Removing the Captain's Chairs 1-15
Removing the Extended Rear Convenience
  Center 2-45
Removing the Flat Tire and Installing
  the Spare Tire 5-87
Removing the Rear Convenience Center on
  Vehicles with the Third Row Stowable Seat 2-46
Removing the Spare Tire and Tools 5-78
Removing the Split Bench Seat 1-10
Removing the Stowable Seat 1-19
Replacement Bulbs 5-54
Replacing Brake System Parts 5-42
Replacing Restraint System Parts After a Crash 1-83
Replacing the Captain's Chairs 1-16
Replacing the Extended Rear Convenience
  Center 2-45
Replacing the Rear Convenience Center on
  Vehicles with the Third Row Stowable Seat 2-47
Replacing the Split Bench Seat 1-12
Replacing the Stowable Seat 1-20
Reporting Safety Defects
  Canadian Government 7-11
  General Motors 7-11
  United States Government 7-11
Reprogramming a Single HomeLink® Button 2-38
Resetting Defaults 2-38
Restraint System Check
  Checking Your Restraint Systems 1-82
  Replacing Restraint System Parts After
    a Crash 1-83
Restraint Systems
  Checking 1-82
  Replacing Parts 1-83
Retained Accessory Power (RAP) 2-21
Retro-Active Reset 3-42
Right Front Passenger Position, Safety Belts 1-37
Roadside
  Assistance Program 7-6
Rocking Your Vehicle To Get It Out 4-33
Roof Rack System 2-41
Routing, Engine Drive Belt 6-13
Running Your Engine While You Are Parked 2-31

S

Safety Belt
Pretensioners 1-46
Reminder Light 3-43
Safety Belts
Care of 5-102
Center Rear Passenger Position 1-42
Driver Position 1-28
How to Wear Safety Belts Properly 1-27
Questions and Answers About Safety Belts 1-26
Rear Safety Belt Comfort Guides for Children and Small Adults 1-44
Rear Seat Passengers 1-38
Right Front Passenger Position 1-37
Safety Belt Extender 1-46
Safety Belt Use During Pregnancy 1-36
Safety Belts Are for Everyone 1-22
Safety Chains 4-46
Safety Warnings and Symbols iii
Scheduled Maintenance 6-4
Seat Recall 3-71
Seats
Captain Chairs 1-14
Four-Way Manual Driver Seat 1-3
Head Restraints 1-8
Heated Seats 1-6
Seats (cont.)
Manual Lumbar 1-5
Manual Passenger 1-3
Memory 2-49
Rear Seat Operation 1-9
Reclining Seatbacks 1-6
Six-Way Power Seats 1-5
Split Bench Seats 1-9
Stowable Seat 1-18
Secondary Latch System 5-84
Securing a Child Restraint
Center Rear Seat Position 1-67
Designed for the LATCH System 1-64
Rear Outside Seat Position 1-64
Right Front Seat Position 1-69
Security Message, PASS-Key® III 3-55
Service 5-3
Adding Equipment to the Outside of Your Vehicle 5-4
Doing Your Own Work 5-3
Engine Soon Light 3-46
Publications Ordering Information 7-12
Traction System Warning Message 3-50
Vehicle Soon Message 3-57
Service Bulletins 7-12
Service Engine Soon Light in the United States or Check Engine Light in Canada 3-46

Service Manuals 7-12
Setting Preset PTYs (RDS Only) 3-102
Setting Preset Stations 3-76, 3-87, 3-100
Setting the Time 3-73
Setting the Tone (Bass/Treble) 3-76, 3-88, 3-100
Sheet Metal Damage 5-105
Shifting Into Park (P) 2-27
Shifting Out of Park (P) 2-29
Shoulder Belt Height Adjuster 1-30
Skidding 4-17
Some Other Rainy Weather Tips 4-22
Special Fabric Cleaning Problems 5-101
Specifications, Capacities 5-115
Speedometer 3-41
Split Bench Seats 1-9
Starting Your Engine 2-21
Steering 4-13
Steering in Emergencies 4-14
Steering Tips 4-13
Steering Wheel Controls, Audio 3-129
Stereo RCA Jacks 3-114
Storage Areas
  Cell Phone Storage Area 2-39
  Convenience Net 2-44
  Cupholder(s) 2-39
  Floor Console Storage Area 2-40
  Front Armrest Storage Area 2-40
  Glove Box 2-39
Storage Areas (cont.)
  Overhead Console 2-39
  Rear Convenience Center 2-44
  Rear Storage Area 2-40
  Roof Rack System 2-41
Storage Compartment 2-39
Storing a Flat or Spare Tire and Tools 5-91
Stowable Seat 1-18
Stuck in Sand, Mud, Ice or Snow 4-32
Sun Visors 2-15
Sunglasses Storage Compartment 2-40
Sunroof 2-48
Switchbanks, Instrument Panel 3-21

T

Tachometer 3-42
Taillamps
  Back-Up Lamps 5-53
  Turn Signal, and Stoplamps 5-52
TCS Warning Light 3-45
Theft-Deterrent, Radio 3-128
Theft-Deterrent Systems 2-15
  Content Theft-Deterrent 2-15
  PASS-Key® III 2-17
  PASS-Key® III Operation 2-17
Tilt Mirror 3-72

Tilt Wheel 3-7
Tips and Trouble 3-123
Tire
  Low Message 3-54
Tire Sidewall Labeling 5-58
Tire Size 5-61
Tire Terminology and Definitions 5-62
Tires 5-57
  Buying New Tires 5-70
  Chains 5-74
  Changing a Flat Tire 5-77
  Check Tire Pressure System 5-65
  Compact Spare Tire 5-98
  If a Tire Goes Flat 5-76
  Inflation - Tire Pressure 5-64
  Inspection and Rotation 5-67
  Uniform Tire Quality Grading 5-71
  Wheel Alignment and Tire Balance 5-72
  Wheel Replacement 5-72
  When It Is Time for New Tires 5-69
To Use the Engine Coolant Heater 2-22
Top Strap 1-57
Top Strap Anchor Location 1-58
Torque Lock 2-29
Total Weight on Your Vehicle's Tires 4-46
Towing
  Recreational Vehicle 4-34
  Towing a Trailer 4-42
  Your Vehicle 4-33
Traction
  Active Message 3-51
  Control System (TCS) 4-11
  Control System Warning Light 3-45
  Service Traction System Warning Message 3-50
Trailer Brakes 4-46
Trailer Wiring Harness 4-50
Transaxle
  Fluid, Automatic 5-21
Transaxle Operation, Automatic 2-23
Transfer Case (Power Transfer Unit) 5-48
Transmission, Transaxle, Transfer Case Unit
  Repair Manual 7-12
Transportation Options 7-8
Trip Odometer 3-41
Turn and Lane-Change Signals 3-8
Turn Signal/Multifunction Lever 3-8
Turn Signals When Towing a Trailer 4-48

U

Ultrasonic Rear Parking Assist (URPA) 3-24
Underhood Fuse Block 5-112
Understanding Radio Reception 3-130
Uniform Tire Quality Grading 5-71
United States – Customer Assistance 7-5
Unlock Feedback 3-69
Used Replacement Wheels 5-73
Using Cleaner on Fabric 5-100
Using HomeLink® 2-38
Using Song List Mode 3-110

V

Vehicle
  Control 4-7
  Damage Warnings iv
  Design 4-3
  Loading 4-36
  Service Soon Message 3-57
  Symbols iv
Vehicle Data Collection and Event Data Records 7-10
Vehicle Identification
  Number (VIN) 5-107
  Service Parts Identification Label 5-108
Vehicle Personalization
  DIC 3-64
  Memory Seat 2-49
Vehicle Storage 5-42
Ventilation Adjustment 3-38
Video Screen 3-116
Visor Vanity Mirror 2-15
Visors 2-15

W

Warm-Up Shift 2-25
Warning Lights, Gages and Indicators 3-39
Warnings
  Hazard Warning Flashers 3-6
  Other Warning Devices 3-7
  Safety and Symbols iii
  Vehicle Damage iv
Washer Fluid Low Warning Message 3-56
Washing Your Vehicle 5-103
Weight of the Trailer 4-43
Weight of the Trailer Tongue 4-45
What Coolant to Use 5-24
What Kind of Engine Oil to Use 5-16
What Power Steering Fluid to Use 5-37
What to Do with Used Oil 5-19

What Washer Fluid to Use 5-37
Wheels
Alignment and Tire Balance 5-72
Replacement 5-72
When to Add Engine Oil 5-15
When to Change Engine Oil
(GM Oil Life System) 5-18
When to Check 5-65
When to Check and Change Automatic
Transaxle Fluid 5-21
When to Check Power Steering Fluid 5-37
When to Inspect the Engine Air Cleaner/Filter 5-19
When You Are Ready to Leave After Parking
on a Hill 4-49
Where to Put the Restraint 1-56
Why Safety Belts Work 1-23
Window Lock Out 2-14
Windows 2-13
Power 2-14
Windshield Washer 3-10
Fluid 5-37
Windshield Wiper
Blade Replacement 5-55
Fuses 5-109
Windshield Wipers 3-9
Winter Driving 4-28

X

XM™ Satellite Radio Antenna System 3-132
XM™ Satellite Radio Service
(48 Contiguous US States) ... 3-74, 3-86, 3-98, 3-130

Y

Your Driving, the Road, and Your Vehicle 4-2
Your Vehicle and the Environment 6-2