Pontiac Sunfire 2001 fuse box diagram

Instrument Panel Fuse Block

The instrument panel fuse block is located on the driver's side of the instrument panel.

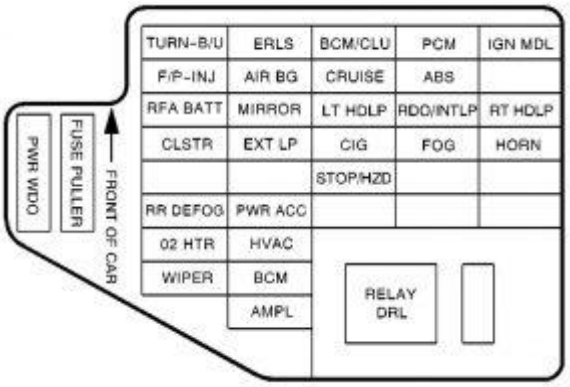

Pontiac Sunfire – fuse box – instrument panel

Fuses	Usage
TURN-B/U	Turn Signals, Back-Up Lamps
ERLS	Cruise Control, Engine Controls
BCM/CLU	Body Control Module, Instrument Panel Cluster
PCM	Powertrain Control Module
IGN MDL	Ignition Module
F/P-INJ	Fuel Pump, Fuel Injectors
AIR BG	Airbag
CRUISE	Cruise Control Module/Switch

ABS	Anti-Lock Brake (Ignition)
Blank	Not Used
RFA BATT	Remote Keyless Entry System
MIRROR	Power Mirror
LT HDLP	Left Headlamp
RDO/INTLP	Radio, Interior Lamps
RT HDLP	Right Headlamps
CLSTR	Instrument Panel Cluster
EXT LP	Exterior Lamps
CIG	Cigarette Lighter, Diagnostic Link Connector
FOG	Fog Lamps
HORN	Horn
Blank	Not Used
Blank	Not Used
STOP/HZD	Stop Lamps, Hazard Lamps

Blank	Not Used
Blank	Not Used
RR DEFOG	Rear Window Defogger
PWR ACC	Power Door Locks
Blank	Not Used
Blank	Not Used
Blank	Not Used
O2 HTR	O2 Sensor Heater
HVAC	Climate Control System
WIPER	Windshield Wiper
BCM	Body Control Module
AMPL	Audio Amplifier
PWR WDO	Power Windows, Sunroof (Circuit Breaker)
DRL	Daytime Running Lamps (Relay)

Engine Compartment Fuse Block

The engine compartment fuse block is located on the driver’s side of the vehicle.

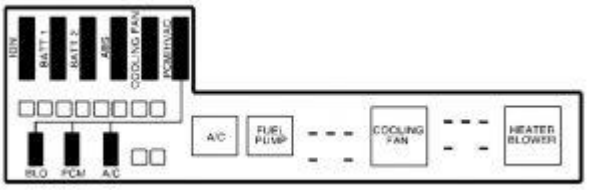

Pontiac Sunfire – fuse box – engine compartment

Fuses	Usage
IGN	Ignition Switch Circuits
BATT 1	Exterior lamps, Power Outlet, Horn, Audio Amplifier
BATT 2	Rear Defogger, Starter, Power Locks, Stoplamps
ABS	Anti-Lock Brake System
COOLING FAN	Engine Cooling Fan
PCM/HVAC	Powertrain Control Module, Heater and A/C Blower
BLO	Heater and A/C Blower
PCM	Powertrain Control Module
A/C	A/C Compressor
FUEL PUMP	Fuel Pump
HEATER BLOWER	Heater and A/C Blower