PORSCHE

911 GT3

Owner's Manual

Downloaded from www.Manualslib.com manuals search engine

WKD 996 321 **04** 2/03

© Dr. Ing. h.c. F. Porsche AG

Porsche, the Porsche crest, Carrera, Targa, Boxster, Cayenne, Tiptronic and Tequipment are registered trademarks and the distinctive shapes of Porsche automobiles are trademarks of Dr. Ing. h.c. F. Porsche AG.

All rights reserved.

Printed in Germany

Downloaded from www.Manualslib.com manuals search engine

Dear Owner,

We would like to thank you for your purchase of a Porsche Sports car.

Judging by the car you have chosen, you are a motorist of a special breed, and you are probably no novice when it comes to automobiles.

Remember however, as with any vehicle, you should take time to familiarize yourself with your Porsche and its performance characteristics. Always drive within your own unique capabilities as a driver and your level of experience with your Porsche. Ensure that anyone else driving your Porsche does the same. To prevent or minimize injury, always use your safety belts. Never consume alcohol or drugs before or during the operation of your vehicle.

This Owner's Manual contains a host of useful information. Please take the time to read this manual before you drive your new Porsche. Become familiar with the operation of your Porsche car for maximum safety and operating pleasure. The better you know your Porsche, the more pleasure you will experience driving your new car.
Always keep your Owner's Manual in the car, and give it to the new owner if you ever sell your Porsche.

A separate Maintenance Booklet explains how you can keep your Porsche in top driving condition by having it serviced regularly.
A separate Warranty and Customer Information Booklet contains detailed information about the warranties covering your Porsche.

For U.S. only:

If you believe that your vehicle has a fault which could cause a crash, injury or death, you should immediately inform the National Highway Traffic Safety Administration (NHTSA) in addition to notifying Porsche Cars North America, Inc. (Porsche Cars N.A.).

If NHTSA receives similar complaints, it may open an investigation, and if it finds that a safety problem exists in a group of vehicles, it may order a recall and remedy campaign. However, NHTSA cannot become involved in individual problems between you and your dealer, or Porsche Cars N.A..

To contact NHTSA, you may either call the Auto Safety Hotline toll-free at 1-(800)-424-9393 (or 366-0123 in Washington, D.C. area) or write to: NHTSA, U.S. Department of Transportation, Washington, D.C. 20590. You can also obtain other information about motor vehicle safety from the Hotline.

Your car has thousands of parts and components which have been designed and manufactured in accordance with Porsche's high standards of engineering quality and safety.

Any alteration of the vehicle may negate or interfere with those safety features built into the vehicle.

Your Porsche is intended to be used in a safe manner obeying the local laws and in the light of driving conditions faced by you, and in accordance with the instructions provided in this Owner's Manual.

Do not misuse your Porsche by ignoring those laws and driving conditions, or by ignoring the instructions in this manual. Any alteration or misuse of the vehicle can lead to accidents and severe or fatal personal injuries.

Regularly check your vehicle for signs of damage.
Damaged or missing aerodynamic components such as spoilers or underside panels affect the driving behavior and therefore must be replaced immediately.

Downloaded from www.Manualslib.com manuals search engine

Your car may have all or some of the components described in this manual.
Should you have difficulty understanding any of the explanations of features or equipment installed in your vehicle, contact your authorized Porsche dealer. He/She will be glad to assist you. Also check with your dealer on other available options or equipment.

Throughout this booklet, left is designated as the driver's side of the vehicle, and right as the passenger's side of the vehicle.

Text, illustrations and specifications in this manual are based on the information available at the time of printing.

It has always been Porsche's policy to continuously improve its products. Porsche, therefore, reserves the right to make changes in design and specification, and to make additions or improvements in its product without incurring any obligation to install them on products previously manufactured.

We wish you many miles of safe and pleasurable driving in your Porsche.

⚠ Important

For your own protection and longer service life of your car, please heed all operating instructions and special warnings. These special warnings use the safety alert symbol, followed by the words **Danger, Warning and Caution.** These special warnings contain important messages regarding your safety and/or the potential for damage to your Porsche. Ignoring them could result in serious mechanical failure or even physical injury.

- ▷ Do not alter your Porsche. Any alteration could create dangerous conditions or defeat safety engineering features built into your car.
- ▷ Do not misuse your Porsche. Use it safely, and consistently with the law, according to the driving conditions, and the instructions in this manual.

Alteration or misuse of your Porsche could cause accidents and severe or fatal personal injuries.

Note to owners

In Canada, this manual is also available in French. To obtain a copy contact your dealer or write to:

Note aux proprietaires

Au Canada on peut se procurer un exemplaire de ce Manuel en franáais aupräs du concessionaire ou du:

Porsche Cars Canada, Ltd.
Automobiles Porsche Canada, LTEE

5045 Orbitor Drive
Building #11, Suite 302
Mississauga, Ontario
Canada L4W 4Y4

Telephone number for customer assistance:
1-800-PORSCHE / Option 3

Downloaded from www.Manualslib.com manuals search engine

Fuel Quality

Your engine is designed to provide optimum performance and fuel economy using **unleaded premium fuel with an octane rating of 98 RON (93 CLC or AKI).** Porsche therefore recommends the use of these fuels in your vehicle.

Porsche also recognizes that these fuels may not always be available. Be assured that your vehicle will operate properly on unleaded premium fuels with octane numbers of at least **95 RON (90 CLC or AKI)**, since the engine's "Electronic Oktane™ knock control" will adapt the ignition timing, if necessary.

Fuels containing alcohol and ether

Some areas of the U.S. require oxygenated fuels during certain portions of the year.
Oxygenated fuels are fuels which contain alcohols (such as methanol or ethanol) or ether (such as MTBE).

Under normal conditions, the amount of these compounds in the fuel will not affect driveability.

You may use oxygenated fuels in your Porsche, provided the octane requirements for your vehicle are met.
We recommend, however, to change to a different fuel or station if any of the following problems occur with your vehicle:

– Deterioration of driveability and performance.

– Substantially reduced fuel economy.

– Vapor lock and non-start problems, especially at high altitude or at high temperature.

– Engine malfunction or stalling.

Fuels containing MMT

Some North American fuels contain an octane enhancing additive called methylcyclopentadienyl manganese tricarbonyl (MMT).
If such fuels are used, your emission control system performance may be negatively affected.
The check engine warning lights on your instrument panel may turn on.
If this occurs, Porsche recommends you stop using fuels containing MMT.

Downloaded from www.Manualslib.com manuals search engine

Tire Pressures for Cold Tires

Summer tires and snow tires

Front	32 psi (2.2 bar) overpressure
Rear	39 psi (2.7 bar) overpressure

These tire pressures are valid only for Porsche approved tires.
For replacement tires it is imperative that you consult the Technical Data and Tires, Wheels sections of this manual and follow the recommendations contained therein.

Downloaded from www.Manualslib.com manuals search engine

Porsche and the Environment

Environmental guidelines

We develop and produce exclusive sports cars with advanced environmental and safety technology and a great ability to fascinate.

Our environmental policy is based on the following principles:

- The maximum possible use of environmental and safety technology that is economically justifiable.
- Economical usage of energy and resources.
- Involvement of our business partners and contractors in our efforts to protect the environment.
- Open dialogue with all social groups.

California Proposition 65 Warning

⚠ Warning!

Engine exhaust, some of its constituents, and certain vehicle components contain or emit chemicals known to the State of California to cause cancer and birth defects or other reproductive harm. In addition, certain fluids contained in vehicles and certain products of component wear contain or emit chemicals known to the State of California to cause cancer and birth defects or other reproductive harm.

Production

The manufacture of Porsche vehicles in a factory adjacent to a residential area requires more than mere compliance with all laws and regulations.

Whether in production or repair, Porsche always relies on environmentally friendly technology.
An example of this is the water-based paint used in our painting installation.
Water-base paints and new painting methods reduce solvent emissions by 70 per cent.
And the water used in the painting installation is recirculated. Waste water leaves the Porsche factory only after being appropriately treated.

A waste-management system has been introduced to reduce the amount of waste while simultaneously increasing the recycling rate.

Downloaded from www.Manualslib.com manuals search engine

Environmentally friendly vehicles

Modern environmental technology ensures compliance with all emission laws applicable worldwide.

These have the following advantages:

- Rapid operational readiness of the catalytic converters ensures low emissions, even in short-trip operation.
- Reliable operation and good emission control over a long useful life.

▷ Please refer to the chapter "FUEL ECONOMY" on page 120.

Recycling – for a Porsche, this is virtually an academic question

More than two-thirds of all Porsches ever built are still running.

Just in case recycling is ever necessary, we take the following precautionary measures:

- Identification of all materials.
- Use of recyclable materials.
- Reusable components designed for simple removal.
- These reasons result in a further increase in the recycling rate which is currently 80 per cent.

Emission control is built in

Innovative engine technology combines high engine performance and environmental compatibility.

The engine diagnosis system electronically monitors the components and systems that affect exhaust gases.

This continuous monitoring and fault storage enables swift, reliable diagnosis and fault detection.

Any fault messages are indicated to the driver by the "Check Engine" warning light and the on-board computer.

▷ Please refer to the chapter "WARNINGS IN THE INSTRUMENT PANEL AND IN THE ON-BOARD COMPUTER" on page 75.

Downloaded from www.Manualslib.com manuals search engine

⚠ Safety notes!

Motor racing is a term we associate with fascination and emotion.
On the one hand.
On the other hand, there's the technology that makes this fascination possible.

Your new 911 GT3 has been developed with experience gained from the development and use of countless GT vehicles, and has been equipped with technical preconditions that facilitate use away from public roads in motor racing.

Depending on use, it can be possible or necessary to adapt the vehicle to the respective conditions. In the case, it must always be taken into account that a modern high-performance sports car represents a complex system with individual components that are carefully adjusted to work together perfectly.

Interfering in this system is only an option if it can be guaranteed that all of the components will continue to work together in a manner adjusted to the actual conditions of use. Well-founded specialist knowledge is necessary for this. You should seek advice from your authorized Porsche dealer. Here, you will receive information about sports parts available from Porsche, their reliability on public roads and important maintenance notes.

Please bear in mind that use on race tracks subjects all vehicle components to considerably more wear than normal use, making professional inspection and maintenance after each use a vital preconditon for functioning and safety.

Please use only Original Porsche Parts for your car. These parts are available from your authorized Porsche dealer, which is conversant with the range of approved parts and will be pleased to advise you further.

Porsche accepts responsibility, in accordance with its legal obligations, for Genuine Porsche Parts and for parts and accessories which it has approved for your car. However, the use of other parts or accessories which are neither Genuine Porsche Parts nor approved by Porsche may adversely affect the safety of your car, and Porsche can take no responsibility for any loss or damage caused by their use.

Even if the supplier of other accessories or parts is a recognised supplier, the safety of your car may still be affected if such items are installed. Due to the large variety of products offered in the accessory market it is not possible for Porsche to inspect and approve every one.

In addition, please note that the use of replacement parts which are not Genuine Porsche Parts or approved parts or the use of accessories not approved by Porsche may also detrimentally affect the Warranties relating to your car.

Technical modifications

Modifications may be carried out on your vehicle only if approved by Porsche.This ensures that your Porsche will remain reliable and safe to drive, and that it will not be damaged as a result of the modifications.Your authorized Porsche dealer will be pleased to advise you.

Coverings

▷ Do not affix any coverings (e.g. films or „stone guards") in the area of the headlights and air intakes.
Damage due to excessive temperatures and abrasion could result.

Motor racing

For reasons of safety, the braking system, steering, running gear, wheels and tires of your car should be checked after every race.
On public highways, the running gear and rear spoiler must be in the standard position.

Downloaded from www.Manualslib.com manuals search engine

Power transmission

The differential lock, which was designed for use in motor sport, may make a slight noise when maneuvering and on tight corners.

Porsche Ceramic Composite Brake (PCCB)

The high-performance brake system is designed for optimal braking effect at all speeds and temperatures. Certain speeds, braking forces and ambient conditions (such as temperature and humidity) therefore might cause brake noises.

Wear on the different components and braking system, such as brake pads or brake discs, depends to a great extent on the individual driving style and the conditions of use and therefore cannot be expressed in actual miles on the road.

The values communicated by Porsche are based on normal operation adapted to traffic. Wear increases considerably when the vehicle is driven on race tracks or through an aggressive driving style.

▷ Please consult your authorized Porsche dealer about the current guidelines in effect before such use of your vehicle.

Aerodynamic components

To benefit from the high driving performance without impairing the driving safety or the service life of the vehicle components, certain vehicle parts must be always fully operational while driving.

▷ Regularly check your vehicle for signs of damage.
Damaged, worn or missing aerodynamic components such as spoilers or underside panels affect driving behaviour and must therefore be replaced immediately.

To optimise the cooling of the PCCB brake discs, large air brake spoilers are fitted to the front and rear running gear control arms.

If these air-brake spoilers are not fitted and there is a high thermal demand on the braking system, the service life of the PCCB brake discs could be reduced.

The aerodynamic stability of the vehicle is influenced considerably at high speeds by the front lip.

Due to the small ground clearance required for the optimisation of the driving behaviour, the front lip and the air-brake spoilers have to be placed in exposed positions to fulfil their function. They can be damaged, for example by ground or curbstone contact.

Ground clearance

Please bear in mind the limited ground clearance of your car on uneven surfaces, when parking (curbs), on ramps, lifting platforms, etc.

Seating

Your car has two seats.
The area behind the seats is not intended for passengers.

⚠ Danger!

Severe personal injury or death can result in the event of an accident.

▷ Never allow anyone to sit in the area behind the seats.

Downloaded from www.Manualslib.com manuals search engine

Setting and operating vehicle components when driving

⚠ **Warning!**

There is a danger of accident if you set or operate the on-board computer, radio, navigation system, telephone or other equipment when driving.
This could distract you from the traffic and cause you to lose control of the vehicle.

- ▷ Operate the components while driving only if the traffic situation allows you to do so safely.
- ▷ Carry out any complicated operating or setting procedures only with the vehicle stationary.

Portable Fuel Containers

⚠ **Danger!**

Portable fuel containers, full or partially empty, may leak, causing an explosion, or result in fire in case of an accident.

- ▷ Never carry additional fuel in portable containers in your vehicle.

Engine Exhaust

⚠ **Danger!**

Engine exhaust is dangerous if inhaled. Engine exhaust fumes have many components which you can smell. They also contain carbon monoxide (CO), which is a colorless and odorless gas.
Carbon monoxide can cause unconsciousness and even death if inhaled.

- ▷ Never start or let the engine run in an enclosed, unventilated area.
  It is not recommended to sit in your car for prolonged periods with the engine on and the car not moving.

Downloaded from www.Manualslib.com manuals search engine

Controls, Instruments	13 - 110
Maintenance, Car Care	112 - 138
Practical Tips, Emergency Service	140 - 178
Vehicle Identification, Technical Data	180 - 189
Index	190 - 194

Downloaded from www.Manualslib.com manuals search engine

Downloaded from www.Manualslib.com manuals search engine

Controls, Instruments

Before driving off 14
Break in hints for the first
1,000 miles/1,600 kilometers 16
Keys 19
Security Wheel Bolts 19
Doors 21
Central Locking 22
Alarm System, Infrared Passenger
Compartment Monitoring 24
Power Windows 26
Inside mirror 28
Rear View Mirrors 28
Rear Window Defogger,
Door Mirror Heating 29
Seat Adjustment 30
Steering Wheel Adjustment 31
Safety Belts 32
Child Restraint Anchorages 35
Child Restraint Systems 36
Airbag Systems 38
Clutch Pedal 40
Parking Brake 40
Brakes 41
ABS Brake System
(Antilock Brake System) 44
Interior lights 46
Footwell Lights 47
Operation, Instruments 48
Ignition/Starter Switch with
anti-theft Steering Lock 50
Starting Procedures 52
Stopping Engine 53
Instrument Panel USA Models 54
Instrument Panel Canada Models 56
Voltmeter 58
Automatic Speed Control 58
Instrument Illumination 59
Trip Odometer 59
Speedometer 60
Changing over between
Miles / Kilometers 60
Tachometer 61
Turn Signal Indicator Light 61
High Beam 61
Cooling System 62
Fuel 63
Clock 64
Engine Oil Pressure 65
Check Engine
Warning Light 66
On-Board Computer (BC) 67
Warnings in the Instrument Panel and in the On-
Board Computer 75
Emergency Flasher Switch 81
Light Switch 82
Automatic Headlight Beam Adjustment 82
Turn Signal /
Headlight Dimmer / Flasher Lever 83
Windshield Wiper / Washer Lever 84
Automatic Speed Control 86
Heating and Ventilation 88
Automatic Air Conditioning 90
Central and Side Vents 93
Fresh-air Intake 93
Ashtray 94
Cigarette Lighter 94
Cupholder 95
Storage in the Passenger Compartment 96
Luggage Compartment Lid and
Engine Compartment Lid 98
Luggage Compartment 100
Trunk Entrapment 101
Sun Visors 103
Spoiler, Side Member Panels 104
Car Audio Operation/Tips 105
Car Telephone and
Aftermarket Alarms 107
Roof Transport System 108
Gearshifting 109

Downloaded from www.Manualslib.com manuals search engine

Dear Porsche Owner

A lot has gone into the manufacture of your Porsche, including advanced engineering, rigid quality control and demanding inspections. These engineering and safety features will be enhanced by you...

the safe driver...

- who knows his car and all controls,
- who maintains the vehicle properly,
- who uses driving skills wisely and always drives within her/his own capabilities and the level of familiarity with the vehicle.

You will find helpful hints in this manual on how to perform most of the checks listed on the following pages.
If in doubt, have these checks performed by your authorized Porsche dealer.

Before driving off...

Check the following items first

- ▷ Turn the engine off before you attempt any checks or repairs on the vehicle.
- ▷ Be sure the tires are inflated correctly. Check tires for damage and tire wear.
- ▷ See that wheel bolts are properly tightened and not loose or missing.
- ▷ Check engine oil level, add if necessary. Make it a habit to have engine oil checked with every fuel filling.
- ▷ Check all fluid levels such as windshield washer and brake fluid levels.
- ▷ Be sure the vehicle battery is well charged and cranks the engine properly.
- ▷ Check all doors and lids for proper operation and latch them properly.
- ▷ Check, and if necessary replace worn or cracked wiper blades.
- ▷ See that all windows are clear and unobstructed.
- ▷ Check air intake slots and area between luggage compartment lid and windshield are free of snow and ice, so the heater and the windshield wipers work properly.
- ▷ If a child will be riding in the vehicle, check child seat/child seat restraint system to ensure that restraints are properly adjusted.
- ▷ Check all exterior and interior lights for operation and that the lenses are clean.
- ▷ Check the headlights for proper aim, and if necessary, have them adjusted.
- ▷ Check under the vehicle for leaks.
- ▷ Be sure all luggage is stowed securely.

Emergency equipment

It is good practice to carry emergency equipment in your vehicle.
Some of the items you should have are:
window scraper, snow brush, container or bag of sand or salt, emergency light, small shovel, first-aid kit, etc.

Downloaded from www.Manualslib.com manuals search engine

In the driver's seat...

- Check operation of the horn.
- Position seat for easy reach of foot pedals and controls.
  To reduce the possibility of injury from the airbag deployment, you should always sit back as far from the steering wheel as is practical, while still maintaining full vehicle control.
- Adjust the inside and outside rear view mirrors.
- Buckle your safety belts.
- Check operation of the foot and parking brake.
- Check all warning and indicator lights with ignition on and engine not running.
- Start engine and check all warning displays for warning symbols.
- Never leave an idling car unattended.
- Lock doors from inside, especially with children in the car to prevent inadvertent opening of doors from inside or outside.
  Drive with doors locked.

On the road...

- Never drive after you have consumed alcohol or drugs.
- Always have your safety belt fastened.
- Always drive defensively.
  Expect the unexpected.
- Use signals to indicate turns and lane changes.
- Turn on headlights at dusk or when the driving conditions warrant it.
- Always keep a safe distance from the vehicle in front of you, depending on traffic, road and weather conditions.
- Reduce speed at night and during inclement weather.
  Driving in wet weather requires caution and reduced speeds, particularly on roads with standing water, as the handling characteristics of the vehicle may be impaired due to hydroplaning of the tires.
- Always observe speed limits and obey road signs and traffic laws.
- When tired, get well off the road, stop and take a rest. Turn the engine off. Do not sit in the vehicle with engine idling.
  Please observe the chapter "ENGINE EXHAUST" on Page 10.
- When parked, always set the parking brake. Move the gearshift lever to reverse or first gear.
  On hills also turn the front wheels toward the curb.
- When emergency repairs become necessary, move the vehicle well off the road. Turn on the emergency flasher and use other warning devices to alert other motorists. Do not park or operate the vehicle in areas where the hot exhaust system may come in contact with dry grass, brush, fuel spill or other flammable material.
- Make it a habit to have the engine oil checked with every fuel filling.

Downloaded from www.Manualslib.com manuals search engine

Break in hints for the first 1,000 miles/1,600 kilometers

The following tips will be helpful in obtaining optimum performance from your new Porsche.

Despite the most modern, high-precision manufacturing methods, it cannot be completely avoided that the moving parts have to wear in with each other. This wearing-in occurs mainly in the first 1,000 miles/1,600 km.

Therefore:

- ▷ Preferably take longer trips.
- ▷ Avoid frequent cold starts with short-distance driving whenever possible.
- ▷ Avoid full throttle starts and abrupt stops.
- ▷ Do not exceed maximum engine speed of 4,200 rpm (revolutions per minute).
- ▷ Do not run a cold engine at high rpm either in Neutral or in gear.
- ▷ Do not let the engine labor, especially when driving uphill. Shift to the next lower gear in time (use the most favorable rpm range).
- ▷ Never lug the engine in high gear at low speeds. This rule applies at all times, not just during the break-in period.
- ▷ Do not participate in motor racing events, sports driving schools, etc. during the first 1,000 miles/1,600 kilometers.

There may be a slight stiffness in the steering, gear-shifting or other controls during the break-in period which will gradually disappear.

Break in brake pads and discs

New brake pads and discs have to be "broken in", and therefore only attain optimal friction when the car has covered several hundred miles or km. The slightly reduced braking ability must be compensated for by pressing the brake pedal harder. This also applies whenever the brake pads and brake discs are replaced.

New tires

New tires do not have maximum traction. They tend to be slippery.

- ▷ Break in new tires by driving at moderate speeds during the first 60 to 120 miles/100 to 200 km. Longer braking distances must be anticipated.

Engine oil consumption

During the break-in period oil consumption may be higher than normal.

As always, the rate of oil consumption depends on the quality and viscosity of oil, the speed at which the engine is operated, the climate and road conditions, as well as the amount of dilution and oxidation of the lubricant.

- ▷ Make a habit of checking engine oil with every fuel filling, add if necessary.

Downloaded from www.Manualslib.com manuals search engine

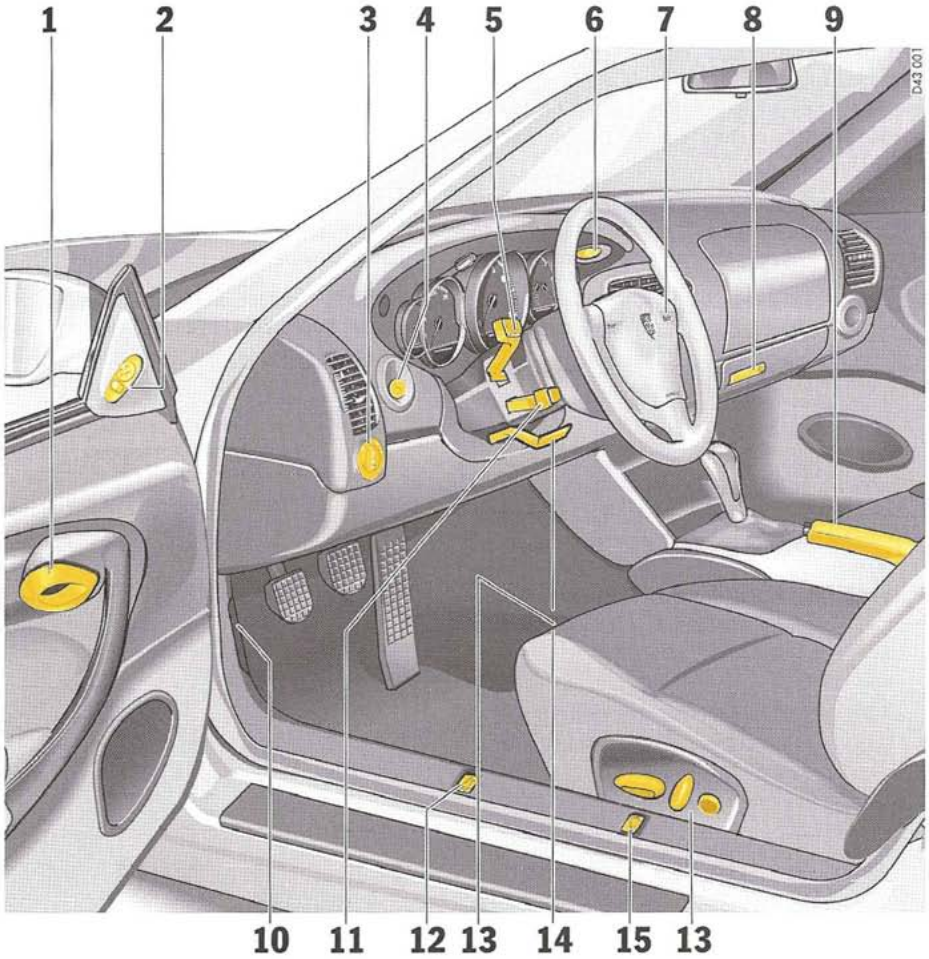

1 Inner door handle
2 Door mirror control
3 Light switch
4 Ignition/starter switch with steering lock
5 Turn signal/headlight dimmer, flasher lever
6 Emergency flasher switch
7 Horn
8 Glove compartment
9 Parking brake
10 Diagnostic socket
11 Operating lever for on-board computer
12 Luggage compartment lid release
13 Seat adjustment
14 Steering-wheel adjustment
15 Engine compartment lid release

Downloaded from www.Manualslib.com manuals search engine

Never invite car theft!

An unlocked car with the key in the ignition lock invites car theft.

A steering wheel lock and a **gong alarm** are standard equipment in your Porsche.
The gong alarm will sound if you open the driver's door while the key is still in the ignition lock. It is your reminder to pull the key out of the ignition lock and to lock the doors.

Warning!

Any uncontrolled movement of the vehicle may result in serious personal injury and property damage.
Never leave your vehicle unattended with the key in the ignition lock, especially if children and/or pets are left unattended in the vehicle. They can operate power windows and other controls. If the engine is left running, they may accidentally engage the shift lever.

- Always remove the ignition key.
- Always set the parking brake.
- Lock the doors with the key or with the remote control.

Warning!

Risk of a serious accident.
The steering column will lock when you remove the key while you are driving or as the car is rolling to a stop. You will not be able to steer the car.

- Never remove the key from the steering lock while you are driving.

To protect your vehicle and your possessions from theft, you should always proceed as follows when leaving your vehicle:

- Close windows.
- Remove ignition key.
- Engage steering lock.
- Lock storage tray between the seats and glove compartment.
- Remove valuables (e.g. car documents, telephone, house keys) from the car.
- Lock doors.

Downloaded from www.Manualslib.com manuals search engine

Keys

- ▷ Please observe the chapter "ALARM SYSTEM, INFRARED PASSENGER COMPARTMENT MONITORING" on Page 24.
- ▷ Please observe the chapter "CENTRAL LOCKING" on Page 22.

Two main keys and one spare key are supplied with your Porsche.
These keys operate all the locks on your vehicle.

- ▷ Be careful with your car keys: do not part with them except under exceptional circumstances.
- ▷ To avoid battery run-down, always remove the ignition key from the ignition lock.

Replacement keys

Replacement car keys can be obtained only from your authorized Porsche dealer, and this can sometimes be very time-consuming.
You should therefore always keep the spare key on your person.
Keep it in a safe place (e.g. wallet), but under no circumstances in or on the vehicle.

The key codes of new keys have to be "reported" to the car control unit by your authorized Porsche dealer.

The key grip of the spare key can be exchanged for a main-key grip.

Disabling key codes

If a key is lost, the key codes can be disabled by an authorized Porsche dealer.
All the remaining car keys are required for this purpose.
Disabling the code ensures that the car can be **started** only using authorized keys.

Note

- ▷ Please note that the other locks can still be opened with the disabled key.

Immobilizer

There is a transponder (an electronic component) in the key grip, containing a stored code.
When the ignition is switched on, the ignition lock checks the code.
The immobilizer can be deactivated and the engine started only using an authorized ignition key.

Note

If the ignition is left on for more than two minutes without starting the engine, the immobilizer is reactivated.

- ▷ If this happens, the ignition key must be turned back to the "0" position before the engine can be started.

The immobilizer is automatically activated when the ignition key is withdrawn.

Security Wheel Bolts

- ▷ If wheels have to be removed during a workshop visit, do not forget to hand over the socket for the security wheel bolts along with the car key.

Downloaded from www.Manualslib.com manuals search engine

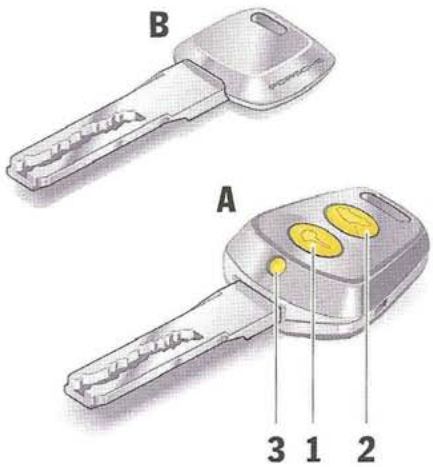

A - *Main key*
1 - *Central locking button*
2 - *Luggage compartment lid button*
3 - *Light-emitting diode*
B - *Spare key*

Key with Radio Remote Control

Operating central locking and alarm system

▷ Press button **1**.
Please observe the appropriate chapters of this Manual.

Unlocking luggage compartment lid

▷ Press button **2** for approx. two seconds.

If the vehicle was locked, it is unlocked simultaneously with the luggage compartment.
The vehicle will be locked again approx. 15 seconds after the luggage compartment is closed if none of the doors was opened.

Note

Your authorized Porsche dealer can program further types of unlocking.

Type 1

The relocking time of the doors can be adjusted to suit your individual requirements:
4 - 120 seconds.

Type 2

The doors stay locked when the luggage compartment is unlocked.

The remote-control standby function switches off after 5 days

If the vehicle is not started or unlocked with the remote control within five days, the remote control standby function is switched off (to prevent discharging of the vehicle battery).

1. In this case, unlock the driver's door with the key at the door lock.
   Leave the door closed in order to prevent the alarm system from being triggered.
2. Press button **1** on the remote control.

The remote control is now activated again.

Downloaded from www.Manualslib.com manuals search engine

Doors

If the door windows are closed, they will be automatically opened by a few millimeters when the doors are opened and, when the doors are closed, they will be closed again. This makes it easier to open and close the doors and protects the seals.
Therefore, you should pull the door handle slowly so that the door window can be lowered before the door is opened.

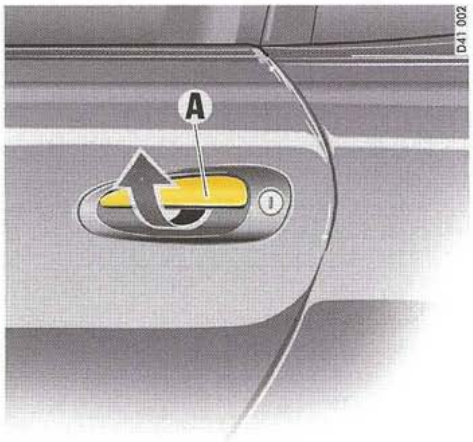

Opening unlocked doors from outside

▷ Slowly pull door handle **A**.

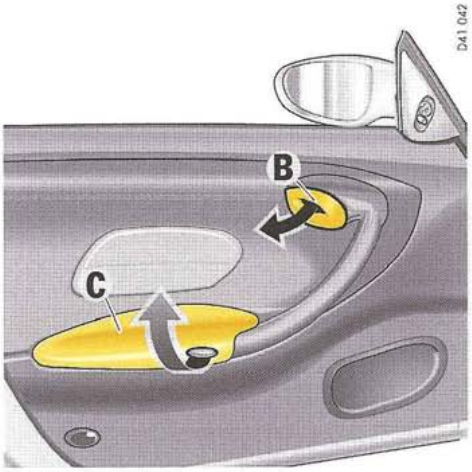

Opening unlocked doors from inside

▷ Slowly pull door handle **B**.

Opening locked doors from inside

▷ Slowly pull door handle **B** twice.
Please observe the chapter "LOCKING CONDITIONS" on Page 22.

Door storage tray

Always keep the door storage tray **C** closed, so that the side airbag is not obstructed in the event of an accident.

Downloaded from www.Manualslib.com manuals search engine

Central Locking

USA: FCC ID LXPRKY 116;
FCC ID LXPVIM 145

Canada: TxF 315P 2255 102 275;
RxF 315P 2255 102 276 A

This device complies with:
Part 15 of the FCC Rules
RSS-210 of Industry Canada.

Operation of this device is subject to the following two conditions:

- It may not cause harmful interference, and
- it must accept any interference received including interference that may cause undesired operation.

Note

The manufacturer is not responsible for any radio or TV interference caused by unauthorized modifications to this equipment.
Such modification could void the user's authority to operate the equipment.

▷ Please observe the chapter "LOAD SWITCH-OFF AFTER TWO HOURS OR FIVE DAYS" on Page 152.

▷ Please observe the chapter "POWER WINDOWS" on Page 26.

Both car doors and the filler flap can be centrally unlocked or locked with the remote control.

The vehicle cannot be locked if the driver's door is not completely closed.

A short **signal from the alarm horn** will draw your attention to the fact that the following components are not completely closed when you try to lock the vehicle:

- Passenger's door
- Luggage compartment lid
- Engine compartment lid
- Storage tray
- Glove compartment

Note

Unlocking the vehicle by using the key in the door lock and opening the door may activate the alarm system within 10 seconds.

Automatic relocking

If the car is unlocked by remote control and none of the car doors is opened within approx. 60 seconds, automatic relocking takes place. This relocking time can be adapted to your individual requirements (4 - 120 seconds) by an authorized Porsche dealer.

Locking conditions

▷ Lock car **once**.
The doors cannot be opened from the outside. Alarm system and infrared passenger compartment monitoring are switched on.

If a person or animal remains in the vehicle:

▷ Quickly lock car **twice**.
The doors cannot be opened from the outside. The infrared passenger compartment monitoring is switched off.

Unlocking the door with the inner door handle

Any person remaining in the locked car can open the door with the inner door handle:

1. Pull inner door handle once to unlock door lock.
2. Pull inner door handle again to open door.

Note

▷ Inform any person remaining in the car that the alarm system will be triggered if the door is opened.

Downloaded from www.Manualslib.com manuals search engine

Emergency operation – opening

▷ Unlock the driver's door with the key at the door lock.
Open the door and switch the ignition on within 10 seconds in order to prevent the alarm system from being triggered.

Emergency operation – closing

▷ Quickly turn the key in the driver's door lock to the lock position **three times** in succession.
If there is a defect in the central locking system, all functioning elements of the central locking system will be locked.
The alarm system is switched on.
The infrared passenger compartment monitoring system is switched off.

The fault should be remedied immediately at an authorized Porsche dealer.

Indication by emergency flasher and alarm horn

If the **remote control** is used for unlocking or locking, a response is provided by the emergency flasher:

- Unlocking – single flash.
- Locking – double flash.
- Locking twice – continuous illumination for approx. 2 seconds and short alarm-horn signal.

Central locking switch

The central locking switch on the dashboard lets you lock and unlock both doors electrically.

Note

If the doors are locked with the key or remote control, they can not be opened by pressing the central locking switch.

Locking

▷ Press the rocker-switch symbol.
Indicator light lights up if ignition is on.

Unlocking

▷ Press the rocker-switch indicator light.
Indicator light goes out.

If the doors were locked with the central locking switch, they can be opened by pulling the inner door handle:

1. Pull inner door handle once to unlock door lock.
2. Pull inner door handle again to open door.

▷ ▷ ▷

Downloaded from www.Manualslib.com manuals search engine

Automatic door locking

Your authorized Porsche dealer can program diverse types of automatic door locking in the control unit of the central locking system:

Type 1

Doors lock automatically when the ignition is switched on.

Type 2

Doors lock automatically when a speed of 3 - 6 mph (5 - 10 km/h) is exceeded.

Type 3

Doors lock automatically when the ignition is switched on. If doors are opened with the engine running, they lock again automatically when a speed of 3 - 6 mph (5 - 10 km/h) is exceeded.

Type 4

The doors do not lock automatically.

Note

Automatically locked doors can be unlocked with the central locking button or opened by pulling on the inside door handle twice.

⚠ Warning!

In an emergency situation where you need to exit the car through an automatically locked door, remember the following procedure to open the door.

- ▷ Unlock the doors by pressing the central locking button **or**
- ▷ pull the inside door handle **twice** to open the door.

Fault indication

A double **horn signal** during locking indicates a defect in the central locking or alarm system. Have the defect remedied at an authorized Porsche dealer.

Overload protection

If the central locking system is operated more than ten times within a minute, further operation is blocked for 30 seconds.

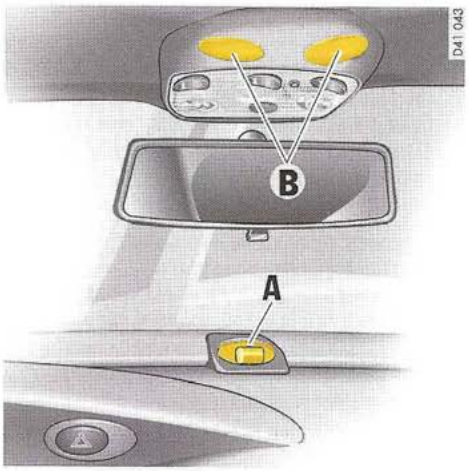

A - *Light-emitting diode for alarm system*
B - *Sensor module for infrared passenger compartment monitoring system*

Alarm System, Infrared Passenger Compartment Monitoring

The alarm system and infrared passenger compartment monitoring system are switched on when the doors are locked with the key or remote control.

- ▷ Please observe the chapter "CENTRAL LOCKING" on Page 22.

Downloaded from www.Manualslib.com manuals search engine

Unlocking the vehicle by using the key in the door lock and opening the door may activate the alarm system within 10 seconds.

Function indication

If the alarm system is activated, light-emitting diode **A** on the dashboard flashes.

If, after locking, the light-emitting diode does not flash or, after ten seconds, it emits double flashes, then **not** all alarm contacts are closed. Additionally, a brief horn signal sounds.

When the doors are unlocked, the alarm system and infrared passenger compartment monitoring system are switched off and the light-emitting diode goes off.

When the alarm is armed, the following areas are monitored

- Doors
- Luggage compartment lid
- Engine compartment lid
- Radio
- Glove compartment
- Storage tray between the seats
- Passenger compartment

If one of these alarm contacts is interrupted, the alarm horn sounds for approximately 3 minutes. Additionally, the emergency flasher and the passenger compartment light flash for approximately five minutes.
When the alarm is triggered, the light-emitting diode changes over to double flashes.

In order not to limit the action range of the infrared passenger compartment monitoring system:

▷ Move sun visors to one of the final positions.

▷ Do not fold the seat backrests forward.

Deactivating the infrared passenger compartment monitoring system for one locking process

If a person or animal remains in the car while it is locked, the infrared passenger compartment monitoring system must be switched off.

▷ Quickly lock car **twice**.
The doors are locked but can be opened from the inside:

1. Pull inner door handle once to unlock door lock.
2. Pull inner door handle again to open door.

Note

▷ Inform any person remaining in the car that the alarm system will be triggered if the door is opened.

Fault indication

A double **horn signal** during locking indicates a defect in the central locking or alarm system.

▷ Have the defect remedied at an authorized Porsche dealer.

Downloaded from www.Manualslib.com manuals search engine

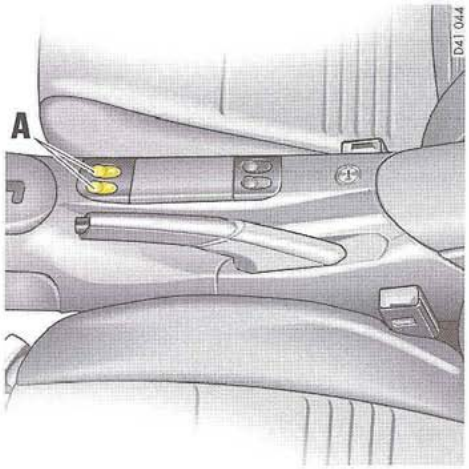

Power Windows

Warning!

Risk of an accident.

▷ Do not put anything on or near the windows that may interfere with the driver's vision.

Risk of injury when the door windows close. This applies especially if the windows are closed with the comfort function, because with this function the window goes up automatically.

▷ Make sure nobody can be injured when the windows close.

▷ Remove the ignition key to shut off power to the window switches when the vehicle is not attended by a responsible person.

Readiness for operation of power windows

- With engine running **or**
- in ignition key position **1 or**
- with door closed and ignition key withdrawn: only until first opening of the door.

Opening windows

▷ Press rocker switch **A** until the window has reached the desired position.

One-touch operation

▷ Press rocker switch **A** briefly.
Window moves to its final position.
Press again to stop the window in the desired position.

Comfort function when unlocking the vehicle

▷ Unlock car with the remote control.
Hold car key in door lock in the unlocking direction until the windows have reached the desired position.

Downloaded from www.Manualslib.com manuals search engine

Closing windows

▷ Press rocker switch **A** until the window has reached the desired position.

One-touch operation

▷ Press rocker switch **A** briefly.
Window moves to its final position.
Press again to stop the window in the desired position.

Comfort function when locking the vehicle at the door lock

▷ Hold car key in door lock in the locking direction until the windows have reached the desired position.

Anti-crushing protection

If a side window is blocked during closing, it will stop and open again by about an inch.

⚠ Warning!

Risk of severe personal injuries.
If the rocker switch is pressed again within 10 seconds of the window being blocked, the window will close with its full closing force. Anti-crushing protection is disabled.

▷ Once the anti-crushing protection acts to stop the window and opens it slightly, do not press the rocker switch again within 10 seconds without checking to make sure that nothing is blocking the path of the window.
The window will close with full closing force.

One-touch operation is disabled for 10 seconds after blockage of a side window.

Automatic window lowering

▷ Please observe the chapter "DOORS" on Page 21.

The standby function of the power windows switches off after two hours

When the car is unlocked, the power windows can no longer be operated after two hours (to save the car battery).

▷ Switch on the ignition or start the engine to reactivate the power windows.

Storing end position of the windows

If the battery is disconnected and reconnected, the windows will not be raised automatically when the door is closed.

1. Close the windows with the rocker switch **once**.
2. Press front half of rocker switch again to store the end position of the windows in the control unit.

Downloaded from www.Manualslib.com manuals search engine

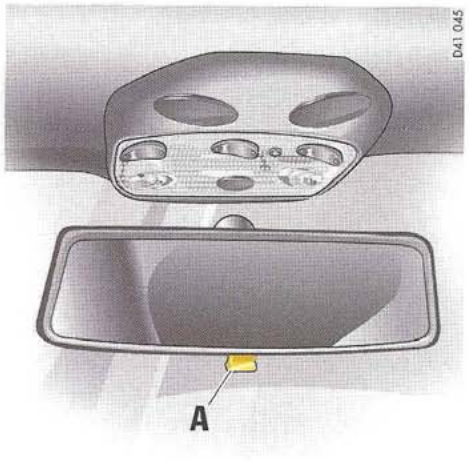

Inside mirror

When the mirror is being adjusted, the anti-glare lever **A** must point forward.

Basic position: lever forward
Anti-glare position: lever back

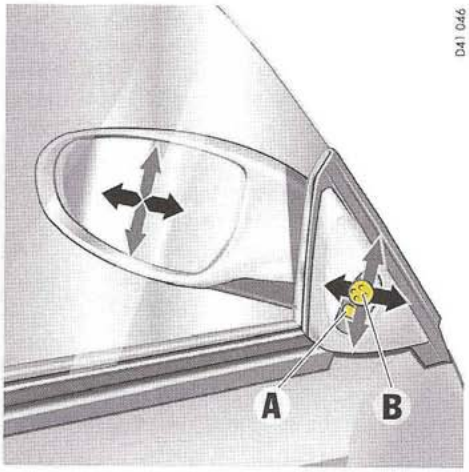

A - *Selector switch, driver's/passenger's side*
B - *Mirror adjustment*

Rear View Mirrors

Before driving the vehicle, adjust the outside and inside mirrors.
It is important for safe driving that you have good vision to the rear.

⚠ Warning!

Risk of an accident.

▷ Do not put anything on or near the windows or the mirrors that may interfere with the driver's vision.

Door mirrors

The mirror housing is hinged and can be folded flat against the car to prevent damage in the tight parking areas.

Adjusting

1. Select driver's side or passenger's side with rocker switch **A**.
2. Move the door mirror glasses in the appropriate direction using the control switch **B**.

If the electrical adjustment facility fails

▷ Adjust mirror by pressing on the mirror face.

Downloaded from www.Manualslib.com manuals search engine

Rear Window Defogger, Door Mirror Heating

The mirror heater is ready for operation when the ignition is on.

Switching on

▷ Press the rocker-switch symbol.
Indicator light is lit.

After about 12 minutes, the heater switches off automatically.
The heater can be switched back on again by a further press on the switch.

Switching off

▷ Press the indicator light in the rocker switch.

Downloaded from www.Manualslib.com manuals search engine

Seat Adjustment

⚠ **Warning!**

The seat may move unexpectedly if you attempt to adjust while driving. This could cause sudden loss of control or personal injury.

▷ Do not adjust seats while the vehicle is in motion.
The backrest locks must be engaged at all times while the vehicle is in motion.

Safety belts only offer protection when the backrest is upright and the belts are properly positioned on the body.
Improperly positioned safety belts can cause serious personal injury in an accident.

▷ Do not operate the car with the driver or passenger backrests excessively reclined (see "Seat position").

Seat position

A correct sitting position is important for safe and fatigue-free driving.
We recommend the following procedure for adjusting the driver's seat to suit individual requirements:

1. Adjust the seat height to give yourself enough headroom and a good overview of the vehicle.
2. Adjust the seat until, with the accelerator pedal fully depressed, your leg is straight but your entire foot still rests on the accelerator pedal.
3. Grip the top half of the steering wheel.
   Set the backrest angle and steering-wheel position so that your arms are almost outstretched. However, your shoulders must still rest on the backrest.
4. If necessary, correct the seat fore-and-aft adjustment.

A - Seat height adjustment

▷ Raise locking lever.

▷ Set the desired seat height by shifting your body weight.

▷ Release the lever.

Downloaded from www.Manualslib.com manuals search engine

B - Fore and aft

▷ Raise locking lever.
Move seat to desired position and release lever.
Ensure that the seat engages correctly.

C - Backrest angle

▷ Operate switch until the desired backrest angle is reached.

Seat backrest

Folding forward

▷ Pull up lever **D** in the side part of the backrest and fold the backrest forward.

Folding back

▷ Tilt back and engage the backrest so that it cannot tip forward when the car is braked.

Steering Wheel Adjustment

⚠ **Warning!**

Risk of accident.
The steering wheel may move further than desired if you attempt to adjust it while driving.
You may lose control of the vehicle.

▷ Do not adjust the steering wheel while driving.

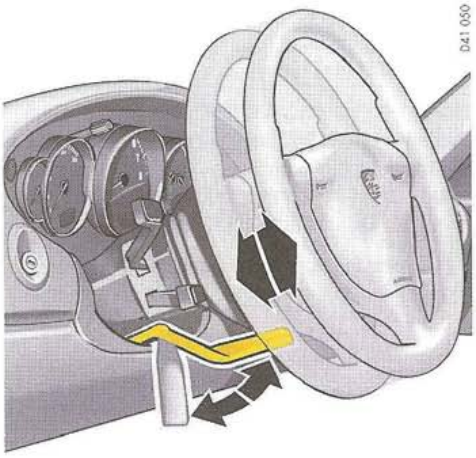

Longitudinal adjustment

1. Push locking lever downwards.
2. Adjust steering wheel to fit the chosen backrest angle and seat position by moving the steering wheel longitudinally.
3. **Swivel locking lever back until you feel it engage.**
   If necessary, move steering wheel slightly longitudinally, to ensure engagement.

Downloaded from www.Manualslib.com manuals search engine

Safety Belts

⚠ Warning!

Always make sure your and your passenger's safety belts are properly fastened while the vehicle is in motion.
Failure to follow safety belt warnings may result in serious personal injury.

- For your and your passenger's protection, use safety belts at all times while the vehicle is in motion.
- Use appropriate child restraint systems for all small children.

Proper wearing of safety belts

- Safety belts must be positioned on the body as to restrain the upper body and lap from sliding forward. Improperly positioned safety belts can cause serious personal injury in case of an accident.
- The shoulder belt should always rest on your upper body. The shoulder belt should never be worn behind your back or under your arm.
- For maximum effectiveness, the lap belt should be worn low across the hips.
- Pregnant women should position the belt as low as possible across the pelvis. Make sure it is not pressing against the abdomen.
- Belts should not be worn twisted.
- Do not wear belts over rigid or breakable objects in or on your clothing, such as eye glasses, pens, keys, etc. as these may cause injury.
- Several layers of heavy clothing may interfere with proper positioning of belts.
- Belts must not rub against sharp objects or damage may occur to the belt.
- Two occupants should never share the same belt at the same time.

Care and maintenance

- Keep belt buckles free of any obstruction that may prevent a secure locking.
- Belts that have been subjected to excessive stretch forces in an accident must be inspected or replaced to ensure their continued effectiveness in restraining you.
  The same applies to belt tensioner systems which have been triggered.
  In addition, the anchor points of the belts should be checked.
- If safety belts do not work properly, see your authorized Porsche dealer immediately.
- If the belts show damage to webbing, bindings, buckles or retractors, they should be replaced to ensure safe operation.
- Do not modify or disassemble the safety belts in your vehicle.
- The belts must be kept clean or the retractors may not work properly
  Please observe the chapter "CAR CARE INSTRUCTIONS" on Page 130.
- Never bleach or dye safety belts.
- Do not allow safety belts to retract until they are completely dry after cleaning or this may cause damage to the belt.

Belt tensioner

Depending on the force of an impact, fastened seat belts are tightened in an accident.

The belt tensioners are triggered in:

- Front and rear impacts

The belt tensioners are not triggered in:

- Side impacts
- Vehicle overturning

Note

The belt tensioner system can be triggered only once; the system must be replaced afterward. Work may be performed on the belt-tensioner system only by an authorized Porsche dealer.
Smoke is released when the belt tensioners are triggered. This does not indicate a fire in the vehicle.

Downloaded from www.Manualslib.com manuals search engine

Safety Belt Warning System

An audio-visual warning system is interconnected with the driver's safety belt.

Every time the ignition is turned on, the gong will sound for about 6 seconds to remind driver and passenger to buckle up.
The safety belt warning lights in the instrument panel and on-board computer will go off as soon as the driver has buckled up.

Inertia reel retractor

The combination lap/shoulder belt with inertia reel locking mechanism adjusts automatically to your size and movements as long as the pull on the belt is slow.

Rapid deceleration during hard braking or a collision locks the belt. The belt will also lock when you drive up or down a steep hill or in a sharp curve, otherwise, the shoulder belt will not inhibit your upper body movement.

- ▷ Assume a comfortable sitting position. The shoulder belt should always rest on your upper body. The shoulder belt should never be worn behind your back or under your arm.
- ▷ To fasten, grasp belt and pull the belt in a continuous slow motion across your chest and lap.
- ▷ Insert belt tongue into buckle on inboard side of seat. Push down until it securely locks with an audible click. Pull the belt to check.
- ▷ Pull shoulder section to make sure belt fits snugly across the pelvis.
- ▷ Belts should fit snugly across the pelvis and chest. Make sure there is no slack in the belt.
- ▷ To unfasten belt, push in release button (**arrow**) on buckle. Belt tongue will spring out of buckle.
- ▷ To release a latched belt, lean back to take the body pressure off the belt.
- ▷ To store lap/shoulder belt, allow the belt to retract as you guide the latch to its stowed position.
- ▷ Please observe the chapter "AUTOMATIC LOCKING RETRACTOR" on Page 34.

▷ ▷ ▷

Downloaded from www.Manualslib.com manuals search engine

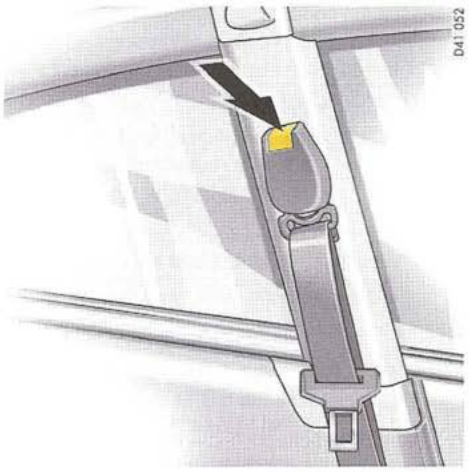

Safety belt height adjustment

Adjust the height of the safety belt so that it runs across the middle of the shoulder, not against the neck.

Adjusting belt height

- ▷ Up – push belt deflector.
- ▷ Down – press button (**arrow**) and move belt deflector.

Automatic locking retractor

The safety belt for the passenger seat is equipped with an automatic locking retractor for securing the child restraint system.
When activated, this retractor allows you to securely fasten the child restraint system in place so that inadvertent movements will not occur.

Activating the automatic locking retractor

1. Pull the safety belt retractor **completely** out. At this point the locking mechanism is activated.
2. Insert the safety belt tongue into the buckle and make certain that it is properly latched.
3. Allow the safety belt to retract until it is tight on the child restraint system. You may further tighten the belt by pulling on it to allow more of it to retract.

Releasing the safety belt

1. Unbuckle the safety belt latch.
2. Then make certain that the belt has fully retracted.
   At this point the automatic locking feature will be disengaged.

Downloaded from www.Manualslib.com manuals search engine

Child Restraint Anchorages

▷ Please observe the chapter "AUTOMATIC LOCKING RETRACTOR" on Page 34.

If your child restraint seat require the use of a tether strap, you will want to use the anchor point provided behind the seat backrests under the carpet. To ensure proper installation, see your authorized Porsche dealer.

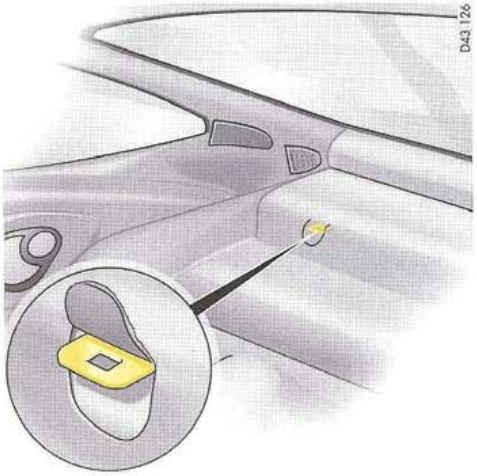

⚠ Warning!

Child restraint anchorages are designed to withstand only those loads imposed by correctly fitted child restraints. Under no circumstances are they to be used for adults safety belts or harnesses. Such use could result in serious personal injury or death.

▷ Do not misuse the child restraint anchorages. They are not designed to withstand loads imposed by adults.

▷ ▷ ▷

Downloaded from www.Manualslib.com manuals search engine

Child Restraint Systems

Porsche recommends that all infants and children be restrained in child restraint systems at all times while the vehicle is in motion in accordance with applicable laws.

The use of infant or child restraints is required by law in all 50 states and the Canadian provinces. The child restraint system should be one that complies with U.S. Federal/Canadian Motor Vehicle Safety Standards 213 and should be secured by a lap belt or lap belt portion of a lap-shoulder belt. A statement by the seat manufacturer of compliance with this standard can be found on the instruction label on the restraint and in the instruction manual provided with the restraint.

⚠ Danger!

Risk of serious personal injury or death to the child.

▷ Follow all child restraint instructions and warnings in this manual.

- When using an infant or child restraint system, be sure to follow all manufacturer's instructions on installation and use.
- Infants and small children should never be held on the lap, nor should they share a safety belt with another occupant while the vehicle is in motion.
- Children too big for child restraint systems should use regular safety belts. A shoulder belt can be used providing it does not cross the face or the neck of the child.

The airbag deactivation device installation requires special programming available only from your authorized Porsche dealer.

Your authorized Porsche dealer will be glad to advise you about the installation possibility for a Porsche child restraint system which allows deactivation of the passenger's airbags.

⚠ Danger!

The use of a child restraint system in the passenger seat without airbag deactivation can result in serious personal injury or death to the child from an airbag deployment.
To reduce risk of injury from an inflating airbag in an accident, Porsche strongly recommends:

▷ Do not use a child restraint system in the passenger seat unless the passenger airbags are deactivated.

Downloaded from www.Manualslib.com manuals search engine

Rearward facing child restraint system:

- ▷ Use only in the passenger seat.
- ▷ Use in passenger seat only with the Porsche child restraint system with airbag deactivation capability.
  When using the Porsche child restraint system you **must** ensure that the passenger airbags are deactivated.

Forward facing child restraint system:

- ▷ **If you must place a forward facing child restraint system in the passenger seat, the passenger airbags must be deactivated.**

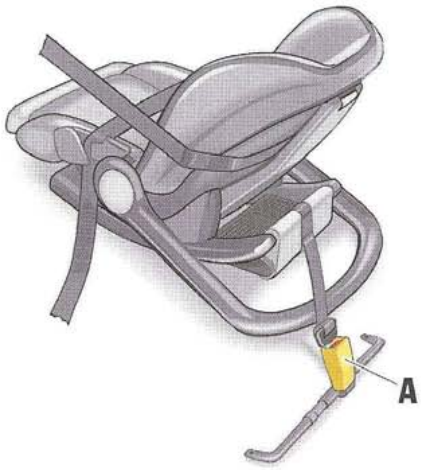

D41 053

Example: Rearward facing child restraint system

In order to deactivate the passenger's airbags, the belt tongue of the child's seat must always be inserted in the buckle "A" in front of the passenger seat.

When the ignition is switched on, deactivation of the airbags is indicated by the airbag warning light flashing for 60 seconds.

⚠ Danger!

If the light does not flash, the airbags are not deactivated and a child restraint system must not be installed.

- ▷ Have the fault remedied immediately by an authorized Porsche dealer.

Downloaded from www.Manualslib.com manuals search engine

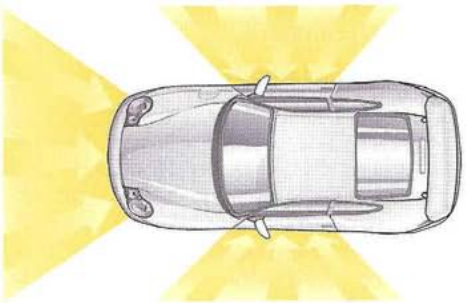

Airbag Systems

The Airbags in combination with the safety belts makes up a safety system which offers the driver and the passenger the greatest known protection from injuries in case of accident.

Even if your vehicle is equipped with airbags, **the safety belts must be worn at all times**, because the front airbag system is only actuated by frontal collisions with an impact of sufficient severity.
See shown figure for ranges of effectiveness.

Below the actuation threshold of the airbag system, and during types of collisions which do not cause the actuation of the system, the safety belts provide the primary protection to the occupants when correctly worn.
Therefore, all persons within the vehicle must always wear safety belts (in many states, state law requires the use of safety belts).

▷ Please observe the chapter "SAFETY BELTS" on Page 32.

The front airbags are located behind the padded steering wheel panel on the driver's side and on the passenger's side in the dashboard.
The side airbags (POSIP - **Po**rsche **S**ide **I**mpact **P**rotection System) are installed in the doors under the door trim panel.

Function

The front airbags are triggered during a frontal collision of sufficient force.
In the event of a side impact of corresponding force, the side airbag on the impact side is triggered.

The inflation process generates the amount of gas required to fill the airbags at the necessary pressure in fractions of a second.

Airbags protect the face and upper body, whilst simultaneously damping the motion of the driver and passenger in the impact direction in the event of a frontal impact or side impact.

⚠ Danger!

To provide optimal occupant protection, airbags must inflate at very high speed.
If you are not wearing your safety belt or are too close to the airbag when its deployed, inflating airbags can result in serious injury or death.

▷ Make sure there are no people, animals or objects between the driver or passenger and the area into which the airbag inflates.

▷ Sit back as far from the dashboard or steering wheel as is practical, while still maintaining full vehicle control.

▷ Do not lean against the inside of the doors.

▷ Always hold the steering wheel by the outer rim.
Never rest your hands on the airbag panel.

▷ Never transport heavy objects on or in front of the passenger seat.

▷ Always keep the lid of the door storage compartment closed. Objects must not protrude out of the door storage compartment.

▷ Give your passenger all of the information in this chapter.

▷ No changes must be made to the wiring or components of the airbag system.

Downloaded from www.Manualslib.com manuals search engine

- ▷ Do not add any additional coverings or stickers to the steering wheel or in the area of the passenger airbag and side airbags. Doing so may adversely affect the functioning of the airbag system or cause harm to the occupants if the airbag system should deploy.
- ▷ Do not undertake any wiring for electrical accessory equipment in the vicinity of the airbag wiring harnesses. Doing so may disable the airbag system or cause inflation.
- ▷ If the warning light comes on, the airbag system should be repaired immediately by your authorized Porsche dealer.

Note

Airbag components (e.g. steering wheel, door trim) may be disassembled only by an authorized Porsche dealer.

When disposing of a used airbag unit, our safety instructions must be followed. These instructions can be obtained at any authorized Porsche dealer.

Warning light

The central triggering unit monitors the operational readiness of the airbag system and the warning light.

Any malfunctions that may occur will be indicated by the warning lights in the instrument panel and on-board computer.

- ▷ **In the following cases you should immediately consult an authorized Porsche dealer in order to assure the airbag system is functioning properly:**

- Illumination of the airbag warning light during travel or repeated illumination longer than 5 seconds after the ignition circuit is turned on.
- Illumination fails to light up during ignition circuit activation.

If the airbags on the passenger's side are switched off by the **child restraint system**, or if an installed child restraint system is detected when the ignition is switched on, the warning light **flashes** for 60 seconds when the ignition is on.

Danger!

If the light does not flash, the airbags are not deactivated and a child restraint system must not be installed.

- ▷ Have the fault remedied immediately by an authorized Porsche dealer.

Airbag maintenance

In order to ensure long-term functioning, the airbag system must be inspected by an authorized Porsche dealer after 4, 8 and 10 years from the date of manufacture shown on the safety compliance sticker, and every 2 years thereafter.

Important information

If you sell your Porsche, notify the purchaser that the vehicle is equipped with airbags, and refer them to the chapter, "Airbag Systems", in the owner's manual (safety and disposal rules).

Further information on the airbag system can be found on stickers at the sun visors, as well as on all airbag components.

- ▷ For special recommendations on the use of child restraints:
  Please observe the chapter "CHILD RESTRAINT SYSTEMS" on Page 36.

Downloaded from www.Manualslib.com manuals search engine

Clutch Pedal

The clutch pedal must be depressed fully before the starter will engage.

⚠ Warning!

Risk of an accident.

- ▷ Always check the movement of the clutch pedal before driving and make sure that it is not obstructed by a floor mat or any other object.
- ▷ Secure the floor mat to prevent it from sliding into positions that could interfere with the safe operation of your vehicle.
  Your Porsche dealer will be glad to offer you floor mats of the correct size including a securing possibility.

To avoid damage to the clutch and transmission:

- ▷ Always depress the clutch pedal fully when changing gears.
- ▷ Do not hold the car on a steep grade with the clutch pedal partially depressed.

Should the free travel of the clutch pedal suddenly become bigger, it could mean a malfunction of the clutch.

- ▷ See your Porsche dealer for correction.

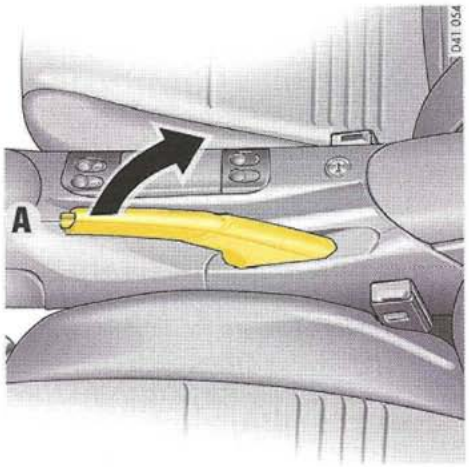

Parking Brake

Parking brake force is mechanically transferred to the rear wheels by means of cables.

- ▷ Use the parking brake only after the vehicle has come to a full stop.

Setting the parking brake

- ▷ Pull the lever **all the way up** (**arrow**).
  With the ignition on, the parking brake warning lights in the instrument panel and on-board computer will come on if the lever is even slightly raised. A firm pull upward is required to properly engage the parking brake.
  If the brake is not fully set, the vehicle may roll without control.
- ▷ Move the gearshift lever to reverse or first gear.
- ▷ Before exiting the vehicle, make sure that the parking brake is fully set and the vehicle is not moving at all.

Releasing the parking brake

- ▷ Pull the lever slightly up as you depress the release button **A**, and then push the lever all the way down.

Downloaded from www.Manualslib.com manuals search engine

Parking brake warning light USA

Parking brake warning light Canada

The warning lights in the instrument panel and on-board computer will go out after the parking brake is fully released.
The warning lights are not an indicator that the parking brake is fully set; it is only intended to be a warning to release the parking brake before driving the car.

Caution!

A partially engaged brake will overheat the rear brakes, reduce their effectiveness and cause excessive wear.

- Release the parking brake fully.

- When parking your car, always set the parking brake by pulling all the way up on the lever.
- Move the gearshift lever to reverse or first gear.
- On hills also turn the front wheels towards the curb.

Brakes

- Please observe the chapter "AERODYNAMIC COMPONENTS" on Page 9.
- Make it a habit to check the operation of your brakes before driving.

Keep in mind that the braking distance increases very rapidly as the speed increases. At 60 mph or 100 km/h, for example, it is not twice but four times longer than 30 mph or 50 km/h. Tire traction is also less effective when the roads are wet or slippery.

- Therefore, always maintain a safe distance from the car in front of you.

Vehicles without Porsche Ceramic Composite Brake (PCCB)

Even though the brake discs consist of alloyed grey cast iron, they will unavoidably start to corrode if your car is parked for an extended period. The brakes will tend to "rub" as the result.
The nature, extent and effects of corrosion depend on the amount of time the vehicle was parked, whether granular or liquid road salt was spread and whether grease-dissolving agents were used in car washes.
If the braking comfort is noticeably impaired, we recommend having the brake system checked by experts at an authorized Porsche dealer.

Brake system function

Your Porsche is equipped with a power assisted hydraulic dual circuit brake system with disc brakes at the front and rear.
Both circuits function independently. One brake circuit operates the front and the other operates the rear.

If one brake circuit has failed, the other will still operate. However, you will notice an increased pedal travel when you apply the brakes.
Failure of one brake circuit will cause the stopping distance to increase.

Warning!

Risk of an accident.
In the unlikely event of hydraulic failure of one brake circuit:

- Push the brake pedal down firmly and hold it in that position.
  A mechanical linkage activates the second circuit, and you will be able to bring the vehicle to a stop.
- After bringing your vehicle to a complete stop, avoid driving the vehicle and instead have it towed to the nearest authorized Porsche dealer for repair.

▷ ▷ ▷

Downloaded from www.Manualslib.com manuals search engine

Brake warning light USA

Brake warning light Canada

If the warning lights in the instrument panel and on-board computer go on while driving, the brake fluid level may be too low, or (if the brake pedal travel has increased) one of the two brake circuits may have failed.

A greater braking pressure will be required, stopping distances will be longer and the braking behavior will change, particularly in curves.

With correctly adjusted brakes, and a correctly working brake system, the pedal travel to the point of brake actuation should be 1-3/16 in. to 1-9/16 in. or 30 to 40 mm.
Whenever the brake pedal travel exceeds this distance, have the brake system checked.

Brake pedal

Warning!

Risk of an accident.
Any obstruction of the brake pedal could increase the stopping distance.

- ▷ Always check the movement of the brake pedal before driving and make sure that it is not obstructed by a floor mat or any other object.
- ▷ Secure the floor mat to prevent it from sliding into positions that could interfere with the safe operation of your vehicle.
  Your Porsche dealer will be glad to offer you floor mats of the correct size including a securing possibility.

Note

In case one of the two brake circuits fails, increased pedal travel is required to bring your vehicle to a full stop.

Warning!

To avoid overheating and premature wear of the brakes:

- ▷ Before descending a steep grade, reduce speed and shift the transmission into a lower gear or driving position to control speed.
- ▷ Do not "ride the brakes" by resting your foot on the pedal when not intending to apply brake pressure.
- ▷ Do not hold the pedal down too long or too often.
  This could cause the brakes to get hot and not function properly.

Downloaded from www.Manualslib.com manuals search engine

Brake booster

The brake booster assists braking only when the engine is running.

When the car is moving while the engine is not running, or if the brake booster is defective, more pressure on the brake pedal is required to bring the car to a stop.

Moisture or road salt on brakes affects braking. When the vehicle is driven on salted roads for extended periods, the brakes should be washed down thoroughly about every 2 weeks. An automatic carwash facility cannot do this job properly. Brakes will dry after a few cautious brake applications.

Warning!

Driving through water may reduce the traction.
Moisture on brakes from road water, car wash, or coating of road salt may affect braking efficiency.

▷ Cautiously apply brakes to test brakes after being exposed.

Brake wear

Your car has excellent brakes, but they are still subject to wear. The rate at which they wear depends on how the brakes are used.

▷ Have the brake system inspected at the intervals recommended in your Maintenance Booklet.

Warning light USA

Warning light Canada

If the warning lights in the instrument panel and onboard computer stay on when the engine is running or come on while driving, the brake pads are worn, excessively.

▷ Do not continue to operate the vehicle. Have your authorized Porsche dealer inspect or replace the brake pads.

Brake pads

Wear on the brake pads and brake discs depends to a great extent on the driving style and the conditions of use and therefore cannot be expressed in actual miles on the road.

The high-performance brake system is designed for optimal braking effect at all speeds and temperatures.
Certain speeds, braking forces and ambient conditions (such as temperature and humidity) therefore might cause "brake noises".

New brake pads or linings

New brake pads and brake discs have to be "broken in", and therefore only attain optimal friction when the car has covered several hundred miles or km.
The slightly reduced braking ability must be compensated for by pressing the brake pedal harder. This also applies whenever the brake pads and brake discs are replaced.

Downloaded from www.Manualslib.com manuals search engine

ABS Brake System (Antilock Brake System)

The ABS system represents a major contribution to the enhancement of active safety in your vehicle. This system prevents the wheels from locking in a panic stop on almost all road surfaces.

With the ABS system in your vehicle, the following areas are enhanced:

Steering, vehicle remains steerable under all braking forces when ABS is engaged.

Good directional control, no swerving caused by locking of wheels under braking conditions.

Shorter stopping distance, stopping distances are usually reduced because controlled braking is maximized.

Prevention of wheel lock up, no brake- induced sliding and thus no localized tire wear from emergency braking.

The crucial advantage of the ABS system over a conventional brake system is in the area of maintaining directional control and maneuverability of the car in emergency situations during normal driving, including panic braking in turns.

⚠ Warning!

The increased control that is provided should not induce you to take greater risks with your safety. The limits dictated by the laws of physics cannot be overcome, even with ABS. The risk of accidents due to inappropriate speed cannot be reduced, even by the ABS. The driver bears the responsibility for all driving maneuvers.

- ▷ Adapt your driving style to the prevailing road and weather conditions.
- ▷ Obey all traffic laws.

Other vehicles not equipped with the ABS system may not be able to maintain control, especially on wet or poor road surfaces and thus may be more likely to impact you from behind.

- ▷ To minimize that risk, use your ABS system to increase your ability to maneuver to avoid dangerous situations and not merely to try to stop in the shortest distance possible.

Downloaded from www.Manualslib.com manuals search engine

Operation of the ABS system

A wheel speed sensor is mounted to each of the four wheels. If wheel lock-up of either of the front wheels or the rear wheels is sensed during braking, the brake pressure is adjusted automatically until the wheel no longer slips. The brake pressure is regulated for each front wheel individually and for both of the rear wheels together.

On a road surface which is slippery on only one side, the rear wheel which is braking on the slippery surface determines the brake pressure which will be applied equally to both rear wheels. This ensures that directional stability is maintained. However, if braking forces approach the wheel lock-up point for all wheels (panic braking) the ABS system will intervene to provide a rapid rythmic braking. The proper operation of ABS is perceived by the driver as a pulsating brake pedal in conjunction with audible noise and perhaps some vibration.

▷ If you experience these sensations while driving or a road surface with questionable traction, reduce vehicle speed appropriate for the prevailing road conditions.

The functional readiness of all the main electrical components of the ABS is checked by an electronic monitoring system both before and while you drive.

Warning light USA

Warning light Canada

When the ignition is switched on the ABS warning light will light up while the system is electronically interrogated and goes out when the engine is started if the check is not yet complete.
If the ABS warning lamp fails to go out, this indicates that ABS has been deactivated due to a fault. If the warning lights in the instrument panel and on-board computer light up while you are driving, this indicates that a fault has occurred. In both cases, normal braking, as in vehicles without ABS, is still retained.

The ABS system should, however, be examined at an authorized Porsche dealer immediately to prevent the occurrence of further faults.

▷ If the ABS system becomes inoperative, take your vehicle to your authorized Porsche dealer immediately.

Warning!

The control unit of the ABS brake system is set for standard tire size. If non-standard tires are installed, the control unit may misinterpret the speed of the vehicle, because of the variant data it receives from the sensors on the axles.

▷ Use only tire makes and types tested by Porsche.

Downloaded from www.Manualslib.com manuals search engine

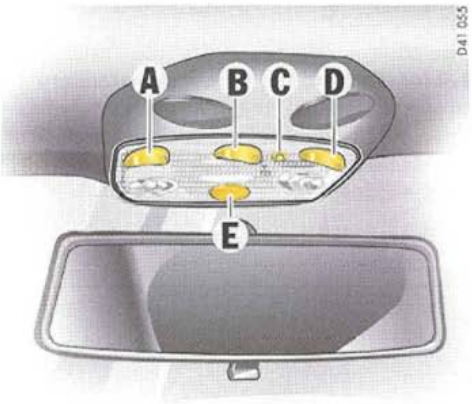

A, D *Switch for reading light on driver's/ passenger's side*
B - *Interior light switch*
C - *Orientation light switch*
E - *Orientation light*

Interior lights

▷ Please observe the chapter "LOAD SWITCH-OFF AFTER TWO HOURS OR FIVE DAYS" on Page 152.

Interior light, reading lights

Switching off

▷ Press left half of switch.

Switching to continuous illumination

▷ Press right half of switch.

Switching on and off automatically

▷ Move switch to center position.

The lights are **switched on** when a door is unlocked or opened or when the ignition key is withdrawn from the ignition lock.

The lights are **switched off** with a delay of approx. 30 seconds after the door is closed. The light goes out immediately as soon as the ignition key is inserted in the ignition lock or the vehicle is locked.

Orientation light

Light-emitting diodes in the doors and in the interior light improve your orientation inside the vehicle when it is dark.
The light-emitting diodes are switched on when the vehicle is unlocked and switched off again when the vehicle is locked.

Light-emitting diode in the interior light

Changing the brightness of the light-emitting diode:

▷ Press switch **C** with a pointed object (such as a ball-point pen).
The brightness changes.

Downloaded from www.Manualslib.com manuals search engine

Footwell Lights

The lights are switched on automatically when a door is opened and go out with a delay of approx. 30 seconds after the door is closed.

Switching to continuous illumination

▷ Press the rocker-switch symbol in the center console.
Indicator light comes on.

The lights between the sun visors and the door guard lights are switched on additionally. The lights are automatically switched off after approx. 12 minutes in order to save the vehicle battery. The lights can be switched back on by pressing the rocker switch again.

Switching lights off

▷ Press the indicator light in the rocker switch.

Downloaded from www.Manualslib.com manuals search engine

Operation, Instruments

1 Side vent

2 Ignition/starter switch with steering lock

3 Space for hands-free microphone for telephone

4 Turn signals/ headlight dimmer/flasher lever

5 Instrument panel

6 Horn

7 Windshield wiper/washer lever

8 Emergency flasher switch

9 Rocker switches for footwell light

10 Readiness display for alarm system

11 Central vent

12 Cupholder

13 Control panel for heating, ventilation, air conditioning

14 Rocker switches for central locking, rear window and door mirror heating

15 Speaker

16 Light switch

17 Operating lever for on-board computer

18 Locking lever for steering-wheel adjustment

19 Operating lever for automatic speed control

20 Wipe interval control

21 Radio

22 Cigarette lighter

23 Glove compartment

24 Interior temperature sensor

Downloaded from www.Manualslib.com manuals search engine

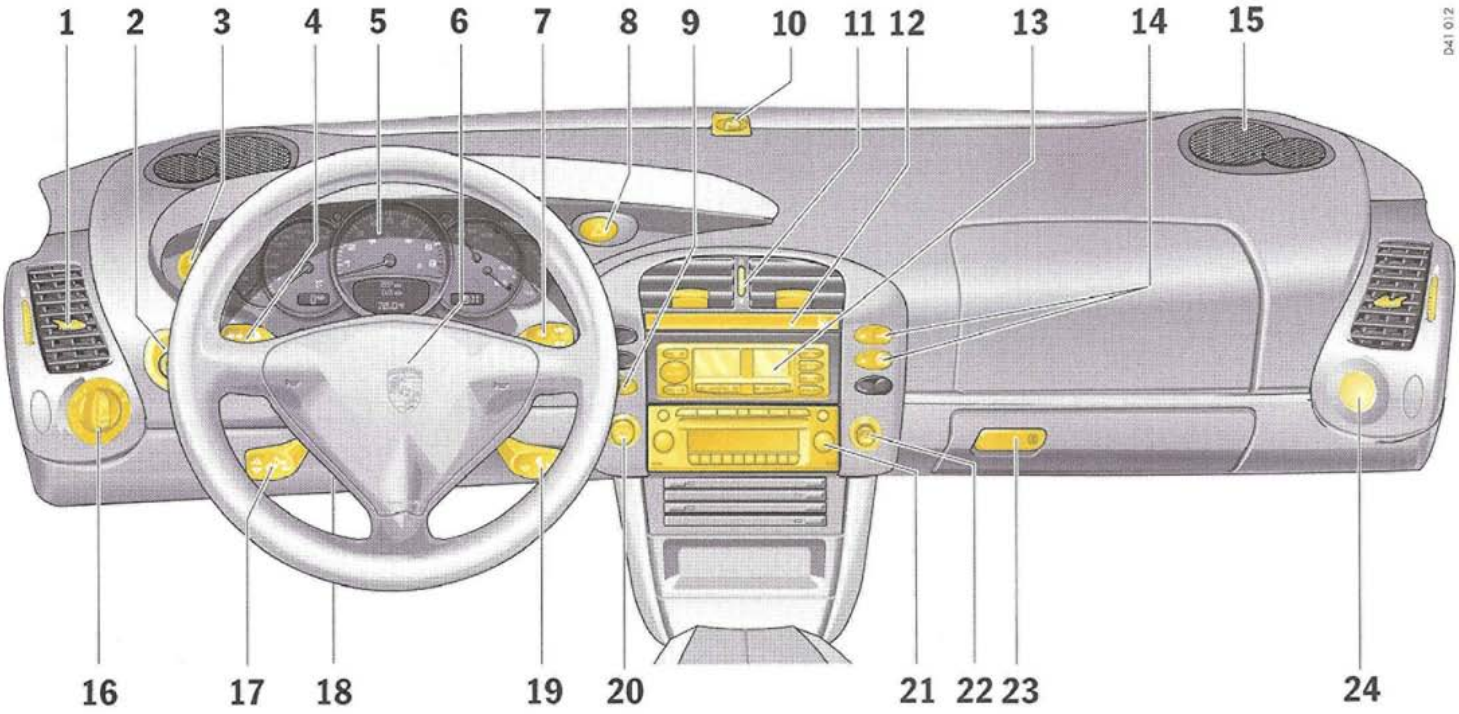

Downloaded from www.Manualslib.com manuals search engine

Ignition/Starter Switch with anti-theft Steering Lock

▷ **For your safety, fasten safety belts.**

▷ Please observe the chapter "IMMOBILIZER" on Page 19.

Before starting the engine

▷ Apply the handbrake.

▷ Move the gearshift lever into neutral.
The clutch pedal must be depressed fully before the starter will engage.

Switch position 0

The ignition key can be withdrawn in this position only.

The steering is locked when the key is withdrawn.

▷ Engage the steering lock by moving the steering wheel to the left or right.
Turn the steering wheel to the locking position before you switch off the engine so that you don't have to exert yourself when locking or unlocking the steering.

Downloaded from www.Manualslib.com manuals search engine

Switch position 1

Ignition is on.
All electrical equipment can be switched on.
The warning lights light up for a lamp check.
Please note the description of the individual warning lights.

▷ When turning the key to position **1**, relieve the steering lock with a slight steering movement.

Note

To conserve battery power at low rpm (traffic jams, town driving etc.), switch off all electrical consumers which are not needed at that moment.

Switch position 2

Starting the engine

▷ Turn the key from position **1** to position **2**.

The clutch pedal must be depressed fully before the starter will engage.
The first operation of the starter is ended automatically when the engine starts.
If the engine does not start, subsequent starter operations will not be ended automatically.

If the engine does not start at the first time or stalls at any time, the key must be returned to position **0**.
When the engine is running, the warning lights should go off. If a light does not go off, take appropriate action as indicated in this manual.

Switching engine off

▷ Turn the ignition key from position **1** to position **0**.

⚠ Warning!

Risk of an accident.
The steering wheel will lock and will cause loss of steering.

▷ Never remove key from the ignition lock or turn the key off while the vehicle is moving.

▷ To avoid battery run-down, always remove the ignition key from the ignition lock.
Please observe the chapter "BATTERY" on Page 155.

▷ Turn the steering wheel until the steering lock is engaged.

Gong

If you leave the key in the ignition/steering lock, a gong will sound when the driver's door is opened. This is a reminder to remove the key.

Downloaded from www.Manualslib.com manuals search engine

Starting Procedures

▷ Please observe the chapter "IMMOBILIZER" on Page 19.

⚠ Warning!

Serious injury may result if you are involved in a collision without having fastened the safety belts.

▷ Fasten safety belts before driving away.

Before starting the engine

▷ Apply the handbrake.

▷ Move the gearshift lever into neutral.
The clutch pedal must be depressed fully before the starter will engage.

Temperature sensors on the engine automatically provide the correct fuel/air mixture required for starting.
Therefore, it is **not necessary to depress the accelerator pedal** while starting a cold or a warm engine.

▷ As soon as the engine starts, release the ignition key.

The first operation of the starter is ended automatically when the engine starts.
If the engine does not start, subsequent starter operations will not be ended automatically.

If the engine fails to start after 10 or 15 seconds of cranking:

▷ Wait about 10 seconds before engaging the starter again.

▷ Do not let the engine idle to warm up.

▷ When starting the engine, be ready to drive immediately.
Drive vehicle at moderate speeds and avoid engine speeds above 4,200 rpm during the first 5 minutes.

⚠ Danger!

Engine exhaust fumes have many components which you can smell. They also contain carbon monoxide (CO), which is a colorless and odorless gas.
Carbon monoxide can cause unconsciousness and even death if inhaled.

▷ Never start or let the engine run in an enclosed, unventilated area.
It is not recommended to sit in your car for prolonged periods with the engine on and the car not moving.

An unattended vehicle with a running engine is potentially hazardous.
If warning lights should come on to indicate improper operation, they would go unnoticed.

▷ Never leave the engine idling unattended.

Danger of fire.

▷ Do not park or operate the vehicle in areas where the hot exhaust system may come in contact with dry grass, brush, fuel spill or other flammable material.

▷ If your car catches on fire for any reason, call the fire department.
Do not endanger your life by attempting to put out the fire.

Downloaded from www.Manualslib.com manuals search engine

Stopping Engine

- ▷ Turn key back to position **0**.
- ▷ Do not stop engine immediately after hard or extended driving.
  Keep engine running at increased idle for about two minutes to prevent excessive heat build-up before turning off engine.
- ▷ To avoid battery run-down, always remove the ignition key from the ignition lock.
- ▷ Make sure that when you leave the car, even briefly, you have withdrawn the ignition key.
- ▷ Engage the steering lock by moving the steering wheel to the left or right.
  Turn the steering wheel to the locking position before you switch off the engine so that you don't have to exert yourself when locking or unlocking the steering.

⚠ Warning!

Hot engine compartment components can burn skin on contact.

- ▷ Before working on any part in the engine compartment, turn the engine off and let it cool down sufficiently.

Engine-compartment blower, radiator fan

The radiator and radiator fans are in the front of the car.
The engine-compartment blower is mounted on the engine compartment lid.

⚠ Warning!

Risk of injury.
After the engine is switched off, the engine-compartment and coolant temperatures are monitored for approx. 20 minutes.
During this period, and depending on temperature, the engine-compartment blower and radiator fans may continue to run or start to run.

- ▷ Carry out work in these areas only with the engine off, the ignition off, and exercise extreme caution.

Automatic garage door

The ignition system in your Porsche may interfere with your electronically operated garage door.

- ▷ To check this, drive your Porsche close to the garage door. Make sure not to interfere with the operating range of the door.
- ▷ Run the engine at different speeds.

If the garage door opens or closes without you operating the garage door unit in your car, contact the dealer who installed the automatic garage door to have the frequency and/or coding of the garage door signal changed or modified.

Downloaded from www.Manualslib.com manuals search engine

Instrument Panel USA Models

Also refer to the corresponding chapters in the Owner's Manual.

1 Voltmeter

2 Speedometer with analogue display

3 Speedometer with digital display

4 Automatic speed control indicator light

5 Tachometer

6 Turn signal indicator light, left

7 High beam indicator light

8 On-board computer

9 Turn signal indicator light, right

10 Light sensor for instrument illumination

11 Clock

12 Cooling system
Temperature gauge, warning light

13 Fuel
Level gauge, warning light

14 Engine oil pressure gauge

Warning lights/indicator lights

A Washer fluid level warning light

B Check engine warning light

C ABS warning light

D Brake fluid level,
Brake distribution warning light

E Parking brake warning light

F Brake pad wear warning light

G Engine oil pressure warning light

H Battery warning light

I Safety belt warning light

J Airbag warning light

K Luggage compartment lid/
engine compartment lid warning light

When the ignition is switched on, the warning lights light up for a lamp check.

Note

Warnings that have been given are stored in the appropriate control unit memory and can be read out at an authorized Porsche dealer.

This information can help to warn you about situations which may be hazardous to you or your car.

Downloaded from www.Manualslib.com manuals search engine

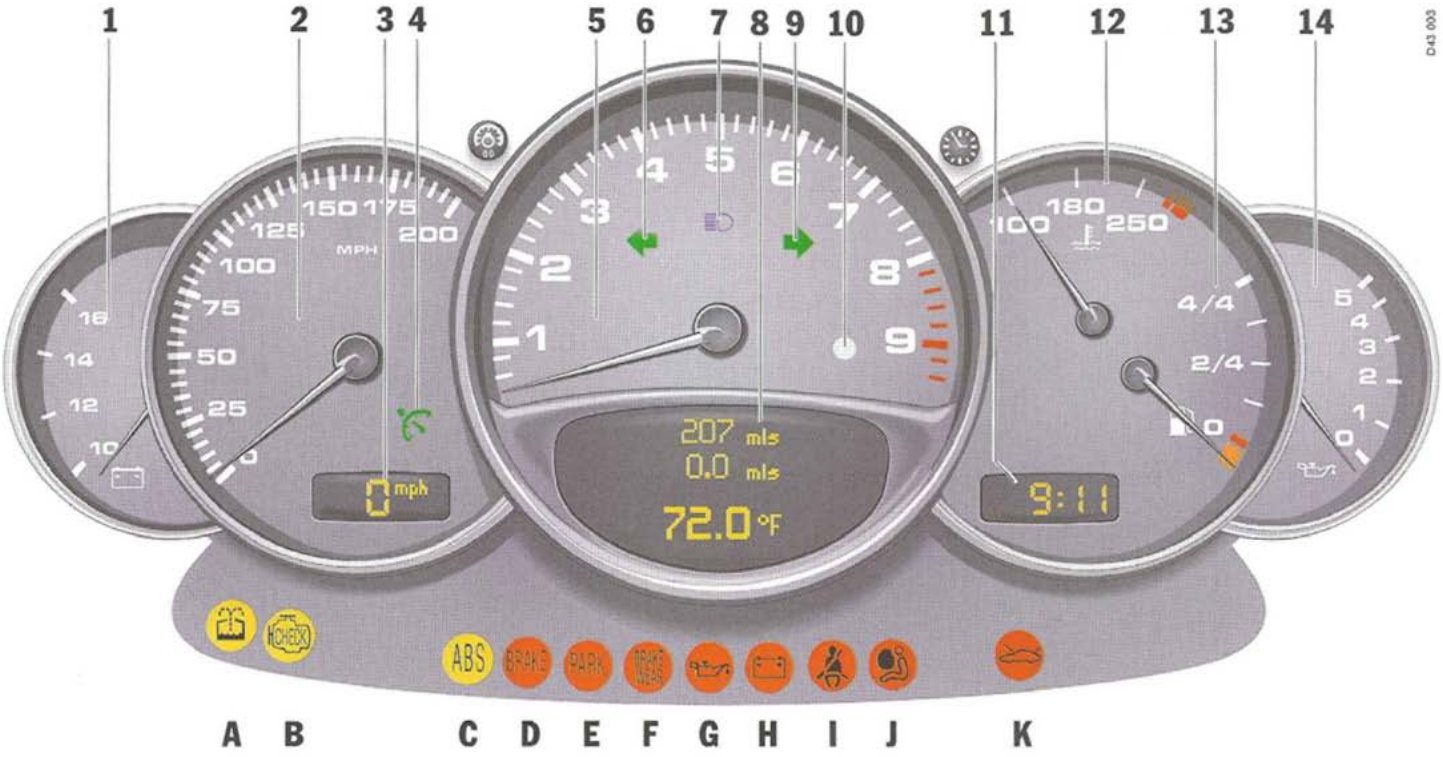

Downloaded from www.Manualslib.com manuals search engine

Instrument Panel Canada Models

Also refer to the corresponding chapters in the Owner's Manual.

1 Voltmeter

2 Speedometer with analogue display

3 Speedometer with digital display

4 Automatic speed control indicator light

5 Tachometer

6 Turn signal indicator light, left

7 High beam indicator light

8 On-board computer

9 Turn signal indicator light, right

10 Light sensor for instrument illumination

11 Clock

12 Cooling system
Temperature gauge, warning light

13 Fuel
Level gauge, warning light

14 Engine oil pressure gauge

Warning lights/indicator lights

A Washer fluid level warning light

B Check engine warning light

C ABS warning light

D Brake fluid level,
Brake distribution warning light

E Parking brake warning light

F Brake pad wear warning light

G Engine oil pressure warning light

H Battery warning light

I Safety belt warning light

J Airbag warning light

K Luggage compartment lid/
engine compartment lid warning light

When the ignition is switched on, the warning lights light up for a lamp check.

Note

Warnings that have been given are stored in the appropriate control unit memory and can be read out at an authorized Porsche dealer.

This information can help to warn you about situations which may be hazardous to you or your car.

Downloaded from www.Manualslib.com manuals search engine

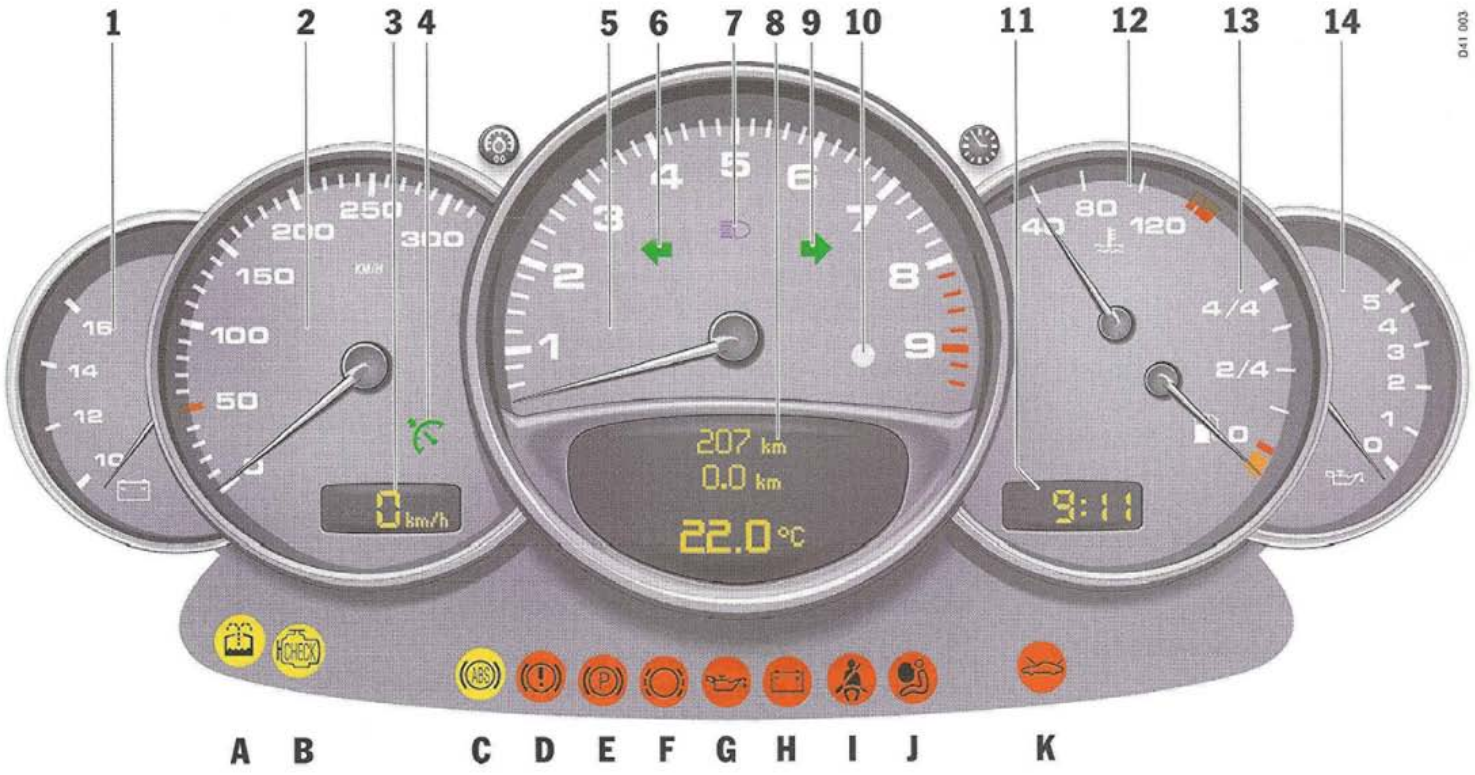

Downloaded from www.Manualslib.com manuals search engine

Voltmeter

Indicates the battery voltage.
Normal range: 12 to 16 volts.

The voltage may drop considerably when the vehicle is being started.

If the gauge is continually below 12 volts when the engine is running:

▷ Have the battery charging system checked at an authorized Porsche dealer.

Battery

Warning light

The warning light in the instrument panel comes on when ignition is switched on and must go off when engine is running.

If the warning lights in the instrument panel and on-board computer come on while the engine is running or while driving:

▷ Stop the car in a safe place and stop the engine.

Possible causes

- Defect in the battery charging system.
- Broken drive belt.

Warning!

Risk of an accident and risk of engine damage.
A broken drive belt means there is no power assistance to the steering (more effort is required to steer) and coolant pump function will stop.

▷ Do not continue driving.

▷ Have the fault remedied at the nearest authorized Porsche dealer.

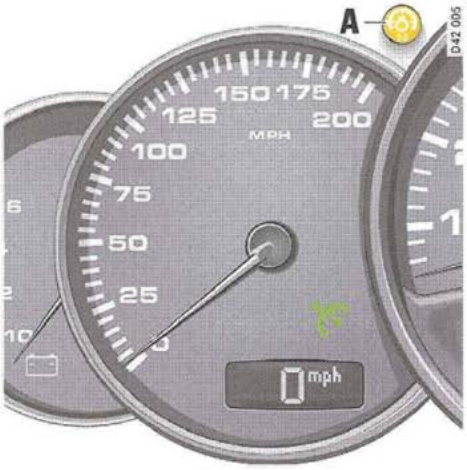

A - *Adjustment button for instrument illumination and trip counter*

Automatic Speed Control

Indicator light

Indicates automatic speed control readiness.

Downloaded from www.Manualslib.com manuals search engine

Instrument Illumination

The illumination is automatically adjusted to the ambient brightness by the light sensor in the tachometer.

In addition, when the car lights are switched on, the instrument and switch symbol brightness can be manually adjusted.

Warning!

Risk of an accident, personal injury and loss of control.

▷ Do not reach through the steering-wheel spokes while driving.

Dimming instrument illumination

▷ Turn adjustment button **A** in the appropriate direction and hold it until the desired brightness has been reached.
The chosen level of brightness is indicated by a bar display in the display field of the on-board computer.

Trip Odometer

Warning!

Risk of an accident, personal injury and loss of control.

▷ Do not reach through the steering-wheel spokes while driving.

Resetting to zero

▷ Press adjustment button **A** for approximately one second **or**

▷ Reset the distance in the "SET" menu of the on-board computer.
Please observe the chapter "ON-BOARD COMPUTER (BC)" on Page 67.

After exceeding 6213 miles or 9999 kilometers, the counter returns to "0".

Downloaded from www.Manualslib.com manuals search engine

A - *Adjustment button for change-over between kilometers/miles*

Speedometer

The digital speedometer is integrated in the pointer instrument.
The indication changes from mph to km/h when the units are changed from miles to kilometers.

Changing over between Miles / Kilometers

You can use adjustment button **A** to change the units of the distance and speed displays in the on-board computer and digital tachometer.

⚠ Warning!

Risk of an accident, personal injury and loss of control.

▷ Do not reach through the steering-wheel spokes while driving.

Switching between units

▷ With the ignition on, hold adjustment button **A** turned to the left for approx. 5 seconds.

Note

The units of the distance and speed displays can also be changed in the "SET" menu of the on-board computer.

Downloaded from www.Manualslib.com manuals search engine

Tachometer

The tachometer shows the engine speed in revolutions per minute (rpm).
The beginning of the red marks at the right end of the scale indicates the maximum permissible engine rpm.
A speed limiter prevents the engine from being overrevved during acceleration. Before reaching this area, the next **higher** gear should be selected.
Shift to the next **lower** gear when the engine rpm drops below 1500 rpm.

Caution!

To avoid severe engine damage.

▷ Always observe the engine rpm before downshifting to a lower gear, so you do not exceed the maximum engine rpm.

Turn Signal Indicator Light

Flashes in synchronism with the turn signals.

Left arrow – left turn signals
Right arrow – right turn signals

▷ If the frequency of the display becomes noticeably faster, check the operation of the turn signals.

High Beam

Indicator light

Lights when high beam or headlight flasher is switched on.
The indicator light goes out when the high beams are switched off.

Downloaded from www.Manualslib.com manuals search engine

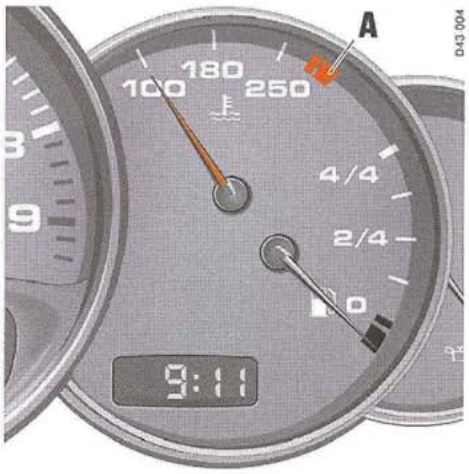

Cooling System

Temperature gauge (ignition on)

USA: Display in °F
Canada: Display in °C

Pointer to the left – engine cold

▷ Avoid high engine speeds and heavy engine loading.

Pointer in the middle – normal operating temperature

The pointer may move up to the red area when engine is heavily loaded and outside temperature is high, but should return to "normal" when engine load is reduced.

Warning light "A"

If the **coolant temperature** is too high, the warning light **comes on**.
Additionally, a warning is displayed in the on-board computer.

▷ Pull off the road, turn off the engine and allow to cool.

▷ Check radiator and air passages in front end of car for obstructions.

▷ Check coolant level.
If necessary, add coolant and have fault remedied at an authorized Porsche dealer.
Please observe the chapter "COOLANT LEVEL" **ON PAGE 113.**

Note

To prevent excessive temperatures, the cooling-air passages must not be restricted by coverings (e.g. films, "stone guards").

If the **coolant level** is too low, the warning light **flashes**.
Additionally, a warning is displayed in the on-board computer.

▷ Switch engine off and allow to cool.

▷ Add coolant.

▷ Have the cause of the fault remedied at an authorized Porsche dealer.
Please observe the chapter "COOLANT LEVEL" **ON PAGE 113.**

Caution!

Risk of engine damage.

▷ If the warning lights come on even though coolant level is correct, do not continue driving.

▷ Have the fault remedied at the nearest authorized Porsche dealer.

Engine compartment blower fan

In addition, this warning light **flashes** to indicate a fault in the **engine compartment blower fan**.

▷ Have the cause of the fault remedied at an authorized Porsche dealer.

Downloaded from www.Manualslib.com manuals search engine

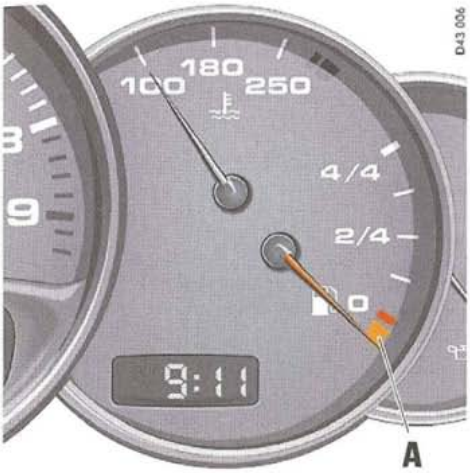

Fuel

Level gauge

When the ignition is on the fuel level is displayed.

▷ Please observe the chapter "CAPACITIES" on Page 185.

If the vehicle's inclination changes (e.g. going up or downhill), minor deviations in the indication may occur.

Note

If the tank is near empty and you top up with only a small quantity of fuel, this cannot be registered by the level gauge and calculation of the range remaining is impossible.

Warning light "A"

When the engine is running, the warning light of the level gauge **lights up** if less than approx. 3 U.S. gallons (12 liters) of fuel remains in the tank or the range on remaining fuel falls below approx. 30 miles (50 km).
Additionally, a warning is displayed in the on-board computer.

▷ Fill up at the next opportunity.

Caution!

To prevent damage to the emission control system and engine.

▷ Never drive the tank completely out of fuel.

▷ Avoid high cornering speeds after the warning lights have come on.

▷ Please observe the chapter "EMISSION CONTROL SYSTEM" on Page 124.

If the level gauge warning light flashes, there has been a system fault.
Additionally, a warning is displayed in the on-board computer.
There will then be no reserve warning.

▷ To remedy the fault, go to an authorized Porsche dealer.

Downloaded from www.Manualslib.com manuals search engine

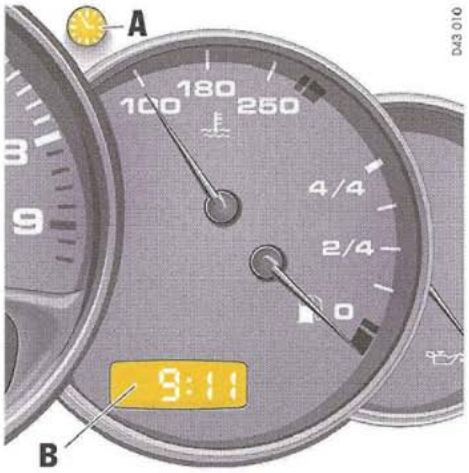

A - *Adjustment button for clock*
B - *Clock*

Clock

The **clock** is blanked out approximately four minutes after the ignition is switched off or when the car is locked.

Setting the time

Warning!

Risk of an accident and loss of control.

▷ Do not reach through the steering-wheel spokes while driving.

Setting hours

▷ Press adjustment button **A** for about one second.
Hour display flashes.

▷ Turn button in the appropriate direction:
to right – increase hours figure
to left – decrease hours figure.

Adjustment in hours – turn button briefly
Fast adjustment (display cycles) – turn and hold button.

Setting minutes

▷ Press adjustment button again.
Minutes display flashes.

▷ Set by rotating as in hours mode.

Leaving adjustment mode

Automatically after one minute **or**:

▷ Press adjustment button again.

When adjustment mode is deliberately left by pressing the button, the time begins precisely to the second.

Note

The time mode can be changed between 12h and 24h in the on-board computer.

Downloaded from www.Manualslib.com manuals search engine

D43 059

Engine Oil Pressure

Gauge

With a warmed-up engine and at a speed of 3000 rpm, the oil pressure should be approx. 3.5 bar.

If the oil pressure drops abruptly and the warning lights in the instrument panel and in the on-board computer come on while the engine is running or while driving:

- ▷ Immediately stop in a suitable place and switch engine off.
  Measures see "Warning light".

Warning light

The warning light in the instrument panel lights up when ignition is switched on and must go out when engine is running.

If the warning lights in the instrument panel and in the on-board computer come on with the engine running or while driving:

- ▷ Immediately stop in a suitable place.
- ▷ Switch off the engine.
- ▷ Check whether there is an obvious oil leak on or under the car.
- ▷ If no oil leak can be detected:
  Measure the oil level using the on-board computer or the oil dipstick **with the engine idling**.
  Please observe the chapter "ON-BOARD COMPUTER (BC)" on Page 67.
  Please observe the chapter "ENGINE OIL LEVEL" on Page 115.
- ▷ Add engine oil if nescessary.

⚠ Caution!

Risk of engine damage.

- ▷ Do not continue driving if there is an obvious oil leak.
- ▷ Do not continue driving if the warning lights come on even though oil level is correct.
- ▷ Have the fault remedied at the nearest authorized Porsche dealer.

Downloaded from www.Manualslib.com manuals search engine

Check Engine Warning Light

The warning light in the instrument panel comes on when the ignition is first turned on and remains on briefly as a bulb check. If the light does not come on, have the bulb replaced promptly.

If the warning lights in the instrument panel and on-board computer come on and remain on while driving, it suggests:

- a potential engine control problem and the need for system service **or**
- an improperly fastened tank cap **or**
- refuelling with engine running.

Although the vehicle is usually driveable and will not require towing, see your dealer for service as soon as possible.

Caution!

If the Check engine light in the instrument panel is flashing, severe catalytic converter damage and power loss will soon occur. Prolonged driving with the Check engine light on could cause damage to the emission control system. It also could affect fuel economy and driveability.

▷ Have the fault remedied at the nearest authorized Porsche dealer immediately.

Downloaded from www.Manualslib.com manuals search engine

On-Board Computer (BC)

Display field

The display field is beneath the tachometer.

Readiness for operation

- With ignition switched on,
- with engine running.

Operation, controls

It is not possible to describe all details of the on-board computer functions in this Owner's Manual. However, the examples will quickly familiarize you with the functional principle and help you to navigate through the menu structure.

You can restore the factory default settings at any time by using the "SET" menu.

Operating lever

The on-board computer is operated with the lower left lever on the steering column.

Selecting functions of the on-board computer

▷ Push lever up **1** or down **2**.

Confirming selection (Enter)

▷ Push lever forward **3**.

Moving back one or several selection levels

▷ Pull the lever back **4** once or several times.

Note

You can always return to the basic menu by pulling the operating lever several times.

▷ ▷ ▷

Downloaded from www.Manualslib.com manuals search engine

Functions and display possibilities

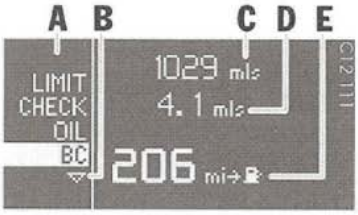

A - *Selection field*
B - *Continuation arrow symbol*
C - *Top display*
D - *Central display*
E - *On-board computer display*

Basic setting

- Top display: Odometer
- Central display: Trip odometer

You can change both displays to suit your requirements by using the "SET" menu.

Calling on-board computer functions in display "E"

▷ Push operating lever up or down (selection field **A** must be switched off).

The following displays can be called step by step:

- Outside temperature (°F),
- Average speed (∅mph),
- Average consumption (∅mpg),
- Range on remaining fuel (miles ⛽),

Canada vehicles

The units in the on-board computer are displayed in kilometers, liters and °C.

The values "Trip odometer", "Average speed" and "Average consumption" can be reset to zero using the "BC" menu.

Note

Pulling the operating lever to the rear **4** takes you directly from a value which can be reset to the "BC" menu.

Switching selection field "A" on or off

▷ Push operating lever forward or back.

Arrow symbol "B" for continuation

Arrow symbol ▽

▷ Push operating lever down in order to continue the menu.

Arrow symbol △

▷ Push operating lever up in order to continue the menu.

Downloaded from www.Manualslib.com manuals search engine

"LIMIT"
Acoustic warning signal for speed limit

The acoustic warning signal can be activated for speeds above 6 mph (10 km/h).
The signal sounds if the preset speed is exceeded.
For the signal to sound again, the driving speed must fall below the preset speed by at least 3 mph (5 km/h).

Switching on selection field "A"

▷ Push operating lever forward.

Setting the speed

▷ Select "LIMIT" with the operating lever.

▷ Push operating lever forward.

Option 1:
Accept current speed

▷ Push operating lever forward.

The acoustic warning signal is activated for the current speed.

Display: ■

Option 2:
Preset speed

▷ Select "LIMIT activated" with the operating lever.

□ not activated

■ activated

▷ Press the operating lever forward if the "not activated" display appears.

▷ Use the operating lever to select "mph +" or "mph –".

▷ Push operating lever forward until the desired speed is reached.
The acoustic warning signal is activated for the desired speed.

Switching the acoustic warning signal off

▷ Select "LIMIT activated" with the operating lever.

▷ Push operating lever forward.

Display: □

▷ ▷ ▷

Downloaded from www.Manualslib.com manuals search engine

"CHECK"
Warning messages

Switching on selection field "A"

▷ Push operating lever forward.

Calling warning messages

▷ Select "CHECK" with the operating lever.

▷ Push operating lever forward.

Any existing warning messages can be called using the operating lever.
You also can call warning messages which were acknowledged during the journey (only until the next time the ignition is switched on).

▷ Push operating lever forward.

Downloaded from www.Manualslib.com manuals search engine

"OIL"
Display and measurement of the engine oil level

Caution!

Risk of engine damage.

- ▷ Regularly check the oil level before refuelling.
- ▷ Do not allow the oil level to fall below the minimum mark.

Conditions for measuring the oil level

1. Engine idling.
2. Engine is at operating temperature.
3. Vehicle is level.
4. Vehicle stationary.

Switching on selection field "A"

- ▷ Push operating lever forward.

Initiating oil level measurement

- ▷ Select "OIL" with the operating lever.

- ▷ Push operating lever forward.

- ▷ Push operating lever forward. Measurement is started.

The waiting time for oil level measurement is indicated by a time display and "cycling" segments of the oil level display.

Once the measurement has been completed, you can read off the engine oil level on the segment display.
If the oil level has fallen below the min. mark, the segment below the min. mark flashes.

The difference between the min. and max. marks on the segment display is approx. 1.5 liters (1.6 quarts).
One segment of the display corresponds to a quantity of approx. 0.25 liters (0.26 quart).

- ▷ Top up engine oil.
  Never add more engine oil than required to reach the max. mark.
- ▷ Please observe the chapter "ENGINE OIL LEVEL" on Page 115.

Info

The "Info" function allows you to call the prerequisites for oil level measurement.

Failure

A failure of the oil level display is indicated by a warning message in the on-board computer.

▷ ▷ ▷

Downloaded from www.Manualslib.com manuals search engine

Display "Check oil level"

The computer display "Check oil level" is an additional reminder to you to check the oil level.

The display depends on the distance travelled and the operating conditions, and does not indicate whether or not the oil level is correct.

"BC"
Calling and resetting on-board computer functions

Switching on selection field "A"

▷ Push operating lever forward.

Example:
Resetting average consumption

▷ Select "BC" with the operating lever.

▷ Push operating lever forward.

▷ Select "Ømpg" with the operating lever.

▷ Push operating lever forward.

▷ Push operating lever forward.

The average consumption is reset to "– –.– Ømpg".

Downloaded from www.Manualslib.com manuals search engine

"SET"
Basic setting of on-board computer

Switching on selection field "A"

▷ Push operating lever forward.

Changing the basic setting of the on-board computer

▷ Select "SET" with the operating lever.

▷ Push operating lever forward.

Reset

- Reset all,
  Reset trip counter,
  Reset average consumption,
  Reset average speed

Speedometer: km/mls

- Change over between kilometers and miles

Display
(Individual combination of upper and central lines of the on-board computer)

- **Changing top display**
  Total mileage
  Trip counter
  Audio information (set radio station)
  Outside temperature
  Range on remaining fuel
  Average speed
  Average consumption
- **Changing central display**
  Total mileage
  Trip counter
  Outside temperature
  Range on remaining fuel
  Average speed
  Average consumption

Basic setting

- Restore the basic setting of the on-board computer

Language

- Select language version

Consumption

- Select unit for fuel consumption:
  l/100 km, mls/gal (USA), mpg (UK), km/l

Temperature

- Select unit for temperature:
  °C, °F

12/24h mode

- Select time mode:
  12h (small squares on the left side of the time display for AM/PM),
  24h

▷ ▷ ▷

Downloaded from www.Manualslib.com manuals search engine

"OFF"
On-board computer display

Switching on selection field "A"

▷ Push operating lever forward.

Switching on-board computer display off

▷ Select "OFF" with the operating lever.

▷ Push operating lever forward.
Display is switched off.

Switching on-board computer display on again

▷ Push operating lever in any direction.

General information regarding the on-board computer functions

Range on remaining fuel

The range on remaining fuel is continuously re-computed while driving based on fuel level, current consumption and average consumption.
The more the fuel level falls, the more spontaneously the display reacts. For this reason, range on remaining fuel is not displayed if less than 15 kilometers (9 miles).

If the vehicle's inclination changes while driving or refuelling, incorrect range information may temporarily be given.

Note

If the tank is nearly empty and you add only a small quantity of fuel, this cannot be used to calculate the range on remaining fuel.

Average consumption and average speed

The displayed values are based on the distance travelled since the last reset to "zero".

You can set the starting time for a measurement before or during the trip.
Switching the ignition off does not reset the measurements. Values can thus be collected over long periods.
Disconnecting the car battery clears these memories.

Outside temperature

The outside temperature display does not indicate, if ice is on the road.
Even if a temperature above 32°F (0°C) is displayed, ice may still form on the road, for instance on bridges or when the road passes through a heavily shaded area.

Downloaded from www.Manualslib.com manuals search engine

Warnings in the Instrument Panel and in the On-Board Computer

If a warning message appears, always refer to the corresponding chapters in the Owner's Manual.
Warning messages are issued only if all measurement preconditions are met.
Therefore, check all fluid levels regularly – in particular, always check the engine oil level before refuelling.

Instrument panel	On-board computer	Text display in on-board computer	Meaning/measure
		Seat belt	Driver and passengers must fasten their safety belts.
USA PARK Canada (P)	PARK	Handbrake	Handbrake not released.
		Ignition key not removed	
		Lights on	
		Front/rear lid not closed	Close luggage compartment lid, engine compartment lid.
		Refill washer fluid	
		Trip counter reset	Trip odometer is reset to 0.

Downloaded from www.Manualslib.com manuals search engine

Instrument panel	On-board computer	Text display in on-board computer	Meaning/measure
		Units are changed	The units kilometers/miles for speed and distance were changed.
		LIMIT Cannot be accepted with vehicle stopped	Current speed can be accepted for the acoustic warning signal only if the vehicle is in motion.
	USA **Canada**	LIMIT exceeded	Selected speed limit for the acoustic warning signal has been exceeded. Adjust your speed if necessary.
Fuel level gauge warning light		Consider range on remaining fuel	Refuel at the next opportunity.
		Engine oil pressure too low	Stop immediately at a suitable place, measure oil level with the on-board computer and, if necessary, add engine oil.
Temperature gauge warning light		Engine temperature too high	Switch engine off and let it cool. Check coolant level and, if necessary, add coolant.
Temperature gauge warning light flashes		Check coolant level	Switch engine off and let it cool. Check coolant level and, if necessary, add coolant.

Downloaded from www.Manualslib.com manuals search engine

Instrument panel	On-board computer	Text display in on-board computer	Meaning/measure
CHECK		Check Engine	Please observe the chapter "CHECK ENGINE WARNING LIGHT" on Page 66. Have the fault remedied at an authorized Porsche dealer.
Temperature gauge warning light flashes		Failure of engine-compartment blower	Have fault remedied at an authorized Porsche dealer.
		Warning battery/ generator	Stop in a safe place and switch the engine off. Do not continue driving. Have the fault remedied at an authorized Porsche dealer.
		Failure indicator	Oil pressure indicator is faulty. Have the fault remedied at an authorized Porsche dealer.
		Failure oil level indicator	Have the fault remedied at an authorized Porsche dealer.
		Failure indicator	Coolant temperature gauge is faulty. Have the fault remedied at an authorized Porsche dealer.
		Failure indicator	The coolant temperature gauge, tachometer or cruise control, etc., could be faulty. Have the fault remedied at an authorized Porsche dealer.

Downloaded from www.Manualslib.com manuals search engine

Instrument panel	On-board computer	Text display in on-board computer	Meaning/measure
USA BRAKE WEAR Canada	BRAKE WEAR	Service wear on brake pads	Have the brake pads replaced at an authorized Porsche dealer without delay.
USA BRAKE Canada	BRAKE FLUID	Warning brake fluid level	Stop immediately in a suitable place. Do not continue driving. Have the fault remedied at an authorized Porsche dealer.
USA BRAKE Canada		Warning brake distribution	Stop immediately in a suitable place. Do not continue driving. Have the fault remedied at an authorized Porsche dealer.
USA ABS Canada	ABS	ABS failure	Have the fault remedied at an authorized Porsche dealer.
		Airbag failure	Have the fault remedied at an authorized Porsche dealer.

Downloaded from www.Manualslib.com manuals search engine

Instrument panel	On-board computer	Text display in on-board computer	Meaning/measure
		Failure indicator	The displays of several systems might have failed. Have the fault remedied at an authorized Porsche dealer.
		Failure of fuel level indicator Go to workshop	Have the fault remedied at an authorized Porsche dealer.
		Failure outside temperature indicator	Have the fault remedied at an authorized Porsche dealer.

Acknowledging warning messages

Warning messages can be erased from the on-board computer display.

▷ Push operating lever of on-board computer forward.

You can recall erased warning messages in the "CHECK" menu.

Downloaded from www.Manualslib.com manuals search engine

Downloaded from www.Manualslib.com manuals search engine

Emergency Flasher Switch

Operational readiness of the emergency flasher does not depend on the ignition lock and turn signal lever position.

▷ If your car is disabled or parked under emergency conditions switch on the emergency flasher in the dashboard (**arrow**).
All turn signals and the indicator light in the switch flash with the same frequency.

Warning!

Risk of an accident.

▷ Whenever stalled or stopped for emergency repairs, move the car well off the road. Switch on the emergency flasher and mark the car with road flares or other warning devices.

▷ Do not remain in the car. Someone approaching from the rear may not realize your vehicle is stopped and cause a collision.

Danger of fire.

▷ Do not park or operate the vehicle in areas where the hot exhaust system may come in contact with dry grass, brush, fuel spill or other flammable material.

Hot engine compartment components can burn skin on contact.

▷ Before working on any part in the engine compartment, turn the engine off and let it cool down sufficiently.

Downloaded from www.Manualslib.com manuals search engine

Light Switch

- **Lights switched off**

Parking lights, side marker lights, license plate light, instrument illumination

Low beam, high beam
Only with ignition on

Fog lights in addition to parking lights or low beam:
Pull switch to first click.
Indicator light on.
The fog lights will go out automatically when the high beams are switched on.

Rear fog light in addition to the fog lights:
Pull switch to second click.
Indicator light on.

Parking light right/left
Only when ignition key is withdrawn:
Pull switch out slightly in position "0" and turn to
– parking-light position left
– parking-light position right.
Parking lights and side marker lights are lit on the selected side.

If the ignition key is withdrawn and the door is opened while the lights (not the parking light left/right) are on, a **gong** warns of possible battery discharge.

In some countries, differences are possible due to provisions of law.

Automatic Headlight Beam Adjustment

Vehicles with **Bi-Xenon headlights** feature **automatic** headlight beam adjustment.

When the ignition is switched on, the level of the headlight beam automatically changes in accordance with the vehicle load.
The level of the headlight beam is automatically kept constant during acceleration and braking.

Checking operation

1. Switch the low beam on.
2. Switch ignition on.
   The light beam first dips all the way down and is then adapted to the vehicle load.

It this test item is not met, the headlight beam adjustment must be checked by an authorized Porsche dealer.

Downloaded from www.Manualslib.com manuals search engine

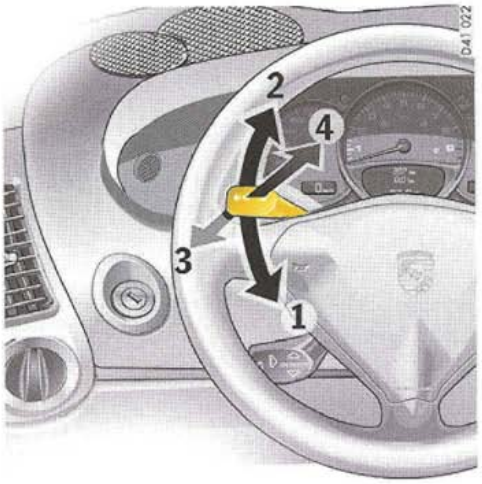

Turn Signal / Headlight Dimmer / Flasher Lever

Turn signals, low beam and high beam are ready for operation when the ignition is on.

1 – Turn signal left
2 – Turn signal right
3 – High beam
4 – Headlight flasher
Lever in center position – Low beam

When high beam and headlight flasher are selected, the blue indicator light in the tachometer is lit.

The turn signal lever turns off automatically when the steering wheel is straightened out after completing a turn.

Lane changer

- ▷ To indicate your intention when changing lanes on the freeway, slightly lift or depress the lever to the resistance point.
  The lever will return to the OFF position when released.
- ▷ If the frequency of the display becomes noticeable faster, check the operation of the turn signal bulbs.

Headlight flasher

(With ignition on or off)

- ▷ To flash the headlights to oncomming motorists, slightly pull the lever toward the steering wheel and then release it.
  The blue indicator light in the tachometer will go on/off as you pull/release the lever.

Downloaded from www.Manualslib.com manuals search engine

Windshield Wiper / Washer Lever

Warning!

Danger of injury when the windshield wipers operate unintentionally.
Risk of damage to the windshield and wiper system.

- Avoid running the wiper blades over a dry windshield to prevent scratching the glass. Spray washer fluid on the windshield first.
  A scratched windshield will reduce visibility.
- Always loosen wiper blades from frozen glass before operating wipers to prevent damage to the wiper motor or blades.
- Always switch off windshield wipers in car wash to prevent them wiping unintentionally (intermittent operation).
- Always switch off windshield wipers before cleaning the windshield to avoid unintentional operation (intermittent operation).
- Do not operate the headlight washer in car washes.
- Do not operate headlight washer when it is frozen.

0 – Windshield wipers off
1 – Windshield wipers slow
2 – Windshield wipers fast
3 – Intermittent operation
4 – Windshield washer system:
Sprays while the lever is pulled towards the steering wheel in the **first** position.
When the lever is released, a few drying wipes are executed.
5 – Windshield wipers and washer system:
Sprays and wipes while the lever is pulled towards the steering wheel in the **second** position.
6 – Headlight washer
(Vehicles with Bi-Xenon headlights):
Sprays only while low beam or high beam is switched on.
The spray duration is limited. If heavily soiled, repeat wash.
Persistent dirt (e.g. insect remains) should be regularly removed.
Please observe the chapter "CAR CARE INSTRUCTIONS" on Page 130.

Note

The **windshield washer nozzles** are heated when the ignition is on, as a precaution against freezing.

Downloaded from www.Manualslib.com manuals search engine

Wipe interval control

In windshield wiper intermittent mode **3** the wipe intervals can be infinitely adjusted.

Shortening wipe intervals

▷ Turn thumb wheel **A** clockwise.

Lengthening wipe intervals

▷ Turn thumb wheel **A** counter-clockwise.

Downloaded from www.Manualslib.com manuals search engine

A - *Automatic speed control readiness off/on*
1 - *Hold and store/accelerate*
2 - *Decelerate/resume*
3 - *Interrupt*

Automatic Speed Control

The automatic speed control maintains any selected speed between 25 mph and 120 mph (40 km/h and 200 km/h) without you having to use the accelerator.
The automatic speed control is operated with the lever on the steering wheel.

⚠ Warning!

A constant speed may not be safe in heavy traffic, or on winding or slippery roads. With the speed control system engaged, the engine speed will not return to idle when removing the foot from the accelerator pedal.

- ▷ Do not use the speed control when it may be unsafe to keep the car at a constant speed.
- ▷ Observe all local and national speed limits.

Switch automatic speed control readiness on

- ▷ Press button **A** on the automatic speed control lever.

This green indicator light in the speedometer now indicates readiness

Hold and store speed

- ▷ Bring the car to the desired speed with the accelerator.
- ▷ Then push operating lever forward **1** briefly.

Accelerating (e.g. to overtake)

- ▷ Increase speed as usual with the accelerator.

When the accelerator is released, the previously saved value is again set.
Automatic speed control operation is automatically interrupted, however, if the speed is increased by more than about 16 mph (25 km/h) for longer than 20 seconds, **or**:

- ▷ Press **operating lever** forward **1** until the desired speed is reached.
  The speed reached is maintained and stored when the lever is released.

Speed can be corrected in steps of 2 km/h (approx. 1 mph) by **briefly** pushing the lever forward or down (up to 10 times).

Downloaded from www.Manualslib.com manuals search engine

Decelerating

▷ Press operating lever down **2** until the desired speed is reached.
The speed reached is maintained and stored when the lever is released.

Speed can be corrected in steps of 2 km/h (approx. 1 mph) by **briefly** pushing the lever forward or down (up to 10 times).

Interrupting automatic speed control operation

▷ Pull operating lever briefly towards the steering wheel **3 or:**

▷ Operate brake or clutch pedal.
The speed driven before the interruption remains stored in the memory.

Automatic speed control operation is interrupted automatically:

- If the set speed is exceeded by more than 16 mph (25 km/h) for longer than 20 seconds,
- if the actual speed falls to 6 mph (10 km/h) below the set vehicle speed for longer than 5 seconds (upward slopes).

Resuming the stored speed

▷ Press operating lever briefly down **2**.

The stored speed should only be called up when traffic conditions and the road surface so permit.

Switching automatic speed control readiness off

▷ Press button **A** on the automatic speed control lever.
The green readiness light in the speedometer goes off.

When the vehicle is parked and the ignition switched off, the memory is cleared.

Important note

On upward or downward slopes, the set speed cannot always be maintained by the automatic speed control.

To obtain sufficient engine braking or a better engine-speed range, therefore, you have to select a lower gear.

Downloaded from www.Manualslib.com manuals search engine

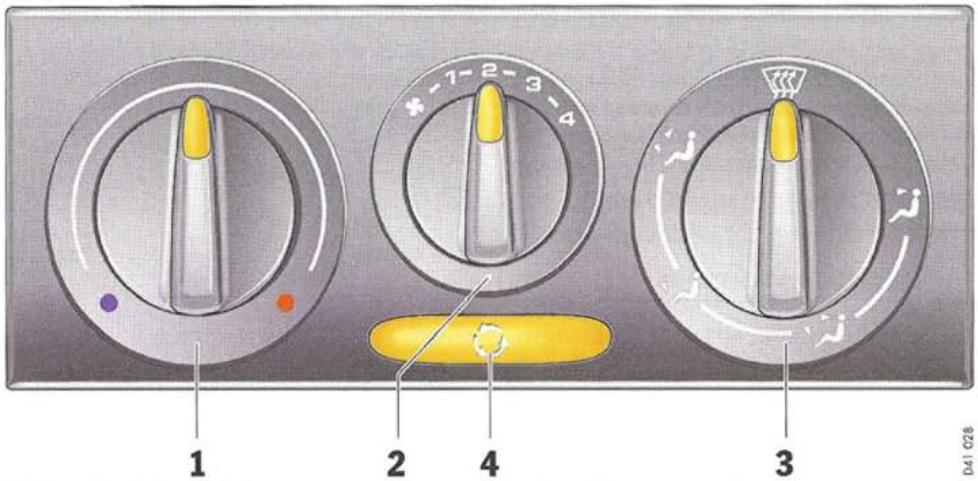

Vehicles without air conditioning

Heating and Ventilation

Setting temperature

▷ Turn knob **1**:
To the left – cold, to the right – warm.

Setting blower speed

▷ Set the desired air throughput with knob **2**.

Note

▷ To prevent the windows from misting, do not switch off the blower when driving (position "0").

Selecting air distribution

▷ Set desired air distribution with knob **3**.

Air flows to windshield

Air distribution to windshield and footwell

Air flows to footwell

Air distribution to central, side and foot-well vents

Air distribution to central and side vents

Downloaded from www.Manualslib.com manuals search engine

Example of setting:
Defrosting windshield and door windows

- ▷ Set blower stage 4
- ▷ Turn temperature knob to the right as far as the stop
- ▷ Air distribution to windshield only
- ▷ Close central vent
- ▷ Open side vents and direct vanes at the door windows

Switching circulating-air setting on or off

- ▷ Press circulating-air button **4**.

The outside-air supply is interrupted and only the inside air is circulated.

⚠ Warning!

Risk of accident due to hampered vision. In circulating-air setting, the windows can mist up.

- ▷ Only select circulating-air setting for short periods.
- ▷ If windows mist up, end circulating-air setting by pressing the circulating-air button again, direct air distribution to the windshield and select blower stage 4.

Downloaded from www.Manualslib.com manuals search engine

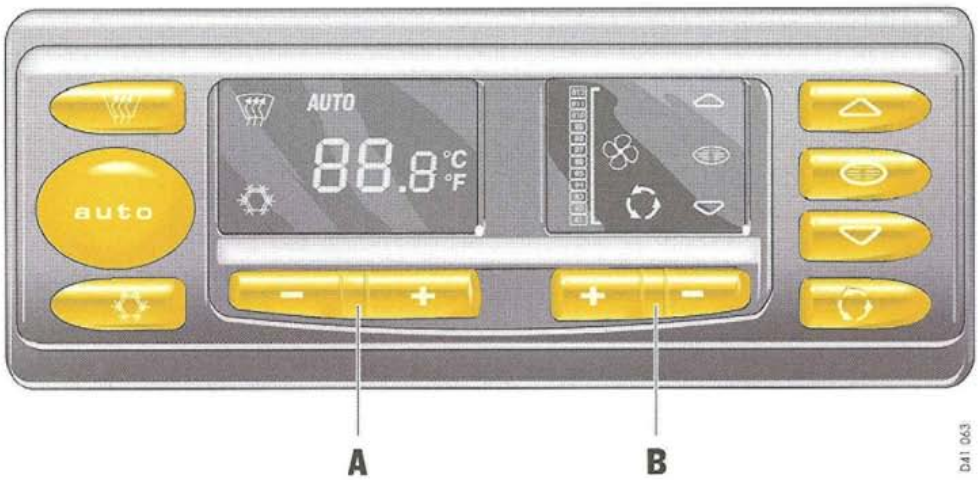

A – Temperature setting

▷ Press the appropriate button.

To suit personal comfort, the interior temperature can be selected between 65°F and 84°F/ 18°C and 29°C.
Recommendation: 72°F/22°C.

If the display "LO" or "HI" appears, the system is operating at maximum cooling or heating power.

Note

If the preselected temperature is changed, the blower speed can increase automatically in automatic operation.
The desired temperature is reached more quickly this way.

Automatic Air Conditioning

The air-conditioning system controls the preselected interior temperature completely automatically.
If necessary, the automatic system can be manually operated.

Left display panel –
Temperature and active functions

Right display panel –
Blower speed and active functions

Automatic operation

▷ Press "**auto**" button.
Air quantity and distribution are automatically controlled, and variations are compensated.

All automatic setting functions can be individually changed.
This setting is retained until the appropriate function button is pressed again or the "**auto**" button is pressed.

Downloaded from www.Manualslib.com manuals search engine

Defrosting the windshield

▷ Press button.
Windshield is demisted or defrosted as quickly as possible.
Air flows to the windshield only.

Switching compressor for air-conditioning system on or off

Whenever outside temperatures exceed 37°F/3°C, the air-conditioning compressor is always switched on in automatic operation.
The compressor can be switched off to save fuel, but control comfort is then limited.

▷ Press button.
The compressor is switched off, the symbol in the left-hand display goes out.

▷ If the interior temperature is too high, switch compressor back on or press "**auto**"-button.

To dry incoming air in damp weather, do not switch off the air-conditioning compressor.
This prevents misting of windows.

B – Adjusting blower speed

▷ Press the appropriate button.
Preset blower speed is increased or decreased, and "Manual" appears in the right-hand display field.

The speed stages are indicated by a bar display.

The speed stages are indicated by a bar display.

If the minus button is pressed at the lowest blower stage, the blower and automatic control are **switched off**.
"OFF" is displayed in the left-hand display.

Pressing on the plus button or the "**auto**" button switches the blower and automatic control **back on again**.

Circulating-air setting

Warning!

Risk of accident due to hampered vision. In circulating-air setting, the windows can mist up.

▷ Only select circulating-air setting for short periods.

▷ If windows mist up, turn off the circulating-air setting by pressing the circulating-air button briefly and select the function "Defrost windshield".

Switching circulating-air setting on or off

▷ Press button.
The outside-air supply is interrupted and only the inside air is circulated.

Over approx. 37°F/3°C

If the air-conditioning compressor was off, it switches on automatically. The duration of circulating-air mode is not limited.

Below approx. 37°F/3°C

The air-conditioning compressor is switched off. Circulating-air mode is automatically ended after approx. 3 minutes.

▷ ▷ ▷

Downloaded from www.Manualslib.com manuals search engine

Air distribution to footwell

▷ Press button.
The air flows to the footwell.

Air distribution to the central and side vents

▷ Press button.
The air flows from the central and side vents. Vents must be open.

Air distribution to windshield

▷ Press button.
The air flows to the windshield.

General instructions for air-conditioning compressor

- Can switch off briefly if engine is under an extreme load to ensure sufficient engine cooling.
- Switches off automatically at temperatures below 37°F/3°C and cannot be switched on, even manually.
- Operates most effectively with windows closed.
  If the car has been in the sun for a long time, however, it is a good idea to ventilate the interior briefly with door windows open.
- Depending on the outside temperature and humidity, condensation can drip from the evaporator and form a pool under the car.
  This is normal and not a sign of leakage.
- If uncooled air flows out when the lowest temperature has been set, switch off the air-conditioning compressor and consult with an authorized Porsche dealer.

Downloaded from www.Manualslib.com manuals search engine

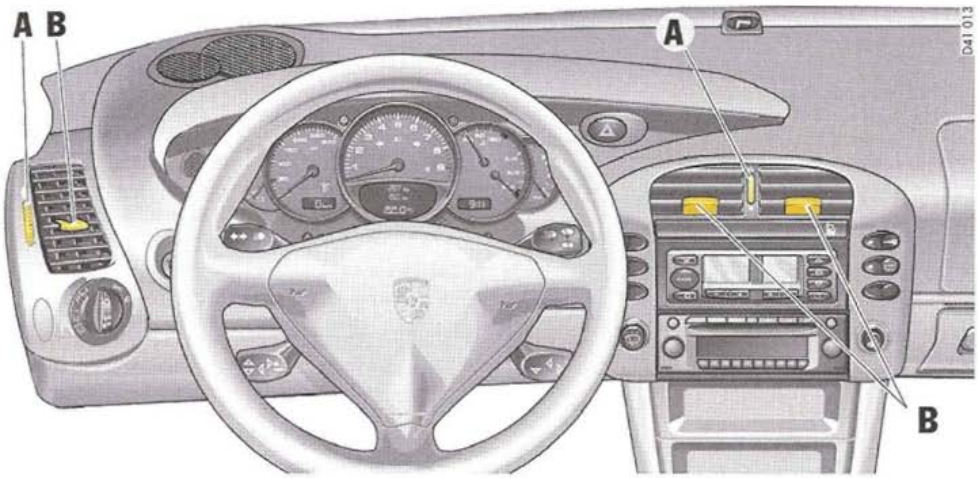

A - *Continuous opening and closing*
B - *Setting vent direction*

Central and Side Vents

Opening vents

▷ Rotate knurled wheel upward.

Closing vents

▷ Rotate knurled wheel downward.

Changing air flow direction

▷ Move the vanes to make the air flow in the desired direction.

Outside air or conditioned air can be delivered from all vents, depending on the air-distribution setting on the operating panel.

Fresh-air Intake

To ensure proper air intake:

▷ Keep the fresh-air inlet between the luggage compartment lid and the windshield free from snow, ice and leaves.

Downloaded from www.Manualslib.com manuals search engine

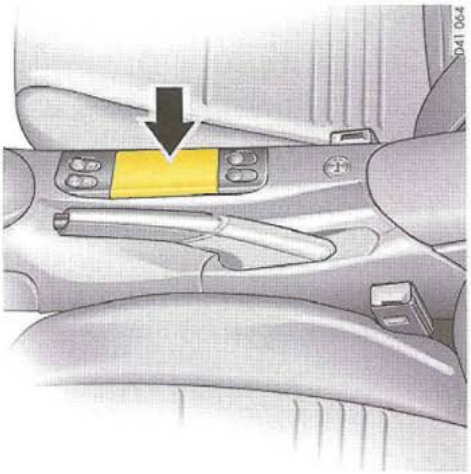

Ashtray

Opening

▷ Press ashtray lid briefly.

Emptying

▷ Open ashtray and carefully pull out ash insert by the lid.

⚠ Warning!

Danger of fire.

▷ Never use ashtray for waste paper disposal, as it could pose a fire hazard.

Cigarette Lighter

⚠ Warning!

Danger of fire and burning.
The cigarette lighter is ready for use, regardless of the ignition lock position.

▷ Never leave unsupervised children in the car.

▷ Never touch the heating element or sides of the lighter.

▷ Hold the lighter by the knob only.

Heating lighter

▷ Push in knob of the cigarette lighter.
When ready for use, the lighter will snap back.

Operating additional appliances

With the cigarette lighter removed, the socket may be used for small electrical appliances, such as a shaver or hand vacuum cleaner.
Maximum rating: 150 Watt.

▷ Do not operate electrical appliances for more than 5 minutes when engine is off (battery will otherwise discharge).

▷ Do not damage the socket by trying to insert plugs of the wrong design.

Downloaded from www.Manualslib.com manuals search engine

Cupholder

(holder for drinks cans and cups)

▷ Keep the cupholder closed while driving.

⚠ Warning!

Risk of scalding or damage due to spilling drinks.

▷ Only use containers which fit.

▷ Never put overfull containers in the cupholder.

▷ Never use hot drinks.

Extending cupholder

▷ Press the cupholder symbol.

The cupholder can be pulled out to accommodate a second container.

Pulling cupholder out

▷ Grasp cupholder at the handle recess and pull it out.

Closing cupholder

▷ Push cupholder drawer in.

▷ Close and engage the cupholder.

Downloaded from www.Manualslib.com manuals search engine

Storage in the Passenger Compartment

⚠ Warning!

Unsecured luggage and heavy objects may come loose during braking, rapid directional changes or in an accident and cause serious personal injury or death.

- ▷ Do not transport any heavy objects in the storage trays.
- ▷ Do not carry unsecured luggage or objects in the passenger compartment.

Additional storage possibilities

- In the door panel,
- in the door sill on the passenger side,
- in the center console,
- clothes hook on back of seats,
- pocket on back of seats.

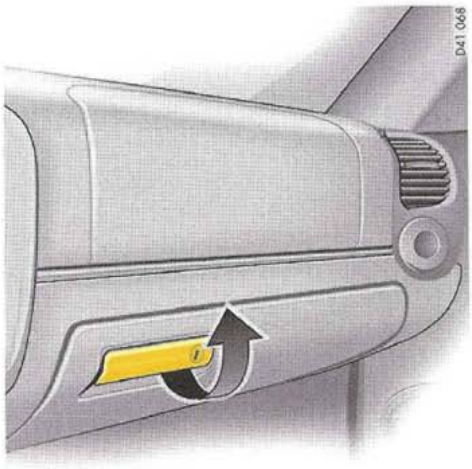

Glove compartment

⚠ Warning!

Risk of injury by the glove compartment lid in case of an accident.

- ▷ Keep the glove compartment closed while driving.

Opening

- ▷ Pull the catch and open the lid.

Locking

- ▷ Lock the catch to secure the contents against unauthorized access.

Downloaded from www.Manualslib.com manuals search engine

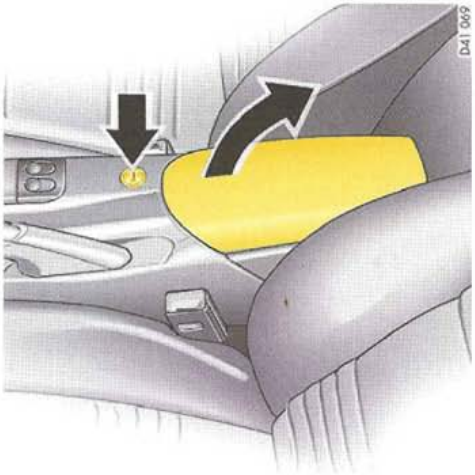

Storage tray between the seats

Opening

▷ Press the locking knob and lift the lid.
There is a coin holder in the forward part of the storage tray.

Locking

▷ Lock the compartment to secure the contents against unauthorized access.

CD or Cassette Holder

Occupied drawers are indicated by a red window.

Opening drawers

▷ Push the button of the drawer you wish to open.

Closing drawers

▷ Fold the **CD** drawer up and close until it clicks shut.
Close the **cassette** drawer until it clicks shut.

Downloaded from www.Manualslib.com manuals search engine

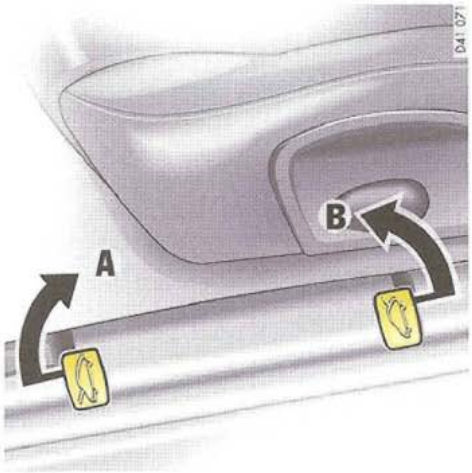

A - *Opening luggage compartment lid*
B - *Opening engine compartment lid*

Luggage Compartment Lid and Engine Compartment Lid

Unlocking

- ▷ Operate the appropriate pull-button next to the driver's seat.
  The luggage compartment or engine compartment is illuminated when the respective lid is open.
- ▷ Please observe the chapter "LOAD SWITCH-OFF AFTER TWO HOURS OR FIVE DAYS" on Page 152.

The luggage compartment lid can also be unlocked with the radio remote control.

- ▷ Please observe the chapter "KEYS" on Page 19.

Important Note

If the vehicle battery is discharged, the lids can be opened only by connecting an external electrical power source.

- ▷ Observe the description inside the fuse box cover.
- ▷ Please observe the chapter "EMERGENCY UNLOCKING OF THE LUGGAGE COMPARTMENT LID AND ENGINE COMPARTMENT LID" on Page 154.

Warning light

The warning lights in the instrument panel and in the on-board-computer come on if the lids are not completely closed.

- ▷ Fully close the lid.

Downloaded from www.Manualslib.com manuals search engine

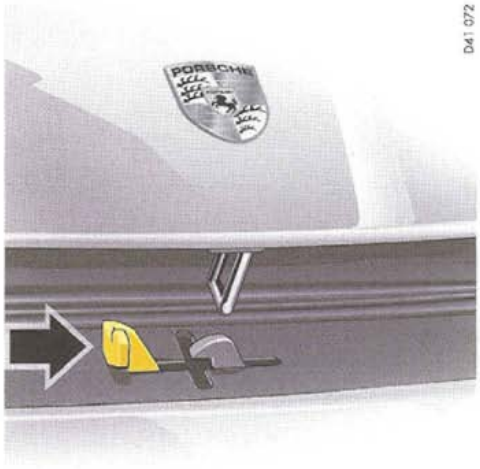

Opening luggage compartment lid

Caution!

Risk of damage to luggage compartment lid or windshield wipers.

- Make sure that the windshield wipers are not folded out forwards when opening the luggage compartment lid.

- Raise lid slightly and unlatch the safety catch with the lever (**arrow**).

Closing luggage compartment lid and engine compartment lid

- Lower lid and let it fall into the lock. If necessary, push the lid with the palm of your hand in the area of the lock.
- Check that the lid has correctly engaged in the lock.

Warning!

Risk of loss of control or an accident, resulting in serious personal injury.

- Should you notice at any time while driving that one of the lids is not secured properly, please stop immediately in a suitable place and close it.
  The front lid may fly up impairing vision.

Downloaded from www.Manualslib.com manuals search engine

Luggage Compartment

Removing luggage compartment floor

▷ Simultaneously pull the luggage compartment floor forward and up at the finger holes.

Inserting luggage compartment floor

▷ Insert luggage compartment floor in the rear guide and press it down.

1 Vehicle identification number (VIN)
2 Battery
3 Fluid reservoir for cleaning windows and headlights
4 Brake-fluid reservoir
5 Paint data (under the carpet)
6 Headlight adjustment and locking (under the carpet)
7 Space for first aid kit
8 Tool kit
9 Air compressor
10 Tire repair kit, socket for security wheel bolts
11 Space for warning triangle

Downloaded from www.Manualslib.com manuals search engine

Trunk Entrapment

Your vehicle is equipped with an internal trunk release mechanism.

A person trapped in the luggage compartment can release the lid from the inside using unlocking handle **A**.
The handle **A** is fluorescent and glows in the dark.

Warning light

The warning lights in the instrument panel and in the on-board computer light up when unlocking handle **A** is operated.

- ▷ Stop the vehicle immediately when the warning lights light up.
- ▷ Check the luggage compartment.
- ▷ Close the lid.

Function with vehicle stationary

If the luggage compartment lid is unlocked with unlocking handle **A**, the lid can be opened from the inside immediately.

Function with vehicle in motion

If the luggage compartment lid is unlocked with unlocking handle **A** when a speed of 3 km/h (2mph) is exceeded, the warning lights in the instrument panel and in the on-board computer light up.
At the same time, the lid is unlocked and the latch striker pops into the catch-hook position. The lid lock is fully released as soon as the car slows to less than 2 mph (3 km/h), and the trapped person can open the lid immediately.

▷ ▷ ▷

Downloaded from www.Manualslib.com manuals search engine

Danger!

Risk of accident.
If the warning lights in the instrument panel and in the on-board computer light up when the vehicle is in motion, the lid may impact in front of the windshield and can tear off.
You can lose control of the vehicle.

- ▷ Stop the vehicle immediately when the warning lights light up.
- ▷ Check the luggage compartment.
- ▷ Close the lid.

Note

The lid cannot be opened from the inside if the battery is disconnected or empty.
Safety reasons therefore require that you unscrew the latch striker of the lid lock if you plan to put the vehicle out of operation for an extended period.
Please consult your authorized Porsche dealer. They will advise you about the necessary measures.

Note

- ▷ When loading the luggage compartment, make sure that items of luggage or other objects cannot become caught on handle **A**.
  This could cause the luggage compartment to open unintentionally.

Downloaded from www.Manualslib.com manuals search engine

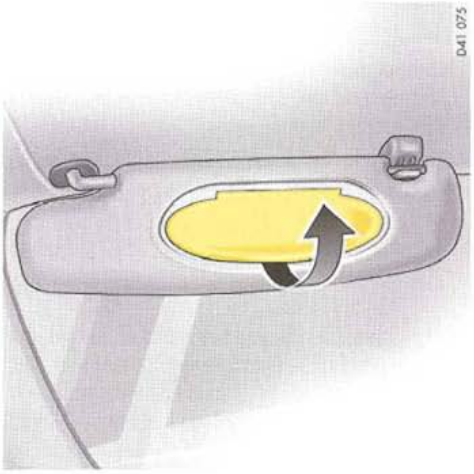

Sun Visors

- Swing the sun visors down to prevent glare from the front.
- To prevent glare from the side, unclip the sun visor from the inner bracket and swivel round so that it is in front of the door window.

Vanity mirror

The vanity mirror on the rear of the sun visor is covered by a lid.

⚠ Warning!

Risk of injury.

- Keep the lid closed while driving.

The vanity mirror illumination is switched on automatically when the cover is opened (**arrow**).

Downloaded from www.Manualslib.com manuals search engine

Spoiler, Side Member Panels

⚠ **Caution!**

Risk of damage. The vehicle may touch the ground as a result of the small ground clearance.

- ▷ Drive slowly and carefully on steep uphill and downhill slopes (e.g. multi-storey carparks).
- ▷ Avoid steep ramps.

Risk of damage to rear spoiler.

- ▷ Please consult the operator before using automatic car washes.
- ▷ Do not push the vehicle by the spoiler.
- ▷ Do not place objects on the spoiler.

Rear spoiler

On public highways, the rear spoiler must be in the standard (lowest) position.

Tightening torque of locking screws:
15 Nm (11 ftlb.)

⚠ **Warning!**

Risk of accident.
Adjusting the rear spoiler (e.g. for sporting events) may cause the screws to come loose. The rear spoiler may come off while you are driving.

- ▷ Therefore, whenever you adjust the rear spoiler, apply **Loctite 270** screw locking fluid to the threads of the fastening screws.

Downloaded from www.Manualslib.com manuals search engine

Car Audio Operation/Tips

For radio operation see your radio manual which is included with your on-board literature.

▷ Please observe the chapter "LOAD SWITCH-OFF AFTER TWO HOURS OR FIVE DAYS" on Page 152.

FM reception

A vehicle is not an ideal place to listen to a radio. Because the vehicle moves, reception conditions are constantly changing.
Buildings, terrain, signal distance and noise from other vehicles are all working against good reception.
Some conditions of FM may appear to be problems when they are not.

The following characteristics are completely normal for a given reception area, and they do not indicate any problem with the radio itself.

Note

Electronic accessories should only be installed by your authorized Porsche dealer.
Equipment which has not been tested and approved by Porsche may impair radio reception.

Fading and drifting

FM range is limited to about 25 miles (40 km), except for some high power stations.

If a vehicle is moving away from the desired station's transmitter, the signal will tend to fade and/or drift. This condition is more prevalent with FM than AM, and is often accompanied by distortion. Fading and drifting can be minimized to a certain degree by careful attention to fine tuning or selection of a stronger signal.

Static and fluttering

When the line-of-sight link between a transmitter and vehicle is blocked by large buildings or mountains, the radio sound may be accompanied with static or fluttering because of the characteristic of FM.
In a similar effect, a fluttering noise is sometimes heard when driving along a tree-lined road.

This static and fluttering can be reduced by adjusting the tone control for greater bass response until the disturbance has passed.

Multipath

Because of the reflecting characteristics of FM, direct and reflected signals may reach the antenna at the same time (multipath) and cancel each other out.
As a vehicle moves through these electronic dead spots, the listener may hear a momentary flutter or loss of reception.

Station swapping

When two FM stations are close to each other, and an electronic dead spot, such as static or multipath area, interrupts the original signal, sometimes the stronger second signal will be selected automatically until the original one returns.
This swapping can also occur as you drive away from the selected station and approach another station of a stronger signal.

▷ ▷ ▷

Downloaded from www.Manualslib.com manuals search engine

Cassette tape player

⚠ **Caution!**

To avoid damage to cassette tape player and tapes.

- ▷ Use only cassette tapes of good quality, having no damage.
- ▷ Avoid using tapes with a total playing time longer than 90 minutes.
  Longer tapes are not recommended because of the thinner cross section of the tape.
- ▷ Be sure that the tape is not slack and that the label is firmly secured on the shell before inserting the cassette into the player.
- ▷ Have the tape firmly wound around the tape by turning the hub with a pencil or similar items. Be careful not to touch the exposed tape surface.
- ▷ When not in use, take the cassette out of the player, put it back into its case and store it away from dust, magnets and direct sunlight. Leaving the cassette tape on the dashboard in the sun can damage the tape.
- ▷ Keep the playback head, capstan and pinch roller clean.
- ▷ Remove tape coating residue accumulated on the head, capstan and pinch roller once or twice a month.
  A cleaning tape, which can do this, should be available in audio stores.
- ▷ Do not oil any part of the tape player and do not insert any object other than a cassette tape into the slot.

COMPACT disc DIGITAL AUDIO

Compact disc player

⚠ **Caution!**

To avoid damage to compact disc player and discs.

- ▷ Use only compact discs labeled as shown, having no dirt, damage or warpage.
- ▷ Never attempt to disassemble or oil any part of the player unit.
  Do not insert any object other than a disc into the slot.
  Remember there are no user-serviceable parts inside the compact disc player.
- ▷ Do not allow the disc to sustain any fingerprints, scrapes or stickers on the surfaces. This may cause poor sound quality.
  Hold the disc only on the edge or center hole.
- ▷ When not in use, take the disc out of the player, put the disc back into its case and store it away from dust, heat, damp and direct sunlight.
  Leaving the disc on the dashboard in the sun can damage the disc.
- ▷ If the disc gets dirty, clean the disc by wiping the surfaces from the center to the outside in a radial direction with a soft cloth.
  Do not use a conventional record cleaner or anti-static record preservative.
  Disc cleaners are available in audio stores.

Downloaded from www.Manualslib.com manuals search engine

Car Telephone and Aftermarket Alarms

Important legal and safety information regarding the use of cellular telephones

Some states may prohibit the use of cellular telephones while driving a vehicle. Check the laws and regulations on the use of cellular telephones in the areas where you drive.

Danger!

Risk of an accident.
Severe personal injury or death can result in the event of an accident.
Looking away from the road or turning your attention away from your driving can cause an accident and serious or fatal injury.

When using your cellular telephone, you should always:

- Give full attention to your driving - pull off the road and park before making or answering a call if traffic conditions so require; **and**
- Keep both hands on the steering wheel - use hands-free operation (if available) - pull off the road and park before using a hand-held telephone.

It is essential to observe the instructions of the telephone manufacturer before putting the telephone into operation.

Any portable telephone or radio transmitter which is used in a Porsche must be properly installed in accordance with the technical requirements of Porsche.

The transmission power must not exceed 10 W.
The devices must possess a type approval for your vehicle and have an **"e" symbol**.

If you should require equipment with transmission power values greater than 10 W, please consult your authorized Porsche dealer for this purpose. He is familiar with the technical requirements for installing devices of this kind.

The antennas for all radios and telephones with a transmitting antenna must be externally mounted.

The improper installation of radios or telephones or use of a radio or telephone with a transmitting antenna inside the car may cause **the warning lights to come on.**

Improper installation of such equipment can create a discharged battery or excessive current draw from added equipment.

If aftermarket systems are installed by non-dealership technicians or outside the selling dealer, problems may result. Installation of aftermarket equipment is not covered under the New Car Warranty.

- Consult your authorized Porsche dealer about the installation of non Porsche approved equipment.

Reception quality

The reception quality of your car telephone will change constantly when you are driving. Interference caused by buildings, landscape and weather is unavoidable. It may become particularly difficult to hear when using the hands-free function due to external noise such as engine and wind noise.

Automatic car-wash

- Unscrew external antennas before using an automatic car-wash.

Downloaded from www.Manualslib.com manuals search engine

Roof Transport System

Follow the separate instructions for fitting the Roof Transport System.

Fitting commercially available luggage racks is **not** possible.

The **Porsche Roof Transport System** allows the transport of various sports and hobby equipment. Your authorized Porsche dealer will be pleased to inform you about the many uses of the Roof Transport System.

Warning!

Risk of an accident, loss of control and damage to the vehicle.

- Completely remove the Roof Transport System before using an automatic car wash.
- Fit the side support elements of the basic carrier only in conjunction with the transverse supporting pipes.
- The permissible useable load of 165 lbs (75 kg), the permissible total vehicle weight and the permissible axle loads must not be exceeded.
  Please observe the chapter "WEIGHTS" on Page 186.
  Items of luggage must not project substantially beyond the side of the load area.
  Distribute load evenly, with heavy items as low as possible.
  Every item must be fixed and secured to the basic carrier with a rope or lashing strap (do not use elastic rubber tensioners).
- Before every journey, and at regular intervals during long trips, check that Roof Transport System and load are secure.
  Retighten if necessary and secure additionally by locking.
- In the loaded state, adjust maximum speed to the nature, size and weight of the load being carried.
  In no case, however, should you drive at more than 90 mph (140 km/h).
- With the basic carrier installed and no load, do not exceed a maximum speed of 110 mph (180 km/h) since driving stability will be adversely affected.
  Adapt your driving style and speed to the changed conditions.
  Nevertheless, Porsche recommends that you do not exceed the posted speed limit.
- Driving, braking and steering behavior of the vehicle change due to the higher center of gravity and the greater wind-resistant area. You should adapt your driving style appropriately.

Note

Since fuel consumption and noise are increased with the Roof Transport System installed, it should not remain on the car if it is not in use.

Downloaded from www.Manualslib.com manuals search engine

Gearshifting

The positions of the gears are shown on the gearshift lever.

Warning!

Risk of an accident.

- Always check the movement of the clutch pedal before driving and make sure that it is not obstructed by a floor mat or any other object.
- Secure the floor mat to prevent it from sliding into positions that could interfere with the safe operation of your vehicle.
  Your Porsche dealer can offer you floor mats of the correct size including a securing possibility.

To avoid damage to the clutch and transmission:

- Always depress the clutch pedal fully when changing gears.
  Make sure that the gearshift lever is completely engaged.
- Only shift into reverse when the car has come to a complete stop.

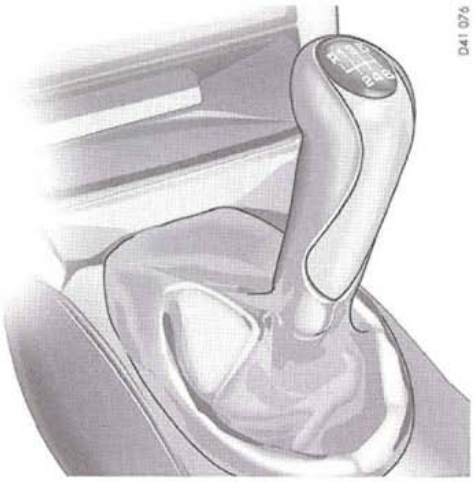

Reverse

- Depress the clutch pedal for several seconds before shifting into reverse.
  Only then move the gearshift lever to the left, overcoming the spring tension, and then to the front.

Both back-up lights come on when the transmission is put into reverse (with ignition on).

Permitted engine speed

- Change into a higher gear before the needle reaches the red mark on the tachometer, or ease off the accelerator.

If the red zone is reached during acceleration, fuel feed is interrupted.

Caution!

To avoid severe engine damage.

- Always observe the engine rpm before downshifting to a lower gear, so you do not exceed the maximum engine rpm.

Downloaded from www.Manualslib.com manuals search engine

Downloaded from www.Manualslib.com manuals search engine

Maintenance, Car Care

Caution 112
Coolant Level 113
Engine Oil 114
Engine Oil Level 115
Engine Oil Recommendation 117
Brake Fluid Level 119
Fuel Economy 120
Fuel Recommendations 122
Portable Fuel Containers 123
Emission Control System 124
Fuel Evaporation Control 126
Washer Fluid 126
Power Steering 127
Air Filter 128
Particle Filter 128
Manual Transmission Oil 128
Wiper Blades 129
Car Care Instructions 130

Downloaded from www.Manualslib.com manuals search engine

Exercise Extreme Caution when Working on your Vehicle

⚠ **Warning!**

Ignoring the following instructions may cause serious personal injury.

- The engine compartment of any motor vehicle is a potentially hazardous area. If you are not fully familiar with proper repair procedures, do not attempt the adjustments described on the following pages.
  This caution applies to the entire vehicle.
- Only work on your vehicle outdoors or in a well ventilated area.
- Ensure that there are no open flames in the area of your vehicle at any time when fuel fumes might be present. Be especially cautious of such devices such as hot water heaters which ignite a flame intermittently.
- Before working on any part in the engine compartment, turn the engine off and let it cool down sufficiently. Hot engine compartment components can burn skin on contact.
- Be alert and cautious around engine at all times while the engine is running.
  If work has to be performed with the engine running, always set the parking brake, and make sure the shift lever is in neutral position.
- In particular, be very careful to ensure that items of clothing (ties, shirt, sleeves etc.), jewelry, long hair, hand or fingers cannot get caught in the engine-compartment blower, fan, belts or other moving parts.
  The radiator and radiator fans are in the front of the car.
  The engine-compartment blower is mounted on the engine compartment lid.
  The fans can start or continue running as a function of temperature, even with the engine switched off.
  Carry out work in these areas only with the engine off, the ignition switched off, and exercise extreme caution.
- Your Porsche is equipped with an electronic ignition system. When the ignition is on, high voltage is present in all wires connected with the ignition system; therefore, exercise extreme caution when working on any part of the engine while the ignition is on or the engine is running.
- Always support your car with safety stands if it is necessary to work under the car.
- When working under the car without safety stands but with the wheels on the ground, make sure the car is on level ground, the wheels are blocked, and that the engine cannot be started.
  Remove the ignition key.
- Do not smoke or allow an open flame around the battery or fuel.
  Keep a fire extinguisher in close reach.
- Incomplete or improper servicing may cause problems in the operation of the car. If in doubt about any servicing, have it done by your authorized Porsche dealer.
  Improper maintenance during the warranty period may affect your Porsche warranty coverage.
- Supplies of fluids, e.g. engine oil, brake fluid or coolant, are hazardous to your health.
  Keep these fluids out of children's reach and dispose of them in accordance with the appropriate regulations.
- Some countries require additional tools and special spare parts to be carried.
  Please make enquiries before driving abroad.

Power measurements

Power measurements on dynamometers are not approved by Porsche.

Downloaded from www.Manualslib.com manuals search engine

Coolant Level

▷ Please observe the chapter "EXERCISE EXTREME CAUTION WHEN WORKING ON YOUR VEHICLE" on Page 112.

The cooling system is filled at the factory with a permanent coolant.
It provides year-round protection from corrosion and freezing down to –31°F/–35°C (Nordic countries –40°F/–40°C).

▷ Only use antifreeze authorized by Porsche.

Checking coolant level

The expansion tank with its filler orifice is in the engine compartment.

▷ Check the coolant level regularly through the transparent expansion tank.

When the engine is cold and the car is level the fluid level must lie between the "MIN" and "MAX" markings.

Topping off coolant

⚠ **Warning!**

Danger of serious personal injury from scalding. Coolant is hazardous to your health, and may be fatal if swallowed.

▷ Do not open the cap of the expansion tank while the engine is hot.

▷ Allow the engine to cool down before opening the cap and protect your hands, arms and face from any possible escape of hot coolant.

▷ Keep coolant out of children's reach.

▷ Also, keep coolant away from your pets. They can be attracted to it should there be a spill, or to used coolant left in an open container. Coolant can be deadly to pets if consumed.

1. Switch engine off and let it cool.
   Please observe the chapter "COOLING SYSTEM" on Page 62.
2. Cover the expansion tank cap with a thick rag. Open cap slowly and carefully and allow overpressure to escape.
   Then unscrew cap completely.
3. Only add a mixture of antifreeze and water in equal parts, and do not exceed the "MAX" mark.

   Antifreeze in coolant:
   50% gives protection down to –31°F/–35°C
   60% gives protection down to –58°F/–50°C
4. Screw cap firmly on.

If in an emergency pure water has been added, the mix ratio must be corrected at an authorized Porsche dealer.

Marked loss of coolant indicates leakage in the cooling system.
The cause should immediately be remedied at an authorized Porsche dealer.

▷ ▷ ▷

Downloaded from www.Manualslib.com manuals search engine

Engine-compartment blower, radiator fan

The radiator and radiator fans are in the front of the car.
The engine-compartment blower is mounted on the engine compartment lid.

Warning!

Risk of injury.
After the engine is switched off, the engine-compartment and coolant temperatures are monitored for approx. 20 minutes.
During this period, and depending on temperature, the engine-compartment blower and radiator fans may continue to run or start to run.

▷ Carry out work in these areas only with the engine off, the ignition switched off, and exercise extreme caution.

Engine Oil

Engine oil consumption

It is normal for your engine to consume oil.
The rate of oil consumption depends on the quality and viscosity of oil, the speed at which the engine is operated, the climate, road conditions as well as the amount of dilution and oxidation of the lubricant.

If the vehicle is used for repeated short trips, and consumes a normal amount of oil, the engine oil measurement may not show any drop in the oil level at all, even after 600 miles (1000 km) or more. This is because the oil is gradually becoming diluted with fuel or moisture, making it appear that the oil level has not changed.
The diluting ingredients evaporate out when the vehicle is driven at high speeds, as on an expressway, making it then appear that oil is excessively consumed after driving at high speeds.

If the conditions you drive your vehicle in are dusty, humid, or hot, the frequency of the oil change intervals should be greater.

If the vehicle is driven at a high rate of speed, climatic conditions are warm, and the load is high, the oil should be checked more frequently, as driving conditions will determine the rate of oil consumption.

- The engine in your vehicle depends on oil to lubricate and cool all of its moving parts. Therefore, the engine oil should be checked regularly and kept at the required level.
- Make it a habit to have the engine oil level checked with every fuel filling.
- The oil pressure warning light is not an oil level indicator.
  The oil pressure warning light indicates serious engine damage may be occuring when lit, if engine rpm is above idle speed.

Downloaded from www.Manualslib.com manuals search engine

Engine Oil Level

- ▷ Please observe the chapter "EXERCISE EXTREME CAUTION WHEN WORKING ON YOUR VEHICLE" on Page 112.
- ▷ Regularly check the oil level using the on-board computer each time the vehicle is refuelled. Please observe the chapter "ON-BOARD COMPUTER (BC)" on Page 67.

⚠ **Warning!**

Risk of burning from hot parts in engine compartment. Risk of injury by rotating parts. The engine compartment blower on the engine compartment lid can start up even with engine off.

- ▷ Exercise extrem caution when working on the engine compartment.
- ▷ Top of engine oil only with the engine off.

Engine oil is hazardous to your health and may be fatal if swallowed.

- ▷ Keep engine oil out of children's reach.

Used engine oil contains chemicals that have caused cancer in laboratory animals.

- ▷ Always protect your skin by washing thoroughly with soap and water.

The oil dipstick and oil filler are in the engine compartment.

▷ ▷ ▷

Downloaded from www.Manualslib.com manuals search engine

Preconditions for correct oil level measurement with the oil dipstick

- Vehicle must be level.
- Engine must be running and at operating temperature
  (engine coolant temperature of at least 176°F/ 80°C).
- The engine must idle for at least 20 seconds (under 1,000 rpm).
- The air conditioning must be off.

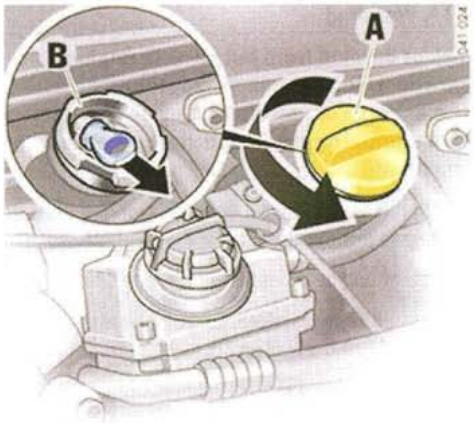

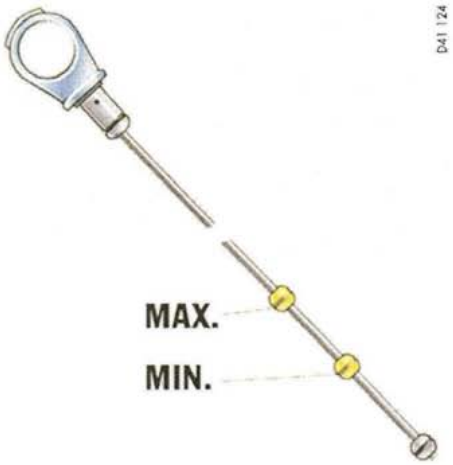

Checking the oil level and topping off engine oil

1. Apply handbrake and put the gearshift lever in neutral.
2. Unscrew cap **A** of the oil filler opening. Withdraw dipstick **B** and wipe it with a clean, lint-free cloth.
3. Push dipstick fully home, withdraw again and read off the oil level.
   Push dipstick in as far as the stop.

The oil level must in no case fall below the minimum or exceed the maximum oil level on the dipstick.
The difference between the two marks is approximately 1.0 liter/1.1 quarts.

4. Add engine oil quarter-liter at a time, if necessary.
5. Check oil level with the dipstick again.
6. Carefully close cap of the oil filler opening.

Downloaded from www.Manualslib.com manuals search engine

Engine Oil Recommendation

Recommended oil viscosity ranges dependent on ambient temperatures

Ambient temperature seasonal	SAE Viscosity Range engine oils
generally up to -13°F/-25°C	0W-40 5W-40 5W-50
generally up to -22°F/-30°C	0W-40

▷ **Use only engine oils approved by Porsche.**

If in doubt ask your authorized Porsche dealer for Porsche tested and approved all-season oils.

Downloaded from www.Manualslib.com manuals search engine

Oil change

The engine oil has to be changed at the intervals listed in your **Maintenance Schedule**.

▷ Please observe the chapter "CAPACITIES" on Page 185.

We recommend that you have the engine oil changed at your Porsche dealer, who has the required oils and the necessary filling equipment.

If you suspect an oil leak in the engine have your dealer check it out immediately.

All current engine oils are compatible with each other, i. e. when making an oil change it is not necessary to flush the engine if you wish to use a different brand or grade of oil.
Since, however, each brand of oil has a special composition, you should, if possible, use the same oil brand if it becomes necessary to top up between oil changes.

Porsche engines have long intervals between oil changes. You can make best use of these long oil change intervals by using multigrade oils since these are largely independent of seasonal fluctuations in temperature.

If your vehicle is used frequently in stop-and-go traffic in cold weather, the engine will not always be properly warmed up.
Condensation from products of combustion may accumulate in the oil. In this case, it is advisable to change the oil more frequently so that your engine once again has 100% efficient engine oil.

Engine oil performance class

Engine oil is not only a lubricant, but also serves to keep the engine clean, to neutralize the dirt which penetrates into the engine through combustion and to protect the engine against corrosion. To perform these functions, the oil is provided with additives which have been specially developed for these functions.
The efficiency of an oil is expressed, for example, by the API, ILSAC or ACEA classifications.

Viscosity

Like all liquids, engine oil is viscous when cold, and thin-bodied when warm. The viscosity of an oil is expressed by its SAE class. For cold viscosity (measured at temperatures below 32°F/0°C) the SAE class is given as a number and the letter "W" (as in winter), for hot viscosity (measured at 212°F/100°C) the SAE class is given only as a number.

The viscosity of an oil is, therefore, always the same if it has the same number of an SAE class.

Oils with two viscosities are called multigrade oils; oils with only one viscosity are termed single-grade oils.

Single-grade oils can not be used in your engine.

The viscosity of the engine oil for your Porsche has to be chosen according to the ambient temperature given in the engine oil recommendation table.

Downloaded from www.Manualslib.com manuals search engine

Brake Fluid Level

▷ Please observe the chapter "EXERCISE EXTREME CAUTION WHEN WORKING ON YOUR VEHICLE" on Page 112.

▷ **Use only new (unused) Original Porsche brake fluid.**

Warning!

Brake fluid is hazardous to your health, and may be fatal if swallowed.
Brake fluid also attacks paintwork.

▷ Keep brake fluid out of children's reach.

▷ Take care while topping off brake fluid not to soil the luggage compartment or items of luggage.

Checking the brake fluid level

The reservoir for the hydraulic braking systems is in the luggage compartment.

▷ Check the brake-fluid level regularly at the transparent reservoir.

The fluid level should always lie between the "MIN" and "MAX" marks.

A slight decrease in the fluid level due to wear and automatic readjustment of the disc brakes is normal.
If, however, the fluid level falls markedly or below the "MIN" mark, the braking system may have developed a leak.

▷ Have the braking system checked immediately at an authorized Porsche dealer.

Changing the brake fluid

Brake fluid absorbs moisture from the air over time. This accumulation of water lowers the boiling point and, under certain operating conditions, can affect the braking action.
Therefore have the brake fluid changed in accordance with the change intervals stated in the brochure "Maintenance".

Warning light USA

Warning light Canada

The brake-fluid warning lights in the instrument panel and on-board computer indicate:

- brake-fluid level too low,
- in conjunction with large pedal travel, a braking-circuit failure.

If the warning lights should light up while driving:

▷ Stop immediately in a suitable place.

▷ Do not continue driving.
Please have the fault remedied at your nearest authorized Porsche dealer.

Downloaded from www.Manualslib.com manuals search engine

Fuel Economy

Fuel economy will vary depending on where, when and how you drive, optional equipment installed, and the general condition of your car.
A car tuned to specifications and correctly maintained, will help you to achieve optimal fuel economy.

- ▷ Have your vehicle tuned to specifications.
  Air cleaner should be dirt free to allow proper engine "breathing".
  Battery should be fully charged.
  Wheels should be properly aligned.
  Tires should be inflated at correct pressure.
- ▷ Always monitor your fuel consumption.
- ▷ Drive smoothly, avoid abrupt changes in speed as much as possible.
- ▷ Avoid jack rabbit starts and sudden stops.
- ▷ Do not drive longer than necessary in the lower gears. Shifting into a higher gear early without lugging the engine will help save fuel.
- ▷ Prolonged "warm up" idling wastes gas. Start the vehicle just before you are ready to drive. Accelerate slowly and smoothly.
- ▷ Switch off the engine if stationary for longer periods.
- ▷ Any additional weight carried in the vehicle reduces fuel economy. Always keep cargo to a minimum and remove all unnecessary items.
- ▷ Organize your trips to take in several errands in one trip.
- ▷ All electrical accessories contribute to increased fuel consumption.
- ▷ Only switch on the air conditioning when necessary.
- ▷ Do not drive with the Roof Transport System mounted unless you need it.

The EPA estimated m.p.g. is to be used for comparison purposes, actual mileage may be different from the estimated m.p.g., depending on your driving speed, weather conditions and trip length. Your actual highway mileage will probably be less than the estimated m.p.g.

- ▷ Please observe all local and national speed limits.

Operating Your Porsche in other Countries

Government regulations in the United States and Canada require that automobiles meet specific emission regulations and safety standards. Therefore, cars built for the U.S. and Canada differ from vehicles sold in other countries.

If you plan to take your Porsche outside the continental limits of the United States or Canada, there is the possibility that

- unleaded fuel may not be available;
- unleaded fuel may have a considerably lower octane rating. Excessive engine knock and serious damage to both engine and catalytic converters could result;
- service may be inadequate due to lack of proper service facilities, tools or diagnostic equipment;
- replacement parts may not be available or very difficult to get.

Porsche cannot be responsible for the mechanical damage that could result because of inadequate fuel, service or parts availability.

If you purchased your Porsche abroad and want to bring it back home, be sure to find out about shipping and forwarding requirements, as well as current import and customs regulations.

Downloaded from www.Manualslib.com manuals search engine

Fuel

⚠ **Warning!**

Fuel is highly flammable and harmful to health.

- ▷ Fire, open flame and smoking are prohibited when handling fuel.
- ▷ Avoid contact with skin or clothing.
- ▷ Do not inhale fuel vapors.

To prevent damage to the emission control system and engine:

- ▷ Never drive the tank completely out of fuel.
- ▷ Avoid high cornering speeds after the warning lights have come on.

- ▷ Please observe the chapter "EMISSION CONTROL SYSTEM" on Page 124.
  Please observe the chapter "FUEL ECONOMY" on Page 120.
  Please observe the chapter "LEVEL GAUGE" on Page 63.

Check engine warning light

If the warning lights in the instrument panel and on-board computer come on and remain on while driving, it suggests:

- an improperly fastened tank cap **or**
- refuelling with engine running.

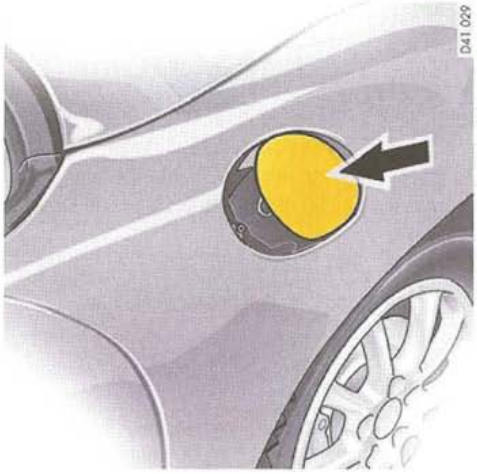

Opening the filler flap

The filler opening is under the filler flap in the front right fender.

- ▷ With the vehicle unlocked, press on the front part of the filler flap (**arrow**) to open the flap.

The filler flap is centrally locked along with the other locks.

If there is a defect in the automatic unlocking system:

- ▷ Open the passenger door.
- ▷ Pull the ring in the right-hand door aperture (**arrow**).

▷ ▷ ▷

Downloaded from www.Manualslib.com manuals search engine

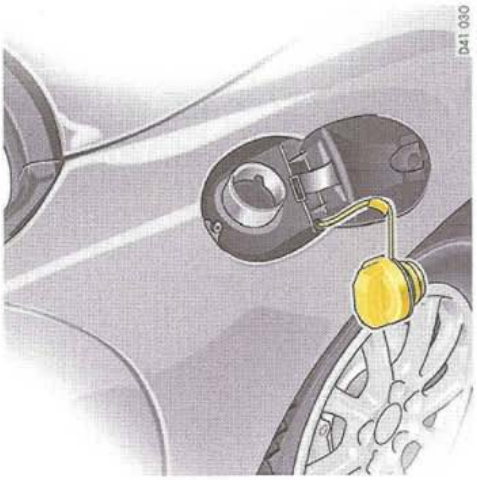

Refuelling

Fuel tank capacity is listed under "Capacities". Porsche does not recommend the use of fuel additives.

▷ Please observe the chapter "CAPACITIES" on Page 185.

1. **Important:** Stop the engine and switch off the ignition.
2. Slowly unscrew the tank cap.
   Hang the tank cap on the plastic strap of the filler flap.
3. Insert fuel-hose nozzle fully into the filler neck with the handle of the fuel-hose nozzle facing down.
4. Do not add further fuel once the correctly operated automatic fuel-hose nozzle has switched off.
   Fuel could spray or could run over in warm temperatures.
5. Replace the tank cap immediately after refuelling and turn it until you hear it and feel it engage.

If you lose the tank cap, you must replace it only with an original part to reduce the possibility of a fire in the event of a collision.

Fuel Recommendations

Your Porsche is equipped with catalytic converters and must use **UNLEADED FUEL ONLY**.

Your engine is designed to provide optimum performance and fuel economy using unleaded premium fuel with an octane rating of **98 RON (93 CLC or AKI)**. Porsche therefore recommends the use of these fuels in your vehicle.

Porsche also recognizes that these fuels may not always be available. Be assured that your vehicle will operate properly on unleaded premium fuels with octane numbers of at least **95 RON (90 CLC or AKI)**, since the engine's "Electronic Oktane™ knock control" will adapt the ignition timing, if necessary.

The use of UNLEADED FUEL ONLY is critically important to the life of the catalytic converters. Deposits from leaded fuels will ruin the converters and make it ineffective as an emission control device.

Cars with catalytic converters have a smaller fuel tank opening, and gas station pumps have smaller nozzles. This will prevent accidental pumping of leaded fuel into cars with catalytic converters.

Downloaded from www.Manualslib.com manuals search engine

Unleaded fuels may not be available outside the continental U.S. and Canada. Therefore, we recommend you do not take your car to areas or countries where unleaded fuel may not be available.

Octane ratings

Octane rating indicates a fuel's ability to resist detonation. Therefore, buying the correct octane gas is important to prevent engine "damage".

The RON octane rating is based on the research method. The CLC (U.S. Cost of Living Council octane rating) or AKI (antiknock index) octane rating usually displayed on U.S. fuel pumps is calculated as research octane number plus motor octane number, divided by 2, that is written as:

$$\frac{RON+MON}{2} \quad \text{or} \quad \frac{R+M}{2}$$

The CLC or AKI octane rating is usually lower than the RON rating:

For example: 95 RON equals 90 CLC or AKI

Fuels containing alcohol and ether

Some areas of the U.S. require oxygenated fuels during certain portions of the year. Oxygenated fuels are fuels which contain alcohols (such as methanol or ethanol) or ether (such as MTBE).

Under normal conditions, the amount of these compounds in the fuel will not affect driveability.

You may use oxygenated fuels in your Porsche, provided the octane requirements for your vehicle are met. We recommend, however, to change to a different fuel or station if any of the following problems occur with your vehicle:

- Deterioration of driveability and performance.
- Substantially reduced fuel economy.
- Vapor lock and non-start problems, especially at high altitude or at high temperature.
- Engine malfunction or stalling.

Fuels containing MMT

Some North American fuels contain an octane enhancing additive called methylcyclopentadienyl manganese tricarbonyl (MMT).

If such fuels are used, your emission control system performance may be negatively affected.

The check engine warning light on your instrument panel may turn on.
If this occurs, Porsche recommends you stop using fuels containing MMT.

Portable Fuel Containers

Danger!

Portable fuel containers, full or partially empty, may leak causing an explosion, or result in fire in case of an accident.

▷ Never carry additional fuel in portable containers in your vehicle.

Downloaded from www.Manualslib.com manuals search engine

Emission Control System

In the interest of clean air

Pollution of our environment has become a problem that is of increasing concern to all of us. We urge you to join us in our efforts for cleaner air in controlling the pollutants emitted from the automobile.

Porsche has developed an emission control system that controls or reduces those parts of the emission that can be harmful to our environment. Your Porsche is equipped with such a system.

Porsche warrants the Emission Control System in your new car under the terms and conditions set forth in the Warranty Booklet.

You, as the owner of the vehicle, have the responsibility to provide regular maintenance service for the vehicle and to keep a record of all maintenance work performed. To facilitate record keeping, have the service performed by authorized Porsche dealers. They have Porsche trained technicians and special tools to provide fast and efficient service.

To assure efficient operation of the Emission Control System:

- ▷ Have your vehicle maintained properly and in accordance with the recommendations described in your Maintenance Booklet.
  Lack of proper maintenance, as well as improper use of the vehicle, will impair the function of the emission control system and could lead to damage.
- ▷ Do not alter or remove any component of the emission control system.
- ▷ Do not alter or remove any device, such as heat shields, switches, ignition wires, valves, etc., which are designed to protect your vehicle's emission control system.
  In addition to serious engine damage, this can result in a fire if excess raw fuel reaches the exhaust system.
- ▷ Do not continue to operate your vehicle if you detect engine misfire or other unusual operating conditions.

Parking

⚠ Warning!

Danger of fire.

- ▷ Do not park or operate the vehicle in areas where the hot exhaust system may come in contact with dry grass, brush, fuel spill or other flammable material.
- ▷ If your car catches on fire for any reason, call the fire department.
  Do not endanger your life by attempting to put out the fire.

Undercoating

⚠ Warning!

Danger of fire and serious personal injuries.

- ▷ Do not apply additional undercoating or rustproofing on or near the exhaust manifold, exhaust pipes, catalytic converters or heat shields. During driving the substance used for undercoating could overheat and ignite.

Downloaded from www.Manualslib.com manuals search engine

How Emission Control Works

When an automobile engine is running, it uses energy generated through the combustion of a mixture of air and fuel. Depending on whether a car is driven fast or slowly or whether the engine is cold or hot, some of the fuel (hydrocarbons) may not be burned completely, but may be discharged into the engine crankcase or exhaust system. Additonal hydrocarbons may enter the atmosphere through evaporation of fuel from the fuel tank. These hydrocarbons (HC), when released into the air, contribute to undesirable pollution.

In addition, carbon monoxide (CO) and oxides of nitrogen (NOx) contribute to engine emissions. They, too, are formed during the combustion process and discharged into the exhaust system.

To reduce these pollutants, your Porsche is equipped with a precisely calibrated fuel injection system to assure a finely balanced air/fuel mixture under all operating conditions.

Oxygen sensor

The oxygen sensor, installed in the exhaust pipe continuously senses the oxygen content of the exhaust and signals the information to an electronic control unit. The control unit corrects the air/fuel ratio, so the engine always receives an accurately metered air/fuel mixture.

Crankcase ventilation

Through crankcase ventilation, undesirable emissions from the engine crankcase are not permitted to reach the outside atmosphere. These emissions are recirculated from the crankcase to the air intake system. From here the emissions mix with the intake air and are later burned in the engine.

Catalytic converters

The catalytic converters are efficient "clean-up" devices built into the exhaust system of the vehicle. The catalytic converters burn the undesirable pollutants in the exhaust gas before it is released into the atmosphere.

The exclusive use of unleaded fuel is critically important for the life of the catalytic converters. Therefore, only unleaded fuel must be used.

The catalytic converters will be damaged by:

- push or tow starting the vehicle
- misfiring of the engine
- turning off the ignition while the vehicle is moving or
- driving until the fuel tank is completely empty
- by other unusual operating conditions.

▷ Do not continue to operate your vehicle under these conditions, since raw fuel might reach the catalytic converters. This could result in overheating of the converters. Federal law prohibits use of leaded fuel in this car.

Downloaded from www.Manualslib.com manuals search engine

Fuel Evaporation Control

Fuel tank venting

The evaporation chamber and the carbon canister prevent fuel from escaping to the atmosphere at extreme high outside temperatures, when driving abruptly around curves and when the car is parked at an incline or in any other nonlevel position.

Vapor control system and storage

When the fuel tank is filled, vapors are collected in the evaporation chamber by a vent line leading the vapors to the carbon canister where they are stored as long as the engine does not run.

Purge system

When the engine is running, the fuel vapors from the canister will be mixed with fresh air from the ambient air of the canister. This mixture will be directed to the intake air housing by the tank vent line, mixed with the intake air and burned during normal combustion.

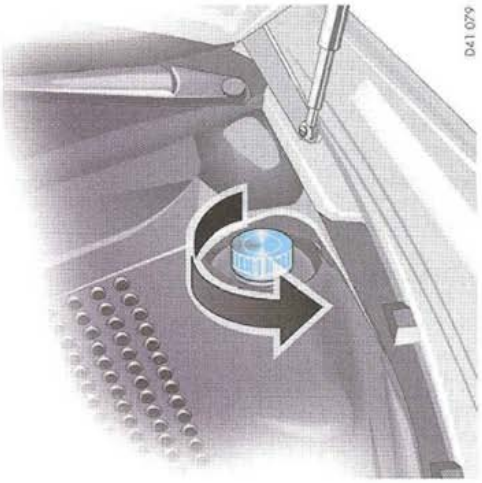

Washer Fluid

The reservoir, with a blue screw cap, is in the luggage compartment, to the rear left.

Capacity

- Without headlight cleaning system: approximately 3.2 quarts (3 liters).
- With headlight cleaning system: approximately 6.1 quarts (5.7 liters).

Clean water is generally not enough to clean the windshield and headlights.
It is advantageous to add a winter cleaner giving antifreeze protection or a suitable summer cleaner, depending on the season. Follow the instructions for the mixing ratio.

▷ Do not use engine coolant anti-freeze or any other solution that can damage the car's paint, in the washer reservoir.

▷ Please note all the information on the container of the cleaning agent.

Warning light

The warning lights in the instrument panel and on-board computer light when approximately 0.5 liter (0.52 quarts) is left in the reservoir.

Downloaded from www.Manualslib.com manuals search engine

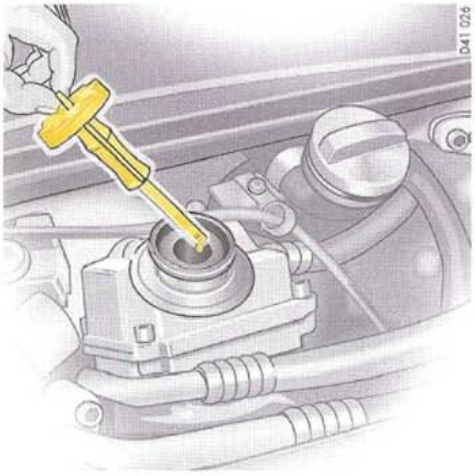

Power Steering

Power steering is assisted by hydraulic auxiliary forces.
The hydraulic fluid reservoir is located in the engine compartment.

Note

The flow noise heard at full steering lock is design-related and does not indicate a defect in the steering system.

⚠ Warning!

Risk of accident.
When the engine is stopped (e.g. when on tow) or the hydraulic system fails, there is no assistance for steering.
Therefore, substantially more force will have to be exerted in order to steer.

- ▷ Exercise great care when being towed.
- ▷ Have the fault remedied at your nearest authorized Porsche dealer.

Checking hydraulic fluid

- ▷ Please observe the chapter "EXERCISE EXTREME CAUTION WHEN WORKING ON YOUR VEHICLE" on Page 112.
- ▷ Only use hydraulic fluid authorized by Porsche. Specification:
  Please observe the chapter "CAPACITIES" on Page 185.

Check the fluid level with the engine stopped and **cold** (approximately 68°F/20°C).

1. Start the engine and let it idle for approx. 20 seconds.
   Switch off the engine.
2. Open the engine compartment lid.
3. Open the reservoir cap.
4. Wipe measuring rod.
   Close lid and reopen. The fluid level should lie in the area of the "Cold" marking.
   Add hydraulic fluid if necessary.
5. Close cap carefully.
   Close engine compartment lid.

Noticeable loss of fluid indicates leakage in the system.
The cause should be remedied immediately at an authorized Porsche dealer.

Downloaded from www.Manualslib.com manuals search engine

Air Filter

A dirty air filter not only reduces engine performance, but can lead to premature engine wear.

Regular filter replacement is part of the routine maintenance service.

▷ In dusty conditions, check the filter element more frequently and replace if necessary.

Particle Filter

The fresh air passing through the particle filter into the passenger compartment is virtually free of dust and pollen.

▷ If the outside air is polluted by exhaust fumes, press the circulating-air button.

A dirty filter can be the cause of reduced air flow:

▷ Have filter replaced by your authorized Porsche dealer.

Regular filter replacement is part of the routine maintenance service.

Manual Transmission Oil

The transmission oil has to be checked and changed at the intervals listed in your Maintenance Schedule.

▷ Please observe the chapter "CAPACITIES" on Page 185.

We recommend that you have the transmission oil changed at your Porsche dealer, who has the required lubricants and the necessary filling equipment.

If you suspect an oil leak in the transmission, have your authorized Porsche dealer check it out immediately.

Downloaded from www.Manualslib.com manuals search engine

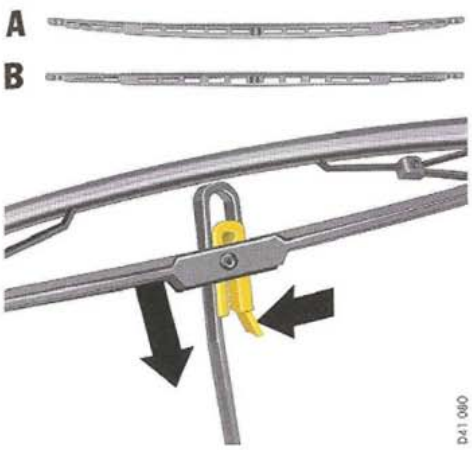

A - *Passenger's side*
B - *Driver's side*

Wiper Blades

- When wiper performance deteriorates, replace the wipers.
- Please observe the chapter "CAR CARE INSTRUCTIONS" on Page 130.

Caution!

Risk of damage if the wiper arm accidentally falls back on to the window.

- Always hold the wiper arm securely when replacing the wiper blade.

Risk of damage if wiper blades that are frozen in place are loosened improperly.

- Thaw the wiper blades before loosening them.

1. Pull out ignition key.
   Fold wiper arm away from the window.
2. Press together the plastic spring of the wiper blade (right arrow).
   Pull wiper blade out of wiper arm.
3. Insert new wiper blade and ensure it engages.
   Ensure that the new wiper blade goes into the same position (direction of spoiler) in the wiper arm and engages.
   For wiper blade **A** on the passenger's side, the arch must face down.
4. Carefully fold wiper arm back on to the window.

Downloaded from www.Manualslib.com manuals search engine

Car Care Instructions

▷ Please observe the chapter "EXERCISE EXTREME CAUTION WHEN WORKING ON YOUR VEHICLE" on Page 112.

Regular and correct care helps to maintain the value of your car and is also a precondition for the New Vehicle Warranty and the Anti Corrosion Warranty.

Your authorized Porsche dealer has specially developed car-care products from the Porsche program available either singly or as complete car-care sets. They will be pleased to help you select suitable products.

Whether you use Porsche products or other commercially available cleaning agents first make sure of their correct application.

A Porsche that is well-cared for can look like new for years. It all depends on the amount of care the owner is willing to give the car.

⚠ Warning!

Risk of serious personal injury or damage to the vehicle or property.
Cleaning agents may be hazardous to your health.
Most chemical cleaners are concentrates which require dilution. High concentrations might cause problems ranging from irritation to serious injury as well as damage to your vehicle.

▷ Keep cleaning agents out of reach from children.

▷ Observe all caution labels.

▷ Always read directions on the container before using any product. These directions may contain information necessary to avoid personal injury.

▷ Do not use fuel, kerosene, naphtha, nail polish remover or other volatile cleaning fluids. They may be toxic, flammable or hazardous in other ways. Only use spot removing fluids in a well vented area.

▷ Do not clean the underside of chassis, fenders, wheel covers, etc., without protecting your hands and arms as you may cut yourself on sharp-edged metal parts.

Moisture and road salt on brakes may affect braking efficiency.

▷ Test the brakes after each vehicle washing.

Downloaded from www.Manualslib.com manuals search engine

Washing

The best method of protecting your car from the damaging effects of the environment is frequent washing and the application of a preservative. The underside of your vehicle should also be washed thoroughly, at the latest when salt is no longer spread on the roads.

The longer salt, road dust and industrial dust, dead insects, bird droppings or substances from trees (resin, pollen) are allowed to remain on the bodywork, the more serious is their harmful effect.

New cars should be washed carefully with plenty of clear water to protect the new paint work. Dark paint finishes show up the smallest of surface damage (e.g., scratches) more readily than lighter colors.

Dark colors are also more susceptible to scratching because of the composition of their pigments and require particularly careful paint care.

▷ Do not wash your car in bright sunlight or while the bodywork is still hot.

▷ When washing by hand, use abundant water, a soft sponge or wash brush, and Porsche car shampoo.

▷ Begin by spraying the body thoroughly with water to rinse away loose dirt.

▷ After washing, rinse the car with plenty of water and then dry with a chamois leather.
Do not use the same chamois leather for drying as you use for cleaning the windshield and windows.

⚠ Warning!

Moisture which gets on to the brakes during a car wash can reduce braking efficiency or make the brakes pull unevenly which could increase the danger of an accident, causing serious personal injuries or death.

▷ Always apply the brakes a few times after washing the car to test braking efficiency and dry the brake discs.
When doing this, take care not to hamper other road users behind you (traffic conditions permitting).

Automatic car washes

Optional add-on parts or parts which project beyond the contours of the vehicle may be damaged by design features (e.g. brushes) of automatic car washes.

The following parts are particularly susceptible to damage:

- Windshield wipers (always switch them off to prevent them wiping unintentionally in intermittent operation)
- External telephone antennas (always unscrew)
- Roof Transport System (always remove completely)
- Rear spoiler
- Wheels (the wider the rim and the lower the tire height, the greater the risk of damage)
- High-gloss wheels (to prevent these from getting scratched, do not clean with the wheel-cleaning brushes of the car wash).

▷ Please consult the operator before using automatic car washes.

▷ Wash and dry by hand all points not reached by a car wash, such as door and lid seams or door sills.

Note

Automatic car washes spray water at odd angles and high pressures, which are not seen in normal driving. Therefore, water can sometimes find its way into the passengers compartment during or shortly after the car wash.

▷ ▷ ▷

Downloaded from www.Manualslib.com manuals search engine

Door locks

- ▷ To prevent the door locks from freezing during the cold season, the lock cylinders should be covered during a wash.
- ▷ Should the locks freeze, use an ordinary de-icer. In many cases, a well warmed key can help.
  Never use excessive force.

Paint

- ▷ Never rub a dusty car with a dry cloth since dust particles are abrasive and could dull and damage the surface finish.

The paintwork of your car is exposed to all types of mechanical and chemical conditions, particularly climatic ones such as bright sunlight, rain, frost and snow. Ultraviolet light, rapid changes in temperature, rain, snow, industrial dust and chemical deposits constantly attack the paint which is only able to withstand such exposure in the long term if it is given regular care and attention.

- ▷ Do not apply silicone polishes to the windshield or windows.
- ▷ Do not treat matt-painted components with preservatives or polishes as this will spoil the matte effect.

Preservation

The paint surface becomes dull over time due to weathering. It is therefore necessary to preserve the paint regularly.
This keeps the paint shiny and elastic. Dirt is prevented from adhering to the paint surface and industrial dust is prevented from penetrating the paint.

Provided it is washed and treated with preservative regularly, the brand new finish of your car will be retained for years to come.

- ▷ Apply the Porsche paint preservative after the car wash and polish it dry to obtain a bright finish or simply add a liquid preservative regularly to the final rinse water.

Polishing

Do not resort to using Porsche polish until it becomes evident that the normal preservatives no longer produce the desired finish.

Spots and stains

- ▷ Remove tar stains, grease, oil spots and dead insects as soon as possible with Insect Remover. They can cause discoloration if allowed to remain on the paintwork.
- ▷ Wash the affected area immediately after treating it.

Minor paint damage

- ▷ Have minor paint damage, such as scratches, scores or chips caused by flying stones, repaired immediately by your authorized Porsche dealer before corrosion sets in.

However, if there are already traces of corrosion, they must first be removed carefully and thoroughly. Coat the area with a rust-proofing primer and finish off with a top coat. The paint code and color number are found on the vehicle's paint data plate.

Downloaded from www.Manualslib.com manuals search engine

Engine compartment

The engine compartment and the surface of the engine are treated with a corrosion-inhibitor at the factory.

If degreasing solvents are used to clean the engine compartment or the engine is washed down, the process almost invariably removes the corrosion-inhibiting coating. It is then absolutely necessary to have a durable preservative applied to all surfaces, body seams, joints and assemblies in the engine compartment. This also applies when corrosion-inhibitor parts are replaced.

⚠ Caution!

Risk of damage to the generator.

▷ Do not point the cleaning jet directly at the alternator, or cover the alternator.

Effective corrosion-proofing is particularly important during the cold weather season. If your car is driven frequently in areas where salt has been spread on the roads, the whole engine compartment should be cleaned thoroughly after the winter to prevent salt from causing any lasting damage. A full under-body wash should also be performed at the same time.

Windows

The road dust which settles on the windshield and windows contains particles of tire rubber and oil residue. The interior trim and upholstery release particles, particularly in strong sunlight, which collect on the insides of the windows. These deposits are augmented by impurities in the air which enters the car through the fresh air vents.

▷ Clean all windows regularly, inside and outside, with Porsche window cleaner.

▷ If you use a chamois leather for the windows, do not use it for paintwork as it will otherwise pick up a certain amount of preservative or polish and could smear the windows and thus impair vision.

▷ Remove dead insects with the Porsche insect remover.

Wiper blades

Wiper blades that are in perfekt condition are vital for a clear view.

▷ Replace the wiper blades twice per year (before and after the cold season) or whenever wiper performance deteriorates.

▷ Periodically clean the wiper blades with Porsche window cleaner, especially after the vehicle has been washed in a car wash.
If they are very dirty (e.g. with insect remains), they can be cleaned with a sponge or cloth.

Undercoating

As it is not possible to exclude the risk of damage to this protective coating in day to day driving, it is advisable to have the underside of the car inspected at certain intervals - preferably before the start of winter and again in spring - and the undercoating restored as necessary.

Your authorized Porsche dealer is familiar with the bodyseal treatment procedures and has the necessary equipment for applying factory approved materials. We recommend that you entrust them with such work and inspections.

Unlike conventional spray oils, undercoating and rust-proofing compounds based on bitumen or wax do not attack the sound-proofing materials applied at the factory.

▷ ▷ ▷

Downloaded from www.Manualslib.com manuals search engine

Warning!

Danger of fire and serious personal injuries.

- Do not apply additional undercoating or rust-proofing on or near the exhaust manifold, exhaust pipes, catalytic converters or heat shields. During driving the substance used for undercoating could overheat and ignite.

- Before applying fresh underseal, carefully remove deposits or dirt and grease. Once it has dried, the new undercoating compound forms a tough protective coating which provides efficient rust-proofing of the floor panels and components.
- Always apply a fresh coating of suitable preservative to unprotected areas after cleaning the underside of the body, the transmission, the engine or carrying out repairs to under-body, engine or transmission components.

Effective rust-proofing is particularly important during the cold weather season. If your car is driven frequently in areas where salt has been spread on the roads, the whole engine compartment should be cleaned thoroughly after the winter to prevent salt from causing any lasting damage. A full under-body wash should also be performed at the same time.

Door, roof, lid and window seals

- Wash dirt (e.g. abrasion, dust, road salts) from all seals regularly using warm soapy water. Do not use any chemical cleaning agents or solvents.

When there is a frost hazard, the outer door seals and the front and rear lid seals can be protected against freezing into place by a suitable care product.

In order to prevent damage to the anti-friction coating, the inner door seals must not be treated with care products.

Headlights, lights, interior and exterior plastic parts

- Use **only** clean water and a little dishwashing detergent to clean light lenses, plastic headlight lenses, plastic parts and surfaces.
  Do not clean when dry.
  Use a soft sponge or a soft, lint-free cloth. Gently wipe the surface without applying too much pressure.
  The Porsche inside window cleaner is also suitable for cleaning plastic surfaces. Follow the cleaning instructions on the container.
  Never use other chemical cleaners or solvents.
- Rinse cleaned surfaces with clear water.

Downloaded from www.Manualslib.com manuals search engine

Light alloy wheels

▷ Please observe the chapter "WASHING" on Page 131.

Pitting may occur if metallic particles which cause contact corrosion (e.g. brass or copper in brake dust) are allowed to remain on the aluminum for too long.

▷ If possible, wash the wheels with a sponge or wash brush about every two weeks. In areas where salt is spread on winter roads or there is a lot of airborne industrial dust, it is best to clean the wheels weekly.
The Porsche Light Alloy Wheel Cleaner (ph-value 9.5) can be used for this purpose.
If the ph-value of the detergent is incorrect, the protective coating on the wheels will be destroyed.

Polishes which dissolve oxides, such as those frequently used for other metals, or abrasive tools or agents are unsuitable because they break down the oxide film of the protective coating and will cause discoloration of the wheel.

▷ Every three months, after cleaning, coat the wheels with a car wax or non-corrosive grease (vaseline).
Using a clean cloth thoroughly rub the grease into the surface.

Leather

Characteristics and special features

The natural surface markings of leather, e.g. creases, healed scars, insect sting marks, structural differences and slight variations in shade and grain add to the attractiveness of the natural leather product.

A special mention must be made here of natural leather.
For natural leather, carefully selected hides of the highest quality are used. It is not covered completely with dye on production.
"Nature's signature" is therefore easily recognisable.
This fine material is distinguished by an outstanding seating comfort, special suppleness and a typical patina.

Leather care and treatment

▷ Clean all types of leather regularly to remove fine dust using a soft, damp, white woollen cloth or a commercially available microfibre cloth.

▷ Remove heavy contamination with Porsche leather cleaner.
Please always follow the instructions for use given on the containers.

Caustic cleaners and hard cleaning objects must not be used.

Perforated leather must under no circumstances get wet on its reverse side.

Once cleaned, leather (particularly the heavily stressed leather seats) must be treated only with Porsche leather care liquid.

▷ ▷ ▷

Downloaded from www.Manualslib.com manuals search engine

Fabric, upholstery, carpets and floor-mats

- ▷ Use only a vacuum cleaner or a medium stiff brush.
- ▷ Remove stains and spots with Porsche stain remover.

The Porsche range of accessories includes floor-mats to protect the carpets in summer and winter.

⚠ Warning!

Risk of an accident.

- ▷ Always check the movement of the pedals before driving and make sure that they are not obstructed by a floor-mat or any other object.
- ▷ Secure the floor-mat to prevent it from sliding into positions that could interfere with the safe operation of your vehicle - do not lie them loosely in the vehicle.
  Your Porsche dealer will be glad to offer you floor-mats of the correct size including a securing possibility.

Alcantara

- ▷ Do not use a leather care product to clean Alcantara.

For regular care it is sufficient to clean the cover with a soft brush.

Cleaning when lightly soiled

- ▷ Wet a soft cloth with water or a neutral soap solution and wipe off the dirt.

Cleaning when heavily soiled

- ▷ Wet a soft cloth with lukewarm water or thinned white spirit and dab the dirt from the outside in.

Safety belts

If it becomes necessary to clean the belts, you can use any mild washing agent.
Allow the belts to dry prior to retracting, but avoid direct sunlight.

- ▷ Only use suitable cleaners.
  If unsuitable cleaners are used or any attempt is made to dye or bleach the belts, the webbing may be weakened and thus constitute a safety risk.

Downloaded from www.Manualslib.com manuals search engine

Storing your Porsche

If you intend to store your Porsche for a prolonged period, please consult your authorized Porsche dealer. The staff will be glad to advise you on the most suitable and necessary methods.

- ▷ Clean your vehicle thoroughly inside and outside.
  Clean the engine compartment.
  The under carriage and chassis components should be free of dirt and salt deposits.
- ▷ Fill up the fuel tank.
- ▷ Change the oil and oil filter, and run the engine for several minutes.
- ▷ Increase the tire pressure to 58 psi (4 bar).
  It is not recommended to lift the vehicle, due to the possibility of corrosion on shock absorber piston shafts.
  The vehicle should be moved slightly, approximately every four weeks, to prevent flat spot on the tires.

Climate control

The air conditioning system should be in good working condition and fully charged.

Windshield/Headlight washer

- ▷ Check and correct antifreeze/cleaning solution level as necessary.

Electrical system

- ▷ Remove the battery from the vehicle and store it in a cool dry place, not on a cement floor. **When the battery is disconnected, the alarm system is deactivated.**
- ▷ Recharge the battery every 3 months. If the battery remains in the vehicle with the cables connected, it is necessary to check, remove and recharge the battery every 2-3 weeks. **Do not fast charge the battery.**
- ▷ Please observe the chapter "BATTERY" on Page 155.

Vehicle interior

The interior must be dry, especially in the area of the floor carpets. The use of drying agents (Silica-Gel) is recommended in vehicles with leather interior and in areas with high humidity. The recommended amount is 3 fabric bags of 1.1 lbs. (500 grams) each placed on the floor carpets.

Windows, doors and lids must be closed. The air flaps should be opened.

Downloaded from www.Manualslib.com manuals search engine

Downloaded from www.Manualslib.com manuals search engine

Practical Tips, Emergency Service

Caution 140
Tires/Wheels 141
Lifting the Vehicle 148
Flat Tire 149
Wheel Bolts 150
Electrical System 152
Battery 155
Emergency Starting with Jumper Cables 160
Lights, Replacing Bulbs 162
Headlights 164
Adjusting Headlights 175
Towing 177

Downloaded from www.Manualslib.com manuals search engine

Exercise Extreme Caution when Working on your Vehicle

⚠ **Warning!**

Ignoring the following instructions may cause serious personal injury.

- The engine compartment of any motor vehicle is a potentially hazardous area. If you are not fully familiar with proper repair procedures, do not attempt the adjustments described on the following pages.
  This caution applies to the entire vehicle.
- Only work on your vehicle outdoors or in a well ventilated area.
- Ensure that there are no open flames in the area of your vehicle at any time when fuel fumes might be present. Be especially cautious of such devices such as hot water heaters which ignite a flame intermittently.
- Before working on any part in the engine compartment, turn the engine off and let it cool down sufficiently. Hot engine compartment components can burn skin on contact.
- Be alert and cautious around engine at all times while the engine is running.
  If work has to be performed with the engine running, always set the parking brake, and make sure the shift lever is in neutral position.
- In particular, be very careful to ensure that items of clothing (ties, shirt, sleeves etc.), jewelry, long hair, hand or fingers cannot get caught in the engine-compartment blower, fan, belts or other moving parts.
  The radiator and radiator fans are in the front of the car.
  The fans can start or continue running as a function of temperature, even with the engine switched off.
  Carry out work in these areas only with the engine off, the ignition switched off, and exercise extreme caution.
- Your Porsche is equipped with an electronic ignition system. When the ignition is on, high voltage is present in all wires connected with the ignition system; therefore, exercise extreme caution when working on any part of the engine while the ignition is on or the engine is running.
- Always support your car with safety stands if it is necessary to work under the car.
- When working under the car without safety stands but with the wheels on the ground, make sure the car is on level ground, the wheels are blocked, and that the engine cannot be started.
  Remove the ignition key.
- Do not smoke or allow an open flame around the battery or fuel.
  Keep a fire extinguisher in close reach.
- Incomplete or improper servicing may cause problems in the operation of the car. If in doubt about any servicing, have it done by your authorized Porsche dealer.
  Improper maintenance during the warranty period may affect your Porsche warranty coverage.
- Supplies of fluids, e.g. engine oil, brake fluid or coolant, are hazardous to your health.
  Keep these fluids out of children's reach and dispose of them in accordance with the appropriate regulations.
- Some countries require additional tools and special spare parts to be carried.
  Please make enquiries before driving abroad.

Downloaded from www.Manualslib.com manuals search engine

Tires/Wheels

The original equipment tires and wheel rims on your Porsche comply with all applicable Federal Motor Vehicle Safety Standards.

For your safety remember the following:

- Wheel rims and wheel bolts are matched to fit your Porsche.
- If you intend to use other than original equipment wheels, be sure that they conform to Porsche specifications for your model.
  Only tires with the same make and with the same specification code (e.g. "N0", "N1"...) can be mounted.
- The use of wheel rims and wheel bolts that do not meet specifications of the original factory installed equipment will affect the safe operation of your vehicle.
- Before you plan on exchanging wheels, or snow tires already mounted on the wheel rims, consult your authorized Porsche dealer. Your dealer has the technical information necessary to advise you which wheel rims and wheel bolts are compatible with the original factory installations.

Warning!

Risk of loss of control and serious personal injury.

▷ If while driving, your vehicle experiences a sudden vibration or ride disturbance, and/or you suspect that possible damage to your tires or vehicle has occurred, you should immediately reduce your speed without excessive use of the brakes.

▷ Stop the vehicle as soon as possible, and inspect the tires.
If you cannot determine the cause for the disturbance, have your vehicle towed to the nearest Porsche or tire dealer to have your vehicle or tire(s) inspected.

▷ Continuing to operate the vehicle without correction could result in a loss of control and serious personal injury.

▷ ▷ ▷

Downloaded from www.Manualslib.com manuals search engine

Uniform Tire Quality Grading

Quality grades can be found where applicable on the tire sidewall between tread shoulder and maximum section width.

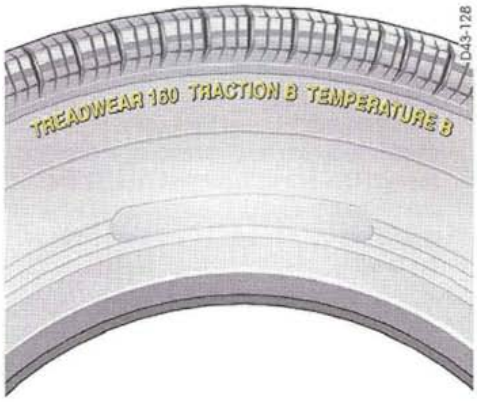

Example

All passenger car tires must conform to Federal Safety Requirements in addition to these grades.

Treadwear

The treadwear grade is a comparative rating based on the wear rate of the tire when tested under controlled conditions on a specific government test course.
For example, a tire graded 150 would wear one and a half (1-1/2) times as well on the government course as a tire graded 100.
The relative performance of tires depends upon the actual conditions of their use, however, and may depart significantly from the norm due to variations in driving habits, service practices and differences in road characteristics and climate.

Traction AA, A, B, C

The traction grades, from highest to lowest, are AA, A, B, and C and they represent the tire's ability to stop on wet pavement as measured under controlled conditions on specified government test surfaces of asphalt and concrete.
A tire marked C may have poor traction performance.

⚠ Warning!

The traction grade assigned to this is based on braking (straight-ahead) traction tests and does not include cornering (turned) traction, acceleration, hydroplaning or peak traction characteristics.

Downloaded from www.Manualslib.com manuals search engine

Temperature A, B, C

The temperature grades are A (the highest), B and C, representing the tire's resistance to the generation of heat and its ability to dissipate heat when tested under controlled conditions on a specified indoor laboratory test wheel.
Sustained high temperatures can cause the material of the tire to degenerate and reduce tire life, and excessive temperature can lead to sudden tire failure.
The grade C corresponds to a level of performance which all passenger car tires must meet under the Federal Motor Vehicle Safety Standard No. 109.
Grades B and A represent higher levels of performance on the laboratory test wheel than the minimum required by law.

⚠ Warning!

The temperature grade for this tire is established for a tire that is properly inflated and not overloaded.
Excessive speed, underinflation, or excessive loading, either separately or in combination, can cause heat buildup and possible tire failure.

Tire pressures

⚠ Warning!

Incorrect tire pressure causes increased tire wear and adversely affects road handling.

- ▷ Always use an accurate tire pressure gauge when checking inflation pressures.
- ▷ Do not exceed the maximum tire pressure listed on the tire sidewall.
  Please observe the chapter "VEHICLE IDENTIFICATION, TECHNICAL DATA" on Page 179.
- ▷ Cold tire inflation pressure means: all tires must be cold, ambient temperature maximum 68°F (20°C), when adjusting the inflation pressure.
  Avoid sunlight striking the tires before measuring cold pressures, since the pressures would rise from temperature influence.
- ▷ Valve caps protect the valve from dust and dirt, and thus from leakage.
  Always screw caps tightly down.
  Replace missing caps immediately.
- ▷ Do not use commercially available sealant or tire inflating bottles.

Tire traction

⚠ Warning!

When driving on wet or slushy roads, a wedge of water may build up between the tires and the road. This phenomenon is known as "hydroplane" and may cause partial or complete loss of traction, vehicle control or stopping ability.

- ▷ Reduce speed on wet surface to prevent this.

Tire life

Tire life depends on various factors, i. e., road surfaces, traffic and weather conditions, driving habits, type of tires and tire care.

- ▷ Inspect your tires for wear and damage before driving off. If you notice uneven or substantial wear, wheels might need alignment or tires should be balanced or replaced.

▷ ▷ ▷

Downloaded from www.Manualslib.com manuals search engine

Tire wear

The original equipment tires on your Porsche have built-in tire wear indicators. They are molded into the bottom of the tread grooves and will appear as approximately 1/2 in (12 mm) bands when the tire tread depth is down to 1/16 of an in (1.6 mm).

When the indicators appear in two or more adjacent grooves, it is time to replace the tires. We recommend, however, that you do not let the tires wear down to this extent.
Worn tires cannot grip the road surface properly and are even less effective on wet roads.

In the United States, state laws may govern the minimum tread depth permissible. Follow all such laws.

⚠ Warning!

Driving on worn tires can result in loss of control of the vehicle and could cause severe personal injuries.

- ▷ Do not drive with worn tires or tires showing cuts or bruises as they may lead to sudden deflation and loss of control which could cause severe personal injury.
- ▷ Specialized high performance tires on high performance sports cars exhibit more wear than those on a family sedan, or even a high performance sedan.
  Therefore, it is important to check your tire pressure and condition at least every two weeks.

If you notice that tires are wearing unevenly, consult your Porsche dealer.
Uneven wear may not always be due to improper wheel alignment. It can be the result of individual driving habits such as cornering at high speeds. If the tire pressure is not checked and adjusted regularly, abnormal tire wear can also occur.

Tire care

- ▷ Avoid damaging tires and wheel rims.
- ▷ If you must drive over a curb or other obstacle, drive slowly and at an obtuse angle.
- ▷ Check tires for uneven wear and damage before driving off.
- ▷ Remove imbedded material.
- ▷ Replace worn or damaged tires immediately.
- ▷ Keep oil, fuel, brake fluid, etc. away from tires.
- ▷ Replace missing valve stem caps.
- ▷ Keep tires inflated correctly.

Downloaded from www.Manualslib.com manuals search engine

Tire damage, puncture

▷ Check tires for imbedded material, cuts, punctures, cracks and bulges (side wall) before driving off.

In case of tire damage, where it is uncertain whether there is a break in the ply with all its consequences or tire damage caused by thermal or mechanical overloading due to loss of pressure or any other prior damage, we recommend that the tire be replaced for safety reasons.

If one faulty tire is replaced it should be noted that the difference in tread depth on one axle must not exceed 30 %.
Handling inconsistencies may result.

▷ Perform a visual inspection if necessary.

Tire replacements

If in doubt, contact your Porsche dealer or Porsche Importer of your country.
Use only tire makes and types tested by Porsche.

If you do not use a Porsche recommended replacement tire, make sure that you purchase your new tires from a reputable tire dealer and that the dealer complies with all manufacturers warnings for those tires.

Only tires with the same make and with the same specification code (e.g. "N0", "N1"...) can be mounted.

Before mounting new tires, check with your Porsche dealer about the current release status.

Use tires with "ZR" quality standards. There are currently no standards concerning tire strength at speeds above 150 mph (240 km/h).

Tires should be replaced no less than on one axle at the time.
Only tires of the same make and type must be used. Mixed tires are not permissible.

Initially, new tires do not have their full traction. You should therefore drive at moderate speeds during the first 60 - 120 miles (100 - 200 km).

If new tires are installed only on one axle, a noticeable change in handling occurs due to the different tread depth of the other tires.
This happens especially if only rear tires are replaced. However, this condition disappears as the new tires are broken in.

▷ Please adjust your driving style accordingly.

Installation of new tires should only be done by a qualified tire technician.

Valves

Rubber valve stems must be replaced every time a tire is replaced.
For metal valves, the installation and replacement instructions must be observed.
Use only genuine Porsche metal valves.

Parking at the curb

⚠ **Warning!**

Hard impacts against curbs (or traffic islands) are dangerous and may cause hidden tire damage which is not noticeable until later. Such damage can result in accidents at high speeds causing severe personal injury.
Depending on the force of impact, the edge of the rim can also be damaged.

▷ If you are in doubt, have the wheel checked by an expert, particularly if you suspect damage on the inside.

▷ If you must drive over a curb or other obstacle, drive slowly and at an obtuse angle. Exercise care when parking along curbs.

▷ ▷ ▷

Downloaded from www.Manualslib.com manuals search engine

Wheel alignment, wheel balancing

As a precaution, have wheels with summer tires balanced in the spring, and those with mud and snow tires before winter.
Unbalanced wheels may affect car handling and tire life.
Only the specified weights may be used for wheel balancing.
Self-adhesive weights must not come into contact with cleaning agents, since they could drop off.
A wheel should always be balanced after a tire repair.
Uneven tread wear indicates wheel imbalance. In this event, the vehicle should be checked at an authorized Porsche dealer.

Warning!

If, during a journey, uneven running or vibrations occur that could be caused by damage to tires or the car, the speed must be reduced immediately, but without braking sharply.
If you continue your trip without having the cause of the fault remedied, you might lose control of your vehicle which could cause severe personal injury.

- Stop the vehicle and check the tires.
- If no cause for the fault can be found, drive carefully to the nearest authorized Porsche dealer.

Removing and storing tires

- After changing, adjust tire pressure and torque wheel bolts diagonally to 94 ftlb (130 Nm). Please observe the chapter "CHANGING A WHEEL" on Page 150.

Tires must always remain on the same side of the vehicle.
When wheels are removed, the direction of rotation and position of each wheel should be marked.

Example

FR (front right), FL, RR and RL.

Wheels must always be fitted in accordance with their marking.

The preception that tire durability and performance are immune to the effects of storage and age is unfounded.
Chemical additives, which make the rubber elastic, lose their effectiveness in the course of time and the rubber becomes brittle and cracks.

Therefore, the tires should be inspected from time to time.

Note

Under no circumstances should tires older than 6 years be used on your Porsche.

The age of the tire can be obtained from the "DOT" code number. If, for example, the last four numbers read 1203, then the tire was produced in the 12th week of 2003.

- **Store tires in a cool and dry place.**

Snow tires

For a better grip on snow and ice, use radial M+S tires with studs.
Check with your local Motor Vehicle Bureau for possible restrictions.

Warning!

Risk of loss of control and damage to the vehicle as well as severe personal injury. The standard tires profile and rubber mixture are optimized for wet and dry driving conditions, and may not prove favorable for snow conditions.

- Therefore install M+S tires before driving in such conditions.

Downloaded from www.Manualslib.com manuals search engine

Before mounting snow tires, consult with your Porsche dealer. He has the technical information necessary to advise you on wheel and tire compatibility.

Snow tires should have the same load capacity as original equipment tires and should be mounted on all four wheels.
Snow tires with studs should be run at moderate speeds when new in order to give the studs time to settle.

Warning!

Tires with badly worn treads and studs are very dangerous and could cause accidents resulting in severe personal injuries.

▷ Make sure they are replaced immediately.

Do not drive a vehicle equipped with snow tires at prolonged high speed.
Snow tires do not have the same degree of traction on dry, wet or snowfree roads as a normal tire.
Furthermore, snow tires wear rapidly under these conditions.

Snow tires do not fulfill their purpose if the tread depth is less than 5/32 in. (4 mm).

Comply with all state and local laws governing snow tire and tread depth requirements.

Snow chains

Caution!

Risk of damage to body, axle or brake components.

▷ Fit snow chains only to the rear wheels, and only with the tire/rim combination listed in the Technical Data.
To ensure adequate clearance between chain and body, Porsche recommends only the use of fine-link chains such as those approved by Porsche.

▷ Follow instructions issued by the supplier of the chains.

Different states and countries have varying statutory requirements regarding maximum speed. Check with local authorities for possible restrictions.

▷ Remove chains as soon as the roads are free of ice and snow.

Tire designations

Due to new speed and load ratings for radial tires, new designations have come into force for snow tires for your Porsche.

The designation to be used for ZR tires is e.g., 255/40 ZR 17 (Z = code letter for radial tires for speeds above 150 mph (240 km/h).

Downloaded from www.Manualslib.com manuals search engine

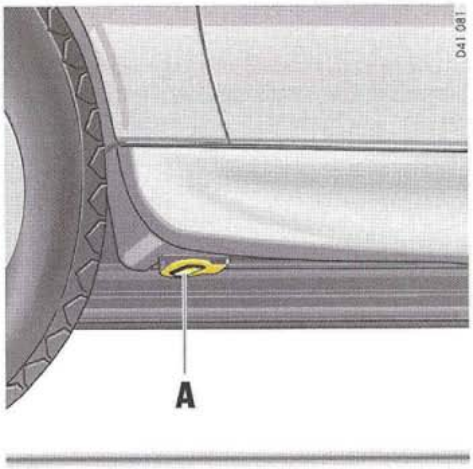

A - *Front jacking point*

Lifting the Vehicle with a Lifting Platform or Garage Lift

The car must be raised **only** at the illustrated jacking points.

▷ Please observe the chapter "CHANGING A WHEEL" on Page 150.

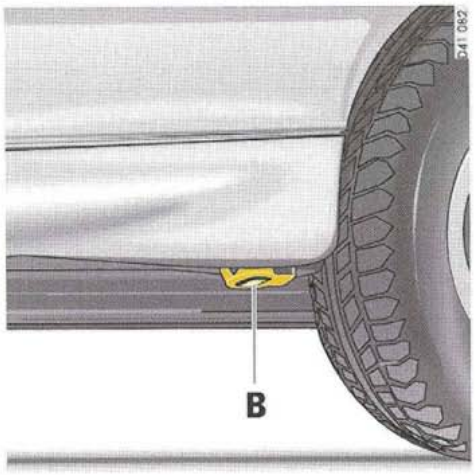

B - *Rear jacking point*

⚠ Caution!

Serious injury and/or serious damage to the engine or the vehicle may occur, if you lift the vehicle improperly.

▷ Never lift the vehicle at any other place than the jacking points.

▷ Never lift the vehicle by the engine, transmission or axles.

▷ Do not damage any sensitive components in the vicinity of the jacking points.

Platform lift

Before the car is driven on to a lifting platform, it must be ensured that there is enough space between the lifting platform and the vehicle.

Garage lift

A garage lift must be used **only** at the illustrated jacking points.

Downloaded from www.Manualslib.com manuals search engine

Flat Tire

Warning!

Failure to follow these instructions may result in serious personal injuries to you or to bystanders.

- If you have a flat tire, move a safe distance off the road. Turn the emergency flasher on and use other warning devices to alert other motorists. Set the parking brake.
- Do not park your vehicle where it may contact dry grass, brush or other flammable materials. The hot parts of the exaust system could set such materials on fire, thereby causing both property damage and severe or fatal physical injury.

- Set up a warning triangle at a suitable distance.

A tire repair kit, compressor and pressure tester are located under the luggage compartment floor.

- Please observe the safety and operating instructions on the special sealant bottle with a special Porsche part number and on the compressor – these are essential.

Important note

Sealing the tire with the tire repair kit is only an emergency repair. Even with the tire airtight, it may be used only for short journeys in an emergency.
The maximum permitted speed is 50 mph (80 km/h).

- Do not use commercially available sealant or tire inflating bottles.

Warning!

Risk of accident.

- Have tires replaced by a specialist workshop as soon as possible.
- Avoid hard acceleration and high cornering speeds.

Downloaded from www.Manualslib.com manuals search engine

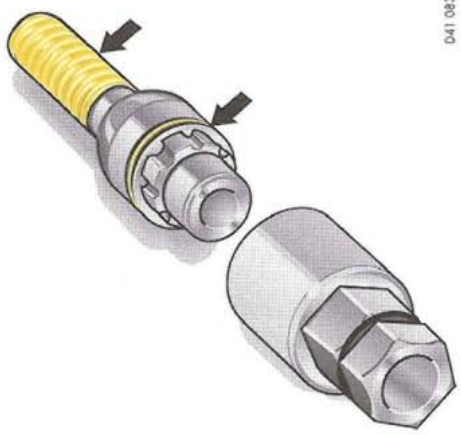

Wheel Bolts

Warning!

Risk of wheel bolt breakage and wheel separation, resulting in severe personal injury or death.

- Follow all instructions concerning wheel bolts.

- Always clean the wheel bolts before fitting.
- Apply a thin coat of **Optimoly TA** (aluminium paste) on the thread and between the bolt head and movable spherical cap ring (**arrows**).
  The bearing surface of the spherical cap facing the wheel must not be greased.
- Replace damaged wheel bolts.
  Only use the Original Porsche wheel bolts specially designed for this vehicle type.

Tightening torque

Tightening torque of wheel bolts:
130 Nm/96 ftlb.

Wheel Securing Bolts

The wrench socket for the wheel securing bolts is in the tool pocket.

To loosen or tighten the wheel bolt with anti-theft protection, a wrench socket with the appropriate coding must be used between the wheel bolt and the wheel-bolt spanner.

- When positioning the wrench socket, ensure that it engages fully in the teeth of the wheel bolt.

If the wheels have to be removed at the workshop, please do not forget to hand over the wrench socket for the wheel securing bolts along with the car key.

Changing a wheel

Warning!

Risk of injury. The car may slip off the jack.

- Make sure that no one is in the vehicle when jacking up and changing a wheel.
- Always place the car on stable supports if work has to be carried out under the car.

Risk of damage to the brake discs of the Porsche Ceramic Composite Brake (PCCB).

- Always screw in both assembly aids when changing a wheel.

1. Fully apply the handbrake, engage 1st gear and withdraw the ignition key.
2. Secure the car against rolling away, e.g. by means of wedges under the wheels on the opposite side.
   This is particularly important on slopes.

Downloaded from www.Manualslib.com manuals search engine

Screw in assembly aid for vehicles ***without*** *Porsche Ceramic Composite Brake*

3. Slightly slacken the wheel bolts of the wheel to be changed.
4. Raise the car until the wheel lifts off the ground.
   Please observe the chapter "LIFTING THE VEHICLE WITH A LIFTING PLATFORM OR GARAGE LIFT" on Page 148.

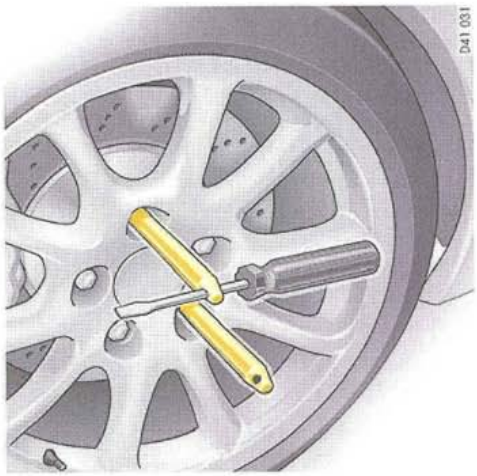

Screw in two assembly aids for vehicles ***with*** *Porsche Ceramic Composite Brake*

5. Remove 1 or 2 wheel bolts (see respective illustration). Remove assembly aids from tool kit and screw in instead of the wheel bolts. Remove the remaining wheel bolts.
6. Take the wheel off and put a new wheel on.
7. Please observe the chapter "WHEEL BOLTS" on Page 150.
   Screw in wheel bolts; remove assembly aids and screw in the remaining wheel bolts. Initially tighten bolts in diagonally opposite sequence so that the wheel is centered.
8. Lower the car completely.
9. Tighten wheel bolts in diagonally opposite sequence.

Immediately after changing a wheel, use a torque wrench to check the prescribed tightening torque (130 Nm/96 ftlb.).

Note

The tools required for changing a wheel (e.g. jack, wheel bolt wrench) are not supplied with the car.

Downloaded from www.Manualslib.com manuals search engine

Electrical System

In order to avoid damage and faults in electrical or electronic systems, electrical accessories should be installed at your authorized Porsche dealer.

▷ Only use accessories authorized by Porsche.

⚠ **Warning!**

Risk of short circuit and fire.
Replacing fuses or relays with the engine running or the ignition on could cause electrical shock.

▷ Disconnected the battery during all work on the electrical system.
Please observe the chapter "BATTERY" on Page 155.

Relays

Defective **relays** should be changed only by an authorized workshop.

Alarm system, central locking

The status of the central locking and alarm system is not changed by disconnecting the battery. When the battery is disconnected, the alarm system ceases to function.

Overload protection

If the central locking system is operated more than ten times within a minute, further operation is blocked for 30 seconds.

Load switch-off after two hours or five days

If the ignition key is removed, loads which are switched on or in standby (e.g. power windows, luggage compartment lighting, interior light, radio) are automatically switched off after approximately **2 hours**.

If the vehicle is not started or unlocked with the remote control within **five days**, the remote control standby function is switched off (to prevent discharging of the vehicle battery).

1. In this case, unlock the driver's door with the key at the door lock.
   Leave the door closed in order to prevent the alarm system from being triggered.
2. Press button **1** on the remote control.

The remote control is now activated again.

Downloaded from www.Manualslib.com manuals search engine

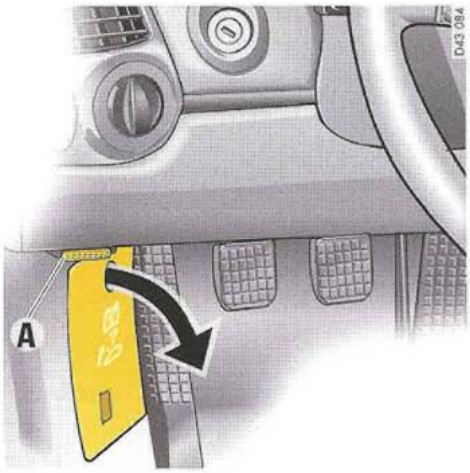

A - *Diagnostic socket*

Replacing fuses

In order to prevent damage to cables and consumers in the electrical system due to short circuits and overloads, the individual circuits are protected by fuses.

The fuse box is at lower left in the driver's footwell and is protected with a plastic cover.

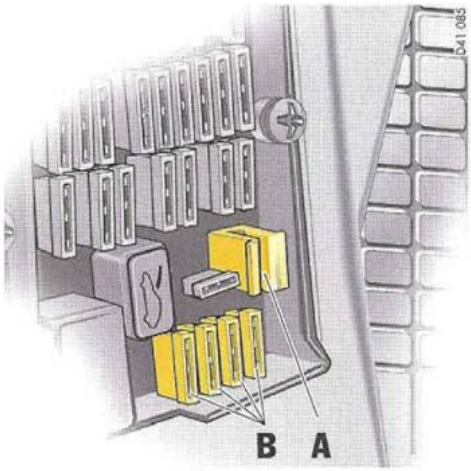

A - *Plastic gripper*
B - *Spare fuses*

1. Before replacing a fuse, switch off all electrical consumers and remove the ignition key.
2. To open, pull the cover off at the finger hole (**arrow**).
   The **fuse plan** and **instructions for emergency unlocking of the luggage compartment lid and engine compartment lid** can be found on the inside of the cover.
3. To check or replace a fuse, remove it from the spring clip using the plastic gripper **A**.
   A blown fuse indicates an overload in the circuit and can be identified by the melted metal strip.
4. Replace only with fuses of the same rating.
   Spare fuses **B** are in the lowest section of the fuse box.

Important note

▷ If a fuse blows repeatedly, please immediately consult an authorized Porsche dealer, so that the short circuit can be located and corrected.

▷ Never try to "repair" fuses: you may cause serious damage to other parts of the electrical system.

▷ ▷ ▷

Downloaded from www.Manualslib.com manuals search engine

Emergency unlocking of the luggage compartment lid and engine compartment lid

If the battery is discharged, the lids can be opened only with the aid of a donor battery.

Unlocking lids

1. Use the key to unlock the vehicle at the door lock.
   Leave the key in the door lock.
2. Remove plastic cover over the fuse box.
3. Pull out positive terminal **A** in the fuse box.
4. Use a jumper cable to connect the positive terminal of the donor battery with positive terminal **A** in the fuse box.

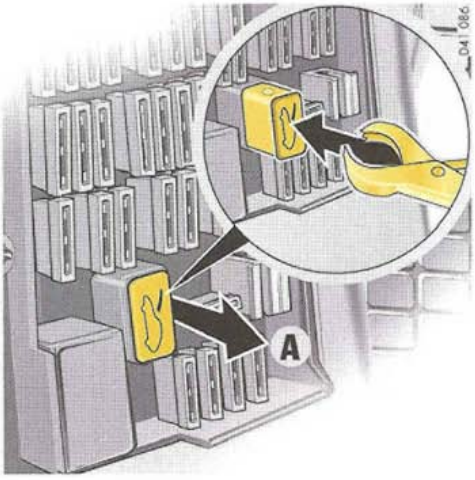

Note

If the vehicle was locked, the alarm horn will sound when the negative cable is connected.

5. Use the second jumper cable to connect the negative terminal of the donor battery with latch striker **B**.
6. Switch the alarm system off by locking and unlocking at the door lock.
7. Unlock the engine compartment lid or luggage compartment lid with the switch.

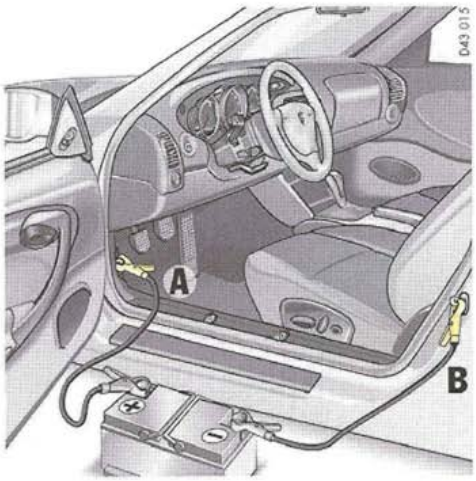

8. Disconnect the negative cable first, then the positive cable.
9. Push positive terminal **A** into the fuse box and push on the plastic fuse box cover.

Note

The engine cannot be started with this method. Please observe the chapter "EMERGENCY STARTING WITH JUMPER CABLES" on Page 160.

Downloaded from www.Manualslib.com manuals search engine

Battery

Warning!

Risk of short circuit and fire.

- ▷ Observe all warning notes on the battery.
- ▷ Disconnect the battery during all work on the electrical system.
- ▷ Do not lay tools or other metal objects on the battery as they could cause a short circuit across the battery terminal.

Hydrogen gas generated by the battery could cause an explosion, resulting in severe personal injuries.

- ▷ Do not expose the battery to an open flame, electrical spark or a lit cigarette.

Risk of severe personal injury and damage to the fabric, metal or paint.

- ▷ Wear eye protection.
- ▷ Do not allow battery acid to come in contact with your skin, eyes, fabric or painted surfaces.
- ▷ If you get electrolyte, which is an acid, in your eyes or on your skin, immediately rinse with cold water for several minutes and call a doctor.
- ▷ Spilled electrolyte must be rinsed off at once with a solution of baking soda and water to neutralize the acid.

Battery posts, terminals and related accessories contain lead and lead compounds, chemicals known to the State of California to cause cancer and reproductive harm.

- ▷ Always protect your skin by washing thoroughly with soap and water.

Charge state

A well charged battery will not only prevent starting problems but will also last longer.

In order to avoid discharging the battery unintentionally:

- ▷ Curtail unnecessary power consumption, particularly in city traffic or when travelling short distances only.
- ▷ Always remove the ignition key when leaving the car.

▷ ▷ ▷

Downloaded from www.Manualslib.com manuals search engine

Battery care

- ▷ Ensure that battery is securely mounted.
- ▷ Keep terminals and connections clean and properly tightened.
  Corrosion can be prevented by coating the terminals and connections with petroleum jelly or silicone spray.
- ▷ Ensure that vent caps are securely tightened to prevent spillage.

Checking the electrolyte fluid level

Generally, the electrolyte level must be checked more often in summer than in the winter, and more often when driving long distances.

- ▷ When adding water, use only clean vessels. In no case may alcohol (e.g. window cleaner residues) be permitted to enter the battery.
- ▷ Unscrew and open the filler vent caps of each cell.

With the car horizontal, the fluid level should meet the indicator mark in each cell.

- ▷ If necessary, top up with **distilled water. Do not use acid.**
  Only fill up to the mark, otherwise the electrolyte will overflow when the battery is being charged and cause damage.

Battery charging

Automotive batteries loose their efficiency when not in use.
The charge available in your battery can be measured with a battery hydrometer.
We recommend that the battery voltage be tested by your Porsche dealer who has the appropriate equipment.

If the car is not driven for prolonged periods, the battery must be charged at least every 6 weeks. A discharged battery allows rapid formation of sulfates, leading to premature deterioration of the plates.

Downloaded from www.Manualslib.com manuals search engine

⚠ **Warning!**

Hydrogen gas generated by the battery could cause an explosion, resulting in severe personal injuries.

- ▷ Charge battery in a well ventilated area.
- ▷ Never charge a frozen battery. It may explode because of gas trapped in the ice. Allow a frozen battery to thaw out first.
- ▷ If you get electrolyte, which is an acid, in your eyes or on your skin, immediately rinse with cold water for several minutes and call a doctor.

Slow battery charging

1. Pay attention to all warnings and follow instructions that come with your battery charger.
2. When charging, ensure adequate ventilation.
3. Remove battery.
   Please observe the chapter "REMOVING THE BATTERY" on Page 158.
4. All vent caps should be open.
   The fluid level should meet the indicator mark in each cell.
5. Ensure that charger is switched off – danger of short circuit!
6. Connect charger cables.
   Charger cables must be connected POSITIVE (+) to POSITIVE (+) and NEGATIVE (–) to NEGATIVE (–).
7. Switch on charger.
   Normally, a battery should be charged at no more than 10 percent of its rated capacity. Rated capacity of the battery in your vehicle is listed on the battery housing.
8. After charging, turn off charger and disconnect charger cables.
9. Tighten the vent caps and reinstall battery
   Please observe the chapter "INSTALLING THE BATTERY" on Page 158.

Winter operation

During the winter months, battery capacity tends to decrease as temperatures drop.
Additionally, more power is consumed while starting, and the headlights, heater, rear window defogger, etc., are used more frequently.

- ▷ Let your Porsche dealer test the battery's capacity before winter sets in.

Replacing battery

The service life of the battery is subject to normal wear; it depends graetly on care, climatic conditions, and driving conditions (distances, loads).

- ▷ Only use an original Porsche battery, with the correct part number, as a replacement.
- ▷ Please observe the disposal instructions for batteries.

▷ ▷ ▷

Downloaded from www.Manualslib.com manuals search engine

Removing the battery

The requisite tool is in the tool kit.

The battery is located in the luggage compartment under a black plastic lid.

⚠ Warning!

Risk of damage to alternator and electronic control units.

- ▷ Do not disconnect the battery while the engine is running.
  This also applies to cars equipped with a battery main switch.
- ▷ Never drive the car with a disconnected battery.

Risk of caustic burns from escaping acid.

- ▷ Keep vent caps on to avoid spillage.
- ▷ Do not tilt the battery when removing and installing it.

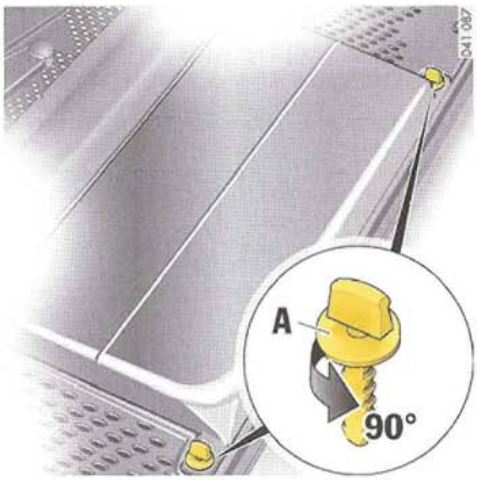

1. Switch off engine and all electrical loads.
2. Open turn-locks **A**.
   Remove plastic lid.
3. Pull off central vent hose **B**.
4. Important: disconnect the negative (–) ground wire first, and then the positive (+) cable. Danger of short circuit!
5. Unscrew fastening screw **C**.
6. Remove battery.

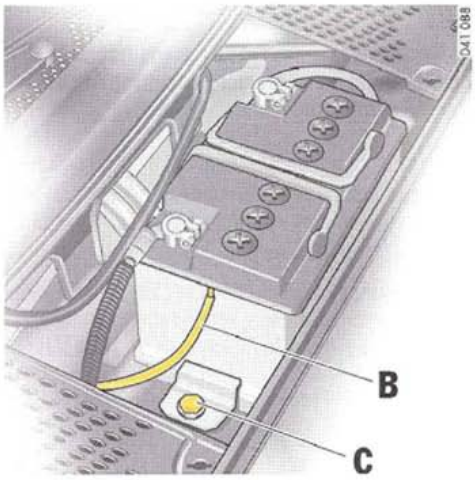

Installing the battery

1. Put battery in.
2. Screw in fastening screw **C**.
3. Important: connect the positive (+) cable first, and then the negative (–) ground wire. Danger of short circuit!
4. Push on central vent hose **B**.
5. Fit plastic lid. Lock turn-locks **A**.

Downloaded from www.Manualslib.com manuals search engine

1. Using your finger nail or a small screwdriver, carefully lift off the cover of the key grip.
2. Replace battery (observe polarity).
   A spare battery (Lithium CR 2032, 3 volts) is available at your authorized Porsche dealer.
3. Replace cover and press together firmly.

Note

Any disposal regulations for batteries must be observed!

Replacing the remote-control battery

A weak battery may be recognized by the clearly reduced action range of the remote control or when the **light-emitting diode 2** in the key grip no longer flashes when the remote control is operated.

Downloaded from www.Manualslib.com manuals search engine

Emergency Starting with Jumper Cables

If the battery is discharged, e.g. in winter or after the car has been parked for a long time, the battery of another car can be used for starting with the help of jumper cables.
Make sure the voltage of both batteries is the same.
The capacity (Ampere hours, Ah) of the booster battery must not be substantially less than that of the discharged battery.
The discharged battery must be correctly connected to the vehicle's electrical system.

- ▷ Please observe the chapter "BATTERY" on Page 155.
- ▷ Please observe the chapter "EMERGENCY UNLOCKING OF THE LUGGAGE COMPARTMENT LID AND ENGINE COMPARTMENT LID" on Page 154.

Note

- ▷ Do not try to start the car by pushing or towing. Damage to the catalytic converters and other components of the car may result.

⚠ Warning!

Risk of damage and serious personal injury due to short circuit.

- ▷ Use only jumper cables of adequate diameter cross-section and fitted with completely insulated alligator clips.
- ▷ Follow all warnings and instructions of the jumper cable manufacturer.
- ▷ When connecting jumper cables, make sure that they cannot get caught in any moving parts in the engine compartment.
  The jumper cables must be long enough so that neither vehicles nor cables touch another.
- ▷ The vehicles must not be in contact, otherwise current might flow as soon as the positive terminals are connected.
- ▷ The cable clamps must not be allowed to contact each other when one end of the jumper cables are connected to a battery.
- ▷ Ensure that tools or conductive jewellery (rings, chains, watch straps) do not come into contact with live parts of the vehicle.
- ▷ Improper hook-up of jumper cables can ruin the alternator.

Danger of caustic burns.

- ▷ Do not lean over the battery.

Danger of gas explosion.

- ▷ Improper use of booster battery to start a vehicle may cause an explosion, resulting in severe personal injuries.
- ▷ Keep sources of ignition away from the battery, e.g. open flame, burning cigarettes or sparking due to cable contact or welding work.
- ▷ A discharged battery can freeze even at 14°F/–10°C.
  Before connecting jumper cables, a frozen battery must be thawed out.

Downloaded from www.Manualslib.com manuals search engine

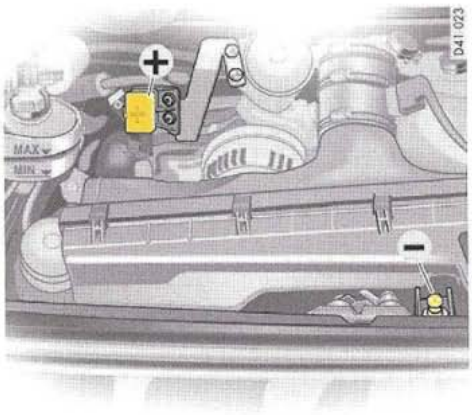

+ =*Positive terminal for jump starting*
– =*Grounding point for jump starting*

Connect jumper cables in the following sequence:

1. Check electrolyte level of each cell. If necessary, fill with distilled water to just above plates.
2. On a vehicle with a discharged battery: turn off all consumers and accessories, move the gear shift lever into the neutral position and set the parking brake.
3. Open the cap of the positive terminal for jump starting (+).
4. Attach the **positive cable** first to the positive terminal for jump starting (+),
   then to the positive terminal of the booster battery.
5. Connect the **negative cable** first to the negative terminal of the booster battery, then to the grounding point for jump starting (–).
6. Run the engine of the booster car at a higher speed.
7. Start the engine.
   An attempted start using jumper cables should not last more than 15 seconds. Then allow a waiting period of at least one minute.
8. With the engine running, disconnect both jumper cables in reverse order.
   Close the lid of the jump start box.

Downloaded from www.Manualslib.com manuals search engine

Lights, Replacing Bulbs

Warning!

Risk of short circuit.

- Always switch off the relevant consumer when changing bulbs.

Risk of injury. The headlights are under high voltage when installed.

- Be careful during all work in the area of the headlights.

Risk of damage. Bulbs of a higher wattage can damage the lamp housing.

- Only the bulbs shown in the chart may be used.

- New bulbs must be clean and free from grease. **Therefore, never touch bulbs with your bare hands.**
  Use a cloth or soft paper while replacing bulbs.
- For reasons of traffic safety, we recommend that you always carry spare bulbs so that you can have a correctly illuminated car at all times.
  In certain countries, the carrying of spare bulbs is mandatory.

Caution!

Risk of damage to headlights due to excessive temperatures and abrasion.

- Attach no coverings (e.g. films, "stone guards") in the area of the headlights.
- Use soapy water only to clean light lenses and plastic headlight lenses.
  In no case may chemical cleaners or other volatile cleaning fluids be used.
- To prevent scratches, do not rub with a dry or merely moist cloth, tissue or insect sponges.

Downloaded from www.Manualslib.com manuals search engine

Bulb Chart	Type, rating
Low beam	H7, 55 W
Bi-Xenon low beam	Philips, D2S 35 W
High beam	H9, 65 W
Additional high beam (with Bi-Xenon headlights)	H11, 55 W
Fog lights	H3, 55 W
Rear fog light, Reversing light	P 21 W
Tail light, brake light	P 21 / 5 W
Raised brake light	W 3 W
Turn signal light	PY 21 W
Parking light front	H 6 W
Side marker light	WY 5 W
Door guard/kerb light	W 5 W
License plate light	C 5 W
Luggage compartment/engine compartment light, interior light	K 10 W
Reading light	6 W Xenon

Downloaded from www.Manualslib.com manuals search engine

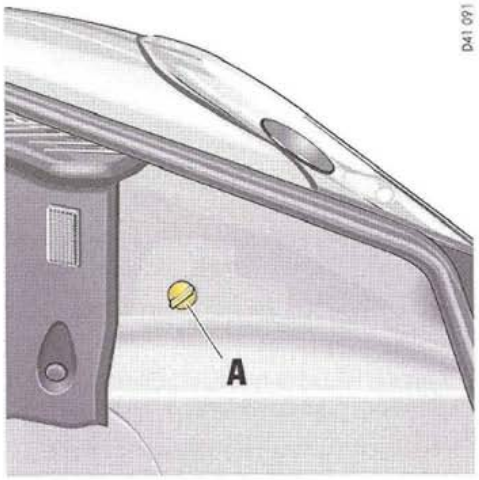

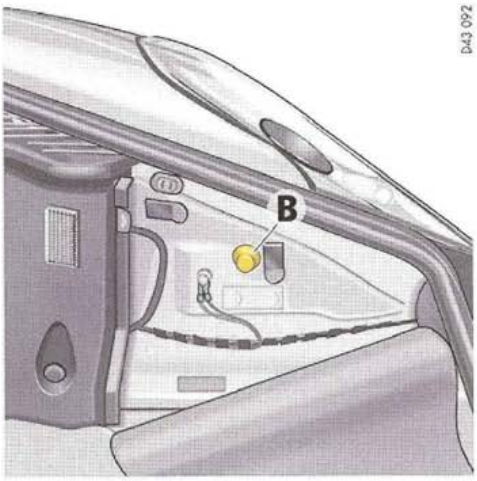

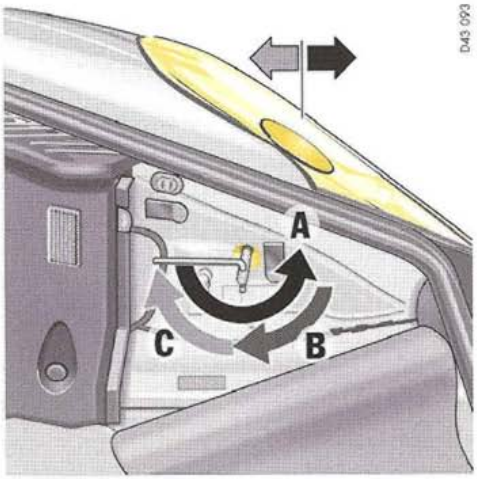

Headlights

Removal

1. Unscrew plastic nut **A**.
   Detach side carpeting.
2. Remove rubber plug **B** from the unlocking opening.
3. Place socket wrench from tool kit on the unlocking spindle.
   The handle of the wrench should point horizontally to the rear.
4. Turn socket wrench approx. 180° **A** and leave in position.
   The headlight is now unlocked and can be pulled forward out of the wing.
5. Turn socket wrench back until it is pointing vertically downward **B**.

Downloaded from www.Manualslib.com manuals search engine

Installing

1. Insert headlight into guide rails and push fully into the wing.
2. Push headlight to the rear and at the same time turn the socket wrench until it points horizontally to the rear **C**.
   The headlight locking device must perceptibly and audibly engage.
3. Check headlight for a firm seating, e.g. by pulling it in the area of the fog light.
4. Insert rubber plug into the unlocking opening and secure the carpeting.
   Check the function of all lights.

▷ ▷ ▷

Downloaded from www.Manualslib.com manuals search engine

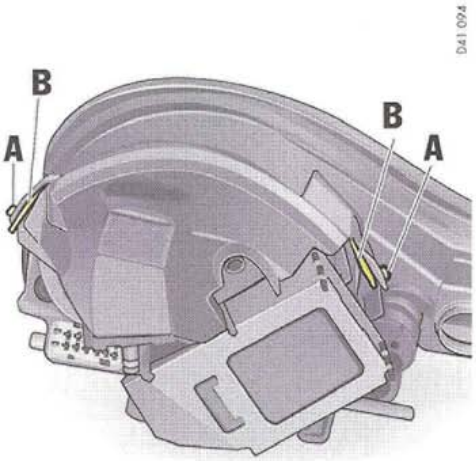

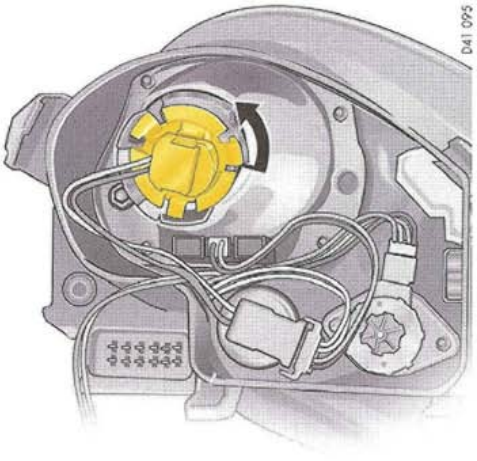

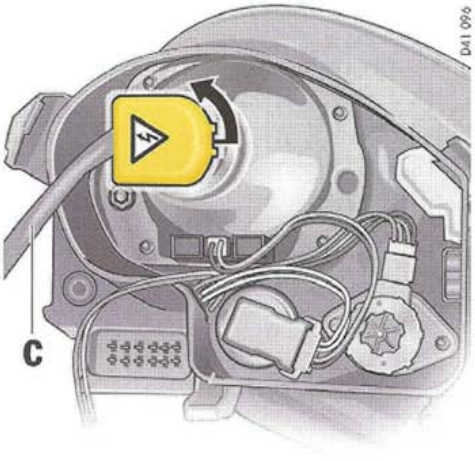

Low beam, high beam and additional high beam

Opening the lid of the headlight housing

1. Unscrew the two screws **A**.
2. Press both release tabs **B** and remove lid.

Changing bulb for low beam

1. Turn plug counter-clockwise (bayonet lock) and pull it off.
2. Replace defective bulb.
   When doing so, ensure bulb is seated properly.
3. Reassemble in reverse order.

Changing bulb for low beam and high beam (Bi-Xenon headlight)

1. Turn plug counter-clockwise (bayonet lock) and pull it off.

Downloaded from www.Manualslib.com manuals search engine

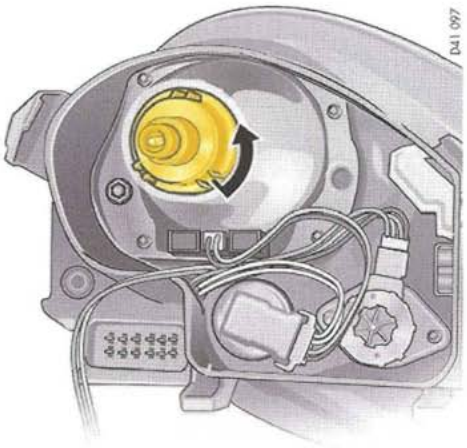

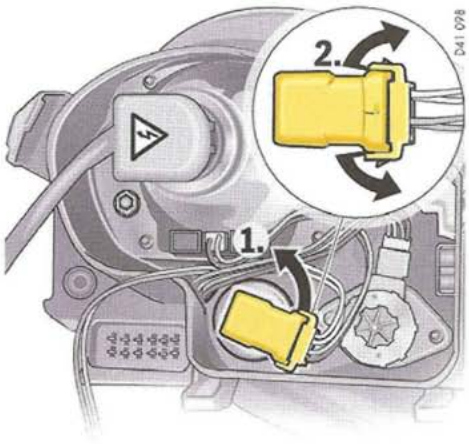

2. Turn clamping ring counter-clockwise (bayonet lock) and pull it off.
3. Replace defective bulb.
   When doing so, ensure bulb is seated properly.
4. Reassemble in reverse order.

Note

In order to prevent impairment of the headlight beam adjustment function, the cable **C** of the plug must always point to the outside of the vehicle.

Changing bulb for high beam or additional high beam (Bi-Xenon headlight)

1. Turn bulb holder.
   Turn it counter-clockwise on the left headlight and clockwise on the right headlight.
   Take bulb holder out of the headlight housing.
2. Pull both plug release tabs apart.
   Pull plug out of the bulb holder.
3. Replace the defective bulb with bulb holder.
4. Reassemble in reverse order.

Closing lid of headlight housing

1. Insert retaining lugs of lid into the bottom of the headlight housing and close lid until it perceptibly engages.
2. Screw in both screws.

▷ ▷ ▷

Downloaded from www.Manualslib.com manuals search engine

Changing bulb for parking light

1. Turn cap in the headlight housing counter-clockwise and remove the cap.
2. Turn bulb holder.
   Turn it counter-clockwise on the left headlight and clockwise on the right headlight.
   Take bulb holder out of the headlight housing.
3. Turn defective bulb counter-clockwise (bayonet lock) and replace it.
4. Reassemble in reverse order.

Changing bulb for turn signal light

1. Turn bulb holder in the headlight housing counter-clockwise and pull it out.
2. Turn defective bulb counter-clockwise (bayonet lock) and replace it.
3. Reassemble in reverse order.

Downloaded from www.Manualslib.com manuals search engine

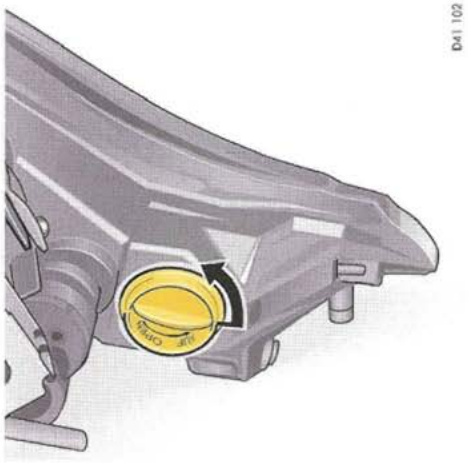

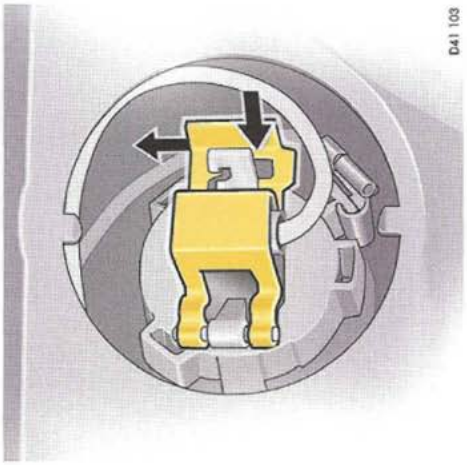

Changing bulb for fog light

1. Turn cap in the headlight housing counter-clockwise and remove the cap.
2. Press the retaining clip down with a screwdriver and push it to the left.
3. Pivot the retaining clip back.
4. Pull bulb with cable out of the headlight housing.
5. Disconnect plug connection and replace the defective bulb.
6. Reassemble in reverse order.

Downloaded from www.Manualslib.com manuals search engine

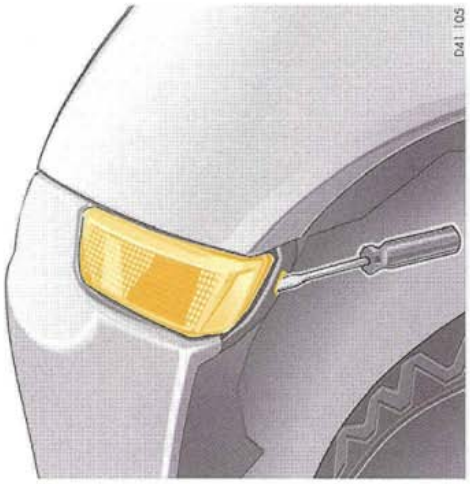

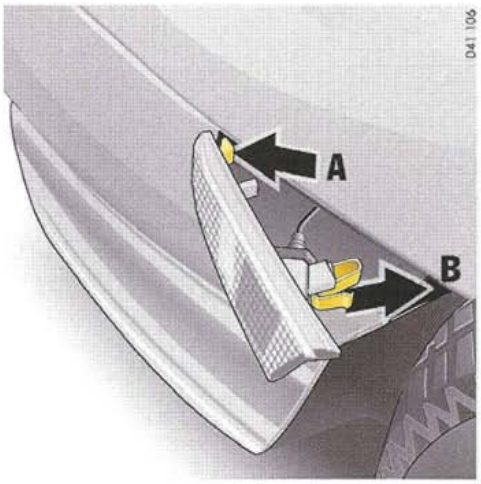

Changing Bulb in the Side Marker Light

1. Remove cap in the wheel housing liner with the screwdriver.
2. Insert screwdriver into the opening in the wheel housing liner at right angles to the side marker light housing.
   By pressing with the screwdriver, disengage the securing spring of the side marker light housing.
3. Remove side marker light and undo bulb holder (bayonet lock).
4. Remove bulb from the holder and replace. Insert holder.
5. Insert the light tabs (arrow **A**) into the wing at the front.
   Engage securing spring (arrow **B**) in the wing.
6. Press cap into the wheel housing liner. Check operation of the light.

Downloaded from www.Manualslib.com manuals search engine

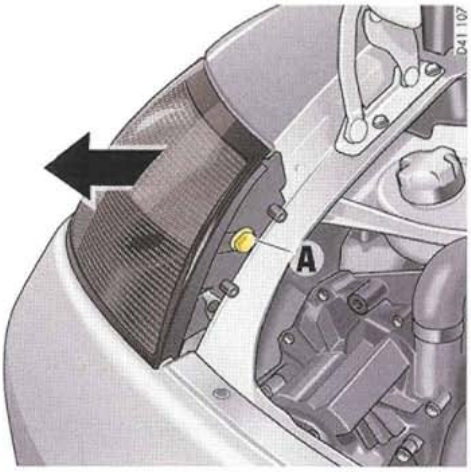

Tail light left

Tail Light

Changing bulb

1. Open lid of engine compartment.
2. Unscrew fastening screw **A** and pull tail light back (**arrow**) and out.

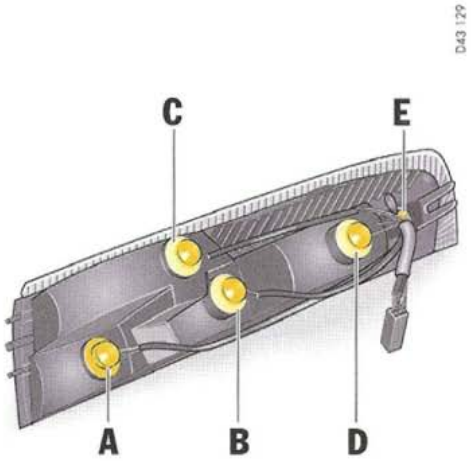

A - *Tail light, brake light*
B - *Reversing light*
C - *Turn signal light*
D - *Rear fog light*
E - *Side marker light*

3. Turn bulb holder counter-clockwise and remove from tail light.
4. Replace defective bulb (bayonet mount).
5. Insert bulb holder and turn clockwise.

6. Insert tail light in the fender.
   Ensure that locating lug (**arrow**) is correctly positioned.
7. Screw in fastening screw **A**.
8. Check operation of the light.

Downloaded from www.Manualslib.com manuals search engine

License Plate Lights

Changing bulb

1. Undo both screws **A** and remove light.
2. Push rubber covering back, remove defective bulb from between the contact springs and replace.
3. Reassemble in reverse order. Check operation of the light.

Luggage Compartment Light, Engine Compartment Light, Footwell Lights

Changing bulb

1. With a screwdriver (**arrow**), carefully press light out of the cutout in the lining.
2. Remove defective bulb from between the contact springs and replace.
3. Insert the light into the cutout first from one side then from the other. Check operation.

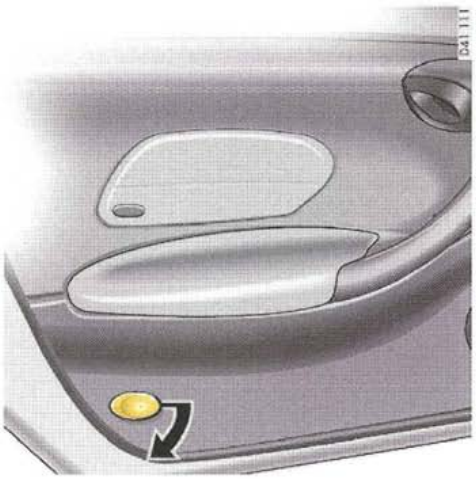

Door Guard / Curb Light

Changing bulb

1. With a screwdriver (**arrow**), carefully push out the light.
2. Pull bulb holder out of light housing. Remove defective bulb and replace.
3. Install bulb holder and insert light.

Downloaded from www.Manualslib.com manuals search engine

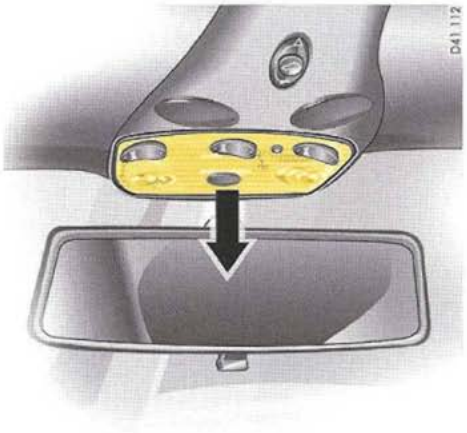

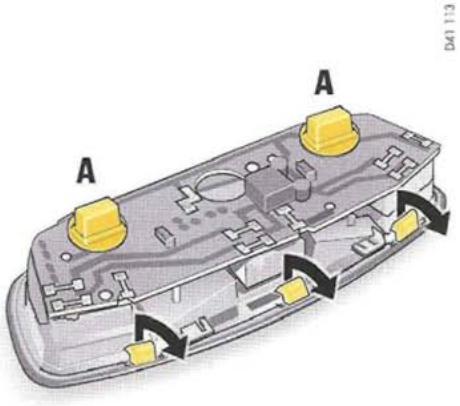

Interior Light, Reading Lights

Changing bulb

1. Carefully pull light housing out of the lining (**arrow**).

2. **Reading light:**
   Turn the holder **A** of the defective bulb counter-clockwise, and remove.
   Remove bulb and replace.

   Interior light:
   Carefully unclip the light lens on the switch side (**arrow**) and then detach it.
   Remove defective bulb from between the contact springs and replace.
   Clip light lens back in.

3. Insert light housing into the lining rear end first. Press front of housing up and click into place. Check operation of lights.

Downloaded from www.Manualslib.com manuals search engine

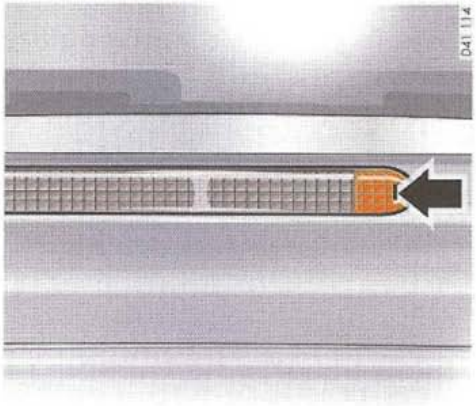

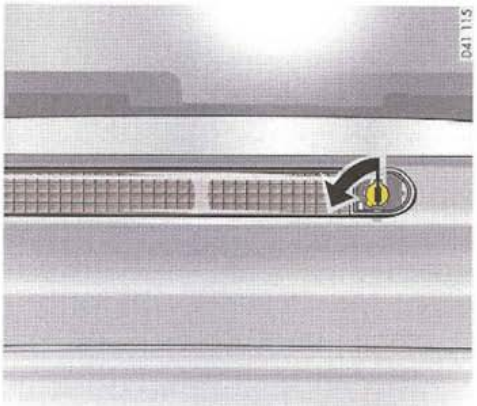

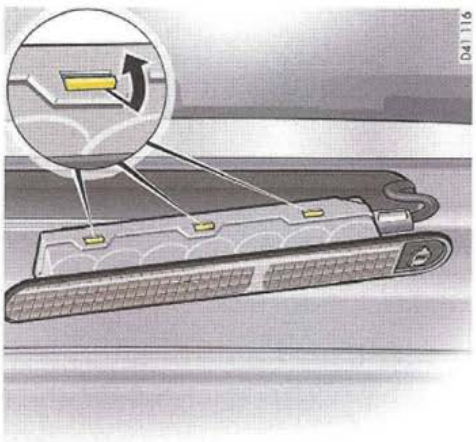

Raised Brake Lights

Changing bulb

1. Lever out right-hand segment of the lens with the screwdriver blade (**arrow**).
2. Turn lock of light housing counter-clockwise by approx. 90°, and remove light.
3. Disengage all 6 securing tabs of the lamp bracket (**arrow**).
   Remove lamp bracket, take out defective bulb and replace.
4. Reassemble in reverse order.
   Check operation of the light.

Downloaded from www.Manualslib.com manuals search engine

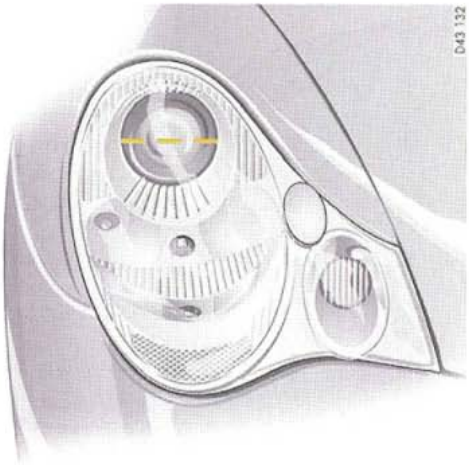

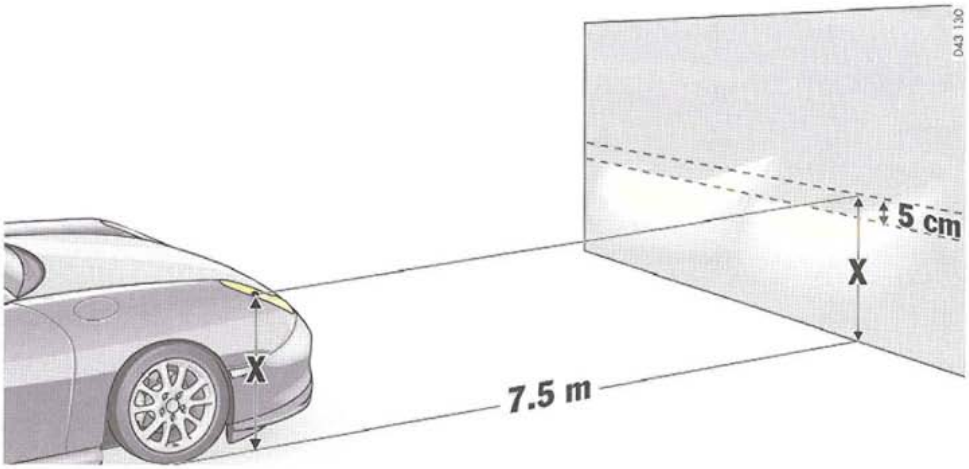

Adjusting Headlights

▷ Please observe the chapter "LIGHTS, REPLACING BULBS" on Page 162.

Adjustment

The adjustment is made with the vehicle ready to drive and the fuel tank completely filled.

The driver's seat must be loaded by a person or a 165 lbs. (75 kg) weight and the tire pressures must meet the prescribed values.
After being loaded, the car must be rolled a few meters so that the suspension can settle.

For checking the headlight adjustment, the vertical position of the cutoff of the lowbeam (see fig.) has to be projected on a vertical screen (wall) in distance of 7.5 m from the front lens of the headlamp.
The correct position of the cutoff is 5 cm at 7.5 m (0.4°) below a horizontal line, **x** cm from ground to the center of the headlamp lens.

Lateral adjustment of the headlights should be carried out at a specialist workshop with an optical adjustment unit.

Distance

Visual aim shall be performed at not less than 7.5 m (this value is a rounded down conversion from the 25-foot distance typical of field aim using a screen). The 7.5 m distance is measured from the headlamp lens to the viewing screen.

▷ ▷ ▷

Downloaded from www.Manualslib.com manuals search engine

Floor

The surface upon which the vehicle rests is flat and approximately level.

Screen

The screen upon which headlamp beams are projected is perpendicular to the floor and the vehicle's longitudinal axis, flat, uniformly light in color, unobstructed, and wide and high enough to accommodate the vehicle beam patterns to be aimed.

The screen should be wide enough to provide at least 1 m of space outboard of the vehicle's headlamp spacing.

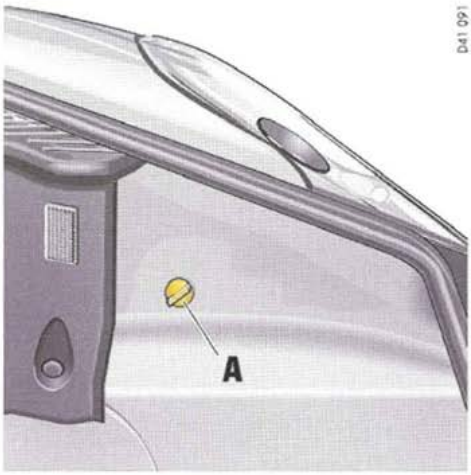

D41 091

Adjustment screws

▷ Detach side carpeting in luggage compartment.
Therefore unscrew plastic nut **A**.
Open the cover of the appropriate adjustment screw.
The setting is adjusted by turning the hexagon socket screws right or left, as appropriate.

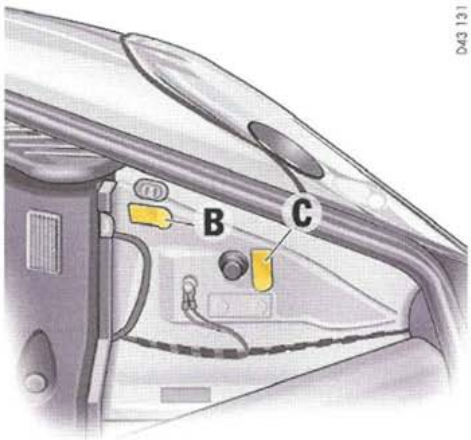

D43 131

B - *Headlight vertical adjustment*
C - *Fog light height adjustment*

Vertical adjustment (screw B)

▷ turn clockwise = beam moves down
turn counter-clockwise = beam moves up

Note

▷ Do not alter the lateral adjustment.

Fog light adjustment

The fog light adjustment **C** should only be done at a specialist workshop with an optical adjustment unit.

Downloaded from www.Manualslib.com manuals search engine

Towing

Certain state statutes and local ordinances prohibit towing with a chain, rope or even a tow bar. In addition, damage to your vehicle may result from improper procedures.
Consult your authorized Porsche dealer for details.

Vehicle towing

Flat bed towing is the preferred type of towing to be used on Porsche vehicles.
Under certain circumstances, wheel lifts may be used when the vehicle will not roll.
The vehicle must be towed with all four wheels off the ground, otherwise damage to the vehicle may result.

Towing eye

The towing eye is contained in the tool kit.

Caution!

Risk of damage to the vehicle.

▷ Use the towing eye only for an emergency to remove the vehicle off the road. The towing eye is to be used only to pull the vehicle onto the flat bed, tractor or towing aparatus if the vehicle will roll freely. Under no circumstances is the vehicle to be secured using the towing eye.

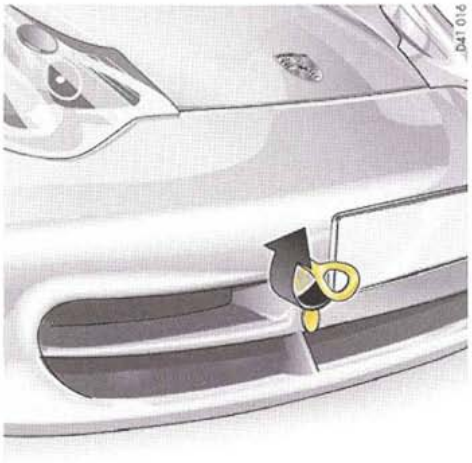

▷ Never use the towing eye to tow this or any other vehicle.

Front mounting

1. Carefully remove the plastic cap beside the license plate with a screw driver.
2. Screw the towing eye into the hole.

Rear mounting

1. Remove license plate.
2. Carefully remove the plastic cap between the bumpers with a screw driver.
3. Screw the towing eye into the hole.

▷ ▷ ▷

Downloaded from www.Manualslib.com manuals search engine

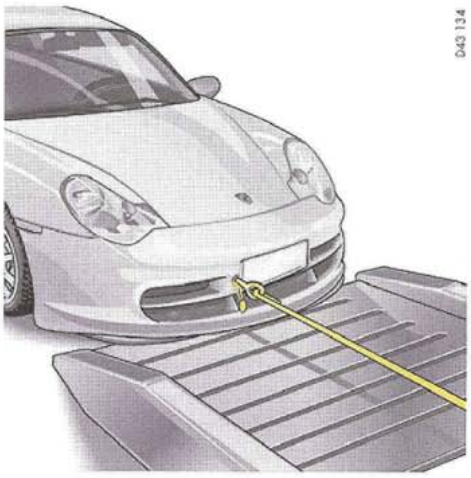

Pulling vehicle onto flat bed

1. Position wooden ramps at the base of the flat bed to reduce the angle of the pull.
2. Reel in the hoist cable and check the underside of the vehicle for any interference.

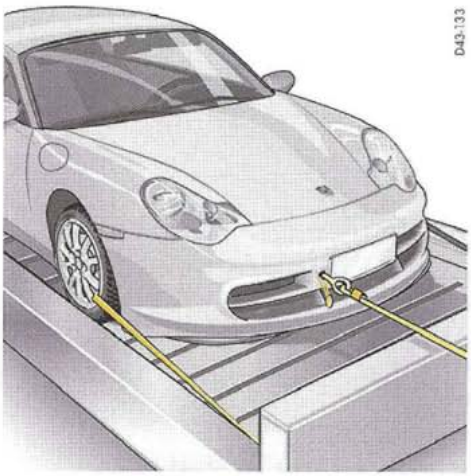

Tieing down vehicle on flat bed

1. Carefully feed towing straps through the opening in the **rear wheels**.
   Make sure metal parts of straps do not damage rim.
   Make sure the strap is flat over the rim bead.
   Make sure brake backing plate is not damaged.
2. Secure straps to rear of flat bed.
3. Reel in hoist cable only far enough to tension tie-down straps.
4. Carefully feed towing straps through the opening in the **front wheels**.
   Make sure metal parts of straps do not damage rim.
   Make sure the strap is flat over the rim bead.
   Make sure brake backing plate is not damaged.
5. Secure straps to front of flat bed.
6. Release tension on hoist cable, but do not disconnect.
   Use hoist cable as a safety cable.

Downloaded from www.Manualslib.com manuals search engine

Vehicle Identification, Technical Data

Downloaded from www.Manualslib.com manuals search engine

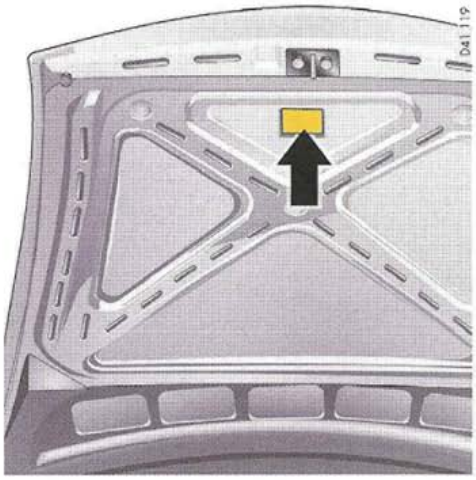

Vehicle Identification

When ordering spare parts or making inquiries, please always quote the vehicle identification number.

Vehicle identification label

Vehicle identification label is attached to the inner side of the luggage compartment hood below the hood lock. It contains all important data about your car.

This label contains the following information:

1. Vehicle Identification No.
2. Type/Type description
3. Engine code/Transmission code
4. Paint No./Interior
5. Optional equipment

A duplicate of this label is in your Maintenance Booklet.

Note

This data bank cannot be re-ordered if it is lost or damaged.

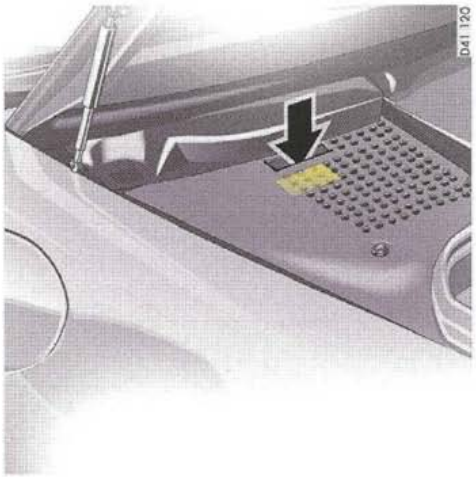

Vehicle identification number

In accordance with Federal Safety Regulations, the vehicle identification number of your car is located at the bottom left of the windshield frame and can be seen from the outside.

The vehicle identification number is also in the luggage compartment on the right next to the battery (**arrow**).

Downloaded from www.Manualslib.com manuals search engine

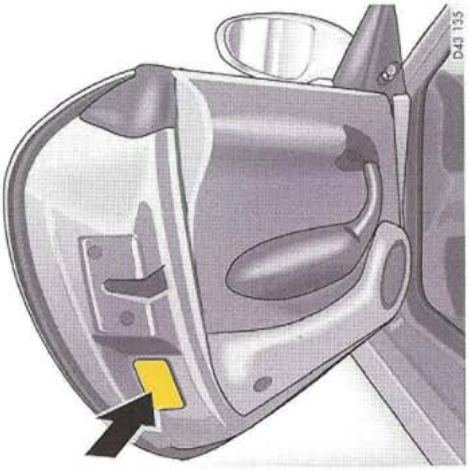

Safety compliance sticker

The safety compliance sticker is your assurance that your new Porsche complies with all applicable Federal Motor Vehicle Safety Standards which were in effect at the time the vehicle was manufactured.

The sticker also shows the month and year of production and the vehicle identification number of your car (perforations) as well as the **G**ross **V**ehicle **W**eight **R**ating and the **G**ross **A**xle **W**eight **R**ating.

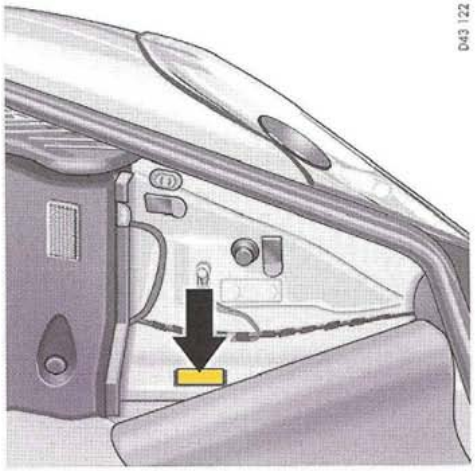

Paint data

The paint data plate is attached to the left side wall under the carpet in the luggage compartment.

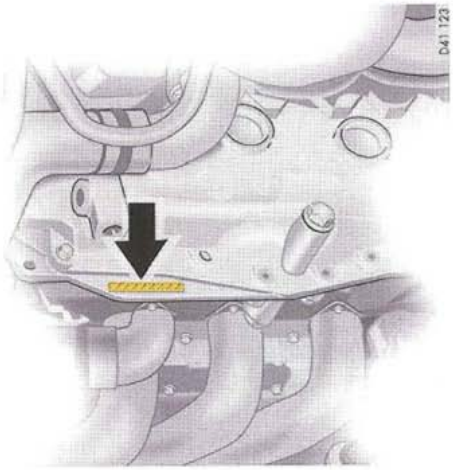

Engine number

The engine number is stamped on the underside of the crankcase.

Downloaded from www.Manualslib.com manuals search engine

Technical Data

Engine data

Type	**M 96/79**
	Horizontally opposed engine, liquid cooled
Number of cylinders	6
Bore	3.94 in./100 mm
Stroke	3.0 in./76.4 mm
Cubic capacity	219.7 cu. in./3600 cm^3
Compression ratio	11.7 : 1
Net-horsepower, SAE J 1349	380 hp/280 kW
at crankshaft speed	7400 rpm
Net torque, SAE J 1349	285 ft. lb./385 Nm
at crankshaft speed	5000 rpm
Alternator	1680 W/120 A
Engine control	Stationar y high-voltage distribution, sequential injection, cylinder-selective knock-control, stereo oxygen sensor closed-loop control, diagnostic system, 4 overhead camshafts, Porsche VarioCam, hydraulic valve clearance compensation

Driving Performance*

Maximum speed	190 mph/306 km/h
Acceleration 0 – 100 km/h (62 mph)	4.5 seconds

* At DIN empty weight and half load, without performance-inhibiting extra equipment

Downloaded from www.Manualslib.com manuals search engine

Transmission

1st gear	3.82 : 1
2nd gear	2.15 : 1
3rd gear	1.56 : 1
4th gear	1.21 : 1
5th gear	1.00 : 1
6th gear	0.85 : 1
Reverse	2.86 : 1
Final drive ratio	3.44 : 1

Tire Pressures for cold tires

Summer tires and snow tires	Front	32 psi (2.2 bar) overpressure
	Rear	39 psi (2.7 bar) overpressure

These tire pressures apply only to the tire makes and types approved by Porsche.
Please observe the chapter "TIRES/WHEELS" on Page 141.

Downloaded from www.Manualslib.com manuals search engine

Tires, Rims, Tracks

		Tire	Rim	Rim offset	Track
Summer tires	front	235/40 ZR 18 (91Y)	8.5 J x 18 H2	40 mm	58.6 in./1488 mm
	rear	295/30 ZR 18 (98Y)	11 J x 18 H2	63 mm	58.6 in./1488 mm
Snow tires	front	225/40 R 18 92V M+S XL	8 J x 18 H2	50 mm	57.8 in./1468 mm
	rear	265/35 R 18 97V M+S XL*	10 J x 18 H2	65 mm	58.4 in./1484 mm

The load capacity coefficient (e.g. "92") and maximum speed code letter (e.g. "V") are minimum requirements.

⚠ Warning!

Installation of sizes not authorized by Porsche may have a dangerous effect on the driving stability and could result in severe personal injury or death.

▷ Before mounting new tires, check with your Porsche dealer about the current release status.

Tire and rim sizes Extensive tests are performed before specific tires and wheels are approved by Porsche. Your Porsche dealer has information about approved tires and wheels and is happy to assist you.
If aftermarket tires and/or wheels are installed which are not approved by Porsche, the vehicle's roadability and handling characteristics might be impaired. Since Porsche has no data on such combinations, Porsche cannot stand behind the safety or durability of these aftermarket combinations.

Snow chains Can be mounted only on the rear wheels; **maximum speed 30 mph/50 km/h.**
Use only Porsche authorized fine-link cross-type or edge chains.
Snow chain clearance can be guaranteed only on the tire + rim combination marked*.

Downloaded from www.Manualslib.com manuals search engine

Capacities

Use only fluids and fuels authorized by Porsche. Your authorized Porsche dealer will gladly advise you.
Your Porsche has been designed so that it is not necessary to mix any additives with oils or fuels.

Engine	Oil change quantity without oil filter approx. 9.3 quarts/8.75 liters Oil change quantity with oil filter approx. 9.6 quarts/9.0 liters Reference indication is the level on the oil dipstick. Please observe the chapter "ENGINE OIL" on Page 114.
Coolant	approx. 7.39 U.S. gallons/28 liters
Manual transmission and differential	3.5 quarts/3.3 liters transmission oil SAE 75W-90, Mobilube PTX
Fuel tank	approx. 16.6 U.S. gallons/63 liters
Fuel quality	Your engine is designed to provide optimum performance and fuel economy using **unleaded premium fuel with an octane rating of 98 RON (93 CLC or AKI).** Porsche therefore recommends the use of these fuels in your vehicle. Porsche also recognizes that these fuels may not always be available. Be assured that your vehicle will operate properly on unleaded premium fuels with octane numbers of at least **95 RON (90 CLC or AKI)**, since the engine's "Electronic Oktane™ knock control" will adapt the ignition timing, if necessary.
Power steering	approx. 1.35 quarts/1.27 liter hydraulic fluid Pentosin CHF 11 S®
Brake fluid	0.67 quarts/0.63 liters; use only Original Porsche brake fluid.
Windshield washer	approx. 3.19 quarts/3 liters without headlight washer approx. 6.06 quarts/5.7 liters with headlight washer

Downloaded from www.Manualslib.com manuals search engine

Weights

Empty weight (depending on equipment)	3042 lbs. to 3152 lbs. 1380 kg to 1430 kg
Maximum gross weight	3659 lbs./1660 kg
Maximum axle load, front*	1565 lbs./710 kg
Maximum axle load, rear*	2226 lbs./1010 kg
Maximum useful load, Roof Transport System**	165 lbs./75 kg

* The maximum gross weight must not be exceeded.
Note: If additional accessories are installed, the useful load will be correspondingly less.

** Use only Original Porsche Roof Transport System.

Dimensions

Length	175.98 in./4470 mm
Width	69.7 in./1770 mm
Height	50.2 in./1275 mm
Wheelbase	92.7 in./2355 mm
Ground clearance	2.9 in./75 mm
Turning circle	34.8 ft./10.6 m
Overhang angle front	7.0°
Overhang angle rear	13.0°
Ramp angle	10.5°

Downloaded from www.Manualslib.com manuals search engine

Diagrams

Acceleration diagram

Values have been determined at DIN empty weight and with a 50 % load without additional equipment.

Transmission diagram

The transmission diagram is based on standard values on the basis of a mean effective scrub radius. Changes of the scrub radius, the tire tolerance, wear and tear, deviating country equipment and tire slip have not been taken into account.

Engine diagram at full power

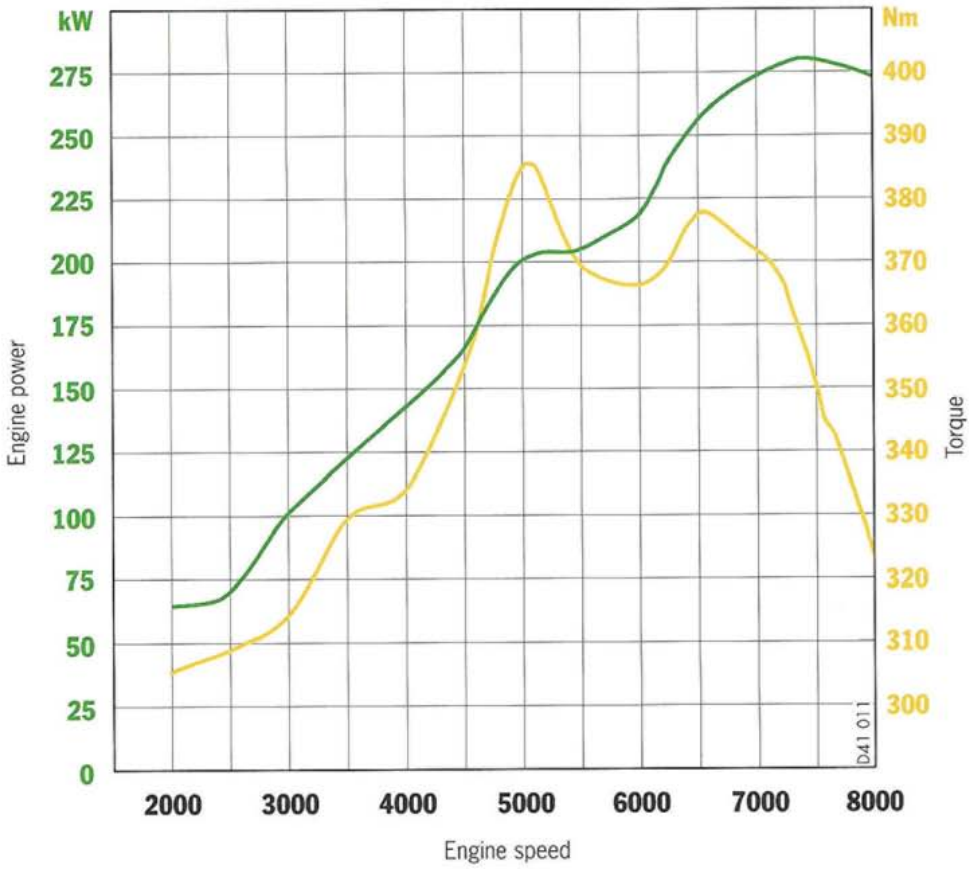

Downloaded from www.Manualslib.com manuals search engine

Acceleration diagram

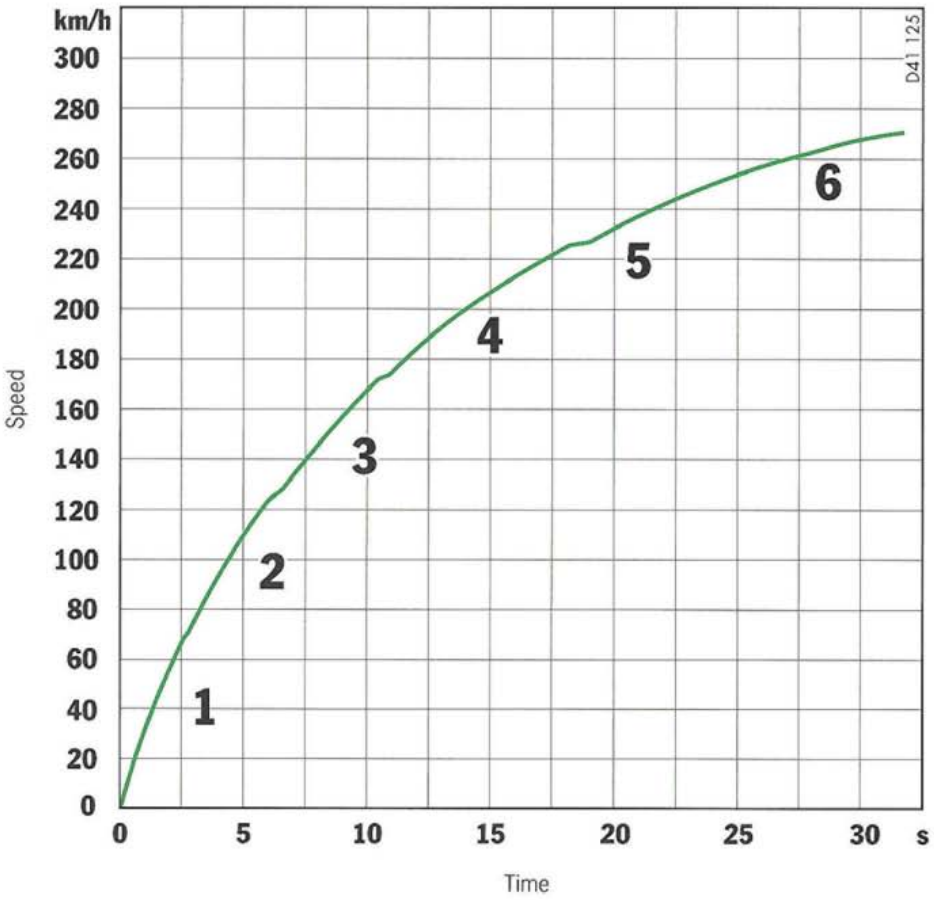

Downloaded from www.Manualslib.com manuals search engine

Transmission diagram

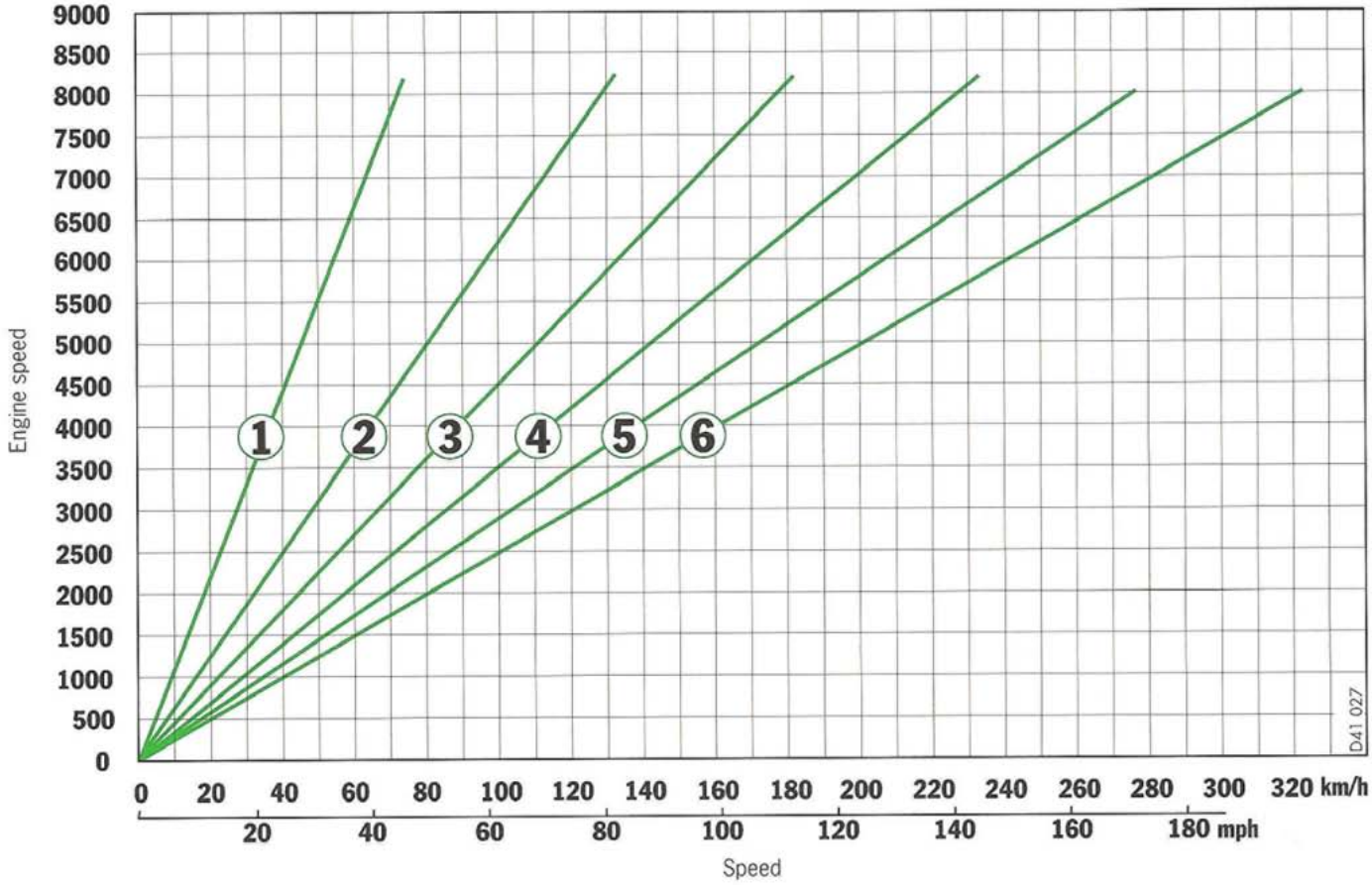

Downloaded from www.Manualslib.com manuals search engine

Index

A

ABS (antilock brake system) 44, 45, 54, 56
Warning light 54, 56
Acoustic warning signal.....69
Aerodynamic components 9
Air compressor.....100
Air conditioning system 90
Air distribution 88, 90
Air filter.....128
Airbag.....38, 39
Switching off passenger airbag 36
Warning light 54, 56
Alarm System.....24, 107
Alcantara 136
Antenna 107, 131
Antifreeze.....113
Antilock brake system (ABS) 44, 45
Ashtray 94
Assembly aids for wheel changes.....150
Audio operation 105, 106
Auto-button air conditioning system 90, 91
Automatic
Air conditioning.....90
Car washes 131
Door locking.....21
Headlight adjustment.....82
Locking retractor 34
Speed control.....54, 56, 58, 86, 87
Average consumption 68
Average speed 68, 72

B

Backrest
Adjustment 30
Release 30, 31
Battery..... 100, 155
Warning light..... 54, 56, 58
Before driving off 14, 15
Belt tensioner 32
Belts 32, 136
Warning light..... 54, 56
Blower adjustment 88, 90, 93
Brakes 40, 119
Distribution warning light..... 54, 56
Fluid..... 119, 185
Fluid level 54, 56
Fluid warning light 119
Lights..... 165, 171
Pad wear warning light 54, 56
Pads 16, 43
Parking brake warning light..... 54, 56
Break in hints.....16
Bulbs
Chart 163
Replacing 162

C

Canholder 95
Capacities, overview 185
Car care.....130
Car washes 131
Cassette tape
Holder 97
Player.....106
Catalytic converters 125
Cautions..... 112, 140
Central locking.....22
emergency operation.....23
Changing wheels.....150
Check engine
Warning light..... 54, 56, 66
Child restraint
Anchorages 35
Switching off passenger airbag 37
System.....36
Cigarette lighter 94
Circulating air button 91
Circulating air setting..... 89, 91
Clock 54, 56, 64
Clothes hook 96
Clutch pedal 40
Compact disc
Changer 106
Holder 97
Player.....106
Compartment monitoring.....24
Compressor 91, 92
Coolant 62, 113
Level 113
Temperature gauge.....62
Warning light.....62
Cooling system 62, 113

Downloaded from www.Manualslib.com manuals search engine

Temperatur gauge 54, 56
Warning light 54, 56
Cruise control 58, 86, 87
Curb light 172

D

Dashboard 48
Defrosting windows 29, 90, 91
Diagnostic socket 17, 153
Diagrams 187
Dimensions 186
Door 21
Guard 172
Handles 21
Locks 21, 132
Windows 21, 26, 27, 133
Door mirror 28
Heating 29
Driving hints 14
Driving performance 182

E

Electrical system 152
Emergency flasher 81
Emergency operation
Central locking 23
Lids 154
Tank flap 121
Emergency service 140
Emergency starting with jumper cables 160, 161
Emission control system 7, 66, 124, 125
Engine
Checking oil level 71, 115
Dipstick 116
Exhaust 10
Number 180
Oil consumption 16, 114
Oil level 116
Oil level gauge 71
Oil pressure gauge 54, 56, 65
Oil pressure warning light 54, 56, 65
Oils 114, 185
Speeds 16, 182
Starting 52
Stopping 53
Engine compartment
Blower 53, 62
Lid 98, 99
Lid warning light 54, 56, 98
Light 172

F

Fog lights 82, 169, 171
Footbrake 41
Footwell lights 47
Fresh air intake 93
Front hood 99
Fuel 4, 63, 121
Containers 10
Economy 120
Evaporation control 126
Level gauge 54, 56, 63
Level warning light 63
Recommendation 122, 123
Tank 122
Warning light 54, 56
Fuses 153

G

Garage lift 148
Gearshifting 109
Glove compartment 96
Gong 18, 51, 69, 79
Ground clearance 9, 186

H

Headlights 82, 83, 164
Adjusting 175, 176
Cleaning system 84, 126, 185
Heated rear window 29
Heating 88
High beam
Indicator light 54, 56, 61
Lever 82
Hoods 98, 99
Horn 17, 22, 23

I

Identification number 100, 180
Ignition lock 50
Immobilizer 19
Indicator lights 54
Infrared passenger compartment monitoring .. 24
Instrument panel 48
Instruments 54
Lights 59, 82
Interior light 46, 173
Interior mirror 28
Intermittent operation switch 84

Downloaded from www.Manualslib.com manuals search engine

J
Jumper cables....145, 160

K
Keys....19, 20

L
Leather care....135
License plate light....82, 172
Lids....99
  Emergency unlocking....154
Light
  Flasher....61, 82, 83
  Low beam....82, 83
  Switch....82, 83
Light sensor for instrument illumination....54, 56
Load switch-off....152
Locking....22
  Conditions....23
Luggage carrier....186
Luggage compartment....100, 172
  Lid....98
  Lid warning light....54, 56, 98

M
Maintenance....112
Make-up mirror....103
Maximum permitted engine speeds....16
Mirrors....28
Monitoring....24

N
Notes on
  Car care....130
  Maintenance....112
Number plate light....82, 172

O
Octane rating....122, 123
Odometer....59
Oil....114, 185
  Consumption....16
  Dipstick....116
  Level checks....71, 115
  Level gauge....71
  Pressure gauge....54, 56, 65
  Pressure warning light....54, 56, 65
On-board computer....54, 56, 67
  Basic setting....68, 73
  Language selection....73
On-board literature....2
Orientation light....46
Outside-temperature display....68

P
Paint
  Care....130
  Data....180
Parking
  Brake....40, 41
  Brake warning light....54, 56
  Light....82, 168, 171
Particle filter....128
Passenger airbag, switching off....37
Passenger compartment monitoring, infrared..24
Plastic parts....134
Platform lift....148
Power measurements....112
Power steering fluid level....127, 185
Power windows....21, 26, 27
Practical tips....140

R
Radiator fan....53, 114
Radio reception....105
Rear fog light....82, 171
Rear spoiler....104
Rear view mirrors....28
Rear window defogger....29
Relays....152
Remote control....20
Replacement key....19
Replacing bulbs....162
Replacing wiper blades....129
Roof Transport System....108, 186
Running in....16

S
Safety belts....32, 136
  Warning light....54, 56
Safety compliance sticker....181
Seals....134
Side marker light....82, 170, 171
Side member panels....104
Snow chains....147
Snow tires....146

Downloaded from www.Manualslib.com manuals search engine

Spare key 19, 20
Speed
Control 58, 86, 87
Gong 69
Speedometer 54, 60
analogue display 56
digital display 54, 56
Spoiler 104
Starting engine 52
Steering lock 50
Steering wheel
Adjustment 31
Lock 51
Stopping engine 53
Storage options 96, 97
Storage tray 97
Storing your Porsche 137
Sun visors 103

T

Tachometer 54, 56, 61
Tail light 171
Tank 121, 122, 185
Ventilation system 126
Technical data 182
Temperature setting 88, 90
Theft protection 18
Tires 16, 141, 184
Pressure 5, 143, 183
Pressure compressor 100
Repair kit 149
Tires and tire care 141
Tool kit 100
Towing 177, 178
Tracks 184
Transmission 109, 183
Fluid 185
Trip counter 59
Trunk entrapment 101
Turn signals 61, 83, 168, 171
Indicator lights 54, 56

U

Undercoating 124, 133

V

Valves 145
Vanity mirror 103
Vehicle
Care 130
Data 180, 181
Identification label 180
Identification number 100, 180
Washing 131
Ventilation 88
Vents 93
Voltmeter 54, 56, 58

W

Warning lamps and messages 75
Washer fluid 126, 185
Level warning light 54, 56
Washing 131
Weights 186
Wheel
Bolts 19, 150
Changing 149
Wheels 135, 184
Windows 26, 27, 133
Washer nozzles 84
Washer system 84, 126, 185
Windshield wiper/washer lever 84
Windshield wipers 84, 85, 129
Replacing 129
Winter operation
Battery 157
Coolant 113
Engine oil 114
Jumper cables 160, 161
Locks 132
Seals 134
Snow chains 147
Tires 146, 184
Washer fluid 126
Wiper blades 129
Wiper
Blades 129
Interval 84, 85

Downloaded from www.Manualslib.com manuals search engine

Downloaded from www.Manualslib.com manuals search engine