2016

Sonic

chevrolet.com (U.S.)
chevrolet.gm.ca (Canada)

Contents

Introduction 2
In Brief 5
Keys, Doors, and Windows 25
Seats and Restraints 43
Storage 86
Instruments and Controls 89
Lighting 120
Infotainment System 127
Climate Controls 176
Driving and Operating 180
Vehicle Care 219
Service and Maintenance 301
Technical Data 314
Customer Information 318
Reporting Safety Defects 329
OnStar 332
Index 342

Introduction

The names, logos, emblems, slogans, vehicle model names, and vehicle body designs appearing in this manual including, but not limited to, GM, the GM logo, CHEVROLET, the CHEVROLET Emblem, and SONIC are trademarks and/or service marks of General Motors LLC, its subsidiaries, affiliates, or licensors.

For vehicles first sold in Canada, substitute the name “General Motors of Canada Limited” for Chevrolet Motor Division wherever it appears in this manual.

This manual describes features that may or may not be on the vehicle because of optional equipment that was not purchased on the vehicle, model variants, country specifications, features/applications that may not be available in your region, or changes subsequent to the printing of this owner manual.

Refer to the purchase documentation relating to your specific vehicle to confirm the features.

Keep this manual in the vehicle for quick reference.

Canadian Vehicle Owners

Propriétaires Canadiens

A French language manual can be obtained from your dealer, at www.helminc.com, or from:

On peut obtenir un exemplaire de ce guide en français auprès du concessionnaire ou à l'adresse savant:

Helm, Incorporated
Attention: Customer Service
47911 Halyard Drive
Plymouth, MI 48170

Using this Manual

To quickly locate information about the vehicle, use the Index in the back of the manual. It is an alphabetical list of what is in the manual and the page number where it can be found.

Danger, Warning, and Caution

Warning messages found on vehicle labels and in this manual describe hazards and what to do to avoid or reduce them.

⚠ Danger
Danger indicates a hazard with a high level of risk which will result in serious injury or death.

Litho in U.S.A.
Part No. 23426672 A First Printing

©2015 General Motors LLC. All Rights Reserved.

⚠ Warning

Warning indicates a hazard that could result in injury or death.

Caution

Caution indicates a hazard that could result in property or vehicle damage.

A circle with a slash through it is a safety symbol which means “Do Not,” “Do not do this,” or “Do not let this happen.”

Symbols

The vehicle has components and labels that use symbols instead of text. Symbols are shown along with the text describing the operation or information relating to a specific component, control, message, gauge, or indicator.

: Shown when the owner manual has additional instructions or information.

: Shown when the service manual has additional instructions or information.

: Shown when there is more information on another page — “see page.”

Vehicle Symbol Chart

Here are some additional symbols that may be found on the vehicle and what they mean. For more information on the symbol, refer to the Index.

: Airbag Readiness Light

: Air Conditioning

: Antilock Brake System (ABS)

: Audio Steering Wheel Controls or OnStar®

: Brake System Warning Light

: Charging System

: Cruise Control

: Do Not Puncture

: Do Not Service

: Engine Coolant Temperature

: Exterior Lamps

: Flame/Fire Prohibited

: Fog Lamps

: Fuel Gauge

: Fuses

: Headlamp High/Low-Beam Changer

: LATCH System Child Restraints

: Malfunction Indicator Lamp

: Oil Pressure

: Power

: Remote Vehicle Start

: Safety Belt Reminders

: Tire Pressure Monitor

: Traction Control/StabiliTrak®

: Under Pressure

: Windshield Washer Fluid

✍ NOTES

In Brief

Instrument Panel
Instrument Panel 6

Initial Drive Information
Initial Drive Information 8
Remote Keyless Entry (RKE) System 8
Remote Vehicle Start 8
Door Locks 9
Liftgate 9
Trunk Release 9
Windows 10
Seat Adjustment 11
Second Row Seats 12
Head Restraint Adjustment 12
Safety Belts 12
Passenger Sensing System . . . 12
Mirror Adjustment 13
Steering Wheel Adjustment 13
Interior Lighting 14
Exterior Lighting 14
Windshield Wiper/Washer 15
Climate Controls 15
Transmission 16
Starting the Engine 17

Vehicle Features
Radio(s) 18
Satellite Radio 19
Portable Audio Devices 19
Bluetooth® 19
Steering Wheel Controls 20
Cruise Control 20
Driver Information Center (DIC) 21
Forward Collision Alert (FCA) System 21
Lane Departure Warning (LDW) 21
Rear Vision Camera (RVC) 21
Power Outlets 22
Sunroof 22

Performance and Maintenance
Traction Control/Electronic Stability Control 23
Tire Pressure Monitor 23
Engine Oil Life System 23
Driving for Better Fuel Economy 24
Roadside Assistance Program 24

Instrument Panel

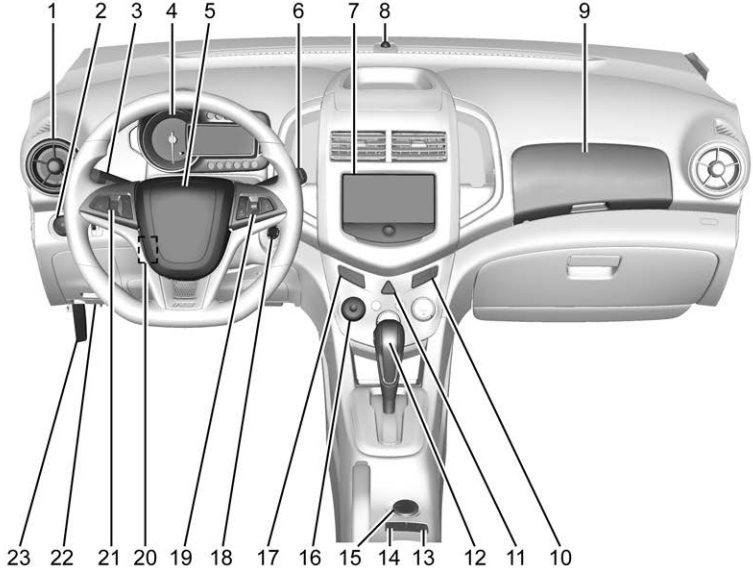

1. *Air Vents* ⇨ *178*.
2. *Exterior Lamp Controls* ⇨ *120*.

   Instrument Panel Illumination Control ⇨ *124*.
3. Turn Signal Lever. See *Turn and Lane-Change Signals* ⇨ *123*.
4. *Instrument Cluster* ⇨ *96*.
5. *Horn* ⇨ *90*.
6. *Windshield Wiper/Washer* ⇨ *91*.
7. *Infotainment* ⇨ *127*.
8. Light Sensor. See *Automatic Headlamp System* ⇨ *122*.
9. *Instrument Panel Storage* ⇨ *86*.

   USB Port ⇨ *142* (Inside IP Storage) (If Equipped).

   Auxiliary Devices ⇨ *144* (Inside IP Storage) (If Equipped).
10. *Passenger Sensing System* ⇨ *62*.
11. *Hazard Warning Flashers* ⇨ *122*.
12. Shift Lever. See *Automatic Transmission* ⇨ *198* (If Equipped) or *Manual Transmission* ⇨ *200* (If Equipped).
13. *Traction Control/Electronic Stability Control* ⇨ *204*.
14. Trunk Release (Sedan). See *Trunk (Sedan)* ⇨ *33*.
15. *Power Outlets* ⇨ *94*.
16. *Climate Control Systems* ⇨ *176*.
17. Central Locking Switch. See *Door Locks* ⇨ *30*.
18. Ignition Switch. See *Ignition Positions* ⇨ *191*.
19. *Steering Wheel Controls* ⇨ *90*.
20. *Steering Wheel Adjustment* ⇨ *90*.
21. *Cruise Control* ⇨ *206*.

    Forward Collision Alert (FCA) System ⇨ *210* (If Equipped.

    Lane Departure Warning (LDW) ⇨ *212* (If Equipped).
22. Data Link Connector (DLC) (Out of View). See *Malfunction Indicator Lamp (Check Engine Light)* ⇨ *100*.
23. Hood Release. See *Hood* ⇨ *222*.

Initial Drive Information

This section provides a brief overview about some of the important features that may or may not be on your specific vehicle.

For more detailed information, refer to each of the features which can be found later in this owner manual.

Remote Keyless Entry (RKE) System

The RKE transmitter may work up to 60 m (195 ft) away from the vehicle.

With Remote Start Shown

Press the key release button to extend the key blade. The key can be used for the ignition and all locks.

Press 🔓 to unlock the driver door or all doors.

Press 🔒 to lock all doors.

Lock and unlock feedback can be personalized. See *Vehicle Personalization* ⇨ *113*.

If equipped, press and hold HOLD to release the trunk.

Press and release 🚨 to initiate vehicle locator.

Press and hold 🚨 for at least three seconds to sound the panic alarm.

Press 🚨 again to cancel the panic alarm.

See *Keys* ⇨ *25* and *Remote Keyless Entry (RKE) System Operation* ⇨ *27*.

Remote Vehicle Start

If equipped, the engine can be started from outside of the vehicle.

Starting the Vehicle

1. Press and release 🔒 on the RKE transmitter.
2. Immediately press and hold ↻ for at least four seconds or until the turn signal lamps flash.
3. Start the vehicle normally after entering.

When the vehicle starts, the parking lamps will turn on.

Remote start can be extended.

Canceling a Remote Start

To cancel a remote start, do one of the following:

- Press and hold until the parking lamps turn off.
- Turn on the hazard warning flashers.
- Turn the vehicle on and then off.

See *Remote Vehicle Start* ⇨ *29*.

Door Locks

To lock or unlock the doors from outside the vehicle:

- Use the key in the driver door to lock all doors or unlock the driver door only.
- Press or on the Remote Keyless Entry (RKE) transmitter. See *Remote Keyless Entry (RKE) System Operation* ⇨ *27*.

To lock the doors from inside the vehicle:

- Press on the central locking switch or on the driver door switch.
- Press the lock knob on the driver door to lock all doors and, if equipped, the liftgate.

To unlock the doors from inside the vehicle:

- Press on the central locking switch or on the driver door switch.
- Pull the door handle. Pulling the door handle again unlatches the door.
- Lift the lock knob on the driver door to unlock the driver door.

See *Door Locks* ⇨ *30*.

Liftgate

To lock or unlock the liftgate from the inside, press or on the central locking switch or on the driver door switch.

The vehicle must be in P (Park) for automatic transmissions. For manual transmissions the parking brake must be engaged.

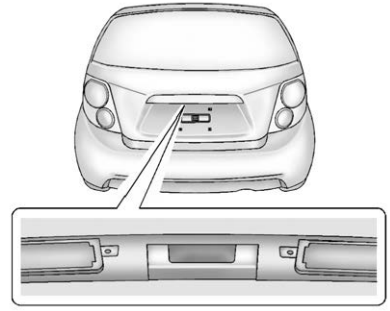

To open the liftgate from the outside, press twice on the RKE transmitter to unlock all doors, then use the touch pad.

See *Liftgate (Hatchback)* ⇨ *35*.

Trunk Release

To lock or unlock the trunk from the inside, press or on the central locking switch or on the driver door switch.

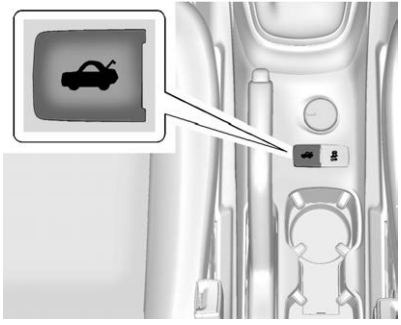

To open the trunk from inside the vehicle press .

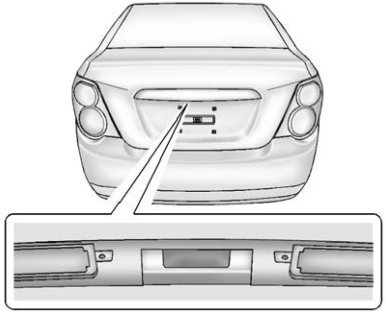

To lock the trunk from the outside press on the RKE transmitter.

To open the trunk from outside of the vehicle:

- Press on the RKE transmitter to unlock all doors, then use the touch pad.
- Press and hold HOLD on the RKE transmitter.

See *Trunk (Sedan)* ⇨ *33* and *Remote Keyless Entry (RKE) System Operation* ⇨ *27*.

Windows

Manual Windows

If equipped, use the window crank to open and close each window.

See *Manual Windows* ⇨ *40*.

Power Windows

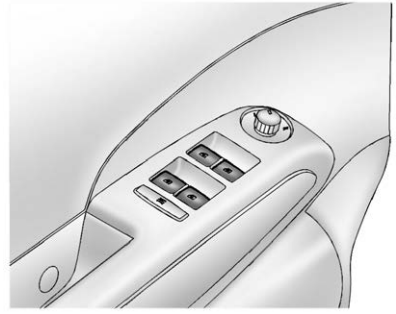

If equipped, press the switch down to open the window. Pull the front of the switch up to close it.

The switches work when the vehicle is in ON/RUN or ACC/ACCESSORY, or when Retained Accessory Power (RAP) is active. See *Retained Accessory Power (RAP)* ⇨ *194*.

See *Power Windows* ⇨ *40*.

Seat Adjustment

Manual Seats

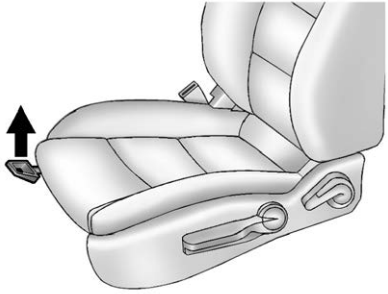

To adjust a manual seat:

1. Pull the handle at the front of the seat.
2. Slide the seat to the desired position and release the handle.
3. Try to move the seat back and forth to be sure it is locked in place.

See *Seat Adjustment* ⇨ *45*.

Seat Height Adjuster

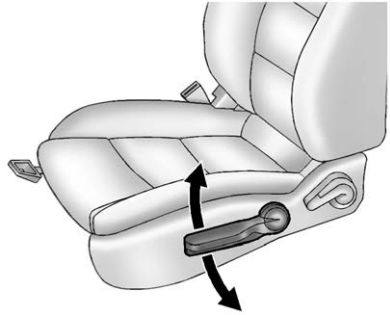

If available, move the lever up or down to manually raise or lower the seat.

See *Seat Adjustment* ⇨ *45*.

Reclining Seatbacks

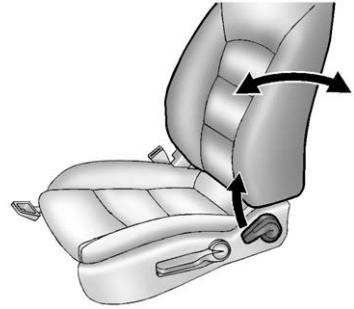

To recline a manual seatback:

1. Lift the lever.

   If necessary, move the safety belt out of the way to access the lever.
2. Move the seatback to the desired position, and then release the lever to lock the seatback in place.
3. Push and pull on the seatback to make sure it is locked in place.

To return the seatback to the upright position:

1. Lift the lever fully without applying pressure to the seatback, and the seatback will return to the upright position.
2. Push and pull on the seatback to make sure it is locked.

See *Reclining Seatbacks* ⇨ *46*.

Second Row Seats

The rear seatbacks can be folded down to increase cargo space.

See *Rear Seats* ⇨ *48*.

Head Restraint Adjustment

Do not drive until the head restraints for all occupants are installed and adjusted properly.

To achieve a comfortable seating position, change the seatback recline angle as little as necessary while keeping the seat and the head restraint height in the proper position.

See *Head Restraints* ⇨ *43* and *Seat Adjustment* ⇨ *45*.

Safety Belts

Refer to the following sections for important information on how to use safety belts properly:

- *Safety Belts* ⇨ *50*.
- *How to Wear Safety Belts Properly* ⇨ *51*.
- *Lap-Shoulder Belt* ⇨ *52*.
- *Lower Anchors and Tethers for Children (LATCH System)* ⇨ *74*.

Passenger Sensing System

United States

Canada

The passenger sensing system turns off the front outboard passenger frontal airbag and knee airbag under certain conditions. No other airbag is affected by the passenger sensing system. See *Passenger Sensing System* ⇨ *62*.

The passenger airbag status indicator will be visible on the instrument panel when the vehicle is started. See *Passenger Airbag Status Indicator* ⇨ *99*.

Mirror Adjustment

Exterior Mirrors

Manual Outside Mirrors

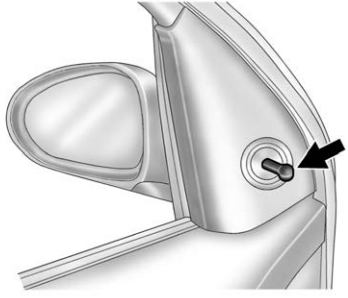

Move the control up, down, or side to adjust the mirror.

See *Manual Mirrors* ⇨ *38*.

Power Outside Mirrors

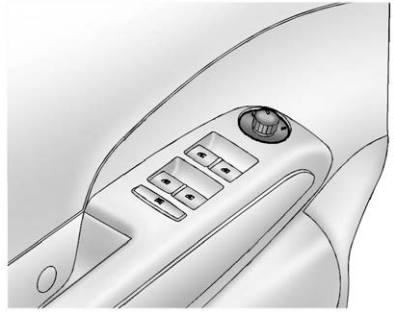

For vehicles with power outside mirrors:

1. Select the mirror by moving the selector switch to L for the driver side or R for the passenger side.
2. Use the control knob to move the mirror in the desired direction.

See *Power Mirrors* ⇨ *38*.

Interior Mirror

Hold the inside rearview mirror in the center to move it for a clearer view behind your vehicle. Adjust the mirror to avoid glare from the headlamps behind you. Push the tab forward for daytime use and pull it for nighttime use.

See *Manual Rearview Mirror* ⇨ *39*.

Steering Wheel Adjustment

To adjust the steering wheel:

1. Pull the lever down.

2. Move the steering wheel up, down, forward, and backward.
3. Pull the lever up to lock the steering wheel in place.

Do not adjust the steering wheel while driving.

Interior Lighting

Dome Lamps

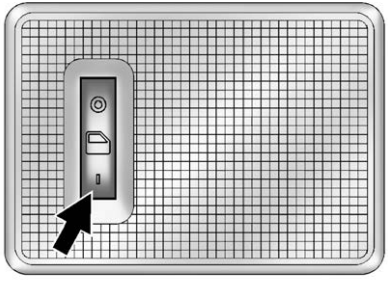

The dome lamp controls are in the headliner above the rear seats.

◯ **:** Press to turn the lamps off, even when a door is open.

: When the button is returned to the middle position, the lamps turn on automatically when a door is opened.

: Press to turn on the dome lamps.

Reading Lamps

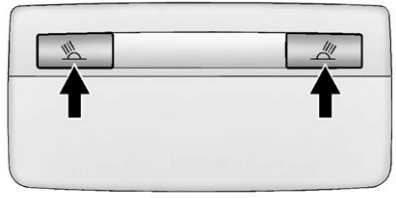

For vehicles with front reading lamps, they are in the overhead console.

or **:** Press to turn each lamp on or off.

For more information about interior lighting, see *Instrument Panel Illumination Control* ⇨ *124* or *Courtesy Lamps* ⇨ *124*.

Exterior Lighting

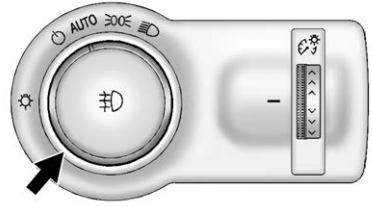

The exterior lamp control is on the instrument panel to the outboard side of the steering column.

⏻ **:** Briefly turn to this position to turn the automatic light control off or on again.

AUTO : Turns the headlamps on automatically at normal brightness, together with the following:

- Parking Lamps
- Taillamps
- License Plate Lamps
- Instrument Panel Lights
- Sidemarker Lamps

: Turns on the parking lamps including all lamps except the headlamps.

: Turns the headlamps on together with the parking lamps and instrument panel lights. A warning chime sounds if the driver door is opened when the ignition switch is off and the headlamps are on.

: For vehicles with fog lamps, press to turn the lamps on or off.

See:

- *Exterior Lamp Controls* ⇨ *120*
- *Daytime Running Lamps (DRL)* ⇨ *121*
- *Fog Lamps* ⇨ *123*

Windshield Wiper/Washer

Sedan

Hatchback

The windshield wiper/washer lever is on the right side of the steering column.

Move the lever to one of the following positions:

HI : Use for fast wipes.

LO : Use for slow wipes.

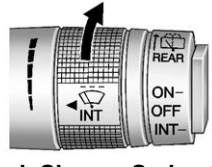

Hatchback Shown, Sedan Similar

INT : Move the lever up to INT for intermittent wipes, then turn the INT band up for more frequent wipes or down for less frequent wipes.

OFF : Use to turn the wipers off.

1X : For a single wipe, briefly move the wiper lever down. For several wipes, hold the wiper lever down.

: Pull the windshield wiper lever toward you to spray windshield washer fluid and activate the wipers.

See *Windshield Wiper/Washer* ⇨ *91*. For vehicles with a rear window wiper/washer, see *Rear Window Wiper/Washer* ⇨ *92*.

Climate Controls

If equipped with these climate control systems, the heating, cooling, and ventilation can be controlled for the vehicle.

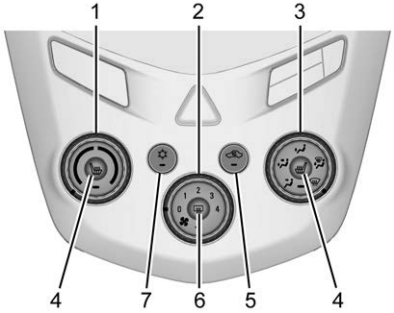

Climate Control System with Heater and Air Conditioning

1. Temperature Control
2. Fan Control
3. Air Delivery Mode Control
4. Driver and Passenger Heated Seats (If Equipped)
5. Recirculation
6. Rear Window Defogger
7. Air Conditioning

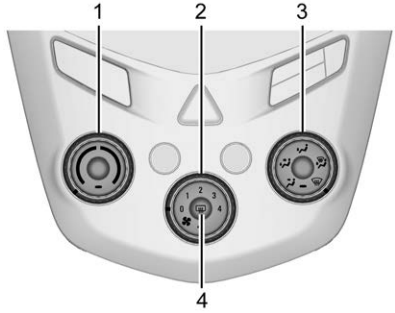

Climate Control System with Heater Only

1. Temperature Control
2. Fan Control
3. Air Delivery Mode Control
4. Rear Window Defogger

See *Climate Control Systems* ⇨ *176*.

Transmission

Automatic Transmission

Manual Mode

This position allows you to change gears similar to a manual transmission. To use this feature:

1. Move the shift lever from D (Drive) rearward to M (Manual Mode).

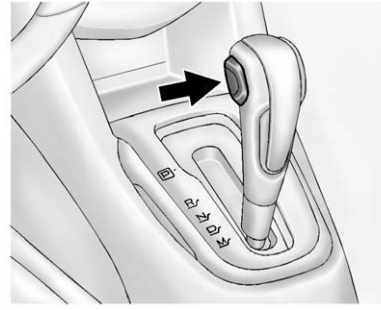

2. Press the + (plus) end of the button on the side of the shift lever to upshift, or press the − (minus) end of the button to downshift.

See *Manual Mode* ⇨ *199*.

Manual Transmission

Up-Shift Light

Vehicles equipped with a manual transmission may have an up-shift light. This light indicates when to shift to the next higher gear for better fuel economy.

For the best fuel economy, accelerate slowly and shift when the light comes on, if weather, road, and traffic conditions allow.

It is normal for the light to go on and off if the accelerator position changes quickly. Ignore the light during downshifts.

Reverse Lockout

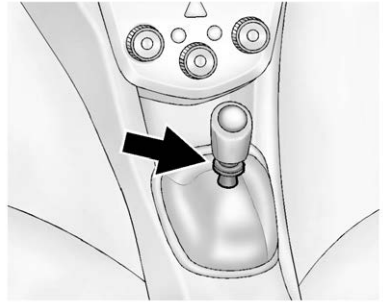

The manual transmission is equipped with a reverse lockout ring. To shift into R (Reverse), press down the clutch pedal, lift up the ring on the shift lever, and shift into R (Reverse). Let up on the clutch pedal slowly while pressing the accelerator pedal.

See *Manual Transmission* ⇨ *200*.

Starting the Engine

The vehicle has a Computer-Controlled Cranking System. It assists in starting the engine and protects components. If the ignition key is turned to START and then released when the engine begins cranking, the engine will continue cranking for a few seconds or until the engine starts. If the engine does not start and the key is held in START, cranking will be stopped after 15 seconds to prevent damage. To prevent gear damage, cranking is not allowed if the engine is running. Engine cranking can be stopped by turning the ignition key to ACC/ACCESSORY or LOCK/OFF. See *Starting the Engine* ⇨ *192*.

Vehicle Features

Radio(s)

Radio Controls without Touchscreen

⏻ **/VOL:** Press to turn the system on or off.

Turn to increase or decrease the volume.

When the system is on, press and release to mute the system. Press and release again to turn the sound back on.

RADIO/BAND: Press to choose FM, AM, or SiriusXM® (if equipped).

SEEK ⏭**:** Seeks the next station.

⏮ **SEEK** Seeks the previous station.

Push/MENU/TUNE: Turn to navigate the available menus. Turn to search for stations.

MEDIA: Press to select external audio source.

For more information about these and other radio features, see *Operation* ⇨ *132*.

Storing a Favorite Station

Stations from all bands can be stored in any order in the favorite pages.

Up to six stations can be stored in each favorite page and the number of available favorite pages can be set.

Storing Stations

To store the station to a position in the list, press the corresponding button 1 to 6 until a beep is heard.

Retrieving Stations

Press the FAV button to open a favorite page or to switch to another favorite page. Briefly press one of the 1 to 6 buttons to retrieve the station.

See “Storing a Favorite Station” under "Radio Controls without Touchscreen" in *AM-FM Radio* ⇨ *136*.

Radio Controls with Touchscreen

Audio Source Menu

∨ **VOL** ∧ **(Volume):** Press to increase or decrease the volume.

⏻ **(Power) :** Press and hold to turn the system on and off.

⌂ **(Home Page) :** Press to enter the Home Page.

Storing a Favorite Station

Stations from all bands can be stored in any order in the favorite pages.

Up to five stations can be stored in each of the seven favorites pages.

Storing Stations

To store the station to a position in the list, touching the corresponding button 1−5 until a beep is heard.

1. Select the desired station.
2. Touch < or > to select the desired page of saved favorites.

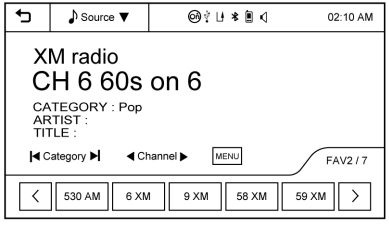

3. Touch and hold any of the preset buttons to save the current radio station to that button of the selected favorites page.

To change a preset button, tune to the new desired radio station and touch and hold the button.

See “Storing a Favorite Station” under "Radio Controls with Touchscreen" in *AM-FM Radio* ⇨ *136*.

Setting the Clock

See *Clock* ⇨ *93*.

Satellite Radio

SiriusXM® is a satellite radio service based in the 48 contiguous United States and 10 Canadian provinces. SiriusXM satellite radio has a wide variety of programming and commercial-free music, coast to coast, and in digital-quality sound. A fee is required to receive the SiriusXM service.

Refer to:

- www.siriusxm.com or call 1-866-635-2349 (U.S.).
- www.xmradio.ca or call 1-877-209-0079 (Canada)

See *Satellite Radio* ⇨ *140*.

Portable Audio Devices

Some vehicles have a 3.5 mm (1/8 in) auxiliary input and a USB port in the storage area to the right of the infotainment system.
A second AUX input is on the front of the infotainment system, if equipped. External devices such as iPods®, laptop computers, MP3 players, CD changers, and USB storage devices may be connected, depending on the audio system.

See *Auxiliary Devices* ⇨ *144*.

Bluetooth®

The Bluetooth® system allows users with a Bluetooth-enabled mobile phone to make and receive hands-free calls using the vehicle audio system and controls.

The Bluetooth-enabled mobile phone must be paired with the in-vehicle Bluetooth system before it can be used in the vehicle. Not all phones will support all functions.

See *Bluetooth (Voice Recognition)* ⇨ *153* or *Bluetooth (Overview)* ⇨ *146* or *Bluetooth (Infotainment Controls)* ⇨ *147* and *Hands-Free Phone* ⇨ *158*.

Steering Wheel Controls

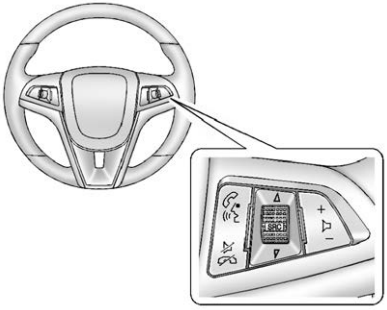

Some audio steering wheel controls could differ depending on the vehicle's options. Some audio steering wheel controls can be adjusted at the steering wheel.

/ : Press to interact with the available Bluetooth or OnStar systems.

/ : Press to decline an incoming call, to end speech recognition, or to end a current call. Press to silence the vehicle speakers while using the infotainment system. Press again to turn the sound on.

For vehicles with OnStar or Bluetooth systems, press to reject an incoming call, or end a current call.

SRC : Press to select an audio source.

Toggle up or down to select the next or previous favorite radio station, USB file, iPod/iPhone song or Bluetooth music.

Toggle and hold up or down to fast forward or reverse the radio stations, USB files, iPod/iPhone songs or Bluetooth music.

+ − : Press + or − to increase or decrease the volume.

See *Steering Wheel Controls* ⇨ *90*.

Cruise Control

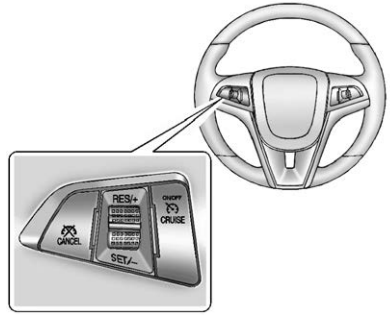

CRUISE : Press to turn the cruise control system on and off. A white indicator comes on in the instrument cluster when cruise is turned on.

RES/+ : If there is a set speed in memory, move the thumbwheel up briefly to resume to that speed or hold upward to accelerate. If cruise control is already active, use to increase vehicle speed.

SET/− : Move the thumbwheel down briefly to set the speed and activate cruise control. If cruise control is already active, use to decrease speed.

CANCEL **:** Press to disengage cruise control without erasing the set speed from memory.

See *Cruise Control* ⇨ *206*.

Driver Information Center (DIC)

The DIC display is in the instrument cluster. It shows the status of many vehicle systems. The controls for the DIC are on the turn signal lever.

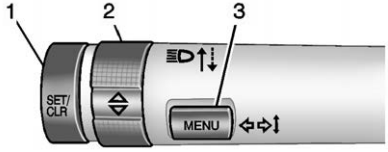

1. **SET/CLR:** Press to set or clear the menu item displayed.
2. △ ▽ **:** Turn the band to scroll through the menu items.
3. **MENU:** Press to display the DIC menus. This button is also used to return to or exit the last screen displayed on the DIC.

See *Driver Information Center (DIC)* ⇨ *109*.

Forward Collision Alert (FCA) System

If equipped, FCA may help avoid or reduce the harm caused by front-end crashes. FCA provides a green indicator, , when a vehicle is detected ahead. When approaching a vehicle ahead too quickly, FCA provides a red flashing alert and rapidly beeps. This alert stays lit if you follow a vehicle much too closely.

See *Forward Collision Alert (FCA) System* ⇨ *210*.

Lane Departure Warning (LDW)

If equipped, LDW may help avoid unintentional lane departures at speeds of 56 km/h (35 mph) or greater. LDW uses a camera sensor to detect the lane markings. The LDW light, , is green if a lane marking is detected. If the vehicle departs the lane without using a turn signal in that direction, the light will change to amber and flash. In addition, beeps will sound.

See *Lane Departure Warning (LDW)* ⇨ *212*.

Rear Vision Camera (RVC)

If equipped, RVC displays a view of the area behind the vehicle, on the center stack display, when the vehicle is shifted into R (Reverse).

See *Rear Vision Camera (RVC)* ⇨ *208*.

Power Outlets

The accessory power outlets can be used to plug in electrical equipment, such as a cell phone or MP3 player.

The vehicle has an accessory power outlet in front of the cupholders on the center floor console.

See *Power Outlets* ⇨ *94*.

Sunroof

On vehicles with this feature, the sunroof only operates when the ignition is turned to ON/RUN or Retained Accessory Power (RAP) is active.

Open/Close : To open the sunroof, press and hold the rear of the switch. To close the sunroof, press and hold the front of the switch.

Vent : Press and hold the front of the switch to vent the sunroof.

Express Open : Press and release the rear of the switch to express open.

Manually close the sunshade.

The sunroof will not operate if the vehicle has an electrical failure.

See *Sunroof* ⇨ *42*.

Performance and Maintenance

Traction Control/ Electronic Stability Control

The Traction Control System (TCS) limits wheel spin. The system is on when the vehicle is started.

The StabiliTrak system assists with directional control of the vehicle in difficult driving conditions. The system is on when the vehicle is started.

- To turn off traction control, press and release the TCS/StabiliTrak button on the center console. The traction off light illuminates.
- Press and release the TCS/ StabiliTrak button again to turn traction control back on.
- To turn off both traction control and StabiliTrak, press and hold the TCS/StabiliTrak button until the traction off light and the StabiliTrak OFF light illuminate.
- Press the TCS/StabiliTrak button again to turn on both systems.

See *Traction Control/Electronic Stability Control* ⇨ *204*.

Tire Pressure Monitor

This vehicle may have a Tire Pressure Monitor System (TPMS).

The low tire pressure warning light alerts to a significant loss in pressure of one of the vehicle's tires. If the warning light comes on, stop as soon as possible and inflate the tires to the recommended pressure shown on the Tire and Loading Information label. See *Vehicle Load Limits* ⇨ *187*. The warning light will remain on until the tire pressure is corrected.

The low tire pressure warning light may come on in cool weather when the vehicle is first started, and then turn off as the vehicle is driven. This may be an early indicator that the tire pressures are getting low and the tires need to be inflated to the proper pressure.

The TPMS does not replace normal monthly tire maintenance. Maintain the correct tire pressures.

See *Tire Pressure Monitor System* ⇨ *262*.

Engine Oil Life System

The engine oil life system calculates engine oil life based on vehicle use and displays the % CHANGE message on the DIC when it is necessary to change the engine oil and filter.

Remember, the oil life display must be reset after each oil change. It will not reset itself.

Resetting the Oil Life System

1. Press the MENU button to show Remaining Oil Life on the display. This display shows an estimate of the oil's remaining useful life. If 99% is displayed, that means that 99% of the current oil life remains.
2. To reset the engine oil life system, press the SET/CLR button while the oil life display is active. After a few seconds, there will be a single chime and the oil life will be reset to 100%.

Be careful not to reset the oil life display accidentally at any time other than when the oil has just been changed. It cannot be reset accurately until the next oil change.

See *Engine Oil Life System* ⇨ *228*.

Driving for Better Fuel Economy

Driving habits can affect fuel mileage. Here are some driving tips to get the best fuel economy possible.

- Avoid fast starts and accelerate smoothly.
- Brake gradually and avoid abrupt stops.
- Avoid idling the engine for long periods of time.
- When road and weather conditions are appropriate, use cruise control.
- Always follow posted speed limits or drive more slowly when conditions require.
- Keep vehicle tires properly inflated.
- Combine several trips into a single trip.
- Replace the vehicle's tires with the same TPC Spec number molded into the tire's sidewall near the size.
- Follow recommended scheduled maintenance.

Roadside Assistance Program

U.S.: 1-800-243-8872

TTY Users (U.S. Only): 1-888-889-2438

Canada: 1-800-268-6800

As the owner of a new Chevrolet, you are automatically enrolled in the Roadside Assistance program.

See *Roadside Assistance Program* ⇨ *322*.

Keys, Doors, and Windows

Keys and Locks
Keys 25
Remote Keyless Entry (RKE) System 27
Remote Keyless Entry (RKE) System Operation 27
Remote Vehicle Start 29
Door Locks 30
Delayed Locking 31
Automatic Door Locks 32
Lockout Protection 32
Safety Locks 32

Doors
Trunk (Sedan) 33
Liftgate (Hatchback) 35

Vehicle Security
Vehicle Security 36
Vehicle Alarm System 36
Immobilizer 37
Immobilizer Operation 37

Exterior Mirrors
Convex Mirrors 38
Manual Mirrors 38
Power Mirrors 38
Folding Mirrors 39
Heated Mirrors 39

Interior Mirrors
Manual Rearview Mirror 39

Windows
Windows 39
Manual Windows 40
Power Windows 40
Sun Visors 41

Roof
Sunroof 42

Keys and Locks

Keys

⚠ Warning

Leaving children in a vehicle with a Remote Keyless Entry (RKE) transmitter is dangerous and children or others could be seriously injured or killed. They could operate the power windows or other controls or make the vehicle move. The windows will function with the RKE transmitter in the vehicle, and children or others could be caught in the path of a closing window. Do not leave children in a vehicle with an RKE transmitter.

⚠ Warning

If the key is unintentionally rotated while the vehicle is running, the ignition could be moved out of the RUN position. This could be caused by heavy items hanging from the key ring, or by large or long items attached to the key ring that could be contacted by the driver or steering wheel. If the ignition moves out of the RUN position, the engine will shut off, braking and steering power assist may be

(Continued)

Warning (Continued)

impacted, and airbags may not deploy. To reduce the risk of unintentional rotation of the ignition key, do not change the way the ignition key and Remote Keyless Entry (RKE) transmitter, if equipped, are connected to the provided key rings.

The ignition key, key rings, and RKE transmitter, if equipped, are designed to work together. As a system, it reduces the risk of unintentionally moving the key out of the RUN position. If replacements or additions are required, see your dealer. Limit added items to a few essential keys or small, light items no larger than an RKE transmitter.

The key that is part of the Remote Keyless Entry (RKE) transmitter can be used for the ignition and all locks.

Press the button on the RKE transmitter to extend the key. Press the button and the key blade to retract the key.

See your dealer if a new key is needed.

If the vehicle has an ignition, and it becomes difficult to turn they key, inspect the key blade for debris.

If you are locked out of the vehicle, see *Roadside Assistance Program* ⇨ *322*.

Remote Keyless Entry (RKE) System

See *Radio Frequency Statement* ⇨ *328*.

If there is a decrease in the RKE operating range:

- Check the distance. The transmitter may be too far from the vehicle.
- Check the location. Other vehicles or objects may be blocking the signal.
- Check the transmitter's battery. See “Battery Replacement” later in this section.
- If the transmitter is still not working correctly, see your dealer or a qualified technician for service.

Remote Keyless Entry (RKE) System Operation

The RKE transmitter may work up to 60 m (195 ft) away from the vehicle.

Other conditions can affect the performance of the transmitter. See *Remote Keyless Entry (RKE) System* ⇨ *27*.

With Remote Start Shown

The following buttons are on the transmitter:

(Lock) : Press to lock all doors. The turn signal indicators may flash and/or the horn may sound to indicate locking. See *Vehicle Personalization* ⇨ *113*.

If the driver door is open when is pressed, all doors lock except the driver door, if Unlocked Door Anti Lock Out is enabled through the vehicle personalization. See *Vehicle Personalization* ⇨ *113*. If the passenger door is open when is pressed, all doors lock.

Pressing may also arm the theft-deterrent system. See *Vehicle Alarm System* ⇨ *36*.

(Unlock) : Press to unlock the driver door or all doors. See *Vehicle Personalization* ⇨ *113*. The turn signal indicators flash to indicate unlocking has occurred. See *Vehicle Personalization* ⇨ *113*.

Pressing may also disarm the theft-deterrent system. See *Vehicle Alarm System* ⇨ *36*.

HOLD(Remote Trunk Release) : If equipped, press and hold to release the trunk.

(Vehicle Locator/Panic Alarm) : Press and release one time to initiate vehicle locator. The exterior lamps flash and the horn chirps three times. Press and hold for at least three seconds to sound the panic alarm. The horn sounds and the turn signals flash for 30 seconds until is pressed again, or the key is placed in the ignition and turned to ON/RUN.

(Remote Vehicle Start) : If equipped, press and release and then immediately press and hold for at least four seconds or until the turn signal lamps flash to start the engine from outside the vehicle using the RKE transmitter. See *Remote Vehicle Start* ⇨ *29*.

The buttons on the RKE transmitter are disabled when there is a key in the ignition.

Programming Transmitters to the Vehicle

Only RKE transmitters programmed to this vehicle will work. If a transmitter is lost or stolen, a replacement can be purchased and programmed through your dealer. When the replacement transmitter is programmed to this vehicle, all remaining transmitters must also be reprogrammed. Any lost or stolen transmitters will no longer work once the new transmitter is programmed. See your dealer to have new transmitters programmed.

Programming with a Recognized Transmitter

To program a new key:

1. Insert the original, already programmed key in the ignition and turn the key to the ON/RUN position.
2. Turn the key to LOCK/OFF, and remove the key.
3. Insert the new key to be programmed and turn it to the ON/RUN position within five seconds. The security light will turn off once the key has been programmed.
4. Repeat Steps 1–3 if additional keys are to be programmed.

If a key is lost or damaged, see your dealer to have a new key made.

Programming without a Recognized Transmitter

Program a new key to the vehicle when a recognized key is not available. Canadian regulations require that owners see their dealer.

If there are no currently recognized keys available, follow this procedure to program the first key.

This procedure will take approximately 30 minutes to complete for the first key. The vehicle must be off and all of the keys you wish to program must be with you.

1. Insert the new vehicle key into the ignition.
2. Turn to ON/RUN. The security light will come on.

3. Wait 10 minutes until the security light turns off.
4. Turn the ignition to LOCK/OFF.
5. Repeat Steps 2–4 two more times. After the third time, turn to ON/RUN; the key is learned and all previously known keys will no longer work with the vehicle.

Remaining keys can be learned by following the procedure in "Programming with a Recognized Transmitter."

Battery Replacement

The battery is not rechargeable. To replace the battery:

Caution
When replacing the battery, do not touch any of the circuitry on the transmitter. Static from your body could damage the transmitter.

1. Press the button on the transmitter to extend the key.
2. Remove the battery cover by prying with a finger.
3. Remove the old battery.
4. Insert the new battery, positive side facing up. Replace with a CR2032 or equivalent battery.
5. Snap the battery cover back on to the transmitter.

Remote Vehicle Start

If equipped, this feature allows the engine to be started from outside the vehicle.

(Remote Vehicle Start) : This button will be on the RKE transmitter if the vehicle has remote start.

The climate control system will use the previous settings during a remote start. The rear defog may come on during remote start based on cold ambient conditions. The rear fog indicator light does not come on during remote start.

If the vehicle has heated seats, they may come on during a remote start. See *Heated Front Seats* ⇨ *47*.

Laws in some local communities may restrict the use of remote starters. For example, some laws require a person using remote start to have the vehicle in view. Check local regulations for any requirements.

Other conditions can affect the performance of the transmitter. See *Remote Keyless Entry (RKE) System* ⇨ *27*.

Starting the Vehicle

To start the engine using the remote start feature:

1. Press and release .
2. Immediately after completing Step 1, press and hold for at least four seconds or until the turn signal lamps flash. The turn signal lamps flashing confirms the request to remote start the vehicle has been received.

When the engine starts, the parking lamps will turn on and remain on as long as the engine is running. The doors will be locked and the climate control system may come on.

The engine will continue to run for 10 minutes. After 30 seconds, repeat the steps if a 10-minute extension is desired. Remote start can be extended only once.

Insert the key and turn it to ON/RUN before driving.

Extending Engine Run Time

The engine run time can also be extended by another 10 minutes, if during the first 10 minutes Steps 1–2 are repeated while the engine is still running. An extension can be requested, 30 seconds after starting. This provides a total of 20 minutes.

When the remote start is extended, the second 10-minute period is added on to the first 10 minutes for a total of 20 minutes.

A maximum of two remote starts, or a single start with an extension, are allowed between ignition cycles. After this, the vehicle's ignition switch must be turned to ON/RUN and then back to LOCK/OFF using the key, before the remote start procedure can be used again.

Canceling a Remote Start

To cancel a remote start, do one of the following:

- Press and hold ⏻ until the parking lamps turn off.
- Turn on the hazard warning flashers.
- Turn the vehicle on and then off.

Conditions in Which Remote Start Will Not Work

The remote vehicle start feature will not operate if:

- The key is in the ignition.
- The hood is not closed.
- The hazard warning flashers are on.
- The malfunction indicator lamp is on.
- The engine coolant temperature is too high.
- The oil pressure is low.
- Two remote vehicle starts, or a single remote start with an extension, have already been used.
- The vehicle is not in P (Park).

Door Locks

⚠ Warning

Unlocked doors can be dangerous.

- Passengers, especially children, can easily open the doors and fall out of a moving vehicle. When a door is locked, the handle will not open it. The chance of being thrown out of the vehicle in a crash is increased if the doors are not locked. So, all passengers should wear safety belts properly and the

(Continued)

Warning (Continued)

doors should be locked whenever the vehicle is driven.

- Young children who get into unlocked vehicles may be unable to get out. A child can be overcome by extreme heat and can suffer permanent injuries or even death from heat stroke. Always lock the vehicle whenever leaving it.
- Outsiders can easily enter through an unlocked door when you slow down or stop the vehicle. Locking the doors can help prevent this from happening.

To lock or unlock the doors from outside the vehicle:

- Use the key in the driver door to lock all doors or unlock the driver door only.
- Press 🔒 or 🔓 on the Remote Keyless Entry (RKE) transmitter. See *Remote Keyless Entry (RKE) System Operation* ⇨ *27*.

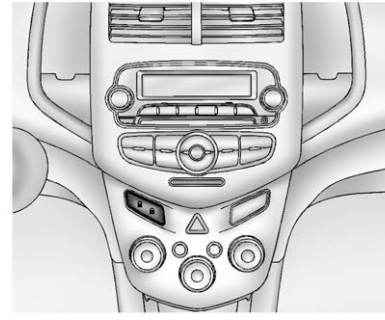

To lock the doors from inside the vehicle:

- Press 🔒 on the central locking switch or on the driver door switch.
- Press the lock knob on the driver door to lock all doors and, if equipped, the liftgate.

To unlock the doors from inside the vehicle:

- Press 🔓 on the central locking switch or on the driver door switch.
- Pull the door handle. Pulling the door handle again unlatches the door.
- Lift the lock knob on the driver door to unlock the driver door.

The central locking switch and power door lock switch also lock and unlock the liftgate/trunk.

Delayed Locking

This feature delays the actual locking of the doors until five seconds after all doors are closed. Delayed locking can only be turned on when the Unlocked Door Anti Lockout feature has been turned off.

When 🔒 is pressed on the driver or passenger door power lock switch while the door is open, a chime will sound three times to indicate that delayed locking is active. The doors will then lock automatically five seconds after all doors are closed.

If a door is reopened before five seconds have elapsed, the five second timer will reset once all the doors are closed again. Press 🔒 on the door lock switch again, or press 🔒 on the RKE transmitter, to override this feature and lock the doors immediately.

Delayed locking can be programmed through the Driver Information Center (DIC). See *Vehicle Personalization* ⇨ *113*.

Automatic Door Locks

The vehicle is programmed so that when the doors are closed, the ignition is on, and the shift lever is moved out of P (Park) for automatic transmissions, or when the vehicle speed is above 13 km/h (8 mph) for manual transmissions, the doors and the trunk/liftgate will lock.

To unlock the doors and the trunk/liftgate press 🔓 on the center stack or the driver door switch.

If equipped with an automatic transmission the vehicle must be in P (Park).

If equipped with a manual transmission the vehicle must be in Neutral with the parking brake set.

This feature can be programmed. See *Vehicle Personalization* ⇨ *113*.

Lockout Protection

If the driver side power door lock switch is pressed when the driver door is open and the key is in the ignition, all of the doors will lock and then the driver door will unlock.

Lockout Protection can be manually overridden with the driver door open by pressing and holding 🔒 on the power door lock switch.

If Unlocked Door Anti Lockout is turned on and: the vehicle is off, the driver door is open, and door locking is requested using a door lock switch or the RKE transmitter, all the doors will lock and only the driver door will unlock. The Unlocked Door Anti Lockout feature can be turned on or off using the vehicle personalization menus. See *Vehicle Personalization* ⇨ *113*.

Safety Locks

The rear door safety locks prevent passengers from opening the rear doors from inside the vehicle.

Manual Safety Locks

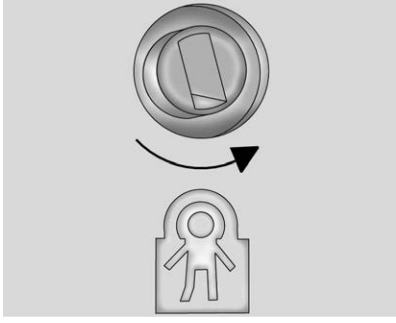

If equipped, the safety lock is located on the inside edge of the rear doors. To use the safety lock:

1. Insert the key into the safety lock slot and turn it so the slot is in the horizontal position.
2. Close the door.
3. Do the same for the other rear door.

To open a rear door when the safety lock is on:

1. Unlock the door by activating the inside handle, by using the power door lock switch, or by using the Remote Keyless Entry (RKE) transmitter.
2. Open the door from the outside.

To cancel the safety lock:

1. Unlock the door and open it from the outside.
2. Insert the key into the safety lock slot and turn it so the slot is in the vertical position. Do the same for the other door.

Doors

Trunk (Sedan)

⚠ Warning

Exhaust gases can enter the vehicle if it is driven with the liftgate, hatch/trunk open, or with any objects that pass through the seal between the body and the hatch/trunk or liftgate. Engine exhaust contains carbon monoxide (CO) which cannot be seen or smelled. It can cause unconsciousness and even death.

If the vehicle must be driven with the liftgate or hatch/trunk open:

- Close all of the windows.
- Fully open the air outlets on or under the instrument panel.
- Adjust the climate control system to a setting that brings in only outside air and set the fan speed to the

(Continued)

Warning (Continued)

highest setting. See “Climate Control Systems” in the Index.

- If the vehicle is equipped with a power liftgate, disable the power liftgate function.

For more information about carbon monoxide, see *Engine Exhaust* ⇨ *197*.

To lock or unlock the trunk from the inside, press 🔒 or 🔓 on the central locking switch or the driver door lock switch.

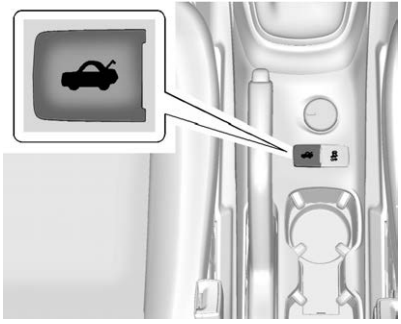

To open the trunk from inside the vehicle, press .

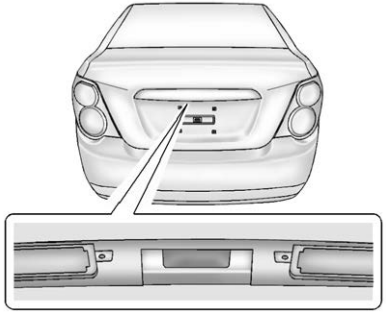

To open the trunk from outside of the vehicle:

- Press on the RKE transmitter to unlock all doors, then use the touch pad.
- Press and hold HOLD on the RKE transmitter.

See *Remote Keyless Entry (RKE) System Operation* ⇨ *27*.

Emergency Trunk Release Handle

Caution
Do not use the emergency trunk release handle as a tie-down or anchor point when securing items in the trunk as it could damage the handle.

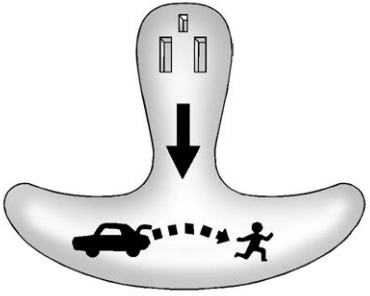

There is a glow-in-the-dark emergency trunk release handle on the underside of the trunk lid. This handle will glow following exposure to light. Pull the release handle down to open the trunk from the inside.

After use, return to the stored position.

Liftgate (Hatchback)

⚠ Warning

Exhaust gases can enter the vehicle if it is driven with the liftgate, hatch/trunk open, or with any objects that pass through the seal between the body and the hatch/trunk or liftgate. Engine exhaust contains carbon monoxide (CO) which cannot be seen or smelled. It can cause unconsciousness and even death.

If the vehicle must be driven with the liftgate or hatch/trunk open:

- Close all of the windows.
- Fully open the air outlets on or under the instrument panel.
- Adjust the climate control system to a setting that brings in only outside air and set the fan speed to the

(Continued)

Warning (Continued)

highest setting. See "Climate Control Systems" in the Index.

- If the vehicle is equipped with a power liftgate, disable the power liftgate function.

For more information about carbon monoxide, see *Engine Exhaust* ⇨ *197*.

To lock or unlock the liftgate from the inside, press 🔒 or 🔓 on the central locking switch or on the driver door.

The vehicle must be in P (Park) for automatic transmissions. For manual transmissions the parking brake must be engaged.

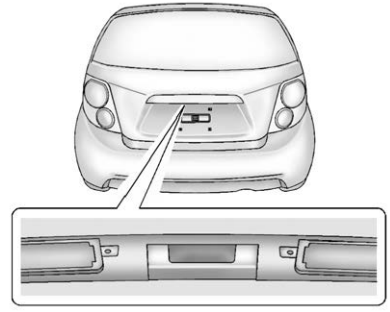

To open the liftgate from the outside, press 🔓 on the RKE transmitter to unlock all doors, then use the touch pad.

See *Remote Keyless Entry (RKE) System Operation* ⇨ *27*.

When closing the liftgate, close from the center to ensure that it fully latches.

Vehicle Security

This vehicle has theft-deterrent features; however, they do not make the vehicle impossible to steal.

Vehicle Alarm System

This vehicle has an anti-theft alarm system.

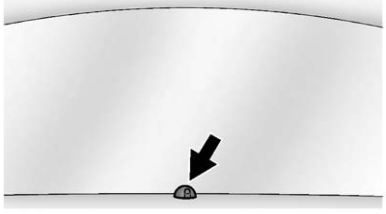

The indicator light on the instrument panel near the windshield indicates the status of the system.

Off : Vehicle is disarmed.

On Solid : Vehicle is secured during the delay to arm the system.

Fast Flash : Vehicle is unsecured. A door, the hood, or the trunk/liftgate is open.

Slow Flash : Alarm system is armed.

Arming the Alarm System

1. Close all doors, the trunk/liftgate, and the hood.
2. Lock the vehicle in one of two ways:
   - Use the RKE transmitter.
   - With a door open, press the inside 🔒.
3. After 30 seconds the alarm system will arm, and the indicator light will begin to slowly flash indicating the alarm system is operating. Pressing 🔒 on the RKE transmitter a second time will bypass the 30-second delay and immediately arm the alarm system.

The vehicle alarm system will not arm if the doors are locked with the key.

If the driver door is opened without first unlocking with the RKE transmitter, the horn will chirp and the lights will flash to indicate pre-alarm. If the vehicle is not started, or the door is not unlocked by pressing 🔓 on the RKE transmitter during the 10-second pre-alarm, the alarm will be activated.

If a door, the hood, or the liftgate is opened without first unlocking with the RKE transmitter, the turn signals will flash and the horn will sound for about 30 seconds. The alarm system will then re-arm to monitor for the next unauthorized event.

Disarming the System

To disarm the system, either unlock the doors using the RKE transmitter, or start the vehicle with a recognized transmitter in the vehicle.

To avoid setting off the alarm by accident:

- Press 🔓 on the RKE transmitter.
- Start the vehicle.

To avoid setting off the alarm by accident:

- Lock the vehicle after all occupants have left the vehicle and all doors are closed.
- Always unlock a door with the RKE transmitter.

Unlocking the driver door with the key will not disarm the system or turn off the alarm.

How to Detect a Tamper Condition

If 🔓 is pressed on the transmitter and the horn chirps and the lights flash three times, an alarm occurred previously while the alarm system was armed.

Immobilizer

See *Radio Frequency Statement* ⇨ *328*.

Immobilizer Operation

This vehicle has a passive theft-deterrent system.

The system does not have to be manually armed or disarmed.

The vehicle is automatically immobilized when the key is removed from the ignition.

The system is automatically disarmed when the vehicle is started with the correct key. The key uses a transponder that matches an immobilizer control unit in the vehicle and automatically disarms the system. Only an authorized key starts the vehicle. The vehicle may not start if the key is damaged.

The security light in the instrument cluster comes on if there is a problem with arming or disarming the theft-deterrent system.

When trying to start the vehicle, the security light comes on briefly when the ignition is turned on.

If the engine does not start and the security light stays on, there is a problem with the system. Turn the ignition off and try again.

If the engine still does not start, and the key appears to be undamaged or the light continues to stay on, try another ignition key. If the engine does not start with the other key, the vehicle needs service. If the vehicle does start, the first key may be damaged. See your dealer who can service the theft-deterrent system and have a new key made.

Do not leave the key or device that disarms or deactivates the theft-deterrent system in the vehicle.

Exterior Mirrors

Convex Mirrors

⚠ Warning

A convex mirror can make things, like other vehicles, look farther away than they really are. If you cut too sharply into the right lane, you could hit a vehicle on the right. Check the inside mirror or glance over your shoulder before changing lanes.

The passenger side mirror is convex shaped. A convex mirror's surface is curved so more can be seen from the driver seat.

Manual Mirrors

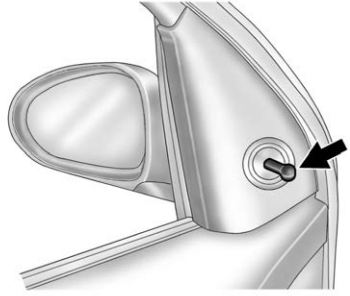

Move the control up, down, or side to side to adjust the mirror.

See *Folding Mirrors* ⇨ *39*.

Power Mirrors

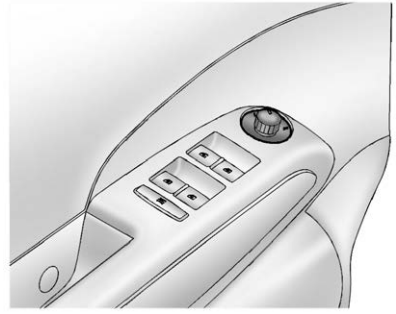

For vehicles with power outside mirrors:

1. Select the mirror by moving the selector switch to L for the driver side or R for the passenger side.
2. Use the control knob to move the mirror in the desired direction.

Folding Mirrors

Manual Folding Mirrors

The vehicle has manual folding mirrors. These mirrors can be folded inward to prevent damage when going through an automatic car wash. To fold, pull the mirror toward the vehicle. Push the mirror outward to return it to the original position.

Heated Mirrors

For vehicles with this feature:

(Rear Window Defogger) : Press to heat the mirrors. See “Rear Window and Outside Mirror Defogger” under *Climate Control Systems* ⇨ *176*.

Interior Mirrors

Manual Rearview Mirror

Hold the inside rearview mirror in the center to move it for a clearer view behind your vehicle. Adjust the mirror to avoid glare from the headlamps behind you. Push the tab forward for daytime use and pull it for nighttime use.

Vehicles with OnStar® have three control buttons at the bottom of the mirror. See your dealer for more information about OnStar and how to subscribe to it. See *OnStar Overview* ⇨ *332*.

Windows

⚠ Warning

Never leave a child, a helpless adult, or a pet alone in a vehicle, especially with the windows closed in warm or hot weather. They can be overcome by the extreme heat and suffer permanent injuries or even death from heat stroke.

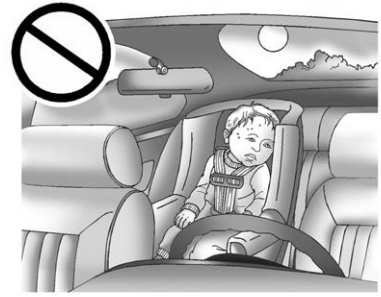

The vehicle aerodynamics are designed to improve fuel economy performance. This may result in a pulsing sound when either rear window is down and the front windows are up. To reduce the sound, open either a front window or the sunroof, if equipped.

Manual Windows

If equipped, use the window crank to open and close each window.

The rear windows do not open fully.

Power Windows

⚠ Warning

Leaving children in a vehicle with the keys is dangerous for many reasons. Children or others could be badly injured or even killed. They could operate the power windows or other controls or even make the vehicle move. The windows will function and they could be seriously injured or killed

(Continued)

Warning (Continued)

if caught in the path of a closing window. Do not leave keys in a vehicle with children.

When there are children in the rear seat use the window lockout button to prevent unintentional operation of the windows.

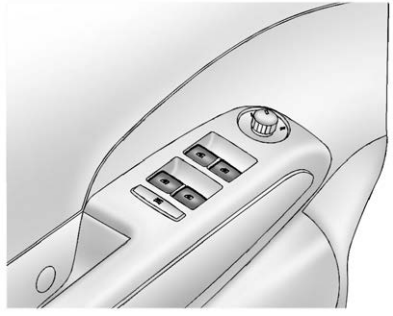

If equipped, press the switch to open the window. Pull the front of the switch up to close it.

The switches work when the vehicle is in ON/RUN or ACC/ ACCESSORY, or when Retained Accessory Power (RAP) is active. See *Retained Accessory Power (RAP)* ⇨ *194*.

Express Window Operation

Windows with an express-down or express-up feature allow the window to be lowered or raised without holding the switch. The driver window has express-down and express-up. Pull a window switch up or push it down all the way, release it, and the window goes up or down automatically. Stop the window by pushing or pulling the switch in the same direction a second time or briefly operating the switch to the first detent in either direction.

Safety Function

If any object is in the path of the window when the express-up feature is active, the window will stop and auto-reverse to a preset position. Weather conditions may cause the window to auto-reverse. The window switch may be held up

to the second position to close the window. The window will return to normal operation once the obstruction or condition is removed.

Safety Function Override

If the battery on the vehicle has been recharged or disconnected, or is not working, the windows will need to be reprogrammed for the express-up feature to work. Before reprogramming, replace or recharge the vehicle's battery.

To program the driver window:

1. With the ignition in ACC/ ACCESSORY or ON/RUN, or when RAP is active, close all doors.
2. Press and hold the power window switch until the window is fully open.
3. Pull the power window switch up until the window is fully closed.
4. Continue holding the switch up for approximately two seconds after the window is completely closed.

The window is now reprogrammed.

Window Lockout

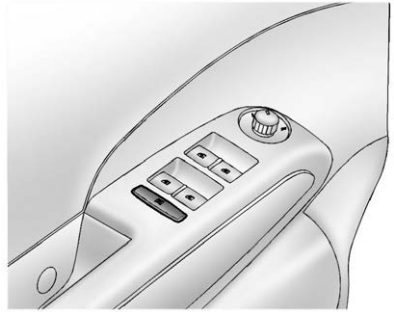

This feature prevents the rear passenger windows from operating, except from the driver position.

Press to disable the rear window switches.

Press again to return to normal window operation.

Sun Visors

To block out glare, swing down the sun visors. You can also remove them from the center mount and swing them to the side.

Visor Vanity Mirror

Vanity mirrors are on the back of the sun visors. Swing down the sun visor and open the cover.

Roof

Sunroof

On vehicles with this feature, the sunroof only operates when the ignition is turned to ON/RUN or Retained Accessory Power (RAP) is active.

Open/Close : To open the sunroof, press and hold the rear of the switch. To close the sunroof, press and hold the front of the switch.

Vent : Press and hold the front of the switch to vent the sunroof.

Express Open : Press and release the rear of the switch to express open.

Manually close the sunshade.

The sunroof will not operate if the vehicle has an electrical failure.

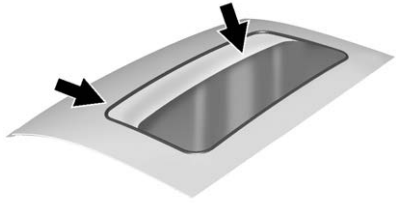

Dirt and debris may collect on the sunroof seal or in the track. This could cause an issue with sunroof operation or noise. It could also plug the water drainage system. Periodically open the sunroof and remove any obstacles or loose debris. Wipe the sunroof seal and roof sealing area using a clean cloth, mild soap, and water. Do not remove grease from the sunroof.

Seats and Restraints

Head Restraints
Head Restraints 43

Front Seats
Seat Adjustment 45
Reclining Seatbacks 46
Front Seat Armrest 47
Heated Front Seats 47

Rear Seats
Rear Seats 48

Safety Belts
Safety Belts 50
How to Wear Safety Belts Properly 51
Lap-Shoulder Belt 52
Safety Belt Use During Pregnancy 54
Safety Belt Extender 55
Safety System Check 55
Safety Belt Care 55
Replacing Safety Belt System Parts after a Crash 55

Airbag System
Airbag System 56
Where Are the Airbags? 58
When Should an Airbag Inflate? 59
What Makes an Airbag Inflate? 60
How Does an Airbag Restrain? 60
What Will You See after an Airbag Inflates? 61
Passenger Sensing System . . . 62
Servicing the Airbag-Equipped Vehicle 66
Adding Equipment to the Airbag-Equipped Vehicle 66
Airbag System Check 67
Replacing Airbag System Parts after a Crash 67

Child Restraints
Older Children 68
Infants and Young Children 69
Child Restraint Systems 72
Where to Put the Restraint 73
Lower Anchors and Tethers for Children (LATCH System) 74
Replacing LATCH System Parts After a Crash 80
Securing Child Restraints (Rear Seat) 80
Securing Child Restraints (Front Passenger Seat) 82

Head Restraints

⚠ Warning

With head restraints that are not installed and adjusted properly, there is a greater chance that occupants will suffer a neck/spinal injury in a crash. Do not drive until the head restraints for all occupants are installed and adjusted properly.

Front Seats

The front seats have adjustable head restraints in the outboard seating positions.

Adjust the head restraint so that the top of the restraint is at the same height as the top of the occupant's head. This position reduces the chances of a neck injury in a crash.

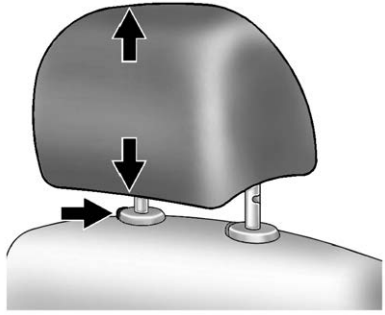

The height of the head restraint can be adjusted. Pull the head restraint up to raise it. Try to move the head restraint to make sure that it is locked in place.

To lower the head restraint, press the button, located on the top of the seatback, and push the head restraint down. Try to move the head restraint after the button is released to make sure that it is locked in place.

The front seat outboard head restraints are not removeable.

Rear Seats

The vehicle's rear seats have adjustable head restraints in the outboard seating positions.

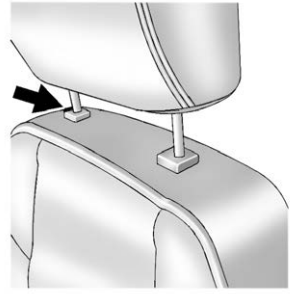

The height of the head restraint can be adjusted. Pull the head restraint up to raise it. Try to move the head restraint to make sure that it is locked in place.

To lower the head restraint, press the button, located on the top of the seatback, and push the head restraint down. Try to move the head restraint after the button is released to make sure that it is locked in place.

Rear outboard head restraints are not removable.

Front Seats

Seat Adjustment

Manual Seats

⚠ Warning

You can lose control of the vehicle if you try to adjust a driver seat while the vehicle is moving. Adjust the driver seat only when the vehicle is not moving.

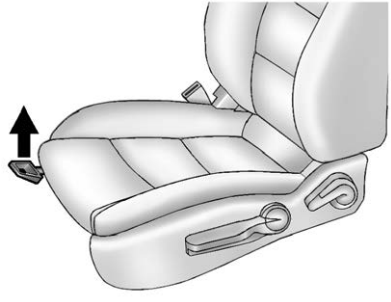

To adjust a manual seat:

1. Pull up on the handle at the front of the seat.
2. Slide the seat to the desired position and release the handle.
3. Try to move the seat back and forth to be sure it is locked in place.

Seat Height Adjuster

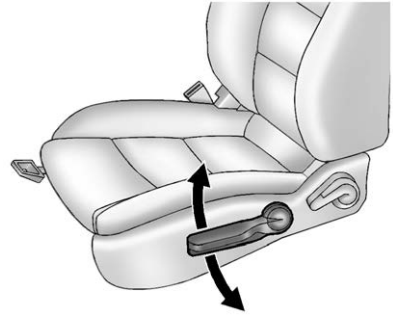

If available, move the lever up or down to manually raise or lower the seat.

Reclining Seatbacks

⚠ Warning

If either seatback is not locked, it could move forward in a sudden stop or crash. That could cause injury to the person sitting there. Always push and pull on the seatbacks to be sure they are locked.

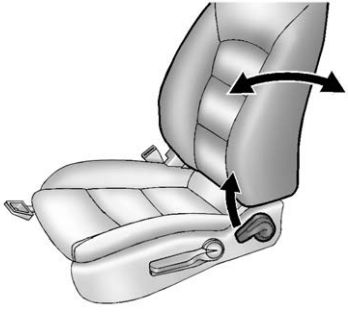

To recline a manual seatback:

1. Lift the lever.

   If necessary, move the safety belt out of the way to access the lever.

2. Move the seatback to the desired position, and then release the lever to lock the seatback in place.

3. Push and pull on the seatback to make sure it is locked in place.

To return the seatback to the upright position:

1. Lift the lever fully without applying pressure to the seatback, and the seatback will return to the upright position.

2. Push and pull on the seatback to make sure it is locked.

⚠ Warning

Sitting in a reclined position when the vehicle is in motion can be dangerous. Even when buckled up, the safety belts cannot do their job.

The shoulder belt will not be against your body. Instead, it will be in front of you. In a crash, you could go into it, receiving neck or other injuries.

The lap belt could go up over your abdomen. The belt forces would be there, not at your pelvic bones. This could cause serious internal injuries.

For proper protection when the vehicle is in motion, have the seatback upright. Then sit well back in the seat and wear the safety belt properly.

Do not have a seatback reclined if the vehicle is moving.

Front Seat Armrest

There is an armrest on the inboard side of the driver seat. To raise or lower the armrest, push up or pull down on the armrest.

Heated Front Seats

⚠ Warning

If you cannot feel temperature change or pain to the skin, the seat heater may cause burns. To reduce the risk of burns, people with such a condition should use care when using the seat heater, especially for long periods of time. Do not place anything on the seat that insulates against heat, such as a blanket, cushion, cover, or similar item. This may cause the seat heater to overheat. An overheated seat heater may cause a burn or may damage the seat.

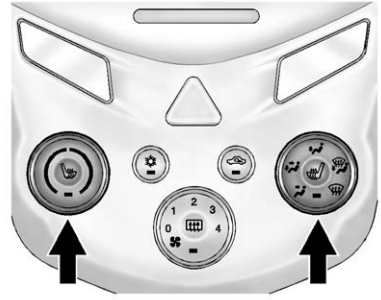

If equipped, the controls are on the climate control system. To operate, the engine must be running.

Press or to heat the driver or passenger seat. The indicator light on the control turns on when this feature is on. Press the control again to turn this feature off.

The passenger seat may take longer to heat up.

Remote Start Auto Heated Seats

If equipped, when it is cold outside the heated seats can be turned on automatically during a remote vehicle start. The heated seats will

be canceled when the ignition is turned on. Press the heated seat controls to use the heated seats after the vehicle is started.

The heated seat indicator lights do not turn on during a remote start.

The temperature performance of an unoccupied seat may be reduced. This is normal.

See *Remote Vehicle Start* ⇨ *29*.

Rear Seats

Folding the Seatback

Either side of the seatback can be folded down for more cargo space. Fold a seatback only when the vehicle is not moving.

Caution
Folding a rear seat with the safety belts still fastened may cause damage to the seat or the safety belts. Always unbuckle the safety belts and return them to their normal stowed position before folding a rear seat.

To fold the seatback down:

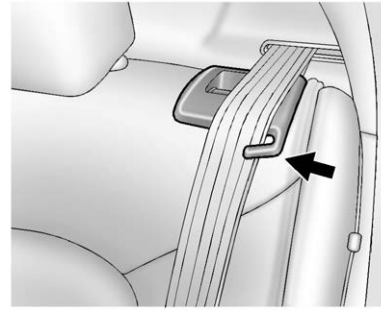

1. Make sure the safety belt is in the retainer hook.

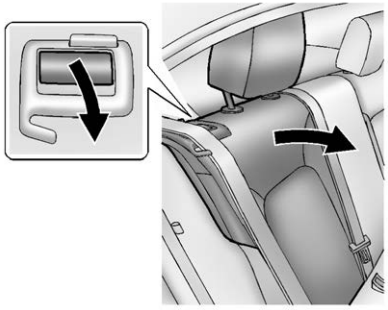

Sedan Shown, Hatchback Similar

2. Reach under the belt and pull the lever on top of the seatback to unlock the seatback.

   A tab near the seatback lever raises when the seatback is unlocked.

3. Fold the seatback down.

   Repeat Steps 1–3 for the other seatback, if desired.

Raising the Seatback

⚠ Warning

If either seatback is not locked, it could move forward in a sudden stop or crash. That could cause injury to the person sitting there. Always push and pull on the seatbacks to be sure they are locked.

⚠ Warning

A safety belt that is improperly routed, not properly attached, or twisted will not provide the protection needed in a crash. The person wearing the belt could be seriously injured. After raising the rear seatback, always check to be sure that the safety belts are properly routed and attached, and are not twisted.

To raise a seatback:

1. Lift the seatback up and push it rearward to lock it in place. Make sure the safety belt is in the retainer hook and is not twisted or caught in the seatback.

   A tab near the seatback lever retracts when the seatback is locked in place.

   The center rear safety belt may lock when you raise the seatback. If this happens, let the belt go back all the way and start again.

2. Push and pull the top of the seatback to be sure it is locked into position.

3. Repeat Steps 1 and 2 for the other seatback, if necessary.

When the seat is not in use, it should be kept in the upright, locked position.

Safety Belts

This section of the manual describes how to use safety belts properly. It also describes some things not to do with safety belts.

⚠ Warning

Do not let anyone ride where a safety belt cannot be worn properly. In a crash, if you or your passenger(s) are not wearing safety belts, injuries can be much worse than if you are wearing safety belts. You can be seriously injured or killed by hitting things inside the vehicle harder or by being ejected from the vehicle. In addition, anyone who is not buckled up can strike other passengers in the vehicle.

It is extremely dangerous to ride in a cargo area, inside or outside of a vehicle. In a collision, passengers riding in these areas are more likely to be seriously injured or killed. Do not allow

(Continued)

Warning (Continued)

passengers to ride in any area of the vehicle that is not equipped with seats and safety belts.

Always wear a safety belt, and check that all passenger(s) are restrained properly too.

This vehicle has indicators as a reminder to buckle the safety belts. See *Safety Belt Reminders* ⇨ *98*.

Why Safety Belts Work

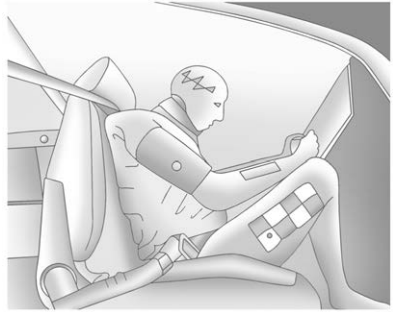

When riding in a vehicle, you travel as fast as the vehicle does. If the vehicle stops suddenly, you keep going until something stops you. It could be the windshield, the instrument panel, or the safety belts!

When you wear a safety belt, you and the vehicle slow down together. There is more time to stop because you stop over a longer distance and, when worn properly, your strongest bones take the forces from the safety belts. That is why wearing safety belts makes such good sense.

Questions and Answers About Safety Belts

Q: Will I be trapped in the vehicle after a crash if I am wearing a safety belt?

A: You *could* be — whether you are wearing a safety belt or not. Your chance of being conscious during and after a crash, so you *can* unbuckle and get out, is *much* greater if you are belted.

Q: If my vehicle has airbags, why should I have to wear safety belts?

A: Airbags are supplemental systems only; so they work *with* safety belts — not instead of them. Whether or not an airbag is provided, all occupants still have to buckle up to get the most protection.

Also, in nearly all states and in all Canadian provinces, the law requires wearing safety belts.

How to Wear Safety Belts Properly

This section is only for people of adult size.

There are special things to know about safety belts and children. And there are different rules for smaller children and infants. If a child will be riding in the vehicle, see *Older Children* ⇨ *68* or *Infants and Young Children* ⇨ *69*. Follow those rules for everyone's protection.

It is very important for all occupants to buckle up. Statistics show that unbelted people are hurt more often in crashes than those who are wearing safety belts.

There are important things to know about wearing a safety belt properly.

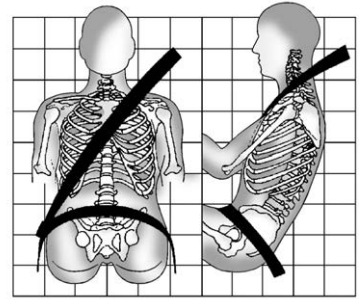

- Sit up straight and always keep your feet on the floor in front of you.
- Always use the correct buckle for your seating position.
- Wear the lap part of the belt low and snug on the hips, just touching the thighs. In a crash, this applies force to the strong pelvic bones and you would be less likely to slide under the lap belt. If you slid under it, the belt would apply force on your abdomen. This could cause serious or even fatal injuries.
- Wear the shoulder belt over the shoulder and across the chest. These parts of the body are best able to take belt restraining forces. The shoulder belt locks if there is a sudden stop or crash.

⚠ Warning

You can be seriously injured, or even killed, by not wearing your safety belt properly.

- Never allow the lap or shoulder belt to become loose or twisted.
- Never wear the shoulder belt under both arms or behind your back.
- Never route the lap or shoulder belt over an armrest.

Lap-Shoulder Belt

All seating positions in the vehicle have a lap-shoulder belt.

The following instructions explain how to wear a lap-shoulder belt properly.

1. Adjust the seat, if the seat is adjustable, so you can sit up straight. To see how, see “Seats” in the Index.

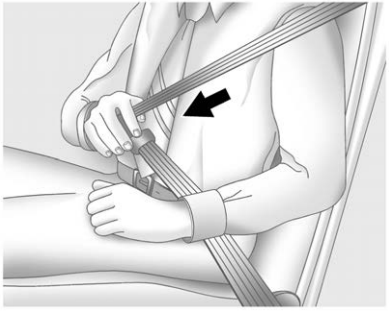

2. Pick up the latch plate and pull the belt across you. Do not let it get twisted.

   The lap-shoulder belt may lock if you pull the belt across you very quickly. If this happens, let the belt go back slightly to unlock it. Then pull the belt across you more slowly.

   If the shoulder portion of a passenger belt is pulled out all the way, the child restraint locking feature may be engaged. If this happens, let the belt go back all the way and start again.

   For the driver and front outboard passenger belts, if the webbing locks in the latch plate before it reaches the buckle, tilt the latch plate to flat to unlock.

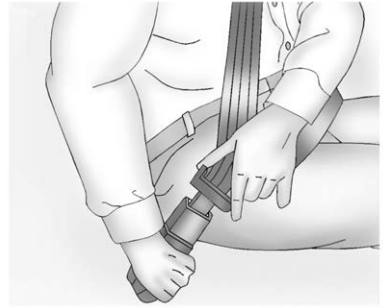

3. Push the latch plate into the buckle until it clicks.

   If the latch plate will not go fully into the buckle, check if the correct buckle is being used.

   Pull up on the latch plate to make sure it is secure. If the belt is not long enough, see *Safety Belt Extender* ⇨ *55*.

   Position the release button on the buckle so that the safety belt could be quickly unbuckled if necessary.

4. If equipped with a shoulder belt height adjuster, move it to the height that is right for you. See “Shoulder Belt Height Adjuster” in this section for instructions on use and important safety information.

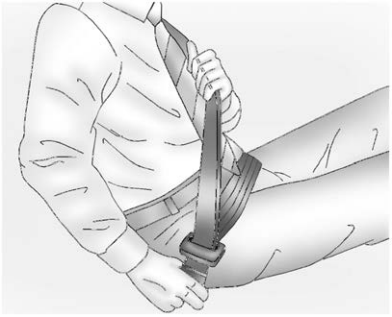

5. To make the lap part tight, pull up on the shoulder belt.

   It may be necessary to pull stitching on the safety belt through the latch plate to fully tighten the lap belt on smaller occupants.

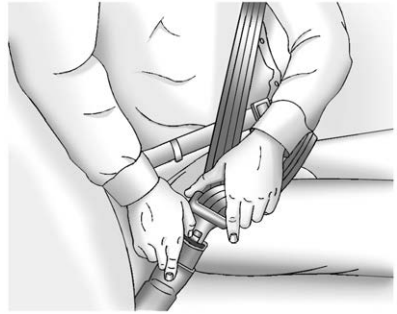

To unlatch the belt, push the button on the buckle. The belt should return to its stowed position.

Always stow the safety belt slowly. If the safety belt webbing returns quickly to the stowed position, the retractor may lock and cannot be pulled out. If this happens, pull the safety belt straight out firmly to unlock the webbing, and then release it. If the webbing is still locked in the retractor, see your dealer.

Before a door is closed, be sure the belt is out of the way. If a door is slammed against a safety belt, damage can occur to both the safety belt and the vehicle.

Shoulder Belt Height Adjuster

The vehicle has a shoulder belt height adjuster for the driver and right front passenger seating positions.

Adjust the height so the shoulder portion of the belt is on the shoulder and not falling off of it. The belt should be close to, but not contacting, the neck. Improper shoulder belt height adjustment could reduce the effectiveness of the safety belt in a crash. See *How to Wear Safety Belts Properly* ⇨ *51*.

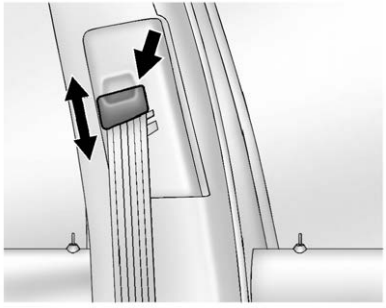

The adjuster can be moved up by pushing the slide/trim up. To move the adjuster down, press the release button and move it down.

After the adjuster is set to the desired position, try to move it down without pressing the release button to make sure it has locked into position.

Safety Belt Pretensioners

This vehicle has safety belt pretensioners for front outboard occupants. Although the safety belt pretensioners cannot be seen, they are part of the safety belt assembly. They can help tighten the safety belts during the early stages of a moderate to severe frontal, near frontal, or rear crash if the threshold conditions for pretensioner activation are met. Safety belt pretensioners can also help tighten the safety belts in a side crash or a rollover event.

Pretensioners work only once. If the pretensioners activate in a crash, the pretensioners and probably other new parts of the vehicle's safety belt system will need to be replaced. See *Replacing Safety Belt System Parts after a Crash* ⇨ *55*.

Rear Safety Belt Comfort Guides

Rear safety belt comfort guides may provide added safety belt comfort for older children who have outgrown booster seats and for some adults. When installed on a shoulder belt, the comfort guide positions the belt away from the neck and head.

Comfort guides are available through your dealer for the rear outboard seating positions. Instructions are included with the guide.

Safety Belt Use During Pregnancy

Safety belts work for everyone, including pregnant women. Like all occupants, they are more likely to be seriously injured if they do not wear safety belts.

A pregnant woman should wear a lap-shoulder belt, and the lap portion should be worn as low as possible, below the rounding, throughout the pregnancy.

The best way to protect the fetus is to protect the mother. When a safety belt is worn properly, it is more likely that the fetus will not be hurt in a crash. For pregnant women, as for anyone, the key to making safety belts effective is wearing them properly.

Safety Belt Extender

If the vehicle's safety belt will fasten around you, you should use it.

But if a safety belt is not long enough, your dealer will order you an extender. When you go in to order it, take the heaviest coat you will wear, so the extender will be long enough for you. To help avoid personal injury, do not let someone else use it, and use it only for the seat it is made to fit. The extender has been designed for adults. Never use it for securing child seats. To wear it, attach it to the regular safety belt. For more information, see the instruction sheet that comes with the extender.

Safety System Check

Now and then, check that the safety belt reminder light, safety belts, buckles, latch plates, retractors, and anchorages are all working properly. Look for any other loose or damaged safety belt system parts that might keep a safety belt system from doing its job. See your dealer to have it repaired. Torn or frayed safety belts may not protect you in a crash. They can rip apart under impact forces. If a belt is torn or frayed, get a new one right away.

Make sure the safety belt reminder light is working. See *Safety Belt Reminders* ⇨ *98*.

Keep safety belts clean and dry. See *Safety Belt Care* ⇨ *55*.

Safety Belt Care

Keep belts clean and dry.

⚠ Warning

Do not bleach or dye safety belts. It may severely weaken them. In a crash, they might not be able to provide adequate protection. Clean safety belts only with mild soap and lukewarm water.

Replacing Safety Belt System Parts after a Crash

⚠ Warning

A crash can damage the safety belt system in the vehicle.
A damaged safety belt system may not properly protect the person using it, resulting in serious injury or even death in a crash. To help make sure the safety belt systems are working properly after a crash, have them inspected and any necessary replacements made as soon as possible.

After a minor crash, replacement of safety belts may not be necessary. But the safety belt assemblies that were used during any crash may have been stressed or damaged. See your dealer to have the safety belt assemblies inspected or replaced.

New parts and repairs may be necessary even if the safety belt system was not being used at the time of the crash.

Have the safety belt pretensioners, if equipped, checked if the vehicle has been in a crash, or if the airbag readiness light stays on after you start the vehicle or while you are driving. See *Airbag Readiness Light* ⇨ *99*.

Airbag System

The vehicle has the following airbags:

- A frontal airbag for the driver.
- A frontal airbag for the front outboard passenger.
- A knee airbag for the driver.
- A knee airbag for the front outboard passenger.
- A seat-mounted side impact airbag for the driver.
- A seat-mounted side impact airbag for the front outboard passenger.
- Seat-mounted side impact airbags for the second row outboard passengers.
- A roof-rail airbag for the driver and the passenger seated directly behind the driver.
- A roof-rail airbag for the front outboard passenger and the passenger seated directly behind the front outboard passenger.

All vehicle airbags have the word AIRBAG on the trim or on a label near the deployment opening.

For frontal airbags, the word AIRBAG is on the center of the steering wheel for the driver and on the instrument panel for the front outboard passenger.

For knee airbags, the word AIRBAG is on the lower part of the instrument panel.

For seat-mounted side impact airbags, the word AIRBAG is on the side of the seatback closest to the door.

For roof-rail airbags, the word AIRBAG is on the ceiling or trim.

Airbags are designed to supplement the protection provided by safety belts. Even though today's airbags are also designed to help reduce the risk of injury from the force of an inflating bag, all airbags must inflate very quickly to do their job.

Here are the most important things to know about the airbag system:

⚠ Warning

You can be severely injured or killed in a crash if you are not wearing your safety belt, even with airbags. Airbags are designed to work with safety belts, not replace them. Also, airbags are not designed to inflate in every crash. In some crashes safety belts are the only restraint. See *When Should an Airbag Inflate?* ⇨ *59*.

Wearing your safety belt during a crash helps reduce the chance of hitting things inside the vehicle or being ejected from it. Airbags are “supplemental restraints” to the safety belts. Everyone in the vehicle should wear a safety belt properly, whether or not there is an airbag for that person.

⚠ Warning

Because airbags inflate with great force and faster than the blink of an eye, anyone who is up against, or very close to any airbag when it inflates can be seriously injured or killed. Do not sit unnecessarily close to any airbag, as you would be if sitting on the edge of the seat or leaning forward. Safety belts help keep you in position before and during a crash. Always wear a safety belt, even with airbags. The driver should sit as far back as possible while still maintaining control of the vehicle. The safety belts and the front outboard passenger airbags are most effective when you are sitting well back and upright in the seat with both feet on the floor.

Occupants should not lean on or sleep against the door or side windows in seating positions with seat-mounted side impact airbags and/or roof-rail airbags.

⚠ Warning

Children who are up against, or very close to, any airbag when it inflates can be seriously injured or killed. Always secure children properly in the vehicle. To read how, see *Older Children* ⇨ *68* or *Infants and Young Children* ⇨ *69*.

There is an airbag readiness light on the instrument panel cluster, which shows the airbag symbol. The system checks the airbag electrical system for malfunctions. The light tells you if there is an electrical problem. See *Airbag Readiness Light* ⇨ *99* for more information.

Where Are the Airbags?

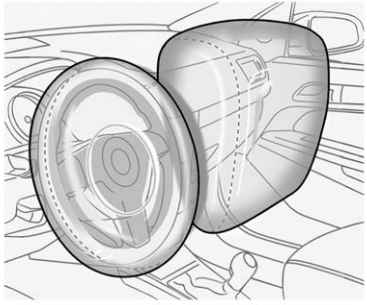

The driver frontal airbag is in the center of the steering wheel.

The front outboard passenger frontal airbag is in the passenger side instrument panel.

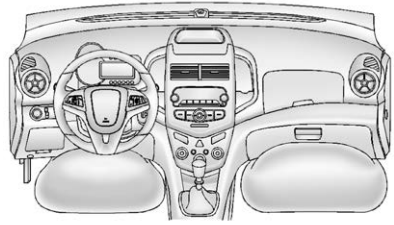

The driver knee airbag is below the steering column. The front outboard passenger knee airbag is below the glove box.

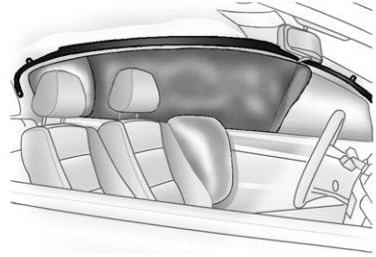

Driver Side Shown, Passenger Side Similar

The seat-mounted side impact airbags for the driver and front outboard passenger are in the side of the seatbacks closest to the door.

The roof-rail airbags for the driver, front outboard passenger, and second row outboard passengers are in the ceiling above the side windows.

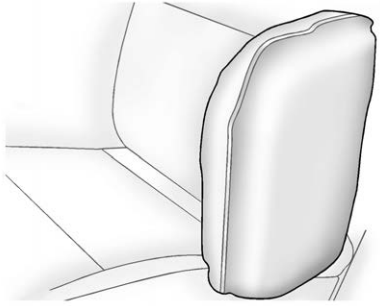

Rear Seat Driver Side Shown, Passenger Side Similar

On vehicles with second row seat-mounted side impact airbags, they are in the sides of the rear seatback closest to the door.

⚠ Warning

If something is between an occupant and an airbag, the airbag might not inflate properly or it might force the object into that person causing severe injury or even death. The path of an inflating airbag must be kept

(Continued)

Warning (Continued)

clear. Do not put anything between an occupant and an airbag, and do not attach or put anything on the steering wheel hub or on or near any other airbag covering.

Do not use seat accessories that block the inflation path of a seat-mounted side impact airbag.

Never secure anything to the roof of a vehicle with roof-rail airbags by routing a rope or tie-down through any door or window opening. If you do, the path of an inflating roof-rail airbag will be blocked.

When Should an Airbag Inflate?

This vehicle is equipped with airbags. See *Airbag System* ⇨ *56*. Airbags are designed to inflate if the impact exceeds the specific airbag system's deployment threshold. Deployment thresholds are used to predict how severe a crash is likely to be in time for the airbags to inflate and help restrain the occupants. The vehicle has electronic sensors that help the airbag system determine the severity of the impact. Deployment thresholds can vary with specific vehicle design.

Frontal airbags are designed to inflate in moderate to severe frontal or near frontal crashes to help reduce the potential for severe injuries, mainly to the driver's or front outboard passenger's head and chest.

Whether the frontal airbags will or should inflate is not based primarily on how fast the vehicle is traveling. It depends on what is hit, the direction of the impact, and how quickly the vehicle slows down.

Frontal airbags may inflate at different crash speeds depending on whether the vehicle hits an object straight on or at an angle, and whether the object is fixed or moving, rigid or deformable, narrow or wide.

Frontal airbags are not intended to inflate during vehicle rollovers, rear impacts, or many side impacts.

In addition, the vehicle has advanced technology frontal airbags. Advanced technology frontal airbags adjust the restraint according to crash severity.

Knee airbags are designed to inflate in moderate to severe frontal or near-frontal impacts. Knee airbags are not designed to inflate during vehicle rollovers, in rear impacts, or in many side crashes.

Seat-mounted side impact airbags are designed to inflate in moderate to severe side crashes depending on the location of the impact. Seat-mounted side impact airbags are not designed to inflate in frontal impacts, near frontal impacts, rollovers, or rear impacts.
A seat-mounted side impact airbag is designed to inflate on the side of the vehicle that is struck.

Roof-rail airbags are designed to inflate in moderate to severe side crashes depending on the location of the impact. In addition, these roof-rail airbags are designed to inflate during a rollover or in a severe frontal impact. Roof-rail airbags are not designed to inflate in rear impacts. Both roof-rail airbags will inflate when either side of the vehicle is struck, if the sensing system predicts that the vehicle is about to roll over on its side, or in a severe frontal impact.

In any particular crash, no one can say whether an airbag should have inflated simply because of the vehicle damage or the repair costs.

What Makes an Airbag Inflate?

In a deployment event, the sensing system sends an electrical signal triggering a release of gas from the inflator. Gas from the inflator fills the airbag causing the bag to break out of the cover. The inflator, the airbag, and related hardware are all part of the airbag module.

For airbag locations, see *Where Are the Airbags?* ⇨ *58*.

How Does an Airbag Restrain?

In moderate to severe frontal or near frontal collisions, even belted occupants can contact the steering wheel or the instrument panel. In moderate to severe side collisions, even belted occupants can contact the inside of the vehicle.

Airbags supplement the protection provided by safety belts by distributing the force of the impact more evenly over the occupant's body.

Rollover capable roof-rail airbags are designed to help contain the head and chest of occupants in the outboard seating positions in the first and second rows. The rollover capable roof-rail airbags are designed to help reduce the risk of full or partial ejection in rollover events, although no system can prevent all such ejections.

But airbags would not help in many types of collisions, primarily because the occupant's motion is not toward those airbags. See *When Should an Airbag Inflate?* ⇨ *59*.

Airbags should never be regarded as anything more than a supplement to safety belts.

What Will You See after an Airbag Inflates?

After the frontal airbags and seat-mounted side impact airbags inflate, they quickly deflate, so quickly that some people may not even realize an airbag inflated. Roof-rail airbags may still be at least partially inflated for some time after they inflate. Some components of the airbag module may be hot for several minutes. For location of the airbags, see *Where Are the Airbags?* ⇨ *58*.

The parts of the airbag that come into contact with you may be warm, but not too hot to touch. There may be some smoke and dust coming from the vents in the deflated airbags. Airbag inflation does not prevent the driver from seeing out of the windshield or being able to steer the vehicle, nor does it prevent people from leaving the vehicle.

⚠ Warning

When an airbag inflates, there may be dust in the air. This dust could cause breathing problems for people with a history of asthma or other breathing trouble. To avoid this, everyone in the vehicle should get out as soon as it is safe to do so. If you have breathing problems but cannot get out of the vehicle after an airbag inflates, then get fresh air by opening a window or a door. If you experience breathing problems following an airbag deployment, you should seek medical attention.

The vehicle has a feature that may automatically unlock the doors, turn on the interior lamps and hazard warning flashers, and shut off the fuel system after the airbags inflate. The feature may also activate, without airbag inflation, after an event that exceeds a predetermined threshold. You can lock the doors, and turn off the interior lamps, and turn off the hazard warning flashers by using the controls for those features.

⚠ Warning

A crash severe enough to inflate the airbags may have also damaged important functions in the vehicle, such as the fuel system, brake and steering systems, etc. Even if the vehicle appears to be drivable after a moderate crash, there may be concealed damage that could make it difficult to safely operate the vehicle.

Use caution if you should attempt to restart the engine after a crash has occurred.

In many crashes severe enough to inflate the airbag, windshields are broken by vehicle deformation.

Additional windshield breakage may also occur from the front outboard passenger airbag.

- Airbags are designed to inflate only once. After an airbag inflates, you will need some new parts for the airbag system. If you do not get them, the airbag system will not be there to help protect you in another crash. A new system will include airbag modules and possibly other parts. The service manual for the vehicle covers the need to replace other parts.
- The vehicle has a crash sensing and diagnostic module which records information after a crash. See *Vehicle Data Recording and Privacy* ⇨ *330* and *Event Data Recorders* ⇨ *330*.
- Let only qualified technicians work on the airbag systems. Improper service can mean that an airbag system will not work properly. See your dealer for service.

Passenger Sensing System

The vehicle has a passenger sensing system for the front outboard passenger position. The passenger airbag status indicator will light on the instrument panel when the vehicle is started.

United States

Canada

The words ON and OFF, or the symbols for on and off, will be visible during the system check. When the system check is complete, either the word ON or OFF, or the symbol for on or off, will be visible. See *Passenger Airbag Status Indicator* ⇨ *99*.

The passenger sensing system turns off the front outboard passenger frontal airbag and knee airbag under certain conditions. No other airbag is affected by the passenger sensing system.

The passenger sensing system works with sensors that are part of the front outboard passenger seat. The sensors are designed to detect the presence of a properly seated occupant and determine if the front outboard passenger frontal airbag and knee airbag should be allowed to inflate or not.

According to accident statistics, children are safer when properly secured in a rear seat in the correct child restraint for their weight and size.

Whenever possible, children age 12 and under should be secured in a rear seating position.

Never put a rear-facing child seat in the front. This is because the risk to the rear-facing child is so great, if the airbag inflates.

⚠ Warning

A child in a rear-facing child restraint can be seriously injured or killed if the front outboard passenger frontal airbag inflates. This is because the back of the rear-facing child restraint would be very close to the inflating airbag. A child in a forward-facing child restraint can be seriously injured or killed if the front outboard passenger frontal airbag inflates and the passenger seat is in a forward position.

Even if the passenger sensing system has turned off the front outboard passenger airbag(s), no system is fail-safe. No one can guarantee that an airbag will not

(Continued)

Warning (Continued)

inflate under some unusual circumstance, even though the airbag(s) are off.

Secure rear-facing child restraints in a rear seat, even if the airbag(s) are off. If you secure a forward-facing child restraint in the front outboard passenger seat, always move the seat as far back as it will go. It is better to secure the child restraint in a rear seat.

The passenger sensing system is designed to turn off the front outboard passenger frontal airbag and knee airbag if:

- The front outboard passenger seat is unoccupied.
- The system determines that an infant is present in a rear-facing infant seat.
- The system determines that a small child is present in a child restraint.
- The system determines that a small child is present in a booster seat.
- A front outboard passenger takes his/her weight off of the seat for a period of time.
- The front outboard passenger seat is occupied by a smaller person, such as a child who has outgrown child restraints.
- There is a critical problem with the airbag system or the passenger sensing system.

When the passenger sensing system has turned off the front outboard passenger frontal airbag and knee airbag, the off indicator will light and stay lit as a reminder that the airbags are off. See *Passenger Airbag Status Indicator* ⇨ *99*.

The passenger sensing system is designed to turn on the front outboard passenger frontal airbag and knee airbag anytime the system senses that a person of adult size is sitting properly in the front outboard passenger seat. When the

passenger sensing system has allowed the airbags to be enabled, the on indicator will light and stay lit as a reminder that the airbags are active.

For some children who have outgrown child restraints, and for very small adults, the passenger sensing system may or may not turn off the front outboard passenger frontal airbag and knee airbag, depending upon the person's seating posture and body build. Everyone in the vehicle who has outgrown child restraints should wear a safety belt properly — whether or not there is an airbag for that person.

⚠ Warning

If the airbag readiness light ever comes on and stays on, it means that something may be wrong with the airbag system. To help avoid injury to yourself or others, have the vehicle serviced right away. See *Airbag Readiness*

(Continued)

Warning (Continued)

Light ⇨ *99* for more information, including important safety information.

If the On Indicator Is Lit for a Child Restraint

If a child restraint has been installed and the on indicator is lit:

1. Turn the vehicle off.
2. Remove the child restraint from the vehicle.
3. Remove any additional items from the seat such as blankets, cushions, seat covers, seat heaters, or seat massagers.
4. Reinstall the child restraint following the directions provided by the child restraint manufacturer and refer to *Securing Child Restraints (Rear Seat)* ⇨ *80* or *Securing Child Restraints (Front Passenger Seat)* ⇨ *82*.
5. If, after reinstalling the child restraint and restarting the vehicle, the on indicator is still lit, turn the vehicle off. Then slightly recline the vehicle seatback and adjust the seat cushion, if adjustable, to make sure that the vehicle seatback is not pushing the child restraint into the seat cushion. Also make sure the child restraint is not trapped under the vehicle head restraint.
   If this happens, adjust the head restraint. See *Head Restraints* ⇨ *43*.
6. Restart the vehicle.

If the on indicator is still lit, secure the child in the child restraint in a rear seat position in the vehicle, and check with your dealer.

If the Off Indicator Is Lit for an Adult-Size Occupant

If a person of adult size is sitting in the front outboard passenger seat, but the off indicator is lit, it could be because that person is not sitting properly in the seat. Use the following steps to allow the system to detect that person and enable the front outboard passenger frontal airbag and knee airbag:

1. Turn the vehicle off.
2. Remove any additional material from the seat, such as blankets, cushions, seat covers, seat heaters, or seat massagers.
3. Place the seatback in the fully upright position.
4. Have the person sit upright in the seat, centered on the seat cushion, with legs comfortably extended.
5. Restart the vehicle and have the person remain in this position for two to three minutes after the on indicator is lit.

⚠ Warning

If the front outboard passenger airbag is turned off for an adult-sized occupant, the airbag will not be able to inflate and help protect that person in a crash, resulting in an increased risk of serious injury or even death. An adult-sized occupant should not

(Continued)

Warning (Continued)

ride in the front outboard passenger seat, if the passenger airbag off indicator is lit.

Additional Factors Affecting System Operation

Safety belts help keep the passenger in position on the seat during vehicle maneuvers and braking, which helps the passenger sensing system maintain the passenger airbag status. See “Safety Belts” and “Child Restraints” in the Index for additional information about the importance of proper restraint use.

A thick layer of additional material, such as a blanket or cushion, or aftermarket equipment such as seat covers, seat heaters, and seat massagers can affect how well the passenger sensing system operates. We recommend that you not use seat covers or other aftermarket equipment except when approved by GM for your specific

vehicle. See *Adding Equipment to the Airbag-Equipped Vehicle* ⇨ *66* for more information about modifications that can affect how the system operates.

The on indicator may be lit if an object, such as a briefcase, handbag, grocery bag, laptop, or other electronic device, is put on an unoccupied seat. If this is not desired, remove the object from the seat.

⚠ Warning

Stowing of articles under the passenger seat or between the passenger seat cushion and seatback may interfere with the proper operation of the passenger sensing system.

Servicing the Airbag-Equipped Vehicle

Airbags affect how the vehicle should be serviced. There are parts of the airbag system in several places around the vehicle. Your dealer and the service manual have information about servicing the vehicle and the airbag system. To purchase a service manual, see *Service Publications Ordering Information* ⇨ *327*.

⚠ Warning

For up to 10 seconds after the vehicle is turned off and the battery is disconnected, an airbag can still inflate during improper service. You can be injured if you are close to an airbag when it inflates. Avoid yellow connectors. They are probably part of the airbag system. Be sure to follow proper service procedures, and make sure the person performing work for you is qualified to do so.

Adding Equipment to the Airbag-Equipped Vehicle

Adding accessories that change the vehicle's frame, bumper system, height, front end, or side sheet metal may keep the airbag system from working properly. The operation of the airbag system can also be affected by changing any parts of the front seats, safety belts, the airbag sensing and diagnostic module, steering wheel, instrument panel, any of the airbag modules, ceiling or pillar garnish trim, front sensors, side impact sensors, or airbag wiring.

Your dealer and the service manual have information about the location of the airbag sensors, sensing and diagnostic module, and airbag wiring.

In addition, the vehicle has a passenger sensing system for the front outboard passenger position, which includes sensors that are part of the passenger seat. The passenger sensing system may not operate properly if the original seat trim is replaced with non-GM covers, upholstery, or trim; or with GM covers, upholstery, or trim designed for a different vehicle. Any object, such as an aftermarket seat heater or a comfort-enhancing pad or device, installed under or on top of the seat fabric, could also

interfere with the operation of the passenger sensing system. This could either prevent proper deployment of the passenger airbag(s) or prevent the passenger sensing system from properly turning off the passenger airbag(s). See *Passenger Sensing System* ⇨ *62*.

The vehicle has rollover roof-rail airbags. See *Different Size Tires and Wheels* ⇨ *270* for additional important information.

If you have to modify your vehicle because you have a disability and you have questions about whether the modifications will affect the vehicle's airbag system, or if you have questions about whether the airbag system will be affected if the vehicle is modified for any other reason, call Customer Assistance. See *Customer Assistance Offices* ⇨ *320*.

Airbag System Check

The airbag system does not need regularly scheduled maintenance or replacement. Make sure the airbag readiness light is working. See *Airbag Readiness Light* ⇨ *99*.

Caution

If an airbag covering is damaged, opened, or broken, the airbag may not work properly. Do not open or break the airbag coverings. If there are any opened or broken airbag coverings, have the airbag covering and/or airbag module replaced. For the location of the airbags, see *Where Are the Airbags?* ⇨ *58*. See your dealer for service.

Replacing Airbag System Parts after a Crash

⚠ Warning

A crash can damage the airbag systems in the vehicle.
A damaged airbag system may not work properly and may not protect you and your passenger(s) in a crash, resulting in serious injury or even death. To help make sure the airbag systems are working properly after a crash, have them inspected and any necessary replacements made as soon as possible.

If an airbag inflates, you will need to replace airbag system parts. See your dealer for service.

If the airbag readiness light stays on after the vehicle is started or comes on when you are driving, the airbag system may not work properly. Have the vehicle serviced right away. See *Airbag Readiness Light* ⇨ *99*.

Child Restraints

Older Children

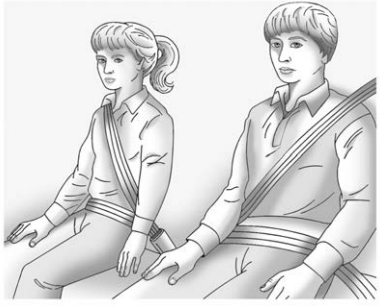

Older children who have outgrown booster seats should wear the vehicle safety belts.

The manufacturer instructions that come with the booster seat state the weight and height limitations for that booster. Use a booster seat with a lap-shoulder belt until the child passes the fit test below:

- Sit all the way back on the seat. Do the knees bend at the seat edge? If yes, continue. If no, return to the booster seat.
- Buckle the lap-shoulder belt. Does the shoulder belt rest on the shoulder? If yes, continue. If no, try using the rear safety belt comfort guide, if available. See “Rear Safety Belt Comfort Guides” under *Lap-Shoulder Belt* ⇨ *52*. If a comfort guide is not available, or if the shoulder belt still does not rest on the shoulder, then return to the booster seat.
- Does the lap belt fit low and snug on the hips, touching the thighs? If yes, continue. If no, return to the booster seat.
- Can proper safety belt fit be maintained for the length of the trip? If yes, continue. If no, return to the booster seat.

Q: What is the proper way to wear safety belts?

A: An older child should wear a lap-shoulder belt and get the additional restraint a shoulder belt can provide. The shoulder belt should not cross the face or neck. The lap belt should fit snugly below the hips, just touching the top of the thighs. This applies belt force to the child's pelvic bones in a crash. It should never be worn over the abdomen, which could cause severe or even fatal internal injuries in a crash.

Also see “Rear Safety Belt Comfort Guides” under *Lap-Shoulder Belt* ⇨ *52*.

According to accident statistics, children are safer when properly restrained in a rear seating position.

In a crash, children who are not buckled up can strike other people who are buckled up, or can be thrown out of the vehicle. Older children need to use safety belts properly.

⚠ Warning

Never allow more than one child to wear the same safety belt. The safety belt cannot properly spread the impact forces. In a crash, they can be crushed together and seriously injured. A safety belt must be used by only one person at a time.

⚠ Warning

Never allow a child to wear the safety belt with the shoulder belt behind their back. A child can be seriously injured by not wearing the lap-shoulder belt properly. In a crash, the child would not be restrained by the shoulder belt. The child could move too far forward increasing the chance of head and neck injury. The child might also slide under the lap belt. The belt force would then be applied right on the abdomen. That could cause serious or fatal injuries. The shoulder belt should go over the shoulder and across the chest.

Infants and Young Children

Everyone in a vehicle needs protection! This includes infants and all other children. Neither the distance traveled nor the age and size of the traveler changes the need, for everyone, to use safety restraints. In fact, the law in every state in the United States and in every Canadian province says children up to some age must be restrained while in a vehicle.

⚠ Warning

Children can be seriously injured or strangled if a shoulder belt is wrapped around their neck. The shoulder belt can tighten but cannot be loosened if it is locked. The shoulder belt locks when it is pulled all the way out of the retractor. It unlocks when the shoulder belt is allowed to go all the way back into the retractor, but it cannot do this if it is wrapped around a child's neck. If the shoulder belt is locked and tightened around a child's neck, the only way to loosen the belt is to cut it.

Never leave children unattended in a vehicle and never allow children to play with the safety belts.

Every time infants and young children ride in vehicles, they should have the protection provided by appropriate child restraints. Neither the vehicle's safety belt system nor its airbag system is designed for them.

Children who are not restrained properly can strike other people, or can be thrown out of the vehicle.

⚠ Warning

Never hold an infant or a child while riding in a vehicle. Due to crash forces, an infant or a child will become so heavy it is not possible to hold it during a crash. For example, in a crash at only 40 km/h (25 mph), a 5.5 kg (12 lb) infant will suddenly become a 110 kg (240 lb) force on a person's arms. An infant should be secured in an appropriate restraint.

⚠ Warning

Children who are up against, or very close to, any airbag when it inflates can be seriously injured or killed. Never put a rear-facing child restraint in the front outboard seat. Secure a rear-facing child restraint in a rear seat. It is also better to secure a forward-facing child restraint in a rear seat. If you must secure a forward-facing child restraint in the front outboard seat, always move the front passenger seat as far back as it will go.

Q: What are the different types of add-on child restraints?

A: Add-on child restraints, which are purchased by the vehicle owner, are available in four basic types. Selection of a particular restraint should take into consideration not only the child's weight, height, and age but also whether or not the restraint will be compatible with the motor vehicle in which it will be used.

For most basic types of child restraints, there are many different models available. When purchasing a child restraint, be sure it is designed to be used in a motor vehicle. If it is, the restraint will have a label saying that it meets federal motor vehicle safety standards.

The restraint manufacturer instructions that come with the restraint state the weight and height limitations for a particular child restraint. In addition, there are many kinds of restraints available for children with special needs.

⚠ Warning

To reduce the risk of neck and head injury in a crash, infants and toddlers should be secured in a rear-facing child restraint until age two, or until they reach the maximum height and weight limits of their child restraint.

⚠ Warning

A young child's hip bones are still so small that the vehicle's regular safety belt may not remain low on the hip bones, as it should. Instead, it may settle up around the child's abdomen. In a crash, the belt would apply force on a body area that is unprotected by any bony structure. This alone could cause serious or fatal injuries. To reduce the risk of serious or fatal injuries during a crash, young children should always be secured in appropriate child restraints.

Child Restraint Systems

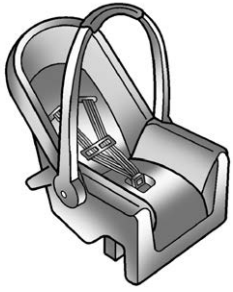

Rear-Facing Infant Seat

A rear-facing infant seat provides restraint with the seating surface against the back of the infant.

The harness system holds the infant in place and, in a crash, acts to keep the infant positioned in the restraint.

Forward-Facing Child Seat

A forward-facing child seat provides restraint for the child's body with the harness.

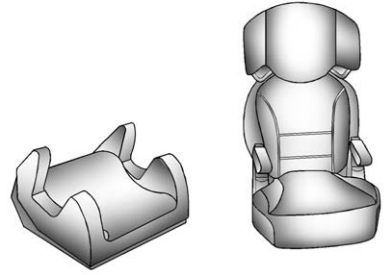

Booster Seats

A booster seat is a child restraint designed to improve the fit of the vehicle's safety belt system.
A booster seat can also help a child to see out the window.

Securing an Add-On Child Restraint in the Vehicle

⚠ Warning

A child can be seriously injured or killed in a crash if the child restraint is not properly secured in the vehicle. Secure the child

(Continued)

Warning (Continued)

restraint properly in the vehicle using the vehicle safety belt or LATCH system, following the instructions that came with that child restraint and the instructions in this manual.

To help reduce the chance of injury, the child restraint must be secured in the vehicle. Child restraint systems must be secured in vehicle seats by lap belts or the lap belt portion of a lap-shoulder belt, or by the LATCH system. See *Lower Anchors and Tethers for Children (LATCH System)* ⇨ *74*. Children can be endangered in a crash if the child restraint is not properly secured in the vehicle.

When securing an add-on child restraint, refer to the instructions that come with the restraint which may be on the restraint itself or in a booklet, or both, and to this manual. The child restraint instructions are important, so if they are not available, obtain a replacement copy from the manufacturer.

Keep in mind that an unsecured child restraint can move around in a collision or sudden stop and injure people in the vehicle. Be sure to properly secure any child restraint in the vehicle — even when no child is in it.

In some areas of the United States and Canada, Certified Child Passenger Safety Technicians (CPSTs) are available to inspect and demonstrate how to correctly use and install child restraints. In the U.S., refer to the National Highway Traffic Safety Administration (NHTSA) website to locate the nearest child safety seat inspection station. For CPST availability in Canada, check with Transport Canada or the Provincial Ministry of Transportation office.

Securing the Child Within the Child Restraint

⚠ Warning

A child can be seriously injured or killed in a crash if the child is not properly secured in the child restraint. Secure the child properly following the instructions that came with that child restraint.

Where to Put the Restraint

According to accident statistics, children and infants are safer when properly restrained in a child restraint system or infant restraint system secured in a rear seating position.

Whenever possible, children aged 12 and under should be secured in a rear seating position.

Never put a rear-facing child seat in the front. This is because the risk to the rear-facing child is so great if the airbag deploys.

⚠ Warning

A child in a rear-facing child restraint can be seriously injured or killed if the front passenger airbag inflates. This is because the back of the rear-facing child restraint would be very close to the inflating airbag. A child in a forward-facing child restraint can be seriously injured or killed if the front passenger airbag inflates and the passenger seat is in a forward position.

Even if the passenger sensing system has turned off the front passenger frontal airbag, no system is fail-safe. No one can guarantee that an airbag will not deploy under some unusual circumstance, even though it is turned off.

Secure rear-facing child restraints in a rear seat, even if the airbag is off. If you secure a forward-facing child restraint in

(Continued)

Warning (Continued)

the front seat, always move the front passenger seat as far back as it will go. It is better to secure the child restraint in a rear seat.

See *Passenger Sensing System* ⇨ *62* for additional information.

When securing a child restraint in a rear seating position, study the instructions that came with the child restraint to make sure it is compatible with this vehicle.

Child restraints and booster seats vary considerably in size, and some may fit in certain seating positions better than others.

Depending on where you place the child restraint and the size of the child restraint, you may not be able to access adjacent safety belt assemblies or LATCH anchors for additional passengers or child restraints. Adjacent seating positions should not be used if the child restraint prevents access to or interferes with the routing of the safety belt.

Wherever a child restraint is installed, be sure to secure the child restraint properly.

Keep in mind that an unsecured child restraint can move around in a collision or sudden stop and injure people in the vehicle. Be sure to properly secure any child restraint in the vehicle — even when no child is in it.

Lower Anchors and Tethers for Children (LATCH System)

The LATCH system secures a child restraint during driving or in a crash. LATCH attachments on the child restraint are used to attach the child restraint to the anchors in the vehicle. The LATCH system is designed to make installation of a child restraint easier.

In order to use the LATCH system in your vehicle, you need a child restraint that has LATCH

attachments. LATCH-compatible rear-facing and forward-facing child seats can be properly installed using either the LATCH anchors or the vehicle's safety belts. Do not use both the safety belts and the LATCH anchorage system to secure a rear-facing or forward-facing child seat.

Booster seats use the vehicle's safety belts to secure the child in the booster seat. If the manufacturer recommends that the booster seat be secured with the LATCH system, this can be done as long as the booster seat can be positioned properly and there is no interference with the proper positioning of the lap-shoulder belt on the child.

Make sure to follow the instructions that came with the child restraint, and also the instructions in this manual.

When installing a child restraint with a top tether, you must also use either the lower anchors or the safety belts to properly secure the child restraint. A child restraint must never be installed using only the top tether and anchor.

The LATCH anchorage system can be used until the combined weight of the child plus the child restraint is 29.5 kg (65 lbs). Use the safety belt alone instead of the LATCH anchorage system once the combined weight is more than 29.5 kg (65 lbs).

The following explains how to attach a child restraint with these attachments in the vehicle.

Not all vehicle seating positions or child restraints have lower anchors and attachments or top tether anchors and attachments. In this case, the safety belt must be used (with top tether where available) to secure the child restraint. See *Securing Child Restraints (Rear Seat)* ⇨ *80* or *Securing Child Restraints (Front Passenger Seat)* ⇨ *82*.

Lower Anchors

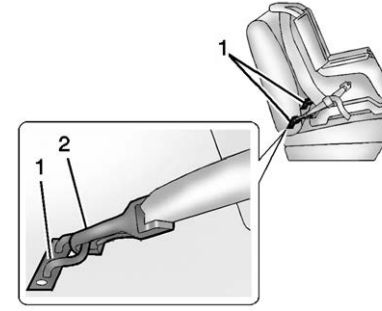

Lower anchors (1) are metal bars built into the vehicle. There are two lower anchors for each LATCH seating position that will accommodate a child restraint with lower attachments (2).

Top Tether Anchor

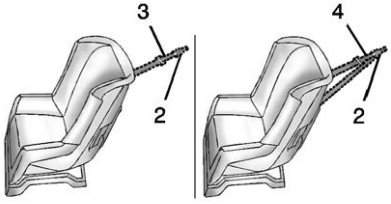

A top tether (3, 4) anchors the top of the child restraint to the vehicle. A top tether anchor is built into the vehicle. The top tether attachment (2) on the child restraint connects to the top tether anchor in the vehicle in order to reduce the forward movement and rotation of the child restraint during driving or in a crash.

The child restraint may have a single tether (3) or a dual tether (4). Either will have a single attachment (2) to secure the top tether to the anchor.

Some child restraints that have a top tether are designed for use with or without the top tether being attached. Others require the top tether always to be attached. In Canada, the law requires that forward-facing child restraints have a top tether, and that the tether be attached. Be sure to read and follow the instructions for your child restraint.

Lower Anchor and Top Tether Anchor Locations

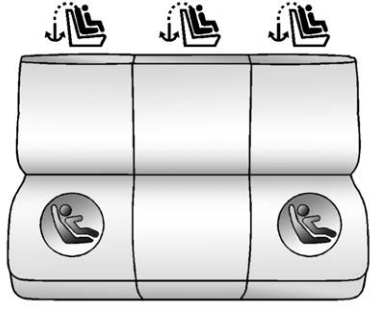

(Top Tether Anchor) : Seating positions with top tether anchors.

(Lower Anchor) : Seating positions with two lower anchors.

To assist in locating the lower anchors, each seating position with lower anchors has two labels, near the crease between the seatback and the seat cushion.

To assist in locating the top tether anchors, the top tether anchor symbol is on the cover for sedan models or near the anchors on hatchback models.

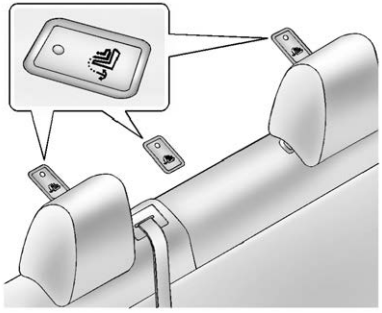

Sedan

For sedan models, the top tether anchors are under the covers behind the rear seat on the filler panel. Pull open the cover to access the top tether anchors. Be sure to use an anchor on the same side of the vehicle as the seating position where the child restraint will be placed.

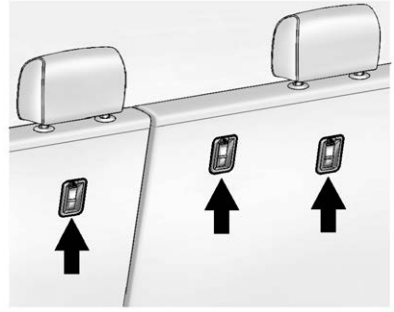

Hatchback

For hatchback models, the top tether anchors are on the back of the rear seatbacks. Remove the cargo cover before installing the top tether. The cargo cover should remain off while the top tether is in use. Be sure to use an anchor on the same side of the vehicle as the seating position where the child restraint will be placed.

Do not secure a child restraint in a position without a top tether anchor if a national or local law requires that the top tether be attached, or if the instructions that come with the child restraint say that the top tether must be attached.

According to accident statistics, children and infants are safer when properly restrained in a child restraint system or infant restraint system secured in a rear seating position. See *Where to Put the Restraint* ⇨ *73* for additional information.

Securing a Child Restraint Designed for the LATCH System

⚠ Warning

If a LATCH-type child restraint is not attached to anchors or with the safety belt, the child restraint will not be able to protect the child correctly. In a crash, the child could be seriously injured or killed. Install a LATCH-type child restraint properly using the anchors, or use the vehicle safety belts to secure the restraint,

(Continued)

Warning (Continued)

following the instructions that came with the child restraint and the instructions in this manual.

⚠ Warning

To reduce the risk of serious or fatal injuries during a crash, do not attach more than one child restraint to a single anchor. Attaching more than one child restraint to a single anchor could cause the anchor or attachment to come loose or even break during a crash. A child or others could be injured.

⚠ Warning

Children can be seriously injured or strangled if a shoulder belt is wrapped around their neck. The shoulder belt can tighten but cannot be loosened if it is locked. The shoulder belt locks when it is pulled all the way out of the retractor. It unlocks when the shoulder belt is allowed to go all the way back into the retractor, but it cannot do this if it is wrapped around a child's neck. If the shoulder belt is locked and tightened around a child's neck, the only way to loosen the belt is to cut it.

Buckle any unused safety belts behind the child restraint so children cannot reach them. Pull the shoulder belt all the way out of the retractor to set the lock, and tighten the belt behind the child restraint after the child restraint has been installed.

Caution

Do not let the LATCH attachments rub against the vehicle's safety belts. This may damage these parts. If necessary, move buckled safety belts to avoid rubbing the LATCH attachments.

Do not fold the empty rear seat with a safety belt buckled. This could damage the safety belt or the seat. Unbuckle and return the safety belt to its stowed position, before folding the seat.

If you need to secure more than one child restraint in the rear seat, see *Where to Put the Restraint* ⇨ 73.

This system is designed to make the installation of child restraints easier. When using lower anchors, do not use the vehicle's safety belts. Instead, use the vehicle's anchors and child restraint attachments to secure the restraints. Some restraints also use another vehicle anchor to secure a top tether.

1. Attach and tighten the lower attachments to the lower anchors. If the child restraint does not have lower attachments or the desired seating position does not have lower anchors, secure the child restraint with the top tether and the safety belts. Refer to your child restraint manufacturer instructions and the instructions in this manual.
   1.1. Find the lower anchors for the desired seating position.
   1.2. Put the child restraint on the seat.
   1.3. Attach and tighten the lower attachments on the child restraint to the lower anchors.
2. If the child restraint manufacturer recommends that the top tether be attached, attach and tighten the top tether to the top tether anchor, if equipped. Refer to the child restraint instructions and the following steps:
   2.1. Find the top tether anchor.
   2.2. Open the cover, if equipped, to access the top tether anchors.
   2.3. For hatchback models, remove the cargo cover before installing the top tether. The cargo cover should remain off while the top tether is in use.
   2.4. Route and tighten the top tether according to your child restraint instructions and the following instructions:

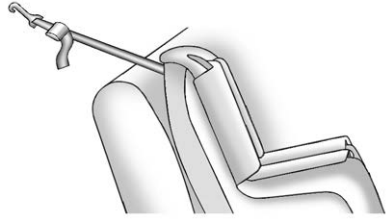

If the position you are using does not have a headrest or head restraint and you are using a single tether, route the tether over the seatback.

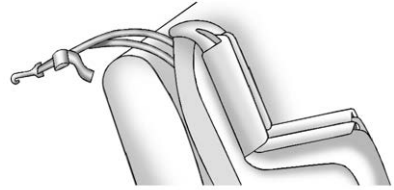

If the position you are using does not have a headrest or head restraint and you are using a dual tether, route the tether over the seatback.

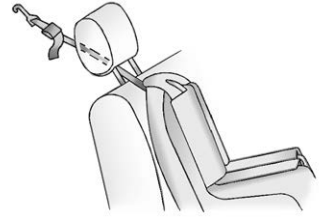

If the position you are using has an adjustable headrest or head restraint and you are using a single tether, raise the headrest or head restraint and route the tether under the headrest or head restraint and in between the headrest or head restraint posts.

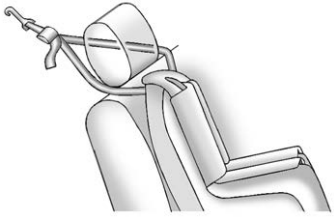

If the position you are using has an adjustable headrest or head restraint and you are using a dual tether, raise the headrest or head restraint and route the tether under the headrest or head restraint and around the headrest or head restraint posts.

3. Before placing a child in the child restraint, make sure it is securely held in place. To check, grasp the child restraint at the LATCH path and attempt to move it side to side and back and forth. There should be no more than 2.5 cm (1 in) of movement for proper installation.

Replacing LATCH System Parts After a Crash

⚠ Warning

A crash can damage the LATCH system in the vehicle. A damaged LATCH system may not properly secure the child restraint, resulting in serious injury or even death in a crash. To help make sure the LATCH system is working properly after a crash,

(Continued)

Warning (Continued)

see your dealer to have the system inspected and any necessary replacements made as soon as possible.

If the vehicle has the LATCH system and it was being used during a crash, new LATCH system parts may be needed.

New parts and repairs may be necessary even if the LATCH system was not being used at the time of the crash.

Securing Child Restraints (Rear Seat)

When securing a child restraint in a rear seating position, study the instructions that came with the child restraint to make sure it is compatible with this vehicle.

If the child restraint has the LATCH system, see *Lower Anchors and Tethers for Children (LATCH System)* ⇨ *74* for how and where to

install the child restraint using LATCH. If a child restraint is secured in the vehicle using a safety belt and it uses a top tether, see *Lower Anchors and Tethers for Children (LATCH System)* ⇨ *74* for top tether anchor locations.

Do not secure a child seat in a position without a top tether anchor if a national or local law requires that the top tether be anchored, or if the instructions that come with the child restraint say that the top strap must be anchored.

In Canada, the law requires that forward-facing child restraints have a top tether, and that the tether be attached.

If the child restraint or vehicle seat position does not have the LATCH system, you will be using the safety belt to secure the child restraint in this position. Be sure to follow the instructions that came with the child restraint. Secure the child in the child restraint when and as the instructions say.

If more than one child restraint needs to be installed in the rear seat, be sure to read *Where to Put the Restraint* ⇨ *73*.

1. Put the child restraint on the seat.
2. Pick up the latch plate, and run the lap and shoulder portions of the vehicle safety belt through or around the restraint. The child restraint instructions will show you how.

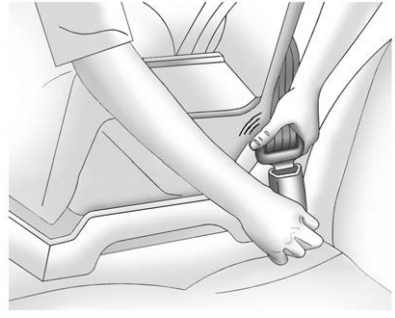

3. Push the latch plate into the buckle until it clicks.

   Position the release button on the buckle so that the safety belt could be quickly unbuckled if necessary.

4. Pull the shoulder belt all the way out of the retractor to set the lock. When the retractor lock is set, the belt can be tightened but not pulled out of the retractor.

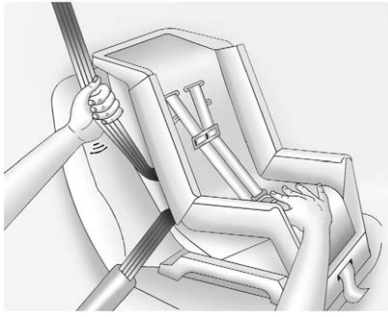

5. To tighten the belt, push down on the child restraint, pull the shoulder portion of the belt to tighten the lap portion of the belt, and feed the shoulder belt back into the retractor. When installing a forward-facing child restraint, it may be helpful to use your knee to push down on the child restraint as you tighten the belt.

   Try to pull the belt out of the retractor to make sure the retractor is locked. If the retractor is not locked, repeat Steps 4 and 5.

6. If the child restraint has a top tether, follow the child restraint manufacturer's instructions regarding the use of the top tether. See *Lower Anchors and Tethers for Children (LATCH System)* ⇨ *74* for more information.

7. Before placing a child in the child restraint, make sure it is securely held in place. To check, grasp the child restraint at the safety belt path and attempt to move it side to side and back and forth. When the child restraint is properly installed, there should be no more than 2.5 cm (1 in) of movement.

To remove the child restraint, unbuckle the vehicle safety belt and let it return to the stowed position. If the top tether is attached to a top tether anchor, disconnect it.

Securing Child Restraints (Front Passenger Seat)

This vehicle has airbags. A rear seat is a safer place to secure a forward-facing child restraint. See *Where to Put the Restraint* ⇨ *73*.

In addition, the vehicle has a passenger sensing system which is designed to turn off the front outboard passenger frontal airbag and knee airbag under certain conditions. See *Passenger Sensing System* ⇨ *62* and *Passenger Airbag Status Indicator* ⇨ *99* for more information on this, including important safety information.

Never put a rear-facing child seat in the front. This is because the risk to the rear-facing child is so great, if the airbag deploys.

⚠ Warning

A child in a rear-facing child restraint can be seriously injured or killed if the front outboard passenger frontal airbag inflates.

(Continued)

Warning (Continued)

This is because the back of the rear-facing child restraint would be very close to the inflating airbag. A child in a forward-facing child restraint can be seriously injured or killed if the front outboard passenger frontal airbag inflates and the passenger seat is in a forward position.

Even if the passenger sensing system has turned off the front outboard passenger airbag(s), no system is fail-safe. No one can guarantee that an airbag will not inflate under some unusual circumstance, even though the airbag(s) are off.

Secure rear-facing child restraints in a rear seat, even if the airbag(s) are off. If you secure a forward-facing child restraint in the front outboard passenger seat, always move the seat as far

(Continued)

Warning (Continued)

back as it will go. It is better to secure the child restraint in a rear seat.

See *Passenger Sensing System* ⇨ *62* for additional information.

If the child restraint uses a top tether, see *Lower Anchors and Tethers for Children (LATCH System)* ⇨ *74* for top tether anchor locations.

Do not secure a child seat in a position without a top tether anchor if a national or local law requires that the top tether be anchored, or if the instructions that come with the child restraint say that the top strap must be anchored.

In Canada, the law requires that forward-facing child restraints have a top tether, and that the tether be attached.

When using the lap-shoulder belt to secure the child restraint in this position, follow the instructions that came with the child restraint and the following instructions:

1. Move the seat as far back as it will go before securing the forward-facing child restraint.

   When the passenger sensing system has turned off the front outboard passenger frontal airbag and knee airbag, the off indicator on the passenger airbag status indicator should light and stay lit when you start the vehicle. See *Passenger Airbag Status Indicator* ⇨ *99*.

2. Put the child restraint on the seat.

3. Pick up the latch plate, and run the lap and shoulder portions of the vehicle's safety belt through or around the restraint. The child restraint instructions will show you how.

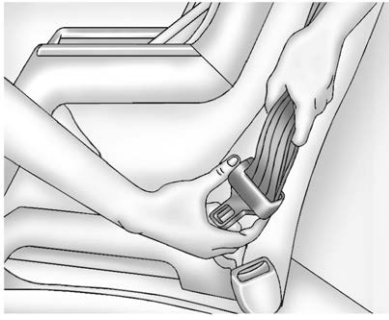

Tilt the latch plate to adjust the belt if needed.

4. Push the latch plate into the buckle until it clicks.

   Position the release button on the buckle so that the safety belt could be quickly unbuckled if necessary.

5. Pull the shoulder belt all the way out of the retractor to set the lock. When the retractor lock is set, the belt can be tightened but not pulled out of the retractor.

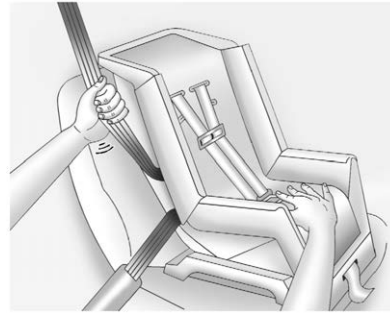

6. To tighten the belt, push down on the child restraint, pull the shoulder portion of the belt to tighten the lap portion of the belt, and feed the shoulder belt back into the retractor. When installing a forward-facing child restraint, it may be helpful to use your knee to push down on the child restraint as you tighten the belt.

   Try to pull the belt out of the retractor to make sure the retractor is locked. If the retractor is not locked, repeat Steps 5 and 6.

7. Before placing a child in the child restraint, make sure it is securely held in place. To check, grasp the child restraint at the safety belt path and attempt to move it side to side and back and forth. When the child restraint is properly installed, there should be no more than 2.5 cm (1 in) of movement.

If the airbags are off, the off indicator in the passenger airbag status indicator will come on and stay on when the vehicle is started.

If a child restraint has been installed and the off symbol is not lit, see “If the On Indicator Is Lit for a Child Restraint” under *Passenger Sensing System* ⇨ *62*.

To remove the child restraint, unbuckle the vehicle's safety belt and let it go back all the way.

Storage

Storage Compartments
Storage Compartments 86
Instrument Panel Storage 86
Glove Box 86

Luggage/Load Locations
Load Compartment (Hatchback) 87

Additional Storage Features
Cargo Cover (Hatchback) 87

Storage Compartments

⚠ Warning

Do not store heavy or sharp objects in storage compartments. In a crash, these objects may cause the cover to open and could result in injury.

Instrument Panel Storage

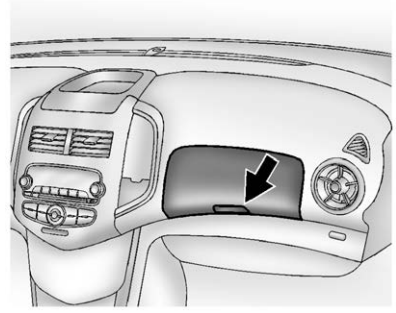

Lift up on the lever to open.

If equipped, the storage area has an auxiliary input jack and USB port inside. See *USB Port* ⇨ *142* and *Auxiliary Devices* ⇨ *144*.

Glove Box

Lift up on the glove box lever to open it.

Luggage/Load Locations

Load Compartment (Hatchback)

The load compartment cover can be used to conceal objects under it or removed and placed on the bottom of the load compartment to carry larger loads.

To remove the load compartment cover:

1. Lift up on the load compartment cover and pull out.
2. Store the load compartment cover on the bottom of the load compartment.

To install the load compartment cover:

1. Align the front sides of the load compartment cover into the slots on both sides at the front of the load compartment.
2. Lower the load compartment cover onto the lip around the load compartment.

Additional Storage Features

Cargo Cover (Hatchback)

⚠ Warning

An unsecured cargo cover could strike people in a sudden stop or turn, or in a crash. Store the cargo cover securely or remove it from the vehicle.

The cargo cover can be used to cover items in the rear of the vehicle.

To remove the cargo cover:

1. Remove both of the cords from the hooks at the top of the liftgate.
2. Push up on the underside of the cargo cover at both pins at the front sides of the cargo cover.

To install the cargo cover:

1. Align the clips on the underside of the cargo cover over the pins on both sides of the cargo area and push down.
2. Reconnect both of the cords to the hooks at the top of the liftgate.

Instruments and Controls

Controls
Steering Wheel Adjustment 90
Steering Wheel Controls 90
Horn 90
Windshield Wiper/Washer 91
Rear Window Wiper/Washer ... 92
Compass 92
Clock 93
Power Outlets 94

Warning Lights, Gauges, and Indicators
Warning Lights, Gauges, and Indicators 95
Instrument Cluster 96
Speedometer 97
Odometer 97
Trip Odometer 97
Tachometer 97
Fuel Gauge 97
Safety Belt Reminders 98
Airbag Readiness Light 99
Passenger Airbag Status Indicator 99
Charging System Light 100
Malfunction Indicator Lamp (Check Engine Light) 100
Service Vehicle Soon Light ... 102
Owner Manual Indicator 102
Brake System Warning Light 102
Antilock Brake System (ABS) Warning Light 103
Up-Shift Light 103
Power Steering Warning Light 104
Lane Departure Warning (LDW) Light 104
Forward Collision Alert (FCA) Warning Light 104
Vehicle Ahead Indicator 104
Traction Off Light 105
StabiliTrak® OFF Light 105
Traction Control System (TCS)/ StabiliTrak® Light 105
Engine Coolant Temperature Warning Light 106
Tire Pressure Light 106
Engine Oil Pressure Light 106
Low Fuel Warning Light 107
Immobilizer Light 107
Reduced Engine Power Light 107
High-Beam On Light 108
Daytime Running Lamps (DRL) Indicator Light 108
Front Fog Lamp Light 108
Lamps On Reminder 108
Cruise Control Light 108
Door Ajar Light 109

Information Displays
Driver Information Center (DIC) 109

Vehicle Messages
Vehicle Messages 111
Engine Oil Messages 111
Tire Messages 111

Trip Computer
Trip Computer 111

Vehicle Personalization
Vehicle Personalization 113

Controls

Steering Wheel Adjustment

To adjust the steering wheel:

1. Pull the lever down.
2. Move the steering wheel up, down, forward, and backward.
3. Pull the lever up to lock the steering wheel in place.

Do not adjust the steering wheel while driving.

Steering Wheel Controls

Some audio steering wheel controls could differ depending on the vehicle's options. Some audio controls can be adjusted at the steering wheel.

/ (Press to Talk) : For vehicles with Bluetooth or OnStar, press to interact with those systems. See *Bluetooth (Voice Recognition)* ⇨ *153* or *Bluetooth (Overview)* ⇨ *146* or *Bluetooth (Infotainment Controls)* ⇨ *147* or OnStar (if equipped).

/ (Mute/End Call) : Press to decline an incoming call, to end speech recognition, or to end a current call. Press to silence the vehicle speakers while using the infotainment system. Press again to turn the sound on.

For vehicles with OnStar or Bluetooth systems, press to reject an incoming call, or end a current call.

△ SRC ▽ (Source) : Press to select an audio source.

Toggle up or down to select the next or previous favorite radio station, USB file, iPod/iPhone song or Bluetooth music.

Toggle and hold up or down to fast forward or reverse the radio stations, USB files, iPod/iPhone songs or Bluetooth music.

+ − (Volume) : Press + or − to increase or decrease the volume.

Horn

Press on the steering wheel pad to sound the horn.

Windshield Wiper/Washer

Sedan

Hatchback

The windshield wiper/washer lever is on the right side of the steering column.

Move the lever to one of the following positions:

HI : Use for fast wipes.

LO : Use for slow wipes.

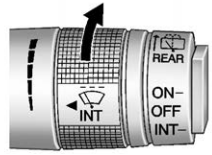

Hatchback Shown, Sedan Similar

INT (Intermittent Wipes) : Move the lever up to INT for intermittent wipes, then turn the INT band up for more frequent wipes or down for less frequent wipes.

OFF : Use to turn the wipers off.

1X (Mist) : For a single wipe, briefly move the wiper lever down. For several wipes, hold the wiper lever down.

Wiper Parking

If the ignition is put in OFF while the wipers are on LO, HI, or INT, they will immediately stop.

If the windshield wiper lever is then moved to OFF before the driver door is opened or within 10 minutes, the wipers will restart and move to the base of the windshield.

If the ignition is put in OFF while the wipers are performing wipes due to windshield washing, the wipers continue to run until they reach the base of the windshield.

(Windshield Washer) : Pull the windshield wiper lever toward you to spray windshield washer fluid and activate the wipers. The wipers will continue until the lever is released or the maximum wash time is reached. When the windshield wiper lever is released, additional wipes may occur depending on how long the windshield washer had been activated. See *Washer Fluid* ⇨ *237* for information on filling the windshield washer fluid reservoir.

⚠ Warning

In freezing weather, do not use the washer until the windshield is warmed. Otherwise the washer fluid can form ice on the windshield, blocking your vision.

Clear snow and ice from the wiper blades before using them. If frozen to the windshield, carefully loosen or thaw them. Damaged wiper blades should be replaced. See *Wiper Blade Replacement* ⇨ *242*.

Heavy snow or ice can overload the wiper motor. A circuit breaker will stop the motor until it cools down.

Rear Window Wiper/ Washer

If equipped with the rear wiper/ washer, the controls are on the end of the windshield wiper lever.

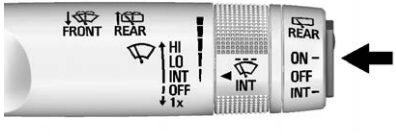

ON : Press the upper portion of the button for continuous rear window wipes.

OFF : The rear wiper turns off when the button is returned to the middle position.

INT (Intermittent Rear Wipes) : Press the lower portion of the button to set a delay between wipes.

(Rear Washer) : Push the windshield wiper lever forward to spray washer fluid on the rear window. The lever returns to its starting position when released.

Auto Wipe in Reverse Gear

If the rear wiper control is off, the rear wiper will automatically operate continuously when the shift lever is in R (Reverse), and the front windshield wiper is performing low or high speed wipes. If the rear wiper control is off, the shift lever is in R (Reverse), and the front windshield wiper is performing interval wipes, then the rear wiper automatically performs interval wipes.

This feature can be changed. See *Vehicle Personalization* ⇨ *113*.

The windshield washer reservoir is used for the windshield and the rear window. Check the fluid level in the reservoir if either washer is not working. See *Washer Fluid* ⇨ *237*.

Compass

The vehicle may have a compass display in the Driver Information Center (DIC). The compass receives its heading and other information from the Global Positioning System (GPS) antenna, StabiliTrak, and vehicle speed information.

Avoid covering the GPS antenna, located on the roof, for long periods of time with objects that may interfere with the antenna's ability to receive a satellite signal. The compass system is designed to operate for a certain number of miles or degrees of turn before needing a signal from the GPS satellites. When the compass display shows CAL, drive the vehicle for a short distance in an open area where it can receive a GPS signal. The compass system

will automatically determine when the GPS signal is restored and provide a heading again.

Clock

The infotainment system controls are used to access the time and date settings through the menu system. See *Operation* ⇨ *132* for information about how to use the menu system.

Radio without Touchscreen

To set the time and date:

1. Press CLOCK.
2. Select Time and Date Settings.
3. Select Set Time or Set Date.
4. Turn the MENU/TUNE knob to adjust the highlighted value.
5. Press the MENU/TUNE knob to select the next value.
6. To save the time or date and return to the Time and Date Settings menu, press the ⇦ BACK button at any time or press the MENU/TUNE knob after adjusting the minutes or year.

To set the 12/24 hour format:

1. Press CLOCK.
2. Select Time and Date Settings.
3. Highlight Set Time Format.
4. Press the MENU/TUNE knob to select the 12 hour or 24 hour display format.

To set the month and day format:

1. Press CLOCK.
2. Select Time and Date Settings.
3. Highlight Set Date Format.
4. Press the MENU/TUNE knob to select MM/DD/YYYY (month/day/year), or DD/MM/YYYY (day/month/year), or YYYY/MM/DD (year/month/day).

Radio with Touchscreen

The infotainment system controls are used to access the time and date settings through the menu system. See *Operation* ⇨ *132* for information about how to use the menu system.

Setting the 12/24 Hour Format

1. Press ⌂ , and then press settings.
2. Press time and date settings.
3. Select 12/24 HR Format.
4. Press ⮌.

Setting the Month and Day Format

1. Press ⌂ , and then press settings.
2. Press time and date settings.
3. Press < or > to set the date display to DD/MM/YYYY (day/month/year), MM/DD/YYYY (month/day/year), or YYYY/MM/DD (year/month/day) display format.
4. Press ⮌.

Setting the Time and Date

1. Press ⌂, and then press settings.
2. Press time and date settings, and then set time and date.
3. Press ∧ or ∨ to adjust the value.
4. Press ↩.

Automatic Clock Sync

1. Press ⌂, and then press settings.
2. Press time and date settings, and then automatic clock sync.
3. Select On to display the real time or Off to display the time set by the user.
4. Press ↩.

Power Outlets

The accessory power outlets can be used to plug in electrical equipment, such as a cell phone or MP3 player.

The vehicle has an accessory power outlet in front of the cupholders on the center floor console.

Remove the cover to access and replace when not in use.

⚠ Warning

Power is always supplied to the outlets. Do not leave electrical equipment plugged in when the vehicle is not in use because the vehicle could catch fire and cause injury or death.

Caution

Leaving electrical equipment plugged in for an extended period of time while the vehicle is off will drain the battery. Always unplug electrical equipment when not in use and do not plug in equipment that exceeds the maximum 20 amp rating.

Certain accessory power plugs may not be compatible with the accessory power outlet and could overload vehicle or adapter fuses. If a problem is experienced, see your dealer.

When adding electrical equipment, be sure to follow the proper installation instructions included with the equipment. See *Add-On Electrical Equipment* ⇨ *217*.

Caution

Hanging heavy equipment from the power outlet can cause damage not covered by the vehicle warranty. The power outlets are designed for accessory power plugs only, such as cell phone charge cords.

Warning Lights, Gauges, and Indicators

Warning lights and gauges can signal that something is wrong before it becomes serious enough to cause an expensive repair or replacement. Paying attention to the warning lights and gauges could prevent injury.

Some warning lights come on briefly when the engine is started to indicate they are working. When one of the warning lights comes on and stays on while driving, or when one of the gauges shows there may be a problem, check the section that explains what to do. Waiting to do repairs can be costly and even dangerous.

Instrument Cluster

English Manual Transmission Shown, Metric Similar

Speedometer

The speedometer shows the vehicle's speed in either kilometers per hour (km/h) or miles per hour (mph).

Odometer

The odometer shows how far the vehicle has been driven, in either kilometers or miles.

Trip Odometer

The trip odometer shows how far the vehicle has been driven since the trip odometer was last reset.

Press the trip odometer reset stem on the cluster to switch between the odometer and trip odometer.

To reset the trip odometer to zero, press and hold the trip odometer reset stem while the trip odometer is displayed. Be careful not to reset the engine oil life monitor accidentally.

Tachometer

The tachometer displays the engine speed in revolutions per minute (rpm).

Caution
If the engine is operated with the rpm's in the warning area at the high end of the tachometer, the vehicle could be damaged, and the damage would not be covered by the vehicle warranty. Do not operate the engine with the rpm's in the warning area.

Fuel Gauge

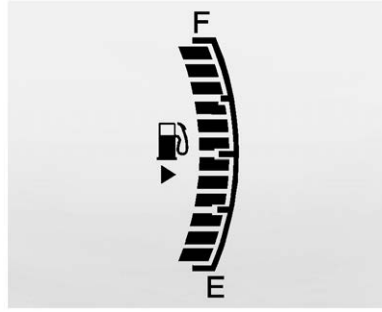

The fuel gauge indicates about how much fuel is left when the ignition is turned to ON/RUN.

When the tank nears empty, the low fuel warning light will come on. There is still a little fuel left, but the vehicle's fuel tank should be filled soon. See *Low Fuel Warning Light* ⇨ *107* for more information.

An arrow on the fuel gauge indicates on which side of the vehicle the fuel door is located.

Here are four things that some owners ask about. None of these show a problem with the fuel gauge:

- At the service station, the gas pump shuts off before the gauge reads full.
- It takes a little more or less fuel to fill up than the gauge indicated. For example, the gauge may have indicated the tank was half full, but it actually took a little more or less than half the tank's capacity to fill the tank.
- The indicator moves a little when turning a corner or speeding up.
- The gauge goes back to empty when the ignition is turned off.

Safety Belt Reminders

Driver Safety Belt Reminder Light

There is a driver safety belt reminder light on the instrument cluster.

When the vehicle is started, this light flashes and a chime may come on to remind the driver to fasten their safety belt. Then the light stays on solid until the belt is buckled. This cycle may continue several times if the driver remains or becomes unbuckled while the vehicle is moving.

If the driver safety belt is buckled, neither the light nor the chime comes on.

Passenger Safety Belt Reminder Light

There is a passenger safety belt reminder light near the passenger airbag status indicator. See *Passenger Sensing System* ⇨ 62.

When the vehicle is started, this light flashes and a chime may come on to remind passengers to fasten their safety belt. Then the light stays on solid until the belt is buckled. This cycle continues several times if the passenger remains or becomes unbuckled while the vehicle is moving.

If the passenger safety belt is buckled, neither the chime nor the light comes on.

The front passenger safety belt reminder light and chime may turn on if an object is put on the seat such as a briefcase, handbag, grocery bag, laptop, or other electronic device. To turn off the reminder light and/or chime, remove the object from the seat or buckle the safety belt.

Airbag Readiness Light

This light shows if there is an electrical problem with the airbag system. The system check includes the airbag sensor(s), passenger sensing system, the pretensioners (if equipped), the airbag modules, the wiring, and the crash sensing and diagnostic module. For more information on the airbag system, see *Airbag System* ⇨ *56*.

The airbag readiness light comes on for several seconds when the vehicle is started. If the light does not come on then, have it fixed immediately.

⚠ Warning

If the airbag readiness light stays on after the vehicle is started or comes on while driving, it means the airbag system might not be working properly. The airbags in the vehicle might not inflate in a crash, or they could even inflate without a crash. To help avoid injury, have the vehicle serviced right away.

Passenger Airbag Status Indicator

The vehicle has a passenger sensing system. See *Passenger Sensing System* ⇨ *62* for important safety information. The instrument panel has a passenger airbag status indicator.

United States

Canada

When the vehicle is started, the passenger airbag status indicator will light ON and OFF, or the symbol for on and off, for several seconds as a system check. Then, after several seconds, the status indicator will light either ON or OFF, or the on or off symbol to let you know the status of the front outboard passenger frontal airbag and knee airbag.

If the word ON or the on symbol is lit on the passenger airbag status indicator, it means that the front

outboard passenger frontal airbag and knee airbag are allowed to inflate.

If the word OFF or the off symbol is lit on the passenger airbag status indicator, it means that the passenger sensing system has turned off the front outboard passenger frontal airbag and knee airbag.

If, after several seconds, both status indicator lights remain on, or if there are no lights at all, there may be a problem with the lights or the passenger sensing system. See your dealer for service.

⚠ Warning

If the airbag readiness light ever comes on and stays on, it means that something may be wrong with the airbag system. To help avoid injury to yourself or others, have the vehicle serviced right away. See *Airbag Readiness Light* ⇨ *99* for more information, including important safety information.

Charging System Light

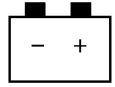

This light will come on briefly when the ignition is turned on, and the engine is not running, as a check to show it is working.

It should go out when the engine is started. If it stays on, or comes on while driving, there may be a problem with the electrical charging system. Have it checked by your dealer. Driving while this light is on could drain the battery. If a short distance must be driven with the light on, turn off all accessories, such as the radio and air conditioner, to help reduce the drain on the battery.

Malfunction Indicator Lamp (Check Engine Light)

This light is part of the vehicle's emission control on-board diagnostic system. If this light is on while the engine is running, a malfunction has been detected and the vehicle may require service. The light should come on to show that it is working when the ignition is in ON/RUN with the engine not running. See *Ignition Positions* ⇨ *191*.

Malfunctions are often indicated by the system before any problem is noticeable. Being aware of the light and seeking service promptly when it comes on may prevent damage.

Caution

If the vehicle is driven continually with this light on, the emission control system may not work as well, the fuel economy may be lower, and the vehicle may not run smoothly. This could lead to costly repairs that might not be covered by the vehicle warranty.

Caution

Modifications to the engine, transmission, exhaust, intake, or fuel system, or the use of replacement tires that do not meet the original tire specifications, can cause this light to come on. This could lead to costly repairs not covered by the vehicle warranty. This could also affect the vehicle's ability to pass an Emissions Inspection/ Maintenance test. See *Accessories and Modifications* ⇨ *220*.

If the light is flashing : A malfunction has been detected that could damage the emission control system and increase vehicle emissions. Diagnosis and service may be required.

To help prevent damage, reduce vehicle speed and avoid hard accelerations and uphill grades.

If the light continues to flash, find a safe place to park. Turn the vehicle off and wait at least 10 seconds before restarting the engine. If the light is still flashing, follow the previous guidelines and see your dealer for service as soon as possible.

If the light is on steady : A malfunction has been detected. Diagnosis and service may be required.

Check the following:

- A loose or missing fuel cap may cause the light to come on. See *Filling the Tank* ⇨ *215*. A few driving trips with the cap properly installed may turn the light off.
- Poor fuel quality can cause inefficient engine operation and poor driveability, which may go away once the engine is warmed up. If this occurs, change the fuel brand. It may require at least one full tank of the proper fuel to turn the light off. See *Fuel* ⇨ *213*.

If the light remains on, see your dealer.

Emissions Inspection and Maintenance Programs

If the vehicle requires an Emissions Inspection/Maintenance test, the test equipment will likely connect to the vehicle's Data Link Connector (DLC).

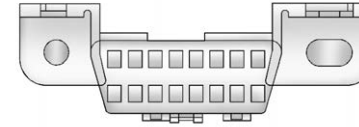

The DLC is under the instrument panel to the left of the steering wheel. Connecting devices that are

not used to perform an Emissions Inspection/Maintenance test or to service the vehicle may affect vehicle operation See *Add-On Electrical Equipment* ⇨ *217*. See your dealer if assistance is needed.

The vehicle may not pass inspection if:

- The light is on when the engine is running.
- The light does not come on when the ignition is in ON/RUN with the engine not running.
- Critical emission control systems have not been completely diagnosed. If this happens, the vehicle would not be ready for inspection and might require several days of routine driving before the system is ready for inspection. This can happen if the 12-volt battery has recently been replaced or run down, or if the vehicle has been recently serviced.

See your dealer if the vehicle will not pass or cannot be made ready for the test.

Service Vehicle Soon Light

For vehicles with this light, it comes on if a condition exists that may require the vehicle to be taken in for service.

If the light comes on, take the vehicle to your dealer for service as soon as possible.

Owner Manual Indicator

This symbol is shown when you need to see the owner manual for additional instructions or information.

Brake System Warning Light

The vehicle brake system consists of two hydraulic circuits. If one circuit is not working, the remaining circuit can still work to stop the vehicle. For normal braking performance, both circuits need to be working

If the warning light comes on, there is a brake problem. Have the brake system inspected right away.

⚠ Warning

The brake system might not be working properly if the brake system warning light is on. Driving with the brake system warning light on can lead to a crash. If the light is still on after the vehicle has been pulled off the road and carefully stopped, have the vehicle towed for service.

Metric

English

This light should come on briefly when the ignition is turned to ON. If it does not come on then, have it fixed so it will be ready to warn if there is a problem.

When the ignition is on, the brake system warning light will also come on when the parking brake is set. The light will stay on if the parking brake does not fully release. If it stays on after the parking brake is fully released, it means there is a brake problem.

If the light comes on while driving, carefully pull off the road and stop. The pedal may be harder to push or may go closer to the floor. It may take longer to stop. If the light is still on, have the vehicle towed for service. See *Towing the Vehicle* ⇨ *289*.

Antilock Brake System (ABS) Warning Light

This light comes on briefly when the engine is started.

If the light stays on, turn the ignition to LOCK/OFF or if the light comes on, stop as soon as possible and turn the ignition off. Then start the engine again to reset the system. If the light still stays on, or comes on again while driving, the vehicle needs service. See your dealer. If the regular brake system warning light is not on, the brakes will still work, but the antilock brakes will not work. If the regular brake system warning light is also on, the antilock brakes will not work and there is a problem with the regular brakes. See *Brake System Warning Light* ⇨ *102*.

The ABS warning light will come on briefly when the ignition is turned to ON/RUN. This is normal. If the light does not come on then, have it fixed so it will be ready to warn if there is a problem.

Up-Shift Light

For manual transmission vehicles, there is an up-shift light that comes on in the lower DIC area. It shows when to shift to the next higher gear for best fuel economy.

See *Manual Transmission* ⇨ *200*.

Power Steering Warning Light

This light comes on briefly when the ignition is turned to ON/RUN as a check to show it is working.

If it does not come on have the vehicle serviced by your dealer.

If this light stays on, or comes on while driving, the system may not be working. If this happens, see your dealer for service.

Lane Departure Warning (LDW) Light

If equipped, this light, located in the center of the instrument panel, comes on briefly while starting the vehicle.

If it does not come on, have the vehicle serviced.

This light is green if LDW is on and ready to operate.

This light changes to amber and flashes to indicate that the lane marking has been crossed without using a turn signal in that direction.

See *Lane Departure Warning (LDW)* ⇨ *212*.

Forward Collision Alert (FCA) Warning Light

This light is on the center of the instrument panel.

The red forward collision alert comes on and flashes when a vehicle is being approached too rapidly.

The forward collision alert stays on when following a vehicle much too closely.

See *Forward Collision Alert (FCA) System* ⇨ *210*.

Vehicle Ahead Indicator

This light is on the center of the instrument panel.

If equipped, this indicator will display green when a vehicle is detected ahead

See *Forward Collision Alert (FCA) System* ⇨ *210*.

Traction Off Light

This light comes on briefly while starting the engine. If it does not, have the vehicle serviced by your dealer. If the system is working normally, the indicator light then turns off.

The traction off light comes on when the Traction Control System (TCS) has been turned off by pressing and releasing the TCS/StabiliTrak button.

This light and the StabiliTrak OFF light come on when StabiliTrak is turned off.

If the TCS is off, wheel spin is not limited. Adjust driving accordingly.

See *Traction Control/Electronic Stability Control* ⇨ *204*.

StabiliTrak® OFF Light

This light comes on briefly while starting the engine. If it does not, have the vehicle serviced by your dealer.

This light comes on when the StabiliTrak system is turned off. If StabiliTrak is off, the Traction Control System (TCS) is also off.

If the StabiliTrak and TCS are off, the system does not assist in controlling the vehicle. Turn on the TCS and the StabiliTrak systems and the warning light turns off.

See *Traction Control/Electronic Stability Control* ⇨ *204*.

Traction Control System (TCS)/StabiliTrak® Light

The StabiliTrak or Traction Control System (TCS) indicator/warning light comes on briefly when the engine is started.

If the light does not come on, have the vehicle serviced by your dealer. If the system is working normally, the indicator light turns off.

If the light is on and not flashing, the TCS, and potentially the StabiliTrak system have been disabled.

If the indicator/warning light is on and flashing, the TCS and/or the StabiliTrak system is actively working.

See *Traction Control/Electronic Stability Control* ⇨ *204*.

Engine Coolant Temperature Warning Light

This light comes on briefly while starting the vehicle.

If it does not, have the vehicle serviced by your dealer. If the system is working normally the indicator light goes off.

Caution
The engine coolant temperature warning light indicates that the vehicle has overheated. Driving with this light on can damage the engine and it may not be covered by the vehicle warranty. See *Engine Overheating* ⇨ *236*.

The engine coolant temperature warning light comes on when the engine has overheated.

If this happens, pull over and turn off the engine as soon as possible. See *Engine Overheating* ⇨ *236*.

Tire Pressure Light

For vehicles with the Tire Pressure Monitor System (TPMS), this light comes on briefly when the engine is started. It provides information about tire pressures and the TPMS.

When the Light Is On Steady

This indicates that one or more of the tires are significantly underinflated.

Stop as soon as possible, and inflate the tires to the pressure value shown on the Tire and Loading Information label. See *Tire Pressure* ⇨ *261*.

When the Light Flashes First and Then Is On Steady

If the light flashes for about a minute and then stays on, there may be a problem with the TPMS. If the problem is not corrected, the light will come on at every ignition cycle. See *Tire Pressure Monitor Operation* ⇨ *263*.

Engine Oil Pressure Light

Caution
Lack of proper engine oil maintenance can damage the engine. Driving with the engine oil low can also damage the engine. The repairs would not be covered by the vehicle warranty. Check the oil level as soon as possible. Add oil if required, but if the oil
(Continued)

Caution (Continued)

level is within the operating range and the oil pressure is still low, have the vehicle serviced. Always follow the maintenance schedule for changing engine oil.

This light should come on briefly as the engine is started. If it does not come on, have the vehicle serviced by your dealer.

If the light comes on and stays on, it means that oil is not flowing through the engine properly. The vehicle could be low on oil and might have some other system problem. See your dealer.

Low Fuel Warning Light

This light comes on for a few seconds when the ignition is turned on as a check to indicate it is working. If it does not come on, have it fixed.

This light comes on when the vehicle is low on fuel.

The low fuel warning light comes on when there are approximately 6.0 L (1.7 gal) of fuel remaining in the tank.

To turn the light off, add fuel to the fuel tank. See *Filling the Tank* ⇨ *215*.

Immobilizer Light

The immobilizer light should come on briefly as the engine is started. If it does not come on, have the vehicle serviced by your dealer. If the system is working normally, the indicator light turns off.

If the light stays on and the engine does not start, there could be a problem with the immobilizer system. See *Immobilizer Operation* ⇨ *37*.

Reduced Engine Power Light

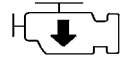

The reduced engine power light should come on briefly as the engine is started. If it does not come on, have the vehicle serviced by your dealer.

This light, along with the malfunction indicator lamp, displays when a noticeable reduction in the vehicle's performance occurs.

The vehicle can be driven at a reduced speed when the reduced engine power light is on but acceleration and speed might be reduced. If this light stays on, see your dealer as soon as possible for diagnosis and repair.

High-Beam On Light

This light comes on when the high-beam headlamps are in use.

See *Headlamp High/Low-Beam Changer* ⇨ *121*.

Daytime Running Lamps (DRL) Indicator Light

This light turns on whenever the Daytime Running Lamps are in use.

See *Daytime Running Lamps (DRL)* ⇨ *121*.

Front Fog Lamp Light

For vehicles with fog lamps, this light comes on when the fog lamps are on.

The light goes out when the fog lamps are turned off. See *Fog Lamps* ⇨ *123* for more information.

Lamps On Reminder

This light comes on when the exterior lamps are in use. See *Exterior Lamp Controls* ⇨ *120*.

Cruise Control Light

For vehicles with cruise control, the cruise control light is white when the cruise control is on and ready, and turns green when the cruise control is set and active.

The light turns off when the cruise control is turned off. See *Cruise Control* ⇨ *206*.

Door Ajar Light

This light comes on when a door is open or not securely latched. Before driving, check that all doors are properly closed.

Information Displays

Driver Information Center (DIC)

The DIC displays information about your vehicle. It also displays warning messages if a system problem is detected. See *Vehicle Messages* ⇨ *111*. All messages appear in the DIC display in the instrument cluster.

DIC Operation and Displays

The DIC has different displays which can be accessed by using the DIC buttons on the turn signal lever on the left side of the steering wheel. The DIC displays trip, fuel, and warning messages if a system problem is detected. See *Trip Computer* ⇨ *111* and *Vehicle Messages* ⇨ *111*.

DIC Buttons

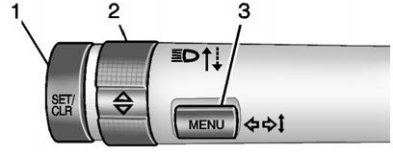

1. **SET/CLR:** Press to set or clear the menu item displayed. This is not used to reset the trip odometer. To reset the trip odometer, use the reset button on the tachometer in the instrument cluster.
2. △ ▽ **(Band):** Turn the band to scroll through the menu items.
3. **MENU:** Press to display the DIC menus. This button is also used to return to or exit the last screen displayed on the DIC.

DIC Menu Items

Press MENU to view the DIC menus. Some items display in the upper display area, some in the lower display area, and others use both the upper and lower display areas. Use △ ▽ to scroll through the menu items. Not all items are available on every vehicle. The following is a list of all possible menu items:

- Units
- Language
- Tire Learn
- Remaining Oil Life

Units

This menu is not available while the vehicle is moving. Press SET/CLR while the unit display is active and move △ ▽ to change units when UNIT SET is displayed. Press SET/CLR to confirm the setting. You will have to select 1, 2, or 3 for the unit display. 1 is Imperial units, 2 is US units, and 3 is metric units. This will change the displays on the cluster and DIC to the type of measurements you select.

Language

This menu is not available while the vehicle is moving. Press SET/CLR while the language display is active and move △ ▽ to change the language of the displays when LANG SET is displayed. You will have to select 1 or 2 for the language display. 1 is Alphabet and 2 is Arabic Numeral. Press SET/CLR to confirm the setting.

Tire Learn

This menu is not available while the vehicle is moving. This display allows for matching of the TPMS sensors. See *Tire Pressure Monitor System* ⇨ *262* and *Tire Pressure Monitor Operation* ⇨ *263*.

Remaining Oil Life

This menu is not available while the vehicle is moving. This display shows an estimate of the oil's remaining useful life. If 99 % is displayed, that means 99% of the current oil life remains.

When the remaining oil life is low, the % CHANGE message will appear on the display. The oil should be changed as soon as possible. See *Engine Oil* ⇨ *226*. In addition to the engine oil life system monitoring the oil life, additional maintenance is recommended in the Maintenance Schedule. See *Maintenance Schedule* ⇨ *302*.

Remember, the oil life display must be reset after each oil change. It will not reset itself. Also, be careful not to reset the oil life display accidentally at any time other than when the oil has just been changed. It cannot be reset accurately until the next oil change. To reset the engine oil life system, press the SET/CLR button while the oil life display is active. See *Engine Oil Life System* ⇨ *228*.

Vehicle Messages

DIC messages display when the status of the vehicle has changed and action may be needed to correct the condition. Multiple messages appear one after another.

Press any of the DIC buttons on the turn signal lever to acknowledge and clear them from the display. More urgent messages cannot be cleared from the DIC display. All messages should be taken seriously. Clearing messages will not correct the problem.

Vehicle messages appear as code numbers.

25 : Left Front Turn Signal Failure

26 : Left Rear Turn Signal Failure

27 : Right Front Turn Signal Failure

28 : Right Rear Turn Signal Failure

49 : Lane Departure Warning Unavailable

52 : Change Timing Belt

77 : Service Front Camera System

84 : Engine Power Is Reduced

89 : Service Vehicle Soon

Engine Oil Messages

% CHANGE

This message displays when the engine oil needs to be changed. When changing the engine oil, be sure to reset the Oil Life System. See *Engine Oil Life System* ⇨ *228*, *Engine Oil* ⇨ *226*, and *Maintenance Schedule* ⇨ *302*.

Tire Messages

LF XX, RF XX, LR XX, or RR XX

A message displays when the tire pressure is low. It shows the location of the low tire and the approximate pressure of the low tire.

If a tire pressure message appears, stop as soon as you can. Inflate the tires by adding air until the tire pressure is equal to the values shown on the Tire and Loading Information label. See *Tires* ⇨ *254*, *Vehicle Load Limits* ⇨ *187*, and *Tire Pressure* ⇨ *261*.

Trip Computer

The trip computer is located in the Driver Information Center (DIC).

It provides the driver with driving information such as average speed, fuel range, average fuel economy, and a timer.

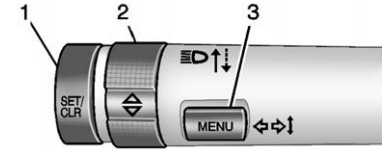

1. **SET/CLR:** Press to set or clear the menu item displayed. This is not used to reset the trip odometer. To reset the trip odometer, use the reset button on the tachometer in the instrument cluster.
2. △ ▽ **(Band):** Turn the band to scroll through the menu items.
3. **MENU:** Press to display the DIC menus. This button is also used to return to or exit the last screen displayed on the DIC.

To operate the trip computer, turn band on the turn signal lever.

The following is a list of the trip computer items”

- Average Speed
- Fuel Range
- Average Fuel Economy
- Timer

Some items can be reset by pressing the SET/CLR button.

Average Speed

Metric

English

This display shows the average speed. To reset the average speed to zero, press and hold the SET/CLR button while the average speed is displayed.

Fuel Range

Metric Shown, English Similar

This displays the approximate distance the vehicle can be driven without refueling. The fuel range estimate is based on an average of the vehicle's fuel economy over recent driving history and the amount of fuel remaining in the fuel tank.

Average Fuel Economy

Metric

English

This display shows the approximate average liters per 100 kilometers (L/100 km) or miles per gallon (mpg).

This number is calculated based on the number of L/100 km (mpg) recorded since the last time this menu item was reset. This number reflects only the approximate average fuel economy that the vehicle has right now, and will change as driving conditions change. To reset the average fuel economy, press and hold the SET/CLR button while the average fuel economy is displayed.

Timer

This display can be used as a timer. To start/stop the timer, press SET/CLR while the timer is displayed. The display will show the amount of time that has passed since the timer was last reset, not including time the ignition is off. The timer will record up to 99:59 hours, after which the display will return to zero. To reset the timer to zero, press and hold SET/CLR.

Vehicle Personalization

Personalization Menu (Radio without Touchscreen)

Use the audio system controls to access the personalization menus for customizing vehicle features.

The following are all possible personalization features. Depending on the vehicle, some may not be available.

CONFIG (Configuration) : Press to access the Configuration Settings menu.

MENU/TUNE : Turn to scroll through the menus. Press to enter the menus and select the menu items.

⇦ **BACK :** Press to exit or move backward in a menu.

Entering the Personalization Menus

1. Press CONFIG to access the Configuration Settings menu.
2. Turn the MENU/TUNE knob to highlight Vehicle Settings.
3. Press MENU/TUNE to select the Vehicle Settings menu.

The following list of menu items may be available:

- Comfort and Convenience
- Language
- Lighting
- Power Door Locks
- Remote Lock, Unlock, Start
- Return to Factory Settings

Comfort and Convenience

Select the Comfort and Convenience menu and the following may display:

- Chime Volume
- Auto Wipe in Reverse Gear

Chime Volume

This allows selection of the chime volume level.

Select Normal or High.

Auto Wipe in Reverse Gear

When on and the vehicle is on, this feature will turn the rear wipers on when the vehicle is placed in R (Reverse) with the front wipers on.

Select On or Off.

Language

Select Language, then select from the available language(s).

Lighting

Select the Lighting menu and the following may display:

- Exterior Vehicle Locator Lights
- Exit Lighting

Exterior Vehicle Locator Lights

This allows selection of whether the exterior lamps will turn on when unlocking the vehicle.

Select On or Off.

Exit Lighting

Select Off, 30 Seconds, 1 Minute, or 2 Minutes.

Power Door Locks

Select Power Door Locks and the following may display:

- Auto Door Unlock
- Unlock Door Anti Lock Out
- Delayed Door Lock

Auto Door Unlock

This allows selection of which of the doors will automatically unlock when the vehicle is shifted into P (Park) or the key is removed.

Select All Doors, Driver Door, or Off.

Unlock Door Anti Lock Out

When on, this feature will keep the driver door from locking when the door is open. If Off is selected, the Unlock Door Anti Lock Out menu will be available and the door will lock as programmed through this menu.

Select On or Off.

Delayed Door Lock

When on, this feature will delay the locking of the doors until five seconds after the last door is closed. Three chimes will signal that delayed locking is in use. Pressing will override the delayed locking feature and immediately lock all of the doors.

Select On or Off.

Remote Lock, Unlock, Start

Select Remote Lock, Unlock, Start and the following may display:

- Remote Unlock Feedback
- Remote Lock Feedback
- Remote Door Unlock

Remote Unlock Feedback

When on, the exterior lamps will flash when unlocking the vehicle with the RKE transmitter.

Select On or Off.

Remote Lock Feedback

This allows selection of what type of feedback is given when locking the vehicle with the RKE transmitter.

Select Lights and Horn, Lights Only, Horn Only, or Off.

Remote Door Unlock

This allows selection of which doors will unlock when pressing 🔓 on the RKE transmitter.

Select All Doors or Driver Door Only. When set to Driver Door Only, the driver door will unlock the first time 🔓 is pressed and all doors will unlock when 🔓 is pressed a second time. When set to All Doors, all of the doors will unlock at the first press of 🔓.

Return to Factory Settings

Select Return to Factory Settings to return all of the vehicle personalization to the default settings.

Select Yes or No.

Personalization Menu (Radio with Touchscreen)

Settings can be made with the ignition on and the vehicle not moving.

Use the audio system controls to access the personalization menus for customizing vehicle features.

The following are all possible personalization features. Depending on the vehicle, some may not be available.

(Home) : Press to access the Home Page Menu.

▲ or ▼ : Press to scroll through the menus or setup items.

: Press to exit, or return to the previous screen or menu.

To access the menu:

1. Press .
2. Press Settings.

The following list of menu items may be available:

- Time & Date Settings
- Radio Settings
- Connection Settings
- Vehicle Settings
- Language
- Text Scroll

- Touch Beep Sound
- Max Startup Volume
- System Version
- DivX® VOD

Press the menu item to select it. Each of the menus is detailed in the following information.

Settings menus and functions may vary depending on vehicle options.

Time & Date Settings

Select to change the settings:

- Set Time Format: Select 12h or 24h.
- Set Date Format: Press < or > to select the date display.
- Set Time & Date: Select, then press ∧ or ∨ to adjust the value.
- Automatic Clock Sync: Select to display the real or user time on the radio. Select On or Off.

Radio Settings

Select and the following may display:

- Auto Volume
- Radio Favorites
- Radio Tune Bar
- Radio Text
- XM Categories
- Radio Factory Settings

Auto Volume

This feature adjusts the radio volume to compensate for road and wind noise as the vehicle speeds up or slows down, so that the volume level is consistent.

Select Off, Low, Medium, or High.

Radio Favorites

This feature sets the number of favorite pages displayed.

Press < or > to select the desired number.

Radio Tune Bar

Select to display the radio station tune bar.

Select On or Off.

Radio Text

Select to display the radio broadcast information.

Select On or Off.

XM Categories

Select to set the selection of XM categories.

Radio Factory Settings

Select to restore the radio to the factory settings.

Connection Settings

Select and the following may display:

- Bluetooth Settings
- Change Ringtone
- Ringtone Volume

Bluetooth Settings

Select this feature to:

- Connect, disconnect, or delete a device
- Change or set a Personal Identification Number (PIN)
- Turn on or off the Bluetooth connection
- Make the infotainment system discoverable by Bluetooth devices
- Check the device information

Change Ringtone

Select to set different ringtones.

Ringtone Volume

Select to set the ringtone volume.

Press < or >.

Vehicle Settings

Select and the following may display:

- Climate & Air Quality
- Comfort & Convenience
- Collision/Detection
- Lighting
- Power Door Locks
- Lock, Unlock Settings
- Rear Camera Option
- Vehicle Factory Settings

Climate & Air Quality

Select and Remote Start Heated Seats may display.

Select On or Off.

Comfort & Convenience

Select and the following may display:

- Chime Volume
- Auto Wipe in Reverse Gear

Chime Volume

Select to set the chime volume level.

Select Normal or High.

Auto Wipe in Reverse Gear

Select to set this feature on or off. When on, and the front wipers are on, the rear window wiper will turn on automatically when the vehicle is shifted into R (Reverse).

Select On or Off.

Collision/Detection

Select and Park Assist may display.

Select On or Off.

Lighting

Select and the following may display:

- Exit Lighting
- Vehicle Locator Lights

Exit Lighting

Select to set how long the exterior lamps stay on when leaving the vehicle and it is dark outside.

Select Off, 30 Sec, 60 Sec, or 120 Sec.

Vehicle Locator Lights

This allows selection of how long the exterior lamps stay on when leaving the vehicle and it is dark outside.

Select On or Off.

Power Door Locks

Select and the following may display:

- Auto Door Unlock
- Unlocked Door Anti Lock Out
- Delayed Door Lock

Auto Door Unlock

Select to set which of the doors will automatically unlock when the vehicle is shifted into P (Park).

Select All Doors, Driver Door, or Off.

Unlocked Door Anti Lock Out

When on, this feature will keep the driver door from locking when the door is open. If Off is selected, the Delayed Door Lock menu will be available and the door will lock as programmed through this menu.

Select On or Off.

Delayed Door Lock

When on, this feature will delay the locking of the doors until five seconds after the last door is closed. Three chimes will signal that delayed locking is in use. Pressing either 🔒 or 🔓 on the RKE transmitter twice will override the delayed locking feature and immediately lock all of the doors.

Select On or Off.

Lock, Unlock Settings

Select and the following may display:

- Remote Unlock Light Feedback
- Remote Lock Light & Horn Feedback
- Remote Door Unlock

Remote Unlock Light Feedback

When on, the exterior lamps will flash when unlocking the vehicle with the RKE transmitter.

Select Flash Lights or Lights Off.

Remote Lock Light & Horn Feedback

Select to set what type of feedback is given when pressing 🔒 on the RKE transmitter.

Select Lights Only, Lights & Horn, Horn Only, or Off.

Remote Door Unlock

Select to set which doors will unlock when pressing 🔓 on the RKE transmitter.

Select All Doors or Driver Door. When set to Driver Door, the driver door will unlock the first time 🔓 is pressed and all doors will unlock when the button is pressed a second time. When set to All Doors, all of the doors will unlock at the first press of 🔓.

Rear Camera Option

Select and the following may display:

- Guidelines

Guidelines

The RVC system has a guideline overlay that can help the driver align the vehicle when backing into a parking spot. See *Rear Vision Camera (RVC)* ⇨ *208*.

Select On or Off.

Vehicle Factory Settings

Select to return all of the vehicle personalization to the default settings.

Select Yes or No.

Language

Select Language, then select from the available language(s).

Text Scroll

When on, if there is long text displayed on the audio screen, the text is scrolled. When off, the text is scrolled once and displayed in truncated form.

Select On or Off.

Touch Beep Sound

When on, a beep will be heard when pressing the screen. When off, the beep is canceled.

Select On or Off.

Max Startup Volume

This allows the startup volume of the infotainment system to be set.

Press < or > to select the desired volume from 9–21.

System Version

Press to view the version of the infotainment system.

DivX VOD

Press DivX VOD.

- **DIVX VIDEO**: DivX is a digital video format created by DivX, LLC, a subsidiary of Rovi Corporation. This is an official DivX Certified® device that plays DivX video. See divx.com for more information and software tools on how to convert files into DivX videos.
- **DIVX VIDEO-ON DEMAND**: This DivX Certified device must be registered in order to play purchased DivX Video-on-Demand (VOD) movies. To obtain a registration code, locate the DivX VOD section in the device setup menu. See vod.divx.com for more information on how to complete the registration.

Lighting

Exterior Lighting
Exterior Lamp Controls 120
Headlamp High/Low-Beam Changer 121
Flash-to-Pass 121
Daytime Running Lamps (DRL) 121
Automatic Headlamp System 122
Hazard Warning Flashers 122
Turn and Lane-Change Signals 123
Fog Lamps 123

Interior Lighting
Instrument Panel Illumination Control 124
Courtesy Lamps 124
Dome Lamps 124
Reading Lamps 124

Lighting Features
Entry Lighting 125
Exit Lighting 125
Battery Load Management . . . 125
Battery Power Protection 126
Exterior Lighting Battery Saver 126

Exterior Lighting

Exterior Lamp Controls

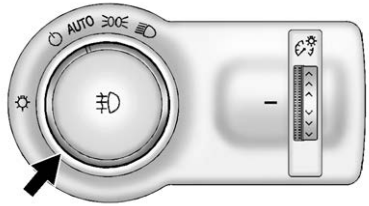

The exterior lamp control is on the instrument panel to the outboard side of the steering column.

There are four positions:

⏻ **(Off) :** Briefly turn to this position to turn the automatic light control off or on again.

AUTO (Automatic) : Turns the headlamps on automatically at normal brightness, together with the following:

- Parking Lamps
- Taillamps
- License Plate Lamps
- Instrument Panel Lights
- Sidemarker Lamps

(Parking Lamps) : Turns on the parking lamps including all lamps except the headlamps.

(Headlamps) : Turns the headlamps on together with the parking lamps and instrument panel lights. A warning chime sounds if the driver door is opened when the ignition switch is off and the headlamps are on.

(Front Fog Lamps) : If equipped with fog lamps, press to turn the lamps on or off.

See *Fog Lamps* ⇨ *123*.

When the lights are on, will be lit. See *Lamps On Reminder* ⇨ *108*.

Headlamp High/ Low-Beam Changer

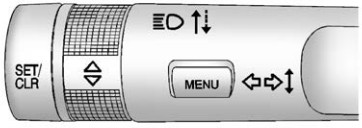

(Headlamp High/Low-Beam Changer) : Push the turn signal lever away from you to turn the high beams on.

Push the lever again or pull the lever toward you to return to low beams.

This indicator light turns on in the instrument cluster when the high-beam headlamps are on.

Flash-to-Pass

To flash the high beams, pull the turn signal lever all the way toward you. Then release it.

Daytime Running Lamps (DRL)

DRL can make it easier for others to see the front of your vehicle during the day. Fully functional DRL are required on all vehicles first sold in Canada.

This indicator light turns on in the instrument cluster when the DRL are on.

A light sensor on top of the instrument panel makes the DRL work, so be sure it is not covered.

The DRL system makes the low-beam headlamps come on at a reduced brightness when the following conditions are met:

- The ignition is in the ON/ RUN mode.
- The exterior lamp control is in AUTO.
- The engine is running.

When the DRL are on, only the low-beam headlamps, at a reduced level of brightness, will be on. The taillamps, sidemarker, instrument panel, and other lamps will not be on.

The headlamps automatically change from DRL to the regular headlamps depending on the darkness of the surroundings. The other lamps that come on with the headlamps will also come on.

When it is bright enough outside, the headlamps go off and the DRL come on.

To turn the DRL lamps off or on again, turn the exterior lamp control to ⏻ and then release. For vehicles first sold in Canada, the DRL lamps cannot be turned off.

Automatic Headlamp System

When it is dark enough outside and the exterior lamp control is in the automatic position, the headlamps come on automatically. See *Exterior Lamp Controls* ⇨ *120*.

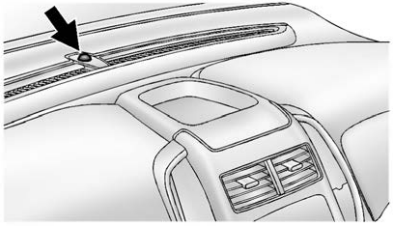

The vehicle has a light sensor on top of the instrument panel. Make sure it is not covered, or the headlamps will be on when they are not needed.

The system may also turn on the headlamps when driving through a parking garage or tunnel.

Lights On with Wipers

If the windshield wipers are activated in daylight with the engine on, and the exterior lamp control is in AUTO, the headlamps, parking lamps, and other exterior lamps come on. The transition time for the lamps coming on varies based on wiper speed. When the wipers are not operating, these lamps turn off. Move the exterior lamp control to ⏻ or ≋ to disable this feature.

Hazard Warning Flashers

⚠ **(Hazard Warning Flasher) :** Press and momentarily hold this button to make the front and rear turn signal lamps flash on and off. This warns others that you are having trouble. Press and momentarily hold again to turn the flashers off.

Turn and Lane-Change Signals

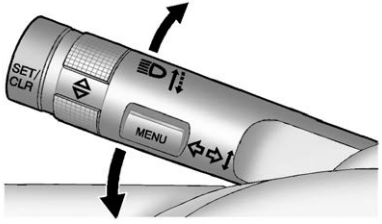

Move the lever all the way up or down to signal a turn.

An arrow on the instrument cluster will flash in the direction of the turn or lane change.

Raise or lower the lever until the arrow starts to flash to signal a lane change. Hold it there until the lane change is completed. If the lever is briefly pressed and released, the turn signal flashes three times.

The lever returns to its neutral position when it is released.

If after signaling a turn or lane change the arrow flashes rapidly or does not come on, a signal bulb may be burned out. Replace any burned out bulbs. If a bulb is not burned out, check the fuse. See *Fuses and Circuit Breakers* ⇨ *248* or *Bulb Replacement* ⇨ *243*.

Turn Signal On Chime

If the turn signal is left on for more than 1.2 km (0.75 mi), a chime will sound at each flash of the turn signal. To turn the chime off, move the turn signal lever to the neutral position.

Fog Lamps

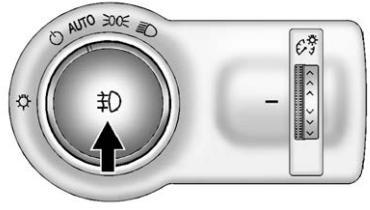

If equipped with front fog lamps, the button is on the outboard side of the instrument panel.

The ignition must be on to turn on the fog lamps.

(Fog Lamps) : Press to turn the fog lamps on or off. An indicator light on the instrument cluster comes on when the fog lamps are on.

The fog lamps come on together with the parking lamps.

If the high-beam headlamps are turned on, the fog lamps will turn off. If the high-beam headlamps are turned off, the fog lamps will turn back on again.

Some localities have laws that require the headlamps to be on along with the fog lamps.

Interior Lighting

Instrument Panel Illumination Control

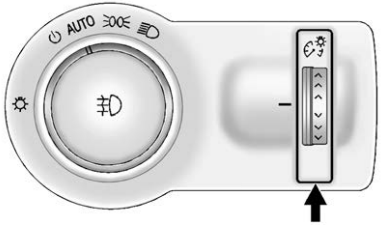

This feature controls the brightness of the instrument panel controls and infotainment display screen. The thumbwheel is to the left of the steering column on the instrument panel.

(Instrument Panel Brightness) : Move the thumbwheel up or down and hold, to brighten or dim the instrument panel controls and infotainment display screen.

Courtesy Lamps

The courtesy lamps come on automatically when any door is opened and the dome lamp is in the door position.

Dome Lamps

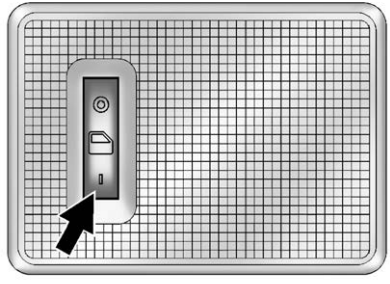

The dome lamp controls are in the headliner above the rear seats.

(Dome Lamp Override) : Press to turn the lamps off, even when a door is open.

(Door) : When the button is returned to the middle position, the lamps turn on automatically when a door is opened.

(On) : Press to turn on the dome lamps.

Reading Lamps

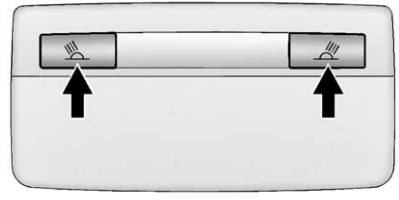

For vehicles with front reading lamps, they are in the overhead console.

or (Reading Lamps) : Press to turn each lamp on or off.

Lighting Features

Entry Lighting

Some exterior lamps and interior lamps turn on briefly at night, or in areas with limited lighting, when 🔓 is pressed on the Remote Keyless Entry (RKE) transmitter. When a door is opened, the interior lamps come on if the dome lamp control is in the Door position. They stay on for about 20 seconds. When all of the doors have been closed or the ignition is turned to ON/RUN, they gradually fade out.

This feature can be changed. See “Vehicle Locator Lights” under *Vehicle Personalization* ⇨ *113*.

Exit Lighting

Some exterior lamps and interior lamps come on at night, or in areas with limited lighting, when the key is removed from the ignition. The dome lamp comes on after the ignition is changed to the OFF position. The exterior lamps and dome lamp remain on for a set amount of time, then automatically turn off.

The exterior lamps turn off immediately by turning the exterior lamp control off.

This feature can be changed. See *Vehicle Personalization* ⇨ *113*.

Battery Load Management

The vehicle has Electric Power Management (EPM) that estimates the battery's temperature and state of charge. It then adjusts the voltage for best performance and extended life of the battery.

When the battery's state of charge is low, the voltage is raised slightly to quickly bring the charge back up. When the state of charge is high, the voltage is lowered slightly to prevent overcharging. If the vehicle has a voltmeter gauge or a voltage display on the Driver Information Center (DIC), you may see the voltage move up or down. This is normal. If there is a problem, an alert will be displayed.

The battery can be discharged at idle if the electrical loads are very high. This is true for all vehicles. This is because the generator (alternator) may not be spinning fast enough at idle to produce all the power needed for very high electrical loads.

A high electrical load occurs when several of the following are on, such as: headlamps, high beams, fog lamps, rear window defogger, climate control fan at high speed, heated seats, engine cooling fans, trailer loads, and loads plugged into accessory power outlets.

EPM works to prevent excessive discharge of the battery. It does this by balancing the generator's output and the vehicle's electrical needs. It can increase engine idle speed to generate more power, whenever needed. It can temporarily reduce the power demands of some accessories.

Normally, these actions occur in steps or levels, without being noticeable. In rare cases at the highest levels of corrective action, this action may be noticeable to the driver.

Battery Power Protection

The battery saver feature is designed to protect the vehicle's battery.

If some interior lamps are left on and the ignition is turned off, the battery rundown protection system automatically turns the lamp off after some time.

Exterior Lighting Battery Saver

The exterior lamps turn off about 10 minutes after the ignition is turned off, if the parking lamps or headlamps have been manually left on. This protects against draining the battery. To restart the 10-minute timer, turn the exterior lamp control to the off position and then back to the parking lamp or headlamp position.

To keep the lamps on for more than 10 minutes, the ignition must be in the ACC/ACCESSORY or ON/RUN position.

Infotainment System

Introduction
Infotainment 127
Theft-Deterrent Feature 128
Overview (AM-FM Radio) 129
Overview (Radio with Touchscreen) 131
Home Page (Radio with Touchscreen) 131
Operation 132

Radio
AM-FM Radio 136
Satellite Radio 140
Radio Reception 141
Satellite Radio Antenna 142
Multi-Band Antenna 142

Audio Players
USB Port 142
Auxiliary Devices 144
Bluetooth Audio 145

Phone
Bluetooth (Overview) 146
Bluetooth (Infotainment Controls) 147
Bluetooth (Voice Recognition) 153
Hands-Free Phone 158

Downloadable Applications
Smartphone Link (Overview) 160
Smartphone Link (Pandora) 162
Smartphone Link (Stitcher) . . . 164

Bluetooth Phone/Devices
Pictures and Movies (Audio System) 165
Pictures and Movies (Picture System) 170
Pictures and Movies (Movie System) 172

Trademarks and License Agreements
Trademarks and License Agreements 174

Introduction

Infotainment

Read the following pages to become familiar with these features.

⚠ Warning

Taking your eyes off the road for too long or too often while using any infotainment feature can cause a crash. You or others could be injured or killed. Do not give extended attention to infotainment tasks while driving. Limit your glances at the vehicle displays and focus your attention on driving. Use voice commands whenever possible.

The infotainment system has built-in features intended to help avoid distraction by disabling some functions when driving. These functions may gray out when they are unavailable. Many infotainment features are also available through the instrument cluster and steering wheel controls.

Before driving:

- Become familiar with the operation, faceplate buttons, and screen buttons.
- Set up the audio by presetting favorite stations, setting the tone, and adjusting the speakers.
- Set up phone numbers in advance so they can be called easily by touching a single button or by using a single voice command if equipped with Bluetooth phone capability.

See *Defensive Driving* ⇨ *181*.

To play the infotainment system with the ignition off, see *Retained Accessory Power (RAP)* ⇨ *194*.

Theft-Deterrent Feature

The theft-deterrent feature works by learning a portion of the Vehicle Identification Number (VIN) to the infotainment system. The infotainment system does not operate if it is stolen or moved to a different vehicle.

Overview (AM-FM Radio)

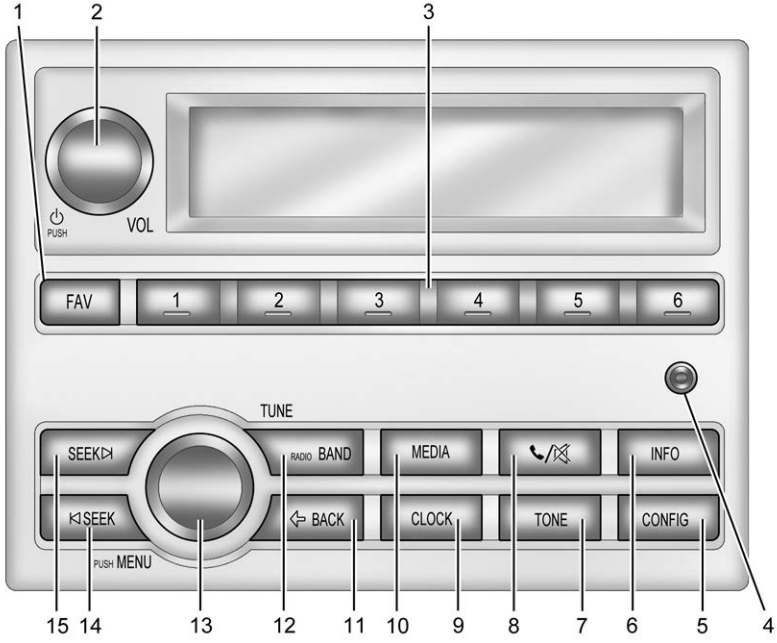

1. FAV (Favorites)
   - Radio: Opens the favorites list.
2. ⏻ /VOL (Power/Volume)
   - Turns the system on or off and adjusts the volume.
3. Buttons 1−6
   - Radio: Saves and selects favorite stations.
4. AUX Port
   - 3.5 mm (1/8 in) connection for external devices.
5. CONFIG (Configuration)
   - Opens the Configuration menu.
6. INFO (Information)
   - Radio: Shows available information about the current station.
7. TONE
   - Opens the Tone menu.

8. / (Phone/Mute)
   - Mutes the audio system.
9. CLOCK
   - Opens the Clock menu.
10. MEDIA
    - Selects external audio source.
11. BACK
    - Menu: Moves one level back.
    - Character Input: Deletes the last character.
12. RADIO/BAND
    - Changes the band while listening to the radio.
    - Selects the radio when listening to a different audio source.
13. Push/MENU/TUNE
    - Radio: Manually selects radio stations.
14. SEEK
    - Radio: Seeks the previous station.
15. SEEK
    - Radio: Seeks the next station.

Overview (Radio with Touchscreen)

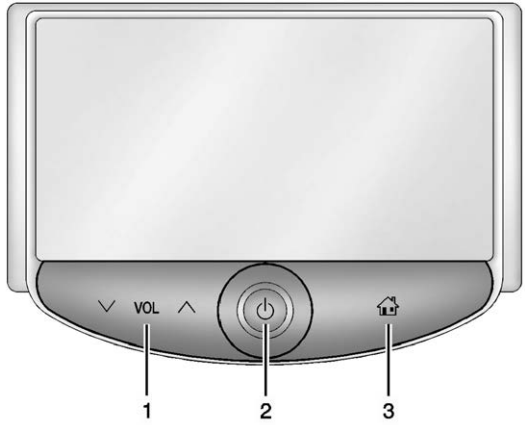

1. ∨ VOL ∧ (Volume)
   - Press to decrease or increase the volume.
2. ⏻ (Power)
   - Press and hold to turn the power on or off.
3. ⌂ (Home Page)
   - Press to go to the Home Page. See *Home Page (Radio with Touchscreen)* ⇨ *131*.

Home Page (Radio with Touchscreen)

Touchscreen Buttons

Touchscreen buttons show on the screen when available. When a function is unavailable, the button may gray out. When a function is selected, the button may highlight.

Home Page Features

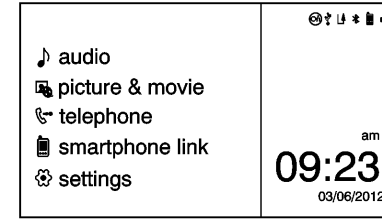

Press ⌂ to go to the Home Page.

♪ **audio :** Press to select AM, FM, SiriusXM® (if equipped), USB/iPod/ Bluetooth Audio, or AUX.

picture & movie : Press to view a picture, movie, or auxiliary video.

telephone : Press to activate the phone features (if equipped). See *Bluetooth (Voice Recognition)* ⇨ *153* or *Bluetooth (Overview)* ⇨ *146* or *Bluetooth (Infotainment Controls)* ⇨ *147*.

smartphone link : Press to listen to Pandora® (if equipped), Stitcher®, or available application. See *Smartphone Link (Overview)* ⇨ *160* or *Smartphone Link (Pandora)* ⇨ *162* or *Smartphone Link (Stitcher)* ⇨ *164*.

settings : Press to access the Personalization menu. See *Vehicle Personalization* ⇨ *113*.

Operation

Radio Controls without Touchscreen

The infotainment system is operated by using the pushbuttons, multifunction knobs, menus shown on the display, and steering wheel controls, if equipped.

Turning the System On or Off

/VOL (Power/Volume) : Press to turn the system on and off.

Automatic Switch-Off

If the infotainment system is on after the ignition is turned off, the system will turn off automatically after 10 minutes.

Volume Control

/VOL (Power/Volume) : Turn to adjust the volume.

/ (Phone/Mute) : For vehicles with OnStar, press and hold / to mute the infotainment system. Press and hold / again, or turn the /VOL knob to cancel mute.

For vehicles without OnStar, press / to mute the infotainment system. Press / again, or turn the /VOL knob to cancel mute.

Menu System

Controls

The Push/MENU/TUNE knob, Push/MENU/TUNE button, and BACK button are used to navigate the menu system.

Push/MENU/TUNE Knob:

Turn to:

- Enter the menu system.
- Highlight a menu option.
- Select a value.

Push/MENU/TUNE Button:

Press to:

- Select or activate the highlighted menu option.
- Confirm a set value.
- Turn a system setting on or off.

⇦ BACK:

Press to:

- Exit a menu.
- Return from a submenu screen to the previous menu screen.
- Delete the last character in a sequence.

Selecting a Menu Option

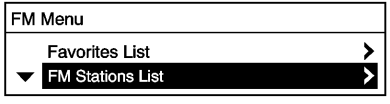

1. Turn the Push/MENU/TUNE knob to move the highlighted bar.
2. Press the Push/MENU/TUNE button to select the highlighted option.

Submenus

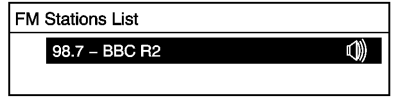

An arrow on the right-hand edge of the menu indicates that it has a submenu with other options.

Activating a Setting

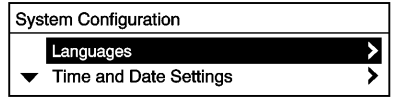

1. Turn the Push/MENU/TUNE knob to highlight the setting.
2. Press the Push/MENU/TUNE button to activate the setting.

Entering a Character Sequence

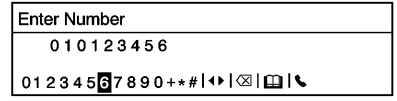

1. Turn the Push/MENU/TUNE knob to highlight the setting.
2. Press the Push/MENU/TUNE button to select the character.

Audio Settings

The audio settings can be set for each radio band and each audio player source.

To quickly reset an audio setting value to 0:

1. Press the TONE button.
2. Select the audio setting.
3. Press and hold the Push/MENU/TUNE button until the value changes to 0.

Press the ⇦ BACK button to go back to the Tone Settings menu.

Adjusting the Treble, Midrange, and Bass

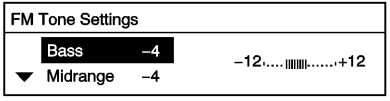

1. Press the TONE button.
2. Select Treble, Midrange, or Bass.
3. Turn the Push/MENU/TUNE knob to select the value between -12 and +12.

Press the ⇦ BACK button to go back to the Tone Settings menu.

Adjusting the Fader and Balance

1. Press the TONE button.
2. Select Fader or Balance.
3. Turn the Push/MENU/TUNE knob to select the value between -15 and +15.

Press the ⇦ BACK button to go back to the Tone Settings menu.

Adjusting the EQ (Equalizer)

For vehicles with an equalizer:

1. Press the TONE button.
2. Select EQ.
3. Select the setting for Pop, Rock, Classical, Talk, or Country.

Press the ⇦ BACK button to go back to the Tone Settings menu.

System Settings

Configuring the Number of Favorite Pages

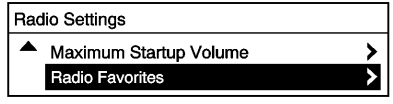

To configure the number of available favorite pages:

1. Press the Push/MENU/TUNE button.
2. Select Radio Settings.
3. Select Radio Favorites.
4. Select the number of available favorite pages.
5. Press the ⇦ BACK button to go back to the System Configuration menu.

Auto Volume

The auto volume feature automatically adjusts the radio volume to compensate for road and wind noise as the vehicle speeds up or slows down, so that the volume level is consistent.

The level of volume compensation can be selected, or the auto volume feature can be turned off.

1. Press the Push/MENU/TUNE button.
2. Select Radio Settings.
3. Select Auto volume control.
4. Select the setting.
5. Press the ⇦ BACK button to go back to the System Configuration menu.

Radio Controls with Touchscreen

The infotainment system is operated by using the pushbuttons, menus shown on the display, and steering wheel controls.

Turning the System On or Off

⏻ **(Power) :** Press and hold to turn the radio on and off.

Automatic Switch-Off

If the infotainment system has been turned on after the ignition is turned off, the system will turn off automatically after 10 minutes.

Volume Control

∨ **VOL** ∧ **(Volume) :** Press to increase or decrease the volume or press the volume bar.

🔇 **(Mute) :** Press ∨ VOL ∧, then press 🔇 to mute and unmute the system.

System Settings

Auto Volume

This feature automatically adjusts the radio volume to compensate for road and wind noise.

The level of volume compensation can be selected, or the feature can be turned off.

1. Press 🏠.
2. Select Settings.
3. Select Radio Settings.
4. Select Auto Volume.
5. Select the setting by pressing < or >.
6. Press ↩.

Auto Store (AS)

This feature automatically stores the stations with the strongest reception.

To store or update the stations, press and hold the AS screen button.

To listen to a auto stored station:

1. Select AM or FM.
2. Press the AS screen button.
3. Press < or > repeatedly to select the desired AS page.
4. Press the desired preset station screen button.

If AS is pressed with no stored stations, AS will update.

Audio Settings

The audio settings can be set for each radio band and each audio player source.

Tone Settings : Press menu, then tone settings from the AM or FM menu.

- EQ (Equalizer): Press < or > to select a sound style or turn off the sound style. When in tone settings “Manual” and “Talk” may be the only settings available depending on the sound system.

- Bass, Mid (Midrange), or Treble: Press − or + to change the desired sound style from −12 to +12.
- Fader or Balance: Adjust the front/rear or left/right speakers by dragging the dot in the vehicle image on the screen.
- Reset: Restore the settings back to default settings.

Press OK to exit Tone Settings.

Radio

AM-FM Radio

Radio Controls without Touchscreen

The buttons used to control the radio are:

⏻ /VOL : Press to turn the radio on and off.

RADIO/BAND : Press to choose between AM, FM, and SiriusXM®, if equipped.

Push/MENU/TUNE Knob : Turn to navigate the available menus. Turn to search for stations.

INFO : Press to display additional information that may be available for the current song.

SEEK ⏭ : Press to search for the next station.

⏮ SEEK : Press to search for the previous station.

FAV : Press to open the favorites list and select the favorites page.

1−6 : Press to select preset stations.

RDS (Radio Data System)

The radio may have RDS. The RDS feature is available for use only on FM stations that broadcast RDS information. This feature only works when the information from the radio station is available. In rare cases, a radio station could broadcast incorrect information that causes the radio features to work improperly. If this happens, contact the radio station.

While the radio is tuned to an FM-RDS station, the station name or call letters display.

Radio Menus

Radio menus are available for AM and FM.

Turn the Push/MENU/TUNE knob to open the main radio menu for that band.

Selecting a Band

Press the RADIO/BAND button to choose AM, FM, or SiriusXM, if equipped. The last station that was playing starts playing again.

Selecting a Station

Seek Tuning

If the radio station is not known:

Briefly press SEEK ⏭ or ⏮ SEEK to automatically search for the next available station. If a station is not found, the radio switches to a more sensitive search level. If a station still is not found, the frequency that was last active begins to play.

If the radio station is known:

Press and hold SEEK ⏭ or ⏮ SEEK until the station on the display is reached, then release the button.

Favorites List

1. Turn the Push/MENU/TUNE knob.
2. Select Favorites List.
3. Select the station.

Station Lists

1. Turn the Push/MENU/TUNE knob.
2. Select AM or FM Station List. All receivable stations in the current reception area are displayed. If a station list has not been created, an automatic station search is done.
3. The first station in the list will play.

Category Lists

Most stations that broadcast an RDS program type code specify the type of programming transmitted. Some stations change the program type code depending on the content. The system stores the RDS stations sorted by program type in the FM category list.

To search for a programming type determined by station:

1. Turn the Push/MENU/TUNE knob.
2. Select FM category list. A list of all available programming types displays.
3. Select the programming type. A list of stations that transmit programming of the selected type displays.
4. Select the station.

   The category lists are updated when the station lists are updated.

Updating Station and Category Lists

If stations stored in the station list can no longer be received:

1. Turn the Push/MENU/TUNE knob.
2. Select Update AM or FM Station List, if the stations stored in the station list are no longer received. A station search will be completed and the first station in the updated list will play.

To cancel the station search, press the Push/MENU/TUNE button.

Storing a Favorite Station

Stations from all bands can be stored in any order in the favorite pages.

Up to six stations can be stored in each favorite page and the number of available favorite pages can be set.

Storing Stations

To store the station to a position in the list, press the corresponding button 1 to 6 until a beep is heard.

Retrieving Stations

Press the FAV button to open a favorite page or to switch to another favorite page. Briefly press one of the 1 to 6 buttons to retrieve the station.

Radio Controls with Touchscreen

Audio Source Menu

∨ VOL ∧ (Volume): Press to increase or decrease the volume.

⏻ (Power) : Press and hold to turn the system on and off.

⌂ (Home Page) : Press to enter the Home Page.

RDS (Radio Data System)

The radio may have RDS. The RDS feature is available for use only on FM stations that broadcast RDS information. This feature only works when the information from the radio station is available. In rare cases, a radio station could broadcast incorrect information that causes the radio features to work improperly. If this happens, contact the radio station.

While the radio is tuned to an FM-RDS station, the station name or call letters display.

Selecting a Band

Press ⌂, audio, then Source ▼ to choose AM, FM, or SiriusXM®, if equipped. The last station that was playing starts playing again.

Selecting an Auxiliary Device

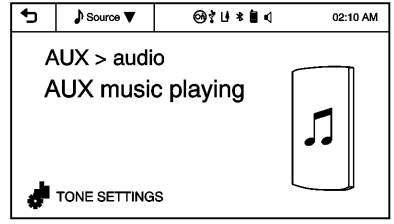

Connect the auxiliary device to the AUX input terminal. Play will begin when the system has finished reading the information on the device.

If the storage device is already connected, press ⌂, audio, Source ▼, select AUX from the drop down menu.

Selecting a Station

Seek Tuning

If the radio station is not known:

Press ⏮ SEEK ⏭ to automatically search for available radio stations.

Hold and drag to the left or right of the radio station to automatically search for available radio stations.

Manual Tuning

Continue pressing ◀ TUNE ▶ to manually change the radio station.

Favorite List

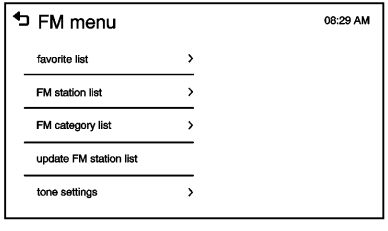

- From the AM or FM menu, press favorite list on the screen.
- Press ▲ or ▼ to scroll through the list. Press on the station to select it.

Station List

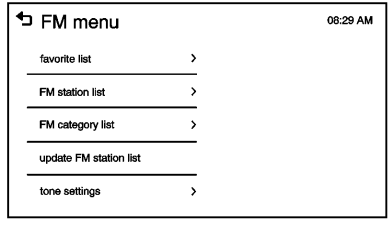

- From the AM or FM menu, press AM or FM station list on the screen.
- Press ▲ or ▼ to scroll through the list. Press on the station to select it.

Category List

- From the FM menu, press FM category list on the screen.
- Press ▲ or ▼ to scroll through the list. Press on the station to select it.

Update Station List

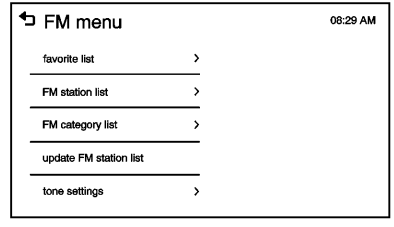

- From the AM or FM menu, press update AM or FM station list on the screen. The broadcasting list updating will begin.
- During the AM or FM broadcasting list update, press Cancel to stop the updates.

Storing a Favorite Station

Stations from all bands can be stored in any order in the favorite pages.

Up to five stations can be stored in each of the seven favorites pages.

Storing Stations

To store the station to a position in the list, press the corresponding button 1−5 until a beep is heard.

1. Select the desired station.
2. Press < or > to select the desired page of saved favorites.

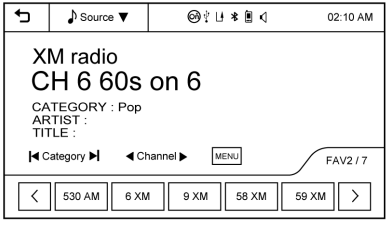

3. Hold down any of the preset buttons to save the current radio station to that button of the selected favorites page.

To change a preset button, tune to the new desired radio station and hold the button.

Satellite Radio

SiriusXM® Satelite Radio Service

SiriusXM is a satellite radio service based in the 48 contiguous United States and 10 Canadian provinces. SiriusXM Satellite Radio has a wide variety of programming and commercial-free music, coast to coast, and in digital-quality sound. A service fee is required to receive the SiriusXM service. For more information, contact SiriusXM at www.siriusxm.com or 1-866-635-2349 (U.S.), and www.xmradio.ca or 1-877-209-0079 (Canada).

Finding a Channel

RADIO/BAND : Press to choose XM. The display will show the selection.

SEEK ⏭ : Press to seek the next XM channel.

⏮ SEEK : Press to seek the previous XM channel.

MENU/TUNE : Turn to go to the next XM channel.

Storing a SiriusXM Channel

Drivers are encouraged to set up XM channel favorites while the vehicle is not moving. Tune to favorite stations using the pushbuttons, favorites button, and steering wheel controls. See *Defensive Driving* ⇨ *181*.

A maximum of 36 stations can be programmed as favorites using the six pushbuttons positioned below the radio station frequency labels and by using the radio favorites page button (FAV button). Press the FAV button to go through up to six pages of favorites, each having six favorite stations available per page. Each page of favorites can contain any combination of AM, FM, or XM channels. To store an XM channel as a favorite:

1. Tune in the desired channel.
2. Press and release the FAV button to display the page where the channel is to be stored.

3. Press and hold one of the six numbered pushbuttons until a beep sounds. When the pushbutton is pressed and released, the channel that was set will return.
4. Repeat Steps 1−3 for each XM channel to be stored as a favorite.

To set up the number of favorites pages:

1. Press and hold FAV until the radio setup menu displays.
2. Select the desired number of favorites pages by pressing the pushbutton located below the displayed page numbers.
3. Press FAV to return to the original main radio screen showing the radio frequency tabs and to begin the process of programming favorites for the chosen number of numbered pages.

Radio Reception

Frequency interference and static can occur during normal radio reception if items such as cell phone chargers, vehicle convenience accessories, and external electronic devices are plugged into the accessory power outlet. If there is interference or static, unplug the item from the accessory power outlet.

AM

The range for most AM stations is greater than for FM, especially at night. The longer range can cause station frequencies to interfere with each other. For better radio reception, most AM radio stations boost the power levels during the day, and then reduce these levels during the night. Static can also occur when things like storms and power lines interfere with radio reception. When this happens, try reducing the treble on the radio.

FM Stereo

FM signals only reach about 16 to 65 km (10 to 40 mi). Although the radio has a built-in electronic circuit that automatically works to reduce interference, some static can occur, especially around tall buildings or hills, causing the sound to fade in and out.

SiriusXM® Satellite Radio Service

SiriusXM Satellite Radio Service gives digital radio reception from coast to coast in the 48 contiguous United States, and in Canada. Just as with FM, tall buildings or hills can interfere with satellite radio signals, causing the sound to fade in and out. In addition, traveling or standing under heavy foliage, bridges, garages, or tunnels may cause loss of the SiriusXM signal for a period of time.

Cellular Phone Usage

Cellular phone usage may cause interference with the vehicle's radio. This interference may occur when making or receiving phone calls,

charging the phone's battery, or simply having the phone on. This interference causes an increased level of static while listening to the radio. If static is received while listening to the radio, unplug the cellular phone and turn it off.

Satellite Radio Antenna

The XM Satellite Radio antenna is located on the roof of the vehicle. Keep the antenna clear of obstructions for clear radio reception.

If the vehicle has a sunroof, the performance of the XM system (if equipped) may be affected if the sunroof is open.

Multi-Band Antenna

The multi-band antenna is on the roof of the vehicle. The antenna is used for the AM-FM radio, OnStar, the SiriusXM Satellite Radio Service System, and GPS (Global Positioning System), if the vehicle has these features. Keep the antenna clear of obstructions for clear reception.

If the vehicle has a sunroof, the performance of the features listed above may be affected if the sunroof is open.

Audio Players

USB Port

The USB port, if equipped, is in the storage area to the right of the infotainment system. See *Overview (Radio with Touchscreen)* ⇨ *131* or *Overview (AM-FM Radio)* ⇨ *129*.

Portable devices are controlled by using the menu system described in *Operation* ⇨ *132*.

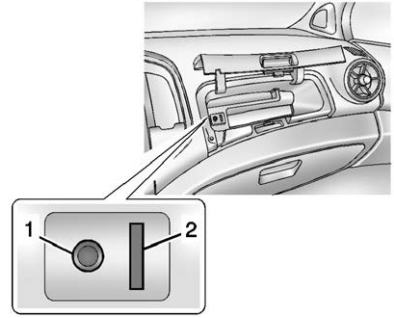

1. 3.5 mm (1/8 in) Auxiliary Input Jack. See *Auxiliary Devices* ⇨ *144*.
2. USB Port.

Radio with Touchscreen

The infotainment system can play music or movies by connecting an auxiliary device to the USB port, if equipped.

USB Supported Devices

- USB Flash Drives
- Devices that support Media Transfer Protocol (MTP)
- Portable USB Hard Drives
- 2G-5G iPod nano®
- 1G-3G iPod touch®
- 120GB/160GB iPod classic®
- 3G/3GS/4/4S iPhone®

Not all iPods and USB drives are compatible with the USB port.

Make sure the iPod has the latest firmware from Apple® for proper operation. iPod firmware can be updated using the latest iTunes® application. See www.apple.com/itunes.

For help with identifying your iPod, go to www.apple.com/support.

The USB port can play both lower and upper case .mp3, .wma, .ogg, and .wav files stored on a USB storage device.

USB Supported File and Folder Structure

The Infotainment system supports:

- Up to 2,500 folders.
- Up to 10 folders in depth.
- Up to 2,500 music files.
- Up to 2,500 photo files.
- Up to 250 movie files.
- ID3 Tag (versions 1.0/1.1/2.2/2.3/2.4).
- FAT16.
- FAT32.
- exFAT.

Connecting a USB Storage Device or iPod/iPhone

To connect a USB storage device, connect the device to the USB port.

To connect an iPod/iPhone, connect one end of the device's cable to the iPod/iPhone and the other end to the USB port.

The iPod/iPhone charges while it is connected to the vehicle if the vehicle is in the ACC/ACCESSORY or ON/RUN position. When the vehicle is turned off, the iPod/iPhone automatically powers off and will not charge or draw power from the vehicle's battery.

For more information on USB usage, see "Audio System" in *Pictures and Movies (Picture System)* ⇨ *170* or *Pictures and Movies (Movie System)* ⇨ *172* or *Pictures and Movies (Audio System)* ⇨ *165*.

Connecting an MTP USB Device

To connect a USB device, connect the device to the USB port.

Once the infotainment system finishes reading the information on the device it will be automatically played.

If a non-readable device that supports MTP is connected, then an error message will appear and the infotainment system will be automatically switched to the previous audio function.

All files may not play. File loading may take a few minutes. An MTP device that has external memory may be recognized as USB1/USB2.

Auxiliary Devices

The optional AUX input allows portable devices to connect to the vehicle using the 3.5 mm (1/8 in) input jack. If equipped with a touchscreen radio, the AUX input jack is in the storage area to the right of the infotainment system. If equipped with a non-touchscreen radio, the AUX input is on the front of the infotainment system. See *Overview (Radio with Touchscreen)* ⇨ *131* or *Overview (AM-FM Radio)* ⇨ *129*.

Portable devices are controlled by using the menu system described in *Operation* ⇨ *132*.

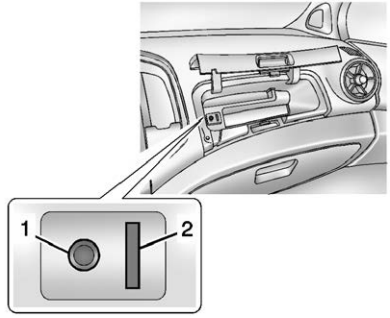

1. 3.5 mm (1/8 in) Auxiliary Input Jack
2. USB Port. See *USB Port* ⇨ *142*.

Radio without Touchscreen

Connect a 3.5 mm (1/8 in) cable to the auxiliary input jack to use a portable audio player.

Playback of an audio device that is connected to the 3.5 mm (1/8 in) jack can only be controlled using the controls on the device.

Adjusting the Volume

Turn the ⏻ /VOL knob to adjust the volume of the infotainment system after the volume level has been set on the portable audio device.

Radio with Touchscreen

The infotainment system can play music or movies connected by the auxiliary device.

Play will begin when the system has finished reading the information on the device.

Playing Music

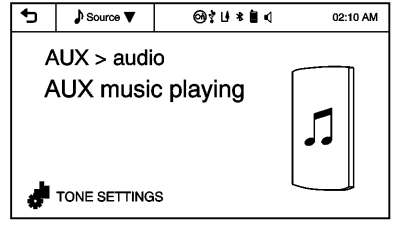

To play the music from the device, if the device is already connected:

1. Press ⌂.
2. Press audio.
3. Press Source ▼.
4. Press AUX/USB.

To adjust the tone settings, see “Tone Settings” under “Radio Controls with Touchscreen” in *Operation* ⇨ *132*.

Playing Movies

Movies are not available while driving.

If the USB storage device is already connected:

1. Press ⌂.
2. Press picture and movie.
3. Press Source ▼.
4. Press USB (Movie).

For iPod/iPhone, connect the iPod/iPhone to the AUX input terminal by using the AUX cable for iPod/iPhone to play movie files.

iPhone 5 cell phones have a connector that no longer supports AUX connections to the radio. This feature is limited to older versions of iPhone.

Using the AUX Movie Menu

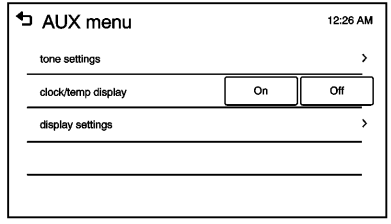

1. Press MENU from the AUX movie screen. The AUX menu is displayed.
2. Press the desired menu.
   - tone settings: Adjust the sound setup. See “Tone Settings” under “Radio Controls with Touchscreen” in *Operation* ⇨ *132*.
   - clock/temp display: To display the clock and temperature on the full screen, select On or Off.
   - display settings: Adjust the brightness and contrast of the screen.
3. Press ↩.

Bluetooth Audio

Streaming Audio

If equipped, music may be played from a paired Bluetooth. See *Bluetooth (Voice Recognition)* ⇨ *153* or *Bluetooth (Overview)* ⇨ *146* or *Bluetooth (Infotainment Controls)* ⇨ *147* for help pairing a device.

The music can be controlled by controls on the device.

To play music via Bluetooth:

1. Power on the device, pair, and connect the device. The device will display “GM Audio Source.”
2. Once paired, press MEDIA to select Bluetooth Audio.
3. Press the play button on the device to begin playback.

When selecting Bluetooth audio, the radio may not be able to launch the audio player on the connected device to start playing. When the vehicle is not moving, choose the phone to begin playback.

All devices launch audio differently. When selecting Bluetooth audio as a source, the radio may show as paused on the screen. Press play on the device to begin playback.

Some phones support sending Bluetooth music information to display on the radio. When the radio receives this information, it will check to see if any album art is available and display it. For more information about your phone and supported Bluetooth features, see www.gm.com/bluetooth.

Phone

Bluetooth (Overview)

For vehicles equipped with Bluetooth capability, the system can interact with many cell phones, allowing:

- Placement and receipt of calls in a hands-free mode.
- Sharing of the cell phone's address book or contact list with the vehicle.

To minimize driver distraction, before driving, and with the vehicle parked:

- Become familiar with the features of the cell phone. Organize the phone book and contact lists clearly and delete duplicate or rarely used entries. If possible, program speed dial or other shortcuts.
- Review the controls and operation of the infotainment system.
- Pair cell phone(s) to the vehicle. The system may not work with all cell phones. See "Pairing" in this section.
- If the cell phone has voice dialing capability, learn to use that feature to access the address book or contact list. See "Voice Pass-Thru" in this section.
- See "Storing and Deleting Phone Numbers" in this section.

⚠ Warning

When using a cell phone, it can be distracting to look too long or too often at the screen of the phone or the infotainment system. Taking your eyes off the road too long or too often could cause a crash resulting in injury or death. Focus your attention on driving.

Vehicles with a Bluetooth system can use a Bluetooth-capable cell phone with a Hands-Free Profile to make and receive phone calls. The infotainment system and voice

recognition are used to control the system. The system can be used while in ON/RUN or ACC/ACCESSORY. The range of the Bluetooth system can be up to 9.1 m (30 ft). Not all phones support all functions and not all phones work with the Bluetooth system. See www.gm.com/bluetooth for more information about compatible phones.

Bluetooth Controls

Use the buttons located on the infotainment system and the steering wheel to operate the Bluetooth system.

Steering Wheel Controls

/ (Press to Talk) : Press to answer incoming calls, confirm system information, and start voice recognition.

/ (Mute/End Call) : Press to end a call, reject a call, or cancel an operation.

Infotainment System Controls

If equipped, the infotainment system allows certain controls to be selected on the infotainment display.

For information about how to navigate the menu system using the infotainment controls, see *Operation* ⇨ *132*.

/ (Phone) : Press to enter the Phone main menu.

Voice Recognition

The voice recognition system uses commands to control the system and dial phone numbers.

Noise : The system may not recognize voice commands if there is too much background noise. Do not point the center air vents directly upward.

When to Speak : A tone sounds to indicate that the system is ready for a voice command. Wait for the tone and then speak.

How to Speak : Speak clearly in a calm and natural voice.

Audio System

When using the Bluetooth system, sound comes through the vehicle's front audio system speakers and overrides the audio system. Use the ⏻ /VOL knob during a call to change the volume level. The adjusted volume level remains in memory for later calls. The system maintains a minimum volume level.

Other Information

The Bluetooth® word mark and logos are owned by the Bluetooth® SIG, Inc. and any use of such marks by General Motors is under license. Other trademarks and trade names are those of their respective owners.

See *Radio Frequency Statement* ⇨ *328*.

Bluetooth (Infotainment Controls)

For information about how to navigate the menu system using the infotainment controls, see *Operation* ⇨ *132*.

Pairing

A Bluetooth-enabled cell phone must be paired to the Bluetooth system and then connected to the vehicle before it can be used. See your cell phone manufacturer's user guide for Bluetooth functions before pairing the cell phone. If a Bluetooth phone is not connected, calls will be made using OnStar Hands-Free Calling, if available. See *OnStar Overview* ⇨ *332*.

Pairing Information

- A Bluetooth phone with MP3 capability cannot be paired to the vehicle as a phone and an MP3 player at the same time.
- Up to five cell phones can be paired to the Bluetooth system.
- The pairing process is disabled when the vehicle is moving.
- Depending on the phone book entries, paring time may be different.
- Pairing only needs to be completed once, unless the pairing information on the cell phone changes or the cell phone is deleted from the system.
- Only one paired cell phone can be connected to the Bluetooth system at a time.
- If multiple paired cell phones are within range of the system, the system connects to the first available paired cell phone in the order that they were first paired to the system. To link to a different paired phone, see “Linking to a Different Phone” later in this section.
- Always accept the Phone book request on the initial pairing of the phone.

When the Bluetooth device and infotainment system are successfully paired, the phone book is downloaded automatically. However, the phone book may not be downloaded automatically according to the type of the phone. In this case, proceed with the phonebook download on phone.

If the phone list is more than 1,000, it may not download to the radio.

Pairing a Phone

When there is no paired device on the infotainment system and the Simple Secure Pairing (SSP) is supported:

1. Press ⌂.

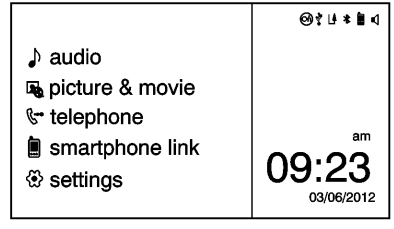

2. Press telephone, then press Yes.
3. Press Search Bluetooth Device.
4. Press the desired device to pair on the searched list screen.

5. Press Yes on the pop-up screen of the Bluetooth device and infotainment system.
6. When the Bluetooth device and infotainment system are successfully paired, the telephone screen is displayed on the infotainment system.

Pairing a Phone

When a paired device is on the infotainment system and the SSP is supported:

1. Press ⌂.

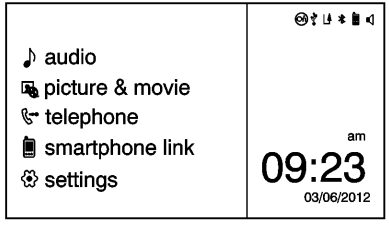

2. Press settings.
3. Press connection settings.
4. Press bluetooth settings.
5. Press pair device.
6. Press Search Bluetooth Device.
7. Press the desired device to pair on the searched list screen.
8. Press Yes on the pop-up screen of the Bluetooth device and infotainment system.
9. When the Bluetooth device and infotainment system are successfully paired, the BT♪ is displayed on the "pair device" screen.

- The connected phone is highlighted by ☎.
- The BT♪ indicates the hands-free and phone music function are enabled.
- The indicates only hands-free function is enabled.
- The BT♪ indicates only Bluetooth music is enabled.

Pairing a Phone

When there is no paired device on the infotainment system and the SSP is not supported:

1. Press ⌂.

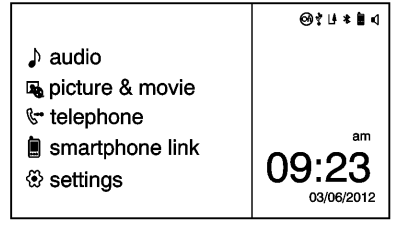

2. Press telephone, then press Yes.
3. Press Search Bluetooth Device.
4. Press the desired device to pair on the searched list screen.
5. Input the PIN code (default: 1234) to the Bluetooth device. When the Bluetooth device and infotainment system are

successfully paired, the telephone screen is displayed on the infotainment system.

When the connection fails, a failure message is displayed on the infotainment system.

If a Bluetooth device was previously connected, the infotainment system executes the auto connection. However, if the Bluetooth setting on the Bluetooth device is turned off, a failure message is displayed on the infotainment system.

Pairing a Phone

When a paired device is on the infotainment system and the SSP is not supported:

1. Press .

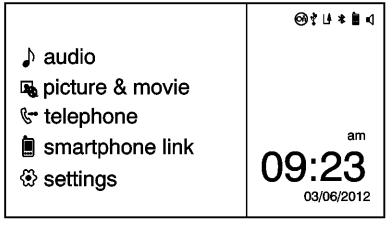

2. Press settings.
3. Press connection settings.
4. Press bluetooth settings.
5. Press pair device.
6. Press Search Bluetooth Device.
7. Press the desired device to pair on the searched list screen.
8. Input the PIN code (default: 1234) to the Bluetooth device. When the Bluetooth device and infotainment system are successfully paired, BT is displayed on the pair device screen.

- The connected phone is highlighted by .
- The BT indicates the hands-free and phone music function are enabled.
- The indicates only hands-free function is enabled.
- The BT indicates only Bluetooth music is enabled.

Connecting a Bluetooth Device

1. Press .
2. Select settings.
3. Press connection settings.
4. Press bluetooth settings.
5. Press pair device.
6. Press the device to be paired.
7. Press OK.

Checking the Bluetooth Connection

1. Press .
2. Select settings.
3. Press connection settings.
4. Press bluetooth settings.
5. Press pair device.
6. The paired device will show with when connected.

Disconnecting the Bluetooth Device

1. Press .
2. Select settings.

3. Press connection settings.
4. Press bluetooth settings.
5. Press pair device.
6. Press the name of the device to be disconnected.
7. Press OK.

Deleting a Paired Phone

1. Press ⌂.
2. Select settings.
3. Press connection settings.
4. Press bluetooth settings.
5. Press pair device.
6. Press Delete.
7. Press Yes.

Bluetooth Music

Before playing Bluetooth music, read the follow information.

- A cell phone or Bluetooth device that supports Advanced Audio Distribution Profile (A2DP) versions over 1.2 must be registered and connected to the product.
- From the cell phone or Bluetooth device, find the Bluetooth device type to set/connect the item as a stereo headset.
- BT♪ will appear on the screen if the stereo headset is successfully connected.
- The sound played by the Bluetooth device is delivered through the infotainment system.
- Bluetooth music can be played only when a Bluetooth device has been connected. To play Bluetooth music, connect the Bluetooth phone to the infotainment system.
- If the Bluetooth device is disconnected while playing phone music, the music is discontinued. The audio streaming function may not be supported in some Bluetooth phones. Only one function can be used at a time between the Bluetooth hands-free or Phone music function. For example, if you convert to the Bluetooth hands-free while playing Phone music, the music is discontinued. Playing music from the car is not possible when there are no music files stored in the cell phone.
- For Bluetooth music to play, the music must be played at least once from the music player mode of the cell phone or Bluetooth device after connecting as a stereo headset. After being played at least once, the music player will automatically play upon entering play mode, and it will automatically stop when the music player mode ends. If the cell phone or Bluetooth device is not in the waiting screen mode, some devices may not automatically play in Bluetooth music play mode.

Playing Bluetooth Music

1. Press ⌂.

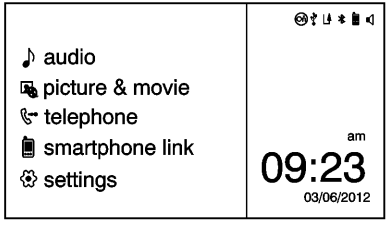

2. Press audio.
3. Press source ▼.
4. Press Bluetooth, then select the connected Bluetooth music play mode.

Pause

Press ▶ II to pause.

Press ▶ II again to resume.

Skipping the Previous or Next File

Press ⏮ or ⏭ to select the previous or next file.

Search

Press and hold ⏮ or ⏭ to fast forward or rewind.

Playing a File Repeatedly

Press during playback.

- 1: Plays the current file repeatedly.
- ALL: Plays all files repeatedly.
- OFF: Returns to normal playback.

This function may not be supported depending on the cell phone.

Playing a File Randomly

Press during playback.

- NO: Plays all files repeatedly.
- OFF: Returns to normal playback.

This function may not be supported depending on the cell phone.

Do not change the track too quickly when playing Bluetooth music.

Conditions that may occur when playing Bluetooth music:

- It takes some time to transmit data from the cell phone to the infotainment system.
- If the cell phone or Bluetooth device is not in the waiting screen mode, it may not automatically play despite being carried out from the Bluetooth music play mode.
- The infotainment system transmits the order to play from the cell phone in the Bluetooth music play mode. If this is done in a different mode, then the device transmits the order to stop. Depending on the cell phone's options, this order to play/stop may take time to activate.
- If the Bluetooth music playback is not functioning, then check to see if the cell phone is in the waiting screen mode.
- Sounds may be cut off during the Bluetooth music playback.

- The infotainment system outputs the audio from the cell phone or Bluetooth device as it is transmitted.

Bluetooth (Voice Recognition)

Using Voice Recognition

To use voice recognition, press the ✆ / button located on the steering wheel. Use the commands below for the various voice features. For additional information, say "Help" while you are in a voice recognition menu.

Pairing

A Bluetooth-enabled cell phone must be paired to the Bluetooth system and then connected to the vehicle before it can be used. See your cell phone manufacturer's user guide for Bluetooth functions before pairing the cell phone. If a Bluetooth phone is not connected, calls will be made using OnStar Hands-Free Calling, if available. See *OnStar Overview* ⇨ *332*.

Pairing Information

- A Bluetooth phone with MP3 capability can be paired to the vehicle as a phone and an MP3 player at the same time.
- Up to five cell phones can be paired to the Bluetooth system.
- The pairing process is disabled when the vehicle is moving.
- Pairing only needs to be completed once, unless the pairing information on the cell phone changes or the cell phone is deleted from the system.
- Only one paired cell phone can be connected to the Bluetooth system at a time.
- If multiple paired cell phones are within range of the system, the system connects to the first available paired cell phone in the order that they were first paired to the system. To link to a different paired phone, see “Connecting to a Different Phone” later in this section.

Pairing a Phone

1. Press ✆ / . The system responds “Ready,” followed by a tone.
2. Say “Bluetooth.” This command can be skipped.
3. Say “Pair.” The system responds with instructions and a four-digit Personal Identification Number (PIN). The PIN is used in Step 5.
4. Start the pairing process on the cell phone that you want to pair. For help with this process, see your cell phone manufacturer's user guide.
5. Locate the device named “Your Vehicle” in the list on the cell phone. Follow the instructions on the cell phone to enter the PIN provided in Step 3. After the PIN is successfully entered, the system prompts you to provide a name for the paired cell phone. This name will be used to indicate which phones are paired and connected to the vehicle. The system

responds with “<Phone name> has been successfully paired” after the pairing process is complete.

6. Repeat Steps 1−5 to pair additional phones.

Listing All Paired and Connected Phones

The system can list all cell phones paired to it. If a paired cell phone is also connected to the vehicle, the system responds with “is connected” after that phone name.

1. Press ✆ / ⌇. The system responds “Ready,” followed by a tone.
2. Say “Bluetooth.”
3. Say “List.”

Deleting a Paired Phone

If the phone name you want to delete is unknown, see “Listing All Paired and Connected Phones.”

1. Press ✆ / ⌇. The system responds “Ready,” followed by a tone.
2. Say “Bluetooth.”
3. Say “Delete.” The system asks for which phone to delete.
4. Say the name of the phone you want to delete.

Connecting to a Different Phone

To connect to a different cell phone, the Bluetooth system looks for the next available cell phone in the order in which all available cell phones were paired. Depending on which cell phone you want to connect to, you may have to use this command several times.

1. Press ✆ / ⌇. The system responds “Ready,” followed by a tone.
2. Say “Bluetooth.”
3. Say “Change phone.”
   - If another cell phone is found, the response will be “<Phone name> is now connected.”
   - If another cell phone is not found, the original phone remains connected.

Storing and Deleting Phone Numbers

The system can store up to 30 phone numbers as name tags in the Hands-Free Directory that is shared between the Bluetooth and OnStar systems.

The following commands are used to delete and store phone numbers.

Store : This command will store a phone number, or a group of numbers as a name tag.

Digit Store : This command allows a phone number to be stored as a name tag by entering the digits one at a time.

Delete : This command is used to delete individual name tags.

Delete All Name Tags : This command deletes all stored name tags in the Hands-Free Calling Directory and the Destinations Directory.

Using the “Store” Command

1. Press ✆ / ⌇. The system responds “Ready,” followed by a tone.

2. Say “Store.”
3. Say the phone number or group of numbers you want to store all at once with no pauses, then follow the directions given by the system to save a name tag for this number.

Using the “Digit Store” Command

If an unwanted number is recognized by the system, say “Clear” at any time to clear the last number.

To hear all of the numbers recognized by the system, say “Verify” at any time.

1. Press ✆ / ⁂. The system responds “Ready,” followed by a tone.
2. Say “Digit Store.”
3. Say each digit, one at a time, that you want to store. After each digit is entered, the system repeats back the digit it heard followed by a tone. After the last digit has been entered, say “Store,” and then follow the directions given by the system to save a name tag for this number.

Using the “Delete” Command

1. Press ✆ / ⁂. The system responds “Ready,” followed by a tone.
2. Say “Delete.”
3. Say the name tag you want to delete.

Using the “Delete All Name Tags” Command

This command deletes all stored name tags in the Hands-Free Calling Directory and the Destinations Directory.

To delete all name tags:

1. Press ✆ / ⁂. The system responds “Ready,” followed by a tone.
2. Say “Delete all name tags.”

Listing Stored Numbers

The list command will list all stored numbers and name tags.

Using the “List” Command

1. Press ✆ / ⁂. The system responds “Ready,” followed by a tone.
2. Say “Directory.”
3. Say “Hands-Free Calling.”
4. Say “List.”

Making a Call

Calls can be made using the following commands.

Dial or Call : The dial or call command can be used interchangeably to dial a phone number or a stored name tag.

Digit Dial : This command allows a phone number to be dialed by entering the digits one at a time.

Re-dial : This command is used to dial the last number used on the cell phone.

Using the “Dial” or “Call” Command

1. Press ✆ / ⁂. The system responds “Ready,” followed by a tone.

2. Say “Dial” or “Call.”
3. Say the entire number without pausing or say the name tag.

Once connected, the person called will be heard through the audio speakers.

Calling 911 Emergency Number

1. Press / . The system responds “Ready,” followed by a tone.
2. Say “Dial” or “Call.”
3. Say “911.”
4. Say “Dial” or “Call.”

Using the “Digit Dial” Command

The digit dial command allows a phone number to be dialed by entering the digits one at a time. After each digit is entered, the system repeats back the digit it heard followed by a tone.

If an unwanted number is recognized by the system, say “Clear” at any time to clear the last number.

To hear all of the numbers recognized by the system, say “Verify” at any time.

1. Press / . The system responds “Ready,” followed by a tone.
2. Say “Digit Dial.”
3. Say each digit, one at a time, that you want to dial. After each digit is entered, the system repeats back the digit it heard followed by a tone. After the last digit has been entered, say “Dial.”

Once connected, the person called will be heard through the audio speakers.

Using the “Re-dial” Command

1. Press / . The system responds “Ready,” followed by a tone.
2. After the tone, say “Re-dial.” The system dials the last number called from the connected cell phone.

Once connected, the person called will be heard through the audio speakers.

Receiving a Call

When an incoming call is received, the audio system mutes and a ring tone is heard in the vehicle.

- Press / to answer the call.
- Press / to ignore a call.

Call Waiting

Call waiting must be supported on the cell phone and enabled by the wireless service carrier.

- Press / to answer an incoming call when another call is active. The original call is placed on hold.
- Press / again to return to the original call.
- To ignore the incoming call, no action is required.
- Press / to disconnect the current call and switch to the call on hold.

Three-Way Calling

Three-way calling must be supported on the cell phone and enabled by the wireless service carrier.

1. While on a call, press ✆ / ⌇.
2. Say “Three-way call.”
3. Use the dial or call command to dial the number of the third party to be called.
4. Once the call is connected, press ✆ / ⌇ to link all callers together.

Ending a Call

Press ✆ / ✆ to end a call.

Muting a Call

During a call, all sounds from inside the vehicle can be muted so that the person on the other end of the call cannot hear them.

To mute a call, press ✆ / ⌇ , and then say “Mute Call.”

To cancel mute, press ✆ / ⌇ , and then say “Un-mute Call.”

Transferring a Call

Audio can be transferred between the Bluetooth system and the cell phone.

The cell phone must be paired and connected with the Bluetooth system before a call can be transferred. The connection process can take up to two minutes after the ignition is turned to ON/RUN.

To Transfer Audio from the Bluetooth System to a Cell Phone

During a call with the audio in the vehicle:

1. Press ✆ / ⌇.
2. Say “Transfer Call.”

To Transfer Audio to the Bluetooth System from a Cell Phone

During a call with the audio on the cell phone, press ✆ / ⌇. The audio transfers to the vehicle. If the audio does not transfer to the vehicle, use the audio transfer feature on the cell phone. See the cell phone manufacturer's user guide.

Voice Pass-Thru

Voice pass-thru allows access to the voice recognition commands on the cell phone. See the cell phone manufacturer's user guide to see if the cell phone supports this feature.

To access contacts stored in the cell phone:

1. Press ✆ / ⌇. The system responds “Ready,” followed by a tone.
2. Say “Bluetooth.” This command can be skipped.
3. Say “Voice.” The system responds “OK, accessing <phone name>.”

The cell phone's normal prompt messages will go through their cycle according to the phone's operating instructions.

Dual Tone Multi-Frequency (DTMF) Tones

The Bluetooth system can send numbers and the numbers stored as name tags during a call. You can use this feature when calling a

menu-driven phone system. Account numbers can also be stored for use.

Sending a Number or Name Tag During a Call

1. Press ✆ / ⁂. The system responds “Ready,” followed by a tone.
2. Say “Dial.”
3. Say the number or name tag to send.

Clearing the System

Unless information is deleted out of the in-vehicle Bluetooth system, it will be retained indefinitely. This includes all saved name tags in the phone book and phone pairing information. For information on how to delete this information, see the previous sections on deleting a paired phone and deleting name tags.

Hands-Free Phone

General Information with Touchscreen

Vehicles with a Hands-Free Phone system can use a Bluetooth-capable cell phone with a hands-free profile to make and receive phone calls. The infotainment system and voice control are used to operate the system. Not all phones support all functions and not all phones work with the Hands-Free Phone system.

Hands-Free Phone Controls

Use the buttons on the infotainment system and the steering wheel to operate the Hands-Free Phone system.

Steering Wheel Controls

Steering wheel controls can be used to:

- Answer incoming calls.
- Confirm system information.
- End a call.
- Decline a call.
- Cancel an operation.
- Make outgoing calls using the call list.

✆ / ⁂ **(Press to Talk) :** Press to answer incoming calls and to confirm system information. Press and hold for two to three seconds to access the call list.

🔇 / ☎ **(Mute/End Call) :** Press to end a call, decline a call, or cancel an operation.

Making a Call by Entering a Phone Number

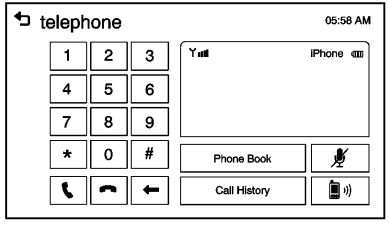

1. Enter the phone number using the keypad on the telephone screen.
2. Press on the screen or / on the steering wheel controls.

If a wrong number is entered, press to delete the number one digit at a time, or press and hold to delete all digits of the number.

Switching a Call to the Cell Phone (Private Mode)

To switch the call from the cell phone to hands-free:

1. Press .
2. Press again to switch back to hands-free.

Turning the Microphone On and Off

Press to turn the microphone on or off.

Calling by Redial

To call by using redial:

- Press / on the steering wheel controls to display the redial guidance screen.
- Press and hold on the telephone screen.

Redialing is not possible when there is no call history.

Taking Calls

When a phone call comes through the connected Bluetooth cell phone, the playing track will be cut off and the phone will ring with the relevant information displayed.

Press / on the steering wheel controls or press Accept on the screen.

To decline the call, press / on the steering wheel controls or press Reject on the screen.

Using the Phone Book Menu

1. Press Phone Book on the telephone screen.
2. Press ▲ or ▼ to scroll through the list.
3. Select the phone book entry to call.
4. Press the number to dial.

Searching for Phone Book Entries

1. Press Phone Book on the telephone screen.
2. Press on the phone book screen.
3. Use the keypad to input the name to search. For details, see “Searching for a Name” following.
4. Select the phone book entry to call.
5. Press the number to dial.

When the Bluetooth device and infotainment system are successfully paired, the phone book will download. Some phones may not download automatically. If this happens, connect it again or proceed with the phone book download on the phone.

Always accept the phone book request on the initial pairing of the phone.

Searching for a Name

Select characters by using the keypad on the phone book screen. As characters are selected, the names that include those characters will display on the phone book screen. As more characters of the name are entered, the list of possible names is shortened.

To search for the name Alex:

1. Press (abc) to select the first character.
2. Press (jkl) to select the second character.
3. Press (def) to select the third character.
4. Press (wxy) to select the fourth character.

Making a Call from Call History

1. Press Call History on the telephone screen.
2. Press one of the following for:
   - Dialed calls.
   - Missed calls.
   - Received calls.
3. Select the phone book entry to call.

Making a Call with Speed Dial Numbers

Press and hold the speed dial number using the keypad on the telephone screen.

Only speed dial numbers already stored on the cell phone can be used for speed dial calls. Up to two-digit speed dial numbers are supported.

For two-digit speed dial numbers, press and hold the second digit to make a call to the speed dial number.

Downloadable Applications

Smartphone Link (Overview)

Before Using Smartphone Link

If equipped, the vehicle can connect to Pandora®, Stitcher SmartRadio®, or other available applications through the infotainment system. The applications must be downloaded to the device first, then the device can be connected to the infotainment system.

Pandora is a free Internet radio service that streams personalized radio stations based on artists, songs, genres, and comedians. Create stations using the Pandora website or smartphone application, then use (thumbs up) or (thumbs down) to personalize stations. To set up an account, or for more information, go to www.pandora.com. Pandora may not be available in Canada or Mexico.

Stitcher SmartRadio is an Internet radio service that streams news, sports, and entertainment shows through the audio system. Create personalized, on-demand stations or discover new shows through Stitcher's preset stations. To set up an account, download the application from the Android Market or iTunes Store, or go to www.stitcher.com.

A phone or tablet with Internet connection and the application installed is required. Personal cell phone data plans are used. Make sure the latest version is installed on the device and the volume is turned up.

Smartphone Supported by Application

To use Applications:

- Connect an iPod/iPhone using the USB port.
- Connect Andriod™ phones through Bluetooth.

iPod/iPhone Error Messages and Solutions

If the system fails to activate the application on the iPod/iPhone connected, an error message is displayed as, “Unable to start application, possible reasons.”

- Your iPhone is locked. To resolve, unlock the iPhone.
- You have another active application open. To resolve, close the other active application.
- You have not installed the application on your iPhone. To resolve, install the application on the iPhone.

iOS Version Error

If the iOS version of the iPhone is less than 4.0, the error message is displayed as, “Your iPhone does not allow this application to be opened on a USB connection. Please refer to owner’s manual.”

- Activate the application on your iPhone, then touch the desired application menu on the infotainment system.

Connecting Application Error

If the infotainment system fails to activate the application on the smartphone connected through Bluetooth wireless technology, the error message is displayed as, “Connecting application failed.”

- Reset all settings related to the phone, then touch the desired application menu on the infotainment system.
- Reconnect the smartphone and infotainment system through Bluetooth wireless technology, then touch the desired application menu on the infotainment system.
- When the application is stopped on the smartphone, it usually takes time to return to normal operation. Try to activate the application after 10–20 seconds.

To switch to another application while playing an application and connected through the USB port, touch HOME on the iPod/iPhone, then touch the application icon on the infotainment system.

Switching Between a USB Connected Device and a Bluetooth Device

When the iPhone is connected to the infotainment system through the USB port, and the infotainment system is connected to another phone through Bluetooth wireless technology, touch iPhone or bluetooth phone on the smartphone list menu to switch between the two applications.

Displaying or Hiding Application Icons

To display or hide application icons on the smartphone link menu:

1. Touch ⌂.
2. Touch smartphone link.

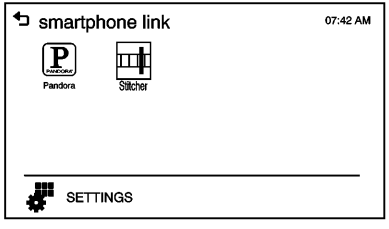

3. Touch SETTINGS.
4. Touch the desired application icon to hide or display it on the smartphone link menu.
5. Touch OK.

If the activated application is on the smartphone link menu, the is activated in the upper position of the HOME menu or playing screen.

Connecting an Application

This section explains a general operation. It may vary depending on the phone operation system, versions, and/or application versions.

To connect an application:

1. Install the application on the smartphone from Appstore or Playstore.
2. Connect the smartphone to the infotainment system through the USB port or Bluetooth.
   - iPhone: USB port
   - Android phone: Bluetooth
3. Activate the application.
4. Touch ⌂ to play the application through the infotainment system. The smartphone link menu is displayed.
5. Touch the application icon.
6. The application screen is displayed.

Smartphone Link (Pandora)

Some images and explanations may vary by phone operating systems, versions, and/or application (App) versions.

Using Pandora

1. Install the Pandora application on the smartphone.
2. Connect the smartphone to the infotainment system through the USB port or Bluetooth wireless technology.
   - iPhone: USB connection.
   - Android phone/BlackBerry phone: Bluetooth wireless technology.

3. Activate the Pandora application.
4. Press ⌂.
5. Press smartphone link.

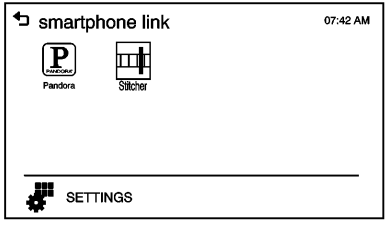

6. Press Pandora.

If the smartphone is not connected to the infotainment system or the application is not installed on the smartphone, the Pandora menu is not activated.

Thumbs Up and Thumbs Down

Rate tracks by using (thumbs up) or (thumbs down).

Pause

- Press ❚❚ to pause.
- Press ▶ to resume.

Changing Tracks

Press ▶▶❚ to change to the next track.

Bookmark

To bookmark a favorite artist or track:

1. Press + on the screen.
2. Press Artist or Track.

Pandora Menus

Creating Stations from Currently Playing Music

1. Press MENU. The Pandora menu is displayed.
2. Press create station.
3. Press from currently playing.
4. Press Artist or Track.
5. Press the desired station. The station is added into the Pandora menu automatically.

Creating Stations by Searching by Artist or Track

1. Press MENU. The Pandora menu is displayed.
2. Press create station.
3. Press enter artist/track. The keypad is displayed.
4. Enter the artist or track name using the keypad, then press Create.
5. Press the desired station. The station is added into the Pandora menu automatically.

Listening to Stations

1. Press MENU. The Pandora menu is displayed.
2. Press ▲ or ▼ to scroll through the list. Select the desired station.

QuickMix

1. Press MENU. The Pandora menu is displayed.
2. Press QuickMix ⤮ to listen to a selection of tracks from your stations.

Tone Settings

1. Press MENU. The Pandora menu is displayed.
2. Press tone settings. The tone settings menu is displayed. See “Tone Settings” under “Radio Controls with Touchscreen” in *Operation* ⇨ *132*.

Smartphone Link (Stitcher)

Some images and explanations may vary by phone operating systems, versions, and/or application (App) versions.

Using Stitcher

1. Install the Stitcher application on the smartphone.
2. Connect the smartphone to the infotainment system through the USB port or Bluetooth wireless technology.
   - iPhone: USB connection.
   - Android phone/BlackBerry phone: Bluetooth wireless technology.
3. Activate the Stitcher application.
4. Press ⌂.
5. Press smartphone link.

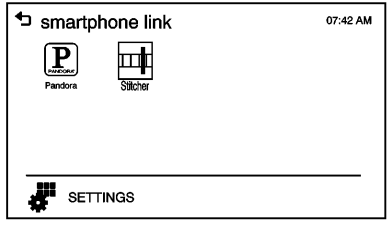

6. Press Stitcher.

If the smartphone is not connected to the infotainment system or the application is not installed on the smartphone, the Stitcher menu is not activated.

Thumbs Up and Thumbs Down

Rate tracks by using (thumbs up) or (thumbs down).

Pause

- Press ❚❚ to pause.
- Press ▶ to resume.

Changing Stations

Press ▶▶❚ to change to the next station.

Saving Favorites

To save a station as a favorite, press ★ on the stitcher screen.

Stitcher Menus

The Stitcher Station menu displays available station data from the Stitcher server.

1. Press MENU. The Stitcher Station menu is displayed.
2. Press ▲ or ▼ to scroll through the list. Select the desired station.

Tone Settings

1. Press MENU. The Stitcher menu is displayed.
2. Press tone settings. The tone settings menu is displayed. See “Tone Settings” under “Radio Controls with Touchscreen” in *Operation* ⇨ *132*.

Bluetooth Phone/ Devices

Pictures and Movies (Audio System)

The infotainment system can play the music files contained in the USB storage device or iPod/iPhone products.

Audio System Information

Using MP3/WMA/OGG/WAV Files

- Music files with .mp3, .wma, .ogg, and .wav file name extensions can be played.
- MP3 files that can be played are: Bit rate: 8 kbps to 320 kbps - Sampling frequency: 48 kHz, 44.1 kHz, 32 kHz, 24 kHz, 22.05 kHz, and 16 kHz.
- Files with a bit rate above 128 kbps will result in higher quality sound.
- ID3 Tag information for MP3 files, such as the album name and the artist, can be played.
- To display album title, track title, and artist information, the file should be compatible with the ID3 Tag V1 and V2 formats.

Using USB Storage Devices and iPod/iPhone

- Use a USB or flash memory type storage device. Do not connect using a USB adaptor.
- Do not connect and reconnect the USB device repeatedly in a short time, as this may cause static electricity and problems using the device.
- Use a USB device with a metal connecting terminal.
- Connection with i-Stick Type USB storage devices may be faulty due to vehicle vibration.
- Do not touch the USB connecting terminal.
- Only USB storage devices formatted in FAT16/32, exFAT file system are recognized. NTFS and other file systems are not recognized.

- The time it takes to process files will depend on the USB storage device type and capacity, and the type of files stored.
- Some USB storage device files may not be compatible.
- Up to two USB devices and one iPod can be played through a USB hub. All devices may not be supported, depending on the performance of the USB hub. If there is not enough power supply, it may not operate normally.
- Do not disconnect the USB storage device while it is playing. This may cause damage to the product or affect the performance of the USB device.
- Disconnect the USB storage device when the ignition is turned off. If the ignition is turned on while the USB device is connected, the USB device may be damaged or may not operate normally.
- USB storage devices can only be connected for playing music/ movies, viewing photo files, or upgrading.
- Do not use the USB terminal to charge USB accessory equipment. The heat generated may cause performance issues or damage.
- Store files in the top-level drive of the USB storage device. When the logical drive is separated from the device, only the USB music files from the top-level logical drive can be played. Music files stored on USB storage devices may not play normally if an application is loaded by partitioning a separate drive.
- Music files to which Digital Right Management (DRM) is applied cannot be played.
- USB storage device capacity limit is 2,500 music files, 2,500 photo files, 250 movie files, 2,500 folders, and 10 stages of folder structure. The iPod/iPhone can play all music files supported, but will only display up to 2,500 files on the screen in alphabetical order.
- Some iPod/iPhone product models may not support the connectivity or functionality of this product.
- Only connect the iPod/iPhone with connection cables supported by iPod/iPhone products. Other connection cables cannot be used.
- The iPod/iPhone may be damaged if it is connected to the vehicle with the ignition on. When not in use, disconnect the iPod/iPhone.
- When the iPod/iPhone is connected to the USB port by using the iPod/iPhone cable, the Bluetooth music is not supported.
- Connect the iPod/iPhone to the USB port by using the iPod/ iPhone cable to play the music files. When the iPod/iPhone is connected to the AUX input

terminal, the music file will play, but can't be controlled by the infotainment system.

- The iPod/iPhone playback functions and the information displayed may be different when played on the infotainment system.

	Step 1	Step 2	Step 3	Step 4
Playlists	Playlists	Songs		
Artists	Artists	Albums	Songs	
Albums	Albums	Songs		
Songs	Songs			
Genres	Genres	Artists	Albums	Songs
Composer	Composer	Albums	Songs	
Audiobooks	Songs			

- Refer to the table for the classification items related to the search function provided by the iPod/iPhone.

USB Player

Playing Music from a USB Device

- Connect the USB device to the USB port.
- Play will start automatically after the system has finished reading the USB device.
- If a non-readable USB device is connected, an error message displays and the system will switch to the previous audio function.

If the USB device is already connected:

- Press ⌂.
- Press audio.
- Press Source▼.
- Press USB.

To stop the USB device and select another media source, press Source▼, then select the other source.

To remove the USB device, select another function, then remove the USB device.

Pause

- Press ❚❚ to pause.
- Press ▶ to resume.

Changing to Next/Previous Files

- Press ▶▶❚ to change to the next file.
- Press ❚◀◀ within five seconds of the playback time to play the previous file.

Returning to the Beginning of the Current File

Press ❚◀◀ after five seconds of the playback time.

Scanning Forward or Backward

Press and hold ⏮ or ⏭ during playback to rewind or fast forward. Release the button to resume playback at normal speed.

Playing a File Repeatedly

Press 🔁 during playback.

- 1: Plays the current file repeatedly.
- ALL: Plays all files repeatedly.
- OFF: Returns to normal playback.

Playing a File Randomly

Press 🔀 during playback.

- ON: Plays all files randomly.
- OFF: Returns to normal playback.

Viewing Information on the Currently Playing File

Press the title during playback to display information about the current file playing.

- The information displayed includes the title, file name, folder name, and artist/album saved with the song.
- Incorrect information cannot be modified or corrected on the infotainment system.
- The information for songs expressed in special symbols or in unavailable languages may be displayed as "▭."

Using the USB Music Menu

- Press MENU during playback.

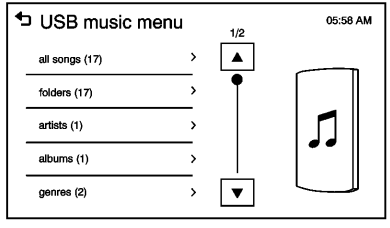

- Press the play mode.

Tone Settings

1. Press ▼.
2. Press tone settings. The Tone Settings menu is displayed. See "Tone Settings" under "Radio Controls with Touchscreen" in *Operation* ⇨ *132*.

Media Transfer Protocol (MTP)

This allows music files on a supported MTP devices to be played.

Playing Music Files

- Connect the supported device to the USB port.
- After the infotainment system reads the device, it will start to play.
- If a non-readable USB device is connected, an error message displays and the system will switch to the previous audio function.

Depending on the connected device, some files may not play.

File loading may take few minutes depending on the type of phone or the number of file/folder stored in it.

When the MTP device is connected, the Infotainment system scans audio files first, then picture and

movie files. Picture and movie files are not available even if the audio file in MTP device is played.

MTP device that has external memory may be recognized as USB1/USB2.

For other USB operations see *USB Port* ⇨ *142*.

When a MTP device is connected and another app is running at the same time, there may be a delay in the rear vision camera.

iPod/iPhone Player

This feature is limited to models supporting the iPod/iPhone connection.

Playing Music Files

- Connect the iPod/iPhone to the USB port.
- Play will start from the previously played point after the system has finished reading the USB device.
- If a non-readable USB device is connected, an error message displays and the system will switch to the previous audio function.
- Connect the iPod/iPhone to the USB port.
- Play will start from the previously played point after the system has finished reading the USB device.
- If a non-readable USB device is connected, an error message displays and the system will switch to the previous audio function.

If the iPod/iPhone is already connected:

1. Press ⌂.
2. Press ♪ audio.
3. Press Source▼.
4. Press iPod.

To stop the device and select another media source, press Source▼, then select the other source.

To remove the device, select another function, then remove the device.

Pause

- Press ❚❚ to pause.
- Press ▶ to resume.

Changing to Next/Previous Song

- Press ⏭ to change to the next song.
- Press ⏮ within two seconds of the playback time to play the previous file.

Returning to the Beginning of the Current File

Press ⏮ after two seconds of the playback time.

Scanning Forward or Backward

Press and hold ⏮ or ⏭ during playback to rewind or fast forward. Release the button to resume playback at normal speed.

Playing a File Repeatedly

Press ⟲ during playback.

- 1: Plays the current file repeatedly.
- ALL: Plays all files repeatedly.
- OFF: Returns to normal playback.

Playing a File Randomly

Press ⇄ during playback.

- NO: Plays all files randomly.
- OFF: Returns to normal playback.

Viewing Information on the Currently Playing Song

Press the title during playback to display information about the current song playing.

- The information displayed includes the title, file name, folder name, and artist/album saved with the song.
- Incorrect information cannot be modified or corrected on the infotainment system.
- The information for songs expressed in special symbols or in unavailable languages may be displayed as "▭."

Using the iPod Menu

- Press MENU during playback.
- Press the appropriate play mode.

Tone Settings

1. Press ▼ on the iPod menu.
2. Press tone settings. The tone settings menu is displayed. See "Tone Settings" under "Radio Controls with Touchscreen" in *Operation* ⇨ *132*.

Pictures and Movies (Picture System)

The infotainment system can view picture files stored on a USB storage device and devices that support Media Transfer Protocol (MTP).

Picture System Information

Caution for Using Picture Files

- File size:
  - JPG: Within 64 to 5,000 pixels (Width) and 64 to 5,000 pixels (Height).
  - BMP, PNG, GIF: Within 64 to 1,024 pixels (Width) and 64 to 1,024 pixels (Height).
- File extensions: .jpg, .bmp, .png, .gif. Animated .gif files are not supported.
- Some files may not operate due to a different recording format or the condition of the file.

Viewing Pictures

1. Connect the USB device to the USB port.

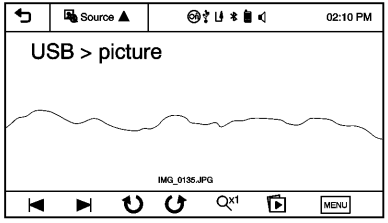

2. Press the screen to open to full screen. Press the screen again to return to the previous screen.

If the USB device is already connected:

1. Press ⌂.
2. Press picture & movie.
3. Press Source ▼.
4. Press USB picture.

Some features are disabled while the vehicle is in motion.

Viewing a Slide Show

1. From the picture screen, press ▶. The slide show will start to play.
2. Press the screen to cancel the slide show during the slide show playback.

Viewing a Previous or Next Picture

Press |◀ or ▶| from the picture screen.

Rotating a Picture

Press ↻ or ↺ from the picture screen.

Enlarging a Picture

Press Q×1 from the picture screen.

Using the USB Picture Menu

1. Press MENU from the picture screen.

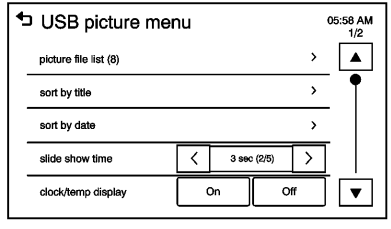

2. Press the appropriate menu:
   - picture file list: lists all picture files.
   - sort by title: shows pictures in title order.
   - sort by date: shows pictures in date order.
   - slide show time: allows selection of the slide show interval.
   - clock/temp display: allows selection of On or Off to show the clock and temperature on the full screen.
   - display settings: adjusts for Brightness and Contrast.
3. Press ↩ to exit.

Pictures and Movies (Movie System)

The infotainment system can play movie files stored on a USB storage device and devices that support Media Transfer Protocol (MTP).

Movie System Information

Caution for Using Movie Files

- Available resolution: Within 720 x 576 (W x H) pixels.
- Frame rate: Less than 30 fps.
- Playable movie file: .avi, .mpg, .mp4, .divx, .xvid, .wmv. The playable movie file may not be played according to the codec format.
- Playable codec format: divx, xvid, mpeg-1, mpeg-4 (mpg4, mp42, mp43), wmv9 (wmv3).
- Playable Audio format: MP3, AC3, AAC, WMA.
- Max video bitrate:
  - mpeg-1: 8 Mbps
  - mpeg-4 (mpg4, mp42, mp43): 4 Mbps
  - wmv9: 3 Mbps
  - divx 3: 3 Mbps
  - divx 4/5/6: 4.8 Mbps
  - xvid: 4.5 Mbps
- Max audio bitrate:
  - mp3: 320 Kbps
  - wma: 320 Kbps
  - ac-3: 640 Kbps
  - aac: 449 Kbps
- Movie files to which Digital Right Management (DRM) is applied may not be played.

Playing a Movie File

1. Connect the USB device to the USB port.
2. Press the screen to open to full screen. Press the screen again to return to the previous screen.

If the USB device is already connected:

1. Press ⌂.
2. Press picture & movie.
3. Press Source▼.
4. Press USB movie.

Movie is not available while driving.

Viewing a Slide Show

From the picture screen, press ▶.

- The slide show will start to play.
- Press the screen to cancel the slide show during the slide show playback.
- The last played audio source will play as background music during the slide show playback.

Pause

- Press ❚❚ to pause.
- Press ▶ to resume.

Changing to Next/Previous Movie

- Press ▶| to change to the next file.
- Press |◀ within five seconds of the playback time to play the previous file.

Returning to the Beginning of the Current Movie

Press |◀ after five seconds of the playback time.

Scanning Forward or Backward

Press and hold |◀ or ▶| during playback to rewind or fast forward. Release the button to resume playback at normal speed.

Viewing Full Screen

Press ⊡ from the movie screen.

Press ⊡ again to return to the previous screen.

Using the USB Movie Menu

1. Press MENU from the movie screen.

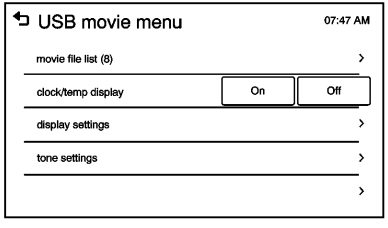

2. Press the appropriate menu:
   - movie file list: lists all movie files.
   - clock/temp display: allows selection of On or Off to show the clock and temperature on the full screen.
   - display settings: adjusts for Brightness and Contrast.
   - tone settings: shows the sound setup. See “Tone Settings” under “Radio Controls with Touchscreen” in *Operation* ⇨ *132*.
3. Press ↩ to exit.

Subtitle Language

If the movie file has a subtitle language, it can be viewed.

- Press ◀ from the movie screen.
- Press < or > on the pop-up screen.
- Press ▶ to close the pop-up screen.

If there is only one subtitle language, it can be set to On/Off.

Audio Language

If the movie file has an audio language, it can be used.

- Press ◀ from the movie screen.
- Press (🔊) < or > on the pop-up screen.
- Press ▶ to close the pop-up screen.

An audio language can be set only when supported by the DivX movie file.

Trademarks and License Agreements

FCC Information

See *Radio Frequency Statement* ⇨ *328*.

Bluetooth®

The Bluetooth word mark and logos are owned by the Bluetooth® SIG, Inc. and any use of such marks by General Motors is under license. Other trademarks and trade names are those of their respective owners.

DivX Certified® to play DivX® video, including premium content.

Covered by one or more of the following U.S. patents: 7,295,673; 7,460,668; 7,515,710; 7,519,274.

DivX®, DivX Certified® and associated logos are trademarks of Rovi Corporation or its subsidiaries and are used under license.

Made for iPod iPhone

"Made for iPod" and "Made for iPhone" mean that an electronic accessory has been designed to connect specifically to iPod or iPhone and has been certified by the developer to meet Apple performance standards.

iPod and iPhone are trademarks of Apple Computer, Inc., registered in the U.S. and other countries.

Fees and Taxes: Subscription fee, taxes, one time activation fee, and other fees may apply. Subscription fee is consumer only. All fees and programming subject to change. Subscriptions subject to Customer Agreement available at www.siriusxm.com. SiriusXM® service only available in the 48 contiguous United States and Canada.

In Canada: Some deterioration of service may occur in extreme northern latitudes. This is beyond the control of SiriusXM® Satellite Radio.

It is prohibited to copy, decompile, disassemble, reverse engineer, hack, manipulate, or otherwise make available any technology or software incorporated in receivers compatible with the SiriusXM Satellite Radio System or that support the SiriusXM website, the Online Service or any of its content. Furthermore, the AMBER voice compression software included in this product is protected by intellectual property rights including

patent rights, copyrights, and trade secrets of Digital Voice Systems, Inc.

General Requirements:

1. A License Agreement from SiriusXM is required for any product that incorporates SiriusXM Technology and/or for use of any of the SiriusXM marks to be manufactured, distributed, or marketed in the SiriusXM Service Area.
2. For products to be distributed, marketed, and/or sold in Canada, a separate agreement is required with Canadian Satellite Radio Inc. (operating as XM Canada).

FreeType 2

Portions of this software are copyright ® 2007-2012 The FreeType Project (www.freetype.org). All rights reserved.

Libjpeg

The navigation software is based in part on the work of the independent JPEG Group.

Climate Controls

Climate Control Systems
Climate Control Systems 176

Air Vents
Air Vents 178

Maintenance
Air Intake 179
Passenger Compartment Air Filter 179

Climate Control Systems

These climate control systems control the heating, cooling, and ventilation for the vehicle.

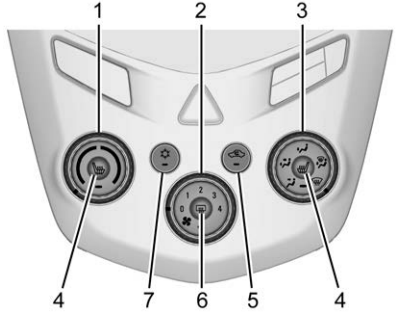

Climate Control System with Heater and Air Conditioning

1. Temperature Control
2. Fan Control
3. Air Delivery Mode Control
4. Driver and Passenger Heated Seats (If Equipped)
5. Recirculation
6. Rear Window Defogger
7. Air Conditioning

Climate Control System with Heater Only

1. Temperature Control
2. Fan Control
3. Air Delivery Mode Control
4. Rear Window Defogger

Temperature Control : Turn clockwise or counterclockwise to increase or decrease the temperature.

(Fan Control) : Turn clockwise or counterclockwise to increase or decrease the fan speed. Turning the

fan control to 0 turns the fan off. The fan must be turned on to run the air conditioning compressor.

Air Delivery Mode Control : Turn clockwise or counterclockwise to change the current airflow mode.

Select from the following air delivery modes:

(Vent) : Air is directed to the instrument panel outlets.

(Bi-Level) : Air is divided between the instrument panel and floor outlets.

(Floor) : Air is directed to the floor outlets, with some air directed to the rear outlets.

(Defog) : This mode clears the windows of fog or moisture. Air is directed to the floor, windshield, and side window outlets.

(Defrost) : This mode clears the windshield of fog or frost more quickly. Air is directed to the windshield and side window outlets.

Do not drive the vehicle until all windows are clear.

In defrost or defog mode, excessive air conditioning use can cause the windows to fog. If this happens, change the air delivery mode to and reduce the fan speed.

(Air Conditioning) : If equipped with air conditioning, follow these steps to use the system. Turn to the desired speed. The air conditioning does not operate when the fan control knob is in the off position. Press to turn the air conditioning on and off. When is pressed, an indicator light comes on to show that the air conditioning is on.

For quick cool down on hot days:

1. Open the windows to let hot air escape.
2. Press .
3. Press .
4. Select the coolest temperature.
5. Select the highest speed.

Using these settings together for long periods of time may cause the air inside the vehicle to become too dry. To prevent this from happening, after the air in the vehicle has cooled, turn the recirculation mode off.

(Recirculation) : This mode recirculates and helps to quickly cool the air inside the vehicle. It can be used to reduce the entry of outside air and odors.

Press the button to turn the recirculation mode on. An indicator light comes on to show that the recirculation is on. Press the button again to return to outside air mode.

Using the recirculation mode for extended periods may cause the windows to fog. If this happens, select the defrost mode.

Max is available when the air conditioning is selected and the temperature is set to the coolest setting while the outside air temperature is warm. When Max is activated, the air inside the vehicle is automatically recirculated,

which helps to quickly cool the vehicle. The recirculation indicator will not be lit.

To allow outside air to enter in these conditions, press the recirculation button twice. The recirculation indicator will not be lit.

or (Heated Seats, If Equipped) : Press to heat the driver or passenger seat. See *Heated Front Seats* ⇨ *47*.

Rear Window and Outside Mirror Defogger

(Rear Window Defogger) : Press to turn the rear window and outside mirror defogger on or off. An indicator light comes on to show that the feature is on.

The rear window defogger can be turned off by pressing again or by turning the ignition to ACC/ACCESSORY or LOCK/OFF.

If equipped with heated outside rearview mirrors, they turn on with the rear window defogger and help to clear fog or frost from the surface of the mirror. See *Heated Mirrors* ⇨ *39*.

Caution
Using a razor blade or sharp object on the inside rear window can damage the antenna or defogger. Repairs would not be covered by the vehicle warranty. Do not stick anything to the rear window.

Air Vents

Use the air vents located in the center and on the side of the instrument panel to direct the airflow. Move the slats on the center air vents to direct airflow.

Turn the knobs on the side air vents counterclockwise or clockwise to open or close off the airflow.

Operation Tips

- Clear away any ice, snow, or leaves from the air inlets at the base of the windshield that may block the flow of air into the vehicle.
- Use of non-GM approved hood deflectors may adversely affect the performance of the system.
- Keep the path under the front seats clear of objects to help circulate the air inside the vehicle more effectively.

Maintenance

Air Intake

Clear away any ice, snow, or leaves from the air intake at the base of the windshield that can block the flow of air into the vehicle.

Passenger Compartment Air Filter

The filter removes dust, pollen, and other airborne irritants from outside air that is pulled into the vehicle.

The filter should be replaced as part of routine scheduled maintenance. See *Maintenance Schedule* ⇨ *302*. To find out what type of filter to use, see *Maintenance Replacement Parts* ⇨ *312*.

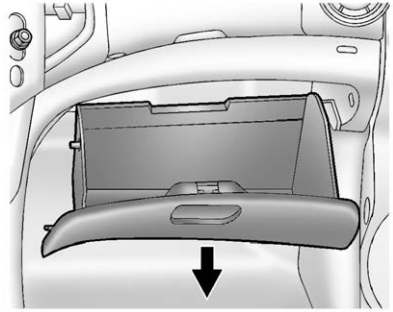

1. Open the glove box completely and pull it to remove.
2. Remove the filter cover by unscrewing both sides of the cover.

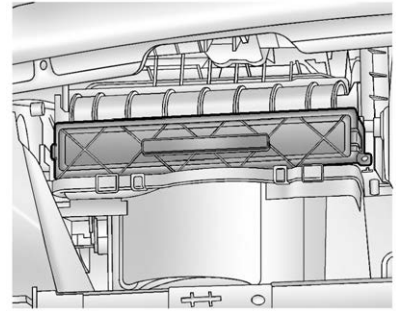

3. Install the new air filter.
4. Reinstall the air filter cover and glove box in reverse order.

See your dealer if additional assistance is needed.

Driving and Operating

Driving Information
Distracted Driving 181
Defensive Driving 181
Drunk Driving 181
Control of a Vehicle 182
Braking 182
Steering 182
Off-Road Recovery 183
Loss of Control 183
Driving on Wet Roads 184
Hill and Mountain Roads 185
Winter Driving 185
If the Vehicle Is Stuck 186
Vehicle Load Limits 187

Starting and Operating
New Vehicle Break-In 190
Ignition Positions 191
Starting the Engine 192
Engine Heater 193
Retained Accessory Power (RAP) 194
Shifting Into Park (Automatic Transmission) 195
Shifting out of Park (Automatic Transmission) 196
Parking 196
Parking over Things That Burn 196

Engine Exhaust
Engine Exhaust 197
Running the Vehicle While Parked 197

Automatic Transmission
Automatic Transmission 198
Manual Mode 199

Manual Transmission
Manual Transmission 200

Brakes
Antilock Brake System (ABS) 202
Parking Brake 202
Brake Assist 203
Hill Start Assist (HSA) 203

Ride Control Systems
Traction Control/Electronic Stability Control 204

Cruise Control
Cruise Control 206

Driver Assistance Systems
Rear Vision Camera (RVC) . . . 208
Forward Collision Alert (FCA) System 210
Lane Departure Warning (LDW) 212

Fuel
Fuel 213
California Fuel Requirements 214
Fuels in Foreign Countries . . . 215
Fuel Additives 215
Filling the Tank 215
Filling a Portable Fuel Container 216

Trailer Towing
General Towing Information 217

Conversions and Add-Ons
Add-On Electrical Equipment 217

Driving Information

Distracted Driving

Distraction comes in many forms and can take your focus from the task of driving. Exercise good judgment and do not let other activities divert your attention away from the road. Many local governments have enacted laws regarding driver distraction. Become familiar with the local laws in your area.

To avoid distracted driving, always keep your eyes on the road, hands on the wheel, and mind on the drive.

- Do not use a phone in demanding driving situations. Use a hands-free method to place or receive necessary phone calls.
- Watch the road. Do not read, take notes, or look up information on phones or other electronic devices.
- Designate a front seat passenger to handle potential distractions.
- Become familiar with vehicle features before driving, such as programming favorite radio stations and adjusting climate control and seat settings. Program all trip information into any navigation device prior to driving.
- Wait until the vehicle is parked to retrieve items that have fallen to the floor.
- Stop or park the vehicle to tend to children.
- Keep pets in an appropriate carrier or restraint.
- Avoid stressful conversations while driving, whether with a passenger or on a cell phone.

⚠ Warning

Taking your eyes off the road too long or too often could cause a crash resulting in injury or death. Focus your attention on driving.

Refer to the Infotainment section for more information on using that system, including pairing and using a cell phone.

Defensive Driving

Defensive driving means “always expect the unexpected.” The first step in driving defensively is to wear the safety belt. See *Safety Belts* ⇨ *50*.

- Assume that other road users (pedestrians, bicyclists, and other drivers) are going to be careless and make mistakes. Anticipate what they might do and be ready.
- Allow enough following distance between you and the driver in front of you.
- Focus on the task of driving.

Drunk Driving

Death and injury associated with drinking and driving is a global tragedy.

⚠ Warning

Drinking and then driving is very dangerous. Your reflexes, perceptions, attentiveness, and judgment can be affected by even a small amount of alcohol. You can have a serious — or even fatal — collision if you drive after drinking.

Do not drink and drive or ride with a driver who has been drinking. Ride home in a cab; or if you are with a group, designate a driver who will not drink.

Control of a Vehicle

Braking, steering, and accelerating are important factors in helping to control a vehicle while driving.

Braking

Braking action involves perception time and reaction time. Deciding to push the brake pedal is perception time. Actually doing it is reaction time.

Average driver reaction time is about three-quarters of a second. In that time, a vehicle moving at 100 km/h (60 mph) travels 20 m (66 ft), which could be a lot of distance in an emergency.

Helpful braking tips to keep in mind include:

- Keep enough distance between you and the vehicle in front of you.
- Avoid needless heavy braking.
- Keep pace with traffic.

If the engine ever stops while the vehicle is being driven, brake normally but do not pump the brakes. Doing so could make the pedal harder to push down. If the engine stops, there will be some power brake assist but it will be used when the brake is applied. Once the power assist is used up, it can take longer to stop and the brake pedal will be harder to push.

Steering

Electric Power Steering

The vehicle has electric power steering. It does not have power steering fluid. Regular maintenance is not required.

If power steering assist is lost due to a system malfunction, the vehicle can be steered, but may require increased effort. See your dealer if there is a problem.

If the steering wheel is turned until it reaches the end of its travel and is held against that position for an extended period of time, power steering assist may be reduced.

If the steering assist is used for an extended period of time, power assist may be reduced.

Normal use of the power steering assist should return when the system cools down.

See your dealer if there is a problem.

Curve Tips

- Take curves at a reasonable speed.
- Reduce speed before entering a curve.
- Maintain a reasonable steady speed through the curve.
- Wait until the vehicle is out of the curve before accelerating gently into the straightaway.

Steering in Emergencies

- There are some situations when steering around a problem may be more effective than braking.
- Holding both sides of the steering wheel allows you to turn 180 degrees without removing a hand.
- The Antilock Brake System (ABS) allows steering while braking.

Off-Road Recovery

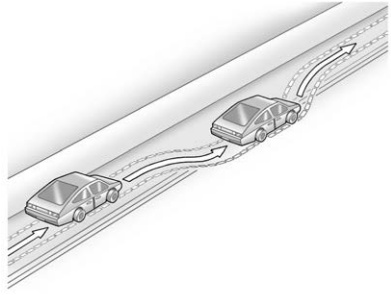

The vehicle's right wheels can drop off the edge of a road onto the shoulder while driving. Follow these tips:

1. Ease off the accelerator and then, if there is nothing in the way, steer the vehicle so that it straddles the edge of the pavement.
2. Turn the steering wheel about one-eighth of a turn, until the right front tire contacts the pavement edge.
3. Turn the steering wheel to go straight down the roadway.

Loss of Control

Skidding

There are three types of skids that correspond to the vehicle's three control systems:

- Braking Skid — wheels are not rolling.
- Steering or Cornering Skid — too much speed or steering in a curve causes tires to slip and lose cornering force.
- Acceleration Skid — too much throttle causes the driving wheels to spin.

Defensive drivers avoid most skids by taking reasonable care suited to existing conditions, and by not overdriving those conditions. But skids are always possible.

If the vehicle starts to slide, follow these suggestions:

- Ease your foot off the accelerator pedal and steer the way you want the vehicle to go.

The vehicle may straighten out. Be ready for a second skid if it occurs.

- Slow down and adjust your driving according to weather conditions. Stopping distance can be longer and vehicle control can be affected when traction is reduced by water, snow, ice, gravel, or other material on the road. Learn to recognize warning clues — such as enough water, ice, or packed snow on the road to make a mirrored surface — and slow down when you have any doubt.
- Try to avoid sudden steering, acceleration, or braking, including reducing vehicle speed by shifting to a lower gear. Any sudden changes could cause the tires to slide.

Remember: Antilock brakes help avoid only the braking skid.

Driving on Wet Roads

Rain and wet roads can reduce vehicle traction and affect your ability to stop and accelerate. Always drive slower in these types of driving conditions and avoid driving through large puddles and deep-standing or flowing water.

⚠ Warning

Wet brakes can cause crashes. They might not work as well in a quick stop and could cause pulling to one side. You could lose control of the vehicle.

After driving through a large puddle of water or a car/vehicle wash, lightly apply the brake pedal until the brakes work normally.

Flowing or rushing water creates strong forces. Driving through flowing water could cause the vehicle to be carried away. If this happens, you and other vehicle occupants could drown. Do not ignore police warnings and be very cautious about trying to drive through flowing water.

Hydroplaning

Hydroplaning is dangerous. Water can build up under the vehicle's tires so they actually ride on the water. This can happen if the road is wet enough and you are going fast enough. When the vehicle is hydroplaning, it has little or no contact with the road.

There is no hard and fast rule about hydroplaning. The best advice is to slow down when the road is wet.

Other Rainy Weather Tips

Besides slowing down, other wet weather driving tips include:

- Allow extra following distance.
- Pass with caution.
- Keep windshield wiping equipment in good shape.
- Keep the windshield washer fluid reservoir filled.
- Have good tires with proper tread depth. See *Tires* ⇨ *254*.
- Turn off cruise control.

Hill and Mountain Roads

Driving on steep hills or through mountains is different than driving on flat or rolling terrain. Tips include:

- Keep the vehicle serviced and in good shape.
- Check all fluid levels and brakes, tires, cooling system, and transmission.
- Shift to a lower gear when going down steep or long hills.

⚠ Warning

Using the brakes to slow the vehicle on a long downhill slope can cause brake overheating, can reduce brake performance, and could result in a loss of braking. Shift the transmission to a lower gear to let the engine assist the brakes on a steep downhill slope.

⚠ Warning

Coasting downhill in N (Neutral) or with the ignition off is dangerous. This can cause overheating of the brakes and loss of steering. Always have the engine running and the vehicle in gear.

- Drive at speeds that keep the vehicle in its own lane. Do not swing wide or cross the center line.
- Be alert on top of hills; something could be in your lane (e.g., stalled car, accident).
- Pay attention to special road signs (e.g., falling rocks area, winding roads, long grades, passing or no-passing zones) and take appropriate action.

Winter Driving

Driving on Snow or Ice

Snow or ice between the tires and the road creates less traction or grip, so drive carefully. Wet ice can occur at about 0 °C (32 °F) when freezing rain begins to fall. Avoid driving on wet ice or in freezing rain until roads can be treated.

For Slippery Road Driving:

- Accelerate gently. Accelerating too quickly causes the wheels to spin and makes the surface under the tires slick.
- Turn on Traction Control. See *Traction Control/Electronic Stability Control* ⇨ *204*.
- The Antilock Brake System (ABS) improves vehicle stability during hard stops, but the brakes should be applied sooner than when on dry pavement. See *Antilock Brake System (ABS)* ⇨ *202*.
- Allow greater following distance and watch for slippery spots. Icy patches can occur on otherwise

clear roads in shaded areas. The surface of a curve or an overpass can remain icy when the surrounding roads are clear. Avoid sudden steering maneuvers and braking while on ice.

- Turn off cruise control.

Blizzard Conditions

Stay with the vehicle unless there is help nearby. If possible, use Roadside Assistance. See *Roadside Assistance Program* ⇨ *322*. To get help and keep everyone in the vehicle safe:

- Turn on the hazard warning flashers.
- Tie a red cloth to an outside mirror.

⚠ Warning

Snow can trap engine exhaust under the vehicle. This may cause exhaust gases to get inside. Engine exhaust contains

(Continued)

Warning (Continued)

carbon monoxide (CO), which cannot be seen or smelled. It can cause unconsciousness and even death.

If the vehicle is stuck in snow:

- Clear snow from the base of the vehicle, especially any blocking the exhaust pipe.
- Open a window about 5 cm (2 in) on the vehicle side that is away from the wind, to bring in fresh air.
- Fully open the air outlets on or under the instrument panel.
- Adjust the climate control system to circulate the air inside the vehicle and set the fan speed to the highest setting. See “Climate Control Systems.”

For more information about CO, see *Engine Exhaust* ⇨ *197*.

To save fuel, run the engine for short periods to warm the vehicle and then shut the engine off and partially close the window. Moving about to keep warm also helps.

If it takes time for help to arrive, when running the engine, push the accelerator pedal slightly so the engine runs faster than the idle speed. This keeps the battery charged to restart the vehicle and to signal for help with the headlamps. Do this as little as possible, to save fuel.

If the Vehicle Is Stuck

Slowly and cautiously spin the wheels to free the vehicle when stuck in sand, mud, ice, or snow.

If stuck too severely for the traction system to free the vehicle, turn the traction system off and use the rocking method. See *Traction Control/Electronic Stability Control* ⇨ *204*.

⚠ Warning

If the vehicle's tires spin at high speed, they can explode, and you or others could be injured. The vehicle can overheat, causing an engine compartment fire or other damage. Spin the wheels as little as possible and avoid going above 56 km/h (35 mph).

Rocking the Vehicle to Get it Out

Turn the steering wheel left and right to clear the area around the front wheels. Turn off any traction system. Shift back and forth between R (Reverse) and a low forward gear, spinning the wheels as little as possible. To prevent transmission wear, wait until the wheels stop spinning before shifting gears. Release the accelerator pedal while shifting, and press lightly on the accelerator pedal when the transmission is in gear. Slowly spinning the wheels in the forward and reverse directions causes a rocking motion that could free the vehicle. If that does not get the vehicle out after a few tries, it might need to be towed out. If the vehicle does need to be towed out, see *Towing the Vehicle* ⇨ *289*.

Vehicle Load Limits

It is very important to know how much weight the vehicle can carry. This weight is called the vehicle capacity weight and includes the weight of all occupants, cargo, and all nonfactory-installed options. Two labels on the vehicle may show how much weight it may properly carry: the Tire and Loading Information label and the Certification label.

⚠ Warning

Do not load the vehicle any heavier than the Gross Vehicle Weight Rating (GVWR), or either the maximum front or rear Gross Axle Weight Rating (GAWR). This can cause systems to break and change the way the vehicle handles. This could cause loss of control and a crash. Overloading can also reduce stopping distance, damage the tires, and shorten the life of the vehicle.

Tire and Loading Information Label

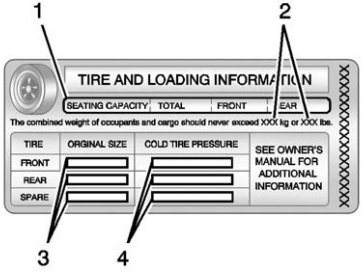

Label Example

A vehicle-specific Tire and Loading Information label is attached to the vehicle's center pillar (B-pillar). The Tire and Loading Information label shows the number of occupant seating positions (1), and the maximum vehicle capacity weight (2) in kilograms and pounds.

The Tire and Loading Information label also shows the tire size of the original equipment tires (3) and the recommended cold tire inflation pressures (4). For more information on tires and inflation see *Tires* ⇨ *254* and *Tire Pressure* ⇨ *261*.

There is also important loading information on the Certification label. It may show the Gross Vehicle Weight Rating (GVWR) and the Gross Axle Weight Rating (GAWR) for the front and rear axle. See “Certification Label” later in this section.

“Steps for Determining Correct Load Limit–

1. Locate the statement "The combined weight of occupants and cargo should never exceed XXX kg or XXX lbs." on your vehicle’s placard.
2. Determine the combined weight of the driver and passengers that will be riding in your vehicle.
3. Subtract the combined weight of the driver and passengers from XXX kg or XXX lbs.
4. The resulting figure equals the available amount of cargo and luggage load capacity. For example, if the "XXX" amount equals 1400 lbs. and there will be five 150 lb passengers in your vehicle, the amount of available cargo and luggage load capacity is 650 lbs. (1400-750 (5 x 150) = 650 lbs.)
5. Determine the combined weight of luggage and cargo being loaded on the vehicle. That weight may not safely exceed the available cargo and luggage load capacity calculated in Step 4.
6. If your vehicle will be towing a trailer, load from your trailer will be transferred to

your vehicle. Consult this manual to determine how this reduces the available cargo and luggage load capacity of your vehicle.”

This vehicle is neither designed nor intended to tow a trailer.

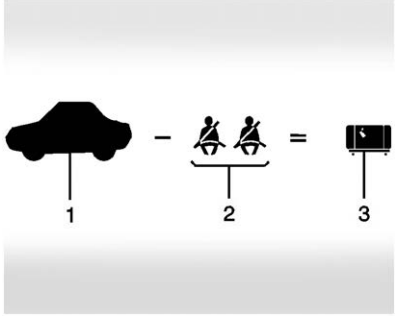

Example 1

1. Vehicle Capacity Weight for Example 1 = 453 kg (1,000 lbs).
2. Subtract Occupant Weight @ 68 kg (150 lbs) × 2 = 136 kg (300 lbs).
3. Available Occupant and Cargo Weight = 317 kg (700 lbs).

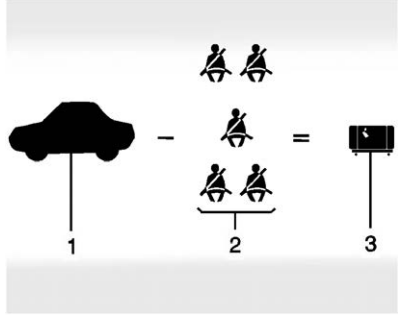

Example 2

1. Vehicle Capacity Weight for Example 2 = 453 kg (1,000 lbs).
2. Subtract Occupant Weight @ 68 kg (150 lbs) × 5 = 340 kg (750 lbs).
3. Available Cargo Weight = 113 kg (250 lbs).

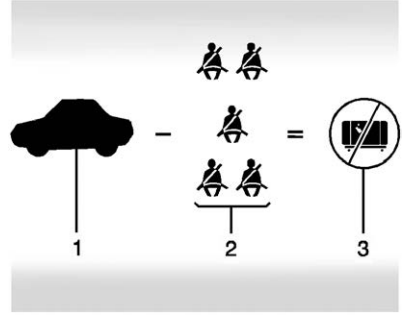

Example 3

1. Vehicle Capacity Weight for Example 3 = 453 kg (1,000 lbs).
2. Subtract Occupant Weight @ 91 kg (200 lbs) × 5 = 453 kg (1,000 lbs).
3. Available Cargo Weight = 0 kg (0 lbs).

Refer to the vehicle's Tire and Loading Information label for specific information about the vehicle's capacity weight and seating positions. The combined

weight of the driver, passengers, and cargo should never exceed the vehicle's capacity weight.

Certification Label

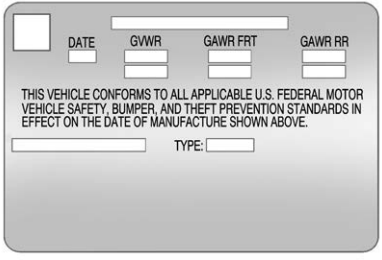

Label Example

A vehicle-specific Certification label is attached to the vehicle's center pillar (B-pillar). The label may show the gross weight capacity of the vehicle, called the Gross Vehicle Weight Rating (GVWR). The GVWR includes the weight of the vehicle, all occupants, fuel, and cargo.

⚠ Warning

Things inside the vehicle can strike and injure people in a sudden stop or turn, or in a crash.

- Put things in the cargo area of the vehicle. In the cargo area, put them as far forward as possible. Try to spread the weight evenly.
- Never stack heavier things, like suitcases, inside the vehicle so that some of them are above the tops of the seats.
- Do not leave an unsecured child restraint in the vehicle.
- Secure loose items in the vehicle.
- Do not leave a seat folded down unless needed.

Starting and Operating

New Vehicle Break-In

Caution

The vehicle does not need an elaborate break-in. But it will perform better in the long run if you follow these guidelines:

- Do not drive at any one constant speed, fast or slow, for the first 805 km (500 mi). Do not make full-throttle starts. Avoid downshifting to brake or slow the vehicle.
- Avoid making hard stops for the first 322 km (200 mi) or so. During this time the new brake linings are not yet broken in. Hard stops with new linings can mean premature wear and earlier replacement. Follow this

(Continued)

Caution (Continued)

breaking-in guideline every time you get new brake linings.

Following break-in, engine speed and load can be gradually increased.

Ignition Positions

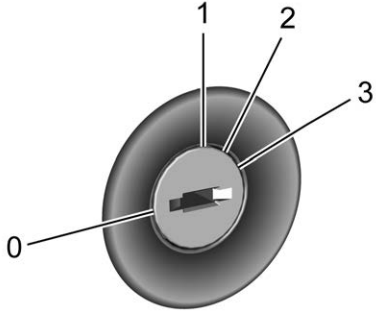

The ignition switch has four different positions.

To shift out of P (Park), the ignition must be in ON/RUN and the regular brake pedal applied.

0 (STOPPING THE ENGINE/LOCK/OFF) : When the vehicle is stopped, turn the ignition switch to LOCK/OFF to turn the engine off.

This position locks the ignition and transmission. The steering wheel may also lock, if equipped.

Do not turn the engine off when the vehicle is moving. This will cause a loss of power assist in the brake and steering systems and disable the airbags.

If the vehicle must be shut off in an emergency:

1. Brake using a firm and steady pressure. Do not pump the brakes repeatedly. This may deplete power assist, requiring increased brake pedal force.
2. Shift the vehicle to N (Neutral). This can be done while the vehicle is moving. After shifting to N (Neutral), firmly apply the brakes and steer the vehicle to a safe location.
3. Come to a complete stop. Shift to P (Park) with an automatic transmission, or Neutral with a manual transmission. Turn the ignition to LOCK/OFF.
4. Set the parking brake. See *Parking Brake* ⇨ *202*.

⚠ Warning

Turning off the vehicle while moving may cause loss of power assist in the brake and steering systems and disable the airbags. While driving, only shut the vehicle off in an emergency.

If the vehicle cannot be pulled over, and must be shut off while driving, turn the ignition to ACC/ACCESSORY.

Caution

Using a tool to force the key to turn in the ignition could cause damage to the switch or break the

(Continued)

Caution (Continued)

key. Use the correct key, make sure it is all the way in, and turn it only with your hand. If the key cannot be turned by hand, see your dealer.

1 (ACC/ACCESSORY) : This is the position in which things like the radio and the windshield wipers can be operated when the engine is off.

2 (ON/RUN) : This position can be used to operate the electrical accessories and to display some instrument cluster warning and indicator lights. This position can also be used for service and diagnostics, and to verify the proper operation of the malfunction indicator lamp as may be required for emission inspection purposes. The switch stays in this position when the engine is running.

If you leave the key in the ACC/ACCESSORY or ON/RUN position with the engine off, the battery could be drained. You may not be able to start the vehicle if the battery is allowed to drain for an extended period of time.

3 (START) : This is the position that starts the engine. When the engine starts, release the key. The ignition switch returns to ON/RUN for driving.

A warning tone will sound when the driver door is opened, the ignition is in ACC/ACCESSORY or LOCK/OFF, and the key is in the ignition. If the ignition becomes difficult to turn, see *Keys* ⇨ *25*.

Starting the Engine

Automatic Transmission

Move the shift lever to P (Park) or N (Neutral). To restart the engine when the vehicle is already moving, use N (Neutral) only.

Caution

Do not try to shift to P (Park) if the vehicle is moving. If you do, you could damage the transmission. Shift to P (Park) only when the vehicle is stopped.

Caution

If you add electrical parts or accessories, you could change the way the engine operates. Any resulting damage would not be covered by the vehicle warranty. See *Add-On Electrical Equipment* ⇨ *217*.

Manual Transmission

The shift lever should be in Neutral and the parking brake engaged. Hold the clutch pedal to the floor and start the engine.

Starting Procedure

1. With your foot off the accelerator pedal, turn the ignition to START. When the engine cranks, let go of the key. The idle speed will go down as the engine gets warm.

Caution
Holding the key in START for longer than 15 seconds at a time will cause the battery to be drained much sooner. And the excessive heat can damage the starter motor. Wait about 15 seconds between each try to help avoid draining the battery or damaging the starter.

2. If the engine does not start, wait about 15 seconds and try again. Wait about 15 seconds between each try.

   When the engine has run about 10 seconds to warm up, the vehicle is ready to be driven. Do not run the engine at high speed when it is cold.

   If the weather is below freezing (0 °C or 32 °F), let the engine run for a few minutes to warm up.

3. If the engine still will not start, or starts but then stops, it could be flooded with too much gasoline. Try pushing the accelerator pedal all the way to the floor and holding it there as you hold the key in START for about three seconds. If the vehicle starts briefly but then stops again, do the same thing, but this time keep the pedal down for five or six seconds. This clears the extra gasoline from the engine.

Engine Heater

The engine heater can provide easier starting and better fuel economy during engine warm-up in cold weather conditions at or below −18 °C (0 °F). Vehicles with an engine heater should be plugged in at least four hours before starting.

1. Turn off the engine.

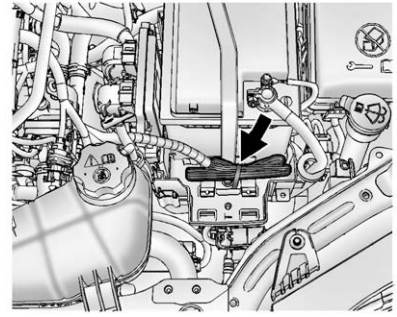

2. Open the hood and unwrap the electrical cord. The cord is located in the driver side of the engine compartment, near the battery. It is shipped from the factory with a tie holding it in place. Use care in removing the tie so that the cord is not damaged.

   Check the heater cord for damage. If it is damaged, do not use it. See your dealer for a replacement. Inspect the cord for damage yearly.

3. Plug it into a normal, grounded 110-volt AC outlet.

⚠ Warning

Improper use of the heater cord or an extension cord can damage the cord and may result in overheating and fire.

- Plug the cord into a three-prong electrical utility receptacle that is protected by a ground fault detection function. An ungrounded outlet could cause an electric shock.
- Use a weatherproof, heavy-duty, 15 amp-rated extension cord if needed. Failure to use the recommended extension cord in good operating condition, or using a damaged heater or extension cord, could make

(Continued)

Warning (Continued)

it overheat and cause a fire, property damage, electric shock, and injury.

- Do not operate the vehicle with the heater cord permanently attached to the vehicle. Possible heater cord and thermostat damage could occur.
- While in use, do not let the heater cord touch vehicle parts or sharp edges. Never close the hood on the heater cord.
- Before starting the vehicle, unplug the cord, reattach the cover to the plug, and securely fasten the cord. Keep the cord away from any moving parts.

4. Before starting the engine, be sure to unplug and store the cord as it was before to keep it away from moving engine parts. If you do not it could be damaged.

The length of time the heater should remain plugged in depends on several factors. Ask a dealer in the area where you will be parking the vehicle for the best advice on this.

Retained Accessory Power (RAP)

These vehicle accessories may be used for up to 10 minutes after the engine is turned off:

- Audio System
- Power Windows
- Sunroof

The power windows and sunroof will continue to work for up to 10 minutes or until any door is opened.

The radio will work when the key is in ON/RUN or ACC/ACCESSORY. Once the key is turned from ON/RUN to LOCK/OFF, the radio will

continue to work for 10 minutes after the last input (button press, knob turn) to the radio is detected.

It is possible to turn the radio back on at any time after it has timed out using the Power knob. The radio will be functional for 10 minutes after the last input (button press, knob turn) to the radio is detected.

Shifting Into Park (Automatic Transmission)

1. Hold the brake pedal down and set the parking brake. See *Parking Brake* ⇨ *202*.
2. Move the shift lever into P (Park) by pressing the button on the shift lever and pushing the lever all the way toward the front of the vehicle.
3. Turn the ignition key to LOCK/OFF.
4. Remove the key and take it with you. If you can leave the vehicle with the ignition key in your hand, the vehicle is in P (Park).

Leaving the Vehicle with the Engine Running (Automatic Transmission)

⚠ Warning

It can be dangerous to leave the vehicle with the engine running. It could overheat and catch fire.

It is dangerous to get out of the vehicle if the shift lever is not fully in P (Park) with the parking brake firmly set. The vehicle can roll.

Do not leave the vehicle when the engine is running. If you have left the engine running, the vehicle can move suddenly. You or others could be injured. To be sure the vehicle will not move, even when you are on fairly level ground, always set the parking brake and move the shift lever to P (Park). See *Shifting Into Park (Automatic Transmission)* ⇨ *195*.

If you have to leave the vehicle with the engine running, be sure the vehicle is in P (Park) and the parking brake is firmly set before you leave it. After you have moved the shift lever into P (Park), hold the brake pedal down. Then see if you can move the shift lever away from P (Park) without first pushing the button on the shift lever. If you can, it means that the shift lever was not fully locked into P (Park).

Torque Lock (Automatic Transmission)

If you are parking on a hill and you do not shift the transmission into P (Park) properly, the weight of the vehicle may put too much force on the parking pawl in the transmission. You may find it difficult to pull the shift lever out of P (Park). This is called “torque lock.”
To prevent torque lock, set the parking brake and then shift into P (Park) properly before you leave the driver seat. To find out how, see “Shifting Into Park” previously in this section.

When you are ready to drive, move the shift lever out of P (Park) before you release the parking brake.

If torque lock does occur, you may need to have another vehicle push yours a little uphill to take some of the pressure from the parking pawl in the transmission, so you can pull the shift lever out of P (Park).

Shifting out of Park (Automatic Transmission)

This vehicle is equipped with a shift lock control. The shift lock control is designed to:

- Prevent ignition key removal unless the shift lever is in P (Park) with the shift lever button fully released.
- Prevent movement of the shift lever out of P (Park) unless the ignition is in ON/RUN and the brake pedal is applied.

The shift lock control is always functional except in the case of an uncharged or low voltage (less than 9-volt) battery.

If the vehicle has an uncharged battery or a battery with low voltage, try charging or jump starting the battery. See *Jump Starting - North America* ⇨ *287*.

To shift out of P (Park):

1. Apply the brake pedal.
2. Turn the ignition to ON/RUN.
3. Press the shift lever button.
4. Move the shift lever to the desired position.

If still unable to shift out of P (Park):

1. Fully release the shift lever button.
2. Hold the brake pedal down and press the shift lever button again.
3. Move the shift lever to the desired position.

If you still cannot move the shift lever from P (Park), consult your dealer or a professional towing service.

The doors may lock when shifting from P (Park). See *Automatic Door Locks* ⇨ *32*.

Parking

If the vehicle has a manual transmission, before getting out of the vehicle, move the shift lever into R (Reverse) if parking on a downhill slope. On a level surface or an uphill slope, use 1 (First) gear. Firmly apply the parking brake. Turn the wheels toward the curb for a downhill slope, or away from the curb for an uphill slope. Once the shift lever has been placed into gear with the clutch pedal pressed in, turn the ignition key to LOCK/OFF, remove the key, and release the clutch.

Parking over Things That Burn

⚠ Warning

Things that can burn could touch hot exhaust parts under the vehicle and ignite. Do not park over papers, leaves, dry grass, or other things that can burn.

Engine Exhaust

⚠ Warning

Engine exhaust contains carbon monoxide (CO) which cannot be seen or smelled. Exposure to CO can cause unconsciousness and even death.

Exhaust may enter the vehicle if:

- The vehicle idles in areas with poor ventilation (parking garages, tunnels, deep snow that may block underbody airflow or tail pipes).
- The exhaust smells or sounds strange or different.
- The exhaust system leaks due to corrosion or damage.
- The vehicle exhaust system has been modified, damaged, or improperly repaired.

(Continued)

Warning (Continued)

- There are holes or openings in the vehicle body from damage or aftermarket modifications that are not completely sealed.

If unusual fumes are detected or if it is suspected that exhaust is coming into the vehicle:

- Drive it only with the windows completely down.
- Have the vehicle repaired immediately.

Never park the vehicle with the engine running in an enclosed area such as a garage or a building that has no fresh air ventilation.

Running the Vehicle While Parked

It is better not to park with the engine running.

If the vehicle is left with the engine running, follow the proper steps to be sure the vehicle will not move. See *Shifting Into Park (Automatic Transmission)* ⇨ *195* and *Engine Exhaust* ⇨ *197*. If the vehicle has a manual transmission, see *Parking* ⇨ *196*.

Automatic Transmission

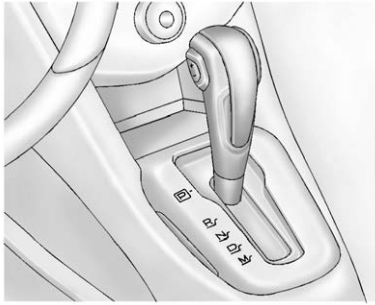

P : This position locks the front wheels. It is the best position to use when you start the engine because the vehicle cannot move easily.

⚠ Warning

It is dangerous to get out of the vehicle if the shift lever is not fully in P (Park) with the parking brake firmly set. The vehicle can roll.

(Continued)

Warning (Continued)

Do not leave the vehicle when the engine is running. If you have left the engine running, the vehicle can move suddenly. You or others could be injured. To be sure the vehicle will not move, even when you are on fairly level ground, always set the parking brake and move the shift lever to P (Park). See *Shifting Into Park (Automatic Transmission)* ⇨ *195*.

Make sure the shift lever is fully in P (Park) before starting the engine. The vehicle has a shift lock control. You must fully apply the brake pedal then press the shift lever button before you can shift from P (Park) while the ignition key is in ON/RUN. If you cannot shift out of P (Park), ease pressure on the shift lever and push the shift lever all the way into P (Park) as you maintain brake application. Then move the shift lever into another gear. See *Shifting out of Park (Automatic Transmission)* ⇨ *196*.

R : Use this gear to back up.

Caution

Shifting to R (Reverse) while the vehicle is moving forward could damage the transmission. The repairs would not be covered by the vehicle warranty. Shift to R (Reverse) only after the vehicle is stopped.

To rock the vehicle back and forth to get out of snow, ice, or sand without damaging the transmission, see *If the Vehicle Is Stuck* ⇨ *186*.

N : In this position, the engine does not connect with the wheels. To restart the engine when the vehicle is already moving, use N (Neutral) only. Also, use N (Neutral) when the vehicle is being towed.

⚠ Warning

Shifting into a drive gear while the engine is running at high speed is dangerous. Unless your foot is firmly on the brake pedal, the vehicle could move very rapidly. You could lose control and hit people or objects. Do not shift into a drive gear while the engine is running at high speed.

Caution

Shifting out of P (Park) or N (Neutral) with the engine running at high speed may damage the transmission. The repairs would not be covered by the vehicle warranty. Be sure the engine is not running at high speed when shifting the vehicle.

D : This position is for normal driving. It provides the best fuel economy. If you need more power for passing, and you are:

- Going less than 56 km/h (35 mph), push the accelerator pedal about halfway down.
- Going about 56 km/h (35 mph) or more, push the accelerator all the way down.

M : This position allows you to change gears similar to a manual transmission. If the vehicle has this feature, see “Manual Mode” following.

Manual Mode

To use this feature:

1. Move the shift lever from D (Drive) rearward to M (Manual Mode).

   While driving in manual mode, the transmission will remain in the driver selected gear. When coming to a stop in the manual position, the vehicle will automatically shift into 1 (First) gear.

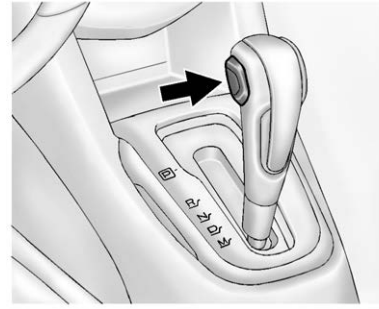

2. Press the + (plus) end of the button on the side of the shift lever to upshift, or press the − (minus) end of the button to downshift.

The Driver Information Center (DIC) in the instrument cluster will change from the currently displayed message to the letter “M,” for Manual position, and a number indicating the requested gear.

While using manual mode, the transmission will have firmer shifting and sportier performance. You can use this for sport driving or when

climbing hills to stay in gear longer or to downshift for more power or engine braking.

The transmission will only allow you to shift into gears appropriate for the vehicle speed and engine revolutions per minute (rpm):

- The transmission will not automatically shift to the next higher gear if the vehicle speed or engine rpm is too low.
- The transmission will not allow shifting to the next lower gear if the vehicle speed or engine rpm is too high.

Manual Transmission

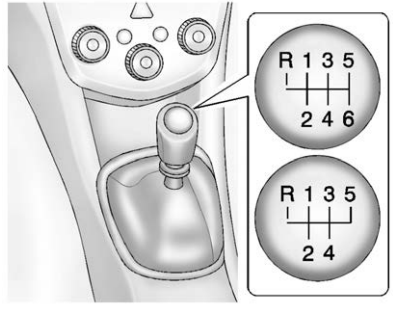

The vehicle may be equipped with a 5-speed or 6-speed manual transmission.

Caution

Shifting the vehicle initially into any gear other than 1 (First) or R (Reverse) can damage the clutch. Shift the manual transmission in the proper sequence, and time the gear

(Continued)

Caution (Continued)

shifting with the accelerator to avoid revving the engine and damaging the clutch.

1 (First) : Press the clutch pedal and shift into 1 (First). Then, slowly let up on the clutch pedal as you press the accelerator pedal.

You can shift into 1 (First) when going less than 32 km/h (20 mph). If you have come to a complete stop and it is hard to shift into 1 (First), put the shift lever in Neutral and let up on the clutch. Press the clutch pedal back down. Then shift into 1 (First).

2 (Second) : Press the clutch pedal as you let up on the accelerator pedal and shift into 2 (Second). Then, slowly let up on the clutch pedal as you press the accelerator pedal.

3 (Third), 4 (Fourth), 5 (Fifth), and 6 (Sixth) : Shift into 3 (Third), 4 (Fourth), 5 (Fifth), and 6 (Sixth) (if equipped) the same way as for

2 (Second). Slowly let up on the clutch pedal as you press the accelerator pedal.

To stop, let up on the accelerator pedal and press the brake pedal. Just before the vehicle stops, press the clutch pedal and the brake pedal, and shift to Neutral.

Neutral : Use this position when you start or idle the engine.

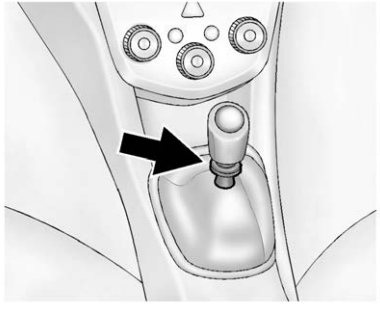

R (Reverse) : To back up, press down the clutch pedal, lift up the reverse lockout ring on the shift lever, and shift into R (Reverse). Let up on the clutch pedal slowly while pressing the accelerator pedal.

Caution
Shifting to R (Reverse) while the vehicle is moving forward could damage the transmission. The repairs would not be covered by the vehicle warranty. Shift to R (Reverse) only after the vehicle is stopped.

Shift Speeds

⚠ Warning
If you skip a gear when downshifting, you could lose control of the vehicle. You could injure yourself or others. Do not shift down more than one gear at a time when downshifting.

Up-Shift Light

Vehicles equipped with a manual transmission may have an up-shift light. This light indicates when to shift to the next higher gear for better fuel economy.

For the best fuel economy, accelerate slowly and shift when the light comes on, and if the weather, road, and traffic conditions allow.

It is normal for the light to go on and off if the accelerator position changes quickly. Ignore the light during downshifts.

Brakes

Antilock Brake System (ABS)

This vehicle has ABS, an advanced electronic braking system that helps prevent a braking skid.

When the vehicle begins to drive away, ABS checks itself.
A momentary motor or clicking noise might be heard while this test is going on, and it might even be noticed that the brake pedal moves a little. This is normal.

If there is a problem with ABS, this warning light stays on. See *Antilock Brake System (ABS) Warning Light* ⇨ *103*.

If driving safely on a wet road and it becomes necessary to slam on the brakes and continue braking to avoid a sudden obstacle, a computer senses the wheels are slowing down. If one of the wheels is about to stop rolling, the computer will separately work the brakes at each wheel.

ABS can change the brake pressure to each wheel, as required, faster than any driver could. This can help you steer around the obstacle while braking hard.

As the brakes are applied, the computer keeps receiving updates on wheel speed and controls braking pressure accordingly.

Remember: ABS does not change the time needed to get a foot up to the brake pedal or always decrease stopping distance. If you get too close to the vehicle in front of you, there will not be enough time to apply the brakes if that vehicle suddenly slows or stops. Always leave enough room up ahead to stop, even with ABS.

Using ABS

Do not pump the brakes. Just hold the brake pedal down firmly and let ABS work. You may hear the ABS pump or motor operating and feel the brake pedal pulsate. This is normal.

Braking in Emergencies

ABS allows you to steer and brake at the same time. In many emergencies, steering can help more than even the very best braking.

Parking Brake

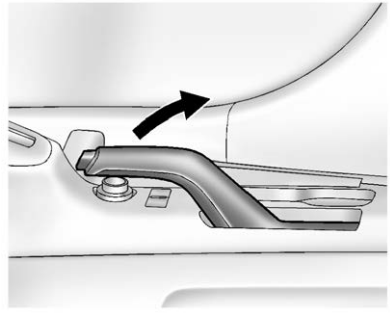

To set the parking brake, hold the brake pedal down and pull up on the parking brake lever. If the ignition is on, the brake system warning light will come on. See *Brake System Warning Light* ⇨ *102*.

To release the parking brake, hold the brake pedal down. Pull the parking brake lever up until you can press the release button. Hold the release button in as you move the brake lever all the way down.

Caution

Driving with the parking brake on can overheat the brake system and cause premature wear or damage to brake system parts. Make sure that the parking brake is fully released and the brake warning light is off before driving.

Brake Assist

The Brake Assist feature is designed to assist the driver in stopping or decreasing vehicle speed in emergency driving conditions. This feature uses the stability system hydraulic brake control module to supplement the power brake system under conditions where the driver has quickly and forcefully applied the brake pedal in an attempt to quickly stop or slow down the vehicle. The stability system hydraulic brake control module increases brake pressure at each corner of the vehicle until the ABS activates. Minor brake pedal pulsation or pedal movement during this time is normal and the driver should continue to apply the brake pedal as the driving situation dictates. The Brake Assist feature will automatically disengage when the brake pedal is released or brake pedal pressure is quickly decreased.

Hill Start Assist (HSA)

This vehicle has an HSA feature, which may be useful when the vehicle is stopped on a grade sufficient enough to activate HSA. This feature is designed to prevent the vehicle from rolling, either forward or rearward, during vehicle drive off. After the driver completely stops and holds the vehicle in a complete standstill on a grade, HSA will be automatically activated. During the transition period between when the driver releases the brake pedal and starts to accelerate to drive off on a grade, HSA holds the braking pressure for a maximum of two seconds to ensure that there is no rolling. The brakes will automatically release when the accelerator pedal is applied within the two-second window. It will not activate if the vehicle is in a drive gear and facing downhill, or if the vehicle is facing uphill and in R (Reverse).

Ride Control Systems

Traction Control/ Electronic Stability Control

System Operation

The vehicle has a Traction Control System (TCS) and StabiliTrak®, an electronic stability control system. These systems help limit wheel slip and assist the driver in maintaining control, especially on slippery road conditions.

TCS activates if it senses that any of the drive wheels are spinning or beginning to lose traction. When this happens, TCS applies the brakes to the spinning wheels and reduces engine power to limit wheel spin.

StabiliTrak activates when the vehicle senses a difference between the intended path and the direction the vehicle is actually traveling. StabiliTrak selectively applies braking pressure to any one of the vehicle wheel brakes to assist the driver in keeping the vehicle on the intended path.

If cruise control is being used and traction control or StabiliTrak begins to limit wheel spin, cruise control will disengage. Cruise control may be turned back on when road conditions allow.

Both systems come on automatically when the vehicle is started and begins to move. The systems may be heard or felt while they are operating or while performing diagnostic checks. This is normal and does not mean there is a problem with the vehicle.

It is recommended to leave both systems on for normal driving conditions, but it may be necessary to turn TCS off if the vehicle gets stuck in sand, mud, ice, or snow. See *If the Vehicle Is Stuck* ⇨ *186* and “Turning the Systems Off and On” later in this section.

The indicator light for both systems is in the instrument cluster. This light will:

- Flash when TCS is limiting wheel spin.
- Flash when StabiliTrak is activated.
- Turn on and stay on when either system is not working.

If either system fails to turn on or to activate, a message displays in the Driver Information Center (DIC), and comes on and stays on to indicate that the system is inactive and is not assisting the driver in maintaining control. The vehicle is safe to drive, but driving should be adjusted accordingly.

If comes on and stays on:

1. Stop the vehicle.
2. Turn the engine off and wait 15 seconds.
3. Start the engine.

Drive the vehicle. If comes on and stays on, the vehicle may need more time to diagnose the problem. If the condition persists, see your dealer.

Turning the Systems Off and On

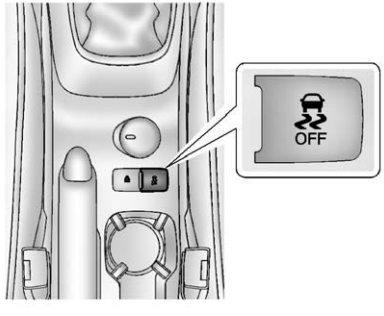

The button for TCS and StabiliTrak is on the center console.

Caution
Do not repeatedly brake or accelerate heavily when TCS is off. The vehicle driveline could be damaged.

To turn off only TCS, press and release the button. The traction off light displays in the instrument cluster.

To turn TCS on again, press and release the button. The traction off light displayed in the instrument cluster will turn off.

If TCS is limiting wheel spin when the button is pressed, the system will not turn off until the wheels stop spinning.

To turn off both TCS and StabiliTrak, press and hold the button until the traction off light and StabiliTrak OFF light come on and stay on in the instrument cluster.

To turn TCS and StabiliTrak on again, press and release the button. The traction off light and StabiliTrak OFF light in the instrument cluster turn off.

Adding accessories can affect the vehicle performance. See *Accessories and Modifications* ⇨ *220*.

Cruise Control

If the vehicle is equipped with cruise control, a speed of about 40 km/h (25 mph) or more can be maintained without keeping your foot on the accelerator. Cruise control does not work at speeds below 40 km/h (25 mph).

⚠ Warning

Cruise control can be dangerous where you cannot drive safely at a steady speed. Do not use cruise control on winding roads or in heavy traffic.

Cruise control can be dangerous on slippery roads. On such roads, fast changes in tire traction can cause excessive wheel slip, and you could lose control. Do not use cruise control on slippery roads.

If the vehicle's Traction Control System (TCS) or StabiliTrak system begins to limit wheel spin while using cruise control, the cruise control will automatically disengage. See *Traction Control/Electronic Stability Control* ⇨ *204*. If a collision alert occurs when cruise control is activated, cruise control is disengaged. See *Forward Collision Alert (FCA) System* ⇨ *210*. When road conditions allow you to safely use it again, the cruise control can be turned back on.

If the brakes are applied, cruise control disengages.

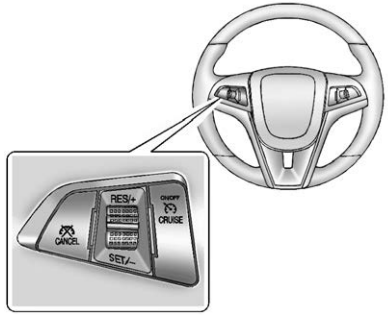

CRUISE (On/Off) : Press to turn the cruise control system on and off. A white indicator comes on in the instrument cluster when cruise is turned on.

RES/+ (Resume/Accelerate) : If there is a set speed in memory, move the thumbwheel up briefly to resume to that speed or hold upward to accelerate. If cruise control is already active, use to increase vehicle speed.

SET/− (Set/Coast) : Move the thumbwheel down briefly to set the speed and activate cruise control. If cruise control is already active, use to decrease speed.

CANCEL (Cancel) : Press to disengage cruise control without erasing the set speed from memory.

Setting Cruise Control

If CRUISE is on when not in use, SET/- or RES/+ could get bumped and go into cruise when not desired. Keep CRUISE off when cruise control is not being used.

To set cruise control:

1. Press CRUISE to turn the cruise system on.
2. Get to the speed desired.

3. Move the thumbwheel down to SET/- and release it.
4. Take your foot off the accelerator pedal.

The cruise control indicator on the instrument cluster turns green after cruise control has been set to the desired speed. See *Instrument Cluster* ⇨ *96*.

Resuming a Set Speed

If the cruise control is set at a desired speed and then the brakes or clutch for manual transmissions are applied or CANCEL is pressed, the cruise control is disengaged without erasing the set speed from memory.

Once the vehicle reaches about 40 km/h (25 mph) or more, move the thumbwheel up toward RES/+ briefly. The vehicle returns to the previous set speed.

Increasing Speed While Using Cruise Control

If the cruise control system is already activated:

- Move the thumbwheel up toward RES/+ and hold it until the desired speed is reached, then release it.
- To increase the vehicle speed in small increments, move the thumbwheel up toward RES/+ briefly and then release it. For each press, the vehicle goes about 1.6 km/h (1 mph) faster.

The speedometer reading can be displayed in either English or metric units. See *Driver Information Center (DIC)* ⇨ *109*. The increment value used depends on the units displayed.

Reducing Speed While Using Cruise Control

If the cruise control system is already activated:

- Move the thumbwheel toward SET/− and hold until the desired lower speed is reached, then release it.
- To decrease the vehicle speed in smaller increments, move the thumbwheel toward SET/− briefly. For each press, the vehicle goes about 1.6 km/h (1 mph) slower.

The speedometer reading can be displayed in either English or metric units. See *Driver Information Center (DIC)* ⇨ *109*. The increment value used depends on the units displayed.

Passing Another Vehicle While Using Cruise Control

Use the accelerator pedal to increase the vehicle speed. When you take your foot off the pedal, the vehicle slows down to the previous set cruise control speed. While pressing the accelerator pedal or shortly following the release to override cruise control, briefly moving the thumbwheel toward SET/- will result in cruise control set to the current vehicle speed.

Using Cruise Control on Hills

How well cruise control works on hills depends on the vehicle speed, load, and the steepness of the hills. When going up steep hills, you might have to step on the

accelerator pedal to maintain the vehicle speed. When going downhill, you might have to brake or shift to a lower gear to keep your speed down. If the brake pedal is applied, cruise control will disengage.

Ending Cruise Control

There are four ways to end cruise control:

- To disengage cruise control, step lightly on the brake pedal or clutch for manual transmission.
- Press CANCEL on the steering wheel.
- Shift the transmission to N (Neutral).
- To turn off cruise control, press CRUISE on the steering wheel.

Erasing Speed Memory

The cruise control set speed is erased from memory if the CRUISE button is pressed or if the ignition is turned off.

Driver Assistance Systems

Rear Vision Camera (RVC)

This vehicle may have the RVC system. Read this entire section before using it.

The RVC system can assist the driver when backing up by displaying a view of the area behind the vehicle.

⚠ Warning

The camera(s) do not display children, pedestrians, bicyclists, crossing traffic, animals, or any other object outside of the cameras' field of view, below the bumper, or under the vehicle. Shown distances may be different from actual distances. Do not drive or park the vehicle using only these camera(s). Always check behind and around the

(Continued)

Warning (Continued)

vehicle before driving. Failure to use proper care may result in injury, death, or vehicle damage.

An image appears on the infotainment screen when the vehicle is shifted into R (Reverse). The infotainment screen goes to the previous screen after approximately 4 seconds once the vehicle is shifted out of R (Reverse).

To return to the previous screen sooner, do one of the following:

- Shift into P (Park).
- Reach a vehicle speed of 8 km/h (5 mph).

Guidelines

The RVC system has a guideline overlay that can help the driver align the vehicle when backing into a parking spot.

To turn the guidelines on or off:

1. Shift into P (Park).

2. From the home page on the infotainment system, select Settings.
3. Select Rear Camera Options.
4. Select Guidelines.

Rear Vision Camera Error Messages

SERVICE REAR VISION CAMERA SYSTEM : This message can display when the system is not operating properly.

If any other problem occurs or if a problem persists, see your dealer.

Rear Vision Camera Location

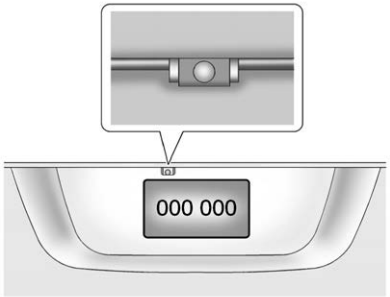

The camera is above the license plate.

The area displayed by the camera is limited. It does not display objects that are close to either corner or under the bumper and can vary depending on vehicle orientation or road conditions. Displayed images may be closer or farther than they appear.

The following illustrations show the field of view that the camera provides.

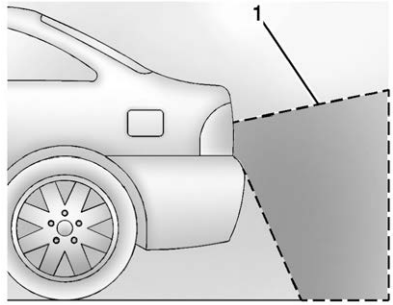

1. View displayed by the camera.

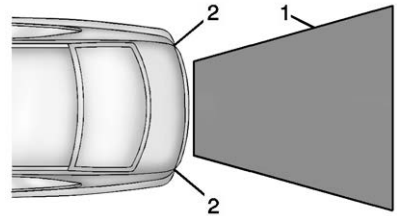

1. View displayed by the camera.
2. Corner of the rear bumper.

When the System Does Not Seem to Work Properly

The RVC system may not work properly or display a clear image if:

- The RVC is turned off. See “Turning the Rear Camera System On or Off” earlier in this section.
- It is dark.
- The sun or the beam of headlamps are shining directly into the camera lens.

- Ice, snow, mud, or anything else builds up on the camera lens. Clean the lens, rinse it with water, and wipe it with a soft cloth.
- The back of the vehicle is in an accident. The position and mounting angle of the camera can change or the camera can be affected. Be sure to have the camera and its position and mounting angle checked at your dealer.

Forward Collision Alert (FCA) System

If equipped, the FCA system may help to avoid or reduce the harm caused by front-end crashes. When approaching a vehicle ahead too quickly, FCA provides a red flashing alert on the windshield and rapidly beeps.

FCA detects vehicles within a distance of approximately 60 m (197 ft) and operates at speeds above 40 km/h (25 mph).

⚠ Warning

FCA is a warning system and does not apply the brakes. When approaching a slower-moving or stopped vehicle ahead too rapidly, or when following a vehicle too closely, FCA may not provide a warning with enough time to help avoid a crash. FCA does not warn of pedestrians, animals, signs, guardrails, bridges, construction barrels, or other objects. Be ready to take action and apply the brakes. For more information, see *Defensive Driving* ⇨ *181*.

FCA can be disabled with the FCA steering wheel control.

Detecting the Vehicle Ahead

FCA warnings will not occur unless the FCA system detects a vehicle ahead. When a vehicle is detected, the vehicle ahead indicator will display green. Vehicles may not be detected on curves, highway exit ramps, or hills, due to poor visibility; or if a vehicle ahead is partially blocked by pedestrians or other objects. FCA will not detect another vehicle ahead until it is completely in the driving lane.

⚠ Warning

FCA does not provide a warning to help avoid a crash, unless it detects a vehicle. FCA may not detect a vehicle ahead if the FCA sensor is blocked by dirt, snow, or ice, or if the windshield is damaged. It may also not detect a vehicle on winding or hilly roads, or in conditions that can limit visibility such as fog, rain, or snow, or if the headlamps or windshield are not cleaned or in

(Continued)

Warning (Continued)

proper condition. Keep the windshield, headlamps, and FCA sensors clean and in good repair.

Collision Alert

When your vehicle approaches another detected vehicle too rapidly, the red FCA display on top of the instrument panel to the right of the steering wheel will flash. Also, several rapid high-pitched beeps will sound from the front. When this Collision Alert occurs, the brake system may prepare for driver braking to occur more rapidly which can cause a brief, mild deceleration. Continue to apply the brake pedal as needed. Cruise control may be disengaged when the Collision Alert occurs.

Tailgating Alert

The red FCA display will stay continuously illuminated when you are following a detected vehicle ahead much too closely.

Selecting the Alert Timing

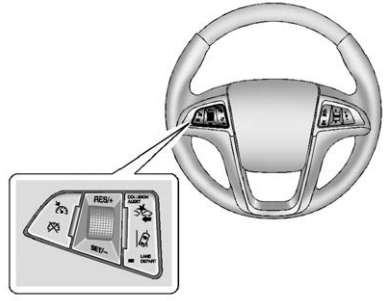

The Collision Alert control is on the steering wheel. Press COLLISION ALERT to set the alert timing to far, medium, near or off. The first button press shows the current control setting on the DIC. Additional button presses will change this setting. The chosen setting will remain until it is changed and will affect both the Collision Alert and the Tailgating Alert features. The timing of both alerts will vary based on vehicle speed. The faster the vehicle speed, the farther away the alert will occur. Consider traffic and weather conditions when selecting the alert timing. The range of selectable alert timing may not be appropriate for all drivers and driving conditions.

Unnecessary Alerts

FCA may sometimes set unnecessary alerts to turning vehicles, vehicles in other lanes, objects that are not vehicles, or shadows. These alerts are normal operation and the vehicle does not need service.

Cleaning the System

If the FCA system does not seem to operate properly, cleaning the outside of the windshield in front of the rearview mirror may correct the issue.

Lane Departure Warning (LDW)

If equipped, LDW may help avoid crashes due to unintentional lane departures. It may provide an alert if the vehicle is crossing a lane without using a turn signal in that direction. LDW uses a camera sensor to detect the lane markings at speeds of 56 km/h (35 mph) or greater.

⚠ Warning

The LDW system does not steer the vehicle. The LDW system may not:

- Provide enough time to avoid a crash.
- Detect lane markings under poor weather or visibility conditions. This can occur if the windshield or headlamps are blocked by dirt, snow, or ice; if they are

(Continued)

Warning (Continued)

not in proper condition; or if the sun shines directly into the camera.

- Detect road edges.
- Detect lanes on winding or hilly roads.

If LDW only detects lane markings on one side of the road, it will only warn you when departing the lane on the side where it has detected a lane marking. Always keep your attention on the road and maintain proper vehicle position within the lane, or vehicle damage, injury, or death could occur. Always keep the windshield, headlamps, and camera sensors clean and in good repair. Do not use LDW in bad weather conditions.

How the System Works

The LDW camera sensor is on the windshield ahead of the rearview mirror.

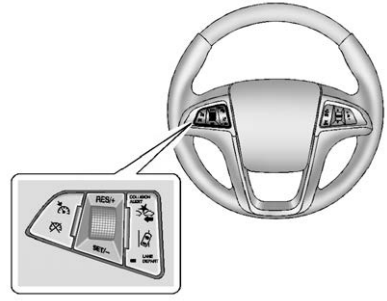

To turn LDW on and off, press LANE DEPART on the steering wheel. The control indicator will light when LDW is on.

When LDW is on, is green if LDW is available to warn of a lane departure. If the vehicle crosses a detected lane marking without using the turn signal in that direction, changes to amber and flashes. Additionally, there will be three beeps on the right or left, depending on the lane departure direction.

When the System Does Not Seem To Work Properly

The system may not detect lanes as well when there are:

- Close vehicles ahead.
- Sudden lighting changes, such as when driving through tunnels.
- Banked roads.

If the LDW system is not functioning properly when lane markings are clearly visible, cleaning the windshield may help.

LDW alerts may occur due to tar marks, shadows, cracks in the road, temporary or construction lane markings, or other road imperfections. This is normal system operation; the vehicle does not need service. Turn LDW off if these conditions continue.

Fuel

Use of the recommended fuel is an important part of the proper maintenance of this vehicle. When driving in the U.S. and Canada, to help keep the engine clean and maintain optimum vehicle performance, we recommend using TOP TIER Detergent Gasolines. See www.toptiergas.com for a list of TOP TIER Detergent Gasolines.

TOP TIER™ Detergent Gasoline

CATÉGORIE SUPERIÉURE™ Essences Détergentes

Use regular unleaded gasoline meeting ASTM specification D4814 with a posted octane rating of 87 or higher. Do not use gasoline with an

octane rating below 87, as it may cause engine damage and will lower fuel economy.

Use of Seasonal Fuels

Use summer and winter fuels in the appropriate season. The fuels industry automatically modifies the fuel for the appropriate season. If fuel is left in the vehicle tank for long periods of time, driving or starting could be affected. Drive the vehicle until the fuel is at one-half tank or less, then refuel with the current seasonal fuel.

Prohibited Fuels

Gasolines containing oxygenates such as ethers and ethanol, as well as reformulated gasolines, are available in some cities. If these gasolines comply with the previously described specification, then they are acceptable to use. However, E85 (85% ethanol) and other fuels containing more than 15% ethanol must be used only in FlexFuel vehicles.

Caution

Do not use fuel containing methanol. It can corrode metal parts in the fuel system and also damage plastic and rubber parts. That damage would not be covered under the vehicle warranty.

Some gasolines, mainly high octane racing gasolines, can contain an octane-enhancing additive called methylcyclopentadienyl manganese tricarbonyl (MMT). Do not use gasolines and/or fuel additives with MMT as they can reduce spark plug life and affect emission control system performance. The malfunction indicator lamp may turn on. If this occurs, see your dealer for service.

California Fuel Requirements

If the vehicle is certified to meet California Emissions Standards, it is designed to operate on fuels that meet California specifications. See the underhood emission control label. If this fuel is not available in states adopting California Emissions Standards, the vehicle will operate satisfactorily on fuels meeting federal specifications, but emission control system performance might be affected. The malfunction indicator lamp could turn on and the vehicle may not pass a smog-check test. See *Malfunction Indicator Lamp (Check Engine Light)* ⇨ *100*. If this occurs, return to your authorized dealer for diagnosis. If it is determined that the condition is caused by the type of fuel used, repairs may not be covered by the vehicle warranty.

Fuels in Foreign Countries

If planning to drive in countries outside the U.S. or Canada, the proper fuel might be hard to find. Check regional auto club or fuel retail brand websites for availability in the country where driving. Never use leaded gasoline, fuel containing methanol, manganese, or any other fuel not recommended. Costly repairs caused by use of improper fuel would not be covered by the vehicle warranty.

Fuel Additives

To keep fuel systems clean, TOP TIER Detergent Gasoline is recommended. See *Fuel* ⇨ *213*.

If TOP TIER Detergent Gasoline is not available, one bottle of Fuel System Treatment PLUS added to the fuel tank at every engine oil change, can help. Fuel System Treatment PLUS is the only gasoline additive recommended by General Motors. It is available at your dealer.

Filling the Tank

⚠ Warning

Fuel vapors and fuel fires burn violently and can cause injury or death.

- To help avoid injuries to you and others, read and follow all the instructions on the fuel pump island.
- Turn off the engine when refueling.
- Keep sparks, flames, and smoking materials away from fuel.
- Do not leave the fuel pump unattended.
- Do not use a cell phone while refueling.
- Do not reenter the vehicle while pumping fuel.
- Keep children away from the fuel pump and never let children pump fuel.

(Continued)

Warning (Continued)

- Fuel can spray out if the fuel cap is opened too quickly. This spray can happen if the tank is nearly full, and is more likely in hot weather. Open the fuel cap slowly and wait for any hiss noise to stop then unscrew the cap all the way.

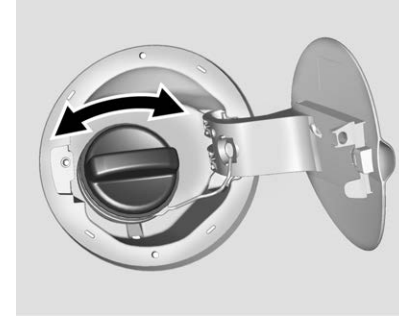

The fuel cap is behind a hinged fuel door on the passenger side of the vehicle.

To remove the fuel cap, turn it slowly counterclockwise. The fuel cap has a spring in it; if the cap is released too soon, it will spring back to the right.

Be careful not to spill fuel. Do not top off or overfill the tank. Wait a few seconds after you have finished pumping before removing the nozzle. Clean fuel from painted surfaces as soon as possible. See “Washing the Vehicle” in *Exterior Care* ⇨ *292*.

⚠ Warning

Overfilling the fuel tank by more than three clicks of a standard fill nozzle may cause:

- Vehicle performance issues, including engine stalling and damage to the fuel system.
- Fuel spills.
- Potential fuel fires.

When replacing the fuel cap, turn it clockwise until it clicks. Make sure the cap is fully installed. The diagnostic system can determine if the fuel cap has been left off or improperly installed. This would allow fuel to evaporate into the atmosphere. See *Malfunction Indicator Lamp (Check Engine Light)* ⇨ *100*.

⚠ Warning

If a fire starts while you are refueling, do not remove the nozzle. Shut off the flow of fuel by shutting off the pump or by notifying the station attendant. Leave the area immediately.

Caution

If a new fuel cap is needed, be sure to get the right type of cap from your dealer. The wrong type of fuel cap may not fit properly, may cause the malfunction indicator lamp to light, and could damage the fuel tank and

(Continued)

Caution (Continued)

emissions system. See *Malfunction Indicator Lamp (Check Engine Light)* ⇨ *100*.

Filling a Portable Fuel Container

⚠ Warning

Filling a portable fuel container while it is in the vehicle can cause fuel vapors that can ignite either by static electricity or other means. You or others could be badly burned and the vehicle could be damaged. Always:

- Use approved fuel containers.
- Remove the container from the vehicle, trunk, or pickup bed before filling.
- Place the container on the ground.

(Continued)

Warning (Continued)

- Place the nozzle inside the fill opening of the container before dispensing fuel, and keep it in contact with the fill opening until filling is complete.
- Fill the container no more than 95% full to allow for expansion.
- Do not smoke, light matches, or use lighters while pumping fuel.
- Avoid using cell phones or other electronic devices.

Trailer Towing

General Towing Information

The vehicle is neither designed nor intended to tow a trailer.

Conversions and Add-Ons

Add-On Electrical Equipment

⚠ Warning

The Data Link Connector (DLC) is used for vehicle service and Emission Inspection/Maintenance testing. See *Malfunction Indicator Lamp (Check Engine Light)* ⇨ *100*. A device connected to the Data Link Connector (DLC)—such as an aftermarket fleet or driver-behavior tracking device—may interfere with vehicle systems. This could affect vehicle operation and cause a crash. Such devices may also access information stored in the vehicle's systems.

Caution

Some electrical equipment can damage the vehicle or cause components to not work and would not be covered by the warranty. Always check with your dealer before adding electrical equipment.

Add-on equipment can drain the vehicle's 12-volt battery, even if the vehicle is not operating.

The vehicle has an airbag system. Before attempting to add anything electrical to the vehicle, see *Servicing the Airbag-Equipped Vehicle* ⇨ *66* and *Adding Equipment to the Airbag-Equipped Vehicle* ⇨ *66*.

Vehicle Care

General Information

General Information 220
California Proposition 65 Warning 220
California Perchlorate Materials Requirements 220
Accessories and Modifications 220

Vehicle Checks

Doing Your Own Service Work 221
Hood 222
Engine Compartment Overview 223
Engine Oil 226
Engine Oil Life System 228
Automatic Transmission Fluid 229
Manual Transmission Fluid . . . 230
Hydraulic Clutch 230
Engine Air Cleaner/Filter 230
Cooling System 232
Engine Coolant 233
Engine Overheating 236
Washer Fluid 237
Brakes 238
Brake Fluid 239
Battery - North America 240
Starter Switch Check 240
Automatic Transmission Shift Lock Control Function Check 241
Ignition Transmission Lock Check 241
Park Brake and P (Park) Mechanism Check 241
Wiper Blade Replacement 242

Headlamp Aiming

Headlamp Aiming 243

Bulb Replacement

Bulb Replacement 243
Halogen Bulbs 243
Headlamps, Front Turn Signal and Parking Lamps 244
Fog Lamps (LS, LT, and LTZ) 245
Fog Lamps (RS) 245
Taillamps, Turn Signal, Stoplamps, and Back-Up Lamps 245
License Plate Lamp 246
Replacement Bulbs 247

Electrical System

Electrical System Overload . . . 248
Fuses and Circuit Breakers . . . 248
Engine Compartment Fuse Block 249
Instrument Panel Fuse Block 252

Wheels and Tires

Tires 254
All-Season Tires 255
Winter Tires 255
Summer Tires 256
Tire Sidewall Labeling 256
Tire Designations 258
Tire Terminology and Definitions 259
Tire Pressure 261
Tire Pressure Monitor System 262
Tire Pressure Monitor Operation 263
Tire Inspection 266
Tire Rotation 266
When It Is Time for New Tires 267
Buying New Tires 268
Different Size Tires and Wheels 270
Uniform Tire Quality Grading 270
Wheel Alignment and Tire Balance 272
Wheel Replacement 272

Tire Chains 273
If a Tire Goes Flat 273
Tire Sealant and Compressor Kit 275
Storing the Tire Sealant and Compressor Kit 281
Tire Changing 281
Compact Spare Tire 286

Jump Starting
Jump Starting - North America 287

Towing the Vehicle
Towing the Vehicle 289
Recreational Vehicle Towing 290

Appearance Care
Exterior Care 292
Interior Care 297
Floor Mats 300

General Information

For service and parts needs, visit your dealer. You will receive genuine GM parts and GM-trained and supported service people.

Genuine GM parts have one of these marks:

California Proposition 65 Warning

WARNING: Most motor vehicles, including this one, contain and/or emit chemicals known to the State of California to cause cancer and birth defects or other reproductive harm. Engine exhaust, many parts and systems, many fluids, and some component wear by-products contain and/or emit these chemicals.

See *Battery - North America* ⇨ *240* and *Jump Starting - North America* ⇨ *287*.

California Perchlorate Materials Requirements

Certain types of automotive applications, such as airbag initiators, safety belt pretensioners, and lithium batteries contained in Remote Keyless Entry transmitters, may contain perchlorate materials. Special handling may be necessary. For additional information, see www.dtsc.ca.gov/hazardouswaste/perchlorate.

Accessories and Modifications

Adding non-dealer accessories or making modifications to the vehicle can affect vehicle performance and safety, including such things as

airbags, braking, stability, ride and handling, emissions systems, aerodynamics, durability, and electronic systems like antilock brakes, traction control, and stability control. These accessories or modifications could even cause malfunction or damage not covered by the vehicle warranty.

Damage to vehicle components resulting from modifications or the installation or use of non-GM certified parts, including control module or software modifications, is not covered under the terms of the vehicle warranty and may affect remaining warranty coverage for affected parts.

GM Accessories are designed to complement and function with other systems on the vehicle. See your dealer to accessorize the vehicle using genuine GM Accessories installed by a dealer technician.

Also, see *Adding Equipment to the Airbag-Equipped Vehicle* ⇨ *66*.

Vehicle Checks

Doing Your Own Service Work

⚠ Warning

It can be dangerous to work on your vehicle if you do not have the proper knowledge, service manual, tools, or parts. Always follow owner manual procedures and consult the service manual for your vehicle before doing any service work.

If doing some of your own service work, use the proper service manual. It tells you much more about how to service the vehicle than this manual can. To order the proper service manual, see *Service Publications Ordering Information* ⇨ *327*.

This vehicle has an airbag system. Before attempting to do your own service work, see *Servicing the Airbag-Equipped Vehicle* ⇨ *66*.

Keep a record with all parts receipts and list the mileage and the date of any service work performed. See *Maintenance Records* ⇨ *313*.

Caution

Even small amounts of contamination can cause damage to vehicle systems. Do not allow contaminants to contact the fluids, reservoir caps, or dipsticks.

Hood

To open the hood:

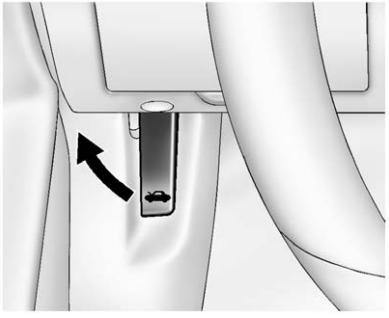

1. Pull the hood release handle inside the vehicle. It is located on the lower left side of the instrument panel.

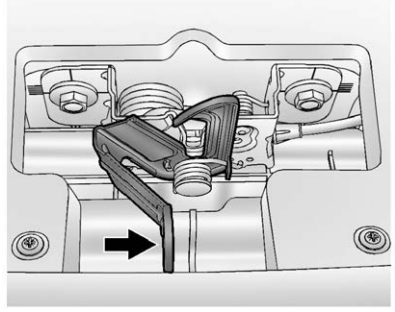

2. Go to the front of the vehicle and move the secondary hood release lever toward the right side of the vehicle.

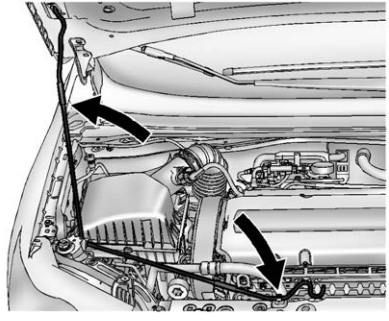

3. Lift the hood and release the hood prop from its retainer, located in front of the engine compartment. Securely place the hood prop into the slot on the underside of the hood.

To close the hood:

1. Before closing the hood, be sure all filler caps are on properly. Then, lift the hood to relieve pressure on the hood prop. Remove the hood prop from the slot in the underside of the hood and return the prop to its retainer. The prop rod must click into place when returning it to the retainer to prevent hood damage.
2. Lower the hood 30 cm (12 in) above the vehicle and release it so it fully latches. Check to make sure the hood is closed and repeat the process if necessary.

Engine Compartment Overview

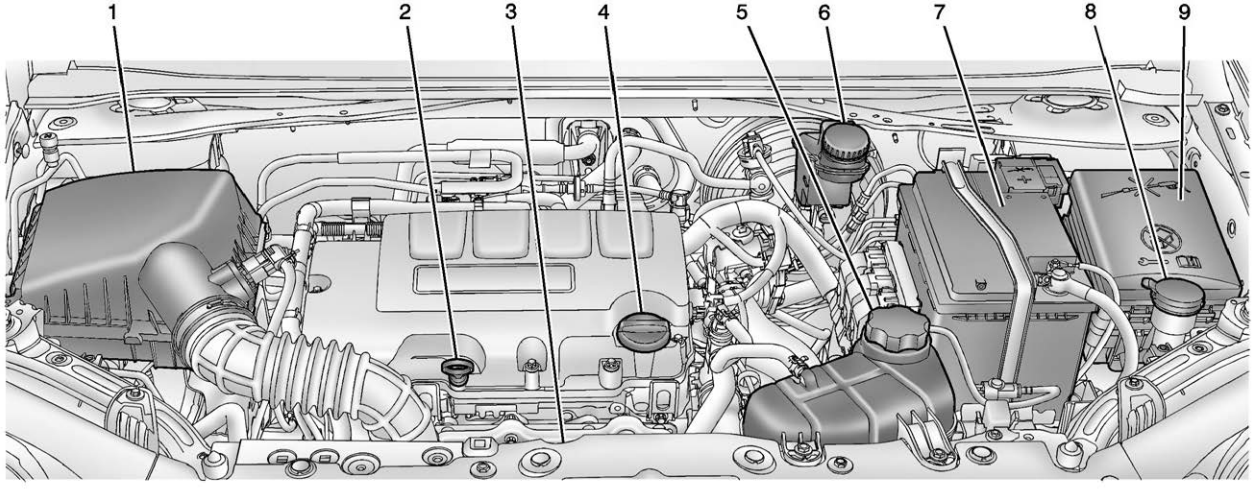

1.4L L4 Engine

1. *Engine Air Cleaner/Filter* ⇨ *230*.
2. Engine Oil Dipstick. See *Engine Oil* ⇨ *226*.
3. Engine Cooling Fan (Out of View). See *Cooling System* ⇨ *232*.
4. Engine Oil Fill Cap. See *Engine Oil* ⇨ *226*.
5. Engine Coolant Surge Tank and Pressure Cap. See *Cooling System* ⇨ *232*.
6. Brake/Clutch Fluid Reservoir. See *Brake Fluid* ⇨ *239* and *Hydraulic Clutch* ⇨ *230*.
7. *Battery - North America* ⇨ *240*.
8. Windshield Washer Fluid Reservoir. See *Washer Fluid* ⇨ *237*.
9. *Engine Compartment Fuse Block* ⇨ *249*.

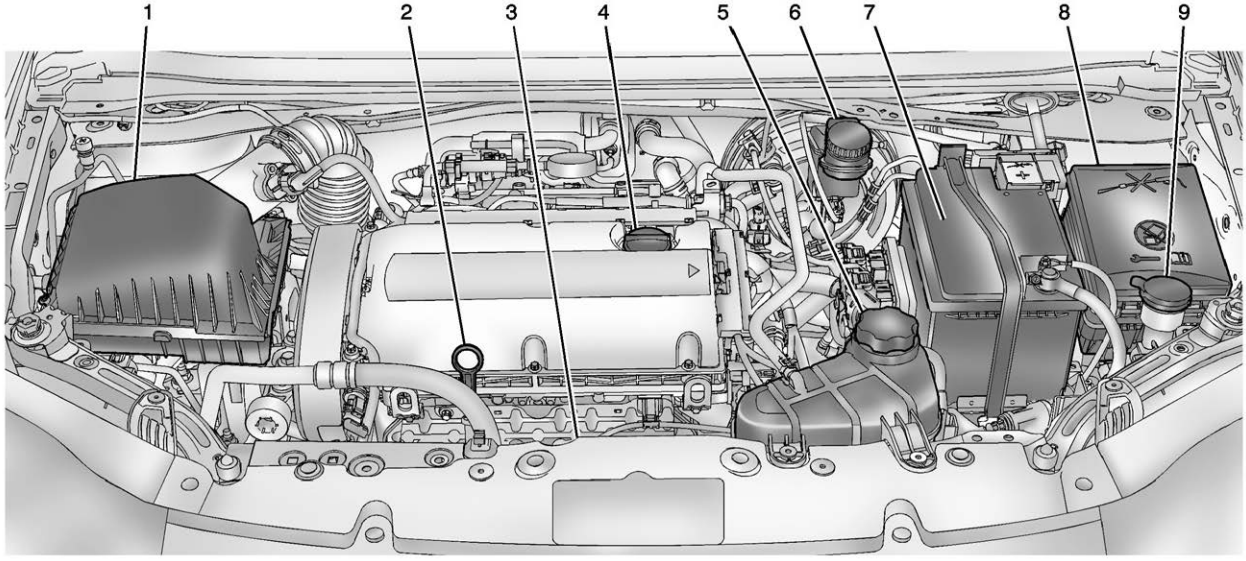

1.8L L4 Engine

1. *Engine Air Cleaner/Filter* ⇨ *230*.
2. Engine Oil Dipstick. See *Engine Oil* ⇨ *226*.
3. Engine Cooling Fan (Out of View). See *Cooling System* ⇨ *232*.
4. Engine Oil Fill Cap. See *Engine Oil* ⇨ *226*.
5. Engine Coolant Surge Tank and Pressure Cap. See *Cooling System* ⇨ *232*.
6. Brake/Clutch Fluid Reservoir. See *Brake Fluid* ⇨ *239* and *Hydraulic Clutch* ⇨ *230*.
7. *Battery - North America* ⇨ *240*.
8. *Engine Compartment Fuse Block* ⇨ *249*.
9. Windshield Washer Fluid Reservoir. See *Washer Fluid* ⇨ *237*.

Engine Oil

To ensure proper engine performance and long life, careful attention must be paid to engine oil. Following these simple, but important steps will help protect your investment:

- Always use engine oil approved to the proper specification and of the proper viscosity grade. See “Selecting the Right Engine Oil” in this section.
- Check the engine oil level regularly and maintain the proper oil level. See “Checking Engine Oil” and “When to Add Engine Oil” in this section.
- Change the engine oil at the appropriate time. See *Engine Oil Life System* ⇨ *228*.
- Always dispose of engine oil properly. See “What to Do with Used Oil” in this section.

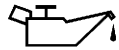

If the engine oil pressure light comes on, check the engine oil level right away. The oil pressure light is on the instrument cluster. See *Engine Oil Pressure Light* ⇨ *106*. Check the engine oil level regularly; this is an added reminder.

Checking Engine Oil

It is a good idea to check the engine oil level at each fuel fill. In order to get an accurate reading, the oil must be warm and the vehicle must be on level ground. The engine oil dipstick handle is a loop. See *Engine Compartment Overview* ⇨ *223* for the location of the engine oil dipstick.

1. If the engine has been running recently, turn off the engine and allow several minutes for the oil to drain back into the oil pan. Checking the oil level too soon

after engine shutoff will not provide an accurate oil level reading.

⚠ Warning

The engine oil dipstick handle may be hot; it could burn you. Use a towel or glove to touch the dipstick handle.

2. Pull out the dipstick and wipe it with a clean paper towel or cloth, then push it back in all the way. Remove it again, keeping the tip down, and check the level.

When to Add Engine Oil

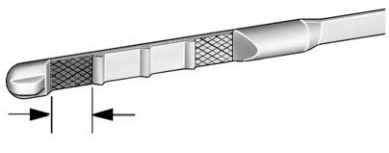

1.4L Shown, 1.8L Similar

If the oil is below the minimum mark on the dipstick, add 1 L (1 qt) of the recommended oil and then recheck the level. See "Selecting the Right Engine Oil" in this section for an explanation of what kind of oil to use. For engine oil crankcase capacity, see *Capacities and Specifications* ⇨ *315*.

Caution

Do not add too much oil. Oil levels above or below the acceptable operating range shown on the dipstick are harmful to the engine. If you find that you have an oil level above the operating range, i.e., the engine has so much oil that the oil level gets above the upper mark that shows the proper operating range, the engine could be damaged. You should drain out the excess oil or limit driving of the vehicle and seek a service professional to remove the excess amount of oil.

See *Engine Compartment Overview* ⇨ *223* for the location of the engine oil fill cap.

Add enough oil to put the level somewhere in the proper operating range. Push the dipstick all the way back in when through.

Selecting the Right Engine Oil

Selecting the right engine oil depends on both the proper oil specification and viscosity grade. See *Recommended Fluids and Lubricants* ⇨ *311*.

Specification

Ask for and use engine oils that meet the dexos1™ specification.

Engine oils that have been approved by GM as meeting the dexos1 specification are marked with the dexos1 approved logo. See www.gmdexos.com.

Caution

Failure to use the recommended engine oil can result in engine damage not covered by the vehicle warranty. Check with your dealer or service provider on whether the oil is approved to the dexos1 specification.

Viscosity Grade

Use SAE 5W-30 viscosity grade engine oil.

Cold Temperature Operation: In an area of extreme cold, where the temperature falls below −29 °C (−20 °F), an SAE 0W-30 oil may be used. An oil of this viscosity grade will provide easier cold starting for the engine at extremely low temperatures. When selecting an oil of the appropriate viscosity grade, always select an oil of the correct specification. See “Specification” earlier in this section for more information.

Engine Oil Additives/Engine Oil Flushes

Do not add anything to the oil. The recommended oils meeting the dexos1 specification are all that is needed for good performance and engine protection.

Engine oil system flushes are not recommended and could cause engine damage not covered by the vehicle warranty.

What to Do with Used Oil

Used engine oil contains certain elements that can be unhealthy for your skin and could even cause cancer. Do not let used oil stay on your skin for very long. Clean your skin and nails with soap and water, or a good hand cleaner. Wash or properly dispose of clothing or rags containing used engine oil. See the manufacturer's warnings about the use and disposal of oil products.

Used oil can be a threat to the environment. If you change your own oil, be sure to drain all the oil from the filter before disposal. Never dispose of oil by putting it in the trash or pouring it on the ground, into sewers, or into streams or bodies of water. Recycle it by taking it to a place that collects used oil.

Engine Oil Life System

When to Change Engine Oil

This vehicle has a computer system that indicates when to change the engine oil and filter. This is based on a combination of factors which include engine revolutions, engine temperature, and miles driven. Based on driving conditions, the mileage at which an oil change is indicated can vary considerably. For the oil life system to work properly, the system must be reset every time the oil is changed.

When the system has calculated that oil life has been diminished, it indicates that an oil change is necessary. A % CHANGE message in the DIC comes on. See *Vehicle Messages* ⇨ *111*. Change the oil as soon as possible within the next 1 000 km (600 mi). It is possible that, if driving under the best conditions, the oil life system

might indicate that an oil change is not necessary for up to a year. The engine oil and filter must be changed at least once a year and, at this time, the system must be reset. Your dealer has trained service people who will perform this work and reset the system. It is also important to check the oil regularly over the course of an oil drain interval and keep it at the proper level.

If the system is ever reset accidentally, the oil must be changed at 5 000 km (3,000 mi) since the last oil change. Remember to reset the oil life system whenever the oil is changed.

How to Reset the Engine Oil Life System

Reset the system whenever the engine oil is changed so that the system can calculate the next engine oil change. To reset the system:

1. Press the MENU button to show Remaining Oil Life on the display. This display shows an estimate of the oil's remaining useful life. If 99% is displayed, that means that 99% of the current oil life remains.
2. To reset the engine oil life system, press the SET/CLR button while the oil life display is active. After a few seconds, there will be a single chime and the oil life will be reset to 100%.

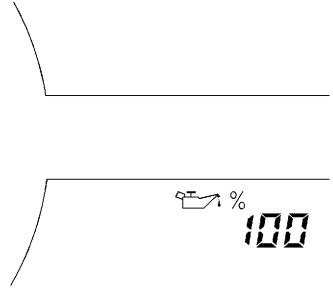

Be careful not to reset the oil life display accidentally at any time other than after the oil is changed. It cannot be reset accurately.

If the % CHANGE message in the DIC comes back on when the vehicle is started, the engine oil life system has not reset. Repeat the procedure.

Automatic Transmission Fluid

How to Check Automatic Transmission Fluid

It is not necessary to check the transmission fluid level.
A transmission fluid leak is the only reason for fluid loss. If a leak occurs, take the vehicle to your dealer and have it repaired as soon as possible.

There is a special procedure for checking and changing the transmission fluid. Because this procedure is difficult, you should have this done at your dealer.

Change the fluid at the intervals listed in *Maintenance Schedule* ⇨ *302*, and be sure to use the fluid listed in *Recommended Fluids and Lubricants* ⇨ *311*.

Manual Transmission Fluid

It is not necessary to check the manual transmission fluid level. A transmission fluid leak is the only reason for fluid loss. If a leak occurs, take the vehicle to your dealer and have it repaired as soon as possible. See *Recommended Fluids and Lubricants* ⇨ *311* for the proper fluid to use.

Hydraulic Clutch

For vehicles with a manual transmission, it is not necessary to regularly check brake/clutch fluid unless there is a leak suspected. Adding fluid will not correct a leak. A fluid loss in this system could indicate a problem. Have the system inspected and repaired.

When to Check and What to Use

The common hydraulic clutch and brake master cylinder fluid reservoir is filled with DOT 3 brake fluid as indicated on the reservoir cap. See *Engine Compartment Overview* ⇨ *223* for reservoir location.

How to Check and Add Fluid

Visually check the brake/clutch fluid reservoir to make sure the fluid level is at the MIN (minimum) line on the side of the reservoir. The brake/hydraulic clutch fluid system should be closed and sealed.

Do not remove the cap to check the fluid level or to top-off the fluid level. Remove the cap only when necessary to add the proper fluid until the level reaches the MIN line.

Engine Air Cleaner/Filter

The engine air cleaner/filter is located in the engine compartment on the passenger side of the vehicle. See *Engine Compartment Overview* ⇨ *223* for more information on location.

When to Inspect the Engine Air Cleaner/Filter

For intervals on changing and inspecting the engine air cleaner/filter, see *Maintenance Schedule* ⇨ *302*.

How to Inspect the Engine Air Cleaner/Filter

Do not start the engine or have the engine running with the engine air cleaner/filter housing open. Before removing the engine air cleaner/filter, make sure that the engine air cleaner/filter housing and nearby components are free of dirt and debris. Remove the engine air cleaner/filter. Lightly tap and shake the engine air cleaner/filter (away from the vehicle), to release loose dust and dirt. Inspect the engine air cleaner/filter for damage, and replace if damaged. Do not clean the engine air cleaner/filter or components with water or compressed air.

To inspect or replace the air cleaner/filter:

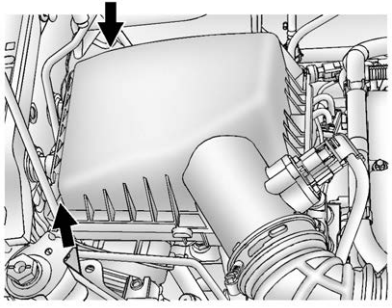

1.4L L4 Engine

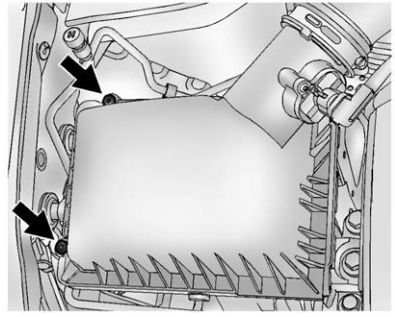

1.8L L4 Engine

1. Remove the two screws, tilt the cover, and slide it out of the assembly.
2. Inspect or replace the engine air cleaner/filter.
3. Lower the cover, slide it into the assembly, then secure with the two screws.

⚠ Warning

Operating the engine with the air cleaner/filter off can cause you or others to be burned. The air cleaner not only cleans the air; it helps to stop flames if the engine backfires. Use caution when working on the engine and do not drive with the air cleaner/filter off.

Caution

If the air cleaner/filter is off, dirt can easily get into the engine, which could damage it. Always have the air cleaner/filter in place when you are driving.

Cooling System

The cooling system allows the engine to maintain the correct working temperature.

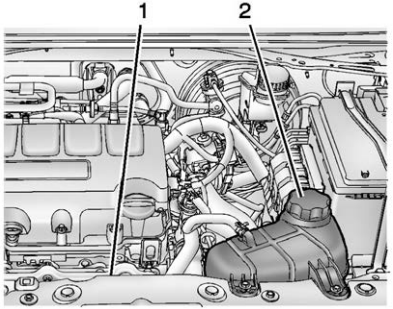

1.4L L4 Engine

1. Engine Cooling Fan (Out of View)
2. Engine Coolant Surge Tank and Pressure Cap

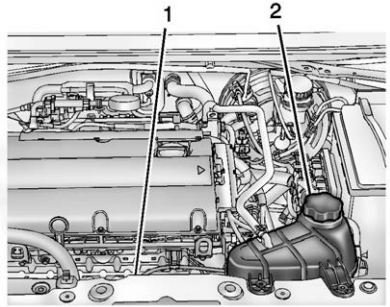

1.8L L4 Engine

1. Engine Cooling Fan (Out of View)
2. Engine Coolant Surge Tank and Pressure Cap

⚠ Warning

An electric engine cooling fan under the hood can start up even when the engine is not running and can cause injury. Keep hands, clothing, and tools away from any underhood electric fan.

⚠ Warning

Heater and radiator hoses, and other engine parts, can be very hot. Do not touch them. If you do, you can be burned.

Do not run the engine if there is a leak. If you run the engine, it could lose all coolant. That could cause an engine fire, and you could be burned. Get any leak fixed before you drive the vehicle.

Caution

Using coolant other than DEX-COOL® can cause premature engine, heater core, or radiator corrosion. In addition, the engine coolant could require changing sooner. Any repairs would not be covered by the vehicle warranty. Always use DEX-COOL (silicate-free) coolant in the vehicle.

Engine Coolant

The cooling system in the vehicle is filled with DEX-COOL engine coolant. This coolant is designed to remain in the vehicle for 5 years or 240 000 km (150,000 mi), whichever occurs first.

The following explains the cooling system and how to check and add coolant when it is low. If there is a problem with engine overheating, see *Engine Overheating* ⇨ *236*.

What to Use

⚠ Warning

Adding only plain water or some other liquid to the cooling system can be dangerous. Plain water and other liquids, can boil before the proper coolant mixture will. The coolant warning system is set for the proper coolant mixture. With plain water or the wrong mixture, the engine could get too hot but you would not get the

(Continued)

Warning (Continued)

overheat warning. The engine could catch fire and you or others could be burned. Use a 50/50 mixture of clean, drinkable water and DEX-COOL coolant.

Use a 50/50 mixture of clean drinkable water and DEX-COOL coolant. This mixture:

- Gives freezing protection down to −37 °C (−34 °F), outside temperature.
- Gives boiling protection up to 129 °C (265 °F), engine temperature.
- Protects against rust and corrosion.
- Will not damage aluminum parts.
- Helps keep the proper engine temperature.

Caution

If improper coolant mixture, inhibitors, or additives are used in the vehicle cooling system, the engine could overheat and be damaged. Too much water in the mixture can freeze and crack engine cooling parts. The repairs would not be covered by the vehicle warranty. Use only the proper mixture of engine coolant for the cooling system. See *Recommended Fluids and Lubricants* ⇨ *311*.

Never dispose of engine coolant by putting it in the trash, pouring it on the ground, or into sewers, streams, or bodies of water. Have the coolant changed by an authorized service center, familiar with legal requirements regarding used coolant disposal. This will help protect the environment and your health.

Checking Coolant

The vehicle must be on a level surface when checking the coolant level.

It is normal to see coolant moving in the upper coolant hose return line when the engine is running.

Check to see if coolant is visible in the coolant surge tank. If the coolant inside the coolant surge tank is boiling, do not do anything else until it cools down.

If coolant is visible but the coolant level is not at or above the mark pointed to, add a 50/50 mixture of clean drinkable water and DEX-COOL coolant.

Be sure the cooling system is cool before this is done.

If no coolant is visible in the coolant surge tank, add coolant as follows:

How to Add Coolant to the Coolant Surge Tank

Caution

This vehicle has a specific coolant fill procedure. Failure to follow this procedure could cause the engine to overheat and be severely damaged.

If no problem is found, check to see if coolant is visible in the coolant surge tank. If coolant is visible but the coolant level is not at the indicated level mark, add a 50/50 mixture of clean, drinkable water and DEX-COOL coolant at the coolant surge tank, but be sure the cooling system, including the coolant surge tank pressure cap, is cool before you do it.

⚠ Warning

Steam and scalding liquids from a hot cooling system can blow out and burn you badly. Never turn

(Continued)

Warning (Continued)

the cap when the cooling system, including the surge tank pressure cap, is hot. Wait for the cooling system and surge tank pressure cap to cool.

⚠ Warning

Adding only plain water or some other liquid to the cooling system can be dangerous. Plain water and other liquids, can boil before the proper coolant mixture will. The coolant warning system is set for the proper coolant mixture. With plain water or the wrong mixture, the engine could get too hot but you would not get the overheat warning. The engine could catch fire and you or others could be burned. Use a 50/50 mixture of clean, drinkable water and DEX-COOL coolant.

Caution

In cold weather, water can freeze and crack the engine, radiator, heater core, and other parts. Use the recommended coolant and the proper coolant mixture.

⚠ Warning

You can be burned if you spill coolant on hot engine parts. Coolant contains ethylene glycol and it will burn if the engine parts are hot enough. Do not spill coolant on a hot engine.

1.4L Engine Shown, 1.8L Engine Similar

1. Remove the coolant surge tank pressure cap when the cooling system, including the coolant surge tank pressure cap and upper radiator hose, is no longer hot.

   Turn the pressure cap slowly counterclockwise about one-quarter of a turn. If you hear a hiss, wait for that to stop. This will allow any pressure still left to be vented out the discharge hose.

2. Keep turning the pressure cap slowly and remove it.

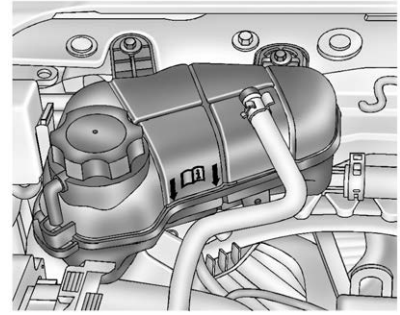

3. Fill the coolant surge tank with the proper DEX-COOL coolant mixture to the indicated level mark.

4. With the coolant surge tank pressure cap off, start the engine and let it run until you can feel the upper radiator hose getting hot. Watch out for the engine cooling fan.

By this time, the coolant level inside the coolant surge tank may be lower. If the level is lower, add more of the proper DEX-COOL coolant mixture to the coolant surge tank until the level reaches the indicated level mark.

5. Replace the pressure cap tightly.

Check the level in the coolant surge tank when the cooling system has cooled down. If the coolant is not at the proper level, repeat Steps 1–3 and reinstall the pressure cap. If the coolant still is not at the proper level when the system cools down again, see your dealer.

Caution

If the pressure cap is not tightly installed, coolant loss and possible engine damage may occur. Be sure the cap is properly and tightly secured.

Engine Overheating

The vehicle has an indicator to warn of the engine overheating.

If the decision is made not to lift the hood when this warning appears, get service help right away. See *Roadside Assistance Program* ⇨ *322*.

If the decision is made to lift the hood, make sure the vehicle is parked on a level surface.

Then check to see if the engine cooling fan is running. If the engine is overheating, the fan should be running. If it is not, do not continue to run the engine. Have the vehicle serviced.

Caution

Running the engine without coolant may cause damage or a fire. Vehicle damage would not be covered by the vehicle warranty.

If Steam Is Coming from the Engine Compartment

⚠ Warning

Steam from an overheated engine can burn you badly, even if you just open the hood. Stay away from the engine if you see or hear steam coming from it. Just turn it off and get everyone away from the vehicle until it cools down. Wait until there is no sign of steam or coolant before you open the hood.

If you keep driving when the engine is overheated, the liquids in it can catch fire. You or others could be badly burned. Stop the engine if it overheats, and get out of the vehicle until the engine is cool.

If No Steam Is Coming from the Engine Compartment

If an engine overheat warning is displayed but no steam can be seen or heard, the problem may not be too serious. Sometimes the engine can get a little too hot when the vehicle:

- Climbs a long hill on a hot day.
- Stops after high-speed driving.
- Idles for long periods in traffic.

If the overheat warning is displayed with no sign of steam:

1. Turn the air conditioning off.
2. Turn the heater on to the highest temperature and to the highest fan speed. Open the windows as necessary.
3. When it is safe to do so, pull off the road, shift to P (Park) or N (Neutral) for an automatic transmission or Neutral for a manual transmission, and let the engine idle.

If the overheat warning no longer displays, the vehicle can be driven. Continue to drive the vehicle slowly for about 10 minutes. Keep a safe vehicle distance from the vehicle in front. If the warning does not come back on, continue to drive normally and have the cooling system checked for proper fill and function.

If the warning continues, pull over, stop, and park the vehicle right away.

If there is no sign of steam, idle the engine for three minutes while parked. If the warning is still displayed, turn off the engine until it cools down.

Washer Fluid

What to Use

When the vehicle needs windshield washer fluid, be sure to read the manufacturer's instructions before use. If operating the vehicle in an area where the temperature may fall below freezing, use a fluid that has sufficient protection against freezing.

Adding Washer Fluid

Open the cap with the washer symbol on it. Add washer fluid until the tank is full. See *Engine Compartment Overview* ⇨ *223* for reservoir location.

Caution

- Do not use washer fluid that contains any type of water repellent coating. This can cause the wiper blades to chatter or skip.
- Do not use engine coolant (antifreeze) in the windshield washer. It can damage the windshield washer system and paint.

(Continued)

Caution (Continued)

- Do not mix water with ready-to-use washer fluid. Water can cause the solution to freeze and damage the washer fluid tank and other parts of the washer system.
- When using concentrated washer fluid, follow the manufacturer instructions for adding water.
- Fill the washer fluid tank only three-quarters full when it is very cold. This allows for fluid expansion if freezing occurs, which could damage the tank if it is completely full.

Brakes

Disc brake pads have built-in wear indicators that make a high-pitched warning sound when the brake pads are worn and new pads are needed. The sound can come and go or be heard all the time when the vehicle is moving, except when applying the brake pedal firmly.

⚠ Warning

The brake wear warning sound means that soon the brakes will not work well. That could lead to a crash. When the brake wear warning sound is heard, have the vehicle serviced.

Caution

Continuing to drive with worn-out brake pads could result in costly brake repair.

Some driving conditions or climates can cause a brake squeal when the brakes are first applied or lightly applied. This does not mean something is wrong with the brakes.

Properly torqued wheel nuts are necessary to help prevent brake pulsation. When tires are rotated, inspect brake pads for wear and evenly tighten wheel nuts in the proper sequence to torque specifications. See *Capacities and Specifications* ⇨ *315*.

Brake pads should be replaced as complete sets.

Brake Pedal Travel

See your dealer if the brake pedal does not return to normal height, or if there is a rapid increase in pedal travel. This could be a sign that brake service may be required.

Replacing Brake System Parts

Always replace brake system parts with new, approved replacement parts. If this is not done, the brakes may not work properly. The braking performance expected can change in many other ways if the wrong replacement brake parts are installed or parts are improperly installed.

Brake Fluid

The brake/clutch master cylinder reservoir is filled with DOT 3 brake fluid as indicated on the reservoir cap. See *Engine Compartment Overview* ⇨ *223* for the location of the reservoir.

There are only two reasons why the brake fluid level in the reservoir might go down:

- Normal brake lining wear. When new linings are installed, the fluid level goes back up.
- A fluid leak in the brake/clutch hydraulic system. Have the brake/clutch hydraulic system fixed. With a leak, the brakes will not work well.

Always clean the brake fluid reservoir cap and the area around the cap before removing it.

Do not top off the brake/clutch fluid. Adding fluid does not correct a leak. If fluid is added when the linings are worn, there will be too much fluid when new brake linings are installed. Add or remove fluid, as necessary, only when work is done on the brake/clutch hydraulic system.

⚠ Warning

If too much brake fluid is added, it can spill on the engine and burn, if the engine is hot enough. You or others could be burned, and the vehicle could be damaged. Add brake fluid only when work is done on the brake hydraulic system.

When the brake/clutch fluid falls to a low level, the brake warning light comes on. See *Brake System Warning Light* ⇨ *102*.

Brake fluid absorbs water over time. Replace brake fluid at the specified intervals to prevent increased stopping distance. See *Maintenance Schedule* ⇨ *302*.

What to Add

Use only GM approved DOT 3 brake fluid from a clean, sealed container. See *Recommended Fluids and Lubricants* ⇨ *311*.

⚠ Warning

The wrong or contaminated brake fluid could result in damage to the brake system. This could result in the loss of braking leading to a possible injury. Always use the proper brake fluid.

Caution

If brake fluid is spilled on the vehicle's painted surfaces, the paint finish can be damaged. Immediately wash off any painted surface.

Battery - North America

The original equipment battery is maintenance free. Do not remove the cap and do not add fluid.

Refer to the replacement number shown on the original battery label when a new battery is needed. See *Engine Compartment Overview* ⇨ *223* for battery location.

⚠ Warning

WARNING: Battery posts, terminals, and related accessories contain lead and lead compounds, chemicals known to the State of California to cause cancer and birth defects or other reproductive harm. Batteries also contain other chemicals known to the State of California to cause cancer. **WASH HANDS AFTER HANDLING.** See *California Proposition 65 Warning* ⇨ *220*.

Vehicle Storage

⚠ Warning

Batteries have acid that can burn you and gas that can explode. You can be badly hurt if you are not careful. See *Jump Starting - North America* ⇨ *287* for tips on working around a battery without getting hurt.

Infrequent Usage: Remove the black, negative (−) cable from the battery to keep the battery from running down.

Extended Storage: Remove the black, negative (−) cable from the battery or use a battery trickle charger.

Starter Switch Check

⚠ Warning

When you are doing this inspection, the vehicle could move suddenly. If the vehicle moves, you or others could be injured.

1. Before starting this check, be sure there is enough room around the vehicle.
2. Apply both the parking brake and the regular brake.

   Do not use the accelerator pedal, and be ready to turn off the engine immediately if it starts.
3. For automatic transmission vehicles, try to start the engine in each gear. The vehicle should start only in P (Park) or N (Neutral). If the vehicle starts in any other position, contact your dealer for service.

For manual transmission vehicles, put the shift lever in Neutral, push the clutch pedal down halfway, and try to start the engine. The vehicle should start only when the clutch pedal is pushed down all the way to the floor. If the vehicle starts when the clutch pedal is not pushed all the way down, contact your dealer for service.

Automatic Transmission Shift Lock Control Function Check

⚠ Warning

When you are doing this inspection, the vehicle could move suddenly. If the vehicle moves, you or others could be injured.

1. Before starting this check, be sure there is enough room around the vehicle. It should be parked on a level surface.
2. Apply the parking brake. Be ready to apply the regular brake immediately if the vehicle begins to move.
3. With the engine off, turn the ignition on, but do not start the engine. Without applying the regular brake, try to move the shift lever out of P (Park) with normal effort. If the shift lever moves out of P (Park), contact your dealer for service.

Ignition Transmission Lock Check

While parked, and with the parking brake set, try to turn the ignition to LOCK/OFF in each shift lever position.

- For automatic transmission vehicles, the ignition should turn to LOCK/OFF only when the shift lever is in P (Park).
- For manual transmission vehicles, the ignition should turn to LOCK/OFF only when the shift lever is in neutral.

On all vehicles, the ignition key should come out only in LOCK/OFF.

Contact your dealer if service is required.

Park Brake and P (Park) Mechanism Check

⚠ Warning

When you are doing this check, the vehicle could begin to move. You or others could be injured and property could be damaged. Make sure there is room in front of the vehicle in case it begins to roll. Be ready to apply the regular brake at once should the vehicle begin to move.

Park on a fairly steep hill, with the vehicle facing downhill. Keeping your foot on the regular brake, set the parking brake.

- To check the parking brake's holding ability: With the engine running and the transmission in N (Neutral), slowly remove foot

pressure from the regular brake pedal. Do this until the vehicle is held by the parking brake only.

- To check the P (Park) mechanism's holding ability: With the engine running, shift to P (Park). Then release the parking brake followed by the regular brake.

Contact your dealer if service is required.

Wiper Blade Replacement

Front Wiper Blade Replacement

Windshield wiper blades should be inspected for wear or cracking. See the *Maintenance Schedule* ⇨ *302* for more information.

Replacement blades come in different types and are removed in different ways. For proper windshield wiper blade length and type, see *Maintenance Replacement Parts* ⇨ *312*.

Caution

Allowing the wiper arm to touch the windshield when no wiper blade is installed could damage the windshield. Any damage that occurs would not be covered by the vehicle warranty. Do not allow the wiper arm to touch the windshield.

To replace the windshield wiper blade:

1. Pull the windshield wiper assembly away from the windshield.

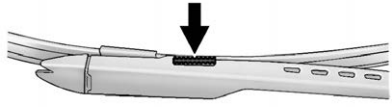

2. Squeeze the tabs on each side of the wiper blade assembly and slide the assembly off the end of the wiper arm.

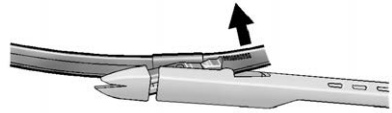

3. Install the new blade onto the arm and make sure the tabs are fully set in the locked position.
4. Repeat the steps for the other wiper.

Rear Wiper Blade Replacement

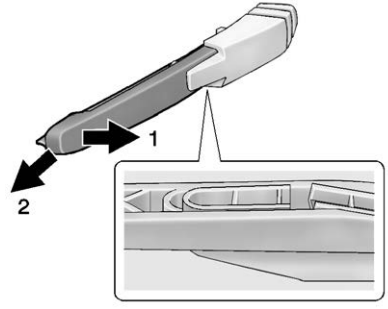

1. Pull the wiper arm a short distance away from the glass (1).
2. Pull the blade out from the arm (2).

   It may require extra effort to remove the old blade.

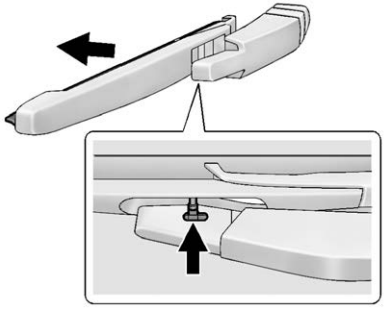

3. Once the blade pin disengages from the wiper arm, remove the wiper blade by sliding the pin out of the guide hole.
4. Reverse the steps to install the new blade.

Headlamp Aiming

Headlamp aim has been preset and should need no further adjustment.

If the vehicle is damaged in a crash, the headlamp aim may be affected. If adjustment to the headlamps is necessary, see your dealer.

Bulb Replacement

For the proper type of replacement bulbs, see *Replacement Bulbs* ⇨ *247*.

For any bulb-changing procedure not listed in this section, contact your dealer.

Halogen Bulbs

⚠ Warning

Halogen bulbs have pressurized gas inside and can burst if you drop or scratch the bulb. You or others could be injured. Be sure to read and follow the instructions on the bulb package.

Headlamps, Front Turn Signal and Parking Lamps

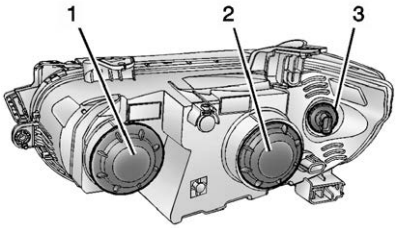

Passenger Side Shown, Driver Side Similar

1. High-Beam Headlamp
2. Low-Beam Headlamp
3. Parking/Turn Signal Lamps

High-Beam Headlamp/ Low-Beam Headlamp

1. Open the hood. See *Hood* ⇨ *222*.
2. For the driver side bulb, remove the windshield washer bottle filler neck by turning it one-quarter turn counterclockwise and pulling it straight up and out of the bottle.

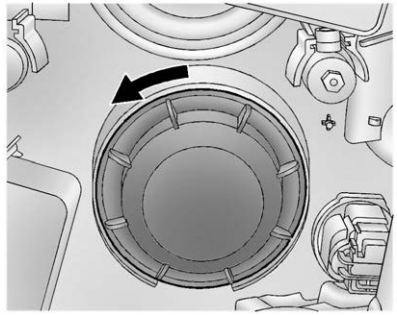

3. Remove the headlamp bulb access cover.
4. Turn the bulb counterclockwise and pull straight back.
5. Disconnect the wiring harness connector from the bulb.
6. Install the new bulb in the headlamp assembly by turning clockwise.
7. Reconnect the wiring harness connector.
8. Install the headlamp bulb access cover.
9. For the driver side bulb, replace the windshield washer bottle filler neck by turning it one-quarter turn clockwise into the bottle.

Parking/Turn Signal Lamp

1. Open the hood. See *Hood* ⇨ *222*.

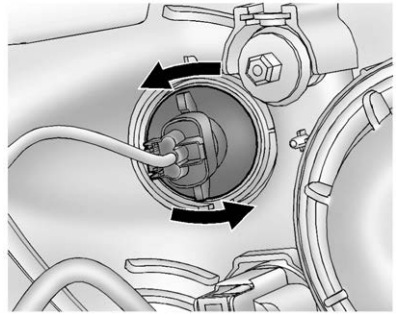

2. Remove the parking/turn signal lamp bulb socket from the headlamp assembly by turning counterclockwise.
3. Remove the bulb from the bulb socket by pulling it straight out.
4. Install the new bulb in the bulb socket.
5. Install the bulb socket into the headlamp assembly by turning clockwise.

Fog Lamps (LS, LT, and LTZ)

To replace the front fog lamp bulb:

1. Locate the fog lamp cover behind the front fascia.
2. Disconnect the electrical connector from the fog lamp bulb assembly.
3. Remove the bulb by turning it counterclockwise and pulling it straight out of the assembly.
4. Install the new bulb by turning it clockwise into the assembly.
5. Reconnect the electrical connector.

Fog Lamps (RS)

To replace the front fog lamp bulb:

1. Locate the fog lamp cover behind the front fascia.

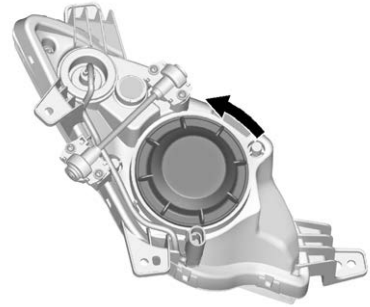

2. Remove the cap from the back of the fog lamp assembly.
3. Disconnect the electrical connector from the fog lamp bulb assembly.
4. Remove the bulb by turning it counterclockwise and pulling it straight out of the assembly.
5. Install the new bulb by turning it clockwise into the assembly.
6. Reconnect the electrical connector.
7. Replace the cap on the back of the fog lamp assembly.

Taillamps, Turn Signal, Stoplamps, and Back-Up Lamps

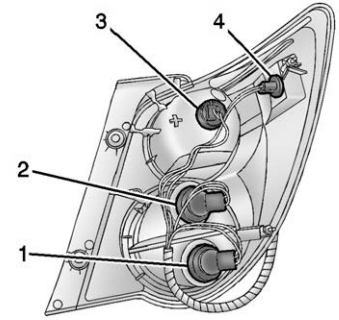

Sedan Taillamp Shown, Hatchback Taillamp Similar

1. Back-up Lamp
2. Turn Signal Lamp

3. Stop Lamp/Taillamp
4. Sidemarker Lamp

To replace one of these bulbs:

1. Open the trunk.

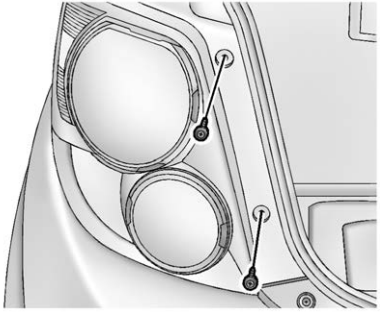

2. Remove the two screws, which secure the taillamp assembly.
3. Remove the taillamp assembly by pulling it straight back until the two posts disengage from the grommets.
4. Remove the bulb socket from the taillamp assembly by turning it counterclockwise.
5. Remove the bulb by pulling it straight out.
6. Install a new bulb into the bulb socket.
7. Install the bulb socket into the taillamp assembly by turning it clockwise.
8. Install the taillamp assembly and tighten the two screws.

License Plate Lamp

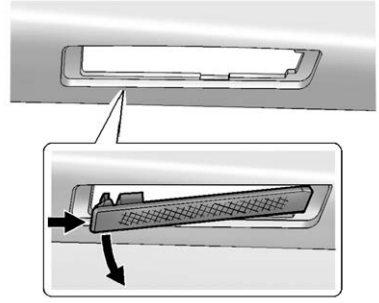

Lamp Assembly

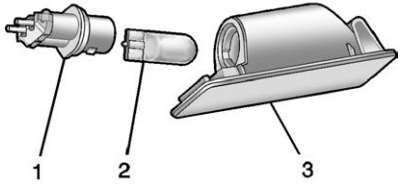

Bulb Assembly

1. Bulb Socket
2. Bulb
3. Lamp Assembly

To replace one of these bulbs:

1. Push the left end of the lamp assembly toward the right.
2. Turn the lamp assembly down to remove it.
3. Turn the bulb socket (1) counterclockwise to remove it from the lamp assembly (3).
4. Pull the bulb (2) straight out of the bulb socket (1).
5. Push the replacement bulb straight into the bulb socket and turn the bulb socket clockwise to install it into the lamp assembly.
6. Turn the lamp assembly into the lamp assembly opening engaging the clip side first.
7. Push on the lamp side opposite the clip until the lamp assembly snaps into place.

Replacement Bulbs

Exterior Lamp	Bulb Number
Back-Up Lamp	921
Front Fog Lamp	H8
Front Parking/Turn Signal Lamp	7444NA
High-Beam Headlamp	9005LL
License Plate Lamp	W5W LL
Low-Beam Headlamp	H11
Rear Sidemarker Lamp	194LL
Rear Turn Signal Lamp	4157NAK
Stop Lamp/Taillamp	7444LL

For replacement bulbs not listed here, contact your dealer.

Electrical System

Electrical System Overload

The vehicle has fuses and circuit breakers to protect against an electrical system overload.

When the current electrical load is too heavy, the circuit breaker opens and closes, protecting the circuit until the current load returns to normal or the problem is fixed. This greatly reduces the chance of circuit overload and fire caused by electrical problems.

Fuses and circuit breakers protect power devices in the vehicle.

Replace a bad fuse with a new one of the identical size and rating.

If there is a problem on the road and a fuse needs to be replaced, the same amperage fuse can be borrowed. Choose some feature of the vehicle that is not needed to use and replace it as soon as possible.

Headlamp Wiring

An electrical overload may cause the lamps to go on and off, or in some cases to remain off. Have the headlamp wiring checked right away if the lamps go on and off or remain off.

Windshield Wipers

If the wiper motor overheats due to heavy snow or ice, the windshield wipers will stop until the motor cools and will then restart.

Although the circuit is protected from electrical overload, overload due to heavy snow or ice may cause wiper linkage damage. Always clear ice and heavy snow from the windshield before using the windshield wipers.

If the overload is caused by an electrical problem and not snow or ice, be sure to get it fixed.

Fuses and Circuit Breakers

The wiring circuits in the vehicle are protected from short circuits by a combination of fuses, circuit breakers, and fusible thermal links. This greatly reduces the chance of fires caused by electrical problems.

Look at the silver-colored band inside the fuse. If the band is broken or melted, replace the fuse. Be sure you replace a bad fuse with a new one of the identical size and rating.

Fuses of the same amperage can be temporarily borrowed from another fuse location, if a fuse goes out. Replace the fuse as soon as you can.

Engine Compartment Fuse Block

LUV and LUW Engines

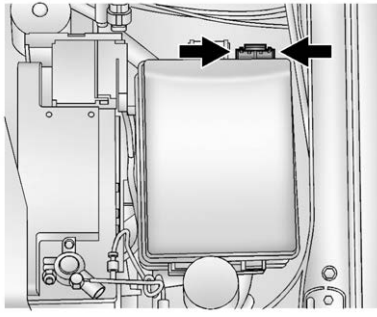

The engine compartment fuse block is on the driver side of the vehicle, near the battery.

Caution
Spilling liquid on any electrical component on the vehicle may damage it. Always keep the covers on any electrical component.

To access the fuses, press the clips together, and lift the cover. To reinstall the cover, push the cover until it is secure.

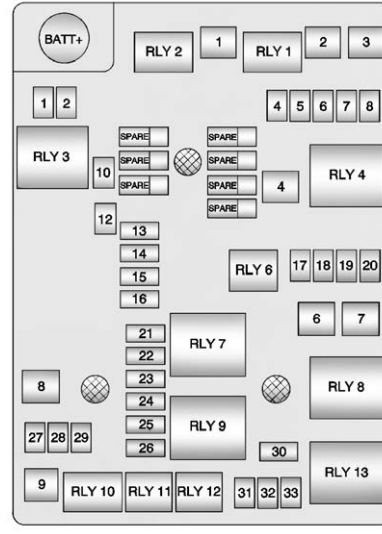

The vehicle may not be equipped with all of the fuses, relays, and features shown.

Mini Fuses	Usage
1	Antilock Brake System Valve
2	Sunroof
4	Rear Wiper
5	Regulated Voltage Control
6	Antilock Brake System Fluid
7	Automatic Occupant Sensing/ROS
8	Outside Rearview Mirror
10	Rear Window Defogger
12	Heated Outside Rearview Mirror
13	Heated Front Seat
14	Fuel System Control Module 1
15	Flex Fuel

Mini Fuses	Usage
16	Washer
17	Fuel Pump (1.8L)
18	Engine Control Module 5
19	Fuel System Control Module 2/Leveling
20	Transmission Control Module 1
21	Engine Control Module 1
22	Coil
23	Engine Control Module 4
24	Engine Control Module 3
25	Engine Control Module 2
26	Injector/Ignition Coil
27	Engine Control Module
28	Air Conditioning Compressor Clutch

Mini Fuses	Usage
29	Transmission Control Module
30	Horn
31	Front Fog Lamps
32	Left High Beam
33	Right High Beam
SPARE	Spare

J-Case Fuses	Usage
1	Antilock Brake System Pump
2	Front Wiper
3	Blower
4	Run/Crank IEC
6	Cooling Fan K5
7	Cooling Fan K4
8	EVP
9	Start

Relays	Usage
RLY 1	Front Wiper Control Relay
RLY 2	Front Wiper Speed Relay
RLY 3	Rear Window Defogger Relay
RLY 4	Run/Crank Relay
RLY 6	Fuel Pump Relay (1.8L)
RLY 7	Cooling Fan K2 Relay (1.4L)
RLY 8	Cooling Fan K3 Relay (1.8L), Cooling Fan K3 High Current Relay (1.4L)
RLY 9	Powertrain Relay
RLY 10	Start High Current Relay
RLY 11	Air Conditioning Compressor Clutch Relay
RLY 12	High-Beam Relay
RLY 13	Cooling Fan K1 Relay

LWE Engine

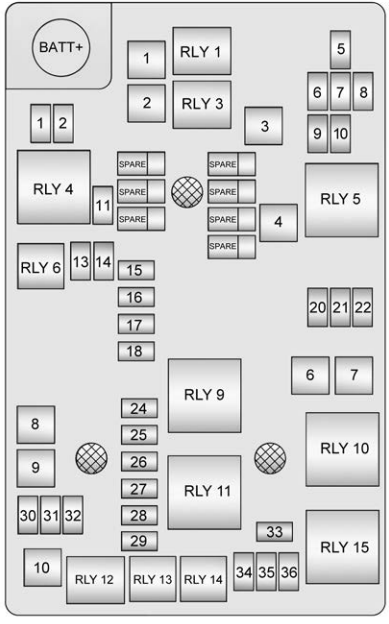

The vehicle may not be equipped with all of the fuses, relays, and features shown.

Mini Fuses	Usage
1	Antilock Brake System Valve
2	Sunroof
5	Outside Rearview Mirror
6	AOS/ROS
7	ABS Oil
8	Regulated Voltage Control
9	Rear Wiper
10	Not Used/IBS*
11	Rear Window Defogger
13	Not Used/SAI Valve*
14	Heated Outside Rearview Mirror
15	Heated Seat Front
16	Fuel System Control Module 1
17	Canister Vent
18	Washer

Mini Fuses	Usage
20	Engine Control Module 5
21	Fuel System Control Module 2/ Leveling
22	Transmission Control Module 1/ DC-DC Converter
24	Engine Control Module 1
25	Coil
26	Engine Control Module 4
27	Engine Control Module 3
28	Engine Control Module 2
29	Injector/ Ignition Coil
30	Engine Control Module
31	Air Conditioning Compressor Clutch

Mini Fuses	Usage
32	Transmission Control Module
33	Horn
34	Front Fog Lamps
35	Left High Beam
36	Right High Beam

J-Case Fuses	Usage
1	Front Wiper
2	Antilock Brake System Pump
3	Blower
4	Run/Crank IEC
6	Cooling Fan K4
7	Cooling Fan K5
8	SAI Pump*
9	EVP
10	Start

Micro Relays	Usage
RLY 1	Front Wiper Control
RLY 3	Front Wiper Speed

HC-Micro Relays	Usage
RLY 12	Start

U-Micro Relays	Usage
RLY 6	Not Used/SAI Valve*
RLY 13	Air Conditioning Compressor Clutch
RLY 14	High-Beam Headlamps

Mini Relays	Usage
RLY 4	Rear Defogger
RLY 5	Run/Crank
RLY 9	SAI Pump*
RLY 10	Cooling Fan K3

Mini Relays	Usage
RLY 11	P/T
RLY 15	Cooling Fan K1

* = If equipped

Instrument Panel Fuse Block

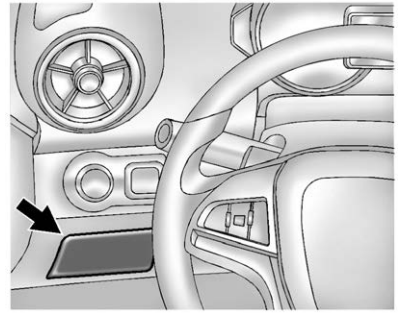

The instrument panel fuse block is on the underside of the driver side instrument panel.

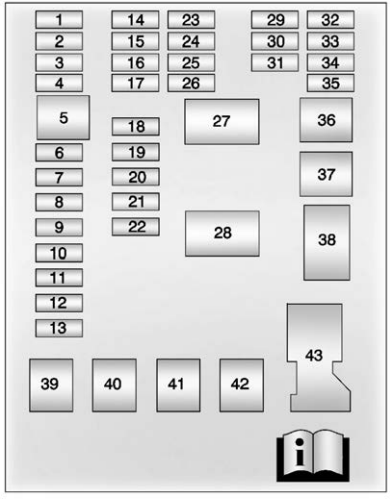

The vehicle may not be equipped with all of the fuses, relays, and features shown.

Number	Usage
1	DLIS
2	Data Link Connector
3	Airbag
4	Liftgate
5	Spare
6	Body Control Module 8
7	Body Control Module 7
8	Body Control Module 6
9	Body Control Module 5
10	Body Control Module 4
11	Body Control Module 3
12	Body Control Module 2
13	Body Control Module 1

Number	Usage
14	Instrument Cluster
15	OnStar
16	Rear Parking Assist
17	Rain Sensing Wiper
18	Audio
19	Trailer
20	VLBS/FCA/LDW
21	CHEVYSTAR
22	Heating, Ventilation, Air Conditioning
23	HDLP ALC
24	Clutch
25	Instrument Cluster/ Automatic Occupant Sensing
26	Airbag Run/Crank
27	Run Relay
28	Liftgate Release

Number	Usage
29	Trailer Run/Crank
30	Clock Spring
31	Heating, Ventilation, and Air Conditioning
32	Spare
33	Sunroof
34	Cigarette Lighter
35	Spare
36	Rear Power Windows
37	Front Power Windows
38	RAP/ACCY
39	DC/DC Converter
40	Driver Power Window Express Up/Down
41	PTC2
42	PTC1
43	Battery Connector

Wheels and Tires

Tires

Every new GM vehicle has high-quality tires made by a leading tire manufacturer. See the warranty manual for information regarding the tire warranty and where to get service. For additional information refer to the tire manufacturer.

⚠ Warning

- Poorly maintained and improperly used tires are dangerous.
- Overloading the tires can cause overheating as a result of too much flexing. There could be a blowout and a serious crash. See *Vehicle Load Limits* ⇨ *187*.

(Continued)

Warning (Continued)

- Underinflated tires pose the same danger as overloaded tires. The resulting crash could cause serious injury. Check all tires frequently to maintain the recommended pressure. Tire pressure should be checked when the tires are cold.
- Overinflated tires are more likely to be cut, punctured, or broken by a sudden impact — such as when hitting a pothole. Keep tires at the recommended pressure.
- Worn or old tires can cause a crash. If the tread is badly worn, replace them.

(Continued)

Warning (Continued)

- Replace any tires that have been damaged by impacts with potholes, curbs, etc.
- Improperly repaired tires can cause a crash. Only the dealer or an authorized tire service center should repair, replace, dismount, and mount the tires.
- Do not spin the tires in excess of 56 km/h (35 mph) on slippery surfaces such as snow, mud, ice, etc. Excessive spinning may cause the tires to explode.

All-Season Tires

This vehicle may come with all-season tires. These tires are designed to provide good overall performance on most road surfaces and weather conditions. Original equipment tires designed to GM's specific tire performance criteria have a TPC specification code molded onto the sidewall. Original equipment all-season tires can be identified by the last two characters of this TPC code, which will be “MS.”

Consider installing winter tires on the vehicle if frequent driving on snow or ice-covered roads is expected. All-season tires provide adequate performance for most winter driving conditions, but they may not offer the same level of traction or performance as winter tires on snow or ice-covered roads. See *Winter Tires* ⇨ *255*.

Winter Tires

This vehicle was not originally equipped with winter tires. Winter tires are designed for increased traction on snow and ice-covered roads. Consider installing winter tires on the vehicle if frequent driving on ice or snow covered roads is expected. See your dealer for details regarding winter tire availability and proper tire selection. Also, see *Buying New Tires* ⇨ *268*.

With winter tires, there may be decreased dry road traction, increased road noise, and shorter tread life. After changing to winter tires, be alert for changes in vehicle handling and braking.

If using winter tires:

- Use tires of the same brand and tread type on all four wheel positions.
- Use only radial ply tires of the same size, load range, and speed rating as the original equipment tires.

Winter tires with the same speed rating as the original equipment tires may not be available for H, V, W, Y, and ZR speed rated tires. If winter tires with a lower speed rating are chosen, never exceed the tire's maximum speed capability.

Summer Tires

This vehicle may come with high performance summer tires. These tires have a special tread and compound that are optimized for maximum dry and wet road performance. This special tread and compound will have decreased performance in cold climates, and on ice and snow. It is recommended that winter tires be installed on the vehicle if frequent driving at temperatures below approximately 5 °C (40 °F) or on ice or snow covered roads is expected. See *Winter Tires* ⇨ *255*.

Caution

High performance summer tires have rubber compounds that lose flexibility and may develop surface cracks in the tread area at temperatures below −7 °C (20 °F). Always store high performance summer tires indoors and at temperatures above −7 °C (20 °F) when not in

(Continued)

Caution (Continued)

use. If the tires have been subjected to −7 °C (20 °F) or less, let them warm up in a heated space to at least 5 °C (40 °F) for 24 hours or more before being installed or driving a vehicle on which they are installed. Do not apply heat or blow heated air directly on the tires. Always inspect tires before use. See *Tire Inspection* ⇨ *266*.

Tire Sidewall Labeling

Useful information about a tire is molded into its sidewall. The examples show a typical passenger vehicle tire and a compact spare tire sidewall.

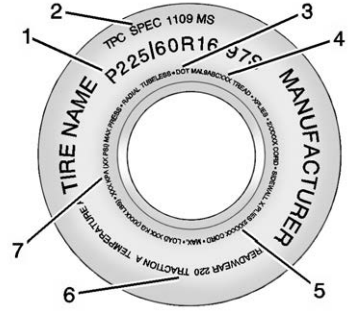

Passenger (P-Metric) Tire Example

(1) Tire Size : The tire size is a combination of letters and numbers used to define a particular tire's width, height, aspect ratio, construction type, and service description. See the “Tire Size” illustration later in this section.

(2) TPC Spec (Tire Performance Criteria Specification) : Original equipment tires designed to GM's specific tire performance criteria have a TPC specification code molded onto the sidewall.

GM's TPC specifications meet or exceed all federal safety guidelines.

(3) DOT (Department of Transportation) : The Department of Transportation (DOT) code indicates that the tire is in compliance with the U.S. Department of Transportation Motor Vehicle Safety Standards.

DOT Tire Date of Manufacture : The last four digits of the TIN indicate the tire manufactured date. The first two digits represent the week (01–52) and the last two digits, the year. For example, the third week of the year 2010 would have a four-digit DOT date of 0310.

(4) Tire Identification Number (TIN) : The letters and numbers following the DOT (Department of Transportation) code are the Tire Identification Number (TIN). The TIN shows the manufacturer and plant code, tire size, and date the tire was manufactured. The TIN is molded onto both sides of the tire, although only one side may have the date of manufacture.

(5) Tire Ply Material : The type of cord and number of plies in the sidewall and under the tread.

(6) Uniform Tire Quality Grading (UTQG) : Tire manufacturers are required to grade tires based on three performance factors: treadwear, traction, and temperature resistance. For more information see *Uniform Tire Quality Grading* ⇨ *270*.

(7) Maximum Cold Inflation Load Limit : Maximum load that can be carried and the maximum pressure needed to support that load.

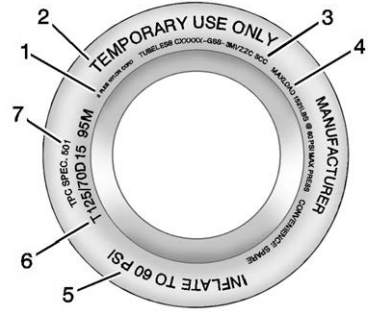

Compact Spare Tire Example

(1) Tire Ply Material : The type of cord and number of plies in the sidewall and under the tread.

(2) Temporary Use Only : The compact spare tire or temporary use tire should not be driven at speeds over 80 km/h (50 mph). The compact spare tire is for emergency use when a regular road tire has lost air and gone flat. If the vehicle has a compact spare tire, see *Compact Spare Tire* ⇨ *286* and *If a Tire Goes Flat* ⇨ *273*.

(3) Tire Identification Number (TIN) : The letters and numbers following the DOT (Department of Transportation) code are the Tire Identification Number (TIN). The TIN shows the manufacturer and plant code, tire size, and date the tire was manufactured. The TIN is molded onto both sides of the tire, although only one side may have the date of manufacture.

(4) Maximum Cold Inflation Load Limit : Maximum load that can be carried and the maximum pressure needed to support that load.

(5) Tire Inflation : The temporary use tire or compact spare tire should be inflated to 420 kPa (60 psi). For more information on tire pressure and inflation see *Tire Pressure* ⇨ *261*.

(6) Tire Size : A combination of letters and numbers define a tire's width, height, aspect ratio, construction type, and service description. The letter T as the first character in the tire size means the tire is for temporary use only.

(7) TPC Spec (Tire Performance Criteria Specification) : Original equipment tires designed to GM's specific tire performance criteria have a TPC specification code molded onto the sidewall. GM's TPC specifications meet or exceed all federal safety guidelines.

Tire Designations

Tire Size

The following is an example of a typical passenger vehicle tire size.

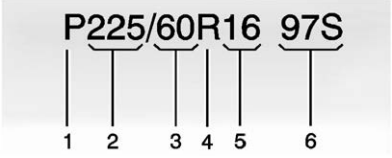

(1) Passenger (P-Metric) Tire : The United States version of a metric tire sizing system. The letter P as the first character in the tire size means a passenger vehicle tire engineered to standards set by the U.S. Tire and Rim Association.

(2) Tire Width : The three-digit number indicates the tire section width in millimeters from sidewall to sidewall.

(3) Aspect Ratio : A two-digit number that indicates the tire height-to-width measurements. For example, if the tire size aspect ratio is 60, as shown in item 3 of the illustration, it would mean that the tire's sidewall is 60 percent as high as it is wide.

(4) Construction Code : A letter code is used to indicate the type of ply construction in the tire. The letter R means radial ply construction; the letter D means diagonal or bias ply construction; and the letter B means belted-bias ply construction.

(5) Rim Diameter : Diameter of the wheel in inches.

(6) Service Description : These characters represent the load index and speed rating of the tire. The load index represents the load carrying capacity a tire is certified to carry. The speed rating is the maximum speed a tire is certified to carry a load.

Tire Terminology and Definitions

Air Pressure : The amount of air inside the tire pressing outward on each square inch of the tire. Air pressure is expressed in kPa (kilopascal) or psi (pounds per square inch).

Accessory Weight : The combined weight of optional accessories. Some examples of optional accessories are automatic transmission, power windows, power seats, and air conditioning.

Aspect Ratio : The relationship of a tire's height to its width.

Belt : A rubber coated layer of cords between the plies and the tread. Cords may be made from steel or other reinforcing materials.

Bead : The tire bead contains steel wires wrapped by steel cords that hold the tire onto the rim.

Bias Ply Tire : A pneumatic tire in which the plies are laid at alternate angles less than 90 degrees to the centerline of the tread.

Cold Tire Pressure : The amount of air pressure in a tire, measured in kPa (kilopascal) or psi (pounds per square inch) before a tire has built up heat from driving. See *Tire Pressure* ⇨ *261*.

Curb Weight : The weight of a motor vehicle with standard and optional equipment including the maximum capacity of fuel, oil, and coolant, but without passengers and cargo.

DOT Markings : A code molded into the sidewall of a tire signifying that the tire is in compliance with the U.S. Department of Transportation (DOT) Motor Vehicle Safety Standards. The DOT code includes the Tire Identification Number (TIN), an alphanumeric designator which can also identify the tire manufacturer, production plant, brand, and date of production.

GVWR : Gross Vehicle Weight Rating. See *Vehicle Load Limits* ⇨ *187*.

GAWR FRT : Gross Axle Weight Rating for the front axle. See *Vehicle Load Limits* ⇨ *187*.

GAWR RR : Gross Axle Weight Rating for the rear axle. See *Vehicle Load Limits* ⇨ *187*.

Intended Outboard Sidewall : The side of an asymmetrical tire that must always face outward when mounted on a vehicle.

Kilopascal (kPa) : The metric unit for air pressure.

Light Truck (LT-Metric) Tire : A tire used on light duty trucks and some multipurpose passenger vehicles.

Load Index : An assigned number ranging from 1 to 279 that corresponds to the load carrying capacity of a tire.

Maximum Inflation Pressure : The maximum air pressure to which a cold tire can be inflated. The maximum air pressure is molded onto the sidewall.

Maximum Load Rating : The load rating for a tire at the maximum permissible inflation pressure for that tire.

Maximum Loaded Vehicle Weight : The sum of curb weight, accessory weight, vehicle capacity weight, and production options weight.

Normal Occupant Weight : The number of occupants a vehicle is designed to seat multiplied by 68 kg (150 lb). See *Vehicle Load Limits* ⇨ *187*.

Occupant Distribution : Designated seating positions.

Outward Facing Sidewall : The side of an asymmetrical tire that has a particular side that faces outward when mounted on a vehicle. The side of the tire that contains a whitewall, bears white lettering, or bears manufacturer, brand, and/or model name molding that is higher or deeper than the same moldings on the other sidewall of the tire.

Passenger (P-Metric) Tire : A tire used on passenger cars and some light duty trucks and multipurpose vehicles.

Recommended Inflation Pressure : Vehicle manufacturer's recommended tire inflation pressure as shown on the tire placard. See *Tire Pressure* ⇨ *261* and *Vehicle Load Limits* ⇨ *187*.

Radial Ply Tire : A pneumatic tire in which the ply cords that extend to the beads are laid at 90 degrees to the centerline of the tread.

Rim : A metal support for a tire and upon which the tire beads are seated.

Sidewall : The portion of a tire between the tread and the bead.

Speed Rating : An alphanumeric code assigned to a tire indicating the maximum speed at which a tire can operate.

Traction : The friction between the tire and the road surface. The amount of grip provided.

Tread : The portion of a tire that comes into contact with the road.

Treadwear Indicators : Narrow bands, sometimes called wear bars, that show across the tread of a tire when only 1.6 mm (1/16 in) of tread remains. See *When It Is Time for New Tires* ⇨ *267*.

UTQGS (Uniform Tire Quality Grading Standards) : A tire information system that provides consumers with ratings for a tire's traction, temperature, and treadwear. Ratings are determined by tire manufacturers using government testing procedures. The ratings are molded into the sidewall of the tire. See *Uniform Tire Quality Grading* ⇨ *270*.

Vehicle Capacity Weight : The number of designated seating positions multiplied by 68 kg (150 lb) plus the rated cargo load. See *Vehicle Load Limits* ⇨ *187*.

Vehicle Maximum Load on the Tire : Load on an individual tire due to curb weight, accessory weight, occupant weight, and cargo weight.

Vehicle Placard : A label permanently attached to a vehicle showing the vehicle capacity weight and the original equipment tire size and recommended inflation pressure. See “Tire and Loading Information Label” under *Vehicle Load Limits* ⇨ *187*.

Tire Pressure

Tires need the correct amount of air pressure to operate effectively.

Caution

Neither tire underinflation nor overinflation is good. Underinflated tires, or tires that do not have enough air, can result in:

- Tire overloading and overheating which could lead to a blowout.
- Premature or irregular wear.
- Poor handling.
- Reduced fuel economy.

Overinflated tires, or tires that have too much air, can result in:

- Unusual wear.

(Continued)

Caution (Continued)

- Poor handling.
- Rough ride.
- Needless damage from road hazards.

The Tire and Loading Information label on the vehicle indicates the original equipment tires and the correct cold tire inflation pressures. The recommended pressure is the minimum air pressure needed to support the vehicle's maximum load carrying capacity. See *Vehicle Load Limits* ⇨ *187*.

How the vehicle is loaded affects vehicle handling and ride comfort. Never load the vehicle with more weight than it was designed to carry.

When to Check

Check the tires once a month or more. Do not forget the compact spare, if the vehicle has one. The cold compact spare tire pressure should be at 420 kPa (60 psi). See *Compact Spare Tire* ⇨ *286*.

How to Check

Use a good quality pocket-type gauge to check tire pressure. Proper tire inflation cannot be determined by looking at the tire. Check the tire inflation pressure when the tires are cold, meaning the vehicle has not been driven for at least three hours or no more than 1.6 km (1 mi).

Remove the valve cap from the tire valve stem. Press the tire gauge firmly onto the valve to get a pressure measurement. If the cold tire inflation pressure matches the recommended pressure on the Tire and Loading Information label, no further adjustment is necessary. If the inflation pressure is low, add air until the recommended pressure is reached. If the inflation pressure is high, press on the metal stem in the center of the tire valve to release air.

Recheck the tire pressure with the tire gauge.

Put the valve caps back on the valve stems to keep out dirt and moisture and prevent leaks. Use only valve caps designed for the vehicle by GM. TPMS sensors could be damaged and would not be covered by the vehicle warranty.

Tire Pressure Monitor System

The Tire Pressure Monitor System (TPMS) uses radio and sensor technology to check tire pressure levels. The TPMS sensors monitor the air pressure in your tires and transmit tire pressure readings to a receiver located in the vehicle.

Each tire, including the spare (if provided), should be checked monthly when cold and inflated to the inflation pressure recommended by the vehicle manufacturer on the vehicle placard or tire inflation pressure label. (If your vehicle has tires of a different size than the size indicated on the vehicle placard or tire inflation pressure label, you should determine the proper tire inflation pressure for those tires.)

As an added safety feature, your vehicle has been equipped with a tire pressure monitoring system (TPMS) that illuminates a low tire pressure telltale when one or more of your tires is significantly under-inflated.

Accordingly, when the low tire pressure telltale illuminates, you should stop and check your tires as soon as possible, and inflate them to the proper pressure. Driving on a significantly under-inflated tire causes the tire to overheat and can lead to tire failure. Under-inflation also reduces fuel efficiency and tire tread life, and may affect the vehicle's handling and stopping ability.

Please note that the TPMS is not a substitute for proper tire maintenance, and it is the driver's responsibility to maintain correct tire pressure, even if under-inflation has not reached the level to trigger illumination of the TPMS low tire pressure telltale.

Your vehicle has also been equipped with a TPMS malfunction indicator to indicate when the system is not operating properly. The TPMS malfunction indicator is combined with the low tire pressure telltale. When the system detects a malfunction, the telltale will flash for approximately one minute and then remain continuously illuminated. This sequence will continue upon subsequent vehicle start-ups as long as the malfunction exists.

When the malfunction indicator is illuminated, the system may not be able to detect or signal low tire pressure as intended. TPMS malfunctions may occur for a variety of reasons, including the installation of replacement or alternate tires or wheels on the vehicle that prevent the TPMS from functioning properly. Always check the TPMS malfunction telltale after replacing one or more tires or wheels on your vehicle to ensure that the replacement or alternate tires and wheels allow the TPMS to continue to function properly.

See *Tire Pressure Monitor Operation* ⇨ *263*.

See *Radio Frequency Statement* ⇨ *328*.

Tire Pressure Monitor Operation

This vehicle may have a Tire Pressure Monitor System (TPMS). The TPMS is designed to warn the driver when a low tire pressure condition exists. TPMS sensors are mounted onto each tire and wheel assembly, excluding the spare tire and wheel assembly. The TPMS sensors monitor the air pressure in

the tires and transmit the tire pressure readings to a receiver located in the vehicle.

When a low tire pressure condition is detected, the TPMS illuminates the low tire pressure warning light located on the instrument cluster. If the warning light comes on, stop as soon as possible and inflate the tires to the recommended pressure shown on the Tire and Loading Information label. See *Vehicle Load Limits* ⇨ *187*.

The low tire pressure warning light comes on at each ignition cycle until the tires are inflated to the correct inflation pressure.

The low tire pressure warning light may come on in cool weather when the vehicle is first started, and then turn off as the vehicle is driven. This could be an early indicator that the air pressure is getting low and must be inflated to the proper pressure.

A Tire and Loading Information label shows the size of the original equipment tires and the correct inflation pressure for the tires when they are cold. See *Vehicle Load Limits* ⇨ *187*, for an example of the Tire and Loading Information label and its location. Also see *Tire Pressure* ⇨ *261*.

The TPMS can warn about a low tire pressure condition but it does not replace normal tire maintenance. See *Tire Inspection* ⇨ *266*, *Tire Rotation* ⇨ *266* and *Tires* ⇨ *254*.

Caution

Tire sealant materials are not all the same. A non-approved tire sealant could damage the TPMS sensors. TPMS sensor damage caused by using an incorrect tire sealant is not covered by the vehicle warranty. Always use only

(Continued)

Caution (Continued)

the GM approved tire sealant available through your dealer or included in the vehicle.

Factory-installed Tire Inflator Kits use a GM-approved liquid tire sealant. Using non-approved tire sealants could damage the TPMS sensors. See *Tire Sealant and Compressor Kit* ⇨ *275* for information regarding the inflator kit materials and instructions.

TPMS Malfunction Light

The TPMS will not function properly if one or more of the TPMS sensors are missing or inoperable. When the system detects a malfunction, the low tire warning light flashes for about one minute and then stays on for the remainder of the ignition cycle. The malfunction light comes on at each ignition cycle until the problem is corrected. Some of the conditions that can cause this to come on are:

- One of the road tires has been replaced with the spare tire. The spare tire does not have a TPMS sensor. The malfunction light should go off after the road tire is replaced and the sensor matching process is performed successfully. See "TPMS Sensor Matching Process" later in this section.
- The TPMS sensor matching process was not done or not completed successfully after rotating the tires. The malfunction light should go off after successfully completing the sensor matching process. See "TPMS Sensor Matching Process" later in this section.
- One or more TPMS sensors are missing or damaged. The malfunction light should go off when the TPMS sensors are installed and the sensor matching process is performed successfully. See your dealer for service.
- Replacement tires or wheels do not match the original equipment tires or wheels. Tires and wheels other than those recommended could prevent the TPMS from functioning properly. See *Buying New Tires* ⇨ *268*.
- Operating electronic devices or being near facilities using radio wave frequencies similar to the TPMS could cause the TPMS sensors to malfunction.

If the TPMS is not functioning properly, it cannot detect or signal a low tire condition. See your dealer for service if the TPMS malfunction light comes on and stays on.

TPMS Sensor Matching Process

Each TPMS sensor has a unique identification code. The identification code needs to be matched to a new tire/wheel position after rotating the tires or replacing one or more of the TPMS sensors. The TPMS sensor matching process should also be performed after replacing a spare tire with a road tire containing the TPMS sensor. The malfunction light should go off at the next ignition cycle. The sensors are matched to the tire/wheel positions, using a TPMS relearn tool, in the following order: driver side front tire, passenger side front tire, passenger side rear tire, and driver side rear. See your dealer for service or to purchase a relearn tool. A TPMS relearn tool can also be purchased. See Tire Pressure Monitor Sensor Activation Tool at www.gmtoolsandequipment.com or call 1-800-GM TOOLS (1-800-468-6657).

There are two minutes to match the first tire/wheel position, and five minutes overall to match all four tire/wheel positions. If it takes longer, the matching process stops and must be restarted.

The TPMS sensor matching process is:

1. Set the parking brake.
2. Turn the ignition to ON/RUN with the engine off.

3. Press the MENU button to display the menu items in the Driver Information Center (DIC).
4. Use the thumbwheel to scroll to the Tire Learn menu item screen.
5. Press and hold the SET/CLR button to begin the sensor matching process.
6. The horn sounds twice to signal the receiver is in relearn mode and the TIRE LEARN message displays on the DIC screen.
7. Start with the driver side front tire.
8. Place the relearn tool against the tire sidewall, near the valve stem. Then press the button to activate the TPMS sensor. A horn chirp confirms that the sensor identification code has been matched to this tire and wheel position.
9. Proceed to the passenger side front tire, and repeat the procedure in Step 8.
10. Proceed to the passenger side rear tire, and repeat the procedure in Step 8.
11. Proceed to the driver side rear tire, and repeat the procedure in Step 8. The horn sounds two times to indicate the sensor identification code has been matched to the driver side rear tire, and the TPMS sensor matching process is no longer active. The TIRE LEARN message on the DIC display screen goes off.
12. Turn the ignition to LOCK/OFF.
13. Set all four tires to the recommended air pressure level as indicated on the Tire and Loading Information label.

Tire Inspection

We recommend that the tires, including the spare tire, if the vehicle has one, be inspected for signs of wear or damage at least once a month.

Replace the tire if:

- The indicators at three or more places around the tire can be seen.
- There is cord or fabric showing through the tire's rubber.
- The tread or sidewall is cracked, cut, or snagged deep enough to show cord or fabric.
- The tire has a bump, bulge, or split.
- The tire has a puncture, cut, or other damage that cannot be repaired well because of the size or location of the damage.

Tire Rotation

Tires should be rotated every 12 000 km (7,500 mi). See *Maintenance Schedule* ⇨ *302*.

Tires are rotated to achieve a more uniform wear for all tires. The first rotation is the most important.

Anytime unusual wear is noticed, rotate the tires as soon as possible, check for proper tire inflation pressure, and check for damaged tires or wheels. If the unusual wear continues after the rotation, check the wheel alignment. See *When It Is Time for New Tires* ⇨ *267* and *Wheel Replacement* ⇨ *272*.

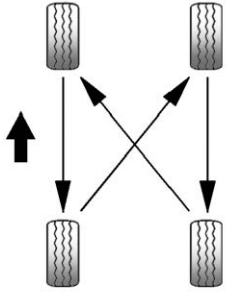

Use this rotation pattern when rotating the tires.

Do not include the compact spare tire in the tire rotation.

Adjust the front and rear tires to the recommended inflation pressure on the Tire and Loading Information label after the tires have been rotated. See *Tire Pressure* ⇨ *261* and *Vehicle Load Limits* ⇨ *187*.

Reset the Tire Pressure Monitor System. See *Tire Pressure Monitor Operation* ⇨ *263*.

Check that all wheel nuts are properly tightened. See “Wheel Nut Torque” under *Capacities and Specifications* ⇨ *315*.

⚠ Warning

Rust or dirt on a wheel, or on the parts to which it is fastened, can make wheel nuts become loose after time. The wheel could come

(Continued)

Warning (Continued)

off and cause an accident. When changing a wheel, remove any rust or dirt from places where the wheel attaches to the vehicle. In an emergency, a cloth or a paper towel can be used; however, use a scraper or wire brush later to remove all rust or dirt.

Lightly coat the center of the wheel hub with wheel bearing grease after a wheel change or tire rotation to prevent corrosion or rust build-up. Do not get grease on the flat wheel mounting surface or on the wheel nuts or bolts.

When It Is Time for New Tires

Factors such as maintenance, temperatures, driving speeds, vehicle loading, and road conditions affect the wear rate of the tires.

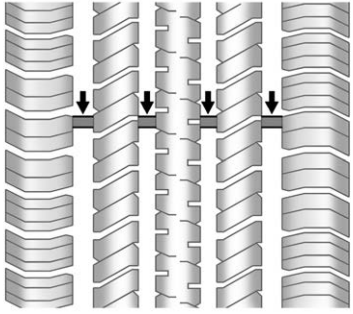

Treadwear indicators are one way to tell when it is time for new tires. Treadwear indicators appear when the tires have only 1.6 mm (1/16 in) or less of tread remaining. See *Tire Inspection* ⇨ *266* and *Tire Rotation* ⇨ *266*.

The rubber in tires ages over time. This also applies to the spare tire, if the vehicle has one, even if it is never used. Multiple factors including temperatures, loading conditions, and inflation pressure maintenance affect how fast aging takes place. GM recommends that tires, including the spare if equipped, be replaced after six years, regardless of tread wear. The tire manufacture date is the last four digits of the DOT Tire Identification Number (TIN) which is molded into one side of the tire sidewall. The first two digits represent the week (01–52) and the last two digits, the year. For example, the third week of the year 2010 would have a four-digit DOT date of 0310.

Vehicle Storage

Tires age when stored normally mounted on a parked vehicle. Park a vehicle that will be stored for at least a month in a cool, dry, clean area away from direct sunlight to slow aging. This area should be free of grease, gasoline, or other substances that can deteriorate rubber.

Parking for an extended period can cause flat spots on the tires that may result in vibrations while driving. When storing a vehicle for at least a month, remove the tires or raise the vehicle to reduce the weight from the tires.

Buying New Tires

GM has developed and matched specific tires for the vehicle. The original equipment tires installed were designed to meet General Motors Tire Performance Criteria Specification (TPC Spec) system rating. When replacement tires are needed, GM strongly recommends buying tires with the same TPC Spec rating.

GM's exclusive TPC Spec system considers over a dozen critical specifications that impact the overall performance of the vehicle, including brake system performance, ride and handling, traction control, and tire pressure monitoring performance. GM's TPC Spec number is molded onto the tire's sidewall near the tire size. If the tires have an all-season tread design, the TPC Spec number

will be followed by MS for mud and snow. See *Tire Sidewall Labeling* ⇨ *256*.

GM recommends replacing worn tires in complete sets of four. Uniform tread depth on all tires will help to maintain the performance of the vehicle. Braking and handling performance may be adversely affected if all the tires are not replaced at the same time. If proper rotation and maintenance have been done, all four tires should wear out at about the same time. See *Tire Rotation* ⇨ *266*. However, if it is necessary to replace only one axle set of worn tires, place the new tires on the rear axle.

Winter tires with the same speed rating as the original equipment tires may not be available for H, V, W, Y and ZR speed rated tires. Never exceed the winter tires' maximum speed capability when using winter tires with a lower speed rating.

⚠ Warning

Tires could explode during improper service. Attempting to mount or dismount a tire could cause injury or death. Only your dealer or authorized tire service center should mount or dismount the tires.

⚠ Warning

Mixing tires of different sizes, brands, or types may cause loss of control of the vehicle, resulting in a crash or other vehicle damage. Use the correct size, brand, and type of tires on all wheels.

⚠ Warning

Using bias-ply tires on the vehicle may cause the wheel rim flanges to develop cracks after many miles of driving. A tire and/or wheel could fail suddenly and cause a crash. Use only radial-ply tires with the wheels on the vehicle.

If the vehicle tires must be replaced with a tire that does not have a TPC Spec number, make sure they are the same size, load range, speed rating, and construction (radial) as the original tires.

Vehicles that have a tire pressure monitoring system could give an inaccurate low-pressure warning if non-TPC Spec rated tires are installed. See *Tire Pressure Monitor System* ⇨ *262*.

The Tire and Loading Information label indicates the original equipment tires on the vehicle. See *Vehicle Load Limits* ⇨ *187*.

Different Size Tires and Wheels

If wheels or tires are installed that are a different size than the original equipment wheels and tires, vehicle performance, including its braking, ride and handling characteristics, stability, and resistance to rollover may be affected. If the vehicle has electronic systems such as antilock brakes, rollover airbags, traction control, electronic stability control, or All-Wheel Drive, the performance of these systems can also be affected.

⚠ Warning

If different sized wheels are used, there may not be an acceptable level of performance and safety if

(Continued)

Warning (Continued)

tires not recommended for those wheels are selected. This increases the chance of a crash and serious injury. Only use GM specific wheel and tire systems developed for the vehicle, and have them properly installed by a GM certified technician.

See *Buying New Tires* ⇨ *268* and *Accessories and Modifications* ⇨ *220*.

Uniform Tire Quality Grading

The following information relates to the system developed by the United States National Highway Traffic Safety Administration (NHTSA), which grades tires by treadwear, traction, and temperature performance. This applies only to vehicles sold in the United States. The grades are molded on the sidewalls of most passenger car tires. The Uniform Tire Quality Grading (UTQG) system does not apply to deep tread, winter tires, compact spare tires, tires with nominal rim diameters of 10 to 12 inches (25 to 30 cm), or to some limited-production tires.

While the tires available on General Motors passenger cars and light trucks may vary with respect to these grades, they must also conform to federal safety requirements and additional General Motors Tire Performance Criteria (TPC) standards.

Quality grades can be found where applicable on the tire sidewall between tread shoulder and maximum section width. For example:

Treadwear 200 Traction AA Temperature A

All Passenger Car Tires Must Conform to Federal Safety Requirements In Addition To These Grades.

Treadwear

The treadwear grade is a comparative rating based on the wear rate of the tire when tested under controlled conditions on a specified government test course. For example, a tire graded 150 would wear one and one-half (1½) times as well on the government course as a tire graded 100. The relative performance of tires depends upon the actual conditions of their use, however, and may depart significantly from the norm due to variations in driving habits, service practices and differences in road characteristics and climate.

Traction

The traction grades, from highest to lowest, are AA, A, B, and C. Those grades represent the tire's ability to stop on wet pavement as measured under controlled conditions on specified government test surfaces of asphalt and concrete. A tire marked C may have poor traction performance. Warning: The traction grade assigned to this tire is based on straight-ahead braking traction tests, and does not include acceleration, cornering, hydroplaning, or peak traction characteristics.

Temperature

The temperature grades are A (the highest), B, and C, representing the tire's resistance to the generation of heat and its ability to dissipate heat when tested under controlled conditions on a specified indoor laboratory test wheel. Sustained high temperature can cause the material of the tire to degenerate and reduce tire life, and excessive temperature can lead to sudden tire failure. The grade C corresponds to a level of performance which all passenger car tires must meet under the Federal Motor Safety Standard No. 109. Grades B and A represent higher levels of performance on the laboratory test wheel than the minimum required by law. Warning: The temperature grade for this tire is established for a tire that is properly inflated and not overloaded. Excessive speed, underinflation, or excessive loading, either separately or in combination, can cause heat buildup and possible tire failure.

Wheel Alignment and Tire Balance

The tires and wheels were aligned and balanced at the factory to provide the longest tire life and best overall performance. Adjustments to wheel alignment and tire balancing are not necessary on a regular basis. Consider an alignment check if there is unusual tire wear or the vehicle is significantly pulling to one side or the other. Some slight pull to the left or right, depending on the crown of the road and/or other road surface variations such as troughs or ruts, is normal. If the vehicle is vibrating when driving on a smooth road, the tires and wheels may need to be rebalanced. See your dealer for proper diagnosis.

Wheel Replacement

Replace any wheel that is bent, cracked, or badly rusted or corroded. If wheel nuts keep coming loose, the wheel, wheel bolts, and wheel nuts should be replaced.
If the wheel leaks air, replace it.

Some aluminum wheels can be repaired. See your dealer if any of these conditions exist.

Your dealer will know the kind of wheel that is needed.

Each new wheel should have the same load-carrying capacity, diameter, width, offset, and be mounted the same way as the one it replaces.

Replace wheels, wheel bolts, wheel nuts, or Tire Pressure Monitor System (TPMS) sensors with new GM original equipment parts.

⚠ Warning

Using the wrong replacement wheels, wheel bolts, or wheel nuts can be dangerous. It could affect the braking and handling of the vehicle. Tires can lose air, and cause loss of control, causing a crash. Always use the correct wheel, wheel bolts, and wheel nuts for replacement.

Caution

The wrong wheel can also cause problems with bearing life, brake cooling, speedometer or odometer calibration, headlamp aim, bumper height, vehicle ground clearance, and tire or tire chain clearance to the body and chassis.

Used Replacement Wheels

⚠ Warning

Replacing a wheel with a used one is dangerous. How it has been used or how far it has been driven may be unknown. It could fail suddenly and cause a crash. When replacing wheels, use a new GM original equipment wheel.

Tire Chains

⚠ Warning

Do not use tire chains. There is not enough clearance. Tire chains used on a vehicle without the proper amount of clearance can cause damage to the brakes, suspension, or other vehicle parts. The area damaged by the tire chains could cause loss of control and a crash.

Use another type of traction device only if its manufacturer recommends it for the vehicle's tire size combination and road conditions. Follow that manufacturer's instructions. To avoid vehicle damage, drive slow and readjust or remove the traction device if it contacts the vehicle. Do not spin the wheels. If traction devices are used, install them on the front tires.

If a Tire Goes Flat

It is unusual for a tire to blow out while driving, especially if the tires are maintained properly. See *Tires* ⇨ *254*. If air goes out of a tire, it is much more likely to leak out slowly. But if there is ever a blowout, here are a few tips about what to expect and what to do:

If a front tire fails, the flat tire creates a drag that pulls the vehicle toward that side. Take your foot off the accelerator pedal and grip the steering wheel firmly. Steer to maintain lane position, and then gently brake to a stop, well off the road, if possible.

A rear blowout, particularly on a curve, acts much like a skid and may require the same correction as used in a skid. Stop pressing the accelerator pedal and steer to straighten the vehicle. It may be very bumpy and noisy. Gently brake to a stop, well off the road, if possible.

⚠ Warning

Driving on a flat tire will cause permanent damage to the tire. Re-inflating a tire after it has been driven on while severely underinflated or flat may cause a blowout and a serious crash. Never attempt to re-inflate a tire that has been driven on while severely underinflated or flat. Have your dealer or an authorized tire service center repair or replace the flat tire as soon as possible.

⚠ Warning

Lifting a vehicle and getting under it to do maintenance or repairs is dangerous without the appropriate safety equipment and training. If a jack is provided with the vehicle, it is designed only for changing a flat tire. If it is used for anything else, you or others could

(Continued)

Warning (Continued)

be badly injured or killed if the vehicle slips off the jack. If a jack is provided with the vehicle, only use it for changing a flat tire.

If a tire goes flat, avoid further tire and wheel damage by driving slowly to a level place, well off the road, if possible. Turn on the hazard warning flashers. See *Hazard Warning Flashers* ⇨ *122*.

⚠ Warning

Changing a tire can be dangerous. The vehicle can slip off the jack and roll over or fall causing injury or death. Find a level place to change the tire. To help prevent the vehicle from moving:

1. Set the parking brake firmly.

(Continued)

Warning (Continued)

2. Put an automatic transmission in P (Park) or a manual transmission in 1 (First) or R (Reverse).
3. Turn off the engine and do not restart while the vehicle is raised.
4. Do not allow passengers to remain in the vehicle.
5. Place wheel blocks, if equipped, on both sides of the tire at the opposite corner of the tire being changed.

This vehicle may come with a jack and spare tire or a tire sealant and compressor kit. To use the jacking equipment to change a spare tire safely, follow the instructions below. Then see *Tire Changing* ⇨ *281*. To use the tire sealant and compressor kit, see *Tire Sealant and Compressor Kit* ⇨ *275*.

When the vehicle has a flat tire (2), use the following example as a guide to assist you in the placement of wheel blocks (1), if equipped.

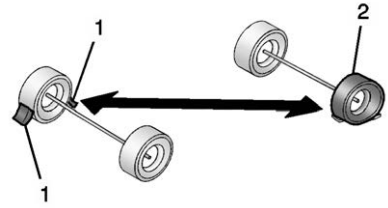

1. Wheel Block (If Equipped)
2. Flat Tire

The following information explains how to repair or change a tire.

Tire Sealant and Compressor Kit

⚠ Warning

Idling a vehicle in an enclosed area with poor ventilation is dangerous. Engine exhaust may enter the vehicle. Engine exhaust contains carbon monoxide (CO) which cannot be seen or smelled. It can cause unconsciousness and even death. Never run the engine in an enclosed area that has no fresh air ventilation. For more information, see *Engine Exhaust* ⇨ *197*.

⚠ Warning

Overinflating a tire could cause the tire to rupture and you or others could be injured. Be sure to read and follow the tire sealant and compressor kit instructions and inflate the tire to its

(Continued)

Warning (Continued)

recommended pressure. Do not exceed the recommended pressure.

⚠ Warning

Storing the tire sealant and compressor kit or other equipment in the passenger compartment of the vehicle could cause injury. In a sudden stop or collision, loose equipment could strike someone. Store the tire sealant and compressor kit in its original location.

If this vehicle has a tire sealant and compressor kit, there may not be a spare tire or tire changing equipment, and on some vehicles there may not be a place to store a tire.

The tire sealant and compressor can be used to temporarily seal punctures up to 6 mm (0.25 in) in the tread area of the tire. It can also be used to inflate an underinflated tire.

If the tire has been separated from the wheel, has damaged sidewalls, or has a large puncture, the tire is too severely damaged for the tire sealant and compressor kit to be effective. See *Roadside Assistance Program* ⇨ *322*.

Read and follow all of the tire sealant and compressor kit instructions.

The kit includes:

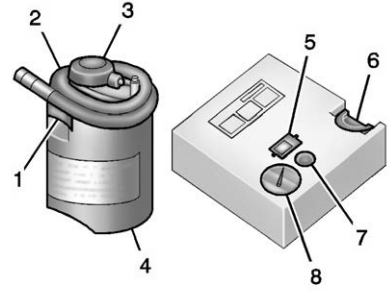

1. Sealant Canister Inlet Valve

2. Sealant/Air Hose
3. Base of Sealant Canister
4. Tire Sealant Canister
5. On/Off Button
6. Slot on Top of Compressor
7. Pressure Deflation Button
8. Pressure Gauge

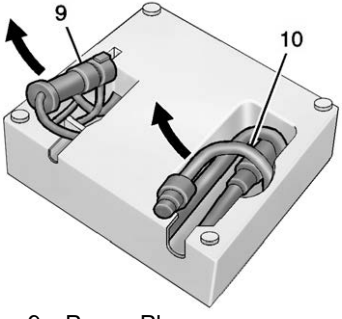

9. Power Plug
10. Air Only Hose

Tire Sealant

Read and follow the safe handling instructions on the label adhered to the tire sealant canister (4).

Check the tire sealant expiration date on the tire sealant canister. The tire sealant canister (4) should be replaced before its expiration date. Replacement tire sealant canisters are available at your local dealer.

There is only enough sealant to seal one tire. After usage, the tire sealant canister must be replaced.

Using the Tire Sealant and Compressor Kit to Temporarily Seal and Inflate a Punctured Tire

When using the tire sealant and compressor kit during cold temperatures, warm the kit in a heated environment for five minutes. This will help to inflate the tire faster.

If a tire goes flat, avoid further tire and wheel damage by driving slowly to a level place. Turn on the hazard warning flashers. See *Hazard Warning Flashers* ⇨ *122*.

See *If a Tire Goes Flat* ⇨ *273* for other important safety warnings.

Do not remove any objects that have penetrated the tire.

1. Remove the tire sealant canister (4) and compressor from its storage location. See *Storing the Tire Sealant and Compressor Kit* ⇨ *281*.
2. Remove the air only hose (10) and the power plug (9) from the bottom of the compressor.
3. Place the compressor on the ground near the flat tire.

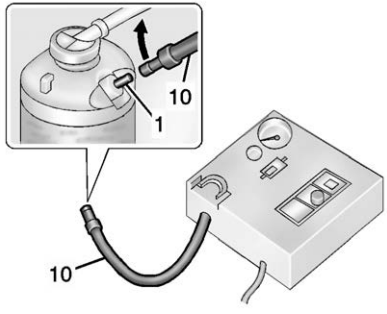

4. Attach the air only hose (10) to the sealant canister inlet valve (1) by turning it clockwise until tight.

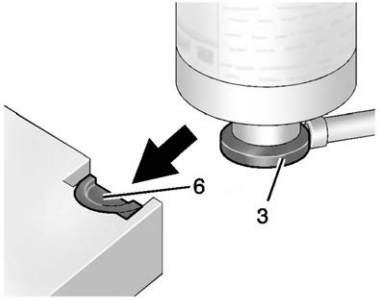

5. Slide the base of the tire sealant canister (3) into the slot on the top of the compressor (6) to hold it upright.

   Make sure the tire valve stem is positioned close to the ground so the hose will reach it.

6. Remove the valve stem cap from the flat tire by turning it counterclockwise.

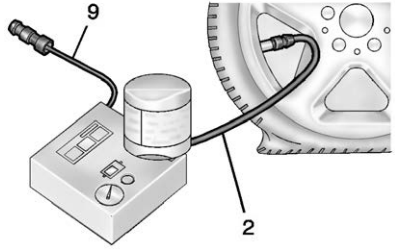

7. Attach the sealant/air hose (2) to the tire valve stem by turning it clockwise until tight.

8. Plug the power plug (9) into the accessory power outlet in the vehicle. Unplug all items from other accessory power outlets. See *Power Outlets* ⇨ *94*.

   If the vehicle has an accessory power outlet, do not use the cigarette lighter.

   If the vehicle only has a cigarette lighter, use the cigarette lighter.

   Do not pinch the power plug cord in the door or window.

9. Start the vehicle. The vehicle must be running while using the air compressor.

10. Press the on/off button (5) to turn the tire sealant and compressor kit on.

    The compressor will inject sealant and air into the tire.

    The pressure gauge (8) will initially show a high pressure while the compressor pushes the sealant into the tire. Once the sealant is completely dispersed into the tire, the pressure will quickly drop and start to rise again as the tire inflates with air only.

11. Inflate the tire to the recommended inflation pressure using the pressure gauge (8). The recommended inflation pressure can be found on the Tire and Loading Information label. See *Tire Pressure* ⇨ *261*.

    The pressure gauge (8) may read higher than the actual tire pressure while the compressor

is on. Turn the compressor off to get an accurate pressure reading. The compressor may be turned on/off until the correct pressure is reached.

Caution

If the recommended pressure cannot be reached after approximately 25 minutes, the vehicle should not be driven farther. The tire is too severely damaged and the tire sealant and compressor kit cannot inflate the tire. Remove the power plug from the accessory power outlet and unscrew the inflating hose from the tire valve. See *Roadside Assistance Program* ⇨ *322*.

12. Press the on/off button (5) to turn the tire sealant and compressor kit off.

    The tire is not sealed and will continue to leak air until the vehicle is driven and the sealant is distributed in the tire. Therefore, Steps 13–21 must be done immediately after Step 12.

    Be careful while handling the tire sealant and compressor kit as it could be warm after usage.

13. Unplug the power plug (9) from the accessory power outlet in the vehicle.
14. Turn the sealant/air hose (2) counterclockwise to remove it from the tire valve stem.
15. Replace the tire valve stem cap.
16. Remove the tire sealant canister (4) from the slot on top of the compressor (6).
17. Turn the air only hose (10) counterclockwise to remove it from the tire sealant canister inlet valve (1).
18. Turn the sealant/air hose (2) clockwise onto the sealant canister inlet valve (1) to prevent sealant leakage.
19. Return the air only hose (10) and power plug (9) back to their original storage location.

20. If the flat tire was able to inflate to the recommended inflation pressure, remove the maximum speed label from the sealant canister and place it in a highly visible location.

    Do not exceed the speed on this label until the damaged tire is repaired or replaced.

21. Return the equipment to its original storage location in the vehicle.
22. Immediately drive the vehicle 8 km (5 mi) to distribute the sealant in the tire.
23. Stop at a safe location and check the tire pressure. Refer to Steps 1–10 under “Using the

Tire Sealant and Compressor Kit without Sealant to Inflate a Tire (Not Punctured).”

If the tire pressure has fallen more than 68 kPa (10 psi) below the recommended inflation pressure, stop driving the vehicle. The tire is too severely damaged and the tire sealant cannot seal the tire. See *Roadside Assistance Program* ⇨ *322*.

If the tire pressure has not dropped more than 68 kPa (10 psi) from the recommended inflation pressure, inflate the tire to the recommended inflation pressure.

24. Wipe off any sealant from the wheel, tire, or vehicle.
25. Dispose of the used tire sealant canister (4) at a local dealer or in accordance with local state codes and practices.
26. Replace it with a new canister available from your dealer.
27. After temporarily sealing a tire using the tire sealant and compressor kit, take the vehicle to an authorized dealer within 161 km (100 mi) of driving to have the tire repaired or replaced.

Using the Tire Sealant and Compressor Kit without Sealant to Inflate a Tire (Not Punctured)

The kit includes:

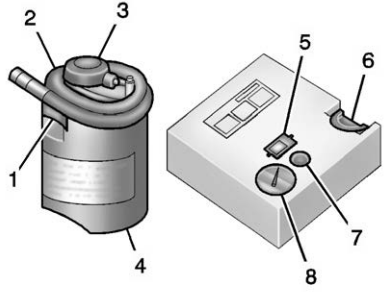

1. Sealant Canister Inlet Valve
2. Sealant/Air Hose
3. Base of Sealant Canister
4. Tire Sealant Canister
5. On/Off Button
6. Slot on Top of Compressor
7. Pressure Deflation Button
8. Pressure Gauge

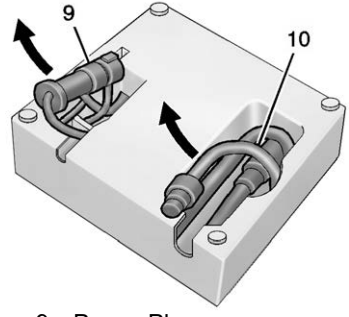

9. Power Plug
10. Air Only Hose

If a tire goes flat, avoid further tire and wheel damage by driving slowly to a level place. Turn on the hazard warning flashers. See *Hazard Warning Flashers* ⇨ *122*.

See *If a Tire Goes Flat* ⇨ *273* for other important safety warnings.

1. Remove the compressor from its storage location. See *Storing the Tire Sealant and Compressor Kit* ⇨ *281*.
2. Remove the air only hose (10) and the power plug (9) from the bottom of the compressor.
3. Place the compressor on the ground near the flat tire.

   Make sure the tire valve stem is positioned close to the ground so the hose will reach it.
4. Remove the valve stem cap from the flat tire by turning it counterclockwise.
5. Attach the air only hose (10) to the tire valve stem by turning it clockwise until tight.
6. Plug the power plug (9) into the accessory power outlet in the vehicle. Unplug all items from other accessory power outlets. See *Power Outlets* ⇨ *94*.

   If the vehicle has an accessory power outlet, do not use the cigarette lighter.

   If the vehicle only has a cigarette lighter, use the cigarette lighter.

   Do not pinch the power plug cord in the door or window.
7. Start the vehicle. The vehicle must be running while using the air compressor.
8. Press the on/off button (5) to turn the tire sealant and compressor kit on.

   The compressor will inflate the tire with air only.
9. Inflate the tire to the recommended inflation pressure using the pressure gauge (8). The recommended inflation pressure can be found on the Tire and Loading Information label. See *Tire Pressure* ⇨ *261*.

   The pressure gauge (8) may read higher than the actual tire pressure while the compressor is on. Turn the compressor off to get an accurate pressure reading. The compressor may be turned on/off until the correct pressure is reached.

Caution

If the recommended pressure cannot be reached after approximately 25 minutes, the vehicle should not be driven farther. The tire is too severely damaged and the tire sealant and compressor kit cannot inflate the tire. Remove the power plug from the accessory power outlet and unscrew the inflating hose from the tire valve. See *Roadside Assistance Program* ⇨ *322*.

10. Press the on/off button (5) to turn the tire sealant and compressor kit off.

    Be careful while handling the compressor as it could be warm after usage.
11. Unplug the power plug (9) from the accessory power outlet in the vehicle.

12. Turn the air only hose (10) counterclockwise to remove it from the tire valve stem.
13. Replace the tire valve stem cap.
14. Return the air only hose (10) and power plug (9) back to their original storage location.
15. Return the equipment to its original storage location in the vehicle.

The tire sealant and compressor kit has accessory adapters located in a compartment on the bottom of its housing that can be used to inflate air mattresses, balls, etc.

Storing the Tire Sealant and Compressor Kit

The tire sealant and compressor kit is located in the rear storage area.

1. Lift the trim cover.

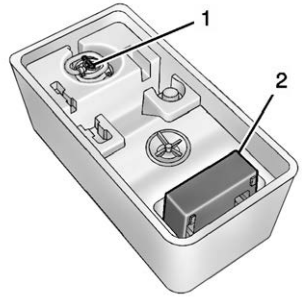

2. Remove the tire sealant canister (1) and the compressor (2).

To store the tire sealant canister and compressor:

1. Attach the sealant/air hose to the sealant canister inlet valve.
2. Return the sealant canister and the compressor to their original storage location.

Tire Changing

Removing the Spare Tire and Tools

The compact spare tire and tools are located in the storage compartment in the rear of the vehicle. The jack and tools are stored below the spare tire.

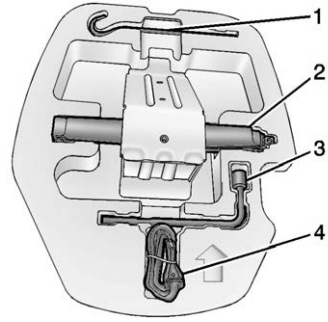

1. Extension
2. Jack
3. Wheel Wrench
4. Strap

To access the spare tire and tools:

1. Open the trunk or liftgate. See *Trunk (Sedan)* ⇨ *33* or *Liftgate (Hatchback)* ⇨ *35*.
2. Lift the trim cover.

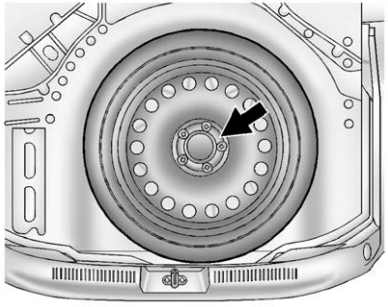

3. Turn the retainer counterclockwise and remove it from the compact spare.
4. Remove the compact spare tire. See *Compact Spare Tire* ⇨ *286* for more information.
5. Remove the jack and tools from their container and place them near the tire being changed.

Removing the Flat Tire and Installing the Spare Tire

1. Do a safety check before proceeding. See *If a Tire Goes Flat* ⇨ *273*.

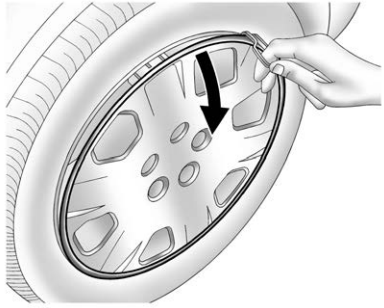

2. Remove the wheel cover, if the vehicle has one, to reach the wheel bolts.

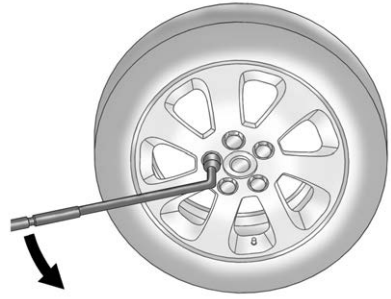

3. Turn the wheel nuts counterclockwise to loosen them. Do not remove them yet.

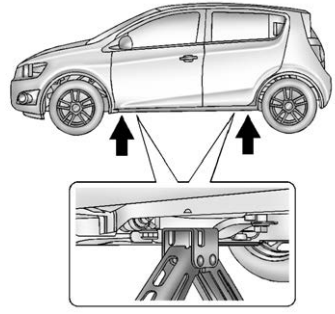

4. Place the jack at the position marked with a half circle.

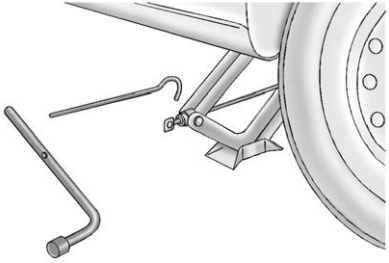

5. Insert the jack handle into the jack and the wheel wrench onto the end of the jack handle.
6. Turn the wheel wrench clockwise until the lift head is firmly contacting the proper lifting point nearest the flat tire.

⚠ Warning

Getting under a vehicle when it is lifted on a jack is dangerous. If the vehicle slips off the jack,

(Continued)

Warning (Continued)

you could be badly injured or killed. Never get under a vehicle when it is supported only by a jack.

⚠ Warning

Raising the vehicle with the jack improperly positioned can damage the vehicle and even make the vehicle fall. To help avoid personal injury and vehicle damage, be sure to fit the jack lift head into the proper location before raising the vehicle.

7. Turn the wheel wrench clockwise to raise the vehicle. Raise the vehicle far enough off the ground so there is enough room for the compact spare tire to fit underneath the wheel well.
8. Turn the wheel nuts counterclockwise to remove them.
9. Remove the flat tire.

⚠ Warning

Rust or dirt on a wheel, or on the parts to which it is fastened, can make wheel nuts become loose after time. The wheel could come off and cause an accident. When changing a wheel, remove any rust or dirt from places where the wheel attaches to the vehicle. In an emergency, a cloth or a paper towel can be used; however, use a scraper or wire brush later to remove all rust or dirt.

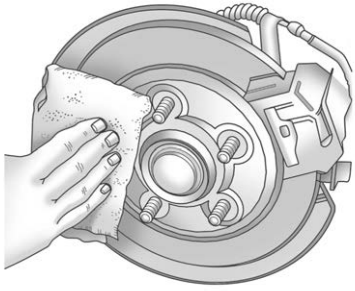

10. Remove any rust or dirt from the wheel bolts, mounting surfaces, and spare wheel.
11. Place the compact spare tire on the wheel-mounting surface.

⚠ Warning

Never use oil or grease on bolts or nuts because the nuts might come loose. The vehicle's wheel could fall off, causing a crash.

12. Reinstall the wheel nuts. Tighten each nut by hand until the wheel is held against the hub.
13. Lower the vehicle by turning the wheel wrench counterclockwise. Lower the jack completely.

⚠ Warning

Wheel nuts that are improperly or incorrectly tightened can cause the wheels to become loose or come off. The wheel nuts should be tightened with a torque wrench to the proper torque specification after replacing. Follow the torque specification supplied by the aftermarket manufacturer when using accessory locking wheel nuts. See *Capacities and Specifications* ⇨ *315* for original equipment wheel nut torque specifications.

Caution

Improperly tightened wheel nuts can lead to brake pulsation and rotor damage. To avoid expensive brake repairs, evenly tighten the wheel nuts in the proper sequence and to the proper torque specification. See *Capacities and Specifications* ⇨ *315* for the wheel nut torque specification.

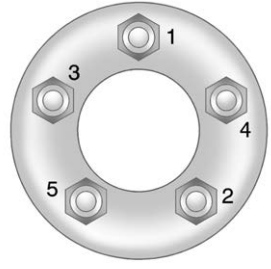

14. Tighten the wheel nuts firmly in a crisscross sequence, as shown.

Caution

Wheel covers will not fit on the vehicle's compact spare. If you try to put a wheel cover on the compact spare, the cover or the spare could be damaged.

Storing a Flat or Spare Tire and Tools

⚠ Warning

Storing a jack, a tire, or other equipment in the passenger compartment of the vehicle could cause injury. In a sudden stop or collision, loose equipment could strike someone. Store all these in the proper place.

Storing the Flat Tire and Tools

1. Return the jack and tools to their original storage location.
2. Replace the trim cover.
3. Place the flat tire, lying flat, in the rear storage compartment.

   If the vehicle is a sedan the flat tire should be against the back of the rear seats.

   If the vehicle is a hatchback the flat tire should be against the back of the trunk.

4. Attach one end of the strap to a cargo tie-down in the rear of the vehicle.

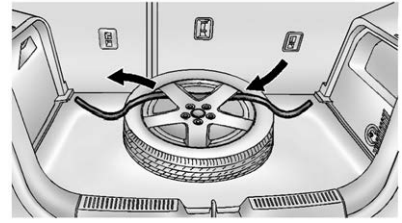

Sedan

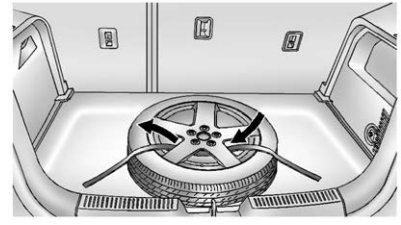

Hatchback

5. Route the strap through the wheel, as shown.
6. Attach the other end of the strap to the other cargo tie-down in the rear of the vehicle.
7. Tighten the strap.

Storing the Compact Spare Tire and Tools

Reverse the instructions for removing the spare tire and tools to store the compact spare tire.

The compact spare tire is for temporary use only. Replace the compact spare tire with a full-size tire as soon as you can. See *Compact Spare Tire* ⇨ *286*.

Compact Spare Tire

⚠ Warning

Driving with more than one compact spare tire at a time could result in loss of braking and handling. This could lead to a crash and you or others could be injured. Use only one compact spare tire at a time.

If this vehicle has a compact spare tire, it was fully inflated when new; however, it can lose air over time. Check the inflation pressure regularly. It should be 420 kPa (60 psi).

Stop as soon as possible and check that the spare tire is correctly inflated after being installed on the vehicle. The compact spare tire is designed for temporary use only. The vehicle will perform differently with the spare tire installed and it is recommended that the vehicle speed be limited to 80 km/h (50 mph). To conserve the tread of the spare tire, have the standard tire repaired or replaced as soon as convenient and return the spare tire to the storage area.

When using a compact spare tire, the ABS and Traction Control systems may engage until the spare tire is recognized by the vehicle, especially on slippery roads. Adjust driving to reduce possible wheel slip.

Caution

When the compact spare is installed, do not take the vehicle through an automatic car wash with guide rails. The compact

(Continued)

Caution (Continued)

spare can get caught on the rails which can damage the tire, wheel, and other parts of the vehicle.

Do not use the compact spare on other vehicles.

Do not mix the compact spare tire or wheel with other wheels or tires. They will not fit. Keep the spare tire and its wheel together.

Caution

Tire chains will not fit the compact spare. Using them can damage the vehicle and the chains. Do not use tire chains on the compact spare.

Jump Starting

Jump Starting - North America

For more information about the vehicle battery, see *Battery - North America* ⇨ *240*.

If the battery has run down, try to use another vehicle and some jumper cables to start your vehicle. Be sure to use the following steps to do it safely.

⚠ Warning

WARNING: Battery posts, terminals, and related accessories contain lead and lead compounds, chemicals known to the State of California to cause cancer and birth defects or other reproductive harm. Batteries also contain other chemicals known to the State of California to cause cancer. **WASH HANDS AFTER HANDLING.** See *California Proposition 65 Warning* ⇨ *220*.

⚠ Warning

Batteries can hurt you. They can be dangerous because:

- They contain acid that can burn you.
- They contain gas that can explode or ignite.
- They contain enough electricity to burn you.

If you do not follow these steps exactly, some or all of these things can hurt you.

Caution

Ignoring these steps could result in costly damage to the vehicle that would not be covered by the vehicle warranty. Trying to start the vehicle by pushing or pulling it will not work, and it could damage the vehicle.

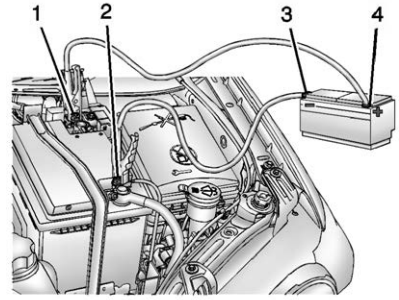

1. Discharged Battery Positive Post
2. Discharged Battery Negative Post
3. Good Battery Negative Post
4. Good Battery Positive Post

The jump start negative post and positive post are on the discharged battery on the driver side of the vehicle.

The jump start positive post and negative post are on the battery of the vehicle providing the jump start.

The positive jump start connection for the discharged battery is under a trim cover. Open the cover to expose the terminal.

1. Check the other vehicle. It must have a 12-volt battery with a negative ground system.

Caution

If the other vehicle does not have a 12-volt system with a negative ground, both vehicles can be damaged. Only use a vehicle that has a 12-volt system with a negative ground for jump starting.

2. Position the two vehicles so that they are not touching.
3. Set the parking brake firmly and put the shift lever in P (Park) with an automatic transmission, or Neutral with a manual transmission. See *Shifting Into Park (Automatic Transmission)* ⇨ *195* with an automatic transmission, or *Parking* ⇨ *196* with a manual transmission.

Caution

If any accessories are left on or plugged in during the jump starting procedure, they could be damaged. The repairs would not be covered by the vehicle warranty. Whenever possible, turn off or unplug all accessories on either vehicle when jump starting.

4. Turn the ignition to LOCK/OFF. Turn off all lights and accessories in both vehicles, except the hazard warning flashers if needed.

⚠ Warning

An electric fan can start up even when the engine is not running and can injure you. Keep hands, clothing, and tools away from any underhood electric fan.

⚠ Warning

Using a match near a battery can cause battery gas to explode. People have been hurt doing this, and some have been blinded. Use a flashlight if you need more light.

Battery fluid contains acid that can burn you. Do not get it on you. If you accidentally get it in your eyes or on your skin, flush the place with water and get medical help immediately.

⚠ Warning

Fans or other moving engine parts can injure you badly. Keep your hands away from moving parts once the engine is running.

5. Connect one end of the red positive (+) cable to the positive (+) terminal on the discharged battery.

6. Connect the other end of the red positive (+) cable to the positive (+) terminal of the good battery.
7. Connect one end of the black negative (–) cable to the negative (–) terminal of the good battery.
8. Connect the other end of the black negative (–) cable to the negative (–) post for the discharged battery.
9. Start the engine in the vehicle with the good battery and run the engine at idle speed for at least four minutes.
10. Try to start the vehicle that had the dead battery. If it will not start after a few tries, it probably needs service.

Caution

If the jumper cables are connected or removed in the wrong order, electrical shorting may occur and damage the vehicle. The repairs would not be covered by the vehicle warranty. Always connect and remove the jumper cables in the correct order, making sure that the cables do not touch each other or other metal.

Jumper Cable Removal

Reverse the sequence exactly when removing the jumper cables.

After starting the disabled vehicle and removing the jumper cables, allow it to idle for several minutes.

Towing the Vehicle

Caution

Incorrectly towing a disabled vehicle may cause damage. The damage would not be covered by the vehicle warranty.

Do not lash or hook to suspension components. Use the proper straps around the tires to secure the vehicle.

Have the vehicle towed on a flatbed car carrier. A wheel lift tow truck could damage the vehicle.

Consult your dealer or a professional towing service if the disabled vehicle must be towed.

Recreational Vehicle Towing

Recreational vehicle towing means towing the vehicle behind another vehicle, such as a motor home. The two most common types of recreational vehicle towing are known as dinghy towing and dolly towing. Dinghy towing is towing the vehicle with all four wheels on the ground. Dolly towing is towing the vehicle with two wheels on the ground and two wheels up on a device known as a dolly.

Here are some important things to consider before recreational vehicle towing:

- What is the towing capacity of the towing vehicle? Be sure to read the tow vehicle manufacturer's recommendations.
- What is the distance that will be traveled? Some vehicles have restrictions on how far and how long they can tow.
- Is the proper towing equipment going to be used? See your dealer or trailering professional for additional advice and equipment recommendations.
- Is the vehicle ready to be towed? Just as preparing the vehicle for a long trip, make sure the vehicle is prepared to be towed.

Caution

Use of a shield mounted in front of the vehicle grille could restrict airflow and cause damage to the transmission. The repairs would not be covered by the vehicle warranty. If using a shield, only use one that attaches to the towing vehicle.

Dinghy Towing RS Model with Automatic Transmission

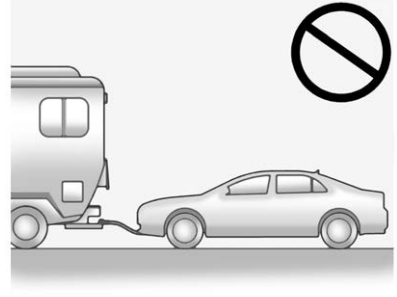

Caution

If the vehicle is towed with all four wheels on the ground, the drivetrain components could be damaged. The repairs would not be covered by the vehicle warranty. Do not tow the vehicle with all four wheels on the ground.

The vehicle was not designed to be towed with all four wheels on the ground. If the vehicle must be towed, a dolly should be used. See the information on dolly towing later in this section.

Dinghy Towing All except RS Model with Automatic Transmission

When dinghy towing a vehicle with an automatic transmission, the vehicle should be run at the beginning of each day and at each RV fuel stop for about five minutes. This will ensure proper lubrication of transmission components.

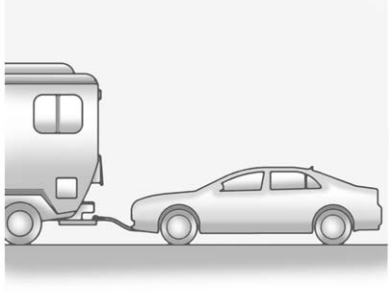

To dinghy tow the vehicle from the front with all four wheels on the ground:

1. Position the vehicle to tow and then secure it to the towing vehicle.
2. Shift the automatic transmission to P (Park) or a manual transmission into 1 (First) gear and turn the ignition to LOCK/OFF.
3. Set the parking brake.
4. To prevent the battery from draining while the vehicle is being towed, remove the DLIS fuse from the instrument panel fuse block. See *Instrument Panel Fuse Block* ⇨ *252*.
5. Turn the ignition to ACC/ACCESSORY.
6. Shift an automatic transmission to N (Neutral) or a manual transmission to Neutral.
7. Release the parking brake.

Reinstall the DLIS fuse once the destination has been reached.

Caution

If 105 km/h (65 mph) is exceeded while towing the vehicle, it could be damaged. Never exceed 105 km/h (65 mph) while towing the vehicle.

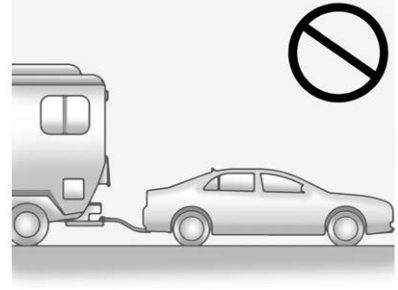

Caution

Towing the vehicle from the rear could damage it. Also, repairs would not be covered by the vehicle warranty. Never have the vehicle towed from the rear.

Dolly Towing from the Front

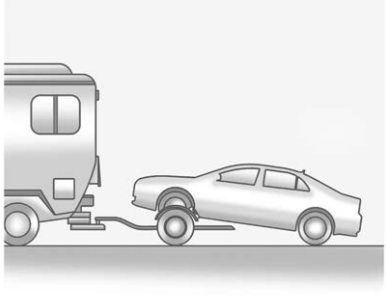

The vehicle can be towed from the front using a dolly. To tow the vehicle using a dolly:

1. Attach the dolly to the tow vehicle following the dolly manufacturer's instructions.
2. Drive the front wheels onto the dolly.
3. Put an automatic transmission in P (Park) or a manual transmission into 1 (First) gear.
4. Set the parking brake and remove the key.
5. Clamp the steering wheel in a straight-ahead position with a clamping device designed for towing.
6. Secure the vehicle to the dolly.
7. Release the parking brake.

Dolly Towing from the Rear

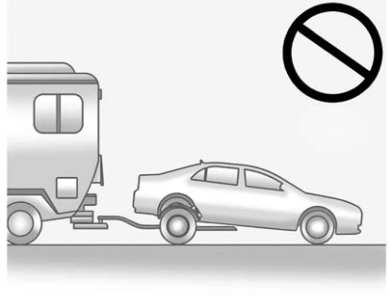

Caution

Towing the vehicle from the rear could damage it. Also, repairs would not be covered by the vehicle warranty. Never have the vehicle towed from the rear.

Appearance Care

Exterior Care

Locks

Locks are lubricated at the factory. Use a de-icing agent only when absolutely necessary, and have the locks greased after using. See *Recommended Fluids and Lubricants* ⇨ *311*.

Washing the Vehicle

To preserve the vehicle's finish, wash it often and out of direct sunlight.

Caution

Do not use petroleum-based, acidic, or abrasive cleaning agents as they can damage the vehicle's paint, metal, or plastic parts. If damage occurs, it would not be covered by the vehicle warranty. Approved cleaning products can be obtained from

(Continued)

Caution (Continued)

your dealer. Follow all manufacturer directions regarding correct product usage, necessary safety precautions, and appropriate disposal of any vehicle care product.

Caution

Avoid using high-pressure washes closer than 30 cm (12 in) to the surface of the vehicle. Use of power washers exceeding 8,274 kPa (1,200 psi) can result in damage or removal of paint and decals.

The symbol is on any underhood compartment electrical center that should not be power washed. This could cause damage that would not be covered by the vehicle warranty.

If using an automatic car wash, follow the car wash instructions. The windshield wiper and rear window wiper, if equipped, must be off. Remove any accessories that may be damaged or interfere with the car wash equipment.

Rinse the vehicle well, before washing and after, to remove all cleaning agents completely. If they are allowed to dry on the surface, they could stain.

Dry the finish with a soft, clean chamois or an all-cotton towel to avoid surface scratches and water spotting.

Finish Care

Application of aftermarket clearcoat sealant/wax materials is not recommended. If painted surfaces are damaged, see your dealer to have the damage assessed and repaired. Foreign materials such as calcium chloride and other salts, ice melting agents, road oil and tar, tree sap, bird droppings, chemicals from industrial chimneys, etc., can damage the vehicle's finish if they remain on painted surfaces. Wash the vehicle as soon as possible. If necessary, use non-abrasive cleaners that are marked safe for painted surfaces to remove foreign matter.

Occasional hand waxing or mild polishing should be done to remove residue from the paint finish. See your dealer for approved cleaning products.

Do not apply waxes or polishes to uncoated plastic, vinyl, rubber, decals, simulated wood, or flat paint as damage can occur.

Caution

Machine compounding or aggressive polishing on a basecoat/clearcoat paint finish may damage it. Use only non-abrasive waxes and polishes that are made for a basecoat/clearcoat paint finish on the vehicle.

To keep the paint finish looking new, keep the vehicle garaged or covered whenever possible.

Protecting Exterior Bright Metal Moldings

Caution
Failure to clean and protect the bright metal moldings can result in a hazy white finish or pitting. This damage would not be covered by the vehicle warranty.

The bright metal moldings on the vehicle are aluminum, chrome or stainless steel. To prevent damage always follow these cleaning instructions:

- Be sure the molding is cool to the touch before applying any cleaning solution.
- Use only approved cleaning solutions for aluminum, chrome or stainless steel. Some cleaners are highly acidic or contain alkaline substances and can damage the moldings.
- Always dilute a concentrated cleaner according to the manufacturer’s instructions.
- Do not use cleaners that are not intended for automotive use.
- Use a nonabrasive wax on the vehicle after washing to protect and extend the molding finish.

Cleaning Exterior Lamps/ Lenses, Emblems, Decals, and Stripes

Use only lukewarm or cold water, a soft cloth, and a car washing soap to clean exterior lamps, lenses, emblems, decals, and stripes. Follow instructions under "Washing the Vehicle" previously in this section.

Lamp covers are made of plastic, and some have a UV protective coating. Do not clean or wipe them when dry.

Do not use any of the following on lamp covers:

- Abrasive or caustic agents.
- Washer fluids and other cleaning agents in higher concentrations than suggested by the manufacturer.
- Solvents, alcohols, fuels, or other harsh cleaners.
- Ice scrapers or other hard items.
- Aftermarket appearance caps or covers while the lamps are illuminated, due to excessive heat generated.

Caution
Failure to clean lamps properly can cause damage to the lamp cover that would not be covered by the vehicle warranty.

Caution
Using wax on low gloss black finish stripes can increase the gloss level and create a non-uniform finish. Clean low gloss stripes with soap and water only.

Air Intakes

Clear debris from the air intakes, between the hood and windshield when washing the vehicle.

Windshield and Wiper Blades

Clean the outside of the windshield with glass cleaner.

Clean rubber blades using a lint-free cloth or paper towel soaked with windshield washer fluid or a mild detergent. Wash the windshield thoroughly when cleaning the blades. Bugs, road grime, sap, and a buildup of vehicle wash/wax treatments may cause wiper streaking.

Replace the wiper blades if they are worn or damaged. Damage can be caused by extreme dusty conditions, sand, salt, heat, sun, snow, and ice.

Weatherstrips

Apply Dielectric silicone grease on weatherstrips to make them last longer, seal better, and not stick or squeak. Lubricate weatherstrips at least once a year. Hot, dry climates may require more frequent application. Black marks from rubber material on painted surfaces can be removed by rubbing with a clean cloth. See *Recommended Fluids and Lubricants* ⇨ *311*.

Tires

Use a stiff brush with tire cleaner to clean the tires.

Caution

Using petroleum-based tire dressing products on the vehicle may damage the paint finish and/or tires. When applying a tire dressing, always wipe off any overspray from all painted surfaces on the vehicle.

Wheels and Trim — Aluminum or Chrome

Use a soft, clean cloth with mild soap and water to clean the wheels. After rinsing thoroughly with clean water, dry with a soft, clean towel. A wax may then be applied.

Caution

Chrome wheels and other chrome trim may be damaged if the vehicle is not washed after driving on roads that have been sprayed with magnesium, calcium, or sodium chloride. These chlorides are used on roads for conditions such as ice and dust. Always wash the chrome with soap and water after exposure.

Caution

To avoid surface damage, do not use strong soaps, chemicals, abrasive polishes, cleaners, brushes, or cleaners that contain acid on aluminum or chrome-plated wheels. Use only approved cleaners. Also, never drive a vehicle with aluminum or chrome-plated wheels through an automatic car wash that uses silicone carbide tire cleaning

(Continued)

Caution (Continued)

brushes. Damage could occur and the repairs would not be covered by the vehicle warranty.

Brake System

Visually inspect brake lines and hoses for proper hook-up, binding, leaks, cracks, chafing, etc. Inspect disc brake pads for wear and rotors for surface condition. Inspect drum brake linings/shoes for wear or cracks. Inspect other brake parts, including drums, wheel cylinders, calipers, parking brake, master cylinder, brake fluid reservoir, vacuum pipes, electric vacuum pump including bracket, and vent hose, if equipped.

Steering, Suspension, and Chassis Components

Visually inspect steering, suspension, and chassis components for damaged, loose, or missing parts or signs of wear at least once a year.

Inspect power steering for proper hook-up, binding, leaks, cracks, chafing, etc.

Visually check constant velocity joint boots and axle seals for leaks.

Body Component Lubrication

Lubricate all key lock cylinders, hood hinges, liftgate hinges, and the steel fuel door hinges, unless the components are plastic. Applying silicone grease on weatherstrips with a clean cloth will make them last longer, seal better, and not stick or squeak.

Underbody Maintenance

At least twice a year, spring and fall, use plain water to flush any corrosive materials from the underbody. Take care to thoroughly clean any areas where mud and other debris can collect.

Do not directly power wash the transfer case and/or front/rear axle output seals. High pressure water can overcome the seals and contaminate the fluid. Contaminated fluid will decrease the life of the transfer case and/or axles and should be replaced.

Sheet Metal Damage

If the vehicle is damaged and requires sheet metal repair or replacement, make sure the body repair shop applies anti-corrosion material to parts repaired or replaced to restore corrosion protection.

Original manufacturer replacement parts will provide the corrosion protection while maintaining the vehicle warranty.

Finish Damage

Quickly repair minor chips and scratches with touch-up materials available from your dealer to avoid corrosion. Larger areas of finish damage can be corrected in your dealer's body and paint shop.

Chemical Paint Spotting

Airborne pollutants can fall upon and attack painted vehicle surfaces causing blotchy, ring-shaped discolorations, and small, irregular

dark spots etched into the paint surface. See “Finish Care” previously in this section.

Interior Care

To prevent dirt particle abrasions, regularly clean the vehicle's interior. Immediately remove any soils. Newspapers or dark garments can transfer color to the vehicle’s interior.

Use a soft bristle brush to remove dust from knobs and crevices on the instrument cluster. Using a mild soap solution, immediately remove hand lotions, sunscreen, and insect repellent from all interior surfaces or permanent damage may result.

Use cleaners specifically designed for the surfaces being cleaned to prevent permanent damage. Apply all cleaners directly to the cleaning cloth. Do not spray cleaners on any switches or controls. Remove cleaners quickly.

Before using cleaners, read and follow all safety instructions on the label. While cleaning the interior, open the doors and windows to get proper ventilation.

To prevent damage, do not clean the interior using the following cleaners or techniques:

- Never use a razor or any other sharp object to remove soil from any interior surface.
- Never use a brush with stiff bristles.
- Never rub any surface aggressively or with too much pressure.
- Do not use laundry detergents or dishwashing soaps with degreasers. For liquid cleaners, use approximately 20 drops per 3.8 L (1 gal) of water.
  A concentrated soap solution will create streaks and attract dirt. Do not use solutions that contain strong or caustic soap.
- Do not heavily saturate the upholstery when cleaning.
- Do not use solvents or cleaners containing solvents.

Interior Glass

To clean, use a terry cloth fabric dampened with water. Wipe droplets left behind with a clean dry cloth. If necessary, use a commercial glass cleaner after cleaning with plain water.

Caution
To prevent scratching, never use abrasive cleaners on automotive glass. Abrasive cleaners or aggressive cleaning may damage the rear window defogger.

Cleaning the windshield with water during the first three to six months of ownership will reduce tendency to fog.

Speaker Covers

Vacuum around a speaker cover gently, so that the speaker will not be damaged. Clean spots with water and mild soap.

Coated Moldings

Coated moldings should be cleaned.

- When lightly soiled, wipe with a sponge or soft, lint-free cloth dampened with water.
- When heavily soiled, use warm soapy water.

Fabric/Carpet/Suede

Start by vacuuming the surface using a soft brush attachment. If a rotating vacuum brush attachment is being used, only use it on the floor carpet. Before cleaning, gently remove as much of the soil as possible:

- Gently blot liquids with a paper towel. Continue blotting until no more soil can be removed.
- For solid soils, remove as much as possible prior to vacuuming.

To clean:

1. Saturate a clean, lint-free colorfast cloth with water. Microfiber cloth is recommended to prevent lint transfer to the fabric or carpet.
2. Remove excess moisture by gently wringing until water does not drip from the cleaning cloth.
3. Start on the outside edge of the soil and gently rub toward the center. Fold the cleaning cloth to a clean area frequently to prevent forcing the soil in to the fabric.
4. Continue gently rubbing the soiled area until there is no longer any color transfer from the soil to the cleaning cloth.
5. If the soil is not completely removed, use a mild soap solution followed only by plain water.

If the soil is not completely removed, it may be necessary to use a commercial upholstery cleaner or spot lifter. Test a small hidden area for colorfastness before using a commercial upholstery cleaner or spot lifter. If ring formation occurs, clean the entire fabric or carpet.

After cleaning, use a paper towel to blot excess moisture.

Cleaning High Gloss Surfaces and Vehicle Information and Radio Displays

Use a microfiber cloth on high gloss surfaces or vehicle displays. First, use a soft bristle brush to remove dirt that can scratch the surface. Then gently clean by rubbing with a microfiber cloth. Never use window cleaners or solvents. Periodically hand wash the microfiber cloth separately, using mild soap. Do not use bleach or fabric softener. Rinse thoroughly and air dry before next use.

Caution

Do not attach a device with a suction cup to the display. This may cause damage and would not be covered by the vehicle warranty.

Instrument Panel, Leather, Vinyl, Other Plastic Surfaces, Low Gloss Paint Surfaces, and Natural Open Pore Wood Surfaces

Use a soft microfiber cloth dampened with water to remove dust and loose dirt. For a more thorough cleaning, use a soft microfiber cloth dampened with a mild soap solution.

Caution

Soaking or saturating leather, especially perforated leather, as well as other interior surfaces, may cause permanent damage. Wipe excess moisture from these surfaces after cleaning and allow them to dry naturally. Never use heat, steam, or spot removers. Do not use cleaners that contain silicone or wax-based products. Cleaners containing these solvents can permanently change

(Continued)

Caution (Continued)

the appearance and feel of leather or soft trim, and are not recommended.

Do not use cleaners that increase gloss, especially on the instrument panel. Reflected glare can decrease visibility through the windshield under certain conditions.

Caution

Use of air fresheners may cause permanent damage to plastics and painted surfaces. If an air freshener comes in contact with any plastic or painted surface in the vehicle, blot immediately and clean with a soft cloth dampened with a mild soap solution. Damage caused by air fresheners would not be covered by the vehicle warranty.

Cargo Cover and Convenience Net

Wash with warm water and mild detergent. Do not use chlorine bleach. Rinse with cold water, and then dry completely.

Care of Safety Belts

Keep belts clean and dry.

⚠ Warning

Do not bleach or dye safety belts. It may severely weaken them. In a crash, they might not be able to provide adequate protection. Clean safety belts only with mild soap and lukewarm water.

Floor Mats

⚠ Warning

If a floor mat is the wrong size or is not properly installed, it can interfere with the pedals. Interference with the pedals can cause unintended acceleration and/or increased stopping distance which can cause a crash and injury. Make sure the floor mat does not interfere with the pedals.

Use the following guidelines for proper floor mat usage:

- The original equipment floor mats were designed for your vehicle. If the floor mats need replacing, it is recommended that GM certified floor mats be purchased. Non-GM floor mats may not fit properly and may interfere with the pedals. Always check that the floor mats do not interfere with the pedals.
- Do not use a floor mat if the vehicle is not equipped with a floor mat retainer on the driver side floor.
- Use the floor mat with the correct side up. Do not turn it over.
- Do not place anything on top of the driver side floor mat.
- Use only a single floor mat on the driver side.
- Do not place one floor mat on top of another.

Removing and Replacing the Floor Mats

Pull up on the rear of the floor mat to unlock each retainer and remove.

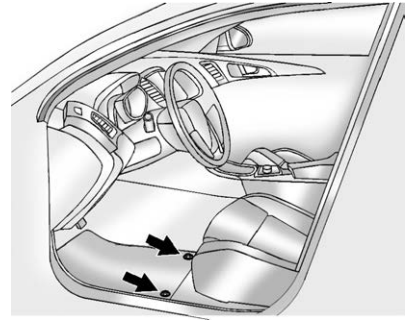

Reinstall by lining up the floor mat retainer openings over the carpet retainers and snap into position.

Make sure the floor mat is properly secured in place.

Verify the floor mat does not interfere with the pedals.

Service and Maintenance

General Information
General Information 301

Maintenance Schedule
Maintenance Schedule 302

Special Application Services
Special Application Services 307

Additional Maintenance and Care
Additional Maintenance and Care 308

Recommended Fluids
Recommended Fluids and Lubricants 311
Maintenance Replacement Parts 312

Maintenance Records
Maintenance Records 313

General Information

Your vehicle is an important investment. This section describes the required maintenance for the vehicle. Follow this schedule to help protect against major repair expenses resulting from neglect or inadequate maintenance. It may also help to maintain the value of the vehicle if it is sold. It is the responsibility of the owner to have all required maintenance performed.

Your dealer has trained technicians who can perform required maintenance using genuine replacement parts. They have up-to-date tools and equipment for fast and accurate diagnostics. Many dealers have extended evening and Saturday hours, courtesy transportation, and online scheduling to assist with service needs.

Your dealer recognizes the importance of providing competitively priced maintenance and repair services. With trained technicians, the dealer is the place for routine maintenance such as oil changes and tire rotations and additional maintenance items like tires, brakes, batteries, and wiper blades.

Caution

Damage caused by improper maintenance can lead to costly repairs and may not be covered by the vehicle warranty. Maintenance intervals, checks, inspections, recommended fluids, and lubricants are important to keep the vehicle in good working condition.

The Tire Rotation and Required Services are the responsibility of the vehicle owner. It is recommended to have your dealer perform these services every 12 000 km/7,500 mi. Proper vehicle maintenance helps to keep the vehicle in good working condition, improves fuel economy, and reduces vehicle emissions.

Because of the way people use vehicles, maintenance needs vary. There may need to be more

frequent checks and services. The Additional Required Services - Normal are for vehicles that:

- Carry passengers and cargo within recommended limits on the Tire and Loading Information label. See *Vehicle Load Limits* ⇨ *187*.
- Are driven on reasonable road surfaces within legal driving limits.
- Use the recommended fuel. See *Fuel* ⇨ *213*.

Refer to the information in the Maintenance Schedule Additional Required Services - Normal chart.

The Additional Required Services - Severe are for vehicles that are:

- Mainly driven in heavy city traffic in hot weather.
- Mainly driven in hilly or mountainous terrain.
- Frequently towing a trailer.
- Used for high speed or competitive driving.
- Used for taxi, police, or delivery service.

Refer to the information in the Maintenance Schedule Additional Required Services - Severe chart.

⚠ Warning

Performing maintenance work can be dangerous and can cause serious injury. Perform maintenance work only if the required information, proper tools, and equipment are available.
If they are not, see your dealer to have a trained technician do the work. See *Doing Your Own Service Work* ⇨ *221*.

Maintenance Schedule

Owner Checks and Services

At Each Fuel Stop

- Check the engine oil level. See *Engine Oil* ⇨ *226*.

Once a Month

- Check the tire inflation pressures. See *Tire Pressure* ⇨ *261*.
- Inspect the tires for wear. See *Tire Inspection* ⇨ *266*.
- Check the windshield washer fluid level. See *Washer Fluid* ⇨ *237*.

Engine Oil Change

When a % CHANGE message displays in the DIC, have the engine oil and filter changed within the next 1 000 km/600 mi. If driven under the best conditions, the engine oil life system may not indicate the need for vehicle service for up to a year. The engine oil and filter must be changed at least once a year and the oil life system must be reset. Your trained dealer technician can perform this work. If the engine oil life system is reset accidentally, service the vehicle within 5 000 km/ 3,000 mi since the last service. Reset the oil life system when the oil is changed. See *Engine Oil Life System* ⇨ *228*.

Tire Rotation and Required Services Every 12 000 km/ 7,500 mi

Rotate the tires, if recommended for the vehicle, and perform the following services. See *Tire Rotation* ⇨ *266*.

- Check engine oil level and oil life percentage. If needed, change engine oil and filter, and reset oil life system. See *Engine Oil* ⇨ *226* and *Engine Oil Life System* ⇨ *228*.
- Check engine coolant level. See *Engine Coolant* ⇨ *233*.
- Check windshield washer fluid level. See *Washer Fluid* ⇨ *237*.
- Visually inspect windshield wiper blades for wear, cracking, or contamination. See *Exterior Care* ⇨ *292*. Replace worn or damaged wiper blades. See *Wiper Blade Replacement* ⇨ *242*.
- Check tire inflation pressures. See *Tire Pressure* ⇨ *261*.
- Inspect tire wear. See *Tire Inspection* ⇨ *266*.
- Visually check for fluid leaks.
- Inspect engine air cleaner filter. See *Engine Air Cleaner/Filter* ⇨ *230*.
- Inspect brake system. See *Exterior Care* ⇨ *292*.
- Visually inspect steering, suspension, and chassis components for damaged, loose, or missing parts or signs of wear. See *Exterior Care* ⇨ *292*.
- Check restraint system components. See *Safety System Check* ⇨ *55*.
- Visually inspect fuel system for damage or leaks.
- Visually inspect exhaust system and nearby heat shields for loose or damaged parts.
- Lubricate body components. See *Exterior Care* ⇨ *292*.
- Check starter switch. See *Starter Switch Check* ⇨ *240*.

- Check automatic transmission shift lock control function. See *Automatic Transmission Shift Lock Control Function Check* ⇨ *241*.
- Check ignition transmission lock. See *Ignition Transmission Lock Check* ⇨ *241*.
- Check parking brake and automatic transmission park mechanism. See *Park Brake and P (Park) Mechanism Check* ⇨ *241*.
- Check accelerator pedal for damage, high effort, or binding. Replace if needed.
- Visually inspect gas strut for signs of wear, cracks, or other damage. Check the hold open ability of the strut. See your dealer if service is required.
- Check tire sealant expiration date, if equipped. See *Tire Sealant and Compressor Kit* ⇨ *275*.
- Inspect sunroof track and seal, if equipped. See *Sunroof* ⇨ *42*.

Maintenance Schedule Additional Required Services - Normal	12 000 km/7,500 mi	24 000 km/15,000 mi	36 000 km/22,500 mi	48 000 km/30,000 mi	60 000 km/37,500 mi	72 000 km/45,000 mi	84 000 km/52,500 mi	96 000 km/60,000 mi	108 000 km/67,500 mi	120 000 km/75,000 mi	132 000 km/82,500 mi	144 000 km/90,000 mi	156 000 km/97,500 mi	168 000 km/105,000 mi	180 000 km/112,500 mi	192 000 km/120,000 mi	204 000 km/127,500 mi	216 000 km/135,000 mi	228 000 km/142,500 mi	240 000 km/150,000 mi
Rotate tires and perform Required Services. Check engine oil level and oil life percentage. Change engine oil and filter, if needed.	✓	✓	✓	✓	✓	✓	✓	✓	✓	✓	✓	✓	✓	✓	✓	✓	✓	✓	✓	✓
Replace passenger compartment air filter. (1)			✓			✓			✓			✓			✓			✓		
Inspect evaporative control system. (2)						✓						✓						✓		
Replace engine air cleaner filter. (3)						✓						✓						✓		
Except 1.4L Engine: Replace spark plugs. Inspect spark plug wires.													✓							
1.4L Engine Only: Replace spark plugs. Inspect spark plug wires.								✓								✓				
Drain and fill engine cooling system. (4)																				✓
Visually inspect accessory drive belts. (5)																				✓
1.8L Engine Only: Replace timing belt, idler pulley, and timing belt tensioner. (6)													✓							
Replace brake/clutch fluid. (6)						✓						✓						✓		

Footnotes — Maintenance Schedule Additional Required Services - Normal

(1) Or every two years, whichever comes first. More frequent passenger compartment air filter replacement may be needed if driving in areas with heavy traffic, poor air quality, high dust levels, or environmental allergens. Passenger compartment air filter replacement may also be needed if there is reduced airflow, window fogging, or odors. Your GM dealer can help determine when to replace the filter.

(2) Check all fuel and vapor lines and hoses for proper hook-up, routing, and condition.

(3) Or every four years, whichever comes first. If driving in dusty conditions, inspect the filter at each oil change or more often as needed.

(4) Or every five years, whichever comes first. See *Cooling System* ⇨ *232*.

(5) Or every 10 years, whichever comes first. Inspect for fraying, excessive cracking, or damage; replace, if needed.

(6) Or every three years, whichever comes first.

Maintenance Schedule Additional Required Services - Severe	12 000 km/7,500 mi	24 000 km/15,000 mi	36 000 km/22,500 mi	48 000 km/30,000 mi	60 000 km/37,500 mi	72 000 km/45,000 mi	84 000 km/52,500 mi	96 000 km/60,000 mi	108 000 km/67,500 mi	120 000 km/75,000 mi	132 000 km/82,500 mi	144 000 km/90,000 mi	156 000 km/97,500 mi	168 000 km/105,000 mi	180 000 km/112,500 mi	192 000 km/120,000 mi	204 000 km/127,500 mi	216 000 km/135,000 mi	228 000 km/142,500 mi	240 000 km/150,000 mi
Rotate tires and perform Required Services. Check engine oil level and oil life percentage. Change engine oil and filter, if needed.	✓	✓	✓	✓	✓	✓	✓	✓	✓	✓	✓	✓	✓	✓	✓	✓	✓	✓	✓	✓
Replace passenger compartment air filter. (1)			✓			✓			✓			✓			✓			✓		
Inspect evaporative control system. (2)						✓						✓						✓		
Replace engine air cleaner filter. (3)						✓						✓						✓		
Change automatic transmission fluid.						✓						✓						✓		
Change manual transmission fluid.						✓						✓						✓		
Except 1.4L Engine: Replace spark plugs. Inspect spark plug wires.													✓							
1.4L Engine Only: Replace spark plugs. Inspect spark plug wires.								✓								✓				
Drain and fill engine cooling system. (4)																				✓
Visually inspect accessory drive belts. (5)																				✓
1.8L Engine Only: Replace timing belt, idler pulley, and timing belt tensioner. (6)													✓							
Replace brake/clutch fluid. (6)						✓						✓						✓		

Footnotes — Maintenance Schedule Additional Required Services - Severe

(1) Or every two years, whichever comes first. More frequent passenger compartment air filter replacement may be needed if driving in areas with heavy traffic, poor air quality, high dust levels, or environmental allergens. Passenger compartment air filter replacement may also be needed if there is reduced airflow, window fogging, or odors. Your GM dealer can help determine when to replace the filter.

(2) Check all fuel and vapor lines and hoses for proper hook-up, routing, and condition.

(3) Or every four years, whichever comes first. If driving in dusty conditions, inspect the filter at each oil change or more often as needed.

(4) Or every five years, whichever comes first. See *Cooling System* ⇨ *232*.

(5) Or every 10 years, whichever comes first. Inspect for fraying, excessive cracking, or damage; replace, if needed.

(6) Or every three years, whichever comes first.

Special Application Services

- Severe Commercial Use Vehicles Only: Lubricate chassis components every 5 000 km/ 3,000 mi.
- Have underbody flushing service performed. See "Underbody Maintenance" in *Exterior Care* ⇨ *292*.

Additional Maintenance and Care

Your vehicle is an important investment and caring for it properly may help to avoid future costly repairs. To maintain vehicle performance, additional maintenance services may be required.

It is recommended that your dealer perform these services — their trained dealer technicians know your vehicle best. Your dealer can also perform a thorough assessment with a multi-point inspection to recommend when your vehicle may need attention.

The following list is intended to explain the services and conditions to look for that may indicate services are required.

Battery

The battery supplies power to start the engine and operate any additional electrical accessories.

- To avoid break-down or failure to start the vehicle, maintain a battery with full cranking power.
- Trained dealer technicians have the diagnostic equipment to test the battery and ensure that the connections and cables are corrosion-free.

Belts

- Belts may need replacing if they squeak or show signs of cracking or splitting.
- Trained dealer technicians have access to tools and equipment to inspect the belts and recommend adjustment or replacement when necessary.
- A message may indicate when scheduled maintenance on the timing belt and other components is required.

Brakes

Brakes stop the vehicle and are crucial to safe driving.

- Signs of brake wear may include chirping, grinding, or squealing noises, or difficulty stopping.
- Trained dealer technicians have access to tools and equipment to inspect the brakes and recommend quality parts engineered for the vehicle.

Fluids

Proper fluid levels and approved fluids protect the vehicle's systems and components. See *Recommended Fluids and Lubricants* ⇨ *311* for GM approved fluids.

- Engine oil and windshield washer fluid levels should be checked at every fuel fill.
- Instrument cluster lights may come on to indicate that fluids may be low and need to be filled.

Hoses

Hoses transport fluids and should be regularly inspected to ensure that there are no cracks or leaks. With a multi-point inspection, your dealer can inspect the hoses and advise if replacement is needed.

Lamps

Properly working headlamps, taillamps, and brake lamps are important to see and be seen on the road.

- Signs that the headlamps need attention include dimming, failure to light, cracking, or damage. The brake lamps need to be checked periodically to ensure that they light when braking.
- With a multi-point inspection, your dealer can check the lamps and note any concerns.

Shocks and Struts

Shocks and struts help aid in control for a smoother ride.

- Signs of wear may include steering wheel vibration, bounce/sway while braking, longer stopping distance, or uneven tire wear.
- As part of the multi-point inspection, trained dealer technicians can visually inspect the shocks and struts for signs of leaking, blown seals, or damage, and can advise when service is needed.

Tires

Tires need to be properly inflated, rotated, and balanced. Maintaining the tires can save money and fuel, and can reduce the risk of tire failure.

- Signs that the tires need to be replaced include three or more visible treadwear indicators; cord or fabric showing through the rubber; cracks or cuts in the tread or sidewall; or a bulge or split in the tire.
- Trained dealer technicians can inspect and recommend the right tires. Your dealer can also provide tire/wheel balancing services to ensure smooth vehicle operation at all speeds. Your dealer sells and services name brand tires.

Vehicle Care

To help keep the vehicle looking like new, vehicle care products are available from your dealer. For information on how to clean and protect the vehicle's interior and exterior, see *Interior Care* ⇨ *297* and *Exterior Care* ⇨ *292*.

Wheel Alignment

Wheel alignment is critical for ensuring that the tires deliver optimal wear and performance.

- Signs that the alignment may need to be adjusted include pulling, improper vehicle handling, or unusual tire wear.
- Your dealer has the required equipment to ensure proper wheel alignment.

Windshield

For safety, appearance, and the best viewing, keep the windshield clean and clear.

- Signs of damage include scratches, cracks, and chips.
- Trained dealer technicians can inspect the windshield and recommend proper replacement if needed.

Wiper Blades

Wiper blades need to be cleaned and kept in good condition to provide a clear view.

- Signs of wear include streaking, skipping across the windshield, and worn or split rubber.
- Trained dealer technicians can check the wiper blades and replace them when needed.

Recommended Fluids

Recommended Fluids and Lubricants

Fluids and lubricants identified below by name, part number, or specification can be obtained from your dealer.

Usage	Fluid/Lubricant
Engine Oil	Use only engine oil meeting the dexos1™ specification of the proper SAE viscosity grade. Look for the dexos1 approved logo for GM approved engine oil. See *Engine Oil* ⇨ *226*.
Engine Coolant	50/50 mixture of clean, drinkable water and use only DEX-COOL® Coolant. See *Engine Coolant* ⇨ *233*.
Hydraulic Brake/Clutch System	DOT 3 Hydraulic Brake Fluid (GM Part No. 19299818, in Canada 19299819).
Windshield Washer	Automotive windshield washer fluid that meets regional freeze protection requirements.
Automatic Transmission	DEXRON®-VI Automatic Transmission Fluid.
Manual Transmission	Manual Transmission Fluid (GM Part No. 19259104, in Canada 19259105).
Chassis Lubrication and Manual Transmission Shift Linkage	Chassis Lubricant (GM Part No. 12377985, in Canada 88901242) or lubricant meeting requirements of NLGI #2, Category LB or GC-LB.
Hood Latch Assembly, Secondary Latch, Pivots, Spring Anchor, and Release Pawl	Lubriplate Lubricant Aerosol (GM Part No. 89021668, in Canada 89021674) or lubricant meeting requirements of NLGI #2, Category LB or GC-LB.
Key Lock Cylinders and Hood and Door Hinges	Multi-Purpose Lubricant, Superlube (GM Part No. 12346241, in Canada 10953474).

Usage	Fluid/Lubricant
Weatherstrip Conditioning	Weatherstrip Lubricant (GM Part No. 3634770, in Canada 10953518) or Dielectric Silicone Grease (GM Part No. 12345579, in Canada 10953481).

Maintenance Replacement Parts

Replacement parts identified below by name, part number, or specification can be obtained from your dealer.

Maintenance Replacement Parts

Part	GM Part Number	ACDelco Part Number
Engine Air Cleaner/Filter	96950990	—
Engine Oil Filter	55594651	PF2257G
Passenger Compartment Air Filter	13356914	CF184
Spark Plugs		
1.4L L4 LUV	55585517	41–121
1.8L L4 LUW	55585534	41–122
1.8L L4 LWE	55585534	41–122
Wiper Blades		
Driver Side – 65.0 cm (25.6 in)	95228809	—
Passenger Side – 38.0 cm (15.0 in)	95228810	—
Rear – 26.5 cm (10.4 in)	95016791	—

Maintenance Records

After the scheduled services are performed, record the date, odometer reading, who performed the service, and the type of services performed in the boxes provided. Retain all maintenance receipts.

Date	Odometer Reading	Serviced By	Services Performed

Technical Data

Vehicle Identification
Vehicle Identification Number (VIN) 314
Service Parts Identification Label 314

Vehicle Data
Capacities and Specifications 315
Engine Drive Belt Routing 317

Vehicle Identification

Vehicle Identification Number (VIN)

This legal identifier is in the front corner of the instrument panel, on the left side of the vehicle. It can be seen through the windshield from outside. The VIN also appears on the Vehicle Certification and Service Parts labels and certificates of title and registration.

Engine Identification

The eighth character in the VIN is the engine code. This code identifies the vehicle's engine, specifications, and replacement parts. See “Engine Specifications” under *Capacities and Specifications* ⇨ *315* for the vehicle's engine code.

Service Parts Identification Label

This label, in the spare tire well in the trunk, has the following information:

- Vehicle Identification Number (VIN).
- Model designation.
- Paint information.
- Production options and special equipment.

Do not remove this label from the vehicle.

Vehicle Data

Capacities and Specifications

The following approximate capacities are given in metric and English conversions. See *Recommended Fluids and Lubricants* ⇨ *311* for more information.

Application	Capacities	
	Metric	English
Air Conditioning Refrigerant	For the air conditioning system refrigerant type and charge amount, see the refrigerant label under the hood. See your dealer for more information.	
Cooling System		
1.4L L4	6.5 L	6.9 qt
1.8L L4	6.0 L	6.3 qt
Engine Oil with Filter		
1.4L L4	4.0 L	4.2 qt
1.8L L4	4.5 L	4.8 qt
Fuel Tank		
With RS Trim	46.0 L	12.2 gal
Excluding RS Trim	41.0 L	10.8 gal
Wheel Nut Torque	140 N•m	100 lb ft
All capacities are approximate. When adding, be sure to fill to the approximate level, as recommended in this manual. Recheck fluid level after filling.		

Engine Specifications

Engine	VIN Code	Transmission	Spark Plug Gap
1.4L L4 LUV	B	Automatic and Manual	0.60–0.70 mm (0.024–0.028 in)
1.8L L4 LUW	H	Automatic and Manual	0.60–0.70 mm (0.024–0.028 in)
1.8L L4 LWE	G	Automatic and Manual	0.60–0.70 mm (0.024–0.028 in)

Engine Drive Belt Routing

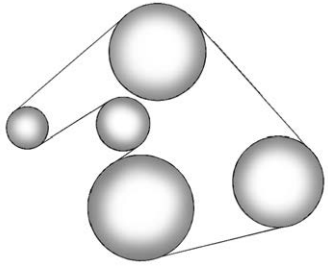

1.4L L4 Engine

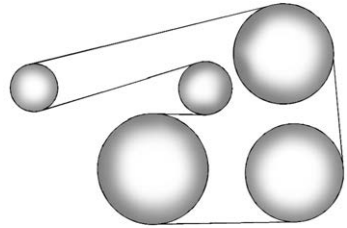

1.8L L4 Engine (with Air Conditioning)

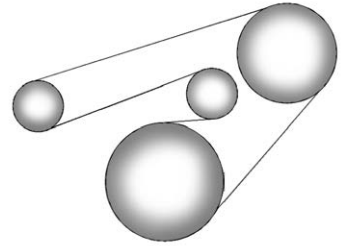

1.8L L4 Engine (without Air Conditioning)

Customer Information

Customer Information
Customer Satisfaction Procedure 318
Customer Assistance Offices 320
Customer Assistance for Text Telephone (TTY) Users 321
Online Owner Center 321
GM Mobility Reimbursement Program 322
Roadside Assistance Program 322
Scheduling Service Appointments 324
Courtesy Transportation Program 324
Collision Damage Repair 325
Service Publications Ordering Information 327
Radio Frequency Statement 328

Reporting Safety Defects
Reporting Safety Defects to the United States Government 329
Reporting Safety Defects to the Canadian Government 329
Reporting Safety Defects to General Motors 329

Vehicle Data Recording and Privacy
Vehicle Data Recording and Privacy 330
Event Data Recorders 330
OnStar® 331

Customer Information

Customer Satisfaction Procedure

Your satisfaction and goodwill are important to your dealer and to Chevrolet. Normally, any concerns with the sales transaction or the operation of the vehicle will be resolved by your dealer's sales or service departments. Sometimes, however, despite the best intentions of all concerned, misunderstandings can occur. If your concern has not been resolved to your satisfaction, the following steps should be taken:

STEP ONE : Discuss your concern with a member of dealership management. Normally, concerns can be quickly resolved at that level. If the matter has already been reviewed with the sales, service, or parts manager, contact the owner of your dealership or the general manager.

STEP TWO : If after contacting a member of dealership management, it appears your concern cannot be

resolved by your dealership without further help, in the U.S., call the Chevrolet Customer Assistance Center at 1-800-222-1020. In Canada, call General Motors of Canada Customer Care Centre at 1-800-263-3777 (English), or 1-800-263-7854 (French).

We encourage you to call the toll-free number in order to give your inquiry prompt attention. Have the following information available to give the Customer Assistance representative:

- Vehicle Identification Number (VIN). This is available from the vehicle registration or title, or the plate at the top left of the instrument panel and visible through the windshield.
- Dealership name and location.
- Vehicle delivery date and present mileage.

When contacting Chevrolet, remember that your concern will likely be resolved at a dealer's facility. That is why we suggest following Step One first.

STEP THREE — U.S. Owners : Both General Motors and your dealer are committed to making sure you are completely satisfied with the new vehicle. However, if you continue to remain unsatisfied after following the procedure outlined in Steps One and Two, you can file with the Better Business Bureau (BBB) Auto Line® Program to enforce your rights.

The BBB Auto Line Program is an out-of-court program administered by the Council of Better Business Bureaus to settle automotive disputes regarding vehicle repairs or the interpretation of the New Vehicle Limited Warranty. Although you may be required to resort to this informal dispute resolution program prior to filing a court action, use of the program is free of charge and your case will generally be heard within 40 days. If you do not agree with the decision given in your case, you may reject it and proceed with any other venue for relief available to you.

You may contact the BBB Auto Line Program using the toll-free telephone number or write them at the following address:

BBB Auto Line Program
Council of Better Business Bureaus, Inc.
3033 Wilson Boulevard
Suite 600
Arlington, VA 22201

Telephone: 1-800-955-5100
http://www.bbb.org/council/programs-services/dispute-handling-and-resolution/bbb-auto-line

This program is available in all 50 states and the District of Columbia. Eligibility is limited by vehicle age, mileage, and other factors. General Motors reserves the right to change eligibility limitations and/or discontinue its participation in this program.

STEP THREE — Canadian Owners : In the event that you do not feel your concerns have been addressed after following the procedure outlined in Steps One and Two, General Motors of Canada

Limited wants you to be aware of its participation in a no-charge Mediation/Arbitration Program. General Motors of Canada Limited has committed to binding arbitration of owner disputes involving factory-related vehicle service claims. The program provides for the review of the facts involved by an impartial third party arbiter, and may include an informal hearing before the arbiter. The program is designed so that the entire dispute settlement process, from the time you file your complaint to the final decision, should be completed in about 70 days. We believe our impartial program offers advantages over courts in most jurisdictions because it is informal, quick, and free of charge.

For further information concerning eligibility in the Canadian Motor Vehicle Arbitration Plan (CAMVAP), call toll-free 1-800-207-0685, or call the General Motors Customer Care Centre, 1-800-263-3777 (English), 1-800-263-7854 (French), or write to:

The Mediation/Arbitration Program
c/o Customer Care Centre
General Motors of Canada Limited
Mail Code: CA1-163-005
1908 Colonel Sam Drive
Oshawa, Ontario L1H 8P7

The inquiry should be accompanied by the Vehicle Identification Number (VIN).

Customer Assistance Offices

Chevrolet encourages customers to call the toll-free number for assistance. However, if a customer wishes to write or e-mail Chevrolet, the letter should be addressed to:

United States and Puerto Rico

Chevrolet Motor Division
Chevrolet Customer Assistance Center
P.O. Box 33170
Detroit, MI 48232-5170
www.Chevrolet.com

1-800-222-1020
1-800-833-2438 (For Text Telephone Devices (TTYs))
Roadside Assistance:
1-800-243-8872

From U.S. Virgin Islands:

1-800-496-9994

Canada

General Motors of Canada Limited
Customer Care Centre, Mail Code: CA1-163-005
1908 Colonel Sam Drive
Oshawa, Ontario L1H 8P7
www.gm.ca

1-800-263-3777 (English)
1-800-263-7854 (French)
1-800-263-3830 (For Text Telephone devices (TTYs))
Roadside Assistance:
1-800-268-6800

Overseas

Please contact the local General Motors Business Unit.

Customer Assistance for Text Telephone (TTY) Users

To assist customers who are deaf, hard of hearing, or speech-impaired and who use Text Telephones (TTYs), Chevrolet has TTY equipment available at its Customer Assistance Center. Any TTY user in the U.S. can communicate with Chevrolet by dialing: 1-800-833-2438. TTY users in Canada can dial 1-800-263-3830.

Online Owner Center

Online Owner Experience (U.S.) my.chevrolet.com

The Chevrolet online owner experience allows interaction with Chevrolet and keeps important vehicle-specific information in one place.

Membership Benefits

(Vehicle Information) : Download owner manuals and view vehicle-specific how-to videos.

(Maintenance Information) : View maintenance schedules, alerts, and OnStar Vehicle Diagnostic Information. Schedule service appointments.

(Service History) : View and print dealer-recorded service records and self-recorded service records.

(Preferred Dealer Information) : Select a preferred dealer and view locations, maps, phone numbers, and hours.

(Warranty Tracking Information) : Track your vehicle's warranty information.

(Recall Information) : View active recalls by Vehicle Identification Number (VIN). See *Vehicle Identification Number (VIN)* ⇨ *314*.

(Other Account Information) : View GM Card, SiriusXM Satellite radio, and OnStar account information (if equipped).

(Live Chat Support) : Chat with online help representatives.

See my.chevrolet.com to register your vehicle.

Chevrolet Owner Centre (Canada) chevroletowner.ca

Visit the Chevrolet Owner Centre:

- Chat live with online help representatives.
- Locate owner resources such as lease-end, financing, and warranty information.
- Retrieve your favorite articles, quizzes, tips, and multimedia galleries organized into the Featured Articles and Auto Care Sections.
- Download owner manuals.
- Find the Chevrolet-recommended maintenance services.

GM Mobility Reimbursement Program

This program is available to qualified applicants for cost reimbursement of eligible aftermarket adaptive equipment required for the vehicle, such as hand controls or a wheelchair/scooter lift for the vehicle.

For more information on the limited offer, visit www.gmmobility.com or call the GM Mobility Assistance Center at 1-800-323-9935. Text Telephone (TTY) users, call 1-800-833-9935.

General Motors of Canada also has a Mobility Program. Visit www.gm.ca or call 1-800-GM-DRIVE (463-7483) for details. TTY users call 1-800-263-3830.

Roadside Assistance Program

For U.S.-purchased vehicles, call 1-800-243-8872. (Text Telephone (TTY): 1-888-889-2438.)

For Canadian-purchased vehicles, call 1-800-268-6800.

Service is available 24 hours a day, 365 days a year.

Calling for Assistance

When calling Roadside Assistance, have the following information ready:

- Your name, home address, and home telephone number.
- Telephone number of your location.
- Location of the vehicle.
- Model, year, color, and license plate number of the vehicle.
- Odometer reading, Vehicle Identification Number (VIN), and delivery date of the vehicle.
- Description of the problem.

Coverage

Services are provided for the duration of the vehicle's powertrain warranty.

In the U.S., anyone driving the vehicle is covered. In Canada, a person driving the vehicle without permission from the owner is not covered.

Roadside Assistance is not a part of the New Vehicle Limited Warranty. General Motors North America and Chevrolet reserve the right to make any changes or discontinue the Roadside Assistance program at any time without notification.

General Motors North America and Chevrolet reserve the right to limit services or payment to an owner or driver if they decide the claims are made too often, or the same type of claim is made many times.

Services Provided

- **Emergency Fuel Delivery:** Delivery of enough fuel for the vehicle to get to the nearest service station.
- **Lock-Out Service:** Service to unlock the vehicle if you are locked out. A remote unlock may be available if you have OnStar. For security reasons, the driver must present identification before this service is given.
- **Emergency Tow from a Public Road or Highway:** Tow to the nearest Chevrolet dealer for warranty service, or if the vehicle was in a crash and cannot be driven. Assistance is not given when the vehicle is stuck in the sand, mud, or snow.
- **Flat Tire Change:** Service to change a flat tire with the spare tire. The spare tire, if equipped, must be in good condition and properly inflated. It is the owner's responsibility for the repair or replacement of the tire if it is not covered by the warranty.
- **Battery Jump Start:** Service to jump start a dead battery.
- **Trip Interruption Benefits and Assistance:** If your trip is interrupted due to a warranty event, incidental expenses may be reimbursed within the Powertrain warranty period. Items considered are reasonable and customary hotel, meals, rental car, or a vehicle being delivered back to the customer, up to 805 km (500 mi).

Services Not Included in Roadside Assistance

- Impound towing caused by violation of any laws.
- Legal fines.
- Mounting, dismounting, or changing of snow tires, chains, or other traction devices.

Service is not provided if a vehicle is in an area that is not accessible to the service vehicle or is not a regularly traveled or maintained public road, which includes ice and winter roads. Off-road use is not covered.

Services Specific to Canadian-Purchased Vehicles

- **Fuel Delivery:** Reimbursement is up to 7 liters. If available, diesel fuel delivery may be restricted. Propane and other fuels are not provided through this service.
- **Lock-Out Service:** Vehicle registration is required.
- **Trip Interruption Benefits and Assistance:** Must be over 150 km from where your trip was started to qualify. General Motors of Canada Limited requires pre-authorization, original detailed receipts, and a copy of the repair orders. Once authorization has been received, the Roadside Assistance advisor will help to make arrangements and explain how to receive payment.
- **Alternative Service:** If assistance cannot be provided right away, the Roadside Assistance advisor may give permission to get local emergency road service. You will

receive payment, up to $100, after sending the original receipt to Roadside Assistance. Mechanical failures may be covered, however any cost for parts and labor for repairs not covered by the warranty are the owner responsibility.

Scheduling Service Appointments

When the vehicle requires warranty service, contact your dealer and request an appointment. By scheduling a service appointment and advising the service consultant of your transportation needs, your dealer can help minimize your inconvenience.

If the vehicle cannot be scheduled into the service department immediately, keep driving it until it can be scheduled for service, unless, of course, the problem is safety related. If it is, please call your dealership, let them know this, and ask for instructions.

If your dealer requests you to bring the vehicle for service, you are urged to do so as early in the work day as possible to allow for same-day repair.

Courtesy Transportation Program

To enhance your ownership experience, we and our participating dealers are proud to offer Courtesy Transportation, a customer support program for vehicles with the Bumper-to-Bumper (Base Warranty Coverage period in Canada), extended powertrain, and/or hybrid-specific warranties in both the U.S. and Canada.

Several Courtesy Transportation options are available to assist in reducing inconvenience when warranty repairs are required.

Courtesy Transportation is not a part of the New Vehicle Limited Warranty. A separate booklet entitled “Limited Warranty and Owner Assistance Information” furnished with each new vehicle provides detailed warranty coverage information.

Transportation Options

Warranty service can generally be completed while you wait. However, if you are unable to do so, your dealer may offer the following transportation options:

Shuttle Service

This includes one-way or round-trip shuttle service within reasonable time and distance parameters of your dealer's area.

Public Transportation or Fuel Reimbursement

If overnight warranty repairs are needed, and public transportation is used, the expense must be supported by original receipts and within the maximum amount allowed by GM for shuttle service. If U.S. customers arrange their own transportation, limited reimbursement for reasonable fuel expenses may be available. Claim amounts should reflect actual costs and be supported by original receipts. See your dealer for information.

Courtesy Rental Vehicle

For an overnight warranty repair, the dealer may provide an available courtesy rental vehicle or provide for reimbursement of a rental vehicle. Reimbursement is limited and must be supported by original receipts as well as a signed and completed rental agreement and meet state/provincial, local, and rental vehicle provider requirements. Requirements vary and may include minimum age requirements, insurance coverage, credit card, etc. Additional fees such as fuel usage charges, taxes, levies, usage fees, excessive mileage, or rental usage beyond the completion of the repair are also your responsibility.

It may not be possible to provide a like vehicle as a courtesy rental.

Additional Program Information

All program options, such as shuttle service, may not be available at every dealer. Contact your dealer for specific availability.

General Motors reserves the right to unilaterally modify, change, or discontinue Courtesy Transportation at any time and to resolve all questions of claim eligibility pursuant to the terms and conditions described herein at its sole discretion.

Collision Damage Repair

If the vehicle is involved in a collision and it is damaged, have the damage repaired by a qualified technician using the proper equipment and quality replacement parts. Poorly performed collision repairs diminish the vehicle resale value, and safety performance can be compromised in subsequent collisions.

Collision Parts

Genuine GM Collision parts are new parts made with the same materials and construction methods as the parts with which the vehicle was originally built. Genuine GM Collision parts are the best choice to ensure that the vehicle's designed appearance, durability, and safety are preserved. The use of Genuine GM parts can help maintain the GM New Vehicle Limited Warranty.

Recycled original equipment parts may also be used for repair. These parts are typically removed from vehicles that were total losses in prior crashes. In most cases, the parts being recycled are from undamaged sections of the vehicle. A recycled original equipment GM part may be an acceptable choice to maintain the vehicle's originally designed appearance and safety performance; however, the history of these parts is not known. Such parts are not covered by the GM New Vehicle Limited Warranty, and any related failures are not covered by that warranty.

Aftermarket collision parts are also available. These are made by companies other than GM and may not have been tested for the vehicle. As a result, these parts may fit poorly, exhibit premature durability/corrosion problems, and may not perform properly in subsequent collisions. Aftermarket parts are not covered by the GM New Vehicle Limited Warranty, and any vehicle failure related to such parts is not covered by that warranty.

Repair Facility

GM also recommends that you choose a collision repair facility that meets your needs before you ever need collision repairs. Your dealer may have a collision repair center with GM-trained technicians and state-of-the-art equipment, or be able to recommend a collision repair center that has GM-trained technicians and comparable equipment.

Insuring the Vehicle

Protect your investment in the GM vehicle with comprehensive and collision insurance coverage. There are significant differences in the quality of coverage afforded by various insurance policy terms. Many insurance policies provide reduced protection to the GM vehicle by limiting compensation for damage repairs by using aftermarket collision parts. Some insurance companies will not specify aftermarket collision parts. When purchasing insurance, we recommend that you ensure that the vehicle will be repaired with GM original equipment collision parts. If such insurance coverage is not available from your current insurance carrier, consider switching to another insurance carrier.

If the vehicle is leased, the leasing company may require you to have insurance that ensures repairs with Genuine GM Original Equipment Manufacturer (OEM) parts or Genuine Manufacturer replacement parts. Read the lease carefully, as you may be charged at the end of the lease for poor quality repairs.

If a Crash Occurs

If there has been an injury, call emergency services for help. Do not leave the scene of a crash until all matters have been taken care of. Move the vehicle only if its position puts you in danger, or you are instructed to move it by a police officer.

Give only the necessary information to police and other parties involved in the crash.

For emergency towing see *Roadside Assistance Program* ⇨ *322*.

Gather the following information:

- Driver name, address, and telephone number.
- Driver license number.
- Owner name, address, and telephone number.
- Vehicle license plate number.
- Vehicle make, model, and model year.
- Vehicle Identification Number (VIN).
- Insurance company and policy number.
- General description of the damage to the other vehicle.

Choose a reputable repair facility that uses quality replacement parts. See “Collision Parts” earlier in this section.

If the airbag has inflated, see *What Will You See after an Airbag Inflates?* ⇨ *61*.

Managing the Vehicle Damage Repair Process

In the event that the vehicle requires damage repairs, GM recommends that you take an active role in its repair. If you have a pre-determined repair facility of choice, take the vehicle there, or have it towed there. Specify to the facility that any required replacement collision parts be original equipment parts, either new Genuine GM parts or recycled original GM parts. Remember, recycled parts will not be covered by the GM vehicle warranty.

Insurance pays the bill for the repair, but you must live with the repair. Depending on your policy limits, your insurance company may initially value the repair using aftermarket parts. Discuss this with the repair professional, and insist on Genuine GM parts. Remember, if the vehicle is leased, you may be obligated to have the vehicle repaired with Genuine GM parts, even if your insurance coverage does not pay the full cost.

If another party's insurance company is paying for the repairs, you are not obligated to accept a repair valuation based on that insurance company's collision policy repair limits, as you have no contractual limits with that company. In such cases, you can have control of the repair and parts choices as long as the cost stays within reasonable limits.

Service Publications Ordering Information

(US and Canada Only)

Service Manuals

Service Manuals have the diagnosis and repair information on the engines, transmission, axle, suspension, brakes, electrical, steering, body, etc.

Service Bulletins

Service Bulletins give additional technical service information needed to knowledgeably service General Motors cars and trucks. Each bulletin contains instructions to assist in the diagnosis and service of the vehicle.

Owner Information

Owner publications are written specifically for owners and intended to provide basic operational information about the vehicle. The Owner Manual includes the Maintenance Schedule for all models.

In-Portfolio: Includes a Portfolio, Owner Manual, and Warranty Manual.

RETAIL SELL PRICE: $35.00 – $40.00 (U.S.) plus handling and shipping fees.

Without Pouch: Owner Manual only.

RETAIL SELL PRICE:
$25.00 (U.S.) plus handling and shipping fees.

Current and Past Models

Technical Service Bulletins and Manuals are available for current and past model GM vehicles.

ORDER TOLL FREE:
1-800-551-4123 Monday – Friday
8:00 AM – 6:00 PM Eastern Time

For Credit Card Orders Only (VISA-MasterCard-Discover), see Helm, Inc. at: www.helminc.com.

Or write to:

Helm, Incorporated
Attention: Customer Service
47911 Halyard Drive
Plymouth, MI 48170

Prices are subject to change without notice and without incurring obligation. Allow ample time for delivery.

All listed prices are quoted in U.S. funds. Make checks payable in U.S. funds.

Radio Frequency Statement

This vehicle has systems that operate on a radio frequency that complies with Part 15/Part 18 of the Federal Communications Commission (FCC) rules and with Industry Canada Standards RSS-GEN/210/216/220/251/310, ICES-001.

Operation is subject to the following two conditions:

1. The device may not cause harmful interference.
2. The device must accept any interference received, including interference that may cause undesired operation of the device.

Changes or modifications to any of these systems by other than an authorized service facility could void authorization to use this equipment.

Reporting Safety Defects

Reporting Safety Defects to the United States Government

If you believe that your vehicle has a defect which could cause a crash or could cause injury or death, you should immediately inform the National Highway Traffic Safety Administration (NHTSA) in addition to notifying General Motors.

If NHTSA receives similar complaints, it may open an investigation, and if it finds that a safety defect exists in a group of vehicles, it may order a recall and remedy campaign. However, NHTSA cannot become involved in individual problems between you, your dealer, or General Motors.

To contact NHTSA, you may call the Vehicle Safety Hotline toll-free at 1-888-327-4236 (TTY: 1-800-424-9153); go to *http://www.safercar.gov;* or write to:

Administrator, NHTSA
1200 New Jersey Avenue, S.E.
Washington, D.C. 20590

You can also obtain other information about motor vehicle safety from *http://www.safercar.gov*.

Reporting Safety Defects to the Canadian Government

If you live in Canada, and you believe that the vehicle has a safety defect, notify Transport Canada immediately, and notify General Motors of Canada Limited. Call Transport Canada at 1-800-333-0510 or write to:

Transport Canada
Road Safety Branch
80 rue Noel
Gatineau, QC J8Z 0A1

Reporting Safety Defects to General Motors

In addition to notifying NHTSA (or Transport Canada) in a situation like this, notify General Motors.

Call 1-800-222-1020, or write:

Chevrolet Motor Division
Chevrolet Customer Assistance Center
P.O. Box 33170
Detroit, MI 48232-5170

In Canada, call 1-800-263-3777 (English) or 1-800-263-7854 (French), or write:

General Motors of Canada Limited
Customer Care Centre, Mail Code: CA1-163-005
1908 Colonel Sam Drive
Oshawa, Ontario L1H 8P7

Vehicle Data Recording and Privacy

The vehicle has a number of computers that record information about the vehicle's performance and how it is driven. For example, the vehicle uses computer modules to monitor and control engine and transmission performance, to monitor the conditions for airbag deployment and deploy them in a crash, and, if equipped, to provide antilock braking to help the driver control the vehicle. These modules may store data to help the dealer technician service the vehicle. Some modules may also store data about how the vehicle is operated, such as rate of fuel consumption or average speed. These modules may retain personal preferences, such as radio presets, seat positions, and temperature settings.

Event Data Recorders

This vehicle is equipped with an event data recorder (EDR). The main purpose of an EDR is to record, in certain crash or near crash-like situations, such as an air bag deployment or hitting a road obstacle, data that will assist in understanding how a vehicle's systems performed. The EDR is designed to record data related to vehicle dynamics and safety systems for a short period of time, typically 30 seconds or less. The EDR in this vehicle is designed to record such data as:

- How various systems in your vehicle were operating;
- Whether or not the driver and passenger safety belts were buckled/fastened;
- How far (if at all) the driver was depressing the accelerator and/or brake pedal; and,
- How fast the vehicle was traveling.

These data can help provide a better understanding of the circumstances in which crashes and injuries occur.

Note

EDR data are recorded by your vehicle only if a non-trivial crash situation occurs; no data are recorded by the EDR under normal driving conditions and no personal data (e.g., name, gender, age, and crash location) are recorded. However, other parties, such as law enforcement, could combine the EDR data with the type of personally identifying data routinely acquired during a crash investigation.

To read data recorded by an EDR, special equipment is required, and access to the vehicle or the EDR is needed. In addition to the vehicle manufacturer, other parties, such as law enforcement, that have the special equipment, can read the information if they have access to the vehicle or the EDR.

GM will not access these data or share it with others except: with the consent of the vehicle owner or, if the vehicle is leased, with the consent of the lessee; in response to an official request by police or similar government office; as part of GM's defense of litigation through the discovery process; or, as required by law. Data that GM collects or receives may also be used for GM research needs or may be made available to others for research purposes, where a need is shown and the data is not tied to a specific vehicle or vehicle owner.

OnStar®

If the vehicle is equipped with OnStar® and has an active subscription, additional data may be collected through the OnStar system. This includes information about the vehicle's operation; collisions involving the vehicle; the use of the vehicle and its features; and, in certain situations, the location and approximate GPS speed of the vehicle. Refer to the OnStar Terms and Conditions and Privacy Statement on the OnStar website.

See *OnStar Additional Information* ⇨ *336*.

OnStar

OnStar Overview
OnStar Overview 332

OnStar Services
Emergency 333
Security 333
Navigation 333
Connections 334
Diagnostics 336

OnStar Additional Information
OnStar Additional Information 336

OnStar Overview

Voice Command Button

Blue OnStar Button

Emergency Button

This vehicle may be equipped with a comprehensive, in-vehicle system that can connect to an OnStar Advisor for Emergency, Security, Navigation, Connections, and Diagnostics Services. OnStar services may require a paid subscription. OnStar requires the vehicle battery and electrical system, cellular service, and GPS satellite signals to be available and operating. OnStar acts as a link to existing emergency service providers. OnStar may collect information about you and your vehicle, including location information. See OnStar's Terms & Conditions and Privacy Statement for more details including system limitations at www.onstar.com (U.S.) or www.onstar.ca (Canada).

The OnStar system status light is next to the OnStar buttons. If the status light is:

- Solid Green: System is ready.
- Flashing Green: On a call.
- Red: Indicates a problem.
- Off: System is off. Press twice to speak with an OnStar Advisor.

Press or call 1-888-4ONSTAR (1-888-466-7827) to speak to an Advisor.

Press to:

- Make a call, end a call, or answer an incoming call.
- Give OnStar Hands-Free Calling voice commands.
- Give OnStar Turn-by-Turn Navigation voice commands.

- Obtain the Wi-Fi® hotspot name or SSID and password, if equipped.

Press On to connect to an Advisor to:

- Verify account information or update contact information.
- Get driving directions.
- Receive a Diagnostic check of the vehicle's key operating systems.
- Receive Roadside Assistance.
- Manage Wi-Fi Settings, if equipped.

Press SOS to get a priority connection to an OnStar Advisor available 24/7 to:

- Get help for an emergency.
- Be a Good Samaritan or respond to an AMBER Alert.
- Get assistance in severe weather or other crisis situations and find evacuation routes.

OnStar Services

Emergency

OnStar Emergency Services require a specific OnStar subscription plan. With Automatic Crash Response, in many crashes, built-in sensors can automatically alert a specially trained OnStar Advisor who is immediately connected to the vehicle to help.

Press SOS for a priority connection to an OnStar Advisor who can contact emergency service providers, direct them to your exact location, and relay important information.

With OnStar Crisis Assist, specially trained Advisors are available 24 hours a day, 7 days a week, to provide a central point of contact, assistance, and information during a crisis.

With Roadside Assistance, Advisors can locate a nearby service provider to help with a flat tire, a battery jump, or an empty gas tank.

Security

If equipped, OnStar provides these services:

- With Stolen Vehicle Assistance, OnStar Advisors can use GPS to pinpoint the vehicle and help authorities quickly recover it.
- With Remote Ignition Block, if equipped, OnStar can block the engine from being started.
- With Stolen Vehicle Slowdown, if equipped, OnStar can work with law enforcement to gradually slow the vehicle down.

Navigation

OnStar navigation requires a specific OnStar subscription plan.

Press On to receive Turn-by-Turn directions or have them sent to the vehicle’s navigation screen, if equipped.

Turn-by-Turn Navigation

1. Press to connect to an Advisor.
2. Request directions to be downloaded to the vehicle.
3. Follow the voice-guided commands.

Using Voice Commands During a Planned Route

Cancel Route

1. Press . System responds: “OnStar ready,” then a tone.
2. Say “Cancel route.” System responds: “Do you want to cancel directions?”
3. Say “Yes.” System responds: “OK, request completed, thank you, goodbye.”

Route Preview

1. Press . System responds: “OnStar ready,” then a tone.
2. Say “Route preview.” System responds with the next three maneuvers.

Repeat

1. Press . System responds: “OnStar ready,” then a tone.
2. Say “Repeat.” System responds with the last direction given, then responds with “OnStar ready,” then a tone.

Get My Destination

1. Press . System responds: “OnStar ready,” then a tone.
2. Say “Get my destination.” System responds with the address and distance to the destination, then responds with “OnStar ready,” then a tone.

Destination Download

Subscribers can have directions sent to the vehicle’s navigation screen, if equipped.

Press , then ask the Advisor to download directions to the vehicle’s navigation system, if equipped. After the call ends, press the Go button on the navigation screen to begin driving directions. Routes that are sent to the navigation screen can only be canceled through the navigation system.

See www.onstar.com (U.S.) or www.onstar.ca (Canada).

Connections

The following OnStar services help with staying connected.

For coverage maps, see www.onstar.com (U.S.) or www.onstar.ca (Canada).

OnStar Wi-Fi Hotspot (If Equipped)

The vehicle may have a built-in Wi-Fi hotspot that provides access to the Internet and web content at 4G LTE speed. Up to seven mobile devices can be connected. A data plan is required. Use the in-vehicle controls only when it is safe to do so.

1. To retrieve Wi-Fi hotspot information, press , wait for the prompt, then say “Wi-Fi settings.” On some vehicles, touch Wi-Fi Settings on the screen.

2. The Wi-Fi settings will display the Wi-Fi hotspot name (SSID), password, and on some vehicles, the connection type (no Internet connection, 3G, 4G, 4G LTE), and signal quality (poor, good, excellent).
3. To change the SSID or password, press or call 1-888-4ONSTAR to connect with an Advisor.

OnStar RemoteLink® Mobile App (If Equipped)

Download the OnStar RemoteLink mobile app to select Apple®, Android™, BlackBerry®, or Windows® mobile devices. OnStar Subscribers can access the following services from a mobile device:

- Remotely start/stop the vehicle, if factory-equipped.
- Lock/unlock doors, if equipped with automatic locks.
- Activate the horn and lamps.
- Check the vehicle's fuel level, oil life, or tire pressure, if factory-equipped with the Tire Pressure Monitor System.
- Send directions to the vehicle.
- Locate the vehicle on a map (U.S. market only).
- Turn the vehicle's Wi-Fi hotspot on/off, manage settings, and monitor data consumption, if equipped.

For OnStar RemoteLink information and compatibility, see www.onstar.com (U.S.) or www.onstar.ca (Canada).

Remote Services

Contact an OnStar Advisor to unlock the doors or sound the horn and flash the lamps.

OnStar AtYourService

OnStar Advisors can provide savings offers from restaurants and retailers on your route, help locate hotels, or book a room.

OnStar Hands-Free Calling

Make and receive calls with the built-in wireless calling service.

Make a Call

1. Press . System responds: “OnStar ready.”
2. Say “Call.” System responds: “Call. Please say the name or number to call.”
3. Say the entire number without pausing, including a “1” and the area code. System responds: “OK, calling.”

Calling 911 Emergency

1. Press . System responds: “OnStar ready.”
2. Say “Call.” System responds: “Call. Please say the name or number to call.”
3. Say “911” without pausing. System responds: “911.”
4. Say “Call.” System responds: “OK, dialing 911.”

Retrieve My Number

1. Press . System responds: “OnStar ready.”
2. Say “My number.” System responds: “Your OnStar Hands-Free Calling number is,” then says the number.

End a Call

Press . System responds: “Call ended.”

Verify Minutes and Expiration

Press and say “Minutes” then “Verify” to check how many minutes remain and their expiration date.

Diagnostics

OnStar Advanced Diagnostics can perform a check of the vehicle's key operating systems through a monthly diagnostics report, through real time alerts or by pressing . OnStar can also monitor tire pressure, if equipped with a Tire Pressure Monitor System.

OnStar Additional Information

In-Vehicle Audio Messages

Audio messages may play important information at the following times:

- Prior to vehicle purchase. Press to set up an account.
- With the OnStar Basic Plan, every 60 days.
- After change in ownership and at 90 days.

Transferring Service

Press to request account transfer eligibility information. The Advisor can cancel or change account information.

Selling/Transferring the Vehicle

Call 1-888-4ONSTAR (1-888-466-7827) immediately to terminate your OnStar services if the vehicle is disposed of, sold, transferred, or if the lease ends.

Reactivation for Subsequent Owners

Press and follow the prompts to speak to an Advisor as soon as possible. The Advisor will update vehicle records and explain OnStar service options.

How OnStar Service Works

Automatic Crash Response, Emergency Services, Crisis Assist, Stolen Vehicle Assistance, Vehicle Diagnostics, Remote Services, Roadside Assistance, Turn-by-Turn Navigation, and Hands-Free Calling are available on most vehicles. Not all OnStar services are available everywhere or on all vehicles. For more information, a full description of OnStar services, system limitations, and OnStar terms and conditions:

- Call 1-888-4ONSTAR (1-888-466-7827).
- See www.onstar.com (U.S.).
- See www.onstar.ca (Canada).
- Call TTY 1-877-248-2080.

- Press ⓞⓝ to speak with an Advisor.

OnStar services cannot work unless the vehicle is in a place where OnStar has an agreement with a wireless service provider for service in that area. The wireless service provider must also have coverage, network capacity, reception, and technology compatible with OnStar services. Service involving location information about the vehicle cannot work unless GPS signals are available, unobstructed, and compatible with the OnStar hardware. OnStar services may not work if the OnStar equipment is not properly installed or it has not been properly maintained. If equipment or software is added, connected, or modified, OnStar services may not work. Other problems beyond the control of OnStar — such as hills, tall buildings, tunnels, weather, electrical system design and architecture of the vehicle, damage to the vehicle in a crash, or wireless phone network congestion or jamming — may prevent service.

See *Radio Frequency Statement* ⇨ *328*.

Services for People with Disabilities

Advisors provide services to help Subscribers with physical disabilities and medical conditions.

Press ⓞⓝ to help:

- Locate a gas station with an attendant to pump gas.
- Find a hotel, restaurant, etc., that meets accessibility needs.
- Provide directions to the closest hospital or pharmacy in urgent situations.

TTY Users

OnStar has the ability to communicate to deaf, hard-of-hearing, or speech-impaired customers while in the vehicle. The available dealer-installed TTY system can provide in-vehicle access to all OnStar services, except Virtual Advisor and OnStar Turn-by-Turn Navigation.

OnStar Personal Identification Number (PIN)

A PIN is needed to access some OnStar services. The PIN will need to be changed the first time when speaking with an Advisor. To change the OnStar PIN, contact an OnStar Advisor by pressing ⓞⓝ or calling 1-888-4ONSTAR.

Warranty

OnStar equipment may be warranted as part of the vehicle warranty.

Languages

The vehicle can be programmed to respond in multiple languages. Press ⓞⓝ and ask for an Advisor. Advisors are available in English, Spanish, and French. Available languages may vary by country.

Potential Issues

OnStar cannot perform Remote Door Unlock or Stolen Vehicle Assistance after the vehicle has been off continuously for five days without an ignition cycle. If the vehicle has not been started for five days, OnStar can contact Roadside Assistance or a locksmith to help gain access to the vehicle.

Global Positioning System (GPS)

- Obstruction of the GPS can occur in a large city with tall buildings; in parking garages; around airports; in tunnels and underpasses; or in an area with very dense trees. If GPS signals are not available, the OnStar system should still operate to call OnStar. However, OnStar could have difficulty identifying the exact location.
- In emergency situations, OnStar can use the last stored GPS location to send to emergency responders.

A temporary loss of GPS can cause loss of the ability to send a Turn-by-Turn Navigation route. The Advisor may give a verbal route or may ask for a call back after the vehicle is driven into an open area.

Cellular and GPS Antennas

Cellular reception is required for OnStar to send remote signals to the vehicle. Do not place items over or near the antenna to prevent blocking cellular and GPS signal reception.

Unable to Connect to OnStar Message

If there is limited cellular coverage or the cellular network has reached maximum capacity, this message may come on. Press on to try the call again or try again after driving a few miles into another cellular area.

Vehicle and Power Issues

OnStar services require a vehicle electrical system, wireless service, and GPS satellite technologies to be available and operating for features to function properly. These systems may not operate if the battery is discharged or disconnected.

Add-on Electrical Equipment

The OnStar system is integrated into the electrical architecture of the vehicle. Do not add any electrical equipment. See *Add-On Electrical Equipment* ⇨ *217*. Added electrical equipment may interfere with the operation of the OnStar system and cause it to not operate.

Vehicle Software Updates

OnStar or GM may remotely deliver software updates or changes to the vehicle without further notice or consent. These updates or changes may enhance or maintain safety, security, or the operation of the vehicle or the vehicle systems. Software updates or changes may affect or erase data or settings that are stored in the vehicle, such as

OnStar Hands-Free Calling name tags, saved navigation destinations, or pre-set radio stations. Neither OnStar nor GM is responsible for any affected or erased data or settings. These updates or changes may also collect personal information. Such collection is described in the OnStar privacy statement or separately disclosed at the time of installation. These updates or changes may also cause a system to automatically communicate with GM servers to collect information about vehicle system status, identify whether updates or changes are available, or deliver updates or changes. An active OnStar agreement constitutes consent to these software updates or changes and agreement that either OnStar or GM may remotely deliver them to the vehicle.

Privacy

The complete OnStar Privacy Statement may be found at www.onstar.com (U.S.), or www.onstar.ca (Canada). We recommend that you review it. If you have any questions, call 1-888-4ONSTAR (1-888-466-7827) or press to speak with an Advisor. Users of wireless communications are cautioned that the privacy of any information sent via wireless cellular communications cannot be assured. Third parties may unlawfully intercept or access transmissions and private communications without consent.

OnStar - Software Acknowledgements

Certain OnStar components include libcurl and unzip software and other third party software. Below are the notices and licenses associated with libcurl and unzip and for other third party software please see http://www.lg.com/global/support/opensource/index and https://www.onstar.com/us/en/support/getdocuments.html

libcurl:

COPYRIGHT AND PERMISSION NOTICE

Copyright (c) 1996 - 2010, Daniel Stenberg, <daniel@haxx.se>.

All rights reserved.

Permission to use, copy, modify, and distribute this software for any purpose with or without fee is hereby granted, provided that the above copyright notice and this permission notice appear in all copies.

THE SOFTWARE IS PROVIDED “AS IS,” WITHOUT WARRANTY OF ANY KIND, EXPRESS OR IMPLIED, INCLUDING BUT NOT LIMITED TO THE WARRANTIES OF MERCHANTABILITY, FITNESS FOR A PARTICULAR PURPOSE AND NONINFRINGEMENT OF THIRD PARTY RIGHTS. IN NO EVENT SHALL THE AUTHORS OR COPYRIGHT HOLDERS BE LIABLE FOR ANY CLAIM, DAMAGES OR OTHER LIABILITY, WHETHER IN AN ACTION OF CONTRACT, TORT OR

OTHERWISE, ARISING FROM, OUT OF OR IN CONNECTION WITH THE SOFTWARE OR THE USE OR OTHER DEALINGS IN THE SOFTWARE.

Except as contained in this notice, the name of a copyright holder shall not be used in advertising or otherwise to promote the sale, use or other dealings in this Software without prior written authorization of the copyright holder.

unzip:

This is version 2005-Feb-10 of the Info-ZIP copyright and license. The definitive version of this document should be available at ftp://ftp.info-zip.org/pub/infozip/license.html indefinitely.

Copyright (c) 1990-2005 Info-ZIP. All rights reserved.

For the purposes of this copyright and license, “Info-ZIP” is defined as the following set of individuals:

Mark Adler, John Bush, Karl Davis, Harald Denker, Jean-Michel Dubois, Jean-loup Gailly, Hunter Goatley, Ed Gordon, Ian Gorman, Chris Herborth, Dirk Haase, Greg Hartwig, Robert Heath, Jonathan Hudson, Paul Kienitz, David Kirschbaum, Johnny Lee, Onno van der Linden, Igor Mandrichenko, Steve P. Miller, Sergio Monesi, Keith Owens, George Petrov, Greg Roelofs, Kai Uwe Rommel, Steve Salisbury, Dave Smith, Steven M. Schweda, Christian Spieler, Cosmin Truta, Antoine Verheijen, Paul von Behren, Rich Wales, Mike White.

This software is provided “as is,” without warranty of any kind, express or implied. In no event shall Info-ZIP or its contributors be held liable for any direct, indirect, incidental, special or consequential damages arising out of the use of or inability to use this software.

Permission is granted to anyone to use this software for any purpose, including commercial applications, and to alter it and redistribute it freely, subject to the following restrictions:

1. Redistributions of source code must retain the above copyright notice, definition, disclaimer, and this list of conditions.
2. Redistributions in binary form (compiled executables) must reproduce the above copyright notice, definition, disclaimer, and this list of conditions in documentation and/or other materials provided with the distribution. The sole exception to this condition is redistribution of a standard UnZipSFX binary (including SFXWiz) as part of a self-extracting archive; that is permitted without inclusion of this license, as long as the normal SFX banner has not been removed from the binary or disabled.

3. Altered versions–including, but not limited to, ports to new operating systems, existing ports with new graphical interfaces, and dynamic, shared, or static library versions–must be plainly marked as such and must not be misrepresented as being the original source. Such altered versions also must not be misrepresented as being Info-ZIP releases–including, but not limited to, labeling of the altered versions with the names “Info-ZIP” (or any variation thereof, including, but not limited to, different capitalizations), “Pocket UnZip,” “WiZ” or “MacZip” without the explicit permission of Info-ZIP. Such altered versions are further prohibited from misrepresentative use of the Zip-Bugs or Info-ZIP e-mail addresses or of the Info-ZIP URL(s).

4. Info-ZIP retains the right to use the names “Info-ZIP,” “Zip,” “UnZip,” “UnZipSFX,” “WiZ,” “Pocket UnZip,” “Pocket Zip,” and “MacZip” for its own source and binary releases.

Index

A

Accessories and Modifications 220
Accessory Power 194
Add-On Electrical Equipment . . . 217
Additional Information
  OnStar® 336
Additional Maintenance and Care 308
Agreements
  Trademarks and License 174
Air Cleaner/Filter, Engine 230
Air Filter, Passenger Compartment 179
Air Intake 179
Air Vents 178
Airbag System
  Check 67
  How Does an Airbag Restrain? 60
  Passenger Sensing System 62
  What Makes an Airbag Inflate? 60
  What Will You See after an Airbag Inflates? 61
  When Should an Airbag Inflate? 59
  Where Are the Airbags? 58
Airbags
  Adding Equipment to the Vehicle 66
  Passenger Status Indicator 99
  Readiness Light 99
  Servicing Airbag-Equipped Vehicles 66
  System Check 56
Alarm
  Vehicle Security 36
All-Season Tires 255
AM-FM Radio 136
Antenna
  Multi-band 142
  Satellite Radio 142
Antilock Brake System (ABS) . . . 202
  Warning Light 103
Appearance Care
  Exterior 292
  Interior 297
Armrest
  Front Seat 47
Assistance Program, Roadside 322
Audio
  Bluetooth 145
  Theft-Deterrent Feature 128

Automatic
Door Locks 32
Headlamp System 122
Transmission 198
Transmission Fluid 229
Automatic Transmission
Manual Mode 199
Shift Lock Control Function
Check 241
Auxiliary
Devices 144

B

Battery
Exterior Lighting Battery
Saver 126
Load Management 125
Power Protection 126
Battery - North America 240, 287
Blade Replacement, Wiper 242
Bluetooth
Overview 146, 147, 153
Bluetooth Audio 145
Brake
System Warning Light 102
Brakes 238
Antilock 202
Assist 203
Fluid 239
Brakes (cont'd)
Parking 202
Braking 182
Break-In, New Vehicle 190
Bulb Replacement 247
Fog Lamps 123, 245
Halogen Bulbs 243
Headlamp Aiming 243
Headlamps 243
Headlamps, Front Turn
Signal, and Parking
Lamps 244
License Plate Lamps 246
Taillamps, Turn Signal,
Stoplamps, and Back-up
Lamps 245
Buying New Tires 268

C

Calibration 92
California
Fuel Requirements 214
Perchlorate Materials
Requirements 220
California
Proposition
65 Warning 220, 240, 287
Camera
Rear Vision (RVC) 208
Canadian Vehicle Owners 2
Capacities and
Specifications 315
Carbon Monoxide
Engine Exhaust 197
Liftgate 35
Trunk 33
Winter Driving 185
Cargo
Cover 87
Caution, Danger, and Warning 2
Chains, Tire 273
Charging System Light 100
Check
Ignition Transmission Lock ... 241
Malfunction Indicator
Engine Light 100
Child Restraints
Infants and Young Children 69
Lower Anchors and Tethers
for Children 74
Older Children 68
Securing 80, 82
Systems 72
Circuit Breakers 248
Cleaning
Exterior Care 292
Interior Care 297

Climate Control Systems 176
Air Conditioning 176
Heating 176
Clock 93
Cluster, Instrument 96
Clutch, Hydraulic 230
Collision Damage Repair 325
Compact Spare Tire 286
Compartment 87
Load 87
Compartments
Storage 86
Compass 92
Compressor Kit, Tire Sealant ... 275
Computer, Trip 111
Connections
OnStar® 334
Control
Traction and Electronic
Stability 204
Control of a Vehicle 182
Convex Mirrors 38
Coolant
Engine 233
Engine Temperature
Warning Light 106
Cooling System 232
Courtesy Lamps 124
Courtesy Transportation
Program 324
Cover
Cargo 87
Cruise Control 206
Light 108
Customer Assistance 321
Offices 320
Text Telephone (TTY)
Users 321
Customer Information
Service Publications
Ordering Information 327
Customer Satisfaction
Procedure 318

D

Damage Repair, Collision 325
Danger, Warning, and Caution 2
Data Recorders, Event 330
Daytime Running
Lamps (DRL) 121
Indicator Light 108
Defensive Driving 181
Delayed Locking 31
Devices
Auxiliary 144
Diagnostics
OnStar® 336
Distracted Driving 181
Dome Lamps 124
Door
Ajar Light 109
Delayed Locking 31
Locks 30
Drive Belt Routing, Engine 317
Driver Information
Center (DIC) 109
Driving
Defensive 181
Drunk 181
For Better Fuel Economy 24
Hill and Mountain Roads 185
If the Vehicle is Stuck 186
Loss of Control 183
Off-Road Recovery 183
Vehicle Load Limits 187
Wet Roads 184
Winter 185

E

Electrical Equipment,
Add-On 217
Electrical System
Engine Compartment Fuse
Block 249
Fuses and Circuit Breakers ... 248

Electrical System (cont'd)
Instrument Panel Fuse Block 252
Overload 248
Emergency
OnStar® 333
Engine
Air Cleaner/Filter 230
Check and Service Engine Soon Light 100
Compartment Overview 223
Coolant 233
Coolant Temperature Warning Light 106
Cooling System 232
Drive Belt Routing 317
Exhaust 197
Heater 193
Oil Life System 228
Oil Messages 111
Oil Pressure Light 106
Overheating 236
Reduced Power Light 107
Running While Parked 197
Starting 17, 192
Entry Lighting 125
Event Data Recorders 330
Exit Lighting 125
Extender, Safety Belt 55
Exterior Lamp Controls 120
Exterior Lighting Battery Saver 126

F

Filter,
Engine Air Cleaner 230
Flash-to-Pass 121
Flashers, Hazard Warning 122
Flat Tire 273
Changing 281
Floor Mats 300
Fluid
Automatic Transmission 229
Brakes 239
Washer 237
Fog Lamps
Bulb Replacement 123, 245
Folding Mirrors 39
Forward Collision Alert (FCA) System 210
Forward Collision Alert (FCA) Warning Light 104
Frequency Statement
Radio 328
Front Fog Lamp
Light 108
Front Seat Armrest 47
Front Seats
Adjustment 45
Heated 47
Fuel 213
Additives 215
Economy Driving 24
Filling a Portable Fuel Container 216
Filling the Tank 215
Foreign Countries 215
Gauge 97
Low Fuel Warning Light 107
Requirements, California 214
Fuses
Engine Compartment Fuse Block 249
Fuses and Circuit Breakers . . . 248
Instrument Panel Fuse Block 252

G

Gauges
Fuel 97
Odometer 97
Speedometer 97
Tachometer 97
Trip Odometer 97
Warning Lights and Indicators 95

General Information
Service and Maintenance 301
Towing 217
Vehicle Care 220
Glove Box 86
GM Mobility Reimbursement Program 322

H

Halogen Bulbs 243
Hands-Free Phone 158
Hazard Warning Flashers 122
Head Restraints 43
Headlamps
Aiming 243
Automatic 122
Bulb Replacement 243
Daytime Running Lamps (DRL) 121
Daytime Running Lamps (DRL) Indicator Light 108
Flash-to-Pass 121
High-Beam On Light 108
High/Low Beam Changer 121
Lamps On Reminder 108
Heated Front Seats 47
Heated Mirrors 39
Heater
Engine 193
Heating and Air Conditioning ... 176
High-Beam On Light 108
Hill and Mountain Roads 185
Hill Start Assist (HSA) 203
Home Page 131
Hood 222
Horn 90
How to Wear Safety Belts Properly 51
Hydraulic Clutch 230

I

Ignition Positions 191
Ignition Transmission Lock Check 241
Immobilizer 37
Light 107
Indicator
Owner Manual 102
Vehicle Ahead 104
Infants and Young Children, Restraints 69
Infotainment 127
Instrument Cluster 96
Instrument Panel
Storage Area 86
Introduction 2

J

Jump Starting - North America 287

K

Keyless Entry
Remote (RKE) System 27
Keys 25

L

Labeling, Tire Sidewall 256
Lamps
Courtesy 124
Daytime Running (DRL) 121
Dome 124
Exterior Controls 120
Exterior Lighting Battery Saver 126
Headlamps, Front Turn Signal, and Parking Lamps 244
License Plate 246
Malfunction Indicator 100
On Reminder 108
Reading 124
Lane Departure Warning (LDW) 212
Lane Departure Warning Light 104

Lap-Shoulder Belt 52
LATCH System
Replacing Parts after a Crash 80
LATCH, Lower Anchors and Tethers for Children 74
Liftgate 35
Lighting
Entry 125
Exit 125
Illumination Control 124
Lights 104
Airbag Readiness 99
Antilock Brake System (ABS) Warning 103
Brake System Warning 102
Charging System 100
Cruise Control 108
Daytime Running Lamps (DRL) 108
Door Ajar 109
Engine Coolant Temperature Warning 106
Engine Oil Pressure 106
Flash-to-Pass 121
Front Fog Lamp 108
High-Beam On 108
High/Low Beam Changer 121
Lights (cont'd)
Immobilizer 107
Lane Departure Warning 104
Low Fuel Warning 107
Reduced Engine Power 107
Safety Belt Reminders 98
Service Vehicle Soon 102
StabiliTrak® OFF 105
Tire Pressure 106
Traction Control System (TCS)/StabiliTrak® 105
Traction Off 105
Up-Shift 103
Warning, Power Steering 104
Link
Smartphone 160, 162, 164
Load Compartment 87
Locks
Automatic Door 32
Delayed Locking 31
Door 30
Lockout Protection 32
Safety 32
Loss of Control 183
Low Fuel Warning Light 107
Lower Anchors and Tethers for Children (LATCH System) 74

M

Maintenance
Records 313
Maintenance and Care
Additional 308
Maintenance Schedule 302
Recommended Fluids and Lubricants 311
Malfunction Indicator Lamp 100
Manual Mirrors 38
Manual Mode 199
Manual Transmission 200
Fluid 230
Manual Windows 40
Messages
Engine Oil 111
Tire 111
Vehicle 111
Mirrors
Convex 38
Folding 39
Heated 39
Manual 38
Manual Rearview 39
Power 38
Monitor System, Tire Pressure 262
Multi-band Antenna 142

N
Navigation
OnStar® 333
New Vehicle Break-In 190

O
Odometer 97
Trip 97
Off-Road
Recovery 183
Oil
Engine 226
Engine Oil Life System 228
Messages 111
Pressure Light 106
Older Children, Restraints 68
Online Owner Center 321
OnStar 331
OnStar® Additional
Information 336
OnStar® Connections 334
OnStar® Diagnostics 336
OnStar® Emergency 333
OnStar® Navigation 333
OnStar® Overview 332
OnStar® Security 333
Operation
Infotainment System 132
Ordering
Service Publications 327
Outlets
Power 94
Overheating, Engine 236
Overview 129, 131
Owner Manual Indicator 102

P
Park
Shifting Into 195
Shifting Out of 196
Parking 196
Brake 202
Brake and P (Park)
Mechanism Check 241
Over Things That Burn 196
Passenger Airbag Status
Indicator 99
Passenger Compartment Air
Filter 179
Passenger Sensing System 62
Perchlorate Materials
Requirements, California 220
Personalization
Vehicle 113
Phone
Bluetooth 146, 147, 153
Hands-Free 158
Pictures and
Movies 165, 170, 172
Port
USB 142
Power
Mirrors 38
Outlets 94
Protection, Battery 126
Reduced Engine Light 107
Retained Accessory (RAP) . . . 194
Windows 40
Power Steering Warning
Lights 104
Pregnancy, Using Safety Belts . . . 54
Privacy
Vehicle Data Recording 330
Program
Courtesy Transportation 324
Proposition
65 Warning,
California 220, 240, 287

R
Radio Frequency Statement 328
Radio Reception 141
Radios
AM-FM Radio 136
Satellite 140
Reading Lamps 124

Rear Seats 48
Rear Vision Camera (RVC) 208
Rear Window Washer/Wiper 92
Rearview Mirrors 39
Reclining Seatbacks 46
Recommended Fluids and
Lubricants 311
Records
Maintenance 313
Recreational Vehicle Towing 290
Reduced Engine Power Light . . . 107
Reimbursement Program,
GM Mobility 322
Remote Keyless Entry (RKE)
System 27
Remote Vehicle Start 29
Replacement Bulbs 247
Replacement Parts
Airbags 67
Maintenance 312
Replacing Airbag System 67
Replacing LATCH System
Parts after a Crash 80
Replacing Safety Belt System
Parts after a Crash 55
Reporting Safety Defects
Canadian Government 329
General Motors 329
Reporting Safety Defects (cont'd)
U.S. Government 329
Restraints
Where to Put 73
Retained Accessory
Power (RAP) 194
Roads
Driving, Wet 184
Roadside Assistance
Program 322
Roof
Sunroof 42
Rotation, Tires 266
Routing, Engine Drive Belt 317
Running the Vehicle While
Parked 197

S

Safety Belts 50
Care 55
Extender 55
How to Wear Safety Belts
Properly 51
Lap-Shoulder Belt 52
Reminders 98
Replacing after a Crash 55
Use During Pregnancy 54
Safety Defects Reporting
Canadian Government 329
Safety Defects Reporting (cont'd)
General Motors 329
U.S. Government 329
Safety Locks 32
Safety System Check 55
Satellite Radio 140
Satellite Radio Antenna 142
Scheduling Appointments 324
Sealant Kit, Tire 275
Seats
Adjustment, Front 45
Head Restraints 43
Heated Front 47
Rear 48
Reclining Seatbacks 46
Securing Child Restraints 80, 82
Security
OnStar® 333
Vehicle 36
Vehicle Alarm 36
Service
Accessories and
Modifications 220
Climate Control System 176
Doing Your Own Work 221
Engine Soon Light 100
Maintenance Records 313

Service (cont'd)
Maintenance, General Information 301
Parts Identification Label 314
Publications Ordering Information 327
Scheduling Appointments 324
Vehicle Soon Light 102
Services
Special Application 307
Servicing the Airbag 66
Shift Lock Control Function
Check, Automatic Transmission 241
Shifting
Into Park 195
Out of Park 196
Signals, Turn and Lane-Change 123
Smartphone Link 160, 162, 164
Spare Tire
Compact 286
Special Application Services 307
Specifications and Capacities 315
Speedometer 97
StabiliTrak
OFF Light 105
Start Assist, Hills 203
Start Vehicle, Remote 29
Starter Switch Check 240
Starting the Engine 17, 192
Steering 182
Power, Warning Lights 104
Wheel Adjustment 90
Wheel Controls 90
Stoplamps and Back-up Lamps
Bulb Replacement 245
Storage
Load Compartment 87
Storage Areas
Cargo Cover 87
Glove Box 86
Instrument Panel 86
Storage Compartments 86
Storing the Tire Sealant and Compressor Kit 281
Stuck Vehicle 186
Summer Tires 256
Sun Visors 41
Sunroof 42
Symbols 3
System
Forward Collision Alert (FCA) 210
Infotainment 127

T

Tachometer 97
Taillamps
Bulb Replacement 245
Text Telephone (TTY) Users 321
Theft-Deterrent Systems 37
Immobilizer 37
Time 93
Tires 254
All-Season 255
Buying New Tires 268
Chains 273
Changing 281
Compact Spare 286
Designations 258
Different Size 270
If a Tire Goes Flat 273
Inspection 266
Messages 111
Pressure Light 106
Pressure Monitor Operation . . 263
Pressure Monitor System 262
Rotation 266
Sealant and Compressor Kit 275
Sealant and Compressor Kit, Storing 281
Sidewall Labeling 256

Tires (cont'd)
Terminology and Definitions .. 259
Uniform Tire Quality Grading 270
Wheel Alignment and Tire Balance 272
Wheel Replacement 272
When It Is Time for New Tires 267
Winter 255
Towing
General Information 217
Recreational Vehicle 290
Vehicle 289
Traction
Control System (TCS)/ StabiliTrak® Light 105
Off Light 105
Traction Control/Electronic Stability Control 204
Trademarks and License Agreements 174
Transmission
Automatic 198
Fluid, Automatic 229
Fluid, Manual 230
Transportation Program, Courtesy 324
Trip Computer 111
Trip Odometer 97
Trunk 33
Turn and Lane-Change Signals 123
Turn Signal
Bulb Replacement 245

U

Uniform Tire Quality Grading ... 270
Up-Shift Light 103
USB Port 142
Using This Manual 2

V

Vehicle
Alarm System 36
Canadian Owners 2
Control 182
Identification Number (VIN) ... 314
Load Limits 187
Messages 111
Personalization 113
Remote Start 29
Security 36
Service Soon Light 102
Towing 289
Vehicle Ahead Indicator 104
Vehicle Care
Storing the Tire Sealant and Compressor Kit 281
Tire Pressure 261
Vehicle Data Recording and Privacy 330
Ventilation, Air 178
Visors 41

W

Warning
Brake System Light 102
Caution and Danger 2
Lane Departure (LDW) 212
Warning Light
Forward Collision Alert (FCA) 104
Warning Lights, Gauges, and Indicators 95
Warnings
Hazard Flashers 122
Washer Fluid 237
Wheels
Alignment and Tire Balance .. 272
Different Size 270
Replacement 272
When It Is Time for New Tires 267
Where to Put the Restraint 73

Windows 39
Manual 40
Power 40
Windshield
Wiper/Washer 91
Winter
Driving 185
Winter Tires 255
Wiper Blade Replacement 242
Wipers
Rear Washer 92