G-Class

Operator's Manual

Mercedes-Benz

Symbols

Registered trademarks:

- Bluetooth® is a registered trademark of Bluetooth SIG Inc.
- DTS is a registered trademark of DTS, Inc.
- Dolby and MLP are registered trademarks of DOLBY Laboratories.
- BabySmart™, ESP® and PRE-SAFE® are registered trademarks of Daimler AG.
- HomeLink® is a registered trademark of Prince.
- iPod® and iTunes® are registered trademarks of Apple Inc.
- Logic7® is a registered trademark of Harman International Industries.
- Microsoft® and Windows media® are registered trademarks of Microsoft Corporation.
- SIRIUS is a registered trademark of Sirius XM radio Inc.
- HD Radio is a registered trademark of iBiquity Digital Corporation.
- Gracenote® is a registered trademark of Gracenote, Inc.
- ZAGATSurvey® and related brands are registered trademarks of ZagatSurvey, LLC.

In this Operator's Manual, you will find the following symbols:

⚠ **WARNING**

Warning notes draw your attention to hazards that endanger your health or life, or the health or life of others.

Environmental note

Environmental notes provide you with information on environmentally aware actions or disposal.

! Notes on material damage alert you to dangers that could lead to damage to your vehicle.

i Practical tips or further information that could be helpful to you.

▶ This symbol indicates an instruction that must be followed.

▶ Several of these symbols in succession indicate an instruction with several steps.

(▷ page) This symbol tells you where you can find more information about a topic.

▷▷ This symbol indicates a warning or an instruction that is continued on the next page.

Display This font indicates a display in the multifunction display/COMAND display.

This symbol tells you that you can find further information in the Digital Operator's Manual.

Parts of the software in the vehicle are protected by copyright © 2005 The FreeType Project http://www.freetype.org. All rights reserved.

Welcome to the world of Mercedes-Benz

Before you first drive off, read this Operator's Manual carefully and familiarize yourself with your vehicle. For your own safety and a longer vehicle life, follow the instructions and warning notices in this manual. Disregarding them may lead to damage to the vehicle or personal injury.

Vehicle damage resulting from the disregard of the instructions is not covered by the Mercedes-Benz Limited Warranty.

The equipment or model designation of your vehicle may differ according to:

- Model
- Order
- Country specification
- Availability

Mercedes-Benz therefore reserves the right to introduce changes in the following areas:

- design
- equipment
- technical features

The equipment in your vehicle may therefore differ from that shown in the descriptions and illustrations.

The following are integral components of the vehicle:

- Operator's Manual
- Maintenance Booklet
- Equipment-dependent supplements

Keep printed copies of the documents in the vehicle at all times. If you sell the vehicle, always pass the documents on to the new owner.

The technical documentation team at Daimler AG wishes you safe and pleasant motoring.

Mercedes-Benz USA, LLC

Mercedes-Benz Canada, Inc.

A Daimler Company

XXXX

Index 4

Introduction 20

At a glance 27

Safety 37

Opening/closing 67

Seats, steering wheel and mirrors 83

Lights and windshield wipers 97

Climate control 117

Driving and parking 137

On-board computer and displays 207

Stowage and features 261

Maintenance and care 287

Breakdown assistance 301

Wheels and tires 317

Technical data 347

1, 2, 3 ...

115 V socket 271
12 V socket 271
4ETS (Electronic Traction System)
Function/notes 62
4MATIC (permanent four-wheel drive) 193
4MATIC off-road system 193

A

ABS (Anti-lock Braking System)
Display message 226
Function/notes 61
Important safety notes 61
Warning lamp 250
Active Blind Spot Assist
Activating/deactivating (on-board computer) 218
Display message 240
Function/information 189
Trailer towing 192
ADAPTIVE BRAKE 64
Adaptive brake lamps 62
Additives (engine oil) 354
Air bags
Display message 231
Front air bag (driver, front passenger) 42
Important safety notes 41
PASSENGER AIR BAG OFF-indicator lamp 44
Safety guidelines 40
Window curtain air bag 44
Air-conditioning system
see Climate control
Air vents
Important safety notes 134
Rear 136
Setting 134
Setting the center air vents 135
Setting the side air vents 135
Alarm system
see ATA (Anti-Theft Alarm system)
All-wheel drive
Transfer case 198
AMG menu (on-board computer) 222
Anti-lock braking system
see ABS (Anti-lock Braking System)
Anti-theft alarm system
see ATA (Anti-Theft Alarm system)
Approach/departure angle 167
Ashtray 269
Assistance menu (on-board computer) 218
ASSYST service interval display
Service messages 293
ATA (Anti-Theft Alarm system)
Activating/deactivating 65
Function 65
Switching off the alarm 65
Audio system
see separate operating instructions
Authorized Mercedes-Benz Center
see Qualified specialist workshop
AUTO lights
Display message 234
see Lights
Automatic car wash 295
Automatic engine start (ECO start/stop function) 143
Automatic engine switch-off (ECO start/stop function) 142
Automatic headlamp mode 100
Automatic transmission
Automatic drive program 150
Display message 245
Drive position (ECO start/stop function) 147
Driving tips 149
Emergency running mode 153
Engaging drive position 147
Engaging neutral 147
Engaging reverse gear 146
Engaging the park position 146
Important safety notes 145
Kickdown 149
Manual drive program 151
Neutral (ECO start/stop function) . 147
Overview 145
Problem (malfunction) 153
Program selector button 149
Pulling away 140
Selector lever 145

Shift ranges 150
Steering wheel paddle shifters 150
Trailer towing 149
Transmission position display 146
Automatic transmission emergency mode 153
Axle load, permissible (trailer towing) 358

B

Backup lamp
Changing bulbs 113
BAS (Brake Assist System) 61
Battery
Checking (SmartKey) 70
Important safety guidelines (SmartKey) 70
Replacing (SmartKey) 71
Battery (vehicle)
Charging 307
Display message 236
Important safety notes 305
Jump starting 308
Overview 305
Blind Spot Assist
Activating/deactivating 218
Display message 240
Notes/function 186
see Active Blind Spot Assist
Brake fluid
Display message 229
Notes 354
Brake fluid level 292
Brake lamps
Adaptive 62
Display message 232
Brakes
ABS 61
BAS 61
Brake fluid (notes) 354
Display message 226
Driving tips 159
High-performance brake system 161
Important safety notes 159
Maintenance 160
Parking brake 157
Warning lamp 249
Breakdown
see Flat tire
see Towing away
Brush guard 280
Bulbs
Backup lamp 113
Brake lamp 113
Cornering light function 110
Fog lamps 110
Rear fog lamp 113
Tail lamp 113
see Changing bulbs

C

California
Important notice for retail customers and lessees 21
Calling up a malfunction
see Display messages
Care
Carpets 300
Car wash 295
Chrome parts 298
Display 298
Gear or selector lever 299
Headlamps 297
Interior 298
Matte finish 296
Notes 294
Paint 296
Plastic trim 298
Power washer 295
Rear view camera 298
Roof lining 300
Seat belt 300
Seat covers 299
Sensors 297
Steering wheel 299
Tail pipes 298
Trim strips 299
Washing by hand 295
Wheels 296
Windows 297
Wiper blades 297
Wooden trim 299

Cargo compartment cover
Installing/removing 267
Notes/how to use 267
Opening and closing 267
Overview 267
Cargo compartment enlargement
Important safety notes 264
Cargo tie down rings 267
CD player/CD changer (on-board computer) 216
Center console
Overview 32
Upper section 32
Central locking
Automatic locking (on-board computer) 220
Locking/unlocking (SmartKey) 68
Changing bulbs
Important safety notes 108
Overview of bulb types 109
Reversing lamps 113
Side marker lamps 112
Turn signals (front) 111
Changing gears 148
Checklist
After driving off-road 166
Before driving off-road 165
Child-proof locks
Important safety notes 59
Rear doors 59
Children
In the vehicle 54
Restraint systems 54
Child seat
Automatic recognition 44
Automatic recognition/air bag deactivation, self-test 46
LATCH-type (ISOFIX) child seat anchors 57
Special seat belt retractor 56
Top Tether 58
Troubleshooting 47
Chrome parts (cleaning instructions) 298
Cigarette lighter 270
Climate control
Controlling automatically 130
Cooling with air dehumidification . . 124
Defrosting the windows 132
Defrosting the windshield 131
Dual-zone automatic climate control 119
Important safety notes 118
Indicator lamp 129
Maximum cooling 132
Notes on using automatic climate control 120
Overview of systems 118
Problems with "cooling with air dehumidification" 129
Problem with the rear window defroster 133
Refrigerant 354
Setting the air distribution 131
Setting the airflow 131
Setting the air vents 134
Setting the temperature 131
Switching air-recirculation mode on/off 134
Switching on/off 121
Switching residual heat on/off 134
Switching the rear window defroster on/off 133
Switching the ZONE function on/off 131
Windshield defroster 133
Cockpit
Overview 28
see Instrument cluster
COMAND
see separate operating instructions
Combination switch 103
Consumption statistics (on-board computer) 213
Convenience opening feature
see Side windows
Coolant (engine)
Checking the level 291
Display message 234
Filling capacity 356
Notes 354
Temperature (on-board computer) . 222

Temperature gauge 209
Warning lamp 256
Cooling
see Climate control
Cornering light function
Function/notes 104
Cruise control
Cruise control lever 170
Display message 242
Driving system 169
Function/notes 169
Selecting 170
Cup holder
Center console 268
Important safety notes 268
Rear compartment 268
Customer Assistance Center (CAC) ... 24
Customer Relations Department 24

D

Data
see Technical data
Daytime running lamps
Display message 234
Switching on/off (on-board computer) 219
Switching on/off (switch) 99
Delayed switch-off
Exterior lighting (on-board computer) 219
Interior lighting 220
Differential locks 201
Digital speedometer 213
Display (cleaning instructions) 298
Display messages
Calling up (on-board computer) 225
Driving systems 238
Engine 234
General notes 224
Hiding (on-board computer) 224
Lights 231
Safety systems 226
Service interval display 293
SmartKey 247
Tires 242
Vehicle 245
Distance display (on-board computer) 218
Distance recorder
see Trip odometer
Distance warning (warning lamp) 258
DISTRONIC PLUS
Activating 179
Activation conditions 179
Cruise control lever 179
Deactivating 184
Display message 240
Displays in the multifunction display 182
Driving tips 184
Function/notes 177
Important safety notes 177
Setting the specified minimum distance 183
wählen 179
Warning lamp 258
Door control panel
Overview 35
Doors
Automatic locking (on-board computer) 220
Automatic locking (switch) 75
Central locking/unlocking (SmartKey) 68
Display message 246
Emergency locking 76
Emergency unlocking 75
Important safety notes 73
Opening (from inside) 74
Overview 73
Drinking and driving 159
Drive program
Automatic 150
Display 146
Manual 151
SETUP (on-board computer) 222
Driving abroad
Symmetrical low beam 98
Driving in mountainous terrain
Approach/departure angle 167
Driving downhill 169
Gradient-climbing capability (maximum) 168

Driving lamps
see Daytime running lamps
Driving off-road
see Off-road driving
Driving on flooded roads 162
Driving safety systems
4ETS (Electronic Traction System) ... 62
ABS (Anti-lock Braking System) 61
ADAPTIVE BRAKE 64
Adaptive brake lamps 62
BAS (Brake Assist System) 61
Electronic brake force distribution ... 64
ESP® (Electronic Stability Program) 62
Important safety information 60
Overview 60
Driving system
Variable SPEEDTRONIC 174
Driving systems
Active Blind Spot Assist 188
Blind Spot Assist 186
Cruise control 169
Display message 238
DISTRONIC PLUS 177
HOLD function 192
PARKTRONIC 194
Rear view camera 197
SPEEDTRONIC 174
Driving tips
Automatic transmission 149
Brakes 159
DISTRONIC PLUS 184
Downhill gradient 160
Driving abroad 98
Driving in winter 163
Driving on flooded roads 162
Driving on sand 166
Driving over obstacles 167
General 158
Gravel roads 166
Hydroplaning 162
Icy road surfaces 163
Off-road driving 164
Off-road fording 162
Snow chains 321
Symmetrical low beam 98
Tire ruts 166
Towing a trailer 203
Traveling uphill 167
Wet road surface 160
DVD audio
Operating (on-board computer) 216
DVD video
Operating (on-board computer) 216

E

EASY-ENTRY feature
Activating/deactivating 221
Function/notes 92
EASY-EXIT feature
Function/notes 92
Switching on/off 221
EBD (electronic brake force distribution)
Display message 228
Function/notes 64
ECO start/stop function
Deactivating/activating 142
General information 141
Electronic Stability Program
see ESP® (Electronic Stability Program)
Electronic Traction System
see 4ETS (Electronic Traction System)
Emergency call
see mbrace
Emergency locking
Vehicle 76
Emergency release
Vehicle 75
Emergency Tensioning Devices
Function 53
Safety guidelines 40
Emissions control
Service and warranty information 21
Engine
Check Engine warning lamp 256
Display message 234
ECO start/stop function 141
Engine number 350
Irregular running 144
Jump-starting 308
Starting problems 144
Starting the engine with the SmartKey 140
Switching off 157

Engine electronics
Problem (malfunction) 144
Engine oil
Adding 291
Additives 354
Checking the oil level 289
Display message 236
Filling capacity 353
Notes about oil grades 353
Temperature (on-board computer) . 222
Viscosity 354
Environmental protection
Note 20
ESP® (Electronic Stability Program)
AMG menu (on-board computer) ... 222
Deactivating/activating 63
Display message 226
Function/notes 62
Important safety information 62
Trailer stabilization 64
Warning lamp 252
Exhaust check 159
Exhaust tail pipe (cleaning instructions) 298
Exterior lighting
see Lights
Exterior mirrors
Adjusting 93
Dipping (automatic) 94
Folding in/out (automatically) 94
Folding in/out (electrically) 93
Folding in when locking (on-board computer) 221
Out of position (troubleshooting) 94
Setting 93
Storing settings (memory function) 95
Storing the parking position 94

F

Filler cap
see Fuel filler flap
First-aid kit 302
Flat tire
Preparing the vehicle 304
Floormat 284
Fog lamps
Switching on/off 101
Folding the seat backrest (rear) forwards/back 265
Front fog lamp (display message) ... 233
Front fog lamps
Switching on/off 101
Fuel
Additives 353
Consumption statistics 213
Displaying the current consumption 213
Displaying the range 213
Fuel gauge 209
Grade (gasoline) 351
Important safety notes 351
Notes for AMG vehicles 352
Premium-grade unleaded gasoline . 351
Problem (malfunction) 156
Refueling 153
Tank content/reserve fuel 351
Fuel/water separator
Service 294
Fuel consumption
Notes 159
Fuel filler flap
Emergency release 155
Opening/closing 154
Fuel level
Calling up the range (on-board computer) 213
Fuel tank
Capacity 351
Problem (malfunction) 156
Fuse allocation chart 313
Fuse box
Battery case 315
Dashboard 314
Front-passenger footwell 314
Transmission tunnel 314
Fuse extractor 313
Fuses
Allocation chart 313
Before changing 313
Dashboard fuse box 314
Fuse allocation chart 313
Fuse box in the front-passenger footwell 314

Fuse box in the transmission tunnel 314
Important safety notes 313
In the battery case 315

G

Garage door opener
Clearing the memory 284
Important safety notes 280
Opening/closing the garage door .. 284
Programming the remote control ... 281
Gasoline 351
Gear indicator (on-board computer) 222
Gear or selector lever (cleaning guidelines) 299
Genuine Mercedes-Benz parts 348
Genuine wood trim and trim strips (cleaning instructions) 299
Glove box 263
Gradient-climbing capability (maximum) 168
GTW (Gross Trailer Weight) (definition) 338

H

Hazard warning lamps 104
Headlamps
Adding fluid to cleaning system 292
Cleaning 297
Cleaning system (capacity) 356
Cleaning system (function) 103
Cleaning system (notes) 356
Fogging up 105
Protective grille 112
see Automatic headlamp mode
Head restraints
Adjusting 86
Adjusting (rear) 87
Installing/removing (rear) 88
Luxury 87
Resetting (front) 87
Heating
see Climate control
High-beam headlamps
Display message 232
Switching on/off 103
Hill start assist 141
HOLD function
Function/notes 192
Hood
Closing 289
Display message 246
Important safety notes 288
Opening 289
Hydroplaning 162

I

Immobilizer 64
Instrument cluster
Overview 209
Warning and indicator lamps 247
Instrument cluster lighting 209
Interior lighting 105
Automatic control 106
Cargo compartment lamp 107
Delayed switch-off (on-board computer) 220
Manual control 106
Overview 105
Reading lamp 107
Rear interior lighting 108

J

Jack
Pump lever 342
Storage location 302
Using 342
Jump starting (engine) 308

K

Key positions
SmartKey 139
Kickdown
Manual drive program 152

L

Lap time (RACETIMER) 222
LATCH-type (ISOFIX) child seat anchors 57
License plate lamp (display message) 233
Lights
Activating/deactivating the interior lighting delayed switch-off . 220
Automatic headlamp mode 100
Cornering light function 104
Driving abroad 98
Fog lamps 101
Hazard warning lamps 104
High beam flasher 104
High-beam headlamps 103
Light switch 98
Low-beam headlamps 99
Parking lamps 102
Rear fog lamp 101
Standing lamps 102
Switching the daytime running lamps on/off (on-board computer) 219
Switching the daytime running lamps on/off (switch) 99
Switching the exterior lighting delayed switch-off on/off (on-board computer) 219
Switching the surround lighting on/off (on-board computer) 219
Turn signals 103
see Changing bulbs
see Interior lighting
Light sensor (display message) 234
LIM indicator lamp
Cruise control 170
DISTRONIC PLUS 179
Variable SPEEDTRONIC 175
Limit speed
Variable SPEEDTRONIC 174
Load anchorage 266
Loading guidelines 262
Locking
Emergency locking 76
From inside the vehicle (central locking button) 74
see Central locking
Locking (doors)
Automatic 75
Locking centrally
see Central locking
Locking verification signal (on-board computer) 221
Low-beam headlamps
Display message 231
Setting for driving abroad (symmetrical) 98
Switching on/off 99
LOW RANGE off-road gear 199
Luggage compartment enlargement
Overview 264
Lumbar support
Adjusting the 4-way lumbar support 89
Luxury head restraints 87

M

M+S tires 320
Malfunction message
see Display messages
Matte finish (cleaning instructions) 296
mbrace
Call priority 276
Display message 229
Downloading destinations (COMAND) 277
Downloading routes 279
Emergency call 274
Geo fencing 280
Important safety notes 272
Locating a stolen vehicle 278
MB info call button 276
Remote vehicle locking 277
Roadside Assistance button 275
Self-test 273
Speed alert 279
System 273

Triggering the vehicle alarm 280
Vehicle remote malfunction diagnosis 278
Vehicle remote unlocking 277
Mechanical key
Function/notes 70
General notes 70
Removing 70
Memory card (audio) 216
Memory function 95
Message memory (on-board computer) 225
Messages
see Display messages
Mirrors
Sun visor 269
see Exterior mirrors
see Rear-view mirror
Mobile phone
Menu (on-board computer) 216
Mounting wheels
Mounting a new wheel 343
Raising the vehicle 342
Removing a wheel 343
Securing the vehicle against rolling away 341
MP3
Operation 216
see separate operating instructions
Multifunction display
Function/notes 212
Permanent display 219
Multifunction steering wheel
Back button 211
Operating the on-board computer . 210
Overview 31

N

Navigation
Menu (on-board computer) 214
see separate operating instructions
NECK-PRO head restraints
Operation 47
Resetting after being triggered 48
Notes on breaking-in a new vehicle 138

O

Occupant safety
Children in the vehicle 54
Important safety notes 38
Odometer
see Trip odometer
Off-road
Differential locks 201
Off-road ABS 61
Off-road driving
Checklist 165
Driving on sand 166
Important safety notes 164
Traveling uphill 167
Off-road fording 162
Off-road system
4MATIC 193
Oil
see Engine oil
On-board computer
AMG menu 222
Assistance menu 218
Audio menu 215
Convenience submenu 221
Display messages 224
DISTRONIC PLUS 182
Factory settings submenu 222
Important safety notes 208
Instrument cluster submenu 219
Lighting submenu 219
Menu overview 212
Message memory 225
Navigation menu 214
Operation 210
RACETIMER 222
Service menu 218
Settings menu 218
Standard display 212
Telephone menu 216
Trip menu 212
Vehicle submenu 220
Video DVD operation 216
Operating system
see On-board computer
Outside temperature display 210
Overhead control panel 34

Override feature
Rear side windows 59

P

Paint code number 349
Paintwork (cleaning instructions) ... 296
Panic alarm 38
Parcel net 264
Parking 156
Engaging park position 146
Important safety notes 156
Position of exterior mirror, front-passenger side 94
see PARKTRONIC
Parking aid
see Exterior mirrors
see PARKTRONIC
Parking brake
Applying 157
Display message 228
Warning lamp 255
Parking lamps
Switching on/off 102
PARKTRONIC
Deactivating/activating 196
Driving system 194
Function/notes 194
Important safety notes 194
Problem (malfunction) 197
Range of the sensors 194
Trailer towing 196
Warning display 195
Pedals 159
Plastic trim (cleaning instructions) . 298
Power supply (trailer) 206
Power washers 295
Product information 20
Programming
SmartKey 69
Program selector button 149
Pulling away
Automatic transmission 140

Q

Qualified specialist workshop 23

R

RACETIMER
Deleting all laps 223
Displaying and starting 222
Displaying the intermediate time ... 223
Resetting the current lap 223
Starting a new lap 223
Stopping 223
RACETIMER (on-board computer) 222
Radio
Selecting a station 215
see separate operating instructions
Reading lamp 105
Rear bench seat
Folding forward 266
Rear compartment
Setting the air vents 136
Rear door
Closing 77
Display message 246
Important safety notes 77
Opening 77
Opening/closing 77
Rear fog lamp
Display message 233
Switching on/off 101
Rear lamps
see Lights
see Tail lamps
Rear seat bench
Folding into an upright position 266
Rear view camera
Function/notes 197
Rear view camera (cleaning instructions) 298
Rear-view mirror
Dipping (automatic) 94
Rear window defroster
Problem (malfunction) 133
Switching on/off 133
Rear window wiper
Switching on/off 115
Refueling
Fuel gauge 209
Important safety notes 153
Refueling process 154
see Fuel

Remote control
Programming (garage door opener) 281
Reporting safety defects 24
Reserve (fuel tank)
see Fuel
Reserve fuel
Display message 237
Warning lamp 256
see Fuel
Residual heat
Switching on/off 134
Restraint systems
see SRS (Supplemental Restraint System)
Reversing lamps (display message) 233
Roadside Assistance (breakdown) 22
Roof lining and carpets (cleaning guidelines) 300
Route (navigation)
see Route guidance (navigation)
Route guidance (navigation) 214

S

Safety
Children in the vehicle 54
Child restraint systems 54
Safety system
see Driving safety systems
Seat backrest
Folding back 265
Seat belts
Adjusting the height 52
Belt force limiters 53
Cleaning 300
Correct usage 49
Emergency Tensioning Devices 53
Fastening 50
Fastening, front 51
Fastening in the rear, center 51
Important safety guidelines 48
Releasing 52
Safety guidelines 40
Special seat belt retractor 56
Warning lamp 248
Warning lamp (function) 53
Seat heating
Indicator lamp (malfunction) 90
Seats
Adjusting (electrically) 86
Adjusting the 4-way lumbar support 89
Adjusting the head restraint 86
Cleaning the cover 299
Correct driver's seat position 84
Important safety notes 85
Overview 85
Storing settings (memory function) 95
Switching seat heating on/off 89
Switching seat ventilation on/off 90
Seat ventilation
Indicator lamp (malfunction) 90
Sensors (cleaning instructions) 297
Service interval display
Displaying a service message (on-board computer) 293
Service menu (on-board computer) . 218
Service products
Brake fluid 354
Coolant (engine) 354
Engine oil 353
Fuel 350
Important safety notes 350
Notes 350
Refrigerant (air-conditioning system) 354
Washer fluid 356
Setting a speed limit
see SPEEDTRONIC
Settings
Calling up a stored setting 96
Factory (on-board computer) 222
On-board computer 218
Setting the air distribution 131
SETUP (on-board computer) 222
Shift ranges 150
Side marker lamp (display message) 233
Side marker lamps (changing bulbs) 112

Side windows
Convenience opening feature 78
Important safety information 78
Opening/closing 78
Overview 78
Troubleshooting 79
Ski rack 267
Sliding sunroof
Important safety notes 79
Opening/closing 80
Operating manually 80
Problem (malfunction) 81
SmartKey
Changing the battery 71
Changing the programming 69
Checking the battery 70
Convenience opening feature 78
Display message 247
Door central locking/unlocking 68
Important safety notes 68
Loss 72
Malfunction 72
Mechanical key 70
Overview 68
Problem (malfunction) 72
Starting the engine 140
Snow chains 321
Sockets
Front-passenger footwell 271
Luggage compartment 271
Rear compartment 271
SOS
see mbrace
Spare fuses 313
Spare wheel
Mounting 340
Notes/data 346
Spare wheel bracket at the rear 303
Stainless-steel spare hub cap 304
Specialist workshop 23
Special seat belt retractor 52
Speed, controlling
see Cruise control
Speedometer
Digital 213
In the Instrument cluster 209
Segments 210
Selecting the unit of measurement 219
see Instrument cluster
SPEEDTRONIC
Display message 241
Selecting 175
Variable 174
SRS
see SRS (Supplemental Restraint System)
SRS (Supplemental Restraint System)
Display message 229
Introduction 39
Warning lamp 255
Warning lamp (function) 39
Standing lamps
Display message 233
Switching on/off 102
Starting the engine
Important safety notes 140
Steering (display message) 246
Steering wheel
Adjusting (electrically) 91
Buttons (on-board computer) 210
Cleaning 299
Important safety notes 90
Paddle shifters 150
Steering wheel heating 91
Storing settings (memory function) 95
Steering wheel heating
Indicator lamp (malfunction) 91
Steering wheel paddle shifters 150
Stopwatch (RACETIMER) 222
Stowage areas 263
Stowage compartments
Armrest (under) 263
Cup holders 268
Glove box 263
Important safety information 263
Stowage pockets 264
Summer tires 320
Sun visor 268

Supplemental Restraint System
see SRS (Supplemental Restraint System)
Surround lighting (on-board computer) 219
Suspension tuning
SETUP (on-board computer) 222
SUV
(Sport Utility Vehicle) 22
Switching air-recirculation mode on/off 134
Switching off the alarm (ATA) 65

T

Tachometer 210
Tailgate
Opening dimensions 357
Tail lamps
Display message 233
see Lights
Tank content
Fuel gauge 209
Technical data
Capacities 350
Tires 344
Tires/wheels 344
Trailer Loads 358
Vehicle data 357
Wheels 344
TELEAID
Call priority 276
Downloading destinations (COMAND) 277
Downloading routes 279
Emergency call 274
Geo fencing 280
Important safety notes 272
Locating a stolen vehicle 278
MB info call button 276
Remote vehicle locking 277
Roadside Assistance button 275
Self-test 273
Speed alert 279
System 273
Triggering the vehicle alarm 280
Vehicle remote malfunction diagnosis 278
Vehicle remote unlocking 277
Telephone
Accepting a call 217
Display message 246
Menu (on-board computer) 216
Number from the phone book 217
Redialing 217
Rejecting/ending a call 217
Telephone compartment 263
Temperature
Coolant 209
Coolant (on-board computer) 222
Engine oil (on-board computer) 222
Outside temperature 210
Setting (climate control) 131
Theft deterrent systems
ATA (Anti-Theft Alarm system) 65
Immobilizer 64
Tilt/sliding sunroof
see Sliding sunroof
Time
see Separate Operator's Manual
Timing (RACETIMER) 222
Tire pressure
Calling up (on-board computer) 325
Checking manually 325
Display message 242
Maximum 324
Notes 323
Recommended 322
Table (single tires) 322
Tire pressure monitor
Checking the tire pressure electronically 327
Warning message 327
Tire pressure monitoring system
Function/notes 325
Restarting 327
Warning lamp 259
Tires
Aspect ratio (definition) 339
Average weight of the vehicle occupants (definition) 338
Bar (definition) 338
Changing a wheel 340
Characteristics 337

Checking 319
Definition of terms 338
Direction of rotation 341
Display message 242
Distribution of the vehicle occupants (definition) 340
DOT, Tire Identification Number (TIN) 337
DOT (Department of Transportation) (definition) 338
GAWR (Gross Axle Weight Rating) (definition) 338
GTW (Gross Trailer Weight) (definition) 338
GVW (Gross Vehicle Weight) (definition) 338
GVWR (Gross Vehicle Weight Rating) (definition) 339
Important safety notes 318
Increased vehicle weight due to optional equipment (definition) 338
Kilopascal (kPa) (definition) 339
Labeling (overview) 334
Load bearing index (definition) 340
Load index 336
Load index (definition) 339
Maximum loaded vehicle weight (definition) 339
Maximum load on a tire (definition) 339
Maximum permissible tire pressure (definition) 339
Maximum tire load 337
Maximum tire load (definition) 339
Optional equipment weight (definition) 340
PSI (pounds per square inch) (definition) 339
Replacing 340
Service life 320
Sidewall (definition) 340
Speed rating (definition) 338
Storing 341
Structure and characteristics (definition) 338
Technical data 344
Temperature 333
TIN (Tire Identification Number) (definition) 340
Tire bead (definition) 340
Tire pressure (definition) 339
Tire pressures (recommended) 338
Tire size (data) 344
Tire size designation, load-bearing capacity, speed rating 334
Tire tread 319
Tire tread (definition) 339
Total load limit (definition) 340
Traction 333
Traction (definition) 340
Tread wear 333
TWR (permissible trailer drawbar noseweight) (definition) 340
Uniform Tire Quality Grading Standards 332
Uniform Tire Quality Grading Standards (definition) 338
Unladen weight (definition) 339
Wear indicator (definition) 340
Wheel rim (definition) 338
see Flat tire

Top Tether 58

Towing
Important safety guidelines 310
In the event of malfunctions 313

Towing a trailer
Axle load, permissible 358
Driving tips 203
Lights display message 231
Mounting dimensions 358
Shift range 149
Trailer loads 358
Trailer tow hitch 358

Towing away
With both axles on the ground 312

Towing eye
Front 311
Rear 311

Tow-starting
Important safety notes 310

Trailer
7-pin connector 206
Power supply 206

Trailer loads
Technical data 358

Trailer tow hitch
Ball position 359
Trailer towing
Active Blind Spot Assist 192
ESP® 64
PARKTRONIC 196
Transfer case
General notes 198
Shifting 199
Shifting (general notes) 199
Shifting (important safety notes) ... 199
Shifting to neutral 200
Shift range 198
Switching off the off-road gear ratio 200
Switching on the off-road gear ratio 199
Transmission
see Automatic transmission
Transmission positions 148
Transporting the vehicle 312
Traveling uphill
Brow of hill 168
Trip computer (on-board computer) 213
Trip odometer
Calling up 212
Resetting (on-board computer) 214
Turn signals
Changing bulbs (front) 111
Display message 232
Switching on/off 103
TWR (Tongue Weight Rating) (definition) 340
Type identification plate
see Vehicle identification plate

U

Unlocking
Emergency unlocking 75
From inside the vehicle (central unlocking button) 74

V

Vanity mirror
Sun visor 269
Variable SPEEDTRONIC
Function/notes 174
Vehicle
Correct use 23
Data acquisition 24
Display message 245
Emergency locking 76
Emergency unlocking 75
Equipment 21
Individual settings 218
Limited Warranty 24
Loading 328
Locking (SmartKey) 68
Lowering 344
Maintenance 21
Parking for a long period 158
Pulling away 140
Raising 342
Reporting problems 24
Securing from rolling away 341
Towing away 310
Tow-starting 310
Transporting 312
Unlocking (SmartKey) 68
Vehicle data 357
Vehicle data 357
Vehicle dimensions 357
Vehicle identification number
see VIN
Vehicle identification plate 349
Vehicle tool kit 302
Ventilation
Setting the airflow 131
Video
Operating the DVD 216
VIN 349

W

Warning and indicator lamps
ABS 250
Brakes 249
Check Engine 256
Coolant 256

Cruise control 170
Distance warning 258
DISTRONIC PLUS 258
ESP® 252
ESP® OFF 253
Fuel tank 256
LIM (DISTRONIC PLUS) 179
LIM (variable SPEEDTRONIC) 175
Overview 30, 247
Parking brake 255
PASSENGER AIRBAG OFF 44
Reserve fuel 256
Seat belt 248
SRS 255
Tire pressure monitor 259
Warning triangle 302
Warranty 348
Washer fluid
Display message 246
Wheel bolt tightening torque 344
Wheels
Changing a wheel 340
Checking 319
Cleaning 296
Cleaning (warning) 341
Important safety notes 318
Interchanging/changing 340
Mounting a new wheel 343
Mounting a wheel 341
Overview 318
Removing a wheel 343
Storing 341
Technical data 344
Tightening torque 344
Wheel size/tire size 344
Window curtain air bag
Display message 230
Operation 44
Windows
see Side windows
Windows (cleaning instructions) 297
Windshield
Defrosting 131
Windshield heating 133
Windshield washer fluid
see Windshield washer system
Windshield washer system
Adding washer fluid 292
Filling capacity 356
Notes 356
Windshield wipers
Problem (malfunction) 116
Rear window wiper 115
Replacing the wiper blades 115
Switching on/off 114
Winter
Driving in winter 163
Winter operation 320
Winter driving
Snow chains 321
Winter operation
Overview 320
Winter tires
M+S tires 320
Wiper blades
Cleaning 297
Important safety notes 115
Replacing 115

Protection of the environment

General notes

Environmental note

Daimler's declared policy is one of integrated environmental protection.

The objectives are for the natural resources that form the basis of our existence on this planet to be used sparingly and in a manner that takes the requirements of both nature and humanity into account.

You too can help to protect the environment by operating your vehicle in an environmentally responsible manner.

Fuel consumption and the rate of engine, transmission, brake and tire wear depend on the following factors:

- operating conditions of your vehicle
- your personal driving style

You can influence both factors. You should bear the following in mind:

Operating conditions:

- avoid short trips as these increase fuel consumption.
- always make sure that the tire pressures are correct.
- do not carry any unnecessary weight.
- keep an eye on the vehicle's fuel consumption.
- remove roof racks once you no longer need them.
- a regularly serviced vehicle will contribute to environmental protection. You should therefore adhere to the service intervals.
- always have service work carried out at a qualified specialist workshop.

Personal driving style:

- do not depress the accelerator pedal when starting the engine.
- do not warm up the engine when the vehicle is stationary.
- drive carefully and maintain a safe distance from the vehicle in front.
- avoid frequent, sudden acceleration.
- change gear in good time and use each gear only up to ⅔ of its maximum engine speed.
- switch off the engine in stationary traffic.

Product information

Mercedes-Benz recommends that you use genuine Mercedes-Benz parts, conversion parts and accessories that have been approved for your vehicle.

Mercedes-Benz tests genuine parts as well as conversion parts and accessories that have been specifically approved for your vehicle for their reliability, safety and suitability. Despite ongoing market research, Mercedes-Benz is unable to assess other parts. Therefore, Mercedes-Benz accepts no responsibility for the use of such parts in Mercedes-Benz vehicles. This is also the case, even if they have been independently or officially approved. The use of non-approved parts could affect your vehicle's operating safety.

Genuine Mercedes-Benz parts, approved conversion parts and accessories are available from any authorized Mercedes-Benz Center. Here, you will receive advice about permissible technical modifications, and the parts will be professionally installed.

Operator's Manual

General notes

Before you first drive off, read this Operator's Manual carefully and familiarize yourself with your vehicle.

For your own safety and a longer vehicle life, follow the instructions and warning notices in this manual. Disregarding them may lead to damage to the vehicle or personal injury.

Vehicle damage resulting from the disregard of the instructions is not covered by the Mercedes-Benz Limited Warranty.

Vehicle equipment

This Operator's Manual describes all models and all standard and optional equipment of your vehicle available at the time of going to print. Country-specific differences are possible. Please note that your vehicle may not be equipped with all features described. This also applies to safety-related systems and functions. The equipment in your vehicle may therefore differ from some of the descriptions or illustrations.

The original purchase agreement lists all systems installed in your vehicle.

Contact an authorized Mercedes-Benz Center if you have any questions about equipment or operation.

The Operator's Manual and the Maintenance Booklet are important documents and should be kept in the vehicle.

Service and vehicle operation

Service and literature

Your vehicle is covered under the terms of the warranties printed in the Service and Warranty Information booklet. Your authorized Mercedes-Benz Center will exchange or repair any defective parts originally installed in the vehicle in accordance with the terms of the following warranties:

- New Vehicle Limited Warranty
- Emission Systems Warranty
- Emission Performance Warranty
- California, Connecticut, Maine, Massachusetts, New York, Pennsylvania, Rhode Island and Vermont Emission Control Systems Warranty
- State warranty enforcement laws (lemon laws)

Information for customers in California

In California, you have the right to exchange a vehicle or receive a refund of the purchase or leasing price if Mercedes-Benz USA, LLC and/or an authorized workshop or maintenance facility cannot, after several authorized repairs, rectify considerable damage to or malfunctions of the vehicle that are covered by the contractual warranty. During the period of 18 months from original delivery of the vehicle or the accumulation of 18,000 miles (approximately 29,000 km) on the odometer of the vehicle, whichever occurs first, a reasonable number of repair attempts is presumed for a retail buyer or lessee if one or more of the following occurs:

(1) the serious defect or damage can result in deadly or serious injury to the vehicle occupants while driving AND this defect has already been repaired at least twice AND Mercedes-Benz, LLC has been informed in writing of the necessity of a repair.

(2) the defect or damage, though less serious than (1) above, has already been repaired at least four times AND Mercedes-Benz has been informed in writing of the necessity of a repair.

(3) the vehicle cannot be used for longer than 30 calendar days because of repair work resulting from this or other serious defects or damage.

Please send your written notice to:

Mercedes-Benz USA, LLC

Customer Assistance Center

One Mercedes Drive

Montvale, NJ 07645-0350

Maintenance

The Service and Warranty Booklet describes all the necessary maintenance work which should be done at regular intervals.

Always have the Service and Warranty Booklet with you when you bring the vehicle to an authorized Mercedes-Benz Center. The service advisor will record every service for you in the Service and Warranty Booklet.

Roadside Assistance

The Mercedes-Benz Roadside Assistance Program offers technical help in the event of a breakdown. Calls to the toll-free Roadside Assistance Hotline are answered by our agents 24 hours a day, 365 days a year.

1-800-FOR-MERCedes(1-800-367-6372) (USA)

1-800-387-0100 (Canada)

For additional information, refer to the Mercedes-Benz Roadside Assistance Program brochure (USA) or the "Roadside Assistance" section in the Service and Warranty booklet (Canada). You will find both in your vehicle literature portfolio.

Change of address or change of ownership

In the event of a change of address, please send us the "Notification of Address Change" in the Service and Guarantee booklet or simply call the Mercedes-Benz Customer Assistance Center (USA) at the hotline number 1-800-FOR-MERCedes(1-800-367-6372) or Customer Service Center (Canada) at 1-800-387-0100. This will assist us in contacting you in a timely manner should the need arise.

If you sell your Mercedes, please leave the entire literature in the vehicle so that it is available to the next owner.

If you have purchased a used car, please send us the "Notification of Used Car Purchase" in the Service and Guarantee booklet or simply call the Mercedes-Benz Customer Assistance Center (USA) at the hotline number 1-800-FOR-MERCedes(1-800-367-6372) or Customer Service (Canada) at 1-800-387-0100.

Vehicle operation outside the USA and Canada

If you plan to operate your vehicle in foreign countries, please be aware that:

- service facilities or replacement parts may not be readily available.
- unleaded fuel for vehicles with a catalytic converter may not be available. Leaded fuel may cause damage to the catalytic converter.
- the fuel may have a considerably lower octane rating. Unsuitable fuel can cause engine damage.

Some Mercedes-Benz models are available for delivery in Europe through our European Delivery Program. For details, consult an authorized Mercedes-Benz Center or write to one of the following addresses.

In the USA

Mercedes-Benz USA, LLC
European Delivery Department
One Mercedes Drive
Montvale, NJ 07645-0350

In Canada

Mercedes-Benz Canada, Inc.
European Delivery Department
98 Vanderhoof Avenue
Toronto, Ontario M4G 4C9

Sports Utility Vehicle

⚠ **WARNING**

This Sport Utility Vehicle is designed for both on-road and off-road use. It can go places and perform tasks for which conventional 2-wheel drive passenger cars are not intended. This vehicle will handle and maneuver differently from conventional passenger cars in driving

conditions which may occur on streets, highways and off-road use.

This vehicle has a higher ground clearance and a higher center of gravity than many passenger cars. As with other vehicles of this type, if you make sharp turns at excessive speeds or abrupt maneuvers, the vehicle may roll over or may go out of control and crash. Utility vehicles have a significantly higher rollover rate than other types of vehicles. Failure to operate this vehicle safely may result in an accident, rollover of the vehicle, and severe or fatal injury.

Before you start to drive this vehicle, read the Operator's Manual. Take time to become familiar with the driving characteristics of this vehicle. Be sure you are familiar with all vehicle controls. Learn how your vehicle handles on different road surfaces. Do not attempt sharp turns at excessive speeds or abrupt maneuvers or other unsafe driving actions that can cause loss of vehicle control. When driving off-road or working the vehicle hard, do not overload it. And, always wear your seat belts at all times. In a rollover crash, an unbelted person is significantly more likely to die than a person wearing a seat belt.

Operating safety

Declarations of conformity

Vehicle components which receive and/or transmit radio waves

USA: "The wireless devices of this vehicle comply with Part 15 of the FCC Rules. Operation is subject to the following two conditions: 1) These devices may not cause harmful interference, and 2) These devices must accept any interference received, including interference that may cause undesired operation. Changes or modifications not expressly approved by the party responsible for compliance could void the user’s authority to operate the equipment."

Canada: "The wireless devices of this vehicle comply with Industry Canada license-exempt RSS standard(s). Operation is subject to the following two conditions: (1) These devices may not cause interference, and (2) These devices must accept any interference, including interference that may cause undesired operation of the device."

Qualified specialist workshop

An authorized Mercedes-Benz Center is a qualified specialist workshop. It has the necessary specialist knowledge, tools and qualifications to correctly carry out the work required on your vehicle. This is especially the case for work relevant to safety.

Observe the notes in the Maintenance Booklet.

Always have the following work carried out at an authorized Mercedes-Benz Center:

- work relevant to safety
- service and maintenance work
- repair work
- alterations, installation work and modifications
- work on electronic components

Correct use

⚠ **WARNING**

There are various warning stickers affixed to your vehicle. Their purpose is to alert you and others to various dangers. Therefore, do not remove any warning stickers unless the sticker clearly states that you may do so.

If you remove any warning stickers, you or others could fail to recognize certain dangers and be injured.

When driving your vehicle observe the following information:

- the safety notes in this manual
- the Technical Data section in this manual

- traffic rules and regulations
- laws and safety standards pertaining to motor vehicles

Problems with your vehicle

If you should experience a problem with your vehicle, particularly one that you believe may affect its safe operation, we urge you to contact an authorized Mercedes-Benz Center immediately to have the problem diagnosed and rectified. If the problem is not resolved to your satisfaction, please discuss the problem again with a Mercedes-Benz Center or contact us at one of the following addresses.

In the USA

Customer Assistance Center

Mercedes-Benz USA, LLC

One Mercedes Drive

Montvale, NJ 07645-0350

In Canada

Customer Relations Department

Mercedes-Benz Canada, Inc.

98 Vanderhoof Avenue

Toronto, Ontario M4G 4C9

Reporting safety defects

USA only:

The following text is reproduced as required of all manufacturers according to Title 49, Code of U.S. Federal Regulations, Part 575 pursuant to the National Traffic and Motor Vehicle Safety Act of 1966.

If you believe that your vehicle has a defect which could cause a crash or could cause injury or death, you should immediately inform the National Highway Traffic Safety Administration (NHTSA) in addition to notifying Mercedes-Benz USA, LLC.

If NHTSA receives similar complaints, it may open an investigation, and if it finds that a safety defect exists in a group of vehicles, it may order a recall and remedy campaign.

However, NHTSA cannot become involved in individual problems between you, your dealer, or Mercedes-Benz USA, LLC.

To contact NHTSA, you may call the Vehicle Safety Hotline toll-free at 1-888-327-4236(TTY: 1-800-424-9153); go to **http://www.safercar.gov**; or write to: Administrator, NHTSA Headquarters, 1200 New Jersey Avenue, SE, West Building, Washington, DC 20590.

You can obtain additional information about vehicle safety from:

http://www.safercar.gov

Limited Warranty

! Follow the instructions in this manual about the proper operation of your vehicle as well as about possible vehicle damage. Damage to your vehicle that arises from culpable contraventions against these instructions is not covered either by the Mercedes-Benz Limited Warranty or by the New or Used-Vehicle Warranty.

Data stored in the vehicle

Information about electronic data acquisition in the vehicle

(Including notice pursuant to California Code § 9951)

Your vehicle records electronic data. If your vehicle is equipped with mbrace (Canada: TELE AID), data is transmitted in the event of an accident.

This information helps, for example, to test vehicle systems after an accident and to continually improve vehicle safety.
Daimler AG can access this data and submit it:

- for safety research or vehicle diagnosis purposes
- with the consent of the vehicle owner

- on the instruction of prosecuting authorities
- for use in arbitration of disputes that involve Daimler AG, its affiliates or its sales and service organizations
- as otherwise required or permitted by law.

Please check your mbrace (Canada: TELE AID) purchase agreement to find out more about data that can be recorded and transmitted by this system.

Information on copyright

Registered trademarks

Registered trademarks:

- Bluetooth® is a registered trademark of Bluetooth SIG Inc.
- DTS is a registered trademark of DTS, Inc.
- Dolby and MLP are registered trademarks of DOLBY Laboratories.
- BabySmart™, ESP® and PRE-SAFE® are registered trademarks of Daimler AG.
- HomeLink® is a registered trademark of Prince.
- iPod® and iTunes® are registered trademarks of Apple Inc.
- Logic7® is a registered trademark of Harman International Industries.
- Microsoft® and Windows media® are registered trademarks of Microsoft Corporation.
- SIRIUS is a registered trademark of Sirius XM radio Inc.
- HD Radio is a registered trademark of iBiquity Digital Corporation.
- Gracenote® is a registered trademark of Gracenote, Inc.
- ZAGATSurvey® and related brands are registered trademarks of ZagatSurvey, LLC.

FreeType

Portions of this software are copyright © 2005 The FreeType Project (www.freetype.org). All rights reserved. © 1996-2000 by David Turner, Robert Wilhelm, and Werner Lemberg.

Gnu compiler

Copyright © 1982, 1986 Regents of the University of California. All rights reserved.

The Berkeley software License Agreement specifies the terms and conditions for redistribution. Redistributions and use in source and binary forms, with or without modification, are permitted provided that the following conditions are met:

1. Redistribution of source code must retain the above copyright notice, this list of conditions and the following disclaimer.
2. Redistribution in binary form must reproduce the above copyright notice, this list of conditions and the following disclaimer in the documentation and/or other materials provided with the distribution.
3. All advertising materials mentioning features or use of this software must display the following acknowledgment: This product includes software developed by the University of California, Berkeley and its contributors.
4. Neither the name of the University nor the names of its contributors may be used to endorse or promote products derived from this software without specific prior written permission.

THIS SOFTWARE IS PROVIDED BY THE REGENTS AND CONTRIBUTORS "AS IS" AND ANY EXPRESS OR IMPLIED WARRANTIES, INCLUDING, BUT NOT LIMITED TO, THE IMPLIED WARRANTIES OF MERCHANTABILITY AND FITNESS FOR A PARTICULAR PURPOSE ARE DISCLAIMED. IN NO EVENT SHALL THE REGENTS OR CONTRIBUTORS BE LIABLE FOR ANY DIRECT,

INDIRECT, INCIDENTAL, SPECIAL, EXEMPLARY, OR CONSEQUENTIAL DAMAGES (INCLUDING, BUT NOT LIMITED TO, PROCUREMENT OF SUBSTITUTE GOODS OR SERVICES; LOSS OF USE, DATA, OR PROFITS; OR BUSINESS INTERRUPTION) HOWEVER CAUSED AND ON ANY THEORY OF LIABILITY, WHETHER IN CONTRACT, STRICT LIABILITY, OR TORT (INCLUDING NEGLIGENCE OR OTHERWISE) ARISING IN ANY WAY OUT OF THE USE OF THIS SOFTWARE, EVEN IF ADVISED OF THE POSSIBILITY OF SUCH DAMAGE.

Cockpit 28
Instrument cluster 29
Multifunction steering wheel 31
Center console 32
Overhead control panel 34
Door control panel 35

Cockpit

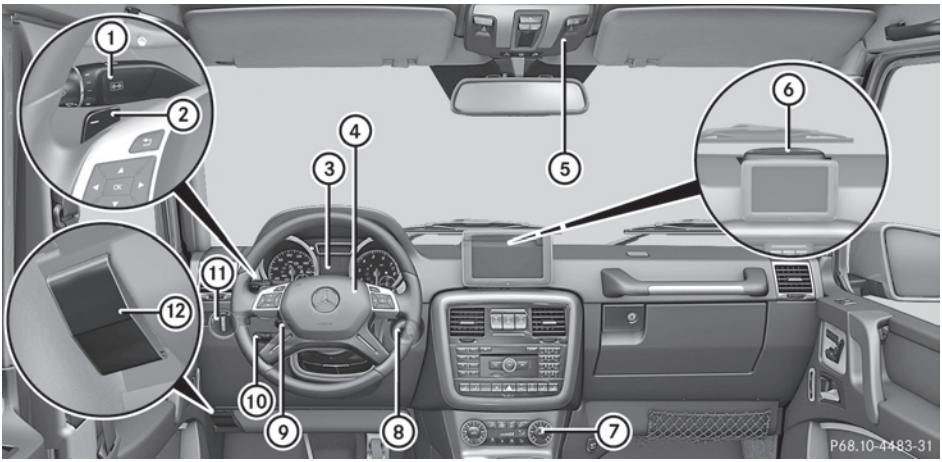

	Function	Page
①	Combination switch	103
②	Steering wheel paddle shifters	
③	Instrument cluster	209
④	Horn	
⑤	Overhead control panel	34
⑥	PARKTRONIC warning display	194
⑦	Climate control systems	118
⑧	Ignition lock	139
⑨	Adjusts the steering wheel	90
⑩	Cruise control lever	170
⑪	Light switch	98
⑫	Opens the hood	289

Instrument cluster

Displays and controls

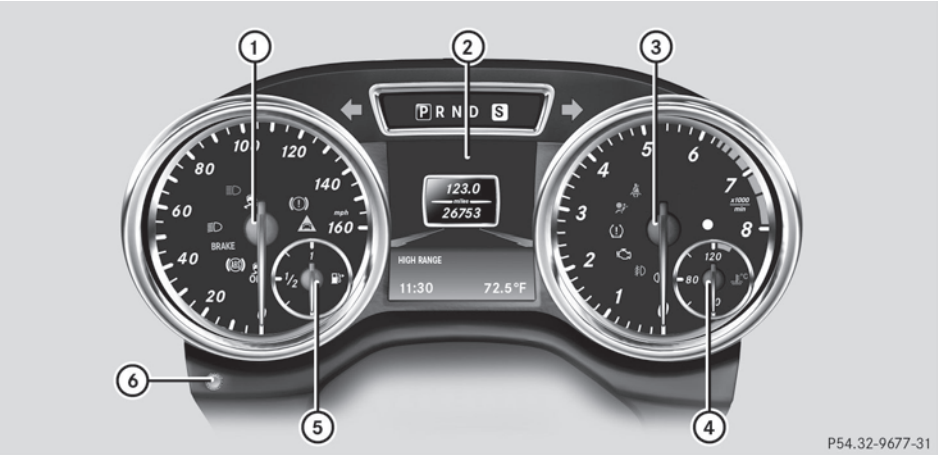

	Function	Page
①	Speedometer with segments	210
②	Multifunction display	212
③	Tachometer	210
④	Coolant temperature display	209
⑤	Fuel gauge	
⑥	Instrument cluster lighting control	209

Warning and indicator lamps

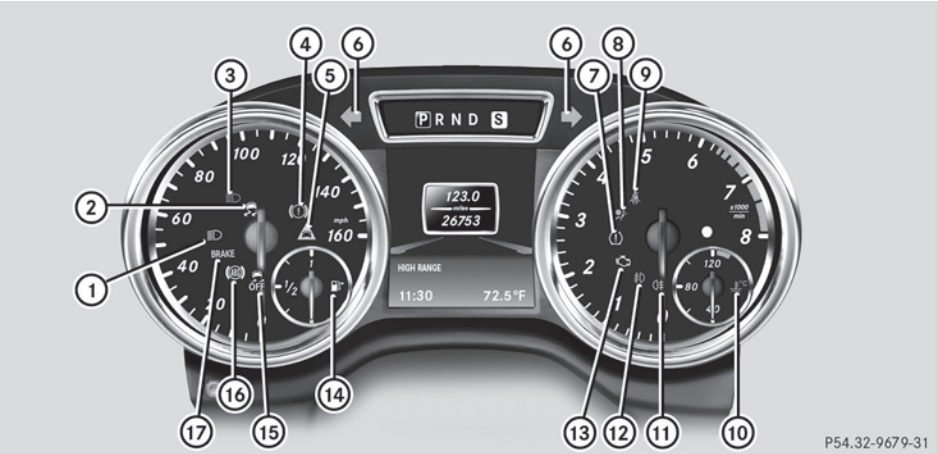

	Function	Page
①	Low-beam headlamps	99
②	ESP®	252
③	High-beam headlamps	103
④	Brakes (yellow)	249
⑤	Distance warning	258
⑥	Turn signals	103
⑦	Tire pressure monitor	259
⑧	SRS	255
⑨	Seat belt	248

	Function	Page
⑩	Coolant	256
⑪	Rear fog lamp	101
⑫	Front fog lamps	101
⑬	Check Engine	256
⑭	Reserve fuel	256
⑮	ESP® OFF	252
⑯	ABS	250
⑰	Brakes (red) BRAKE (USA only) (Canada only)	249

Multifunction steering wheel

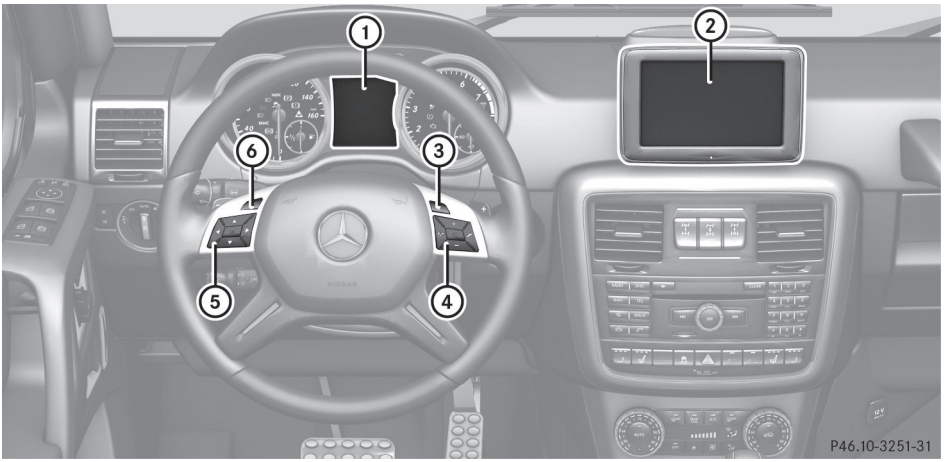

	Function	Page
①	Multifunction display	
②	COMAND display	
③	Switches on the Voice Control System; see the separate operating instructions	
④	Rejects or ends a call Exits phone book/redial memory Makes or accepts a call Switches to the redial memory + − Adjusts the volume Mute	

	Function	Page
⑤	◀ ▶ Selects a menu ▲ ▼ Selects a submenu or scrolls through lists OK Confirms selections and hides messages	
⑥	Back Switches off the Voice Control System; see the separate operating instructions	

Center console

Center console, upper section

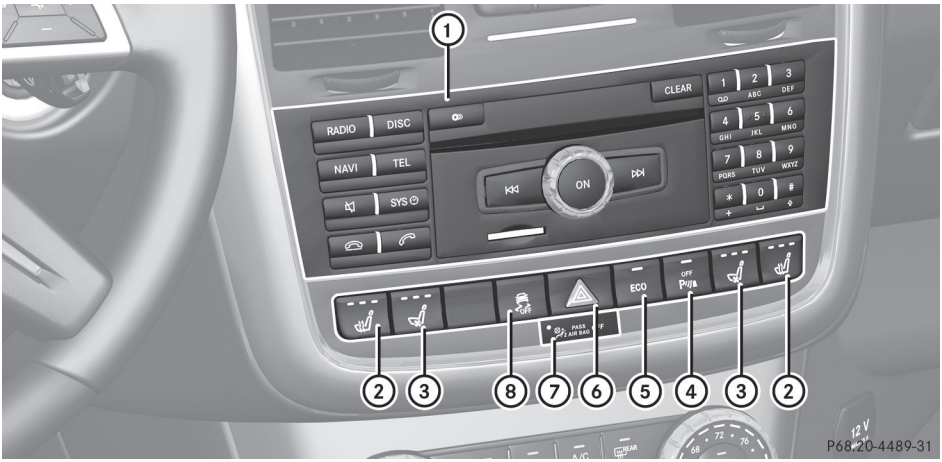

	Function	Page
①	Audio system; see the separate operating instructions COMAND	73
②	Seat heating	89
③	Seat ventilation	90
④	PARKTRONIC	194

	Function	Page
⑤	ECO ECO start/stop function	141
⑥	Hazard warning lamps	104
⑦	PASS AIR BAG OFF Indicator lamp	
⑧	ESP®	62

Center console, lower section

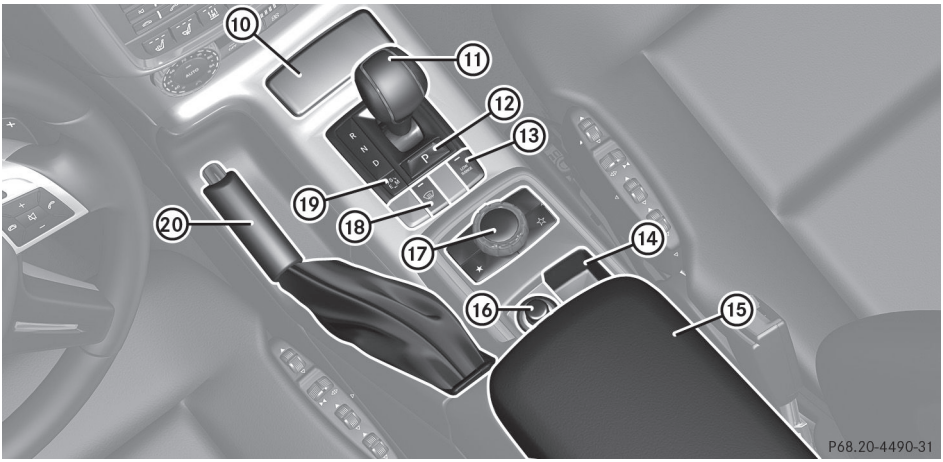

	Function	Page
⑩	Stowage compartment/ ashtray	269
⑪	Automatic transmission selector lever	145
⑫	Selects park position	146
⑬	LOW RANGE Selects/deselects LOW RANGE off-road gear	199
⑭	Stowage compartment	21
⑮	Opens/closes the stowage compartment	263

	Function	Page
⑯	Cigarette lighter	270
⑰	Audio controller, see the separate operating instructions COMAND controller	21
⑱	Switches the windshield heating on/off	133
⑲	S E M Selects the drive program	149
⑳	Parking brake	157

Overhead control panel

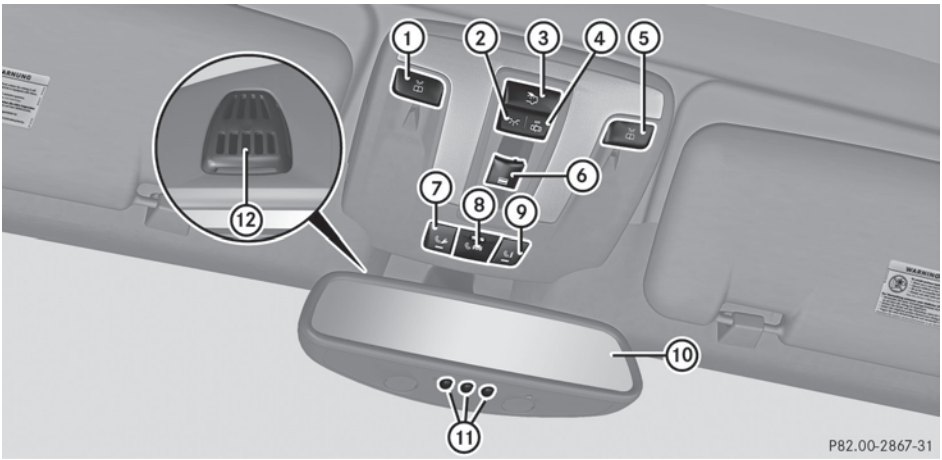

	Function	Page
①	Switches the left-hand reading lamp on/off	105
②	Switches the front interior lighting on	106
③	Switches the rear interior lighting on/off	106
④	Switches the front interior lighting/automatic interior lighting control off	106
⑤	Switches the right-hand reading lamp on/off	105
⑥	Opens/closes the sliding sunroof	80
⑦	Roadside Assistance call button (mbrace system)	275

	Function	Page
⑧	SOS button (mbrace system)	274
⑨	MB Info call button (mbrace system)	276
⑩	Rear-view mirror	93
⑪	Buttons for the garage door opener	284
⑫	Microphone for mbrace (emergency call system), telephone and the Voice Control System	

Door control panel

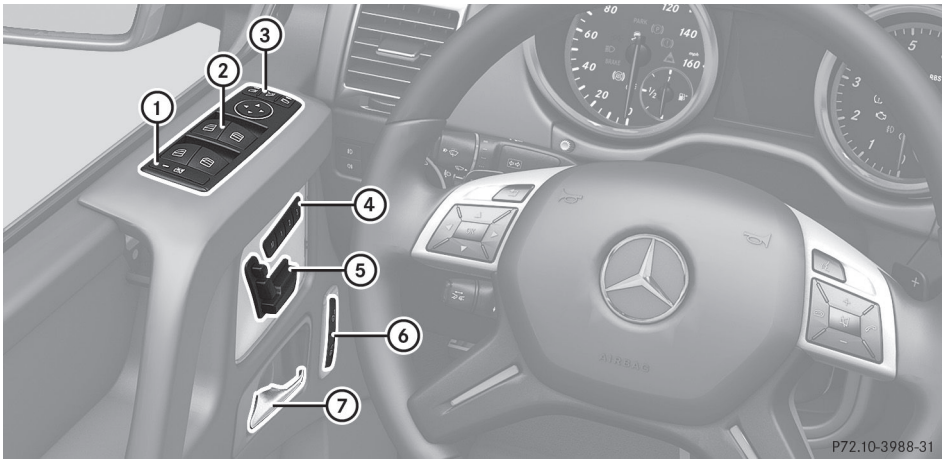

	Function	Page
①	Activates/deactivates the override feature for the side windows in the rear compartment	59
②	Opens/closes the side windows	78
③	Adjusts and folds the exterior mirrors in/out electrically	93

	Function	Page
④	M 1 2 3 Stores settings for the seat, exterior mirrors and steering wheel (memory function)	95
⑤	Adjusts the seats	86
⑥	Unlocks/locks the vehicle	74
⑦	Opens the door	74

Useful information 38
Panic alarm 38
Occupant safety 38
Children in the vehicle 54
Driving safety systems 60
Theft deterrent locking system 64

Useful information

ℹ This Operator's Manual describes all models and all standard and optional equipment of your vehicle available at the time of publication of the Operator's Manual. Country-specific differences are possible. Please note that your vehicle may not be equipped with all features described. This also applies to safety-related systems and functions.

ℹ Read the information on qualified specialist workshops: (▷ page 23).

Panic alarm

▶ **To activate:** press PANIC button ① for at least one second.
An alarm sounds and the indicator lamp flashes.

▶ **To deactivate:** press PANIC button ① again.

or

▶ Insert the SmartKey into the ignition lock.

ℹ USA only:

This device complies with part 15 of the FCC Rules. Operation is subject to the following two conditions:

1. This device may not cause interference, and

2. this device must accept any interference received, including interference that may cause undesired operation of the device.

Any unauthorized modification to this device could void the user's authority to operate the equipment.

The Product label with FCC ID and IC certification number can be found in the battery case of the SmartKey.

ℹ Canada only:

This device complies with the RSS-210 Rules of Industry Canada. Operation is subject to the following two conditions:

1. This device may not cause interference, and

2. this device must accept any interference received, including interference that may cause undesired operation.

Any unauthorized modification to this device could void the user's authority to operate the equipment.

The Product label with FCC ID and IC certification number can be found in the battery case of the SmartKey.

Occupant safety

Important safety notes

⚠ **WARNING**

Modifications to or work improperly conducted on restraint system components or their wiring, as well as tampering with interconnected electronic systems, can lead to the restraint systems no longer functioning as intended.

Air bags or Emergency Tensioning Devices (ETDs), for example, could deploy inadvertently or fail to deploy in accidents although the deceleration threshold for air bag deployment is exceeded. Therefore, never modify the restraint systems. Do not tamper with electronic components or their software.

In this section, you will learn the most important facts about the restraint system components of the vehicle.

The restraint system consists of:

- seat belts
- child restraint systems
- LATCH-type (ISOFIX) child seat anchors

Additional protection is provided by:

- SRS (Supplemental Restraint System)
- NECK-PRO head restraints
- Air bag system components with:
  - The [PASS AIR BAG OFF] indicator lamp
  - Front-passenger seat with BabySmart™ air bag deactivation system

The different air bag systems work independently of each other. The protective functions of the system work in conjunction with each other. Not all air bags are always deployed in an accident.

ⓘ Observe the additional information on infants and children traveling with you in the vehicle and restraint systems for infants and children (▷ page 54).

SRS (Supplemental Restraint System)

Introduction

SRS reduces the risk of occupants coming into contact with the vehicle's interior in the event of an accident. It can also reduce the effect of the forces to which occupants are subjected during an accident.

SRS consists of:

- The [SRS] SRS warning lamp
- Air bags
- Air bag control unit (with crash sensors)
- Emergency Tensioning Device (ETD) for seat belts
- Seat belt force limiter

SRS warning lamp

⚠ **WARNING**

The SRS self-check has detected a malfunction if the [SRS] SRS indicator lamp:

- does not light up at all
- does not go out after approximately four seconds after the engine is started
- lights up after the engine is started or while the vehicle is in motion

For your safety, Mercedes-Benz strongly recommends that you have the system checked as soon as possible at a qualified specialist workshop. SRS may otherwise fail to activate when it is needed in the event of an accident, which could lead to serious or fatal injuries. SRS might also be activated unexpectedly and unnecessarily, which could also result in injury.

In addition, work carried out improperly on SRS may render SRS inoperative or cause unintended air bag deployment. Work on the SRS system should only be carried out by qualified specialist personnel. Consult a qualified specialist workshop.

If it is necessary to modify an air bag system to accommodate a person with disabilities, contact an authorized Mercedes-Benz Center for details. USA only: for further information, contact our Customer Assistance Center at 1-800-FOR-MERCedes (1-800-367-6372).

SRS functions are checked regularly when you switch on the ignition and when the engine is running. Therefore, malfunctions can be detected in good time.

The [SRS] SRS warning lamp in the instrument cluster lights up when the ignition is switched on. It goes out no later than a few seconds after the engine is started.

The SRS components are in operational readiness when the SRS [SRS] indicator lamp goes out while the engine is running.

Safety guidelines for seat belts, Emergency Tensioning Devices (ETDs) and air bags

⚠ **WARNING**

- Damaged seat belts or seat belts that have been subjected to stress in an accident must be replaced. Their anchoring points must also be checked. Only use seat belts installed or supplied by an authorized Mercedes-Benz Center.
- Air bags and pyrotechnic Emergency Tensioning Devices (ETDs) contain perchlorate material, which may require special handling and regard for the environment. Check your national disposal guidelines. California residents, see **www.dtsc.ca.gov/HazardousWaste/Perchlorate/index.cfm**.
- Air bags and ETDs are designed to function on a one-time-only basis. An air bag or ETD that has deployed must be replaced.
- Do not pass seat belts over sharp edges. They could tear.
- Do not make any modification that could change the effectiveness of the seat belts.
- Do not bleach or dye seat belts as this may severely weaken them. In a crash they may not be able to provide adequate protection.
- No modifications of any kind may be made to any components or wiring of the SRS.
- Do not change or remove any component or part of the SRS.
- Do not install additional trim material, seat covers, badges, etc. over the steering wheel hub, front-passenger front air bag cover, outer sides of the seat backrests, door trim panels, or door frame trims.
- Do not install additional electrical/electronic equipment on or near SRS components and wiring.
- Keep area between air bags and occupants free of objects (e.g. packages, purses, umbrellas, etc.).
- Do not hang items such as coat hangers from the coat hooks or handles over the door. These items may be thrown around in the vehicle and cause head and other injuries when the window curtain air bag is deployed.
- Air bag system components will be hot after an air bag has inflated. Do not touch them.
- Never place your feet on the instrument panel, dashboard, or on the seat. Always keep both feet on the floor in front of the seat.
- Improper repair work on the SRS creates a risk of rendering the SRS inoperative or causing unintended air bag deployment. Work on the SRS must therefore only be performed by qualified technicians. Contact an authorized Mercedes-Benz Center.
- For your protection and the protection of others, when scrapping the air bag unit or ETD, our safety instructions must be followed. These instructions are available from any authorized Mercedes-Benz Center.
- Given the considerable deployment speed, required inflation volume, and the material of the air bags, there is the possibility of abrasions or other, potentially more serious injuries resulting from air bag deployment.

If you sell your vehicle, Mercedes-Benz strongly recommends that you inform the subsequent owner that the vehicle is equipped with SRS. Also, refer them to the applicable section in the Operator's Manual.

Air bags

Important safety notes

⚠ **WARNING**

Air bags are designed to reduce the potential of injury and fatality in certain

- frontal impacts (front air bags)
- side impacts (window curtain air bags)

However, no system available today can completely eliminate injuries and fatalities.

Deployment of the air bags temporarily releases a small amount of dust from the air bags. This dust, however, is neither harmful to your health, nor does it indicate a fire in the vehicle. The dust might cause some temporary breathing difficulty for people with asthma or other breathing trouble. To avoid this, you may wish to get out of the vehicle as soon as it is safe to do so. If you have any breathing difficulty but cannot get out of the vehicle after the air bag inflates, then get fresh air by opening a window or door.

⚠ **WARNING**

To reduce the risk of injury when the front air bags inflate, it is very important for the driver and front passenger to always be in a properly seated position and to wear their respective seat belt.

For maximum protection in the event of a collision always be in normal seated position with your back against the seat backrest. Fasten your seat belt and make sure it is properly positioned on your body.

Since the air bag inflates with considerable speed and force, a proper seating position and correct positioning of the hands on the steering wheel will help to keep you at a safe distance from the air bag. Occupants who are not wearing their seat belt, are not seated properly or are too close to the air bag can be seriously injured or killed by an air bag as it inflates with great force instantaneously:

- Sit with the seat belt properly fastened in a position that is as upright as possible with your back against the seat backrest.
- Move the driver's seat as far back as possible, still permitting proper operation of vehicle controls. The distance from the center of the driver's chest to the center of the air bag cover on the steering wheel must be at least 10 inches (25 cm) or more. You should be able to accomplish this by adjusting the seat and steering wheel. If you have any difficulties, please contact an authorized Mercedes-Benz Center.
- Do not lean your head or chest close to the steering wheel or dashboard.
- Keep hands on the outside of the steering wheel rim. Placing hands and arms inside the rim can increase the risk and potential severity of hand/arm injury when the driver front air bag inflates.
- Adjust the front passenger seat as far as possible rearward from the dashboard when the seat is occupied.
- Occupants, especially children, should never place their bodies or lean their heads in the area of the door where the window curtain air bag inflates. This could result in serious injuries or death should the window curtain air bag be deployed. Always sit as upright as possible, wear the seat belt properly and use an appropriately sized infant restraint, toddler restraint, or booster seat recommended for the size and weight of the child.
- Children 12 years old and under must never ride in the front seat, except in a Mercedes-Benz authorized BabySmart™ compatible

▷▷

child seat, which operates with the BabySmart™ air bag deactivation system installed in the vehicle to deactivate the front passenger front air bag when it is installed properly. Otherwise they will be struck by the air bag when it inflates in a crash. If this happens, serious or fatal injury will result.

Failure to follow these instructions can result in severe injuries to you or other occupants.

If you sell your vehicle, it is important that you make the buyer aware of this safety information. Be sure to give the buyer this Operator's Manual.

⚠ WARNING

Accident research shows that the safest place for children in an automobile is in a rear seat. Should you choose to place a child 12 years old or under in the front passenger seat of your vehicle, you must properly use a BabySmart™ child restraint which will turn off the front passenger front air bag.

To help avoid the possibility of injury, please follow these guidelines:

(1) Always sit as upright as possible, wear the seat belt properly, and for children 12 years old and under, use an appropriately sized infant restraint, toddler restraint, or booster seat recommended for the size and weight of the child.

(2) Always wear seat belts properly.

If the air bags are deployed, you will hear a bang, and a small amount of powder may also be released. Only in rare cases will the bang affect your hearing. The powder that is released generally does not constitute a health hazard. The SRS warning lamp lights up.

The air bags are deployed if the air bag control unit detects the need for deployment. Only in the event of such a situation will the air bags provide their supplemental protection.

If the driver and front passenger do not wear their seat belts, it is not possible for the air bags to provide their supplemental protection.

In the event of other types of impacts and impacts below air bag deployment thresholds, the air bags will not deploy. The driver and passengers will then be protected to the extent possible by a properly fastened seat belt. A properly fastened seat belt is also needed to provide the best possible protection if the vehicle rolls over.

Air bags provide additional protection; they are not, however, a substitute for seat belts. All vehicle occupants must fasten their seat belts regardless of whether your vehicle is equipped with air bags or not.

It is important for your safety and that of your passengers to have deployed air bags replaced and to have any malfunctioning air bags repaired. This will help to make sure the air bags continue to perform their protective function for the vehicle occupants in the event of an accident.

Front air bags

⚠ WARNING

Observe "Important safety notes" (▷ page 41).

⚠ WARNING

Your vehicle is equipped with air bag technology which disables the front-passenger air bag if the system recognizes that the front-passenger seat is empty .

If the front-passenger seat is occupied by an adult or young person and the PASS. AIR BAG OFF indicator lamp is lit up, the front-passenger air bag is disabled. If the front-passenger seat is recognized as empty, the air bag control unit will not deploy the front-passenger air bag in the event of a collision.

Ask your passenger to sit correctly on the front-passenger seat in an upright position until the PASS. AIR BAG OFF indicator lamp goes out.

If the PASS. AIR BAG OFF indicator lamp does not go out, please consult an authorized Mercedes-Benz Center.

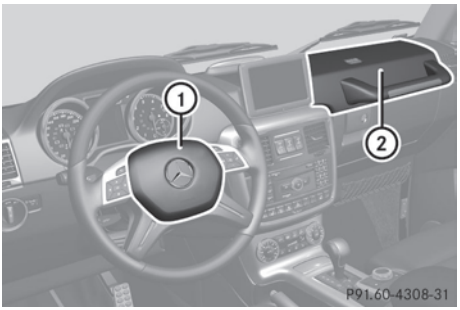

Driver's air bag ① deploys in front of the steering wheel; front-passenger front air bag ② deploys in front of and above the glove box.

The front air bags increase protection for the driver's and front-passenger's head, neck and chest.

They are deployed:

- in the event of certain frontal impacts
- if the system determines that air bag deployment can offer additional protection to that provided by the seat belt
- independently of other air bags in the vehicle
- depending on whether the seat belt is being used

If the vehicle rolls over, the front air bags are generally not deployed. If the system detects high vehicle deceleration in a longitudinal direction, the front air bags are deployed.

Your vehicle is equipped with a dual-stage driver's air bag and a single-stage front-passenger front air bag. In the event of a collision, the air bag control unit evaluates the vehicle deceleration. In the first deployment stage, the driver's air bag is filled with enough propellant gas to reduce the risk of injuries. The front-passenger front air bag, however, is immediately filled with the maximum amount of propellant gas. The driver's air bag is fully deployed if a second deployment threshold is exceeded within a few milliseconds.

The lighter the front passenger, the higher the vehicle deceleration rate required (predicted at the start of the impact) for triggering the front-passenger front air bag.

The front air bags will not deploy in impacts with vehicle deceleration or acceleration rates which do not exceed the system's preset deployment thresholds for vehicle deceleration or acceleration. You will then be protected by the fastened seat belt.

Front-passenger front air bag ② will only deploy if:

- the front-passenger seat is occupied.
- the PASS. AIR BAG OFF indicator lamp on the center console is not lit (▷ page 44)
- the impact exceeds a preset deployment threshold

The front-passenger air bag is automatically activated and deactivated. Both driver and passenger should always check whether the front-passenger air bag is activated or deactivated.

The deployment of the driver's air bag does not mean that the front-passenger air bag will also deploy. If the system recognizes that the front-passenger seat is empty, the front-passenger air bag does not deploy even if the impact fulfills the criteria and the driver's air bag has deployed.

If the system detects that the front-passenger seat is occupied, the PASS. AIR BAG OFF indicator lamp lights up for approximately six seconds if:

- you turn the SmartKey to position **1** or **2** in the ignition lock.
- the engine is running and then you switch it off.

This indicates the operational readiness of the front-passenger air bag.

Note that objects placed on the front-passenger seat may cause the system to recognize the seat as occupied. This can result in the deployment of the front-

passenger air bag if the impact fulfills the specified criteria. If the PASS AIR BAG OFF indicator lamp lights up, the front-passenger front air bag is disabled and will not be deployed in certain situations. If the PASS AIR BAG OFF indicator lamp does not light up, the front-passenger front air bag is enabled and can be deployed.

Window curtain air bags

⚠ WARNING

Observe "Important safety notes" (▷ page 41).

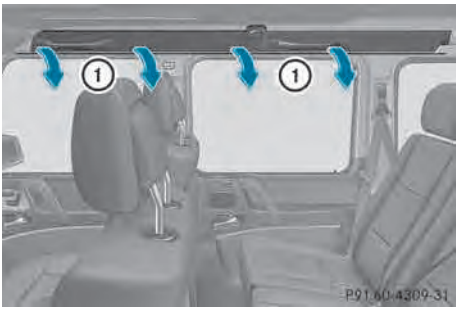

Window curtain air bags ① enhance the level of protection for the head, but not chest or arms, of the vehicle occupants on the side of the vehicle on which the impact occurs.

Window curtain air bags ① are integrated into the side of the roof frame and deploy in the area extending from the front door (A-pillar) to the rear door (C-pillar).

Window curtain air bags ① are deployed:

- on the side on which an impact occurs
- at the start of an accident with a high rate of lateral vehicle deceleration or acceleration, e.g. in a side impact
- regardless of whether the front-passenger seat is occupied
- independently of seat belt use
- if the vehicle rolls over and the system determines that window curtain air bag deployment can offer additional protection to that provided by the seat belt
- independently of the front air bags

Window curtain air bags will not deploy in impacts which do not exceed the system's preset deployment thresholds for lateral acceleration/deceleration. You will then be protected by the fastened seat belt.

BabySmart™ air bag deactivation system

How the air bag deactivation system works

⚠ WARNING

According to accident statistics, children are safer when properly restrained in the rear seating positions than in the front seating position. Thus, we strongly recommend that children be placed in the rear seats whenever possible. Regardless of seating position, children 12 years old and under must be seated and properly secured in an appropriate infant restraint, toddler restraint, or booster seat recommended for the size and weight of the child.

The infant or child restraint must be properly secured with the vehicle's seat belt, the seat belt and top tether strap, or lower anchors and top tether strap, fully in accordance with the child seat manufacturer's instructions.

Occupants, especially children, should always sit as upright as possible, wear the seat belt properly and use an appropriately sized infant restraint, toddler restraint, or booster seat recommended for the size and weight of the child.

Children can be killed or seriously injured by an inflating air bag. Note the following important information when circumstances require you to place a child in the front passenger seat:

- Children 12 years old and under must never ride in the front seat, except in a Mercedes-Benz authorized BabySmart™ compatible child seat, which operates with the BabySmart™ system installed in the vehicle to deactivate the front passenger front air

bag when it is installed properly. Otherwise they will be struck by the air bag when it inflates in a crash. If this happens, serious or fatal injury will result.

- A child in a rear-facing child restraint on the front passenger seat will be seriously injured or even killed if the front passenger front air bag inflates in a collision which could occur under some circumstances, even with the air bag technology installed in your vehicle. The only means to completely eliminate this risk is to never place a child in a rear-facing child restraint in the front seat. We therefore strongly recommend that you always place a child in a rear-facing child restraint in a backseat.
- If you must install a BabySmart™ compatible rear-facing child restraint on the front passenger seat because circumstances require you to do so, make sure the [ ] [PASS. AIR BAG OFF] indicator lamp is illuminated, indicating that the front passenger front air bag is deactivated. Should the [ ] [PASS. AIR BAG OFF] indicator lamp not illuminate or go out while the restraint is installed, please check installation. Periodically check the [ ] [PASS. AIR BAG OFF] indicator lamp while driving to make sure the [ ] [PASS. AIR BAG OFF] indicator lamp is illuminated. If the [ ] [PASS. AIR BAG OFF] indicator lamp goes out or remains out, do not transport a child on the front passenger seat until the system has been repaired.

  A child in a rear-facing child restraint on the front passenger seat will be seriously injured or even killed if the front passenger front air bag inflates.
- If you have to place a child in a forward-facing child restraint on the front passenger seat, move the seat as far back as possible, use the proper child restraint recommended for the age, size and weight of the child, and secure child restraint with the vehicle's seat belt according to the child seat manufacturer's instructions.

⚠ WARNING

When using a BabySmart™ compatible child seat on the front passenger seat, the front passenger front air bag will not deploy only if the [ ] [PASS. AIR BAG OFF] indicator lamp remains illuminated.

Please be sure to check the [ ] [PASS. AIR BAG OFF] indicator lamp every time you use a BabySmart™ compatible child seat on the front passenger seat. Should the [ ] [PASS. AIR BAG OFF] indicator lamp go out while the restraint is installed, please check installation. If the [ ] [PASS. AIR BAG OFF] indicator lamp remains out, do not use the BabySmart™ restraint to transport a child on the front passenger seat until the system has been repaired.

⚠ WARNING

The BabySmart™ air bag disabling system ONLY works with specially adapted child restraint systems. It does not work with child restraint systems that are not compatible with BabySmart™.

Never place anything between the seat cushion and the child restraint system (e.g. a cushion), as this reduces the effectiveness of the BabySmart™ air bag deactivation system. The underside of the child restraint system must lie against the seat cushion of the front-passenger seat. In the event of an accident, an incorrectly installed child restraint system could injure the child instead of offering protection.

Observe the manufacturer's instructions when installing special child restraint systems.

Your vehicle is equipped with a BabySmart™ system.

Special child restraint systems which are compatible with BabySmart™ are necessary for deactivating the front-passenger air bag. When the special BabySmart™-compatible child restraint system is installed correctly and is recognized by the sensor system in the front-passenger seat, the front-passenger air bag is deactivated. In this case, [2] [PASS AIR BAG OFF] indicator lamp ① lights up. If you have any questions regarding the special BabySmart™-compatible child restraint systems, consult an authorized Mercedes-Benz Center.

If the SmartKey has been removed from the ignition lock or is in position **0**, [2] [PASS AIR BAG OFF] indicator lamp ① does not light up.

The system does not disable:

- the window curtain air bag
- the Emergency Tensioning Device

System self-test

⚠ **WARNING**

Do not leave any switched on notebooks, mobile phones, electronic tags (e.g. a ski pass) or similar electronic devices on the front-passenger seat. Signals emitted from such devices can interfere with the BabySmart™ air bag deactivation system. Such interference can lead to the [2] [PASS AIR BAG OFF] indicator lamp not lighting up during the self-test.

If the [SRS] SRS warning lamp and the [2] [PASS AIR BAG OFF] indicator lamp light up simultaneously in the instrument cluster, the system is malfunctioning. The front-passenger air bag could deploy without cause, or may fail to deploy in the event of an accident.

Have the system checked as soon as possible at an authorized Mercedes-Benz Center.

The [2] [PASS AIR BAG OFF] indicator lamp lights up when the SmartKey is turned to position **1** or **2** in the ignition lock.

The [2] [PASS AIR BAG OFF] indicator lamp goes out after approximately six seconds.

If the [2] [PASS AIR BAG OFF] indicator lamp does not light up or is always lit, then the system is malfunctioning. Have the BabySmart™ system checked at an authorized Mercedes-Benz Center before transporting a child on the front-passenger seat.

For further information, see "Problems with air bag deactivation system" (▷ page 47).

Problems with the air bag deactivation system

⚠ **WARNING**

If the [PASS AIR BAG OFF] indicator lamp illuminates and remains illuminated when the weight of a typical adult or someone larger than a small individual has been detected on the passenger seat, do not allow any occupant to use the passenger seat until the system has been repaired.

Problem	Possible causes/consequences and ▶ Solutions
The [PASS AIR BAG OFF] indicator lamp is continuously lit.	A special BabySmart™-compatible child restraint system is mounted on the front-passenger seat. The front-passenger air bag is therefore disabled.
	There is no BabySmart™-compatible child restraint system mounted on the front-passenger seat. The BabySmart™ system is malfunctioning. ▶ Have the BabySmart™ system checked as soon as possible at an authorized Mercedes-Benz Center.
The [PASS AIR BAG OFF] indicator lamp does not light up and/or remain lit when a BabySmart™-compatible child restraint system is installed on the front-passenger seat.	The BabySmart™ system is malfunctioning. ▶ Make sure there is nothing between the seat cushion and the child restraint system. ▶ Check that the child restraint system is installed correctly. ▶ If the [PASS AIR BAG OFF] indicator lamp does not light up, have the BabySmart™ system checked as soon as possible at an authorized Mercedes-Benz Center. Do not transport a child on the front-passenger seat until the air bag deactivation system has been repaired.

NECK-PRO head restraints

Important safety notes

⚠ **WARNING**

Do not secure any objects (e.g. coat hangers) on the NECK-PRO head restraints. Otherwise, the NECK-PRO head restraints may not function properly, or in the event of a rear-end collision may not be able offer the level of protection they are designed to provide.

⚠ **WARNING**

Head restraint covers prevent the NECK-PRO head restraints from triggering correctly. Consequently, the NECK-PRO head restraints cannot provide the intended level of protection. Do not use head restraint covers.

⚠ **WARNING**

For your protection, drive only with properly positioned head restraints.

Adjust the head restraint so that it is as close to the head as possible and the center of the head restraint supports the back of the head at eye level. This will reduce the potential for injury to the head and neck in the event of an accident or similar situation.

The NECK-PRO head restraints increase protection to the driver's and the front passenger's head and neck. The NECK-PRO head restraints on the driver's and front-

passenger seats are moved forwards and upwards in the event of a rear-end collision of a certain severity. This provides better head support.

If the NECK-PRO head restraints have been triggered in an accident, reset the NECK-PRO head restraints on the driver's and front-passenger seat (▷ page 48). Otherwise, the additional protection will not be available in the event of another rear-end collision. You can recognize if NECK-PRO head restraints have been triggered by the fact that they have moved forwards and can no longer be adjusted.

Resetting triggered NECK-PRO head restraints

⚠ **WARNING**

For safety reasons, have the NECK-PRO head restraints checked at a qualified specialist workshop after a rear-end collision.

⚠ **WARNING**

When pushing back the NECK-PRO head restraint cushion, make sure your fingers do not become caught between the head restraint cushion and the cover. Failure to observe this could result in injuries.

- ▶ Tilt the top of the NECK-PRO head restraint cushion forwards in the direction of arrow ①.
- ▶ Push the NECK-PRO head restraint cushion down in the direction of arrow ② as far as it will go.
- ▶ Firmly push the NECK-PRO head restraint cushion back in the direction of arrow ③ until the cushion engages.
- ▶ Repeat this procedure for the second NECK-PRO head restraint.

ℹ Resetting the NECK-PRO head restraints requires a lot of strength. If you have difficulty resetting the NECK-PRO head restraints, have this work carried out at a qualified specialist workshop.

Seat belts

Important safety notes

⚠ **WARNING**

Always fasten your seat belt before driving off. Always make sure all of your passengers are properly restrained. You and your passengers should always wear seat belts.

Failure to wear and properly fasten and position your seat belt greatly increases your risk of injuries and their likely severity in an accident.

If you are ever in an accident, your injuries can be considerably more severe without your seat belt properly buckled. Without your seat belt buckled, you are much more likely to hit the interior of the vehicle or be ejected from it. You can be seriously injured or killed.

In the same crash, the possibility of injury or death is lessened if you are properly wearing your seat belt. The air bags can only protect as intended if the occupants are properly wearing their seat belts.

⚠ **WARNING**

Never ride in a moving vehicle with the seat backrest in an excessively reclined position as this can be dangerous. You could slide under the seat belt in a collision. If you slide under it, the seat belt would apply force at the abdomen or neck. That could cause serious or even fatal injuries. The seat backrest and seat belt provide the best restraint when the

wearer is in a position that is as upright as possible and the seat belt is properly positioned on the body.

⚠ **WARNING**

Never let more people ride in the vehicle than there are seat belts available. Make sure everyone riding in the vehicle is correctly restrained with a separate seat belt. Never use a seat belt for more than one person at a time.

⚠ **WARNING**

Always have damaged seat belts or seat belts that have been subjected to a load in an accident replaced and the anchorages checked.

Only use seat belts that have been approved by Mercedes-Benz.

Never tamper with seat belts. This can result in the unintended deployment of the Emergency Tensioning Devices or the failure to deploy when necessary.

Do not bleach or dye seat belts, as this may severely weaken them. In the event of a collision, they may be unable to provide adequate protection.

Have all work carried out only by qualified technicians. Consult a qualified specialist workshop.

The use of infant or child restraints is required by law in all 50 states, the District of Columbia, all U.S. territories and all Canadian provinces.

Even where this is not the case, all vehicle occupants should have their seat belts fastened when the vehicle is in motion.

ℹ See "Children in the vehicle" (▷ page 54) for further information on infants and children traveling in the vehicle, as well as on child restraint systems.

Correct use of the seat belts

⚠ **WARNING**

CORRECT USE OF SEAT BELTS

- Seat belts only work properly if they are fastened correctly. Never wear seat belts in any other way than as described in this section, as that could result in serious injuries in the event of an accident.
- All occupants should wear their seat belt at all times, because seat belts help reduce the likelihood of and potential severity of injuries in accidents, even if the vehicle overturns. The restraint system installed is equipped with SRS (driver's air bag, front-passenger air bag, window curtain air bags), belt tensioners and belt force limiters.

  The system is designed to enhance the protection offered to occupants who are wearing their seat belts correctly, in certain frontal impacts (front air bags and belt tensioners) and side impacts (window curtain air bags and belt tensioners) which exceed preset deployment thresholds.
- Never route the shoulder section of the seat belt under your arm, across your neck or anywhere other than across your shoulder. In the event of a frontal impact, your body would be moved too far forward. This would increase the risk of head and neck injuries. The seat belt would then apply excessive force to the ribs or abdomen which could cause severe internal injuries to organs such as the liver or spleen.

  Adjust the seat belt so that the upper part of the belt is as close as possible to the center of the shoulder. It should not touch the neck. Never route the belt under the shoulder. The height of the belt outlet can be altered to ensure correct usage.
- The lap belt should be routed as low as possible across the hips, not across the abdomen. If the lap belt is routed across the

abdomen, it could cause serious injuries in the event of an impact.

- Never route the seat belt over rigid or fragile objects in or on your clothing, such as eyeglasses, pens, keys etc, as this could cause injuries.
- Always ensure that the seat belt is routed correctly. This is particularly important if you are wearing loose clothing.
- Only one person should use each seat belt at any one time. Never use a seat belt to restrain more than one person or route the belt around additional objects.
- Never wear seat belts when they are twisted. Otherwise, in the event of an impact, the full width of the seat belt is unavailable to distribute the force of the impact. The twisted seat belt routed across your body could cause injuries.
- Pregnant women should also wear a three-point seat belt. The lap belt must always pass across your lap as low down as possible, i.e. across your hips; not across your abdomen.
- The seat backrest should be set as close to vertical as possible.
- Check the seat belt during the journey in order to make sure that it is correctly positioned.
- Never rest your feet on the dashboard or the seat. Always keep both feet on the floor in front of the seat.
- When using a seat belt to secure an infant restraint system, child restraint system or a child on a booster seat, always follow the child seat manufacturer's instructions.

⚠ **WARNING**

Do not pass seat belts over sharp edges. They could tear.

Do not allow the seat belt to get caught in the door or in the seat adjustment mechanism. This could damage the seat belt.

Never attempt to make modifications to seat belts. This could impair the effectiveness of the seat belts.

Fastening seat belts

Important safety notes

⚠ **WARNING**

According to accident statistics, children are safer when properly restrained on the rear seats than on the front-passenger seat. Thus, we strongly recommend that children be placed in the rear seat whenever possible. Regardless of seating position, children 12 years old and under must be seated and properly secured in an appropriately sized child restraint system or booster seat recommended for the size and weight of the child. For additional information, see the "Children in the vehicle" section.

A child's risk of serious or fatal injuries is significantly increased if the child restraints are not properly secured in the vehicle and/or the child is not properly secured in the child restraint.

⚠ **WARNING**

Children 12 years old and under must never ride in the front seat, except in a Mercedes-Benz authorized BabySmart™ compatible child seat, which operates with the BabySmart™ system installed in the vehicle to deactivate the front passenger front air bag when it is installed properly. Otherwise they will be struck by the air bag when it inflates in a crash. If this happens, serious or fatal injury will result.

Three-point seat belt, front

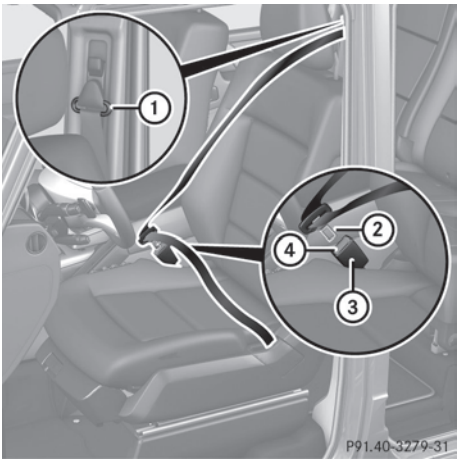

- ▶ Adjust the seat and move the backrest to an almost vertical position (▷ page 84).
- ▶ Pull the seat belt smoothly through belt sash guide ①.
- ▶ Without twisting it, guide the shoulder section of the seat belt across the middle of your shoulder and the lap section across your hips.
- ▶ Engage belt tongue ② in buckle ③.
- ▶ If necessary, adjust the seat belt to the appropriate height (▷ page 52).
- ▶ If necessary, pull upwards on the shoulder section of the seat belt to tighten the belt across your body.

Further information on releasing the seat belts with release button ④(▷ page 52).

Three-point seat belt in the rear, center

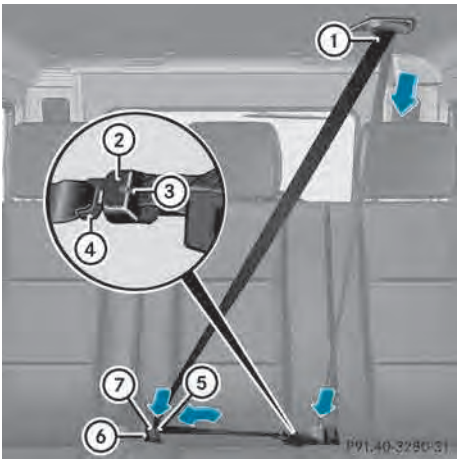

① Bracket for seat belt tongues
② Belt buckle for fixed belt tongue
③ Release button for fixed belt tongue
④ Fixed belt tongue
⑤ Belt buckle for moveable belt tongue
⑥ Release button for moveable belt tongue
⑦ Moveable belt tongue

- ▶ Pull both seat belt tongues ④ and ⑦ from bracket ①.

- Pull the seat belt smoothly from the seat belt retractor.
- Engage fixed seat belt tongue ④ in buckle ②.

- Pull movable seat belt tongue ⑦ and route the seat belt across your body. Without twisting it, guide the shoulder section of the seat belt across the middle of your shoulder and the lap section across your hips.
- Engage movable seat belt tongue ⑦ in buckle ⑤.
- If necessary, pull upwards on the shoulder section of the seat belt to tighten the belt across your body.

Further information on releasing the seat belts with release buttons ⑥ and ③(▷ page 52).

Special seat belt retractor

All seat belts in the vehicle with the exception of the driver's are equipped with a special seat belt retractor, to which a child restraint system can be secured. For further information on the "special seat belt retractor" (▷ page 56).

Belt height adjustment

You can adjust the belt height on the driver's and front-passenger seat, as well as on the outer rear seats.

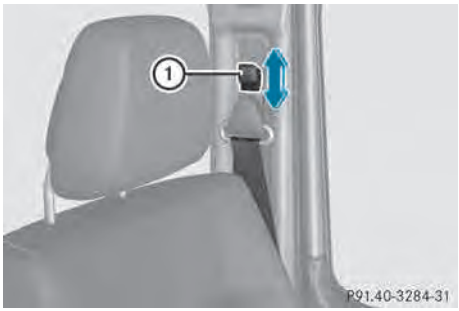

Adjust the height so that the upper part of the seat belt is routed across the center of your shoulder.

- **To raise:** slide the belt sash guide upwards. The belt sash guide engages in various positions.
- **To lower:** draw belt sash guide release ① forwards and hold it.
- Slide the belt sash guide downwards.
- Let go of belt sash guide release ① and make sure that the belt sash guide has engaged.

Releasing seat belts

! Make sure that the seat belt is fully rolled up. Otherwise, the seat belt or belt tongue will be trapped in the door or in the seat mechanism. This could damage the door,

the door trim panel and the seat belt. Damaged seat belts can no longer fulfill their protective function and must be replaced. Visit a qualified specialist workshop.

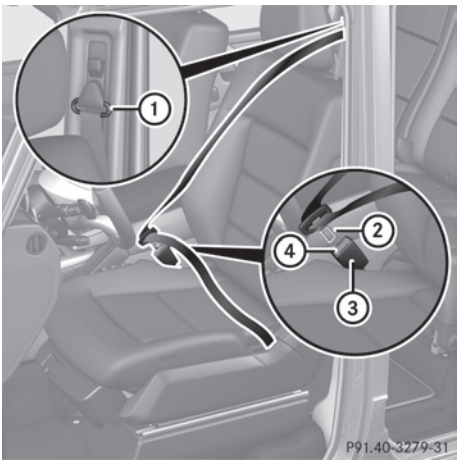

▶ Press release button ④ of buckle ③ and guide belt tongue ② back towards belt sash guide ①.

Belt warning for the driver and front passenger

The [seat belt warning lamp] seat belt warning lamp in the instrument cluster is a reminder for all occupants to fasten their seat belts. Regardless of whether the driver's and front-passenger seat belts have already been fastened, the [seat belt warning lamp] seat belt warning lamp lights up for six seconds each time the engine is started. It then goes out once the driver and the front passenger have fastened their seat belts.

If the driver and/or front passenger have not fastened their seat belts after the engine has been started, an additional warning tone sounds. This warning tone switches off after approximately six seconds or once the driver's seat belt is fastened.

If after six seconds, the driver or front passenger have not fastened their seat belts and the doors are closed:

- the [seat belt warning lamp] seat belt warning lamp remains illuminated as long as either the driver's or front-passenger seat belt is not fastened
- and if vehicle speed once exceeds 15 mph (25 km/h), the [seat belt warning lamp] seat belt warning lamp lights up. A warning tone also sounds with increasing intensity for a maximum of 60 seconds or until the driver or front-passenger seat belt has been fastened.

If the driver or front-passenger seat belt is unfastened while the vehicle is in motion, the [seat belt warning lamp] seat belt warning lamps light up and a warning tone sounds again.

The warning tone ceases even if the driver or front-passenger seat belt has still not been fastened after 60 seconds. The [seat belt warning lamp] seat belt warning lamp stops flashing but remains illuminated.

After the vehicle comes to a standstill, the warning tone is reactivated and the [seat belt warning lamp] seat belt warning lamp flashes again if the vehicle speed again exceeds 15 mph (25 km/h).

The [seat belt warning lamp] seat belt warning lamp only goes out if:

- both the driver and the front passenger have fastened their seat belts.

or

- the vehicle is stationary and a door is open.

ℹ Further information about the [seat belt warning lamp] seat belt warning lamp (▷ page 248).

Emergency Tensioning Devices, belt force limiters

⚠ **WARNING**

Pyrotechnic ETDs that were activated must be replaced.

For your safety, when disposing of the pyrotechnic ETDs always follow our safety instructions. These are available at any authorized Mercedes-Benz Center.

! If the front-passenger seat is not occupied, do not engage the seat belt tongue in the buckle on the front-passenger seat. Otherwise, the Emergency Tensioning Device could be triggered in the event of an accident.

▶ In order to ensure that the pyrotechnic Emergency Tensioning Devices have not been triggered, always have the seat belts checked after an accident.
If the Emergency Tensioning Devices have been triggered, they must be replaced.

The seat belts for the front seats and rear outer seats are equipped with ETDs and seat belt force limiters.

The ETDs on the driver's and front-passenger seat consist of pyrotechnic belt buckle tensioners and belt anchor installation tensioners that are triggered together. The belt buckle tensioner is mounted on the B-pillar and the belt anchor installation is mounted on the side of the seat. After deploying, both tensioners must always be replaced.

The ETDs tighten the seat belts in an accident, pulling them close against the body.

The ETDs do not correct incorrect seat positions or incorrectly fastened seat belts.

The ETDs do not pull vehicle occupants back towards the backrest.

When triggered, seat belt force limiters help to reduce the peak force exerted by the seat belt on the vehicle occupant.

The front seat belt force limiters are synchronized with the front air bags, which take on a part of the deceleration force. Thus, the force exerted on the occupant is distributed over a greater area.

The ETDs can only be activated when:

- the SmartKey is in position **1** or **2** in the ignition lock.
- the restraint systems are operational; see "SRS warning lamp" (▷ page 39).
- the belt tongue is engaged in the buckle on each of the lap-shoulder belts in the front.
- the front-passenger seat is occupied and the belt tongue is engaged in the buckle on the front-passenger side

The Emergency Tensioning Devices are triggered depending on the type and severity of an accident, if:

- in the event of a head-on or rear-end collision, the vehicle decelerates or accelerates rapidly in a longitudinal direction during the initial stages of the impact
- if, in the event of a side impact, on the side opposite the impact the vehicle decelerates or accelerates rapidly in a lateral direction
- in certain situations where the vehicle overturns and the system determines that it can provide additional protection

If the ETDs are deployed, you will hear a bang, and a small amount of powder may also be released. Only in rare cases will the bang affect your hearing. The powder that is released generally does not constitute a health hazard. The [ ] SRS warning lamp lights up.

Children in the vehicle

Child restraint systems

Important safety notes

⚠ **WARNING**

According to accident statistics, children are safer when properly restrained in the rear seating positions than in the front seating position. Thus, we strongly recommend that children be placed in the rear seats whenever possible. Regardless of seating position, children 12 years old and under must be seated and properly secured in an appropriate infant restraint, toddler restraint, or booster seat recommended for the size and weight of the child.

The infant or child restraint must be properly secured with the vehicle's seat belt, the seat belt and top tether strap, or lower anchors and top tether strap, fully in accordance with the child seat manufacturer's instructions.

Occupants, especially children, should always sit as upright as possible, wear the seat belt properly and use an appropriately sized infant restraint, toddler restraint, or booster seat recommended for the size and weight of the child.

Children can be killed or seriously injured by an inflating air bag. Note the following important information when circumstances require you to place a child in the front passenger seat:

- Children 12 years old and under must never ride in the front seat, except in a Mercedes-Benz authorized BabySmart™ compatible child seat, which operates with the BabySmart™ system installed in the vehicle to deactivate the front passenger front air bag when it is installed properly. Otherwise they will be struck by the air bag when it inflates in a crash. If this happens, serious or fatal injury will result.
- A child in a rear-facing child restraint on the front passenger seat will be seriously injured or even killed if the front passenger front air bag inflates in a collision which could occur under some circumstances, even with the air bag technology installed in your vehicle. The only means to completely eliminate this risk is to never place a child in a rear-facing child restraint in the front seat. We therefore strongly recommend that you always place a child in a rear-facing child restraint in a backseat.
- If you must install a rear-facing child restraint on the front passenger seat because circumstances require you to do so, make sure the [ ] [PASS. AIR BAG OFF] indicator lamp is illuminated, indicating that the front passenger front air bag is deactivated. Should the [ ] [PASS. AIR BAG OFF] indicator lamp not illuminate or go out while the restraint is installed, please check installation. Periodically check the [ ] [PASS. AIR BAG OFF] indicator lamp while driving to make sure the [ ] [PASS. AIR BAG OFF] indicator lamp is illuminated. If the [ ] [PASS. AIR BAG OFF] indicator lamp goes out or remains out, do not transport a child on the front passenger seat until the system has been repaired.

  A child in a rear-facing child restraint on the front passenger seat will be seriously injured or even killed if the front passenger front air bag inflates.
- If you have to place a child in a forward-facing child restraint on the front passenger seat, move the seat as far back as possible, use the proper child restraint recommended for the age, size and weight of the child, and secure child restraint with the vehicle's seat belt according to the child seat manufacturer's instructions.

⚠ WARNING

Infants and small children should never share a seat belt with another occupant. In the event of an accident, they could be crushed between the occupant and seat belt.

A child's risk of serious or fatal injuries is significantly increased if the child restraints are not properly secured in the vehicle and/or the child is not properly secured in the child restraint.

Children that are too large for a child restraint must travel in seats using normal seat belts. Position the shoulder belt across the chest and shoulder, not face or neck. A booster seat may be necessary to achieve proper seat belt positioning for children over 41 lb (18 kg) until they reach a height where a lap-shoulder belt fits properly without a booster.

When the child restraint is not in use, remove it from the vehicle or secure it with the seat belt to prevent the child restraint from becoming a projectile in the event of an accident.

⚠ **WARNING**

When leaving the vehicle, always remove the SmartKey from the ignition lock. Always take the SmartKey with you and lock the vehicle. Do not leave children unattended in the vehicle, even if they are secured in a child restraint system, or with access to an unlocked vehicle. A child's unsupervised access to a vehicle could result in an accident and/or serious personal injury. The children could:

- injure themselves on parts of the vehicle
- be seriously or fatally injured through excessive exposure to extreme heat or cold
- injure themselves or cause an accident with vehicle equipment that can be operated even if the SmartKey is removed from the ignition lock or removed from the vehicle, such as seat adjustment, steering wheel adjustment, or the memory function

If children open a door, they could injure other persons or get out of the vehicle and injure themselves or be injured by following traffic.

Do not expose the child restraint system to direct sunlight. The child restraint system's metal parts, for example, could become very hot, and the child could be burned on these parts.

⚠ **WARNING**

Do not carry heavy or hard objects in the passenger compartment or trunk unless they are firmly secured in place.

Unsecured or improperly positioned cargo increases a child's risk of injury in the event of

- strong braking maneuvers
- sudden changes of direction
- an accident

We recommend that all infants and children be properly restrained using the infant or child restraint systems at all times while the vehicle is in motion.

Always use a child restraint system that is compatible with BabySmart™ on the front-passenger seat.

The use of infant or child restraints is required by law in all 50 states, the District of Columbia, all U.S. territories and all Canadian provinces.

Infants and small children must be seated in an appropriate infant or child restraint system recommended for the size and weight of the child. The infant or child restraint system must be properly secured in accordance with the manufacturer's instructions. All infant or child restraint systems must comply with U.S. Federal Motor Vehicle Safety Standards 213 and 225 and Canadian Motor Vehicle Safety Standards 213 and 210.2.

An information label on the child restraint system indicates whether it meets these standards. This confirmation can also be found in the installation instructions that are included with the child restraint system.

Always read and follow the manufacturer's instructions when using an infant or child restraint system or booster seat.

Observe the warning labels in the vehicle interior or on the infant or child restraint.

If an infant or child is traveling in the vehicle:

▶ Secure the child with a child or infant seat restraint system appropriate to the age and weight of the child.

▶ Make sure that the infant or child is properly secured at all times while the vehicle is in motion.

Special seat belt retractor

⚠ **WARNING**

Observe "Important safety notes" (▷ page 54).

⚠ **WARNING**

Never release the seat belt buckle while the vehicle is in motion, since the special seat belt retractor will be deactivated.

All seat belts except the driver's seat belt are equipped with a special seat belt retractor. When activated, the special seat belt retractor ensures that the seat belt will not slacken once the child restraint system has been secured.

Installing a child restraint system:

- ▶ Always comply with the manufacturer's installation instructions.
- ▶ Pull the seat belt smoothly from the seat belt retractor.
- ▶ Engage the seat belt tongue in the belt buckle.

Activating the special seat belt retractor:

- ▶ Pull the seat belt out fully and let the seat belt retractor retract it again.
  While the seat belt is retracting, you should hear a ratcheting sound. The special seat belt retractor is activated.
- ▶ Push down on the child restraint system to take up any slack.

Removing a child restraint system/ deactivating the special seat belt retractor:

- ▶ Always comply with the manufacturer's installation instructions.
- ▶ Press the release button on the seat belt buckle.
- ▶ Guide the seat belt tongue into the belt outlet.
  The special seat belt retractor is deactivated.

LATCH-type (ISOFIX) child seat anchors in the rear

⚠ **WARNING**

Observe "Important safety notes" (▷ page 54).

⚠ **WARNING**

Children that are too large for a child restraint must travel in seats using normal seat belts. Position shoulder belt across the chest and shoulder, not face or neck.

A booster seat may be necessary to achieve proper seat belt positioning for children over 41 lb (18 kg) until they reach a height where a lap/shoulder belt fits properly without a booster.

Install the child restraint system in accordance with the manufacturer's instructions.

Attach the child restraint system to both securing rings.

An incorrectly installed child restraint system could come loose during an accident and seriously or even fatally injure the child.

Child restraint systems or child seat securing rings that are malfunctioning or damaged as the result of a collision must be replaced.

! When installing the child restraint system, make sure that the seat belt for the middle seat does not get trapped. The seat belt could otherwise be damaged.

ISOFIX is a standardized securing system for specially designed child restraint systems on the rear seats. Securing rings for two LATCH-type (ISOFIX) child restraint systems are installed on the left and right of the rear seats.

Secure non-LATCH-type (ISOFIX) child restraint systems using the vehicle's seat belt system. When installing child restraint systems, you must observe the manufacturer's installation instructions.

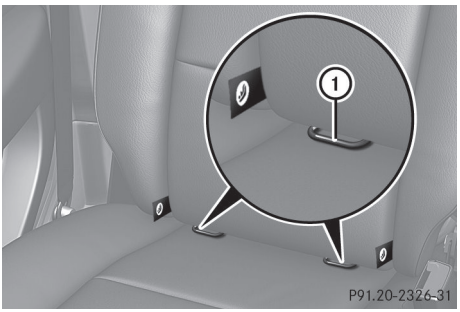

① Securing rings

- ▶ Install the LATCH-type (ISOFIX) child restraint system. Comply with the manufacturer's instructions when

installing the LATCH-type (ISOFIX) child restraint system.

▶ When a LATCH-type (ISOFIX) child seat securing system is installed, make sure that the center seat belt in the rear compartment is fully functional and can move freely.

Top Tether

⚠ **WARNING**

Observe "Important safety notes" (▷ page 54).

⚠ **WARNING**

Always lock the rear seat backrests in their upright position when the rear seats are occupied by passengers. Lock the rear seat backrests in their upright position before installing the Top Tether straps or when the cargo compartment is not in use. Make sure that rear seat backrests are secured properly by pushing and pulling on the seat backrests. If the seat backrest is not locked properly, the seat backrest could fold forward. The child restraint system is no longer supported properly or held in position and can no longer fulfill its function. This could cause serious or even fatal injuries.

⚠ **WARNING**

Only use the described top tether anchorage rings for the respective child seat. Other lashing eyelets could tear in case of an accident. Make sure the top tether straps are not crossed or twisted and the hook is attached and closed properly.

Top Tether provides an additional connection between a child restraint system, secured with a LATCH-type (ISOFIX) child seat mount, and the rear seat. This helps reduce the risk of injury even further.

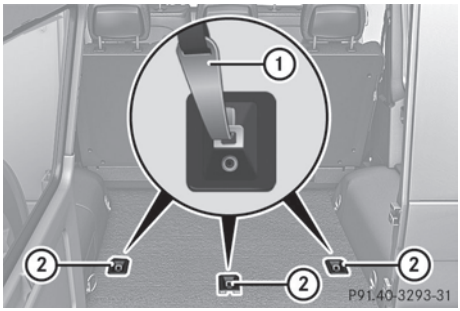

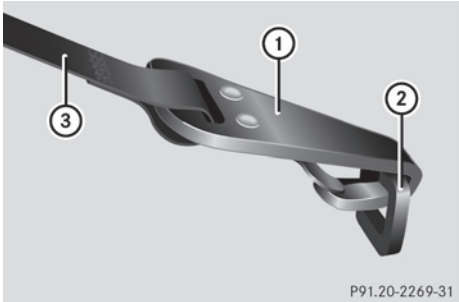

▶ Remove cargo compartment cover (▷ page 267).

▶ Move the head restraint upwards.

▶ Install the LATCH-type (ISOFIX) child restraint system with Top Tether. Comply with the manufacturer's installation instructions when doing so.

▶ Route Top Tether belt ③ under the head restraint between the two head restraint bars.

▶ Attach Top Tether hook ① to Top Tether anchorage ② on the cargo compartment floor.

▶ Hook Top Tether hook ① of Top Tether belt ③ into Top Tether anchorage ②.

Ensure that:

- Top Tether hook ① is hooked into Top Tether anchorage ② as shown.
- Top Tether belt ③ is not twisted.

▶ Make sure that Top Tether belt ③ is not twisted.

▶ Tension Top Tether belt ③. Comply with the manufacturer's installation instructions when doing so.

▶ Move head restraint back down again slightly if necessary (▷ page 86). Make sure that you do not interfere with the correct routing of Top Tether belt ③.

Child-proof locks

Important safety notes

⚠ **WARNING**

When children ride on the vehicle's rear seats, activate the override switch. Otherwise, the children could be injured, e.g. by trapping themselves in the rear side window.

⚠ **WARNING**

When leaving the vehicle, always remove the SmartKey from the ignition lock. Always take the SmartKey with you and lock the vehicle. Do not leave children unattended in the vehicle, even if they are secured in a child restraint system, or with access to an unlocked vehicle. A child's unsupervised access to a vehicle could result in an accident and/or serious personal injury. The children could:

- injure themselves on parts of the vehicle
- be seriously or fatally injured through excessive exposure to extreme heat or cold
- injure themselves or cause an accident with vehicle equipment that can be operated even if the SmartKey is removed from the ignition lock or removed from the vehicle, such as seat adjustment, steering wheel adjustment, or the memory function

If children open a door, they could injure other persons or get out of the vehicle and injure themselves or be injured by following traffic.

Do not expose the child restraint system to direct sunlight. The child restraint system's metal parts, for example, could become very hot, and the child could be burned on these parts.

Child-proof locks for the rear doors

⚠ **WARNING**

Children could open a rear door from inside the vehicle. This could result in serious injuries or an accident. Therefore, when children ride in the rear always secure the rear doors with the child-proof locks.

You secure each door individually with the child-proof locks on the rear doors. A door secured with a child-proof lock cannot be opened from inside the vehicle. When the vehicle is unlocked, the door can be opened from the outside.

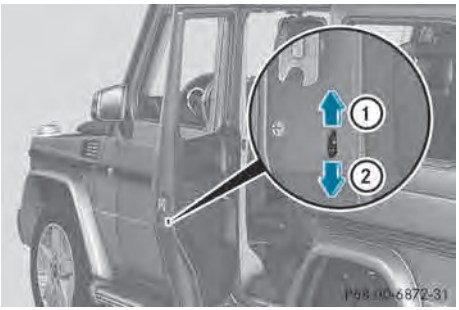

▶ **To activate:** press the child-proof lock lever down in the direction of arrow ②.

▶ Make sure that the child-proof locks are working properly.

▶ **To deactivate:** press the child-proof lock lever up in the direction of arrow ①.

Override feature for the rear side windows

⚠ **WARNING**

When children ride on the vehicle's rear seats, activate the override switch. Otherwise, the children could be injured, e.g. by trapping themselves in the rear side window.

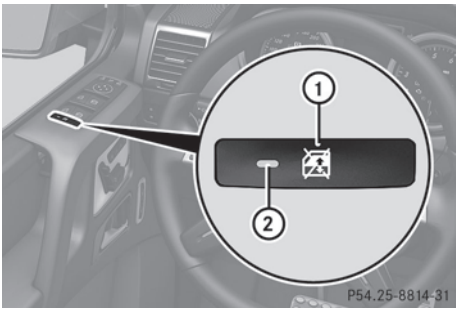

▶ **To activate/deactivate:** press button ①. If indicator lamp ② is lit, operation of the rear side windows is disabled. Operation is only possible using the switches in the driver's door. If indicator lamp ② is off, operation is possible using the switches in the rear compartment.

Driving safety systems

Driving safety systems overview

In this section, you will find information about the following driving safety systems:

- ABS (**A**nti-lock **B**raking **S**ystem) (▷ page 61)
- BAS (**B**rake **A**ssist **S**ystem) (▷ page 61)
- Adaptive brake lamps (▷ page 62)
- ESP® (**E**lectronic **S**tability **P**rogram) (▷ page 62)
- EBD (**e**lectronic **b**rake force **d**istribution) (▷ page 64)
- ADAPTIVE BRAKE(▷ page 64)
- Trailer stabilization

Important safety notes

⚠ **WARNING**

The ABS, the BAS, and the ESP® switch off when the differential locks are switched on. When the ABS, the BAS, and the ESP® are switched off

- wheels may lock during hard braking
- steering capabilities are reduced
- braking distance is increased
- vehicle stability in standard driving maneuvers is increased

Make sure the differential locks are switched on at all times except when driving off-road for example. Switch on the differential locks immediately when returning from off-road driving.

If you fail to adapt your driving style or become distracted, the driving safety systems can neither reduce the risk of accident nor override the laws of physics. Driving safety systems are merely aids designed to assist driving. You are responsible for the distance to the vehicle in front, for vehicle speed and for braking in good time. Always adapt your driving style to suit the prevailing road and weather conditions and maintain a safe distance from the vehicle in front. Drive carefully.

ⓘ Please note that the driving safety systems described only work as effectively as possible if there is adequate contact between the tires and the road surface. Pay particular attention to the information regarding tires, recommended minimum tire tread depths etc. in the "Wheels and tires" section (▷ page 318).

In wintry driving conditions, always use winter tires (M+S tires) and if necessary, snow chains. Only in this way will the driving safety systems described in this section work as effectively as possible.

ABS (Anti-lock Braking System)

Important safety notes

ℹ Observe the "Important safety notes" section (▷ page 60).

⚠ **WARNING**

If the ABS malfunctions, other driving systems such as the BAS or the ESP® are also switched off. Observe indicator and warning lamps that may come on as well as messages in the multifunction display that may appear.

If the ABS malfunctions, the wheels may lock during hard braking, reducing the steering capability and extending the braking distance.

⚠ **WARNING**

If ABS is faulty, the wheels could lock when braking. The steerability and braking characteristics may be severely impaired. Additionally, further driving safety systems are deactivated. There is an increased danger of skidding and accidents.

Drive on carefully. Have ABS checked immediately at a qualified specialist workshop.

ABS regulates brake pressure in such a way that the wheels do not lock when you brake. This allows you to continue steering the vehicle when braking.

Provided that the differential locks are not active, ABS works from a speed of about 5 mph (8 km/h) upwards, regardless of road-surface conditions. ABS works on slippery surfaces, even if you only brake gently.

The yellow [ABS] ABS warning lamp in the instrument cluster lights up when the ignition is switched on. It goes out when the engine is running.

Braking

If ABS intervenes when braking, you will feel a pulsing in the brake pedal.

- ▶ **If ABS intervenes:** continue to depress the brake pedal vigorously until the braking situation is over.
- ▶ **To make a full brake application:** depress the brake pedal with full force.

The pulsating brake pedal can be an indication of hazardous road conditions, and functions as a reminder to take extra care while driving.

Off-road ABS

If the **LOW RANGE** shift range is selected by the transfer case, (▷ page 199), an ABS system specifically suited to off-road terrain is automatically activated.

At speeds below 37 mph (60 km/h), the front wheels lock cyclically during braking. The digging-in effect achieved in the process reduces the stopping distance on off-road terrain. This limits steering capability.

BAS (Brake Assist System)

ℹ Observe the "Important safety notes" section (▷ page 60).

⚠ **WARNING**

If BAS is malfunctioning, the braking distance in an emergency braking situation is increased. There is a risk of an accident.

In an emergency braking situation, depress the brake pedal with full force. ABS prevents the wheels from locking.

BAS operates in emergency braking situations. If you depress the brake pedal quickly, BAS automatically boosts the braking force, thus shortening the stopping distance.

- ▶ Keep the brake pedal firmly depressed until the emergency braking situation is over. ABS prevents the wheels from locking.

The brakes will function as usual once you release the brake pedal. BAS is deactivated.

Adaptive brake lamps

If you brake sharply from a speed of more than 30 mph (50 km/h) or if braking is assisted by BAS, the brake lamps flash rapidly. In this way, traffic traveling behind you is warned in an even more noticeable manner.

If you brake sharply from a speed of more than 45 mph (70 km/h) to a standstill, the hazard warning lamps are activated automatically. If the brakes are applied again, the brake lamps light up continuously. If you drive faster than 6 mph (10 km/h), the hazard warning lamps are deactivated automatically. You can also switch off the hazard warning lamps using the hazard warning button (▷ page 104).

ESP® (Electronic Stability Program)

Important safety notes

ⓘ Observe the "Important safety notes" section (▷ page 60).

⚠ **WARNING**

If ESP® is malfunctioning, ESP® is unable to stabilize the vehicle. Additionally, further driving safety systems are deactivated. This increases the risk of skidding and an accident.

Drive on carefully. Have ESP® checked at a qualified specialist workshop.

! Only operate the vehicle for a maximum of ten seconds on a brake test dynamometer. Switch off the ignition.

Application of the brakes by ESP® may otherwise destroy the brake system.

! A function or performance test should only be carried out on a two-axle dynamometer. Before you operate the vehicle on such a dynamometer, please consult a qualified workshop. You could otherwise damage the drive train or the brake system.

ESP® monitors driving stability and traction. Traction is the power transmission between the tires and the road surface.

ESP® is deactivated if the [OFF] warning lamp in the instrument cluster lights up continuously when the engine is running.

If the [car] warning lamp and the [OFF] warning lamp are lit continuously, ESP® is not available due to a malfunction.

Observe the information on warning lamps (▷ page 252) and any display messages that appear in the instrument cluster (▷ page 226).

If ESP® detects that the vehicle is deviating from the direction desired by the driver, one or more wheels are braked to stabilize the vehicle. If necessary, the engine output is also modified to keep the vehicle on the desired course within physical limits. ESP® assists the driver when pulling away on wet or slippery roads. ESP® can also stabilize the vehicle during braking.

If ESP® intervenes, the [car] warning lamp flashes in the instrument cluster.

If ESP® intervenes:

- ▶ Do not deactivate ESP® under any circumstances.
- ▶ Only depress the accelerator pedal as far as necessary when pulling away.
- ▶ Adapt your driving style to suit the prevailing road and weather conditions.

ⓘ Only use wheels with the recommended tire sizes. Only then will ESP® function properly.

ⓘ If differential locks are switched on, ABS, BAS and ESP® switch themselves off automatically.

4ETS (Electronic Traction System)

Traction control remains active if you deactivate ESP®.

▶ If appropriate for the driving conditions, engage the **LOW RANGE** off-road gear (▷ page 199).

Traction control is part of ESP®.

Traction control brakes the drive wheels individually if they spin. This enables you to pull away and accelerate on slippery surfaces, for example if the road surface is slippery on one side. In addition, more drive torque is transferred to the wheel or wheels with traction.

Traction control remains active if you deactivate ESP®.

At speeds above approximately 37 mph (60 km/h), traction control is no longer active.

Traction control brakes the drive wheels individually if they spin. This enables you to pull away and accelerate on slippery surfaces, for example if the road surface is slippery on one side. In addition, more drive torque is transferred to the wheel or wheels with traction.

Deactivating/activating ESP®

⚠ **WARNING**

If you deactivate ESP®, ESP® no longer stabilizes the vehicle. There is an increased risk of skidding and an accident.

Only deactivate ESP® in the situations described in the following.

! Avoid spinning the driven wheels for an extended period with ESP® deactivated. You could otherwise damage the drivetrain.

▶ **To deactivate:** press button ① until the OFF warning lamp lights up in the instrument cluster.

▶ **To activate:** press button ① until the OFF warning lamp goes out in the instrument cluster.

ESP® is activated automatically when the engine is started.

ℹ **Vehicles with the ECO start/stop function:** the ECO start/stop function automatically switches the engine off when the vehicle comes to a stop. The engine starts automatically when the driver wants to pull away again. ESP® remains in its previously selected status. Example: if ESP® was deactivated before the engine was switched off, ESP® remains deactivated when the engine is switched on again.

It may be best to deactivate ESP® in the following situations:

- when using snow chains
- in deep snow
- on sand or gravel

If you deactivate ESP®:

- ESP® no longer improves driving stability.
- the engine's torque is no longer limited and the drive wheels can spin. The spinning of the wheels results in a cutting action, which provides better grip.
- traction control is still activated.

- ESP® still provides support when you brake.
- and are driving at above 37 mph (60 km/h), ESP® still intervenes when one wheel reaches its grip limit even though it is switched off.

ℹ If ESP® is deactivated and one or more wheels start to spin, the warning lamp in the instrument cluster flashes. In such situations, ESP® will not stabilize the vehicle.

ℹ If ESP® is deactivated, it is automatically reactivated when you drive faster than 37 mph (60 km/h) or if a predefined lateral acceleration threshold has been exceeded.

Trailer stabilization

⚠ **WARNING**

If road and weather conditions are poor, trailer stabilization will not be able to prevent the vehicle/trailer combination from swerving. Trailers with a high center of gravity can tip over before ESP® can detect this. There is a risk of an accident.

Always adapt your driving style to the prevailing road and weather conditions.

Trailer stabilization does not work if ESP® is deactivated because of a malfunction.

If your vehicle with trailer (vehicle/trailer combination) begins to lurch, you can only stabilize the vehicle/trailer combination by depressing the brake firmly.

In this situation, ESP® assists you and can detect if the vehicle/trailer combination begins to lurch. ESP® slows the vehicle down by braking and limiting the engine output until the vehicle/trailer combination has stabilized.

Trailer stabilization is active above speeds of about 37 mph (60 km/h).

EBD (electronic brake force distribution)

ℹ Observe the "Important safety notes" section (▷ page 60).

⚠ **WARNING**

If EBD has malfunctioned, the rear wheels can still lock, e.g. under full braking. This increases the risk of skidding and an accident.

You should therefore adapt your driving style to the different handling characteristics. Have the brake system checked at a qualified specialist workshop.

Observe information regarding indicator and warning lamps (▷ page 250) as well as display messages (▷ page 228).

EBD monitors and controls the brake pressure on the rear wheels to improve driving stability while braking.

ADAPTIVE BRAKE

ADAPTIVE BRAKE provides increased braking safety. In addition to the braking function, ADAPTIVE BRAKE also has the HOLD function (▷ page 192) and hill start assist (▷ page 141).

Theft deterrent locking system

Immobilizer

▶ **To activate:** remove the SmartKey from the ignition lock.

▶ **To deactivate:** switch on the ignition.

The immobilizer prevents your vehicle from being started without the correct SmartKey.

When leaving the vehicle, always take the SmartKey with you and lock the vehicle. The engine can be started by anyone with a valid SmartKey that is left inside the vehicle.

ℹ The immobilizer is always deactivated when you start the engine.

In the event that the engine cannot be started when the starter battery is fully charged, the immobilizer may be faulty. Contact an authorized Mercedes-Benz Center or call 1-800-FOR-MERCedes (in the USA) or 1-800-387-0100 (in Canada).

ATA (anti-theft alarm system)

▶ **To arm:** lock the vehicle with the SmartKey.
Indicator lamp ① flashes. The alarm system is armed after approximately 15 seconds.

▶ **To deactivate:** unlock the vehicle with the SmartKey.

ℹ If you then do not open a door or the rear door, the alarm system switches back on again after approximately 40 seconds.

▶ **To stop the alarm:** insert the SmartKey into the ignition lock.
The alarm is switched off.

or

▶ Press the [🔓] or [🔒] button on the SmartKey.
The alarm is switched off.

A visual and audible alarm is triggered if the alarm system is armed and you open:

- a door
- a door using the mechanical key
- the rear door
- the hood

The alarm is also triggered if:

- the position of the vehicle is changed.
- a window is smashed.
  The alarm is not switched off, even if you close the open door that has triggered it, for example.

ℹ If the alarm stays on for more than 30 seconds, the Tele Aid system automatically initiates a call to the Customer Assistance center. The mbrace emergency call system initiates the call if:

- you have subscribed to the Tele Aid service.
- the Tele Aid service has been activated properly.
- the required mobile phone, power supply and GPS are available.

Useful information 68
SmartKey 68
Doors 73
Rear door 77
Side windows 78
Sliding sunroof 79

Useful information

ℹ This Operator's Manual describes all models and all standard and optional equipment of your vehicle available at the time of publication of the Operator's Manual. Country-specific differences are possible. Please note that your vehicle may not be equipped with all features described. This also applies to safety-related systems and functions.

ℹ Read the information on qualified specialist workshops: (▷ page 23).

SmartKey

Important safety notes

⚠ **WARNING**

When leaving the vehicle, always remove the SmartKey from the ignition lock. Always take the SmartKey with you and lock the vehicle. Do not leave children unsupervised in the vehicle, even if they are secured in a child restraint system, and do not give them access to an unlocked vehicle. A child's unsupervised access to a vehicle could result in an accident and/or serious personal injury. They could:

- injure themselves on vehicle parts
- be seriously or fatally injured by extreme heat or cold
- injure themselves or have an accident with vehicle equipment that may still be in operation even after the SmartKey has been removed from the ignition, such as the seat adjustment, steering wheel adjustment or memory function.

If children open a door, they could cause severe or even fatal injury to other persons; if they get out of the vehicle, they could injure themselves when doing so or be seriously or even fatally injured by any passing traffic.

Do not expose the child restraint system to direct sunlight. The child restraint system's metal parts, for example, could become very hot, and a child could be burned on these parts.

⚠ **WARNING**

Do not carry heavy or hard objects in the passenger compartment or cargo compartment unless they are firmly secured in place.

Unsecured or improperly positioned cargo increases a child's risk of injury in the event of

- strong braking maneuvers
- sudden changes of direction
- an accident

⚠ **WARNING**

If you attach heavy or large objects to the SmartKey, the SmartKey could be unintentionally turned in the ignition lock. This could cause the engine to be switched off. There is a risk of an accident.

Do not attach any heavy or large objects to the SmartKey. Remove any bulky keyrings before inserting the SmartKey into the ignition lock.

SmartKey functions

⚠ **WARNING**

If children are left unsupervised in the vehicle, they could:

- open the doors, thus endangering other people or road users.
- get out and disrupt traffic.
- operate the vehicle's equipment.

Additionally, children could set the vehicle in motion if, for example, they:

- release the parking brake.
- shift the automatic transmission out of parking position P.
- shift the manual transmission into neutral.
- starting the engine.

There is a risk of an accident and injury.

When leaving the vehicle, always take the SmartKey with you and lock the vehicle. Never leave children or animals unattended in the vehicle. Always keep the SmartKey out of reach of children.

① 🔒 To lock the vehicle

② 🔓 To unlock the vehicle

▶ **To unlock centrally:** press the 🔓 button.

If you do not open the vehicle within approximately 40 seconds of unlocking:

- the vehicle is locked again.
- the theft deterrent locking system is armed again.

▶ **To lock centrally:** press the 🔒 button.

The SmartKey centrally locks/unlocks:

- the doors
- the rear door
- the fuel filler flap

ℹ When unlocking, the turn signals flash once. When locking, they flash three times.

You can also set an audible signal to confirm that the vehicle has been locked. The audible signal can be activated and deactivated using the on-board computer (▷ page 221).

When it is dark, the surround lighting also comes on if it is activated in the on-board computer (▷ page 219).

Changing the settings of the locking system

You can change the setting of the locking system in such a way that only the driver's door and the fuel filler flap are unlocked. This is useful if you frequently travel on your own.

ℹ If the setting of the locking system is changed within the signal range of the vehicle, pressing the 🔒 or 🔓 button locks or unlocks the vehicle.

▶ **To change the setting:** press and hold down the 🔓 and 🔒 buttons simultaneously for approximately six seconds until battery check lamp ① flashes twice.

The SmartKey now functions as follows:

▶ **To unlock the driver's door and fuel filler flap:** press the 🔓 button once.

▶ **To unlock centrally:** press the 🔓 button twice.

▶ **To lock centrally:** press the 🔒 button.

Restoring the factory settings

▶ Press the [🔓] and [🔒] buttons simultaneously for approximately six seconds until battery check lamp ① flashes twice.

Mechanical key

General notes

If the vehicle can no longer be unlocked with the SmartKey, use the mechanical key.

If you use the mechanical key to unlock and open the driver's door or the rear door, the anti-theft alarm system will be triggered (▷ page 65).

▶ **To end the alarm:** insert the SmartKey into the ignition lock.

Removing the mechanical key

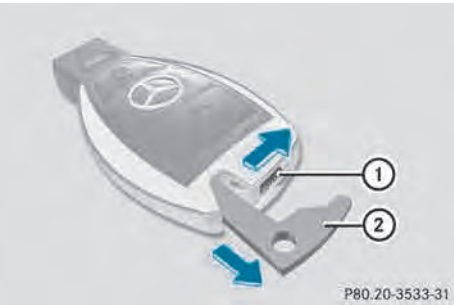

① Release catch

② Mechanical key

▶ Push release catch ① in the direction of the arrow and at the same time remove mechanical key ② from the SmartKey.

SmartKey battery

Important safety notes

⚠ **WARNING**

Batteries contain toxic and corrosive substances. If batteries are swallowed, it can result in severe health problems. There is a risk of fatal injury.

Keep batteries out of the reach of children. If a battery is swallowed, seek medical attention immediately.

The SmartKey batteries contain perchlorate material, which may require special handling and regard for the environment. National guidelines must be observed during disposal. In California, see **www.dtsc.ca.gov/HazardousWaste/Perchlorate/index.cfm**.

Mercedes-Benz recommends that you have the batteries replaced at a qualified specialist workshop.

Checking the battery

▶ Press the [🔒] or [🔓] button.
The battery is working properly if battery check lamp ① lights up briefly.

If battery check lamp ① does not light up during the test, the battery is discharged.

▶ Change the battery (▷ page 71).

ℹ You can get a battery in any qualified specialist workshop.

ℹ Have the batteries replaced at a qualified specialist workshop.

ℹ If the SmartKey battery is checked within the signal reception range of the vehicle, pressing the 🔒 or 🔓 button:

- locks or
- unlocks the vehicle

Replacing the battery

You require a CR 2025 3 V cell battery.

▶ Take the mechanical key out of the SmartKey (▷ page 70).

① Battery compartment cover

② Mechanical key

▶ Press mechanical key ② into the opening in the SmartKey in the direction of the arrow until battery tray cover ① opens. Do not hold the cover closed while doing so.

▶ Remove battery tray cover ①.

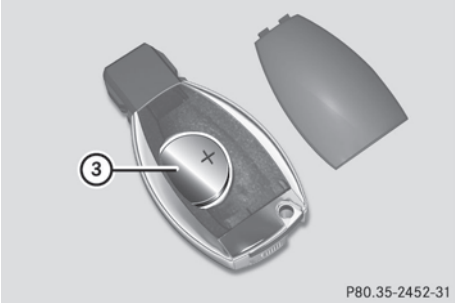

③ Battery

▶ Repeatedly tap the SmartKey against your palm until battery ③ falls out.

▶ Insert the new battery with the positive terminal facing upwards. Use a lint-free cloth to do so.

▶ Make sure that the surface of the battery is free from lint, grease and all other forms of contamination.

▶ Insert the front tabs of battery tray cover ① and then press to close it.

▶ Insert the mechanical key into the SmartKey.

▶ Check the function of all SmartKey buttons on the vehicle.

Problems with the SmartKey

Problem	Possible causes/consequences and ▶ Solutions
You cannot lock or unlock the vehicle using the SmartKey.	The SmartKey battery is discharged or nearly discharged. ▶ Point the tip of the SmartKey at the driver's door handle from a distance of approximately 1.5 ft (50 cm) and try to unlock or lock the vehicle again. If this does not work: ▶ Check the SmartKey battery (▷ page 70) and replace it if necessary (▷ page 71). ▶ Lock (▷ page 75) or unlock (▷ page 76) the vehicle using the mechanical key.
	The SmartKey is faulty. ▶ Lock or unlock the vehicle using the mechanical key (▷ page 75). ▶ Have the SmartKey checked at a qualified specialist workshop.
You have lost a SmartKey.	▶ Have the SmartKey deactivated at a qualified specialist workshop. ▶ Report the loss immediately to the vehicle insurers. ▶ If necessary, have the locks changed as well.
You have lost the mechanical key.	▶ Report the loss immediately to the vehicle insurers. ▶ If necessary, have the locks changed as well.

Problem	Possible causes/consequences and ▶ Solutions
The engine cannot be started using the SmartKey.	The SmartKey has been in position **0**(▷ page 139) for a considerable time. ▶ Remove the SmartKey and reinsert it into the ignition lock. ▶ Start the engine.
	The on-board voltage is too low. ▶ Switch off non-essential consumers, e.g. seat heating or interior lighting, and try to turn the SmartKey again. If this does not work: ▶ Check the battery and charge it if necessary (▷ page 307). or ▶ Jump-start the vehicle (▷ page 308). or ▶ Consult a qualified specialist workshop.

Doors

Important safety notes

⚠ **WARNING**

When leaving the vehicle, always remove the SmartKey from the ignition lock. Always take the SmartKey with you and lock the vehicle. Do not leave children unsupervised in the vehicle, even if they are secured in a child restraint system, and do not give them access to an unlocked vehicle. A child's unsupervised access to a vehicle could result in an accident and/or serious personal injury. They could:

- injure themselves on vehicle parts
- be seriously or fatally injured by extreme heat or cold
- injure themselves or have an accident with vehicle equipment that may still be in operation even after the SmartKey has been removed from the ignition, such as the seat adjustment, steering wheel adjustment or memory function.

If children open a door, they could cause severe or even fatal injury to other persons; if they get out of the vehicle, they could injure themselves when doing so or be seriously or even fatally injured by any passing traffic.

Do not expose the child restraint system to direct sunlight. The child restraint system's metal parts, for example, could become very hot, and a child could be burned on these parts.

⚠ **WARNING**

Do not carry heavy or hard objects in the passenger compartment or cargo compartment unless they are firmly secured in place.

Unsecured or improperly positioned cargo increases a child's risk of injury in the event of

- strong braking maneuvers
- sudden changes of direction
- an accident

⚠ **WARNING**

If children are left unsupervised in the vehicle, they could:

- open the doors, thus endangering other people or road users.
- get out and disrupt traffic.
- operate the vehicle's equipment.

Additionally, children could set the vehicle in motion if, for example, they:

- release the parking brake.
- shift the automatic transmission out of parking position P.
- shift the manual transmission into neutral.
- starting the engine.

There is a risk of an accident and injury.

When leaving the vehicle, always take the SmartKey with you and lock the vehicle. Never leave children or animals unattended in the vehicle. Always keep the SmartKey out of reach of children.

Unlocking and opening doors from the inside

If the vehicle has previously been locked with the SmartKey, opening a door from the inside will trigger the anti-theft alarm system. Switch off the alarm (▷ page 65).

Only open the door when the traffic situation permits.

▶ **Front doors:** pull door handle ②.
If the door is locked, locking knob ① pops up. The door is unlocked and can be opened.

▶ **Rear compartment doors:** pull handle ① up.
The door is unlocked.

▶ Pull door handle ②.

Centrally locking and unlocking the vehicle from the inside

⚠ **WARNING**

If children are left unsupervised in the vehicle, they could:

- open the doors, thus endangering other people or road users.
- get out and disrupt traffic.
- operate the vehicle's equipment.

Additionally, children could set the vehicle in motion if, for example, they:

- release the parking brake.
- shift the automatic transmission out of parking position P.
- shift the manual transmission into neutral.
- starting the engine.

There is a risk of an accident and injury.

When leaving the vehicle, always take the SmartKey with you and lock the vehicle. Never leave children or animals unattended in the vehicle. Always keep the SmartKey out of reach of children.

You can centrally lock or unlock the vehicle from the inside. This feature may be useful if, for example, you wish to unlock the front-passenger door from the inside or lock the vehicle before you pull away.

The central locking button does not lock or unlock the fuel filler flap.

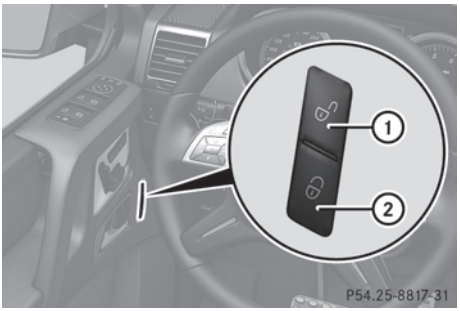

▶ **To unlock:** press button ①.

▶ **To lock:** press button ②.
If all the doors and the tailgate are closed, the vehicle locks.

You can open a front door from inside the vehicle even if it has been locked. Only open the door when the traffic situation permits.

If the vehicle has been locked with the central locking button:

- and the SmartKey is restored to the factory settings, the entire vehicle is unlocked if a front door is opened from inside the vehicle.
- and the SmartKey is set to an individual setting, only the front door that is opened from inside the vehicle is unlocked.

If the vehicle has been locked centrally with the SmartKey, it does not unlock if you use the central locking button.

ℹ You cannot unlock the vehicle centrally from the inside if the vehicle has been locked from the outside using the SmartKey.

ℹ It is only possible to lock the vehicle centrally if all doors are closed.

Automatic locking feature

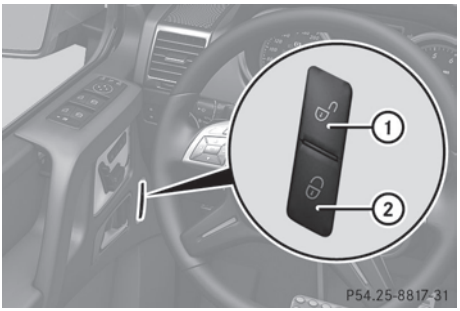

① To deactivate

② To activate

▶ **To disarm:** press and hold button ① for about five seconds until a tone sounds.

▶ **To arm:** press and hold button ② for about five seconds until a tone sounds.

ℹ If you press one of the two buttons and do not hear a tone, the relevant setting has already been selected.

The vehicle is locked automatically when the ignition is switched on and the vehicle's wheels are moving at a speed in excess of 9 mph (15 km/h).

You could therefore be locked out if:

- the vehicle is being pushed.
- the vehicle is being towed.
- the vehicle is being tested on a dynamometer.

You can also switch the automatic locking function on and off using the on-board computer (▷ page 220).

Unlocking the driver's door (mechanical key)

If the vehicle can no longer be centrally unlocked with the SmartKey, use the mechanical key.

If you use the mechanical key to unlock and open the driver's door, the anti-theft alarm system will be triggered (▷ page 65).

Take the mechanical key out of the SmartKey (▷ page 70).

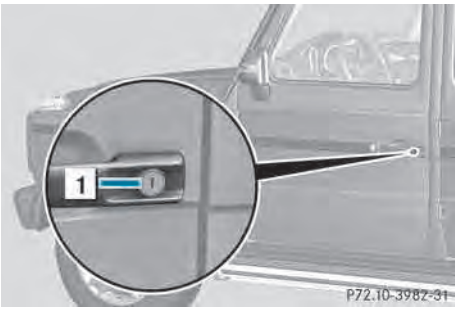

- ▶ Insert the mechanical key into the lock of the driver's door as far as it will go.
- ▶ Turn the mechanical key counter-clockwise to position 1.
  The door is unlocked.
- ▶ Turn the mechanical key back and remove it.
- ▶ Insert the mechanical key into the SmartKey.

Locking the vehicle

If the vehicle can no longer be centrally locked with the SmartKey, use the mechanical key.

- ▶ Close the front-passenger door, the rear doors and the tailgate.
- ▶ Press the locking button (▷ page 74).
- ▶ Make sure that the locking knobs on the doors are still visible. Press down the locking knobs by hand, if necessary.
- ▶ Close the driver's door from the outside.

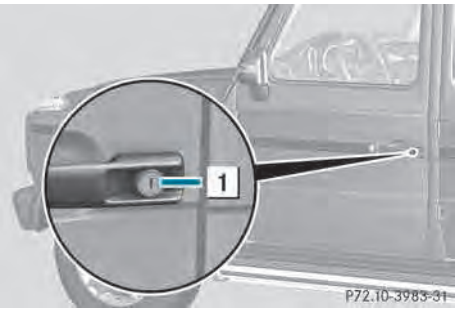

- ▶ Take the mechanical key out of the SmartKey (▷ page 70).
- ▶ Insert the mechanical key into the lock of the driver's door as far as it will go.
- ▶ Turn the mechanical key clockwise as far as it will go to position 1.
- ▶ Turn the mechanical key back and remove it.
- ▶ Make sure that the doors and the tailgate are locked.
- ▶ Insert the mechanical key into the SmartKey.

ℹ If you lock the vehicle as described above, the fuel filler flap is not locked. The anti-theft alarm system is not armed.

Rear door

Important safety notes

⚠ **WARNING**

When leaving the vehicle, always remove the SmartKey from the ignition lock. Always take the SmartKey with you and lock the vehicle. Do not leave children unsupervised in the vehicle, even if they are secured in a child restraint system, and do not give them access to an unlocked vehicle. A child's unsupervised access to a vehicle could result in an accident and/or serious personal injury. They could:

- injure themselves on vehicle parts
- be seriously or fatally injured by extreme heat or cold
- injure themselves or have an accident with vehicle equipment that may still be in operation even after the SmartKey has been removed from the ignition, such as the seat adjustment, steering wheel adjustment or memory function.

If children open a door, they could cause severe or even fatal injury to other persons; if they get out of the vehicle, they could injure themselves when doing so or be seriously or even fatally injured by any passing traffic.

Do not expose the child restraint system to direct sunlight. The child restraint system's metal parts, for example, could become very hot, and a child could be burned on these parts.

⚠ **WARNING**

Do not carry heavy or hard objects in the passenger compartment or cargo compartment unless they are firmly secured in place.

Unsecured or improperly positioned cargo increases a child's risk of injury in the event of

- strong braking maneuvers
- sudden changes of direction
- an accident

⚠ **WARNING**

Combustion engines emit poisonous exhaust gases such as carbon monoxide. If the rear door is open when the engine is running, particularly if the vehicle is moving, exhaust fumes could enter the passenger compartment. There is a risk of poisoning.

Turn off the engine before opening the rear door. Never drive with the rear door open.

! The tailgate swings out to the side when opened. Therefore, make sure that there is sufficient clearance.

ⓘ Do not leave the SmartKey in the cargo compartment. Otherwise, you could lock yourself out.

Opening

You can only open the rear door after unlocking it first.

▶ Press the [🔓] button on the SmartKey.

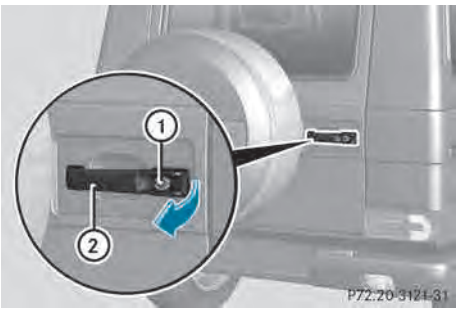

▶ Press release button ① and pull door handle ②.

▶ Open the rear door.

Closing

▶ Push the rear door closed from outside the vehicle.

▶ If necessary, lock the vehicle with the [🔒] button on the SmartKey.

Side windows

Important safety notes

⚠ **WARNING**

While opening the side windows, body parts could become trapped between the side window and the door frame as the side window moves. There is a risk of injury.

Make sure that nobody touches the side window during the opening procedure. If somebody becomes trapped, release the switch or pull the switch to close the side window again.

⚠ **WARNING**

While opening the side windows, body parts in the closing area could become trapped. There is a risk of injury.

Make sure that no body parts are in close proximity during the closing procedure. If somebody becomes trapped, release the switch or press the switch to open the side window again.

Opening and closing the side windows

The switches for all side windows are located on the driver's door. There is also a switch on each door for the corresponding side window.

The switches on the driver's door take precedence.

The side windows cannot be operated from the rear when the override feature for the side windows is activated (▷ page 59).

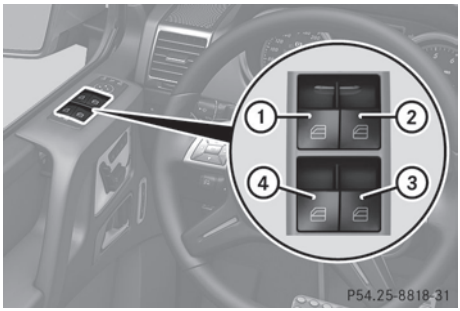

① Front left
② Front right
③ Rear right
④ Rear left

▶ Turn the SmartKey to position **1** or **2** in the ignition.

▶ **To open:** press the corresponding switch.

▶ **To close:** pull the corresponding switch.

▶ **To open automatically:** press the corresponding switch briefly beyond the point of resistance.
The side window opens completely.

▶ **To interrupt automatic operation:** press or pull the corresponding switch again.

ℹ You can continue to operate the side windows after you switch off the engine or remove the SmartKey. This function is available for up to five minutes or until the driver's or front-passenger door is opened.

ℹ The side windows cannot be operated from the rear when the override feature for the side windows is activated (▷ page 59).

Convenience opening

ℹ The convenience opening feature can only be operated using the SmartKey. The SmartKey must be close to the driver's door handle.

You can ventilate the vehicle before you start driving. To do this, the SmartKey is used to carry out the following functions simultaneously:

- unlock the vehicle
- open the side windows
- open the sliding sunroof
- switch on the seat ventilation for the driver's seat and front-passenger seat

▶ Point the tip of the SmartKey at the driver's door handle.

▶ Press and hold the button until the side windows and the sliding sunroof are in the desired position.

▶ **To interrupt convenience opening:** release the button.

Problems with the side windows

⚠ **WARNING**

Closing the side windows with increased force or without the anti-entrapment feature could lead to serious or even fatal injury. Make sure that nobody can become trapped when closing the side windows.

Problem: a side window cannot be closed because objects are trapped between the side window and the door frame.

▶ Remove the objects.

▶ Close the side window.

Problem: a side window cannot be closed and you cannot see the cause.

If a side window is obstructed during closing and reopens again slightly:

▶ Immediately after the window blocks, pull the corresponding switch again until the side window has closed.

If a side window is obstructed again during closing and reopens again slightly:

▶ Immediately after the window blocks, pull the corresponding switch again until the side window has closed.

ⓘ If a side window no longer opens or closes due to a malfunction, contact a qualified specialist workshop.

Sliding sunroof

Important safety notes

! Only open the sliding sunroof if it is free of snow and ice. Otherwise, malfunctions may occur.

Do not allow anything to protrude from the sliding sunroof. Otherwise, the seals could be damaged.

! If the sliding sunroof still cannot be opened or closed as a result of a malfunction, contact a qualified specialist workshop.

! The weather can change abruptly. It could start to rain or snow. Make sure that the sliding sunroof is closed when you leave the vehicle. The vehicle electronics can be damaged if water enters the vehicle interior.

ⓘ Resonance noises can occur in addition to the usual airflow noises when the sliding sunroof is open. They are caused by minor pressure fluctuations in the vehicle interior. Change the position of the sliding sunroof or open a side window slightly to reduce or eliminate these noises.

Opening and closing the sliding sunroof

Overhead control panel

① To raise

② To open

③ To close/lower

▶ Turn the SmartKey to position **1** or **2**(▷ page 139) in the ignition.

▶ Press or pull the [▬] switch in the corresponding direction.

▶ **To open automatically:** press the [▬] switch briefly beyond the point of resistance in the direction of arrow ②. The sliding sunroof opens completely.

▶ **To interrupt automatic operation:** press or pull the [▬] switch again.

ℹ When opening and raising the roof, automatic operation is only available if the sliding sunroof is in the closed position.

Operating the sliding sunroof manually

The actuator is located in the cargo compartment, on the left-hand side behind the rear wall trim.

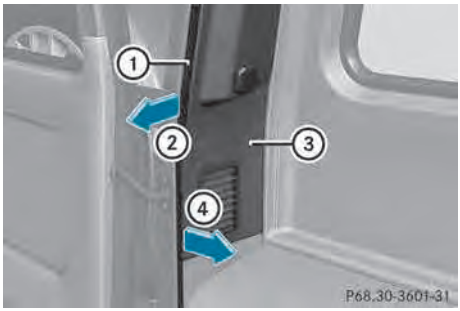

▶ Open the rear door.

▶ Pull off edge protection ① from the door pillar in the direction of arrow ②.

▶ Pull away rear panel trim ③ as far as necessary in the direction of arrow ④ until the electrical connections can be accessed.

▶ Disconnect the electrical connections.

▶ Remove rear panel trim ③ completely.

▶ Take lug wrench ⑤ out of the vehicle tool kit (▷ page 302).

▶ Place lug wrench ⑤ onto the hexagonal nut of the actuator.

▶ **To open:** turn lug wrench ⑤ counter-clockwise.

▶ **To close:** turn lug wrench ⑤ clockwise.

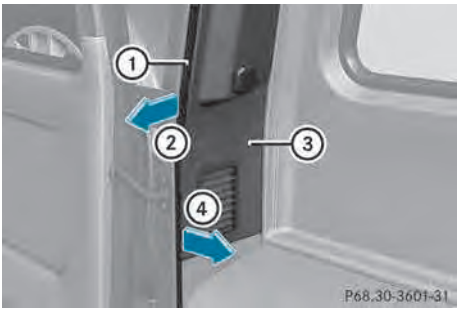

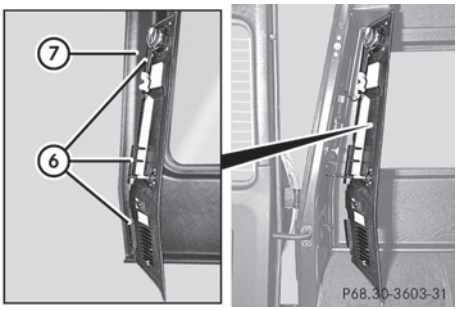

- Reconnect the electrical connections.
- Re-install rear panel trim ③.
  When doing so, hook lugs ⑥ of rear panel trim ③ into vehicle side wall ⑦.
- Re-install edge protection ①.
- Close the rear door.

Problems with the sliding sunroof

⚠ **WARNING**

You could be severely or even fatally injured when closing the sliding sunroof with increased closing force or if the anti-entrapment feature is deactivated. Make sure that nobody can become trapped when closing the sliding sunroof.

! If the sliding sunroof still cannot be opened or closed as a result of a malfunction, contact a qualified specialist workshop.

Problem: the sunroof cannot be closed and you cannot see the cause.

If the sliding sunroof is obstructed during closing and reopens again slightly:

- Immediately after the sliding sunroof blocks, pull the [▬] switch in the overhead control panel down to the point of resistance and hold it until the sliding sunroof is closed.

If the sliding sunroof is obstructed again during closing and reopens again slightly:

- Immediately after the sliding sunroof blocks, pull the [▬] switch in the overhead control panel down to the point of resistance and hold it until the sliding sunroof is closed.

Useful information 84
Correct driver's seat position 84
Seats 85
Steering wheel 90
Mirrors 93
Memory functions 95

Useful information

ℹ This Operator's Manual describes all models and all standard and optional equipment of your vehicle available at the time of publication of the Operator's Manual. Country-specific differences are possible. Please note that your vehicle may not be equipped with all features described. This also applies to safety-related systems and functions.

ℹ Read the information on qualified specialist workshops: (▷ page 23).

Correct driver's seat position

① Steering wheel
② Seat belts
③ Backrest

▶ Observe the safety guidelines on seat adjustment (▷ page 85).

▶ Make sure that seat ③ is adjusted properly.

Electrical seat adjustment (▷ page 86)

When adjusting the seat, make sure that:

- you are as far away from the driver's air bag as possible.
- you are sitting in a normal upright position.
- you can fasten the seat belt properly.
- you have moved the backrest to an almost vertical position.
- you have set the seat cushion angle so that your thighs are gently supported.
- you can depress the pedals properly.

▶ Check whether the head restraint is adjusted properly (▷ page 86).

When doing so, make sure that you have adjusted the head restraint so that the back of your head is supported at eye level by the center of the head restraint.

▶ Observe the safety guidelines on steering wheel adjustment (▷ page 85).

▶ Make sure that steering wheel ① is adjusted properly.

Adjusting the steering wheel electrically (▷ page 91)

When adjusting the steering wheel, make sure that:

- you can hold the steering wheel with your arms slightly bent.
- you can move your legs freely.
- you can see all the displays in the instrument cluster clearly.

▶ Observe the safety guidelines for seat belts (▷ page 48).

▶ Check whether you have fastened seat belt ② properly (▷ page 51).

The seat belt should:

- fit snugly across your body
- be routed across the middle of your shoulder
- be routed in your pelvic area across the hip joints

▶ Before starting off, adjust the rear-view mirror and the exterior mirrors in such a way that you have a good view of road and traffic conditions (▷ page 93).

▶ **Vehicles with a memory function:** save the seat, steering wheel and exterior mirror settings with the memory function (▷ page 95).

Seats

Important safety notes

⚠ **WARNING**

The seats can still be adjusted when there is no key in the ignition lock. For this reason, children should never be left unsupervised in the vehicle. They could otherwise become trapped when adjusting the seat.

⚠ **WARNING**

In order to avoid possible loss of vehicle control, all seat, head restraint, steering wheel and rear view mirror adjustments, as well as fastening of seat belts, must be done before setting the vehicle in motion.

⚠ **WARNING**

Do not adjust the driver's seat while driving. Adjusting the seat while driving could cause the driver to lose control of the vehicle.

Never travel in a moving vehicle with the seat backrest in an excessively reclined position as this can be dangerous. You could slide under the seat belt in a collision. If you slide under it, the seat belt would apply force at the abdomen or neck. This could cause serious or fatal injuries. The seat backrest and seat belts provide the best restraint when the wearer is in a position that is as upright as possible and seat belts are properly positioned on the body.

⚠ **WARNING**

Your seat belt must be adjusted so that you can correctly fasten your seat belt.

Observe the following points:

- adjust the seat backrest until your arms are slightly angled when holding the steering wheel.
- adjust the seat to a comfortable seating position that still allows you to reach the accelerator/brake pedal safely. The position should be as far back as possible with the driver still able to operate the controls properly.
- adjust the head restraint so that it is as close to the head as possible and the center of the head restraint supports the back of the head at eye level.
- never place hands under the seat or near any moving parts while a seat is being adjusted.

Failure to do so could result in an accident and/or serious personal injury.

⚠ **WARNING**

According to accident statistics, children are safer when properly restrained on the rear seats than on the front-passenger seat. Thus, we strongly recommend that children be placed in the rear seat whenever possible. Regardless of seating position, children 12 years old and under must be seated and properly secured in an appropriately sized child restraint system or booster seat recommended for the size and weight of the child. For additional information, see the "Children in the vehicle" section.

A child's risk of serious or fatal injuries is significantly increased if the child restraints are not properly secured in the vehicle and/or the child is not properly secured in the child restraint.

⚠ **WARNING**

For your protection, drive only with properly positioned head restraints.

Adjust the head restraint so that it is as close to the head as possible and the center of the head restraint supports the back of the head at eye level. This will reduce the potential for injury to the head and neck in the event of an accident or similar situation.

Do not drive the vehicle without the seat head restraints. Head restraints are intended to help reduce injuries during an accident.

! To avoid damage to the seats and the seat heating, observe the following information:

- keep liquids from spilling on the seats. If liquid is spilled on the seats, dry them as soon as possible.
- if the seat covers are damp or wet, do not switch on the seat heating. The seat heating should also not be used to dry the seats.
- clean the seat covers as recommended; see the "Interior care" section.
- do not transport heavy loads on the seats. Do not place sharp objects on the seat cushions, e.g. knives, nails or tools. The seats should only be occupied by passengers, if possible.
- when the seat heating is in operation, do not cover the seats with insulating materials, e.g. blankets, coats, bags, seat covers, child seats or booster seats.

! Make sure that there are no objects in the footwell or behind the seats when resetting the seats. There is a risk that the seats and/or the objects could be damaged.

! When the rear bench seat is folded forwards, the front seats cannot be moved to their rearmost position. You could otherwise damage the seats and the rear bench seat.

! Make sure that the sun visor is folded up before adjusting the backrest and head restraint height. The head restraint and sun visor could otherwise collide when the head restraint is fully extended.

ⓘ If the front door is open, the seats can be adjusted for up 30 minutes after the ignition has been switched off.

ⓘ The rear-compartment head restraints can be removed (▷ page 88).

For more information, contact a qualified specialist workshop.

ⓘ You can find further information about enlarging the cargo compartment (folding the rear bench seat forwards) on (▷ page 266).

Adjusting the seats electrically

! Make sure that the cup holder on the center console is folded down before you move the front-passenger seat forwards.

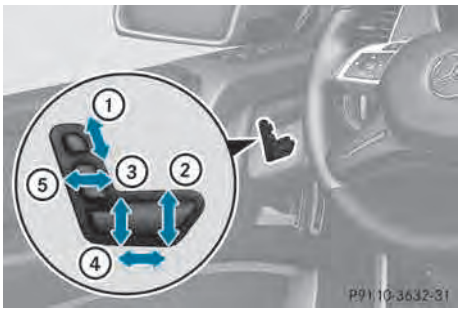

① Head restraint height
② Seat cushion angle
③ Seat height
④ Seat fore-and-aft adjustment
⑤ Backrest angle

ⓘ You can store the seat settings using the memory function (▷ page 95).

Adjusting the head restraints

Important safety notes

⚠ **WARNING**

For safety reasons, always drive with the rear head restraints in the upright position when the rear seats are occupied.

Keep the area around head restraints clear of articles (e.g. clothing) to not obstruct the folding operation of the head restraints.

⚠ **WARNING**

For your protection, drive only with properly positioned head restraints.

Adjust the head restraint so that it is as close to the head as possible and the center of the

head restraint supports the back of the head at eye level. This will reduce the potential for injury to the head and neck in the event of an accident or similar situation.

Do not drive the vehicle without the seat head restraints. Head restraints are intended to help reduce injuries during an accident.

Adjusting the front seat head restraint height

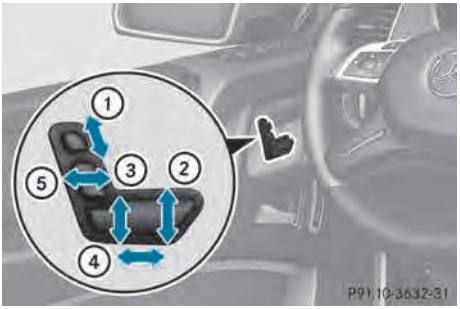

① Head restraint height
② Seat cushion angle
③ Seat height
④ Seat fore-and-aft adjustment
⑤ Backrest angle

▶ Slide head restraint adjustment button ① up or down in the direction of the arrow.

Adjusting the luxury head restraints

⚠ **WARNING**

When folding back the head restraint side bolsters, do not put your hands between the side bolster and the cushion holder. There is a danger of becoming trapped.

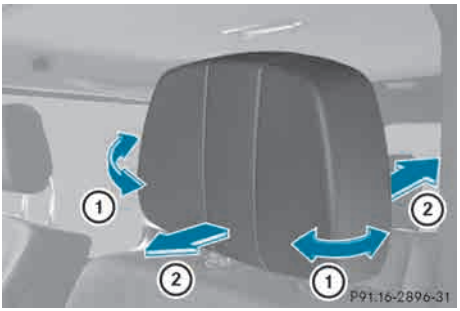

▶ **To adjust the side bolsters of the head restraint:** push or pull right and/or left-hand side bolster ① into the desired position.

▶ **To adjust the angle of the head restraint:** push or pull the head restraint in the direction of arrow ②.

Resetting the front seat head restraints

It is necessary to reset the front seat head restraints after the voltage supply has been interrupted, e.g. if the battery has been completely discharged or disconnected.

▶ Make sure that the cup holder on the center console is folded down (▷ page 268).

▶ Move the seat as far forward as possible and the head restraint in as far as possible.

Rear seat head restraints

Important safety notes

⚠ **WARNING**

For safety reasons, always drive with the rear head restraints in the upright position when the rear seats are occupied.

Keep the area around head restraints clear of articles (e.g. clothing) to not obstruct the folding operation of the head restraints.

⚠ **WARNING**

For your protection, drive only with properly positioned head restraints.

Adjust the head restraint in such a way that it is as close to the head as possible and the

center of the head restraint supports the back of the head at eye level. This will reduce the potential for injury to the head and neck in the event of an accident or similar situation.

With a rear seat occupied, make sure to move the respective head restraint up from the lowest non-use position and have the occupant adjust the head restraint properly.

Do not drive the vehicle without the seat head restraints installed when the rear seats are occupied. Head restraints are intended to help reduce injuries during an accident.

⚠ **WARNING**

Make sure the rear seat head restraints engage when placing them upright manually. Otherwise their protective function cannot be ensured.

The back of the head will not be supported in the event of a collision. That could cause serious or even fatal injuries. Rear seat occupants can be seriously injured or killed.

Adjusting the rear seat head restraint height

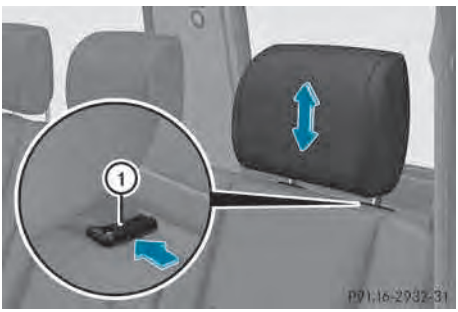

- Once the head restraint is fully lowered, press release catch ①.
- **To raise:** pull the head restraint up to the desired position.
- **To lower:** press release catch ① and push the head restraint down until it is in the desired position.

Installing/removing the rear seat head restraints

- **To remove:** pull the head restraint up to the stop.
- Press release catch ① and pull the head restraint out of the guides.
- **To re-install:** place the head restraint in the guides of the backrest.

ℹ The notches on the guide rod must be on the left-hand side when viewed in the direction of travel.

- Push the head restraint down until you hear it engage in position.

Adjusting the multicontour seat

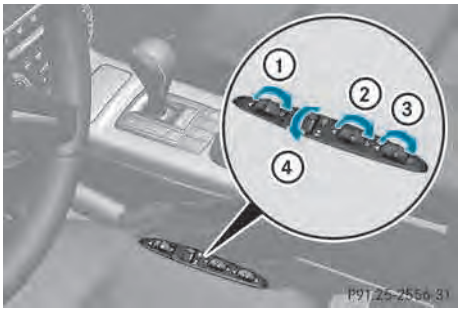

① To adjust the thigh cushion

② To adjust the backrest contour in the lumbar region

③ To adjust the backrest contour in the upper back region

④ To adjust the side bolsters of the seat backrest

You can adjust the contour of the front seats individually so as to provide optimum support for your back and sides.

- Make sure that the SmartKey is in position **1** or **2** (▷ page 139) in the ignition lock.

Adjusting the 4-way lumbar support

You can adjust the contour of the front seat backrests individually to provide optimum support for your back.

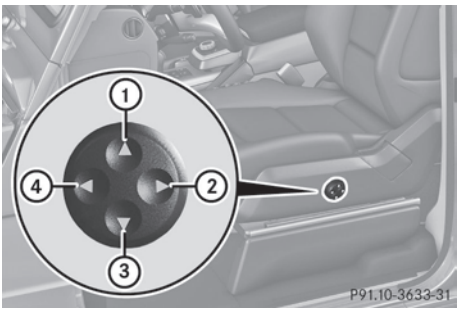

① To raise the backrest contour
② To soften the backrest contour
③ To lower the backrest contour
④ To harden the backrest contour

Switching the seat heating on/off

General notes

⚠ **WARNING**
Repeatedly setting the seat heating to level **3** may result in excessive seat temperatures. The health of passengers that have limited temperature sensitivity or a limited ability to react to excessively high temperatures may be affected or they may even suffer burn-like injuries. Therefore, do not use seat heating level **3** repeatedly.

The red indicator lamps in the button indicate the heating level you have selected.

▶ Make sure that the SmartKey is in position **2** in the ignition lock.

ℹ If the battery voltage is too low, the seat heating may switch off.

One or more of the indicator lamps in the seat heating button are flashing.

Switching the front-seat heating on/off

▶ **To switch on:** press button ① repeatedly until the desired heating level is set.
▶ **To switch off:** press button ① repeatedly until all the indicator lamps go out.

ℹ The system automatically switches down from level **3**to level**2** after approximately 8 minutes.

The system automatically switches down from level **2**to level**1** after approximately 10 minutes.

The system automatically switches off approximately 35 minutes after it is set to level **1**.

Switching the rear-seat heating on/off

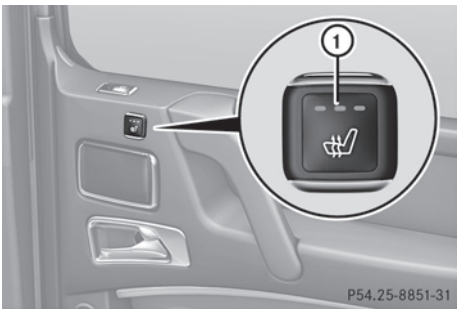

▶ **To switch on:** press button ① repeatedly until the desired heating level is set.
▶ **To switch off:** press button ① repeatedly until all the indicator lamps go out.

ℹ The system automatically switches down from level **3**to level**2** after approximately 8 minutes.

The system automatically switches down from level **2**to level**1** after approximately 10 minutes.

The system automatically switches off approximately 35 minutes after it is set to level **1**.

Problems with the seat heating

If the on-board voltage is too low, the seat heating is switched off automatically.

- Switch off electrical consumers which you do not need, such as the rear window defroster or interior lighting.
  If the on-board voltage is only interrupted briefly, the seat heating will switch back on automatically. If the seat heating is not switched on automatically:
- Switch the seat heating on manually (▷ page 89)

Switching the seat ventilation on/off

Activating/deactivating

Seat ventilation is only available for the front seats.

The three blue indicator lamps in the buttons indicate the ventilation level you have selected.

- Make sure that the SmartKey is in position **2** (▷ page 139) in the ignition lock.
- **To switch on:** press button ① repeatedly until all the indicator lamps go out.

ℹ If you open the side windows and the sliding sunroof using the SmartKey (▷ page 78), the driver's seat ventilation automatically switches to the highest level.

- **To switch off:** press button ① repeatedly until all the indicator lamps go out.

ℹ If the battery voltage is too low, the seat ventilation may switch off.

Problems with the seat ventilation

If one or all of the indicator lamps in the seat ventilation button are flashing, the seat ventilation has switched off automatically. The vehicle's electrical system voltage is too low because too many electrical consumers are switched on.

- Switch off electrical consumers that you do not need, such as the rear window defroster or interior lighting.
  Once the battery is sufficiently charged, the seat ventilation will switch back on automatically.

Steering wheel

Important safety notes

⚠ **WARNING**

Do not adjust the steering wheel while driving. Adjusting the steering wheel while driving could cause the driver to lose control of the vehicle.

The electrical steering wheel adjustment feature can be operated at any time. Therefore, do not leave children unattended in the vehicle, or with access to an unlocked vehicle. A child's unsupervised access to a vehicle could result in an accident and/or serious personal injury.

Adjusting the steering wheel

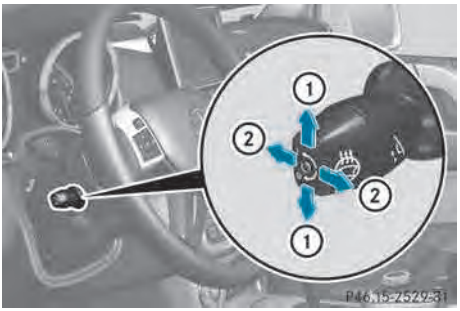

① To adjust the steering wheel height

② To adjust the steering wheel position (fore-and-aft adjustment)

ℹ If the driver's door is open, the steering wheel can be adjusted for up to 30 minutes after the ignition has been switched off.

ℹ Further related subjects:

- EASY-ENTRY/EXIT feature (▷ page 92)
- Storing settings (▷ page 95)

Steering wheel heating

Activating/deactivating

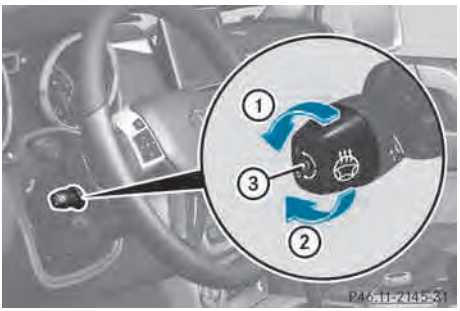

① To switch on the steering-wheel heating

② To switch off the steering-wheel heating

③ Indicator lamp

The steering-wheel heating heats the leather areas of the steering wheel.

▶ **To activate:** make sure that the SmartKey is in position **1** or **2** in the ignition lock.

▶ Turn the catch in the direction of arrow ①.
Indicator lamp ③ lights up.

▶ **To deactivate:** make sure that the SmartKey is in position **1** or **2** in the ignition lock.

▶ Turn the catch in the direction of arrow ②.
Indicator lamp ③ goes out.

ℹ The steering wheel heating does not switch off automatically.

ℹ The steering wheel heating may switch off temporarily if:

- the temperature in the vehicle interior is above 86 °F (30 °C)
- the temperature of the steering wheel is above 95 °F (35 °C)

Indicator lamp ③ remains on.

ℹ The steering wheel heating is deactivated if you remove the SmartKey from the ignition lock.

Problems with the steering wheel heating

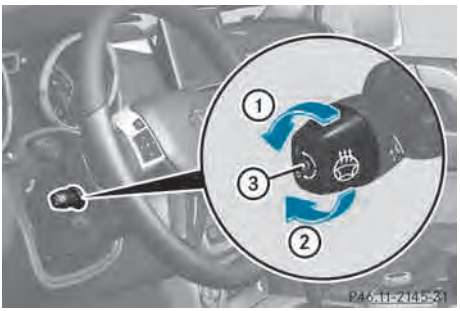

① To switch on the steering-wheel heating

② To switch off the steering-wheel heating

③ Indicator lamp

If steering wheel heating indicator lamp ③ is flashing, the steering wheel heating has switched off automatically. The vehicle's electrical system voltage is too low because too many electrical consumers are switched on.

▶ Switch off electrical consumers that you do not need, such as the rear window defroster or interior lighting.
Once the battery is sufficiently charged, the steering wheel heating will switch back on automatically.

Steering wheel EASY-ENTRY/EXIT feature

Important safety notes

⚠ **WARNING**

Make sure that nobody can become trapped when you activate the EASY-ENTRY/EXIT feature.

If there is a risk of someone becoming trapped, stop the adjustment procedure. To halt the procedure:

- press the steering column adjustment button.
- press one of the memory function position buttons.

The steering column stops moving immediately.

Do not keep the memory function position button pressed as this will start the memory function and set the steering wheel and seat in motion.

Do not leave children unattended in the vehicle. They could open the driver's door and thereby unintentionally activate the EASY-ENTRY/EXIT feature and become trapped.

⚠ **WARNING**

Let the system complete the adjustment procedure before setting the vehicle in motion. All steering wheel adjustment must be completed before setting the vehicle in motion. Driving off with the steering wheel still adjusting could cause the driver to lose control of the vehicle.

! Do not activate the EASY-ENTRY/EXIT feature, if the seat backrest is reclined too far backwards. This can damage the front or rear seats. You must first move the backrest to a vertical position.

The EASY-ENTRY/EXIT feature makes getting in and out of your vehicle easier.

You can activate and deactivate the EASY-ENTRY/EXIT feature in the on-board computer (▷ page 221).

Position of the steering wheel when the EASY-ENTRY/EXIT feature is active

The steering wheel moves upwards and towards the dashboard if:

- you remove the SmartKey from the ignition lock or
- you open the driver's door with the SmartKey in position **0** or **1** in the ignition lock.

ⓘ The steering wheel only moves upwards and towards the dashboard if it has not already reached the upper end stop.

Position of the steering wheel for driving

The steering wheel is moved to the last selected position when:

- the driver's door is closed.
- you insert the SmartKey into the ignition lock.

The last position of the steering wheel is stored when you switch off the ignition or when you store the setting with the memory function (▷ page 95).

Mirrors

Rear-view mirror

▶ Adjust the rear-view mirror by hand so you have a good overview of the traffic conditions behind you.

Exterior mirrors

Adjusting the exterior mirrors

⚠ **WARNING**

The exterior mirrors reduce the size of the image. Objects are actually closer than they appear. You could misjudge the distance from vehicles driving behind and cause an accident, e.g. when changing lane. For this reason, make sure of the actual distance from the vehicle driving behind by glancing over your shoulder.

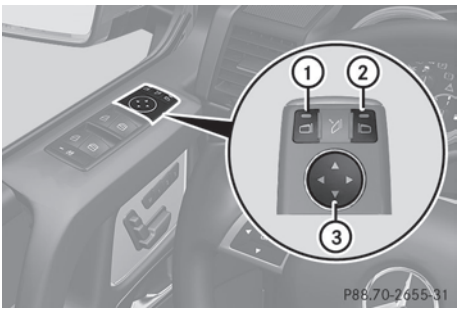

▶ Make sure that the SmartKey is in position **1** or **2** (▷ page 139) in the ignition lock.

▶ Press button ① to select the left-hand exterior mirror

or

▶ Press button ② to select the right-hand exterior mirror.

▶ Press button ③ up, down, or to the left or right until you have adjusted the exterior mirror to the correct position. You should have a good overview of traffic conditions.

ℹ The convex exterior mirrors provide a larger field of vision.

ℹ The exterior mirrors are automatically heated if the rear window defroster is switched on and the outside temperature is low.

Folding the exterior mirrors in/out electrically

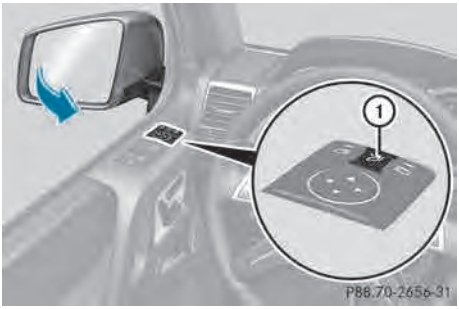

▶ Make sure that the SmartKey is in position **1** or **2** (▷ page 139) in the ignition lock.

▶ Briefly press button ①.
Both exterior mirrors fold in or out.

ℹ Make sure that the exterior mirrors are always folded out fully while driving. They could otherwise vibrate.

ℹ If you are driving faster than 9 mph (15 km/h), you can no longer fold in the exterior mirrors.

Setting the exterior mirrors

If the battery has been disconnected or completely discharged, the exterior mirrors must be reset. The exterior mirrors will otherwise not fold in when you select the

"Fold in mirrors when locking" function in the on-board computer (▷ page 221).

▶ Make sure that the SmartKey is in position **1**(▷ page 139) in the ignition lock.

▶ Briefly press button ①.

Folding the exterior mirrors in/out automatically

If the "Fold in mirrors when locking" function is activated in the on-board computer (▷ page 221):

- the exterior mirrors fold in automatically as soon as you lock the vehicle from the outside.
- the exterior mirrors fold out again automatically as soon as you unlock the vehicle and then open the driver's or front-passenger door.

Exterior mirror out of position

▶ Press button ① repeatedly until you hear the mirror engage in position.
The mirror housing is engaged again and you can adjust the exterior mirrors as usual (▷ page 93).

Automatic anti-glare mirrors

⚠ **WARNING**

If incident light from headlamps is prevented from striking the sensor in the rear-view mirror, for instance, by luggage piled too high in the vehicle, the mirror's automatic anti-glare function will not operate.

Incident light could then blind you. This may distract you from the traffic conditions and, as a result, you may cause an accident.

The rear-view mirror and the exterior mirror on the driver's side automatically go into anti-glare mode if:

- the ignition is switched on and
- incident light from headlamps strikes the sensor in the rear-view mirror.

ℹ The mirrors do not go into anti-glare mode if reverse gear is engaged or if the interior lighting is switched on.

Parking position for the exterior mirror on the front-passenger side

Setting/storing the parking position

Using reverse gear

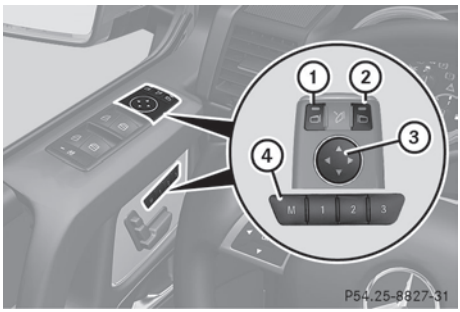

① Left-hand exterior mirror
② Right-hand exterior mirror
③ Adjustment button
④ Memory button

You can position the front-passenger side exterior mirror in such a way that you can see the rear wheel on that side as soon as you engage reverse gear. You can store this position.

▶ Make sure that the vehicle is stationary and that the SmartKey is in position **2**(▷ page 139) in the ignition lock.

▶ Press button ② for the exterior mirror on the front-passenger side.

▶ Engage reverse gear.
The exterior mirror on the front-passenger side moves to the preset parking position.

▶ Use adjustment button ③ to adjust the exterior mirror to a position that allows you to see the rear wheel and the curb.
The parking position is stored.

ℹ If you shift the transmission to another position, the exterior mirror on the front-

passenger side returns to the driving position.

Using the memory button

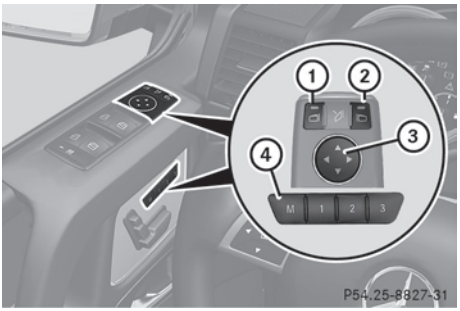

① Left-hand exterior mirror
② Right-hand exterior mirror
③ Adjustment button
④ Memory button

You can position the front-passenger side exterior mirror in such a way that you can see the rear wheel on that side as soon as you engage reverse gear. This setting can be stored using memory button **M** ④.

- ▶ Make sure that the SmartKey is in position **2** (▷ page 139) in the ignition lock.
- ▶ With the exterior mirror on the front-passenger side activated, use adjustment button ③ to adjust the exterior mirror. In the exterior mirror, the rear wheel and the curb should be visible.
- ▶ Press memory button **M** ④ and one of the arrows on adjustment button ③ within three seconds.
  The parking position is stored if the exterior mirror does not move.
- ▶ If the mirror moves out of position, repeat the steps.

Calling up a stored parking position setting

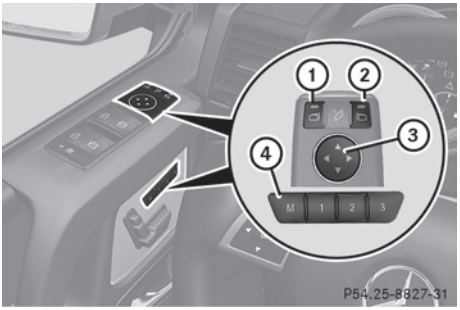

① Left-hand exterior mirror
② Right-hand exterior mirror
③ Adjustment button
④ Memory button

- ▶ Turn the SmartKey to position **2** (▷ page 139) in the ignition lock.
- ▶ Adjust the exterior mirror on the front-passenger side using button ②.
- ▶ Engage reverse gear.
  The exterior mirror on the front-passenger side moves to the stored parking position.

The exterior mirror on the front-passenger side moves back to its original position:

- as soon as you exceed a speed of 9 mph (15 km/h)
- if you press button ① for the exterior mirror on the driver's side

Memory functions

Storing settings

⚠ **WARNING**
Only use the memory function on the driver's side when the vehicle is stationary. You could otherwise be distracted from the traffic conditions by the seat moving of its own accord, and as a result cause an accident.

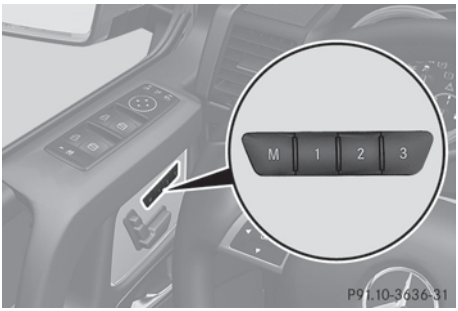

- Make sure that the SmartKey is in position **2**(▷ page 139) or that the respective door is open.
- Adjust the seat (▷ page 86) and head restraint (▷ page 86).
- On the driver's side, adjust the steering wheel (▷ page 91) and the exterior mirrors (▷ page 93).
- Press the **M** memory button.
- Press one of memory buttons **1**, **2** or **3** within three seconds.
  The settings are stored in the selected storage position.

Calling up a stored setting

! If you want to move the seat from the fully reclined position to a stored seat position, first raise the backrest using the seat switch. The seat could otherwise be damaged.

- Press and hold the relevant memory button **1**, **2** or **3**, until the seat, head restraints, steering wheel and mirrors are in the stored position.

i The setting procedure is interrupted as soon as you release the memory button.

Useful information 98
Exterior lighting 98
Interior lighting 105
Replacing bulbs 108
Windshield wipers 114

Useful information

ⓘ This Operator's Manual describes all models and all standard and optional equipment of your vehicle available at the time of publication of the Operator's Manual. Country-specific differences are possible. Please note that your vehicle may not be equipped with all features described. This also applies to safety-related systems and functions.

ⓘ Read the information on qualified specialist workshops: (▷ page 23).

Exterior lighting

Important safety notes

For reasons of safety, Mercedes-Benz recommends that you drive with the lights switched on even during the daytime. In some countries, operation of the headlamps varies due to legal requirements and self-imposed obligations.

Driving abroad

Conversion to symmetrical low beam

Switch the headlamps to symmetrical low beam in countries in which traffic drives on the opposite side of the road from the country where the vehicle is registered. This prevents glare to oncoming traffic. When using symmetrical lights, the edge of the road is not lit as widely and as far ahead as normal.

Have the headlamps converted at a qualified specialist workshop as close to the border as possible before driving in these countries.

Conversion to asymmetrical low beam after returning

Have the headlamps converted back to asymmetrical low-beam headlamps at a qualified specialist workshop as soon as possible after crossing the border again.

Light switch

Operation

! Switch off the parking lamps and low-beam headlamps when you leave the vehicle. This prevents the battery from discharging.

! If the battery has been excessively discharged, the parking lamps or standing lamps are automatically switched off to enable the next engine start. Always park your vehicle safely and sufficiently lit according to legal standards. Avoid the continuous use of the [≡DC] parking lamps for several hours. If possible, switch on the [P≡→] right or the [←P≡] left standing lamp.

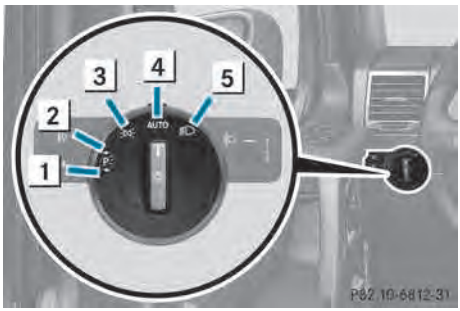

1 [←P≡] Left-hand standing lamps

2 [P≡→] Right-hand standing lamps

3 [≡DC] Parking lamps, side marker lamps, license plate and instrument cluster lighting

4 [AUTO] Automatic headlamp mode/daytime running lamps

5 [≡D] Low-beam/high-beam headlamps

If you hear a warning tone when you leave the vehicle, the lights may still be switched on.

▶ Turn the light switch to [AUTO].

The turn signals, high-beam headlamps and the high-beam flasher are operated using the combination switch (▷ page 103).

The exterior lighting (except the parking/standing lamps) switches off automatically if you:

- remove the SmartKey from the ignition lock
- open the driver's door with the SmartKey in position **0**.

Low-beam headlamps

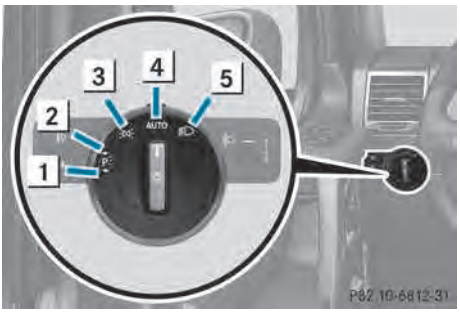

1 Left-hand standing lamps
2 Right-hand standing lamps
3 Parking lamps, side marker lamps, license plate and instrument cluster lighting
4 AUTO Automatic headlamp mode/daytime running lamps
5 Low-beam/high-beam headlamps

▶ **To switch on the low-beam headlamps:** turn the SmartKey in the ignition lock to position **2** or start the engine.

▶ Turn the light switch to .
The indicator lamp in the instrument cluster lights up.

Daytime running lamps

Daytime running lamps in Canada

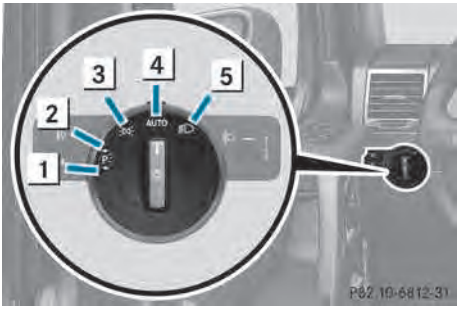

1 Left-hand standing lamps
2 Right-hand standing lamps
3 Parking lamps, side marker lamps, license plate and instrument cluster lighting
4 AUTO Automatic headlamp mode/daytime running lamps
5 Low-beam/high-beam headlamps

The daytime running lamps function is required by law in Canada. It cannot therefore be deactivated.

▶ Turn the light switch to AUTO.
With the engine running: depending on the ambient light, the daytime running lamps or the low-beam headlamps are switched on.
When the low-beam headlamps are switched on, the indicator lamp in the instrument cluster lights up.

When the engine is running and the vehicle is stationary: if you move the selector lever from a drive position to **P**, the daytime running lamps/low-beam headlamps go out after three minutes.

When the engine is running, the vehicle is stationary and in high ambient light brightness: if you turn the light switch to , you turn on the daytime running lamps and parking lamps.

If the engine is running and you turn the light switch to , the manual settings take precedence over the daytime running lamps.

Daytime running lamps in the USA

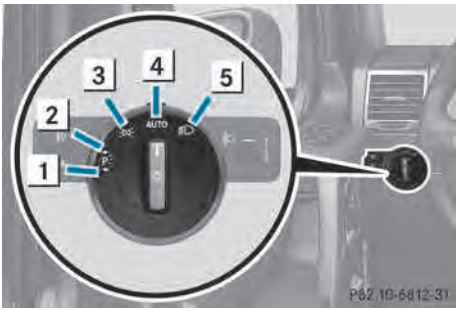

1 Left-hand standing lamps
2 Right-hand standing lamps
3 Parking lamps, side marker lamps, license plate and instrument cluster lighting
4 AUTO Automatic headlamp mode/daytime running lamps
5 Low-beam/high-beam headlamps

In the USA, the daytime running lamps are deactivated upon delivery from the factory.

▶ **To activate the daytime running lamps:** activate the daytime running lamps function in the on-board computer (▷ page 219).

▶ Turn the light switch to AUTO.
With the engine running: depending on the ambient light, the daytime running lamps or the low-beam headlamps are switched on.

When the low-beam headlamps are switched on, the indicator lamp in the instrument cluster lights up.

If the engine is running and you turn the light switch to or , the manual settings take precedence over the daytime running lamps.

Automatic headlamp mode

⚠ **WARNING**

If the light switch is set to AUTO and it is foggy, snowing or there is poor visibility, the low-beam headlamps will not come on automatically. This could endanger you and others. In such situations turn the light switch to .

The automatic headlamp feature is only an aid. The driver is responsible for the vehicle's lighting at all times.

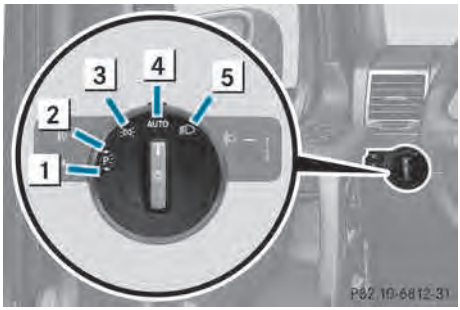

1 Left-hand standing lamps
2 Right-hand standing lamps
3 Parking lamps, side marker lamps, license plate and instrument cluster lighting
4 AUTO Automatic headlamp mode/daytime running lamps
5 Low-beam/high-beam headlamps

▶ **To switch on automatic headlamp mode:** turn the light switch to AUTO.
SmartKey in position **1** in the ignition lock: the parking lamps are switched on or off automatically depending on the brightness of the ambient light.

With the engine running: if you have activated the daytime running lamps function in the on-board computer, the daytime running lamps or the low-beam headlamps are switched on or off automatically depending on the brightness of the ambient light.

When the low-beam headlamps are switched on, the indicator lamp in the instrument cluster lights up.

Front fog lamps (except AMG vehicles)

WARNING

If you suspect that driving conditions will be foggy, turn the light switch to [≡D] before you start your journey. Your vehicle may otherwise not be visible and you could endanger yourself and others.

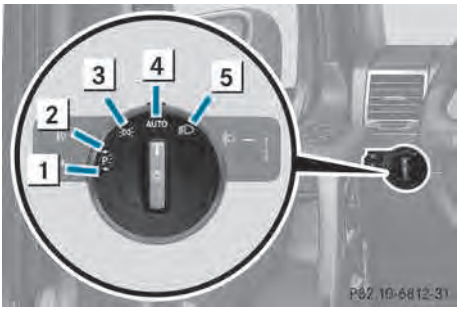

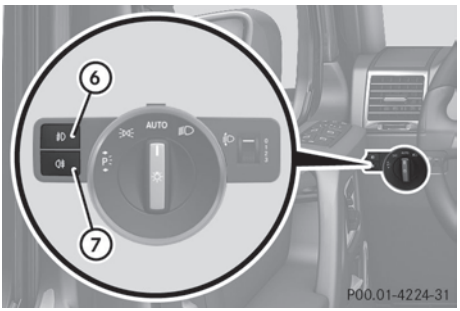

1 [←P≡] Left-hand standing lamps

2 [P≡→] Right-hand standing lamps

3 [≡DC] Parking lamps, side marker lamps, license plate and instrument cluster lighting

4 [AUTO] Automatic headlamp mode/daytime running lamps

5 [≡D] Low-beam/high-beam headlamps

⑥ [‡D] Fog lamps (except AMG vehicles)

⑦ [0‡] Rear fog lamp

▶ **To switch on the fog lamps:** turn the SmartKey in the ignition lock to position **2** or start the engine.

▶ Turn the light switch to [≡DC], [≡D] or [AUTO].

▶ Press the [‡D] button.
The green [‡D] indicator lamp in the instrument cluster lights up.

▶ **To switch off the front fog lamps:** press the [‡D] button.
The green [‡D] indicator lamp in the instrument cluster goes out.

Only vehicles with front fog lamps have the fog lamps function.

Rear fog lamp

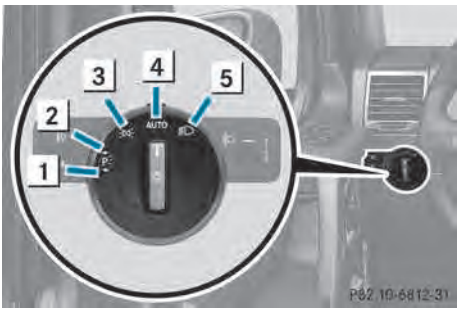

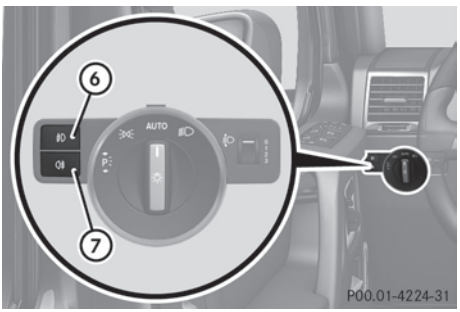

1 [←P≡] Left-hand standing lamps

2 [P≡→] Right-hand standing lamps

3 [≡DC] Parking lamps, side marker lamps, license plate and instrument cluster lighting

4 [AUTO] Automatic headlamp mode/daytime running lamps

5 [≡D] Low-beam/high-beam headlamps

⑥ [‡D] Fog lamps (except AMG vehicles)

⑦ [0‡] Rear fog lamp

- **To switch on the rear fog lamp:** turn the SmartKey in the ignition lock to position **2** or start the engine.
- Turn the light switch to [≡D] or [AUTO].
- Press the [0≡] button.
  The yellow [0≡] indicator lamp in the instrument cluster lights up.
- **To switch off the rear fog lamp:** press the [0≡] button.
  The yellow [0≡] indicator lamp in the instrument cluster goes out.

Parking lamps

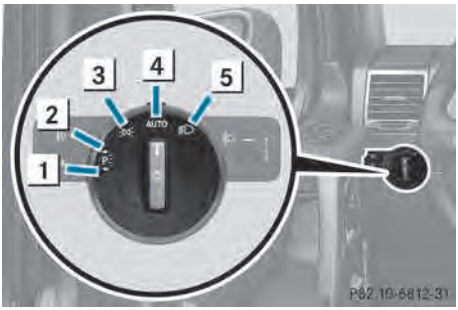

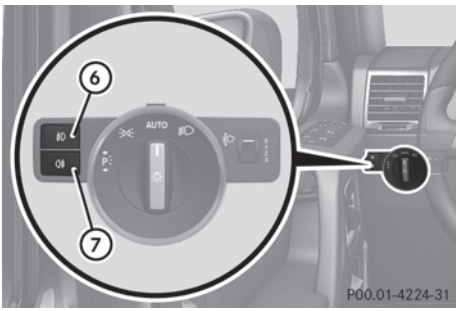

1 [←P≡] Left-hand standing lamps
2 [P≡→] Right-hand standing lamps
3 [≡DO≡] Parking lamps, side marker lamps, license plate and instrument cluster lighting
4 [AUTO] Automatic headlamp mode/daytime running lamps
5 [≡D] Low-beam/high-beam headlamps
6 [≡D] Fog lamps (except AMG vehicles)
7 [0≡] Rear fog lamp

- **To switch on:** turn light switch to [≡DO≡].

Standing lamps

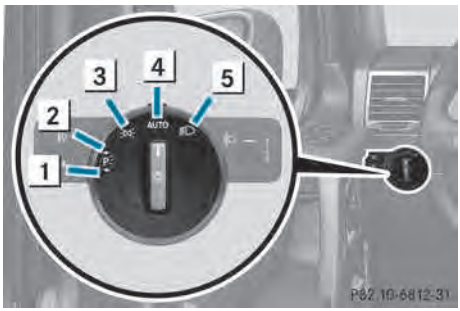

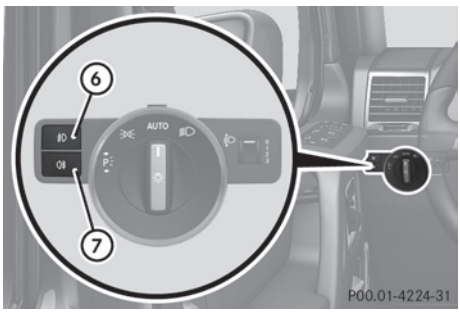

1 [←P≡] Left-hand standing lamps
2 [P≡→] Right-hand standing lamps
3 [≡DO≡] Parking lamps, side marker lamps, license plate and instrument cluster lighting
4 [AUTO] Automatic headlamp mode/daytime running lamps
5 [≡D] Low-beam/high-beam headlamps
6 [≡D] Fog lamps (except AMG vehicles)
7 [0≡] Rear fog lamp

Switching on the standing lamps ensures the corresponding side of the vehicle is illuminated.

▶ **To switch on the parking lamps:** the SmartKey is not inserted in the ignition lock or it is in position **0**(▷ page 139).

▶ Turn the light switch to [←P≡] (left-hand side of the vehicle) or [P≡→] (right-hand side of the vehicle).

Headlamp cleaning system

The headlamps are cleaned automatically if the "Wipe with washer fluid" function is operated ten times while the lights are on and the engine is running (▷ page 114). When you switch off the ignition, the automatic headlamp cleaning system is reset and counting is resumed from 0.

Combination switch

Turn signals

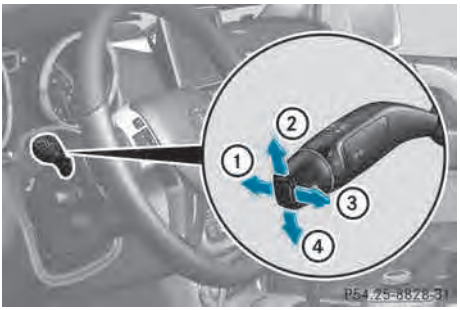

① High-beam headlamps
② Turn signal, right
③ High-beam flasher
④ Turn signal, left

▶ **To indicate briefly:** press the combination switch briefly to the pressure point in the direction of arrow ② or ④.
The corresponding turn signal flashes three times.

▶ **To indicate:** press the combination switch beyond the pressure point in the direction of arrow ② or ④.

High-beam headlamps

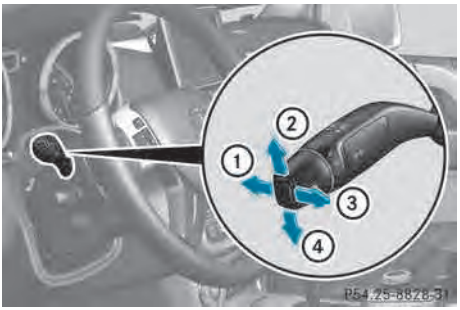

① High-beam headlamps
② Turn signal, right
③ High-beam flasher
④ Turn signal, left

▶ **To switch on the high-beam headlamps:** turn the SmartKey in the ignition lock to position **2** or start the engine.

▶ Turn the light switch to [≡D] or [AUTO].

▶ Press the combination switch beyond the pressure point in the direction of arrow ①.
In the [AUTO] position, the high-beam headlamps are only switched on when it is dark and the engine is running.
The blue [≡D] indicator lamp in the instrument cluster lights up when the high-beam headlamps are switched on.

▶ **To switch off the high-beam headlamps:** move the combination switch back to its normal position.
The blue [≡D] indicator lamp in the instrument cluster goes out.

High-beam flasher

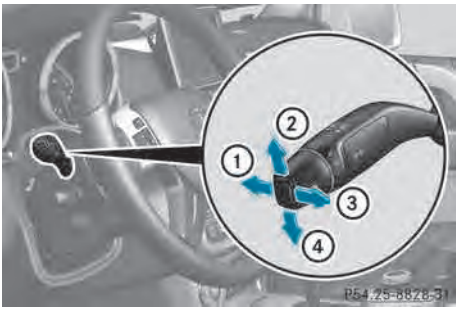

① High-beam headlamps
② Turn signal, right
③ High-beam flasher
④ Turn signal, left

▶ **To switch on:** turn the SmartKey in the ignition lock to position **1** or **2** or start the engine.

▶ Pull the combination switch briefly in the direction of arrow ③.

Hazard warning lamps

▶ **To switch on the hazard warning lamps:** press button ①.
All turn signals flash. If you now switch on a turn signal using the combination switch, only the turn signal lamp on the corresponding side of the vehicle will flash.

▶ **To switch off the hazard warning lamps:** press button ①.

The hazard warning lamps automatically switch on if:

- an air bag is deployed
- the Emergency Tensioning Devices are triggered, or
- the vehicle is slowed down rapidly from a speed of over 45 mph (70 km/h) and comes to a halt

The hazard warning lamps switch on automatically if an air bag or the Emergency Tensioning Devices are triggered and the SmartKey is in position **1** in the ignition lock.

The hazard warning lamps switch off automatically if the vehicle reaches a speed of over 6mph (10km/h) again after a full brake application.

ℹ The hazard warning lamps still operate if the ignition is switched off.

Cornering light function

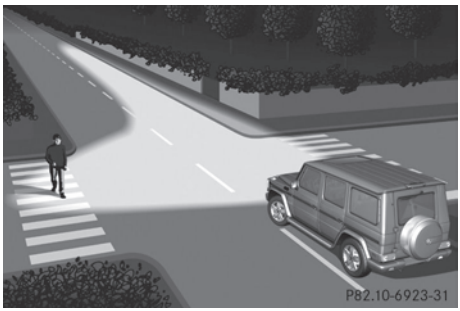

The cornering light function improves the illumination of the road over a wide angle in the direction you are turning, enabling better visibility in tight bends, for example. The cornering light function can only be activated if the low-beam headlamps are switched on and the fog lamps are switched off.

Active: if you are driving at speeds below 25 mph (40 km/h) and switch on the turn signal or turn the steering wheel

Not active: if you are driving at speeds above 25 mph (40 km/h) or switch off the turn

signal or turn the steering wheel to the straight-ahead position

The cornering light function may remain lit for a short time, but is automatically switched off after no more than three minutes.

Headlamps and indicator lamps fogged up on the inside

The headlamps and the indicator lamps in the exterior mirrors may fog up on the inside if there is high atmospheric humidity.

▶ Drive with the headlamps switched on. The level of moisture diminishes, depending on the length of the journey and the weather conditions (humidity and temperature).

If the level of moisture does not diminish:

▶ Have the headlamps checked at a qualified specialist workshop.

Interior lighting

Overview of interior lighting

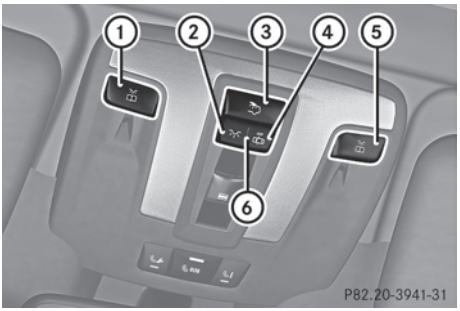

Front overhead control panel

① Switches the left-hand front reading lamp on/off

② Switches the front interior lighting on

③ Switches the cargo compartment lamp/rear interior lighting on/off

④ Switches the front interior lighting/automatic interior lighting control off

⑤ Switches the right-hand reading lamp on/off

⑥ Switches the automatic interior lighting control on

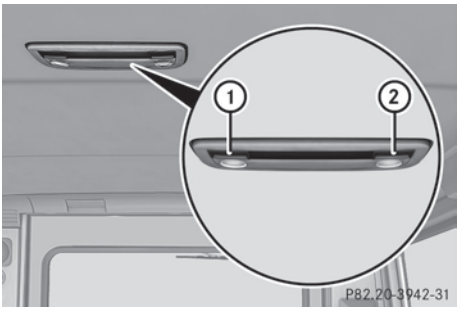

Rear-compartment overhead control panel

① Switches the right-hand reading lamp on/off

② Switches the left-hand reading lamp on/off

Interior lighting control

General notes

In order to prevent the vehicle's battery from discharging, the interior lighting functions are automatically deactivated after some time unless the SmartKey is in position **2** in the ignition lock.

The brightness of the ambient lighting may be set using the control on the instrument cluster (▷ page 209).

Automatic interior lighting control

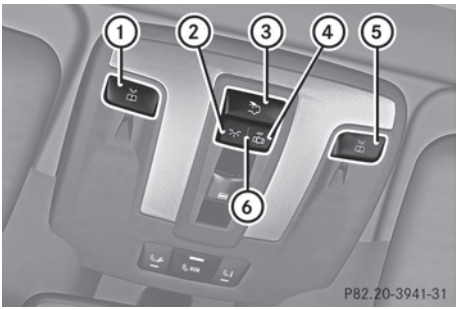

Front overhead control panel

① Switches the left-hand front reading lamp on/off

② Switches the front interior lighting on

③ Switches the cargo compartment lamp/rear interior lighting on/off

④ Switches the front interior lighting/automatic interior lighting control off

⑤ Switches the right-hand reading lamp on/off

⑥ Switches the automatic interior lighting control on

▶ **To switch on:** set rocker switch ⑥ to the center position.

The interior lighting switches on automatically when it is dark if you:

- unlock the vehicle
- open a door
- remove the SmartKey from the ignition lock

▶ **To switch off:** press the symbol on rocker switch ⑥.

The interior lighting remains switched off even when it is dark if you:

- unlock the vehicle
- open a door.
- remove the SmartKey from the ignition lock

The interior light is activated for a short while when the SmartKey is removed from the ignition lock. You can activate this delayed switch-off using the on-board computer (▷ page 220).

When a front door is opened, the front interior lighting comes on. When a rear door is opened, the rear interior lighting comes on. In addition, the courtesy lights come on.

ℹ If a door remains open and the SmartKey is not in the ignition lock, the interior lighting switches off after a short while.

Manual interior lighting control

Front interior lighting

! If the interior lighting has been switched on manually, it will not be switched off automatically.

This can cause the starter battery to discharge.

Make sure that the interior lighting does not remain switched on too long after the engine has been switched off.

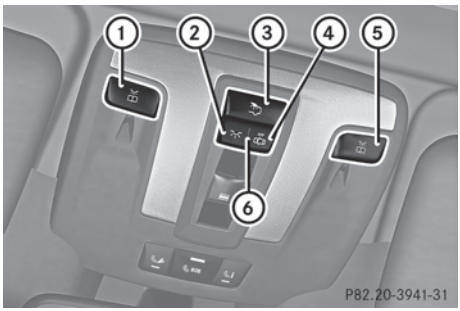

Front overhead control panel

① Switches the left-hand front reading lamp on/off

② Switches the front interior lighting on

③ Switches the cargo compartment lamp/rear interior lighting on/off

④ Switches the front interior lighting/automatic interior lighting control off

⑤ Switches the right-hand reading lamp on/off

⑥ Switches the automatic interior lighting control on

▶ **To switch on:** press the symbol on rocker switch ⑥.

▶ **To switch off:** set rocker switch ⑥ to the center position.

Reading lamps

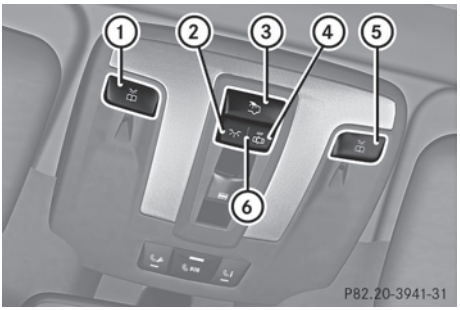

Front overhead control panel

① Switches the left-hand front reading lamp on/off

② Switches the front interior lighting on

③ Switches the cargo compartment lamp/rear interior lighting on/off

④ Switches the front interior lighting/automatic interior lighting control off

⑤ Switches the right-hand reading lamp on/off

⑥ Switches the automatic interior lighting control on

▶ **To activate/deactivate:** press the button.

Cargo compartment lamp

⚠ **WARNING**

To prevent possible personal injury, always keep hands and fingers away from the cargo compartment opening when closing the tailgate. Be especially careful when small children are around.

⚠ **WARNING**

Make sure the tailgate is closed when the engine is running and while driving. Among other dangers, deadly carbon monoxide (CO) gases may enter vehicle interior resulting in unconsciousness and death.

! Switch off the cargo compartment lamp if you wish to leave the rear door open for a longer period. The battery may otherwise discharge.

! Do not close the rear door while lock ① is engaged at the bottom. Otherwise, you could damage lock ①.

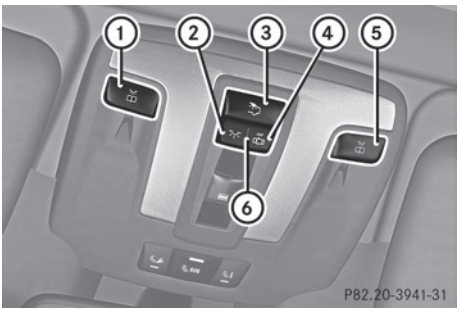

Front overhead control panel

① Switches the left-hand front reading lamp on/off

② Switches the front interior lighting on

③ Switches the cargo compartment lamp/rear interior lighting on/off

④ Switches the front interior lighting/automatic interior lighting control off

⑤ Switches the right-hand reading lamp on/off

⑥ Switches the automatic interior lighting control on

▶ **To switch on/off:** press the button.

ℹ If you open the rear door, the cargo compartment lamp comes on. You will then be unable to switch it off using the button.

Switch off the cargo compartment lamp if you wish to leave the rear door open for a longer period. This prevents the battery from discharging.

▶ Open the rear door.

▶ **To switch off with the rear door open:** press lock ① down in the direction of the arrow until it engages.
The cargo compartment lamp is switched off.

▶ **To switch on with the rear door open:** press lock cylinder ② on the door handle.
The cargo compartment lamp resumes its normal function.

Rear interior lighting

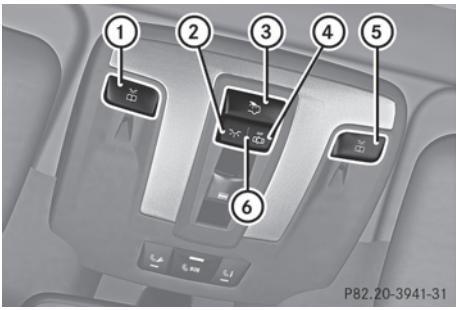

Front overhead control panel

① Switches the left-hand front reading lamp on/off

② Switches the front interior lighting on

③ Switches the cargo compartment lamp/rear interior lighting on/off

④ Switches the front interior lighting/automatic interior lighting control off

⑤ Switches the right-hand reading lamp on/off

⑥ Switches the automatic interior lighting control on

▶ **To switch on/off:** press the button.

ℹ The rear interior lighting switches on when you open a rear door. You will then be unable to switch it off using the button.
Switch off the rear interior lighting if you wish to leave the rear doors open for a longer period. This prevents the battery from discharging.

Replacing bulbs

Important safety notes

Xenon bulbs

⚠ **DANGER**

Xenon bulbs carry a high voltage. You could get an electric shock and be seriously or even fatally injured if you touch the electric contacts on Xenon bulbs. Therefore, never remove the cover from Xenon bulbs.

Do not change the Xenon bulbs yourself, but have them replaced at a qualified workshop.

If your vehicle is equipped with Xenon bulbs, you can recognize this by the following: the cone of light from the Xenon bulbs moves from the top to the bottom and back again when you start the engine. For this to be observed, the lights must be switched on before starting the engine.

Bulbs and lamps are an important aspect of vehicle safety. You must therefore make sure that these function correctly at all times. Have the headlamp setting checked regularly.

LED lamps

You can neither replace Xenon bulbs nor LED bulbs. Have LED bulbs changed at a qualified specialist workshop.

Bulbs and lamps are an important aspect of vehicle safety. You must therefore make sure that these function correctly at all times. Have the headlamp setting checked regularly.

Other bulbs

⚠ **WARNING**

Bulbs and lamps can become very hot. For this reason, allow them to cool down before changing them. Otherwise, you could burn yourself when you touch them.

Keep bulbs out of the reach of children. Otherwise, they could, for example, damage the bulbs and injure themselves.

Never use a bulb which has been dropped. Such a bulb may explode and injure you.

Halogen bulbs are pressurized and could explode when you change them, especially if they are very hot. You should therefore wear eye protection and gloves when you are changing them.

There are bulbs other than the Xenon bulbs that you cannot replace. Replace only the bulbs listed (▷ page 109). Have the bulbs that you cannot replace yourself changed at a qualified specialist workshop.

If you require assistance changing bulbs, consult a qualified specialist workshop.

Do not touch the glass tube of new bulbs with your bare hands. Even minor contamination can burn into the glass surface and reduce the service life of the bulbs. Always use a lint-free cloth or only touch the base of the bulb when installing.

Only use bulbs of the correct type.

If the new bulb still does not light up, consult a qualified specialist workshop.

Bulbs and lamps are an important aspect of vehicle safety. You must therefore make sure that these function correctly at all times. Have the headlamp setting checked regularly.

Before changing bulbs

Have the following bulbs changed at a qualified specialist workshop:

- Additional turn signals in the exterior mirrors
- High-mounted brake lamp
- High-beam/low-beam headlamps (Xenon bulbs)
- Daytime running lamps
- Parking lamp/standing lamp
- License plate lamp

ℹ Individual segments of the license plate lamp LEDs may fail without a display message appearing in the multifunction display. Regularly check the license plate lamp. If necessary, visit a qualified specialist workshop.

You can replace the following bulbs:

- Fog lamp/cornering light with fog lamp function
- Turn signal lamp (front)
- Brake/tail lamp
- Turn signal lamp (rear)
- Tail lamp/standing lamp
- Backup lamp
- Rear fog lamp
- Side marker lamps

Overview: changing bulbs/bulb types

Front lamps

You can change the following bulbs. The bulb type can be found in the legend.

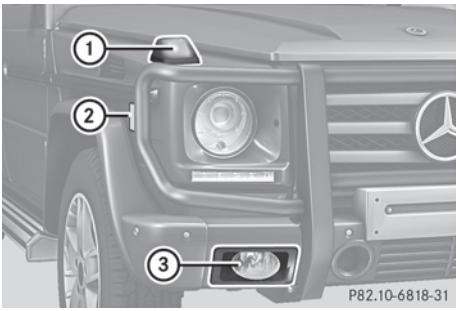

① Turn signal lamp: 1156 NA
② Side marker lamp: T 4 W
③ Cornering light function with fog lamp function: H11 55 W (except AMG vehicles)

Rear lamps

You can change the following bulbs. The bulb type can be found in the legend.

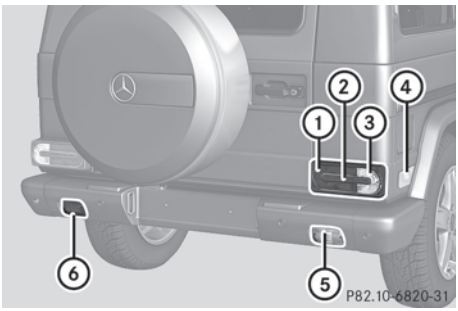

① Tail lamp/standing lamp: W 5 W
② Brake lamp/tail lamp: P 21/5 W
③ Turn signal lamp: PY 21 W
④ Side marker lamp: T 4 W
⑤ Backup lamp: P 21 W
⑥ Rear fog lamp: P 21 W

Changing the front bulbs

Front fog lamps/cornering lamps with fog lamp function

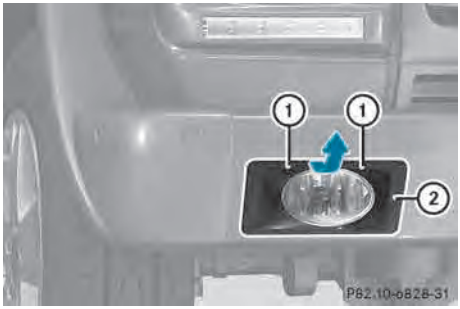

▶ Switch off the lights.
▶ Unscrew screws ①.
▶ Remove cover ②.

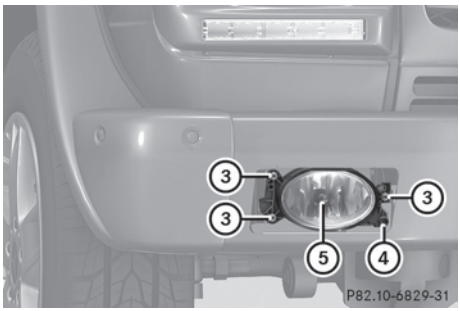

▶ Unscrew screws ③.

ℹ Only remove screws ③. Do not turn adjustment screw ④. If adjustment screw ④ has been turned, the front fog lamp adjustment must be checked at a qualified workshop.

▶ Remove lamp ⑤.

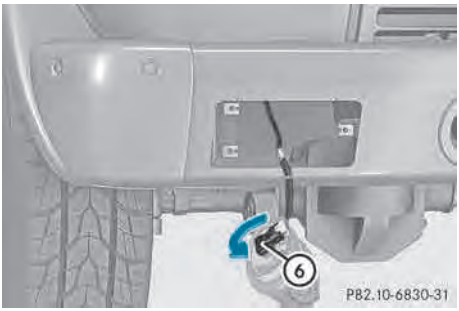

▶ Hold lamp ⑤.

▶ Lightly press bulb holder ⑥, turn it counter-clockwise to the stop and pull it out.

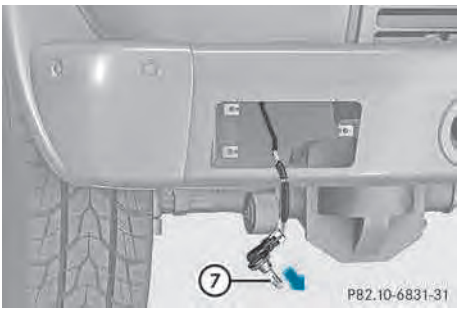

▶ Take bulb ⑦ out of bulb holder ⑥.

▶ Insert the new bulb into bulb holder ⑥.

▶ Insert bulb holder ⑥ into lamp ⑤ and turn it clockwise to the stop.

▶ Insert lamp ⑤.

▶ Replace and tighten screws ③.

▶ Position cover ②.

▶ Replace and tighten screws ①.

Turn signals

! Make sure that the protective grille does not hit any painted surfaces.

You could otherwise damage the paintwork.

! Do not fasten the screws too tightly. You could otherwise damage the lens.

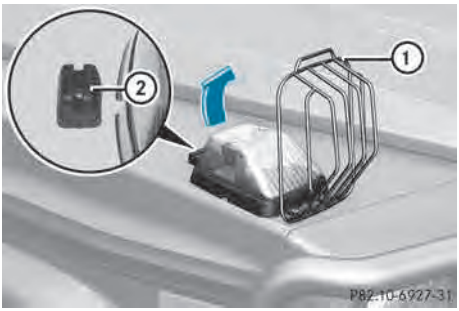

Turn signal lamp with protection grille (AMG vehicles)

▶ Switch off the lights.

▶ **AMG vehicles:** pull protection grille ① in the direction of the arrow out of mounting ②.

▶ Fold up protection grille ①.

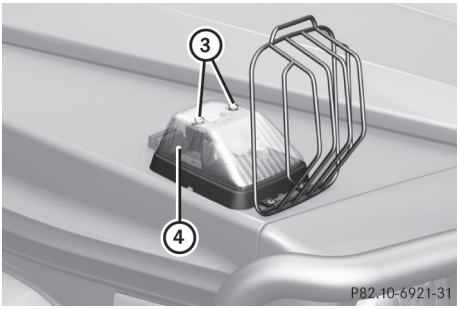

Example: turn signal lamp

▶ Switch off the lights.

▶ Unscrew screws ③.

▶ Remove lens ④.

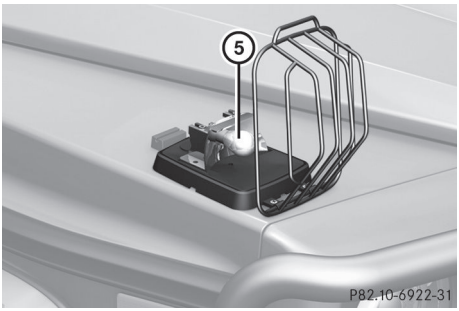

Example: turn signal lamp

- Turn bulb ⑤ counter-clockwise, applying slight pressure, and remove it from the bulb holder.
- Insert the new bulb into the bulb holder and turn it clockwise until it engages.
- Install lens ④.
- Replace and tighten screws ③.
- **AMG vehicles:** fold down protection grille ① and allow it to engage in mounting ②.

Side marker lamps

! Do not fasten the screws too tightly. You could otherwise damage the lens.

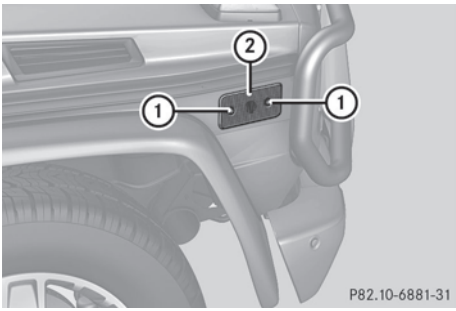

Front side marker lamp (example)

The bulbs of the front and rear side marker lamps are changed in the same way.

- Switch off the lights.
- Unscrew screws ①.
- Remove housing ②.

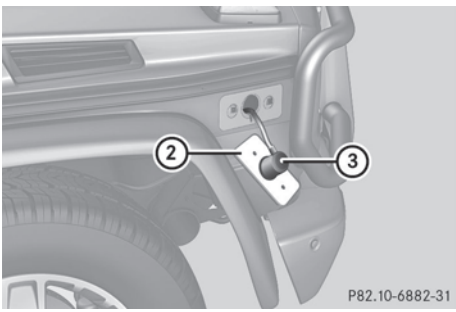

- Remove dust cover ③.
- Push the catch to the side and pull the bulb holder with the bulb out of housing ②.

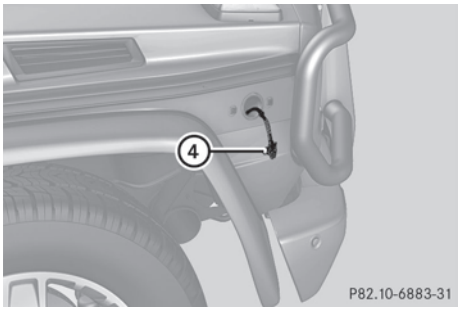

- Lightly press bulb ④, turn it counter-clockwise and pull it out.
- Insert the new bulb and, applying slight pressure, turn it clockwise until it engages.
- Insert the bulb holder into housing ②.
- Attach dust cover ③.
- Insert housing ②.
- Replace and tighten screws ①.

Changing the rear bulbs

G 55 AMG only: protective grille

! Make sure that the protective grille does not hit any painted surfaces.

You could otherwise damage the paintwork.

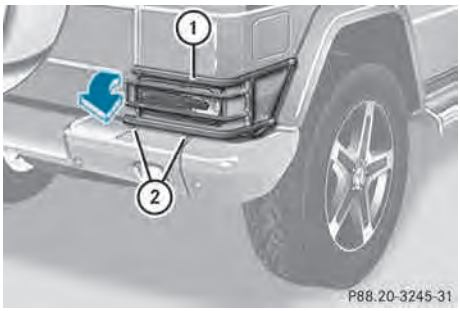

Protection grille (AMG vehicles)

You must remove the protective grille before you can change the bulbs in the tail lamps.

▶ Unscrew screws ②.
▶ Swing protection grille ① to the right.
▶ After changing the bulbs, swing protection grille ① to the left.
▶ Tighten screws ②.

Tail lamp

! When installing the lens, make sure that the seal is positioned correctly.

! Do not fasten the screws too tightly. You could otherwise damage the lens.

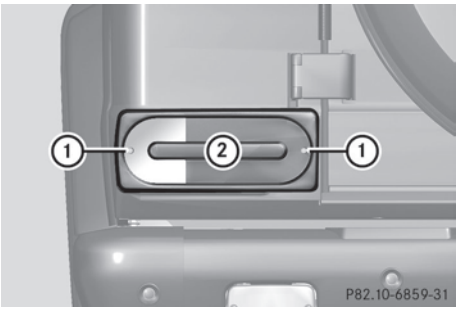

▶ Switch off the lights.
▶ Unscrew screws ①.
▶ Remove lens ②.

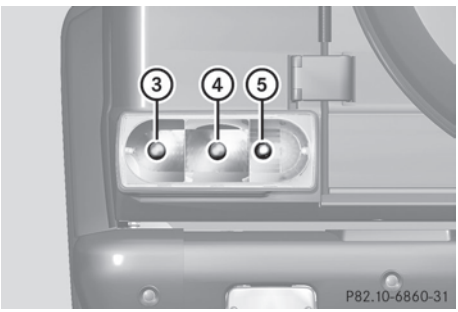

③ Turn signals
④ Brake/tail lamp
⑤ Tail lamp/standing lamp

▶ Turn the bulb counterclockwise, applying slight pressure, and remove it from bulb holder.
▶ Insert the new bulb into the bulb holder and turn it clockwise until it engages.
▶ Install lens ②.
▶ Replace and tighten screws ①.
▶ **AMG vehicles:** secure the protection grille (▷ page 112).

Backup lamp/rear fog lamp

! Do not fasten the screws too tightly. You could otherwise damage the lens.

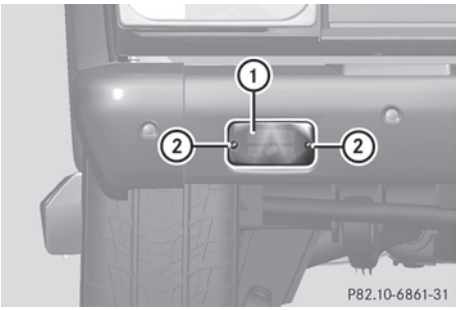

Example: rear fog lamp

▶ Switch off the lights.
▶ Unscrew screws ②.
▶ Remove lens ①.

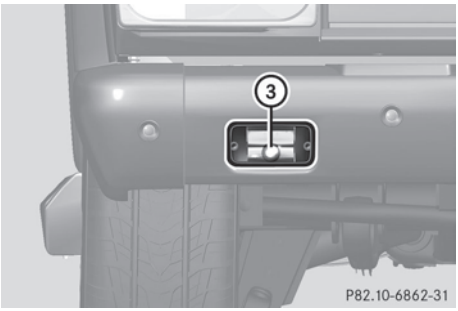

▶ Turn bulb ③ counter-clockwise, applying slight pressure, and remove it from the bulb holder.
▶ Insert the new bulb into the bulb holder and turn it clockwise until it engages.

▶ Install lens ①.

▶ Replace and tighten screws ②.

Windshield wipers

Switching the windshield wipers on/off

⚠ **WARNING**

The windshield will not longer be wiped properly if the wiper blades are worn. This could prevent you from observing the traffic conditions, thereby causing an accident. Replace the wiper blades twice a year, ideally in spring and fall.

! Do not operate the windshield wipers when the windshield is dry, as this could damage the wiper blades. Moreover, dust that has collected on the windshield/rear window can scratch the glass if wiping takes place when the windshield/rear window is dry.

If it is necessary to switch on the windshield wipers in dry weather conditions, always use washer fluid when operating the windshield wipers.

! If the windshield wipers leave smears on the windshield/rear window after the vehicle has been washed in an automatic car wash, this may be due to wax or other residue. Clean the windshield/rear window with washer fluid after an automatic car wash.

! Intermittent wiping with rain sensor: due to optical influences and the windshield becoming dirty in dry weather conditions, the windshield wipers may be activated inadvertently. This could then damage the windshield wiper blades or scratch the windshield.

For this reason, you should always switch off the windshield wipers in dry weather.

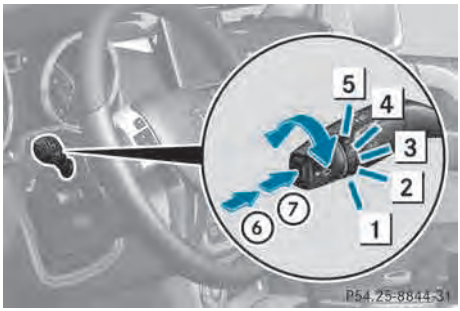

Combination switch

1 [0] Windshield wipers off

2 [•••] Intermittent wipe, low (rain sensor set to low sensitivity)

3 [••••] Intermittent wipe, high (rain sensor set to high sensitivity)

4 [—] Continuous wipe, slow

5 [=] Continuous wipe, fast

⑥ [ ] Single wipe

⑦ [ ] To wipe with washer fluid

▶ Switch on the ignition.

▶ Turn the combination switch to the corresponding position.

Intermittent wiping is interrupted if you stop and open a front door. This protects people getting into and out of the vehicle from being sprayed with water.

Intermittent wiping continues when all doors are closed and:

- you shift the automatic transmission to drive position **D** or reverse gear **R**

  or

- you change the wipe setting on the combination switch.

In the [•••] or [••••] position, the appropriate wiping frequency is set automatically according to the intensity of the rain. In the [••••] position, the rain sensor is more sensitive than in the [•••] position, causing the windshield wipers to wipe more frequently.

Switching the rear window wiper on/off

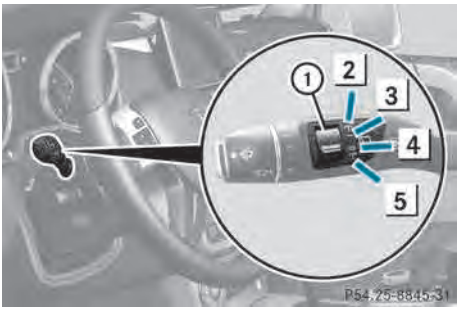

Combination switch

① Switch

2 To wipe with washer fluid

3 **I** To switch on intermittent wiping

4 **0** To switch off intermittent wiping

5 To wipe with washer fluid

▶ Turn the SmartKey to position **1** or **2** in the ignition lock.

▶ Turn switch ① on the combination switch to the corresponding position.
When the rear window wiper is switched on, the icon appears in the instrument cluster.

ℹ The rear window wiper comes on automatically if you shift the selector lever to **R** while the windshield wipers are on.

Replacing the wiper blades

Important safety notes

⚠ **WARNING**

For safety reasons, switch off the wipers and remove the SmartKey from the starter switch before replacing a wiper blade. Otherwise, the wiper motor could suddenly turn on and cause injury.

! To avoid damaging the wiper blades, make sure that you touch only the wiper arm of the wiper.

! Never open the hood if a windshield wiper arm has been folded away from the windshield.

Never fold a windshield wiper arm without a wiper blade back onto the windshield/rear window.

Hold the windshield wiper arm firmly when you change the wiper blade. If you release the windshield wiper arm without a wiper blade and it falls onto the windshield, the windshield may be damaged by the force of the impact.

Mercedes-Benz recommends that you have the wiper blades changed at a qualified specialist workshop.

Removing the wiper blade

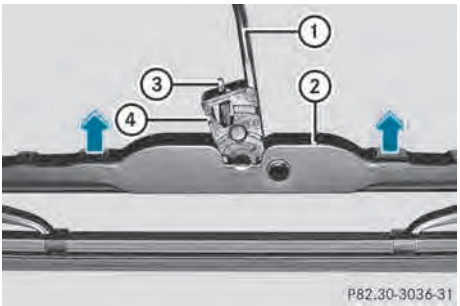

① Windshield wiper arm

② Wiper blade

③ Locking spring

④ Hinge piece

▶ Remove the SmartKey from the ignition lock.

▶ Fold wiper arm ① away from the windshield until it engages.

▶ Position wiper blade ② horizontally.

▶ Press locking spring ③.

▶ Slide wiper blade ② with hinge piece ④ from wiper arm ①.

Installing the wiper blade

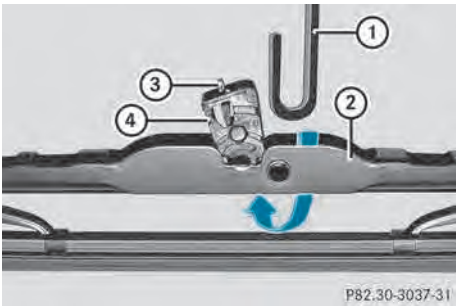

① Windshield wiper arm
② Wiper blade
③ Locking spring
④ Hinge piece

▶ Slide new wiper blade ② with the recess onto wiper arm ①.
▶ Engage locking spring ③ into the end of the wiper arm.
▶ Make sure that wiper blade ② is seated correctly.
▶ Fold wiper arm ① back onto the windshield.

Problems with the windshield wipers

The windshield wipers are obstructed

Leaves or snow, for example, may be obstructing the windshield wiper movement. The wiper motor has been deactivated.

▶ For safety reasons, you should remove the SmartKey from the ignition lock.
▶ Remove the cause of the obstruction.
▶ Switch the windshield wipers back on.

The windshield wipers are inoperative

The windshield wiper drive is malfunctioning.

▶ Select another wiper speed on the combination switch.
▶ Have the windshield wipers checked at a qualified specialist workshop.

Useful information 118
Overview of climate control systems 118
Operating the climate control systems 121
Setting the air vents 134

Useful information

ℹ This Operator's Manual describes all models and all standard and optional equipment of your vehicle available at the time of publication of the Operator's Manual. Country-specific differences are possible. Please note that your vehicle may not be equipped with all features described. This also applies to safety-related systems and functions.

ℹ Read the information on qualified specialist workshops: (▷ page 23).

Overview of climate control systems

Important safety notes

⚠ **WARNING**

Severe conditions (e.g. strong air pollution) may require replacement of the filter before its scheduled replacement interval. A clogged filter will reduce the air volume to the interior and the windows could fog up, impairing visibility and endangering you and others. Have a blocked filter replaced at a Mercedes-Benz Center as soon as possible.

⚠ **WARNING**

Follow the recommended settings for heating and cooling given on the following pages. Otherwise, the windows could fog up, impairing visibility and endangering you and others.

Automatic climate control controls the temperature and the humidity in the vehicle interior and filters undesirable substances from the air.

Automatic climate control is only operational when the engine is running. Optimum operation is only achieved if you drive with the side windows and sliding sunroof closed.

The climatic comfort deteriorates whilst the sliding sunroof is open. The automatic climate control cannot maintain the set temperature with the sliding sunroof open. You have to adjust the climate control manually.

ℹ The "residual heat" function can only be activated or deactivated with the ignition switched off.

ℹ The residual heat function can only be activated or deactivated with the ignition switched off (▷ page 134).

ℹ Ventilate the vehicle for a brief period during warm weather, e.g. using the convenience opening feature (▷ page 78). This will speed up the cooling process and the desired vehicle interior temperature will be reached more quickly.

ℹ The integrated filter can filter out most particles of dust, and completely filters out pollen. A clogged filter reduces the amount of air supplied to the vehicle interior. For this reason, you should always observe the interval for replacing the filter, which is specified in the Maintenance Booklet. Since the replacement interval depends on environmental conditions, e.g. heavy air pollution, the interval may be shorter than stated in the Maintenance Booklet.

Control panel for dual-zone automatic climate control

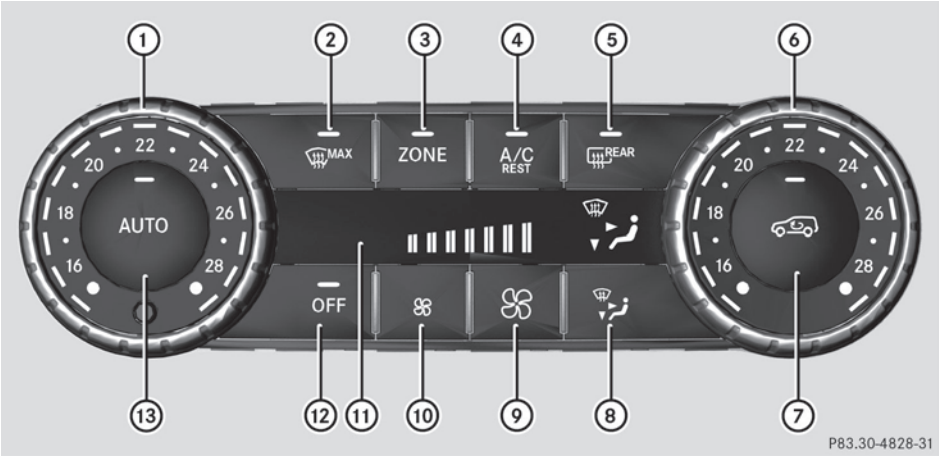

Canada only

① Sets the temperature, left (▷ page 131)
② Defrosts the windshield (▷ page 131)
③ Switches the ZONE function on/off (▷ page 131)
④ Activates/deactivates cooling with air dehumidification (▷ page 124)
⑤ Switches the rear window defroster on/off(▷ page 133)
⑥ Sets the temperature, right (▷ page 131)
⑦ Activates/deactivates air-recirculation mode (▷ page 134)
⑧ Sets the air distribution (▷ page 131)
⑨ Increases the airflow (▷ page 131)
⑩ Reduces the airflow (▷ page 131)
⑪ Display
⑫ Switches climate control on/off (▷ page 121)
⑬ Sets climate control to automatic (▷ page 130)

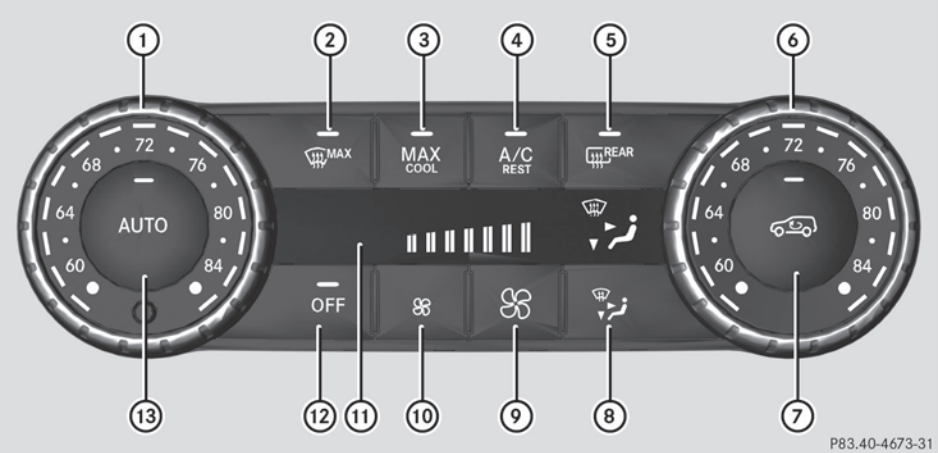

USA only

① Sets the temperature, left (▷ page 131)
② Defrosts the windshield (▷ page 131)
③ Switches maximum cooling MAX COOL on/off (▷ page 132)
④ Activates/deactivates cooling with air dehumidification (▷ page 124)
⑤ Switches the rear window defroster on/off(▷ page 133)
⑥ Sets the temperature, right (▷ page 131)
⑦ Activates/deactivates air-recirculation mode (▷ page 134)
⑧ Sets the air distribution (▷ page 131)
⑨ Increases the airflow (▷ page 131)
⑩ Reduces the airflow (▷ page 131)
⑪ Display
⑫ Switches climate control on/off (▷ page 121)
⑬ Sets climate control to automatic (▷ page 130)

Information about using automatic climate control

The following contains notes and recommendations on optimum use of automatic climate control.

- Activate climate control using the AUTO and A/C REST buttons. The indicator lamps in the AUTO and A/C REST buttons light up.
- Set the temperature to 72 °F (22 °C).
- Only use the "defrosting" function briefly until the windshield is clear again.
- Only use "air-recirculation" mode briefly, e.g. if there are unpleasant outside odors or when in a tunnel. The windows could otherwise fog up, since no fresh air is drawn into the vehicle in air-recirculation mode.
- Use the ZONE function to adopt the temperature settings on the driver's side for the front-passenger side as well. The indicator lamp in the ZONE button goes out.

Operating the climate control systems

Activating/deactivating climate control

Points to observe before use

WARNING

When the climate control system is deactivated, the outside air supply and circulation are also deactivated. Only choose this setting for a short time. Otherwise the windows could fog up, impairing visibility and endangering you and others.

Switching the air conditioning on

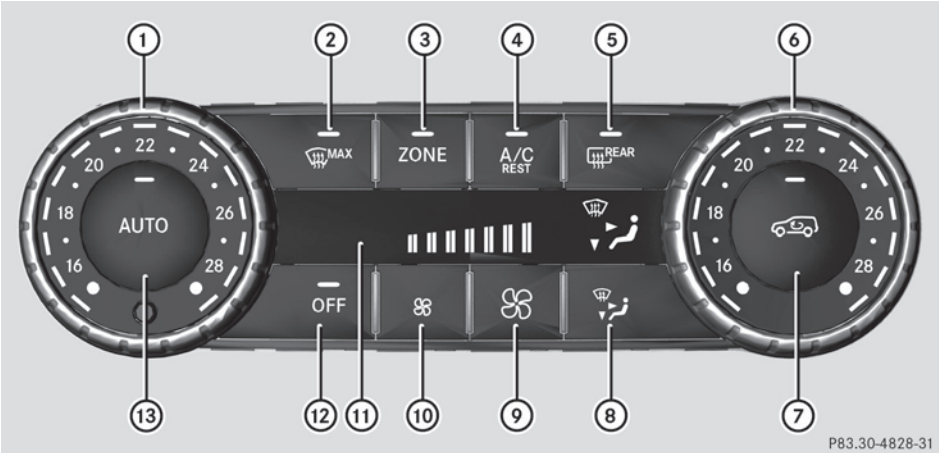

Canada only

① Sets the temperature, left (▷ page 131)
② Defrosts the windshield (▷ page 131)
③ Switches the ZONE function on/off (▷ page 131)
④ Activates/deactivates cooling with air dehumidification (▷ page 124)
⑤ Switches the rear window defroster on/off(▷ page 133)
⑥ Sets the temperature, right (▷ page 131)
⑦ Activates/deactivates air-recirculation mode (▷ page 134)
⑧ Sets the air distribution (▷ page 131)
⑨ Increases the airflow (▷ page 131)
⑩ Reduces the airflow (▷ page 131)
⑪ Display
⑫ Switches climate control on/off (▷ page 121)
⑬ Sets climate control to automatic (▷ page 130)

▶ Turn the SmartKey to position **2** (▷ page 139) in the ignition lock.

▶ Press the AUTO button.
The indicator lamp in the AUTO button lights up. Airflow and air distribution are set to automatic mode.

or

▶ Press the OFF button.
The indicator lamp in the OFF button goes out. The previously selected settings are restored.

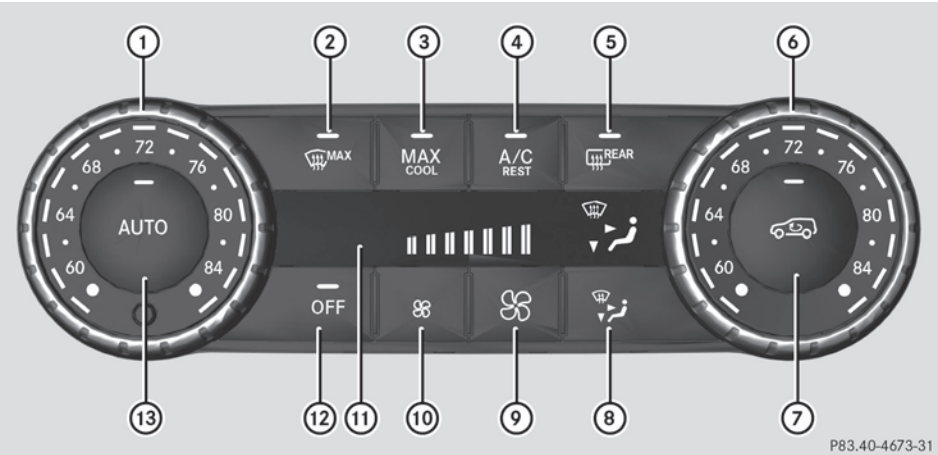

USA only

① Sets the temperature, left (▷ page 131)
② Defrosts the windshield (▷ page 131)
③ Switches maximum cooling MAX COOL on/off (▷ page 132)
④ Activates/deactivates cooling with air dehumidification (▷ page 124)
⑤ Switches the rear window defroster on/off(▷ page 133)
⑥ Sets the temperature, right (▷ page 131)
⑦ Activates/deactivates air-recirculation mode (▷ page 134)
⑧ Sets the air distribution (▷ page 131)
⑨ Increases the airflow (▷ page 131)
⑩ Reduces the airflow (▷ page 131)
⑪ Display
⑫ Switches climate control on/off (▷ page 121)
⑬ Sets climate control to automatic (▷ page 130)

▶ Turn the SmartKey to position **2** (▷ page 139) in the ignition lock.

▶ Press the AUTO button.
The indicator lamp in the AUTO button lights up. Airflow and air distribution are set to automatic mode.

or

▶ Press the OFF button.
The indicator lamp in the OFF button goes out. The previously selected settings are restored.

Switching off climate control

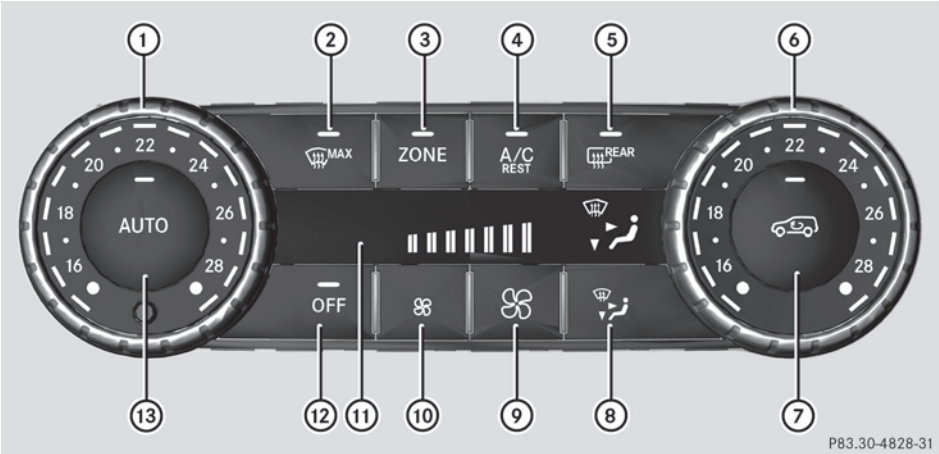

Canada only

① Sets the temperature, left (▷ page 131)
② Defrosts the windshield (▷ page 131)
③ Switches the ZONE function on/off (▷ page 131)
④ Activates/deactivates cooling with air dehumidification (▷ page 124)
⑤ Switches the rear window defroster on/off(▷ page 133)
⑥ Sets the temperature, right (▷ page 131)
⑦ Activates/deactivates air-recirculation mode (▷ page 134)
⑧ Sets the air distribution (▷ page 131)
⑨ Increases the airflow (▷ page 131)
⑩ Reduces the airflow (▷ page 131)
⑪ Display
⑫ Switches climate control on/off (▷ page 121)
⑬ Sets climate control to automatic (▷ page 130)

▶ Press the OFF button.
The indicator lamp in the OFF button lights up.

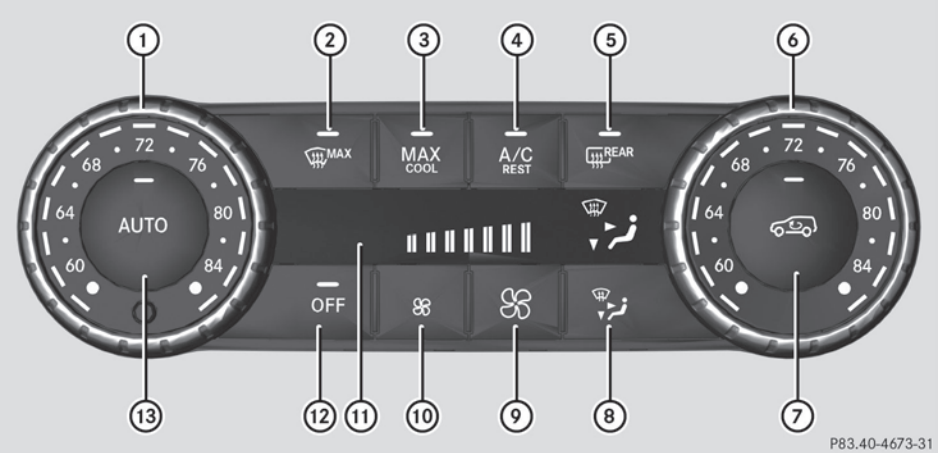

USA only

① Sets the temperature, left (▷ page 131)
② Defrosts the windshield (▷ page 131)
③ Switches maximum cooling MAX COOL on/off (▷ page 132)
④ Activates/deactivates cooling with air dehumidification (▷ page 124)
⑤ Switches the rear window defroster on/off(▷ page 133)
⑥ Sets the temperature, right (▷ page 131)
⑦ Activates/deactivates air-recirculation mode (▷ page 134)
⑧ Sets the air distribution (▷ page 131)
⑨ Increases the airflow (▷ page 131)
⑩ Reduces the airflow (▷ page 131)
⑪ Display
⑫ Switches climate control on/off (▷ page 121)
⑬ Sets climate control to automatic (▷ page 130)

▶ Press the OFF button.
The indicator lamp in the OFF button lights up.

Activating/deactivating cooling with air dehumidification

Points to observe before use

⚠ **WARNING**
If you switch off the cooling function, the vehicle will not be cooled when weather conditions are warm. The windows can fog up more quickly. Window fogging may impair visibility and endanger you and others.

The cooling with air dehumidification function is only available when the engine is running. The air inside the vehicle is cooled and dehumidified according to the temperature selected.

Condensation may drip from the underside of the vehicle when it is in cooling mode. This is normal and not a sign that there is a malfunction.

ℹ The cooling with air dehumidification function uses refrigerant R134a. This coolant does not contain chlorofluorocarbons, and therefore does not damage the ozone layer.

Activating the cooling with air dehumidification function

! If the cooling with air dehumidification does not switch on, it is possible that the climate control system has lost coolant.

Have the cooling with air dehumidification checked at a qualified specialist workshop.

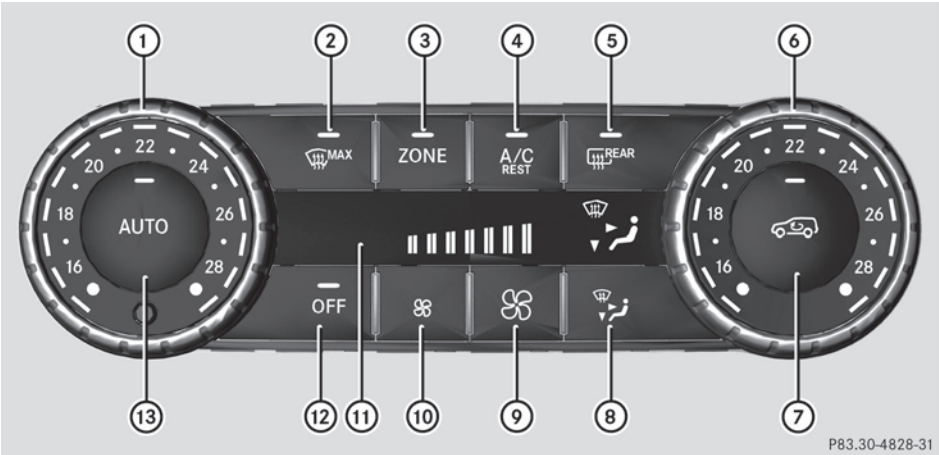

Canada only

① Sets the temperature, left (▷ page 131)
② Defrosts the windshield (▷ page 131)
③ Switches the ZONE function on/off (▷ page 131)
④ Activates/deactivates cooling with air dehumidification (▷ page 124)
⑤ Switches the rear window defroster on/off (▷ page 133)
⑥ Sets the temperature, right (▷ page 131)
⑦ Activates/deactivates air-recirculation mode (▷ page 134)
⑧ Sets the air distribution (▷ page 131)
⑨ Increases the airflow (▷ page 131)
⑩ Reduces the airflow (▷ page 131)
⑪ Display
⑫ Switches climate control on/off (▷ page 121)
⑬ Sets climate control to automatic (▷ page 130)

▶ Press the [A/C REST] button.
The indicator lamp in the [A/C REST] button lights up.

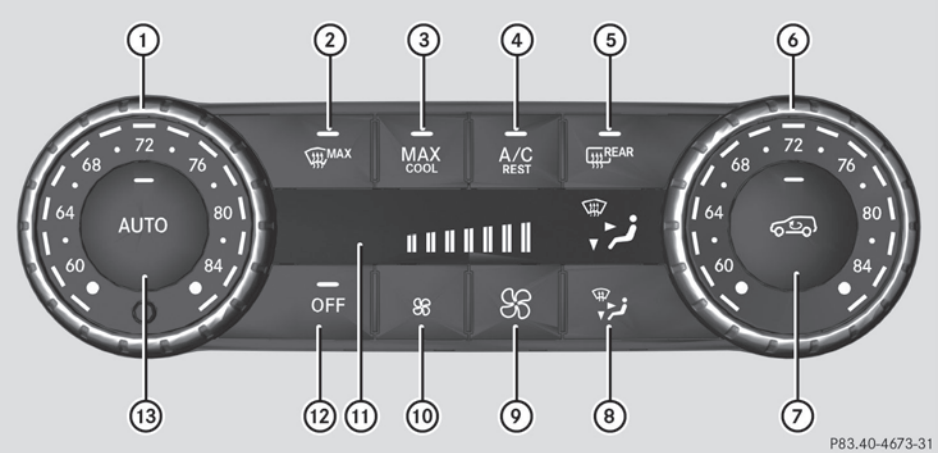

USA only

① Sets the temperature, left (▷ page 131)
② Defrosts the windshield (▷ page 131)
③ Switches maximum cooling MAX COOL on/off (▷ page 132)
④ Activates/deactivates cooling with air dehumidification (▷ page 124)
⑤ Switches the rear window defroster on/off (▷ page 133)
⑥ Sets the temperature, right (▷ page 131)
⑦ Activates/deactivates air-recirculation mode (▷ page 134)
⑧ Sets the air distribution (▷ page 131)
⑨ Increases the airflow (▷ page 131)
⑩ Reduces the airflow (▷ page 131)
⑪ Display
⑫ Switches climate control on/off (▷ page 121)
⑬ Sets climate control to automatic (▷ page 130)

▶ Press the [A/C REST] button.
The indicator lamp in the [A/C REST] button lights up.

Deactivating the cooling with air dehumidification function

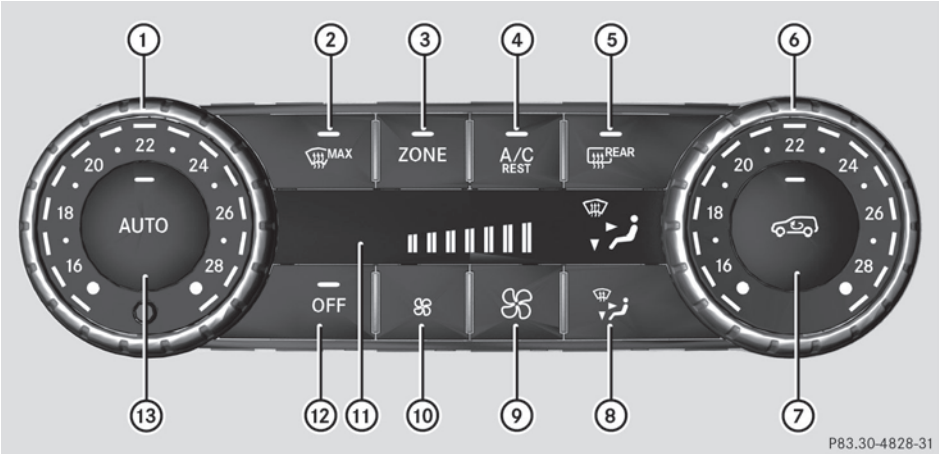

Canada only

① Sets the temperature, left (▷ page 131)
② Defrosts the windshield (▷ page 131)
③ Switches the ZONE function on/off (▷ page 131)
④ Activates/deactivates cooling with air dehumidification (▷ page 124)
⑤ Switches the rear window defroster on/off (▷ page 133)
⑥ Sets the temperature, right (▷ page 131)
⑦ Activates/deactivates air-recirculation mode (▷ page 134)
⑧ Sets the air distribution (▷ page 131)
⑨ Increases the airflow (▷ page 131)
⑩ Reduces the airflow (▷ page 131)
⑪ Display
⑫ Switches climate control on/off (▷ page 121)
⑬ Sets climate control to automatic (▷ page 130)

▶ Press the [A/C REST] button.
The indicator lamp in the [A/C REST] button goes out. The cooling with air dehumidification function has a delayed switch-off feature.

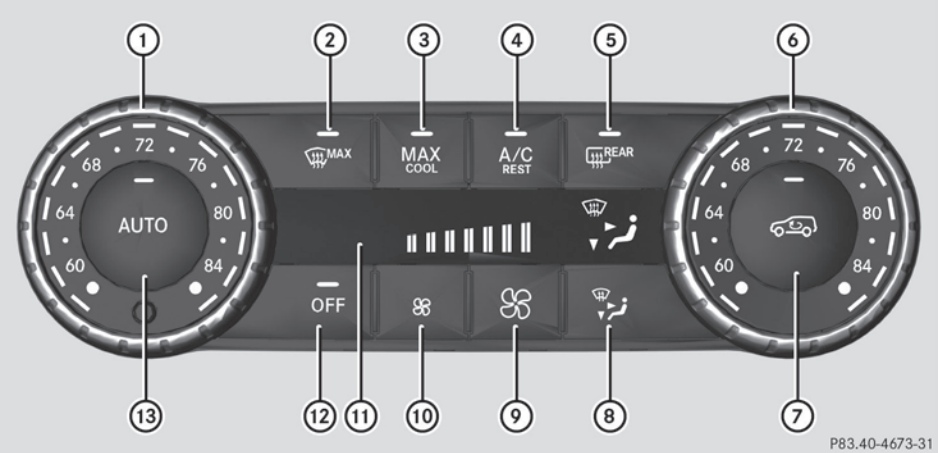

USA only

① Sets the temperature, left (▷ page 131)
② Defrosts the windshield (▷ page 131)
③ Switches maximum cooling MAX COOL on/off (▷ page 132)
④ Activates/deactivates cooling with air dehumidification (▷ page 124)
⑤ Switches the rear window defroster on/off (▷ page 133)
⑥ Sets the temperature, right (▷ page 131)
⑦ Activates/deactivates air-recirculation mode (▷ page 134)
⑧ Sets the air distribution (▷ page 131)
⑨ Increases the airflow (▷ page 131)
⑩ Reduces the airflow (▷ page 131)
⑪ Display
⑫ Switches climate control on/off (▷ page 121)
⑬ Sets climate control to automatic (▷ page 130)

▶ Press the [A/C REST] button.
The indicator lamp in the [A/C REST] button goes out. The cooling with air dehumidification function has a delayed switch-off feature.

Problems with the cooling with air dehumidification function

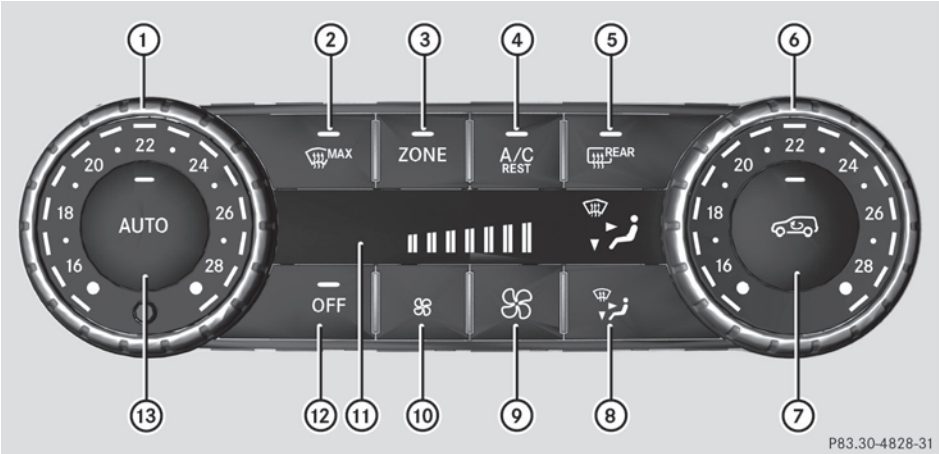

Canada only

① Sets the temperature, left (▷ page 131)
② Defrosts the windshield (▷ page 131)
③ Switches the ZONE function on/off (▷ page 131)
④ Activates/deactivates cooling with air dehumidification (▷ page 124)
⑤ Switches the rear window defroster on/off(▷ page 133)
⑥ Sets the temperature, right (▷ page 131)
⑦ Activates/deactivates air-recirculation mode (▷ page 134)
⑧ Sets the air distribution (▷ page 131)
⑨ Increases the airflow (▷ page 131)
⑩ Reduces the airflow (▷ page 131)
⑪ Display
⑫ Switches climate control on/off (▷ page 121)
⑬ Sets climate control to automatic (▷ page 130)

When you press the A/C REST button, the indicator lamp in the button flashes three times or remains off. You can no longer switch on the cooling with air dehumidification function.

▶ Visit a qualified specialist workshop.

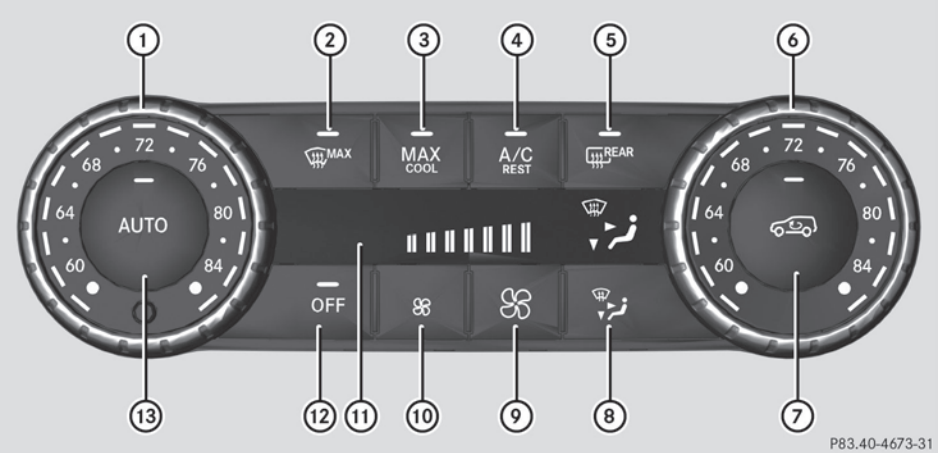

USA only

① Sets the temperature, left (▷ page 131)
② Defrosts the windshield (▷ page 131)
③ Switches maximum cooling MAX COOL on/off (▷ page 132)
④ Activates/deactivates cooling with air dehumidification (▷ page 124)
⑤ Switches the rear window defroster on/off(▷ page 133)
⑥ Sets the temperature, right (▷ page 131)
⑦ Activates/deactivates air-recirculation mode (▷ page 134)
⑧ Sets the air distribution (▷ page 131)
⑨ Increases the airflow (▷ page 131)
⑩ Reduces the airflow (▷ page 131)
⑪ Display
⑫ Switches climate control on/off (▷ page 121)
⑬ Sets climate control to automatic (▷ page 130)

When you press the A/C REST button, the indicator lamp in the button flashes three times or remains off. You can no longer switch on the cooling with air dehumidification function.

▶ Visit a qualified specialist workshop.

Setting climate control to automatic

⚠ **WARNING**

If you switch off the cooling function, the vehicle will not be cooled when weather conditions are warm. The windows can fog up more quickly. Window fogging may impair visibility and endanger you and others.

In automatic mode, the set temperature is maintained at a constant level. The system automatically regulates the temperature of the dispensed air, the airflow and the air distribution.

Automatic mode will achieve optimal operation if cooling with air dehumidification is also activated. If desired, cooling with air dehumidification can be deactivated.

- Turn the SmartKey to position **2** (▷ page 139) in the ignition lock.
- Set the desired temperature.
- **To switch on:** press the AUTO button. The indicator lamp in the AUTO button lights up. Automatic air distribution and airflow are activated.
- **To deactivate:** press the button.

or

- Press the or button. The indicator lamp in the AUTO button goes out.

Setting the temperature

You can set the temperature separately for the driver's and front-passenger sides with controls ① or ⑥(▷ page 119).

- Turn the SmartKey to position **2** (▷ page 139) in the ignition lock.
- Set control ① or ⑥(▷ page 119) to the desired temperature. Only change the temperature setting in small increments. Start at 72 °F (22 °C).

Setting the air distribution

- Turn the SmartKey to position **2** (▷ page 139) in the ignition lock.
- Press the button repeatedly until the desired symbol appears in the display.

Directs the airflow through the center vents

Directs the airflow through the footwell air vents

Directs the airflow through the center and footwell vents

Directs air through the defroster vents

Canada only: directs the airflow through the defroster and center vents

Directs air through the defroster and footwell vents

Canada only: directs the airflow through the defroster, center and side air vents and the footwell

Setting the airflow

- Turn the SmartKey to position **2** (▷ page 139) in the ignition lock.
- **To increase:** press the button.
- **To reduce:** press the button.

ℹ The airflow from the rear-compartment vents and the center vents is the same.

Activating/deactivating the zone function

- **To switch on:** press the ZONE button. The indicator lamp in the ZONE button lights up.

ℹ The temperature setting for the driver's side is not adopted for the front-passenger side and the rear compartment. The temperature for the front-passenger side and the rear compartment must be set separately.

- **To switch off:** press button ZONE. The indicator lamp in the ZONE button goes out.

ℹ The temperature setting for the driver's side is adopted for the front-passenger side and the rear compartment.

Defrosting the windshield

You can use this function to defrost the windshield or to defrost the inside of the windshield and the side windows.

ℹ You should only select the defrosting function until the windshield is clear again.

▶ Turn the SmartKey to position **2** (▷ page 139) in the ignition lock.

▶ **To activate:** press the [MAX] button.
The indicator lamp in the [MAX] button lights up.

The climate control system switches to the following functions:

- cooling with air dehumidification (only with engine running)
- high airflow (depending on the outside temperature)
- high temperature (depending on the outside temperature)
- air distribution to the windshield and front side windows
- air-recirculation mode off

▶ **To deactivate:** press the [MAX] button.
The indicator lamp in the [MAX] button goes out. The previously selected settings are restored. The cooling with air dehumidification function remains on. Air-recirculation mode remains deactivated.

or

▶ Press the [AUTO] button.
The indicator lamp in the [MAX] button goes out. Airflow and air distribution are set to automatic mode.

or

▶ Turn controls ① or ⑥ clockwise or counter-clockwise (▷ page 119).

or

▶ Press the [ ] or [ ] button.

Activating/deactivating MAX COOL maximum cooling

The MAX COOL function is only available in vehicles for the USA.

MAX COOL is only operational when the engine is running.

▶ **To activate:** press the [MAX COOL] button.
The indicator lamp in the button lights up.

▶ **To activate:** press off-road button [MAX COOL] again.
The indicator lamp goes out. The previously selected settings are restored.

When you activate MAX COOL, climate control switches to the following functions:

- maximum cooling
- maximum airflow
- air-recirculation mode on

Defrosting the windows

Windows fogged up on the inside

▶ Activate the [A/C REST] cooling with air dehumidification function.

▶ Activate automatic mode [AUTO].

▶ If the windows continue to fog up, activate the defrosting function (▷ page 131).

ℹ You should only select this setting until the windshield is clear again.

Windows fogged up on the outside

▶ Switch on the windshield wipers (▷ page 114).

▶ Press the [ ] button repeatedly until the [ ] or [ ] symbol appears in the display.

ℹ You should only select this setting until the windshield is clear again.

Switching the windshield defroster on/off

⚠ **WARNING**
Any accumulation of snow and ice should be removed from the windshield before driving. Otherwise, your vision may be impaired, which could endanger you or others.

▶ Turn the SmartKey to position **2** (▷ page 139) in the ignition lock.

▶ **To switch on:** press button ②.
Indicator lamp ① lights up.

▶ **To switch off:** press button ②.
Indicator lamp ① goes out.

ℹ At outside temperatures above 50 °F(10 °C), the windshield heating cannot be activated. Indicator lamp ① lights up briefly when you attempt to activate it and then goes out again.

ℹ The windshield defroster has a high current draw. You should therefore switch it off as soon as the windshield is clear. The windshield heating otherwise switches itself off automatically after 10 minutes.

ℹ If you turn on the windshield heating for the fourth consecutive time, the windshield heating will automatically switch off after 5 minutes.

ℹ If the vehicle's electrical system voltage is too low because too many electrical consumers are switched on, indicator lamp ① flashes. After approximately 30 seconds, the windshield heating turns off automatically.

Switching the rear window defroster on/off

Activating/deactivating

⚠ **WARNING**
Any accumulation of snow and ice should be removed from the rear window before driving. Visibility could otherwise be impaired, endangering you and others.

▶ Turn the SmartKey to position **2** (▷ page 139) in the ignition lock.

▶ **USA only:** press the [REAR] button.
The indicator lamp in the [REAR] button lights up or goes out.

ℹ The rear window defroster has a high current draw. You should therefore switch it off as soon as the rear window is clear. as it only switches off automatically after several minutes.

ℹ If the battery voltage is too low, the rear window defroster may switch off.

Problems with the rear window defroster

If the indicator lamp in the [REAR] rear window defroster button flashes, the on-board voltage is too low. The rear window defroster has deactivated prematurely or cannot be activated.

▶ Switch off any consumers that are not required, e.g. reading lamps or interior lighting.
When the battery is sufficiently charged, the rear window defroster is activated again automatically.

Activating/deactivating air-recirculation mode

⚠ **WARNING**
Fogged windows impair visibility, endangering you and others. If the windows begin to fog on the inside, switching off the air recirculation mode immediately should clear interior window fogging. If interior window fogging persists, make sure the air conditioning is activated, or press the MAX button.

▶ Turn the SmartKey to position **2** (▷ page 139) in the ignition lock.

▶ **To switch on:** press the button. The indicator lamp in the button lights up.

ℹ Air-recirculation mode is automatically activated at high levels of pollution or at high outside temperatures. When air-recirculation mode is activated automatically, the indicator lamp in the button is not lit.

Outside air is added after approximately 30 minutes.

▶ **To deactivate:** press the button. The indicator lamp in the button goes out.

ℹ Air-recirculation mode switches off automatically:

- after approximately five minutes at outside temperatures below approximately 41 °F
- after approximately five minutes if cooling with air dehumidification is deactivated
- after approximately 30 minutes at outside temperatures above approximately 41 °F (5 °C)

Activating/deactivating the residual heat function

The "residual heat" function is only available in Canada.

It is possible to make use of the residual heat of the engine to continue heating the stationary vehicle for up to 30 minutes after the engine has been switched off. The heating time depends on the coolant temperature and on the interior temperature that has been set.

ℹ The blower will run at a low speed regardless of the airflow setting.

ℹ If you activate the residual heat function at high temperatures, only the ventilation will be activated.

▶ Turn the SmartKey to position **0**(▷ page 139) in the ignition lock or remove it.

▶ **To activate:** press the A/C REST button. The indicator lamp in the A/C REST button lights up.

▶ **To deactivate:** press the A/C REST button. The indicator lamp in the A/C REST button goes out.

ℹ Residual heat is deactivated automatically:

- after approximately 30 minutes
- when the ignition is switched on
- if the battery voltage drops
- if the coolant temperature is too low

Setting the air vents

Important safety notes

⚠ **WARNING**
When operating the climate control, the air that enters the passenger compartment through the air vents can be very hot or very cold (depending on the set temperature). This could cause burns or frostbite to unprotected skin in the immediate area of the air vents.

Always keep sufficient distance between unprotected parts of the body and the air vents. If necessary, use the air distribution adjustment to direct the air to air vents in the vehicle interior that are not in the immediate area of unprotected skin.

General notes

In order to ensure the direct flow of fresh air through the air vents into the vehicle interior, please observe the following notes:

- keep the air intake grill on the hood free of blockages, such as ice, snow or leaves.
- never cover the air vents or air intake grilles in the vehicle interior.

ℹ For virtually draft-free ventilation, adjust the sliders of the air vents to the center position.

ℹ If the automatic climate control constantly differs from the set temperature or if undesired drafts are noticeable, proceed as follows:

▶ Open the side air vents

▶ Open the center air vents

▶ Open the rear air vents

▶ Set the temperature to 72 °F (22 °C). The automatic climate control adjusts itself to the set temperature.

Setting the center air vents

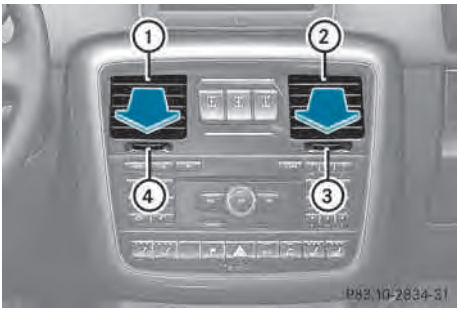

Center air vents

① Center air vent, left

② Center air vent, right

③ Center vent thumbwheel, right

④ Center vent thumbwheel, left

▶ **To open/close:** turn thumbwheels ③ and ④ to the right or left.

Setting the side air vents

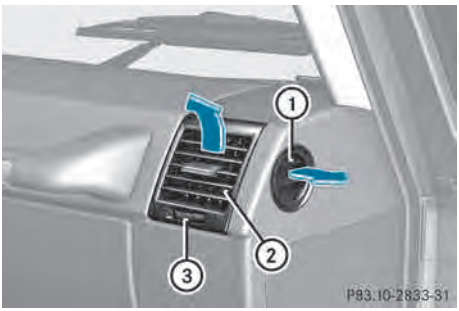

Side air vents

① Side air vent

② Swiveling side air vent

③ Control for side air vent

▶ **To open/close:** turn thumbwheel ③ to the left or right.

Setting the rear-compartment air vents

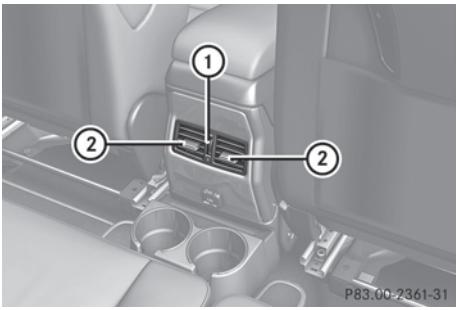

- **To open/close:** turn thumbwheel ① up or down.
- **To set the air direction:** move slider ② for the corresponding rear-compartment air vent to the left, right, up or down.

Useful information 138
Breaking-in notes 138
Driving 138
Automatic transmission 145
Refueling 153
Parking 156
Driving tips 158
Driving systems 169
Off-road driving systems 198
Towing a trailer 203

Useful information

ℹ This Operator's Manual describes all models and all standard and optional equipment of your vehicle available at the time of publication of the Operator's Manual. Country-specific differences are possible. Please note that your vehicle may not be equipped with all features described. This also applies to safety-related systems and functions.

ℹ Read the information on qualified specialist workshops: (▷ page 23).

Breaking-in notes

Important safety notes

New and replaced brake pads and discs only reach their optimum braking effect after several hundred kilometers of driving. Compensate for this by applying greater force to the brake pedal.

The first 1,000 miles (1,500 km)

The more you look after the engine when it is new, the more satisfied you will be with its performance in the future.

- You should therefore drive at varying vehicle and engine speeds for the first 1,000 miles (1,500 km).
- Avoid heavy loads, e.g. driving at full throttle, during this period.
- Change gear in good time, before the tachometer needle is ⅔ of the way to the red area of the tachometer.
- Do not manually shift to a lower gear to brake the vehicle.
- If possible, do not depress the accelerator pedal past the point of resistance (kickdown).
- Only select shift ranges **3**, **2** or **1** when driving slowly, e.g. in mountainous terrain.

After 1,000 miles (1,500 km), you can increase the engine speed gradually and bring the vehicle up to full speed.

Additional breaking-in notes for AMG vehicles:

- Do not drive faster than 85 mph (140 km/h for the first 1,000 miles (1,500 km)
- Only allow the engine to reach a maximum engine speed of 4,500 rpm briefly.
- Change gear in good time.
- Avoid driving off-road before the differential oil change at 2,000 miles (3,000 km).
- Ideally, drive for the first 1,000 miles(1,500 km) in drive program **C**.

ℹ You should also observe these breaking-in notes if the engine or parts of the drive train on your vehicle have been replaced.

ℹ Always observe the respective speed limits.

AMG vehicles with rear axle locking differential

To improve the protection of the differential, change the oil after a break-in distance of 2,000 miles (3,000 km). This oil change will lengthen the service life of the differential. Have the oil change carried out at a qualified specialist workshop. Mercedes-Benz recommends that you use an authorized Mercedes-Benz Center for this purpose.

Driving

Important safety notes

⚠ **WARNING**

Objects in the driver's footwell can restrict the pedal travel or obstruct a depressed pedal. The operating and road safety of the vehicle is jeopardized. There is a risk of an accident.

Make sure that all objects in the vehicle are stowed correctly, and that they cannot enter the driver's footwell. Install the floormats securely and as specified in order to ensure sufficient clearance for the pedals. Do not use loose floormats.

⚠ **WARNING**

Unsuitable footwear can hinder correct usage of the pedals, e.g.:

- shoes with thick soles
- shoes with high heels
- slippers

There is a risk of an accident.

Wear suitable footwear to ensure correct usage of the pedals.

⚠ **WARNING**

If you switch off the ignition while driving, safety-relevant functions are only available with limitations, or not at all. This could affect, for example, the power steering and the brake boosting effect. You will require considerably more effort to steer and brake. There is a risk of an accident.

Do not switch off the ignition while driving.

⚠ **WARNING**

If the parking brake has not been fully released when driving, the parking brake can:

- overheat and cause a fire
- lose its hold function.

There is a risk of fire and an accident. Release the parking brake fully before driving off.

! Warm up the engine quickly. Do not use the engine's full performance until it has reached operating temperature.

Only shift the automatic transmission to the desired drive position when the vehicle is stationary.

Where possible, avoid spinning the drive wheels when pulling away on slippery roads. You could otherwise damage the drive train.

! Avoid high engine speeds when the engine is cold. The engine's service life could otherwise be significantly shortened. Do not use the engine's full performance until it has reached operating temperature.

! **AMG vehicles:** at low engine oil temperatures below 68 °F (+20 °C), the maximum engine speed is restricted in order to protect the engine. To protect the engine and maintain smooth engine operation, avoid driving at full throttle when the engine is cold.

SmartKey positions

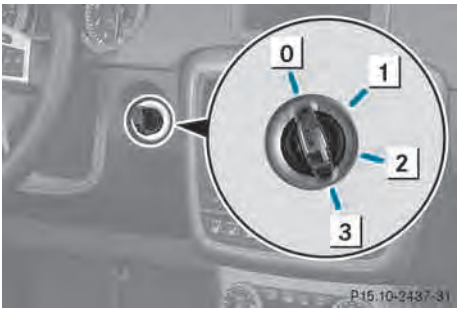

0 To remove the SmartKey

1 Power supply for some consumers, such as the windshield wipers

2 Ignition (power supply for all consumers) and drive position

3 To start the engine

As soon as the ignition is switched on, all the indicator lamps in the instrument cluster light up. If an indicator lamp does not go out after starting the engine or lights up while driving, see (▷ page 249).

If the SmartKey is in position **0** in the ignition lock for an extended period of time, it can no longer be turned in the ignition lock. The steering is then locked. To unlock, remove the SmartKey and reinsert it into the ignition lock.

The steering is locked when you remove the SmartKey from the ignition lock.

▶ Remove the SmartKey when the engine is switched off.
The starter battery could otherwise be discharged.

If you cannot turn the SmartKey in the ignition lock, the starter battery may not be charged sufficiently.

▶ Check the starter battery and charge it if necessary (▷ page 307).

or

▶ Jump-start the vehicle (▷ page 308).

ℹ You can only remove the SmartKey if:

- the SmartKey is in position **0** in the ignition lock.
- the automatic transmission selector lever is in **P**.

Starting the engine

Important safety notes

⚠ **WARNING**

Combustion engines emit poisonous exhaust gases such as carbon monoxide. Inhaling these exhaust gases leads to poisoning. There is a risk of fatal injury. Therefore never leave the engine running in enclosed spaces without sufficient ventilation.

⚠ **WARNING**

Inhalation of exhaust gas is hazardous to your health. All exhaust gas contains carbon monoxide (CO), and inhaling it can cause unconsciousness and possible death.

Do not run the engine in confined areas (such as a garage) which are not properly ventilated. If you think that exhaust gas fumes are entering the vehicle while driving, have the cause determined and corrected immediately. If you must drive under these conditions, drive only with at least one window fully open at all times.

! Do not depress the accelerator pedal when starting the engine.

Starting procedure

▶ Shift the automatic transmission to position **P**.
The transmission position display in the multifunction display shows **P**.

ℹ For further information about the automatic transmission, see (▷ page 145).

ℹ If you depress the brake when starting the engine, pedal travel is unusually long and there is less pedal resistance.

▶ Make sure that the parking brake is applied.

▶ Turn the SmartKey in the ignition lock to position **3** (▷ page 139) and release it as soon as the engine is running.

ℹ You can also use the touch-start function. To do this, turn the SmartKey to position **3** (▷ page 139) and release it immediately. The engine then starts automatically.

Pulling away

Automatic transmission

⚠ **WARNING**

If the engine speed is above the idling speed and you engage transmission position **D** or **R**, the vehicle could pull away suddenly. There is a risk of an accident.

When engaging transmission position **D** or **R**, always firmly depress the brake pedal and do not simultaneously accelerate.

! Only shift the automatic transmission to reverse gear **R** or park position **P** when the vehicle is stationary. Otherwise, the automatic transmission could be damaged.

! Do not depress the accelerator pedal while depressing the brake pedal. This impairs engine performance and results in premature wear on the brake system and drivetrain.

! If a warning tone sounds and the Release Park. Brake message appears in the multifunction display, the parking brake is still applied. Release the parking brake.

▶ Depress the brake pedal and keep it depressed.

▶ Shift the automatic transmission to position **D** or **R**.

ℹ Before driving off, wait until the gear change is fully completed.

▶ Release the parking brake (▷ page 157).

▶ Release the brake pedal.

▶ Carefully depress the accelerator pedal.

ℹ It is only possible to shift the automatic transmission from position **P** to a different position if you depress the brake pedal. Only then is the selector lever lock released.

ℹ The vehicle locks centrally once you have pulled away. The locking knobs in the doors drop down.

You can open the doors from the inside at any time.

You can also deactivate the automatic locking feature (▷ page 220).

ℹ Upshifts take place at higher engine speeds after a cold start. This helps the catalytic converter to reach its operating temperature more quickly.

Hill start assist

⚠ **WARNING**

After a short time, hill start assist will no longer brake your vehicle and it could roll away. There is a risk of an accident and injury.

Therefore, quickly move your foot from the brake pedal to the accelerator pedal. Never leave the vehicle when it is held by hill start assist.

Hill start assist helps you when pulling away forwards or in reverse on an uphill gradient. It holds the vehicle for a short time after you have removed your foot from the brake pedal. This gives you enough time to move your foot from the brake pedal to the accelerator pedal and to depress it before the vehicle begins to roll.

▶ Take your foot off the brake pedal.

ℹ Once you have taken your foot off the brake pedal, the vehicle is held for around one second.

▶ Pull away.

Hill start assist will not function if:

- you are pulling away on a level road or on a downhill gradient.
- the transmission is in position **N**.
- the parking brake is applied.
- ESP® is malfunctioning.

ECO start/stop function (AMG vehicles)

Important safety notes

⚠ **WARNING**

If the engine is switched off automatically and you exit the vehicle, the engine is restarted automatically. The vehicle may begin moving. There is a risk of accident and injury.

If you wish to exit the vehicle, always turn off the ignition and secure the vehicle against rolling away.

General notes

The ECO start/stop function is only available for the G 63 AMG.

The ECO start/stop function switches the engine off automatically when the vehicle stops moving.

The engine starts automatically when the driver wants to pull away again. The ECO start/stop function thereby helps you to reduce the fuel consumption and emissions of your vehicle.

The ECO start/stop function is activated each time the engine is switched on.

The ECO start/stop function is only available in drive program **C**.

The system is operational when the ECO symbol is shown in green in the multifunction display.

The system is operational if all conditions for automatic engine switch-off have been fulfilled (▷ page 142) and the ECO symbol is shown in green in the multifunction display.

In addition, the Stop/Start active message is shown in the AMG menu in the multifunction display.

If not all conditions for automatic engine switch-off (▷ page 142) are fulfilled, the ECO symbol is shown in yellow in the multifunction display.

In addition, the Stop/Start inactive message is shown in the AMG menu in the multifunction display.

If the ECO start/stop function has been manually deactivated (▷ page 142) or a malfunction has caused the system to be deactivated, the ECO symbol is not displayed.

The Stop/Start active or Stop/Start inactive message in the AMG menu in the multifunction display goes out.

Deactivating/activating the ECO start/stop function

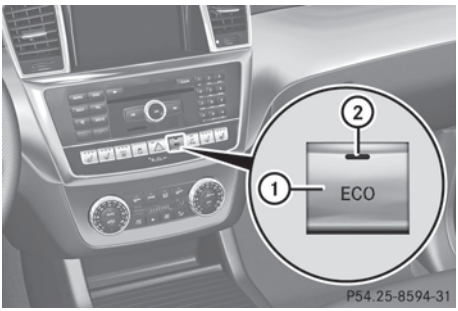

ECO button

▶ **To switch off:** press button ① in drive program **C**.

or

▶ Switch to drive program **S** or **M** (▷ page 149).
Indicator lamp ② on button ① and the ECO symbol in the multifunction display go out.

The Stop/Start active or Stop/Start inactive message in the AMG menu in the multifunction display goes out.

▶ **To switch on:** press button ①.
Indicator lamp ② lights up. If drive program **S** or **M** is active, the automatic transmission switches to drive program **C**.

If all conditions for automatic engine switch-off (▷ page 142) are fulfilled, the ECO symbol is shown in green in the multifunction display. In addition, the Stop/Start active message is shown in the AMG menu in the multifunction display.

If conditions for automatic engine switch-off (▷ page 142) have not been fulfilled, the ECO symbol will be shown in yellow. If this is the case, the ECO start/stop function is not available. In addition, the Stop/Start inactive message is shown in the AMG menu in the multifunction display.

ℹ If indicator lamp ② is off, the ECO start/stop function has been deactivated manually or as the result of a malfunction. The engine will then not be switched off automatically when the vehicle stops.

Automatic engine switch-off

If the vehicle is braked to a standstill in **D** or **N**, the ECO start/stop function switches off the engine automatically.

The ECO start/stop function is operational and the ECO symbol is displayed in green in the multifunction display, if:

- the indicator lamp in the ECO button is lit green.
- no off-road program has been selected.

- the vehicle is stationary.
- the outside temperature is within the comfort range.
- the engine is at normal operating temperature.
- the set temperature for the vehicle interior has been reached.
- the battery is sufficiently charged.
- the system detects that the windshield is not fogged up when the air-conditioning system is switched on.
- the hood is closed.
- the driver's door is closed and the driver's seat belt is fastened.

If conditions for automatic engine switch-off have not been fulfilled, the ECO symbol will be shown in yellow.

In addition, the Stop/Start inactive message is shown in the AMG menu in the multifunction display.

ⓘ If you shift the transmission from **R** to **D**, the ECO start/stop function is available again once the ECO symbol reappears in green in the multifunction display.

ⓘ The engine can be automatically switched off an unlimited number of times.

ⓘ You can still activate the HOLD function when the vehicle is stationary, even if the engine has been switched off automatically. It is then not necessary to continue applying the brakes during the automatic stop phase. When you depress the accelerator pedal, the engine starts automatically and the braking effect of the HOLD function is deactivated. Depress the accelerator pedal carefully, as the engine must be started first.

ⓘ During automatic engine switch-off, the climate control system only operates at a reduced capacity. If you require full climate control capacity, the ECO start/stop function can be deactivated by pressing the ECO button (▷ page 142).

Automatic engine start

The engine starts automatically if:

- In general:
  - you switch off the ECO start/stop function by pressing the ECO button.
  - you release the brakes when in transmission position **D** or **N** and when the HOLD function is not active.
- By the driver:
  - you release the brakes when in transmission position **D** or **N**.
  - you depress the accelerator pedal.
  - you engage reverse gear **R**.
  - you move the transmission out of position **P**.
  - you switch to drive program **S** or **M.**
  - you unfasten your seat belt or open the driver's door.
- By the system:
  - the vehicle starts to roll.
  - the brake system requires this.
  - the temperature in the vehicle interior deviates from the set range.
  - the system detects moisture on the windshield when the air-conditioning system is switched on.
  - the charge level of the battery is too low.

ⓘ Shifting the transmission to position **P** does not start the engine.

Problems with the engine

Problem	Possible causes/consequences and ▶ Solutions
The engine does not start. The starter motor can be heard.	• There is a malfunction in the engine electronics. • There is a malfunction in the fuel supply. ▶ Turn the SmartKey back to position **0** in the ignition lock before attempting to start the engine again. ▶ Try to start the engine again (▷ page 140). Avoid excessively long and frequent attempts to start the engine, as this (▷ page 139) will drain the battery. If the engine does not start after several attempts: ▶ Consult a qualified specialist workshop.
The engine does not start. The starter motor can be heard. The yellow reserve fuel warning lamp is lit and the needle of the fuel gauge display shows **0**.	The fuel tank is empty. ▶ Refuel the vehicle.
The engine does not start. You cannot hear the starter motor.	The on-board voltage is too low because the battery is too weak or discharged. ▶ Jump-start the vehicle (▷ page 308). If the engine does not start despite attempts to jump-start it: ▶ Consult a qualified specialist workshop.
	The starter motor was exposed to a thermal load that was too high. ▶ Allow the starter motor to cool down for approximately two minutes. ▶ Try to start the engine again. If the engine still does not start: ▶ Consult a qualified specialist workshop.
The engine is not running smoothly and is misfiring.	There is a malfunction in the engine electronics or in a mechanical component of the engine management system. ▶ Only depress the accelerator pedal slightly. Otherwise, non-combusted fuel may get into the catalytic converter and damage it. ▶ Have the cause rectified immediately at a qualified specialist workshop.

Problem	Possible causes/consequences and ▶ Solutions
The coolant temperature display is showing more than 248 °F (120 °C). A display message may also appear in the multifunction display and a warning tone may sound.	The coolant level is too low. The coolant is too hot and the engine is no longer being cooled sufficiently. ▶ Stop as soon as possible and allow the engine and the coolant to cool down. ▶ Check the coolant level (▷ page 291). Observe the warning notes as you do so and add coolant if necessary.
	If the coolant level is correct, the radiator fan may be faulty. The coolant is too hot and the engine is no longer being cooled sufficiently. ▶ At coolant temperatures below 248 °F (120 °C), drive to the next qualified specialist workshop. ▶ Avoid heavy loads on the engine as you do so, e.g. driving in mountainous terrain and stop-and-go traffic.

Automatic transmission

Important safety notes

⚠ **WARNING**

If the engine speed is above the idling speed and you engage transmission position **D** or **R**, the vehicle could pull away suddenly. There is a risk of an accident.

When engaging transmission position **D** or **R**, always firmly depress the brake pedal and do not simultaneously accelerate.

⚠ **WARNING**

The automatic transmission switches to neutral position **N** when you switch off the engine. The vehicle may roll away. There is a risk of an accident.

After switching off the engine, always switch to parking position **P**. Prevent the parked vehicle from rolling away by applying the parking brake.

ⓘ Bear in mind that the power transmission between the engine and the transmission is interrupted when the engine is switched off. Therefore, to prevent the vehicle from rolling away, shift the automatic transmission to position **P** and apply the parking brake when the engine is switched off and the vehicle is stationary.

Selector lever

Overview of transmission positions

! If the engine speed is too high or if the vehicle is rolling, do not shift the transmission directly from **D** to **R**, from **R** to **D** or directly to **P**.

Do not open the driver's door while the vehicle is in motion. At low speeds in transmission position **D** or **R**, park position **P** is otherwise engaged automatically.

The transmission could be damaged.

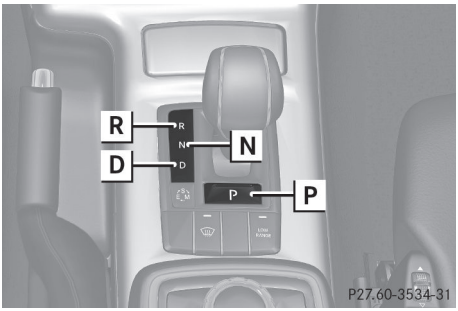

Selector lever

P Park position

R Reverse gear

N Neutral

D Drive

When you select a transmission position, the selector lever subsequently returns to its original position.

The current transmission position **P**, **R**, **N** or **D** appears in the transmission position display in the multifunction display.

Transmission position and drive program display

! If the transmission position display in the multifunction display is not working, you should pull away carefully to check whether the desired transmission position is engaged. Select transmission position **D**. Do not restrict the shift range.

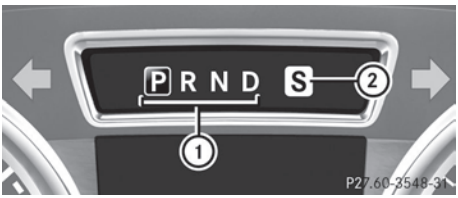

① Transmission position

② Drive program

Current transmission position ① and current drive program ② appear in the multifunction display.

The current position of the selector lever is shown by the indicators next to the selector lever.

The indicators light up when the SmartKey is inserted into the ignition lock. The indicators go out when the SmartKey is removed from the ignition lock.

When the selector lever is in position **D**, you can influence the gearshifts made by the automatic transmission by:

- restricting the shift range
- changing gear yourself

Engaging park position P

▶ When the vehicle is stationary, depress the brake pedal and keep it depressed.

▶ Press the **P** button in the center console.

ℹ If you depress the brake pedal and push the selector lever forwards or back to the first point of resistance, park position **P** is disengaged. The transmission shifts to neutral **N**.

Park position **P** is automatically engaged:

- if you remove the SmartKey from the ignition lock
- if you open the driver's door while traveling at low speed in transmission position **D** or **R**
- if DISTRONIC PLUS (▷ page 177) brakes your vehicle until it is stationary and at least one of the following conditions is fulfilled:
  - the engine is switched off.
  - the driver's door is open and the seat belt is not fastened.
  - there is a system malfunction.
  - the power supply is insufficient.

Engaging reverse gear R

! Only shift the automatic transmission to **R** when the vehicle is stationary.

▶ When the vehicle is stationary, depress the brake pedal and keep it depressed.

▶ Push the selector lever forwards past the first point of resistance.
Transmission position **R** is engaged.

ⓘ **For AMG vehicles:** when reverse gear is engaged and the ECO start/stop function is switched on, the engine starts up automatically (▷ page 141).

Shifting to neutral N

⚠ **WARNING**

When leaving the SmartKey in the starter switch, do not leave children unattended in the vehicle. It is possible for children to switch on the ignition which could result in unsupervised use of vehicle equipment. Unsupervised use of vehicle equipment could result in an accident and/or serious personal injury.

If the vehicle is stationary:

▶ Depress the brake pedal.

▶ Depending on the current transmission position, press the selector lever forwards or backwards to the first point of resistance.
The automatic transmission shifts to **N**.

If the engine has been switched off, the automatic transmission automatically shifts to **N**.

ⓘ **For AMG vehicles:** the ECO start/stop function switches the engine off automatically if the vehicle is braked to a standstill when in neutral **N** and the brake is still depressed (▷ page 141).

Remaining in neutral N

⚠ **WARNING**

If children are left unsupervised in the vehicle, they could:

- open the doors, thus endangering other people or road users.
- get out and disrupt traffic.
- operate the vehicle's equipment.

Additionally, children could set the vehicle in motion if, for example, they:

- release the parking brake.
- shift the automatic transmission out of parking position P.
- starting the engine.

There is a risk of an accident and injury.

When leaving the vehicle, always take the SmartKey with you and lock the vehicle. Never leave children or animals unattended in the vehicle. Always keep the SmartKey out of reach of children.

▶ Make sure that the ignition is switched on.

▶ When the vehicle is stationary, depress the brake pedal and keep it depressed.

▶ Shift to neutral **N**.

▶ Release the brake pedal.

▶ If the parking brake is applied, release it.

▶ Switch off the ignition and leave the SmartKey in the ignition lock.

Shifting to transmission position D

▶ When the vehicle is stationary, depress the brake pedal and keep it depressed.

▶ Push the selector lever back past the first point of resistance.
Transmission position **D** is engaged.

ⓘ **For AMG vehicles:** the ECO start/stop function switches the engine off automatically if the vehicle is braked to a standstill when in transmission position **D** and the brake is still depressed (▷ page 141).

Transmission positions

P	**Park position** Do not shift the transmission into position **P** (▷ page 145) unless the vehicle is stationary. The parking lock should not be used as a brake when parking. In addition to engaging the parking lock, you must always apply the parking brake to secure the vehicle. ℹ The SmartKey can only be removed if the transmission is in position **P**. When there is no SmartKey in the ignition lock, the selector lever is locked in position **P**. Have the vehicle electronics checked immediately at a qualified specialist workshop.
R	**Reverse gear** Only shift the transmission to **R** when the vehicle is stationary.
N	**Neutral** No power is transmitted from the engine to the drive wheels. Releasing the brakes will allow you to move the vehicle freely, e.g. to push it or tow it. Do not shift the transmission to **N** while driving. Otherwise, the automatic transmission could be damaged. If ESP® is deactivated or faulty: only shift the transmission to position **N** if the vehicle is in danger of skidding, e.g. on icy roads. If you want to engage the transfer case, shift briefly into **N** (▷ page 199). ! Rolling in neutral **N** can damage the drive train.
D	**Drive** The automatic transmission changes gear automatically. All forward gears are available.

Changing gear

The automatic transmission shifts to the individual gears automatically when it is in transmission position **D**. This automatic gearshifting behavior is determined by:

- a shift range restriction, if selected
- the position of the transfer case (**HIGH RANGE** or **LOW RANGE**)
- the position of the accelerator pedal
- the road speed

Driving tips

Accelerator pedal position

Your style of driving influences how the automatic transmission shifts gear:

- little throttle: early upshifts
- more throttle: late upshifts

Kickdown

Use kickdown for maximum acceleration.

▶ Depress the accelerator pedal beyond the pressure point.
The transmission shifts to a lower gear depending on the engine speed.

▶ Ease off the accelerator pedal once the desired speed is reached.
The automatic transmission shifts back up.

Rocking the vehicle free

Rocking the vehicle free by shifting back and forth between transmission positions **D** and **R** can help to free a vehicle that has become stuck in mud or snow. The vehicle's engine management restricts repeated shifting between transmission positions **D** and **R** up to a maximum speed of up to 5 mph (9 km/h). To shift back and forth between transmission positions **D** and **R**, move the selector lever forwards and backwards past the point of resistance.

Towing a trailer

▶ Drive in the middle of the engine speed range on uphill gradients.

▶ Limit shift range to **3** or **2** depending on the uphill or downhill gradient (▷ page 150), even if cruise control or SPEEDTRONIC is activated.

▶ Shift the transfer case into low-range driving position **LOW RANGE** on extreme uphill gradients or steep downhill gradients (▷ page 199).

Program selector button

General notes

The program selector button allows you to choose between drive programs with different driving characteristics.

ℹ In AMG vehicles, drive program **E** is called drive program **C**.

Drive programs

E Economy **C** Controlled Efficiency	Comfortable, economical driving
S Sport	Sporty driving style
M Manual	Manual gear shifting

ℹ When the engine is started, the automatic transmission always switches to automatic drive program **E** (drive program **C** in AMG vehicles).

ℹ For further information on the automatic drive program, see (▷ page 150).

ℹ Only change from automatic drive program **E** or **S** to manual drive program **M** when the vehicle is stationary.

Selecting the drive program

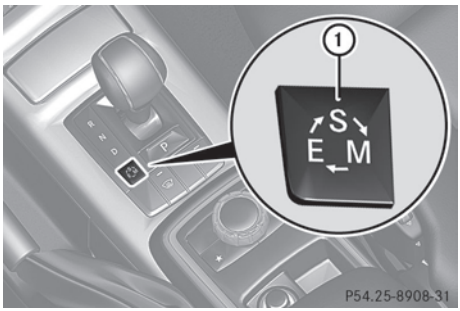

Example: program selector button

▶ Press program selector button ① repeatedly until the letter for the desired

gearshift program appears in the multifunction display.

ℹ Only change from automatic drive program **E** or **S** to manual drive program **M** when the vehicle is stationary.

Steering wheel paddle shifters

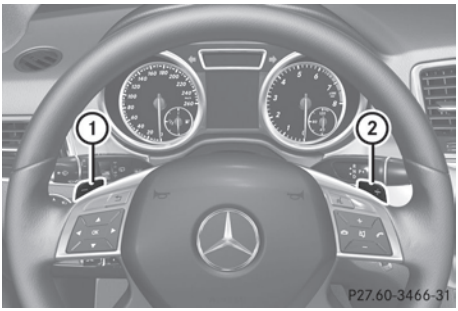

In the automatic drive program, you can restrict or derestrict the shift range by using steering wheel paddle shifters ① and ② (▷ page 150).

In the manual drive program you can change gears manually using steering wheel paddle shifters ① and ②(▷ page 151).

ℹ You can only change gear with the steering wheel paddle shifters when the transmission is in position **D**.

Automatic drive program

Drive program **E** (drive program **C** on AMG vehicles) is characterized by the following:

- comfort-oriented engine and transmission settings
- optimal fuel consumption resulting from the automatic transmission shifting up sooner
- the vehicle pulling away more gently in forward and reverse gears, unless the accelerator pedal is depressed fully
- increased sensitivity. This improves driving stability on slippery road surfaces, for example
- the automatic transmission shifting up sooner. This results in the vehicle being driven at lower engine speeds and the wheels being less likely to spin

Drive program **S** is characterized by the following:

- sporty engine and transmission settings
- the vehicle pulling away in first gear
- the automatic transmission shifting up later
- the fuel consumption possibly being higher as a result of the later automatic transmission shift points

Shift ranges

Introduction

When the automatic transmission is in position **D**, it is possible to restrict or derestrict the shift range.

The shift range selected is shown in the multifunction display. The automatic transmission shifts only as far as the selected gear.

Driving situations

3	You can use the engine's braking effect.
2	The braking effect of the engine can be utilized on downhill gradients or when driving: • on steep mountain roads • in mountainous terrain • in arduous conditions
1	The braking effect of the engine can be utilized on extremely steep downhill gradients and long downhill stretches.

Restricting the shift range

▶ Pull the left-hand steering wheel paddle shifter (▷ page 150).
The automatic transmission shifts down one gear and restricts the shift range to the relevant gear.

ℹ If the engine exceeds the maximum engine speed when shifting down, the automatic transmission protects against engine damage by not shifting down.

ℹ If the maximum engine speed for the shift range is reached and you continue to accelerate, the automatic transmission shifts up in order to prevent the engine from overrevving, even if the shift range is restricted.

Derestricting the shift range

▶ Pull the right-hand steering wheel paddle shifter (▷ page 150).
The automatic transmission shifts up one gear and restricts the shift range to the relevant gear.

Clearing the shift range restriction

▶ Pull and hold the right-hand steering wheel paddle shifter (▷ page 150) until **D** is shown again in the multifunction display.
The automatic transmission shifts from the current shift range directly to **D**.

Selecting the ideal shift range

▶ Pull the left-hand steering wheel paddle shifter (▷ page 150) and hold it in position.
The automatic transmission shifts to the gear which allows optimum acceleration and deceleration. To do this, the automatic transmission shifts down one or more gears.

ℹ The automatic transmission cannot shift down beyond second gear. To shift to first gear, you have to pull the left steering wheel paddle shifter.

Manual drive program

Introduction

In drive program **M**, you can change gear manually using the steering wheel paddle shifters. For this, the transmission must be in position **D**. The gear currently selected and engaged is shown in the multifunction display.

Manual drive program **M** differs from drive programs **E** and **S** with regard to spontaneity, responsiveness and smoothness of gear changes.

Switching on the manual drive program

▶ Press the program selector button (▷ page 149) repeatedly until **M** appears in the multifunction display.

Upshifting (except AMG vehicles)

▶ Pull the right-hand paddle (▷ page 150).
The automatic transmission shifts up to the next gear.

Shifting up (AMG vehicles)

! In manual drive program **M**, the automatic transmission does not shift up automatically even when the engine limiting speed for the current gear is reached. When the engine limiting speed is reached, the fuel supply is cut to prevent the engine from overrevving. Always make sure that the engine speed does not reach the red area of the tachometer. There is otherwise a risk of engine damage.

▶ Pull the right-hand paddle (▷ page 150).
The automatic transmission shifts up to the next gear.

Before the engine speed reaches the red area, an upshift indicator will be shown in the multifunction display.

▶ If the color in the speedometer multifunction display changes to red and

the UP display message is shown, shift up a gear.

Downshifting

▶ Pull the left-hand paddle (▷ page 150). The automatic transmission shifts down to the next gear.

ℹ If you slow down or stop without shifting down, the automatic transmission automatically shifts down.

Selecting the optimal gear for maximum acceleration

▶ Pull the left-hand steering wheel paddle shifter until the transmission selects the optimum gear for the current speed.

Kickdown

You can also use kickdown for maximum acceleration in manual drive program **M**.

▶ Depress the accelerator pedal beyond the pressure point.
The transmission shifts to a lower gear depending on the engine speed.

▶ Shift back up once the desired speed is reached.

ℹ **Vehicles with an AMG engine:** it is not possible to use kickdown in manual drive program **M**.

ℹ **Vehicles without an AMG engine:** if you apply full throttle, the automatic transmission shifts up to the next gear when the maximum engine speed is reached. This prevents the engine from overrevving.

Switching off the manual drive program

▶ Press the program selector button (▷ page 149) repeatedly until **E** (**C** in AMG vehicles) or **S** appears in the multifunction display.

Problems with the automatic transmission

Problem	Possible causes/consequences and ▶ Solutions
The acceleration ability is deteriorating. The transmission no longer changes gear.	The transmission is in emergency mode. It is only possible to shift into **second** gear and reverse gear. ▶ Stop the vehicle. ▶ Shift the transmission to position **P**. ▶ Turn the SmartKey to position **0** in the ignition lock. ▶ Wait at least ten seconds before restarting the engine. ▶ Shift the transmission to position **D** or **R**. If **D** is selected, the transmission shifts into **second** gear; if **R** is selected, the transmission shifts into reverse gear. ▶ Have the transmission checked at a qualified specialist workshop immediately.
You hear a warning tone.	You have: • switched off the engine • opened the driver's door • not moved the selector lever to position **P** ▶ Move the selector lever to position **P**.

Refueling

Important safety notes

⚠ **WARNING**

Gasoline is highly flammable and poisonous. It burns violently and can cause serious personal injury.

Never allow sparks, flames or smoking materials near gasoline.

Turn off the engine before refueling.

Whenever you are around gasoline, avoid inhaling fumes and any skin or clothing contact.

Direct skin contact with fuels and the inhalation of fuel vapors are damaging to your health.

! Do not use diesel to refuel vehicles with a gasoline engine. Even small amounts of the wrong fuel result in damage to the fuel system and engine.

! Do not switch on the ignition if you accidentally refuel with the wrong fuel. Otherwise, the fuel will enter the fuel lines. Notify a qualified specialist workshop and have the fuel tank and fuel lines drained completely.

! Overfilling the fuel tank could damage the fuel system.

! Take care not to spill any fuel on painted surfaces. You could otherwise damage the paintwork.

! Use a filter when refueling from a fuel can. Otherwise, the fuel lines and/or injection system could be blocked by particles from the fuel can.

If you overfill the fuel tank, pressure may build up in the fuel tank. This could cause fuel to spray out when the fuel pump nozzle is removed. There is a risk of injury. The fuel tank is full when the fuel pump nozzle first switches off. End the refueling process.

For further information on fuel and fuel quality (▷ page 350).

Refueling

Fuel filler flap

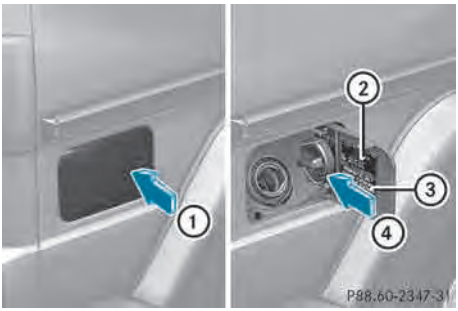

Example: G 550 fuel filler cap

① To open the fuel filler flap

② Tire pressure table

③ Fuel type

④ To insert the fuel filler cap

When you open or close the vehicle with the SmartKey, the fuel filler flap is automatically unlocked or locked.

The position of the fuel filler cap is displayed [⛽] in the instrument cluster. The arrow next to the filling pump indicates the side of the vehicle. The fuel filler flap is located to the rear on the right.

Opening

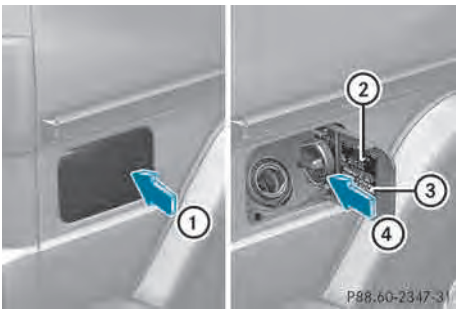

① To open the fuel filler flap

② Tire pressure table

③ Fuel type

④ To insert the fuel filler cap

▶ Switch off the engine.

ℹ When the engine is running and the fuel filler flap is open, the yellow reserve fuel warning lamp and the [check engine] (USA only) or [⚙] (Canada only) Check Engine warning lamp may light up.

Further information about warning and indicator lamps in the instrument cluster can be found in the Digital Operator's Manual.

▶ Remove the SmartKey from the ignition lock.

▶ Press the fuel filler flap in the direction of arrow ①.

The fuel filler flap opens slightly.

▶ Open the fuel filler flap.

▶ Turn the fuel filler cap counterclockwise and remove it.

▶ Insert the fuel filler cap into the holder bracket on the inside of filler flap ④.

▶ Completely insert the filler neck of the fuel pump nozzle into the tank and refuel.

ℹ Do not add any more fuel after the pump stops filling for the first time. Otherwise, fuel may leak out.

Closing

▶ Replace the fuel filler cap and turn it clockwise. The fuel filler cap audibly engages.

▶ Close the fuel filler flap.

ℹ Close the fuel filler flap before locking the vehicle. A locking pin otherwise prevents the fuel filler flap from closing after the vehicle has been locked.

Fuel filler flap emergency release

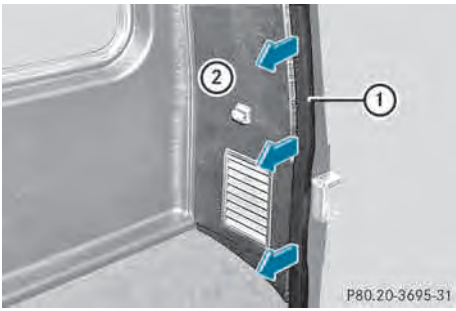

The emergency release is located in the cargo compartment, on the right-hand side when viewed in the direction of travel, behind the rear panel trim.

ℹ The vehicle body in the emergency release area has sharp edges. There is a risk of injury. Avoid contact with the edges on the inside of the vehicle body.

▶ Open the rear door.

▶ Remove edge protection ①.

▶ Remove rear panel trim ②.

▶ Pull emergency release ③ in the direction of the arrow.
The fuel filler flap is unlocked.

▶ Open the fuel filler flap.

Problems with the fuel and fuel tank

Problem	Possible causes/consequences and ▶ Solutions
Fuel is leaking from the vehicle.	⚠ **Risk of explosion or fire** The fuel line or the fuel tank is defective. ▶ Turn the SmartKey to position **0**(▷ page 139) in the ignition lock immediately and remove it. ▶ Do not restart the engine under any circumstances. ▶ Consult a qualified specialist workshop.
The fuel filler flap cannot be opened.	The fuel filler flap is not unlocked. or The SmartKey batteries are discharged. ▶ Unlock the vehicle (▷ page 68). or ▶ Unlock the vehicle using the mechanical key (▷ page 70). ▶ Open the rear door. ▶ Manually unlock the fuel filler flap using the emergency release (▷ page 155).
	The fuel filler flap is unlocked, but the opening mechanism is jammed. ▶ Manually unlock the fuel filler flap using the emergency release (▷ page 155). ▶ Consult a qualified specialist workshop.

Parking

Important safety notes

⚠ **WARNING**

If you leave children unsupervised in the vehicle, they could set it in motion by, for example:

- releasing the parking brake
- shifting the automatic transmission out of the parking position **P**
- starting the engine.

They could also operate the vehicle's equipment. There is a risk of an accident and injury.

When leaving the vehicle, always take the SmartKey with you and lock the vehicle. Never leave children unsupervised in the vehicle.

⚠ **WARNING**

If flammable materials such as leaves, grass or twigs are exposed to prolonged contact to parts of the exhaust system that heat up, they could ignite. There is a risk of fire.

Park the vehicle so that no flammable materials come into contact with parts of the vehicle which are hot. Take particular care not to park on dry grassland or harvested grain fields.

⚠ **WARNING**

If you switch off the ignition while driving, safety-relevant functions are only available with limitations, or not at all. This could affect, for example, the power steering and the brake boosting effect. You will require considerably more effort to steer and brake. There is a risk of an accident.

Do not switch off the ignition while driving.

Switching off the engine

Important safety notes

⚠ **WARNING**

If you switch off the ignition while driving, safety-relevant functions are only available with limitations, or not at all. This could affect, for example, the power steering and the brake boosting effect. You will require considerably more effort to steer and brake. There is a risk of an accident.

Do not switch off the ignition while driving.

⚠ **WARNING**

The automatic transmission switches to neutral position **N** when you switch off the engine. The vehicle may roll away. There is a risk of an accident.

After switching off the engine, always switch to parking position **P**. Prevent the parked vehicle from rolling away by applying the parking brake.

Vehicles with automatic transmission

▶ Shift the transmission to position **P**.

▶ Turn the SmartKey to position **0** in the ignition lock (▷ page 139) and remove it. The immobilizer is activated.

▶ Apply the parking brake firmly.

▶ Turn the steering wheel until the steering wheel lock engages.

ℹ If you turn off the engine with the SmartKey and then remove it from the ignition lock or open a front door, the automatic transmission shifts to **P** automatically.

ℹ The SmartKey can only be removed if the automatic transmission is in position **P**.

Parking brake

⚠ **WARNING**

If you must brake the vehicle with the parking brake, the braking distance is considerably longer and the wheels could lock. There is an increased danger of skidding and accidents.

Only use the parking brake to brake the vehicle when the service brake is faulty. Do not apply the parking brake too firmly. If the wheels lock, release the parking brake until the wheels begin turning again.

⚠ **WARNING**

If you leave children unsupervised in the vehicle, they could set it in motion by, for example:

- releasing the parking brake
- shifting the automatic transmission out of the parking position **P**
- starting the engine.

They could also operate the vehicle's equipment. There is a risk of an accident and injury.

When leaving the vehicle, always take the SmartKey with you and lock the vehicle. Never leave children unsupervised in the vehicle.

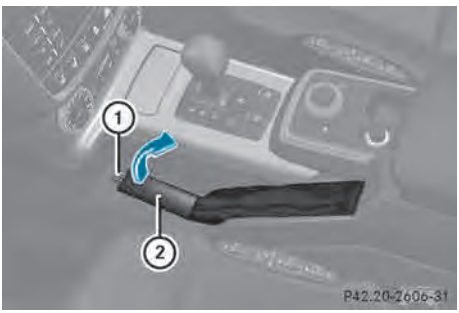

ℹ When you apply parking brake ② to brake the vehicle, the brake lamps do not light up.

▶ **To apply:** pull parking brake ② up firmly. Parking brake ② is applied.

When the ignition is switched on or the engine is running, the PARK (USA only) or (Ⓟ) (Canada only) indicator lamp is lit in the instrument cluster.

▶ **To release:** depress the brake pedal and keep it depressed.
The selector lever lock is released.

▶ Pull parking brake ② up firmly.

▶ Press release button ① on parking brake ② and move parking brake ② down to the stop.
When the ignition is switched on or the engine is running, the PARK (USA only) or (Ⓟ) (Canada only) indicator lamp goes out in the instrument cluster.

ℹ If you pull away with parking brake ② applied, a warning tone sounds.

Parking the vehicle for a long period

If you leave the vehicle parked for longer than four weeks, the battery may be damaged by exhaustive discharge.

▶ Connecting a trickle charger.

ℹ You can obtain information about trickle chargers from a qualified specialist workshop.

If you leave the vehicle parked for longer than six weeks, the vehicle may suffer damage as a result of lack of use.

▶ Visit a qualified specialist workshop and seek advice.

Driving tips

General driving tips

Important safety notes

⚠ **WARNING**

Always remember that you must concentrate primarily on driving the vehicle. The driver's concentration must always be directed primarily at road traffic. For your own safety and that of others, we recommend that you stop the vehicle at a safe place and in accordance with the traffic conditions before making or accepting a phone call.

Comply with all legal requirements if you use the telephone while driving. Use the hands-free system and only use the telephone when road, weather and traffic conditions permit. In some jurisdictions, it is forbidden for drivers to use mobile phones while driving.

Only operate COMAND (Cockpit Management and Data System) in compliance with all legal requirements and when the road, weather and traffic conditions permit. You may otherwise not be able to observe the traffic conditions, endangering yourself and others.

Remember that your vehicle covers a distance of 44 ft (approximately 14 m) a second when it is traveling at only 30 mph (approximately 50 km/h).

⚠ **WARNING**

If you switch off the ignition while driving, safety-relevant functions are only available with limitations, or not at all. This could affect, for example, the power steering and the brake boosting effect. You will require considerably more effort to steer and brake. There is a risk of an accident.

Do not switch off the ignition while driving.

Drive sensibly – save fuel

Observe the following tips to save fuel:

- ▶ The tires should always be inflated to the recommended tire pressure.
- ▶ Remove unnecessary loads.
- ▶ Remove roof carriers when they are not needed.
- ▶ Warm up the engine at low engine speeds.
- ▶ Avoid frequent acceleration or braking.
- ▶ Have all maintenance work performed at the service intervals specified in the Service Booklet or indicated by the service interval indicator.

Fuel consumption also increases when driving in cold weather, in stop-and-go traffic and in mountainous terrain.

Drinking and driving

⚠ **WARNING**

Drinking and driving and/or taking drugs and driving are very dangerous combinations. Even a small amount of alcohol or drugs can affect your reflexes, perceptions and judgment.

The possibility of a serious or even fatal accident are greatly increased when you drink or take drugs and drive.

Do not drink or take drugs and drive or allow anyone to drive who has been drinking or taking drugs.

Pedals

⚠ **WARNING**

Objects in the driver's footwell can restrict the pedal travel or obstruct a depressed pedal. The operating and road safety of the vehicle is jeopardized. There is a risk of an accident.

Make sure that all objects in the vehicle are stowed correctly, and that they cannot enter the driver's footwell. Install the floormats securely and as specified in order to ensure sufficient clearance for the pedals. Do not use loose floormats.

Exhaust check

⚠ **WARNING**

Inhalation of exhaust gas is hazardous to your health. All exhaust gas contains carbon monoxide (CO), and inhaling it can cause unconsciousness and possible death.

Do not run the engine in confined areas (such as a garage) which are not properly ventilated. If you think that exhaust gas fumes are entering the vehicle while driving, have the cause determined and corrected immediately. If you must drive under these conditions, drive only with at least one window fully open at all times.

Certain engine systems are designed to keep the level of poisonous components in exhaust fumes within legal limits.

These systems only work at peak efficiency if they are serviced exactly in accordance with the manufacturer's specifications. For this reason, all work on the engine should only be carried out by qualified and authorized Mercedes-Benz technicians.

The engine settings must not be changed under any circumstances. Furthermore, all specific service work must be carried out at regular intervals and in accordance with the Mercedes-Benz service requirements. Details can be found in the Maintenance Booklet.

Braking

Important safety notes

⚠ **WARNING**

If you activate the LOW off-road gear while driving on a slippery road surface, the wheels may lose traction:

- if you remove your foot from the accelerator pedal when driving
- if off road ABS intervenes when braking

If the wheels lose traction. the vehicle can no longer be steered. There is an increased danger of skidding and accidents.

▷▷

Never activate the LOW off-road gear while driving on a slippery road surface.

Downhill gradients

! On long and steep gradients, you must reduce the load on the brakes by shifting early to a lower gear. This allows you to take advantage of the engine braking effect and helps avoid overheating and excessive wear of the brakes.

When you take advantage of the engine braking effect, a drive wheel may not turn for some time, e.g. on a slippery road surface. This could cause damage to the drive train. This type of damage is not covered by the Mercedes-Benz warranty.

Heavy and light loads

⚠ **WARNING**

If you rest your foot on the brake pedal while driving, the braking system can overheat. This increases the stopping distance and can even cause the braking system to fail. There is a risk of an accident.

Never use the brake pedal as a footrest. Never depress the brake pedal and the accelerator pedal at the same time.

! Depressing the brake pedal constantly results in excessive and premature wear to the brake pads.

If the brakes have been subjected to a heavy load, do not stop the vehicle immediately, but drive on for a short while. This allows the airflow to cool the brakes more quickly.

Wet roads

If driving in heavy rain for a prolonged period of time without braking, there may be a delayed reaction from the brakes when braking for the first time. This may also occur after the vehicle has been washed.

You have to depress the brake pedal more firmly. Maintain a greater distance from the vehicle in front.

After driving on a wet road or having the vehicle washed, brake firmly while paying attention to the traffic conditions. This will warm up the brake discs, thereby drying them more quickly and protecting them against corrosion.

Limited braking performance on salt-treated roads

If you drive on salted roads, a layer of salt residue may form on the brake discs and brake pads. This can result in a significantly longer braking distance.

- Brake occasionally to remove any possible salt residue. Make sure that you do not endanger other road users when doing so.
- Carefully depress the brake pedal and the beginning and end of a journey.
- Maintain a greater distance to the vehicle ahead.

Servicing the brakes

! If the brake warning lamp lights up in the instrument cluster and you hear a warning tone even though the parking brake has been released, the brake fluid level may be too low. Observe additional warning messages in the multifunction display.

The brake fluid level may be too low due to brake pad wear or leaking brake lines.

Have the brake system checked immediately. This work should be carried out at a qualified specialist workshop.

! A function or performance test should only be carried out on a 2-axle dynamometer. If you are planning to have the vehicle tested on such a dynamometer, contact an authorized Mercedes-Benz Center to obtain further information first. Otherwise, you could damage the drive train or the brake system.

! As the ESP® system operates automatically, the engine and the ignition must be switched off (the SmartKey must be in position **0** or **1** in the ignition lock) if the parking brake is tested on a brake dynamometer (for a maximum of ten seconds).

Braking applications triggered automatically by ESP® may otherwise seriously damage the brake system.

Mercedes-Benz recommends that you only have brake pads/linings installed on your vehicle which have been approved for Mercedes-Benz vehicles or which correspond to an equivalent quality standard. Brake pads/linings which have not been approved for Mercedes-Benz vehicles or which are not of an equivalent quality could affect your vehicle's operating safety.

Mercedes-Benz recommends that you only use brake fluid that has been specially approved for your vehicle by Mercedes-Benz, or which corresponds to an equivalent quality standard. Brake fluid which has not been approved for Mercedes-Benz vehicles or which is not of an equivalent quality could affect your vehicle's operating safety.

All checks and maintenance work on the brake system must be carried out at a qualified specialist workshop.

Have brake pads installed and brake fluid replaced at a qualified specialist workshop.

If your brake system is subject only to moderate loads, you should test the functionality of your brakes at regular intervals by pressing firmly on the brake pedal at high speeds. This improves the grip of the brake pads.

You can find a description of Brake Assist (BAS) on (▷ page 61).

High-performance brake system for AMG vehicles

The high-performance brake system is only installed on the G 63 AMG and the G 65 AMG.

The high-performance brake system is designed for heavy loads. This may lead to noise when braking. This will depend on:

- Speed
- Braking force
- Environmental conditions, such as temperature and humidity

The wear of individual components of the brake system, such as the brake pads/linings or brake discs, depends on the individual driving style and operating conditions.

For this reason, it is impossible to state a mileage that will be valid under all circumstances. An aggressive driving style will lead to high wear. You can obtain further information about this from your authorized Mercedes-Benz Center.

New and replaced brake pads and discs only reach their optimum braking effect after several hundred kilometers of driving. Compensate for this by applying greater force to the brake pedal. Keep this in mind, and adapt your driving and braking accordingly during this break-in period.

Excessive heavy braking results in correspondingly high brake wear. Observe the brake system warning lamp in the instrument cluster and note any brake status messages in the multifunction display. For high-performance driving in particular, it is important to maintain and have the brake system checked regularly.

Parking brake

⚠ **WARNING**

If you must brake the vehicle with the parking brake, the braking distance is considerably longer and the wheels could lock. There is an increased danger of skidding and accidents.

Only use the parking brake to brake the vehicle when the service brake is faulty. Do not apply the parking brake too firmly. If the wheels lock, release the parking brake until the wheels begin turning again.

If you brake the vehicle with the parking brake, the brake lamps will not light up.

If you drive on wet roads or dirt-covered surfaces, road salt and/or dirt could get into the parking brake.

In order to prevent corrosion and a reduction in the braking power of the parking brake, observe the following:

- pull the parking brake upwards with the release button depressed from time to time before beginning the journey (▷ page 157).
- drive for approximately 110 yds (100 m) at a maximum speed of 12 mph (20 km/h).

Driving on wet roads

Hydroplaning

If water has accumulated to a certain depth on the road surface, there is a danger of hydroplaning occurring, even if:

- you drive at low speeds.
- the tires have adequate tread depth.

For this reason, in the event of heavy rain or in conditions in which hydroplaning may occur, you must drive in the following manner:

- lower your speed.
- avoid ruts.
- brake carefully.

Driving on flooded roads

! Do not drive through flooded areas. Check the depth of any water before driving through it. Drive slowly through standing water. Otherwise, water may enter the vehicle interior or the engine compartment. This can damage the electronic components in the engine or the automatic transmission. Water can also be drawn in by the engine's air suction nozzles and this can cause engine damage.

If you have to drive on stretches of road on which water has collected, please bear in mind that:

- the maximum permissible fording depth in still water is 24 in (60 cm)
- you should drive no faster than at walking pace.

Off-road fording

! The water depth may not exceed a maximum of 24 in (60 cm). Note that the possible fording depth is less in flowing water.

! Under no circumstances should you accelerate before entering the water. The bow wave could cause water to enter and damage the engine and other assemblies.

! Do not open any of the vehicle's doors while fording. Otherwise, water could get into the vehicle interior and damage the vehicle's electronics and interior equipment.

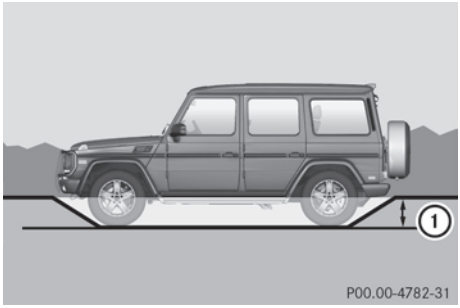

① Fording depth: 24 in (60 cm)

The fording depth must not exceed 24 in (60 cm) when the vehicle is loaded and ready to drive.

ℹ You may only drive through fresh water.

- Observe the safety notes (▷ page 164) and the general notes (▷ page 164) on off-road driving.
- Establish how deep the water is and the characteristics of the body of water before fording.

- Switch off the air-conditioning system.
-
- Shift the transfer case to **LOW RANGE**(▷ page 198).
- Engage the differential locks, if necessary (▷ page 201).
- Restrict the shift range to **1** or **2**(▷ page 150).
- Avoid high engine speeds.
- Enter and exit the water at a flat place and at a steady walking pace.
- Drive slowly and at an even speed through the water.
- Do not stop and do not switch off the engine.
- Water offers a high degree of resistance, and the ground is slippery and in some cases unstable. Therefore, it is difficult and dangerous to pull away in the water.
- Ensure that a bow wave does not form as you drive.
- Clean any mud from the tire tread after fording.
- Apply the brakes to dry them after fording.
- Water offers a high degree of resistance, and the ground is slippery and in some cases unstable. Therefore, it is difficult and dangerous to pull away in the water.
- Ensure that a bow wave does not form as you drive.
- Clean any mud from the tire tread after fording.
- Apply the brakes to dry them after fording.

Winter driving

General notes

⚠ **DANGER**

If the exhaust pipe is blocked or adequate ventilation is not possible, poisonous gases such as carbon monoxide (CO) may enter the vehicle. This is the case, e.g. if the vehicle becomes trapped in snow. There is a risk of fatal injury.

If you leave the engine or the auxiliary heating running, make sure the exhaust pipe and area around the vehicle are clear of snow. To ensure an adequate supply of fresh air, open a window on the side of the vehicle that is not facing into the wind.

⚠ **WARNING**

If snow chains are installed to the front wheels, they may drag against the vehicle body or chassis components. This could cause damage to the vehicle or the tires. There is a risk of an accident.

To avoid hazardous situations:

- never install snow chains to the front wheels
- always install snow chains in pairs to the rear wheels.

Have your vehicle winterproofed at a qualified specialist workshop at the onset of winter.

Observe the notes in the "Winter operation" section (▷ page 320).

Driving with summer tires

Observe the notes in the "Winter operation" section (▷ page 320).

Slippery road surfaces

⚠ **WARNING**

If you shift down on a slippery road surface in an attempt to increase the engine's braking effect, the drive wheels could lose their grip. There is an increased danger of skidding and accidents.

Do not shift down for additional engine braking on a slippery road surface.

⚠ **WARNING**

The outside temperature indicator is not designed to serve as an ice-warning device and is therefore unsuitable for that purpose.

Indicated temperatures just above the freezing point do not guarantee that the road surface is free of ice. The road may still be icy, especially in wooded areas or on bridges.

⚠ **WARNING**

If you activate the LOW off-road gear while driving on a slippery road surface, the wheels may lose traction:

- if you remove your foot from the accelerator pedal when driving
- if off road ABS intervenes when braking

If the wheels lose traction. the vehicle can no longer be steered. There is an increased danger of skidding and accidents.

Never activate the LOW off-road gear while driving on a slippery road surface.

Drive particularly carefully on slippery road surfaces. Avoid sudden acceleration, steering and braking maneuvers. Do not use cruise control.

If the vehicle threatens to skid or cannot be stopped when moving at low speed:

▶ Shift the transmission to position **N**.

▶ Try to bring the vehicle under control using corrective steering.

ℹ For more information on driving with snow chains, see (▷ page 321).

Off-road driving

Important safety notes

⚠ **WARNING**

Do not load items on the basic carrier bars. It may cause instability during some maneuvers which could result in an accident.

Drive slowly in unknown terrain. This will make it easier to recognize unexpected obstacles and avoid damage to the vehicle.

To help avoid the vehicle rolling over, never turn it around on steep inclines. If the vehicle cannot complete the attempted climb, back it down in reverse gear.

Do not drive along the side of a slope. The vehicle might otherwise rollover. If in doing so the vehicle begins to show a tendency to roll, immediately steer into a line of gravity (straight up or downhill).

Never let the vehicle roll backwards in idle. You may lose control of the vehicle if you use only the service brake. For information on driving downhill, see "Driving downhill".

When driving off-road, sand, mud and water, possibly mixed with oil, for example, could get into the brakes. This could result in a reduced braking effect or in total brake failure and also in increased wear and tear. The braking characteristics change depending on the material ingressing the brakes. Clean the brakes after driving off-road. If you detect a reduced braking effect or grinding noises, have the brake system checked in a qualified specialist workshop as soon as possible. Adapt your driving style to the different braking characteristics.

Driving off-road increases the likelihood of damage to the vehicle, which, in turn, can lead to failure of the mechanical assembly or systems. Adapt your driving style to suit the terrain conditions. Drive carefully. Have damage to the vehicle rectified immediately at a qualified specialist workshop.

General notes

Environmental note

Protection of the environment is of primary importance. Treat nature with respect. Observe all prohibiting signs.

Read this section carefully before driving your vehicle off-road. Practice by driving over more gentle off-road terrain first.

Familiarize yourself with the characteristics of your vehicle and the gear shift operation before driving through difficult terrain.

The following driving systems are specially adapted to off-road driving:

- 4ETS (▷ page 62)
- Transfer case (▷ page 198)
- Differential locks (▷ page 201)

Observe the following notes:

- stop your vehicle and, if necessary, shift the transfer case to **LOW RANGE**(▷ page 199) before driving off-road.
- **AMG vehicles:** to shift the transfer case to **LOW RANGE**, deactivate the ECO start/stop function (▷ page 142).
- engage the differential locks, if necessary (▷ page 201)

ℹ ABS, 4ETS, ESP® and BAS are deactivated when the differential locks are activated. This allows the front wheels to lock briefly, so that these can dig into a loose surface. However, please note that locked wheels skid and can no longer steer.

- Check that items of luggage and loads are stowed safely and are well secured (▷ page 267).
- To avoid damaging the vehicle, make sure there is always sufficient ground clearance.
- Always keep the engine running and in gear when driving on a downhill gradient.
- Always keep the engine running and in gear when driving on a slope.
- Drive slowly and evenly, if necessary at a walking pace.
- Ensure that the wheels are in contact with the ground at all times.
- Drive with extreme care on unknown off-road routes where visibility is poor. For safety reasons, get out of the vehicle first and survey the off-road route.
- Check the depth of water before fording rivers and streams.
- When fording, do not stop and do not switch off the engine.
- Look out for obstacles such as rocks, holes, tree stumps and furrows.
- Always keep the doors, rear door, side windows and the sliding sunroof closed while the vehicle is in motion.
- Switch off cruise control.
- Do not stray from marked routes or paths.
- Adapt your speed to the terrain. The rougher, steeper or more ruts on the terrain, the slower your speed should be.
- Drive slowly and at an even speed through the water. Ensure that a bow wave does not form as you drive.
- On sand, drive quickly to overcome the rolling resistance. Otherwise, the vehicle could dig itself into the sand.
- Do not jump with the vehicle as this will interrupt the vehicle's propulsion.
- Avoid high engine speeds. Drive at appropriate engine speeds (maximum 3,000 rpm).
- Do not shift the automatic transmission to transmission position **N**.
- Always check the vehicle for damage after off-road driving.

ℹ Information about retrofitting special all-terrain tires is available from any qualified specialist workshop.

ℹ Do not use the HOLD function when driving off-road, on steep uphill or downhill gradients or on slippery or loose surfaces. The HOLD function cannot hold the vehicle on such surfaces.

Checklist before driving off-road

! If the engine oil warning lamp lights up while the vehicle is in motion, stop the vehicle in a safe place as soon as possible. Check the engine oil level. The engine oil warning lamp warning must not be ignored. Continuing the journey while the symbol is displayed could lead to engine damage.

- ▶ **Engine oil level:** check the engine oil level and add oil if necessary.
  Only then does the engine receive enough oil when the vehicle is standing on a steep incline.
- ▶ **Tire-changing tool kit:** check that the jack is working and make sure you have the lug wrench, a robust tow cable and a folding spade in the vehicle.
- ▶ **Wheels and tires:** check the tire tread depth and tire pressure.
- ▶ Check for damage and remove any foreign objects, e.g. small stones, from the wheels/tires.
- ▶ Replace any missing valve caps.
- ▶ Replace dented or damaged wheels.
- ▶ Carry a sound spare wheel.

Checklist after driving off-road

Driving over rough terrain places greater demands on your vehicle than driving on normal roads. After driving off-road, check the vehicle. This allows you to detect damage promptly and reduce the risk of an accident to yourself and other road users.

- ▶ Shift the transfer case to **HIGH RANGE**(▷ page 199).
- ▶ Disengage the differential locks (▷ page 201).
- ▶ Clean the headlamps and rear lights and check for damage.
- ▶ Clean the front and rear license plates.
- ▶ Clean the wheels and tires with a water jet and remove any foreign objects.
- ▶ Clean the wheels, tires, wheel housings and the vehicle underside with a water jet; check for any foreign objects and damage.
- ▶ Check whether twigs or other parts of plants have become trapped. These increase the risk of fire and can damage fuel pipes, brake hoses or the rubber bellows of the axle joints and propeller shafts.
- ▶ After the trip, examine without fail the entire undercarriage, wheels, tires, brakes, bodywork structure, steering, chassis and exhaust system for damage.
- ▶ After driving for extended periods across sand, mud, gravel, water or in similarly dirty conditions, have the brake discs, wheels, brake pads/linings and axle joints checked and cleaned.
- ▶ If you notice strong vibrations after off-road driving, check for foreign objects in the wheels and drive train and, if necessary, remove them. Foreign objects can disturb the balance and cause vibrations.
- ▶ Test the brakes.

Driving on sand

Observe the following rules when driving on sand:

- Shift the transfer case to **LOW RANGE**(▷ page 199).
- Avoid high engine speeds.
- Limit the shift range of the automatic transmission according to the off-road conditions.
- Drive quickly to overcome the rolling resistance. Otherwise, the vehicle could dig itself into the sand.
- Drive in the tracks of other vehicles if possible. Make sure that the ruts are not too deep, that the sand is firm enough and that your vehicle has sufficient ground clearance.

Tire ruts and gravel roads

! Check that the ruts are not too deep and that your vehicle has sufficient clearance. Otherwise, your vehicle could be damaged or bottom out and get stuck.

Observe the following rules when driving along ruts in off-road terrain or on roads with loose gravel:

- Shift the transfer case to **LOW RANGE**(▷ page 199).
- Avoid high engine speeds.
- Observe the safety notes (▷ page 164) and the general notes (▷ page 164) on off-road driving.
- Restrict the shift range of the automatic transmission to **1**(▷ page 150).
- Drive slowly.
- Where ruts are too deep, drive with the wheels of one side on the center grassy area, if possible.

Driving over obstacles

! Obstacles could damage the floor of the vehicle or components of the chassis. Ask passengers for guidance when driving over large obstacles. The passenger should always keep a safe distance from the vehicle when doing so in order to avoid injury as a result of unexpected vehicle movements. After driving off-road or over obstacles, check the vehicle for possible damage, especially to the underbody and the components of the chassis.

! Drive with particular care when driving over an obstacle while driving up or down a steep slope.

The vehicle could otherwise tilt and slide sideways or tip over.

Observe the following rules when driving over tree stumps, large stones and other obstacles:

- Observe the safety notes (▷ page 164) and the general notes (▷ page 164) on off-road driving.
- Shift the transfer case to **LOW RANGE**(▷ page 199).
- Avoid high engine speeds.
- Restrict the shift range to **1**(▷ page 150).
- Make sure that you have enough ground clearance before driving across an obstacle.
- Drive very slowly.
- Try to drive straight over the center of obstacles: front wheel first, then rear wheel.

Traveling uphill

Approach/departure angle

⚠ WARNING

If you drive on a steep incline at an angle or turn when driving on an incline, the vehicle could slip sideways, tip and rollover. There is a risk of an accident.

Always drive on a steep incline in the line of fall (straight up or down) and do not turn the vehicle.

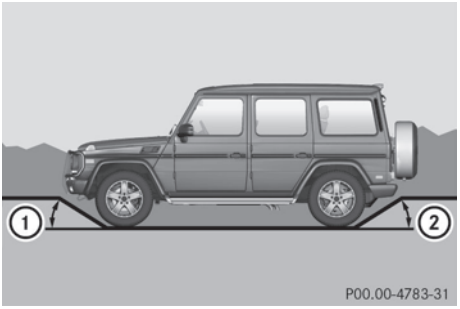

	①	②
G 550	34°	29°
G 63 AMG	Value not available at the time of going to print.	Value not available at the time of going to print.

- Observe the safety notes (▷ page 164) and the general notes (▷ page 164) on off-road driving.
- Do not drive at an angle on slopes, inclines or gradients, but instead follow the direct line of fall. The maximum gradient-climbing capability of your vehicle is 80%, which corresponds to an approach/departure angle of 38°. Note that the vehicle's gradient-climbing capability depends on the off-road conditions.
- Before driving on extreme uphill and downhill gradients, shift the transfer case to **LOW RANGE**(▷ page 199).
- Engage the differential locks, if necessary (▷ page 201).
- Drive slowly.
- Accelerate gently and make sure that the wheels are gripping.
- Avoid high engine speeds, except when driving on sandy and muddy routes with high driving resistance.
- Avoid high engine speeds – drive at an appropriate engine speed (maximum 3,000 rpm).
- When driving down an incline, make use of the engine's braking effect. Observe the engine speed; do not overrev the engine.

ℹ Further information on the maximum engine speed: (▷ page 210).

- Select a shift range appropriate to the gradient.
- Before tackling steep downhill gradients, select shift range **1**(▷ page 150).
- Always check the brakes after driving off-road.

ℹ Hill start assist will aid you when pulling away on a hill.

For more information, see "Hill start assist" (▷ page 141).

Maximum gradient-climbing capability

On good road surfaces the maximum gradient-climbing capability of your vehicle is 80%, which corresponds to an approach/departure angle of 38°. Note that the vehicle's gradient-climbing capability depends on the off-road conditions.

Accelerate carefully and make sure that the wheels do not spin when driving on steep terrain.

ℹ If the load on the front axle is reduced when pulling away on a steep uphill slope, the front wheels have a tendency to spin. 4ETS detects this and brakes the wheels accordingly. The rear wheel torque is increased, making it easier to drive off.

Hilltops

When driving on an uphill gradient, reduce pressure slightly on the accelerator immediately before reaching the top of the hill (do not shift the transmission to position **N**). Use the vehicle's own impetus to drive over the top of the hill.

This style of driving prevents:

- the vehicle from lifting off the ground on the brow of a hill
- loss of traction
- the vehicle from traveling too quickly down the other side

Driving downhill

- Before tackling steep downhill gradients, select shift range **1**(▷ page 150).

  This way you use the engine's braking effect to reduce the speed. If this is not sufficient, brake gently. When doing so, make sure that the vehicle is facing in the direction of the line of fall.
- Observe the notes on driving in mountainous terrain (▷ page 168).
- Drive slowly.
- Do not drive at an angle down steep inclines. Steer into the line of fall and drive with the front wheels aligned straight. Otherwise, the vehicle could slip sideways, tip and roll over.
- Check that the brakes are working normally after a long downhill stretch.

ℹ The special off-road ABS setting (▷ page 61) enables repeated, brief, precise locking of the front wheels, which leads to the wheels digging into the loose ground. Note that when the front wheels are fully braked, they slide easily over the surface of the ground, making it difficult to steer.

Driving systems

Cruise control

Important safety notes

⚠ **WARNING**

The brake pedal moves when cruise control brakes the vehicle. A foot in the area under the brake pedal could become trapped. The movement of the pedal, and therefore the vehicle's ability to brake, may be restricted by objects in the area under the brake. There is a risk of an accident and injury.

Do not place your foot under the brake pedal. Keep the area under the brake pedal free from obstructions.

If you fail to adapt your driving style, cruise control can neither reduce the risk of accident nor override the laws of physics. Cruise control cannot take account of road, weather and traffic conditions. Cruise control is only an aid. You are responsible for the distance to the vehicle in front, for vehicle speed and for braking in good time. Adjust your driving style to the traffic conditions. Only engage cruise control when the current road, weather and traffic conditions permit it to be done safely. Drive carefully and maintain a suitable distance to the vehicle in front.

Do not use cruise control:

- in traffic conditions that do not allow you to drive at a constant speed, e.g. heavy traffic, on winding roads or off-road
- on slippery road surfaces. Braking or accelerating could cause the drive wheels to lose traction and the vehicle could then skid
- when there is poor visibility, e.g. due to fog, heavy rain or snow

General notes

Cruise control maintains a constant road speed for you. On long and steep downhill gradients, especially if the vehicle is laden, you must select shift range **1**, **2** or **3** in good time. By doing so, you will make use of the braking effect of the engine, which relieves the load on the brake system and prevents the brakes from overheating and wearing too quickly.

Use cruise control only if road and traffic conditions make it appropriate to maintain a steady speed for a prolonged period. You can store any road speed above 20 mph (30 km/h).

ℹ Cruise control should not be activated during off-road driving.

Cruise control lever

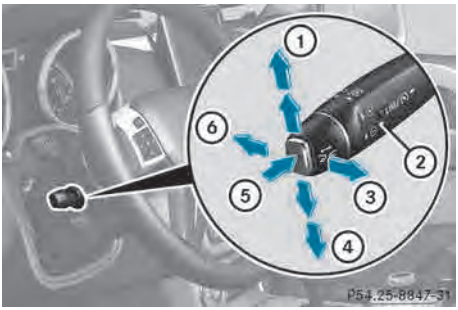

① To activate or increase speed
② LIM indicator lamp
③ To activate at the current speed/last stored speed
④ To activate or reduce speed
⑤ To switch between cruise control and variable SPEEDTRONIC
⑥ To deactivate cruise control

You can operate cruise control and variable SPEEDTRONIC with the cruise control lever.

When you activate cruise control, the stored speed is shown in the multifunction display for five seconds.

The full range of cruise control functions will become available again once you confirm the DEF display message:

▶ Briefly press the [ ], [ ], [ ] or [ ] button on the multifunction steering wheel.

or

▶ Briefly press the reset button on the instrument cluster.

The LIM indicator lamp on the cruise control lever indicates which system you have selected:

- **LIM indicator lamp off:** cruise control is selected.
- **LIM indicator lamp on:** variable SPEEDTRONIC is selected.

Activation conditions

To activate cruise control, all of the following activation conditions must be fulfilled:

- the parking brake must be released.
- you are driving faster than 20 mph (30 km/h).
- ESP® must be active, but not intervening.
- the transmission must be in position **D**.

Selecting cruise control

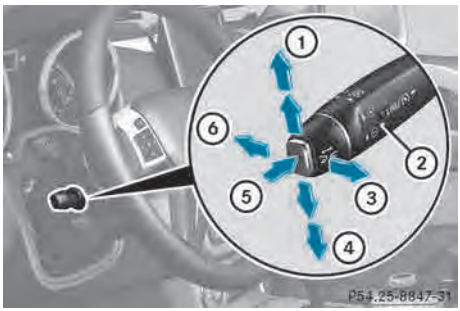

① To activate or increase speed
② LIM indicator lamp
③ To activate at the current speed/last stored speed
④ To activate or reduce speed
⑤ To switch between cruise control and variable SPEEDTRONIC
⑥ To deactivate cruise control

▶ Check whether LIM indicator lamp ② is off.

If it is off, cruise control is already selected.

If it is not, press the cruise control lever in the direction of arrow ⑤.

LIM indicator lamp ② in the cruise control lever goes out. Cruise control is selected.

Storing and maintaining the current speed

Storing and maintaining

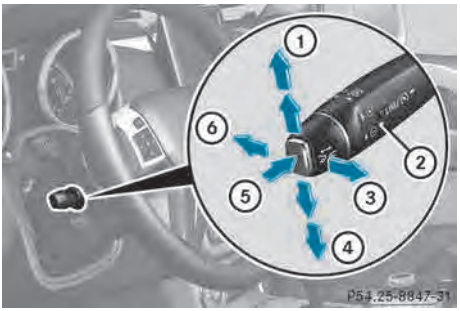

① To activate or increase speed
② LIM indicator lamp
③ To activate at the current speed/last stored speed
④ To activate or reduce speed
⑤ To switch between cruise control and variable SPEEDTRONIC
⑥ To deactivate cruise control

You can store the current speed if you are driving faster than 20 mph (30 km/h).

▶ Accelerate the vehicle to the desired speed.
▶ Briefly press the cruise control lever up ① or down ④.
▶ Remove your foot from the accelerator pedal.
Cruise control is activated. The vehicle automatically maintains the stored speed.

ℹ Cruise control may be unable to maintain the stored speed on uphill and downhill gradients. The stored speed is resumed when the gradient levels out. Cruise control maintains the stored speed on downhill gradients by automatically applying the brakes.

Calling up the last speed stored

⚠ **WARNING**

If you call up the stored speed and it is lower than the current speed, the vehicle decelerates. If you do not know the stored speed, the vehicle could decelerate unexpectedly. There is a risk of an accident.

Pay attention to the road and traffic conditions before calling up the stored speed. If you do not know the stored speed, store the desired speed again.

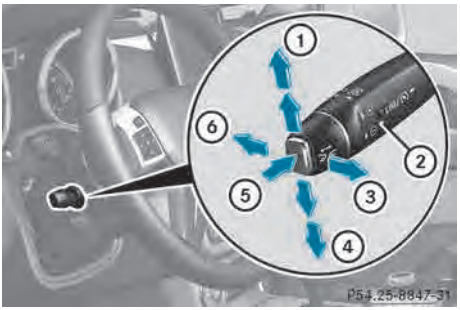

① To activate or increase speed
② LIM indicator lamp
③ To activate at the current speed/last stored speed
④ To activate or reduce speed
⑤ To switch between cruise control and variable SPEEDTRONIC
⑥ To deactivate cruise control

▶ Briefly pull the cruise control lever towards you ③.
▶ Remove your foot from the accelerator pedal.
Cruise control is activated and adjusts the vehicle's speed to the last speed stored.

ℹ If no speed is stored, cruise control stores the current speed and maintains it.

Calling up the last speed stored

Storing and maintaining

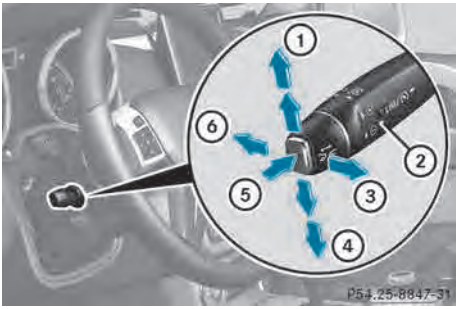

① To activate or increase speed
② LIM indicator lamp
③ To activate at the current speed/last stored speed
④ To activate or reduce speed
⑤ To switch between cruise control and variable SPEEDTRONIC
⑥ To deactivate cruise control

You can store the current speed if you are driving faster than 20 mph (30 km/h).

▶ Accelerate the vehicle to the desired speed.
▶ Briefly press the cruise control lever up ① or down ④.
▶ Remove your foot from the accelerator pedal.
Cruise control is activated. The vehicle automatically maintains the stored speed.

ℹ Cruise control may be unable to maintain the stored speed on uphill and downhill gradients. The stored speed is resumed when the gradient levels out. Cruise control maintains the stored speed on downhill gradients by automatically applying the brakes.

Calling up the last speed stored

⚠ **WARNING**

If you call up the stored speed and it is lower than the current speed, the vehicle decelerates. If you do not know the stored speed, the vehicle could decelerate unexpectedly. There is a risk of an accident.

Pay attention to the road and traffic conditions before calling up the stored speed. If you do not know the stored speed, store the desired speed again.

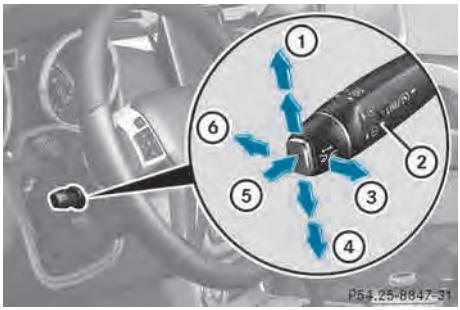

① To activate or increase speed
② LIM indicator lamp
③ To activate at the current speed/last stored speed
④ To activate or reduce speed
⑤ To switch between cruise control and variable SPEEDTRONIC
⑥ To deactivate cruise control

▶ Briefly pull the cruise control lever towards you ③.
▶ Remove your foot from the accelerator pedal.
Cruise control is activated and adjusts the vehicle's speed to the last speed stored.

ℹ If no speed is stored, cruise control stores the current speed and maintains it.

Setting a speed

Adjusting

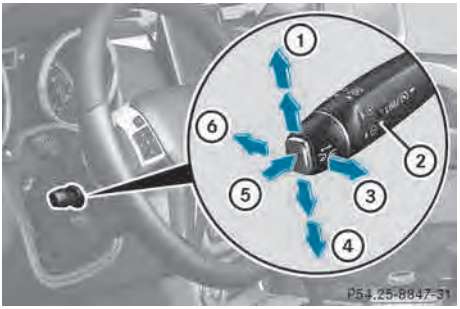

① To activate or increase speed
② LIM indicator lamp
③ To activate at the current speed/last stored speed
④ To activate or reduce speed
⑤ To switch between cruise control and variable SPEEDTRONIC
⑥ To deactivate cruise control

Keep in mind that it may take a brief moment until the vehicle accelerates or decelerates to the set speed.

▶ **To increase the speed:** press the cruise control lever up ①.

▶ **To decrease the speed:** press the cruise control lever down ④.

▶ Keep the cruise control lever pressed until the desired speed is reached.

▶ Release the cruise control lever.
The new speed is stored.

Making adjustments in 1 mph increments (1 km/h increments in Canada)

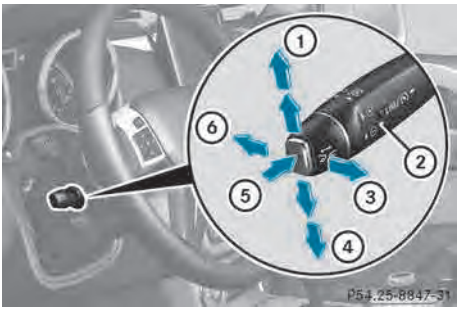

① To activate or increase speed
② LIM indicator lamp
③ To activate at the current speed/last stored speed
④ To activate or reduce speed
⑤ To switch between cruise control and variable SPEEDTRONIC
⑥ To deactivate cruise control

▶ Briefly press the cruise control lever up ① for a higher speed or down ④ for a lower speed.
The last speed stored is increased or reduced.

Adjusting in 5 mph increments (10 km/h increments):

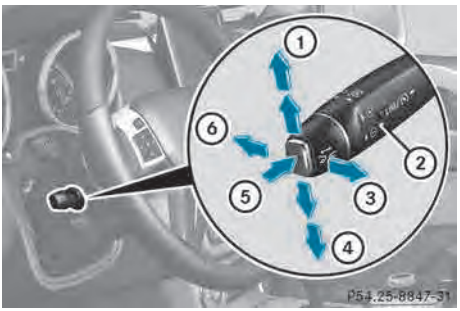

① To activate or increase speed
② LIM indicator lamp
③ To activate at the current speed/last stored speed
④ To activate or reduce speed

⑤ To switch between cruise control and variable SPEEDTRONIC

⑥ To deactivate cruise control

▶ Briefly press the cruise control lever up ① or down ④ to beyond the pressure point.
The last speed stored is increased or reduced.

ℹ Cruise control is not deactivated if you depress the accelerator pedal. For example, if you accelerate briefly to overtake, cruise control adjusts the vehicle's speed to the last speed stored after you have finished overtaking.

Deactivating cruise control

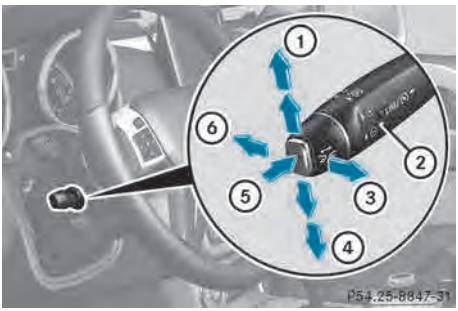

① To activate or increase speed

② LIM indicator lamp

③ To activate at the current speed/last stored speed

④ To activate or reduce speed

⑤ To switch between cruise control and variable SPEEDTRONIC

⑥ To deactivate cruise control

There are several ways to deactivate cruise control:

▶ Briefly press the cruise control lever forwards ⑥.

or

▶ Brake.

or

▶ Briefly press the cruise control lever in the direction of arrow ⑤.
Variable SPEEDTRONIC is selected. LIM indicator lamp ② in the cruise control lever lights up.

Cruise control is automatically deactivated if:

- you apply the parking brake.
- you are driving at less than 20 mph (30 km/h).
- ESP® intervenes or you deactivate ESP®.
- you shift the transmission to position **N** while driving.

ℹ The last speed stored is cleared when you switch off the engine.

SPEEDTRONIC

Important safety notes

⚠ **WARNING**

If you rest your foot on the brake pedal while driving, the braking system can overheat. This increases the stopping distance and can even cause the braking system to fail. There is a risk of an accident.

Never use the brake pedal as a footrest. Never depress the brake pedal and the accelerator pedal at the same time.

! Depressing the brake pedal constantly results in excessive and premature wear to the brake pads.

If you fail to adapt your driving style, SPEEDTRONIC can neither reduce the risk of accident nor override the laws of physics. SPEEDTRONIC cannot take account of road, weather and traffic conditions. SPEEDTRONIC is only an aid. You are responsible for the distance to the vehicle in front, for vehicle speed, for braking in good time and for staying in lane. Only engage SPEEDTRONIC when the current road, weather and traffic conditions permit it to be

done safely. Drive carefully and maintain a suitable distance to the vehicle in front.

General notes

SPEEDTRONIC brakes automatically so that you do not exceed the set speed. On long and steep downhill gradients, especially if the vehicle is laden or towing a trailer, you must select shift range **1**, **2** or **3** in good time. By doing so, you will make use of the braking effect of the engine, which relieves the load on the brake system and prevents the brakes from overheating and wearing too quickly. If you need additional braking, depress the brake pedal repeatedly rather than continuously.

ℹ The speed indicated in the speedometer may differ slightly from the limit speed stored.

Cruise control lever

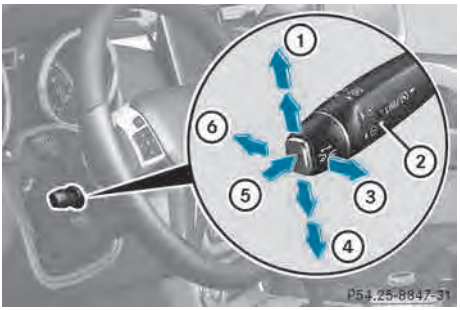

① To store the current speed or a higher speed
② LIM indicator lamp
③ To call up the last speed stored
④ To store the current speed or a lower speed
⑤ To switch between cruise control and variable SPEEDTRONIC
⑥ To deactivate variable SPEEDTRONIC

You can operate cruise control and variable SPEEDTRONIC with the cruise control lever.

The LIM indicator lamp on the cruise control lever indicates which system you have selected:

- **LIM indicator lamp off:** cruise control is selected.
- **LIM indicator lamp on:** variable SPEEDTRONIC is selected.

You can use the cruise control lever to limit the speed to any speed above 30 km/h while the engine is running.

Selecting variable SPEEDTRONIC

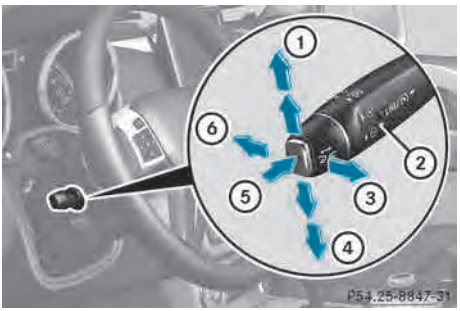

① To activate or increase speed
② LIM indicator lamp
③ To activate at the current speed/last stored speed
④ To activate or reduce speed
⑤ To switch between cruise control and variable SPEEDTRONIC
⑥ To deactivate cruise control

If you fail to adapt your driving style, SPEEDTRONIC can neither reduce the risk of accident nor override the laws of physics. SPEEDTRONIC cannot take account of road, weather and traffic conditions. SPEEDTRONIC is only an aid. You are responsible for the distance to the vehicle in front, for vehicle speed, for braking in good time and for staying in lane. Only engage SPEEDTRONIC when the current road, weather and traffic conditions permit it to be done safely. Drive carefully and maintain a suitable distance to the vehicle in front.

▶ Check whether LIM indicator lamp ② is on.

If it is on, variable SPEEDTRONIC is already selected.

If it is not, press the cruise control lever in the direction of arrow ⑤.

LIM indicator lamp ② in the cruise control lever lights up. Variable SPEEDTRONIC is selected.

Storing the current speed

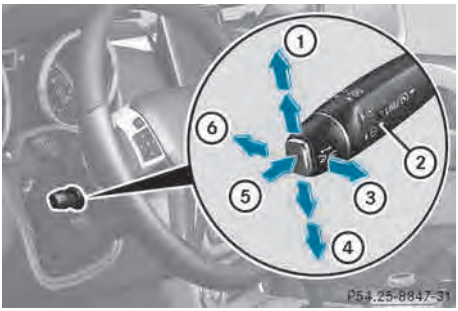

① To activate or increase speed
② LIM indicator lamp
③ To activate at the current speed/last stored speed
④ To activate or reduce speed
⑤ To switch between cruise control and variable SPEEDTRONIC
⑥ To deactivate cruise control

You can use the cruise control lever to limit the speed to any speed above 18 km/h while the engine is running.

▶ Briefly press the cruise control lever up ① or down ④.
The current speed is stored and shown in the multifunction display.

ℹ On downhill gradients, the speed can be exceeded despite variable SPEEDTRONIC. If this is the case, you will hear a warning tone and the `Limit Exceeded` message appears in the multifunction display. Apply the brakes yourself if required.

Calling up the last speed stored

Calling up the last speed stored

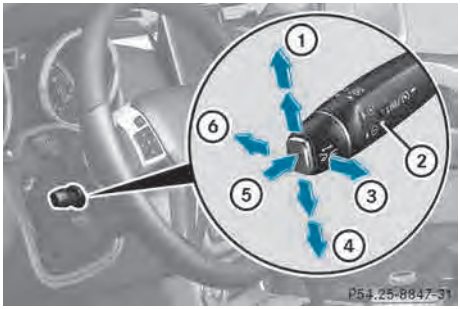

① To activate or increase speed
② LIM indicator lamp
③ To activate at the current speed/last stored speed
④ To activate or reduce speed
⑤ To switch between cruise control and variable SPEEDTRONIC
⑥ To deactivate cruise control

If you fail to adapt your driving style, SPEEDTRONIC can neither reduce the risk of accident nor override the laws of physics. SPEEDTRONIC cannot take account of road, weather and traffic conditions. SPEEDTRONIC is only an aid. You are responsible for the distance to the vehicle in front, for vehicle speed, for braking in good time and for staying in lane. Only engage SPEEDTRONIC when the current road, weather and traffic conditions permit it to be done safely. Drive carefully and maintain a suitable distance to the vehicle in front.

▶ Briefly pull the cruise control lever towards you ③.

ℹ If you call up the stored speed and your current speed is higher, you will hear a warning tone. The `Limit Exceeded` message appears in the multifunction display.

ℹ If no speed is stored, variable SPEEDTRONIC stores the current speed and maintains it.

Deactivating variable SPEEDTRONIC

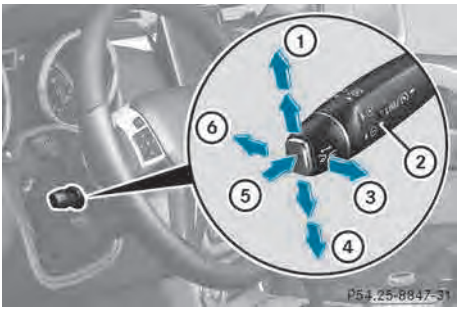

There are several ways to deactivate variable SPEEDTRONIC:

▶ Briefly press the cruise control lever forwards ⑥.

or

▶ Briefly press the cruise control lever in the direction of arrow ⑤.
LIM indicator lamp ② in the cruise control lever goes out. Variable SPEEDTRONIC is deactivated.

Cruise control is selected.

It is not possible to deactivate variable SPEEDTRONIC by braking.

Variable SPEEDTRONIC is deactivated automatically when you depress the accelerator pedal beyond the pressure point (kickdown), but only if your current speed does not differ by more than 12 mph from the stored speed.

DISTRONIC PLUS

Important safety notes

⚠ **WARNING**

DISTRONIC PLUS does not react to:

- people or animals
- stationary obstacles on the road, e.g. stopped or parked vehicles
- oncoming and crossing traffic

As a result, DISTRONIC PLUS may neither give warnings nor intervene in such situations. There is a risk of an accident.

Always pay careful attention to the traffic situation and be ready to brake.

⚠ **WARNING**

DISTRONIC PLUS cannot always clearly identify other road users and complex traffic situations.

In such cases, DISTRONIC PLUS may:

- give an unnecessary warning and then brake the vehicle
- neither give a warning nor intervene
- accelerate unexpectedly

There is a risk of an accident.

Continue to drive carefully and be ready to brake, in particular when warned to do so by DISTRONIC PLUS.

⚠ **WARNING**

DISTRONIC PLUS brakes your vehicle with up to 40% of the maximum braking force. If this braking force is insufficient, DISTRONIC PLUS warns you visually and audibly. There is a risk of an accident.

In such cases, apply the brakes yourself and try to take evasive action.

⚠ **WARNING**

If you call up the stored speed and it differs from the current speed, the vehicle accelerates or decelerates. If you do not know the stored speed, the vehicle could accelerate or brake unexpectedly. There is a risk of an accident.

Pay attention to the road and traffic conditions before calling up the stored speed. If you do not know the stored speed, store the desired speed again.

If you fail to adapt your driving style, DISTRONIC PLUS can neither reduce the risk of accident nor override the laws of physics. DISTRONIC PLUS cannot take account of

road, weather and traffic conditions. DISTRONIC PLUS is only an aid. You are responsible for the distance to the vehicle in front, for vehicle speed, for braking in good time and for staying in lane. Only engage DISTRONIC PLUS when the current road, weather and traffic conditions permit it to be done safely, and adapt your driving style accordingly. Drive carefully and maintain a suitable distance to the vehicle in front.

If DISTRONIC PLUS detects a risk of collision but cannot sufficiently decelerate the vehicle in order to maintain the set distance, you will be warned visually and acoustically. DISTRONIC PLUS cannot prevent a collision without your intervention. An intermittent warning tone will then sound and the distance warning lamp will light up in the instrument cluster. Brake immediately in order to increase the distance from the vehicle in front, or take evasive action, provided it is safe to do so.

DISTRONIC PLUS may not detect narrow vehicles driving in front, e.g. motorcycles, or vehicles driving on a different line. Therefore, always pay attention to traffic conditions even when DISTRONIC PLUS is activated. Otherwise, you may fail to recognize dangers in time, cause an accident and injure yourself and others.

In particular, the detection of obstacles can be impaired if there is:

- the sensor is dirty or covered
- snow or heavy rain
- interference by other radar sources
- there is the possibility of strong radar reflections, for example, in parking garages.

If DISTRONIC PLUS is activated, the vehicle brakes automatically in certain situations. This can happen unexpectedly, especially when towing or in a car wash. There is a risk of an accident. In these or similar situations, deactivate DISTRONIC PLUS.

If you want DISTRONIC PLUS to assist you, the following activation conditions must be fulfilled (▷ page 179) and the radar sensor system must be operational.

General notes

DISTRONIC PLUS regulates the speed and automatically helps you maintain the distance to the vehicle detected in front. DISTRONIC PLUS brakes automatically so that the set speed is not exceeded.

On long and steep downhill gradients, especially if the vehicle is laden or towing a trailer, you must select shift range **1**, **2** or **3** in good time. By doing so, you will make use of the braking effect of the engine, which relieves the load on the brake system and prevents the brakes from overheating and wearing too quickly.

If DISTRONIC PLUS detects a slower-moving vehicle in front, your vehicle is braked in order to maintain the preset distance to the vehicle in front.

If there is no vehicle in front, DISTRONIC PLUS operates in the same way as cruise control in the speed range between 20 mph (Canada: 30 km/h) and120 mph (Canada: 200 km/h). If a vehicle is driving in front of you, it operates in the speed range between 0 mph (0 km/h) and 120 mph (Canada: 200 km/h).

Do not use DISTRONIC PLUS while driving on roads with steep gradients.

As DISTRONIC PLUS transmits radar waves, it can resemble the radar detectors of the responsible authorities. You can refer to the relevant chapter in the Operator's Manual if questions are asked about this.

ℹ USA only:

This device has been approved by the FCC as a “Vehicular Radar System”. The radar sensor is intended for use in an automotive radar system only. Removal, tampering, or altering of the device will void any warranties, and is not permitted by the FCC. Do not tamper with, alter, or use in any non-approved way.

Any unauthorized modification to this device could void the user's authority to operate the equipment.

ℹ Canada only: This device complies with RSS-210 of Industry Canada. Operation is subject to the following two conditions:

1. This device may not cause interference, and

2. this device must accept any interference received, including interference that may cause undesired operation of the device.

Removal, tampering, or altering of the device will void any warranties, and is not permitted. Do not tamper with, alter, or use the device in any non-approved way.

Any unauthorized modification to this device could void the user's authority to operate the equipment.

Cruise control lever

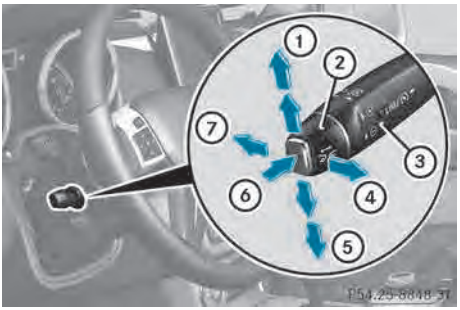

① To activate or increase speed
② To set the specified minimum distance
③ LIM indicator lamp
④ To activate at the current speed/last stored speed
⑤ To activate or reduce speed
⑥ To switch between DISTRONIC PLUS and variable SPEEDTRONIC
⑦ To deactivate DISTRONIC PLUS

With the cruise control lever, you can operate DISTRONIC PLUS and variable SPEEDTRONIC.

▶ **To switch between variable SPEEDTRONIC and DISTRONIC PLUS:** press the cruise control lever in the direction of arrow ⑥.

LIM indicator lamp ③ on the cruise control lever indicates which function you have selected:

- **LIM indicator lamp ③ off:** DISTRONIC PLUS is selected.
- **LIM indicator lamp ③ on:** variable SPEEDTRONIC is selected.

Activating DISTRONIC PLUS

Activation conditions

In order to activate DISTRONIC PLUS, the following conditions must be fulfilled:

- the engine must be started. It may take up to two minutes after pulling away before DISTRONIC PLUS is operational.
- the parking brake must be released.
- the differential lock must be deactivated.
- ESP® must be active, but not intervening.
- the transmission must be in position **D**.
- the driver's door must be closed when you shift from **P** to **D** or your seat belt must be fastened.
- the front-passenger door and rear doors must be closed.
- the vehicle must not skid.
- the DISTRONIC PLUS function must be selected (▷ page 179).
- the transfer case must be in the **HIGH RANGE** transmission position.
- the vehicle must not be on an uphill or downhill gradient of more than 22-25%.
- the radar sensor must be free from dirt (▷ page 297).

Activating while driving

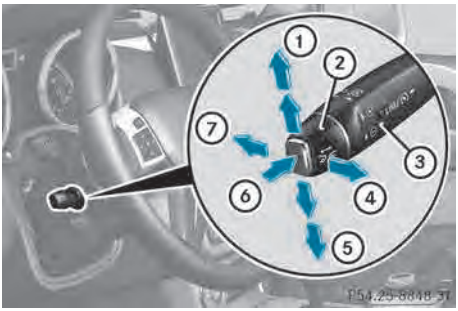

When driving at speeds below 20 mph (30 km/h) you can activate DISTRONIC PLUS if the vehicle in front has been detected and is shown in the multifunction display. If the vehicle in front is no longer detected and displayed, DISTRONIC PLUS switches off and a tone sounds.

▶ Briefly pull the cruise control lever towards you ④, or press it up ① or down ⑤. DISTRONIC PLUS is selected.

▶ Press the cruise control lever up ① or down ⑤ repeatedly until the desired speed is set.

▶ Remove your foot from the accelerator pedal.
Your vehicle adapts its speed to that of the vehicle in front, but only up to the desired stored speed.

ℹ If you do not fully release the accelerator pedal, the `DISTRONIC PLUS Passive` message appears in the multifunction display. The set distance to a slower-moving vehicle in front will then not be maintained. You will be driving at the speed you determine by the position of the accelerator pedal.

Switching on while stationary

This function may be useful if you want to keep up with the traffic flow, e.g. at the end of a tailback.

You can only activate DISTRONIC PLUS if:

- the vehicle in front and
- your vehicle are stationary

▶ Briefly pull the cruise control lever towards you ④, or press it up ① or down ⑤. DISTRONIC PLUS is selected.

ℹ DISTRONIC PLUS can be activated at a standstill at under 20 mph (30 km/h) only if a vehicle in front has been detected. Therefore, the DISTRONIC PLUS distance display in the instrument cluster should be activated (▷ page 218).

▶ Keep the cruise control lever pressed up ① or down ⑤ until the desired speed is set.

ℹ You can use the cruise control lever to set the stored speed and the control on the cruise control lever to set the specified minimum distance (▷ page 183).

Activating at the current speed/last stored speed

⚠ **WARNING**

If you call up the stored speed and it differs from the current speed, the vehicle accelerates or decelerates. If you do not know the stored speed, the vehicle could accelerate or brake unexpectedly. There is a risk of an accident.

Pay attention to the road and traffic conditions before calling up the stored speed. If you do not know the stored speed, store the desired speed again.

▶ Briefly pull the cruise control lever towards you ④.

▶ Remove your foot from the accelerator pedal.
DISTRONIC PLUS is activated. The first time it is activated, the current speed is

stored. Otherwise, it sets the vehicle cruise speed to the previously stored value.

Driving with DISTRONIC PLUS

Pulling away and driving

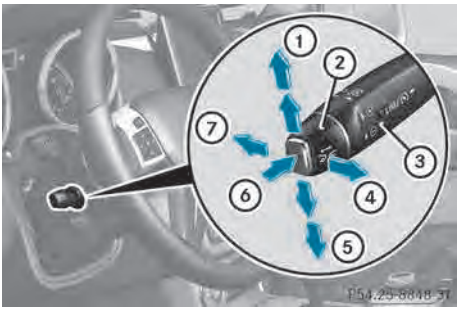

▶ **If the vehicle in front pulls away:** remove your foot from the brake pedal.

▶ Briefly pull the cruise control lever towards you ④, or press it up ① or down ⑤.

or

▶ Accelerate briefly.
Your vehicle pulls away and adapts its speed to that of the vehicle in front.

If there is no vehicle in front, DISTRONIC PLUS operates in the same way as cruise control.

If DISTRONIC PLUS detects that the vehicle in front has slowed down, it brakes your vehicle. In this way, the distance you have selected is maintained.

If DISTRONIC PLUS detects that the vehicle in front is driving faster, it accelerates your vehicle, but only up to the speed you have stored.

If you depress the brake, DISTRONIC PLUS is deactivated unless your vehicle is stationary.

Changing lanes

If you change to the passing lane, DISTRONIC PLUS supports you when:

- you are driving faster than 40 mph (60 km/h).
- DISTRONIC PLUS is maintaining the distance to a vehicle in front.
- you switch on the appropriate turn signal.
- DISTRONIC PLUS does not detect a danger of collision.

If these conditions are fulfilled, your vehicle is accelerated. Acceleration will be interrupted if changing lanes takes too long or if the distance between your vehicle and the vehicle in front becomes too small.

ⓘ When changing lanes, DISTRONIC PLUS monitors the left lane on left-hand drive vehicles and the right lane on right-hand drive vehicles.

Stopping

⚠ **WARNING**

When leaving the vehicle, even if it is braked only by DISTRONIC PLUS, it could roll away if:

- there is a malfunction in the system or in the voltage supply.
- DISTRONIC PLUS has been deactivated with the cruise control lever, e.g. by a vehicle occupant or from outside the vehicle.
- the electrical system in the engine compartment, the battery or the fuses have been tampered with.
- the battery is disconnected.
- the accelerator pedal has been depressed, e.g. by a vehicle occupant.

There is a risk of an accident.

If you wish to exit the vehicle, always turn off DISTRONIC PLUS and secure the vehicle against rolling away.

If DISTRONIC PLUS detects that the vehicle in front is stopping, it brakes your vehicle until it is stationary.

Once your vehicle is stationary, it remains stationary and you do not need to depress the brake.

ℹ Depending on the specified minimum distance, your vehicle will come to a standstill at a sufficient distance behind the vehicle in front. The specified minimum distance is set using the control on the cruise control lever.

On steep uphill or downhill inclines or if there is a malfunction, the transmission may also automatically be shifted into position **P**.

Displays in the instrument cluster

Displays in the speedometer

Example: DISTRONIC PLUS displays in the speedometer

When DISTRONIC PLUS is activated, one or two segments ② in the set speed range light up.

If DISTRONIC PLUS detects a vehicle in front, segments ② between speed of the vehicle in front ① and stored speed ③ light up.

ℹ For design reasons, the speed displayed in the speedometer may differ slightly from the speed set for DISTRONIC PLUS.

Display when DISTRONIC PLUS is deactivated

Distance display when DISTRONIC PLUS is deactivated

① Vehicle in front, if detected

② Distance indicator, current distance to the vehicle in front

③ Specified minimum distance to the vehicle in front; adjustable

④ Own vehicle

You can select the distance display in the Assistance menu (▷ page 218) of the on-board computer.

▶ Select the `Distance Display` function using the on-board computer.

Display when DISTRONIC PLUS is activated

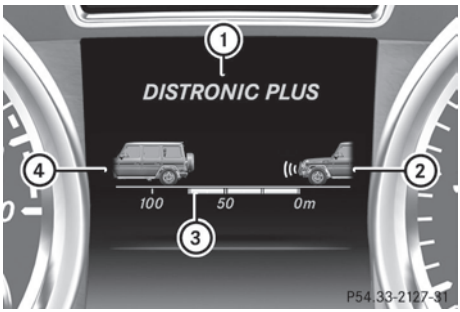

Distance display with DISTRONIC PLUS activated in the multifunction display

① DISTRONIC PLUS activated

② Own vehicle

③ Specified minimum distance to the vehicle in front; adjustable

④ Vehicle in front, if detected

In the Assistance menu (▷ page 218) of the on-board computer, you can select the distance display.

▶ Select the Distance Display function using the on-board computer (▷ page 218).

You will see the stored speed for about five seconds when you activate DISTRONIC PLUS.

Setting a speed

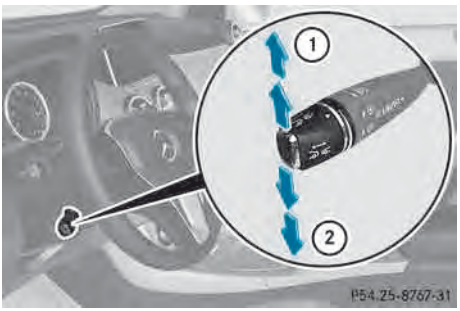

① To store the current speed or a higher speed

② To store the current speed or a lower speed

▶ Press the cruise control lever up ① for a higher speed or down ② for a lower speed.

▶ Keep the cruise control lever pressed until the desired speed is reached.

▶ Release the cruise control lever.
The new speed is stored. DISTRONIC PLUS is activated and adjusts the vehicle's speed to the new speed stored.

▶ **To adjust the set speed in 1 mph increments (1 km/h increments):** briefly press the cruise control lever up ① or down ② to the pressure point.
Every time the cruise control lever is pressed up ① or down ② the last speed stored is increased or reduced.

▶ **To adjust the set speed in 5 mph increments (10 km/h increments):** briefly press the cruise control lever up ① or down ② to the pressure point.
Every time the cruise control lever is pressed up ① or down ②, the last speed stored is increased or reduced.

ℹ DISTRONIC PLUS is not deactivated if you depress the accelerator pedal. If you accelerate to overtake, DISTRONIC PLUS adjusts the vehicle's speed to the last speed stored after you have finished overtaking.

Setting the specified minimum distance

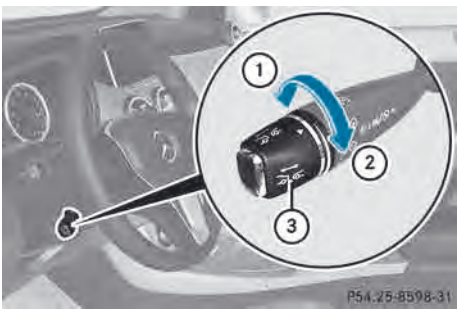

You can set the specified minimum distance for DISTRONIC PLUS by varying the time span between one and two seconds. With this function, you can set the minimum distance that DISTRONIC PLUS keeps to the vehicle in front, dependent on vehicle speed. You can see this distance in the multifunction display (▷ page 218).

▶ **To increase:** turn control ③ in direction ②.
DISTRONIC PLUS then maintains a greater distance between your vehicle and the vehicle in front.

▶ **To decrease:** turn control ③ in direction ①.
DISTRONIC PLUS then maintains a shorter distance between your vehicle and the vehicle in front.

ℹ Make sure that you maintain the minimum distance to the vehicle in front as required by law. Adjust the distance to the vehicle in front if necessary.

Deactivating DISTRONIC PLUS

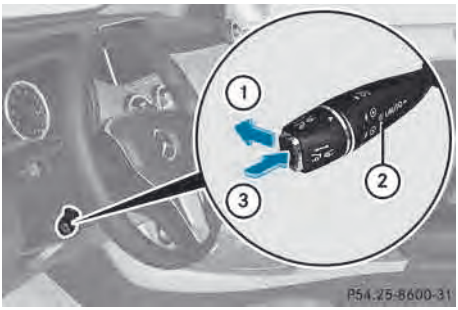

There are several ways to deactivate DISTRONIC PLUS:

▶ Briefly press the cruise control lever forwards ①.

or

▶ Brake, unless the vehicle is stationary.

or

▶ Briefly press the cruise control lever in the direction of arrow ③.
Variable SPEEDTRONIC is selected. LIM indicator lamp ② in the cruise control lever lights up.

When you deactivate DISTRONIC PLUS, you will see the DISTRONIC PLUS Off message in the multifunction display for approximately five seconds.

ℹ The last speed stored remains stored until you switch off the engine.

DISTRONIC PLUS is automatically deactivated if:

- you engage the parking brake.
- you are driving more slowly than 15 mph (25 km/h) and there is no longer a vehicle in front, or if the vehicle in front is no longer detected.
- ESP® intervenes or you deactivate ESP®.
- the transmission is in the **P**, **R** or **N** position.
- you pull the cruise control lever towards you in order to pull away and the front-passenger door or one of the rear doors is open.
- the vehicle has skidded.

If DISTRONIC PLUS is deactivated, you will hear a warning tone. You will see the DISTRONIC PLUS Off message in the multifunction display for approximately five seconds.

In the Assistance menu (▷ page 218) of the on-board computer, you can select the distance display.

Tips for driving with DISTRONIC PLUS

General notes

The following contains descriptions of certain road and traffic conditions in which you must be particularly attentive. In such situations, brake if necessary. DISTRONIC PLUS is then deactivated.

Cornering, going into and coming out of a bend

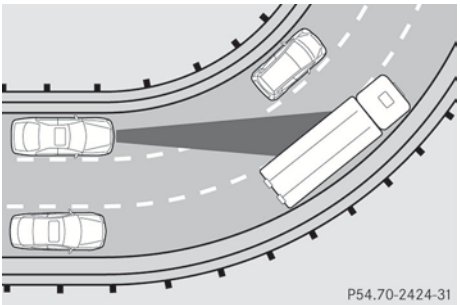

The ability of DISTRONIC PLUS to detect vehicles when cornering is limited. Your vehicle may brake unexpectedly or late.

Vehicles traveling on a different line

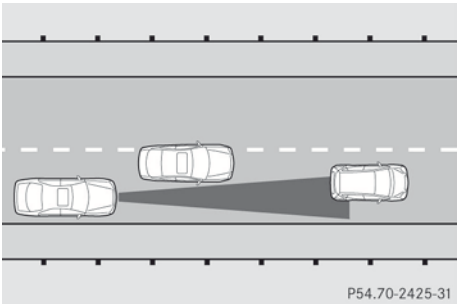

DISTRONIC PLUS may not detect vehicles traveling on a different line. The distance to the vehicle in front will be too short.

Other vehicles changing lanes

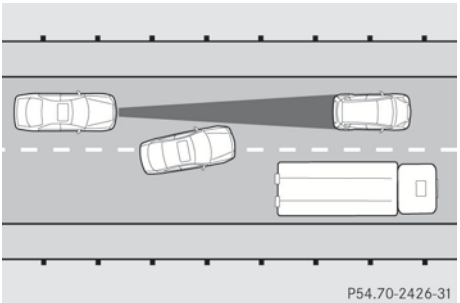

DISTRONIC PLUS has not detected the vehicle cutting in yet. The distance to this vehicle will be too short.

Narrow vehicles

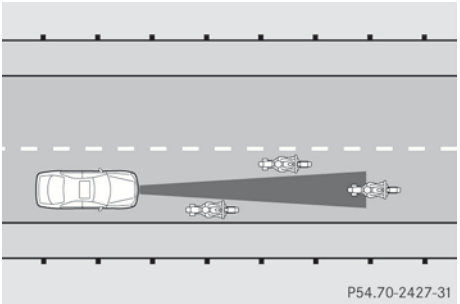

DISTRONIC PLUS has not yet detected the vehicle in front on the edge of the road, because of its narrow width. The distance to the vehicle in front will be too short.

Obstructions and stationary vehicles

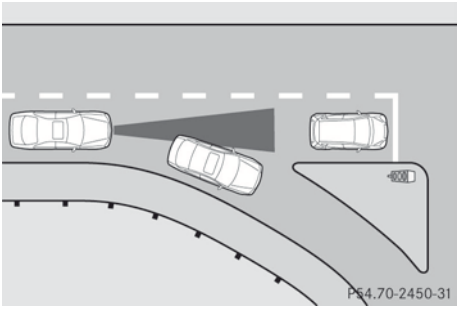

DISTRONIC PLUS does not brake for obstacles or stationary vehicles. If, for example, the detected vehicle turns a corner and reveals an obstacle or stationary vehicle, DISTRONIC PLUS will not brake for these.

Crossing vehicles

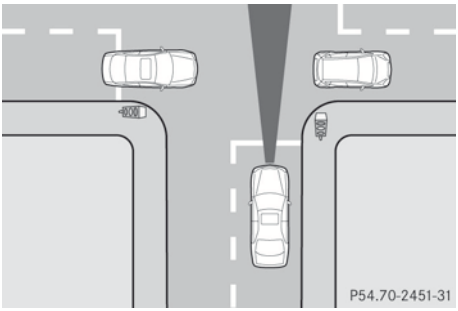

DISTRONIC PLUS may detect vehicles that are crossing your lane by mistake. Activating DISTRONIC PLUS at traffic lights with crossing traffic, for example, could cause your vehicle to pull away unintentionally.

Blind Spot Assist

Important safety notes

⚠ **WARNING**

Blind Spot Assist does not react to:

- vehicles overtaken too closely on the side, placing them in the blind spot area
- vehicles approaching and driving by with a speed difference of more than approximately 11 km/h

As a result, Blind Spot Assist may not give warnings in such situations. There is a risk of an accident.

Always observe the traffic conditions carefully, and maintain a safe lateral distance.

⚠ **WARNING**

Blind Spot Assist does not react to:

- vehicles overtaken too closely on the side, placing them in the blind spot area
- vehicles approaching and driving by with a speed difference of more than 6.8 mph (11 km/h)

As a result, Blind Spot Assist may not give warnings in such situations. There is a risk of an accident.

Always observe the traffic conditions carefully, and maintain a safe lateral distance.

Blind Spot Assist is only an aid. It may fail to detect some vehicles and is no substitute for attentive driving.

In particular, the detection of obstacles can be impaired if there is:

- dirt on the sensors or anything else covering the sensors.
- visibility is poor, e.g. due to fog, heavy rain or snow.
- there is a narrow vehicle traveling in front, e.g. a motorcycle or bicycle.
- the road has very wide lanes.
- the road has narrow lanes.
- you are not driving in the middle of the lane.
- there are barriers or other road boundaries.

ℹ USA only:

This device has been approved by the FCC as a “Vehicular Radar System”. The radar sensor is intended for use in an automotive radar system only. Removal, tampering, or altering of the device will void any warranties, and is not permitted by the FCC. Do not tamper with, alter, or use in any non-approved way.

Any unauthorized modification to this device could void the user’s authority to operate the equipment.

General notes

Blind Spot Assist uses a radar sensor system to monitor both the left and right sides of your vehicle. It supports you from a speed of approximately 20 mph (30 km/h). A warning display in the exterior mirrors draws your attention to vehicles detected in the monitored area. If you then switch on the corresponding turn signal to change lane, you will also receive an optical and audible collision warning. For this purpose, Blind Spot Assist uses sensors in the rear bumper.

Monitoring range of the sensors

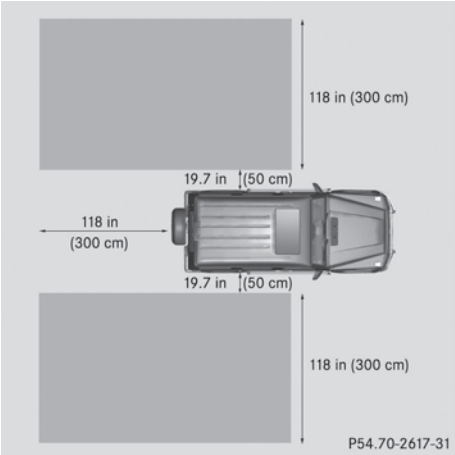

Blind Spot Assist monitors the area up to 10 ft (3 m) behind your vehicle and directly next to your vehicle, as shown in the diagram.

If the lanes are narrow, vehicles driving in the lane beyond the lane next to your vehicle may be indicated, especially if the vehicles are not driving in the middle of their lane. This may be the case if the vehicles are driving on the inner side of their lane.

Due to the nature of the system:

- warnings may be issued in error when driving close to crash barriers or similar solid lane borders.
- the warning is canceled when driving for an extended period next to long vehicles, such as trucks.

The two sensors for Blind Spot Assist are integrated into the sides of the rear bumper. Make sure that the bumper is free from dirt, ice or slush around the sensors. The rear sensors must not be covered, for example by bicycle racks or overhanging loads. Following a severe impact or in the event of damage to the bumpers, have the function of the radar sensors checked at a qualified specialist workshop. Blind Spot Assist may otherwise not work properly.

Indicator and warning display

⚠ WARNING

Blind Spot Assist does not react to:

- vehicles overtaken too closely on the side, placing them in the blind spot area
- vehicles approaching and driving by with a speed difference of more than 6.8 mph (11 km/h)

As a result, Blind Spot Assist may not give warnings in such situations. There is a risk of an accident.

Always observe the traffic conditions carefully, and maintain a safe lateral distance.

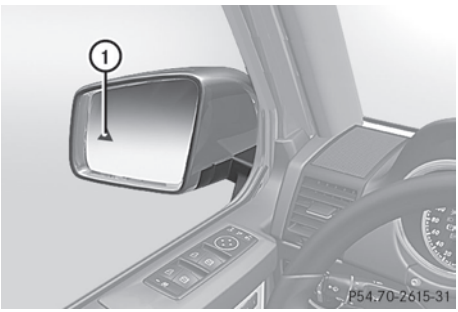

① Yellow indicator lamp/red warning lamp

When Active Blind Spot Assist is activated, indicator lamp ① in the exterior mirrors lights up yellow at speeds of up to 20 mph(30 km/h). At speeds above 20 mph (30 km/h) the indicator lamp goes out and Blind Spot Assist is operational.

If a vehicle is detected within the monitoring range of Blind Spot Assist at speeds above 20 mph (30 km/h), warning lamp ① on the corresponding side lights up red. This warning is always emitted when a vehicle enters the blind spot monitoring range from behind or from the side. When you overtake a vehicle, the warning only occurs if the difference in speed is less than 7 mph (12 km/h).

The yellow indicator lamp goes out if reverse gear is engaged. In this event, Blind Spot Assist is no longer active.

The brightness of the indicator/warning lamps is adjusted automatically according to the ambient light.

Collision warning

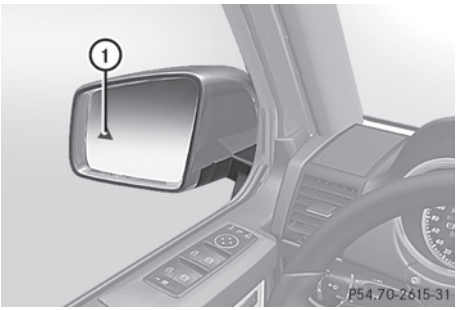

① Yellow indicator lamp/red warning lamp

If a vehicle is detected in the monitoring range of Blind Spot Assist and you switch on the corresponding turn signal, a double warning tone sounds. Red warning lamp ① flashes. If the turn signal remains on, vehicles detected are indicated by the flashing of red warning lamp ①. There are no further warning tones.

Switching on Blind Spot Assist

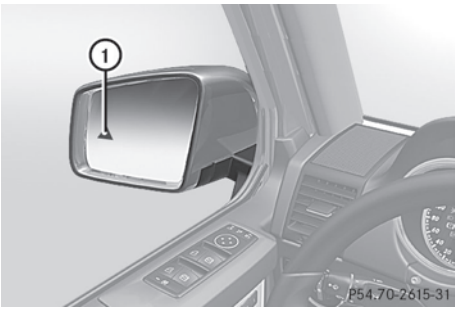

① Yellow indicator lamp/red warning lamp

▶ Make sure that Blind Spot Assist is activated in the on-board computer (▷ page 218).

▶ Turn the SmartKey to position **2** (▷ page 139) in the ignition lock. Warning lamps ① in the exterior mirrors light up red for approximately 1.5 seconds and then turn yellow.

Active Blind Spot Assist

Important safety notes

⚠ **WARNING**

Active Blind Spot Assist does not react to:

- vehicles overtaken too closely on the side, placing them in the blind spot area
- vehicles approaching and driving by with a speed difference of more than approximately 11 km/h

As a result, Active Blind Spot Assist may neither give warnings nor intervene in such situations. There is a risk of an accident.

Always observe the traffic conditions carefully, and maintain a safe lateral distance.

⚠ **WARNING**

Active Blind Spot Assist does not react to:

- vehicles overtaken too closely on the side, placing them in the blind spot area
- vehicles approaching and driving by with a speed difference of more than approximately 6.8 mph (11 km/h)

As a result, Active Blind Spot Assist may neither give warnings nor intervene in such situations. There is a risk of an accident.

Always observe the traffic conditions carefully, and maintain a safe lateral distance.

Active Blind Spot Assist is only an aid. It may fail to detect some vehicles and is no substitute for attentive driving.

In particular, the detection of obstacles can be impaired if there is:

- dirt on the sensors or anything else covering the sensors.
- visibility is poor, e.g. due to fog, heavy rain or snow.
- there is a narrow vehicle traveling in front, e.g. a motorcycle or bicycle.
- the road has very wide lanes.
- the road has narrow lanes.
- you are not driving in the middle of the lane.
- there are barriers or other road boundaries.

ℹ USA only:

This device has been approved by the FCC as a “Vehicular Radar System”. The radar sensor is intended for use in an automotive radar system only. Removal, tampering, or altering of the device will void any warranties, and is not permitted by the FCC. Do not tamper with, alter, or use in any non-approved way.

Any unauthorized modification to this device could void the user’s authority to operate the equipment.

ℹ Canada only: This device complies with RSS-210 of Industry Canada. Operation is subject to the following two conditions:

1. This device may not cause interference, and

2. this device must accept any interference received, including interference that may cause undesired operation of the device.

Removal, tampering, or altering of the device will void any warranties, and is not permitted. Do not tamper with, alter, or use the device in any non-approved way.

Any unauthorized modification to this device could void the user's authority to operate the equipment.

General notes

Active Blind Spot Assist uses a radar sensor system to monitor the side areas of your vehicle which are in back of the driver. A warning display in the exterior mirrors draws your attention to vehicles detected in the monitored area. If you then switch on the corresponding turn signal to change lanes, you will also receive an optical and audible collision warning. If a risk of lateral collision is detected, corrective braking may help you avoid a collision. To support the course-correcting brake application, Active Blind Spot Assist also uses the forward-facing radar sensor system.

Active Blind Spot Assist supports you from a speed of approximately 20 mph(30 km/h).

Monitoring area

⚠ **WARNING**

Active Blind Spot Assist monitors certain areas in the immediate vicinity of your vehicle. Vehicles that approach and drive past at high speeds are not detected. No visual nor audible warnings are emitted and the system does not brake the vehicle to correct your course.

If the lanes are very wide, it may not be possible to monitor the complete width of the neighboring lane. For this reason, vehicles in the next lane may not be detected, especially if they are driving in a staggered formation. This may be the case if vehicles are driving at that edge of their lane which is furthest away from your vehicle.

Always pay attention to traffic conditions and your surroundings. Otherwise, you may fail to recognize dangers in time, cause an accident and injure yourself and others.

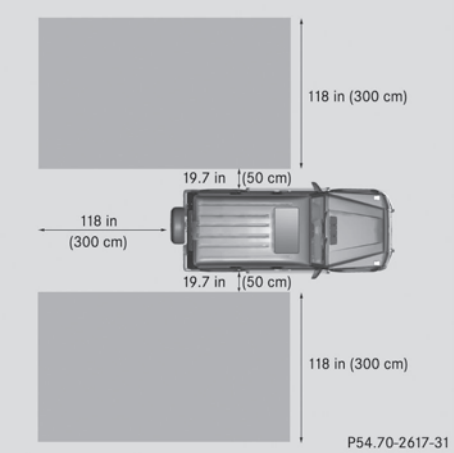

Active Blind Spot Assist monitors the area up to 10 ft (3.0 m) behind your vehicle and directly next to your vehicle, as shown in the diagram. For this purpose, Active Blind Spot Assist uses radar sensors in the rear bumper.

If the lanes are narrow, vehicles driving in the lane beyond the lane next to your vehicle may be indicated, especially if the vehicles are not driving in the middle of their lane. This may be the case if there are vehicles driving at the inner edge of their lanes.

Due to the nature of the system:

- warnings may be issued in error when driving close to crash barriers or similar solid lane borders.
- warnings may be interrupted when driving alongside particularly long vehicles, for example trucks, for a prolonged time.

Two Active Blind Spot Assist radar sensors are integrated into the front and rear bumpers respectively. An additional radar sensor is located behind the cover in the radiator grill. Make sure that the bumpers and the cover in the radiator grill are free of dirt, ice or slush. The rear sensors must not be covered, for example by cycle racks or overhanging cargo. Following a severe impact or in the event of damage to the bumpers, have the function of the radar sensors checked at a qualified specialist workshop. Active Blind Spot Assist may otherwise no longer work properly.

Indicator and warning display

⚠ WARNING

Active Blind Spot Assist is not active at speeds below 20 mph (30km/h). The indicator lamps in the exterior mirrors are yellow. Vehicles in the monitoring range are then not indicated.

Always pay attention to traffic conditions and your surroundings. Otherwise, you may fail to recognize dangers in time, cause an accident and injure yourself and others.

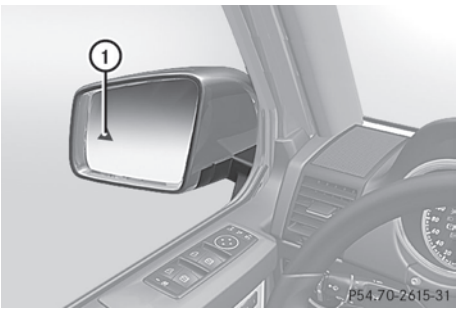

① Yellow indicator lamp/red warning lamp

When Active Blind Spot Assist is activated, indicator lamp ① in the exterior mirrors lights up yellow at speeds of up to 20 mph (30 km/h). At speeds above 20 mph(30 km/h), the indicator lamp goes out and Active Blind Spot Assist is operational.

If a vehicle is detected within the monitoring range of Blind Spot Assist at speeds above 20 mph (30 km/h), warning lamp ① on the corresponding side lights up red. This warning is always emitted when a vehicle enters the blind spot monitoring range from behind or from the side. When you overtake a vehicle, the warning only occurs if the difference in speed is less than 7 mph (12 km/h).

The yellow indicator lamp goes out if reverse gear is engaged. In this event, Active Blind Spot Assist is no longer active.

The brightness of the indicator/warning lamps is adjusted automatically according to the ambient light.

Visual and audible collision warnings

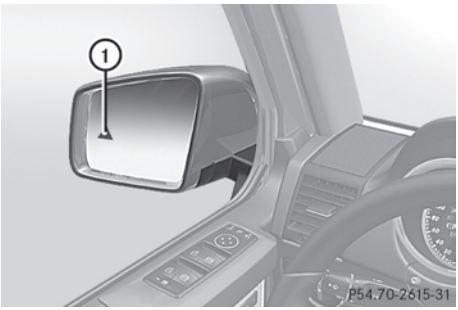

When you switch on the turn signals to change lanes and a vehicle is detected in the side monitoring range, you receive a visual and acoustic collision warning. You then hear a double warning tone and red warning lamp ① flashes. If the turn signal remains on, detected vehicles are indicated by the flashing of red warning lamp ①. There are no further warning tones.

Course-correcting brake application

⚠ **WARNING**

Active Blind Spot Assist is only an aid designed to assist driving. It is not a substitute for attentive driving. In some cases, the course-correcting brake application is not sufficient to avoid a collision. In such a case, you must steer, brake or accelerate.

In very rare cases, the system may erroneously detect a danger of collision in the area of crash barriers or similar lane borders and apply the brakes. Active Blind Spot Assist does not detect all traffic situations and road users. Always make sure that there is sufficient distance on the side for other traffic or obstacles. An inappropriate brake application may be interrupted at any time if you steer slightly in the opposite direction or accelerate.

You are responsible for driving at appropriate speeds, braking in good time, and steering correctly. Always adapt your driving style to suit the prevailing road and weather conditions. Always pay attention to traffic conditions and your surroundings. Otherwise, you may fail to recognize dangers in time, cause an accident and injure yourself and others.

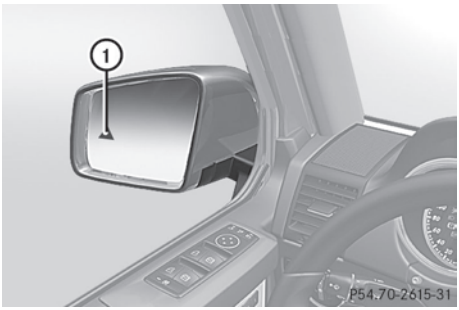

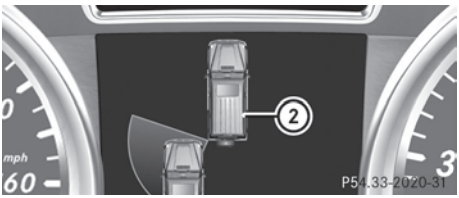

If a course-correcting brake application occurs, red warning lamp ① flashes in the exterior mirror and a dual warning tone sounds. In addition, display ② appears in the multifunction display.

If Active Blind Spot Assist detects a risk of a lateral collision in the monitoring range, a course-correcting brake application is carried out. This is meant to assist you in avoiding a collision.

The course-correcting brake application is available in the speed range between 20 mph (30 km/h) and 120 mph (200 km/h).

There will be either no or only a weak course-correcting brake application if:

- there are vehicles or obstacles, e.g. crash barriers, located on both sides of your vehicle.
- a vehicle approaches you too closely at the side.
- you have adopted a sporty driving style with high cornering speeds.
- you clearly brake or accelerate.
- a driving safety system intervenes, e.g. ESP®.
- ESP® is switched off.
- the LOW RANGE off-road gear is activated.
- a loss of tire pressure has been detected.

Switching on Active Blind Spot Assist

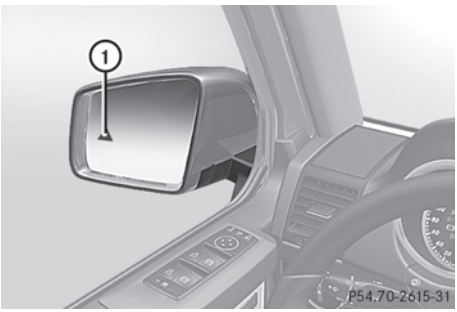

▶ Make sure that active Blind Spot Assist (▷ page 218) is activated in the on-board computer.

▶ Turn the SmartKey to position **2** in the ignition lock.
Warning lamps ① in the exterior mirrors light up red for approximately 1.5 seconds and then turn yellow.

Towing a trailer

When you attach a trailer, make sure you have correctly established the electrical connection. This can be accomplished by checking the trailer lighting. Active Blind Spot Assist is then deactivated. The indicator lamp lights up yellow in the exterior mirrors and the `Active Blind Spot Assist Currently Unavailable See Operator's Manual` message appears in the multifunction display.

HOLD function

General notes

The HOLD function can assist the driver in the following situations:

- when pulling away, especially on steep slopes
- when maneuvering on steep slopes
- when waiting in traffic

The vehicle is kept stationary without the driver having to depress the brake pedal.

The braking effect is canceled and the HOLD function deactivated when you depress the accelerator pedal to pull away.

ℹ Do not use the HOLD function when driving off-road, on steep uphill or downhill gradients or on slippery or loose surfaces. The HOLD function cannot hold the vehicle on such surfaces.

Activation conditions

You can activate the HOLD function if:

- the vehicle is stationary.
- the engine is running or it has been switched off by the ECO start/stop function (AMG vehicles).
- the engine is running.
- the driver's door is closed or your seat belt is fastened.
- the transmission is in position **D**, **R** or **N**.
- DISTRONIC PLUS is deactivated.

Activating the HOLD function

The vehicle's brakes are applied when the HOLD function is activated. For this reason, deactivate the HOLD function while in the car wash or while towing.

▶ Make sure that the activation conditions are met.

▶ Depress the brake pedal.

▶ Quickly depress the brake pedal further until HOLD appears in the multifunction display.
The HOLD function is activated. You can release the brake pedal.

ⓘ If depressing the brake pedal the first time does not activate the HOLD function, wait briefly and then try again.

Deactivating the HOLD function

⚠ **WARNING**

When leaving the vehicle, it can still roll away despite being braked by the HOLD function if:

- there is a malfunction in the system or in the voltage supply.
- the HOLD function has been deactivated by pressing the accelerator pedal or the brake pedal, e.g. by a vehicle occupant.
- the electrical system in the engine compartment, the battery or the fuses have been tampered with.
- the battery is disconnected

There is a risk of an accident.

If you wish to exit the vehicle, always turn off the HOLD function and secure the vehicle against rolling away.

The HOLD function is deactivated automatically if:

- you accelerate and the transmission is in position **D** or **R**.
- you shift the transmission to position **P**.
- you depress the brake pedal again with a certain amount of pressure until HOLD disappears from the multifunction display.
- you activate DISTRONIC PLUS.

On steep uphill or downhill gradients or if there is a malfunction, the transmission may also be automatically shifted into position **P**.

4MATIC (permanent four-wheel drive)

! Never tow the vehicle with one axle raised. This may damage the transfer case. Damage of this sort is not covered by the Mercedes-Benz Limited Warranty. All wheels must remain either on the ground or be fully raised. Observe the instructions for towing the vehicle with all wheels in full contact with the ground.

! When testing the parking brake, operate the vehicle only briefly (for a maximum of ten seconds) on a brake test dynamometer. When doing this, turn the SmartKey to position **0** or **1** in the ignition. Failure to do this can cause damage to the drive train or the brake system.

! A function or performance test should only be carried out on a two-axle dynamometer. Before you operate the vehicle on such a dynamometer, please consult a qualified workshop. You could otherwise damage the drive train or the brake system.

4MATIC ensures that all four wheels are permanently driven. Together with ESP® and 4ETS, it improves the traction of your vehicle whenever a drive wheel spins due to insufficient grip.

If a drive wheel spins due to insufficient grip:

- Only depress the accelerator pedal as far as necessary when pulling away.
- Accelerate less when driving.

If you fail to adapt your driving style, 4MATIC can neither reduce the risk of accident nor override the laws of physics. 4MATIC cannot take account of road, weather and traffic conditions. 4MATIC is only an aid. You are responsible for the distance to the vehicle in front, for vehicle speed, for braking in good time and for staying in lane. Only engage 4MATIC when the current road, weather and traffic conditions permit it to be done safely, and adapt your driving style accordingly. Drive carefully and maintain a suitable distance to the vehicle in front.

ℹ In wintry driving conditions, the maximum effect of 4MATIC can only be achieved if you use winter tires (M+S tires), with snow chains if necessary.

For information about driving off-road, see (▷ page 164).

PARKTRONIC

Important safety notes

! When parking, pay particular attention to objects above or below the sensors, such as flower pots or trailer drawbars. PARKTRONIC does not detect such objects when they are in the immediate vicinity of the vehicle. You could damage the vehicle or the objects.

The sensors may not detect snow and other objects that absorb ultrasonic waves.

Ultrasonic sources such as an automatic car wash, the compressed-air brakes on a truck or a pneumatic drill could cause PARKTRONIC to malfunction.

PARKTRONIC may not function correctly on uneven terrain.

PARKTRONIC is an electronic parking aid with ultrasonic sensors. It indicates visually and audibly the distance between your vehicle and an object.

PARKTRONIC is only an aid. It is not a replacement for your attention to your immediate surroundings. You are always responsible for safe maneuvering, parking and exiting a parking space. Check in front, behind and to the sides of the vehicle before maneuvering, parking or exiting a parking space. There must not be any persons, animals or objects in the area in which you are maneuvering.

PARKTRONIC cannot identify any persons or objects outside of the detection range. As a result, PARKTRONIC cannot warn you about objects in this area.

PARKTRONIC is activated automatically when you:

- switch on the ignition
- shift the transmission to position **D**, **R** or **N**
- release the parking brake

PARKTRONIC is deactivated at speeds above 11 mph (18 km/h). It is reactivated at lower speeds.

PARKTRONIC monitors the area around your vehicle using six sensors in the front bumper and four sensors in the rear bumper.

Range of the sensors

General notes

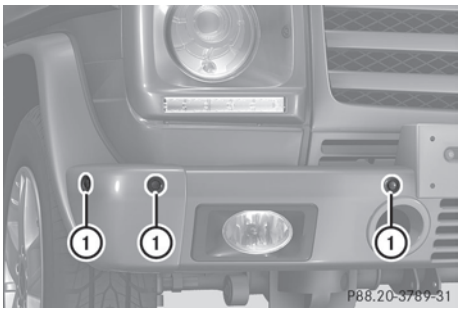

① Example: sensors in the front bumper, left-hand side

Side view

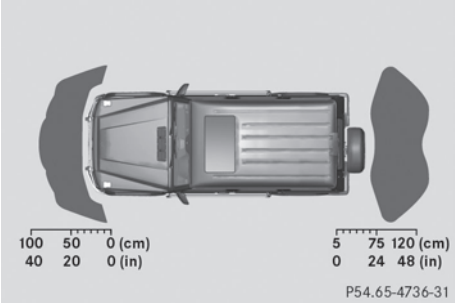

Top view

The sensors must be free from dirt, ice or slush. Otherwise, they may not function correctly. Clean the sensors regularly, taking care not to scratch or damage them (▷ page 297).

Front sensors

Center	Approximately 40 in (approximately 100 cm from brush guard)
Corners	Approximately 24 in (approximately 60cm)

Rear sensors

Center	Approximately 36 in (approximately 90 cm) from spare wheel
Corners	Approximately 32 in (approximately 80 cm)

Minimum distance

Center	Approximately 8 in (approximately 20 cm)
Corners	Approximately 8 in (approximately 20 cm)

If there is an obstacle within this range, the relevant warning displays light up and a warning tone sounds. If the distance falls below the minimum, the distance may no longer be shown.

Warning displays

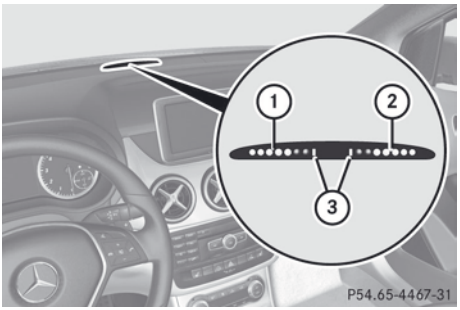

Warning display for the front area

① Segments on the left-hand side of the vehicle

② Segments on the right-hand side of the vehicle

③ Segments showing operational readiness

The warning displays show the distance between the sensors and the obstacle. The warning display for the front area is located on the dashboard above the center air vents. The warning display for the rear area is located on the headliner in the rear compartment.

The warning display for each side of the vehicle is divided into five yellow and two red segments. PARKTRONIC is operational if yellow segments showing operational readiness ③ light up.

The selected transmission position and the direction in which the vehicle is rolling determine which warning display is active when the engine is running.

Transmission position	Warning display
D	Front area activated
R, **N** or the vehicle is rolling backwards	Rear and front areas activated
P	No areas activated

One or more segments light up as the vehicle approaches an obstacle, depending on the vehicle's distance from the obstacle.

From the:

- sixth segment onwards, you will hear an intermittent warning tone for approximately two seconds.
- seventh segment onwards, you will hear a warning tone for approximately two seconds. This indicates that you have now reached the minimum distance.

Deactivating/activating PARKTRONIC

① Indicator lamp

② To deactivate/activate PARKTRONIC

If indicator lamp ① lights up, PARKTRONIC is deactivated.

ℹ PARKTRONIC is automatically activated when you turn the SmartKey to position **2** in the ignition lock.

Towing a trailer

PARKTRONIC is deactivated for the rear area when you establish an electrical connection between your vehicle and a trailer.

Problems with PARKTRONIC

Problem	Possible causes/consequences and ▶ Solutions
Only the red segments in the PARKTRONIC warning displays are lit. You also hear a warning tone for approximately two seconds. PARKTRONIC is deactivated after a few seconds, and the indicator lamp in the PARKTRONIC button lights up.	PARKTRONIC has malfunctioned and has switched off. ▶ If problems persist, have PARKTRONIC checked at a qualified specialist workshop.
Only the red segments in the PARKTRONIC warning displays are lit. PARKTRONIC is deactivated after a few seconds.	The PARKTRONIC sensors are dirty or there is interference. ▶ Clean the PARKTRONIC sensors (▷ page 297). ▶ Switch the ignition back on.
	The problem may be caused by an external source of radio or ultrasound waves. ▶ See if PARKTRONIC functions in a different location.

Rear view camera

Important safety notes

The rear view camera is only an aid. It is not a replacement for your attention to your immediate surroundings. You are always responsible for safe maneuvering and parking. When maneuvering or parking, make sure that there are no persons, animals or objects in the area in which you are maneuvering.

Under the following circumstances, the rear view camera will not function, or will function in a limited manner:

- the rear door is open
- in heavy rain, snow or fog
- at night or in very dark places
- if the camera is exposed to very bright light
- if the area is lit by fluorescent light or LED lighting (the display may flicker)
- if there is a sudden change in temperature, e.g. when driving into a heated garage in winter
- if the camera lens is dirty or obstructed
- if the rear of your vehicle is damaged. In this event, have the camera position and setting checked at a qualified specialist workshop. Mercedes-Benz recommends that you use an authorized Mercedes-Benz Center for this purpose

Activating/deactivating the rear view camera

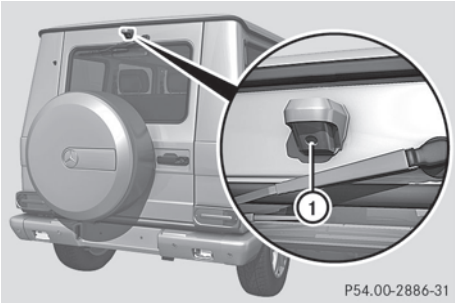

① Rear view camera

▶ **To activate:** make sure that the SmartKey is in position **2** in the ignition lock.

▶ Make sure that the rear view camera function is selected in COMAND (see the separate operating instructions for COMAND).

▶ Engage reverse gear.
The area behind the vehicle is shown in the COMAND display with guide lines.

▶ **To change the function mode:** using the COMAND controller, select symbol ① for the "Reverse parking" function or symbol ② for "Coupling up a trailer" (see the separate COMAND operating instructions).
The symbol of the selected function is highlighted.

To deactivate: the rear view camera is deactivated if you:

- shift the transmission to position **P**
- drive forward ten meters
- shift the transmission from **R** to another position (after 15 seconds)
- drive forwards at a speed of over 5 mph (10 km/h)

Off-road driving systems

Transfer case

General notes

The vehicle has permanent all-wheel drive. Power is always transmitted to both axles.

For further information on driving off-road, see (▷ page 164).

Shift ranges

⚠ **WARNING**

If you do not wait for the transfer case gear change process to complete, the transfer case could remain in the neutral position. The power transmission to the driven wheels is then interrupted. There is a danger of the vehicle rolling away unintentionally. There is a risk of an accident.

Wait until the transfer case shift process is completed.

Do not turn off the engine while changing gear and do not shift the automatic transmission to another gear.

HIGH RANGE	Position for all normal on-road driving conditions.
LOW RANGE	Low-range position for driving off-road. Also for use on steep uphill or downhill gradients, especially when towing a trailer. The vehicle travels around half the speed of on-road driving range **HIGH RANGE**. The tractive power is correspondingly higher.

Shifting the transfer case

Important safety notes

⚠ **WARNING**

When the transfer case is in the neutral position, power transmission to the driven wheels is interrupted. As a result, the vehicle could roll away. There is a risk of an accident.

Secure the vehicle with the parking brake, and on uphill or downhill gradients, also secure it with a device such as a wheel chock.

⚠ **WARNING**

When the transfer case is in the neutral position, power transmission to the driven wheels is interrupted. As a result, the vehicle could roll away. There is a risk of an accident.

Secure the vehicle with the parking brake, and on uphill or downhill gradients, also secure it with a device such as a wheel chock.

Always wait for the gear change process from **HIGH RANGE** to **LOW RANGE** and from **LOW RANGE** to **HIGH RANGE** to complete. Do not turn off the engine while changing gear and do not shift the automatic transmission to another gear.

General notes

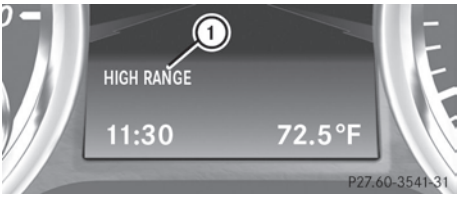

① Current shift range

① Indicator lamp

② LOW RANGE button

Switching on the off-road gear ratio

! Only carry out the gear selection if:

- the engine is running.
- the vehicle is rolling.
- the automatic transmission is in selector lever position **N**.
- you are driving no faster than 25 mph (40 km/h).

You could otherwise damage the transfer case.

ℹ **AMG vehicles:** to shift the transfer case to **LOW RANGE**, deactivate the ECO start/stop function (▷ page 142).

▶ Press LOW RANGE button ②.
When the shift procedure is complete, the LOW RANGE transfer case position appears in the multifunction display.
Indicator lamp ① lights up.

▶ Shift the transmission to position **D**.

Switching off the off-road gear ratio

⚠ **WARNING**
When the transfer case is in the neutral position, power transmission to the driven wheels is interrupted. As a result, the vehicle could roll away. There is a risk of an accident.
Secure the vehicle with the parking brake, and on uphill or downhill gradients, also secure it with a device such as a wheel chock.

! Only carry out the gear selection if:

- the engine is running.
- the vehicle is rolling.
- the automatic transmission is in selector lever position **N**.
- you are driving no faster than 43 mph (70 km/h).

You could otherwise damage the transfer case.

▶ Press button ②.
When the shift procedure is complete, the HIGH RANGE transfer case position appears in the multifunction display.
Indicator lamp ① goes out.

If the gear change is not completed, the following messages could appear in the display:

- TC Shift Conditions Not Fulfilled
  You have not met one or more shift conditions.
- TC NEUTRAL On
  The transfer case has canceled the gear change process and is in **N**. The N transfer case position appears in the multifunction display.
- TC Shift Canceled
  The transfer case has not performed the gear change process.

▶ Carry out the gear change process again.
Make sure to meet all conditions for changing gears.

- TC Malfunction Visit Workshop
  There is a malfunction in the transfer case.

▶ Do not shift the transfer case.

▶ Have the vehicle checked as soon as possible at a qualified specialist workshop.

Shifting to neutral

⚠ **WARNING**
When the transfer case is in the neutral position, power transmission to the driven wheels is interrupted. As a result, the vehicle could roll away. There is a risk of an accident.
Secure the vehicle with the parking brake, and on uphill or downhill gradients, also secure it with a device such as a wheel chock.

▶ Turn the SmartKey to position **2** (▷ page 139) in the ignition lock.

▶ Apply the parking brake.

▶ Depress the brake pedal.

▶ Move the selector lever to position **N**(▷ page 145).

▶ Press and hold LOW RANGE button ② for approximately 10 seconds.
Once the gear change procedure is complete, TC Neutral On message appears in the multifunction display for approximately 5 seconds.

If the gear change is not completed, the following messages could appear in the display (▷ page 238).

ℹ If the transfer case is in **Neutral**, the SmartKey is in the ignition lock and you open the driver's door, the TC Neutral On message appears in the multifunction

display. If you then release the parking brake, a warning tone will sound.

Differential locks

General notes

⚠ **WARNING**

When differential locks are engaged on a firm, high-grip surface, the vehicle's steerability is greatly impaired. In particular, engaging the differential locks when cornering could lead to you losing control of the vehicle. There is a risk of an accident.

Disengage the differential locks immediately on firm, high-grip surfaces.

⚠ **WARNING**

ABS, 4ETS, ESP® and BAS are deactivated while the differential locks are engaged. As a result, the wheels could lock when braking and the braking distance is increased. There is a risk of an accident.

Disengage the differential locks immediately on firm, high-grip surfaces.

! In order to avoid damage to the transfer case, you must operate the vehicle on a dynamometer (1-axle dynamometer) only if:

- the axle not driven on is jacked up

  or
- the corresponding propeller shaft is disconnected and the transfer case differential lock is activated.

Otherwise, the transfer case can be damaged.

Differential locks improve the traction of the vehicle.

Your vehicle is equipped with a differential lock for:

- the transfer case: this controls the balance between the front and rear axles.
- the rear axle: this controls the balance between the wheels on the rear axle.
- the front axle: this controls the balance between the wheels on the front axle.

Information on differential and differential locks

When the vehicle drives around a curve, the wheels on the outside of the curve must cover a greater distance. Therefore, the wheels turn more rapidly than on the inside. The differential, a transmission in the drive train, compensates for these different rotational speeds, making cornering possible.

The disadvantage of a differential is that more power is transferred to the wheels that have the least grip. An example: a wheel of a driven axle is on a snow-covered surface and therefore does not have any traction. The differential causes this wheel to be subjected to the strongest driving force, as the flow of force takes the path of least resistance. The opposite wheel on this axle, however, which stands on firm ground and could therefore allow propulsion, receives no driving power. 4ETS compensates for this disadvantage. 4ETS provides good steerability by automatically braking the spinning wheel. 4ETS provides the wheel on the firm surface with more drive force, which in turn provides propulsion.

ESP® and 4ETS are traction systems that are ideal for road driving and suitable for light off-road driving. The **LOW RANGE** off-road gear also improves off-road capability.

Moreover, the more difficult conditions in off-road driving require further measures such as locking one or several differentials. Your vehicle is equipped with three differential locks:

- a central differential lock for the transfer case,
- a differential lock for the front axle and
- a differential lock for the rear axle.

Each differential lock can be engaged with the respective switch on the center console. If the transfer case differential is disabled, the front and rear wheels turn at the same speed. If the differential for the rear axle is locked, both rear wheels turn at the same speed, regardless of their individual torques. Please note that activating the differential locks severely restricts the vehicle's steerability.

Please note that the functions of the differential are absolutely necessary for driving on paved roads. The differential locks must never be engaged when driving on paved roads. Otherwise, the vehicle may not be steerable and you could lose control of the vehicle. The differential locks must therefore only be engaged when driving off-road. You may only engage the differential locks if the functions of the 4ETS and ESP® driving systems and the **LOW RANGE** off-road gear are insufficient.

ℹ The differential locks are only available in the **LOW RANGE** off-road gear.

Activating the differential lock

Important safety notes

⚠ **WARNING**

When differential locks are engaged on a firm, high-grip surface, the vehicle's steerability is greatly impaired. In particular, engaging the differential locks when cornering could lead to you losing control of the vehicle. There is a risk of an accident.

Disengage the differential locks immediately on firm, high-grip surfaces.

⚠ **WARNING**

ABS, 4ETS, ESP® and BAS are deactivated while the differential locks are engaged. As a result, the wheels could lock when braking and the braking distance is increased. There is a risk of an accident.

Disengage the differential locks immediately on firm, high-grip surfaces.

! Only activate the differential locks when:

- you are driving at walking pace.
- the driven wheels are not spinning.
- you are not driving on a firm road surface.

General notes

The switches are located on the center console.

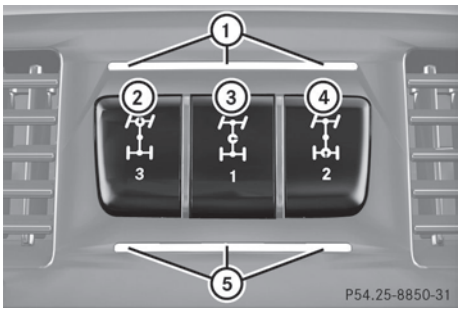

① Function indicator lamps (red)
② Differential lock for the front axle
③ Differential lock for the transfer case
④ Differential lock for the rear axle
⑤ Activation indicator lamps (yellow)

Activate the differential locks:

- off-road
- to deactivate ABS, 4ETS, ESP® and BAS while off-road
- when fording

For further information on driving off-road, see (▷ page 164).

ℹ You can only engage the differential locks if the transfer case is in the **LOW RANGE** off-road driving position (▷ page 198).

ℹ You can activate the differential locks in the following order ③, ④, ②.

Differential lock for the transfer case

▶ **To engage:** switch the transfer case to the **LOW RANGE** off-road driving position (▷ page 199).

▶ Press switch ③.

When the transfer case is in the **LOW RANGE** off-road driving position, the yellow activation indicator lamp below switch ③ lights up.

The [OFF] warning lamp in the instrument panel lights up.

When the differential is locked, the red function indicator lamp above switch ③ lights up.

In the multifunction display you see the:

`ABS not available Differential Locked`

The [OFF] [ABS] [⚠] warning lamps in the instrument cluster light up.

The differential lock for the transfer case is engaged.

4ETS, ESP®, BAS and ABS are deactivated.

The vehicle's ability to steer is severely restricted. Drive carefully and accelerate gently for optimum traction.

ℹ You can now engage the differential lock for rear axle ④ and the differential lock for front axle ② as required.

Differential lock for the rear axle

▶ **To engage:** press switch ④.

Yellow activation indicator lamp ⑤ lights up first, followed by red function indicator lamp ① of switch ④.

The differential lock for the rear axle is engaged.

Differential lock for the front axle

▶ **To engage:** press switch ②.

First, the yellow activation indicator lamp lights up, followed by the red function indicator lamp.

The differential lock for the front axle is engaged.

Deactivating the differential lock

You can deactivate the differential locks in this order: ②, ④, ③.

▶ **To simultaneously deactivate all differential locks:** press switch ③.

Yellow activation indicator lamps ⑤ and red function indicator lamps ① go out.

After approximately three seconds of normal driving, ABS, 4ETS, ESP® and BAS are activated.

The `ABS not available Differential Locked` message disappears from the multifunction display and the [OFF], [ABS] and [⚠] warning lamps in the instrument cluster go out.

▶ Shift the transfer case to the **HIGH RANGE** on-road position (▷ page 199).

ℹ If red function indicator lamps ① do not go out after disengaging the differential locks, bring the vehicle to a standstill in accordance with the traffic conditions. Then continue driving, as the load change can release the differential locks.

Towing a trailer

Notes on towing a trailer

Important safety notes

⚠ **WARNING**

If you rest your foot on the brake pedal while driving, the braking system can overheat. This increases the stopping distance and can even cause the braking system to fail. There is a risk of an accident.

Never use the brake pedal as a footrest. Never depress the brake pedal and the accelerator pedal at the same time.

⚠ **WARNING**

When the vehicle/trailer combination begins to lurch, you could lose control of it. The vehicle/trailer combination could even rollover. There is a risk of an accident.

On no account should you attempt to straighten up the vehicle/trailer combination by increasing the speed. Reduce vehicle speed and do not countersteer. Apply the brake as necessary.

⚠ **WARNING**

If you install a ball coupling other than the one delivered with the vehicle, the trailer tow hitch and the rear axle may be overloaded. This applies especially if the ball coupling in question is longer or angled differently. This could seriously impair the driving characteristics and the trailer can come loose. There is a risk of an accident.

Only install the ball coupling delivered with the vehicle or a ball coupling that is designed to meet your trailer towing requirements. Do not modify the ball coupling or the trailer tow hitch.

⚠ **WARNING**

If the ball coupling is not installed correctly or not secured with the bolt provided and the corresponding spring cotter, the trailer may come loose. There is a risk of an accident.

Always install and secure the ball coupling as described. Before every journey, ensure that the ball coupling is secured with the bolt and the corresponding spring cotter.

Please observe the manufacturer's operating instructions for the trailer coupling if a detachable trailer coupling is used.

You will find the applicable permissible values, which must not be exceeded, in the vehicle documents. You will find the values approved by the manufacturer on the vehicle identification plates and those for the towing vehicle in the "Technical data" section (▷ page 349).

Couple and uncouple the trailer carefully. If you do not couple the trailer to the towing vehicle correctly, the trailer could become detached.

Make sure that the following values are not exceeded:

- the permissible trailer drawbar noseweight
- the permissible trailer load
- the permissible rear axle load of the towing vehicle
- the maximum permissible gross vehicle weight of both the towing vehicle and the trailer

When towing a trailer, your vehicle's handling characteristics will be different in comparison with when driving without a trailer.

The vehicle/trailer combination:

- is heavier
- is restricted in its acceleration and gradient-climbing capability
- has an increased braking distance
- is affected more by strong crosswinds
- demands more sensitive steering
- has a larger turning circle

This could impair the handling characteristics.

When towing a trailer, always adjust your speed to the current road and weather conditions. Do not exceed the maximum permissible speed for your vehicle/trailer combination.

General notes

- Do not exceed the legally prescribed maximum speed for vehicle/trailer combinations in the relevant country.

  This lowers the risk of an accident.
- Only install an approved trailer coupling on your vehicle.

  Further information on availability and on installation is available from any authorized Mercedes-Benz Center.

- The bumpers of your vehicle are not suitable for installing detachable trailer couplings.
- Do not install hired trailer couplings or other detachable trailer couplings on the bumpers of your vehicle.
- If you do not need the ball coupling, remove the ball coupling from the ball coupling recess. This reduces the risk of damage to the ball coupling.

ⓘ When towing a trailer, set the tire pressure on the rear axle of the towing vehicle for a maximum load; see the tire pressure table in the fuel filler flap (▷ page 322).

You will find installation dimensions and loads in the technical data (▷ page 358).

The maximum permissible trailer drawbar noseweight on the ball coupling for up to 3 persons is 562 lbs (255 kg). The maximum permissible trailer drawbar noseweight for more than 3 persons and the maximum load in the trunk can be found in the trailer drawbar noseweight table (▷ page 358). However, the actual noseweight must not exceed the value given on the trailer tow hitch or trailer identification plates. The lowest weight applies.

ⓘ When towing a trailer, set the tire pressure on the rear axle of the towing vehicle for a maximum load; see the tire pressure table in the fuel filler flap (▷ page 322).

Please note that when towing a trailer, PARKTRONIC (▷ page 194) and Blind Spot Assist (▷ page 186) are only available with limitations, or not at all.

ⓘ On vehicles without level control, the height of the ball coupling will alter according to the load placed on the vehicle. If necessary, use a trailer with a height-adjustable drawbar.

Driving tips

▶ On long and steep downhill gradients, select shift range **1**, **2** or **3** (▷ page 150) in good time.

ⓘ This also applies if you have activated cruise control or SPEEDTRONIC.

▶ If necessary, shift the transfer case to **LOW RANGE**(▷ page 199).
This will use the braking effect of the engine, so that less braking will be required to maintain the speed. which relieves the load on the brake system and prevents the brakes from overheating and wearing too quickly. If you need additional braking, depress the brake pedal repeatedly rather than continuously.

The maximum permissible speed for vehicle/trailer combinations depends on the type of trailer. Before beginning the journey, check the trailer's documents to see what the maximum permitted speed is. Observe the legally prescribed maximum speed in the relevant country.

For certain Mercedes-Benz vehicles, the maximum permissible rear axle load is increased when towing a trailer. Refer to the "Technical data" section to find out whether this applies to your vehicle. If you utilize any of the added maximum rear axle load when towing a trailer, the vehicle/trailer combination may not exceed a maximum speed of 60 mph (100 km/h) for reasons concerning the operating permit. This also applies in countries in which the permissible maximum speed for vehicle/trailer combinations is above 60 mph (100 km/h).

When towing a trailer, your vehicle's handling characteristics will be different in comparison to when driving without a trailer and it will consume more fuel.

On long and steep downhill gradients, you must select shift range **1**, **2** or **3** in good time.

ⓘ This also applies if you have activated cruise control or DISTRONIC PLUS.

This will use the braking effect of the engine, so that less braking will be required to maintain the speed. which relieves the load on the brake system and prevents the brakes from overheating and wearing too quickly. If you need additional braking, depress the brake pedal repeatedly rather than continuously.

Driving tips

If the trailer swings from side to side:

▶ Do not accelerate.

▶ Do not counter-steer.

▶ Brake if necessary.

- Maintain a greater distance from the vehicle in front than when driving without a trailer.
- Avoid braking abruptly. If possible, brake gently at first to allow the trailer to run on. Then, increase the braking force rapidly.
- The values given for gradient-climbing capabilities from a standstill refer to sea level. When driving in mountainous areas, note that the power output of the engine, and consequently the vehicle's gradient-climbing capability, decrease with increasing altitude.

Trailer power supply

! You can connect accessories with a maximum power consumption of 180 W to the permanent power supply.

You must not charge a trailer battery using the power supply.

The trailer socket of your vehicle is equipped at the factory with a permanent power supply.

The permanent power supply is supplied via trailer socket pin 9.

A qualified specialist workshop can provide more information about installing the trailer electrics.

Trailer with 7-pin connector

General notes

You can make a connection to the 13-pin socket on the ball coupling using an adapter or, if necessary, an adapter cable. Both can be obtained in a qualified specialist workshop.

Installing the adapter

! Make sure that there is enough slack in the cable for cornering so that the cable cannot become detached.

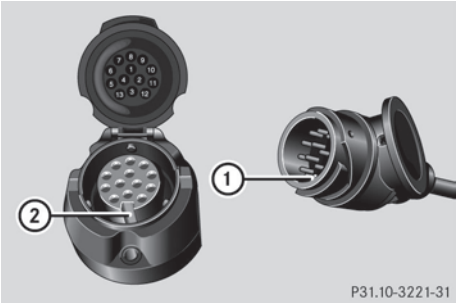

▶ Open the socket cover.

▶ Insert the connector with lug ① into groove ② on the socket and turn the connector clockwise to the stop.

▶ Make the cover engage.

▶ If you are using an adapter cable, secure the cable to the trailer with cable ties.

ℹ When the socket is connected, the ultrasonic backing up aid is deactivated.

Useful information 208
Important safety notes 208
Displays and operation 209
Menus and submenus 212
Display messages 224
Warning and indicator lamps in the instrument cluster 247

Useful information

ℹ This Operator's Manual describes all models and all standard and optional equipment of your vehicle available at the time of publication of the Operator's Manual. Country-specific differences are possible. Please note that your vehicle may not be equipped with all features described. This also applies to safety-related systems and functions.

ℹ Read the information on qualified specialist workshops: (▷ page 23).

Important safety notes

⚠ **WARNING**

The driver's concentration must always be directed primarily at road traffic.

For your safety and the safety of others, selecting features through the multifunction steering wheel should only be done by the driver when traffic and road conditions permit it to be done safely.

Bear in mind that at a speed of only 30 mph (approximately 50 km/h), the vehicle covers a distance of 44 feet (approximately 14 m) per second.

⚠ **WARNING**

No messages will be displayed if either the instrument cluster or the multifunction display is inoperative.

As a result, you will not be able to see information about your driving conditions, such as

- speed
- outside temperature
- warning/indicator lamps
- malfunction/warning messages
- failure of any systems

Driving characteristics may be impaired.

If you must continue to drive, do so with added caution. Contact an authorized Mercedes-Benz Center as soon as possible.

⚠ **WARNING**

Malfunction and warning messages are only displayed for certain systems and are intentionally not very detailed. The malfunction and warning messages are simply a reminder with respect to the operation of certain systems. They do not replace the owner's and/or driver's responsibility to maintain the vehicle's operating safety. Have all required maintenance services and safety checks performed on the vehicle. Bring the vehicle to an authorized Mercedes-Benz Center to address the malfunction and warning messages.

⚠ **WARNING**

All categories of messages contain important information which should be taken note of and, where a malfunction is indicated, addressed as soon as possible at an authorized Mercedes-Benz Center.

Failure to repair the condition noted may cause damage not covered by the Mercedes-Benz Limited Warranty, or result in property damage or personal injury.

For an illustration of the instrument cluster, see (▷ page 209).

Displays and operation

Instrument cluster

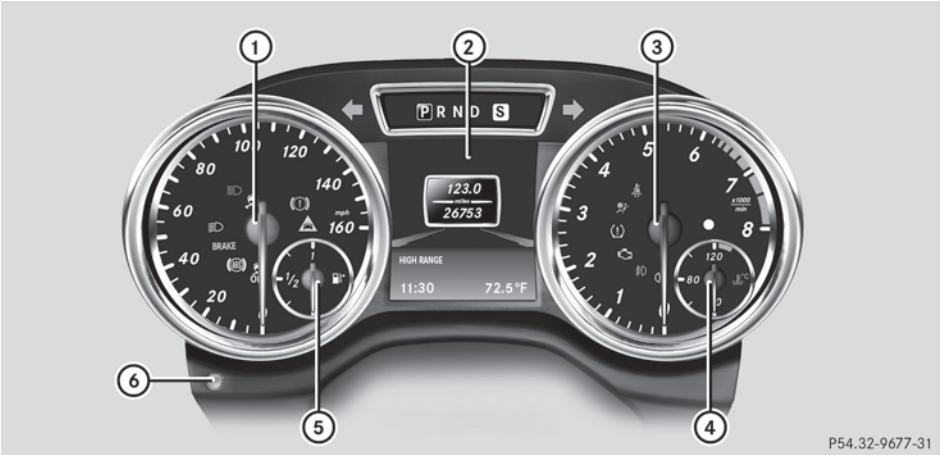

Instrument cluster: miles

① Speedometer with segments (▷ page 210)
② Multifunction display (▷ page 212)
③ Tachometer (▷ page 210)
④ Coolant temperature (▷ page 209)
⑤ Fuel gauge
⑥ Instrument cluster lighting (▷ page 209)

Instrument lighting

The lighting in the instrument cluster, in the displays and the controls in the vehicle interior can be adjusted using the brightness control knob.

The brightness control knob is located on the bottom left of the instrument cluster (▷ page 209).

▶ Turn the brightness control knob clockwise or counter-clockwise.
If the light switch is set to AUTO, ≋DC or ≋D, the brightness is dependent upon the brightness of the ambient light.

ℹ The light sensor in the instrument cluster automatically controls the brightness of the multifunction display.

In daylight, the displays in the instrument cluster are not illuminated.

Displaying the coolant temperature

⚠ **WARNING**

Driving when your engine is overheated can cause some fluids which may have leaked into the engine compartment to catch fire. You could be seriously burned.

Steam from an overheated engine can cause serious burns which can occur just by opening the engine hood. Stay away from the engine if you see or hear steam coming from it.

Stop the vehicle in a safe location away from other traffic. Turn off the engine, get out of the

vehicle and do not stand near the vehicle until the engine has cooled down.

! A display message is shown if the coolant temperature is too high.

If the coolant temperature is over 248 °F(120 °C), do not continue driving. The engine will otherwise be damaged.

The coolant temperature gauge is in the instrument cluster on the right-hand side (▷ page 209).

Under normal operating conditions and with the specified coolant level, the coolant temperature may rise to 248 °F (120 °C).

Tachometer

! Do not drive in the overrevving range, as this could damage the engine.

The red band in the tachometer indicates the engine's overrevving range.

The fuel supply is interrupted to protect the engine when the red band is reached.

Outside temperature display

⚠ **WARNING**

The outside temperature indicator is not designed to serve as an ice-warning device and is therefore unsuitable for that purpose.

Indicated temperatures just above the freezing point do not guarantee that the road surface is free of ice. The road may still be icy, especially in wooded areas or on bridges.

The outside temperature display is in the multifunction display (▷ page 212).

Changes in the outside temperature are displayed after a short delay.

Speedometer with segments

The segments in the speedometer indicate which speed range is available.

- Cruise control activated (▷ page 169):

  The segments light up from the stored speed to the maximum speed.
- Variable SPEEDTRONIC activated (▷ page 174):

  The segments light up from the start of the scale to the selected limit speed.
- DISTRONIC PLUS activated (▷ page 179):

  One or two segments in the set speed range light up.
- DISTRONIC PLUS detects a vehicle in front:

  The segments between the speed of the vehicle in front and the stored speed light up.

Operating the on-board computer

Overview

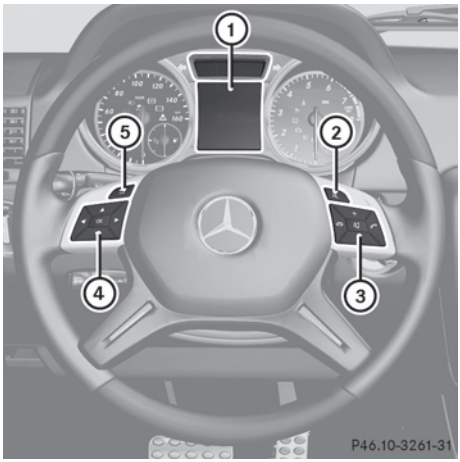

① Multifunction display

② To switch on the Voice Control System; see the separate operating instructions

③ Right control panel

④ Left control panel

⑤ Back button

▶ **To activate the on-board computer:** turn the SmartKey to position **1**(▷ page 139) in the ignition lock.

You can control the multifunction display and the settings in the on-board computer using the buttons on the multifunction steering wheel.

Left control panel

◀ ▶	• Calls up the menu and menu bar
▲ ▼	**Press briefly:** • Scrolls in lists • Selects a submenu or function • In the Audio menu: selects a stored station, an audio track or a video scene • In the Tel (telephone) menu: switches to the phone book and selects a name or telephone number
▲ ▼	**Press and hold:** • In the Audio menu: selects the previous/next station or selects an audio track or a video scene using rapid scrolling • In the Tel (telephone) menu: starts rapid scrolling if the phone book is open
OK	• Confirms a selection/display message • In the Tel (telephone) menu: switches to the telephone book and starts dialing the selected number • In the Audio menu: stops the station search function at the desired station

Right control panel

	• Rejects or ends a call • Exits phone book/redial memory
	• Makes or accepts a call • Switches to the redial memory
+ −	• Adjusts the volume
	• Mute

Back button

	Press briefly: • Back • Switches off the Voice Control System; see the separate operating instructions • Hides display messages/calls up the last Trip menu function used • Exits the telephone book/redial memory
	Press and hold: • Calls up the standard display in the Trip menu

Multifunction display

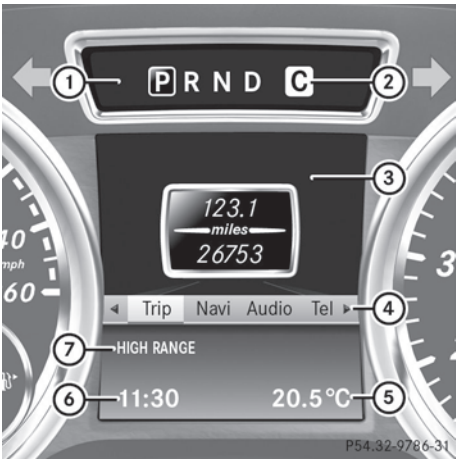

① Transmission position (▷ page 148)
② Drive program (▷ page 149)
③ Description field
④ Menu bar
⑤ Outside temperature or speed (▷ page 219)
⑥ Time
⑦ Transfer case position (▷ page 198)

▶ **To show menu bar ④:** press the ◀ or ▶ button on the steering wheel.

Menu bar ④ disappears after a few seconds.

Text field ③ shows the selected menu or submenu as well as display messages.

For further information on displaying the transmission position, see (▷ page 146).

ℹ You can set the time using the audio system or COMAND, see the separate operating instructions.

The following messages may appear in the multifunction display:

↑	Upshift indicator (▷ page 151)
[speedometer]	Cruise control (▷ page 169)
LIM	SPEEDTRONIC (▷ page 174)
ECO	ECO start/stop function (AMG vehicles) (▷ page 141)
LOW RANGE	LOW RANGE off-road gear (▷ page 199)
HOLD	HOLD function (▷ page 192)

Menus and submenus

Menu overview

Press the ◀ or ▶ button on the steering wheel to call up the menu bar and select a menu.

Operating the on-board computer (▷ page 210).

Depending on the equipment installed in the vehicle, you can call up the following menus:

- Trip menu (▷ page 212)
- Navi menu (navigation instructions) (▷ page 214)
- Audio menu (▷ page 215)
- Tel menu (telephone) (▷ page 216)
- DriveAssist menu (assistance) (▷ page 218)
- Serv. menu (▷ page 218)
- Sett. menu (▷ page 218)
- AMG menu in AMG vehicles (▷ page 222)

Trip menu

Standard display

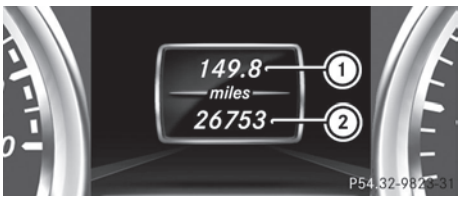

▶ Press and hold the ⮌ button on the steering wheel until the Trip menu with trip odometer ① and odometer ② is shown.

Trip computer "From start" or "From reset"

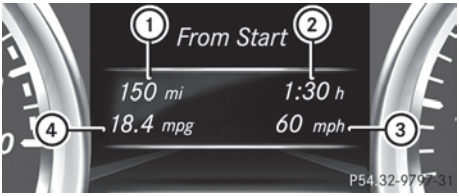

Example: trip computer "From Start"

① Distance

② Time

③ Average speed

④ Average fuel consumption

▶ Press the ◀ or ▶ button on the steering wheel to select the Trip menu.

▶ Press ▲ or ▼ to select From Start or From Reset.

The values in the From Start submenu are calculated from the start of a journey whilst the values in the From Reset submenu are calculated from the last time the submenu was reset (▷ page 214).

The From Start trip computer is automatically reset when:

- The ignition has been switched off for more than four hours.
- 999 hours have been exceeded.
- 9,999 miles have been exceeded.

The From Reset trip computer is automatically reset if the value exceeds 9,999 hours or 99,999 miles.

Displaying the range and current fuel consumption

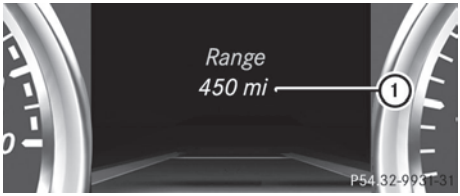

① Approximate range

② Current fuel consumption (not for AMG vehicles)

▶ Press the ◀ or ▶ button on the steering wheel to select the Trip menu.

▶ Press the ▲ or ▼ button to select the current fuel consumption (not for AMG vehicles) and the approximate range.

The approximate range that can be covered depends on the fuel level and your current driving style. If there is only a small amount of fuel left in the fuel tank, the display shows a vehicle being refueled instead of the range.

Digital speedometer

① Digital speedometer

▶ Press the ◀ or ▶ button on the steering wheel to select the Trip menu.

▶ Press the ▲ or ▼ button to select the digital speedometer.

Resetting values

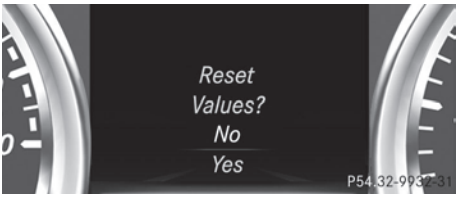

Example: resetting the trip computer "From Start"

- ▶ Press the ◀ or ▶ button on the steering wheel to select the Trip menu.
- ▶ Press the ▲ or ▼ button to select the function that you wish to reset.
- ▶ Press the OK button.
- ▶ Press the ▼ button to select Yes and press the OK button to confirm.

You can reset the values of the following functions:

- Trip odometer
- "From Start" trip computer
- "From Reset" trip computer

Navigation system menu

Displaying navigation instructions

In the Navi menu, the multifunction display shows navigation instructions.

For more information, see the separate operating instructions.

- ▶ Switch on COMAND (see the separate operating instructions).
- ▶ Press the ◀ or ▶ button on the steering wheel to select the Navi menu.

Route guidance not active

① Direction of travel

② Current street

Route guidance active

No change of direction announced

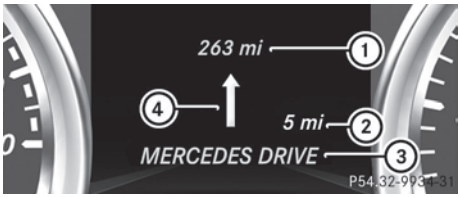

① Distance to the destination

② Distance to the next change of direction

③ Current street

④ Symbol "follow the road's course"

Change of direction announced without a lane recommendation

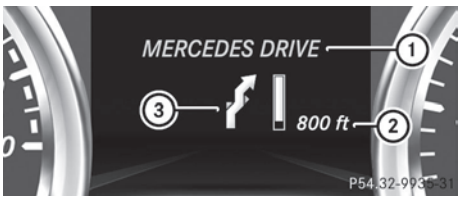

① Road into which the change of direction leads

② Distance to change of direction and visual distance display

③ Change-of-direction icon

When a change of direction has been announced, you will see visual distance display ② next to the symbol for change of direction ③. This shortens from the bottom

to the top of the display as you approach the point of the announced change of direction.

Change of direction announced with a lane recommendation

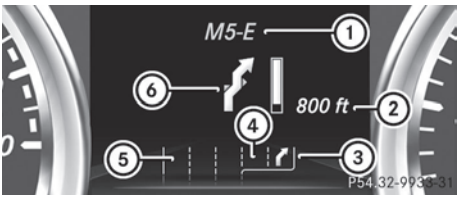

① Road into which the change of direction leads
② Distance to change of direction and visual distance display
③ Lane recommendation
④ New lane during a change of direction
⑤ Uninterrupted lane
⑥ Change-of-direction icon

On multilane roads, the system can display lane recommendation ③ for the next change of direction. During the change of direction, additional lanes may be displayed.

Lane recommendations are only displayed if the relevant data is available on the digital map.

Other status indicators of the navigation system

- ▩ : you have reached the destination or an intermediate destination.
- New Route... or Calculating Route: calculating a new route
- Off Map or Off Mapped Road: the vehicle position is outside the area of the digital map (off-map position).
- No Route: no route could be calculated to the selected destination.

Audio menu

Selecting a radio station

① Waveband
② Station frequency with memory position

ℹ Station ② is displayed with the station frequency or station name. The memory position is only displayed along with station ② if this has been stored.

▶ Switch on COMAND and select Radio; see the separate operating instructions.

▶ Press the ◀ or ▶ button on the steering wheel to select the Audio menu.

▶ **To select a stored station:** briefly press the ▲ or ▼ button.

▶ **To select a station from the station list:** press and briefly hold the ▲ or ▼ button.

If no station list is received:

▶ **To select a station using the station search:** press and briefly hold the ▲ or ▼ button.

ℹ For information on switching waveband and storing stations; see the separate operating instructions.

ℹ SIRIUS XM satellite radio functions like a normal radio.

For more information on satellite radio operation, see the separate operating instructions.

Operating audio devices or media

Display CD/DVD changer (example)

① Current CD in the CD/DVD changer

② Current title

Audio data from various audio devices or media can be played, depending on the equipment installed in the vehicle.

▶ Switch on COMAND and select the audio player or medium (see the separate operating instructions).

▶ Press the ◀ or ▶ button on the steering wheel to select the Audio menu.

▶ **To select the next/previous track:** briefly press the ▲ or ▼ button.

▶ **To select a track from the track list (rapid scrolling):** press and hold the ▲ or ▼ button until desired track ② has been reached.

If you press and hold ▲ or ▼, the rapid scrolling speed is increased. Not all audio drives or data carriers support this function.

If track information is stored on the audio device or medium, the multifunction display will show the number and title of the track. The current track does not appear in audio AUX mode (**Aux**iliary audio mode: external audio source connected).

Video DVD operation

Display CD/DVD changer (example)

① Current DVD in the CD/DVD changer

② Current scene

▶ Switch on COMAND and select video DVD; see the separate operating instructions.

▶ Press the ◀ or ▶ button on the steering wheel to select the Audio menu.

▶ **To select the next/previous scene:** briefly press the ▲ or ▼ button.

▶ **To select a scene from the scene list (rapid scrolling):** press and hold the ▲ or ▼ button until desired scene ② has been reached.

Telephone menu

Introduction

⚠ **WARNING**

The driver's attention to the road must always be his/her primary focus when driving. For your safety and the safety of others, we recommend that you pull over to a safe location and stop before placing or taking a telephone call. If you choose to use the telephone while driving, please use the hands-free device and only use the telephone when road, weather and traffic conditions permit.

Some jurisdictions prohibit the driver from using a mobile phone while driving a vehicle.

Bear in mind that at a speed of just 30 mph (approximately 50 km/h), your vehicle covers a distance of 44 feet (approximately 14 m) every second.

- Switch on the mobile phone (see the separate operating instructions).
- Switch on COMAND (see the separate operating instructions).
- Establish a Bluetooth® connection to COMAND; see the separate operating instructions.
- Press the ◀ or ▶ button on the steering wheel to select the Tel menu.

You will see one of the following display messages in the multifunction display:

- Phone READY or the name of the network provider: the mobile phone has found a network and is ready to receive.
- Phone No Service: there is no network available or the mobile phone is searching for a network.

Accepting a call

Example: incoming call

If someone calls you when you are in the Tel menu, a display message appears in the multifunction display.

- Press the button on the steering wheel to accept an incoming call.

You can accept a call even if you are not in the Tel menu.

Rejecting or ending a call

- Press the button on the steering wheel.

You can end or reject a call even if you are not in the Tel menu.

Dialing a number from the phone book

- Press the ◀ or ▶ button on the steering wheel to select the Tel menu.
- Press the ▲, ▼ or OK button to switch to the phone book.
- Press the ▲ or ▼ button to select the desired name.

or

- **To begin rapid scrolling:** press and hold the ▲ or ▼ button for longer than one second.
  Rapid scrolling stops when you release the button or reach the end of the list.
- **If only one telephone number is stored for a name:** press the or OK button to start dialing.

or

- **If there is more than one number for a particular name:** press the or OK button to display the numbers.
- Press the ▲ or ▼ button to select the number you want to dial.
- Press the or OK button to start dialing.

or

- **To exit the telephone book:** press the or button.

Redialing

The on-board computer saves the last names or numbers dialed in the redial memory.

- Press the ◀ or ▶ button on the steering wheel to select the Tel menu.
- Press the button to switch to the redial memory.
- Press the ▲ or ▼ button to select the desired name or number.
- Press the or OK button to start dialing.

or

- **To exit the redial memory:** press the or button.

Assistance menu

Introduction

In the DriveAssist menu, you have the following options:

- show the distance display (▷ page 218)
- activate/deactivate Blind Spot Assist or Active Blind Spot Assist (▷ page 218)

Showing the distance display

▶ Press ◀ or ▶ on the steering wheel to select the DriveAssist menu.

▶ Press the ▲ or ▼ button to select Distance Display.

▶ Press the OK button.
The DISTRONIC PLUS distance display appears in the multifunction display (▷ page 182).

Activating/deactivating Blind Spot Assist

▶ Press ◀ or ▶ on the steering wheel to select the DriveAssist menu.

▶ Press the ▲ or ▼ button to select Blind Spot Asst.

▶ Press the OK button.
The current selection is displayed.

▶ **To activate/deactivate:** press the OK button again.

For further information about Blind Spot Assist, see (▷ page 186).

For further information about Active Blind Spot Assist, see (▷ page 188).

Service menu

Example: service menu

In the Serv. menu, you have the following options:

- calling up display messages (▷ page 225)
- checking the tire pressure electronically (▷ page 327)
- calling up when a service is due (▷ page 293)

Settings menu

Introduction

Example: settings menu

In the Sett. menu, you have the following options:

- changing the instrument cluster settings (▷ page 219)
- changing the light settings (▷ page 219)
- changing the vehicle settings (▷ page 220)
- changing the convenience settings (▷ page 221)
- restoring the factory settings (▷ page 222)

Instrument cluster

Selecting the unit of measurement for distance

The Display Unit Speed-/Odometer: function allows you to choose whether certain displays appear in kilometers or miles in the multifunction display.

You can determine whether the multifunction display shows some messages in miles or kilometers.

- ▶ Press the ◀ or ▶ button on the steering wheel to select the Sett. menu.
- ▶ Press the ▼ or ▲ button to select the Inst. Cluster submenu.
- ▶ Press OK to confirm.
- ▶ Press the ▼ or ▲ button to select the Display Unit Speed-/Odometer: function.
  You will see the selected setting: km or miles.
- ▶ Press the OK button to save the setting.

The selected unit of measurement for distance applies to:

- **Vehicles with instrument cluster in kilometers:** digital speedometer in the Trip menu
- the odometer and the trip odometer
- the trip computer
- the current consumption and the range
- the navigation instructions in the Navi menu
- cruise control
- SPEEDTRONIC
- DISTRONIC PLUS
- the service interval display

Selecting the permanent display function

You can determine whether the multifunction display permanently shows your speed or the outside temperature.

- ▶ Press the ◀ or ▶ button on the steering wheel to select the Sett. menu.
- ▶ Press the ▼ or ▲ button to select the Instr. Cluster submenu.
- ▶ Press OK to confirm.
- ▶ Press the ▼ or ▲ button to select the Permanent Display: function.
  You will see the selected setting: Outside Temperature or Speedometer [mph].
- ▶ Press the OK button to save the setting.

ⓘ Speed is displayed in mph.

Lights

Setting the daytime running lamps

ⓘ This function is not available in Canada.

- ▶ Press the ◀ or ▶ button on the steering wheel to select the Sett. menu.
- ▶ Press the ▼ or ▲ button to select the Lights submenu.
- ▶ Press OK to confirm.
- ▶ Press ▼ or ▲ to select the Daytime Running Lights function.
  If the Daytime Running Lights: have been switched on, the cone of light and the ☀ symbol in the multifunction display are shown in red.
- ▶ Press the OK button to save the setting.

Further information on daytime running lamps (▷ page 99).

Surround lighting and exterior lighting delayed switch-off

- ▶ Press the ◀ or ▶ button on the steering wheel to select the Sett. menu.
- ▶ Press the ▼ or ▲ button to select the Lights submenu.
- ▶ Press OK to confirm.

▶ Press ▼ or ▲ to select the Surround Lighting function.
When the Surround Lighting function is activated, the cone of light in the multifunction display is shown in red.

▶ Press the OK button to save the setting.

Deactivating delayed switch-off of the exterior lighting temporarily:

▶ Before leaving the vehicle, turn the SmartKey to position **0**(▷ page 139) in the ignition lock.

▶ Turn the SmartKey to position **2** in the ignition lock (▷ page 139).
The exterior lighting delayed switch-off is deactivated.

Delayed switch-off of the exterior lighting is reactivated the next time you start the engine.

If you have activated the Surround Lighting function and the light switch is set to AUTO, the following functions are activated when it is dark:

- **Surround lighting:** the exterior lighting remains lit for 40 seconds after unlocking with the SmartKey. If you start the engine, the surround lighting is switched off and automatic headlamp mode is activated (▷ page 100).
- **Exterior lighting delayed switch-off:** the exterior lighting remains lit for 60 seconds after the engine is switched off. If you close all the doors and the trunk lid, the exterior lighting goes off after 15 seconds.

ⓘ Depending on your vehicle's equipment, when the surround lighting and delayed switch-off exterior lighting are on, the following light up:

- Parking lamps
- Front fog lamps
- Low-beam headlamps
- Daytime running lamps
- Side marker lamps
- Surround lighting in the exterior mirrors

Activating/deactivating the interior lighting delayed switch-off

If you activate the Interior Lighting Delay function, the interior lighting remains on for 20 seconds after you remove the SmartKey from the ignition lock.

▶ Press the ◀ or ▶ button on the steering wheel to select the Sett. menu.

▶ Press the ▼ or ▲ button to select the Lights submenu.

▶ Press OK to confirm.

▶ Press ▼ or ▲ to select the Interior Lighting Delay function.
When the Interior Lighting Delay function is activated, the vehicle interior is displayed in red in the multifunction display.

▶ Press the OK button to save the setting.

Vehicle

Activating/deactivating the automatic door locking mechanism

If you activate the Automatic Door Lock function, the vehicle is centrally locked above a speed of around 9 mph (15 km/h).

▶ Press the ◀ or ▶ button on the steering wheel to select the Sett. menu.

▶ Press the ▼ or ▲ button to select the Vehicle submenu.

▶ Press OK to confirm.

▶ Press ▼ or ▲ to select the Automatic Door Lock function.
When the Automatic Door Lock function is activated, the vehicle doors are displayed in red in the multifunction display.

▶ Press the OK button to save the setting.

For further information on the automatic locking feature, see (▷ page 75).

Activating/deactivating the acoustic locking verification signal

If you switch on the Acoustic Lock function, an acoustic signal sounds when you lock the vehicle.

- ▶ Press the ◀ or ▶ button on the steering wheel to select the Sett. menu.
- ▶ Press ▼ or ▲ to select the Vehicle submenu.
- ▶ Press OK to confirm.
- ▶ Press the ▼ or ▲ button to select the Acoustic Lock function.
  If the Acoustic Lock function is activated, the 🔒 symbol in the multifunction display lights up red.
- ▶ Press the OK button to save the setting.

Convenience

Activating/deactivating the EASY-ENTRY/EXIT feature

⚠ WARNING

You must make sure no one can become trapped or injured by the moving steering wheel when the easy-entry/exit feature is activated.

To stop steering wheel movement, move steering wheel adjustment lever or press one of the memory position buttons.

Do not leave children unattended in the vehicle, or with access to an unlocked vehicle. Children could open the driver's door and unintentionally activate the easy-entry/exit feature, which could result in an accident and/or serious personal injury.

- ▶ Press the ◀ or ▶ button on the steering wheel to select the Sett. menu.
- ▶ Press the ▼ or ▲ button to select the Convenience submenu.
- ▶ Press OK to confirm.
- ▶ Press ▼ or ▲ to select the Easy Entry/Exit: function.
  If the Easy Entry/Exit function is activated, the vehicle steering wheel is displayed in red in the multifunction display.
- ▶ Press the OK button to save the setting.

Further information on the EASY-ENTRY/EXIT feature (▷ page 92).

Switching the fold-in mirrors when locking feature on/off

When you activate the Auto. Mirror Folding function, the exterior mirrors are folded in when the vehicle is locked. If you unlock the vehicle and then open a door, the exterior mirrors fold out again.

- ▶ Press the ◀ or ▶ button on the steering wheel to select the Sett. menu.
- ▶ Press the ▼ or ▲ button to select the Convenience submenu.
- ▶ Press OK to confirm.
- ▶ Press ▼ or ▲ to select the Auto. Mirror Folding function.
  If the Auto. Mirror Folding function is activated, the vehicle's exterior mirror is displayed in red in the multifunction display.
- ▶ Press the OK button to save the setting.

① To fold the exterior mirrors in or out

If you have switched the Auto. Mirror Folding on and you fold the exterior mirrors in using button ①, they will not fold out automatically (▷ page 93).

You can then only fold out the exterior mirrors using button ①.

Restoring the factory settings

- Press the ◀ or ▶ button on the steering wheel to select the Sett. menu.
- Press the ▼ or ▲ button to select the Factory Setting submenu.
- Press OK to confirm.
  The Reset All Settings? message appears.
- Press the ▼ or ▲ button to select No or Yes.
- Press OK to confirm the selection.
  If you select Yes, the multifunction display shows a confirmation message.

For safety reasons, the Daytime Running Lights function in the Lights submenu is only reset if the vehicle is stationary.

AMG menu in AMG vehicles

AMG displays

P54.32-9367-31

① Digital speedometer
② Gear indicator
③ Upshift indicator
④ Engine oil temperature
⑤ Coolant temperature
⑥ Status indicator for ECO start/stop function (▷ page 141)

- Press ◀ or ▶ on the steering wheel to select the AMG menu.

Upshift indicator UP ③ indicates that the engine has reached the overrevving range when in the manual gearshift program.

Upshift indicator UP ③ fades out other messages until you have shifted up.

If the engine oil temperature is below 176 °F (80 °C), the oil temperature is shown in blue. Avoid driving at full engine output during this time.

SETUP

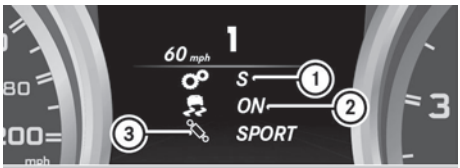

P54.32-9378-31

① Drive program (C/SS+/M)
② ESP® mode (ON/OFF)
③ Suspension tuning (SPORT/COMFORT)

SETUP shows the drive program, the ESP® (Electronic Stability Program) mode and the SPORT handling mode.

- Press ◀ or ▶ on the steering wheel to select the AMG menu.
- Press the ▲ button repeatedly until SETUP is displayed.

RACETIMER

Displaying and starting RACETIMER

⚠ WARNING

The RACETIMER feature is only for use on roads and in conditions where high speed driving is permitted. Racing on public roads is prohibited under all circumstances. The driver is and must always remain responsible for following posted speed limits.

P54.32-9368-31

① Lap

② RACETIMER

You can start the RACETIMER when the engine is running or if the SmartKey is in position **2**(▷ page 139) in the ignition lock.

▶ Press ◀ or ▶ on the steering wheel to select the AMG menu.

▶ Press the ▲ button repeatedly until the RACETIMER is shown.

▶ **To start:** press the OK button to start the RACETIMER.

Displaying the intermediate time

P54.32-9370-31

▶ Press the ◀ or ▶ button to select Interm. Time.

▶ Press OK to confirm.
The intermediate time is displayed for five seconds.

Starting a new lap

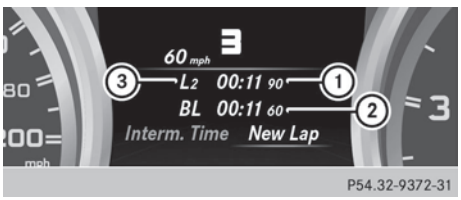

P54.32-9372-31

① RACETIMER

② Fastest lap time (best lap)

③ Lap

▶ Press OK to confirm New Lap.

ℹ It is possible to store a maximum of sixteen laps. The 16th lap can only be completed with Finish Lap.

Stopping the RACETIMER

P54.32-9374-31

▶ Press the ⮌ button on the steering wheel.

▶ Press OK to confirm Yes.

The RACETIMER is interrupted if you stop the vehicle and turn the SmartKey to position **1**(▷ page 139) in the ignition lock. If you turn the SmartKey to position **2** or **3**(▷ page 139) and then press OK to confirm Start, timing is continued.

Resetting the current lap

▶ Stop the RACETIMER (▷ page 223).

▶ Press ◀ or ▶ to select Reset Lap.

▶ Press OK to reset the lap time to "0".

Deleting all laps

P54.32-9376-31

If you switch off the engine, the RACETIMER is reset to "0" after 30 seconds. All laps are deleted.

You cannot delete individual stored laps. If you have stopped 16 laps, the current lap does not have to be reset.

- ▶ Reset the current lap (▷ page 223).
- ▶ Press OK to confirm Reset.
  Reset Race Timer? appears in the multifunction display.
- ▶ Press the ▼ button to select Yes and press the OK button to confirm.
  All laps are deleted.

Overall statistics

① RACETIMER overall evaluation
② Total time driven
③ Average speed
④ Distance covered
⑤ Maximum speed

This function is shown if you have stored at least one lap and stopped the RACETIMER.

- ▶ Press ◀ or ▶ on the steering wheel to select the AMG menu.
- ▶ Press the ▲ button repeatedly until the overall evaluation is shown.

Lap statistics

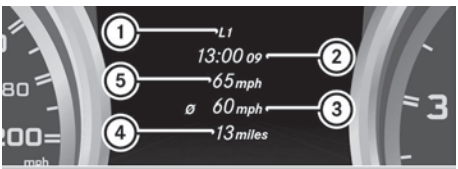

① Lap
② Lap time
③ Average lap speed
④ Lap length
⑤ Top speed during lap

This function is only available if you have stored at least two laps and have stopped the RACETIMER.

- ▶ Press ◀ or ▶ on the steering wheel to select the AMG menu.
- ▶ Press the ▲ button repeatedly until the lap evaluation is shown.
  Each lap is shown in a separate submenu. The fastest lap is indicated by flashing symbol ①.
- ▶ Press the ▲ or ▼ button to select a different lap evaluation.

Display messages

Introduction

General notes

Display messages appear in the multifunction display.

Display messages with graphic displays may be shown in simplified form in the Operator's Manual and may differ from the messages shown in the multifunction display.

Please respond in accordance with the display messages and follow the additional notes in this Operator's Manual.

Certain display messages are accompanied by an audible warning tone or a continuous tone.

When you stop and park the vehicle, please observe the notes on:

- HOLD function (▷ page 192)
- Parking (▷ page 156)

Hiding display messages

- ▶ Press the OK or ⮌ button on the steering wheel to hide the display message.
  The display message is cleared.

Display messages with a high priority are shown in red.

You cannot hide display messages of the highest priority. The multifunction display

shows these messages continuously until the causes for the messages have been remedied.

Message memory menu

The on-board computer saves certain display messages. You can call up the display messages in the **message memory**.

- Press the ◀ or ▶ button on the steering wheel to select the Serv. menu. If there are display messages, the multifunction display shows 2 Messages, for example.
- Press the ▲ or ▼ button to select the entry, e.g. 2 Messages.
- Press OK to confirm.
- Press the ▲ or ▼ button to scroll through the display messages.

When the ignition is switched off, all display messages are deleted, apart from some high-priority display messages. Once the causes of the high-priority display messages have been rectified, the corresponding display messages are also deleted.

Safety systems

Display messages	Possible causes/consequences and ▶ Solutions
Currently Unavailable See Operator's Manual	ABS (Anti-lock Braking System), ESP® (Electronic Stability Program), BAS (Brake Assist), the HOLD function, hill start assist and ESP® trailer stabilization are temporarily unavailable. BAS and the adaptive brake lights may also have failed. In addition, the , OFF and warning lamps light up in the instrument cluster. Possible causes are: • Self-diagnosis is not yet complete. • The on-board voltage may be insufficient. ⚠ **WARNING** The brake system continues to function normally, but without the functions listed above. The wheels could therefore lock if you brake hard, for example. The steerability and braking characteristics may be severely affected. The braking distance in an emergency braking situation can increase. If ESP® is not operational, ESP® is unable to stabilize the vehicle. There is an increased risk of skidding and an accident. ▶ Carefully drive a suitable distance making slight steering movements at a speed above 12 mph (20 km/h). If the display message disappears, the functions mentioned above are available again. If the display message continues to be displayed: ▶ Drive on carefully. ▶ Visit a qualified specialist workshop.
Inoperative See Operator's Manual	ABS, ESP®, BAS, the HOLD function, hill start assist and ESP® trailer stabilization are unavailable due to a malfunction. BAS and the adaptive brake lights may also have failed. The BRAKE (USA only)/ (Canada only), , OFF and warning lamps in the instrument cluster also light up. ⚠ **WARNING** The brake system continues to function normally, but without the functions listed above. The wheels could therefore lock if you brake hard, for example. The steerability and braking characteristics may be severely affected. The braking distance in an emergency braking situation can increase.

Display messages	Possible causes/consequences and ▶ Solutions
	If ESP® is not operational, ESP® is unable to stabilize the vehicle. There is an increased risk of skidding and an accident. ▶ Drive on carefully. ▶ Visit a qualified specialist workshop immediately.
Currently Unavailable See Operator's Manual	ESP®, BAS, the HOLD function, hill start assist and ESP® trailer stabilization are unavailable due to a malfunction. BAS and the adaptive brake lights may also have failed. In addition, the and warning lamps light up in the instrument cluster. The self-diagnosis function might not be complete, for example. ⚠ **WARNING** The brake system continues to function normally, but without the functions listed above. The braking distance in an emergency braking situation can thus increase. If ESP® is not operational, ESP® is unable to stabilize the vehicle. There is an increased risk of skidding and an accident. ▶ Carefully drive a suitable distance making slight steering movements at a speed above 12 mph (20 km/h). If the display message disappears, the functions mentioned above are available again. If the display message continues to be displayed: ▶ Drive on carefully. ▶ Visit a qualified specialist workshop.

Display messages	Possible causes/consequences and ▶ Solutions
Inoperative See Operator's Manual	ESP®, BAS, the HOLD function, hill start assist and ESP® trailer stabilization are unavailable due to a malfunction. BAS and the adaptive brake lights may also have failed. In addition, the and warning lamps light up in the instrument cluster. ⚠ **WARNING** The brake system continues to function normally, but without the functions listed above. The braking distance in an emergency braking situation can thus increase. If ESP® is not operational, ESP® is unable to stabilize the vehicle. There is an increased risk of skidding and an accident. ▶ Drive on carefully. ▶ Visit a qualified specialist workshop.
EBD Inoperative See Operator's Manual	EBD (electronic brake force distribution), ABS, ESP®, BAS, the HOLD function, hill start assist and ESP® trailer stabilization are unavailable due to a malfunction. BAS and the adaptive brake lights may also have failed. In addition, the , and warning lamps light up in the instrument cluster and a warning tone sounds. ⚠ **WARNING** The brake system continues to function normally, but without the functions listed above. The front and rear wheels could therefore lock if you brake hard, for example. The steerability and braking characteristics may be severely affected. The braking distance in an emergency braking situation can increase. If ESP® is not operational, ESP® is unable to stabilize the vehicle. There is an increased risk of skidding and an accident. ▶ Drive on carefully. ▶ Visit a qualified specialist workshop immediately.
PARK (USA only) (Canada only) Release Park. Brake	You are driving with the parking brake applied. A warning tone also sounds. ▶ Release the parking brake.

Display messages	Possible causes/consequences and ▶ Solutions
BRAKE (USA only) (Canada only) Check Brake Fluid Level	There is not enough brake fluid in the brake fluid reservoir. In addition, the BRAKE (USA only)/ (Canada only) warning lamp lights up in the instrument cluster and a warning tone sounds. ⚠ **WARNING** The braking effect may be impaired. There is a risk of an accident. ▶ Pull over and stop the vehicle safely as soon as possible, paying attention to road and traffic conditions. Do not continue driving under any circumstances. ▶ Secure the vehicle against rolling away (▷ page 156). ▶ Consult a qualified specialist workshop. ▶ Do not add brake fluid. This does not correct the malfunction.
Check Brake Pad Wear	The brake pads/linings have reached their wear limit. ▶ Visit a qualified specialist workshop.
SOS mbrace Inoperative	**USA only:** one or more main functions of the mbrace system are malfunctioning. **Canada only:** one or more main functions of the TELE AID system are malfunctioning. ▶ **USA only:** have the mbrace system checked at a qualified specialist workshop. ▶ **Canada only:** have the Tele AID system checked at a qualified specialist workshop.
SRS Malfunction Service Required	There is a malfunction in the SRS (Supplemental Restraint System). The warning lamp also lights up in the instrument cluster. ⚠ **WARNING** The air bags or Emergency Tensioning Devices may either be triggered unintentionally or, in the event of an accident, may not be triggered. There is an increased risk of injury. ▶ Visit a qualified specialist workshop. For further information about SRS, see (▷ page 39).

Display messages	Possible causes/consequences and ▶ Solutions
Front Left Malfunction Service RequiredorFront Right Malfunction Service Required	SRS has malfunctioned at the front on the left or right. The warning lamp also lights up in the instrument cluster. ⚠ **WARNING** The air bags or Emergency Tensioning Devices may either be triggered unintentionally or, in the event of an accident, may not be triggered. There is an increased risk of injury. ▶ Visit a qualified specialist workshop.
Rear Left Malfunction Service RequiredorRear Right Malfunction Service Required	SRS has malfunctioned at the rear on the left or right. The warning lamp also lights up in the instrument cluster. ⚠ **WARNING** The air bags or Emergency Tensioning Devices may either be triggered unintentionally or, in the event of an accident, may not be triggered. There is an increased risk of injury. ▶ Visit a qualified specialist workshop.
Rear Center Malfunction Service Required	SRS has malfunctioned at the rear center. The warning lamp also lights up in the instrument cluster. ⚠ **WARNING** The air bags or Emergency Tensioning Devices may either be triggered unintentionally or, in the event of an accident, may not be triggered. There is an increased risk of injury. ▶ Visit a qualified specialist workshop.
Left Side Curtain Airbag Malfunction Service Required or Right Side Curtain Airbag Malfunction Service Required	There is a malfunction in the left-hand or right-hand window curtain air bag. The warning lamp also lights up in the instrument cluster. ⚠ **WARNING** The left or right window curtain air bag may either be triggered unintentionally or, in the event of an accident, may not be triggered. There is an increased risk of injury. ▶ Visit a qualified specialist workshop.

Display messages	Possible causes/consequences and ▶ Solutions
Front Passenger Airbag Disabled See Operator's Manual	A special BabySmart™-compatible child restraint system is mounted on the front-passenger seat. The PASS. AIR BAG OFF indicator lamp also lights up. The front-passenger air bag is therefore disabled. Further information on BabySmart™(▷ page 44).
Front Passenger Airbag Enabled See Operator's Manual	The PASS. AIR BAG OFF indicator lamp does not remain lit if a special BabySmart™-compatible child restraint system has been installed on the front-passenger seat. The BabySmart™ system is malfunctioning. ⚠ **WARNING** The front-passenger front air bag can be triggered unintentionally in the event of an accident. There is a risk of an accident. ▶ Make sure there is nothing between the seat and the child restraint system. ▶ Check that the child restraint system is installed correctly. ▶ If the PASS. AIR BAG OFF indicator lamp does not light up, have the BabySmart™ system checked as soon as possible at a qualified specialist workshop. Do not transport a child on the front-passenger seat until the air bag deactivation system has been repaired.

Lights

ℹ Display messages about LEDs:

This display message will only appear if all LEDs have failed.

Display messages	Possible causes/consequences and ▶ Solutions
Check Left Low Beam or Check Right Low Beam	The left or right-hand low-beam headlamp is defective. ▶ Visit a qualified specialist workshop.
Check Trailer Left Tail Lamp or Check Trailer Right Tail Lamp	The left or right-hand trailer tail lamp is faulty. ▶ Check whether you are permitted to change the bulb yourself. or ▶ Visit a qualified specialist workshop.

Display messages	Possible causes/consequences and ▶ Solutions
Check Trailer Left Turn Signal or Check Trailer Right Turn Signal	The left or right-hand trailer turn signal lamp is defective. ▶ Check whether you are permitted to change the bulb yourself. or ▶ Visit a qualified specialist workshop.
Check Trailer Brake Lamp	The trailer brake lamp is defective. ▶ Check whether you are permitted to change the bulb yourself. or ▶ Visit a qualified specialist workshop.
Check Rear Left Turn Signal or Check Rear Right Turn Signal	The rear left-hand or rear right-hand turn signal is defective. ▶ Check whether you are permitted to replace the bulb yourself (▷ page 109). or ▶ Visit a qualified specialist workshop.
Check Front Left Turn Signal or Check Front Right Turn Signal	The front left-hand or front right-hand turn signal is defective. ▶ Check whether you are permitted to replace the bulb yourself (▷ page 109). or ▶ Visit a qualified specialist workshop.
Check Left Mirror Turn Signal or Check Right Mirror Turn Signal	The turn signal in the left-hand or right-hand exterior mirror is defective. ▶ Visit a qualified specialist workshop.
Check Center Brake Lamp	The high-mounted brake lamp is faulty. ▶ Visit a qualified specialist workshop.
Check Left Brake LamporCheck Right Brake Lamp	The left or right-hand brake lamp is defective. ▶ Replace the bulb (▷ page 108).
Check Left High BeamorCheck Right High Beam	The left or right-hand high beam is defective. ▶ Visit a qualified specialist workshop.

Display messages	Possible causes/consequences and ▶ Solutions
License Plate Lamp	There is a short circuit in the LED lamps. The LEDs have been switched off. ▶ Visit a qualified specialist workshop.
Check Left Fog LamporCheck Right Fog Lamp	The left-hand or right-hand front fog lamp is defective. ▶ Replace the bulb (▷ page 108).
Rear Fog Lamp	The rear fog lamp is defective. ▶ Check whether you are permitted to replace the bulb yourself (▷ page 109). or ▶ Visit a qualified specialist workshop.
Check Front Left Parking Lamp or Check Front Right Parking Lamp	The front left or front right parking or standing lamp is defective. ▶ Check whether you are permitted to replace the bulb yourself (▷ page 109). or ▶ Visit a qualified specialist workshop.
Backup Light	The backup lamp is defective. ▶ Replace the bulb (▷ page 108).
Check Front Left Sidemarker LamporCheck Front Right Sidemarker Lamp	The left or right front side marker lamp is defective. ▶ Check whether you are permitted to replace the bulb yourself (▷ page 109). or ▶ Visit a qualified specialist workshop.
Check Left Tail LamporCheck Right Tail Lamp	The left or right-hand tail lamp is defective. ▶ Check whether you are permitted to replace the bulb yourself (▷ page 109). or ▶ Visit a qualified specialist workshop.

Display messages	Possible causes/consequences and ▶ Solutions
Check Left Daytime Running Light or Check Right Daytime Running Light	The left or right-hand daytime running lamp is defective. ▶ Visit a qualified specialist workshop.
Malfunction See Operator's Manual	The exterior lighting is defective. ▶ Visit a qualified specialist workshop.
Auto Lamp Function Inoperative	The light sensor is defective. ▶ Visit a qualified specialist workshop.
Switch Off Lights	The lights are still switched on when you leave the vehicle. A warning tone also sounds. ▶ Turn the light switch to AUTO.

Engine

Display messages	Possible causes/consequences and ▶ Solutions
Check Coolant Level See Operator's Manual	The coolant level is too low. ▶ Add coolant, observing the warning notes before doing so (▷ page 291). ▶ Have the coolant system checked at a qualified specialist workshop if the coolant needs topping up more often than usual.
	The fan motor is faulty. ▶ At coolant temperatures below 248 °F (120 °C), drive to the next qualified specialist workshop. ▶ Avoid heavy loads on the engine as you do so, e.g. driving in mountainous terrain and stop-start traffic.

Display messages	Possible causes/consequences and ▶ Solutions
Coolant Too Hot Stop Vehicle Turn Engine Off	The coolant is too hot. A warning tone also sounds. ⚠ **WARNING** Do not drive when your engine is overheated. This can cause some fluids which may have leaked into the engine compartment to catch fire. Steam from the overheated engine can also cause serious burns which can occur just by opening the hood. There is a risk of injury. ▶ Pull over and stop the vehicle safely and switch off the engine, paying attention to road and traffic conditions. ▶ Secure the vehicle against rolling away (▷ page 156). ▶ Leave the vehicle and keep a safe distance from the vehicle until the engine has cooled down. ▶ Make sure that the air supply to the engine radiator is not blocked, e.g. by snow, slush or ice. ▶ Do not start the engine again until the display message goes out and the coolant temperature is below 248 °F (120 °C). Otherwise, the engine could be damaged. ▶ Pay attention to the coolant temperature display. ▶ If the temperature increases again, visit a qualified specialist workshop immediately. Under normal operating conditions and with the specified coolant level, the coolant temperature may rise to 248 °F (120 °C).
	The poly-V-belt may have torn. ▶ Pull over and stop the vehicle safely and switch off the engine, paying attention to road and traffic conditions. ▶ Check the poly-V-belt. **If the poly-V-belt is torn:** ! Do not continue driving. The engine could otherwise overheat. ▶ Consult a qualified specialist workshop. **If the poly-V-belt is not damaged:** ▶ Wait until the display message disappears before restarting the engine. Otherwise, the engine could be damaged. ▶ Pay attention to the coolant temperature display. ▶ Visit a qualified specialist workshop.

Display messages	Possible causes/consequences and ▶ Solutions
	The battery is not being charged. A warning tone also sounds. Possible causes are: • a defective alternator • a torn poly-V-belt • a malfunction in the electronics ▶ Pull over and stop the vehicle safely and switch off the engine, paying attention to road and traffic conditions. ▶ Open the hood. ▶ Check whether the poly-V-belt is torn. **If the poly-V-belt is torn:** ! Do not continue driving. The engine could otherwise overheat. ▶ Consult a qualified specialist workshop. **If the poly-V-belt is not damaged:** ▶ Visit a qualified specialist workshop.
 Check Engine Oil At Next Refueling	The engine oil level has dropped to the minimum level. A warning tone also sounds. ▶ Check the oil level when next refueling, at the latest (▷ page 289). ▶ If necessary, add engine oil (▷ page 291). ▶ Have the engine checked at a qualified specialist workshop if engine oil needs to be added more often than usual. ! Avoid long journeys with too little engine oil. The engine will otherwise be damaged. Information on approved engine oils can be obtained from any qualified specialist workshop or on the Internet at http://www.mbusa.com (USA only).
 Engine Oil Level Low Stop Vehicle Turn Engine Off	The engine oil level is too low. There is a risk of engine damage. ▶ Pull over and stop the vehicle safely and switch off the engine, paying attention to road and traffic conditions. ▶ Add engine oil (▷ page 291) and check the oil level (▷ page 289).

Display messages	Possible causes/consequences and ▶ Solutions
Check Engine Oil Level (Add 1 quart)	AMG vehicles: the engine oil level is too low. ▶ Check the oil level when next refueling, at the latest (▷ page 289). ▶ If necessary, add engine oil (▷ page 291). ▶ Have the engine checked at a qualified specialist workshop if engine oil needs to be added more often than usual. ! Avoid long journeys with too little engine oil. The engine will otherwise be damaged. Information on approved engine oils can be obtained from any qualified specialist workshop or on the Internet at http://www.mbusa.com (USA only).
Engine Oil Level Cannot Be Measured	The measuring system is malfunctioning. ▶ Visit a qualified specialist workshop.
Fuel Level Low	The fuel level has dropped into the reserve range. ▶ Refuel at the nearest gas station.
	There is only a very small amount of fuel in the fuel tank. ▶ Refuel at the nearest gas station without fail.
Gas Cap Loose	The fuel system pressure is too low. The fuel filler cap is not closed correctly or the fuel system is leaking. ▶ Check that the fuel filler cap is correctly closed. **If the fuel filler cap is not correctly closed:** ▶ Close the fuel filler cap. **If the fuel filler cap is correctly closed:** ▶ Visit a qualified specialist workshop.

Driving systems	
Display messages	**Possible causes/consequences and ▶ Solutions**
TC Shift Conditions Not Fulfilled Apply Brake/ Parking Brake	The parking brake has not been applied and the brake pedal has not been depressed. The transfer case has canceled the gear change process and is in **Neutral**. There is no connection between the engine and the drive wheels. ▶ Pull over and stop the vehicle safely as soon as possible, paying attention to road and traffic conditions. ▶ Depress the brake pedal and apply the parking brake. ▶ Shift the automatic transmission to neutral position **N**. ▶ Make sure all conditions for changing gears are met (▷ page 199). ▶ Repeat the gearshift process.
TC Malfunction Visit WorkshopTo park, apply the parking brake	There is a malfunction in the transfer case. ▶ Do not shift the transfer case. ▶ When parking, secure the vehicle against rolling away (▷ page 156). ▶ Have the vehicle checked at a qualified specialist workshop.
TC Shift Canceled Please Reactivate	The transfer case has not performed the gear change process. ▶ Repeat the gearshift process. ▶ Make sure all conditions for changing gears are met (▷ page 199).
TC Shift Condition Not Fulfilled Drive at Max. 25 mph	You have exceeded the maximum speed for the gearshift process. ▶ Drive more slowly. ▶ Repeat the gearshift process.
TC Shift Condition Not Fulfilled Shift to NEUTRAL	You have not met one or more shift conditions. ▶ Shift the automatic transmission to neutral position **N**. ▶ Repeat the gearshift process.
TC shift condition not fulfilled Drive at Max. 40 mph	You have exceeded the maximum speed for the gearshift process. ▶ Drive more slowly. ▶ Repeat the gearshift process.
LOW RANGE On	The transfer case is in the **LOW RANGE** off-road position.
HIGH RANGE On	The transfer case is in the **HIGH RANGE** on-road position.

Display messages	Possible causes/consequences and ▶ Solutions
Differential Locks Available Only in LOW RANGE	The LOW RANGE button has been pressed. The transfer case is in the **LOW RANGE** off-road driving position and a differential lock is engaged. ▶ Disengage the differential locks (▷ page 201). ▶ Repeat the gearshift process.
TC-NEUTRAL On	The transfer case is in the **Neutral** neutral position. A warning tone will also sound when the driver's door is opened and the brake pedal is not depressed. ▶ Close the driver's door. ▶ Secure the vehicle against rolling away (▷ page 156). ▶ Shift the transfer case according to driving conditions (▷ page 198).
Differential Lock Preselected ESP Not Available	A differential lock has been engaged. The differential gear has not yet locked the respective differential. The activation indicator lamp (yellow) (▷ page 201) of the switch lights up. ESP is unavailable. ABS is still available.
Differential Locks Active ABS and ESP Not Available	A differential lock was engaged and the differential gear has locked the respective differential. The activation indicator lamp (yellow) and function indicator lamp (red) (▷ page 201) on the switch light up. ABS and ESP are unavailable.

Display messages	Possible causes/consequences and ▶ Solutions
Blind Spot Assist Currently Unavailable See Operator's Manualor Active Blind Spot Assist Currently Unavailable See Operator's Manual	Blind Spot Assist or Active Blind Spot Assist is temporarily inoperative. Possible causes are: • you have established the electrical connection between the trailer and your vehicle. • the sensors are dirty. • function is impaired due to heavy rain or snow. • the radar sensor system is outside the operating temperature range. • the radar sensor system is temporarily inoperative, e.g. due to electromagnetic radiation emitted by nearby TV or radio stations or other sources of electromagnetic radiation. The yellow ▲ indicator lamps also light up in the exterior mirrors. ▶ When towing a trailer, confirm the display message with OK. If you are driving without a trailer and the display message does not disappear: ▶ Pull over and stop the vehicle safely as soon as possible, paying attention to road and traffic conditions. ▶ Apply the parking brake. ▶ Clean the sensors (▷ page 297). ▶ Restart the engine. If the system detects that the sensors are fully operational, the display message disappears. Blind Spot Assist or Active Blind Spot Assist is operational again.
Blind Spot Assist Inoperativeor Active Blind Spot Assist Inoperative	Blind Spot Assist or Active Blind Spot Assist is defective. The yellow ▲ indicator lamps also light up in the exterior mirrors. ▶ Visit a qualified specialist workshop.
DISTRONIC PLUS Off	DISTRONIC PLUS has been deactivated (▷ page 177). If it was deactivated automatically, a warning tone also sounds.
DISTRONIC PLUS Now Available	DISTRONIC PLUS is operational again after having been temporarily unavailable. You can now reactivate DISTRONIC PLUS (▷ page 177).

Display messages	Possible causes/consequences and ▶ Solutions
DISTRONIC PLUS Currently Unavailable See Operator's Manual	DISTRONIC is deactivated and temporarily inoperative. Possible causes are: • the DISTRONIC PLUS cover in the radiator trim is dirty • function is impaired due to heavy rain or snow. • the sensors in the bumpers are dirty. • the radar sensor system is temporarily inoperative, e.g. due to electromagnetic radiation emitted by nearby TV or radio stations or other sources of electromagnetic radiation. • the system is outside the operating temperature range. • the transfer case is in the **LOW RANGE** transmission position. • the vehicle is on an uphill or downhill gradient of greater than 22%-25%. • the on-board voltage is too low. A warning tone also sounds. If the display message does not disappear: ▶ Pull over and stop the vehicle safely as soon as possible, paying attention to road and traffic conditions. ▶ Apply the parking brake. ▶ Clean the DISTRONIC PLUS cover in the radiator trim and the bumper (▷ page 297). ▶ Restart the engine. If the system detects that the sensors are fully operational, the display message disappears. DISTRONIC is operational again.
DISTRONIC PLUS Inoperative	DISTRONIC PLUS is defective. BAS (Brake Assist) may also have failed. A warning tone also sounds. ▶ Visit a qualified specialist workshop.
DISTRONIC PLUS Passive	You have depressed the accelerator pedal. DISTRONIC PLUS is no longer controlling the speed of the vehicle. ▶ Remove your foot from the accelerator pedal.
DISTRONIC PLUS --- mph	An activation condition for DISTRONIC PLUS is not fulfilled. ▶ Check the activation conditions for DISTRONIC PLUS (▷ page 177).
DISTRONIC PLUS and SPEEDTRONIC Inoperative	DISTRONIC PLUS and SPEEDTRONIC are faulty. A warning tone also sounds. ▶ Visit a qualified specialist workshop.

Display messages	Possible causes/consequences and ▶ Solutions
Cruise Control and SPEEDTRONIC Inoperative	Cruise control and SPEEDTRONIC are malfunctioning. ▶ Visit a qualified specialist workshop.
Limit --- mph	While depressing the accelerator pedal beyond the pressure point (kickdown), SPEEDTRONIC cannot be activated.
Cruise Control --- mph	A condition for activating cruise control has not been fulfilled. You have tried to store a speed below 20 mph (30 km/h), for example. ▶ If conditions permit, drive faster than 20 mph (30 km/h) and store the speed. ▶ Check the activation conditions for cruise control (▷ page 169).

Tires

Display messages	Possible causes/consequences and ▶ Solutions
Tire pressure will be displayed after driving a few minutes	The tire pressure monitor is measuring the tire pressure. ▶ Drive on. The tire pressures appear in the multifunction display after you have been driving for a few minutes.
Tire Press. Monitor Inoperative	The tire pressure monitor is faulty. ▶ Visit a qualified specialist workshop.
Tire Pressure Monitor Inoperative No Wheel Sensors	The wheels mounted do not have a suitable tire pressure sensor. The tire pressure monitor is deactivated. ▶ Mount wheels with suitable tire pressure sensors. The tire pressure monitor is activated automatically after driving for a few minutes.

Display messages	Possible causes/consequences and ▶ Solutions
Check Tires	The tire pressure in one or more tires has dropped significantly. The wheel position is displayed in the multifunction display. A warning tone also sounds. ⚠ **WARNING** With tire pressures which are too low, there is a risk of the following hazards: • they may burst, especially as the load and vehicle speed increase. • they may wear excessively and/or unevenly, which may greatly impair tire traction. • the driving characteristics, as well as steering and braking, may be greatly impaired. There is a risk of an accident. ▶ Stop the vehicle without making any sudden steering or braking maneuvers. Pay attention to the traffic conditions as you do so. ▶ Secure the vehicle against rolling away (▷ page 156). ▶ If there is a flat tire, inspect the tires (▷ page 304). ▶ Check the tire pressure (▷ page 325). ▶ If necessary, correct the tire pressure.
Warning Tire Malfunction	The tire pressure in one or more tires has dropped suddenly. The wheel position is shown in the multifunction display. ⚠ **WARNING** If you drive with a flat tire, there is a risk of the following hazards: • A flat tire affects the ability to steer or brake the vehicle. • You could lose control of the vehicle. • Continued driving with a flat tire will cause excessive heat build-up and possibly a fire. There is a risk of an accident. ▶ Stop the vehicle without making any sudden steering or braking maneuvers. Pay attention to the traffic conditions as you do so. ▶ Secure the vehicle against rolling away (▷ page 156). ▶ If there is a flat tire, inspect the tires (▷ page 304).
Correct Tire Pressure	The tire pressure is too low in at least one of the tires, or the tire pressure difference between the wheels is too great. ▶ Check the tire pressures at the next opportunity (▷ page 325). ▶ If necessary, correct the tire pressure. ▶ Restart the tire pressure monitor (▷ page 327).

Display messages	Possible causes/consequences and ▶ Solutions
TirePress. Sensor(s) Missing	There is no signal from the tire pressure sensor of one or several wheels. The pressure of the affected tire is not displayed in the multifunction display. ▶ Have the faulty tire pressure sensor replaced at a qualified specialist workshop.
Tire Press. Monitor Currently Unavailable	Due to a source of radio interference, no signals can be received from the wheel sensors. The tire pressure monitor is temporarily malfunctioning. ▶ Drive on. The tire pressure monitor restarts automatically as soon as the problem has been solved.
 Tire Pressure Warning Tire Failure	The tire pressure in one or more tires has dropped suddenly. A warning tone also sounds. ⚠ **WARNING** If you drive with a flat tire, there is a risk of the following hazards: • A flat tire affects the ability to steer or brake the vehicle. • You could lose control of the vehicle. • Continued driving with a flat tire will cause excessive heat build-up and possibly a fire. There is a risk of an accident. ▶ Stop the vehicle without making any sudden steering or braking maneuvers. Pay attention to the traffic conditions as you do so. ▶ Secure the vehicle against rolling away (▷ page 156). ▶ If there is a flat tire, inspect the tires (▷ page 304).

Display messages	Possible causes/consequences and ▶ Solutions
Check Tire Pressure	The tire pressure in one or more tires has dropped significantly. ⚠ **WARNING** With tire pressures which are too low, there is a risk of the following hazards: • they may burst, especially as the load and vehicle speed increase. • they may wear excessively and/or unevenly, which may greatly impair tire traction. • the driving characteristics, as well as steering and braking, may be greatly impaired. There is a risk of an accident. ▶ Stop the vehicle without making any sudden steering or braking maneuvers. Pay attention to the traffic conditions as you do so. ▶ Secure the vehicle against rolling away (▷ page 156). ▶ If there is a flat tire, inspect the tires (▷ page 304). ▶ Check the tire pressure (▷ page 325). ▶ If necessary, correct the tire pressure.
Correct Tire Pressure	The tire pressure is too low in at least one of the tires, or the tire pressure difference between the wheels is too great. ▶ Check the tire pressures at the next opportunity (▷ page 325). ▶ If necessary, correct the tire pressure.

Vehicle

Display messages	Possible causes/consequences and ▶ Solutions
Shift to 'P' or 'N' to Start Engine	You have attempted to start the engine with the transmission in position **R** or **D**. ▶ Shift the transmission to position **P** or **N**.
Auxiliary Battery Malfunction	The auxiliary battery for the automatic transmission is no longer being charged. ▶ Visit a qualified specialist workshop at the next opportunity. ▶ Until then, set the automatic transmission to position **P** before you switch off the engine. ▶ Before leaving the vehicle, apply the parking brake.

Display messages	Possible causes/consequences and ▶ Solutions
	The rear door is open. ⚠ **WARNING** When the engine is running, exhaust gases can enter the vehicle interior if the rear door is open. There is a risk of poisoning. ▶ Close the rear door.
	The hood is open. ⚠ **WARNING** The open hood may block your view when the vehicle is in motion. There is a risk of an accident. ▶ Pull over and stop the vehicle safely as soon as possible, paying attention to road and traffic conditions. ▶ Secure the vehicle against rolling away (▷ page 156). ▶ Close the hood.
	At least one door is open. A warning tone also sounds. ▶ Close all the doors.
Power Steering Malfunction See Operator's Manual	The power steering is malfunctioning. A warning tone also sounds. ⚠ **WARNING** You will need to use more force to steer. There is a risk of an accident. ▶ Check whether you are able to apply the extra force required. ▶ **If you are able to steer safely:** carefully drive on to a qualified specialist workshop. ▶ **If you are unable to steer safely:** do not drive on. Contact the nearest qualified specialist workshop.
Phone No Service	Your vehicle is outside the network provider's transmitter/receiver range. ▶ Wait until the mobile phone operational readiness symbol appears in the multifunction display.
Check Washer Fluid	The washer fluid level in the washer fluid reservoir has dropped below the minimum. ▶ Add washer fluid (▷ page 292).

SmartKey

Display messages	Possible causes/consequences and ▶ Solutions
Key Does Not Belong to Vehicle	You have put the wrong SmartKey in the ignition lock. ▶ Use the correct SmartKey.
Take Your Key from Ignition	The SmartKey is in the ignition lock. ▶ Remove the SmartKey.
Obtain a New Key	The SmartKey needs to be replaced. ▶ Visit a qualified specialist workshop.

Warning and indicator lamps in the instrument cluster

Overview of warning and indicator lamps

	Low-beam headlamps(▷ page 99)
	Turn signals (▷ page 103)
	High-beam headlamps (▷ page 103)
	Fog lamps (▷ page 101)
	Rear fog lamp (▷ page 101)
	Seat belts (▷ page 248)
BRAKE (USA)	Brakes (▷ page 249)
(Canada)	Brakes (yellow) (▷ page 249)
	ABS (▷ page 250)
	ESP®(▷ page 252)
	ESP® OFF (▷ page 252)
	SRS (▷ page 255)
	Check Engine (▷ page 256)
	Reserve fuel (▷ page 256)
	Coolant (▷ page 256)
	Distance warning signal (▷ page 258)
	Tire pressure monitor (▷ page 259)

Safety

Seat belts

Problem	Possible causes/consequences and ▶ Solutions
After starting the engine, the red seat belt warning lamp lights up for six seconds.	The seat belt warning lamp reminds the driver and front passenger to fasten their seat belts. ▶ Fasten your seat belt (▷ page 50).
After starting the engine, the red seat belt warning lamp lights up. In addition, a warning tone sounds for up to six seconds.	The driver's seat belt is not fastened. ▶ Fasten your seat belt (▷ page 50). The warning tone ceases.
The red seat belt warning lamp lights up after the engine starts, as soon as the driver's or the front-passenger door is closed.	The driver or front passenger has not fastened their seat belt. ▶ Fasten your seat belt (▷ page 50). The warning lamp goes out.
	There are objects on the front-passenger seat. ▶ Remove the objects from the front-passenger seat and stow them in a secure place. The warning lamp goes out.
The red seat belt warning lamp flashes and an intermittent audible warning sounds.	The driver or front passenger has not fastened their seat belt. In addition, you are driving faster than 15 mph (25 km/h) or you have briefly driven faster than 15 mph (25 km/h). ▶ Fasten your seat belt (▷ page 50). The warning lamp goes out and the intermittent warning tone ceases.
	There are objects on the front-passenger seat. In addition, you are driving faster than 15 mph (25 km/h) or you have briefly driven faster than 15 mph (25 km/h). ▶ Remove the objects from the front-passenger seat and stow them in a secure place. The warning lamp goes out and the intermittent warning tone ceases.

Safety systems

Problem	Possible causes/consequences and ▶ Solutions
BRAKE (USA only) (Canada only) **USA only:** the red brake system warning lamp is lit while the engine is running. A warning tone also sounds. **Canada only:** the yellow brake system warning lamp is lit while the engine is running. A warning tone also sounds.	⚠ **WARNING** The brake boosting effect is malfunctioning and the braking characteristics may be affected. There is a risk of an accident. ▶ Pull over and stop the vehicle safely as soon as possible, paying attention to road and traffic conditions. Do not continue driving under any circumstances. ▶ Secure the vehicle against rolling away (▷ page 156). ▶ Consult a qualified specialist workshop. ▶ Observe the additional display messages in the multifunction display.
BRAKE (USA only) (Canada only) **USA only:** the red brake system warning lamp is lit while the engine is running. A warning tone also sounds. **Canada only:** the yellow brake system warning lamp is lit while the engine is running. A warning tone also sounds.	There is not enough brake fluid in the brake fluid reservoir. ⚠ **WARNING** The braking effect may be impaired. There is a risk of an accident. ▶ Pull over and stop the vehicle safely as soon as possible, paying attention to road and traffic conditions. Do not continue driving under any circumstances. ▶ Secure the vehicle against rolling away (▷ page 156). ▶ Do not add brake fluid. Topping up will not remedy the malfunction. ▶ Consult a qualified specialist workshop. ▶ Observe the additional display messages in the multifunction display.

Problem	Possible causes/consequences and ▶ Solutions
The yellow ABS warning lamp is lit while the engine is running.	ABS (Anti-lock Brake System) is deactivated due to a malfunction. BAS (Brake Assist), ESP® (Electronic Stability Program), the HOLD function, hill start assist, the adaptive brake lights and ESP® trailer stabilization, for example, are therefore also deactivated. ⚠ **WARNING** The brake system continues to function normally, but without the functions listed above. The wheels could therefore lock if you brake hard, for example. The steerability and braking characteristics may be severely affected. The braking distance in an emergency braking situation can increase. If ESP® is not operational, ESP® is unable to stabilize the vehicle. There is an increased risk of skidding and an accident. ▶ Observe the additional display messages in the multifunction display. ▶ Drive on carefully. ▶ Visit a qualified specialist workshop. If the ABS control unit is faulty, there is also a possibility that other systems, such as the navigation system or the automatic transmission, will not be available.

Problem	Possible causes/consequences and ▶ Solutions
The yellow ABS warning lamp is lit while the engine is running.	ABS is temporarily unavailable. BAS, ESP®, EBD (electronic brake force distribution), the HOLD function, hill start assist, ESP® trailer stabilization and the adaptive brake lights, for example, are therefore also deactivated. Possible causes are: • Self-diagnosis is not yet complete. • The on-board voltage may be insufficient. ⚠ **WARNING** The brake system continues to function normally, but without the functions listed above. The front and rear wheels could therefore lock if you brake hard, for example. The steerability and braking characteristics may be severely affected. The braking distance in an emergency braking situation can increase. If ESP® is not operational, ESP® is unable to stabilize the vehicle. There is a risk of an accident. ▶ Carefully drive a suitable distance making slight steering movements at a speed above 12 mph (20 km/h). The functions mentioned above are available again when the warning lamp goes out. If the warning lamp is still on: ▶ Observe the additional display messages in the multifunction display. ▶ Drive on carefully. ▶ Visit a qualified specialist workshop.

Problem	Possible causes/consequences and ▶ Solutions
(ABS) The yellow ABS warning lamp is lit while the engine is running. A warning tone also sounds.	EBD is malfunctioning. Therefore, ABS, BAS, ESP®, the HOLD function, hill start assist, the adaptive brake lights and ESP® trailer stabilization are also not available, for example. ⚠ **WARNING** The brake system continues to function normally, but without the functions listed above. The front and rear wheels could therefore lock if you brake hard, for example. The steerability and braking characteristics may be severely affected. The braking distance in an emergency braking situation can increase. If ESP® is not operational, ESP® is unable to stabilize the vehicle. There is an increased risk of skidding and an accident. ▶ Observe the additional display messages in the multifunction display. ▶ Drive on carefully. ▶ Visit a qualified specialist workshop.
(ABS) The yellow ABS warning lamp is lit while the engine is running.	You have engaged the differential locks. ABS is deactivated. ▶ Disengage the differential locks. Subsequently ABS is reactivated.
BRAKE (USA only) (!) (Canada only) OFF (ABS) The yellow brake warning lamp, the yellow ESP® and ESP® OFF warning lamps and the yellow ABS warning lamp are lit while the engine is running.	ABS and ESP® are malfunctioning. Therefore, BAS, EBD, the HOLD function, hill start assist, the adaptive brake lights and ESP® trailer stabilization, for example, are also not available. ⚠ **WARNING** The brake system continues to function normally, but without the functions listed above. The front and rear wheels could therefore lock if you brake hard, for example. The steerability and braking characteristics may be severely affected. The braking distance in an emergency braking situation can increase. If ESP® is not operational, ESP® is unable to stabilize the vehicle. There is an increased risk of skidding and an accident. ▶ Observe the additional display messages in the multifunction display. ▶ Drive on carefully. ▶ Visit a qualified specialist workshop.

Problem	Possible causes/consequences and ▶ Solutions
The yellow ESP® warning lamp flashes while the vehicle is in motion.	ESP® or traction control has intervened because there is a risk of skidding or at least one wheel has started to spin. Cruise control or DISTRONIC PLUS is deactivated. ▶ When pulling away, only depress the accelerator pedal as far as necessary. ▶ Ease off the accelerator pedal while the vehicle is in motion. ▶ Adapt your driving style to suit the road and weather conditions. ▶ Do not deactivate ESP®. For exceptions, see: (▷ page 62).
The yellow ESP® OFF warning lamp is lit while the engine is running.	ESP® is deactivated. ⚠ **WARNING** If ESP® is switched off, ESP® is unable to stabilize the vehicle. There is an increased risk of skidding and an accident. ▶ Reactivate ESP®. For exceptions, see: (▷ page 62). ▶ Adapt your driving style to suit the road and weather conditions. If ESP® cannot be activated: ▶ Have ESP® checked at a qualified specialist workshop.
The yellow ESP® and ESP® OFF warning lamps are lit while the engine is running.	ESP®, BAS, the HOLD function, hill start assist, the adaptive brake lights and ESP® trailer stabilization are not available due to a malfunction. ⚠ **WARNING** The brake system continues to function normally, but without the functions listed above. The braking distance in an emergency braking situation can thus increase. If ESP® is not operational, ESP® is unable to stabilize the vehicle. There is an increased risk of skidding and an accident. ▶ Observe the additional display messages in the multifunction display. ▶ Drive on carefully. ▶ Visit a qualified specialist workshop.

Problem	Possible causes/consequences and ▶ Solutions
The yellow ESP® and ESP® OFF warning lamps are lit while the engine is running.	ESP®, BAS, the HOLD function, hill start assist and ESP® trailer stabilization are temporarily unavailable. BAS and the adaptive brake lights may also have failed. Self-diagnosis is not yet complete. ⚠ **WARNING** The brake system continues to function normally, but without the functions listed above. The braking distance in an emergency braking situation can thus increase. If ESP® is not operational, ESP® is unable to stabilize the vehicle. There is an increased risk of skidding and an accident. ▶ Carefully drive a suitable distance making slight steering movements at a speed above 12 mph (20 km/h). The functions mentioned above are available again when the warning lamp goes out. If the warning lamp is still on: ▶ Observe the additional display messages in the multifunction display. ▶ Drive on carefully. ▶ Visit a qualified specialist workshop.
The yellow ESP® OFF warning lamp is lit while the engine is running.	You have engaged the differential locks. ABS, ESP®, 4ETS and BAS have been deactivated. ▶ Disengage the differential locks. ESP®, 4ETS and BAS are subsequently reactivated. ▶ Observe the additional display messages in the multifunction display.

Problem	Possible causes/consequences and ▶ Solutions
(Canada only) (USA only) The red parking brake warning lamp comes on while the vehicle is moving. A warning tone also sounds.	You are driving with the parking brake applied. ▶ Release the parking brake. The warning lamp goes out and the warning tone ceases.
The red SRS warning lamp is lit while the engine is running.	There is a malfunction in the SRS (Supplemental Restraint System). ⚠ **WARNING** The air bags or Emergency Tensioning Devices may either be triggered unintentionally or, in the event of an accident, may not be triggered. There is an increased risk of injury. ▶ Drive on carefully. ▶ Have SRS checked at a qualified specialist workshop immediately. For further information about SRS, see (▷ page 39).

Engine	
Problem	**Possible causes/consequences and ▶ Solutions**
The yellow Check Engine warning lamp lights up while the engine is running.	There may be a malfunction, for example: • in the engine management • in the fuel injection system • in the exhaust system • in the ignition system • in the fuel system The emission limit values may be exceeded and the engine may be running in emergency mode. ▶ Have the vehicle checked as soon as possible at a qualified specialist workshop. ⓘ In some states, you must immediately visit a qualified specialist workshop as soon as the yellow Check Engine warning lamp lights up. This is due to the legal requirements in effect in these states. If in doubt, check whether such legal regulations apply in the state in which you are currently driving.
The yellow reserve fuel warning lamp lights up while the engine is running.	The fuel level has dropped into the reserve range. ▶ Refuel at the nearest gas station.
The yellow reserve fuel warning lamp flashes while the vehicle is in motion. In addition, the Check Engine warning lamp may light up.	The fuel system pressure is too low. The fuel filler cap is not closed correctly or the fuel system is leaking. ▶ Check that the fuel filler cap is correctly closed. ▶ **If the fuel filler cap is not correctly closed:** close the fuel filler cap. ▶ **If the fuel filler cap is closed:** visit a qualified specialist workshop.
The red coolant warning lamp lights up while the engine is running and the coolant temperature gauge is at the start of the scale.	The temperature sensor for the coolant temperature gauge is defective. The coolant temperature is no longer being monitored. There is a risk of engine damage if the coolant temperature is too high. ▶ Pull over and stop the vehicle safely and switch off the engine, paying attention to road and traffic conditions. Do not continue driving under any circumstances. ▶ Apply the parking brake. ▶ Consult a qualified specialist workshop.

Problem	Possible causes/consequences and ▶ Solutions
The red coolant warning lamp comes on while the engine is running.	The coolant level is too low. **!** Avoid making long journeys with too little coolant in the engine cooling system. The engine will otherwise be damaged. If the coolant level is correct, the airflow to the engine radiator may be blocked or the electric engine radiator fan may be malfunctioning. The coolant is too hot and the engine is no longer being cooled sufficiently. ▶ Observe the additional display messages in the multifunction display. ▶ Pull over and stop the vehicle safely and switch off the engine, paying attention to road and traffic conditions. ▶ Apply the parking brake. ▶ Leave the vehicle and keep a safe distance from the vehicle until the engine has cooled down. ▶ Check the coolant level and add coolant, observing the warning notes (▷ page 291). ▶ If you need to add coolant more often than usual, have the engine coolant system checked. ▶ Make sure that the air supply to the engine radiator is not blocked, e.g. by snow, slush or ice. ▶ Do not start the engine again until the coolant temperature is below 248 °F (120 °C). Otherwise, the engine could be damaged. ▶ Drive to the nearest qualified specialist workshop. ▶ Avoid subjecting the engine to heavy loads, e.g. driving in mountainous terrain, and stop-start driving.
The red coolant warning lamp comes on while the engine is running. A warning tone also sounds.	The coolant temperature has exceeded 248 °F (120 °C). The airflow to the engine radiator may be blocked or the coolant level may be too low. ⚠ **WARNING** The engine is not being cooled sufficiently and may be damaged. Do not drive when your engine is overheated. This can cause some fluids which may have leaked into the engine compartment to catch fire. Steam from the overheated engine can also cause serious burns which can occur just by opening the hood. There is a risk of injury.

Problem	Possible causes/consequences and ▶ Solutions
	▶ Observe the additional display messages in the multifunction display. ▶ Pull over and stop the vehicle safely and switch off the engine, paying attention to road and traffic conditions. ▶ Secure the vehicle against rolling away (▷ page 156). ▶ Leave the vehicle and keep a safe distance from the vehicle until the engine has cooled down. ▶ Check the coolant level and add coolant, observing the warning notes (▷ page 291). ▶ If you need to add coolant more often than usual, have the engine coolant system checked. ▶ Make sure that the air supply to the engine radiator is not blocked, e.g. by snow, slush or ice. ▶ At coolant temperatures below 248 °F (120 °C), drive to the next qualified specialist workshop. ▶ Avoid subjecting the engine to heavy loads, e.g. driving in mountainous terrain, and stop-start driving.

Driving systems

Problem	Possible causes/consequences and ▶ Solutions
The red distance warning lamp lights up while the vehicle is in motion.	The distance to the vehicle in front is too small for the speed selected. ▶ Increase the distance.
The red distance warning lamp lights up while the vehicle is in motion. A warning tone also sounds.	You are approaching a vehicle or a stationary obstacle in your line of travel at too high a speed. ▶ Be prepared to brake immediately. ▶ Pay careful attention to the traffic situation. You may have to brake or take evasive action. Further information on DISTRONIC PLUS (▷ page 177).

Tires	
Problem	**Possible causes/consequences and ▶ Solutions**
USA only: The yellow tire pressure monitor warning lamp (pressure loss/ malfunction) is lit. Canada only: The yellow tire pressure monitor warning lamp (pressure loss) is lit.	The tire pressure monitor has detected a loss of pressure in at least one of the tires. ⚠ **WARNING** With tire pressures which are too low, there is a risk of the following hazards: • they may burst, especially as the load and vehicle speed increase. • they may wear excessively and/or unevenly, which may greatly impair tire traction. • the driving characteristics, as well as steering and braking, may be greatly impaired. There is a risk of an accident. ▶ Stop the vehicle without making any sudden steering or braking maneuvers. Pay attention to the traffic conditions as you do so. ▶ Secure the vehicle against rolling away (▷ page 156). ▶ Observe the additional display messages in the multifunction display. ▶ If there is a flat tire, inspect the tires (▷ page 304). ▶ Check the tire pressure (▷ page 325). ▶ If necessary, correct the tire pressure.
USA only: The yellow tire pressure monitor warning lamp (pressure loss/ malfunction) flashes for approximately one minute and then remains lit.	The tire pressure monitor is faulty. ⚠ **WARNING** The system is possibly unable to recognize or register low tire pressure. There is a risk of an accident. ▶ Observe the additional display messages in the multifunction display. ▶ Visit a qualified specialist workshop.

Useful information 262
Loading guidelines 262
Stowage areas 263
Features 268

Useful information

ℹ This Operator's Manual describes all models and all standard and optional equipment of your vehicle available at the time of publication of the Operator's Manual. Country-specific differences are possible. Please note that your vehicle may not be equipped with all features described. This also applies to safety-related systems and functions.

ℹ Read the information on qualified specialist workshops: (▷ page 23).

Loading guidelines

⚠ **WARNING**

Always fasten items being carried as securely as possible using cargo tie-down rings and fastening materials appropriate for the weight and size of the load.

In an accident, during hard braking or sudden maneuvers, loose items will be thrown around inside the vehicle. This can cause injury to vehicle occupants unless the items are securely fastened in the vehicle.

To help avoid personal injury during a collision or sudden maneuver, exercise care when transporting cargo. Do not pile luggage or cargo higher than the seat backrests.

Never drive a vehicle with the tailgate open. Deadly carbon monoxide (CO) gases may enter vehicle interior resulting in unconsciousness and death.

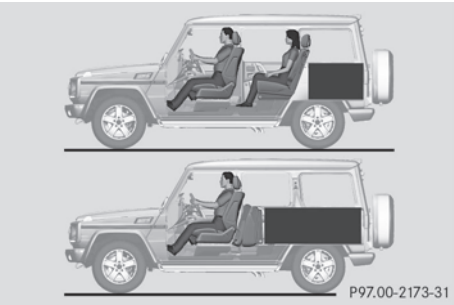

The handling characteristics of a laden vehicle are dependent on the distribution of the load within the vehicle. You should therefore load your vehicle as shown in the illustrations.

The gross vehicle weight (GVW) is the vehicle weight including fuel, vehicle tool kit, spare wheel, installed accessories, vehicle occupants and luggage/cargo.

The gross load limit and the gross vehicle weight rating (GVWR) for your vehicle must never be exceeded. The gross load limit and the GVWR are specified on the vehicle identification plate on the B-pillar of the driver's door (▷ page 349).

The load must also be distributed so that the weight on each axle never exceeds the gross axle weight rating (GAWR) for the front and rear axles. The specifications for GVWR and GAWR are on the vehicle identification plate on the B-pillar of the driver's door (▷ page 349).

Further information can be found in the "Loading the vehicle" section (▷ page 328).

Observe the following notes when transporting a load:

- position heavy loads as far forwards as possible and as low down in the cargo compartment as possible.

ℹ Transport loads when possible in the cargo compartment. You should only use the cargo compartment enlargement if the load does not fit in the cargo compartment.

- always place the load against the front or rear seat backrests.

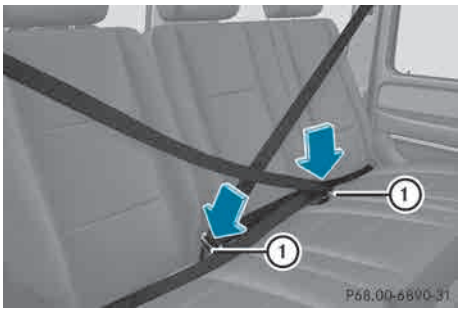

If the rear bench seat is not occupied:

▶ Insert the belt tongue on the outer seat belts into the buckle of opposite seat belt ①.

▶ Secure the load with sufficiently strong and wear-resistant tie downs.

▶ Pad sharp edges for protection.

Stowage areas

Stowage space

Important safety notes

⚠ **WARNING**

To help avoid personal injury during a collision or sudden maneuver, exercise care when storing objects in the vehicle. Put luggage or cargo in the cargo compartment if possible. Do not pile luggage or cargo higher than the seat backrests.

Keep compartment lids closed. This will help to prevent stored objects from being thrown about and injuring vehicle occupants during

- braking
- vehicle maneuvers
- an accident

Stowage compartments in the front

Glove box

▶ **To open:** pull handle ① and open glove box flap ②.

▶ **To close:** fold glove box flap ② upwards until it engages.

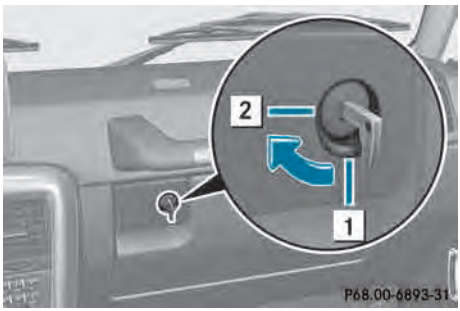

1 Glove box unlocked

2 Glove box locked

▶ **To lock:**(▷ page 70) insert the mechanical key into the lock and turn it 90° clockwise to position 2.

▶ **To unlock:**(▷ page 70) insert the mechanical key into the lock and turn it 90° counter-clockwise to position 1.

ℹ The glove box can only be locked and unlocked using the mechanical key.

Stowage compartment/telephone compartment under the armrest/in the center console

① Small stowage compartment

② Release button for the armrest

Stowage compartment/telephone compartment under the armrest

▶ **To open:** press button ②.

▶ Fold up armrest.

ℹ In the stowage compartment, there is a stowage tray.

▶ **To close:** fold the armrest down. The armrest engages audibly.

Stowage space in the rear

Stowage pockets

⚠ **WARNING**

Storage bags are intended for storing light-weight items only.

Heavy objects, objects with sharp edges or fragile objects may not be transported in the storage bag. In an accident, during hard braking, or sudden maneuvers, they could be thrown around inside the vehicle and cause injury to vehicle occupants.

Storage bags cannot protect transported goods in the event of an accident.

The stowage pockets are located on the rear side of the front seats.

Stowage nets

⚠ **WARNING**

Stowage nets are only intended for transporting light loads such as road maps, mail, etc.

Do not use stowage nets to transport heavy, bulky, sharp-edged or fragile objects. In an accident, during hard braking or during a change of direction, they could be thrown around inside the vehicle and cause injury to vehicle occupants.

Stowage nets cannot protect the transported loads in the event of an accident.

The stowage net is in the front-passenger footwell.

Cargo compartment enlargement

Important safety notes

⚠ **WARNING**

Always lock the seat backrest in its upright position when the rear seat bench is occupied, or the extended cargo volume is not in use.

Check for secure locking by pushing and pulling on the seat backrest.

In an accident, during hard braking or sudden maneuvers, loose items will be thrown around inside the vehicle. This can cause injury to vehicle occupants unless the items are securely fastened in the vehicle.

To help avoid personal injury during a collision or sudden maneuver, exercise care when transporting cargo.

⚠ **WARNING**

Failure to assure that the seat bench and seat backrests are locked into place could result in an increased chance of injury in an accident.

Never place hands under seat or near any moving parts while a seat is being adjusted.

For safety reasons, the rear seat bench must only be adjusted when the vehicle is stationary.

Never drive a vehicle with the tailgate open. Deadly carbon monoxide (CO) gases may enter vehicle interior resulting in unconsciousness and death.

! Ensure that you remove all containers from the cup holder in the rear before folding the seat backrest and the seat cushion of the rear bench seat forwards.

The rear bench seat is split symmetrically.

The left-hand and right-hand rear seats can be folded down to increase the cargo compartment capacity. The following changes are possible:

- fold the seat backrests forward
- fold the rear bench seat back fully.

Folding the seat backrest forward

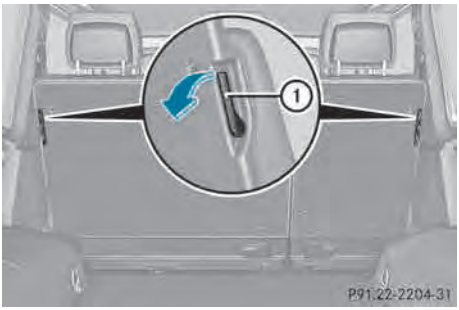

To fold forward the seat backrests, proceed as follows:

- ▶ Open the rear doors.
  This allows you better access to release lever ①.
- ▶ Remove the center head restraint (▷ page 88).
- ▶ Pull catch ① in the direction of the arrow.
  The corresponding rear seat backrest is not engaged.
- ▶ Fold the backrest forwards.
  The rear seat backrest engages audibly.

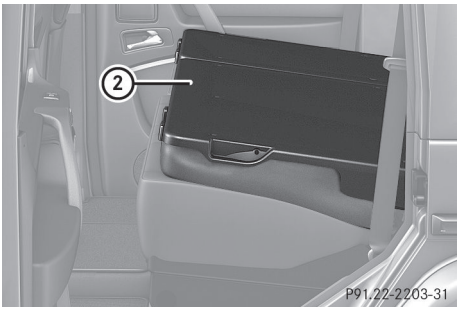

② Backrest folded forward

Folding the seat backrest back

! Make sure that the seat belt does not become trapped when folding the rear seat backrest back. Otherwise, it could be damaged.

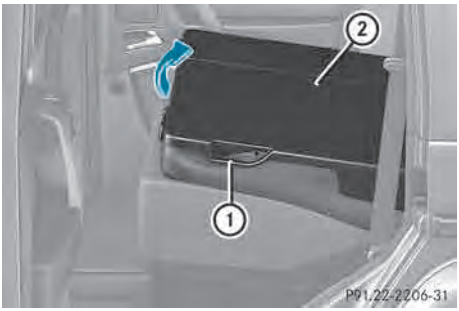

- ▶ Pull release lever ①.
  The corresponding seat backrest is released.
- ▶ Fold backrest ② backwards in the direction of the arrow.
  The seat catch engages audibly.
- ▶ Install the head restraint (▷ page 88).

Rear bench seat

Seat backrest release lever

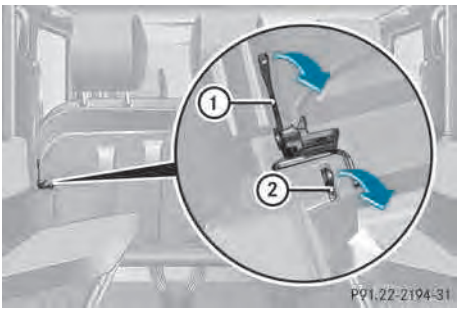

Seat backrest release lever

① Long lever

② Short lever

- ▶ Remove the head restraints (▷ page 88).
- ▶ Pull short lever ② in the direction of the arrow and hold it.
- ▶ Pull long lever ① in the direction of the arrow and fold the seat backrest forwards.

Folding the rear bench seat forward

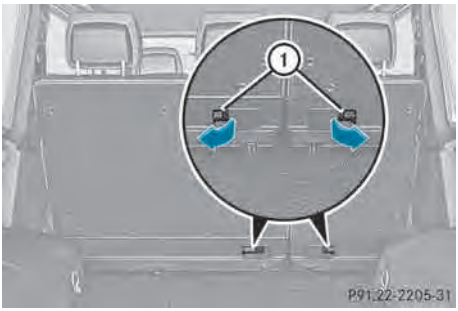

▶ Fold rear seat backrest (▷ page 265) forwards.

▶ Pull catch ① in the direction of the arrow. The corresponding rear bench seat is released.

▶ Fold rear bench seat ② forwards.

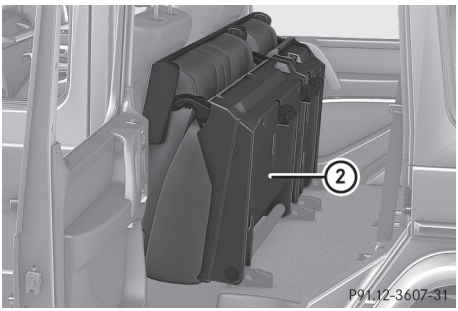

② Rear bench seat folded forward

Folding the rear bench seat into an upright position

⚠ **WARNING**

Make sure that the rear bench seat and front seat backrest are correctly engaged in position.

If the seat backrests or rear bench seat are not fully engaged and the following occurs:

- sharp braking
- a sudden change of direction
- an accident

the seat backrests or rear bench seat may fold forwards and instead of being restrained by the seats as intended you could be injured by them. Occupants could then also be injured in the event of an accident, e.g. by objects being thrown forwards from the cargo compartment.

▶ Fold the rear bench seat back. The seat catch engages audibly.

▶ Fold the backrest backwards (▷ page 265).

▶ Install the head restraints (▷ page 88).

Securing cargo

Important safety notes

⚠ **WARNING**

Distribute the load on the cargo tie down rings evenly.

Otherwise, vehicle occupants could be injured by objects being thrown around if you:

- brake sharply
- change direction suddenly
- are involved in an accident

Please observe the loading guidelines.

Observe the following notes on securing loads:

- secure the load using the cargo tie-down rings.
- do not use elastic straps or nets to secure a load, as these are only intended as an anti-slip protection for light loads.
- do not route tie-downs across sharp edges or corners.
- pad sharp edges for protection.
- only use tie downs that have been checked in accordance with applicable standards, e.g. lashing nets or lashing straps.
- fill the spaces between the load and the cargo compartment walls and the wheel mountings in a form-locking way. Only use dimensionally stable transportation aids for this, such as chocks, wooden fixings or padding.

Cargo tie-down rings in the cargo compartment

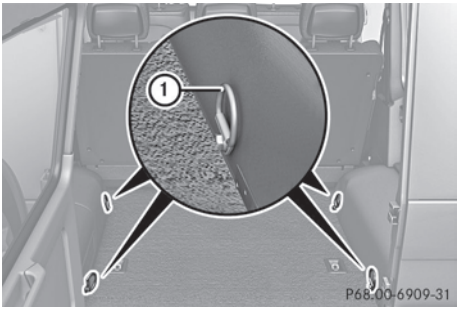

There are four cargo tie-down rings ① mounted at the sides in the cargo compartment.

Cargo compartment cover

Important safety notes

! When loading the vehicle, make sure that you do not stack the load in the cargo compartment higher than the lower edge of the side windows. Do not place heavy objects on top of the cargo compartment cover.

The cargo compartment cover is located behind the rear bench seat backrest.

Opening and closing the cargo compartment cover

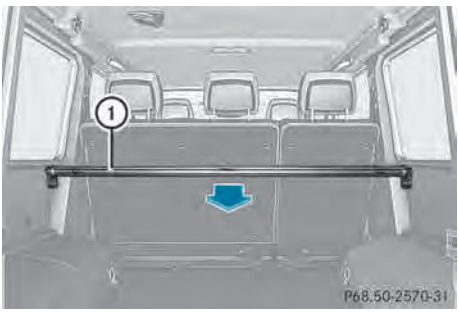

- **To open:** pull cargo compartment cover ① back and clip it into the retainers on the left and right of the rear door.
- **To close:** unclip cargo compartment cover ① and guide it forwards until it is completely rolled up.

Installing/removing the cargo compartment cover

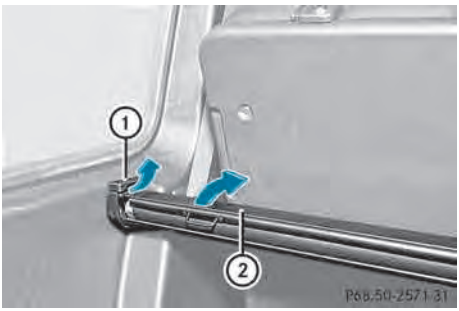

- **To remove:** make sure that cargo compartment cover ② is rolled up.
- Slide catches ① on the left-hand and right-hand sides of cargo compartment cover ② towards the center of the vehicle.
- Swing cargo compartment cover ② up and out.
- **To install:** slide catches ① towards the center of the vehicle.
- Insert cargo compartment cover ② into the recesses in the side trim.
- Push down the right-hand and left-hand sides of cargo compartment cover ② until it engages.
- Slide catches ① in the direction of the side trim.

Roof carrier

⚠ WARNING

Do not load items on the roof. It may cause instability during some maneuvers which could result in an accident.

The roof is not suited for transporting loads. Never use roof rails or other accessories mounted on the roof.

Features

Cup holders

Important safety notes

⚠ **WARNING**

In order to help prevent spilling liquids on vehicle occupants and/or vehicle equipment, only use containers that fit into the cup holder. Use lids on open containers and do not fill containers to a height where the contents, especially hot liquids, could spill during braking, vehicle maneuvers, or in an accident. Liquids spilled on vehicle occupants may cause serious personal injury. Liquids spilled on vehicle equipment may cause damage not covered by the Mercedes-Benz Limited Warranty.

When not in use, keep the cup holder closed. An open cup holder may cause injury to you or others when contacted during braking, vehicle maneuvers, or in an accident.

Keep in mind that objects placed in the cup holder may come loose during braking, vehicle maneuvers, or in an accident and be thrown around in the vehicle interior. Objects thrown around in the vehicle interior may cause an accident and/or serious personal injury.

Cup holder on the center console

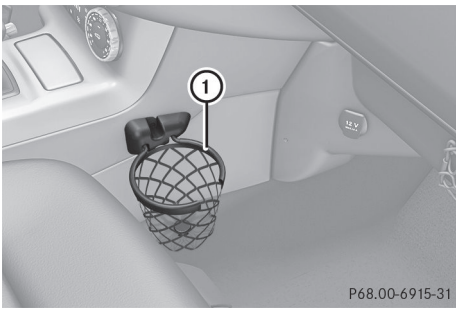

▶ Fold cup holder ① all the way up.

Cup holders in the rear compartment

! Ensure that you remove all containers from the cup holder in the rear before folding the seat backrest and the seat cushion of the rear bench seat forwards.

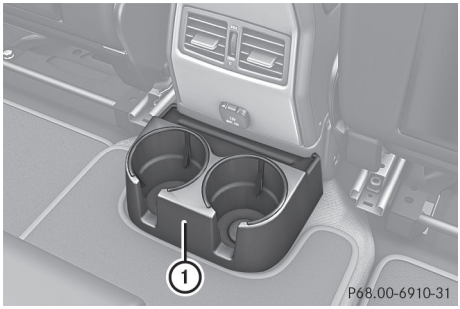

① Cup holders

Sun visors

Overview of sun visors

⚠ **WARNING**

Do not use the vanity mirror while driving. Keep the vanity mirrors in the sun visors closed while the vehicle is in motion. Reflected glare can endanger you and others.

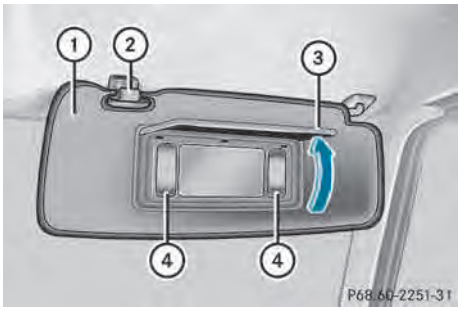

① Sun visor
② Bracket
③ Mirror cover
④ Mirror light

Vanity mirror in the sun visor

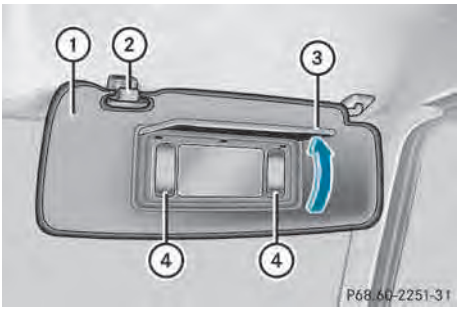

① Sun visor
② Bracket
③ Mirror cover
④ Mirror light

Mirror lights ④ will only function if sun visor ① is clipped into bracket ②.

▶ Fold down sun visor ①.

▶ Fold up mirror cover ③.
Mirror lights ④ are switched on automatically.

Glare from the side

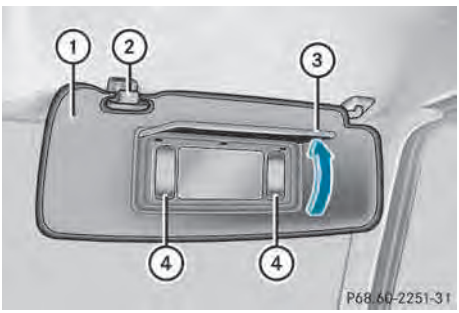

① Sun visor
② Bracket
③ Mirror cover
④ Mirror light

▶ Fold down sun visor ①.

▶ Pull sun visor ① from bracket ②.

▶ Swing sun visor ① to the side.

Stowage compartment/ashtray

Stowage compartment/ashtray in the center console

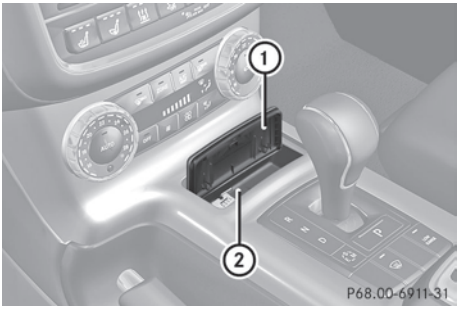

① Cover
② Insert

ℹ On new vehicles, insert ② is stored in the glove box. Install the insert before using the ashtray.

▶ **To open:** press cover ① and then release it.
The ashtray opens.

▶ **To remove the insert:** make sure that the engine is switched off and that the parking brake has been applied to secure the vehicle against rolling away.

▶ Move the selector lever to **N**.

▶ Press down cover ①.
Insert ② is released.

▶ Pull insert ② upwards and remove it.

▶ **To install the insert:** install insert ② from above.

▶ Push insert ② down.
Insert ② audibly engages.

▶ **To close:** close cover ① fully.

ℹ The ashtray is lit up if the low-beam headlamps are on.

Ashtray in the rear compartment

▶ **To open:** fold cover ② out in the direction of the arrow.

▶ **To remove the insert:** press retaining lug ① and pull insert ③ upwards and out.

▶ **To install the insert:** install insert ③ from above.

▶ **To close:** close cover ② fully.

Cigarette lighter

⚠ **WARNING**

When leaving the vehicle, always remove the SmartKey from the ignition lock. Always take the SmartKey with you and lock the vehicle. Do not leave children unattended in the vehicle, even if they are secured in a child restraint system, or with access to an unlocked vehicle. A child's unsupervised access to a vehicle could result in an accident and/or serious personal injury. The children could:

- injure themselves on parts of the vehicle
- be seriously or fatally injured through excessive exposure to extreme heat or cold
- injure themselves or cause an accident with vehicle equipment that can be operated even if the SmartKey is removed from the ignition lock or removed from the vehicle, such as seat adjustment, steering wheel adjustment, or the memory function

If children open a door, they could injure other persons or get out of the vehicle and injure themselves or be injured by following traffic.

Do not expose the child restraint system to direct sunlight. The child restraint system's metal parts, for example, could become very hot, and the child could be burned on these parts.

⚠ **WARNING**

Never touch the heating element or sides of the lighter; they are extremely hot. Hold the knob only.

Make sure any children traveling with you do not injure themselves or start a fire with the hot cigarette lighter.

! The 12 V socket in the cigarette lighter can be used for accessories (up to a maximum of 180 W), as long as they have the standard socket type for cigarette lighters.

Note that the socket in the cigarette lighter can be damaged when connecting accessories, for example by:

- frequent insertion and removal
- sockets that do not fit correctly

A damaged socket can cause the cigarette lighter to stop working.

▶ Press in cigarette lighter ①.
Cigarette lighter ① will pop out automatically when the heating element is red-hot.

12 V sockets

General notes

! If you are simultaneously using all three sockets in the vehicle, make sure that you do not exceed the maximum current draw of 45 A. Otherwise, you will overload the fuses.

The sockets can be used for accessories with a maximum current draw of 180 W (15 A), e.g. lamps or chargers for mobile phones.

If you use the sockets for long periods when the engine is switched off, the battery may discharge.

▶ Turn the SmartKey to position **2** in the ignition lock.

Socket in the front-passenger footwell

▶ Lift up the cover of the socket.

ⓘ The cigarette lighter socket can be also used (▷ page 270). This is the case even if the SmartKey has been removed from the ignition lock.

Socket in the rear compartment

The socket is located on the center console in the rear compartment.

▶ Lift up the cover of the socket.

Socket in the cargo compartment

The socket is located in the cargo compartment on the left-hand side, when viewed in the direction of travel, next to the rear door.

▶ Lift up the cover of the socket.

115 V socket

⚠ **WARNING**

The 115 V AC power socket operates on high voltage. Use the 115 V AC power socket in the vehicle with the same caution and care that you would take with power sockets at home. Keep fluids away from the 115 V AC power socket. Do not use liquids or sharp tools to clean the power socket. Keep the cover of the 115 V AC power socket closed

when not in use. Otherwise, you could suffer an electric shock and be seriously or even fatally injured.

⚠ **WARNING**

Any device that you connect must have a suitable plug and meet U.S. standards. Never pull at a cable to disconnect a plug from a 115 V AC power socket. Never use a damaged connection cable. The 115 V AC power socket must never be connected to another 115 V AC power source. Do not use a converter with an earthed plug for the 115 V AC power socket. This could cause serious injury to you and/or other people.

⚠ **WARNING**

If the 115 V AC power socket is damaged or pulled out of the trim, do not use or touch the 115 V AC power socket. The use of a 115 V AC power socket that has been damaged or pulled out of the trim could cause serious injury to you or others.

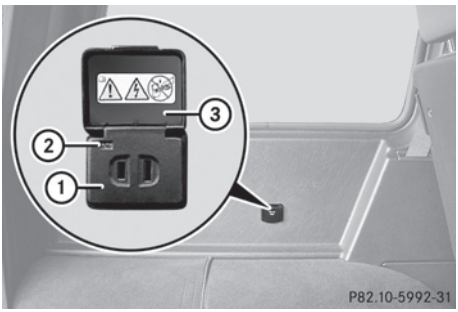

115 V power socket ① provides an AC voltage of 115 V so that small electronic devices can be connected. These devices, such as games consoles, chargers and laptops, should not consume more than a maximum of 150 W altogether.

Requirements for operation of these devices:

- the 12 V sockets in the rear compartment and the cargo compartment are operational (▷ page 271).
- the plug of the electronic device is plugged into 115 V power socket ①.
- the on-board power supply is within a permissible voltage range.
- the electronic device's maximum power output does not exceed 150 W.

▶ Open flap ③.

▶ Switch on the ignition.

▶ Insert the plug of the electronic device into 115 V power socket ①.
Indicator lamp ② lights up.

If indicator lamp ② does not light up, please read the section on malfunctions.

▶ **To turn off:** disconnect the plug from 115 V power socket ①.

Ensure that you do not pull on the cord.

▶ Close flap ③.

Possible causes of malfunctions:

- the on-board power supply is not within a permissible voltage range.
- the temperature of the DC/AC converter is temporarily too high.
- some small electronic devices have a constant nominal power of less than 150 W, but a very high switch-on current. In that case, there is a possibility that these devices will not function properly as 115 V socket ① is not able to provide a high enough current.

▶ If indicator lamp ② still does not light up, contact a qualified specialist workshop.

mbrace

Important safety notes

! You must have a license agreement to activate the mbrace service. Ensure that your system is activated and ready for use,

and press the [•—] MB Info call button to register. If one of these steps is not carried out, it may not be possible to activate the system.

If you have questions about the activation, contact one of the following telephone hotlines:

- **USA:** Response Center at 1-888-990-9007
- **Canada:** Customer Service at 1-888-923-8367

USA only: shortly after successfully registering with the mbrace service a user ID and password will be sent to you by post. You can use this password to log onto the mbrace area under "Owners Online" at **http://www.mbusa.com**.

The mbrace system is available if:

- it has been activated and is operational. Activation requires an available mobile phone network, a valid SIM card and a subscription to a security service.
- the battery is sufficiently charged.
- the corresponding mobile phone network is available for transmitting data to the Customer Center.

ⓘ Determining the location of the vehicle on a map is only possible if there is sufficient GPS reception and the vehicle position can be forwarded to the Customer Center.

The mbrace system

To adjust the volume during an mbrace call, proceed as follows:

▶ Press the [+] or [−] button on the multifunction steering wheel.

or

▶ Use the COMAND volume control.

The mbrace system provides three different services:

- automatic and manual emergency call
- Roadside Assistance call
- MB Info call

USA only: you can find further information and a description of all available features under "Owners Online" at **http://www.mbusa.com.**

System self-test

⚠ **WARNING**

A malfunction in the system has been detected if one of the following conditions occurs:

- the indicator lamp in the SOS button does not light up during the system self-diagnosis.
- the indicator lamp in the [🔧] Roadside Assistance button does not light up during the system self-diagnosis.
- the indicator lamp in the [•—] information button does not light up during the system self-diagnosis.
- the indicator lamp in the SOS button, [🔧] Roadside Assistance button or [•—] information button continues to be lit red after the system self-diagnosis.
- the `Tele Aid inoperative` or `Tele Aid not activated` message appears on the multifunction display after the system self-diagnosis.

If a malfunction is indicated as outlined above, the system may not operate as expected. In the event of an emergency, assistance must be summoned by other means.

Have the system checked at the nearest authorized Mercedes-Benz Center or contact the following service hotlines:

- **USA:** Response Center at 1-888-990-9007
- **Canada:** Customer Service at 1-888-923-8367

After you have switched on the ignition, the system carries out a self-diagnosis.

Emergency call

Important safety notes

⚠ **WARNING**

If the indicator lamp in the SOS button is flashing continuously and there was no voice connection to the Response Center established, then the mbrace system could not initiate an emergency call (e.g. the relevant cellular phone network is not available).

The message `Call Failed` appears in the multifunction display for approximately 10 seconds.

Should this occur, assistance must be summoned by other means.

! You must have a license agreement to activate the mbrace service. Ensure that your system is activated and ready for use, and press the [•—] MB Info call button to register. If one of these steps is not carried out, it may not be possible to activate the system.

If you have questions about the activation, contact one of the following telephone hotlines:

- **USA:** Response Center at 1-888-990-9007
- **Canada:** Customer Service at 1-888-923-8367

An emergency call is dialed automatically if an air bag or Emergency Tensioning Device is triggered.

ℹ An automatically dialed mbrace emergency call cannot be canceled.

An emergency call can also be initiated manually.

As soon as the emergency call has been initiated, the indicator lamp in the SOS button flashes. The `Connecting Call` message appears on the multifunction display.

COMAND is muted.

Once the connection has been made, the `Call Connected` message appears in the multifunction display.

All important information on the emergency is provided, for example:

- Current location of the vehicle (as determined by the GPS system)
- Vehicle model
- Vehicle color
- Vehicle identification number

A short time after the emergency call is initiated, a voice connection is automatically established between the Response Center and the vehicle occupants. If the vehicle occupants are able to respond, the Response Center will attempt to obtain more detailed information on the emergency.

ℹ If there is no response from the vehicle occupants, an ambulance is immediately sent to the vehicle.

Making an emergency call

⚠ **WARNING**

If you feel at any way in jeopardy when in the vehicle (e.g. smoke or fire in the vehicle, vehicle in a dangerous road location), please do not wait for voice contact after you have pressed the SOS button. Carefully leave the vehicle and move to a safe location. The Response Center will automatically contact local emergency officials with the vehicle's approximate location if they receive an automatic SOS signal and cannot make voice contact with the vehicle occupants.

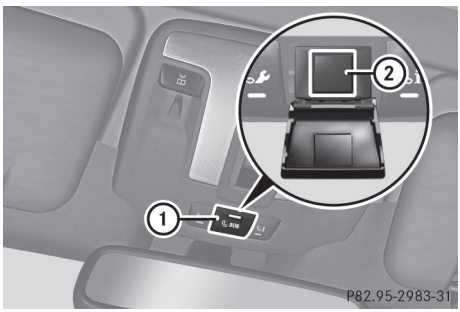

▶ **To initiate an emergency call manually:** press cover ① briefly to open.

▶ Press SOS button ② briefly.
The indicator lamp in SOS button ② flashes until the emergency call is concluded.

▶ Wait for the voice connection with the Response Center.

▶ After the emergency call, close cover ①.

Roadside Assistance button

▶ Open the stowage compartment under the armrest (▷ page 263).

▶ Press Roadside Assistance button ① for more than two seconds.
A call to a Mercedes-Benz Roadside Assistance Representative is initiated. Indicator lamp ② in Roadside Assistance button ① flashes while the call is active. The `Connecting Call` message appears in the multifunction display and the COMAND system is muted.

If a connection can be made, the `Call Connected` message appears in the multifunction display.

If a mobile phone network is available and there is sufficient GPS reception, the mbrace system transmits data to the Response Center, for example:

- Current location of the vehicle
- Vehicle identification number
- Vehicle model
- Vehicle color

ℹ The COMAND display shows that an mbrace call is active. You can switch to the navigation menu during the call by pressing the NAVI button on COMAND. Voice output is not available.

A voice connection is established between the Mercedes-Benz Roadside Assistance Representative and the vehicle occupants.

The Mercedes-Benz Roadside Assistance Representative either sends a qualified Mercedes-Benz technician or makes arrangements for your vehicle to be transported to the nearest authorized Mercedes-Benz Center. You may be charged for services such as repair work and/or towing. Further details are available in your mbrace manual.

▶ Describe the type of assistance needed.

ℹ If the indicator lamp in Roadside Assistance button ① is flashing continuously and no voice connection with the Response center has been established, then the mbrace system has not been able to initiate a Roadside Assistance call (e.g. the relevant mobile phone network is not available). The `Call Failed` message appears in the multifunction display.

▶ **To end a call:** press the [☎] button on the multifunction steering wheel.

or

▶ Press the corresponding button for ending a phone call on COMAND.

ℹ Sign and drive services[1]: you are not charged for services such as jump-starting, providing a few gallons of fuel for a fuel tank that has been run dry or changing a faulty tire with the vehicle's own spare wheel.

1 USA only.

MB Info call button

▶ Open the stowage compartment under the armrest (▷ page 263).

▶ Press Roadside Assistance button ① for more than two seconds.
A call to a Mercedes-Benz Roadside Assistance Representative is initiated. Indicator lamp ② in Roadside Assistance button ① flashes while the call is active. The `Connecting Call` message appears in the multifunction display and the COMAND system is muted.

If a connection can be made, the `Call Connected` message appears in the multifunction display.

If a mobile phone network is available and there is sufficient GPS reception, the mbrace system transmits data to the Response Center, for example:

- Current location of the vehicle
- Vehicle identification number
- Vehicle model
- Vehicle color

ℹ The COMAND display shows that an mbrace call is active. You can switch to the navigation menu during the call by pressing the NAVI button on COMAND. Voice output is not available.

A voice connection between the Response Center and the vehicle occupants is established. You can obtain information on how to operate your vehicle's systems, on the location of the nearest authorized Mercedes-Benz Center, and on further products and services offered by Mercedes-Benz USA.

You can find further information on the mbrace system at **http://www.mbusa.com**[2] Log in under "Owners Online".

ℹ If the indicator lamp in MB Info call button ① is flashing continuously and no voice connection with the Response center has been established, then the mbrace system has not been able to initiate an MB Info call (e.g. the relevant mobile phone network is not available). The `Call Failed` message appears in the multifunction display.

▶ **To end a call:** press the [☎] button on the multifunction steering wheel.

or

▶ Press the corresponding button for ending a phone call on COMAND.

Call priority

When service calls are active, e.g. Roadside Assistance or MB Info calls, an emergency call can still be initiated. In this case, an emergency call has the highest priority and takes precedence over all other active calls.

The indicator lamp of the respective button flashes until the call is ended. An emergency call can only be terminated by the Response Center. All other calls can be ended by pressing the [☎] button on the multifunction steering wheel or the corresponding COMAND button for ending a telephone call.

ℹ When an mbrace call has been initiated, COMAND is muted. The mobile phone is no longer connected to COMAND. However, if you want to use your mobile phone, we recommend that you do this only when the vehicle is stationary and in a safe location.

2 USA only.

Downloading destinations in COMAND

Destination Download gives you access to a database with over ten million points of interest (POIs) which can be downloaded onto the navigation system of your vehicle. If you know the destination, you can download the address or obtain the location of points of interest (POIs) or important destinations in the surrounding area.

You are prompted to confirm route guidance to the address entered.

ℹ Information on the components and operating principles of the COMAND system can be found in the separate COMAND operating instructions.

▶ Select Yes with the ◀ or ▶ button on COMAND.

▶ Confirm with the OK button on COMAND.

The system calculates the route and subsequently starts the route guidance with the address entered.

ℹ If you select No, the address can be stored in the address book.

ℹ The Destination Download function is available if the corresponding mobile phone network is available and data transfer is possible.

Search & Send

"Search & Send" is a destination entry service. You can find further information on "Search & Send" in the separate COMAND operating instructions.

Vehicle remote opening

If you have unintentionally locked your vehicle (e.g. the SmartKey is inside the vehicle) and a replacement key is not available:

▶ Contact the following service hotlines:

- **USA:** Response Center at 1-888-990-9007
- **Canada:** Customer Service at 1-888-923-8367

You will be asked for your password.

▶ Return to your vehicle at the time arranged with the Response Center.

▶ Press the release button on the door handle of the rear door for at least 20 seconds until the indicator lamp in the SOS button (▷ page 274) flashes.
The Connecting Call message appears on the multifunction display.

Alternatively, the vehicle can be opened via the Internet in the "Owner's Online" section using your identification number and password[3].

ℹ Vehicle remote opening is only possible if the corresponding mobile phone network is accessible.

The SOS button flashes and the Connecting Call message appears in the multifunction display to confirm that the command for vehicle remote unlocking has been received.

If the lock cylinder on the rear door is pressed for longer than 20 seconds before receiving authorization for remote unlocking from the Response center, you must wait 15 minutes before you can press the lock cylinder on the rear door again.

Vehicle remote closing

The remote closing feature can be used when you have forgotten to lock the vehicle and you are no longer nearby. The vehicle can then be locked by the Mercedes-Benz Customer Assistance Center.

The vehicle can be remotely locked within four days of the ignition being turned off.

▶ Contact the following service hotlines:

3 USA only.

- **USA:** Mercedes-Benz Customer Assistance Center at 1-800-FOR-MERCedes (1-800-367-6372) or 1-888-990-9007
- **Canada:** Customer Service at 1-888-923-8367

You will be asked for your PIN.

The next time you are inside the vehicle and you switch on the ignition, the Tele Aid Doors Locked Remotely message appears in the multifunction display.

USA only: alternatively, the vehicle can be locked via:

- the Internet, under the "Owners Online" section
- the telephone application (e.g. iPhone®, Blackberry)

To do this, you will need your identification number and password.

ⓘ The vehicle remote closing feature is available when the relevant mobile phone network is available and data connection is possible.

Stolen vehicle recovery service

If your vehicle has been stolen:

▶ Contact the police.
The police will issue an incident report. This report has a number.

▶ Forward this number to the Response Center together with your PIN.
The Response Center will then attempt to covertly contact the mbrace system. The Response Center contacts you and the local law enforcement authority if the vehicle is located. However, only the law enforcement agency is informed of the location of the vehicle.

ⓘ If the anti-theft alarm system is active for longer than 30 seconds, mbrace is automatically connected with the Customer Assistance center.

Vehicle remote malfunction diagnosis

With the vehicle remote malfunction diagnosis (Vehicle Health Check), the Customer Assistance center can provide improved support for problems with your vehicle. During an existing call, vehicle data is transferred to the Customer Assistance center. The customer service representative can use the received data to decide what kind of assistance is required. You are then, for example, guided to the nearest Mercedes-Benz Service center or a recovery vehicle is called.

If vehicle data needs to be transferred during an MB Info call or a Roadside Assistance call, this is initiated by the Customer Assistance center. You will see the Roadside Assistance Connected message in the COMAND display. If the vehicle remote malfunction diagnosis is able to be started, the Request for vehicle diagnosis received. Start vehicle diagnosis? message appears in the display.

▶ Press Yes to confirm the message.

▶ If the Vehicle Diagnosis: Please start ignition message appears: turn the SmartKey to position **2** in the ignition lock.

▶ If the Please follow the instructions received by phone and move your vehicle into a safe position message appears: follow the instructions of the customer service representative.
The message in the display disappears.
If you select Cancel, the vehicle remote malfunction diagnosis is canceled completely.
The vehicle operating state check begins. Meanwhile, the Vehicle diagnosis activated message appears.

When the check is finished, the Sending vehicle diagnosis data... (Voice connection may be interrupted during data transfer) message appears.

The vehicle data can now be sent to the Customer Assistance center.

▶ Press OK to confirm the message.
The voice connection with the Customer Assistance center is terminated.

The Vehicle Diagnosis: Transferring data... message appears.

The vehicle data is sent to the Customer Assistance center.

Depending on what the customer service representative agreed with you, the voice connection is re-established after the transfer is complete. If necessary, you will be contacted at a later time by another means, e.g. by e-mail or phone.

Further functions of the vehicle remote malfunction diagnosis include, for example:

- transfer of service data to the Customer Assistance center. If a service is overdue, the COMAND display shows a message about various special offers at your workshop.
- monthly status information e-mail on oil level, air pressure, maintenance, brakes, etc. If applicable, you will receive information on special offers in the e-mail.

  USA only: this information can also be called up under "Owners Online" at http://www.mbusa.com.

Information on the data stored in the vehicle (▷ page 24).

Information on Roadside Assistance (▷ page 22).

Downloading routes

Downloading routes allows you to transfer and save predefined routes in the navigation system. To do this, an SD memory card must be inserted into the COMAND system. If no SD memory card is inserted, you must insert the card into the card slot on the COMAND system before saving.

A route can be prepared and sent either by a customer service representative or via the mbrace portal on the Internet. Each route can include up to 20 way points. When a route has been received by the navigation system, the 'Route name' has been saved to memory card. Do you want to start route guidance? message appears on the COMAND display. The route is saved to the SD memory card.

▶ **To start route guidance:** select Yes.
An overview of the route is shown in the display.

ℹ If you select No, the saved route can be called up later in the navigation menu.

▶ Select Start.
Route guidance is started.

ℹ Downloaded and saved data can be called up again in COMAND. Further information can be found in the "COMAND", "Online and Internet services" and "Download destination/route" sections.

Speed alert

You can define the upper speed limit, which must not be exceeded by the vehicle. If this selected speed is exceeded by the vehicle, a message will be sent to the Customer Assistance center. The Customer Assistance center then forwards this information to you. You can select the way in which you receive this information beforehand. Possible options include text message, e-mail or an automated call.

The data which is sent to the Customer Assistance center contains the following information:

- the location where the speed limit was exceeded
- the time at which the speed limit was exceeded
- the selected speed limit which was exceeded

Geo fencing

Geo fencing allows you to select areas which the vehicle should not enter or leave. You will be informed if the vehicle crosses the boundaries of the selected areas. You can select the way in which you receive this information beforehand. Possible options include text message, e-mail or an automated call.

The area can be determined as either a circle or a polygon with a maximum of ten corners. You can specify up to ten areas simultaneously. Different settings are possible for each area.

USA only: these settings can be called up under "Owners Online" at http://www.mbusa.com.

Alternatively, you can trigger an MB Info call and inform the customer service representative that you wish to activate geo fencing.

Currently inactive areas can be activated by text message.

Triggering the vehicle alarm

With this function, you can trigger the vehicle's panic alarm via text message. An alarm sounds and the exterior lighting flashes. Depending on the setting, the panic alarm lasts five or ten seconds. Afterwards, the alarm switches off.

Brush guard (USA only)

⚠ **WARNING**

The brush guard is designed solely to enhance the appearance of the vehicle and help protect grille and headlamps from minor mishaps, either on or off road.

Since the safety characteristics are limited in the event of an accident, brush guard are not intended to prevent injury or damage in the event of an accident. Also observe state and local regulations on installation and use.

Raise and lower the brush guard in an open space with plenty of room.

ℹ If you wish to remove the brush guard, contact a qualified specialist workshop.

Garage door opener

Important safety notes

⚠ **WARNING**

Before programming the integrated remote control to a garage door opener or gate operator, make sure people and objects are out of the way of the device to prevent potential harm or damage. When programming a garage door opener, the door moves up or down. When programming a gate operator, the gate opens or closes.

Do not use the integrated remote control with any garage door opener that lacks safety stop and reverse features as required by U.S. federal safety standards (this includes any garage door opener model manufactured before April 1, 1982). A garage door that cannot detect an object - signaling the door to stop and reverse - does not meet current U.S. federal safety standards.

When programming a garage door opener, park vehicle outside the garage.

Do not run the engine while programming the integrated remote control. Inhalation of exhaust gas is hazardous to your health. All exhaust gas contains carbon monoxide (CO), and inhaling it can cause unconsciousness and possible death. All exhaust gas contains carbon monoxide (CO), and inhaling it can cause unconsciousness and possible death.

You can use the HomeLink® garage door opener integrated into the rear-view mirror to operate up to three different gate/garage door opener systems.

ℹ Certain garage door drives are incompatible with the integrated garage door opener. If you have difficulty programming the integrated garage door opener, contact an authorized Mercedes-Benz Center. You can also contact the following service hotlines:

- **USA:** Mercedes-Benz Customer Assistance Center at 1-800-FOR-MERCedes
- **Canada:** Customer Service at 1-800-387-0100

ℹ USA only:

This device complies with Part 15 of the FCC Rules. Operation is subject to the following two conditions:

1. This device may not cause harmful interference, and

2. this device must accept any interference received, including interference that may cause undesired operation.

Any unauthorized modification to this device could void the user's authority to operate the equipment.

ℹ Canada only:

This device complies with the RSS-210 Rules of Industry Canada. Operation is subject to the following two conditions:

1. This device may not cause harmful interference, and

2. this device must accept any interference received, including interference that may cause undesired operation of the device.

Any unauthorized modification to this device could void the user's authority to operate the equipment.

Programming the remote control

Programming

⚠ **WARNING**

Only press the button on the integrated garage door opener if there are no persons or objects present within the sweep of the garage door. Persons could otherwise be injured as the door moves.

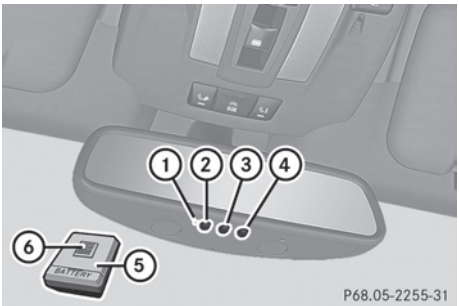

Integrated remote control in the rear-view mirror

①	Indicator lamp
②③④	Transmitter buttons
⑤	Garage door remote control
⑥	Transmitter button on the garage door remote control

Garage door remote control ⑤ is not part of the garage door opener.

ℹ To achieve the best result, insert new batteries in garage door remote control ⑤ of your garage door drive before programming.

▶ Delete the memory of the integrated remote control (▷ page 284) before programming it for the first time.

▶ Turn the SmartKey to position **2**(▷ page 139) in the ignition lock.

▶ Press and hold transmitter button ②, ③ or ④.

After a short time, indicator lamp ① will start flashing. It flashes approximately once per second.

ℹ Indicator lamp ① flashes immediately the first time that the transmitter button is programmed. If this transmitter button has already been programmed, indicator lamp ① will only start flashing at a rate of once a second after 20 seconds have elapsed.

▶ Continue to hold the transmitter button.

▶ Point transmitter button ⑤ of garage door remote control ⑥ towards the transmitter buttons on the rear-view mirror at a distance of 2 to 12 inches (5 to 30 cm).

ℹ The distance between garage door remote control ⑤ and the integrated garage door opener depends on the system of the garage door drive. Several attempts might be necessary. You should test every position for at least 20 seconds before trying another position.

▶ Keep transmitter button ⑥ on garage door remote control ⑤ pressed until indicator lamp ① starts to flash rapidly.
The programming has been successful if indicator lamp ① flashes rapidly.

▶ Release transmitter buttons ②, ③ or ④ on the integrated remote control and transmitter button ⑥ on the garage door remote control.

If indicator lamp ① goes out after approximately 20 seconds and has not flashed rapidly:

▶ Release transmitter buttons ②, ③ or ④ on the integrated remote control and transmitter button ⑥ on the garage door remote control.

▶ Repeat the procedure for the other transmitter buttons. When doing so, vary the distance between the garage door's remote control and the transmitter buttons in the rear-view mirror.

ℹ If the garage door system works with a rolling code, you must synchronize the remote control integrated in the rear-view mirror with the garage door system receiver after programming.
You will find further information in the garage door opening system's operating instructions, e.g. the sections on "Synchronizing the transmitter" or "Registering a new transmitter". You can also call the hotline mentioned above.

Synchronizing the rolling code

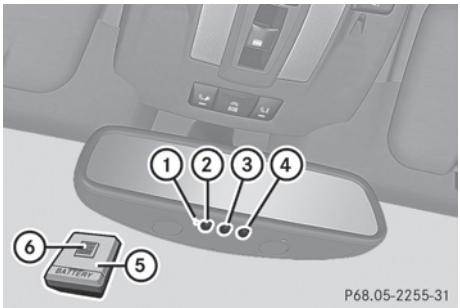

Integrated remote control in the rear-view mirror

①	Indicator lamp
②③④	Transmitter buttons
⑤	Garage door remote control
⑥	Transmitter button on the garage door remote control

Your vehicle must be within reach of the garage door or exterior gate drive. Make sure that neither your vehicle nor any persons/objects are present within the sweep of the door or gate.

Observe the safety notes when performing the rolling code synchronization (▷ page 280).

▶ Turn the SmartKey to position **2**(▷ page 139) in the ignition lock.

▶ Press the programming button of the door or gate drive (see the door or gate drive operating instructions, e.g. under "Programming of additional remote controls").

ℹ Usually, you now have 30 seconds to initiate the next step.

▶ Press previously programmed button ②, ③ or ④ of the integrated garage door opener until the door closes.
The rolling code synchronization is then complete.

Notes on programming the remote control

Canadian radio frequency laws require a "break" (or interruption) of the transmission

signals after broadcasting for a few seconds. Therefore, these signals may not last long enough for the integrated remote control to recognize the signal during programming. Comparable with Canadian law, American garage door openers also have a built-in "interruption".

If you live in Canada or have difficulties programming the garage door opener (regardless of where you live) when using the programming steps, proceed as follows:

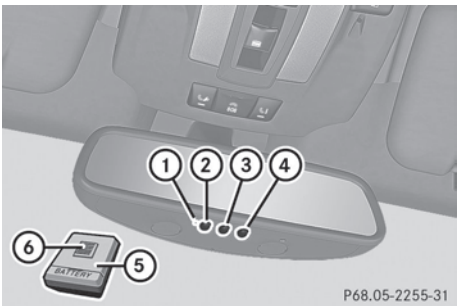

Integrated remote control in the rear-view mirror

① Indicator lamp

②③④ Transmitter buttons

⑤ Garage door remote control

⑥ Transmitter button on the garage door remote control

▶ Keep the transmitter button (②, ③ or ④) depressed until the integrated remote control has been set up successfully.

▶ At the same time, press transmitter button ⑥ of the garage door remote control for two seconds, then release it for two seconds, then press it again for two seconds.

▶ Repeat this sequence on transmitter button ⑥ of the garage door remote control until the frequency signal has been saved.

▶ If the setup procedure is successful, indicator lamp ① flashes once slowly and goes out after a few seconds.

▶ Continue with the other programming steps (see above).

Problems when programming

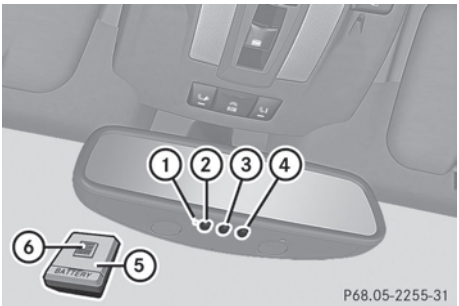

Integrated remote control in the rear-view mirror

① Indicator lamp

②③④ Transmitter buttons

⑤ Garage door remote control

⑥ Transmitter button on the garage door remote control

If you have problems when programming the integrated remote control, please note the following:

- Check the transmitter frequency of garage door remote control ⑤ (which can usually be found on the back of the remote control).

  The integrated remote control is compatible with devices that have units which operate in the frequency range of 280 to 390 MHz.
- Replace the batteries in garage door remote control ⑤. This increases the probability of garage door remote control ⑤ sending a strong and more precise signal to the integrated remote control on the rear-view mirror.
- When programming, hold garage door remote control ⑤ at varying distances and angles from the transmitter button which you are programming. Try various angles at a distance between 2and 12 inches (5to 30 cm) or at the same angle but at varying distances.
- If there is another garage door remote control for the same device, perform the programming steps again using that garage

door opener. Before performing these steps, make sure that new batteries have been inserted in the garage door remote control.

- Align the antenna cable of the garage door opener unit. This can improve signal reception/transmission.

Opening/closing the garage door

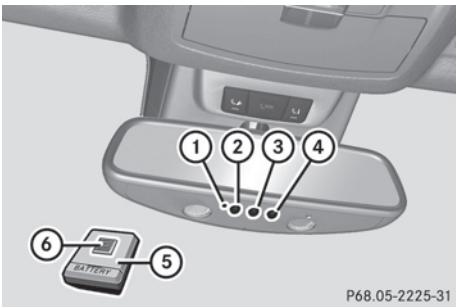

① Indicator lamp
②③④ Transmitter buttons
⑤ Garage door remote control
⑥ Transmitter button on the garage door remote control

Once programmed, the integrated remote control will assume the function of the garage door system's remote control. Please also read the operating instructions for the garage door system.

▶ Turn the SmartKey to position **2**(▷ page 139) in the ignition lock.

▶ Press transmitter button ②, ③ or ④ on the integrated remote control in the rear-view mirror that is programmed to operate the garage door.
Garage door system with fixed code: indicator lamp ① lights up continuously.

Garage door system with rolling code: indicator lamp ① flashes briefly and then lights up for approximately two seconds. This is repeated for up to 20 seconds.

ℹ The transmitter will transmit a signal for as long as the transmitter button is being pressed. The transmission will be halted after a maximum of 20 seconds and indicator lamp ① will flash. Press the transmitter button again, if necessary.

Clearing the remote control memory

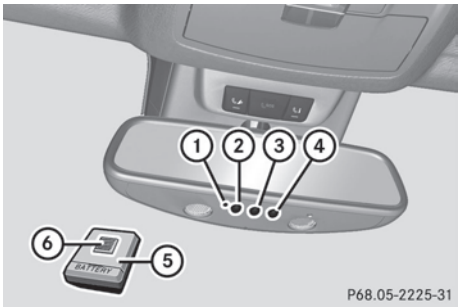

① Indicator lamp
②③④ Transmitter buttons
⑤ Garage door remote control
⑥ Transmitter button on the garage door remote control

▶ Turn the SmartKey to position **2**(▷ page 139) in the ignition lock.

▶ Press and hold transmitter buttons ② and ④ for approximately 20 seconds until indicator lamp ① flashes rapidly.
The memory is cleared.

ℹ You should clear the remote control memory before selling the vehicle.

Floormat on the driver's side

⚠ **WARNING**

Whenever you are using a floormat, make sure there is enough clearance and that the floormat is securely fastened.

The floormat should always be securely fastened using the fastening equipment.

Before driving off, check that the floormat is securely in place and adjust it if necessary. A loose floormat could slip and hinder proper functioning of the pedals.

Do not place several floormats on top of each other as this may impair pedal movement.

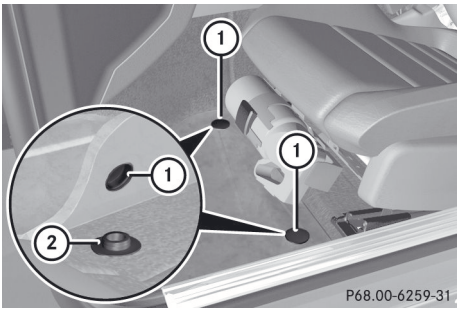

- Slide the seat backwards.
- **To install:** place the floormat in the footwell.
- Press studs ① onto retainers ②.
- **To remove:** pull the floormat out of retainers ②.
- Remove the floormat.

Useful information 288
Engine compartment 288
Maintenance 293
Care 294

Useful information

ℹ This Operator's Manual describes all models and all standard and optional equipment of your vehicle available at the time of publication of the Operator's Manual. Country-specific differences are possible. Please note that your vehicle may not be equipped with all features described. This also applies to safety-related systems and functions.

ℹ Read the information on qualified specialist workshops: (▷ page 23).

Engine compartment

Hood

Important safety notes

⚠ **WARNING**

Do not pull the release lever while the vehicle is in motion. Otherwise, the hood could be forced open by passing air flow.

This could cause the hood to come loose and injure you and/or others.

⚠ **WARNING**

Do not open the hood when the engine is overheated. You could be seriously injured. Observe the coolant temperature gauge to determine whether the engine may be overheated. If you see flames or smoke coming from the engine compartment, move away from the vehicle. Wait until the engine has cooled. If necessary, call the fire department.

⚠ **WARNING**

You could be injured when the hood is open – even when the engine is turned off.

Parts of the engine can become very hot. To prevent burns, let the engine cool completely before touching any components on the vehicle. Comply with all relevant safety precautions.

⚠ **WARNING**

To avoid injury, stay clear of moving parts when the hood is open and the engine is running.

The radiator fan may continue to run for approximately 30seconds or may even restart after the engine has been switched off. For this reason, you must not reach into the fan rotation area.

⚠ **WARNING**

The engine is equipped with a transistorized ignition system. Because of the high voltage, it is dangerous to touch any components (ignition coils, spark plug sockets, diagnostic socket) of the ignition system:

- with the engine running
- while starting the engine
- when the ignition is switched on and the engine is turned manually

⚠ **WARNING**

The windshield wipers and wiper linkage could be set in motion.

When the hood is open, you or others could be injured by the wiper linkage.

Make sure that the windshield wipers are switched off and that the SmartKey has been pulled out of the ignition lock before opening the hood.

! Make sure that the windshield wipers are not folded away from the windshield. You could otherwise damage the windshield wipers or the hood.

Opening the hood

The release lever on the hood is in the footwell on the left-hand side of the vehicle when viewed in the direction of travel.

▶ Make sure that the windshield wipers are turned off.

▶ Pull release lever ① on the hood.
The hood is released.

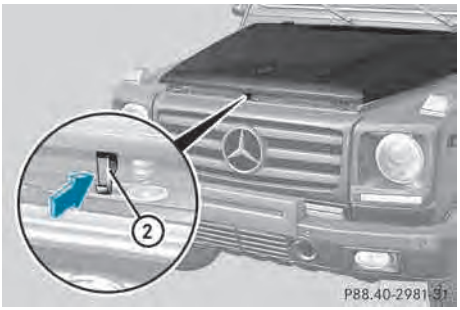

▶ Lift the hood slightly.

▶ Push hood catch handle ② in the direction of the arrow and lift the hood.

Closing the hood

⚠ **WARNING**

When closing the hood, use extreme caution not to catch hands or fingers. Be careful that you do not close the hood on anyone.

Make sure the hood is securely engaged before driving off. Do not continue driving if the hood can no longer engage after an accident, for example. The hood could otherwise come loose while the vehicle is in motion and injure you and/or others.

▶ Lower the hood and let it drop shut from a height of approximately 8 in. (20 cm).

▶ Check that the hood has engaged properly. If the hood can be raised slightly, it is not properly engaged. Open it again and close it with a little more force.

Engine oil

Notes on the oil level

Depending on the driving style, the vehicle consumes up to 0.9 US qt (0.8 l) of oil over a distance of 600 miles (1000 km). The oil consumption may be higher than this when the vehicle is new or if you frequently drive at high engine speeds.

Checking the oil level using the oil dipstick

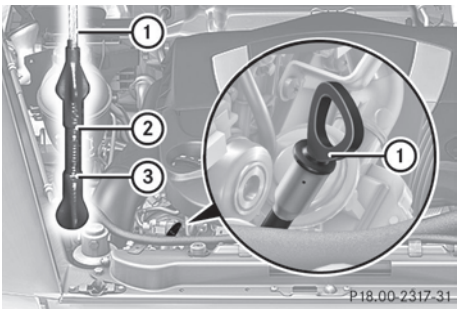

Example: oil dipstick

When checking the oil level:

- park the vehicle on a level surface.
- the engine should be switched off for approximately five minutes if the engine is at normal operating temperature.
- the engine should be switched off for at least 30 minutes if the engine is not at operating temperature (i.e. if you only start the engine briefly).

▶ Pull oil dipstick ① out of the dipstick guide tube.

▶ Wipe off oil dipstick ①.

▶ Slowly slide oil dipstick ① into the guide tube to the stop, and take it out again. The oil level is correct if the level is between MIN mark ③ and MAX mark ②.

▶ Add oil if necessary.

Checking the oil level using the on-board computer

! Do not add too much oil. adding too much engine oil can result in damage to the engine or to the catalytic converter. Have excess engine oil siphoned off.

G 65 AMG: the oil level can be checked using the on-board computer only.

On all other models, the oil dipstick must be used to check the engine oil level.

When checking the oil level:

- park the vehicle on a level surface.
- the engine should be switched off for approximately five minutes if the engine is at normal operating temperature.

▶ Make sure that the SmartKey is in position **2** in the ignition lock.

▶ Press the △ or ▽ button on the steering wheel to select the following message:

The measurement takes a few seconds. You will see one of the following messages in the multifunction display:

- Engine Oil Level OK
- Add 1.0 qt (Canada: 1.0 liter) to reach maximum oil level.
- Add 1.5 qts (Canada: 1.5 liters) to reach maximum oil level.
- Add 2.0 qts. (Canada: 2.0 liters) to reach maximum oil level.

▶ Add oil if necessary.

If the engine is at normal operating temperature and the Engine Oil Reduce Oil Level message appears, the engine oil level is too high.

▶ Have excess oil siphoned off.

If the Switch ignition on to check engine oil level message appears:

▶ Turn the SmartKey to position **2** in the ignition lock (▷ page 139).

If the Observe Waiting Time message appears:

▶ **If the engine is at normal operating temperature:** repeat the measurement after about five minutes.

▶ **If the engine is not at normal operating temperature:** (e.g. if the engine was only started briefly) repeat the measurement after about 30 minutes.

If the Engine Oil level Not With Engine On message appears:

▶ Switch off the engine.

▶ **If the engine is at normal operating temperature:** wait about five minutes before carrying out the measurement.

▶ **If the engine is not at normal operating temperature:** e.g. if the engine was only started briefly, wait approximately 30 minutes before carrying out the measurement.

ℹ If you wish to cancel the measurement, press the ▽ or △ button on the multifunction steering wheel.

Adding engine oil

Environmental note

When adding oil, take care not to spill any. If oil enters the soil or waterways, it is harmful to the environment.

! Only use engine oils and oil filters that have been approved for vehicles with a service system. You can obtain a list of the engine oils and oil filters tested and approved in accordance with the Mercedes-Benz Specifications for Service Products at any Mercedes-Benz Service center.

Damage to the engine or exhaust system is caused by the following:

- using engine oils and oil filters that have not been specifically approved for the service system
- replacing engine oil and oil filters after the interval for replacement specified by the service system has been exceeded
- using engine oil additives.

! Do not add too much oil. If the oil level is above the "max" mark on the dipstick, too much oil has been added. This can lead to damage to the engine or the catalytic converter. Have excess oil siphoned off.

Example: engine oil cap

▶ Turn cap ① counter-clockwise and remove it.

▶ Add the amount of oil required.

Observe the specifications in the on-board computer when doing so or fill carefully to the maximum mark on the oil dipstick.

Further information on engine oil (▷ page 353).

ℹ The difference between the minimum mark and the maximum mark on the oil dipstick is approximately 2.1 US qt (2 l).

▶ Replace cap ① on the filler neck and tighten clockwise.
Ensure that the cap locks into place securely.

Additional service products

Checking the coolant level

⚠ WARNING

In order to avoid potentially serious burns:

- use extreme caution when opening the hood if there are any signs of vapor or coolant leaking from the cooling system, or if the coolant temperature display indicates that the coolant is overheated.
- do not remove the pressure cap on the coolant tank if the coolant temperature is above 158 °F (70 °C). Allow the engine to cool down before removing the cap. The coolant tank contains hot fluid and is under pressure.
- using a cloth, slowly turn the cap approximately ½ turn to relieve excess pressure. If you open the cap immediately, pressurized scalding hot fluid and vapor will be blown out.
- do not spill antifreeze on hot engine parts. Antifreeze contains ethylene glycol which may burn if it comes into contact with hot engine parts.

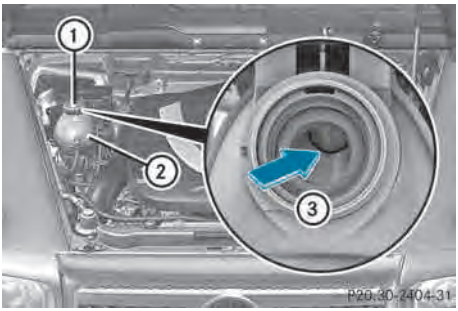

▶ Park the vehicle on a level surface.

Only check the coolant level when the vehicle is on a level surface and the engine has cooled down.

▶ Turn the SmartKey to position **2** (▷ page 139) in the ignition lock.

▶ Check the coolant temperature display in the instrument cluster.
The coolant temperature must be below 158 °F (70 °C).

▶ Slowly turn cap ① half a turn counter-clockwise to allow excess pressure to escape.

▶ Turn cap ① further counter-clockwise and remove it.
If the coolant is at the level of marker bar ③ in the filler neck when cold, there is enough coolant in coolant expansion tank ②.

If the coolant level is approximately 0.6 in (1.5 cm) above marker bar ③ in the filler neck when warm, there is enough coolant in coolant expansion tank ②.

▶ If necessary, add coolant that has been tested and approved by Mercedes-Benz.

▶ Replace cap ① and turn it clockwise as far as it will go.

For further information on coolant, see (▷ page 354).

Adding washer fluid to the windshield washer system/headlamp cleaning system

⚠ **WARNING**

Washer solvent/antifreeze is highly flammable. Do not spill washer solvent/antifreeze on hot engine parts, because it may ignite and burn. You could be seriously burned.

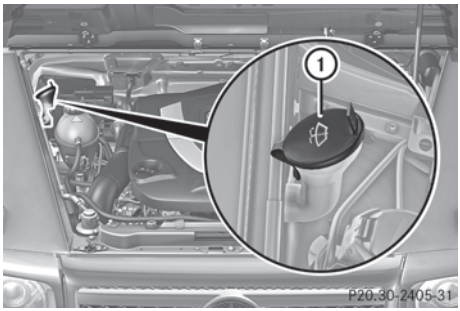

Example: washer fluid reservoir

▶ **To open:** pull cap ① upwards by the tab.

▶ Add the premixed washer fluid.

▶ **To close:** press cap ① onto the filler neck until it engages.

Further information on windshield washer fluid/antifreeze (▷ page 356).

Brake fluid level

! If you notice that the brake fluid level in the brake fluid reservoir has fallen to the MIN mark or less, check the brake system immediately for leaks. Also check the thickness of the brake linings. Visit a qualified specialist workshop immediately.

Do not add brake fluid. This does not correct the error.

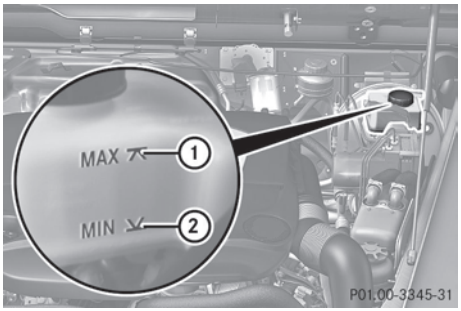

Only check the brake fluid level when the vehicle is on a level surface.

If the brake fluid level is between MIN mark ① and MAX mark ② on the brake fluid reservoir, it is correct.

Maintenance

Service interval display

Service messages

Information on the type of service and service intervals (see the separate Maintenance Booklet).

You can obtain further information from an authorized Mercedes-Benz Center or at http://www.mbusa.com (USA only).

The ASSYST service interval display informs you of the next service due date.

If a service due date has been exceeded, you also hear a warning tone.

The multifunction display shows a service message for several seconds, e.g.:

Service A in 99999 Miles
Service A Due Now
Service A Exceeded By 99999 Miles

Maintaining the time-dependent service schedule:

▶ Before disconnecting the battery, note down the service due date displayed.

or:

▶ After reconnecting the battery, subtract the battery disconnection periods from the service date shown on the display.

ℹ The service interval display should not be confused with the engine oil level display.

The symbol and the letter indicate which type of service is due:

Minor service A

Major service B

The ASSYST service interval display does not take into account any periods of time during which the battery is disconnected.

Hiding a service message

▶ To hide the service message, press the back button on the multifunction steering wheel (▷ page 31)(▷ page 211).

Displaying service messages

Use the buttons on the multifunction steering wheel.

▶ Switch on the ignition.

▶ Press or to select the **standard display** menu on the steering wheel (▷ page 212).

▶ Select or to select the service interval display.
The or service symbol and the service due date are displayed.

Points to note

Arduous operating conditions or increased loads on the vehicle will require some service work to be performed more often than for a vehicle in normal use. Such arduous conditions include regular city driving with frequent intermediate stops and use in

mountainous terrain or on poor road surfaces.

For example, if the vehicle is used under arduous operating conditions, have air filters, engine oil and oil filters changed frequently and check the wheels often. Further information can be obtained at a qualified specialist workshop, e.g. an authorized Mercedes-Benz Center.

Fuel/water separator

Environmental note

Dispose of service products in an environmentally responsible manner.

! If you continue driving without having the fuel/water separator serviced, this could cause damage to the engine. Any resulting damage is not covered by the warranty.

If the fuel/water separator needs servicing, the following message appears in the multifunction display:

You will also hear a brief warning tone.

▶ Visit a qualified specialist workshop as soon as possible.

Care

General notes

Regular care of your vehicle is a condition for retaining the quality in the long term.

Use care products and cleaning agents recommended and approved by Mercedes-Benz.

WARNING

Many cleaning products can be hazardous. Some are poisonous, others are flammable. Always follow the instructions on the particular container. Always open your vehicle's doors or windows when cleaning the inside.

Never use fluids or solvents that are not designed for cleaning your vehicle.

Always lock away cleaning products and keep them out of reach of children.

! For cleaning your vehicle, do not use any of the following:

- dry, rough or hard cloths
- abrasive cleaning agents
- solvents
- cleaning agents containing solvents

Do not scrub.

Do not touch the surfaces or protective films with hard objects, e.g. a ring or ice scraper. You could otherwise scratch or damage the surfaces and protective film.

Environmental note

Dispose of empty packaging and cleaning cloths in an environmentally responsible manner.

! Do not park the vehicle for an extended period straight after cleaning it, particularly after having cleaned the wheels with wheel cleaner. Wheel cleaners could cause increased corrosion of the brake discs and brake pads/linings. For this reason, you should drive for a few minutes after cleaning. Braking heats the brake discs and the brake pads/linings, thus drying them. The vehicle can then be parked.

Exterior care

Automatic car wash

⚠ **WARNING**

Braking efficiency is reduced after washing the vehicle. This could cause an accident. For this reason, you must drive particularly carefully after washing the vehicle until the brakes have dried.

! Never clean your vehicle in a Touchless Automatic Car Wash as these use special cleaning agents. These cleaning agents can damage the paintwork or plastic parts.

! Make sure that the automatic car wash is suitable for the size of the vehicle. Fold in the exterior mirrors before the vehicle is washed. The exterior mirrors could otherwise be damaged.

! Make sure that the automatic transmission is in position **N** when washing your vehicle in a tow-through car wash. The vehicle could be damaged if the transmission is in another position.

! Make sure that:

- the side windows and sliding sunroof are closed completely.
- the blower for the ventilation/heating is switched off (airflow control is turned to position **0**/the AUTO and A/C REST buttons are switched off).
- the windshield wiper switch is at position **0**.

The vehicle could otherwise be damaged.

You can wash the vehicle in an automatic car wash from the very start.

If the vehicle is very dirty, pre-wash it before cleaning it in an automatic car wash.

After using an automatic car wash, wipe off wax from the windshield and the wiper blades. This will prevent smears and reduce wiping noises caused by residue on the windshield.

Washing by hand

In some countries, washing by hand is only allowed at specially equipped washing bays. Observe the legal requirements in all countries concerned.

When using the vehicle in winter, remove all traces of road salt deposits carefully and as soon as possible.

When washing the vehicle underbody, also clean the inside of the wheels.

▶ Do not use hot water and do not wash the vehicle in direct sunlight.

▶ Use a soft sponge to clean.

▶ Use a mild cleaning agent, such as a car shampoo approved by Mercedes-Benz.

▶ Thoroughly hose down the vehicle with a gentle jet of water.

▶ Do not point the water jet directly towards the air inlets.

▶ Use plenty of water and rinse out the sponge frequently.

▶ Rinse the vehicle with clean water and dry thoroughly with a chamois.

▶ Do not let the cleaning agent dry on the paintwork.

Power washers

⚠ **WARNING**

Do not use power washers with circular jet nozzles (concentrated-power jets) to clean your vehicle, especially for cleaning tires. You could otherwise damage the tires and cause an accident.

! Always maintain a distance of at least 11.8 in (30 cm) between the vehicle and the power washer nozzle. Information about the correct distance is available from the equipment manufacturer.

Move the power washer nozzle around when cleaning your vehicle.

Do not aim directly at any of the following:

- tires
- door gaps, roof gaps, joints, etc.
- electrical components
- battery
- connectors
- lights
- seals
- trim
- ventilation slots

Damaged seals or electrical components can lead to leaks or failures.

Cleaning the wheels

! Do not use acidic wheel cleaning products to remove brake dust. This could damage wheel bolts and brake components.

! Do not park the vehicle for an extended period straight after cleaning it, particularly after having cleaned the wheels with wheel cleaner. Wheel cleaners could cause increased corrosion of the brake discs and brake pads/linings. For this reason, you should drive for a few minutes after cleaning. Braking heats the brake discs and the brake pads/linings, thus drying them. The vehicle can then be parked.

Cleaning the paintwork

! Do not affix:

- stickers
- films
- magnetic plates or similar items

to painted surfaces. You could otherwise damage the paintwork.

Scratches, corrosive deposits, areas affected by corrosion and damage caused by inadequate care cannot always be completely repaired. In such cases, visit a qualified specialist workshop.

▶ Remove dirt immediately, where possible, while avoiding rubbing too hard.

▶ Soak insect remains with insect remover and rinse off the treated areas afterwards.

▶ Soak bird droppings with water and rinse off the treated areas afterwards.

▶ Remove coolant, brake fluid, tree resin, oils, fuels and greases by rubbing gently with a cloth soaked in petroleum ether or lighter fluid.

▶ Use tar remover to remove tar stains.

▶ Use silicone remover to remove wax.

If water no longer forms "beads" on the paint surface, use the paint care products recommended and approved by Mercedes-Benz. This is the case approximately every three to five months, depending on the climate conditions and the care product used.

If dirt has penetrated the paint surface or if the paint has become dull, the paint cleaner recommended and approved by Mercedes-Benz should be used.

Do not use these care products in the sun or on the hood while the hood is hot.

▶ Use a suitable touch-up stick, e.g. MB Touch-Up Stick, to correct smaller areas of paint damage quickly and provisionally.

Matte finish care

! Never polish the vehicle or the light alloy wheels. Polishing causes the finish to shine.

! Never use paint cleaner, buffing or polishing products, or gloss preserver, e.g. wax. These products are only suitable for high-gloss surfaces. Their use on vehicles with matte finish leads to considerable surface damage (shiny, spotted areas).

Always have paintwork repairs carried out at a qualified specialist workshop.

! Do not use wash programs with a hot wax treatment under any circumstances.

If your vehicle has a clear matte finish, observe the following instructions in order to avoid damage to the paintwork due to incorrect care.

These notes also apply to light alloy wheels with a clear matte finish.

ⓘ The vehicle should preferably be washed by hand using a soft sponge, car shampoo and plenty of water.

ⓘ Use only insect remover and car shampoo from the range of recommended and approved Mercedes-Benz care products.

Cleaning the windows

⚠ **WARNING**

Switch off the windshield wipers and remove the SmartKey from the ignition lock before cleaning the windshield or the wiper blades. The windshield wipers could otherwise move and injure you.

! Do not use dry cloths, abrasive products, solvents or cleaning agents containing solvents to clean the inside of the windows. Do not touch the insides of the windows with hard objects, e.g. an ice scraper or ring. There is otherwise a risk of damaging the windows.

! Clean the water drainage channels of the windshield and the rear window at regular intervals. Deposits such as leaves, petals and pollen may under certain circumstances prevent water from draining away. This can lead to corrosion damage and damage to electronic components.

▶ Clean the inside and outside of the windows with a damp cloth and a cleaning agent that is recommended and approved by Mercedes-Benz.

Cleaning the wiper blades

⚠ **WARNING**

Switch off the windshield wipers and remove the SmartKey from the ignition lock before cleaning the windshield or the wiper blades. The windshield wipers could otherwise move and injure you.

! Do not pull the wiper blade. Otherwise, the wiper blade could be damaged.

! Do not clean wiper blades too often and do not rub them too hard. Otherwise, the graphite coating could be damaged. This could cause wiper noise.

! Hold the wiper arm securely when folding back. The windshield could be damaged if the wiper arm smacks against it suddenly.

▶ Fold the windshield wiper arms away from the windshield.

▶ Carefully clean the wiper blades with a damp cloth.

▶ Fold the windshield wiper arms back again before switching on the ignition.

Cleaning the headlamps

! Only use cleaning agents or cleaning cloths which are suitable for plastic headlamp lenses. Unsuitable cleaning agents or cleaning cloths could scratch or damage the plastic headlamp lenses.

▶ Clean the headlamp lenses with a damp sponge and a mild cleaning agent, e.g. Mercedes-Benz car shampoo or cleaning cloths.

Cleaning the sensors

! If you clean the sensors with a power washer, make sure that you keep a distance of at least 11.8 in (30 cm) between the vehicle and the power washer nozzle. Information about the correct distance is available from the equipment manufacturer.

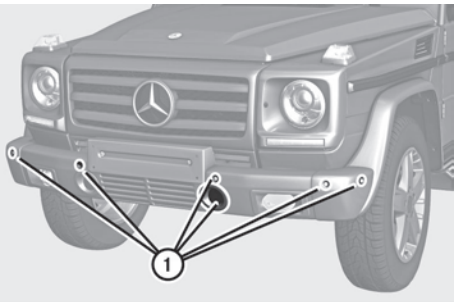

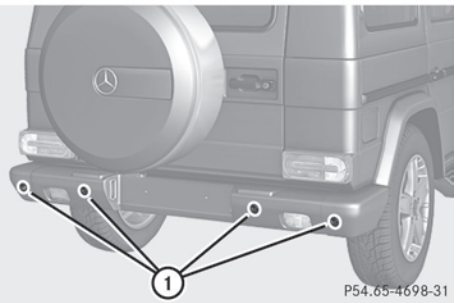

▶ Clean sensors ① of the driving systems with water, car shampoo and a soft cloth.

Cleaning the rear view camera

! Do not clean the camera lens and the area around the rear view camera with a power washer.

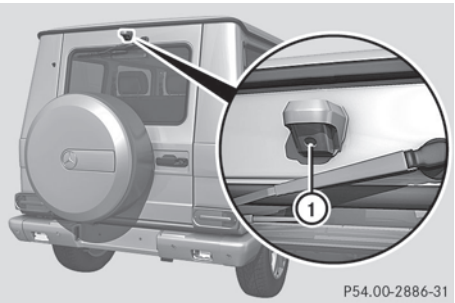

▶ Use clear water and a soft cloth to clean camera lens ①.

Cleaning chrome parts

! Do not clean the exhaust pipe with acid-based cleaning agents such as sanitary cleansers or wheel cleaners.

Impurities combined with the effects of road grit and corrosive environmental factors may cause flash rust to form on the surface. You can restore the original shine of the chrome parts by cleaning them regularly, especially in winter and after washing.

▶ Clean the chrome parts with a chrome care product tested and approved by Mercedes-Benz.

Interior care

Cleaning the display

! For cleaning, do not use any of the following:

- alcohol-based thinner or gasoline
- abrasive cleaning agents
- commercially-available household cleaning agents

These may damage the display surface. Do not put pressure on the display surface when cleaning. This could lead to irreparable damage to the display.

▶ Before cleaning the display, make sure that it is switched off and has cooled down.

▶ Clean the display surface using a commercially available microfiber cloth and TFT/LCD display cleaner.

▶ Dry the display surface using a dry microfiber cloth.

Cleaning the plastic trim

⚠ **WARNING**

When cleaning the steering wheel boss and dashboard, do not use cockpit sprays or cleaning agents containing solvents. Cleaning agents containing solvents cause the surface to become porous, and as a result, plastic

parts may break away and be thrown around the interior when an air bag is deployed, which may result in severe injuries.

! Do not affix the following to plastic surfaces:

- stickers
- films
- scented oil bottles or similar items

You can otherwise damage the plastic.

! Do not allow cosmetics, insect repellent or sunscreen to come into contact with the plastic trim. This maintains the high-quality look of the surfaces.

▶ Wipe the plastic trim with a damp, lint-free cloth, e.g. a microfiber cloth.

▶ **Heavy soiling:** use car care and cleaning products recommended and approved by Mercedes-Benz.
The surface may change color temporarily. Wait until the surface is dry again.

Cleaning the steering wheel and gear or selector lever

▶ Thoroughly wipe with a damp cloth or use leather care agents that have been recommended and approved by Mercedes-Benz.

Cleaning wooden trim and trim strips

! Do not use solvent-based cleaning agents such as tar remover, wheel cleaners, polishes or waxes. There is otherwise a risk of damaging the surface.

! Do not use chrome polish for trim strips. The trim strips have a chrome look but are mostly made of anodized aluminum and can lose their shine if chrome polish is used. Use a damp, lint-free cloth instead when cleaning the trim strips.

If the chrome-plated trim strips are very dirty, you can use a chrome polish. If you are unsure as to whether the trim strips are chrome-plated or not, consult an authorized Mercedes-Benz Center.

▶ Wipe the wooden trim and trim strips with a damp, lint-free cloth, e.g. a microfiber cloth.

▶ **Heavy soiling:** use car care and cleaning products recommended and approved by Mercedes-Benz.

Cleaning the seat covers

! Do not use microfiber cloths to clean genuine leather or artificial leather covers, as these are too aggressive and, if used often, may damage the cover.

! Observe the following when cleaning:

- clean genuine leather covers carefully with a damp cloth and then wipe the covers down with a dry cloth. Make sure that the leather does not become soaked. It may otherwise become rough and cracked. Only use leather care agents that have been tested and approved by Mercedes-Benz. You can obtain these from a qualified specialist workshop.
- clean artificial leather covers with a cloth moistened with a solution containing 1% detergent (e.g. dishwashing liquid).
- clean cloth covers with a microfiber cloth moistened with a solution containing 1% detergent (e.g. dishwashing liquid). Rub carefully and always wipe entire seat sections to avoid leaving visible lines. Leave the seat to dry afterwards. Cleaning results depend on the type of dirt and how long it has been there.

ⓘ Note that regular care is essential to ensure that the appearance and comfort of the covers is retained over time.

Cleaning the seat belts

⚠ **WARNING**

Do not bleach or dye seat belts as this may severely weaken them. In a crash, they may not be able to provide adequate protection.

! Do not clean the seat belts using chemical cleaning agents. Do not dry the seat belts by heating at temperatures above 176 °F (80 °C) or in direct sunlight.

▶ Use clean, lukewarm water and soap solution.

Cleaning the headliner and carpets

▶ **Headliner:** if it is very dirty, use a soft brush or dry shampoo.

▶ **Carpets:** use the carpet and textile cleaning agents recommended and approved by Mercedes-Benz.

Useful information 302
Where will I find...? 302
Flat tire 304
Battery (vehicle) 305
Jump-starting 308
Towing and tow-starting 310
Fuses 313

Useful information

ℹ This Operator's Manual describes all models and all standard and optional equipment of your vehicle available at the time of publication of the Operator's Manual. Country-specific differences are possible. Please note that your vehicle may not be equipped with all features described. This also applies to safety-related systems and functions.

ℹ Read the information on qualified specialist workshops: (▷ page 23).

Where will I find...?

Warning triangle

Setting up the warning triangle

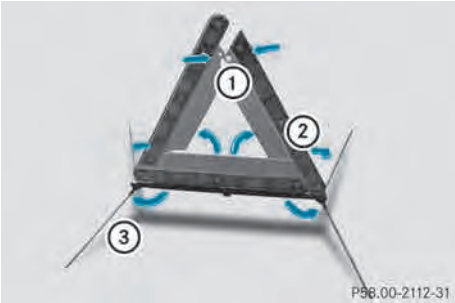

① Press-stud
② Reflectors
③ Feet

▶ Fold feet ③ down and out to the side.

▶ Pull side reflectors ② up to form a triangle and lock them at the top using press-stud ①.

First-aid kit

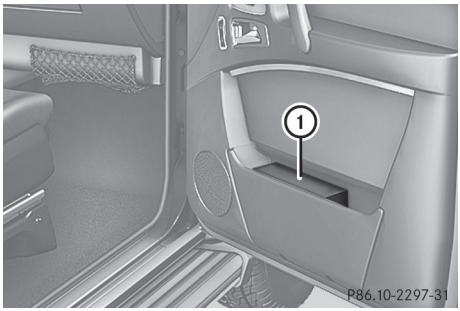

First-aid kit ① is located in the stowage compartment in the right-hand door.

ℹ Check the expiration date on the first-aid kit at least once a year. Replace the contents if necessary, and replace missing items.

Vehicle tool kit

General notes

ℹ When they leave the factory, vehicles are not equipped with the tools needed to change a wheel, such as a jack or lug wrench. Some tools for changing a wheel are specific to the vehicle. To obtain tools approved for your vehicle, contact a qualified specialist workshop.

The vehicle tool kit contains:

- Vehicle tool kit bag with:
  - a fuse extractor
  - an Allen key, e.g. to operate the sliding roof manually in an emergency
  - a pump lever for the vehicle jack
  - a screwdriver
  - a lug wrench
- Jack

Vehicle tool kit

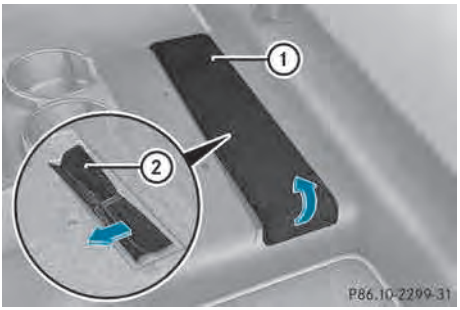

The vehicle tool kit is under the cover in the footwell in front of the rear bench seat.

▶ Fold cover ① to the side.

▶ Pull vehicle tool kit ② out by the tab.

Jack

! Make sure that, while installing the vehicle jack, there are no cables on the holder, in order to avoid them becoming trapped.

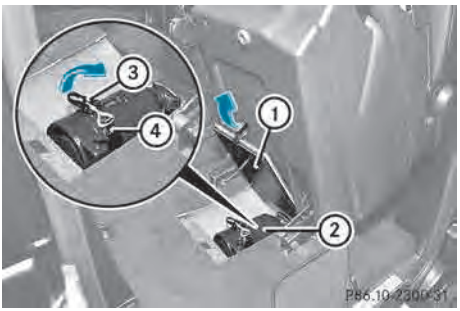

The jack is located under the rear bench seat on the right-hand side when viewed in the direction of travel.

▶ Fold rear bench seat (▷ page 266) forwards.

▶ Open cover ①.

▶ Pull bar ③ upwards and detach from tab ④.

▶ Remove jack ②.

Exterior spare wheel bracket

General notes

⚠ **WARNING**

If the spare tire is more than 6 years old or is not the same model as the regular tires, have the spare tire replaced with a new tire at the nearest Mercedes-Benz Center.

Never operate the vehicle with more than one spare wheel mounted.

⚠ **WARNING**

The wheel or tire size as well as the tire type of the spare wheel or emergency spare wheel and the wheel to be replaced may differ. Mounting an emergency spare wheel may severely impair the driving characteristics. There is a risk of an accident.

To avoid hazardous situations:

- adapt your driving style accordingly and drive carefully.
- never install more than one spare wheel or emergency spare wheel that differs in size.
- only use a spare wheel or emergency spare wheel of a different size briefly.
- do not switch ESP® off.
- have a spare wheel or emergency spare wheel of a different size replaced at the nearest qualified specialist workshop. Observe that the wheel and tire dimensions as well as the tire type must be correct.

You must not exceed the maximum speed of 50 mph (80 km/h) when using spare wheels of differing sizes.

ⓘ When changing a wheel, you should also observe the safety notes in the "Flat tire" section (▷ page 340).

The spare wheel is on the outer side of the rear door.

Stainless-steel spare hub cap

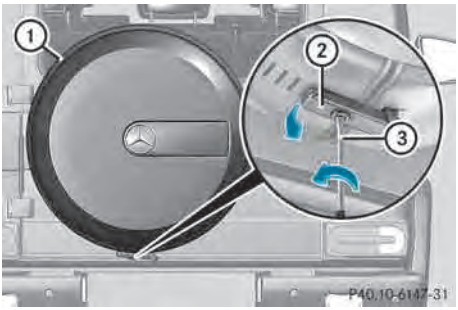

- Take the screwdriver out of the vehicle tool kit (▷ page 302).
- Open the lock on cover ring ① with screwdriver ③ or a similar tool.
- Fold tab ② down.

- Pull cover ring ① apart and remove it.
- Pull off cover panel ④.

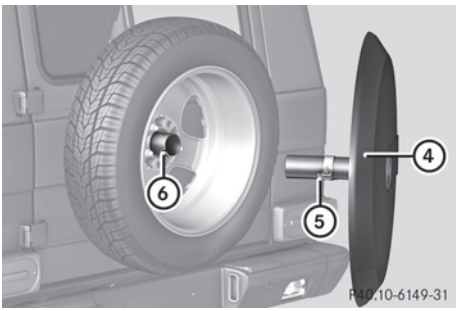

ℹ When refitting cover panel ④, make sure that retainer ⑤ engages in recess ⑥.

Removing the spare wheel

The spare wheel is heavy. Take particular note of this when removing the spare wheel.

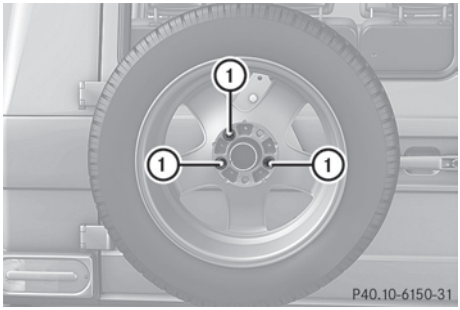

- Remove wheel nuts ①.
- Remove the spare wheel.

Mounting the wheel

After changing a wheel:

- Repair or replace the damaged wheel as soon as possible and secure the spare wheel in place again.
- Secure the damaged wheel on the spare wheel bracket with wheel nuts ①. When doing so, make sure that the wheel cannot come loose.
- When refitting cover panel ④, make sure that retainer ⑥ engages in recess ⑤(▷ page 304).
- Make sure that tab ② is below when refitting cover ring ①(▷ page 304).
- For safety reasons, regularly check to ensure that the wheel is securely fastened.

Flat tire

Preparing the vehicle

- Stop the vehicle on solid, non-slippery and level ground, as far away as possible from traffic.
- Switch on the hazard warning lamps (▷ page 104).

- ▶ Apply the parking brake.
- ▶ Bring the front wheels into the straight-ahead position.
- ▶ Move the selector lever to position **P**.
- ▶ Switch off the engine.
- ▶ Remove the SmartKey from the ignition lock.
  The steering wheel lock stays active for as long as the SmartKey is removed.
- ▶ All occupants must get out of the vehicle. Make sure that they are not endangered as they do so.
- ▶ Make sure that no one is near the danger area while a wheel is being changed. Anyone who is not directly assisting in the wheel change should, for example, stand behind the barrier.
- ▶ Get out of the vehicle. Pay attention to traffic conditions when doing so.
- ▶ Close the driver's door.

Battery (vehicle)

Important safety notes

Special tools and expert knowledge are required when working on the battery, e.g. removal and installing. You should therefore have all work involving the battery carried out at a qualified specialist workshop.

⚠ **WARNING**

Work carried out incorrectly on the battery can, for example, lead to a short circuit and damage your vehicle's electronic system. This can disrupt driving safety systems such as ABS (anti-lock braking system) or ESP® (Electronic Stability Program).

- If ABS malfunctions, the wheels can lock during braking. This limits the steerability of the vehicle when braking and the braking distance may increase. There is a risk of accident.
- If ESP® malfunctions, the vehicle will not be stabilised if it starts to skid or a wheel starts to spin. There is a risk of accident.

You should therefore have all work involving the battery carried out at a qualified specialist workshop.

⚠ **WARNING**

During the charging process, a battery produces hydrogen gas. If a short circuit occurs or sparks are created, the hydrogen gas can ignite. There is a risk of an explosion.

- Make sure that the positive terminal of a connected battery does not come into contact with vehicle parts.
- Never place metal objects or tools on a battery.
- It is important that you observe the described order of the battery terminals when connecting and disconnecting a battery.
- When jump-starting, make sure that the battery poles with identical polarity are connected.
- It is particularly important to observe the described order when connecting and disconnecting the jumper cables.
- Never connect or disconnect the battery terminals while the engine is running.

⚠ **WARNING**

Electrostatic build-up can lead to the creation of sparks, which could ignite the highly explosive gases of a battery. There is a risk of an explosion.

Before handling the battery, touch the vehicle body to remove any existing electrostatic build-up.

⚠ **WARNING**

Battery acid is caustic. There is a risk of injury.

Avoid contact with the skin, eyes or clothing. Do not inhale any battery gases. Do not lean

over the battery. Keep children away from batteries. Wash battery acid immediately with water and seek medical attention.

! Have the battery checked regularly at a qualified specialist workshop.

Observe the service intervals in the Maintenance Booklet or contact a qualified specialist workshop for more information.

! You should have all work involving the battery carried out at a qualified specialist workshop. In the exceptional case that it is necessary for you to disconnect the battery yourself, make sure that:

- you switch off the engine and remove the SmartKey. Check that all the indicator lamps in the instrument cluster are off. Otherwise, electronic components, such as the alternator, may be damaged.
- you first remove the negative terminal clamp and then the positive terminal clamp. Never swap the terminal clamps. Otherwise, the vehicle's electronic system may be damaged.
- on vehicles with automatic transmission, the transmission is locked in position **P** after disconnecting the battery. The vehicle is secured against rolling away. You can then no longer move the vehicle.

The battery and the cover of the positive terminal clamp must be installed securely during operation.

Environmental note

Batteries contain dangerous substances. It is against the law to dispose of them with the household rubbish. They must be collected separately and recycled to protect the environment.

Dispose of batteries in an environmentally friendly manner. Take discharged batteries to a qualified specialist workshop or a special collection point for used batteries.

In order for the battery to achieve the maximum possible service life, it must always be sufficiently charged.

Comply with safety precautions and take protective measures when handling batteries.

WARNING

Avoid the creation of sparks and heat.

Avoid fire, naked flames and smoking. Creation of sparks.

Battery acid is caustic.

Avoid contact with the skin, eyes or clothing.

Wear eye protection.

Keep children away.

Observe this Operator's Manual.

The vehicle battery, like other batteries, can discharge over time if you do not use the vehicle. In this case, have the battery disconnected at a qualified specialist workshop. You can also charge the battery with a charger recommended by Mercedes-Benz. Contact a qualified specialist workshop for further information.

Explosive gases are created during charging and jump-starting.

For safety reasons, Mercedes-Benz recommends that you only use batteries which have been tested and approved for your vehicle by Mercedes-Benz. These batteries provide increased impact protection to prevent vehicle occupants from

suffering acid burns should the battery be damaged in the event of an accident.

Have the battery charge level checked more frequently if you use the vehicle mainly for short trips or if you leave it standing idle for a lengthy period. Consult a qualified specialist workshop if you wish to leave your vehicle parked up for a long period of time.

ⓘ Remove the SmartKey if you park the vehicle and do not require any electrical consumers. The vehicle will then use very little energy, thus conserving battery power.

ⓘ If the power supply has been interrupted, e.g. due to a discharged battery, you will have to:

- set the clock. Information on setting the clock can be found in the separate operating instructions.

  On vehicles with COMAND and a navigation system, the clock is set automatically.
- reset the head restraints on the front seats (▷ page 87).
- reset the function for folding the exterior mirrors in/out automatically, by folding the mirrors out once (▷ page 93).

Charging the battery

⚠ **WARNING**

During charging and jump-starting, explosive gases can escape from the battery. There is a risk of an explosion.

Particularly avoid fire, naked flames, creating sparks and smoking. Ensure there is sufficient ventilation while charging and jump-starting. Do not lean over a battery.

⚠ **WARNING**

Battery acid is caustic. There is a risk of injury.

Avoid contact with the skin, eyes or clothing. Do not inhale any battery gases. Do not lean over the battery. Keep children away from batteries. Wash battery acid immediately with water and seek medical attention.

⚠ **WARNING**

A discharged battery can freeze at temperatures below freezing point. When jump-starting the vehicle or charging the battery, gases can escape from the battery. There is a risk of an explosion.

Allow the frozen battery to thaw out before charging it or jump-starting.

! Only use battery chargers with a maximum charging voltage of 14.8 V.

! Only charge the battery using the jump-starting connection point.

Never charge a battery still installed in the vehicle unless a battery charger unit approved by Mercedes-Benz is being used.

A battery charger unit specially adapted for Mercedes-Benz vehicles and tested and approved by Mercedes-Benz is available as an accessory. It permits the charging of the battery in its installed position. Contact an authorized Mercedes-Benz Center for information and availability. Charge the battery in accordance with the separate instructions for the battery charger.

The jump-starting connection point is in the engine compartment (▷ page 308).

Read the battery charger's operating instructions before charging the battery.

▶ Open the hood (▷ page 289).

▶ Connect the battery charger to the positive terminal and ground point in the same order as when connecting the donor battery in the jump-starting procedure (▷ page 308).

Jump-starting

⚠ **WARNING**

Battery acid is caustic. There is a risk of injury.

Avoid contact with the skin, eyes or clothing. Do not inhale any battery gases. Do not lean over the battery. Keep children away from batteries. Wash battery acid immediately with water and seek medical attention.

⚠ **WARNING**

During charging and jump-starting, explosive gases can escape from the battery. There is a risk of an explosion.

Particularly avoid fire, naked flames, creating sparks and smoking. Ensure there is sufficient ventilation while charging and jump-starting. Do not lean over a battery.

⚠ **WARNING**

During the charging process, a battery produces hydrogen gas. If a short circuit occurs or sparks are created, the hydrogen gas can ignite. There is a risk of an explosion.

- Make sure that the positive terminal of a connected battery does not come into contact with vehicle parts.
- Never place metal objects or tools on a battery.
- It is important that you observe the described order of the battery terminals when connecting and disconnecting a battery.
- When jump-starting, make sure that the battery poles with identical polarity are connected.
- It is particularly important to observe the described order when connecting and disconnecting the jumper cables.
- Never connect or disconnect the battery terminals while the engine is running.

⚠ **WARNING**

A discharged battery can freeze at temperatures below freezing point. When jump-starting the vehicle or charging the battery, gases can escape from the battery. There is a risk of an explosion.

Allow the frozen battery to thaw out before charging it or jump-starting.

⚠ **WARNING**

Non-combusted fuel can collect in the exhaust system and ignite. There is a risk of fire. Avoid repeated and lengthy starting attempts.

! Avoid repeated and lengthy starting attempts. Otherwise, non-combusted fuel may damage the catalytic converter and create a risk of fire.

Do not use a rapid charging device to start the vehicle.

Make sure the jumper cables are not damaged.

Make sure the jumper cables are not touching any other metal objects when they are connected to the battery.

If the indicator/warning lamps do not light up at temperatures around or below freezing point, the discharged battery is likely to be frozen (a commonplace scenario). In this case, do not jump-start the vehicle or recharge the battery.

Once the battery has thawed out, its service life may be dramatically reduced.

The starting characteristics can be impaired, particularly at low temperatures.

It is recommended that you have the thawed out battery checked at a qualified specialist workshop.

Do not start the vehicle using a rapid charging device. If your vehicle's battery is discharged, the engine can be jump-started from another vehicle or from a second battery using jumper cables. Observe the following points:

- The battery is not accessible in all vehicles. If the other vehicle's battery is not accessible, jump-start the vehicle using a second battery or a jump-starting device.
- **Vehicles with a gasoline engine:** only jump-start the vehicle when the engine and exhaust system are cold.
- Do not start the engine if the battery is frozen. Let the battery thaw first.
- Jump-starting may only be performed from batteries with a nominal voltage of 12 V.
- Only use jumper cables which have a sufficient cross-section and insulated terminal clamps.
- If the battery is fully discharged, leave the battery that is being used to jump-start connected for a few minutes before attempting to start. This charges the empty battery a little.
- Make sure that the two vehicles do not touch.

Make sure that:

- the jumper leads are not damaged.
- when the jumper cables are connected to the battery, uninsulated sections of the terminal clamp do not come into contact with other metal sections.
- The jumper cables cannot come into contact with parts such as the pulley or the fan. These parts move when the engine is started and while it is running.

▶ Apply the parking brake.

▶ Move the selector lever to position **P**.

▶ Switch off all electrical consumers (e.g. radio, blower, etc.).

▶ Open the hood (▷ page 289).

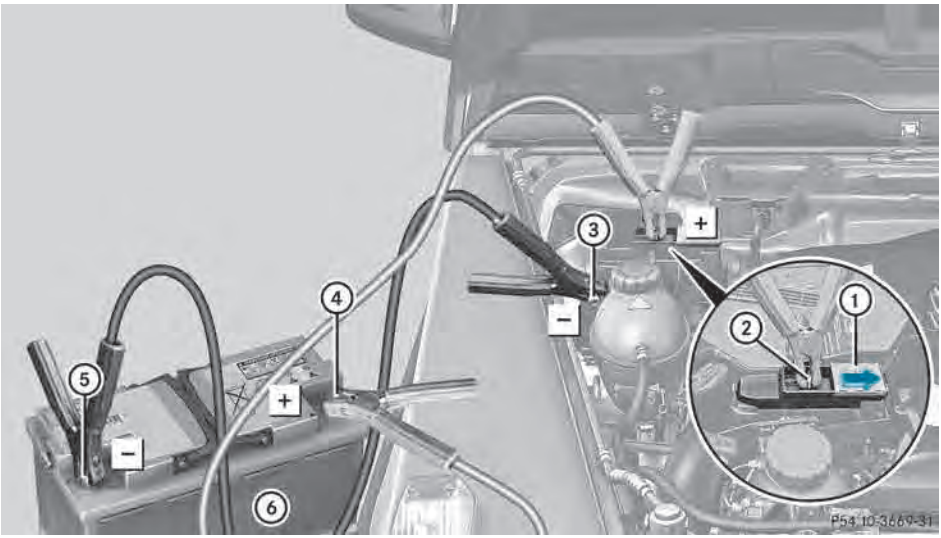

Position number ⑥ identifies the charged battery of the other vehicle or an equivalent jump-starting device.

The jump-start terminal point consists of terminals ② and ④.

- ▶ Lift up cover ① of positive terminal ② in the direction of the arrow.
- ▶ Connect positive terminal ② on your vehicle to positive terminal ④ of donor battery ⑥ using the jumper cable. beginning with your own battery.
- ▶ Start the engine of the donor vehicle and run it at idling speed.
- ▶ Connect negative terminal ⑤ of donor battery ⑥ to ground point ③ of your vehicle using the jumper cable, connecting the jumper cable to donor battery ⑥ first.
- ▶ Start the engine.
- ▶ First, remove the jumper cable from ground point ③ and negative terminal ⑤, then from positive terminal ② and positive terminal ④, each time disconnecting from the battery on your own vehicle first.
- ▶ Have the battery checked at a qualified specialist workshop.

ℹ Jump-starting is not considered to be a normal operating condition.

ℹ Jumper cables and further information regarding jump starting can be obtained at any qualified specialist workshop.

Towing and tow-starting

Important safety notes

⚠ **WARNING**

The vehicle is braked when the HOLD function or DISTRONIC PLUS is activated. Therefore, deactivate HOLD and DISTRONIC PLUS if the vehicle is to be towed.

! The vehicle can be towed a maximum of 30 miles (50km). The towing speed of 30 mph (50 km/h) must not be exceeded.

If the vehicle has to be towed more than 30 miles (50km), the entire vehicle must be raised and transported.

! Only secure the tow cable or tow bar to the towing eyes. You could otherwise damage the vehicle.

! Do not tow with sling-type equipment. This could damage the vehicle.

! Do not use the towing eyes for recovery purposes as this could damage the vehicle. If in doubt, recover the vehicle with a crane.

! When towing, pull away slowly and smoothly. If the tractive power is too high, the vehicles could be damaged.

! Your vehicles is equipped with an automatic transmission. Therefore, you must not have the vehicle tow-started. The transmission may otherwise be damaged.

⚠ **WARNING**

If the weight of the vehicle to be towed or tow-started is greater than the permissible gross weight of your vehicle:

- the towing eye could detach itself
- the vehicle/trailer combination could rollover.

There is a risk of an accident.

When towing or tow-starting another vehicle, its weight should not be greater than the permissible gross weight of your vehicle.

Information on your vehicle's gross vehicle weight rating can be found on the vehicle identification plate (▷ page 349).

It is better to have the vehicle transported than to have it towed.

If the transfer case can be shifted into neutral **N**, you can tow the vehicle.

If the transfer case cannot be shifted into neutral **N**, you can tow the vehicle with one axle raised. Please bear the following in mind:

- remove the propeller shaft between the transfer case and the rolling axle.
- turn the SmartKey to position **1** in the ignition lock (▷ page 139).

The battery must be connected and charged. Otherwise, you:

- cannot turn the SmartKey in the ignition lock to position **2**(▷ page 139)
- cannot shift the automatic transmission to position **N**

ℹ Deactivate the automatic locking feature (▷ page 75). You could otherwise be locked out when pushing or towing the vehicle.

Towing eyes

Towing eyes, front

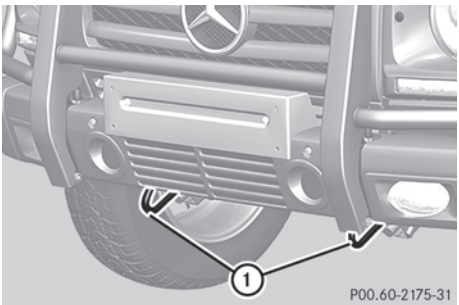

① Towing eyes, front

Towing eye, rear

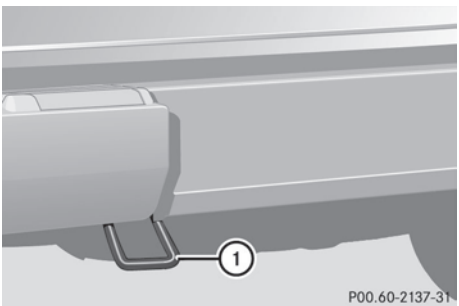

Rear towing eye ① is located under the bumper, on the left-hand side when viewed in the direction of travel.

Towing a vehicle with both axles on the ground

It is important that you observe the safety instructions when towing away your vehicle (▷ page 310).

▶ Switch on the hazard warning lamps (▷ page 104).

ℹ In order to signal a change of direction when towing the vehicle with the hazard warning lamps switched on, use the combination switch as usual. In this case, only the turn signals for the desired direction flash. When you reset the combination switch, the hazard warning lamps start flashing again.

▶ Turn the SmartKey to position **2** in the ignition lock (▷ page 139).

▶ When the vehicle is stationary, depress the brake pedal and keep it depressed.

▶ Shift the transfer case to **neutral**(▷ page 200).

▶ Shift the automatic transmission to position **N**.

▶ Release the brake pedal.

▶ Release the parking brake (▷ page 157).

ℹ The transmission can only change gear if the battery has sufficient charge.

If you cannot move the selector lever to **N**, the propeller shafts to the driven axles must be removed.

Transporting the vehicle

! Only lash the vehicle down by the wheels or wheel rims, not by parts of the vehicle such as axle or steering components. Otherwise, the vehicle could be damaged.

Use the towing eyes to pull the vehicle if it needs to be transported on a trailer or transporter (▷ page 311).

▶ Apply the parking brake.

▶ Turn the SmartKey to position **2** in the ignition lock (▷ page 139).

▶ Move the selector lever to **N**.

▶ Shift the transfer case to **neutral**(▷ page 200).

▶ Secure the towing cable to the towing eyes (▷ page 311).

▶ Make sure that the vehicle cannot roll away.

▶ Release the parking brake.

▶ Load the vehicle onto the transporter.

As soon as the vehicle is loaded:

▶ Apply the parking brake.

▶ Shift the automatic transmission to position **P**.

▶ Turn the SmartKey to position **0** in the ignition lock (▷ page 139) and remove it.

▶ Secure the vehicle.

Recovering a vehicle that has become stuck

! Pull away smoothly, slowly, and in a straight line when pulling out a vehicle that has become stuck. Excessive tractive power could damage the vehicles.

If the drive wheels get trapped on loose or muddy ground, recover the vehicle with the utmost care, especially so if the vehicle is laden.

Never attempt to recover a vehicle with a trailer attached.

Pull out the vehicle backwards, if possible, using the tracks it made when it became stuck.

Towing in the event of malfunctions

General notes

! If you are removing the propeller shaft, use M10 nuts as spacers on the M8 bolts and secure them with M8 nuts.

New self-locking nuts must be used when the propeller shafts are refitted.

▶ Observe the safety notes as you do so (▷ page 310).

ⓘ Consult an authorized Mercedes-Benz Center.

Engine damage, gear damage or electrical malfunctions

▶ Move the selector lever to position **N**(▷ page 145).

▶ Shift the transfer case to **neutral**(▷ page 200).

In the event of damage to the transfer case

Have the propeller shafts between the axles and the transfer case removed.

In the event of damage to the front axle

Have the propeller shaft between the rear axle and the transfer case removed.

Have the vehicle towed with the front axle raised.

In the event of damage to the rear axle

Have the propeller shaft between the front axle and the transfer case removed.

Have the vehicle towed with the rear axle raised and with wheel rollers under the front axle.

Fuses

Important safety notes

⚠ **WARNING**

Only use fuses that have been approved for Mercedes-Benz vehicles and that have the correct fuse rating for the systems concerned. Do not attempt to repair or bridge faulty fuses. Using fuses that have not been approved or attempting to repair or bridge faulty fuses could cause the fuse to be overloaded and result in a fire. Have the cause traced and rectified at a qualified specialist workshop.

! Only use fuses that have been approved for Mercedes-Benz vehicles and which have the correct fuse rating for the system concerned. Otherwise, components or systems could be damaged.

The fuses in your vehicle serve to close down faulty circuits. If a fuse blows, all the components on the circuit and their functions stop operating.

Blown fuses must be replaced with fuses of the same rating, which you can recognize by the color and value. The fuse ratings are listed in the fuse allocation chart.

ⓘ If a fuse has blown, contact a breakdown service or an authorized Mercedes-Benz Center.

If a newly inserted fuse also blows, have the cause traced and rectified at a qualified specialist workshop, e.g. an authorized Mercedes-Benz Center.

Before changing a fuse

▶ Park the vehicle and apply the parking brake.

▶ Switch off all electrical consumers.

▶ Remove the SmartKey from the ignition lock.
All indicator lamps in the instrument cluster must be off.

The fuses are located in various fuse boxes:

- Main fuse box on the driver's side of the dashboard
- Fuse box in the front-passenger footwell
- Fuse box in the transmission tunnel
- Fuse box in the battery case

The fuse allocation chart and the spare fuses are in the main fuse box on the dashboard (▷ page 314).

You will find the fuse removal device in the vehicle tool kit (▷ page 302).

Dashboard fuse box

! Do not use a pointed object such as a screwdriver to open the cover in the dashboard. You could damage the dashboard or the cover.

! Make sure that no moisture can enter the fuse box when the cover is open.

! When closing the cover, make sure that it is lying correctly on the fuse box. Moisture seeping in or dirt could otherwise impair the operation of the fuses.

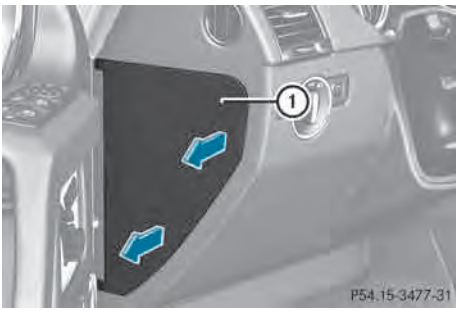

▶ Open the driver's door.

▶ **To open:** pull cover ① outwards in the direction of the arrow and remove it.

▶ **To close:** clip in cover ① on the front of the dashboard.

▶ Fold cover ① inwards until it engages.

Fuse box in the front-passenger footwell

! Make sure that no moisture can enter the fuse box when the cover is open.

! When closing the cover, make sure that it is lying correctly on the fuse box. Moisture seeping in or dirt could otherwise impair the operation of the fuses.

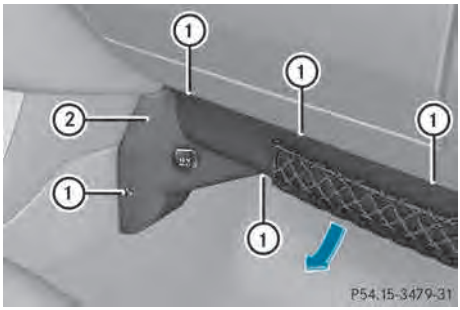

▶ Unscrew screws ①.

▶ Lift up cover ② in the direction of the arrow.

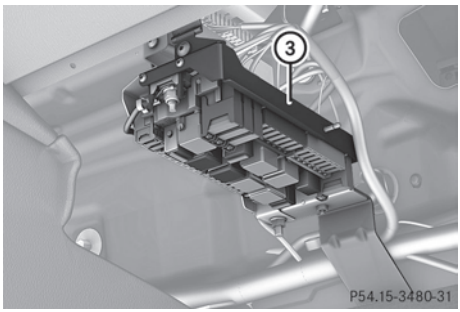

③ Fuse box

Fuse box in the transmission tunnel

! Make sure that no moisture can enter the fuse box when the cover is open.

! When closing the cover, make sure that it is lying correctly on the fuse box. Moisture seeping in or dirt could otherwise impair the operation of the fuses.

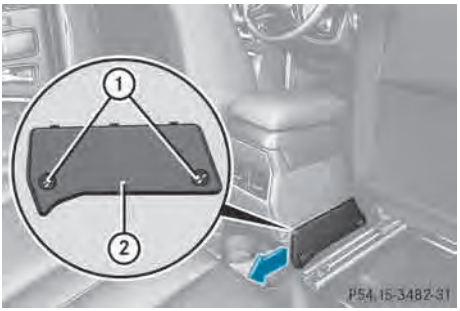

- Fold down the cup holder on the center console (▷ page 268).
- Adjust the front-passenger seat to its foremost position (▷ page 86).
- To open: remove screws ①.
- Remove cover ② in the direction of the arrow.
- **To close:** clip in cover ②.
- Install cover ② with screws ①.

Fuse box in the battery case

The fuses in the battery case do not usually need to be replaced. If a fuse change is necessary, consult a qualified specialist workshop.

Useful information 318
Important safety notes 318
Operation 319
Winter operation 320
Tire pressure 322
Loading the vehicle 328
Uniform Tire Quality Grading Standards 332
Tire labeling 334
Changing a wheel 340
Wheel and tire combinations 344

Useful information

ℹ This Operator's Manual describes all models and all standard and optional equipment of your vehicle available at the time of publication of the Operator's Manual. Country-specific differences are possible. Please note that your vehicle may not be equipped with all features described. This also applies to safety-related systems and functions.

ℹ Read the information on qualified specialist workshops: (▷ page 23).

Important safety notes

⚠ **WARNING**

Replace rims or tires with the same designation, manufacturer and type as shown on the original part. For further information contact an authorized Mercedes-Benz Center. If incorrectly sized rims and tires are mounted, the wheel brakes or suspension components can be damaged. Also, the operating clearance of the wheels and the tires may no longer be correct.

⚠ **WARNING**

Worn, old tires can cause accidents. If the tire tread is worn to minimum tread depth, or if the tires have sustained damage, replace them.

When replacing rims, only use genuine Mercedes-Benz wheel bolts specified for the particular rim type. Failure to do so can result in the bolts loosening and possibly an accident.

Retreaded tires are not tested or recommended by Mercedes-Benz, since previous damage cannot always be recognized on retreads. The operating safety of the vehicle cannot be assured when such tires are used.

⚠ **WARNING**

If you notice sudden significant vibrations or unusual handling performance or if you suspect that damage has occurred to the vehicle, you should activate the hazard warning lamps, gently reduce speed and carefully head for an area that is located at a safe distance from the road.

Check the tires and the underside of the vehicle for damage. If the vehicle seems unsafe, have the vehicle towed away to the nearest Mercedes-Benz Center or tire dealer to be repaired.

⚠ **WARNING**

Do not drive with a flat tire. A flat tire affects the ability to steer or brake the vehicle. You might lose control of the vehicle. Continued driving with a flat tire or driving at high speed with a flat tire will cause excessive heat build-up and possibly a fire.

⚠ **Warning**

A flat tire severely impairs the driving, steering and braking characteristics of the vehicle. There is a risk of an accident.

do not drive with a flat tire. Immediately replace the flat tire with your spare wheel, or consult a qualified specialist workshop.

Consult an authorized Mercedes-Benz Center if you require information on approved and recommended tires and wheels for summer and winter operation. Advice on purchasing and caring for tires is also available there.

Accessories that are not approved for your vehicle by Mercedes-Benz or are not being used correctly can impair the operating safety.

Before purchasing and using non-approved accessories, visit a qualified specialist workshop and ask about:

- suitability
- legal stipulations
- factory recommendations

Information on the dimensions and types of wheels and tires for your vehicle can be found in the "Wheel/tire combinations" section (▷ page 344).

Information on air pressure for the tires on your vehicle can be found:

- on the tire pressure label on the fuel filler flap
- in the "Tire pressure" section

ℹ Further information on wheels and tires can be obtained at any qualified specialist workshop.

Operation

Notes on driving

If the vehicle is heavily loaded, check the tire pressures and correct them if necessary.

When parking your vehicle, make sure that the tires do not get deformed by the curb or other obstacles. If it is necessary to drive over curbs, speed humps or similar elevations, try to do so slowly and at an obtuse angle. Otherwise, the tires, particularly the sidewalls, may be damaged.

Regular checking of wheels and tires

⚠ **WARNING**

Regularly check the tires for damage. Damaged tires can cause tire inflation pressure loss. As a result, you could lose control of your vehicle.

Worn, old tires can cause accidents. If the tire tread is worn to minimum tread depth, or if the tires have sustained damage, replace them.

- Regularly check the wheels and tires of your vehicle for damage at least once a month, as well as after driving off-road or on rough roads. Damage includes bulges and deformation on tires, cuts, punctures, cracks or severe corrosion on wheels, for example. Damaged wheels can cause a loss of tire pressure.
- Regularly check the tire tread depth and the condition of the tread across the whole width of the tire (▷ page 319). In order to inspect the inner side of the tire surface, turn the steering wheel to full lock.
- All wheels must have a valve cap to protect the valve against dirt and moisture. Do not install anything onto the valve other than the standard valve cap or a valve cap approved by Mercedes-Benz for your vehicle.

  Do not install anything onto the valve, such as tire pressure monitoring systems.
- You should regularly check the pressure of all your tires including the spare wheel, particularly prior to long trips. Adjust the tire pressure as necessary (▷ page 327).

The service life of tires depends, among other things, on the following factors:

- Driving style
- Tire pressure
- Distance covered

Tire tread

⚠ **WARNING**

Although the applicable federal motor vehicle safety laws consider a tire to be worn when the treadwear indicators (TWI) become visible at approximately 1/16 inches (1.6 mm), we recommend that you do not allow your tires to wear down to that level. As tread depth approaches 1/8 inches (3 mm) the adhesion properties on a wet road are sharply reduced.

Depending upon the weather and/or road surface (conditions), the tire traction varies widely.

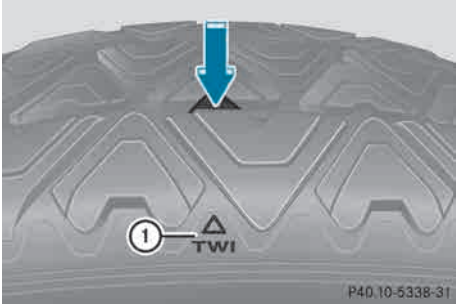

Mark ① is a visual warning on the tread wear indicators (TWI). The arrow indicates the placement of the tire tread.

Do not drive with tires which have too little tread depth. tire traction on wet road surfaces decreases significantly when the tread depth is less than $^{1}/_{8}$ in (3 mm).

Tread wear indicators (TWI) are required by law. Six indicators are positioned over the tire tread. They are visible once the tread depth is approximately $^{1}/_{16}$ in (1.6 mm). If this is the case, the tire is so worn that it must be replaced.

The recommended tread depth for summer tires is at least $^{1}/_{8}$ in (3 mm). The recommended tread depth for winter tires is at least $^{1}/_{6}$ in (4 mm).

Selecting, mounting and replacing tires

- Only mount tires and wheels of the same type and make.
- Only mount approved tires of the correct size onto the wheels.
- Tires are supplied with a protective layer from the factory. Break in new tires at moderate speeds for the first 60 miles (100 km). They only reach their full performance after this distance.
- Do not drive with tires which have too little tread depth. as this significantly reduces the traction on wet roads (hydroplaning).
- Replace the tires after six years at the latest, regardless of wear. This also applies to the spare wheel.

Winter operation

General notes

Have your vehicle winterproofed at a qualified specialist workshop at the onset of winter.

Observe the notes in the "Changing a wheel" section (▷ page 340).

Driving with summer tires

At temperatures below 45 °F (+7 °C), summer tires lose elasticity significantly, and therefore traction and braking power as well. Change the tires on your vehicle to M+S tires. Using summer tires at very cold temperatures could cause cracks to form, thereby damaging the tires permanently. Mercedes-Benz cannot accept responsibility for this type of damage.

M+S tires

⚠ **WARNING**

M+S tires with a tire tread depth of less than ⅙ in (4 mm) are not suitable for use in winter and do not provide sufficient traction. There is a risk of an accident.

M+S tires with a tread depth of less than ⅙ in (4 mm) must be replaced immediately.

⚠ **WARNING**

The spare wheel and M+S tires have different tire characteristics. Driving characteristics can be severely impaired when you mount the spare wheel. There is a risk of an accident.

You should therefore adapt your driving style and drive carefully. Have the spare wheel

replaced with a new wheel with an M+S tire at the nearest qualified specialist workshop.

At temperatures below 45 °F(+7 °C), use all-season tires or winter tires. Both types of tire are identified by the M+S marking.

Not all tires with the M+S marking provide the driving characteristics of winter tires. In addition to the M+S marking, winter tires also have the snowflake symbol on the tire wall. Tires with this marking fulfill the requirements of the Rubber Manufacturers Association (RMA) and the Rubber Association of Canada (RAC) regarding snow traction, and were specially developed for driving on snow. Only these tires will allow driving safety systems such as ABS and ESP® to function optimally in winter, since these tires have been designed specifically for driving on snow.

Use M+S tires of the same make and tread on all wheels to maintain safe handling characteristics.

Always observe the maximum permissible speed specified for the M+S tires you have mounted.

When you have installed the M+S tires:

▶ Check the tire pressures (▷ page 325).

▶ Restart the tire pressure monitor (▷ page 327).

ℹ You can obtain information about winter tires that have been approved by Mercedes-Benz especially for your vehicle at any Mercedes-Benz Service center.

ℹ For further information about tires, see (▷ page 346).

Snow chains

! Information about the use of snow chain compatible AMG winter tires is applicable for AMG tires. Use of snow chains is only permissible with these tires.

! On some tire sizes there is not enough space for snow chains. To avoid damage to the vehicle or tires, observe the "Wheel and tire combinations" section under "Tires and wheels".

! If snow chains are mounted on the front wheels, the snow chains could grind against the bodywork or components of the chassis. This could result in damage to the vehicle or the tires.

For safety reasons, Mercedes-Benz recommends that you only use snow chains that have been specially approved for your vehicle by Mercedes-Benz, or are of a corresponding standard of quality.

- Only use snow chains when driving on roads completely covered by snow. Remove the snow chains as soon as possible when you are no longer driving on snow-covered roads.
- Local regulations may restrict the use of snow chains. Observe the relevant regulations when mounting snow chains.
- Do not exceed the maximum permissible speed of 30 mph (50 km/h).

If you intend to mount snow chains, please bear the following points in mind:

- Snow chains cannot be mounted on all wheel/tire combinations (▷ page 62).
- Mount snow chains only in pairs and only on the rear wheels. Observe the manufacturer's mounting instructions.

ℹ You may wish to deactivate ESP®(▷ page 62) when pulling away with snow chains installed. This way you can allow the wheels to spin in a controlled manner, achieving an increased driving force (cutting action).

Tire pressure

Tire pressure specifications

Important safety notes

⚠ WARNING

Underinflated or overinflated tires pose the following risks:

- the tires may burst, especially as the load and vehicle speed increase.
- the tires may wear excessively and/or unevenly, which may greatly impair tire traction.
- the driving characteristics, as well as steering and braking, may be greatly impaired.

There is a risk of an accident.

Follow recommended tire inflation pressures and check the pressure of all the tires including the spare wheel:

- monthly, at least
- if the load changes
- before beginning a long journey
- under different operating conditions, e.g. off-road driving

If necessary, correct the tire pressure.

ℹ The specifications on the sample Tire and Loading Information placard and tire pressure tables are examples. Tire pressure specifications are vehicle-specific and may deviate from the data shown here. The tire pressure specifications that are valid for your vehicle can be found on the Tire and Loading Information placard and tire pressure table on the vehicle.

General notes

The recommended tire pressures for the tires mounted at the factory can be found on the labels described here.

Operation with a trailer: the applicable value for the rear tires is the maximum tire pressure value stated in the table inside the fuel filler flap.

Further information on tire pressures can be obtained at a qualified specialist workshop.

Tire and Loading Information placard

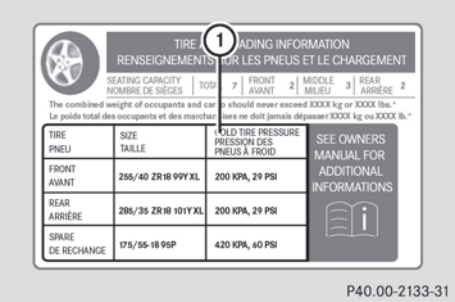

① Recommended tire pressures

The Tire and Loading Information placard is on the B-pillar on the driver's side (▷ page 328).

The Tire and Loading Information placard contains the recommended tire pressures for cold tires. The recommended tire pressures are valid for the maximum permissible load and up to the maximum permissible vehicle speed.

Tire pressure table

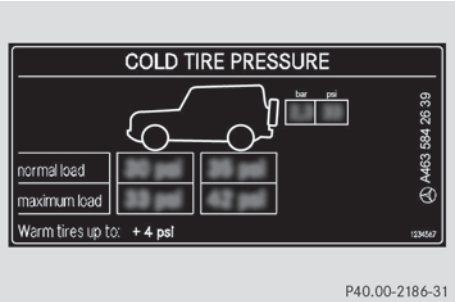

Example: tire pressure table for all tires permitted for this vehicle by the factory

The tire pressure table is on the inside of the fuel filler flap.

The tire pressure table contains the recommended pressures for cold tires for various operating conditions, i.e. differing load and speed conditions.

P40.00-2188-31

Example: tire pressure table with tire dimensions

If a tire size precedes a tire pressure, the tire pressure information following is only valid for that tire size. The load conditions "partially laden" and "fully laden" are defined in the table for different numbers of occupants and amounts of luggage. The actual number of seats may differ.

P40.00-2181-31

Some tire pressure tables only show the rim diameter instead of the complete tire size, e.g. **R16**. The rim diameter is part of the tire size and can be found on the tire sidewall (▷ page 334).

If the tire pressures have been set to the lower values for lighter loads and/or lower road speeds, the pressures should be reset to the higher values:

- if you want to drive with an increased load and/or
- if you want to drive at higher road speeds.

ℹ The tire pressures for increased loads and/or higher road speeds, shown in the tire pressure table, may have a negative effect on driving comfort.

If the tire pressure is not set correctly, this can lead to an excessive build up of heat and a sudden loss of pressure.

For more information, contact a qualified specialist workshop.

Important notes on tire pressure

⚠ **WARNING**

If the tire pressure drops repeatedly, the wheel, valve or tire may be damaged. Tire pressure that is too low may result in a tire blow-out. There is a risk of an accident.

- Check the tire for foreign objects.
- Check whether the wheel is losing air or the valve is leaking.

If you are unable to rectify the damage, contact a qualified specialist workshop.

⚠ **WARNING**

If you fit unsuitable accessories onto tire valves, the tire valves may be overloaded and malfunction, which can cause tire pressure loss. Due to their design, retrofitted tire pressure monitors keep the tire valve open. This can also result in tire pressure loss. There is a risk of an accident.

Only screw the standard valve cap or other valve caps approved by Mercedes-Benz for your vehicle onto the tire valve.

Use a suitable pressure gauge to check the tire pressure. The outer appearance of a tire does not permit any reliable conclusion about the tire pressure. On vehicles equipped with the electronic tire pressure monitoring system, the tire pressure can be checked using the on-board computer.

The tire temperature and pressure increase when the vehicle is in motion. This is dependent on the driving speed and the load.

Therefore, you should only correct tire pressures when the tires are cold.

The tires are cold:

- if the vehicle has been parked without direct sunlight on the tires for at least three hours and
- if the vehicle has been driven for less than 1 mile (1.6 km).

The tire temperature changes depending on the outside temperature, the vehicle speed and the tire load. If the tire temperature changes by 18 °F (10 °C), the tire pressure changes by approximately 10 kPa (0.1 bar/ 1.5 psi). Take this into account when checking the pressure of warm tires. Only correct the tire pressure if it is too low for the current operating conditions. If you check the tire pressure when the tires are warm, the resulting value will be higher than if the tires were cold. This is normal. Do not reduce the tire pressure to the value specified for cold tires. The tire pressure would otherwise be too low.

Observe the recommended tire pressures for cold tires:

- on the Tire and Loading Information placard on the B-pillar on the driver's side
- in the tire pressure table on the inside of the fuel filler flap

Observe the following for the tire pressure on the spare wheel:

- the tire and loading information table on the B-pillar on the driver's side.
- the tire pressure sticker on the inside of the fuel filler flap.

Underinflated or overinflated tires

Underinflation

⚠ **WARNING**

Tires with pressure that is too low can overheat and burst as a consequence. In addition, they also suffer from excessive and/ or irregular wear, which can severely impair the braking properties and the driving characteristics. There is a risk of an accident.

Avoid tire pressures that are too low in all the tires, including the spare wheel.

Underinflated tires may:

- overheat, leading to tire defects
- have an adverse effect on handling characteristics
- wear quickly and unevenly
- have an adverse effect on fuel consumption

Overinflation

⚠ **WARNING**

Tires with excessively high pressure can burst because they are damaged more easily by road debris, potholes etc. In addition, they also suffer from irregular wear, which can severely impair the braking properties and the driving characteristics. There is a risk of an accident.

Avoid tire pressures that are too high in all the tires, including the spare wheel.

Overinflated tires may:

- increase the braking distance
- have an adverse effect on handling characteristics
- wear quickly and unevenly
- have an adverse effect on ride comfort
- be more susceptible to damage

Maximum tire pressures

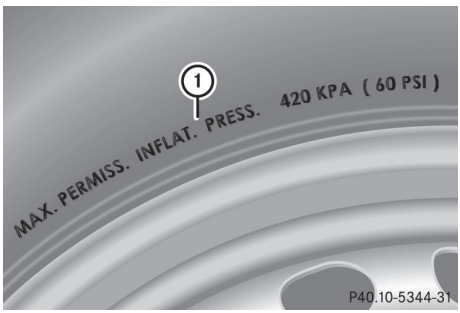

① Example: maximum permissible tire pressure

Never exceed the maximum permissible tire inflation pressure. Always observe the recommended tire pressure for your vehicle when adjusting the tire pressure (▷ page 338).

ℹ The actual values for tires are vehicle-specific and may deviate from the values in the illustration.

Checking the tire pressures

Important safety notes

Observe the notes on tire pressure (▷ page 322).

Information on air pressure for the tires on your vehicle can be found:

- on the vehicle's Tire and Loading Information placard on the B-pillar (▷ page 322)
- on the tire pressure label on the fuel filler flap (▷ page 322)
- in the "Tire pressure information" section
- in the "Tire pressure information" section (▷ page 322)

Checking tire pressures manually

To determine and set the correct tire pressure, proceed as follows:

▶ Remove the valve cap of the tire that is to be checked.

▶ Press the tire pressure gauge securely onto the valve.

▶ Read the tire pressure and compare it with the recommended value on the Tire and Loading Information placard on the B-pillar on the driver's side of your vehicle (▷ page 322).

▶ **The tire pressure is too low:** increase the tire pressure to the recommended value.

▶ **The tire pressure is too high:** press down the metal pin in the valve using the tip of a pen, for example.
Air is released from the tire.

▶ Check the tire pressure again with the tire pressure gauge.

▶ Screw the valve cap onto the valve.

▶ Repeat these steps for the other tires.

Tire pressure monitor

Important safety notes

⚠ **WARNING**

Each tire, including the spare (if provided), should be checked at least once a month when cold and inflated to the pressure recommended by the vehicle manufacturer on the Tire and Loading Information placard on the driver's door B-pillar or the tire pressure label on the inside of the fuel filler flap. If your vehicle has tires of a different size than the size indicated on the Tire and Loading Information placard or the tire pressure label, you should determine the proper tire pressure for those tires.

As an added safety feature, your vehicle has been equipped with a tire pressure monitoring system (TPMS) that illuminates a low tire pressure telltale when one or more of your tires are significantly underinflated. Accordingly, when the low tire pressure telltale illuminates, you should stop and check your tires as soon as possible, and inflate them to the proper pressure. Driving on a significantly underinflated tire causes the tire to overheat and can lead to tire failure. Underinflation also reduces fuel efficiency and tire tread life, and may affect the vehicle's handling and stopping ability.

Please note that the TPMS is not a substitute for proper tire maintenance, and it is the driver's responsibility to maintain correct tire pressure, even if underinflation has not reached the level to trigger illumination of the TPMS low tire pressure telltale.

USA only:

Your vehicle has also been equipped with a TPMS malfunction indicator to indicate if the system is not operating properly. The TPMS

malfunction indicator is combined with the low tire pressure telltale. When the system detects a malfunction, the warning lamp will flash for approximately a minute and then remain continuously illuminated. This sequence will be repeated every time the vehicle is started as long as the malfunction exists.

When the malfunction indicator is illuminated, the system may not be able to detect or signal low tire pressure as intended. TPMS malfunctions may occur for a variety of reasons, including the installation of incompatible replacement or alternate tires or wheels on the vehicle that prevent the TPMS from functioning properly. Always check the TPMS malfunction telltale after replacing one or more tires or wheels on your vehicle to ensure that the replacement or alternate tires and wheels allow the TPMS to continue to function properly.

It is the driver's responsibility to set the tire pressure to the recommended cold tire pressure suitable for the operating situation (▷ page 322). Note that the correct tire pressure for the current operating situation must first be taught-in to the tire pressure monitor. If there is a substantial loss of pressure, the warning threshold for the warning message is aligned to the reference values taught-in. Restart the tire pressure monitor after adjusting to the cold tire pressure (▷ page 327). The current pressures are saved as new reference values. As a result, a warning message will appear if the tire pressure drops significantly.

The tire pressure monitor does not warn you of an incorrectly set tire pressure. Observe the notes on the recommended tire pressure (▷ page 322).

The tire pressure monitor is not able to warn you of a sudden loss of pressure, e.g. if the tire is penetrated by a foreign object. In the event of a sudden loss of pressure, bring the vehicle to a halt by braking carefully. Avoid abrupt steering maneuvers.

If a tire pressure monitor system is installed, the vehicle's wheels have sensors installed that monitor the tire pressures in all four tires. The tire pressure monitor warns you if the pressure drops in one or more of the tires. The tire pressure monitor only functions if the correct wheel electronics units are installed on each wheel.

The tire pressure monitor has a yellow warning lamp in the instrument cluster for indicating pressure loss/malfunctions (USA) or pressure loss (Canada). Whether the warning lamp flashes or lights up indicates whether a tire pressure is too low or the tire pressure monitor is malfunctioning:

- if the warning lamp is lit continuously, the tire pressure on one or more tires is significantly too low. The tire pressure monitor is not malfunctioning.
- USA only: if the warning lamp flashes for around a minute and then remains lit constantly, the tire pressure monitor is malfunctioning.

Information on tire pressures is displayed in the multifunction display. After a few minutes of driving, the current tire pressure of each tire is shown in the multifunction display.

USA only: if there is a malfunction with the tire pressure monitor it can take more than ten minutes until the malfunction is shown by the tire pressure warning lamp flashing for approximately one minute and then lighting up continuously. When the malfunction has been rectified, the tire pressure warning lamp goes out after a few minutes of driving.

The tire pressure values indicated by the on-board computer may differ from those measured at a gas station with a pressure gauge. The tire pressures shown by the on-board computer refer to those measured at sea level. At high altitudes, the tire pressure values indicated by a pressure gauge are higher than those shown by the on-board computer. In this case, do not reduce the tire pressures.

The operation of the tire pressure monitor can be affected by interference from radio transmitting equipment (e.g. radio headphones, two-way radios) that may be being operated in or near the vehicle.

ⓘ USA only:

This device complies with part 15 of the FCC Rules. Operation is subject to the following two conditions:

1. This device may not cause interference, and

2. this device must accept any interference received, including interference that may cause undesired operation of the device.

Any unauthorized modification to this device could void the user's authority to operate the equipment.

ⓘ Canada only:

This device complies with RSS-210 of Industry Canada. Operation is subject to the following two conditions:

1. This device may not cause interference, and

2. this device must accept any interference received, including interference that may cause undesired operation.

Any unauthorized modification to this device could void the user's authority to operate the equipment.

Checking tire pressure electronically

▶ Make sure that the SmartKey is in position **2** (▷ page 139) in the ignition lock.

▶ Press the ◀ or ▶ button on the steering wheel to select the Serv. menu.

▶ Press the ▲ or ▼ button to select Tire Pressure.

▶ Press button OK.
The current tire pressure for each wheel will be displayed in the multifunction display.

If the vehicle has been parked for over 20 minutes, the message Tire pressure will be displayed after driving a few minutes appears.

After a teach-in period, the tire pressure monitor automatically recognizes new wheels or new sensors. As long as a clear allocation of the tire pressure values to the individual wheels is not possible, the Tire Pressure Monitor Active display message is shown instead of the tire pressure display. The tire pressures are already being monitored.

ⓘ If a spare wheel is mounted, the system may continue to show the tire pressure of the wheel that has been removed for a few minutes. If this occurs, note that the value displayed for the position where the spare wheel is mounted is not the same as the spare wheel's current tire pressure.

Tire pressure monitor warning messages

If the tire pressure monitor detects a significant pressure loss on one or more tires, a warning message is shown in the multifunction display. A warning tone also sounds and the tire pressure warning lamp lights up in the instrument cluster.

Each tire that is affected by a significant loss of pressure is highlighted in the pressure display.

▶ If the Correct Tire PressureCorrect Tire Pressure message appears in the multifunction display, check the tire pressure on all four wheels and correct it if necessary.

ⓘ If the wheel positions on the vehicle are interchanged, the tire pressures may be displayed for the wrong positions for a short time. This is rectified after a few minutes of driving, and the tire pressures are displayed for the correct positions.

Restarting the tire pressure monitor

When you restart the tire pressure monitor, all existing warning messages are deleted and the warning lamps go out. The monitor uses

the currently set tire pressures as the reference values for monitoring. In most cases, the tire pressure monitor will automatically detect the new reference values after you have changed the tire pressure. However, you can also define reference values manually as described here.

- Set the tire pressure to the value recommended for the corresponding driving situation on the Tire and Loading Information placard on the driver's side B-pillar (▷ page 322).

  Additional tire pressure values for different loads can also be found on the tire pressure table on the inside of the fuel filler flap (▷ page 322).
- Make sure that the tire pressure is correct on all four wheels.
- Make sure that the SmartKey is in position **2** (▷ page 139) in the ignition lock.
- Press the ◀ or ▶ button on the steering wheel to select the `Serv.` menu.
- Press the ▲ or ▼ button to select `Tire Pressure`.
- Press the OK button.
  The multifunction display shows the current tire pressure for the individual tires or the `Tire pressure will be displayed after driving a few minutes` message.
- Press the ▼ button.
  The `Use Current Pressures as New Reference Values` message appears in the multifunction display.

If you wish to confirm the restart:

- Press the OK button.
  The `Tire Press. Monitor Restarted` message appears in the multifunction display.

  After driving for a few minutes, the system checks whether the current tire pressures are within the specified range. The new tire pressures are then accepted as reference values and monitored.

If you wish to cancel the restart:

- Press the ⮌ button.
  The tire pressure values stored at the last restart will continue to be monitored.

Loading the vehicle

Instruction labels for tires and loads

⚠ **WARNING**

Overloaded tires can overheat, causing a blowout. Overloaded tires can also impair the steering and driving characteristics and lead to brake failure. There is a risk of accident.

Observe the load rating of the tires. The load rating must be at least half of the GAWR of your vehicle. Never overload the tires by exceeding the maximum load.

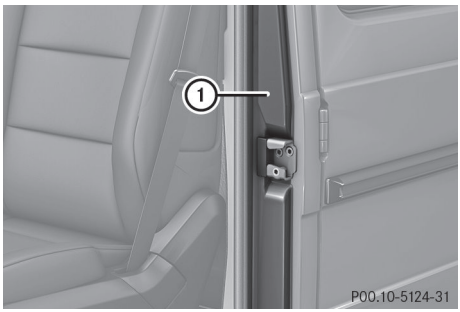

① B-pillar, driver's side

Two instruction labels on your vehicle show the maximum possible load.

(1) The Tire and Loading Information placard is on the B-pillar on the driver's side. The Tire and Loading Information placard shows the maximum permissible number of occupants and the maximum permissible vehicle load. It also contains details of the tire sizes and corresponding pressures for tires mounted at the factory.

(2) The vehicle identification plate is on the B-pillar on the driver's side. The vehicle identification plate informs you of the gross vehicle weight rating. It is made up

of the vehicle weight, all vehicle occupants, the fuel and the cargo. You can also find information about the maximum gross axle weight rating on the front and rear axle.

The maximum gross axle weight rating is the maximum weight that can be carried by one axle (front or rear axle). Never exceed the maximum load or the maximum gross axle weight rating for the front or rear axle.

Maximum permissible gross vehicle weight rating

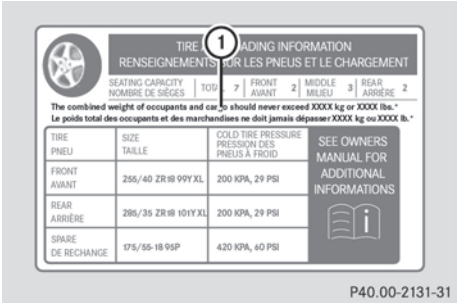

P40.00-2131-31

▶ Specification for maximum gross vehicle weight ① is listed in the Tire and Loading Information placard: "The combined weight of occupants and cargo should never exceed XXX kilograms or XXX lbs."

The gross weight of all vehicle occupants, cargo, luggage and trailer load/noseweight (if applicable) must not exceed the specified value.

ℹ The specifications shown on the Tire and Loading Information placard in the illustration are examples. The maximum permissible gross vehicle weight rating is vehicle-specific and may differ from that in the illustration. You can find the valid maximum permissible gross vehicle weight rating for your vehicle on the Tire and Loading Information placard.

Number of seats

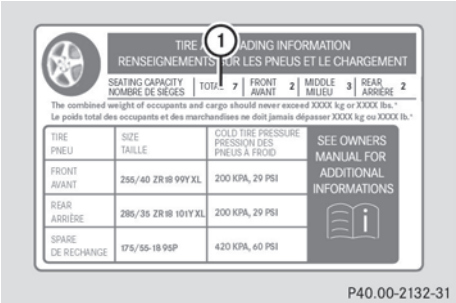

P40.00-2132-31

Maximum number of seats ① indicates the maximum number of occupants allowed to travel in the vehicle. This information can be found on the Tire and Loading Information placard.

ℹ The specifications shown on the Tire and Loading Information placard in the illustration are examples. The number of seats is vehicle-specific and can differ from the details shown. The number of seats in your vehicle can be found on the Tire and Loading Information placard.

Determining the correct load limit

Step-by-step instructions

The following steps have been developed as required of all manufacturers under Title 49, Code of U.S. Federal Regulations, Part 575 pursuant to the "National Traffic and Motor Vehicle Safety Act of 1966".

▶ **Step 1:** Locate the statement "The combined weight of occupants and cargo should never exceed XXX kg or XXX lbs." on your vehicle's Tire and Loading Information placard.

▶ **Step 2:** Determine the combined weight of the driver and passengers that will be riding in your vehicle.

▶ **Step 3:** Subtract the combined weight of the driver and passengers from XXX kilograms or XXX lbs.

- **Step 4:** The resulting figure equals the available amount of cargo and luggage load capacity. For example, if the "XXX" amount equals 1400 lbs and there will be five 150-pound passengers in your vehicle, the amount of available cargo and luggage load capacity is 650 lbs (1400 – 750 (5 x 150) = 650 lbs).
- **Step 5:** Determine the combined weight of luggage and cargo being loaded on the vehicle. That weight may not safely exceed the available cargo and luggage load capacity calculated in step 4.
- **Step 6 (if applicable):** If your vehicle will be towing a trailer, load from your trailer will be transferred to your vehicle. This reduces the available cargo and luggage load capacity of your vehicle (▷ page 358).

Example: steps 1 to 3

The following table shows examples on how to calculate total and cargo load capacities with varying seating configurations and number and size of occupants. The following examples use a maximum load of 1500 lbs (680 kg). **This is for illustration purposes only.** Make sure you are using the actual load limit for your vehicle stated on your vehicle's Tire and Loading Information placard (▷ page 328).

The higher the weight of all the occupants, the smaller the maximum load for luggage.

Additional information when towing a trailer (▷ page 358).

Step 1

	Example 1	Example 2	Example 3
Combined maximum weight of occupants and cargo (data from the Tire and Loading Information placard)	1500 lbs (680 kg)	1500 lbs (680 kg)	1500 lbs (680 kg)

Step 2

	Example 1	Example 2	Example 3
Number of people in the vehicle (driver and occupants)	5	3	1
Distribution of the occupants	Front: 2 Rear: 3	Front: 1 Rear: 2	Front: 1
Weight of the occupants	Occupant 1: 150 lbs (68 kg) Occupant 2: 180 lbs (82 kg) Occupant 3: 160 lbs (73 kg) Occupant 4: 140 lbs (63 kg) Occupant 5: 120 lbs (54 kg)	Occupant 1: 200 lbs (91 kg) Occupant 2: 190 lbs (86 kg) Occupant 3: 150 lbs (68 kg)	Occupant 1: 150 lbs (68 kg)
Gross weight of all occupants	750 lbs (340 kg)	540 lbs (245 kg)	150 lbs (68 kg)

Step 3

	Example 1	Example 2	Example 3
Permissible load (maximum gross vehicle weight rating from the Tire and Loading Information placard minus the gross weight of all occupants)	1500 lbs (680 kg) -750 lbs (340 kg) = 750 lbs (340 kg)	1500 lbs (680 kg) -540 lbs (245 kg) = 960 lbs (435 kg)	1500 lbs (680 kg) -150 lbs (68 kg) = 1350 lbs (612 kg)

Vehicle identification plate

Even if you have calculated the total load carefully, you should still make sure that the gross vehicle weight rating and the gross axle weight rating are not exceeded. Details can be found on the vehicle identification plate on the B-pillar on the driver's side of the vehicle (▷ page 328).

Permissible gross vehicle weight: the gross weight of the vehicle, all passengers, load and trailer load/noseweight (if applicable) must not exceed the permissible gross vehicle weight.

Gross axle weight rating: the maximum permissible weight that can be carried by one axle (front or rear axle).

To ensure that your vehicle does not exceed the maximum permissible values (gross vehicle weight and maximum gross axle weight rating), have your loaded vehicle (including driver, occupants, cargo, and full trailer load if applicable) weighed on a suitable vehicle weighbridge.

Trailer load/noseweight

The trailer load/noseweight affects the gross weight of the vehicle. If a trailer is attached, the trailer load/noseweight is included in the load along with occupants and luggage. The trailer load/noseweight is usually approximately 10% of the gross weight of the trailer and its load.

Only use a trailer tow hitch that has been approved for your vehicle by Mercedes-Benz. Comply with the manufacturer's operating instructions for operation, care and maintenance.

Uniform Tire Quality Grading Standards

Overview of Tire Quality Grading Standards

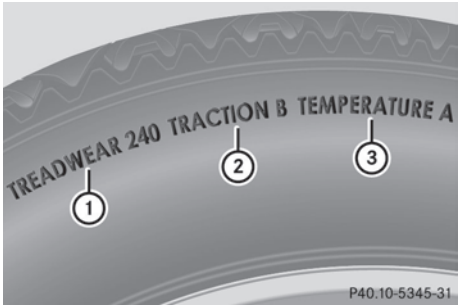

Uniform Tire Quality Grading Standards are U.S. government specifications. Their purpose is to provide drivers with uniform reliable information on tire performance data. Tire manufacturers have to grade tires using three performance factors: ① tread wear grade, ② traction grade and ③ temperature grade. These regulations do not apply to

Canada. Nevertheless, all tires sold in North America are provided with the corresponding quality grading markings on the sidewall of the tire.

Where applicable, the tire grading information can be found on the tire sidewall between the tread shoulder and maximum tire width.

Example:

- **Treadwear grade:** 200
- **Traction grade:** AA
- **Temperature grade:** A

All passenger car tires must conform to the statutory safety requirements in addition to these grades.

ℹ The actual values for tires are vehicle-specific and may deviate from the values in the illustration.

Treadwear

The treadwear grade is a comparative rating based on the wear rate of the tire when tested under controlled conditions on a specified U.S. government course. For example, a tire graded 150 would wear one and one-half times as well on the government test track as a tire graded 100.

The relative performance of tires depends upon the actual conditions of their use, however, and may depart significantly from the norm, due to variations in driving habits, service practices and differences in road characteristics and climate conditions.

Traction

⚠ **WARNING**

The traction grade assigned to this tire is based on straight-ahead braking traction tests, and does not include acceleration, cornering, hydroplaning, or peak traction characteristics.

! Avoid wheelspin. This can lead to damage to the drive train.

The traction grades, from highest to lowest, are AA, A, B, and C. Those grades represent the tire's ability to stop on a wet surface as measured under controlled conditions on specified government test surfaces of asphalt and concrete. A tire marked C may have poor traction performance.

The safe speed on a wet, snow covered or icy road is always lower than on dry road surfaces.

You should pay special attention to road conditions when temperatures are around freezing point.

Mercedes-Benz recommends a minimum tread depth of ⅙ in (4 mm) on all four winter tires. Observe the legally required minimum tire tread depth (▷ page 319). Winter tires can reduce the braking distance on snow-covered surfaces in comparison with summer tires. The braking distance is still much further than on surfaces that are not icy or covered with snow. Take appropriate care when driving.

Further information on winter tires (M+S tires) (▷ page 320).

Temperature

⚠ **WARNING**

The temperature grade for this tire is established for a tire that is properly inflated and not overloaded. Excessive speed, underinflation, or excessive loading, either separately or in combination, can cause excessive heat build-up and possible tire failure.

The temperature grades are A (the highest), B, and C. These represent the tire's resistance to the generation of heat and its ability to dissipate heat when tested under controlled conditions on a specified indoor laboratory test wheel. Sustained high temperature can cause the material of the tire to degenerate and reduce tire life, and

excessive temperature can lead to sudden tire failure. The grade C corresponds to a level of performance which all passenger car tires must meet under the Federal Motor Vehicle Safety Standard No. 109. Grades B and A represent higher levels of performance on the laboratory test wheel than the minimum required by law.

Tire labeling

Tire labeling overview

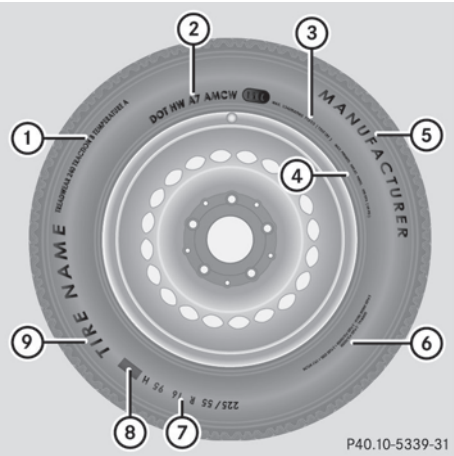

① Uniform tire Quality Grading Standard (▷ page 338)
② DOT tire Identification Number (▷ page 337)
③ Maximum tire load (▷ page 337)
④ Maximum tire pressures (▷ page 324)
⑤ Manufacturer
⑥ Tire material (▷ page 337)
⑦ Tire size designation, load-bearing capacity and speed rating (▷ page 334)
⑧ Load identification (▷ page 336)
⑨ Tire name

The markings described above are on the tire in addition to the tire name (sales designation) and the manufacturer's name.

ℹ Tire data is vehicle-specific and may deviate from the data in the example.

Tire size designation, load-bearing capacity and speed rating

⚠ **WARNING**

Exceeding the stated tire load-bearing capacity and the approved maximum speed could lead to tire damage or the tire bursting. There is a risk of accident.

Therefore, only use tire types and sizes approved for your vehicle model. Observe the tire load rating and speed rating required for your vehicle.

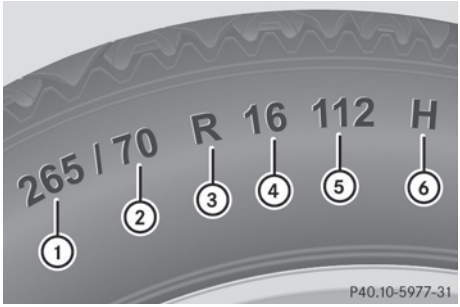

① Tire width
② Height-width ratio in percentage
③ Tire code
④ Rim diameter
⑤ Load bearing index
⑥ Speed rating

General: depending on the manufacturer's standards, a letter is imprinted into the tire wall before the size description.

If there is no letter preceding the size description (as shown above): these are passenger vehicle tires according to European manufacturing standards.

If "P" precedes the size description: passenger vehicle tires according to U.S. manufacturing standards.

If "P" precedes the size description: light truck tires according to U.S. manufacturing standards.

If "T" precedes the size description: these are compact emergency spare wheels at high tire pressure, to be used only temporarily in an emergency.

Tire width: tire width ① shows the nominal tire width in millimeters.

Height-width ratio: height-width ratio ② is the ratio between tire height and tire width. The aspect ratio is calculated by dividing the tire width by the tire height. The resulting quotient is given as a percentage.

Tire code: tire code ③ shows the tire type. "R" represents radial tires; "D" represents diagonal tires; "B" represents diagonal radial tires.

Optionally, tires with a maximum speed of over 149 mph (240 km/h) may have "ZR" in the size description, depending on the manufacturer (e.g. 245/40 ZR 18).

Rim diameter: rim diameter ④ is the diameter of the bead seat, not the diameter of the rim flange. The rim diameter is specified in inches (in).

Load bearing index: ⑥ load bearing index ⑤ (also load index) is a numerical code that specifies the maximum load-bearing capacity of a tire.

Do not overload the tires by exceeding the specified load limit. The maximum permissible load can be found on the vehicle's Tire and Loading Information placard on the B-pillar on the driver's side (▷ page 328).

Example:

Load-bearing index 91 indicates a maximum load of 1356 lbs (615 kg) that the tires can bear. For further information on the maximum tire load in kilograms and pounds, see (▷ page 337).

For further information on the load bearing index, see "Load index" (▷ page 336).

Speed rating: speed rating ⑥ specifies the approved maximum speed of the tire.

ℹ Tire data is vehicle-specific and may deviate from the data in the example.

Regardless of the speed rating, always observe the speed limits. Drive carefully and adapt your driving style to the traffic conditions.

ℹ Since 2009, tires in Europe which correspond to the noise limitations of Directive ECE-R 117 show an >>S<< (Sound) mark. This identification follows the type approval number and has no connection with the speed rating.

Summer tires

Index	Speed rating
Q	up to 100 mph (160 km/h)
R	up to 106 mph (170 km/h)
S	up to 112 mph (180 km/h)
T	up to 118 mph (190 km/h)
H	up to 130 mph (210 km/h)
V	up to 149 mph (240 km/h)
W	up to 168 mph (270 km/h)
Y	up to 186 mph (300 km/h)
ZR...Y	up to 186 mph (300 km/h)
ZR...(..Y)	over 186 mph (300 km/h)
ZR	over 149 mph (240 km/h)

- Optionally, tires with a maximum speed of over 149 mph (240 km/h) may have "ZR" in the size description, depending on the manufacturer (e.g. 245/40 ZR18).

  The service specification is made up of load-bearing index ⑤ and speed rating ⑥.
- If the size description of your tire includes "ZR" and there are no service

specifications, ask the tire manufacturer in order to find out the maximum speed.

If a service specification is available, the maximum speed is limited according to the speed rating in the service specification. Example: 245/40 ZR 18 97 Y. In this example, "97 Y" is the service specification. The letter "Y" represents the speed rating and the maximum speed of the tire is limited to 186 mph(300 km/h).

- The size description for all tires with maximum speeds of over 186 mph (300 km/h) must include "ZR" **and** the service specification must be given in parentheses. Example: 275/40 ZR 18 (99 Y). The speed rating "(Y)" indicates that the maximum speed of the tire is over 186 mph (300 km/h). Ask the tire manufacturer about the maximum speed.

All-weather tires and winter tires

Index	Speed rating
Q M+S[4]	up to 100 mph (160 km/h)
T M+S[4]	up to 118 mph (190 km/h)
H M+S[4]	up to 130 mph (210 km/h)
V M+S[4]	up to 149 mph (240 km/h)

ℹ Not all tires with the M+S marking provide the driving characteristics of winter tires. In addition to the M+S marking, winter tires also have the snowflake symbol on the tire wall. Tires with this marking fulfill the requirements of the Rubber Manufacturers Association (RMA) and the Rubber Association of Canada (RAC). These tires have been developed specifically for driving on snow.

When the electronic speed limiter is set, your vehicle is prevented from exceeding 130 mph (210 km/h).

The speed rating of tires mounted at the factory may be higher than the maximum speed that the electronic speed limiter permits.

Make sure that your tires have the required speed rating, e.g. when buying new tires. The required speed rating for your vehicle can be found in the "Tires" section (▷ page 346).

Further information about reading tire data can be obtained from any qualified specialist workshop.

Load index

In addition to the load bearing index, load rating ① may be imprinted after the letters that identify speed rating ⑥ on the sidewall of the tire (▷ page 334).

- If no specification is given: no text (as in the example above), represents a standard load (SL) tire
- XL or Extra Load: represents a reinforced tire
- Light Load: represents a light load tire
- C, D, E: represents a load range that depends on the maximum load that the tire can carry at a certain pressure

ℹ Tire data is vehicle-specific and may deviate from the data in the example.

4 Or M+S for winter tires.

Maximum load rating

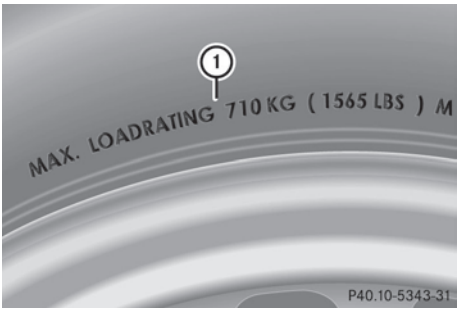

Maximum tire load ① is the maximum permissible weight for which the tire is approved.

Do not overload the tires by exceeding the specified load limit. The maximum permissible load can be found on the vehicle's Tire and Loading Information placard on the B-pillar on the driver's side (▷ page 328).

ℹ The actual values for tires are vehicle-specific and may deviate from the values in the illustration.

DOT, Tire Identification Number (TIN)

U.S. tire regulations prescribe that every manufacturer of new tires or retreader has to imprint a TIN in or on the sidewall of each tire produced.

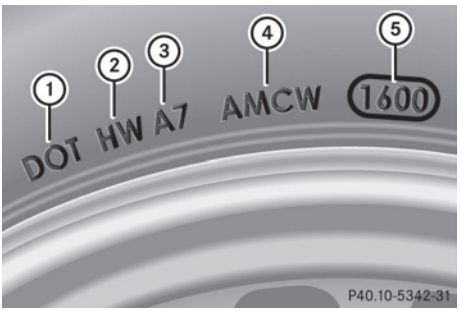

The TIN is a unique identification number. The TIN enables tire manufacturers to inform purchasers of recalls and other safety-relevant matters. It makes it possible for the purchaser to easily identify the affected tires.

The TIN is made up of manufacturer identification code ②, tire size ③, tire type code ④ and manufacturing date ⑤.

DOT (Department of Transportation): tire symbol ① indicates that the tire complies with the requirements of the U.S. Department of Transportation.

Manufacturer identification code: manufacturer identification code ② provides details on the tire manufacturer. New tires have a code with two symbols. Retreaded tires have a code with four symbols.

For further information about retreaded tires, see (▷ page 318).

Tire size: identifier ③ describes the tire size.

Tire type code: tire type code ④ can be used by the manufacturer as a code to describe specific characteristics of the tire.

Date of manufacture: date of manufacture ⑤ provides information about the age of a tire. The first and second positions represent the week of manufacture, starting with "01" for the first calendar week. Positions three and four represent the year of manufacture. For example, a tire that is marked with "3208", was manufactured in week 32 in 2008.

ℹ Tire data is vehicle-specific and may deviate from the data in the example.

Tire characteristics

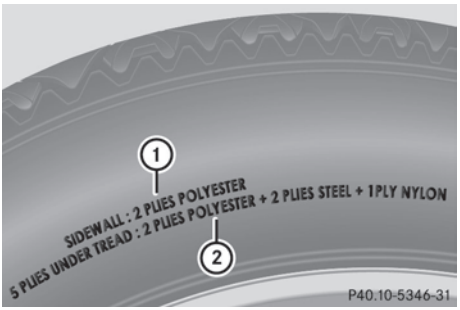

This information describes the type of tire cord and the number of layers in sidewall ① and under tire tread ②.

ℹ Tire data is vehicle-specific and may deviate from the data in the example.

Definition of terms for tires and loading

Tire ply composition and material used

Describes the number of layers or the number of rubber-coated belts in the tread and the sidewall of the tire. These are made of steel, nylon, polyester and other materials.

Bar

Metric unit for tire pressure.
14.5038 pounds per square inch (psi) and 100 kilopascals (kPa) are the equivalent of 1 bar.

DOT (Department of Transportation)

DOT marked tires fulfill the requirements of the United States Department of Transportation.

Normal occupant weight

The number of occupants for which the vehicle is designed multiplied by 68 kilograms (150 lbs).

Uniform Tire Quality Grading Standards

A uniform standard to grade the quality of tires with regards to tread quality, tire traction and temperature characteristics. Ratings are determined by tire manufacturers using U.S. government testing procedures. The ratings are molded into the sidewall of the tire.

Recommended tire pressure

The recommended tire pressure applies to the tires mounted at the factory.

The Tire and Loading Information placard contains the recommended tire pressures for cold tires on a fully loaded vehicle and for the maximum permissible vehicle speed.

The tire pressure table contains the recommended pressures for cold tires for various operating conditions, i.e. differing load and speed conditions.

Increased vehicle weight due to optional equipment

This is the combined weight of all standard and optional equipment available for the vehicle, regardless of whether it is actually installed on the vehicle or not.

Rim

This is the part of the wheel on which the tire is mounted.

GAWR (Gross Axle Weight Rating)

The GAWR is the maximum gross axle weight rating. The actual load on an axle must never exceed the gross axle weight rating. The gross axle weight rating can be found on the vehicle identification plate on the B-pillar on the driver's side.

Speed rating

The speed rating is part of the tire identification. It specifies the speed range for which the tire is approved.

GTW (Gross Trailer Weight)

The GTW is the weight of a trailer including the weight of the load, luggage, accessories etc. on the trailer.

GVW (Gross Vehicle Weight)

The gross vehicle weight includes the weight of the vehicle including fuel, tools, the spare wheel, accessories installed, occupants, luggage and the drawbar noseweight, if applicable. The gross vehicle weight must not

exceed the gross vehicle weight rating GVWR as specified on the vehicle identification plate on the B-pillar on the driver's side.

GVWR (Gross Vehicle Weight Rating)

The GVWR is the maximum permissible gross weight of a fully loaded vehicle (the weight of the vehicle including all accessories, occupants, fuel, luggage and the drawbar noseweight, if applicable). The gross vehicle weight rating is specified on the vehicle identification plate on the B-pillar on the driver's side.

Maximum loaded vehicle weight

The maximum weight is the sum of:

- the curb weight of the vehicle
- the weight of the accessories
- the load limit
- the weight of the factory installed optional equipment

Kilopascal (kPa)

Metric unit for tire pressure. 6.9 kPa corresponds to 1 psi. Another unit for tire pressure is bar. 100 kilopascals (kPa) are the equivalent of 1 bar.

Load index

In addition to the load-bearing index, the load index may also be imprinted on the sidewall of the tire. This specifies the load-bearing capacity more precisely.

Curb weight

The weight of a vehicle with standard equipment including the maximum capacity of fuel, oil and coolant. It also includes the air-conditioning system and optional equipment if these are installed in the vehicle, but does not include passengers or luggage.

Maximum load rating

The maximum tire load is the maximum permissible weight in kilograms or lbs for which a tire is approved.

Maximum permissible tire pressure

Maximum permissible tire pressure for one tire.

Maximum load on one tire

Maximum load on one tire. This is calculated by dividing the maximum axle load of one axle by two.

PSI (pounds per square inch)

A standard unit of measure for tire pressure.

Aspect ratio

Relationship between tire height and tire width in percent.

Tire pressure

This is pressure inside the tire applying an outward force to each square inch of the tire's surface. The tire pressure is specified in pounds per square inch (psi), in kilopascal (kPa) or in bar. The tire pressure should only be corrected when the tires are cold.

Cold tire pressure

The tires are cold:

- if the vehicle has been parked without direct sunlight on the tires for at least three hours and
- if the vehicle has not been driven further than 1 mile (1.6 km)

Tread

The part of the tire that comes into contact with the road.

Bead

The tire bead ensures that the tire sits securely on the wheel. There are several steel wires in the bead to prevent the tire from coming loose from the wheel rim.

Sidewall

The part of the tire between the tread and the bead.

Weight of optional extras

The combined weight of those optional extras that weigh more than the replaced standard parts and more than 2.3 kg (5 lbs). These optional extras, such as high-performance brakes, level control, a roof rack or a high-performance battery, are not included in the curb weight and the weight of the accessories.

TIN (Tire Identification Number)

This is a unique identifier which can be used by a tire manufacturer to identify tires, for example for a product recall, and thus identify the purchasers. The TIN is made up of the manufacturer's identity code, tire size, tire type code and the manufacturing date.

Load bearing index

The load bearing index (also load index) is a code that contains the maximum load bearing capacity of a tire.

Traction

Traction is the result of friction between the tires and the road surface.

TWR (Tongue Weight Rating)

The TWR specifies the maximum permissible weight that the ball coupling of the trailer tow hitch can support.

Treadwear indicators

Narrow bars (tread wear bars) that are distributed over the tire tread. If the tire tread is level with the bars, the wear limit of 1/16 in (1.6 mm) has been reached.

Occupant distribution

The distribution of occupants in a vehicle at their designated seating positions.

Total load limit

Nominal load and luggage load plus 150 lbs (68 kg) multiplied by the number of seats in the vehicle.

Changing a wheel

Flat tire

The "Breakdown assistance" section (▷ page 304) contains information and notes on how to deal with a flat tire.

Interchanging the wheels

⚠ **WARNING**

Rotate front and rear wheels only if the tires are of the same dimension.

If your vehicle is equipped with mixed-size tires (different tire dimensions front vs. rear), tire rotation is not possible.

⚠ **WARNING**

Have the tightening torque checked after changing a wheel. The wheels could come loose if they are not tightened to a torque of 96 lb-ft (130 Nm).

Only use genuine Mercedes-Benz wheel bolts specified for your vehicle's rims.

! On vehicles equipped with a tire pressure monitor, electronic components are located in the wheel.

Tire-mounting tools should not be used near the valve. This could damage the electronic components.

Only have tires changed at a qualified specialist workshop.

Interchanging the front and rear wheels of differing dimensions can render the general operating permit invalid.

Always pay attention to the instructions and safety notices in the section on "Changing a wheel and mounting a spare wheel" (▷ page 341).

The wear patterns on the front and rear tires differ, depending on the operating conditions. Rotate the wheels before a clear wear pattern has formed on the tires. Front tires typically wear more on the shoulders and the rear tires in the center.

If your vehicle's tire configuration allows, you can rotate the wheels according to the intervals in the tire manufacturer's warranty book in your vehicle documents. If no warranty book is available, the tires should be replaced every 3000 to 6000 miles(5000 to 10,000 km), or earlier if tire wear necessitates it. Do not change the direction of wheel rotation.

Clean the contact surfaces of the wheel and the brake disc thoroughly every time a wheel is interchanged. Check the tire pressure and reactivate the tire pressure monitor (▷ page 325) if necessary.

Direction of rotation

Tires with a specified direction of rotation have additional benefits, e.g. if there is a risk of hydroplaning. You will only gain these benefits if the correct direction of rotation is observed.

An arrow on the sidewall of the tire indicates its correct direction of rotation.

You may mount the spare wheel against the direction of rotation. Adhere to the time restriction on use as well as the speed limitation specified on the spare wheel.

Storing wheels

Store tires that are not being used in a cool, dry and preferably dark place. Protect the tires from oil, grease, gasoline and diesel.

Cleaning the wheels

⚠ **WARNING**

Do not use power washers with circular-jet nozzles (dirt grinders) to clean your vehicle, in particular the tires. You could otherwise damage the tires and cause an accident.

Mounting a wheel

Preparing the vehicle

⚠ **WARNING**

You must remove the spare wheel from the spare wheel carrier before lifting the vehicle. Otherwise the vehicle could fall off the jack and injure you or others.

▶ Prepare the vehicle as described (▷ page 304).

▶ Remove the vehicle tool kit and the jack (▷ page 302).

▶ Secure the vehicle to prevent it from rolling away.

▶ Remove the spare wheel from the spare wheel bracket (▷ page 303).

ⓘ Vehicles without a spare wheel or emergency spare wheel are not equipped with a tire-change tool kit at the factory. For more information on which tools are required to perform a wheel change on your vehicle e.g. lug wrench or jack, consult an authorized Mercedes-Benz Center.

Securing the vehicle to prevent it from rolling away

▶ **On level ground:** place chocks or other suitable items under the front and rear of

the wheel that is diagonally opposite the wheel you wish to change.

▶ **On downhill gradients:** place chocks or other suitable items in front of the wheels of the front and rear axle.

Raising the vehicle

⚠ **WARNING**

If you do not position the jack correctly at the appropriate jacking point of the vehicle, the jack could tip over with the vehicle raised. There is a risk of injury.

Only position the jack at the appropriate jacking point of the vehicle. The base of the jack must be positioned vertically, directly under the jacking point of the vehicle.

! The jack is designed exclusively for jacking up the vehicle at the jacking points. Otherwise, your vehicle could be damaged.

The following must be observed when raising the vehicle:

- to raise the vehicle, only use the vehicle-specific jack that has been tested and approved by Mercedes-Benz. If used incorrectly, the jack could tip over with the vehicle raised.
- the jack is designed only to raise and hold the vehicle for a short time while a wheel is being changed. It is not suited for performing maintenance work under the vehicle.
- avoid changing the wheel on uphill and downhill slopes.
- before raising the vehicle, secure it from rolling away by applying the parking brake and inserting wheel chocks. Never disengage the parking brake while the vehicle is raised.
- the jack must be placed on a firm, flat and non-slip surface. On a loose surface, a large, load-bearing underlay must be used. On a slippery surface, a non-slip underlay must be used, e.g. rubber mats.
- do not use wooden blocks or similar objects as a jack underlay. Otherwise, the jack will not be able to achieve its load-bearing capacity due to the restricted height.
- make sure that the distance between the underside of the tires and the ground does not exceed 1.2 inches (3 cm).
- never place your hands and feet under the raised vehicle.
- never lie under the raised vehicle.
- never start the engine when the vehicle is raised.
- never open or close a door or the tailgate when the vehicle is raised.
- make sure that no persons are present in the vehicle when the vehicle is raised.

▶ Using lug wrench ①, loosen the bolts on the wheel you wish to change by about one full turn. Do not unscrew the wheel bolts completely.

Pump lever

② Notch on pump lever

▶ Assemble the pump lever for the jack. It can be found with the vehicle tool kit (▷ page 302).

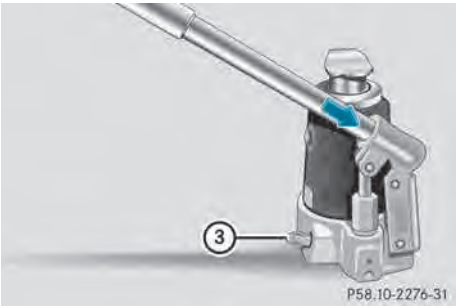

▶ Turn pressure release screw ③ clockwise as far as it will go using notch ② on the pump lever.
Pressure release screw ③ is closed.

ℹ Do not turn pressure release screw ③ by more than one to two revolutions. Otherwise, hydraulic fluid could escape.

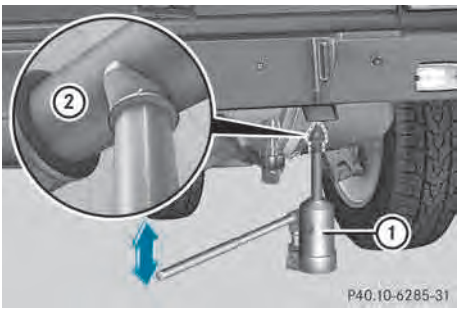

▶ Set jack ① on solid ground.

▶ Position jack ① on the axle carrier tube ② of the front or rear axle. Jack ① must always stand vertically, even on slopes.

Make sure that jack ① is correctly positioned under axle carrier tube ②. The front or rear axle must sit securely in the recess of jack ①.

▶ Raise the vehicle by pumping in the direction of the arrow, until the tire is a maximum of 1.2 in (3 cm) off the ground.

Removing a wheel

❗ Do not place wheel bolts in sand or on a dirty surface. The bolt and wheel hub threads could otherwise be damaged when you screw them in.

▶ Unscrew the wheel bolts.

▶ Remove the wheel.

Mounting a new wheel

⚠ **WARNING**

Always replace wheel bolts that are damaged or rusted.

Never oil or grease wheel bolts. This could cause the bolts to loosen in the wheel hub.

⚠ **WARNING**

Always replace wheel bolts that are damaged or rusted.

Never apply oil or grease to wheel bolts.

Damaged wheel hub threads should be repaired immediately. Do not continue to drive under these circumstances! Contact an authorized Mercedes-Benz Center or call Roadside Assistance.

Incorrect wheel bolts or improperly tightened wheel bolts can cause the wheel to come off. This could cause an accident. Make sure to use the correct wheel bolts.

⚠ **WARNING**

Only use genuine Mercedes-Benz wheel bolts. Other wheel bolts may come loose.

Do not tighten the wheel bolts when the vehicle is raised. Otherwise, the vehicle could fall off the jack.

❗ To prevent damage to the paintwork, hold the wheel securely against the wheel hub while screwing in the first wheel bolt.

Always pay attention to the instructions and safety notes in the "Changing a wheel" section (▷ page 340).

- Clean the wheel and wheel hub contact surfaces.
- Place the new wheel on the wheel hub and push it on.
- Tighten the wheel bolts until they are finger-tight.

Lowering the vehicle

WARNING

The wheels could work loose if the wheel nuts and bolts are not tightened to the specified tightening torque. There is a risk of accident.

Have the tightening torque immediately checked at a qualified specialist workshop after a wheel is changed.

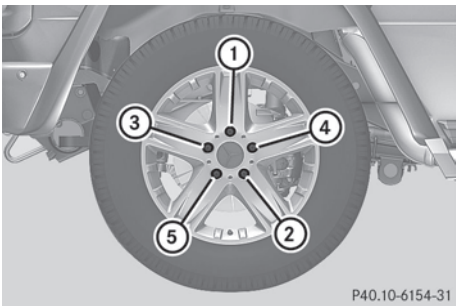

- Open the pressure release screw on the jack using the pump lever (▷ page 342) by approximately one turn.
- Lower the vehicle until it is once again standing firmly on the ground.
- Place the jack to one side.
- Tighten the wheel bolts evenly in a crosswise pattern in the sequence indicated (① to ⑤). The specified tightening torque is 96 lb-ft (130 Nm).
- Disassemble the pump lever.
- Push the jack piston back in and close the drain plug.
- Use the bolts to secure the faulty wheel to the spare wheel bracket (▷ page 303).
- Stow the jack and the vehicle tools in the vehicle again.
- Check the tire pressure of the newly installed wheel and adjust it if necessary.

  A table with the tire pressures for your vehicle can be found on the B-pillar on the driver's side.

Wheel and tire combinations

General notes

WARNING

Replace rims or tires with the same designation, manufacturer and type as shown on the original part. For further information contact an authorized Mercedes-Benz Center. If incorrectly sized rims and tires are mounted, the wheel brakes or suspension components can be damaged. Also, the operating clearance of the wheels and the tires may no longer be correct.

WARNING

Replace rims or tires with the same designation, manufacturer and type as shown on the original part. For further information contact an authorized Mercedes-Benz Center. If incorrectly sized rims and tires are mounted, the wheel brakes or suspension components can be damaged. Also, the operating clearance of the wheels and the tires may no longer be correct.

WARNING

If you notice sudden significant vibrations or unusual handling performance or if you suspect that damage has occurred to the vehicle, you should activate the hazard warning lamps, gently reduce speed and carefully head for an area that is located at a safe distance from the road.

Check the tires and the underside of the vehicle for damage. If the vehicle seems unsafe, have the vehicle towed away to the

nearest Mercedes-Benz Center or tire dealer to be repaired.

⚠ **WARNING**

Do not drive with a flat tire. A flat tire affects the ability to steer or brake the vehicle. You might lose control of the vehicle. Continued driving with a flat tire or driving at high speed with a flat tire will cause excessive heat build-up and possibly a fire.

! For safety reasons, Mercedes-Benz recommends that you only use tires, wheels and accessories which have been approved by Mercedes-Benz specifically for your vehicle. These tires have been specially adapted for use with the driving safety systems, such as ABS or ESP®.

Only use tires, wheels or accessories tested and approved by Mercedes-Benz. Certain characteristics, e.g. handling, vehicle noise emissions or fuel consumption, may otherwise be adversely affected. In addition, when driving with a load, tire dimension variations could cause the tires to come into contact with the bodywork and axle components. This could result in damage to the tires or the vehicle.

Mercedes-Benz accepts no liability for damage resulting from the use of tires, wheels or accessories other than those tested and approved.

Further information about wheels, tires and approved combinations can be obtained from any authorized Mercedes-Benz Center.

ℹ The Tire and Loading Information placard with the recommended tire pressures is attached to the B-pillar on the driver's side. Further information about driving at high speeds or driving with vehicle loads that are lighter than the maximum vehicle load can be found in the tire pressure table on the inside of the fuel filler flap. Check tire pressures regularly, and only when the tires are cold. Comply with the maintenance recommendations of the tire manufacturer in the vehicle document wallet.

Further information on recommended tire pressures as well as tire pressures for specific driving situations, see (▷ page 338).

ℹ Notes on the vehicle equipment – always equip the vehicle with:

- tires of the same size on a given axle (left/right)
- tires of the same type on your vehicle at a given time (summer tires, winter tires, all-weather tires, all-terrain tires)

ℹ The following pages contain information on approved wheels and tire sizes for equipping your vehicle with winter tires. Winter tires are not available at the factory as standard equipment or optional extras.

If you wish to mount approved winter tires on your vehicle, wheels of appropriate size may also be required as the sizes of the approved winter tires may differ from those of the original tires. This is dependent on the model and the equipment installed at the factory.

The wheels and tires as well as further information can be obtained at a qualified specialist workshop.

The tire and wheel combinations listed in the tables below apply to the following models:

V1	G 550
V2	G 63 AMG

ℹ Not all wheel and tire combinations are available at the factory for all countries.

Tires

G 550

All-weather tires

Tires (radial tires)	Alloy wheels
265/60 R18 110V M+S	7.5 J x 18 H2 Wheel offset: 1.69 in(43 mm)

ⓘ You can obtain information about tires and tire dimensions that are not listed here at any authorized Mercedes-Benz Center.

Spare wheel

All-weather tires

tires (radial tires)	Alloy wheels
265/60 R18 110V M+S	7.5 J x 18 H2 Wheel offset: 1.69 in (43 mm)

ⓘ You can obtain information about tires and tire dimensions that are not listed here at any authorized Mercedes-Benz Center.

G 63 AMG

Summer tires

Tires	Alloy wheels
275/50 R20 113W XL Use of snow chains not permitted. Tire manufacturer recommended by Mercedes-Benz: Yokohama.	9.5J x 20 H2 ET 50

ⓘ You can obtain information about tires and tire dimensions that are not listed here at any authorized Mercedes-Benz Center.

Winter tires

Tires	Alloy wheels
265/55 R19 109H M+S Tire manufacturer recommended by Mercedes-Benz: Dunlop.	9.5J x 19 H2 ET 50

ⓘ You can obtain information about tires and tire dimensions that are not listed here at any authorized Mercedes-Benz Center.

Spare wheel

! The spare wheel must be inflated to the maximum tire pressure given in the table on the inside of the fuel filler flap.

Tires	Alloy wheels
265/55 R19 109H M+S Tire manufacturer recommended by Mercedes-Benz: Dunlop.	9.5J x 19 H2 ET 50

ⓘ You can obtain information about tires and tire dimensions that are not listed here at any authorized Mercedes-Benz Center.

Useful information 348
Genuine Mercedes-Benz parts 348
Warranty 348
Identification plates 349
Service products and filling capacities 350
Vehicle data 357
Trailer tow hitch 358

Useful information

ℹ This Operator's Manual describes all models and all standard and optional equipment of your vehicle available at the time of publication of the Operator's Manual. Country-specific differences are possible. Please note that your vehicle may not be equipped with all features described. This also applies to safety-related systems and functions.

ℹ Read the information on qualified specialist workshops: (▷ page 23).

Genuine Mercedes-Benz parts

⚠ **WARNING**

Driving safety may be impaired if non-approved parts, tires and wheels or safety-relevant accessories are used.

This could lead to malfunctions in safety-relevant systems, e.g. the brake system. This could cause you to lose control of your vehicle and cause an accident.

For this reason, Mercedes-Benz recommends that you use genuine Mercedes-Benz parts or parts of equal quality. Only use tires, wheels and accessories that have been specifically approved for your vehicle.

Environmental note

Daimler AG also supplies reconditioned major assemblies and parts which are of the same quality as new parts. They are covered by the same Limited Warranty entitlements as new parts.

! The use of non-approved parts could impair the vehicle's safety. For this reason, Mercedes-Benz recommends genuine Mercedes-Benz parts and approved conversion parts and accessories for your vehicle model.

! Air bags and Emergency Tensioning Devices, as well as control units and sensors for these restraint systems, may be installed in the following areas of your vehicle:

- doors
- door pillars
- door sills
- seats
- cockpit
- instrument cluster
- center console

Do not install accessories such as audio systems in these areas. Do not carry out repairs or welding. You could impair the operating efficiency of the restraint systems.

Have aftermarket accessories installed at a qualified specialist workshop.

Genuine Mercedes-Benz parts are subject to strict quality control. Each part has been specially developed, manufactured or selected for Mercedes-Benz vehicles and fine-tuned for them. Only genuine Mercedes-Benz parts should therefore be used.

More than 300,000 different genuine parts are available for Mercedes-Benz models.

All Mercedes-Benz Centers maintain a supply of genuine Mercedes-Benz parts for necessary service and repair work. In addition, strategically located parts delivery centers provide quick and reliable parts service.

Always specify the vehicle identification number (VIN) (▷ page 349) and the engine number (▷ page 350) when ordering genuine Mercedes-Benz parts.

Warranty

Your vehicle is covered under the terms of the warranties printed in the Service and Warranty Information booklet.

Your authorized Mercedes-Benz Center will replace and repair all factory-installed parts in accordance with the following warranty terms and conditions:

- New Vehicle Limited Warranty
- Emission Systems Warranty
- Emission Performance Warranty
- California, Connecticut, Maine, Massachusetts, New York, Pennsylvania, Rhode Island and Vermont Emission Control System Warranty
- State warranty enforcement laws (Lemon Laws)

Replacement parts and accessories are covered by the Mercedes-Benz Parts and Accessories warranties. These are available at any authorized Mercedes-Benz Center.

ⓘ If you lose the Service and Warranty Information booklet, contact an authorized Mercedes-Benz Center to arrange a replacement. It will be mailed to you.

Identification plates

Vehicle identification plate with vehicle identification number (VIN) and paint code number

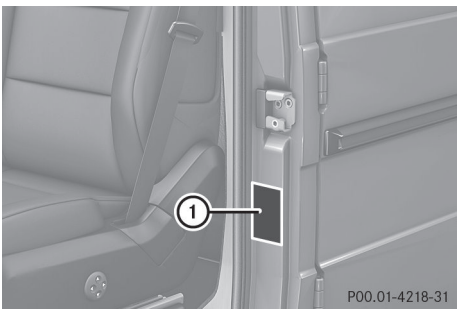

▶ Open the driver's door.
You will see vehicle identification plate ①.

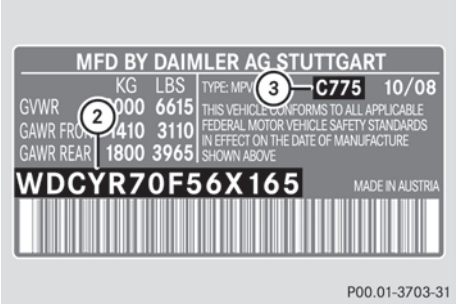

Example: vehicle identification plate (USA only)

② VIN

③ Paint code

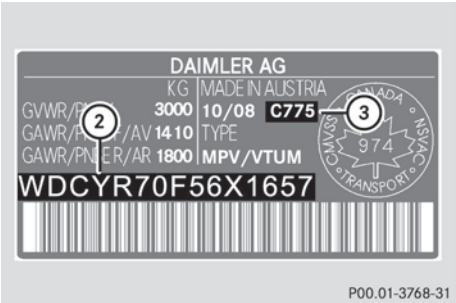

Example: vehicle identification plate (Canada only)

② VIN

③ Paint code

ⓘ The data shown on the vehicle identification plate is used only as an example. This data is different for every vehicle and can deviate from the data shown here. The correct data for your vehicle can be found on the vehicle identification plate that is mounted on your vehicle.

Vehicle identification number (VIN)

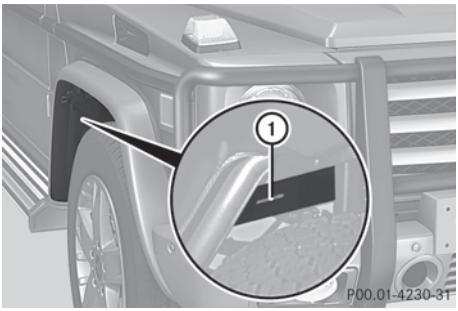

① VIN (stamped into the chassis on the right-hand side, when viewed in the direction of travel)

① VIN (on the lower edge of the windshield)

The VIN can be found in the following locations:

- on the vehicle identification plate (▷ page 349)
- stamped into the chassis on the right-hand side (when viewed in the direction of travel)
- on the lower edge of the windshield

Engine number

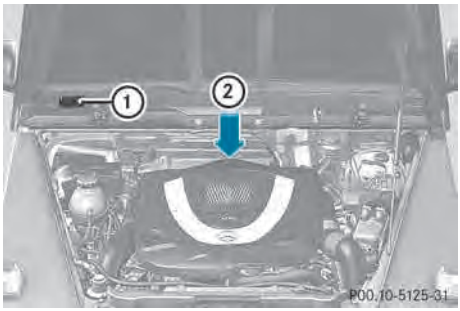

Example: G 550

① Plate with information on emissions testing, including the confirmation of the emission standards at U.S. federal level as well as for California

② Engine number (stamped into the crankcase)

Service products and filling capacities

Important safety notes

⚠ WARNING

Comply with all valid regulations with respect to handling, storing and disposing of service fluids. Otherwise, you could endanger persons or the environment.

Keep service fluids out of the reach of children.

For health reasons, you should prevent service fluids from coming into direct contact with your skin or clothing.

If a service fluid is swallowed, contact a physician immediately.

Environmental note

Dispose of service products in an environmentally responsible manner.

Service products include the following:

- Fuels
- Lubricants (e.g. engine oil, transmission oil)

- Coolant
- Brake fluid
- Windshield washer fluid
- Climate control system refrigerant

Components and service products must be matched. You should therefore only use products that have been tested and approved by Mercedes-Benz.

Information on tested and approved products can be obtained at an authorized Mercedes-Benz Center or on the Internet at **http://bevo.mercedes-benz.com**.

You can recognize service products approved by Mercedes-Benz by the following inscription on the containers:

- MB-Freigabe (e.g. MB-Freigabe 229.51)
- MB Approval (e.g. MB Approval 229.51)

Other designations or recommendations indicate a level of quality or a specification in accordance with an MB Sheet number (e.g. MB 229.5). They have not necessarily been approved by Mercedes-Benz.

Fuel

Important safety notes

⚠ **WARNING**

Fuel is highly flammable. If you handle fuel incorrectly, there is a risk of fire and explosion.

You must avoid fire, naked flames, creating sparks and smoking. Switch off the engine and, if applicable, the auxiliary heating before refueling.

⚠ **WARNING**

Fuel is poisonous and hazardous to health. There is a risk of injury.

You must make sure that fuel does not come into contact with your skin, eyes or clothing and that it is not swallowed. Do not inhale fuel vapors. Keep fuel away from children.

If you or others come into contact with fuel, observe the following:

- Wash away fuel from skin immediately using soap and water.
- If fuel comes into contact with your eyes, immediately rinse them thoroughly with clean water. Seek medical assistance without delay.
- If fuel is swallowed, seek medical assistance without delay. Do not induce vomiting.
- Immediately change out of clothing which has come into contact with fuel.

Tank capacity

Total capacity	
All models	25.4 US gal (96.0 l)

Of which reserve	
All models	Approximately 3.7 US gal (14.0 l)

Gasoline (EN 228)

Fuel grade

! Do not use diesel to refuel vehicles with a gasoline engine. Even small amounts of the wrong fuel result in damage to the fuel system and engine.

! You should only refuel with unleaded premium-grade gasoline as this avoids damaging the catalytic converter.

If engine running problems are apparent, have the cause checked immediately and repaired. Excess unburned fuel can otherwise enter the catalytic converter, leading to overheating and possibly causing a fire.

! To ensure the longevity and full performance of the engine, only premium-grade unleaded gasoline may be used.

If there is no premium-grade unleaded gasoline available and regular unleaded gasoline must be used, please observe the following precautions:

- only fill the fuel tank to half full with regular unleaded gasoline and fill the rest with premium-grade unleaded gasoline as soon as possible.
- do not drive at the maximum speed.
- avoid sudden acceleration.
- if the vehicle is carrying a light load, e.g. two passengers without luggage, do not allow the engine to rev above 3000 rpm.
- if the vehicle is fully loaded or is being operated in mountainous terrain, do not depress the accelerator pedal further than ⅔ of the pedal travel.

! Use a filter when refueling from a fuel can. Otherwise, the fuel lines and/or injection system could be blocked by particles from the fuel can.

Only refuel using premium-grade unleaded gasoline with a minimum octane rating of 91.

Reformulated Gasoline (RFG) and/or unleaded gasoline with additives can be used. The concentration of additives in the fuel, however, must not exceed 10%, e.g.:

- Ethanol
- TAME
- ETBE
- IPA
- TBA

For MTBE, the concentration should not exceed 15%.

The concentration of methanol in gasoline, including other additives, must not exceed 3%.

Using mixtures of methanol and ethanol is not permitted. Gasohol, a mixture of 10% ethanol and 90% unleaded gasoline, may be used.

All of these mix fuels must fulfill the fuel requirements, e.g.:

- knock resistance
- boiling point
- vapor pressure

You will usually find information about the fuel grade on the pump. If you cannot find the label on the pump, ask the staff for assistance.

i For further information, consult an authorized Mercedes-Benz Center or on the Internet at http://www.mbusa.com (USA only).

Information on refueling (▷ page 153).

AMG vehicles

! Only refuel using super-grade unleaded gasoline with at least 98 RON/88 MON that conforms to European standard EN 228 or an equivalent specification.

You could otherwise impair engine output or damage the engine.

! Premium-grade unleaded gasoline with an octane rating of 95 RON/85 MON may be used as a temporary measure if the recommended fuel is not available. This may reduce engine performance and increase fuel consumption. Do not drive at full throttle.

! Regular unleaded gasoline with an octane rating of 91 RON/82.5 MON may also be used as an emergency measure if the recommended fuel is not available.

Doing so results in noticeably higher fuel consumption, and the engine power output is noticeably reduced. Avoid driving at full throttle.

If only regular unleaded gasoline with an octane rating of 91 RON/82.5 MON or lower is available, you must have the vehicle adapted to this fuel at a qualified specialist workshop.

Additives

! Do not refuel with low-grade fuel and do not use fuel additives that are not tested and approved for Mercedes-Benz vehicles. Damage to or malfunctions of the fuel system may otherwise occur.

One of the main problems of poor fuel quality is the forming of deposits that are created during the gasoline combustion process. Mercedes-Benz recommends that you use branded fuels that have additives.

If you use fuels without these additives over a longer period of time, carbon deposits may build up. These deposits form at the inlet valves and in the combustion chamber in particular.

This could lead to engine problems, e.g.:

- longer engine warm-up phase
- uneven idle
- engine noise
- misfiring
- loss of power

Carbon deposits may form if the availability of gasoline with relevant additives is insufficient (in certain regions). In this case, Mercedes-Benz recommends additives approved for use in Mercedes-Benz vehicles; see http://bevo.mercedes-benz.com.

For a list of approved products, consult an authorized Mercedes-Benz Center. Comply with the instructions for use on the product label.

Do not mix other fuel additives with fuel. This causes unnecessary costs and could damage the engine.

Engine oil

General notes

! Never use engine oil or an oil filter of a specification other than is necessary to fulfill the prescribed service intervals. Do not change the engine oil or oil filter in order to achieve longer replacement intervals than those prescribed. You could otherwise cause engine damage or damage to the exhaust gas aftertreatment.

Follow the instructions in the service interval display regarding the oil change. Otherwise, you may damage the engine and the exhaust gas aftertreatment.

The engine oils are matched to the performance of Mercedes-Benz engines and service intervals. For this reason, only use engine oils and oil filters that are approved for vehicles with a service system.

For a list of approved engine oils and oil filters, consult an authorized Mercedes-Benz Center or go to the Internet site **http://bevo.mercedes-benz.com** (USA only).

The table shows which engine oils have been approved for your vehicle.

Model	Engine model	MB Approval
G 550	273	229.5
G 63 AMG	157	229.5

ⓘ **Restriction for AMG vehicles:** only engine oils SAE 0W-40 or SAE 5W-40 may be used.

ⓘ MB approval is indicated on the oil containers.

Filling capacities

The following values refer to an oil change including the oil filter.

The missing values for the following model were not available at the time of going to print:

- G 63 AMG

Vehicle model	Capacity including oil filter
G 550	2.4 US gal (9.0 l)
G 63 AMG	

Additives

! Do not use any additives in the engine oil. This could damage the engine.

Engine oil viscosity

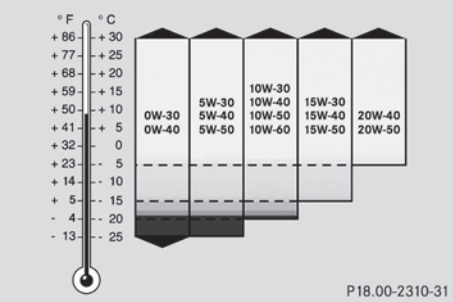

Viscosity describes the flow characteristics of a fluid. If an engine oil has a high viscosity, this means that it is thick; a low viscosity means that it is thin.

Select an engine oil with an SAE (viscosity) classification suitable for the prevailing outside temperatures. The table shows you which SAE classifications are to be used. The low-temperature characteristics of engine oils can deteriorate significantly, e.g. as a result of aging, soot and fuel deposits. It is therefore strongly recommended that you carry out regular oil changes using an approved engine oil with the appropriate SAE classification.

Refrigerant of the air-conditioning system

! Never use refrigerant R 12 (CFC) or mineral lubricants. Otherwise, you could damage the air-conditioning system.

The air-conditioning system is filled with R134a (HFC) refrigerant and a special PAG lubricant.

Brake fluid

⚠ **WARNING**

Over a period of time, the brake fluid absorbs moisture from the air; this lowers its boiling point.

If the boiling point of the brake fluid is too low, vapor pockets may form in the brake system when the brakes are applied hard (e.g. when driving downhill). This would impair braking efficiency.

You should have the brake fluid renewed at regular intervals. The brake fluid change intervals can be found in the Maintenance Booklet.

Only use brake fluid approved by Mercedes-Benz according to MB Approval 331.0.

Information about approved brake fluid can be obtained at any qualified specialist workshop or on the Internet at http://bevo.mercedes-benz.com.

ⓘ Have the brake fluid renewed regularly at a qualified specialist workshop.

Coolant

Important safety notes

⚠ **WARNING**

Antifreeze is highly flammable. Fire, open flames and smoking are prohibited when handling antifreeze.

If antifreeze comes into contact with hot engine parts, it may ignite and you could burn yourself. Do not spill any antifreeze on hot engine parts.

! Only add coolant that has been premixed with the desired antifreeze protection. You could otherwise damage the engine.

Further information on coolants can be found in the Mercedes-Benz Specifications for Service Products, MB Specifications for Service Products 310.1, e.g. on the Internet at

http://bevo.mercedes-benz.com. Or contact a qualified specialist workshop.

! Always use a suitable coolant mixture, even in countries where high temperatures prevail.

Otherwise, the engine cooling system is not sufficiently protected from corrosion and overheating.

The coolant is a mixture of water and antifreeze/corrosion inhibitor. It performs the following tasks:

- corrosion protection
- antifreeze protection
- raising the boiling point

If the coolant has antifreeze protection down to -35 °F (-37 °C), the boiling point of the coolant in the pressure system is approximately 266 °F (130 °C).

The antifreeze/corrosion inhibitor concentration in the engine cooling system should:

- be at least 50%. This will protect the engine cooling system against freezing down to approximately -35 °F (-37 °C).
- not exceed 55% (antifreeze protection down to -49 °F [-45 °C]). Otherwise, heat will not be dissipated as effectively.

If the vehicle has lost coolant, add equal amounts of water and antifreeze/corrosion inhibitor. Mercedes-Benz recommends an antifreeze/corrosion inhibitor in accordance with MB Specifications for Service Products 310.1.

The coolant is checked with every maintenance interval at a qualified specialist workshop.

i When the vehicle is first delivered, it is filled with a coolant mixture that ensures adequate antifreeze and corrosion protection.

The engine cooling system is filled with coolant at the factory; this coolant contains antifreeze/corrosion inhibitor that ensures protection down to approximately -35 °F (-37 °C).

Your vehicle has a range of aluminum components. Aluminum components in the engine make it necessary to use antifreeze/corrosion inhibitor that has been specifically formulated to protect the aluminum parts. Using other antifreeze/corrosion inhibitors without these characteristics affects the service life.

The coolant must be used throughout the year in order to maintain the necessary corrosion protection and to provide protection from overheating. In the Maintenance Booklet, you can find information on the intervals for renewal.

The renewal interval is determined by the coolant type and the engine cooling system design. The renewal interval in the Maintenance Booklet is only valid if the coolant is renewed or added to with Mercedes-Benz approved products. Therefore, only use MB 326.0 antifreeze/corrosion inhibitor or another Mercedes-Benz approved product of the same specification.

Information on other products with the same specifications that are approved by Mercedes-Benz can be obtained at an authorized Mercedes-Benz Center or on the Internet at **http://bevo.mercedes-benz.com**.

If the coolant level is too low, MB 325.0 antifreeze/corrosion inhibitor should be added. Have the engine cooling system checked for possible leaks.

Capacity

Model	Capacity
G 550	Approximately 11.1 US qt (10.5 l)
G 63 AMG	Approximately 14.6 US qt (13.8 l) Low-temperature circuit: approximately 3.1 US qt (2.9 l)

ⓘ Use MB 325.0 or MB 326.0 corrosion inhibitor/antifreeze.

Washer fluid

Important safety notes

⚠ **WARNING**

Windshield washer concentrate is highly flammable. If it comes into contact with hot engine components or the exhaust system it could ignite. There is a risk of fire and injury.

Make sure that no windshield washer concentrate is spilled next to the filler neck.

! Only use washer fluid that is suitable for plastic lamp lenses, e.g. MB SummerFit or MB WinterFit. Unsuitable washer fluid could damage the plastic lenses of the headlamps.

! Do not add distilled or de-ionized water to the washer fluid container. Otherwise, the level sensor may be damaged.

! Only MB SummerFit and MB WinterFit washer fluid should be mixed together. The spray nozzles may otherwise become blocked.

At temperatures above freezing:

- ▶ Fill the washer fluid reservoir with a mixture of water and windshield washer fluid, e.g. MB SummerFit.
- ▶ Add 1 part MB SummerFit to 100 parts water.

At temperatures below freezing:

- ▶ Fill the washer fluid reservoir with a mixture of water and washer fluid, e.g. MB WinterFit.

Adapt the mixing ratio to the outside temperature.

- ▶ Down to 14 °F (-10 °C): mix 1 part MB WinterFit to 2 parts water.
- ▶ Down to -4 °F (-20 °C): mix 1 part MB WinterFit to 1 part water.
- ▶ Down to -20.2 °F (-29 °C): mix 2 parts MB WinterFit to 1 part water.

ⓘ Add washer fluid concentrate, e.g. MB SummerFit or MB WinterFit, to the washer fluid all year round.

Filling capacities

Model	Capacity
All models (except AMG vehicles)	7.4 US qt (7.0 l)
AMG vehicles	3.6 US qt (3.4 l)

Vehicle data

General notes

Please note that for the specified vehicle data:

- the heights specified may vary as a result of:
  - Tires
  - Load
  - Condition of the suspension
  - Optional equipment
- the vehicle length specified includes the front license plate adapter.

Dimensions and weights

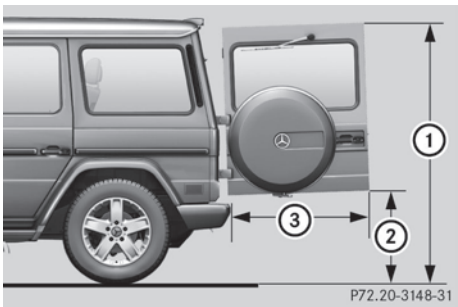

The missing values for the following models were not available at time of going to print:

- G 63 AMG

	G 550	G 63 AMG
①Upper-edge clearance	75 in - 78.9 in (1905 mm - 2005 mm)	
②Lower-edge clearance	26.8 in - 30.7 in (680 mm - 780 mm)	
③Range of movement	36.7 in (931 mm)	

The missing values for the following model were not available at the time of going to print:

- G 63 AMG

G 550	
Vehicle length	183.5 in (4662 mm)
Vehicle width including exterior mirrors	80.9 in (2055 mm)
Maximum vehicle height	76.8 in (1951 mm)
Wheelbase	112.2 in (2850 mm)
Minimum ground clearance	8.1 in (205 mm)
Turning radius	44.6 ft (13.60 m)
Gross vehicle weight rating (GVWR)	7054.8 lb (3200 kg)
Gross axle weight rating (GAWR), front	3196.7 lb (1450 kg)
Gross axle weight rating (GAWR), rear	4188.8 lb (1900 kg)

ⓘ The GVWR is the maximum permissible gross vehicle weight. Gross Vehicle Weight (GVW) is the vehicle weight including fuel, service products, spare wheel, accessories installed, load and, if applicable, trailer drawbar load. The GVW must never exceed the GVWR.

ⓘ The GAWR is the maximum gross axle weight rating.

Trailer tow hitch

Mounting dimensions

⚠ **WARNING**

Only have a trailer tow hitch retrofitted at a qualified specialist workshop.

! If you have a trailer tow hitch retrofitted, changes to the engine cooling system may be necessary, depending on the vehicle type.

If you have a trailer tow hitch retrofitted, observe the anchorage points on the chassis frame.

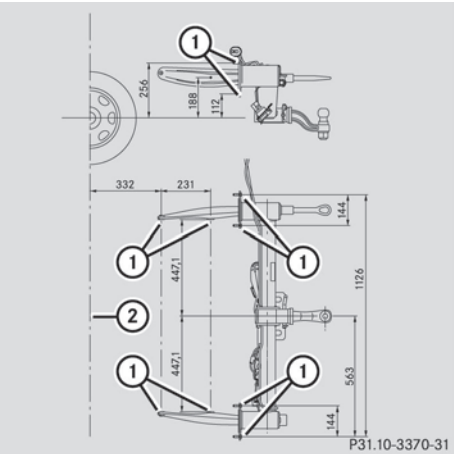

Anchorage points for the trailer tow hitch

① Anchorage points

② Overhang dimension

For trailer tow hitches installed at the factory, the overhang dimension including protective covering is 35.2 in (895 mm).

Trailer loads

G 550 G 63 AMG	
Permissible trailer load, unbraked	1653 lbs (750 kg)
Permissible trailer load, braked (at a minimum gradient-climbing capability of 12% from a standstill)	7000 lbs (3175 kg)
Permissible rear axle load when towing a trailer (the drawbar noseweight is not included in the towing weight)	4188 lbs (1900 kg)

Trailer drawbar noseweight

Number of passengers each weighing 150 lbs (68 kg)	Seat occupancy	Trunk load	Maximum drawbar noseweight
2	Front seats	220 lbs (100 kg)	562 lbs (255 kg)
3	2 front seats 1 rear seat	176 lbs (80 kg)	562 lbs (255 kg)
4	2 front seats 2 rear seats	132 lbs (60 kg)	456 lbs (207 kg)
5	2 front seats 3 rear seats	0 lbs (0 kg)	423 lbs (192 kg)

Ball position

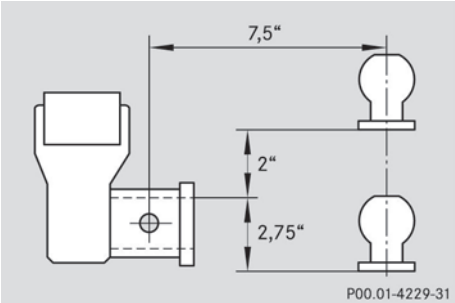

Ball position of the ball coupling

When choosing a ball coupling, the dimensions stated in the illustration must not be exceeded.

Internet

Further information about Mercedes-Benz vehicles and about Daimler AG can be found on the following websites:

http://www.mbusa.com (USA only)

http://www.mercedes-benz.ca (Canada only)

Editorial office

Not to be reprinted, translated or otherwise reproduced, in whole or in part, without the written permission of Daimler AG.

As at 06.12.2011

XXXX

Order no. XXXX XXXX 13 Part no. XXX X Edition A 2013