ENGINE CONTROL SYSTEM

SECTION **EC**

CONTENTS

PRECAUTIONS AND PREPARATION
Precautions 5
Preparation 9
INDEX FOR DTC
DTC No. Index 11
ENGINE CONTROL SYSTEM
General 13
ECCS Controls 13
System Diagram 14
Vacuum Hose Drawing 15
System Chart 16
Multiport Fuel Injection (MFI) System 16
Mixture Ratio Feedback Control (Closed Loop Control) 17
Electronic Ignition (EI) System 18
Air Conditioning Cut Control 19
Fuel Cut Control (At No Load and High Engine Speed) 20
CAN Communication 20
A/T Models 21
BASIC SERVICE PROCEDURE
Idle Speed and Ignition Timing Check 22
Accelerator Pedal Released Position Learning 23
Throttle Valve Closed Position Learning 23
Idle Air Volume Learning 24
Operation Procedure 24
Fuel Pressure Check 26
Fuel Pressure Check 27
Injector 28
TROUBLE DIAGNOSIS
Trouble Diagnosis Introduction 31
Work Flow 32
Description for Work Flow 33
Diagnostic Worksheet 34
Worksheet Sample 35
DTC Inspection Priority Chart 35
Fail-safe Chart 36
Basic Inspection 38
Symptom Matrix Chart 44
Engine Control Component Parts Location 48
Circuit Diagram 52
ECM Harness Connector Terminal Layout 53
ECM Terminals and Reference Value 53
ECM Inspection Table 53
CONSULT-II Function 60
Engine Control Component Parts/Control Systems Application 61
Work Support Mode 63
Self-diag Results Mode 63
Data Monitor Mode 64
Active Test Mode 67
Real Time Diagnosis In Data Monitor Mode (Recording Vehicle Data) 68
Major Sensor Reference Graph in Data Monitor Mode 72
CLSD THL POS, ACCEL SEN 1, THRTL SEN 1 72
ENG SPEED, MAS A/F SE-B1, THRTL SEN 1, HO2S1 (B1), INJ PULSE-B1 72
POWER SUPPLY CIRCUIT FOR ECM
Wiring Diagram 75
Diagnostic Procedure 76
Component Inspection 80
DTC U1000, U1001 CAN COMMUNICATION LINE
Description 81
On Board Diagnosis Logic 81
DTC Confirmation Procedure 81
Wiring Diagram 82
Diagnostic Procedure 83
DTC P1065 ECM POWER SUPPLY
Component Description 85
DTC Confirmation Procedure 85
Wiring Diagram 86
Diagnostic Procedure 87
DTC P0340 CAMSHAFT POSITION SENSOR (PHASE) CIRCUIT
Component Description 89
On Board Diagnosis Logic 89
DTC Confirmation Procedure 89
Wiring Diagram 91
Diagnostic Procedure 92
Component Inspection 95
Removal and Installation 95

CONTENTS

DTC P0335 CRANKSHAFT POSITION SENSOR (POS) CIRCUIT
- Component Description 96
- On Board Diagnosis Logic 96
- DTC Confirmation Procedure 96
- Wiring Diagram 98
- Diagnostic Procedure 99
- Component Inspection 101
- Removal and Installation 102

DTC P0102, P0103 MASS AIR FLOW SENSOR CIRCUIT
- Component Description 103
- On Board Diagnosis Logic 103
- Fail-Safe Mode 103
- DTC Confirmation Procedure 103
- Wiring Diagram 105
- Diagnostic Procedure 106
- Component Inspection 108

DTC P0112, P0113 INTAKE AIR TEMPERATURE SENSOR CIRCUIT
- Component Description 109
- Wiring Diagram 110
- Diagnostic Procedure 111
- Component Inspection 112

DTC P0117, P0118 ENGINE COOLANT TEMPERATURE SENSOR CIRCUIT
- Component Description 113
- On Board Diagnosis Logic 113
- Fail-Safe Mode 113
- Wiring Diagram 115
- Diagnostic Procedure 116
- Component Inspection 117
- Removal and Installation 117

DTC P0350 IGNITION SIGNAL PRIMARY
- Component Description 118
- DTC Confirmation Procedure 118
- Wiring Diagram 119
- Diagnostic Procedure 121
- Component Inspection 125
- Condenser 125
- Ignition Coil with Power Transistor 125
- Removal and Installation 126

DTC P1217 ENGINE OVER TEMPERATURE (OVERHEAT)
- System Description 127
- Operation 127
- On Board Diagnosis Logic 128
- Overall Function Check 128
- Wiring Diagram 131
- Diagnostic Procedure 132
- Main 12 Causes of Overheating 139
- Component Inspection 140

DTC P0327, P0328 KNOCK SENSOR CIRCUIT
- Component Description 141
- On Board Diagnosis Logic 141
- DTC Confirmation Procedure 141
- Wiring Diagram 142
- Diagnostic Procedure 143
- Component Inspection 144
- Removal and Installation 144

DTC P0122, P0123 THROTTLE POSITION SENSOR-2 CIRCUIT
- Component Description 145
- On Board Diagnosis Logic 145
- Fail-Safe Mode 145
- DTC Confirmation Procedure 145
- Wiring Diagram 147
- Diagnostic Procedure 148
- Component Inspection 150
- Remove and Installation 150

DTC P1121 ELECTRIC THROTTLE CONTROL ACTUATOR
- Component Description 151
- On Board Diagnosis Logic 151
- Fail-Safe Mode 151
- DTC Confirmation Procedure 151
- Procedure for Malfunction A and B 151
- Procedure for Malfunction C 152
- Diagnostic Procedure 152
- Remove and Installation 152

DTC P1122 ELECTRIC THROTTLE CONTROL PERFORMANCE PROBLEM
- Description 153
- On Board Diagnosis Logic 153
- Fail-Safe Mode 153
- DTC Confirmation Procedure 153
- Wiring Diagram 154
- Diagnostic Procedure 155
- Component Inspection 159
- Throttle Control Motor 159
- Remove and Installation 159

DTC P1124, P1126 THROTTLE CONTROL MOTOR RELAY CIRCUIT
- Component Description 160
- On Board Diagnosis Logic 160
- Fail-Safe Mode 160
- DTC Confirmation Procedure 160
- Procedure For DTC P1124 160
- Procedure For DTC P1126 161
- Wiring Diagram 162
- Diagnostic Procedure 163
- Component Inspection 165

DTC P1128 THROTTLE CONTROL MOTOR CIRCUIT SHORT
- Component Description 166
- On Board Diagnosis Logic 166
- Fail-Safe Mode 166
- DTC Confirmation Procedure 166
- Wiring Diagram 167
- Diagnostic Procedure 168
- Component Inspection 169
- Remove and Installation 169

CONTENTS

DTC P1225 CLOSED THROTTLE POSITION SENSOR LEARNING PERFORMANCE PROBLEM
- Component Description 170
- On Board Diagnosis Logic 170
- DTC Confirmation Procedure 170
- Diagnostic Procedure 171
- Remove and Installation 171

DTC P1226 CLOSED THROTTLE POSITION SENSOR LEARNING PERFORMANCE PROBLEM
- Component Description 172
- On Board Diagnosis Logic 172
- DTC Confirmation Procedure 172
- Diagnostic Procedure 173
- Remove and Installation 173

DTC P1229 SENSOR POWER SUPPLY CIRCUIT SHORT
- On Board Diagnosis Logic 174
- Fail-Safe Mode 174
- DTC Confirmation Procedure 174
- Wiring Diagram 175
- Diagnostic Procedure 176

DTC P2122, P2123 ACCEL SENSOR - 1
- Component Description 178
- On Board Diagnosis Logic 178
- Fail-Safe Mode 178
- DTC Confirmation Procedure 179
- Wiring Diagram 180
- Diagnostic Procedure 181
- Component Inspection 184
- Remove and Installation 184

DTC P2127, P2128 ACCEL SENSOR - 2
- Component Description 185
- On Board Diagnosis Logic 185
- Fail-Safe Mode 185
- DTC Confirmation Procedure 186
- Wiring Diagram 187
- Diagnostic Procedure 188
- Component Inspection 191
- Remove and Installation 191

DTC P2135 THROTTLE SENSOR SIGNAL DISCORDANCE PROBLEM
- Component Description 192
- On Board Diagnosis Logic 192
- Fail-Safe Mode 192
- DTC Confirmation Procedure 192
- Wiring Diagram 194
- Diagnostic Procedure 195
- Component Inspection 197
- Remove and Installation 197

DTC P2138 ACCELERATOR PEDAL POSITION SENSOR CIRCUIT RANGE/ PERFORMANCE PROBLEM
- Component Description 198
- On Board Diagnosis Logic 198
- Fail-Safe Mode 198
- DTC Confirmation Procedure 199
- Wiring Diagram 200
- Diagnostic Procedure 201
- Component Inspection 204
- Remove and Installation 204

DTC P0500 VEHICLE SPEED SENSOR
- Description 205
- On Board Diagnosis Logic 205
- DTC Confirmation Procedure 205
- Wiring Diagram 207
- Diagnostic Procedure 208

DTC P1111 INTAKE VALVE TIMING CONTROL SOLENOID VALVE CIRCUIT
- Description 209
- Component Description 209
- On Board Diagnosis Logic 210
- DTC Confirmation Procedure 210
- Wiring Diagram 211
- Diagnostic Procedure 212
- Component Inspection 213
- Removal and Installation 213

EVAP CANISTER PURGE VOLUME CONTROL SOLENOID VALVE
- Description 214
- Component Description 214
- Wiring Diagram 215
- Diagnostic Procedure 217
- Component Inspection 220
- Removal and Installation 220

INJECTOR CIRCUIT
- Component Description 221
- Wiring Diagram 222
- Diagnostic Procedure 223
- Component Inspection 226
- Removal and Installation 226

DTC P0171 FUEL INJECTION SYSTEM FUNCTION TOO LEAN
- On Board Diagnosis Logic 227
- DTC Confirmation Procedure 227
- Wiring Diagram 228
- Diagnostic Procedure 229

DTC P0172 FUEL INJECTION SYSTEM FUNCTION TOO RICH
- On Board Diagnosis Logic 232
- DTC Confirmation Procedure 232
- Wiring Diagram 233
- Diagnostic Procedure 234

FUEL PUMP CIRCUIT
- Description 237
- Component Description 237
- Wiring Diagram 238
- Diagnostic Procedure 239
- Component Inspection 242

CONTENTS

DTC P0550 POWER STEERING PRESSURE SENSOR CIRCUIT
- Component Description 243
- On Board Diagnosis Logic 243
- DTC Confirmation Procedure 243
- Wiring Diagram 244
- Diagnostic Procedure 245
- Component Inspection 246

DTC P0132 HEATED OXYGEN SENSOR - FR CIRCUIT HIGH VOLTAGE
- Component Description 247
- On Board Diagnosis Logic 247
- DTC Confirmation Procedure 248
- Wiring Diagram 249
- Diagnostic Procedure 250
- Component Inspection 251
- Removal and Installation 252

DTC P0134 HEATED OXYGEN SENSOR - FR CIRCUIT NO ACTIVITY DETECTED
- Component Description 253
- On Board Diagnosis Logic 253
- Overall Function Check 254
- Wiring Diagram 255
- Diagnostic Procedure 256
- Component Inspection 257
- Removal and Installation 258

HEATED OXYGEN SENSOR 1 HEATER (FR)
- Description 259
- Operation 259
- Wiring Diagram 260
- Diagnostic Procedure 261
- Component Inspection 263
- Removal and Installation 263

HEATED OXYGEN SENSOR 1 (FR)
- Component Description 264
- Wiring Diagram 265
- Diagnostic Procedure 266
- Component Inspection 269
- Removal and Installation 270

DTC P0138 HEATED OXYGEN SENSOR - RR CIRCUIT HIGH VOLTAGE
- Component Description 271
- On Board Diagnosis Logic 271
- DTC Confirmation Procedure 271
- Wiring Diagram 273
- Diagnostic Procedure 274
- Component Inspection 275

DTC P0031, P0032 HEATED OXYGEN SENSOR HEATER CONTROL CIRCUIT - FR
- System Description 277
- Operation 277
- On Board Diagnosis Logic 277
- DTC Confirmation Procedure 277
- Wiring Diagram 279
- Diagnostic Procedure 280
- Component Inspection 281

DTC P0037, P0038 HEATED OXYGEN SENSOR HEATER CONTROL CIRCUIT - RR
- System Description 282
- Operation 282
- On Board Diagnosis Logic 282
- DTC Confirmation Procedure 282
- Wiring Diagram 283
- Diagnostic Procedure 284
- Component Inspection 285

ELECTRICAL LOAD SIGNAL
- Wiring Diagram 287
- Diagnostic Procedure 289

DTC P1805 BRAKE SWITCH
- Description 294
- On Board Diagnosis Logic 294
- Fail-Safe Mode 294
- DTC Confirmation Procedure 294
- Wiring Diagram 295
- Diagnostic Procedure 296
- Component Inspection 299

PARK/NEUTRAL POSITION (PNP) SWITCH
- Component Description 300
- Wiring Diagram 301
- Diagnostic Procedure 302

REFRIGERANT PRESSURE SENSOR
- Component Description 304
- Wiring Diagram 305
- Diagnostic Procedure 306

DTC P0605 ENGINE CONTROL MODULE
- Component Description 309
- On Board Diagnosis Logic 309
- Fail-Safe Mode 309
- DTC Confirmation Procedure 309
- Wiring Diagram 312

EVAPORATIVE EMISSION SYSTEM
- Description 313
- Vacuum Lines in Evaporative Emission System 314
- Component Inspection 315

POSITIVE CRANKCASE VENTILATION
- Description 316
- Component Inspection 316

SERVICE DATA AND SPECIFICATIONS (SDS)
- Fuel Pressure 318
- Idle Speed and Ignition Timing 318
- Mass Air Flow Sensor 318
- Intake Air Temperature Sensor 318
- Engine Coolant Temperature Sensor 318
- Crankshaft Position Sensor (POS) 318
- Crankshaft Position Sensor (PHASE) 318
- Throttle Control Motor 318
- Injector 319
- Fuel Pump 319

Precautions

Supplemental Restraint System (SRS) “AIR BAG” and “SEAT BELT PRE-TENSIONER”

WARNING:

To install/remove the SRS airbag, pretensioner seatbelt system related components and harness, turn the ignition switch “OFF”, disconnect the battery terminals and wait over 3 minutes. (This is to discharge all the remaining electricity in the airbag sensor unit’s auxiliary power circuit.)

Do not use air impact or electrical tools when installing/removing the components.

Do not use any hand-held tools for harness used in SRS airbag and pretensioner seatbelt systems. Be careful with the harness not to tangle with or interfere with other components.

Do not use any electrical test equipments such as circuit tester when inspecting the SRS airbag and pretensioner seatbelt circuit while installed unless the Service Manual instructs to do so. (The weak current in the tester can cause the SRS airbag to operate.)

Do not insert any foreign materials such as a screwdriver in the airbag module and pretensioner seatbelt connector in order to prevent unintended operation due to static electricity.

The harnesses used in SRS airbag and pretensioner are covered with yellow insulation for easy identification.

Refer to “RS Restraint System” in this Service Manual for safe airbag system service information.

ON BOARD DIAGNOSTIC (OBD) SYSTEM OF ENGINE

The ECM has an on board diagnostic system. It will light up the malfunction indicator (MIL) to warn the driver of a malfunction causing emission deterioration.

CAUTION:

Be sure to turn the ignition switch OFF and disconnect the battery ground cable before any repair or inspection work. The open/short circuit of related switches, sensors, solenoid valves, etc. will cause the MIL to light up.

Be sure to connect and lock the connectors securely after work. A loose (unlocked) connector will cause the MIL to light up due to the open circuit. (Be sure the connector is free from water, grease, dirt, bent terminals, etc.)

Be sure to route and secure the harnesses properly after work. The interference of the harness with a bracket, etc. may cause the MIL to light up due to the short circuit.

Be sure to erase the unnecessary malfunction information (repairs completed) from the ECM before returning the vehicle to the customer.

PRECAUTION

Always use a 12 volt battery as power source.

Do not attempt to disconnect battery cables while engine is running.

Before connecting or disconnecting the ECM harness connector, turn ignition switch OFF and disconnect battery ground cable. Failure to do so may damage the ECM because battery voltage is applied to ECM even if ignition switch is turned off.

Before removing parts, turn ignition switch OFF and then disconnect battery ground cable.

Precautions (Cont'd)

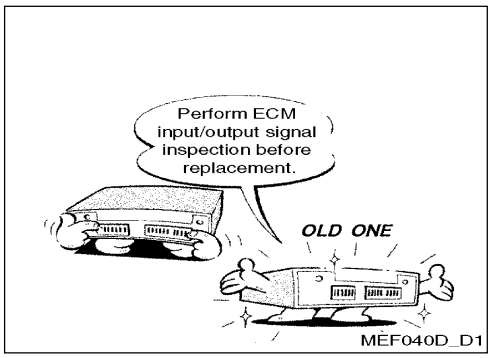

Do not disassemble ECM.

If battery cable is disconnected, the memory will return to the initial ECM values. The ECM will now start to self-control at its initial values. Engine operation can vary slightly when the cable is disconnected. However, this is not an indication of a malfunction. Do not replace parts because of a slight variation.

When connecting ECM harness connector, fasten it securely with a lever as far as it will go as shown at right.

When connecting or disconnecting pin connectors into or from ECM, take care not to damage pin terminals (bend or break). Make sure that there are not any bends or breaks on ECM pin terminal, when connecting pin connectors.

Securely connect ECM harness connectors. A poor connection can cause an extremely high (surge) voltage to develop in coil and condenser, thus resulting in damage to ICs.

Keep engine control system harness at least 10 cm (4 in) away from adjacent harness, to prevent engine control system malfunctions due to receiving external noise, degraded operation of ICs, etc.

Keep engine control system parts and harness dry.

Before replacing ECM, perform "ECM Terminals and Reference Value" inspection and make sure ECM functions properly. Refer to EC-53, "ECM Terminals and Reference Value".

Handle mass air flow sensor carefully to avoid damage.

Do not disassemble mass air flow sensor.

Do not clean mass air flow sensor with any type of detergent.

Do not disassemble electric throttle control actuator.

Even a slight leak in the air intake system can cause serious incidents.

Do not shock or jar the camshaft position sensor (PHASE), crankshaft position sensor (POS).

Perform ECM input/output signal inspection before replacement.

Precautions (Cont'd)

After performing each TROUBLE DIAGNOSIS, perform DTC Confirmation Procedure or Overall Function Check. The DTC should not be displayed in the DTC Confirmation Procedure if the repair is completed. The Overall Function Check should be a good result if the repair is completed.

When measuring ECM signals with a circuit tester, connect a break-out box and Y-cable adapter between the ECM and ECM harness connector.

When measuring ECM signals with a circuit tester, never allow the two tester probes to contact. Accidental contact of probes will cause a short circuit and damage the ECM power transistor.

Do not use ECM ground terminals when measuring input/output voltage. Doing so may result in damage to the ECM's transistor. Use a ground other than ECM terminals, such as the ground.

Do not operate fuel pump when there is no fuel in lines.

Tighten fuel hose clamps to the specified torque.

Precautions (Cont'd)

Do not depress accelerator pedal when starting.

Immediately after starting, do not rev up engine unnecessarily.

Do not rev up engine just prior to shutdown.

When installing C.B. ham radio or a mobile phone, be sure to observe the following as it may adversely affect electronic control systems depending on installation location.

- Keep the antenna as far as possible from the electronic control units.
- Keep the antenna feeder line more than 20 cm (8 in) away from the harness of electronic controls. Do not let them run parallel for a long distance.
- Adjust the antenna and feeder line so that the standingwave radio can be kept smaller.
- Be sure to ground the radio to vehicle body.

Wiring Diagrams and Trouble Diagnosis

When you read wiring diagrams, refer to the following:

"HOW TO READ WIRING DIAGRAMS", GI-8

"POWER SUPPLY ROUTING", EL-5 for power distribution circuit

When you perform trouble diagnosis, refer to the following:

"HOW TO PERFORM EFFICIENT DIAGNOSES FOR AN ELECTRICAL INCIDENT", GI-14.

Preparation

Commercial Service Tools

Tool Number and Name	Description	
Fuel filler cap adapter		Checking fuel tank vacuum relief valve opening pressure
Socket wrench		Removing and installing engine coolant temperature sensor
Oxygen sensor thread cleaner	[redacted]	Reconditioning the exhaust system threads before installing a new oxygen sensor. Use with anti-seize lubricant shown below. a: 18 mm diameter with pitch 1.5 mm for Zirconia Oxygen Sensor b: 12 mm diameter with pitch 1.25 mm for Titania Oxygen Sensor

MEMO:

Index for DTC

DTC No. Index

NOTE:

If DTC U1000 or U1001 is displayed with other DTC, first perform the trouble diagnosis for DTC U1000, U1001. Refer to EC-81, “DTC U1000, U1001 CAN COMMUNICATION LINE”.

O: Applicable X: Not applicable

DTC		Items (CONSULT-II Screen Terms)	MIL Lighting Up	Reference Page
CONSULT-II	ECM			
P0000	0000	NO DTC IS DETECTED. FURTHER TESTING MAY BE REQUIRED.	X	-
U1000	1000	CAN COMM CIRCUIT	X	EC-81
U1001	1001	CAN COMM CIRCUIT	X	EC-81
U0426	0426	-	X	EC-81
P0031	0031	HO2S1 HTR (B1)	X	EC-277
P0032	0032	HO2S1 HTR (B1)	X	EC-277
P0037	0037	HO2S2 HTR (B1)	X	EC-282
P0038	0038	HO2S2 HTR (B1)	X	EC-282
P0102	0102	MAF SEN/CIRCUIT	X	EC-103
P0103	0103	MAF SEN/CIRCUIT	X	EC-103
P0112	0112	IAT SEN/CIRCUIT	X	EC-109
P0113	0113	IAT SEN/CIRCUIT	X	EC-109
P0117	0117	ECT SEN/CIRCUIT	O	EC-113
P0118	0118	ECT SEN/CIRCUIT	O	EC-113
P0122	0122	TP SEN 2/CIRC	X	EC-145
P0123	0123	TP SEN 2/CIRC	X	EC-145
P0132	0132	HO2S1 (B1)	X	EC-247
P0134	0134	HO2S1 (B1)	X	EC-253
P0138	0138	HO2S2 (B1)	X	EC-271
P0171	0171	FUEL SYS-LEAN-B1	X	EC-227
P0172	0172	FUEL SYS-RICH-B1	X	EC-232
P0222	0222	TP SEN 1/CIRC	X	-
P0223	0223	TP SEN 1/CIRC	X	-
P0327	0327	KNOCK SEN/CIRC-B1	X	EC-141
P0328	0328	KNOCK SEN/CIRC-B1	X	EC-141
P0335	0335	CKP SEN/CIRCUIT	X	EC-96
P0340	0340	CMP SEN/CIRC-B1	X	EC-89
P0350	0350	IGN SIGNAL-PRIMARY	X	EC-118
P0500	0500	VEH SPEED SEN/CIRC	X	EC-205
P0550	0550	PW ST P SEN/CIRC	X	EC-243
P0605	0605	ECM	O	EC-309
P0633	0633	-	X	*1
P1065	1065	ECM BACK UP/CIRC	X	EC-85
P1111	1111	INT/V TIM V/CIR-B1	X	EC-209
P1121	1121	ETC ACTR	X	EC-151
P1122	1122	ETC FUNCTION/CIRC	X	EC-153
P1124	1124	ETC MOT PWR	X	EC-160
P1126	1126	ETC MOT PWR	X	EC-160
P1128	1128	ETC MOT	X	EC-166

Index for DTC (Cont'd)

DTC		Items (CONSULT-II Screen Terms)	MIL Lighting Up	Reference Page
CONSULT-II	ECM			
P1217	1217	ENG OVER TEMP	O	EC-127
P1225	1225	CTP LEARNING	X	EC-170
P1226	1226	CTP LEARNING	X	EC-172
P1229	1229	SENSOR POWER/CIRC	X	EC-174
P1805	1805	BRAKE SW/CIRCUIT	X	EC-294
P2122	2122	APP SEN 1/CIRC	X	EC-178
P2123	2123	APP SEN 1/CIRC	X	EC-178
P2127	2127	APP SEN 2/CIRC	X	EC-185
P2128	2128	APP SEN 2/CIRC	X	EC-185
P2135	2135	TP SENSOR	X	EC-192
P2138	2138	APP SENSOR	X	EC-198

*1: If this code is displayed, register ECM to combination meter. Refer to "CONSULT-II OPERATION MANUAL NATS".

Engine Control System

General

The ECCS (Electronic Concentrated engine Control System) controls the fuel injection, ignition timing and idle RPM as one single control unit. CONSULT-II can check and diagnose ECCS functions easily.

ECCS Controls

Control Item	Description
Fuel injection control	SOFIS control is adopted to enhance responses and exhaust efficiency by optimizing fuel injection amount. It improves drivability by performing compensations under extreme conditions such as sudden oxygen changes through oxygen feedback learning control. It minimizes exhaust gases by employing the oxygen sensor.
Ignition timing control	It optimizes the ignition timing at various circumstances by employing the hole IC type crankshaft position sensor. It improves ignition performance by employing the DLI (Distributorless Ignition) system that has power transistor integrated ignition coil on each cylinder. It optimizes ignition timing by employing the knock control that advances or retards ignition timing according to knocking conditions during different driving conditions and used fuel quality.
Idle RPM control	It controls idle speed by operating DC motor directly.
Fuel pump drive control	It controls the fuel pump relay on and off according to engine RPM signals.
A/C cut control	It minimizes engine load by turning the A/C relay off under high refrigerant pressure and high engine speed.
Radiator fan control	It controls the radiator fan relay on and off according to vehicle speed, coolant temperature and A/C signal.
Canister purge control	It performs duty control on the canister according to driving conditions.
Engine and automatic transaxle integrated control	It minimizes gear shift shock by reducing the engine torque during gear changes.
Fail-safe function	It allows safety and emergency driving under system defectives.
Diagnosis system	It corresponds with CONSULT-II for easy diagnosing.

System Diagram

Engine Control System (Cont'd)

Vacuum Hose Drawing

NOTE:

Do not use soapy water or any type of solvent while installing vacuum hose or purge hoses.

Refer to EC-14, "System Diagram" for Vacuum Control System.

Engine Control System (Cont'd)

System Chart

Input (Sensor)	ECM Function	Output (Actuator)
Camshaft position sensor (PHASE) Crankshaft position sensor (POS) Mass air flow sensor Engine coolant temperature sensor Heated oxygen sensor 1 Throttle position sensor Accelerator pedal position sensor Park/neutral position (PNP) switch Intake air temperature sensor Power steering pressure sensor Ignition switch Stop lamp switch Battery voltage Knock sensor Refrigerant pressure sensor TCM (Transmission control module)*1 Air conditioner switch Vehicle speed signal Electrical load signal	Fuel injection & mixture ratio control	Fuel injectors
	Electronic ignition system	Power transistor
	Fuel pump control	Fuel pump relay
	On board diagnostic system	MIL (On the instrument panel)
	Intake valve timing control	Intake valve timing control solenoid valve
	Heated oxygen sensor 1 heater control	Heated oxygen sensor 1 heater
	EVAP canister purge flow control	EVAP canister purge volume control solenoid valve
	Air conditioning cut control	Air conditioner relay
	Cooling fan control	Cooling fan relays

*1: This input signal is sent to the ECM through CAN communication line.

Multiport Fuel Injection (MFI) System

INPUT/OUTPUT SIGNAL CHART

Sensor	Input Signal to ECM	ECM Function	Actuator
Crankshaft position sensor (POS) Camshaft position sensor (PHASE)	Engine speed*1 and piston position	Fuel injection & mixture ratio control	Fuel injectors
Mass air flow sensor	Amount of intake air		
Engine coolant temperature sensor	Engine coolant temperature		
Heated oxygen sensor 1	Density of oxygen in exhaust gas		
Throttle position sensor	Throttle position		
Accelerator pedal position sensor	Accelerator pedal position		
Park/neutral position (PNP) switch	Gear position		
Knock sensor	Engine knocking condition		
Battery	Battery voltage*1		
Power steering pressure sensor	Power steering operation		
Vehicle speed signal	Vehicle speed		
Air conditioner switch	Air conditioner operation		

*1: The ECM determines the start signal status by the signals of engine speed and battery voltage.

SYSTEM DESCRIPTION

The amount of fuel injected from the fuel injector is determined by the ECM. The ECM controls the length of time the valve remains open (injection pulse duration). The amount of fuel injected is a program value in the ECM memory. The program value is preset by engine operating conditions. These conditions are determined by input signals (for engine speed and intake air) from the crankshaft position sensor (POS), camshaft position sensor (PHASE) and the mass air flow sensor.

Engine Control System (Cont'd)

VARIOUS FUEL INJECTION INCREASE/DECREASE COMPENSATION

In addition, the amount of fuel injected is compensated to improve engine performance under various operating conditions as listed below.

<Fuel increase>

- During warm-up
- When starting the engine
- During acceleration
- Hot-engine operation
- When selector lever is changed from N to D (A/T models)
- High-load, high-speed operation

<Fuel decrease>

- During deceleration
- During high engine speed operation

Mixture Ratio Feedback Control (Closed Loop Control)

The mixture ratio feedback system provides the best air-fuel mixture ratio for driveability and emission control. The three way catalyst (manifold) can then better reduce CO, HC and NOx emissions. This system uses heated oxygen sensor 1 in the exhaust manifold to monitor if the engine operation is rich or lean. The ECM adjusts the injection pulse width according to the sensor voltage signal. For more information about heated oxygen sensor 1, refer to EC-247. This maintains the mixture ratio within the range of stoichiometric (ideal airfuel mixture). This stage is referred to as the closed loop control condition.

OPEN LOOP CONTROL

The open loop system condition refers to when the ECM detects any of the following conditions. Feedback control stops in order to maintain stabilized fuel combustion.

- Deceleration and acceleration
- High-load, high-speed operation
- Malfunction of heated oxygen sensor 1 or its circuit
- Insufficient activation of heated oxygen sensor 1 at low engine coolant temperature
- High engine coolant temperature
- During warm-up
- After shifting from N to D (A/T models)
- When starting the engine

MIXTURE RATIO SELF-LEARNING CONTROL

The mixture ratio feedback control system monitors the mixture ratio signal transmitted from heated oxygen sensor 1. This feedback signal is then sent to the ECM. The ECM controls the basic mixture ratio as close to the theoretical mixture ratio as possible. However, the basic mixture ratio is not necessarily controlled as originally designed. Both manufacturing differences (i.e., mass air flow sensor hot film) and characteristic changes during operation (i.e., injector clogging) directly affect mixture ratio.

Engine Control System (Cont'd)

Accordingly, the difference between the basic and theoretical mixture ratios is monitored in this system. This is then computed in terms of "injection pulse duration" to automatically compensate for the difference between the two ratios.

"Fuel trim" refers to the feedback compensation value compared against the basic injection duration. Fuel trim includes short term fuel trim and long term fuel trim.

"Short term fuel trim" is the short-term fuel compensation used to maintain the mixture ratio at its theoretical value. The signal from heated oxygen sensor 1 indicates whether the mixture ratio is RICH or LEAN compared to the theoretical value. The signal then triggers a reduction in fuel volume if the mixture ratio is rich, and an increase in fuel volume if it is lean.

"Long term fuel trim" is overall fuel compensation carried out long-term to compensate for continual deviation of the short term fuel trim from the central value. Such deviation will occur due to individual engine differences, wear over time and changes in the usage environment.

FUEL INJECTION TIMING

Two types of systems are used.

SEQUENTIAL MULTIPORT FUEL INJECTION SYSTEM

Fuel is injected into each cylinder during each engine cycle according to the firing order. This system is used when the engine is running.

SIMULTANEOUS MULTIPORT FUEL INJECTION SYSTEM

Fuel is injected simultaneously into all four cylinders twice each engine cycle. In other words, pulse signals of the same width are simultaneously transmitted from the ECM. The four injectors will then receive the signals two times for each engine cycle. This system is used when the engine is being started and/or if the fail-safe system (CPU) is operating.

FUEL SHUT-OFF

Fuel to each cylinder is cut off during deceleration or operation of the engine at excessively high speeds.

Electronic Ignition (EI) System

INPUT/OUTPUT SIGNAL CHART

Sensor	Input Signal to ECM	ECM Function	Actuator
Crankshaft position sensor (POS) Camshaft position sensor (PHASE)	Engine speed*1 and piston position	Ignition timing control	Power transistor
Mass air flow sensor	Amount of intake air		
Engine coolant temperature sensor	Engine coolant temperature		
Throttle position sensor	Throttle position		
Accelerator pedal position sensor	Accelerator pedal position		
Knock sensor	Engine knocking condition		
Park/neutral position (PNP) switch	Gear position		
Battery	Battery voltage*1		
Vehicle speed signal	Vehicle speed		

*1: The ECM determines the start signal status by the signals of engine speed and battery voltage.

Engine Control System (Cont'd)

SYSTEM DESCRIPTION

The ignition timing is controlled by the ECM to maintain the best airfuel ratio for every running condition of the engine. The ignition timing data is stored in the ECM. This data forms the map shown. The ECM receives information such as the injection pulse width and camshaft position sensor signal. Computing this information, ignition signals are transmitted to the power transistor. e.g., N: 1,800 rpm, Tp: 1.50 msec A °BTDC During the following conditions, the ignition timing is revised by the ECM according to the other data stored in the ECM.

At starting

During warm-up

At idle

At low battery voltage

During acceleration

The knock sensor retard system is designed only for emergencies. The basic ignition timing is programmed within the anti-knocking zone, if recommended fuel is used under dry conditions. The retard system does not operate under normal driving conditions. If engine knocking occurs, the knock sensor monitors the condition. The signal is transmitted to the ECM. The ECM retards the ignition timing to eliminate the knocking condition.

Air Conditioning Cut Control

INPUT/OUTPUT SIGNAL CHART

Sensor	Input Signal to ECM	ECM Function	Actuator
Air conditioner switch	Air conditioner ON signal	Air conditioner cut control	Air conditioner relay
Throttle position sensor	Throttle valve opening angle		
Crankshaft position sensor (POS) Camshaft position sensor (PHASE)	Engine speed*1		
Engine coolant temperature sensor	Engine coolant temperature		
Battery	Battery voltage*1		
Refrigerant pressure sensor	Refrigerant pressure		
Power steering pressure sensor	Power steering operation		
Vehicle speed signal	Vehicle speed		

*1: The ECM determines the start signal status by the signals of engine speed and battery voltage.

SYSTEM DESCRIPTION

This system improves engine operation when the air conditioner is used.

Under the following conditions, the air conditioner is turned off.

When the accelerator pedal is fully depressed.

When cranking the engine.

At high engine speeds.

When the engine coolant temperature becomes excessively high.

When operating power steering during low engine speed or low vehicle speed.

When engine speed is excessively low.

When refrigerant pressure is excessively low or high.

Engine Control System (Cont'd)

Fuel Cut Control (At No Load and High Engine Speed)

INPUT/OUTPUT SIGNAL CHART

Sensor	Input Signal to ECM	ECM Function	Actuator
Park/neutral position (PNP) switch	Neutral position	Fuel cut control	Fuel injectors
Throttle position sensor	Throttle position		
Accelerator pedal position sensor	Accelerator pedal position		
Engine coolant temperature sensor	Engine coolant temperature		
Crankshaft position sensor (POS) Camshaft position sensor (PHASE)	Engine speed		
Vehicle speed signal	Vehicle speed		

SYSTEM DESCRIPTION

If the engine speed is above 3,950 rpm with no load (for example, in neutral and engine speed over 3,950 rpm) fuel will be cut off after some time. The exact time when the fuel is cut off varies based on engine speed. Fuel cut will operate until the engine speed reaches 1,500 rpm, then fuel cut is cancelled.

NOTE:

This function is different from deceleration control listed under. Refer to EC-16, "Multiport Fuel Injection (MFI) System".

CAN Communication

SYSTEM DISCRIPTION

CAN (Controller Area Network) is a serial communication line for real time application. It is an on-vehicle multiplex communication line with high data communication speed and excellent error detection ability. Many electronic control units are equipped onto a vehicle, and each control unit shares information and links with other control units during operation (not independent). In CAN communication, control units are connected with 2 communication lines (CAN H line, CAN L line) allowing a high rate of information transmission with less wiring. Each control unit transmits/receives data but selectively reads required data only.

CAM COMMUNICATION UNIT

Go to CAN system, when selecting your car model from the following table.

Body Type	Sedan	
Axle	2WD	
Engine	QG16DE (Electric throttle control)	
Transmission	A/T	M/T
CAN communication unit		
ECM (CAN gate 1)	O	*1
ECM (CAN gate 2)	O	

O : Applicable
*1 : Communication cannot be established.

Engine Control System (Cont'd)

A/T Models

SYSTEM DIAGRAM

NPUT/OUTPUT SIGNALCHART

T: Transmit R: Receive

Signals	ECM	TCM
Output shaft revolution signal	R	T
Closed throttle position signal	T	R
Wide open throttle position signal	T	R
Engine and A/T integrated control signal	T	R
	R	T

Basic Service Procedure

Idle Speed and Ignition Timing Check

IDLE SPEED

With CONSULT-II

Check idle speed in “DATA MONITOR” mode with CONSULT-II.

Without CONSULT-II

Check the idle speed by installing the pulse type tachometer clamp on the loop wire or on suitable high-tension wire which is installed between No. 1 ignition coil and No. 1 spark plug.

NOTE:

For the method of installing the tachometer, refer to EC-22, “IGNITION TIMING”.

IGNITION TIMING

Any of following two methods may be used.

Method A

1. Slide the harness protector of ignition coil No. to clear the wires.
2. Attach timing light to the loop wires as shown.
3. Check ignition timing.

Method B

1. Remove No. 1 ignition coil.

Basic Service Procedure (Cont'd)

2. Connect No. 1 ignition coil and No. 1 spark plug with suitable high-tension wire as shown, and attach timing light clamp to this wire.

3. Check ignition timing.

Accelerator Pedal Released Position Learning

DESCRIPTION

Accelerator Pedal Released Position Learning is an operation to learn the fully released position of the accelerator pedal by monitoring the accelerator pedal position sensor output signal. It must be performed each time harness connector of accelerator pedal position sensor or ECM is disconnected.

OPERATION PROCEDURE

1. Make sure that accelerator pedal is fully released.
2. Turn ignition switch ON and wait at least 2 seconds.
3. Turn ignition switch OFF wait at least 10 seconds.
4. Turn ignition switch ON and wait at least 2 seconds.
5. Turn ignition switch OFF wait at least 10 seconds.

Throttle Valve Closed Position Learning

DESCRIPTION

Throttle Valve Closed Position Learning is an operation to learn the fully closed position of the throttle valve by monitoring the throttle position sensor output signal. It must be performed each time harness connector of electric throttle control actuator or ECM is disconnected.

OPERATION PROCEDURE

1. Make sure that accelerator pedal is fully released.
2. Turn ignition switch "ON".
3. Turn ignition switch OFF wait at least 10 seconds.

Basic Service Procedure (Cont'd)

Make sure that throttle valve moves during above 10 seconds by confirming the operating sound.

Idle Air Volume Learning

DESCRIPTION

Idle Air Volume Learning is an operation to learn the idle air volume that keeps each engine within the specific range. It must be performed under any of the following conditions:

- Each time electric throttle control actuator or ECM is replaced.
- Idle speed or ignition timing is out of specification.

PREPARATION

Before performing Idle Air Volume Learning, make sure that all of the following conditions are satisfied.

Learning will be cancelled if any of the following conditions are missed for even a moment.

- Battery voltage: More than 12.9V (At idle)
- Engine coolant temperature: 70 - 95°C (158 - 203°F)
- PNP switch: ON
- Electric load switch: OFF (Air conditioner, headlamp, rear window defogger)
- Steering wheel: Neutral (Straight-ahead position)
- Vehicle speed: Stopped
- Transmission: Warmed-up

For A/T models with CONSULT-II, drive vehicle until "FLUID TEMP SE" in "DATA MONITOR" mode of "A/T" system indicates less than 0.9V.

For A/T models without CONSULT-II and M/T models, drive vehicle for 10 minutes.

Operation Procedure

With CONSULT-II

1. Perform EC-23, "Accelerator Pedal Released Position Learning".
2. Perform EC-23, "Throttle Valve Closed Position Learning".
3. Start engine and warm it up to normal operating temperature.
4. Check that all items listed under the topic PREPARATION (previously mentioned) are in good order.
5. Select "IDLE AIR VOL LEARN" in "WORK SUPPORT" mode.
6. Select a proper mode.
   - Service mode: when changing throttle assembly or ECM
   - Workshop mode: when changing engine assembly
7. Touch "START" and wait 20 seconds.

Basic Service Procedure (Cont'd)

8. Make sure that "CMPLT" is displayed on CONSULT-II screen. If "CMPLT" is not displayed, Idle Air Volume Learning will not be carried out successfully. In this case, find the cause of the incident by referring to the Diagnostic Procedure below.
9. Rev up the engine two or three times and make sure that idle speed and ignition timing are within the specifications.

Engine and transmission type		Idle speed (in P or N position)	Ignition timing (in P or N position)
QG16DE	M/T	650 ± 50 rpm	6 ± 2° BTDC
	A/T	700 ± 50 rpm	6 ± 2° BTDC

Without CONSULT-II

NOTE:

It is better to count the time accurately with a clock.

It is impossible to switch the diagnostic mode when an accelerator pedal position sensor circuit has a malfunction.

1. Perform EC-23, "Accelerator Pedal Released Position Learning".
2. Perform EC-23, "Throttle Valve Closed Position Learning".
3. Start engine and warm it up to normal operating temperature.
4. Check that all items listed under the topic PREPARATION (previously mentioned) are in good order.
5. Turn ignition switch OFF and wait at least 10 seconds.
6. Confirm that accelerator pedal is fully released, turn ignition switch ON and wait 3 seconds.
7. Repeat the following procedure quickly five times within 5 seconds.
   a) Fully depress the accelerator pedal.
   b) Fully release the accelerator pedal.
8. Wait 7 seconds, fully depress the accelerator pedal and keep it for approx. 20 seconds until the MIL stops blinking and turned ON.
9. Fully release the accelerator pedal within 3 seconds after the MIL turned ON.
10. Start engine and let it idle.
11. Wait 20 seconds.

12. Rev up the engine two or three times and make sure that idle speed and ignition timing are within the specifications.

Engine and transmission type		Idle speed (in P or N position)	Ignition timing (in P or N position)
QG16DE	M/T	650 ± 50 rpm	6 ± 2° BTDC
	A/T	700 ± 50 rpm	6 ± 2° BTDC

Basic Service Procedure (Cont'd)

13. If idle speed and ignition timing are not within the specification, Idle Air Volume Learning will not be carried out successfully. In this case, find the cause of the incident by referring to the "Diagnostic Procedure" below.

DIAGNOSTIC PROCEDURE

If idle air volume learning cannot be performed successfully, proceed as follows:

1. Check that throttle valve is fully closed.
2. Check PCV valve operation.
3. Check that downstream of throttle valve is free from air leakage.
4. When the above three items check out OK, engine component parts and their installation condition are questionable. Check and eliminate the cause of the incident. It is useful to perform EC-69, "CONSULT-II Reference Value in Data Monitor Mode".
5. If any of the following conditions occur after the engine has started, eliminate the cause of the incident and perform "Idle air volume learning" all over again:
   - Engine stalls.
   - Erroneous idle.

Fuel Pressure Check

FUEL PRESSURE RELEASE

Before disconnecting fuel line, release fuel pressure from fuel line to eliminate danger.

NOTE:

Prepare pans or saucers under the disconnected fuel line because the fuel may spill out. The fuel pressure cannot be completely released because QG16DE electric throttle control type models do not have fuel return system.

With CONSULT-II

1. Turn ignition switch ON.
2. Perform "FUEL PRESSURE RELEASE" in "WORK SUPPORT" mode with CONSULT-II.
3. Start engine.
4. After engine stalls, crank it two or three times to release all fuel pressure.
5. Turn ignition switch OFF.

Without CONSULT-II

1. Remove fuel pump fuse located in fuse box.
2. Start engine.
3. After engine stalls, crank it two or three times to release all fuel pressure.
4. Turn ignition switch OFF.
5. Reinstall fuel pump fuse after servicing fuel system.

Basic Service Procedure (Cont'd)

Fuel Pressure Check

Before disconnecting fuel line, release fuel pressure from fuel line to eliminate danger.

NOTE:

Prepare pans or saucers under the disconnected fuel line because the fuel may spill out. The fuel pressure cannot be completely released because QG16DE electric throttle control type models do not have fuel return system.

When reconnecting fuel line, always use new clamps.

Make sure that clamp screw does not contact adjacent parts.

Use a torque driver to tighten clamps.

Use Pressure Gauge to check fuel pressure.

1. Release fuel pressure to zero. Refer to EC-26, "FUEL PRESSURE RELEASE".
2. Install the fuel pressure gauge with the fuel pressure check adapter as shown in the figure.
3. Turn ignition switch ON, and check for fuel leakage.
4. Start engine and check for fuel leakage.
5. Read the indication of fuel pressure gauge.

   At idling: Approximately 350 kPa
   (3.5 bar, 3.57 kg/cm ^{2}, 51 psi)
6. If result is unsatisfactory, go to next step.
7. Check the following.

   Fuel hoses and fuel tubes for clogging

   Fuel filter for clogging

   Fuel pump

   Fuel pressure regulator for clogging

   If OK, replace fuel pressure regulator.

   If NG, repair or replace.

Basic Service Procedure (Cont'd)

Injector

REMOVAL AND INSTALLATION

① Fuel tube
② Fuel feed hose
③ O-ring
④ Clip
⑤ Fuel injector
⑥ Intake manifold

CAUTION:

Apply new engine oil when installing the parts that specified to do so in the figure.

Do not remove or disassembly parts unless instructed as shown in the figure.

REMOVAL

1. Release fuel pressure. Refer to EC-26, "FUEL PRESSURE RELEASE".
2. Disconnect harness for fuel injector, and move it aside.
3. Remove fuel hose.

CAUTION:

After removal, install blind plug to fuel hose to prevent the fuel from draining.

4. Remove fuel tube and injector assembly with the following procedure:
   a) Loosen mounting bolts in reverse order shown in figure.
   b) Pull out fuel injector/fuel tube assembly toward engine rear side.

CAUTION:

Do not touch fuel injector nozzle with intake manifold or other parts.

Basic Service Procedure (Cont'd)

5. Remove fuel injector from fuel tube.
   Release clip and remove it.
   Pull fuel injector straight out of fuel tube.

CAUTION:

Be careful not to damage nozzle part.

Avoid any impact such as a dropping.

Do not disassemble or adjust it.

INSTALLATION

1. When installing O-ring to fuel injector, follow instructions described

CAUTION:

Handle O-ring with bare hands. Never wear gloves.

Lubricate O-ring with new engine oil.

Do not clean O-ring with solvent.

Make sure that O-ring and its mating part are free of foreign material.

Be careful not to scratch it with a tool or fingernails during installation. Also be careful not to twist or stretch O-ring. If O-ring is stretched while being attached, do not insert it into fuel tube immediately.

Insert O-ring straight into fuel tube. Do not angle or twist it.

2. Install fuel injector to fuel tube with the following procedure.
   a) Insert clip into clip mounting groove on fuel injector.
      Insert clip so that lug A of fuel injector matches notch A of the clip.

CAUTION:

Do not reuse clip. Replace it with a new one.

Be careful to keep clip from interfering with O-ring. If interference occurs, replace O-ring.

   b) Insert fuel injector into fuel tube with clip attached.
      Insert it while matching it to the axial center.
      Insert fuel injector so that lug B of fuel tube matches notch B of the clip.
      Make sure that fuel tube flange is securely fixed in flange fixing groove on clip.
   c) Make sure that installation is complete by checking that fuel injector does not rotate or come off.
3. Tighten mounting bolts in two steps in numerical order shown in figure.
   1st step: 11.8 - 13.8 N·m (1.2 - 1.4 kg-m, 9 - 10 ft-lb)
   2nd step: 20.8 - 28.2 N·m (2.1 - 2.8 kg-m, 16 - 20 ft-lb)
4. Install fuel feed hose.

CAUTION:

Install hose clamp avoiding interference with bulge, and securely tighten it.

5. Install remaining parts in the reverse order of removal.

Basic Service Procedure (Cont'd)

INSPECTION AFTER INSTALLATION

Check for fuel leakage with following procedure.

1. Turn ignition switch ON (do not start engine), and check connections for leakage by applying fuel pressure to fuel piping.
2. Start engine, and re-check connections for fuel leakage by increasing engine speed.

Trouble Diagnosis

Trouble Diagnosis Introduction

INTRODUCTION

The engine has an ECM to control major systems such as fuel control, ignition control, idle air control system, etc. The ECM accepts input signals from sensors and instantly drives actuators. It is essential that both input and output signals are proper and stable. At the same time, it is important that there are no malfunctions such as vacuum leaks, fouled spark plugs, or other malfunctions with the engine. It is much more difficult to diagnose a incident that occurs intermittently rather than continuously.

Most intermittent incidents are caused by poor electric connections or improper wiring. In this case, careful checking of suspected circuits may help prevent the replacement of good parts. A visual check only may not find the cause of the incidents. A road test with CONSULT-II or a circuit tester connected should be performed. Follow the Work Flow on EC-32.

Before undertaking actual checks, take a few minutes to talk with a customer who approaches with a driveability complaint.

The customer can supply good information about such incidents, especially intermittent ones. Find out what symptoms are present and under what conditions they occur. A Diagnostic Worksheet like the example on EC-35 should be used. Start your diagnosis by looking for “conventional” malfunctions first. This will help troubleshoot driveability malfunctions on an electronically controlled engine vehicle.

Trouble Diagnosis (Cont'd)

Work Flow

FLOW CHART

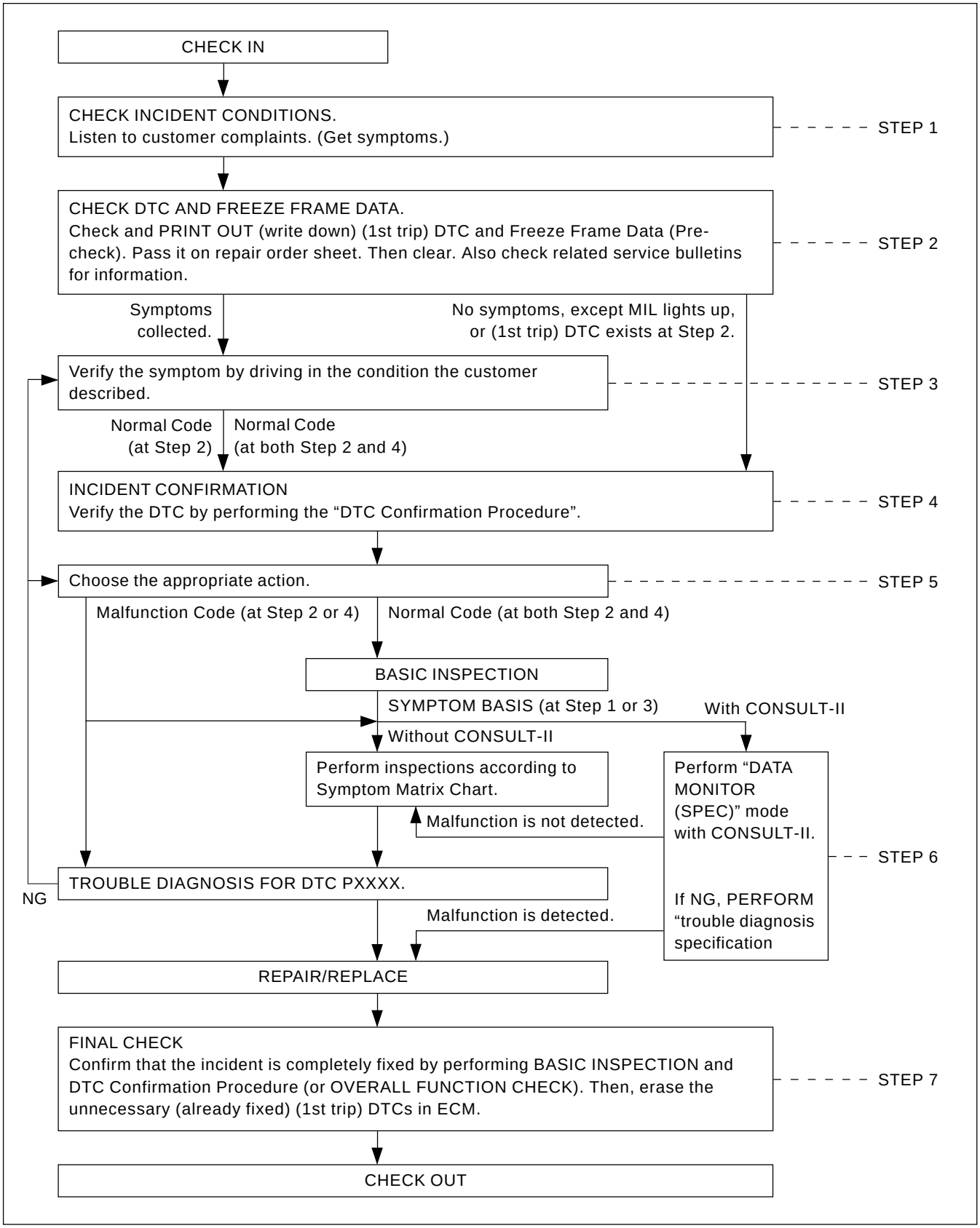

Trouble Diagnosis (Cont'd)

Description for Work Flow

STEP	DESCRIPTION
STEP I	Get detailed information about the conditions and the environment when the incident/symptom occurred using the Worksheet sample, EC-36.
STEP II	Before confirming the concern, check and write down (print out using CONSULT-II) the DTC and the freeze frame data, then erase the DTC and the data. The DTC and the freeze frame data can be used when duplicating the incident at STEP III & IV. If the incident cannot be verified, perform EC-74, "Trouble Diagnosis For Intermittent Incident". Study the relationship between the cause, specified by DTC, and the symptom described by the customer. (The Symptom Matrix Chart will be useful. See EC-44.) Also check related service bulletins for information.
STEP III	Try to confirm the symptom and under what conditions the incident occurs. The DIAGNOSTIC WORK SHEET and the freeze frame data are useful to verify the incident. Connect CONSULT-II to the vehicle in DATA MONITOR (AUTO TRIG) mode and check real time diagnosis results. If the incident cannot be verified, perform EC-74, "Trouble Diagnosis For Intermittent Incident". If the malfunction code is detected, skip STEP IV and perform STEP V.
STEP IV	Try to detect the DTC by driving in (or performing) the DTC Confirmation Procedure. Check and read the DTC and freeze frame data by using CONSULT-II. During the DTC verification, be sure to connect CONSULT-II to the vehicle in DATA MONITOR (AUTO TRIG) mode and check real time diagnosis results. If the incident cannot be verified, perform EC-74, "Trouble Diagnosis For Intermittent Incide". In case the DTC Confirmation Procedure is not available, perform the Overall Function Check instead. The DTC cannot be displayed by this check, however, this simplified check is an effective alternative. The NG result of the Overall Function Check is the same as the DTC detection.
STEP V	Take the appropriate action based on the results of STEP I through IV. If the malfunction code is indicated, proceed to TROUBLE DIAGNOSIS FOR DTC PXXXX. If the normal code is indicated, proceed to the Basic Inspection. (Refer to EC-38.) If CONSULT-II is available, perform "DATA MONITOR (SPEC)" mode with CONSULT-II and proceed to the EC-69, "CONSULT-II Reference Value in Data Monitor Mode". (If malfunction is detected, proceed to "PERAIR/REPLACE".) Then perform inspections according to the EC-44, "Symptom Matrix Chart".
STEP VI	Identify where to begin diagnosis based on the relationship study between symptom and possible causes. Inspect the system for mechanical binding, loose connectors or wiring damage using (tracing) Harness Layouts. Gently shake the related connectors, components or wiring harness with CONSULT-II set in "DATA MONITOR (AUTO TRIG)" mode. Check the voltage of the related ECM terminals or monitor the output data from the related sensors with CONSULT-II. Refer to EC-53, EC-69. The "Diagnostic Procedure" in EC section contains a description based on open circuit inspection. A short circuit inspection is also required for the circuit check in the Diagnostic Procedure. For details, refer to "Circuit Inspection" in "HOW TO PERFORM EFFICIENT DIAGNOSES FOR AN ELECTRICAL INCIDENT", GI-19. Repair or replace the malfunction parts. If malfunctioning part cannot be detected, perform EC-74, "Trouble Diagnosis For Intermittent Incide".
STEP VII	Once you have repaired the circuit or replaced a component, you need to run the engine in the same conditions and circumstances which resulted in the customer's initial complaint. Perform the DTC Confirmation Procedure and confirm the normal code [DTC No. P0000] is detected. If the incident is still detected in the final check, perform STEP VI by using a method different from the previous one. Before returning the vehicle to the customer, be sure to erase the unnecessary DTC in ECM and TCM (Transmission control module).

Trouble Diagnosis (Cont'd)

KEY POINTS	
WAHT	Vehicle & engine model
WHEN	Date, Frequencies
WHERE	Road conditions
HOW	Operating conditions, Weather conditions, Symptoms

Diagnostic Worksheet

DESCRIPTION

There are many operating conditions that lead to the malfunction of engine components. A good grasp of such conditions can make troubleshooting faster and more accurate.

In general, each customer feels differently about a incident. It is important to fully understand the symptoms or conditions for a customer complaint.

Utilize a diagnostic worksheet like the one on the next page in order to organize all the information for troubleshooting.

Some conditions may cause the MIL to come on steady or blink and DTC to be detected.

Examples:

Vehicle ran out of fuel, which caused the engine to misfire.

Fuel filler cap was left off or incorrectly screwed on, allowing fuel to evaporate into the atmosphere.

Trouble Diagnosis (Cont'd)

Worksheet Sample

Customer name MR/MS		Model & Year		VIN	
Engine #		Transmission type		Mileage	
Incident Date		Manufactured Date		In Service Date	
Fuel and fuel filler cap		Vehicle ran out of fuel causing misfire. Fuel filter cap was left off or incorrectly screwed on.			
Symptoms	Startability	Impossible to start No combustion Partial combustion Partial combustion affected by throttle position Partial combustion NOT affected by throttle position Possible but hard to start Others [			
	Idling	] No fast idle Unstable High idle Low idle			
	Driveability	Others [ ] Stumble Surge Knock Lack of power Intake backfire Exhaust backfire			
	Engine stall	Others [ ] At the time of start While idling Wheel accelerating While decelerating			
Incident occurrence		Just after stopping While loading Just after delivery Recently			
Frequency		In the morning At night In the day time			
Weather conditions		All the time Under certain conditions Sometimes			
	Weather	Not affected			
	Temperature	Fine Raining Snowing Others [ ]			
Engine conditions		Hot Warm Cool Cold Humid °C Cold During warm-up After warm-up			
Road conditions		Engine speed rpm			
Driving conditions		In town In suburbs Highway Off road (up/down) Not affected At starting While idling At racing While accelerating While cruising While decelerating While turning (RH/LH)			
Malfunction indicator lamp		Vehicle speed km/h			
		Turned on Not turned on			

DTC Inspection Priority Chart

If some DTCs are displayed at the same time, perform inspections one by one based on the following priority chart.

NOTE:

If DTC U1000 and/or U1001 is displayed with other DTC, first perform the trouble diagnosis for DTC U1000 and U1001. Refer to EC-81, "DTC U1000, U1001 CAN COMMUNICATION LINE".

Trouble Diagnosis (Cont'd)

Priority	Detected Items (DTC)
1	U1000 U1001 CAN communication line P0102 P0103 Mass air flow sensor P0117 P0118 Engine coolant temperature sensor P0122 P0123 P0222 P0223 P1225 P1226 P1229 P2135 Throttle position sensor P2122 P2123 P2127 P2128 P2138 Accelerator pedal position sensor P0327 P0328 Knock sensor P0335 Crankshaft position sensor (POS) P0340 Camshaft position sensor (PHASE) P0350 ignition signal P0500 Vehicle speed sensor P0605 ECM
2	P0132 P0134 Heated oxygen sensor 1 P0550 Power steering pressure sensor P1111 Intake valve timing control solenoid valve P1065 ECM power supply P1122 Electric throttle control function P1124 P1126 P1128 Electric throttle control actuator P1805 Brake switch
3	P1121 Electric throttle control actuator P1217 Engine over temperature (OVERHEAT)

Fail-safe Chart

When the DTC listed below is detected, the ECM enters the fail-safe mode and the MIL lights up.

<table>
<tr><th>DTC No</th><th>Detected Items</th><th>Engine Operating Condition In Fail-Safe Mode</th></tr>
<tr><td>P0102
P0103</td><td>Mass air flow sensor circuit</td><td>Engine speed will not rise more than 2,400 rpm due to the fuel cut.</td></tr>
<tr><td>P0117
P0118</td><td>Engine coolant temperature sensor circuit</td><td>Engine coolant temperature will be determined by ECM based on the time after turning ignition switch ON or START.
CONSULT-II displays the engine coolant temperature decided by ECM.
<table>
<tr><th>Condition</th><th>Engine coolant temperature decided (CONSULT-II display)</th></tr>
<tr><td>Just as ignition switch is turned ON or Start</td><td>40°C (104°F)</td></tr>
<tr><td>More than approx. 4 minutes after ignition ON or Start</td><td>80°C (176°F)</td></tr>
<tr><td>Except as shown above</td><td>40 - 80°C (104 - 176°F)
(Depends on the time)</td></tr>
</table>
When the fail-safe system for engine coolant temperature sensor is activated, the cooling fan operates while engine is running.</td></tr>
<tr><td>P0122
P0123
P0222
P0223
P2135</td><td>Throttle position sensor</td><td>The ECM controls the electric throttle control actuator in regulating the throttle opening in order for the idle position to be within +10 degrees.
The ECM regulates the opening speed of the throttle valve to be slower than the normal condition. So, the acceleration will be poor.</td></tr>
</table>

Trouble Diagnosis (Cont'd)

DTC No	Detected Items	Engine Operating Condition In Fail-Safe Mode
P1121	Electric throttle control actuator	(When electric throttle control actuator does not function properly due to the return spring malfunction:) ECM controls the electric throttle actuator by regulating the throttle opening around the idle position. The engine speed will not rise more than 2,000 rpm.
		(When throttle valve opening angle in fail-safe mode is not in specified range:) ECM controls the electric throttle control actuator by regulating the throttle opening to 20 degrees or less.
		(When ECM detects the throttle valve is stuck open:) While the vehicle is driving, it slows down gradually by fuel cut. After the vehicle stops, the engine stalls. The engine can restart in N or P position, and engine speed will not exceed 1,000 rpm or more.
P1122	Electric throttle control function	ECM stops the electric throttle control actuator control, throttle valve is maintained at a fixed opening (approx. 6.05 degrees) by the return spring.
P1124 P1126	Throttle control motor relay	ECM stops the electric throttle control actuator control, throttle valve is maintained at a fixed opening (approx. 6.05 degrees) by the return spring.
P1128	Throttle control motor	ECM stops the electric throttle control actuator control, throttle valve is maintained at a fixed opening (approx. 6.05 degrees) by the return spring.
P1229	Sensor power supply	ECM stops the electric throttle control actuator control, throttle valve is maintained at a fixed opening (approx. 6.05 degrees) by the return spring.
P2122 P2123 P2127 P2128	Accelerator pedal position sensor	The ECM controls the electric throttle control actuator in regulating the throttle opening in order for the idle position to be within +10 degrees. The ECM regulates the opening speed of the throttle valve to be slower than the normal condition. So, the acceleration will be poor.

The fail-safe function also operate when above diagnoses except MIL circuit are detected and demands the driver to repair the trouble.

Engine operating condition in fail-safe mode	Engine speed will not rise more than 2,500 rpm due to the fuel cut

Trouble Diagnosis (Cont'd)

Basic Inspection

1. INSPECTION START

1. Check service records for any recent repairs that may indicate a related malfunction, or a current need for scheduled maintenance.

	2. Open engine hood and check the following: – Harness connectors for improper connections – Wiring harness for improper connections, pinches and cut – Vacuum hoses for splits, kinks and improper connections – Hoses and ducts for leaks – Air cleaner clogging – Gasket 3. Confirm that electrical or mechanical loads are not applied. – Headlamp switch is OFF. – Air conditioner switch is OFF. – Rear window defogger switch is OFF. – Steering wheel is in the straight-ahead position, etc.
	4. Start engine and warm it up until engine coolant temperature indicator points the middle of gauge. Ensure engine stays below 1,000 rpm.
	5. Run engine at about 2,000 rpm for about 2 minutes under noload. 6. Make sure that no DTC is displayed with CONSULT-II or ECM. <u>OK or NG</u> OK >> GO TO 3. NG >> GO TO 2.

2. REPAIR OR REPLACE

Repair or replace components as necessary according to corresponding Diagnostic Procedure.
>> GO TO 3.

Trouble Diagnosis (Cont'd)

3. CHECK TARGET IDLE SPEED

With CONSULT-II

1. Run engine at about 2,000 rpm for about 2 minutes under no-load.
2. Rev engine (2,000 to 3,000 rpm) two or three times under noload, then run engine at idle speed for about 1 minute.
3. Read idle speed in "DATA MONITOR" mode with CONSULT-II.

Engine and transmission type		Idle speed (in P or N position)
QG16DE	M/T	650 ± 50 rpm
	A/T	700 ± 50 rpm

Without CONSULT-II

1. Run engine at about 2,000 rpm for about 2 minutes under no-load.
2. Rev engine (2,000 to 3,000 rpm) two or three times under no-load, then run engine at idle speed for about 1 minute.
3. Check idle speed.

Engine and transmission type		Idle speed (in P or N position)
QG16DE	M/T	650 ± 50 rpm
	A/T	700 ± 50 rpm

OK or NG

OK >> GO TO 10.

NG >> GO TO 4.

4. PERFORM ACCELERATOR PEDAL RELEASED POSITION LEARNING

1. Stop engine.
2. Perform EC-23, "Accelerator Pedal Released Position Learning".

   >> GO TO 5.

Trouble Diagnosis (Cont'd)

5. PERFORM THROTTLE VALVE CLOSED POSITION LEARNING

Perform EC-23, "Throttle Valve Closed Position Learning".

>> GO TO 6.

6. PERFORM IDLE AIR VOLUME LEARNING

Refer to EC-24, "Idle Air Volume Learning".

Is Idle Air Volume Learning carried out successfully?

Yes or No

Yes >>GO TO 7.

No >>1. Follow the instruction of Idle Air Volume Learning.
2. GO TO 4.

7. CHECK TARGET IDLE SPEED AGAIN

With CONSULT-II

1. Start engine and warm it up to normal operating temperature.
2. Read idle speed in "DATA MONITOR" mode with CONSULT-II.

Engine and transmission type		Idle speed (in P or N position)
QG16DE	M/T	650 ± 50 rpm
	A/T	700 ± 50 rpm

Without CONSULT-II

1. Start engine and warm it up to normal operating temperature.
2. Check idle speed.

Engine and transmission type		Idle speed (in P or N position)
QG16DE	M/T	650 ± 50 rpm
	A/T	700 ± 50 rpm

OK or NG

OK >>GO TO 10.

NG >>GO TO 8.

Trouble Diagnosis (Cont'd)

8. DETECT MALFUNCTIONING PART

Check the following.

Check camshaft position sensor (PHASE) and circuit. Refer to EC-89.

Check crankshaft position sensor (POS) and circuit. Refer to EC-96.

OK or NG

OK >>GO TO 9.

NG >>1. Repair or replace.
2. GO TO 4.

9. CHECK ECM FUNCTION

1. Substitute another known-good ECM to check ECM function. (ECM may be the cause of an incident, but this is the rarely the case.)

10. CHECK IGNITION TIMING

1. Run engine at idle.
2. Check ignition timing with a timing light.

Engine and transmission type		Idle speed (in P or N position)
QG16DE	M/T	6 ± 2° BTDC
	A/T	6 ± 2° BTDC

OK or NG

OK >>INSPECTION END

NG >>GO TO 11.

11. PERFORM ACCELERATOR PEDAL RELEASED POSITION LEARNING

1. Stop engine.
2. Perform EC-23, "Accelerator Pedal Released Position Learning".

>> GO TO 12.

12. PERFORM THROTTLE VALVE CLOSED POSITION LEARNING

Perform EC-23, "Throttle Valve Closed Position Learning".

>> GO TO 13.

Trouble Diagnosis (Cont'd)

13. PERFORM IDLE AIR VOLUME LEARNING

Refer to EC-23, "Idle Air Volume Learning".

Is Idle Air Volume Learning carried out successfully?

Yes or No

Yes >> GO TO 14.

No >> 1. Follow the instruction of Idle Air Volume Learning.
2. GO TO 4.

14. CHECK TARGET IDLE SPEED AGAIN

With CONSULT-II

1. Start engine and warm it up to normal operating temperature.
2. Read idle speed in "DATA MONITOR" mode with CONSULT-II.

Engine and transmission type		Idle speed (in P or N position)
QG16DE	M/T	650 ± 50 rpm
	A/T	700 ± 50 rpm

Without CONSULT-II

1. Start engine and warm it up to normal operating temperature.
2. Check idle speed.

Engine and transmission type		Idle speed (in P or N position)
QG16DE	M/T	650 ± 50 rpm
	A/T	700 ± 50 rpm

OK or NG

OK >> GO TO 15.

NG >> GO TO 17.

Trouble Diagnosis (Cont'd)

15. CHECK IGNITION TIMING AGAIN

1. Run engine at idle.
2. Check ignition timing with a timing light.

Engine and transmission type		Idle speed (in P or N position)
QG16DE	M/T	6 ± 2° BTDC
	A/T	6 ± 2° BTDC

OK or NG

OK >>INSPECTION END

NG >>GO TO 16.

16. CHECK TIMING CHAIN INSTALLATION

Check timing chain installation. Refer to "TIMING CHAIN", (QG16: EM-36).

OK or NG

OK >>GO TO 17.

NG >>1. Repair the timing chain installation.
2. GO TO 4.

17. DETECT MALFUNCTIONING PART

Check the following.

Check camshaft position sensor (PHASE) and circuit. Refer to EC-89.

Check crankshaft position sensor (POS) and circuit. Refer to EC-96.

OK or NG

OK >>GO TO 18.

NG >>1. Repair or replace.
2. GO TO 4.

18. CHECK ECM FUNCTION

1. Substitute another known-good ECM to check ECM function. (ECM may be the cause of an incident, but this is the rarely the case.)

Trouble Diagnosis (Cont'd)

Symptom Matrix Chart

SYSTEM - BASIC ENGINE CONTROL SYSTEM

		Symptom													Reference Page
		HARD/NO START/RESTART (EXCP. HA)	ENGINE STALL	HESITATION/SURGING	SPARK KNOCK/DETONATION	LACK OF POWER/POOR ACCELERATION	HIGH IDLE/LOW IDLE	ROUGH IDLE/HUNTING	IDLING VIBRATION	SLOW/NO RETURN TO IDLE	OVERHEATS/WATER TEMPERATURE HIGH	EXCESSIVE FUEL CONSUMPTION	EXCESSIVE OIL CONSUMPTION	BATTERY DEAD (UNDER CHARGE)	
Fuel	Fuel pump circuit	1	1	2	3	2		2	2			3		2	EC-237
	Fuel pressure regulator system	3	3	4	4	4	4	4	4	4		4			-
	Injector circuit	1	1	2	3	2		2	2			2			EC-221
	Evaporative emission system	3	3	4	4	4	4	4	4	4		4			EC-313
Air	Positive crankcase ventilation system	3	3	4	4	4	4	4	4	4		4	4		-
	Incorrect idle speed adjustment	3	3				1	1	1	1		1			EC-316
	Electric throttle control actuator	1	1	2	3	3	2	2	2	2	2	2			EC-151
Ignition	Incorrect ignition timing adjustment	3	3				1	1	1	1		1			-
	Ignition circuit	1	1	2	2	2		2	2			2			EC-118
Main power supply and ground circuit		2	2	3	3	3		3	3		2	3			EC-75
Mass air flow sensor circuit		1	1	2	2	2		2	2			2			EC-103
Engine coolant temperature sensor circuit		1	1	2	2	2	3	2	2	3	1	2			EC-113
Throttle position sensor circuit		1	2		2	2	2	2	2		2				EC-145
Accelerator pedal position sensor circuit		3	2	1	2			2							EC-178
Heated oxygen sensor 1 circuit			1	2	3	2			2	2		2			EC-247
Knock sensor circuit			2	2								3			EC-141
Crankshaft position sensor (POS) circuit			2	2											EC-96
Camshaft position sensor (PHASE) circuit			2	2											EC-89
Vehicle speed signal circuit				2	3		3					3			EC-205
Power steering pressure sensor circuit				2				3	3	3	3				EC-243

Trouble Diagnosis (Cont'd)

	Symptom													Reference Page
	HARD/NO START/RESTART (EXCP. HA)	ENGINE STALL	HESITATION/SURGING	SPARK KNOCK/DETONATION	LACK OF POWER/POOR ACCELERATION	HIGH IDLE/LOW IDLE	ROUGH IDLE/HUNTING	IDLING VIBRATION	SLOW/NO RETURN TO IDLE	OVERHEATS/WATER TEMPERATURE HIGH	EXCESSIVE FUEL CONSUMPTION	EXCESSIVE OIL CONSUMPTION	BATTERY DEAD (UNDER CHARGE)	
ECM	2	2	3	3	3	3	3	3	3	3	3			EC-75
Intake valve timing control solenoid valve circuit	3	3	2		1	3	2	2	2		2			EC-209
PNP switch circuit			3		3	3	3	3	3		3			EC-300
Refrigerant pressure sensor circuit		2				3	3	3	3		4			EC-304
Electrical load signal circuit						3	3	3	3					EC-286
Air conditioner circuit	2	2	3	3	3	3	3	3	3		3		2	EC-304

1 - 6: The numbers refer to the order of inspection.

(continued on next page)

Trouble Diagnosis (Cont'd)

SYSTEM - ENGINE MECHANICAL & OTHER

		Symptom													Reference Page
		HARD/NO START/RESTART (EXCP. HA)	ENGINE STALL	HESITATION/SURGING	SPARK KNOCK/DETONATION	LACK OF POWER/POOR ACCELERATION	HIGH IDLE/LOW IDLE	ROUGH IDLE/HUNTING	IDLING VIBRATION	SLOW/NO RETURN TO IDLE	OVERHEATS/WATER TEMPERATURE HIGH	EXCESSIVE FUEL CONSUMPTION	EXCESSIVE OIL CONSUMPTION	BATTERY DEAD (UNDER CHARGE)	
Fuel	Fuel tank	5	5												FE section
	Fuel piping	5	5	5	5	5		5	5			5			
	Vapor lock		5												
	Valve deposit	5	5	5	5	5		5	5			5			
	Poor fuel (Heavy weight gasoline, Low octane)	5	5	5	5	5		5	5			5			
Air	Air duct		5	5		5		5	5			5			
	Air cleaner		5	5		5		5	5			5			
	Air leakage from air duct (Mass air flow sensor - electric throttle control actuator)	5	5	5	5	5	5	5	5	5		5			
	Electric throttle control actuator	5	5	5	5	5	5	5	5	5		5			EM section
	Air leakage from intake manifold/Collector/Gasket	5	5	5	5	5	5	5	5	5		5			-
Cranking	Battery	1	1	1		1		1	1			1		1	
	Alternator circuit	1	1	1		1		1	1			1		1	
	Starter circuit	3													
	Signal plate/Flywheel/Drive plate	6													EM section
	PNP switch	4													AT or MT section
Engine	Cylinder head	5	5	5	5	5		5	5			5			
	Cylinder head gasket	5	5	5	5	5		5	5		4	5	3		
	Cylinder block	6	6	6	6	6		6	6			6	4		
	Piston	6	6	6	6	6		6	6			6	4		EM section
	Piston ring	6	6	6	6	6		6	6			6	4		
	Connecting rod	6	6	6	6	6		6	6			6			
	Bearing	6	6	6	6	6		6	6			6			
	Crankshaft	6	6	6	6	6		6	6			6			

Trouble Diagnosis (Cont'd)

		Symptom													Reference Page
		HARD/NO START/RESTART (EXCP. HA)	ENGINE STALL	HESITATION/SURGING	SPARK KNOCK/DETONATION	LACK OF POWER/POOR ACCELERATION	HIGH IDLE/LOW IDLE	ROUGH IDLE/HUNTING	IDLING VIBRATION	SLOW/NO RETURN TO IDLE	OVERHEATS/WATER TEMPERATURE HIGH	EXCESSIVE FUEL CONSUMPTION	EXCESSIVE OIL CONSUMPTION	BATTERY DEAD (UNDER CHARGE)	
Valve mechanism	Timing chain	5	5	5	5	5		5	5			5			EM section
	Camshaft	5	5	5	5	5		5	5			5			
	Intake valve timing control	5	5	5	5	5		5	5			5			
	Intake valve	5	5	5	5	5		5	5			5	3		
	Exhaust valve	5	5	5	5	5		5	5			5	3		
Exhaust	Exhaust manifold/Tube/ Muffler/Gasket	5	5	5	5	5		5	5			5			FE section
	Three way catalyst	5	5	5	5	5		5	5			5			
Lubrication	Oil pan/Oil strainer/Oil pump/Oil filter/Oil gallery Oil level (Low)/Filthy oil	5	5	5	5	5		5	5			5			MA, EM and LC section
	Radiator/Hose/Radiator filler cap	5	5	5	5	5		5	5			5			LC section
Cooling	Thermostat	5	5	5	5	5		5	5		2	5			
	Water pump	5	5	5	5	5		5	5	5	2	5			
	Water gallery	5	5	5	5	5		5	5		2	5			
	Cooling fan	5	5	5	5	5		5	5		2	5			
	Coolant level (low)/Contaminated coolant	5	5	5	5	5		5	5	5	2	5			
		5	5	5	5	5		5	5		2	5			MA section

Trouble Diagnosis (Cont'd)

Engine Control Component Parts Location

Trouble Diagnosis (Cont'd)

Trouble Diagnosis (Cont'd)

Trouble Diagnosis (Cont'd)

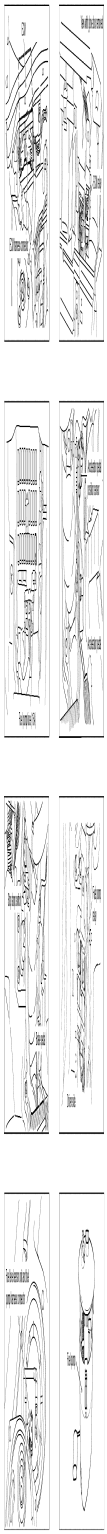

Circuit Diagram

[redacted]

Trouble Diagnosis (Cont'd)

ECM Harness Connector Terminal Layout

ECM Terminals and Reference Value

PREPARATION

1. ECM is located behind in the left side of the cowl top (behind the strut tower).
   For this inspection.
2. Remove ECM harness protector.
3. When disconnecting ECM harness connector, loosen it with levers as far as they will go as shown at right.
4. Connect a break-out box and Y-cable adapter between the ECM and ECM harness connector.
   Use extreme care not to touch 2 pins at one time.
   Data is for comparison and may not be exact.

ECM Inspection Table

Specification data are reference values and are measured between each terminal and ground.

Pulse signal is measured by CONSULT-II

CAUTION:

Do not use ECM ground terminals when measuring input/output voltage. Doing so may result in damage to the ECM's transistor. Use a ground other than ECM terminals, such as the ground.

Terminal No.	Wire Color	Item	Condition	Data (DC Voltage)
1	B	ECM ground	[Engine is running] Idle speed	Engine ground
3	R	Throttle control motor power supply	[Ignition switch ON]	BATTERY VOLTAGE (11 - 14V)

Trouble Diagnosis (Cont'd)

Terminal No	Wire Color	Item	Condition	Data (DC Voltage)
4	BR	Throttle control motor (Close)	[Ignition switch ON] Engine stopped Gear position is 1st (M/T models) Gear position is D (A/T models) Accelerator pedal is releasing	0 ~ 14 V
5	Y	Throttle control motor (Open)	[Ignition switch ON] Engine stopped Gear position is 1st (M/T models) Gear position is D (A/T models) Accelerator pedal is depressing	0 ~ 14 V
12	W	Power steering pressure sensor	[Engine is running] Steering wheel is being turned	0.5 ~ 5.0 V
			[Engine is running] Steering wheel is not being turned	0.4 ~ 0.8 V
13	R	Crankshaft position sensor (POS)	[Engine is running] Warm-up condition Idle speed	Approximately 3.0 V
			[Engine is running] Engine speed is 2,000 rpm	Approximately 3.0 V
14	R	Camshaft position sensor (PHASE)	[Engine is running] Warm-up condition Idle speed	1.0 ~ 4.0
			[Engine is running] Engine speed is 2,000 rpm	1.0 ~ 4.0

Trouble Diagnosis (Cont'd)

Terminal No	Wire Color	Item	Condition	Data (DC Voltage)
15	W	Knock sensor	[Engine is running] Idle speed	Approximately 2.5 V
16	W	Heated oxygen sensor 2	[Engine is running] Idle speed	Approximately 0 ~ 1 V
19	GY/L	EVAP canister purge volume control solenoid valve	[Engine is running] Idle speed	BATTERY VOLTAGE (11 - 14 V)
			[Engine is running] Engine speed is about 2,000 rpm (More than 100 seconds after starting engine)	Approximately 10 V
22 23 41 42	G/B R/B L/B Y/B	Injector No. 3 Injector No. 1 Injector No. 4 Injector No. 2	[Engine is running] Warm-up condition Idle speed	BATTERY VOLTAGE (11 - 14 V)
			[Engine is running] Warm-up condition Engine speed is 2,000 rpm	BATTERY VOLTAGE (11 - 14 V)
24	G	Heated oxygen sensor 1 heater	[Engine is running] Warm-up condition Engine speed is below 3,600 rpm	Approximately 7.0 V
			[Ignition switch "ON"] Engine stopped. [Engine is running] Engine speed is above 3,600 rpm	BATTERY VOLTAGE (11 - 14 V)
29	B	Camshaft position sensor (PHASE) ground	[Engine is running] Idle speed	Approximately 0 V
30	B	Camshaft position sensor (POS) ground	[Engine is running] Idle speed	Approximately 0 V

Trouble Diagnosis (Cont'd)

Terminal No	Wire Color	Item	Condition	Data (DC Voltage)
34	BR	Intake air temperature sensor	[Engine is running]	Approximately 0 - 4.8 V Output voltage varies with intake air temperature.
35	W	Heated oxygen sensor 1	[Engine is running] Warm-up condition Engine speed is 2,000 rpm	0 - Approximately 1.0 V (Periodically change)
46	R	Sensor power supply (Refrigerant pressure	[Ignition switch ON]	Approximately 5 V
47	G	sensor) Sensor power supply	[Ignition switch ON]	Approximately 5 V
49	W	(Throttle position sensor) Throttle position sensor 1	[Ignition switch ON] Engine stopped Gear position is 1st (M/T models) Gear position is D (A/T models) Accelerator pedal fully released	More than 0.36 V
			[Ignition switch ON] Engine stopped Gear position is 1st (M/T models) Gear position is D (A/T models) Accelerator pedal fully depressed	Less than 4.75 V
50	Y	Mass air flow sensor	[Engine is running] Warm-up condition Idle speed	Approximately 1.0 - 1.7 V
			[Engine is running] Warm-up condition Engine speed is 2,500 rpm	Approximately 1.5 - 2.1 V
54	B		[Engine is running] Idle speed	Approximately 0 V
57	B	Sensor ground (Knock sensor shield circuit) Sensors' ground (Power	[Engine is running] Warm-up condition Idle speed	Approximately 0 V
60 61 79 80	L/R BR GY/R PU	steering pressure sensor/Refrigerant pressure sensor/ASCD steering switch) Ignition signal No. 3 Ignition signal No. 1 Ignition signal No. 4 Ignition signal No. 2	[Engine is running] Warm-up condition Idle speed	Approximately 0 - 0.1 V
			[Engine is running] Warm-up condition Engine speed is 2,000 rpm	Approximately 0 - 0.1 V

Trouble Diagnosis (Cont'd)

Terminal No	Wire Color	Item	Condition	Data (DC Voltage)
62	Y/R	Intake valve timing control solenoid valve	[Engine is running] Warm-up condition Idle speed	BATTERY VOLTAGE (11 - 14 V)
			[Engine is running] Warm-up condition When revving engine up to 2,000 rpm quickly	7 - 10 V
65	G	Sensor power supply (Power steering pressure sensor)	[Ignition switch ON]	Approximately 5 V
66	B	Sensor ground (Throttle position sensor)	[Engine is running] Warm-up condition Idle speed	Approximately 0 V
67	B	Sensor ground (Mass air flow sensor)	[Engine is running] Warm-up condition Idle speed	Approximately 0 V
68	R	Throttle position sensor 2	[Ignition switch ON] Engine stopped Gear position is 1st (M/T models) Gear position is D (A/T models) Accelerator pedal fully released	Less than 4.75 V
			[Ignition switch ON] Engine stopped Gear position is 1st (M/T models) Gear position is D (A/T models) Accelerator pedal fully depressed	More than 0.36 V
69	R/L	Refrigerant pressure sensor	[Engine is running] Warm-up condition Both A/C switch and blower switch are ON (Compressor operates.)	Approximately 1.0 - 4.0 V
72	BR/W	Engine coolant temperature sensor	[Engine is running]	Approximately 0 - 4.8 V Output voltage varies with engine coolant temperature.
73	B	Sensor ground (Engine coolant temperature sensor)	[Engine is running] Warm-up condition Idle speed	Approximately 0 V
74	B	Heated oxygen sensor ground	[Engine is running] Warm-up condition Idle speed	Approximately 0 V
75	R	Sensor ground (Intake air temperature sensor)	[Engine is running] Warm-up condition Idle speed	Approximately 0 V

Trouble Diagnosis (Cont'd)

Terminal No	Wire Color	Item	Condition	Data (DC Voltage)
82	B	Sensor ground Accelerator pedal position sensor 1)	[Engine is running] Warm-up condition Idle speed	Approximately 0 V
83	B	Sensor ground Accelerator pedal position sensor 2)		
84	R/W	Electrical load signal (Headlamp signal)	Lighting switch is ON	BATTERY VOLTAGE (11 - 14 V)
			Lighting switch is OFF	Approximately 0 V
85	LG	DATA link connector (K-Line)	CONSULT-II is disconnected.	Approximately 0 V
			CONSULT-II is connected.	BATTERY VOLTAGE (11 - 14 V)
86	R	CAN communication line	During communication between ECU and TCU	Approximately 2.3 V
87	OR/L	MIL drive signal	MIL (mulfunction indicator lamp) ON	Approximately 0 V
			MIL (mulfunction indicator lamp) OFF	Approximately 11 - 14 V
88	PU/R	Vehicle speed input signal	Engine stopped Gear position is Neutral (M/T models) Gear position is P or N (A/T models) (while turning the wheel)	0 - Approximately 12 V (Periodically change)
			Lift the drive wheel Gear position is any drive gear (M/T models) Gear position is D (A/T models)	0 - Approximately 12 V (Periodically change)
89	LG/R	Cooling fan relay (High)	Cooling fan is operating	Approximately 0 V
			Cooling fan is not operating	BATTERY VOLTAGE (11 - 14 V)
90	R	Sensor power supply (Accelerator pedal position sensor 1)	[Ignition switch ON]	Approximately 5V
91	G	Sensor power supply (Accelerator pedal position sensor 2)		
92	GY	Engine and automatic transaxle integrated control	Same with TPS 1 sensor input value	
93	L/R	Electrical load signal (Rear window defogger signal)	Rear window defogger switch is ON	BATTERY VOLTAGE (11 - 14 V)
			Rear window defogger switch is OFF	Approximately 0 V
94	L	CAN communication line	During communication between ECU and TCU	Approximately 2.8 V
96	LG/B	Heater fan switch signal	[ignition switch ON] Heater fan control switch is ON	Approximately 0 V
			[ignition switch ON] Heater fan control switch is OFF	BATTERY VOLTAGE (11 - 14 V)
97	LG/B	Cooling fan relay (Low)	[Engine is running] Cooling fan is operating	Approximately 1 V
			[Engine is running] Cooling fan is not operating	BATTERY VOLTAGE (11 - 14 V)
98	LG	Accelerator pedal position sensor	[Ignition switch ON] Engine stopped Accelerator pedal fully released	Approximately 0.5 V
			[Ignition switch ON] Engine stopped Accelerator pedal fully depressed	Approximately 2.3 V

Trouble Diagnosis (Cont'd)

Terminal No	Wire Color	Item	Condition	Data (DC Voltage)
101	R/G	Stop lamp switch	[Ignition switch OFF] Brake pedal fully released	Approximately 0 V
			[Ignition switch OFF] Brake pedal fully depressed	BATTERY VOLTAGE (11 - 14 V)
102	G/OR	PNP switch	[Ignition switch ON] Engine stopped Gear position is Neutral (M/T models) Gear position is P or N (A/T models)	Approximately 0 V
			[Ignition switch ON] Engine stopped Except the above gear position	Approximately 5 V
104	OR	Throttle control motor relay	[Ignition switch OFF]	BATTERY VOLTAGE (11 - 14 V)
			[Ignition switch ON]	Approximately 0 V
105	L	Air conditioner relay	[Engine is running] Both A/C switch and blower switch are ON (Compressor operates)	Approximately 0 V
			[Engine is running] A/C switch is OFF	BATTERY VOLTAGE (11 - 14 V)
106	L	Accelerator pedal position sensor 1	[Ignition switch ON] Engine stopped Accelerator pedal fully released	0.5 - 1.0 V
			[Ignition switch ON] Engine stopped Accelerator pedal fully depressed	3.9 - 4.7 V
109	B/R	Ignition switch	[Ignition switch OFF]	Approximately 0 V
			[Ignition switch ON]	BATTERY VOLTAGE (11 - 14 V)
110	L/R	Air conditioner switch signal	[Engine is running] Both A/C switch and blower switch are ON	Approximately 0 V
			[Engine is running] A/C switch is OFF	BATTERY VOLTAGE (11 - 14 V)
111	W/G	EGI relay	[Engine is running] [Ignition switch OFF] For a 4 seconds after turning ignition switch OFF	Approximately 0 V
			[Ignition switch OFF] More than a 4 seconds passed after turning ignition switch OFF	BATTERY VOLTAGE (11 - 14 V)
113	B/P	Fuel pump relay	[Ignition switch ON] For 1 second after turning ignition switch ON	Approximately 0 V
			[Engine is running] [Ignition switch ON] More than 1 second after turning ignition switch ON	BATTERY VOLTAGE (11 - 14 V)

Trouble Diagnosis (Cont'd)

Terminal No	Wire Color	Item	Condition	Data (DC Voltage)
115 116	B B	ECM ground	[Engine is running] Idle speed	Engine ground
119 120	W W	Power supply for ECM	[Ignition switch ON]	BATTERY VOLTAGE (11 - 14 V)
121	W	Power supply for ECM (Back-up)	[Ignition switch OFF]	BATTERY VOLTAGE (11 - 14 V)

: Average voltage for pulse signal (Actual pulse signal can be confirmed by oscilloscope.)

CONSULT-II Function

FUNCTION

Diagnostic Test Mode	Function
Work support	This mode enables a technician to adjust some devices faster and more accurately by following the indications on the CONSULT-II unit.
Self-diagnostic results	Self-diagnostic results such as 1st trip DTC, DTCs and 1st trip freeze frame data or freeze frame data can be read and erased quickly.*1
Data monitor	Input/Output data in the ECM can be read.
Data monitor (spec)	Specification with basic fuel schedule, MAS A/F sensor and A/F alpha can be read.
CAN diagnostic support monitor	The results of transmit/receive diagnosis of CAN communication can be read.
Active test	Diagnostic Test Mode in which CONSULT-II drives some actuators apart from the ECMs and also shifts some parameters in a specified range.
Function test	This mode is used to inform customers when their vehicle condition requires periodic maintenance.
ECM part number	ECM part number can be read.

*1: The following emission-related diagnostic information is cleared when the ECM memory is erased.
Diagnostic trouble codes
Freeze frame data
Others

Trouble Diagnosis (Cont'd)

Engine Control Component Parts/Control Systems Application

			Diagnostic Test Mode			
			Work Support	Self-Diagnostic Results DTC*1	Data Monitor	Active Test
ENGINE CONTROL COMPONENT PARTS	INPUT	Crankshaft position sensor (POS)		O	O	
		Camshaft position sensor (PHASE)		O	O	
		Mass air flow sensor		O	O	
		Engine coolant temperature sensor		O	O	O
		Heated oxygen sensor 1, 2		O	O	
		Vehicle speed signal		O	O	
		Accelerator pedal position sensor		O	O	
		Throttle position sensor		O	O	
		Intake air temperature sensor		O	O	
		Knock sensor		O		
		Refrigerant pressure sensor			O	
		Closed throttle position switch (accelerator pedal position sensor signal)		O	O	
		Air conditioner switch			O	
		Park/neutral position (PNP) switch			O	
		Stop lamp switch		O	O	
		Power steering pressure sensor		O	O	
		Battery voltage			O	
		Electrical load signal			O	
		Injectors			O	O
		Power transistor (Ignition timing)		O	O	O
	OUTPUT	Throttle control motor relay		O	O	
		Throttle control motor		O		
		EVAP canister purge volume control solenoid valve			O	O
		Air conditioner relay			O	
		Fuel pump relay	O		O	O
		Cooling fan relay		O	O	O
		Heated oxygen sensor 1 heater		O	O	
		Intake valve timing control solenoid valve		O	O	O

O: Applicable
*1: This item includes DTCs.

Trouble Diagnosis (Cont'd)

CONSULT-II INSPECTION PROCEDURE

1. Turn ignition switch OFF.
2. Connect "CONSULT-II" to data link connector, which is located under the driver's side dash panel.
3 Turn ignition switch ON.
4. Touch "START (X-BADGE VHCL)".
5. Touch "ENGINE".
6. Perform each diagnostic test mode according to each service procedure.

   For further information, see the CONSULT-II Operation Manual.

Trouble Diagnosis (Cont'd)

Work Support Mode

WORK ITEM

Work Item	Condition	Usage
FUEL PRESSURE RELEASE	● FUEL PUMP WILL STOP BY TOUCHING "START" DURING IDLING. CRANK A FEW TIMES AFTER ENGINE STALLS.	When releasing fuel pressure from fuel line
IDLE AIR VOL LEARN	● THE IDLE AIR VOLUME THAT KEEPS THE ENGINE WITHIN THE SPECIFIED RANGE IS MEMORIZED IN ECM.	When learning the idle air volume
SELF-LEARNING CONT	● THE COEFFICIENT OF SELF-LEARNING CONTROL MIXTURE RATIO RETURNS TO THE ORIGINAL COEFFICIENT.	When clearing the coefficient of self-learning control value
V/N REGISTRATION	● IN THIS MODE, V/N IS REGISTERED IN ECM	When registening V/N in ECM
TARGET IDLE RPM ADJ*	● IDLE CONDITION	When setting target idle speed
TARGET IGN TIM ADJ*	● IDLE CONDITION	When adjusting target ignition timing

*: This function is not necessary in the usual service procedure.

Self-diag Results Mode

SELF DIAGNOSTIC ITEM

Regarding items of DTC and DTC, refer to EC-11, "INDEX FOR DTC".

FREEZE FRAME DATA

Freeze Frame Data Item	Unit	Description
DIAG TROUBLE CODE [PXXXX]	-	● The engine control component part/control system has a trouble code, it is displayed as PXXXX. (Refer to EC-11, "INDEX FOR DTC".)
FUEL SYS-B1	-	● "Fuel injection system status" at the moment a malfunction is detected is displayed. ● One mode in the following is displayed. "MODE 2": Open loop due to detected system malfunction "MODE 3": Open loop due to driving conditions (power enrichment, deceleration enrichment) "MODE 4": Closed loop - using oxygen sensor(s) as feedback for fuel control "MODE 5": Open loop - has not yet satisfied condition to go to closed loop
COOLANT TEMP	°C or °F	● The engine coolant temperature at the moment a malfunction is detected is displayed.
L-FUEL TRIM-B1	%	● The long-term fuel trim indicates much more gradual feedback compensation to the base fuel schedule than short-term fuel trim.
S-FUEL TRIM-B1	%	● The short-term fuel trim indicates dynamic or instantaneous feedback compensation to the base fuel schedule.
ENGINE SPEED	rpm	● The engine speed at the moment a malfunction is detected is displayed.
VEHICL SPEED	km/h or mph	● The vehicle speed at the moment a malfunction is detected is displayed.
B/FUEL SCHDL	msec	● The base fuel schedule at the moment a malfunction is detected is displayed.
INT/A TEMP SE	°C or °F	● The intake air temperature at the moment a malfunction is detected is displayed.

Trouble Diagnosis (Cont'd)

Data Monitor Mode

MONITORED ITEM

Monitored Item [Unit]	ECM Input Signals	Main Signals	Description	Description
ENG SPEED [rpm]	O	O	● Indicates the engine speed computed from the signals of the crankshaft position sensor (POS) and camshaft position sensor (PHASE).	● Accuracy becomes poor if engine speed drops below the idle rpm. ● If the signal is interrupted while the engine is running, an abnormal value may be indicated.
MAS A/F SE-B1 [V]	O	O	● The signal voltage of the mass air flow sensor is displayed.	● When the engine is stopped, a certain value is indicated.
B/FUEL SCHDL [msec]		O	● "Base fuel schedule" indicates the fuel injection pulse width programmed into ECM, prior to any learned on board correction.	
A/F ALPHA-B1 [%]		O	● The mean value of the air-fuel ratio feedback correction factor per cycle is indicated.	● When the engine is stopped, a certain value is indicated. ● This data also includes the data for the air-fuel ratio learning control.
COOLAN TEMP/S [°C] or [°F]	O	O	● The engine coolant temperature (determined by the signal voltage of the engine coolant temperature sensor) is displayed.	● When the engine coolant temperature sensor is open or short-circuit, ECM enters fail-safe mode. The engine coolant temperature determined by the ECM is displayed.
HO2S1 (B1) [V]	O	O	● The signal voltage of the heated oxygen sensor 1 is displayed.	
HO2S2 (B1) [V]	O		● The signal voltage of the heated oxygen sensor 2 is displayed.	
HO2S1 MNTR (B1) [RICH/LEAN]	O	O	● Display of heated oxygen sensor 1 signal during air-fuel ratio feedback control: RICH... means the mixture became "rich", and control is being affected toward a leaner mixture. LEAN... means the mixture became "lean", and control is being affected toward a rich mixture.	● After turning ON the ignition switch, "RICH" is displayed until air-fuel mixture ratio feedback control begins. ● When the air-fuel ratio feedback is clamped, the value just before the clamping is displayed continuously.
VHCL SPEED SE [km/h] or [mph]	O	O	● The vehicle speed computed from the vehicle speed signal sent from combination meter is displayed.	
BATTERY VOLT [V]	O	O	● The power supply voltage of ECM is displayed.	
ACCEL SEN 1 [V]	O	O	● The accelerator pedal position sensor signal voltage is displayed.	
ACCEL SEN 2 [V]	O			
THRTL SEN 1 [V]	O	O	● The throttle position sensor signal voltage is displayed.	
THRTL SEN 2 [V]	O			

Trouble Diagnosis (Cont'd)

Monitored Item [Unit]	ECM Input Signals	Main Signals	Description	Description
INT/A TEMP SE [°C] or [°F]	O	O	● The intake air temperature (determined by the signal voltage of the intake air temperature sensor) is indicated.	
START SIGNAL [ON/OFF]	O	O	● Indicates [ON/OFF] condition of the starter signal computed from the signals of the crankshaft position sensor (POS), camshaft position sensor (PHASE) and battery voltage.	● After starting the engine, [OFF] is displayed regardless of the starter signal.
CLSD THL POS [ON/OFF]	O	O	● Indicates idle position [ON/OFF] computed by ECM according to the accelerator pedal position sensor signal.	
AIR COND SIG [ON/OFF]	O	O	● Indicates [ON/OFF] condition of the air conditioner switch as determined by the air conditioner signal.	
P/N POSI SW [ON/OFF]	O	O	● Indicates [ON/OFF] condition from the park/neutral position (PNP) switch signal.	
PW/ST SIGNAL [ON/OFF]	O	O	● [ON/OFF] condition of the power steering oil pressure switch as determined by the power steering oil pressure signal is indicated.	
LOAD SIGNAL [ON/OFF]	O	O	● Indicates [ON/OFF] condition from the electrical load signal. ON... Rear window defogger switch is ON and/or lighting switch is in 2nd position. OFF... Both rear window defogger switch and lighting switch are OFF.	
IGNITION SW [ON/OFF]	O		● Indicates [ON/OFF] condition from ignition switch.	
HEATER FAN SW [ON/OFF]	O		● Indicates [ON/OFF] condition from the heater fan switch signal.	
BRAKE SW [ON/OFF]	O		● Indicates [ON/OFF] condition from the stop lamp switch signal.	
INJ PULSE-B1 [msec]		O	● Indicates the actual fuel injection pulse width compensated by ECM according to the input signals.	● When the engine is stopped, a certain computed value is indicated.
IGN TIMING [BTDC]		O	● Indicates the ignition timing computed by ECM according to the input signals.	● When the engine is stopped, a certain value is indicated.
PURG VOL C/V [%]			● Indicates the EVAP canister purge volume control solenoid valve control value computed by the ECM according to the input signals. ● The opening becomes larger as the value increases.	

Trouble Diagnosis (Cont'd)

Monitored Item [Unit]	ECM Input Signals	Main Signals	Description	Description
INT/V TIM (B1) [CA]			● Indicates [°CA] of intake camshaft advanced angle.	
INT/V SOL (B1) [%]			● The control condition of the intake valve timing control solenoid valve is indicated.	
AIR COND RLY [ON/OFF]		O	● The air conditioner relay control condition (determined by ECM according to the input signals) is indicated.	
FUEL PUMP RLY [ON/OFF]		O	● Indicates the fuel pump relay control condition determined by ECM according to the input signals.	
THRTL RELAY [ON/OFF]		O	● Indicates the throttle control motor relay control condition determined by the ECM according to the input signals.	
COOLING FAN [HI/LOW/OFF]			● Indicates the condition of the cooling fan (determined by ECM according to the input signals). HI... High speed operation LOW... Low speed operation OFF... Stop	
IDL A/V LEARN [YET/CMPLT]			● Display the condition of idle air volume learning YET... Idle air volume learning has not been performed yet. CMPLT... Idle air volume learning has already been performed successfully.	
O2SEN HTR DTY [%]			● Indicates the heated oxygen sensor 1 heater control value computed by the ECM according to the input signals.	
AC PRESS SEN [V]	O		● The signal voltage from the refrigerant pressure sensor is displayed.	

NOTE:

- **Any monitored item that does not match the vehicle being diagnosed is deleted from the display automatically.**

Trouble Diagnosis (Cont'd)

Active Test Mode

TEST ITEM

Test Item	Condition	Judgement	Description
FUEL INJECTION	● Engine: Return to the original trouble condition ● Change the amount of fuel injection using CONSULT-II.	If trouble symptom disappears, see CHECK ITEM.	● Harness and connectors ● Fuel injectors ● Heated oxygen sensor 1
IGNITION TIMING	● Engine: Return to the original trouble condition ● Timing light: Set ● Retard the ignition timing using CONSULT-II.	If trouble symptom disappears, see CHECK ITEM.	● Perform "Idle Air Volume Learning".
POWER BALANCE	● Engine: After warming up, idle the engine. ● A/C switch OFF ● Shift lever: N (A/T models) Neutral (M/T models) ● Cut off each injector signal one at a time using CONSULT-II.	Engine runs rough or dies.	● Harness and connectors ● Compression ● Fuel injectors ● Power transistor ● Spark plugs ● Ignition coils
COOLING FAN	● Ignition switch: ON ● Turn the cooling fan "ON" and "OFF" with CONSULT-II.	Cooling fan moves and stops.	● Harness and connectors ● Cooling fan relay ● Cooling fan motor
ENG COOLANT TEMP	● Engine: Return to the original trouble condition. ● Change the engine coolant temperature using CONSULT-II.	If trouble symptom disappears, see CHECK ITEM.	● Harness and connectors ● Engine coolant temperature sensor ● Fuel injectors
FUEL PUMP RELAY	● Ignition switch: ON (Engine stopped) ● Turn the fuel pump relay "ON" and "OFF" using CONSULT-II and listen to operating sound.	Fuel pump relay makes the operating sound.	● Harness and connectors ● Fuel pump relay
PURG VOL CONT/V	● Engine: After warming up, run engine at 1,500 rpm. ● Change the EVAP canister purge volume control solenoid valve opening percent using CONSULT-II.	Engine speed changes according to the opening percent.	● Harness and connectors ● Solenoid valve
V/T ASSIGN ANGLE	● Engine: Return to the original trouble condition. ● Timing light: Set ● Change intake valve timing using CONSULT-II.	If trouble symptom disappears, see CHECK ITEM.	● Harness and connectors ● Intake valve timing control solenoid valve

Trouble Diagnosis (Cont'd)

Real Time Diagnosis In Data Monitor Mode (Recording Vehicle Data)

DESCRIPTION

CONSULT-II has two kinds of triggers and they can be selected by touching "SETTING" in "DATA MONITOR" mode.

1. "AUTO TRIG" (Automatic trigger):
   - The malfunction will be identified on the CONSULT-II screen in real time.

     In other words, DTC/1st trip DTC and malfunction item will be displayed if the malfunction is detected by ECM. At the moment a malfunction is detected by ECM, "MONITOR" in "DATA MONITOR" screen is changed to "Recording Data... xx%" as shown at right, and the data after the malfunction detection is recorded. Then when the percentage reached 100%, "REAL-TIME DIAG" screen is displayed. If "STOP" is touched on the screen during "Recording Data...xx%", "REAL-TIME DIAG" screen is also displayed.

     The recording time after the malfunction detection and the recording speed can be changed by "TRIGGER POINT" and "Recording Speed". Refer to CONSULT-II OPERATION MANUAL.
2. "MANU TRIG" (Manual trigger):
   - DTC/1st trip DTC and malfunction item will not be displayed automatically on CONSULT-II screen even though a malfunction is detected by ECM.

     DATA MONITOR can be performed continuously even though a malfunction is detected.

OPERATION

1. "AUTO TRIG"
   - While trying to detect the DTC/1st trip DTC by performing the DTC Confirmation Procedure, be sure to select to "DATA MONITOR (AUTO TRIG)" mode. You can confirm the malfunction at the moment it is detected.
   - While narrowing down the possible causes, CONSULT-II should be set in "DATA MONITOR (AUTO TRIG)" mode, especially in case the incident is intermittent. When you are inspecting the circuit by gently shaking (or twisting) the suspicious connectors, components and harness in the DTC Confirmation Procedure, the moment a malfunction is found the DTC/1st trip DTC will be displayed. (Refer to "Incident Simulation Tests" in "HOW TO PERFORM EFFICIENT DIAGNOSES FOR AN ELECTRICAL INCIDENT", GI-15.)
2. "MANU TRIG"
   - If the malfunction is displayed as soon as "DATA MONITOR" is selected, reset CONSULT-II to "MANU TRIG". By selecting "MANU TRIG" you can monitor and store the data. The data can be utilized for further diagnosis, such as a comparison with the value for the normal operating condition.

Trouble Diagnosis (Cont'd)

CONSULT-II Reference Value in Data Monitor Mode

REMARKS:

- Specification data are reference values.
- Specification data are output/input values which are detected or supplied by the ECM at the connector.
  Specification data may not be directly related to their components signals/values/operations.
  i.e. Adjust ignition timing with a timing light before monitoring IGN TIMING, because the monitor may show the specification data in spite of the ignition timing not being adjusted to the specification data. This IGN TIMING monitors the data calculated by the ECM according to the signals input from the camshaft position sensor and other ignition timing related sensors.

Monitor Item	Condition		Specification
ENG SPEED	● Run engine and compare CONSULT-II value with the tachometer indication.		Almost the same speed as the tachometer indication.
MAS A/F SE-B1	● Engine: After warming up ● Shift lever: N (A/T models) Neutral (M/T models) ● No-load	Idle	Approx. 0.8 V
		2,500 rpm	Approx. 1.5 - 2.1 V
B/FUEL SCHDL	● Engine: After warming up ● Shift lever: N (A/T models) Neutral (M/T models) ● Air conditioner switch: OFF ● No-load	Idle	1.5 - 3.0 msec
		2,000 rpm	1.2 - 3.0 msec
A/F ALPHA-B1	● Engine: After warming up	Maintaining engine speed at 2,000 rpm	75% - 125%
COOLAN TEMP/S	● Engine: After warming up		More than 70°C (158°F)
HO2S1 (B1)	● Engine: After warming up	Maintaining engine speed at 2,000 rpm	0 - 0.3V ↔ Approx. 0.6 - 1.0 V
HO2S1 MNTR (B1)	● Engine: After warming up	Maintaining engine speed at 2,000 rpm	LEAN ↔ RICH Changes more than 5 times during 10 seconds.
VHCL SPEED SE	● Turn drive wheels and compare CONSULT-II value with the speedometer indication.		Almost the same speed as the speedometer indication.
BATTERY VOLT	● Ignition switch: ON (Engine stopped)		11 - 14 V
ACCEL SEN1	● Ignition switch: ON (engine stopped)	Accelerator pedal: Fully released	0.5 - 1.0 V
		Accelerator pedal: Fully depressed	4.0 - 4.8 V
ACCEL SEN2*1	● Ignition switch: ON (engine stopped)	Accelerator pedal: Fully released	0.3 - 1.2 V
		Accelerator pedal: Fully depressed	3.9 - 4.8 V
THRTL SEN1 THRTL SEN2*1	● Ignition switch: ON (Engine stopped) ● Shift lever: D (A/T models) 1st (M/T models)	Accelerator pedal: Fully released	More than 0.36 V
		Accelerator pedal: Fully depressed	3.9 - 4.8 V
START SIGNAL	● Ignition switch: ON → START → ON		OFF → ON → OFF
CLSD THL POS	● Ignition switch: ON	Accelerator pedal: Fully released	ON
		Accelerator pedal: Slightly depressed	OFF
AIR COND SIG	● Air conditioner switch: OFF	Air conditioner switch: OFF	OFF
	● Engine: After warming up, idle the engine (Compressor operates.)	Air conditioner switch: ON	ON

Trouble Diagnosis (Cont'd)

Monitor Item	Condition		Specification
P/N POSI SW	● Ignition switch: ON	Shift lever: P or N (A/T models) Neutral (M/T models)	ON
		Shift lever: Except above	OFF
PW/ST SIGNAL	● Engine: After warming up, idle the engine	Steering wheel is in neutral position. (Forward direction)	OFF
		Steering wheel is turned.	ON
LOAD SIGNAL	● Ignition switch: ON	Rear window defogger switch is ON and/or lighting switch is in 2nd.	ON
		Rear window defogger switch is OFF and lighting switch is OFF.	OFF
IGNITION SW	● Ignition switch: ON → START → ON		ON → OFF → ON
HEATER FAN SW	● Ignition switch: ON	Heater fan is operating.	ON
	● Engine: After warming up, idle the engine	Heater fan is not operating.	OFF
BRAKE SW	● Ignition switch: ON	Brake pedal: Fully released	OFF
		Brake pedal: Slightly depressed	ON
INJ PULSE-B1	● Engine: After warming up ● Shift lever: N (A/T models) Neutral (M/T models) ● Air conditioner switch: OFF ● No-load	Idle	2.0 - 3.5 msec
		2,000 rpm	1.5 - 3.5 msec
IGN TIMING	● Engine: After warming up ● Shift lever: N (A/T models) Neutral (M/T models) ● Air conditioner switch: OFF ● No-load	Idle	M/T: 6 ± 2° BTDC (QG16DE) A/T: 6 ± 2° BTDC (QG16DE)
		2,000 rpm	25° - 45° BTDC
PURG VOL C/V	● Engine: After warming up ● Shift lever: N (A/T models) Neutral (M/T models) ● Air conditioner switch: OFF ● No-load	Idle	0%
		2,000 rpm	15 - 30%
INT/V TIM (B1)	● Engine: After warming up ● Shift lever: N (A/T models) Neutral (M/T models) ● Air conditioner switch: OFF ● No-load	Idle	-5° - 5°CA
		When revving engine up to 2,000 rpm quickly	Approx. 0° - 30°CA
INT/V SOL (B1)	● Engine: After warming up ● Shift lever: N (A/T models) Neutral (M/T models) ● Air conditioner switch: OFF ● No-load	Idle	0% - 2%
		When revving engine up to 2,000 rpm quickly	Approx. 0% - 60%
AIR COND RLY	● Engine: After warming up, idle the engine	Air conditioner switch: OFF	OFF
		Air conditioner switch: ON(Compressor operates)	ON

Trouble Diagnosis (Cont'd)

Monitor Item	Condition		Specification
FUEL PUMP RLY	● For 1 seconds after turning ignition switch ON ● Engine running or cranking		ON
	● Except above conditions		OFF
THRTL RELAY	● Ignition switch: ON		ON
COOLING FAN	● Engine: After warming up, idle the engine ● Air conditioner switch: OFF	Engine coolant temperature is 94°C (201°F) or less.	OFF
		Engine coolant temperature is between 95°C (203°F) and 104°C (219°F).	LOW
		Engine coolant temperature is 105°C (221°F) or more	HIGH
O2SEN HTR DTY	● Engine speed: Above 3,600 rpm		OFF
	● Engine coolant temperature when engine started: More than 80° (176°F) ● Engine speed: Below 3,600 rpm		Approx. 50%
AC PRESS SEN	● Ignition switch: ON (Engine stopped)		Approx. 0 V
	● Engine: Idle ● Air conditioner switch: OFF		1.0 - 4.0 V
BRAKE SW1	● Ignition switch: ON	Brake pedal: Fully released	ON
		Brake pedal: Slightly depressed	OFF

*1: Accelerator pedal position sensor 2 signal and throttle position sensor 2 signal are converted by ECM internally. Thus, they differ from ECM terminals voltage signal.

Trouble Diagnosis (Cont'd)

Major Sensor Reference Graph in Data Monitor Mode

The following are the major sensor reference graphs in "DATA MONITOR" mode.

CLSD THL POS, ACCEL SEN 1, THRTL SEN 1

Below is the data for "CLSD THL POS", "ACCEL SEN 1" and "THRTL SEN 1" when depressing the accelerator pedal with the ignition switch "ON" and with selector lever in D position (A/T models) or with shift lever in 1st position (M/T models).

The signal of "ACCEL SEN 1" and "THRTL SEN 1" should rise gradually without any intermittent drop or rise after "CLSD THL POS" is changed from ON to OFF.

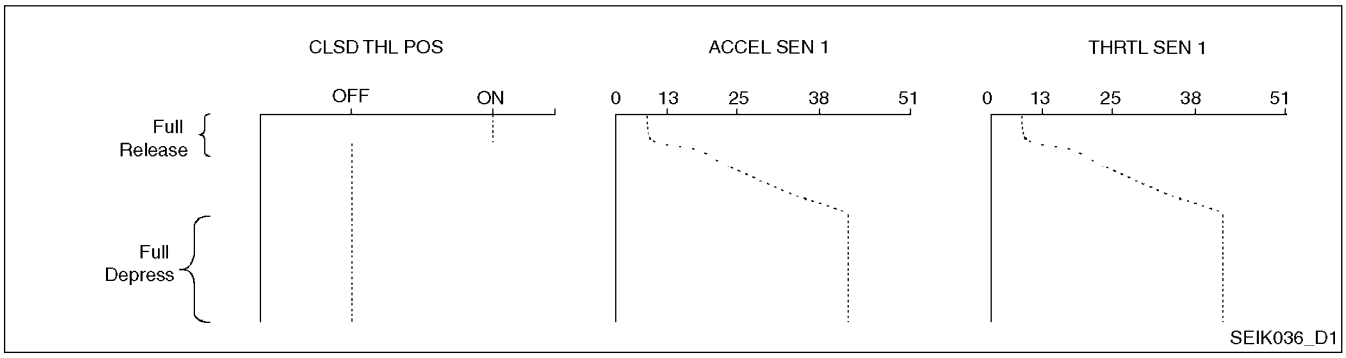

ENG SPEED, MAS A/F SE-B1, THRTL SEN 1, HO2S1 (B1), INJ PULSE-B1

Below is the data for "ENG SPEED", "MAS A/F SE-B1", "THRTL SEN 1", "HO2S1 (B1)" and "INJ PULSE-B1" when revving engine quickly up to 4,800 rpm under no load after warming up engine sufficiently.

Each value is for reference, the exact value may vary.

Trouble Diagnosis (Cont'd)

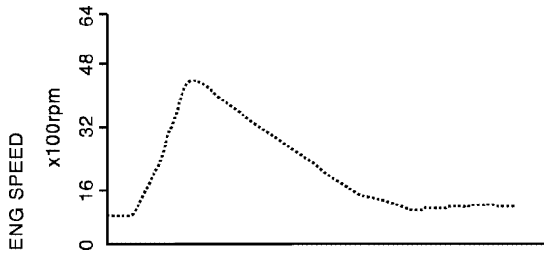

- "ENG SPEED" should increase gradually while depressing the accelerator pedal and should decrease gradually after releasing the pedal without any intermittent drop or rise.

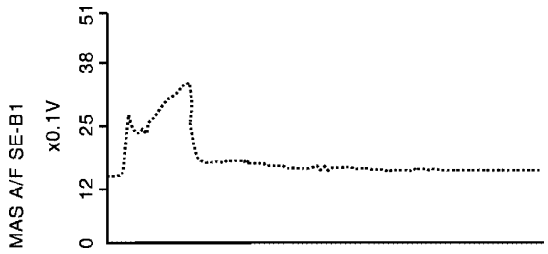

- "MAS A/F SE-B1" should increase when depressing the accelerator pedal and should decrease at the moment "THRTL POS SEN" is closed (accelerator pedal is released).

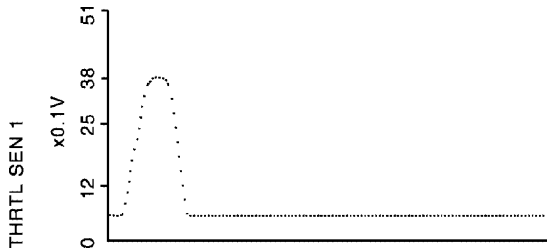

- "THRTL SEN 1" should increase while depressing the accelerator pedal and should decrease while releasing it.

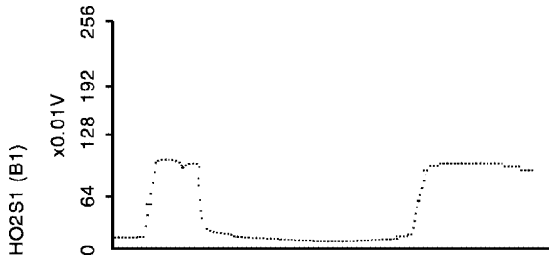

- "HO2S1 (B1)" may increase immediately after depressing the accelerator pedal and may decrease after releasing the pedal.

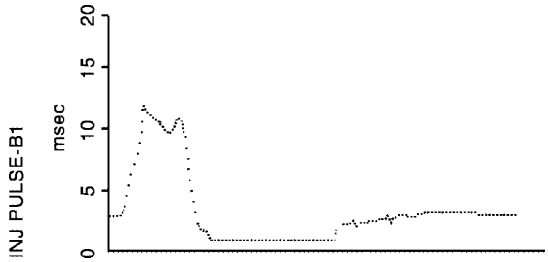

- "INJ PULSE-B1" should increase when depressing the accelerator pedal and should decrease when the pedal is released.

Trouble Diagnosis For Intermittent Incident

Description

Intermittent incidents (I/I) may occur. In many cases, the malfunction resolves itself (the part or circuit function returns to normal without intervention). It is important to realize that the symptoms described in the customer's complaint often do not recur on (1st trip) DTC visits. Realize also that the most frequent cause of Intermittent Incident occurrences is poor electrical connections. Because of this, the conditions under which the incident occurred may not be clear. Therefore, circuit checks made as part of the standard diagnostic procedure may not indicate the specific malfunctioning area.

COMMON INTERMITTENT INCIDENT REPORT SITUATIONS

STEP in Work Flow	Situation
II	The CONSULT-II is used. The SELF-DIAG RESULTS screen shows time data other than 0 or [1t].
III	The symptom described by the customer does not recur.
IV	DTC does not appear during the DTC Confirmation Procedure.
VI	The Diagnostic Procedure for PXXXX does not indicate the malfunctioning area.

Diagnostic Procedure

1. INSPECTION START

Erase DTCs.

>> GO TO 2.

2. CHECK GROUND TERMINALS

Check ground terminals for corroding or loose connection.

Refer to "HOW TO PERFORM EFFICIENT DIAGNOSES FOR AN ELECTRICAL INCEDENT", GI-15, "Incident Simulation Tests".

OK or NG

OK >> GO TO 3.

NG >> Repair or replace.

3. SEARCH FOR ELECTRICAL INCIDENT

Perform "HOW TO PERFORM EFFICIENT DIAGNOSES FOR AN ELECTRICAL INCIDENT", GI-15, "Incident Simulation Tests".

OK or NG

OK >> INSPECTION END

NG >> Repair or replace.

Wiring Diagram

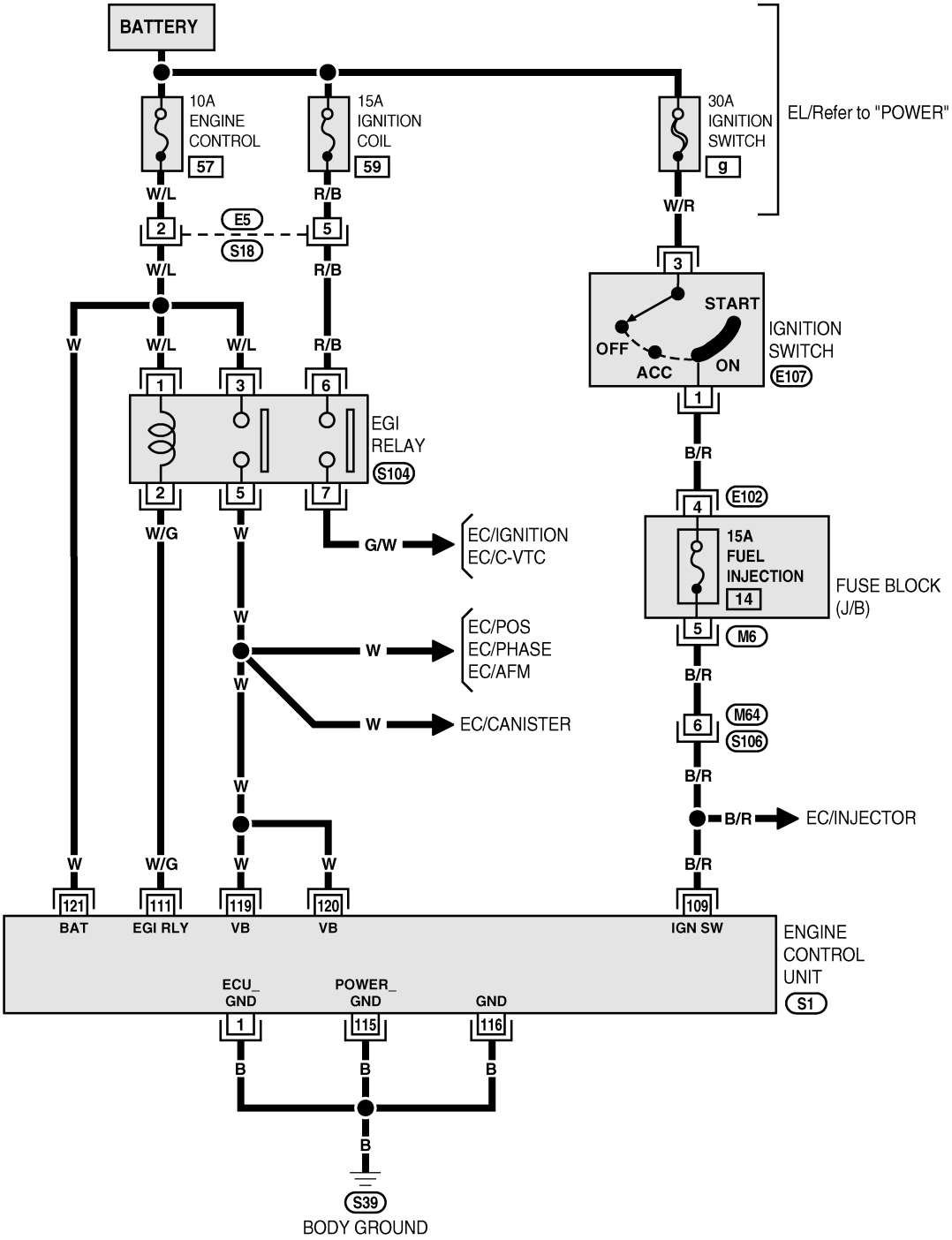

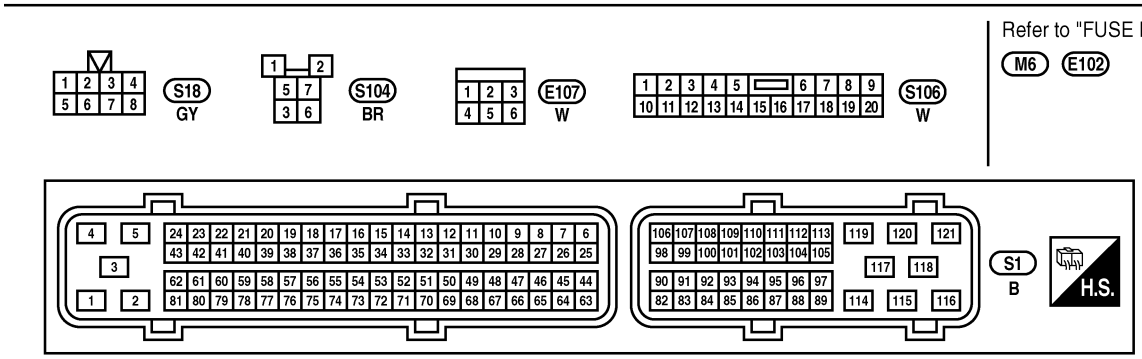

SEWK001_D1

Power Supply Circuit For ECM (Cont'd)

Specification data are reference values and are measured between each terminal and ground.

CAUTION:

Do not use ECM ground terminals when measuring input/output voltage. Doing so may result in damage to the ECM's transistor. Use a ground other than ECM terminals, such as the ground.

Terminal No.	Wire Color	Item	Condition	Data (DC Voltage)
1	B	ECM ground	**[Engine is running]** ● Idle speed	Engine ground
109	B/R	Ignition switch	**[Ignition switch OFF]**	Approximately 0 V
			[Ignition switch ON]	BATTERY VOLTAGE (11 - 14 V)
111	W/G	EGI relay (Self shut-off)	**[Engine is running]** **[Ignition switch OFF]** ● For a 4 seconds after turning ignition switch OFF	Approximately 0 V
			[Ignition switch OFF] ● More than a 4 seconds passed after turning ignition switch OFF	BATTERY VOLTAGE (11 - 14 V)
115 116	B B	ECM ground	**[Engine is running]** ● Idle speed	Engine ground
119 120	W W	Power supply for ECM	**[Ignition switch ON]**	BATTERY VOLTAGE (11 - 14 V)
121	W	Power supply for ECM (Back-up)	**[Ignition switch OFF]**	BATTERY VOLTAGE (11 - 14 V)

Diagnostic Procedure

1. INSPECTION START

Start engine.

Is engine running?

Yes or No

Yes >> GO TO 10.

No >> GO TO 2.

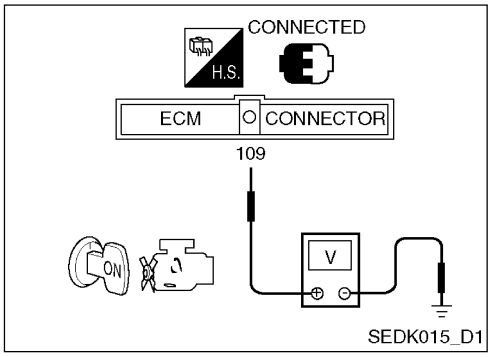

2. CHECK ECM POWER SUPPLY CIRCUIT

1. Turn ignition switch OFF and then ON.
2. Check voltage between ECM terminal 109 and ground with CONSULT-II or tester.

   Voltage: Battery voltage

   OK or NG

   OK >> GO TO 4.

   NG >> GO TO 3.

Power Supply Circuit For ECM (Cont'd)

3. DETECT MALFUNCTIONING PART

Check the following.

- Fuse block (J/B) connector M6
- 10A fuse
- Harness connectors M64, S106
- Harness for open or short between ECM and fuse

>> Repair open circuit or short to ground or short to power in harness or connectors.

4. CHECK ECM GROUND CIRCUIT FOR OPEN AND SHORT-I

1. Turn ignition switch OFF.
2. Disconnect ECM harness connector.
3. Check harness continuity between ECM terminals 1, 115, 116 and engine ground. Refer to Wiring Diagram.

   Continuity should exist.

4. Also check harness for short to power.

OK or NG

OK >> GO TO 6.

NG >> GO TO 5

5. DETECT MALFUNCTIONING PART

Check the following.

- Harness for open or short between ECM and engine ground.

>> Repair open circuit or short to power in harness or connectors.

6. CHECK ECM POWER SUPPLY CIRCUIT-II

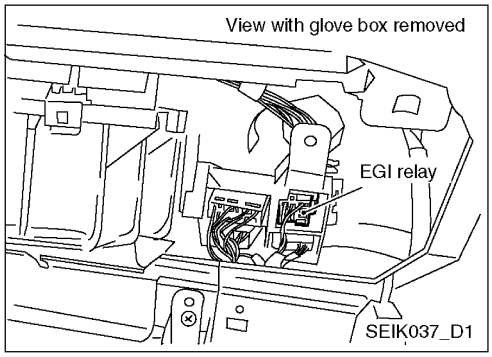

1. Disconnect EGI relay.

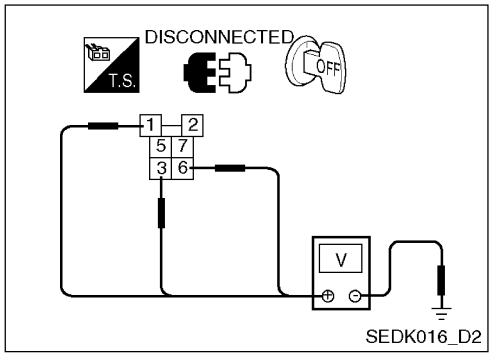

2. Check voltage between EGI relay terminals 1, 3, 6 and ground with CONSULT-II or tester.

   Voltage: Battery voltage

OK or NG

OK >> GO TO 8.

NG >> GO TO 7.

Power Supply Circuit For ECM (Cont'd)

7. DETECT MALFUNCTIONING PART

Check the following.

- Harness connectors E5, S18
- Fusible link and fuse box connectors
- 10A fuse
- 15A fuse
- Harness for open or short between EGI relay and battery.

>> Repair open circuit or short to ground or short to power in harness or connectors.

8. CHECK OUTPUT SIGNAL CIRCUIT FOR OPEN AND SHORT

1. Check harness continuity between ECM terminal 111 and EGI relay terminal 2.
   Refer to Wiring Diagram.

   Continuity should exist.

2. Also check harness for short to ground and short to power.

OK or NG

OK >> GO TO 9.

NG >> Repair open circuit or short to ground or short to power in harness or connectors.

9. CHECK EGI RELAY

Refer to EC-80, "Component Inspection".

OK or NG

OK >> Go to EC-118, "DTC P0350 IGNITION SIGNAL".

NG >> Replace EGI relay.

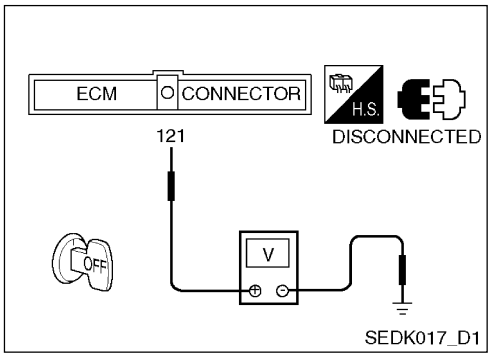

10. CHECK ECM POWER SUPPLY-III

1. Stop engine.
2. Check voltage between ECM terminal 121 and ground with CONSULT-II or tester.

   Voltage: Battery voltage

OK or NG

OK >> GO TO 12.

NG >> GO TO 11.

11. DETECT MALFUNCTIONING PART

Check the harness for open or short between ECM and harness connector S18.

>> Repair harness or connectors.

Power Supply Circuit For ECM (Cont'd)

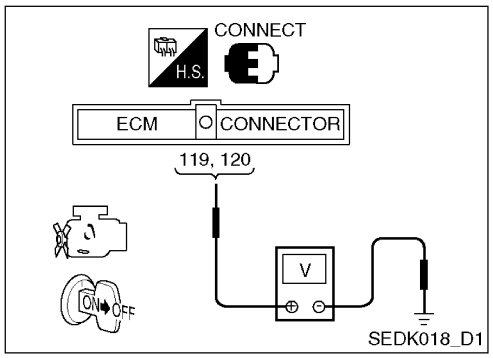

12. CHECK ECM POWER SUPPLY CIRCUIT-IV

1. Stop engine and wait at least 10 seconds.
2. Turn ignition switch ON and then OFF.
3. Check voltage between ECM terminals 119, 120 and ground with CONSULT-II or tester.

   Voltage: After turning ignition switch OFF, battery voltage will exist for a 4 seconds, then drop approximately 0V.

OK or NG

OK >> GO TO 17.

NG (Battery voltage does not exist.) >> GO TO 13.

NG (Battery voltage exists for more than a few seconds.) >>GO TO 15.

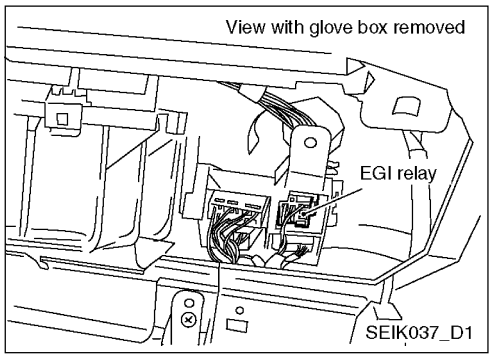

13. CHECK ECM POWER SUPPLY CIRCUIT-IV

1. Disconnect EGI relay.
2. Check voltage between EGI relay terminal 3 and ground with CONSULT-II or tester.

   Voltage: Battery voltage

OK or NG

OK >> GO TO 15.

NG >> GO TO 14.

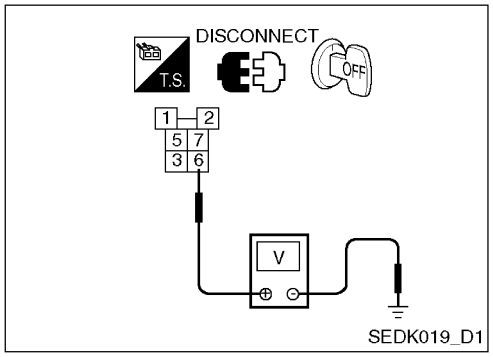

14. DETECT MALFUNCTIONING PART

Check the following.

- Harness for open or short between EGI relay and S18

  >> Repair open circuit or short to ground or short to power in harness or connectors.

Power Supply Circuit For ECM (Cont'd)

15. CHECK ECM POWER SUPPLY CIRCUIT-V

1. Disconnect ECM harness connector.
2. Check harness continuity between ECM terminals 119, 120 and EGI relay terminal 5.
   Refer to Wiring Diagram.

Continuity should exist.

3. Also check harness for short to ground and short to power.

OK or NG

OK >> GO TO 16.

NG >> Repair open circuit or short to ground or short to power in harness or connectors.

16. CHECK EGI RELAY

Refer to EC-80, "Component Inspection".

OK or NG

OK >> GO TO 17.

NG >> Replace EGI relay.

17. CHECK ECM GROUND CIRCUIT FOR OPEN AND SHORT-II

1. Check harness continuity between ECM terminals 1, 115, 116 and engine ground.
   Refer to Wiring Diagram.

Continuity should exist.

2. Also check harness for short to power.

OK or NG

OK >> GO TO 19.

NG >> GO TO 18.

18. DETECT MALFUNCTIONING PART

Check the following

- Harness for open or short between ECM and engine ground
  >> Repair open circuit or short to power in harness or connectors.

19. CHECK INTERMITTENT INCIDENT

Refer to EC-74, "TROUBLE DIAGNOSIS FOR INTERMITTENT INCIDENT".

>> **INSPECTION END**

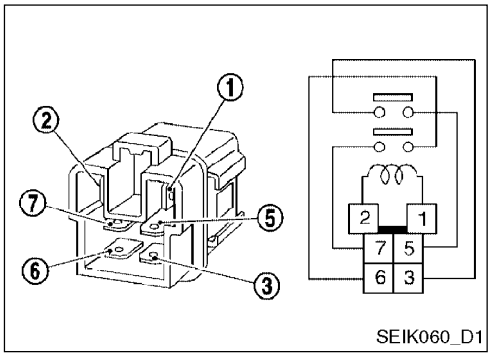

Component Inspection

EGI RELAY

1. Apply 12V direct current between ECM relay terminals 1 and 2.
2. Check continuity between relay terminals 3 and 5, 6 and 7.

DTC U1000, U1001 CAN Communication Line

Description

CAN (Controller Area Network) is a serial communication line for real time application. It is an on-vehicle multiplex communication line with high data communication speed and excellent error detection ability. Many electronic control units are equipped onto a vehicle, and each control unit shares information and links with other control units during operation (not independent). In CAN communication, control units are connected with 2 communication lines (CAN H line, CAN L line) allowing a high rate of information transmission with less wiring.

Each control unit transmits/receives data but selectively reads required data only.

On Board Diagnosis Logic

The MIL will not light up for this diagnosis.

DTC No.	Trouble Diagnosis Name	DTC Detecting Condition	Possible Cause
U1000 1000	CAN communication line	● ECM cannot communicate to other control units. ● ECM cannot communicate for more than the specified time.	● Harness or connectors (CAN communication line is open or shorted.)
U1001 1001			
U0426 0426			

DTC Confirmation Procedure

1. Turn ignition switch ON and wait at least 3 seconds.
2. Select “DATA MONITOR” mode with CONSULT-II.
3. If 1st trip DTC is detected, go to EC-83, “Diagnostic Procedure”.

Wiring Diagram

EC/AT Communication

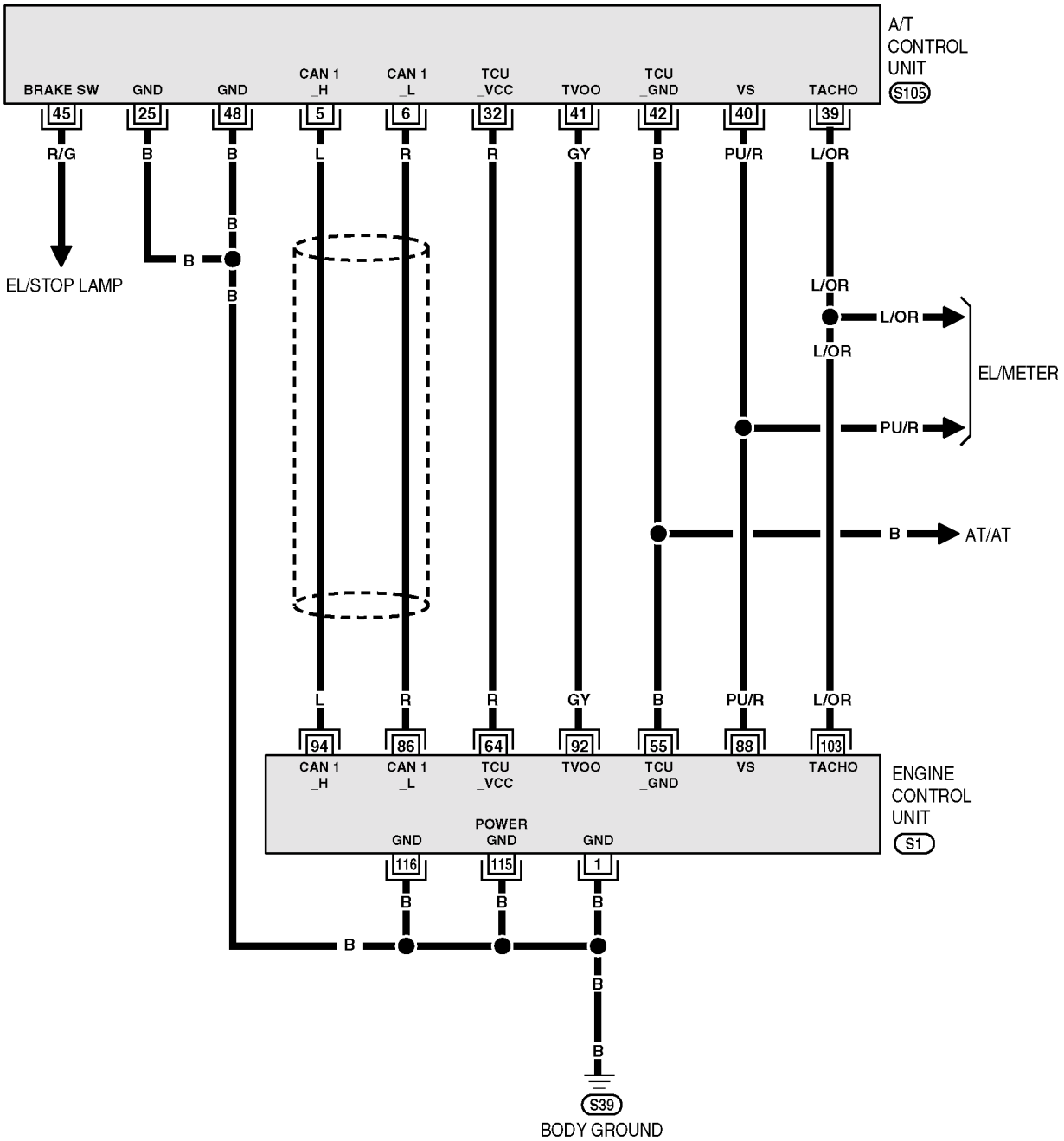

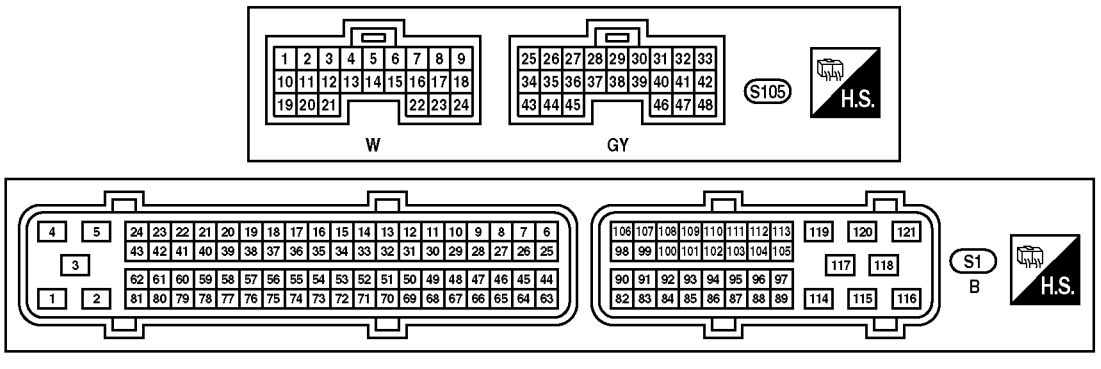

DTC U1000, U1001 CAN Communication Line (Cont'd)

Diagnostic Procedure

GO TO LAN section.

MEMO:

DTC P1065 ECM Power Supply

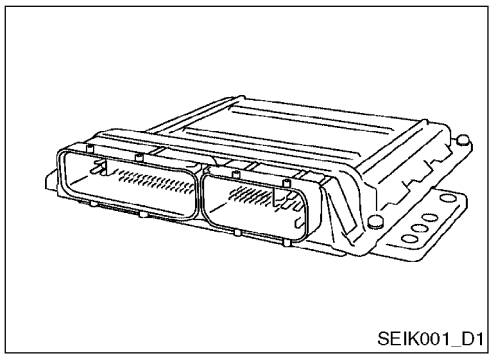

Component Description

Battery voltage is supplied to the ECM even when the ignition switch is turned OFF for the ECM memory function of the DTC memory, the air fuel ratio feedback compensation value memory, the idle air volume learning value memory, etc.

ECM Power Supply

On Board Diagnosis Logic

DTC No.	Trouble Diagnosis Name	DTC Detecting Condition	Possible Cause
P1065 1065	ECM power supply circuit	ECM back up RAM system does not function properly.	● Harness or connectors [ECM power supply (back-up) circuit is open or shorted.] ● ECM

DTC Confirmation Procedure

NOTE:

- **If DTC Confirmation Procedure has been previously conducted, always turn ignition switch OFF and wait at least 10 seconds before conducting the next test.**

With CONSULT-II

1. Turn ignition switch ON and wait at least 1 second.
2. Select “DATA MONITOR” mode with CONSULT-II.
3. Start engine and let it idle for 1 second.
4. Turn ignition switch OFF, wait at least 10 seconds, and then turn ON.
5. Repeat steps 3 and 4 for 4 times.
6. If 1st trip DTC is detected, go to EC-87, “Diagnostic Procedure”.

Without CONSULT-II

1. Turn ignition switch ON and wait at least 1 second.
2. Start engine and let it idle for 1 second.
3. Turn ignition switch OFF, wait at least 10 seconds and then turn ON.
4. Repeat steps 2 and 3 for 4 times.
5. Turn ignition switch OFF, wait at least 10 seconds and then turn ON.
6. Perform Diagnostic Test Mode II (Self-diagnostic results).
7. If 1st trip DTC is detected, go to EC-87, “Diagnostic Procedure”.

Wiring Diagram

EC/ECM Power Supply

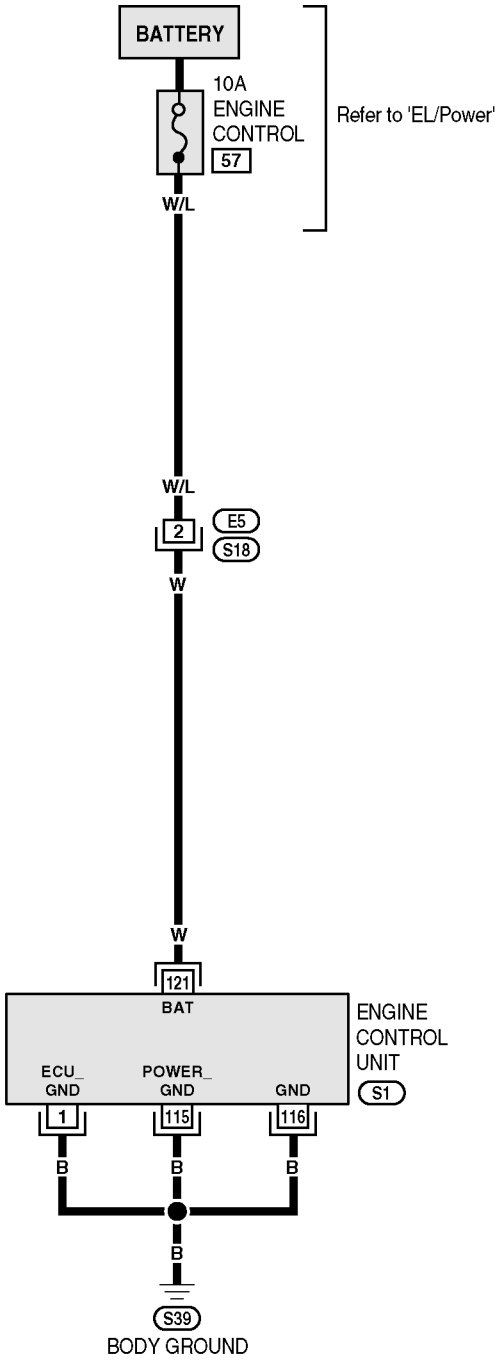

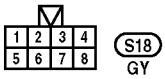

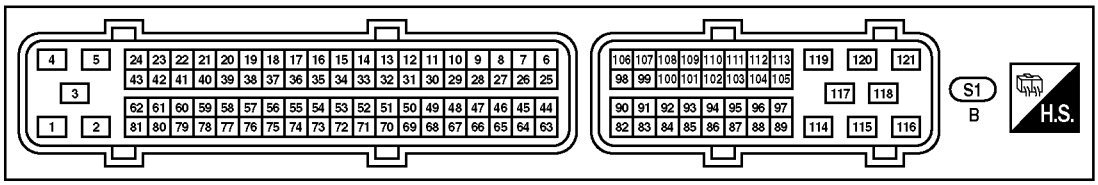

SEWK027_D1

DTC P1065 ECM Power Supply (Cont'd)

Specification data are reference values and are measured between each terminal and ground.

CAUTION:

- **Do not use ECM ground terminals when measuring input/output voltage. Doing so may result in damage to the ECM's transistor. Use a ground other than ECM terminals, such as the ground.**

Terminal No.	Wire Color	Item	Condition	Data (DC Voltage)
121	W	Power supply for ECM (Back-up)	**[Ignition switch OFF]**	BATTERY VOLTAGE (11 - 14 V)

Diagnostic Procedure

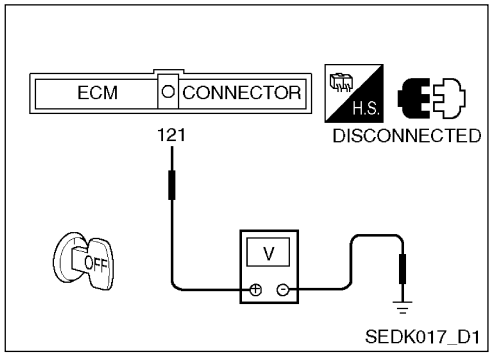

1. CHECK ECM POWER SUPPLY

1. Turn ignition switch OFF.
2. Disconnect ECM harness connector.
3. Check voltage between ECM terminal 121 and ground with CONSULT-II or tester.

   Voltage: Battery voltage

OK or NG

OK >> GO TO 3.

NG >> GO TO 2.

2. DETECT MALFUNCTIONING PART

Check the following.

- Harness connectors E5, S18
- Fusible link and fuse box connector
- 10A fuse
- Harness for open or short between ECM and battery

>> Repair open circuit or short to ground or short to power in harness or connectors.

3. CHECK INTERMITTENT INCIDENT

Refer to EC-74, "TROUBLE DIAGNOSIS FOR INTERMITTENT INCIDENT".

OK or NG

OK >> GO TO 4.

NG >> Repair open circuit or short to ground or short to power in harness or connectors.

DTC P1065 ECM Power Supply (Cont'd)

4. PERFORM DTC CONFIRMATION PROCEDURE

With CONSULT-II

1. Turn ignition switch ON.
2. Select "SELF DIAG RESULTS" mode with CONSULT-II.
3. Touch "ERASE".
4. Perform DTC Confirmation Procedure.
   See EC-85.
5. Is the DTC P1065 displayed again?

Without CONSULT-II

1. Turn ignition switch ON.
2. Erase the Diagnostic Test Mode II (Self-diagnostic results) memory.
3. Perform DTC Confirmation Procedure.
   See EC-85.
4. Is the DTC P1065 displayed again?

Yes or No

Yes >> GO TO 5.

No >> **INSPECTION END**

5. REPLACE ECM

1. Replace ECM.
2. Perform EC-23, "Accelerator Pedal Released Position Learning".
3. Perform EC-23, "Throttle Valve Closed Position Learning".
4. Perform EC-24, "Idle Air Volume Learning".

>>**INSPECTION END**

DTC P0340 Camshaft Position Sensor (PHASE) Circuit

Component Description

The camshaft position sensor (PHASE) senses the retraction of intake valve camshaft to identify a particular cylinder. The camshaft position sensor (PHASE) senses the piston position. When the crankshaft position sensor (POS) system becomes inoperative, the camshaft position sensor (PHASE) provides various controls of engine parts instead, utilizing timing of cylinder identification signals.

The sensor consists of a permanent magnet and Hall IC.

When engine is running, the high and low parts of the teeth cause the gap with the sensor to change.

The changing gap causes the magnetic field near the sensor to change.

Due to the changing magnetic field, the voltage from the sensor changes.

On Board Diagnosis Logic

DTC No.	Trouble Diagnosis Name	DTC Detecting Condition	Possible Cause
P0340 0340	Camshaft position sensor (PHASE) circuit	The cylinder No. signal is not sent to ECM for the first few seconds during engine cranking. The cylinder No. signal is not set to ECM during engine running. The cylinder No. signal is not in the normal pattern during engine running.	Harness or connectors (The sensor circuit is open or shorted.) Camshaft position sensor (PHASE) Camshaft (Intake) Starter motor Starting system circuit Dead (Weak) battery

DTC Confirmation Procedure

NOTE:

If DTC Confirmation Procedure has been previously conducted, always turn ignition switch OFF and wait at least 10 seconds before conducting the next test.

TESTING CONDITION:

Before performing the following procedure, confirm that battery voltage is more than 10.5V with ignition switch ON.

With CONSULT-II

1. Turn ignition switch ON.
2. Select “DATA MONITOR” mode with CONSULT-II.
3. Crank engine for at least 2 seconds and run it for at least 5 seconds at idle speed.
4. If DTC is detected, go to EC-92, “Diagnostic Procedure”. If DTC is not detected, go to next step.
5. Maintain engine speed at more than 800 rpm for at least 5 seconds.
6. If DTC is detected, go to EC-92, “Diagnostic Procedure”.

Without CONSULT-II

1. Crank engine for at least 2 seconds and run it for at least 5 seconds at idle speed.
2. Turn ignition switch OFF, wait at least 10 seconds and then turn ON.
3. Perform Diagnostic Test Mode II (Self-diagnostic results).
4. If DTC is detected, go to EC-92, “Diagnostic Procedure”. If DTC is not detected, go to next step.

DTC P0340 Camshaft Position Sensor (PHASE) Circuit

5. Turn ignition switch OFF and wait at least 10 seconds.
6. Start engine and maintain engine speed at more than 800 rpm for at least 5 seconds.
7. Turn ignition switch OFF, wait at least 10 seconds and then turn ON.
8. Perform Diagnostic Test Mode II (Self-diagnostic results).
9. If DTC is detected, go to EC-92, “Diagnostic Procedure”.

Wiring Diagram

EC/PHASE

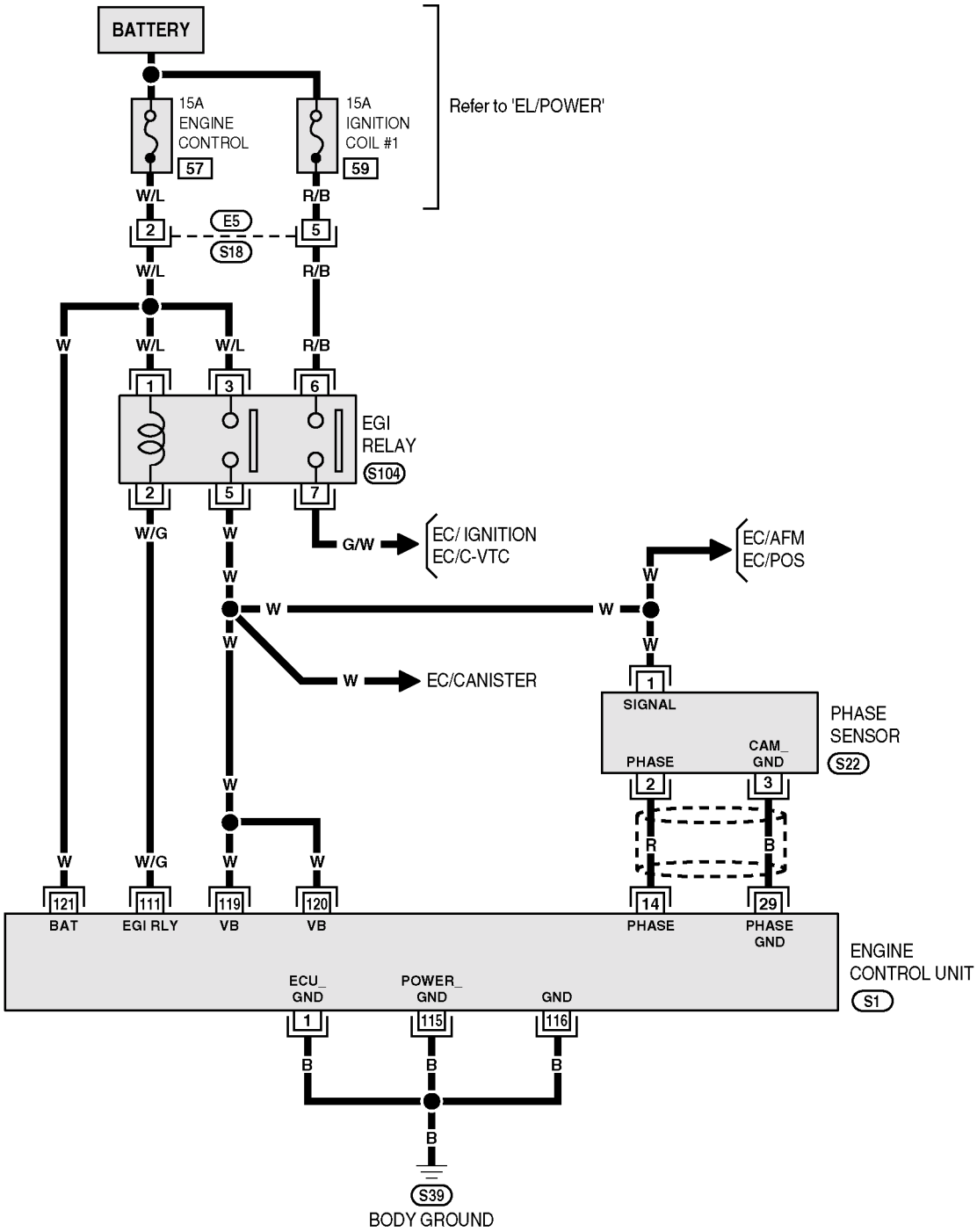

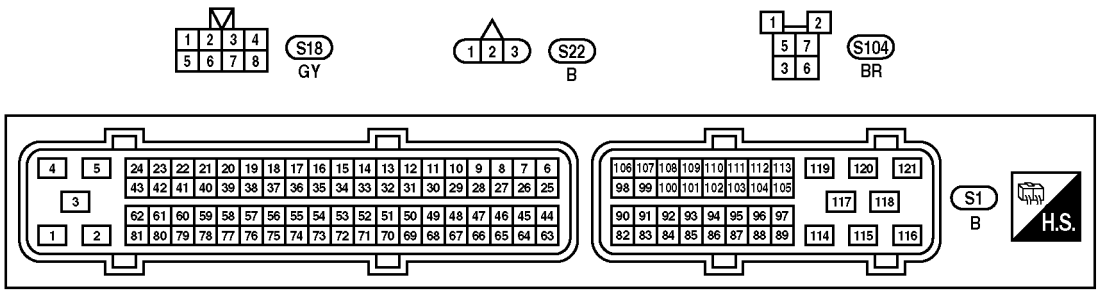

SEWK004_D1

DTC P0340 Camshaft Position Sensor (PHASE) Circuit (Cont'd)

Specification data are reference values and are measured between each terminal and ground. Pulse signal is measured by CONSULT-II.

CAUTION:

- **Do not use ECM ground terminals when measuring input/output voltage. Doing so may result in damage to the ECM's transistor. Use a ground other than ECM terminals, such as the ground.**

Terminal No.	Wire Color	Item	Condition	Data (DC Voltage)
14*1	R	Camshaft position sensor (PHASE)	**[Engine is running]** ● Warm-up condition ● Idle speed	1.0 - 4.0 V ★ 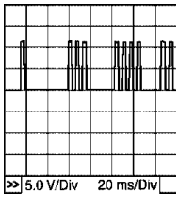
			[Engine is running] ● Engine speed is 2,000 rpm.	1.0 - 4.0 V ★ 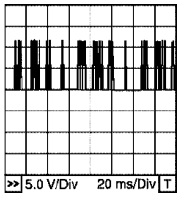
29	B	Camshaft position sensor (PHASE) ground	**[Engine is running]** ● Idle speed	Approximately 0 V

★ : Average voltage for pulse signal (Actual pulse signal can be confirmed by oscilloscope.)

Diagnostic Procedure

1. CHECK STARTING SYSTEM

Turn ignition switch to START position.

Does the engine turn over?

Does the starter motor operate?

Yes or No

Yes >> GO TO 2.

No >> Check starting system.

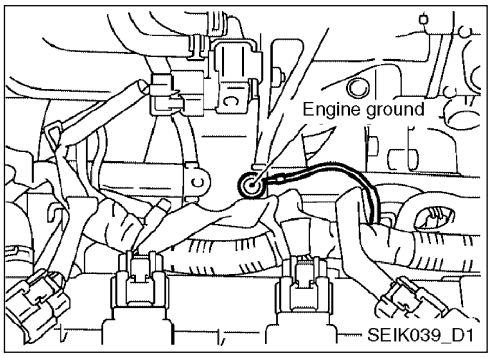

2. RETIGHTEN GROUND SCREWS

1. Turn ignition switch OFF.
2. Loosen and retighten engine ground screws.

>> GO TO 3.

DTC P0340 Camshaft Position Sensor (PHASE) Circuit (Cont'd)

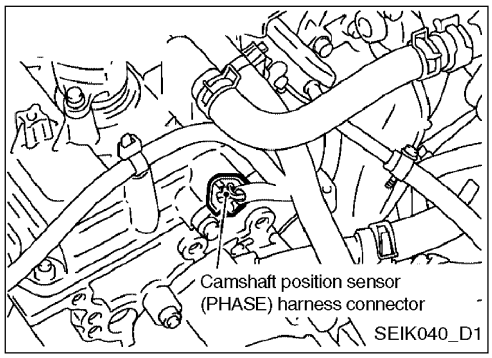

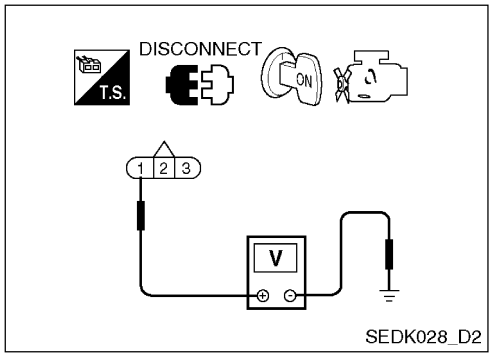

3. CHECK CMP SENSOR (PHASE) POWER SUPPLY CIRCUIT

1. Disconnect camshaft position (CMP) sensor (PHASE) harness connector.
2. Turn ignition switch ON.
3. Check voltage between CMP sensor (PHASE) terminal 1 and ground with CONSULT-II or tester.

   Voltage: Battery voltage
4. Also check harness for short to ground and short to power.

OK or NG

OK >> GO TO 5.

NG >> GO TO 4.

4. DETECT MALFUNCTIONING PART

Check the following.

- Harness for open or short between camshaft position sensor (PHASE) and ECM
- Harness for open or short between camshaft position sensor (PHASE) and ECM relay

>> Repair open circuit or short to ground or short to power in harness or connectors.

DTC P0340 Camshaft Position Sensor (PHASE) Circuit (Cont'd)

5. CHECK CMP SENSOR (PHASE) GROUND CIRCUIT FOR OPEN AND SHORT

1. Turn ignition switch OFF.
2. Disconnect ECM harness connector.
3. Check harness continuity between ECM terminal 29 and CMP sensor (PHASE) terminal 3.

   Continuity should exist.

4. Also check harness for short to ground and short to power.

OK or NG

OK >> GO TO 6.

NG >> Repair open circuit or short to ground or short to power in harness or connectors.

6. CHECK CMP SENSOR (PHASE) INPUT SIGNAL CIRCUIT FOR OPEN AND SHORT

1. Check harness continuity between ECM terminal 14 or 13 and CMP sensor (PHASE) terminal 2.

   Refer to Wiring Diagram.

   Continuity should exist.

2. Also check harness for short to ground or short to power.

OK or NG

OK >> GO TO 7.

NG >> Repair open circuit or short to ground or short to power in harness or connectors.

7. CHECK CAMSHAFT POSITION SENSOR (PHASE)

Refer to EC-95, "Component Inspection".

OK or NG

OK >>GO TO 9.

NG >> Replace camshaft position sensor (PHASE).

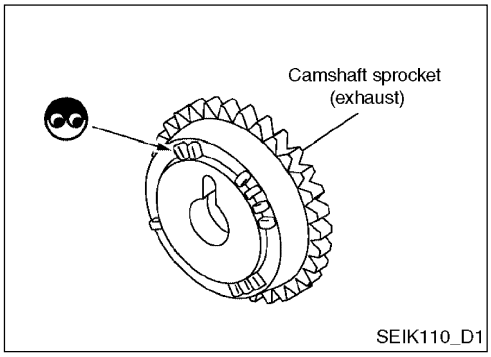

8. CHECK CAMSHAFT SPROCKET (EXHAUST)

Check the following.

- Accumulation of debris to the signal plate of camshaft sprocket
- Chipping signal plate of camshaft sprocket

OK or NG

OK >> GO TO 10.

NG >> Remove debris and clean the signal plate of camshaft sprocket.

DTC P0340 Camshaft Position Sensor (PHASE) Circuit (Cont'd)

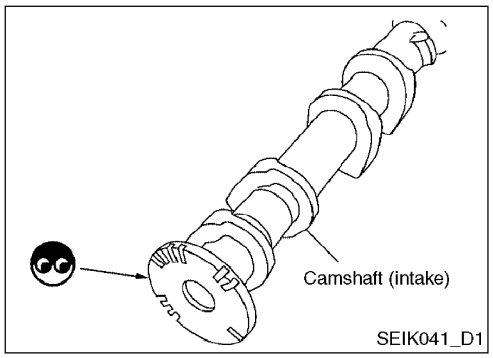

9. CHECK CAMSHAFT (INTAKE)

Check the following.

- Accumulation of debris to the signal plate of camshaft rear end
- Chipping signal plate of camshaft rear end

OK or NG

OK >> GO TO 10.

NG >> Remove debris and clean the signal plate of camshaft rear end or replace camshaft.

10. CHECK INTERMITTENT INCIDENT

Refer to EC-74, "TROUBLE DIAGNOSIS FOR INTERMITTENT INCIDENT".

>>**INSPECTION END**

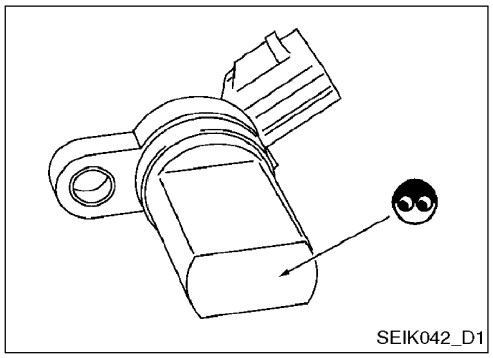

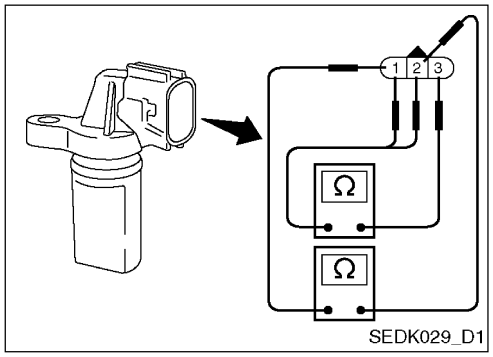

Component Inspection

CAMSHAFT POSITION SENSOR (PHASE)

1. Loosen the fixing bolt of the sensor.
2. Disconnect camshaft position sensor (PHASE) harness connector.
3. Remove the sensor.
4. Visually check the sensor for chipping.
5. Check resistance as shown in the figure.

Terminal No. (Polarity)	Resistance Ω [at 25°C (77°F)]
3 (+) - 1 (-)	Except 0 or α
3 (+) - 2 (-)	
2 (+) - 1 (-)	

Removal and Installation

CAMSHAFT POSITION SENSOR (PHASE)

Refer to "CYLINDER HEAD" (QG16: EM-40).

DTC P0335 Crankshaft Position Sensor (POS) Circuit

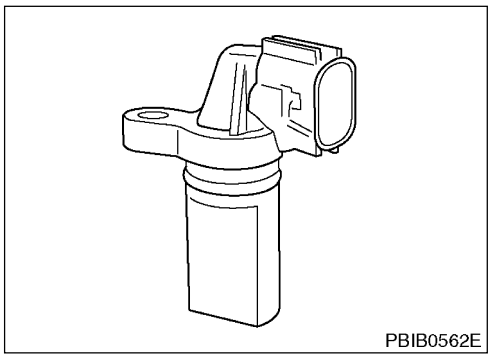

Component Description

The crankshaft position sensor (POS) is located on the cylinder block rear housing facing the gear teeth (cogs) of the signal plate at the end of the crankshaft. It detects the fluctuation of the engine revolution.

The sensor consists of a permanent magnet and Hall IC.

When the engine is running, the high and low parts of the teeth cause the gap with the sensor to change.

The changing gap causes the magnetic field near the sensor to change.

Due to the changing magnetic field, the voltage from the sensor changes.

The ECM receives the voltage signal and detects the fluctuation of the engine revolution.

CONSULT-II REFERENCE VALUE IN DATA MONITOR MODE

Monitor Item	Condition	Specification
ENG SPEED	● Run engine and compare CONSULT-II value with the tachometer indication.	Almost the same speed as the tachometer indication.

On Board Diagnosis Logic

DTC No.	Trouble Diagnosis Name	DTC Detecting Condition	Possible Cause
P0335 0335	Crankshaft position sensor (POS) circuit	● The crankshaft position sensor (POS) signal is not detected by the ECM during the first few seconds of engine cranking. ● The proper pulse signal from the crankshaft position sensor (POS) is not sent to ECM while the engine is running. ● The crankshaft position sensor (POS) signal is not in the normal pattern during engine running.	● Harness or connectors (The sensor circuit is open or shorted.) ● Crankshaft position sensor (POS) ● Signal plate

DTC Confirmation Procedure

NOTE:

- **If DTC Confirmation Procedure has been previously conducted, always turn ignition switch OFF and wait at least 10 seconds before conducting the next test.**

TESTING CONDITION:

Before performing the following procedure, confirm that battery voltage is more than 10.5V with ignition switch ON.

With CONSULT-II

1. Turn ignition switch ON and select “DATA MONITOR” mode with CONSULT-II.
2. Crank engine for at least 2 seconds and run it for at least 5 seconds at idle speed.
3. If DTC is detected, go to EC-99, “Diagnostic Procedure”.

DTC P0335 Crankshaft Position Sensor (POS) Circuit (Cont'd)

Without CONSULT-II

1. Crank engine for at least 2 seconds and run it for at least 5 seconds at idle speed.
2. Turn ignition switch OFF, wait at least 10 seconds and then turn ON.
3. Perform Diagnostic Test Mode II (Self-diagnostic results) with ECM.
4. If DTC is detected, go to EC-99, "Diagnostic Procedure".

Wiring Diagram

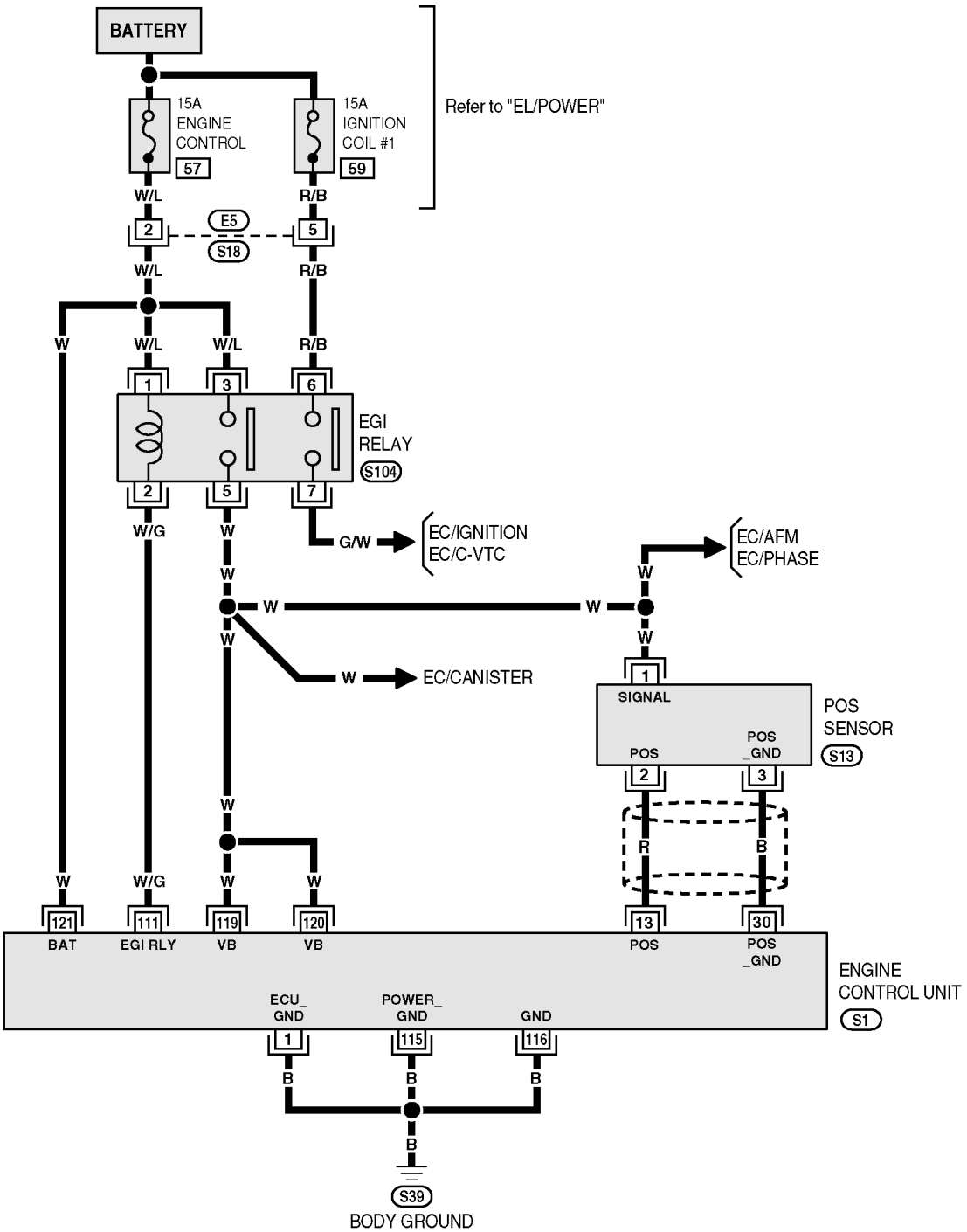

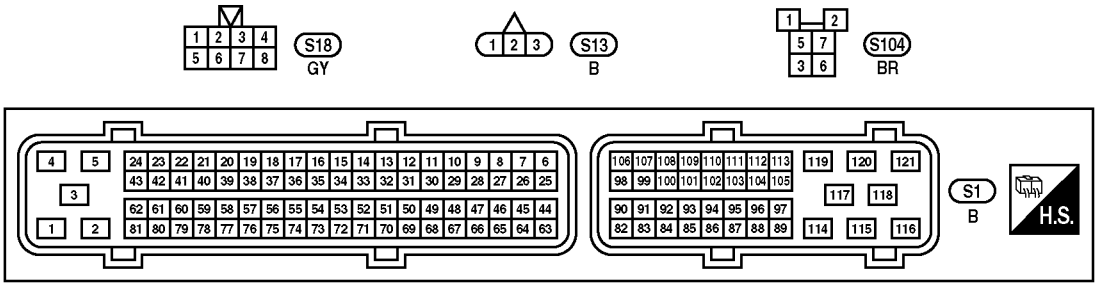

SEWK003_D1

DTC P0335 Crankshaft Position Sensor (POS) Circuit (Cont'd)

Specification data are reference values and are measured between each terminal and ground.
Pulse signal is measured by CONSULT-II.

CAUTION:

- **Do not use ECM ground terminals when measuring input/output voltage. Doing so may result in damage to the ECM's transistor. Use a ground other than ECM terminals, such as the ground.**

Terminal No.	Wire Color	Item	Condition	Data (DC Voltage)
13	R	Crankshaft position sensor (POS)	**[Engine is running]** ● Warm-up condition ● Idle speed	Approximately 3.0 V ★ 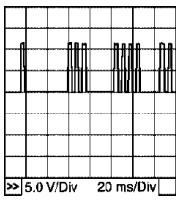
			[Engine is running] ● Engine speed is 2,000 rpm.	Approximately 3.0 V ★ 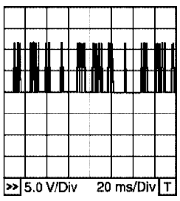
30	B	Crankshaft position sensor (POS) ground	**[Engine is running]** ● Idle speed	Approximately 0 V

★ : Average voltage for pulse signal (Actual pulse signal can be confirmed by oscilloscope.)

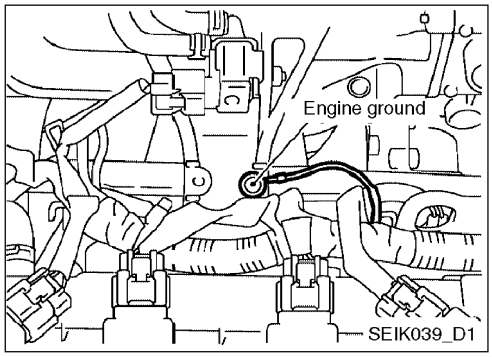

Diagnostic Procedure

1. RETIGHTEN GROUND SCREWS

1. Turn ignition switch OFF.
2. Loosen and retighten engine ground screws.
   >> GO TO 2.

DTC P0335 Crankshaft Position Sensor (POS) Circuit (Cont'd)

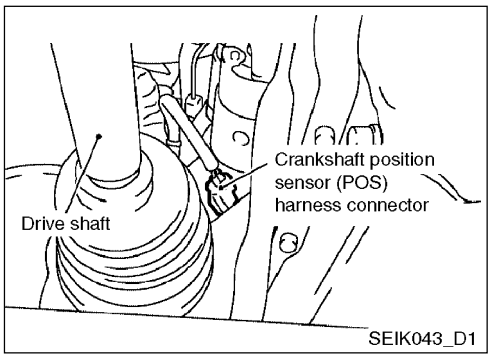

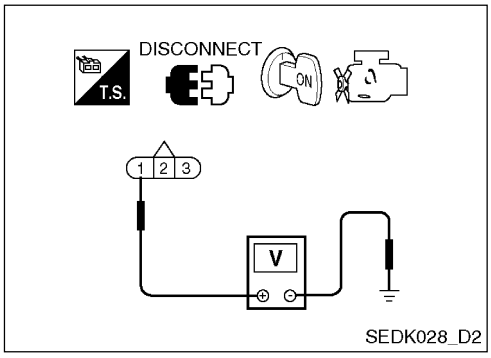

2. CHECK CKP SENSOR (POS) POWER SUPPLY CIRCUIT

1. Disconnect crankshaft position (CKP) sensor (POS) harness connector.
2. Turn ignition switch ON.
3. Check voltage between CKP sensor (POS) terminal 1 and ground with CONSULT-II or tester.

   Voltage: Battery voltage
4. Also check harness for short to ground and short to power.

OK or NG

OK >> GO TO 4.

NG >> GO TO 3.

3. DETECT MALFUNCTIONING PART

Check the following.

- Harness for open or short between crankshaft position sensor (POS) and ECM
- Harness for open or short between crankshaft position sensor (POS) and ECM relay

>> Repair open circuit or short to ground or short to power in harness or connectors.

4. CHECK CKP SENSOR (POS) GROUND CIRCUIT FOR OPEN AND SHORT

1. Turn ignition switch OFF.
2. Disconnect ECM harness connector.
3. Check harness continuity between ECM terminal 30 and CKP sensor (POS) terminal 3.

   Refer to Wiring Diagram.

   Continuity should exist.
4. Also check harness for and short to ground and short to power.

OK or NG

OK >> GO TO 5.

NG >> Repair open circuit or short to ground or short to power in harness or connectors.

DTC P0335 Crankshaft Position Sensor (POS) Circuit (Cont'd)

5. CHECK CKP SENSOR (POS) INPUT SIGNAL CIRCUIT FOR OPEN AND SHORT

1. Check harness continuity between ECM terminal 13 and CKP sensor (POS) terminal 2.
   Refer to Wiring Diagram.
   Continuity should exist.
2. Also check harness for short to ground and short to power.

OK or NG

OK >> GO TO 6.

NG >> Repair open circuit or short to ground or short to power in harness or connectors.

6. CHECK CRANKSHAFT POSITION SENSOR (POS)

Refer to EC-101, "Component Inspection".

OK or NG

OK >> GO TO 7.

NG >> Replace crankshaft position sensor (POS).

7. CHECK GEAR TOOTH

Visually check for chipping signal plate gear tooth.

OK or NG

OK >> GO TO 8.

NG >> Replace the signal plate.

8. CHECK INTERMITTENT INCIDENT

Refer to EC-74, "TROUBLE DIAGNOSIS FOR INTERMITTENT INCIDENT".

>> **INSPECTION END**

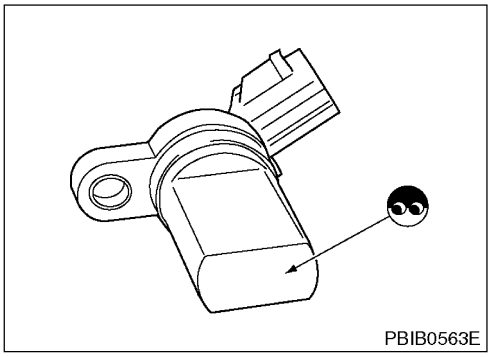

Component Inspection

CRANKSHAFT POSITION SENSOR (POS)

1. Loosen the fixing bolt of the sensor.
2. Disconnect crankshaft position sensor (POS) harness connector.
3. Remove the sensor.
4. Visually check the sensor for chipping.

DTC P0335 Crankshaft Position Sensor (POS) Circuit (Cont'd)

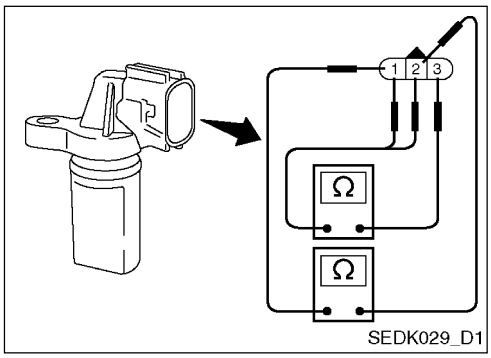

5. Check resistance as shown in the figure.

Terminal No. (Polarity)	Resistance Ω [at 25°C (77°F)]
3 (+) - 1 (-)	Except 0 or α
3 (+) - 2 (-)	
2 (+) - 1 (-)	

6. If NG, replace crankshaft position sensor (POS).

Removal and Installation

CRANKSHAFT POSITION SENSOR (POS)

Refer to "CYLINDER BLOCK" (QG16: EM-60).

DTC P0102, P0103 Mass Air Flow Sensor Circuit

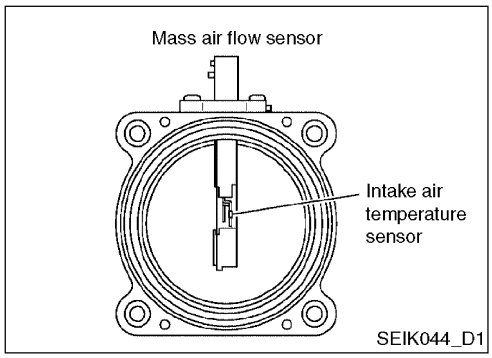

Component Description

The mass air flow sensor is placed in the stream of intake air. It measures the intake flow rate by measuring a part of the entire intake flow. It consists of a hot film that is supplied with electric current from the ECM. The temperature of the hot film is controlled by the ECM a certain amount. The heat generated by the hot film is reduced as the intake air flows around it. The more air, the greater the heat loss.

Therefore, the ECM must supply more electric current to maintain the temperature of the hot film as air flow increases. The ECM detects the air flow by means of this current change.

CONSULT-II REFERENCE VALUE IN DATA MONITOR MODE

Monitor Item	Condition		Specification
MAS A/F SE-B1	● Air conditioner switch: OFF ● Shift lever: N (A/T models) Neutral (M/T models) ● No-load	Idle	Approx. 0.8 V
		2,500 rpm	Approx. 1.5 - 2.1 V

On Board Diagnosis Logic

These self-diagnoses have the one trip detection logic.

DTC No.	Trouble Diagnosis Name	DTC Detecting Condition	Possible Cause
P0102	Mass air flow sensor circuit low input	An excessively low voltage from the sensor is sent to ECM when engine is running.	● Harness or connectors (The sensor circuit is open or shorted.) ● Intake air leaks ● Mass air flow sensor
P0103	Mass air flow sensor circuit high input	An excessively high voltage from the sensor is sent to ECM.	● Harness or connectors (The sensor circuit is open or shorted.) ● Mass air flow sensor

Fail-Safe Mode

When the malfunction is detected, the ECM enters fail-safe mode and the MIL lights up.

Detected Items	Engine Operating Condition In Fail-Safe Mode
Mass air flow sensor circuit	Engine speed will not rise more than 2,400 rpm due to the fuel cut.

DTC Confirmation Procedure

NOTE:

- **If DTC Confirmation Procedure has been previously conducted, always turn ignition switch OFF and wait at least 10 seconds before conducting the next test.**

PROCEDURE FOR DTC P0102

With CONSULT-II

1. Turn ignition switch ON.

DTC P0102, P0103 Mass Air Flow Sensor Circuit (Cont'd)

2. Select "DATA MONITOR" mode with CONSULT-II.
3. Start engine and wait at least 5 seconds.
4. If DTC is detected, go to EC-106, "Diagnostic Procedure".

Without CONSULT-II

1. Start engine and wait 5 seconds at most.
2. Tarn ignition switch OFF, wait at least 10 seconds and then turn ON.
3. Perform Diagnostic Test Mode II (Self-diagnostic results).
4. If DTC is detected, go to EC-106, "Diagnostic Procedure".

With CONSULT-II

1. Turn ignition switch ON.
2. Select "DATA MONITOR" mode with CONSULT-II.
3. Wait at least 5 seconds.
4. If DTC is detected, go to EC-106, "Diagnostic Procedure".
   If DTC is not detected, go to next step.
5. Start engine and wait at least 5 seconds.
6. If DTC is detected, go to EC-106, "Diagnostic Procedure".

Without CONSULT-II

1. Turn ignition switch ON and wait at least 5 seconds.
2. Turn ignition switch OFF, wait at least 10 seconds and then turn ON.
3. Perform Diagnostic Test Mode II (Self-diagnostic results).
4. If DTC is detected, go to EC-106, "Diagnostic Procedure".
   If DTC is not detected, go to next step.
5. Turn ignition switch OFF and wait at least 10 seconds.
6. Start engine and wait at least 5 seconds.
7. Turn ignition switch OFF, wait at least 10 seconds and then turn ON.
8. Perform Diagnostic Test Mode II (Self-diagnostic results).
9. If DTC is detected, go to EC-106, "Diagnostic Procedure".

Wiring Diagram

EC/AFM

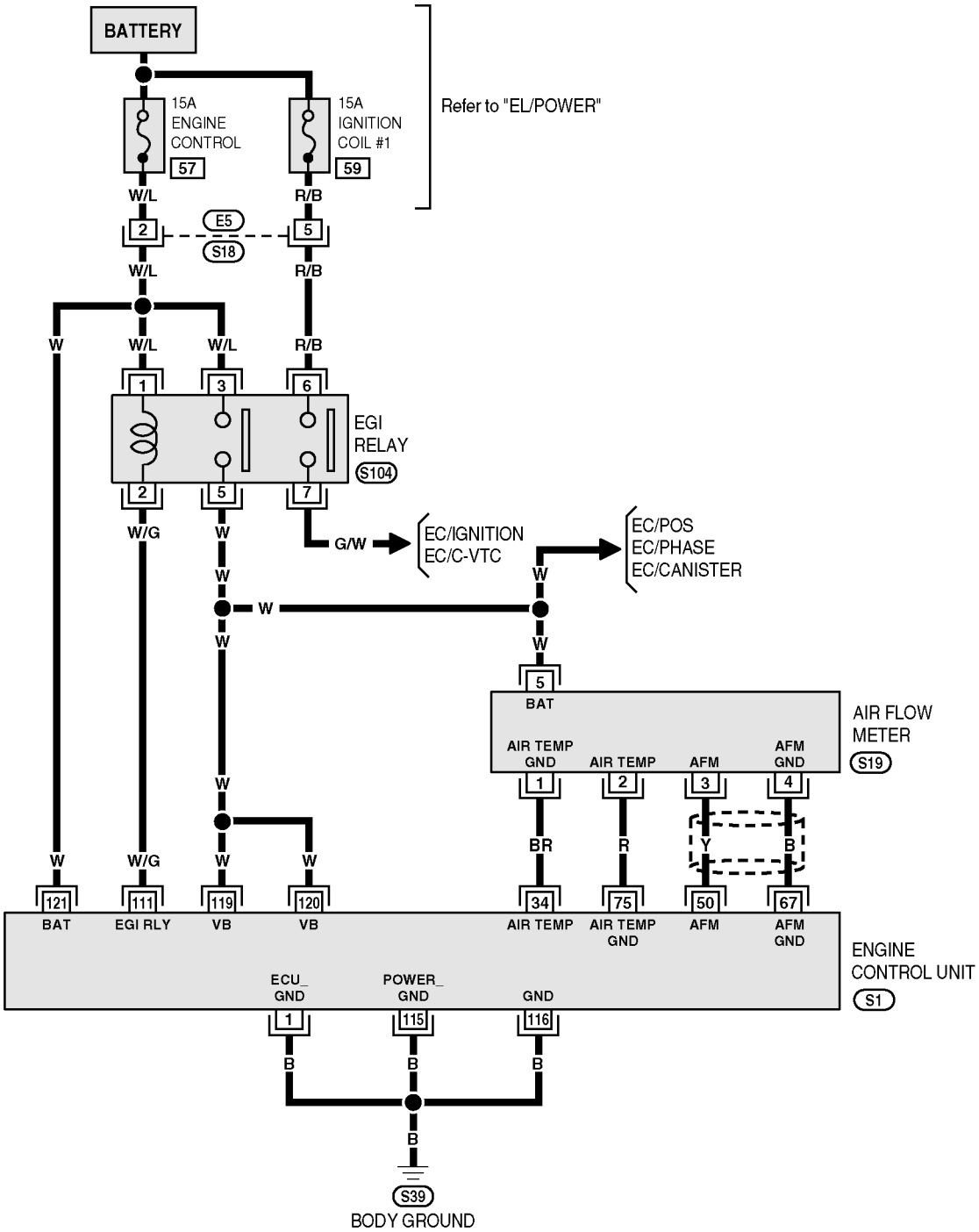

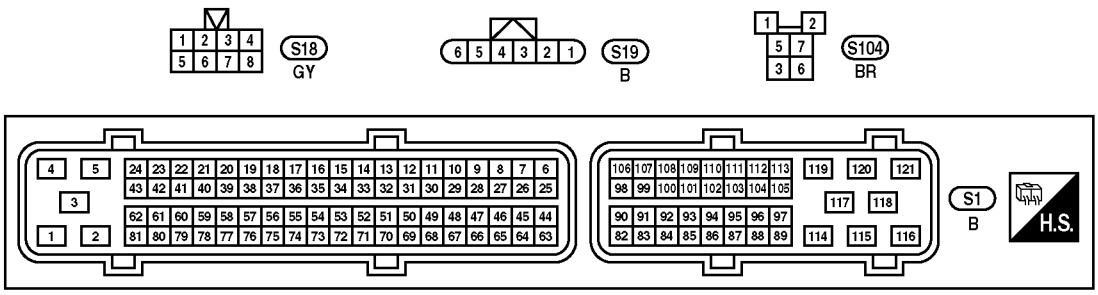

SEWK024_D1

DTC P0102, P0103 Mass Air Flow Sensor Circuit (Cont'd)

Specification data are reference values and are measured between each terminal and ground.

CAUTION:

- **Do not use ECM ground terminals when measuring input/output voltage. Doing so may result in damage to the ECM's transistor. Use a ground other than ECM terminals, such as the ground.**

Terminal No.	Wire Color	Item	Condition	Data (DC Voltage)
50	Y	Mass air flow sensor	**[Engine is running]** ● Warm-up condition ● Idle speed	Approximately 0.8 V
			[Engine is running] ● Warm-up condition ● Engine speed is 2,500 rpm.	1.5 - 2.1 V
67	B	Sensor ground	**[Engine is running]** ● Warm-up condition ● Idle speed	Approximately 0 V

Diagnostic Procedure

1. INSPECTION START

Which malfunction (P0102 or P0103) is duplicated?

P0102 or P0103

P0102 >> GO TO 2.

P0103 >> GO TO 3.

2. CHECK INTAKE SYSTEM

Check the following for connection.

- Air duct
- Vacuum hoses
- Intake air passage between air duct to intake manifold

OK or NG

OK >> GO TO 3.

NG >> Reconnect the parts.

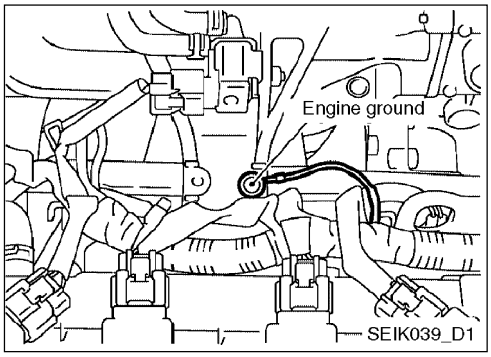

3. RETIGHTEN GROUND SCREWS

1. Turn ignition switch OFF.
2. Loosen and retighten engine ground screws.

>> GO TO 4.

DTC P0102, P0103 Mass Air Flow Sensor Circuit (Cont'd)

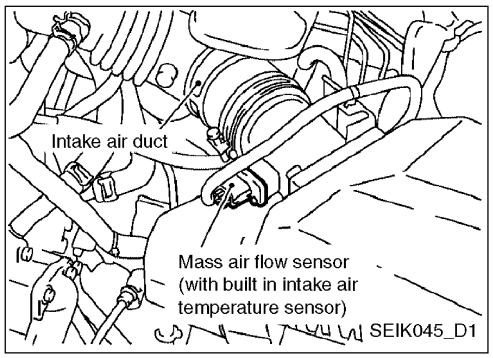

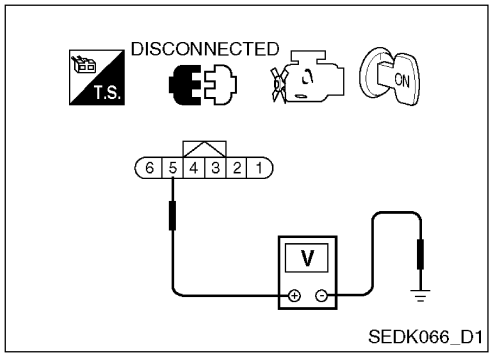

4. CHECK MAF SENSOR POWER SUPPLY CIRCUIT

1. Disconnect MAF sensor harness connector.
2. Turn ignition switch ON.
3. Check voltage between MAF sensor terminals 2 and ground with CONSULT-II or tester.

   Voltage: Battery voltage

OK or NG

OK >> GO TO 6.

NG >> GO TO 5.

5. DETECT MALFUNCTIONING PART

Check the following.

- Harness for open or short between mass air flow sensor and ECM
- Harness for open or short between mass air flow sensor and EGI relay

>> Repair open circuit or short to ground or short to power in harness or connectors.

6. CHECK MAF SENSOR GROUND CIRCUIT FOR OPEN AND SHORT

1. Turn ignition switch OFF.
2. Disconnect ECM harness connector.
3. Check harness continuity between MAF sensor terminal 4 and ECM terminal 67.

   Refer to Wiring Diagram.

   Continuity should exist.

4. Also check harness for short to ground and short to power.

OK or NG

OK >> GO TO 7.

NG >> Repair open circuit or short to ground or short to power in harness or connectors.

DTC P0102, P0103 Mass Air Flow Sensor Circuit (Cont'd)

7. CHECK MAF SENSOR INPUT SIGNAL CIRCUIT FOR OPEN AND SHORT

1. Check harness continuity between MAF sensor terminal 3 and ECM terminal 50.

   Refer to Wiring Diagram.

   Continuity should exist.

2. Also check harness for short to ground and short to power.

OK or NG

OK >> GO TO 8.

NG >> Repair open circuit or short to ground or short to power in harness or connectors.

8. CHECK MASS AIR FLOW SENSOR

Refer to EC-108, "Component Inspection".

OK or NG

OK >> GO TO 9.

NG >> Replace mass air flow sensor.

9. CHECK INTERMITTENT INCIDENT

Refer to EC-74, "TROUBLE DIAGNOSIS FOR INTERMITTENT INCIDENT".

>> INSPECTION END

Component Inspection

MASS AIR FLOW SENSOR

1. Reconnect harness connectors disconnected.
2. Start engine and warm it up to normal operating temperature.
3. Check voltage between ECM terminal 50 (Mass air flow sensor signal) and ground.

Condition	Voltage V
Ignition switch "ON" (Engine stopped.)	Approx. 0.4
Idle (Engine is warmed-up to normal operating temperature.)	Approx. 0.8
2,500 rpm (Engine is warmed-up to normal operating temperature.)	1.5 - 2.1
Idle to about 4,000 rpm*	Approx. 0.8 to Approx. 4.0

*: Check for liner voltage rise in response to engine being increased to about 4,000 rpm.

4. If the voltage is out of specification, proceed the following.
   a) Turn ignition switch OFF.
   b) Disconnect mass air flow sensor harness connector and reconnect it again.
   c) Perform steps 2 and 3 again.
5. If NG, remove mass air flow sensor from air duct. Check hot film for damage or dust.
6. If NG, clean or replace mass air flow sensor.

DTC P0112, P0113 Intake Air Temperature Sensor Circuit

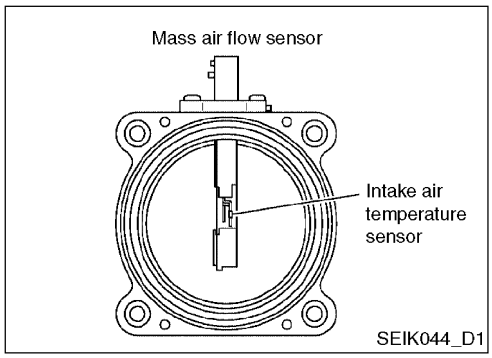

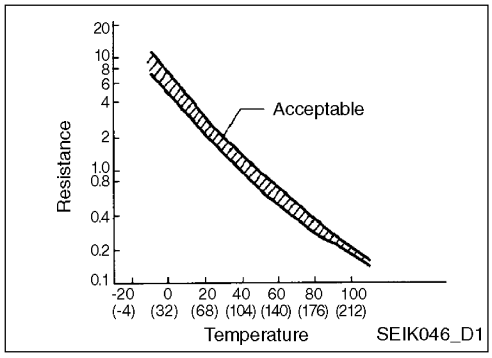

Component Description

The intake air temperature sensor is built into mass air flow sensor. The sensor detects intake air temperature and transmits a signal to the ECM.

The temperature sensing unit uses a thermistor which is sensitive to the change in temperature. Electrical resistance of the thermistor decreases in response to the temperature rise.

<Reference data>

Intake air temperature °C (°F)	Voltage* V	Resistance kΩ
-10	4.43	7.9 ~ 9.3
25	3.32	1.9 ~ 2.1
80	1.23	0.31 ~ 0.37

*: These data are reference values and are measured between ECM terminal 75 (Intake air temperature sensor) and body ground.

CAUTION:

- **Do not use ECM ground terminals when measuring input/ output voltage. Doing so may result in damage to the ECM's transistor. Use a ground other than ECM terminals, such as the ground.**

On Board Diagnosis Logic

These self-diagnoses have the one trip detection logic.

DTC No.	Trouble Diagnosis Name	DTC Detecting Condition	Possible Cause
P0112 0112	Intake air temperature sensor circuit low input	An excessively low voltage from the sensor is sent to ECM.	• Harness or connectors (The sensor circuit is open or shorted.) • Intake air temperature sensor
P0113 0113	Intake air temperature sensor circuit high input	An excessively high voltage from the sensor is sent to ECM.	

DTC Confirmation Procedure

NOTE:

- **If DTC Confirmation Procedure has been previously conducted, always turn ignition switch OFF and wait at least 10 seconds before conducting the next test.**

With CONSULT-II

1. Turn ignition switch ON.
2. Select "DATA MONITOR" mode with CONSULT-II.
3. Start engine and wait at least 5 seconds.
4. If DTC is detected, go to EC-111, "Diagnostic Procedure".

Wiring Diagram

EC/AFM

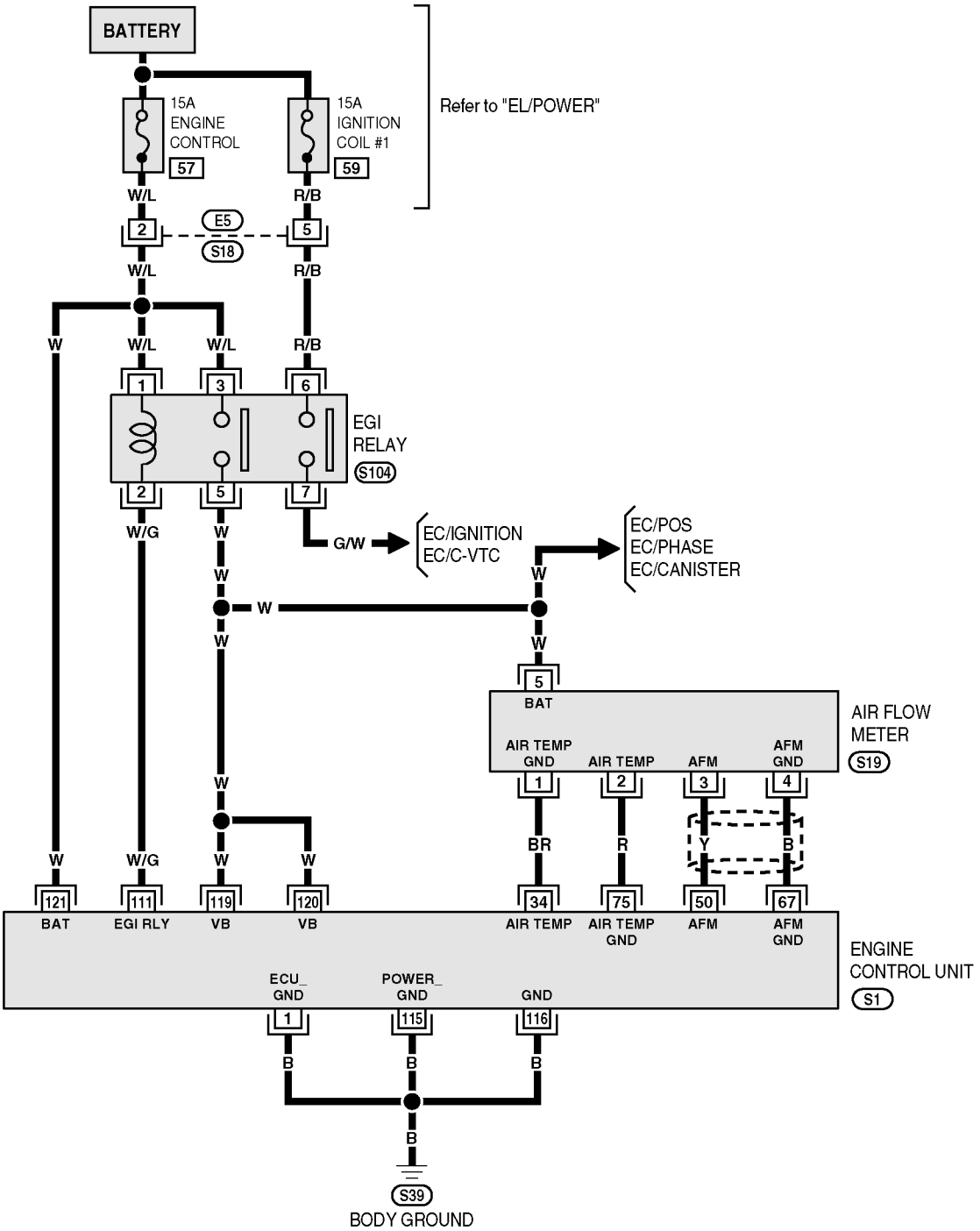

SEWK024_D1

DTC P0112, P0113 Intake Air Temperature Sensor Circuit (Cont'd)

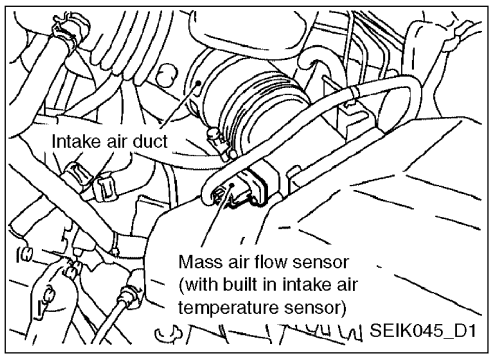

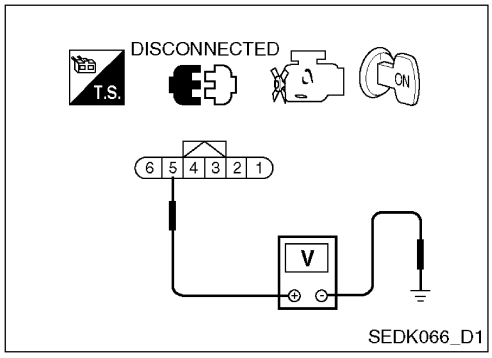

Diagnostic Procedure

1. CHECK INTAKE AIR TEMPERATURE SENSOR POWER SUPPLY CIRCUIT

1. Turn ignition switch OFF.
2. Disconnect mass air flow sensor (intake air temperature sensor is built-into) harness connector.
3. Turn ignition switch ON.
4. Check voltage between mass air flow sensor terminal 5 and ground.

   Voltage: Battery voltage

OK or NG

OK >> GO TO 2.

NG >> Repair open circuit or short to ground or short to power in harness or connectors.

2. CHECK INTAKE AIR TEMPERATURE SENSOR GROUND CIRCUIT FOR OPEN AND SHORT

1. Turn ignition switch OFF.
2. Disconnect ECM harness connector.
3. Check harness continuity between ECM terminal 34 and mass air flow sensor terminal 1.

   Refer to Wiring Diagram.

   Continuity should exist.
4. Also check harness for short to ground and short to power.

OK or NG

OK >> GO TO 3.

NG >> Repair open circuit or short to ground or short to power in harness or connectors.

3. CHECK INTAKE AIR TEMPERATURE SENSOR

Refer to EC-112, "Component Inspection".

OK or NG

OK >> GO TO 4.

NG >> Replace mass air flow sensor (with intake air temperature sensor).

4. CHECK INTERMITTENT INCIDENT

Refer to EC-74, "TROUBLE DIAGNOSIS FOR INTERMITTENT INCIDENT".

>> **INSPECTION END**

DTC P0112, P0113 Intake Air Temperature Sensor Circuit (Cont'd)

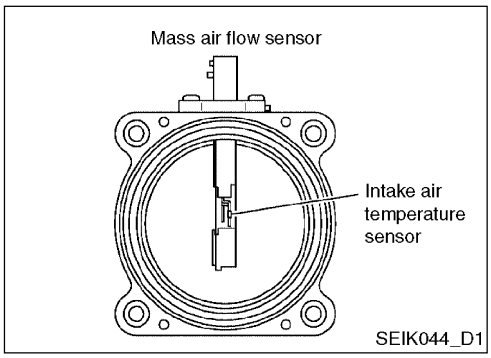

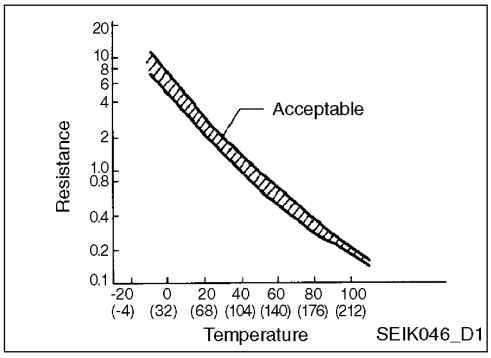

Component Inspection

INTAKE AIR TEMPERATURE SENSOR

1. Check resistance between intake air temperature sensor terminals 1 and 2 under the following conditions.

Intake air temperature °C (°F)	Resistance kΩ
25 (77)	1.94 ~ 2.06

2. If NG, replace mass air flow sensor (with intake air temperature sensor).

CAUTION:

- **Discard any heated oxygen sensor which has been dropped from a height of more than 0.5 m (19.7 in) onto a hard surface such as a concrete floor; use a new one.**
- **Before installing new oxygen sensor, clean exhaust system threads using oxygen sensor thread cleaner and approved anti-seize lubricant.**

Removal and Installation

MASS AIR FLOW SENSOR

Refer to "Air Cleaner • Air Duct" (QG15: EM-11).

DTC P0117, P0118 Engine Coolant Temperature Sensor Circuit

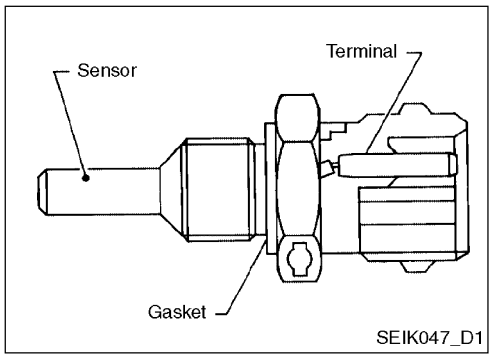

Component Description

The engine coolant temperature sensor is used to detect the engine coolant temperature. The sensor modifies a voltage signal from the ECM. The modified signal returns to the ECM as the engine coolant temperature input. The sensor uses a thermistor which is sensitive to the change in temperature. The electrical resistance of the thermistor decreases as temperature increases.

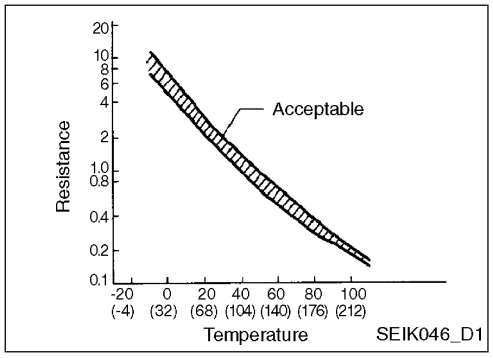

<Reference data>

Intake air temperature °C (°F)	Voltage* V	Resistance kΩ
-10	4.4	7.0 ~ 11.4
20	3.5	2.1 ~ 2.9
50	2.2	0.68 ~ 1.00
90	0.9	0.236 ~ 0.260

*: These data are reference values and are measured between ECM terminal 72 (Engine coolant temperature sensor) and ground.

CAUTION:

- **Do not use ECM ground terminals when measuring input/output voltage. Doing so may result in damage to the ECM's transistor. Use a ground other than ECM terminals, such as the ground.**

On Board Diagnosis Logic

DTC No.	Trouble Diagnosis Name	DTC Detecting Condition	Possible Cause
P0117 0117	Engine coolant temperature sensor circuit low input	An excessively low voltage from the sensor is sent to ECM.	• Harness or connectors (The sensor circuit is open or shorted.) • Engine coolant temperature sensor
P0118 0118	Engine coolant temperature sensor circuit high input	An excessively high voltage from the sensor is sent to ECM.	

Fail-Safe Mode

When the DTC is detected, the ECM enters fail-safe mode and the MIL lights up.

Detected Items	Engine Operating Condition In Fail-Safe Mode	
Engine coolant temperature sensor circuit	Engine coolant temperature will be determined by ECM based on the time after turning ignition switch ON or START. CONSULT-II displays the engine coolant temperature decided by ECM.	
	Condition	Engine coolant temperature decided (CONSULT-II display)
	Just as ignition switch is turned ON or Start	40°C (104°F)
	More than approx. 4 minutes after ignition ON or Start	80°C (176°F)
	Except as shown above	40 - 80°C (104 - 176°F) (Depends on the time)
	When the fail-safe system for engine coolant temperature sensor is activated, the cooling fan operates while engine is running.	

DTC P0117, P0118 Engine Coolant Temperature Sensor Circuit (Cont'd)

NOTE:

- **If DTC Confirmation Procedure has been previously conducted, always turn ignition switch OFF and wait at least 10 seconds before conducting the next test.**

With CONSULT-II

1. Turn ignition switch ON.
2. Select "DATA MONITOR" mode with CONSULT-II.
3. Wait at least 5 seconds.
4. If DTC is detected, go to EC-116, "Diagnostic Procedure".

Without CONSULT-II

1. Turn ignition switch ON and wait at least 5 seconds.
2. Turn ignition switch OFF, wait at least 10 seconds and then turn ON.
3. Perform Diagnostic Test Mode II (Self-diagnostic results).
4. If DTC is detected, go to EC-116, "Diagnostic Procedure".

Wiring Diagram

EC/WTS

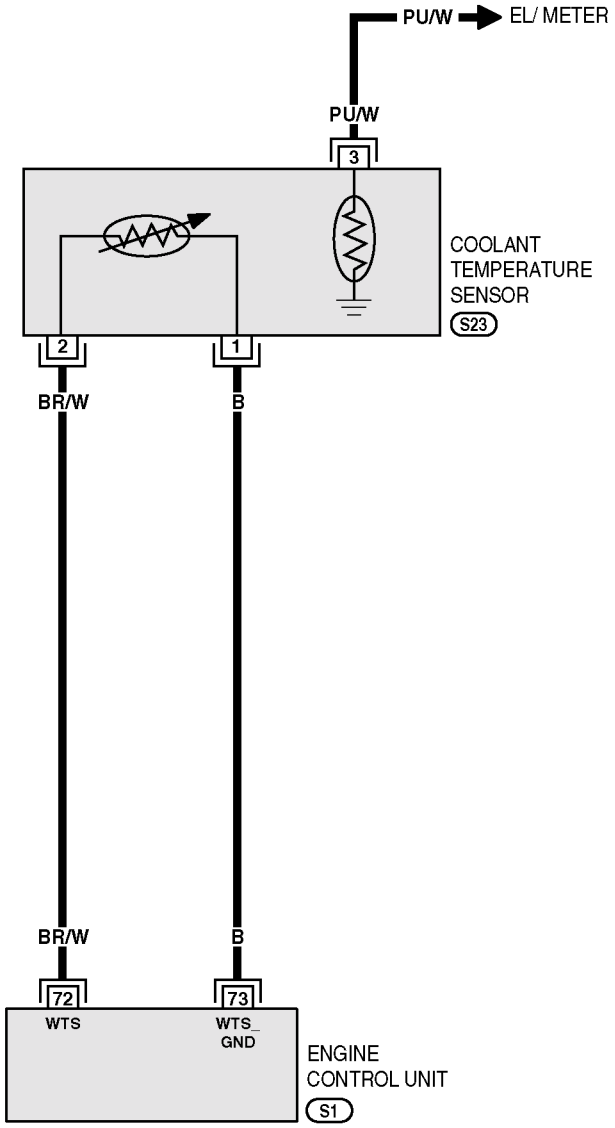

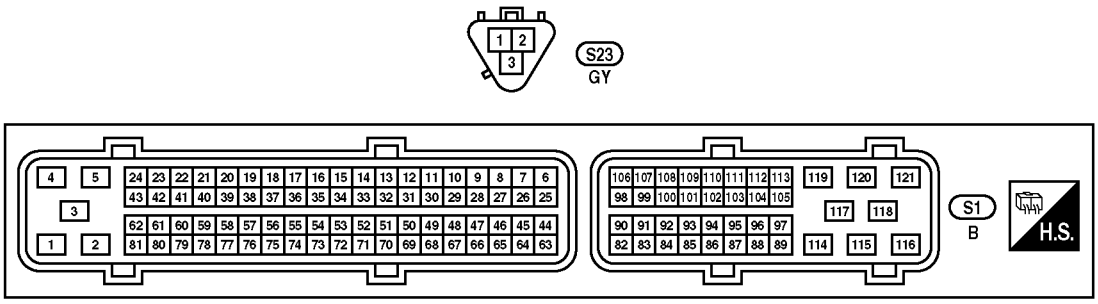

SEWK005_D1

DTC P0117, P0118 Engine Coolant Temperature Sensor Circuit (Cont'd)

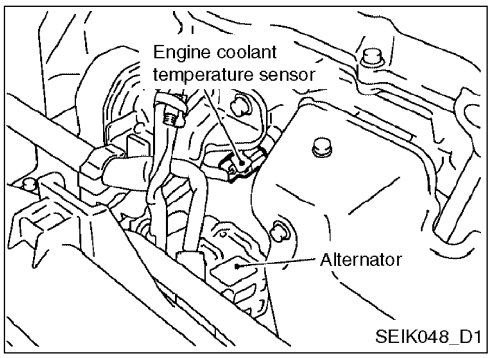

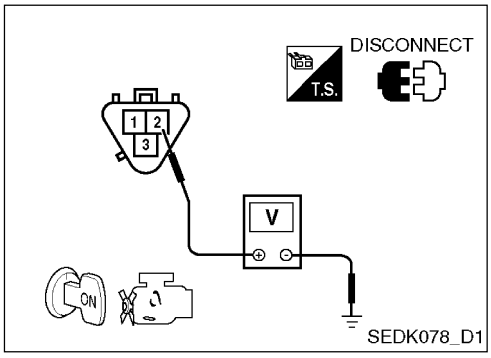

Diagnostic Procedure

1. CHECK ECT SENSOR POWER SUPPLY CIRCUIT

1. Turn ignition switch OFF.
2. Disconnect engine coolant temperature (ECT) sensor harness connector.
3. Turn ignition switch ON.
4. Check voltage between ECT sensor terminal 2 and ground with CONSULT-II or tester.

   Voltage: Approximately 5V

OK or NG

OK >> GO TO 2.

NG >> Repair open circuit or short to ground or short to power in harness or connectors.

2. CHECK ECT SENSOR GROUND CIRCUIT FOR OPEN AND SHORT

1. Turn ignition switch OFF.
2. Disconnect ECM harness connector.
3. Check harness continuity between ECT sensor terminal 1 and ECM terminal 73.

   Refer to Wiring Diagram.

   Continuity should exist.

4. Also check harness for short to ground and short to power.

OK or NG

OK >> GO TO 3.

NG >> Repair open circuit or short to ground or short to power in harness or connectors.

3. CHECK ENGINE COOLANT TEMPERATURE SENSOR

Refer to EC-117, "Component Inspection".

OK or NG

OK >> GO TO 4.

NG >> Replace engine coolant temperature sensor.

4. CHECK INTERMITTENT INCIDENT

Refer to EC-74, "TROUBLE DIAGNOSIS FOR INTERMITTENT INCIDENT".

>> **INSPECTION END**

DTC P0117, P0118 Engine Coolant Temperature Sensor Circuit (Cont'd)

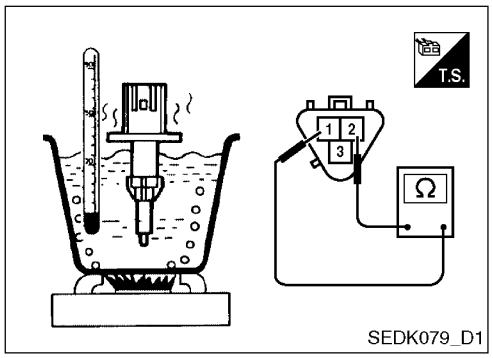

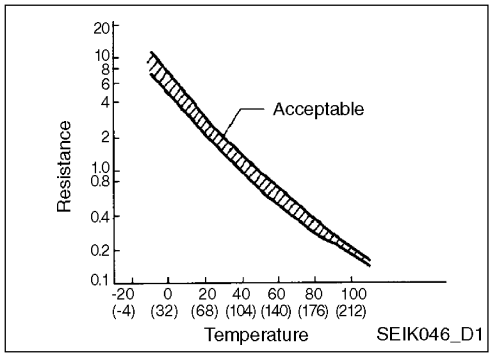

Component Inspection

ENGINE COOLANT TEMPERATURE SENSOR

1. Check resistance between engine coolant temperature sensor terminals 1 and 2 as shown in the figure.

<Reference data>

Intake air temperature °C (°F)	Voltage* V	Resistance kΩ
20	3.5	2.1 ~ 2.9
50	2.2	0.68 ~ 1.00
90	0.9	0.236 ~ 0.260

*: These data are reference values and are measured between ECM terminal 72 (Engine coolant temperature sensor) and ground.

2. If NG, replace engine coolant temperature sensor.

Removal and Installation

ENGINE COOLANT TEMPERATURE SENSOR

Refer to "OUTER COMPONENT PARTS" (QG16: EM-13).

DTC P0350 Ignition Signal Primary

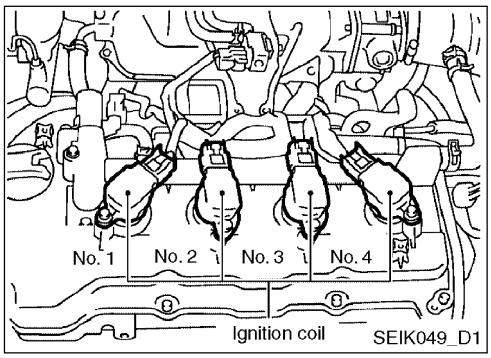

Component Description

IGNITION COIL & POWER TRANSISTOR

The ignition signal from the ECM is sent to and amplified by the power transistor. The power transistor turns on and off the ignition coil primary circuit. This on-off operation induces the proper high voltage in the coil secondary circuit.

On Board Diagnosis Logic

DTC No.	Trouble Diagnosis Name	DTC Detecting Condition	Possible Cause
P0350 0350	Ignition coil primary/secondary circuit	The ignition signal in the primary circuit is not sent to ECM during engine cranking or running.	● Harness or connectors (The ignition primary circuit is open or shorted.) ● Power transistor unit built into ignition coil ● Condenser ● Crankshaft position sensor (POS) ● Crankshaft position sensor (POS) circuit ● Camshaft position sensor (PHASE) ● Camshaft position sensor (PHASE) circuit

DTC Confirmation Procedure

NOTE:

- **If DTC Confirmation Procedure has been previously conducted, always turn ignition switch OFF and wait at least 10 seconds before conducting the next test.**
- **If DTC P0350 is displayed with DTC P0335 or P0340, perform trouble diagnosis for DTC P0335 or P0340 first. Refer to EC-89~96.**

With CONSULT-II

1. Turn ignition switch ON.
2. Select “DATA MONITOR” mode with CONSULT-II.
3. Start engine. (If engine does not run, turn ignition switch to START for at least 5 seconds.)
4. If 1st trip DTC is detected, go to EC-121, “Diagnostic Procedure”.

Without CONSULT-II

1. Start engine. (If engine does not run, turn ignition switch to START for at least 5 seconds.)
2. Turn ignition switch OFF, wait at least 10 seconds and then turn ON.
3. Perform Diagnostic Test Mode II (Self-diagnostic results).
4. If DTC is detected, go to EC-121, “Diagnostic Procedure”.

Wiring Diagram

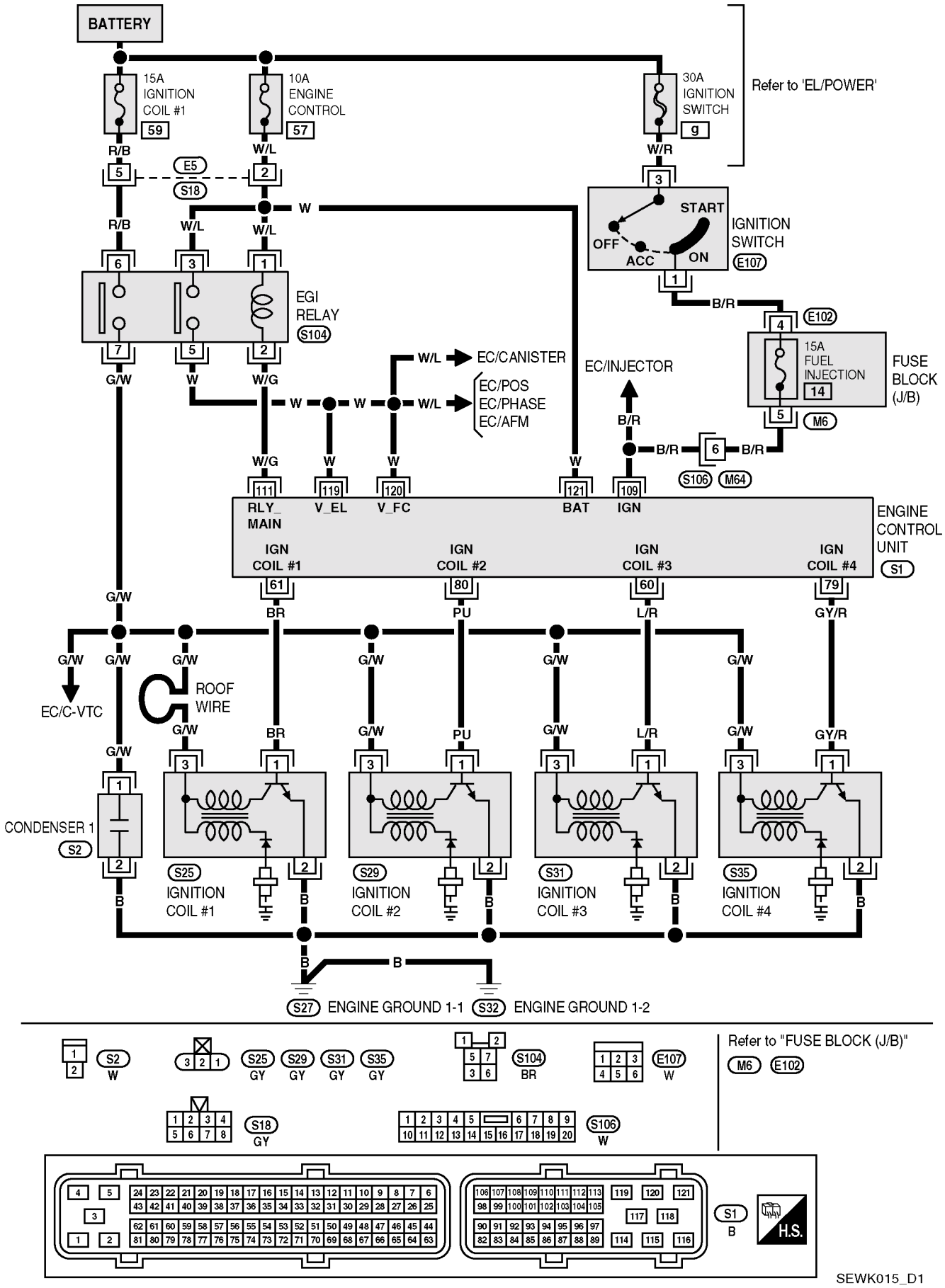

SEWK015_D1

DTC P0350 Ignition Signal Primary (Cont'd)

Specification data are reference values and are measured between each terminal and ground.

CAUTION:

- **Do not use ECM ground terminals when measuring input/output voltage. Doing so may result in damage to the ECM's transistor. Use a ground other than ECM terminals, such as the ground.**

Terminal No.	Wire Color	Item	Condition	Data (DC Voltage)
111	W/G	EGI relay	**[Engine is running]** **[Ignition switch OFF]** ● For a 4 seconds after turning ignition switch OFF	Approximately 0 V
			[Ignition switch OFF] ● More than a 4 seconds passed after turning ignition switch OFF	BATTERY VOLTAGE (11 - 14 V)
119 120	W W	Power supply for ECM	**[Ignition switch ON]**	BATTERY VOLTAGE (11 - 14 V)
61 80	BR PU	Ignition signal No. 1 Ignition signal No. 2	**[Engine is running]** ● Warm-up condition ● Idle speed	0 - 0.1 V ★ 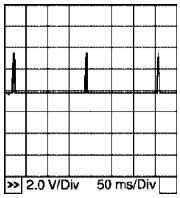
			[Engine is running] ● Warm-up condition ● Engine speed is 2,000 rpm.	0 - 0.2 V ★ 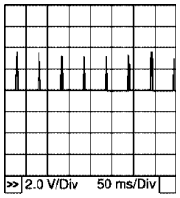
60 79	L/R GY/R	Ignition signal No. 3 Ignition signal No. 4	**[Engine is running]** ● Warm-up condition ● Idle speed	0 - 0.1 V ★ 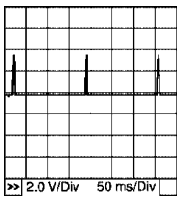
			[Engine is running] ● Warm-up condition ● Engine speed is 2,000 rpm.	0 - 0.2 V ★ 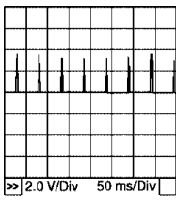

★ : Average voltage for pulse signal (Actual pulse signal can be confirmed by oscilloscope.)

DTC P0350 Ignition Signal Primary (Cont'd)

Diagnostic Procedure

1. CHECK ENGINE START

Turn ignition switch OFF, and restart engine.

Is engine running?

Yes or No

Yes (With CONSULT-II) >> GO TO 2.

Yes (Without CONSULT-II) >> GO TO 12.

No >> GO TO 4.

2. SEARCH FOR MALFUNCTIONING CIRCUIT

With CONSULT-II

1. Perform "POWER BALANCE" in "ACTIVE TEST" mode with CONSULT-II.
2. Make sure that each circuit produces a momentary engine speed drop.

NG >> GO TO 12.

DTC P0350 Ignition Signal Primary (Cont'd)

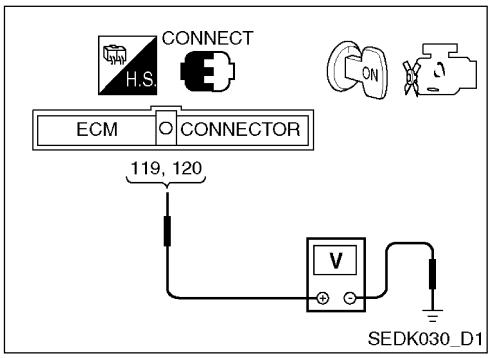

3. CHECK IGNITION COIL POWER SUPPLY CIRCUIT-I

1. Turn ignition switch ON.
2. Check voltage between ECM terminals 119, 120 and ground with CONSULT-II or tester.

   Voltage: Battery voltage

OK or NG

OK >> GO TO 4.

NG >> Go to EC-76, "POWER SUPPLY CIRCUIT FOR ECM".

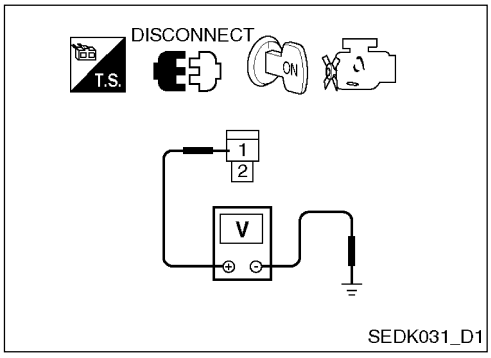

4. CHECK IGNITION COIL POWER SUPPLY CIRCUIT-II

1. Turn ignition switch OFF.
2. Disconnect condenser harness connector.
3. Turn ignition switch ON.
4. Check voltage between condenser terminal 1 and ground with CONSULT-II or tester.

   Voltage: Battery voltage

OK or NG

OK >> GO TO 9.

NG >> GO TO 5.

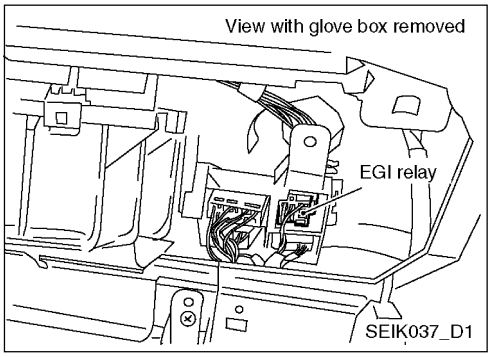

5. CHECK IGNITION COIL POWER SUPPLY CIRCUIT-III

1. Turn ignition switch OFF.
2. Disconnect EGI relay.
3. Check harness continuity between EGI relay terminal 7 and condenser terminal 1.

   Refer to Wiring Diagram.

   Continuity should exist.
4. Also check harness for short to ground and short to power.

OK or NG

OK >> GO TO 6.

NG >> Repair open circuit or short to ground or short to power in harness or connectors.

DTC P0350 Ignition Signal Primary (Cont'd)

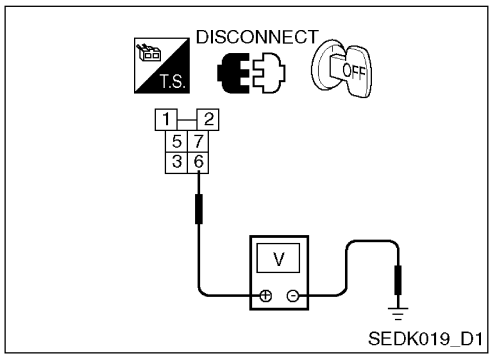

6. CHECK IGNITION COIL POWER SUPPLY CIRCUIT-IV

Check voltage between ECM relay terminal 6 and ground with CONSULT-II or tester.

Voltage: Battery voltage

OK or NG

OK >> GO TO 8.

NG >> GO TO 7.

7. DETECT MALFUNCTIONING PART

Check the following.

- Harness connectors E5, S18
- Fusible link and fuse box connector
- 15A fuse
- Harness for open or short between ECM relay and battery

>> Repair open circuit or short to ground or short to power in harness or connectors.

8. CHECK EGI RELAY

Refer to EC-125, "Component Inspection".

OK or NG

OK >> GO TO 15.

NG >> Replace EGI relay.

9. CHECK CONDENSER GROUND CIRCUIT FOR OPEN AND SHORT

1. Turn ignition switch OFF.
2. Disconnect condenser harness connector.
3. Check harness continuity between condenser terminal 2 and ground.
   Refer to Wiring diagram.

   Continuity should exist.
4. Also check harness for short to power.

OK or NG

OK >> GO TO 10.

NG >> Repair open circuit or short to power in harness or connector.

10. CHECK CONDENSER

Refer to EC-125, "Component Inspection".

OK or NG

OK >> GO TO 11.

NG >> Replace condenser.

DTC P0350 Ignition Signal Primary (Cont'd)

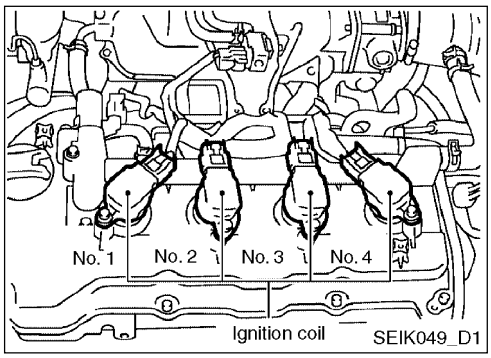

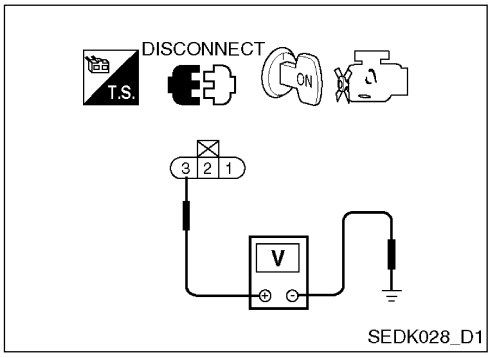

11. CHECK IGNITION COIL POWER SUPPLY CIRCUIT-V

1. Turn ignition switch OFF.
2. Reconnect all harness connectors disconnected.
3. Disconnect ignition coil harness connector.
4. Turn ignition switch ON.
5. Check voltage between ignition coil terminal 3 and ground with CONSULT-II or tester.

   Voltage: Battery voltage

OK or NG

OK >> GO TO 12.

NG >> Repair open circuit or short to ground or short to power in harness or connectors.

12. CHECK IGNITION COIL GROUND CIRCUIT FOR OPEN AND SHORT

1. Turn ignition switch OFF.
2. Check harness continuity between ignition coil terminal 2 and engine ground.

   Refer to Wiring Diagram.

   Continuity should exist.

3. Also check harness for short to power.

OK or NG

OK >> GO TO 13.

NG >> Repair open circuit or short to power in harness or connectors.

13. CHECK IGNITION COIL OUTPUT SIGNAL CIRCUIT FOR OPEN AND SHORT

1. Disconnect ECM harness connector.
2. Check harness continuity between ECM terminals 60, 61, 79, 80 and ignition coil terminal 1.

   Refer to Wiring Diagram.

   Continuity should exist.

3. Also check harness for short to ground and short to power.

OK or NG

OK >> GO TO 14.

NG >> Repair open circuit or short to ground or short to power in harness or connectors.

DTC P0350 Ignition Signal Primary (Cont'd)

14. CHECK IGNITION COIL WITH POWER TRANSISTOR

Refer to EC-125, "Component Inspection".

OK or NG

OK >> GO TO 15.

NG >> Replace ignition coil with power transistor.

15. CHECK INTERMITTENT INCIDENT

Refer to EC-74, "TROUBLE DIAGNOSIS FOR INTERMITTENT INCIDENT".

>> **INSPECTION END**

Component Inspection

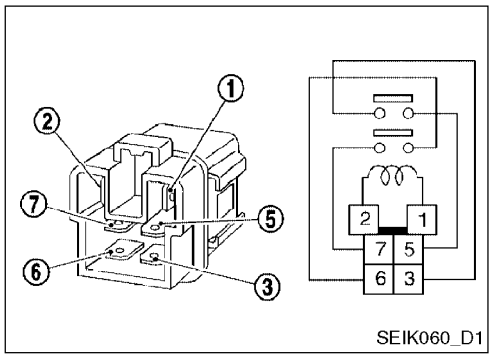

SEIK060_D1

EGI RELAY

1. Apply 12V direct current between EGI relay terminals 1 and 2.
2. Check continuity between EGI relay terminals 3 and 5, 6 and 7.

Condition	Continuity
12V direct current supply between terminals 1 and 2	Yes
OFF	No

3. If NG, replace EGI relay.

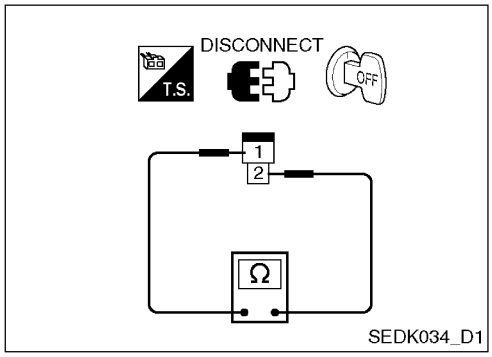

SEDK034_D1

Condenser

1. Turn ignition switch OFF.
2. Disconnect condenser harness connector.
3. Check resistance between condenser terminals 1 and 2.

Resistance: Above 1 MΩ at 25°C (77°F)

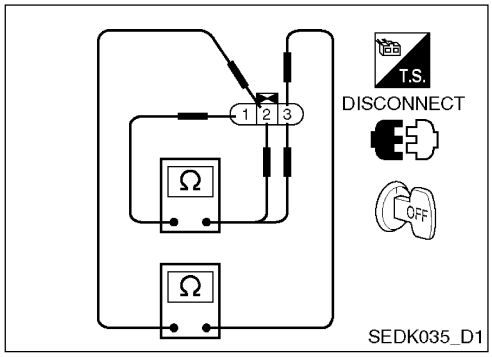

SEDK035_D1

Ignition Coil with Power Transistor

1. Turn ignition switch OFF.
2. Disconnect ignition coil harness connector.
3. Check resistance between ignition coil terminals as follows.

Terminal No.	Resistance Ω [at 25°C (77°F)]
3 and 1	Except 0 or α
3 and 2	Except 0
1 and 2	

DTC P0350 Ignition Signal Primary (Cont'd)

Removal and Installation

Refer to "OUTER COMPONENT PARTS" (QG16: EM-13).

DTC P1217 Engine Over Temperature (Overheat)

System Description

COOLING FAN CONTROL

Sensor	Input Signal to ECM	ECM Function	Actuator
Crankshaft position sensor (POS)	Engine speed*1	Cooling fan control	Cooling fan relay
Camshaft position sensor (PHASE)			
Battery	Battery voltage*1		
Vehicle speed signal	Vehicle speed		
Engine coolant temperature sensor	Engine coolant temperature		
Air conditioner switch	Air conditioner “ON” signal		
Refrigerant pressure sensor	Refrigerant pressure		

*1: The ECM determines the start signal status by the signals of engine speed and battery voltage.

The ECM controls the cooling fan corresponding to the vehicle speed, engine coolant temperature, refrigerant pressure, and air conditioner ON signal. The control system has 3 step control [HIGH/LOW/OFF].

Operation

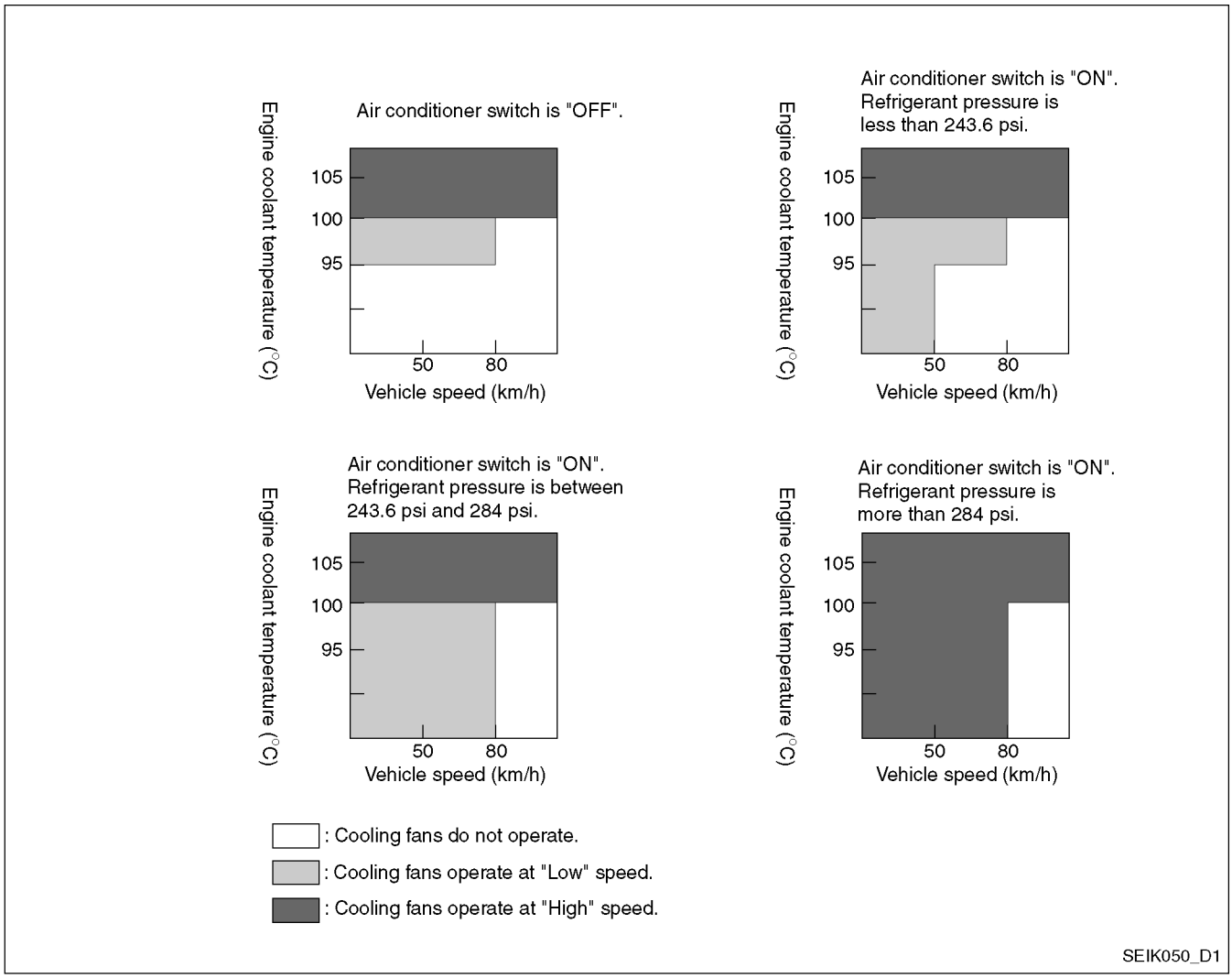

DTC P1217 Engine Over Temperature (Overheat) (Cont'd)

CONSULT-II REFERENCE VALUE IN DATA MONITOR MODE

Monitor Item	Condition		Specification
AIR COND SIG	● Engine: After warming up, idle the engine	Air conditioner switch: OFF	OFF
		Air conditioner switch: ON (Compressor operates)	ON
COOLING FAN	● After warming up engine, idle the engine. ● Air conditioner switch: OFF	Engine coolant temperature is 94°C (201°F) or less.	OFF
		Engine coolant temperature is between 95°C (203°F) and 99°C (210°F)	LOW
		Engine coolant temperature is 100°C (212°F) or more	HIGH

On Board Diagnosis Logic

If the cooling fan or another component in the cooling system malfunctions, engine coolant temperature will rise. When the engine coolant temperature reaches an abnormally high temperature condition, a malfunction is indicated.

THIS SELF-DIAGNOSIS HAS THE ONE TRIP DETECTION LOGIC.

DTC No.	Trouble Diagnosis Name	DTC Detecting Condition	Possible Cause
P1217 1217	Engine over temperature (Overheat)	● Cooling fan does not operate properly (Overheat). ● Cooling fan system does not operate properly (Overheat). ● Engine coolant was not added to the system using the proper filling method. ● Engine coolant is not within the specified range.	● Harness or connectors (The cooling fan circuit is open or shorted) ● Cooling fan ● Thermostat ● Improper ignition timing ● Engine coolant temperature sensor ● Blocked radiator ● Blocked front end (Improper fitting of nose mask) ● Crushed vehicle frontal area (Vehicle frontal is collided but not repaired) ● Blocked air passage by improper installation of front fog lamp or fog lamps. ● Improper mixture ratio of coolant ● Damaged bumper For more information, refer to EC-139, "Main 12 Causes of Overheating".

CAUTION:

- **When a malfunction is indicated, be sure to replace the coolant. Refer to "Coolant Change" (QG15: LC-9). Also, replace the engine oil. Refer to "OIL CHANGE" (QG15: LC-5).**

1. Fill radiator with coolant up to specified level with a filling speed of 2 liters per minute. Be sure to use coolant with the proper mixture ratio. Refer to "Engine Coolant Mixture Ratio" (MA-13).
2. After refilling coolant, run engine to ensure that no water-flow noise is emitted.

Overall Function Check

Use this procedure to check the overall function of the cooling fan. During this check, a DTC might not be confirmed.

WARNING:

- **Never remove the radiator cap when the engine is hot. Serious burns could be caused by high pressure fluid escaping from the radiator. Wrap a thick cloth around cap. Carefully remove the cap by turning it a quarter turn to allow built-up pressure to escape. Then turn the cap all the way off.**

DTC P1217 Engine Over Temperature (Overheat) (Cont'd)

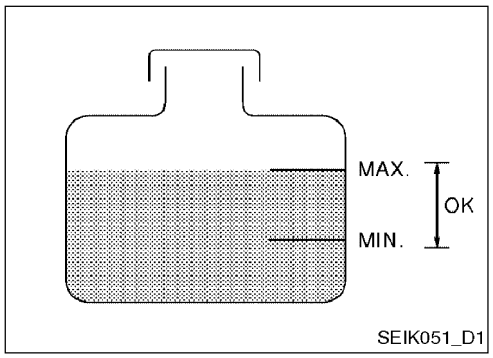

With CONSULT-II

1. Check the coolant level in the reservoir tank and radiator.
   Allow engine to cool before checking coolant level.
   If the coolant level in the reservoir tank and/or radiator is below the proper range, skip the following steps and go to EC-132, "Diagnostic Procedure".
2. Confirm whether customer filled the coolant or not. If customer filled the coolant, skip the following steps and go to EC-132, "Diagnostic Procedure".
3. Turn ignition switch ON.
4. Perform "COOLING FAN" in "ACTIVE TEST" mode with CONSULT-II.
5. If the results are NG, go to EC-132, "Diagnostic Procedure".

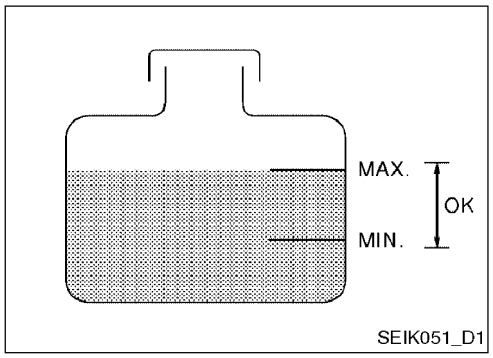

Without CONSULT-II

1. Check the coolant level in the reservoir tank and radiator.
   Allow engine to cool before checking coolant level.
   If the coolant level in the reservoir tank and/or radiator is below the proper range, skip the following steps and go to EC-132, "Diagnostic Procedure".
2. Confirm whether customer filled the coolant or not. If customer filled the coolant, skip the following steps and go to EC-132, "Diagnostic Procedure".
3. Start engine.
   Be careful not to overheat engine.
4. Set temperature control lever to full cold position.
5. Turn air conditioner switch ON.
6. Turn blower fan switch ON.
7. Run engine at idle for a few minutes with air conditioner operating.
   Be careful not to overheat engine.

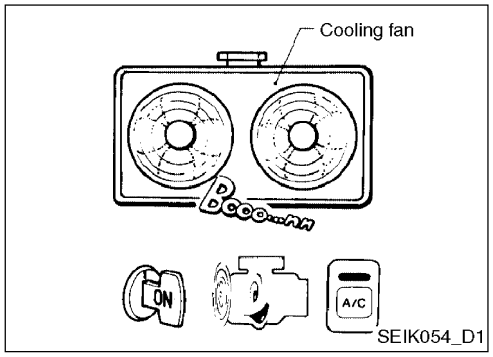

8. Make sure that cooling fan operates at low speed.
   If NG, go to EC-132, "Diagnostic Procedure".
   If OK, go to the following step.
9. Turn ignition switch OFF.
10. Turn air conditioner switch and blower fan switch OFF.
11. Disconnect engine coolant temperature sensor harness connector.
12. Connect 150Ω resistor to engine coolant temperature sensor harness connector.

DTC P1217 Engine Over Temperature (Overheat) (Cont'd)

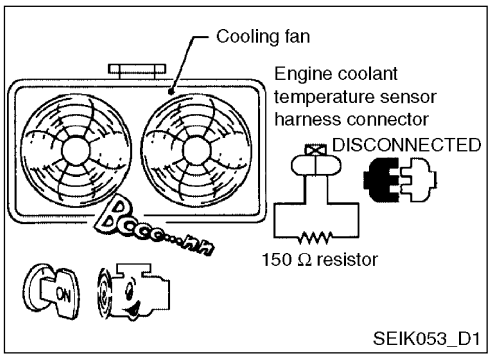

13. Restart engine and make sure that cooling fan operates at higher speed than low speed.

    Be careful not to overheat engine.

    If NG, go to EC-132, "Diagnostic Procedure".

Wiring Diagram

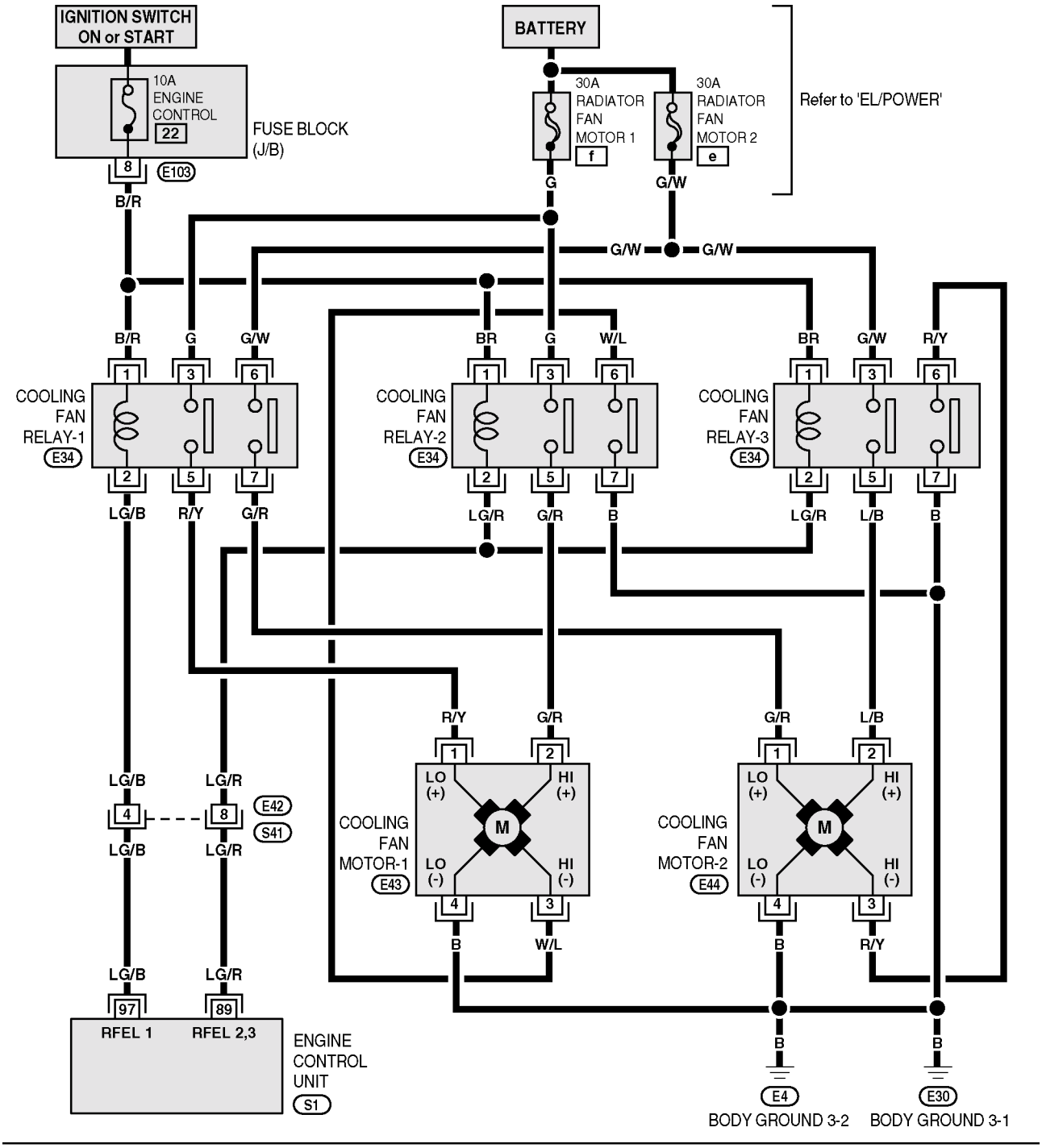

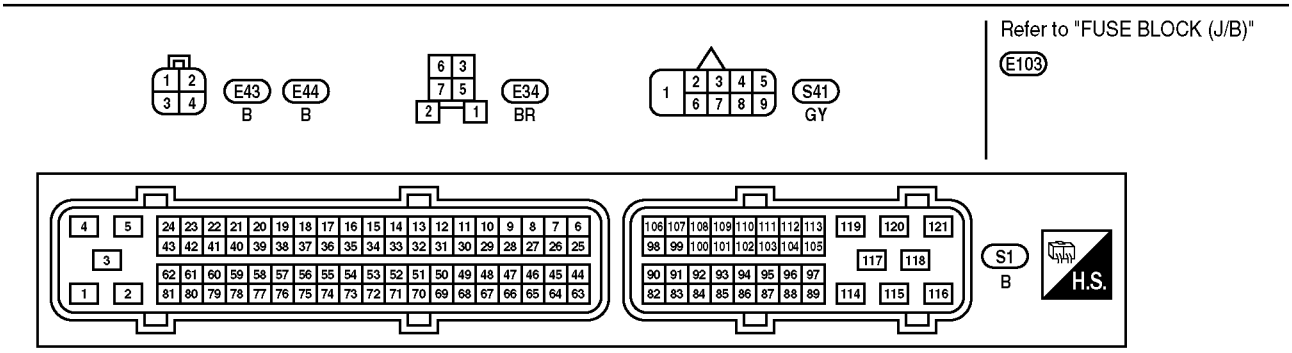

SEWK018_D1

DTC P1217 Engine Over Temperature (Overheat) (Cont'd)

Specification data are reference values and are measured between each terminal and ground.

CAUTION:

- **Do not use ECM ground terminals when measuring input/output voltage. Doing so may result in damage to the ECM's transistor. Use a ground other than ECM terminals, such as the ground.**

Terminal No.	Wire Color	Item	Condition	Data (DC Voltage)
89	LG/R	Cooling fan relay (High)	**[Engine is running]** ● Cooling fan is not operating	BATTERY VOLTAGE (11 - 14 V)
			[Engine is running] ● Cooling fan is operating at high speed	Approximately 0 V
97	LG/B	Cooling fan relay (Low)	**[Engine is running]** ● Cooling fan is not operating	BATTERY VOLTAGE (11 - 14 V)
			[Engine is running] ● Cooling fan is operating at low or high speed	Approximately 0 V

Diagnostic Procedure

1. INSPECTION START

Do you have CONSULT-II?

Yes or No

Yes >> GO TO 2.

No >> GO TO 4.

2. CHECK COOLING FAN LOW SPEED OPERATION

With CONSULT-II

1. Start engine and let it idle.
2. Select "COOLING FAN" in "ACTIVE TEST" mode with CONSULT-II and touch "LOW" on the CONSULT-II screen.
3. Make sure that cooling fans-1 and -2 operate at low speed.

OK or NG

OK >> GO TO 3.

NG >> Check cooling fan low speed control circuit. (Go to EC-136, "PROCEDURE A".)

3. CHECK COOLING FAN HIGH SPEED OPERATION

With CONSULT-II

1. Select "COOLING FAN" in "ACTIVE TEST" mode with CONSULT-II and touch "HI" on the CONSULT-II screen.
2. Make sure that cooling fans-1 and -2 operate at higher speed than row speed.

OK or NG

OK >> GO TO 6.

NG >> Check cooling fan high speed control circuit. (Go to EC-138, "PROCEDURE B".)

DTC P1217 Engine Over Temperature (Overheat) (Cont'd)

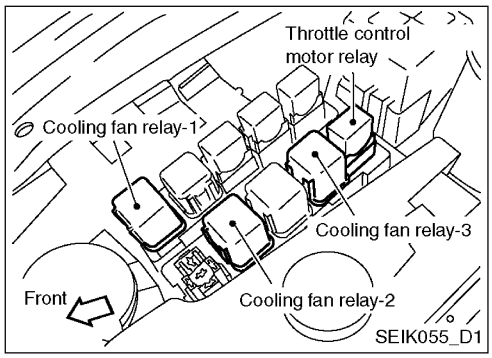

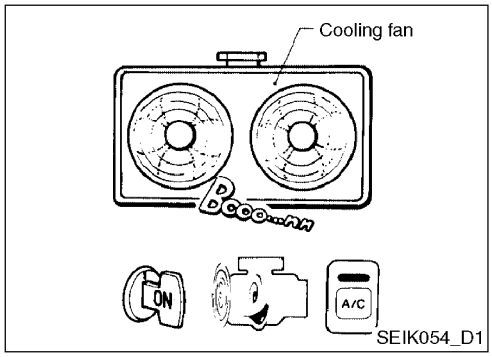

4. CHECK COOLING FAN LOW SPEED OPERATION

Without CONSULT-II

1. Disconnect cooling fan relays-2 and -3.
2. Start engine and let it idle.
3. Set temperature lever at full cold position.
4. Turn air conditioner switch ON.
5. Turn blower fan switch ON.
6. Make sure that cooling fans-1 and -2 operate at low speed.

OK or NG

OK >> GO TO 5.

NG >> Check cooling fan low speed control circuit. (Go to EC-136, "PROCEDURE A".)

5. CHECK COOLING FAN HIGH SPEED OPERATION

Without CONSULT-II

1. Turn ignition switch OFF.
2. Reconnect cooling fan relays-2 and -3.
3. Turn air conditioner switch and blower fan switch OFF.
4. Disconnect engine coolant temperature sensor harness connector.
5. Connect 150 Ω resistor to engine coolant temperature sensor harness connector.
6. Restart engine and make sure that cooling fans-1 and -2 operate at higher speed than low speed.

OK or NG

OK >> GO TO 6.

NG >> Check cooling fan high speed control circuit. (Go to EC-138, "PROCEDURE B".)

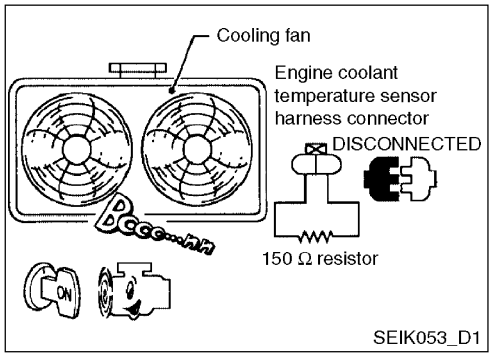

DTC P1217 Engine Over Temperature (Overheat) (Cont'd)

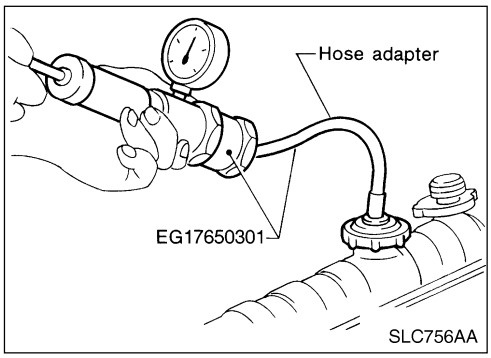

6. CHECK COOLING SYSTEM FOR LEAK

Apply pressure to the cooling system with a tester, and check if the pressure drops.

Testing pressure: 157 kPa (1.57 bar, 1.6 kg/cm^2, 23 psi)

CAUTION:

- **Higher than the specified pressure may cause radiator damage.**

Pressure should not drop.

OK or NG

OK >> GO TO 8.

NG >> GO TO 7.

7. DETECT MALFUNCTIONING PART

Check the following for leak.

- Hose
- Radiator
- Water pump

>> Repair or replace.

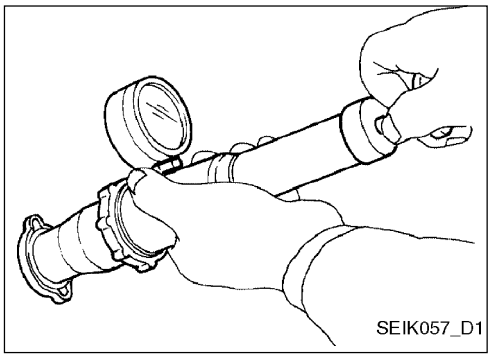

8. CHECK RADIATOR CAP

Apply pressure to cap with a tester and check radiator cap relief pressure.

Radiator cap relief pressure:
59 - 98 kPa (0.59 - 0.98 bar, 0.6 - 1.0 kg/cm^2, 9 - 14 psi)

OK or NG

OK >> GO TO 9.

NG >> Replace radiator cap.

9. CHECK THERMOSTAT

1. Remove thermostat.
2. Check valve seating condition at normal room temperatures.

   It should seat tightly.

3. Check valve opening temperature and valve lift.

   Valve opening temperature: 82°C (180°F) [standard]

   Valve lift: More than 8 mm/95°C (0.31 in/203°F)

4. Check if valve is closed at 5°C (9°F) below valve opening temperature. For details, refer to "Thermostat" (QG15: LC-14).

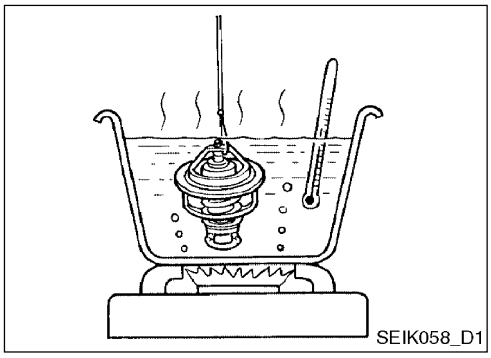

OK or NG

OK >> GO TO 10.

NG >> Replace thermostat.

DTC P1217 Engine Over Temperature (Overheat) (Cont'd)

10. CHECK ENGINE COOLANT TEMPERATURE SENSOR

Refer to EC-117, "Component Inspection".

OK or NG

OK >> GO TO 11.

NG >> Replace engine coolant temperature sensor.

11. CHECK MAIN 12 CAUSES

- If the cause cannot be isolated, go to EC-139, "Main 12 Causes of Overheating".

>> **INSPECTION END**

DTC P1217 Engine Over Temperature (Overheat) (Cont'd)

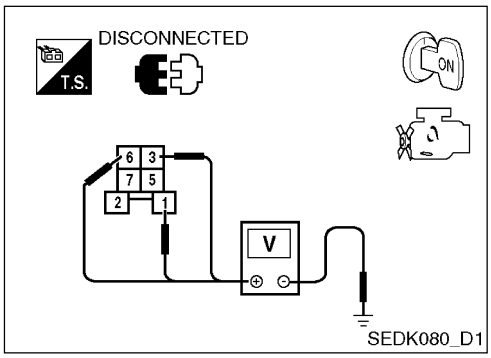

PROCEDURE A

1. CHECK COOLING FAN POWER SUPPLY CIRCUIT

1. Turn ignition switch OFF.
2. Disconnect cooling fan relay-1.
3. Turn ignition switch ON.
4. Check voltage between cooling fan relay-1 terminals 1, 3, 6 and ground with CONSULT-II or tester.

   Voltage: Battery voltage

OK or NG

OK >> GO TO 3.

NG >> GO TO 2.

2. DETECT MALFUNCTIONING PART

- 10A fuse
- 40A fusible links
- Fuse block (J/B) connector E108
- Fusible link and fuse box connectors
- Harness for open or short between cooling fan relay-1 and fuse
- Harness for open or short between cooling fan relay-1 and battery

>> Repair open circuit or short to ground or short to power in harness or connectors.

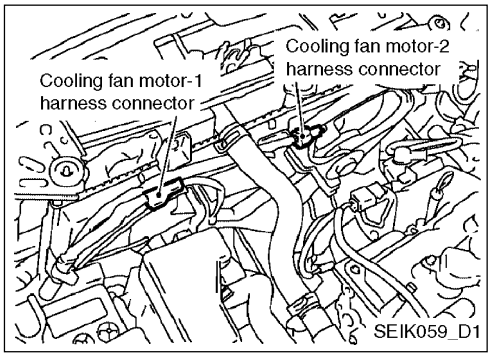

3. CHECK COOLING FAN GROUND CIRCUIT FOR OPEN AND SHORT

1. Turn ignition switch OFF.
2. Disconnect cooling fan motor-1 harness connector and cooling fan motor-2 harness connector.
3. Check harness continuity between cooling fan relay-1 terminal 5 and cooling fan motor-1 terminal 1, cooling fan motor-1 terminal 4 and engine ground. Refer to Wiring Diagram.

   Continuity should exist.

4. Also check harness for short to ground and short to power.
5. Check harness continuity between cooling fan relay-1 terminal 7 and cooling fan motor-2 terminal 1, cooling fan motor-2 terminal 4 and engine ground. Refer to Wiring Diagram.

   Continuity should exist.

6. Also check harness for short to ground and short to power.

OK or NG

OK >> GO TO 4.

NG >> Repair open circuit or short to ground or short to power in harness or connectors.

DTC P1217 Engine Over Temperature (Overheat) (Cont'd)

4. CHECK COOLING FAN OUTPUT SIGNAL CIRCUIT FOR OPEN AND SHORT

1. Disconnect ECM harness connector.
2. Check harness continuity between ECM terminal 97 and cooling fan relay-1 terminal 2.
   Refer to Wiring Diagram.

   Continuity should exist.
3. Also check harness for short to ground and short to power.

OK or NG

OK >> GO TO 6.

NG >> GO TO 5.

5. DETECT MALFUNCTIONING PART

Check the following.

- Harness connectors E42, S41
- Harness for open or short between cooling fan relay-1 and ECM

  >> Repair open circuit or short to ground or short to power in harness or connectors.

6. CHECK COOLING FAN RELAY-1

Refer to EC-140, "Component Inspection".

OK or NG

OK >> GO TO 7.

NG >> Replace cooling fan relay.

7. CHECK COOLING FAN MOTORS-1 AND -2

Refer to EC-140, "Component Inspection".

OK or NG

OK >> GO TO 8.

NG >> Replace cooling fan motors.

8. CHECK INTERMITTENT INCIDENT

Perform EC-74, "TROUBLE DIAGNOSIS FOR INTERMITTENT INCIDENT".

>> **INSPECTION END**

DTC P1217 Engine Over Temperature (Overheat) (Cont'd)

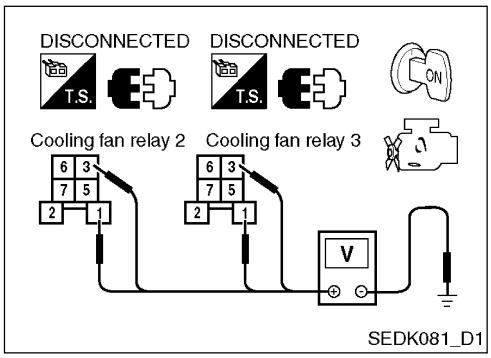

PROCEDURE B

1. CHECK COOLING FAN POWER SUPPLY CIRCUIT

1. Turn ignition switch OFF.
2. Disconnect cooling fan relays-2 and -3.
3. Turn ignition switch ON.
4. Check voltage between cooling fan relays-2 and -3 terminals 1, 3 and ground with CONSULT-II or tester.

   Voltage: Battery voltage

OK or NG

OK >> GO TO 3.

NG >> GO TO 2.

2. DETECT MALFUNCTIONING PART

Check the following.

- Harness for open or short between cooling fan relays-2 and -3 and fuse
- Harness for open or short between cooling fan relays-2 and -3 and fusible link

>> Repair open circuit or short to ground or short to power in harness or connectors.

3. CHECK COOLING FAN GROUND CIRCUIT FOR OPEN AND SHORT

1. Turn ignition switch OFF.
2. Disconnect cooling fan motor-1 harness connector and cooling fan motor-2 harness connector.
3. Check harness continuity between cooling fan relay-2 terminal 5 and cooling fan motor-1 terminal 2, cooling fan relay-2 terminal 6 and cooling fan motor-1 terminal 3, cooling fan relay-2 terminal 7 and engine ground. Refer to Wiring Diagram.

   Continuity should exist.
4. Also check harness for short to ground and short to power.
5. Check harness continuity between cooling fan relay-3 terminal 5 and cooling fan motor-2 terminal 2, cooling fan relay-3 terminal 6 and cooling fan motor-2 terminal 3, cooling fan relay-3 terminal 7 and engine ground. Refer to Wiring Diagram.

   Continuity should exist.
6. Also check harness for short to ground and short to power.

OK or NG

OK >> GO TO 4.

NG >> Repair open circuit or short to ground or short to power in harness or connectors.

DTC P1217 Engine Over Temperature (Overheat) (Cont'd)

4. CHECK COOLING FAN OUTPUT SIGNAL CIRCUIT FOR OPEN AND SHORT

1. Disconnect ECM harness connector.
2. Check harness continuity between ECM terminal 89 and cooling fan relay-2 terminal 2, cooling fan relay-3 terminal 2. Refer to Wiring Diagram.
   Continuity should exist.
3. Also check harness for short to ground and short to power.

OK or NG

OK >> GO TO 6.

NG >> GO TO 5.

5. DETECT MALFUNCTIONING PART

Check the following.

- Harness connectors E42, S415
- Harness for open or short between cooling fan relays-2 and -3 and ECM

>> Repair open circuit or short to ground or short to power in harness or connectors.

6. CHECK COOLING FAN RELAYS-2 AND -3

Refer to EC-140, "Component Inspection".

OK or NG

OK >> GO TO 7.

NG >> Replace cooling fan relays.

7. CHECK COOLING FAN MOTORS-1 AND -2

Refer to EC-140, "Component Inspection".

OK or NG

OK >> GO TO 8.

NG >> Replace cooling fan motors.

8. CHECK INTERMITTENT INCIDENT

Perform EC-74, "TROUBLE DIAGNOSIS FOR INTERMITTENT INCIDENT".

>> **INSPECTION END**

Main 12 Causes of Overheating

Engine	Step	Inspection Item	Equipment	Standard	Reference Page
OFF	1	● Blocked radiator ● Blocked condenser ● Blocked radiator grille ● Blocked bumper	● Visual	No blocking	-
	2	● Coolant mixture	● Coolant tester	50 - 50% coolant mixture	See "Engine Coolant Mixture Ratio" (MA-13).
	3	● Coolant level	● Visual	Coolant up to MAX level in reservoir tank and radiator filler neck	See "Coolant Change"

DTC P1217 Engine Over Temperature (Overheat) (Cont'd)

Engine	Step	Inspection Item	Equipment	Standard	Reference Page
OFF	4	● Radiator cap	● Pressure tester	59 - 98 kPa (0.59 - 0.98 bar, 0.6 - 1.0 kg/cm², 9 - 14 psi) (Limit)	See "Radiator Cap Inspection"
ON*2	5	● Coolant leaks	● Visual	No leaks	See "COOLANT LEAK INSPECTION"
ON*2	6	● Thermostat	● Touch the upper and lower radiator hoses	Both hoses should be hot	See "INSPECTION AFTER REMOVAL"
ON*1	7	● Cooling fan	● CONSULT-II	Operating	See trouble diagnosis for DTC P1217 (EC-127).
OFF	8	● Combustion gas leak	● Color checker chemical tester 4 Gas analyzer	Negative	-
ON*3	9	● Coolant temperature gauge	● Visual	Gauge less than 3/4 when driving	-
		● Coolant overflow to reservoir tank	● Visual	No overflow during driving and idling	See " Coolant Change"
OFF*	10	● Coolant return from reservoir tank to radiator	● Visual	Should be initial level in reservoir tank	See " Coolant Change"
OFF	11	● Cylinder head	● Straight gauge feeler gauge	0.1 mm (0.004 in) Maximum distortion (warping)	See "Inspection", (QG16: EM-43).
	12	● Cylinder block and pistons	● Visual	No scuffing on cylinder walls or piston	See "Inspection", (QG16: EM-64).

*1: Turn the ignition switch ON.
*2: Engine running at 3,000 rpm for 10 minutes.
*3: Drive at 90 km/h (55 MPH) for 30 minutes and then let idle for 10 minutes.

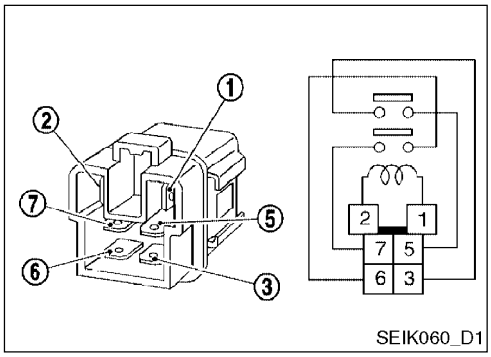

Component Inspection

COOLING FAN RELAYS-1, -2 AND -3

1. Apply 12V direct current between cooling fan relay terminals 1 and 2.
2. Check continuity between cooling fan relay terminals 3 and 5, 6 and 7

Conditions	Continuity
12V direct current supply between terminals 1 and 2	Yes
No current supply	No

3. If NG, replace relay.

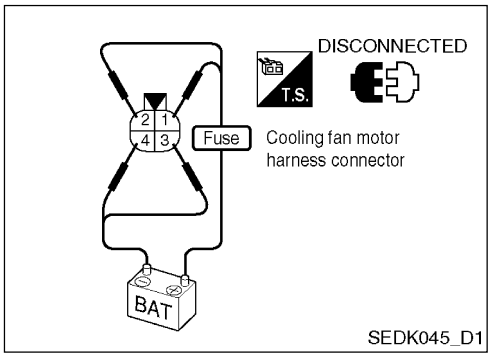

COOLING FAN MOTORS-1 AND -2

1. Disconnect cooling fan motor harness connectors.
2. Supply cooling fan motor terminals with battery voltage and check operation.

	Speed	Terminals	
		(+)	(-)
Cooling fan motor	Low	1	4
	High	12	34

Cooling fan motor should operate.

3. If NG, replace cooling fan motor.

DTC P0327, P0328 Knock Sensor Circuit

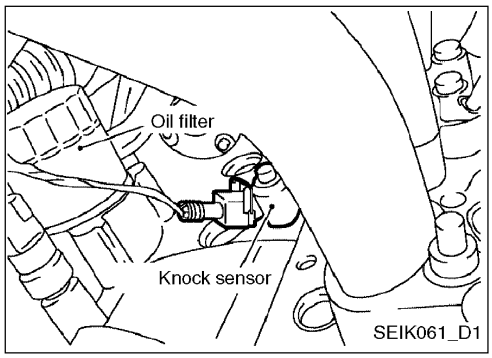

Component Description

The knock sensor is attached to the cylinder block. It senses engine knocking using a piezoelectric element. A knocking vibration from the cylinder block is sensed as vibrational pressure. This pressure is converted into a voltage signal and sent to the ECM.

On Board Diagnosis Logic

The MIL will not light up for this diagnosis.

DTC No.	Trouble Diagnosis Name	DTC Detecting Condition	Possible Cause
P0327 0327	Knock sensor circuit low input	An excessively low voltage from the sensor is sent to ECM.	● Harness or connectors (The sensor circuit is open or shorted.) ● Knock sensor
P0328 0328	Knock sensor circuit high input	An excessively high voltage from the sensor is sent to ECM.	

DTC Confirmation Procedure

NOTE:

- **If DTC Confirmation Procedure has been previously conducted, always turn ignition switch OFF and wait at least 10 seconds before conducting the next test.**

TESTING CONDITION:

Before performing the following procedure, confirm that battery voltage is more than 10V at idle.

With CONSULT-II

1. Turn ignition switch ON and select “DATA MONITOR” mode with CONSULT-II.
2. Start engine and run it for at least 5 seconds at idle speed.
3. If DTC is detected, go to EC-143, “Diagnostic Procedure”.

Without CONSULT-II

1. Start engine and run it for at least 5 seconds at idle speed.
2. Turn ignition switch OFF, wait at least 10 seconds and then turn ON.
3. Perform Diagnostic Test Mode II (Self-diagnostic results).
4. If DTC is detected, go to EC-143, “Diagnostic Procedure”.

Wiring Diagram

EC/Knock Sensor

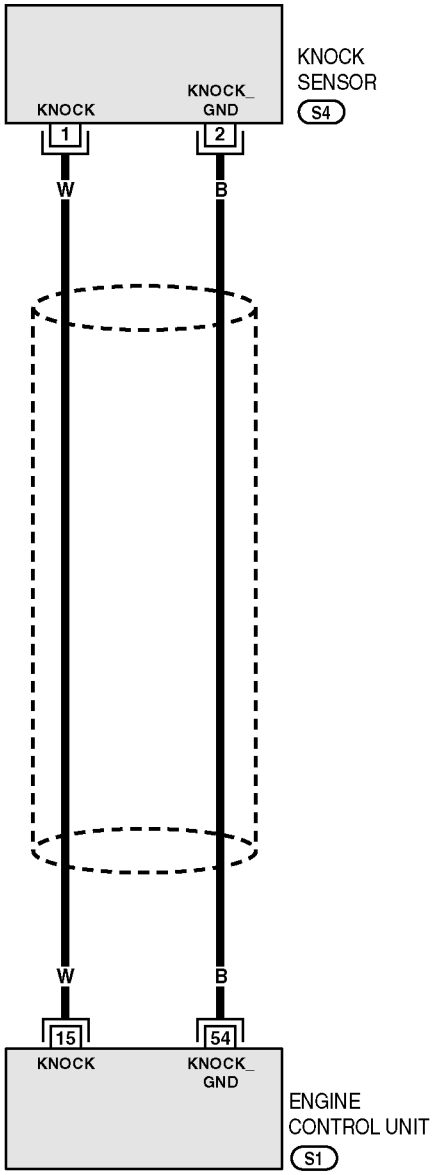

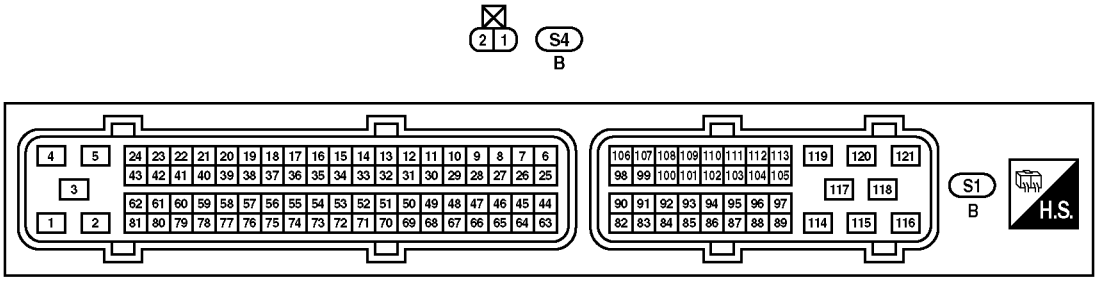

SEWK007_D1

DTC P0327, P0328 Knock Sensor Circuit

Specification data are reference values and are measured between each terminal and ground.

CAUTION:

- **Do not use ECM ground terminals when measuring input/output voltage. Doing so may result in damage to the ECM's transistor. Use a ground other than ECM terminals, such as the ground.**

Terminal No.	Wire Color	Item	Condition	Data (DC Voltage)
15	W	Knock sensor	**[Engine is running]** ● Idle speed	Approximately 2.5 V
54	B	Knock sensor ground	**[Engine is running]** ● Idle speed	Approximately 0 V

Diagnostic Procedure

1. CHECK KNOCK SENSOR INPUT SIGNAL CIRCUIT-I

1. Turn ignition switch OFF.
2. Disconnect ECM harness connector.
3. Check resistance between ECM terminal 15 and engine ground. Refer to Wiring Diagram.

NOTE:

- **It is necessary to use an ohmmeter which can measure more than 10 MΩ.**

Resistance: Approximately 530 - 590kΩ [at 20°C (68°F)]

4. Also check harness for short to ground and short to power.

OK or NG

OK >> GO TO 4.

NG >> GO TO 2.

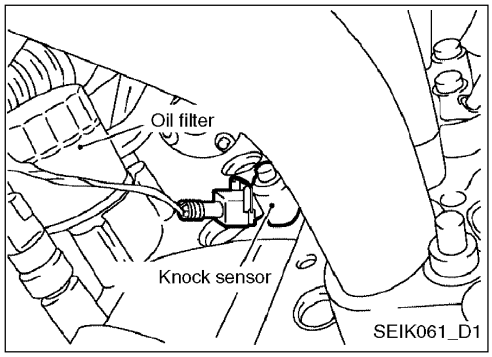

2. CHECK KNOCK SENSOR INPUT SIGNAL CIRCUIT-II

1. Disconnect knock sensor harness connector.
2. Check harness continuity between ECM terminal 15 and knock sensor terminal 1.
   Refer to Wiring Diagram.
   Continuity should exist.
3. Also check harness for short to ground and short to power.

OK or NG

OK >> GO TO 3.

NG >> Repair open circuit or short to ground or short to power in harness or connectors.

3. CHECK KNOCK SENSOR

Refer to EC-144, "Component Inspection".

OK or NG

OK >> GO TO 5.

NG >> Replace knock sensor.

DTC P0327, P0328 Knock Sensor Circuit (Cont'd)

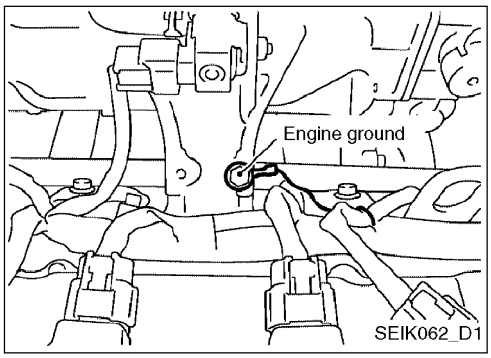

4. RETIGHTEN GROUND SCREWS

Loosen and retighten engine ground screws.

>> GO TO 5.

5. CHECK KNOCK SENSOR SHIELD CIRCUIT FOR OPEN AND SHORT

1. Reconnect knock sensor harness connector.
2. Check harness continuity between ECM terminal 54 and engine ground.
   Refer to Wiring Diagram.
3. Also check harness for short to ground and short to power.

OK or NG

OK >> GO TO 6.

NG >> Repair open circuit or short to ground or short to power in harness or connectors.

6. CHECK INTERMITTENT INCIDENT

Refer to EC-74, "TROUBLE DIAGNOSIS FOR INTERMITTENT INCIDENT".

>> **INSPECTION END**

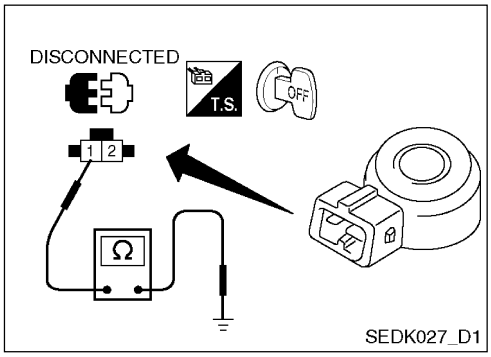

Component Inspection

KNOCK SENSOR

Check resistance between knock sensor terminal 1 and ground.

NOTE:

- **It is necessary to use an ohmmeter which can measure more than 10 MΩ.**
  Resistance: Approximately 530 - 590kΩ [at 20°C (68°F)]

CAUTION:

- **Do not use any knock sensors that have been dropped or physically damaged. Use only new ones.**

Removal and Installation

KNOCK SENSOR

Refer to "CYLINDER BLOCK" (QG16: EM-60).

DTC P0122, P0123 Throttle Position Sensor-2 Circuit

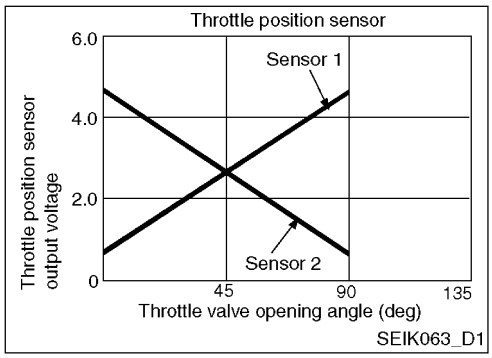

Component Description

Electric Throttle Control Actuator consists of throttle control motor, throttle position sensor, etc. The throttle position sensor responds to the throttle valve movement.

The throttle position sensor has the two sensors. These sensors are a kind of potentiometers which transform the throttle valve position into output voltage, and emit the voltage signal to the ECM. In addition, these sensors detect the opening and closing speed of the throttle valve and feed the voltage signals to the ECM. The ECM judges the current opening angle of the throttle valve from these signals and the ECM controls the throttle control motor to make the throttle valve opening angle properly in response to driving condition.

CONSULT-II REFERENCE VALUE IN DATA MONITOR MODE

Monitor Item	Condition		Specification
THRTL SEN1 THRTL SEN2*	● Ignition switch: ON (Engine stopped) ● Shift lever: D (A/T models) 1st (M/T models)	Accelerator pedal: Fully released	More than 0.36V
		Accelerator pedal: Fully depressed	Less than 4.75V

*: Throttle position sensor 2 signal is converted by ECM internally. Thus, it differs from ECM terminal voltage signal.

On Board Diagnosis Logic

These self-diagnoses have the one trip detection logic.

DTC No.	Trouble Diagnosis Name	DTC Detecting Condition	Possible Cause
P0122 0122	Throttle position sensor 2 circuit low input	An excessively low voltage from the throttle position sensor 2 is sent to ECM.	● Harness or connectors (The throttle position sensor 2 circuit is open or shorted.) ● Electric throttle control actuator (throttle position sensor 2)
P0123 0123	Throttle position sensor 2 circuit high input	An excessively high voltage from the throttle position sensor 2 is sent to ECM.	

Fail-Safe Mode

When the malfunction is detected, the ECM enters fail-safe mode and the MIL lights up.

Engine Operation Condition In Fail-Safe Mode
The ECM controls the electric throttle control actuator in regulating the throttle opening in order for the idle position to be within +10 degrees. The ECM regulates the opening speed of the throttle valve to be slower than the normal condition. So, the acceleration will be poor.

DTC Confirmation Procedure

NOTE:

- **If DTC Confirmation Procedure has been previously conducted, always turn ignition switch OFF and wait at least 10 seconds before conducting the next test.**

TESTING CONDITION:

Before performing the following procedure, confirm that battery voltage is more than 10V at idle.

DTC P0122, P0123 Throttle Position Sensor-2 Circuit (Cont'd)

With CONSULT-II

1. Turn ignition switch ON.
2. Select "DATA MONITOR" mode with CONSULT-II.
3. Start engine and let it idle for 1 second.
4. If DTC is detected, go to EC-148, "Diagnostic Procedure".

Wiring Diagram

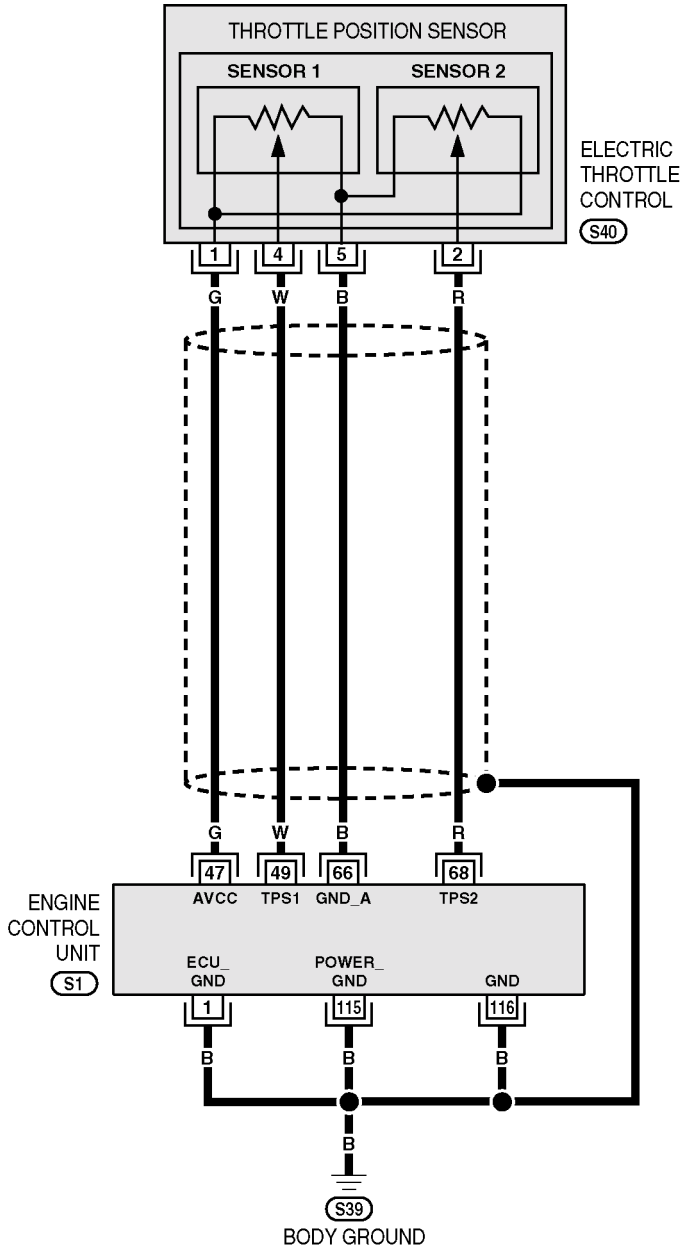

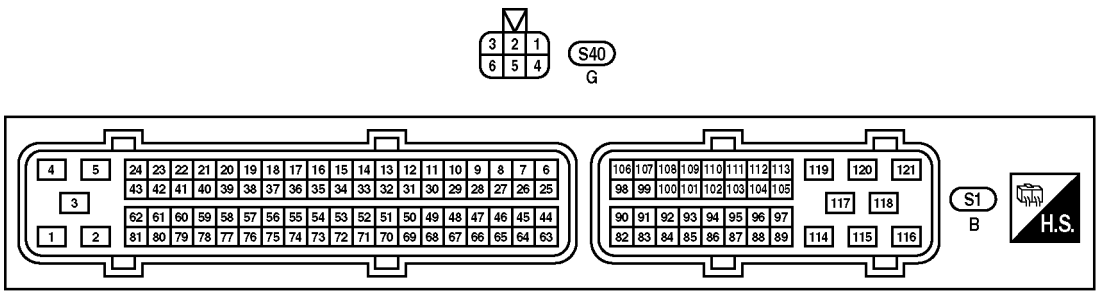

SEWK025_D1

DTC P0122, P0123 Throttle Position Sensor-2 Circuit (Cont'd)

Specification data are reference values and are measured between each terminal and ground.

CAUTION:

- **Do not use ECM ground terminals when measuring input/output voltage. Doing so may result in damage to the ECM's transistor. Use a ground other than ECM terminals, such as the ground.**

Terminal No.	Wire Color	Item	Condition	Data (DC Voltage)
47	G	Throttle position sensor power supply	**[Ignition switch ON]**	Approximately 5 V
49	W	Throttle position sensor 1	**[Ignition switch ON]** ● Engine stopped ● Shift lever position is D (A/T models) ● Shift lever position is 1st (M/T models) ● Accelerator pedal fully released	More than 0.36 V
			[Ignition switch ON] ● Engine stopped ● Shift lever position is D (A/T models) ● Shift lever position is 1st (M/T models) ● Accelerator pedal fully depressed	Less than 4.75 V
66	B	Throttle position sensor ground	**[Engine is running]** ● Warm-up condition ● Idle speed	Approximately 0 V
68	R	Throttle position sensor 2	**[Ignition switch ON]** ● Engine stopped ● Shift lever position is D (A/T models) ● Shift lever position is 1st (M/T models) ● Accelerator pedal fully released	Less than 4.75 V
			[Ignition switch ON] ● Engine stopped ● Shift lever position is D (A/T models) ● Shift lever position is 1st (M/T models) ● Accelerator pedal fully depressed	More than 0.36 V

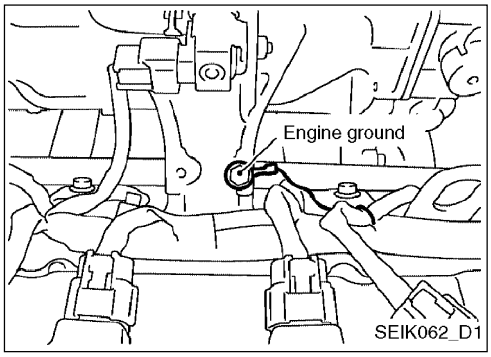

Diagnostic Procedure

1. RETIGHTEN GROUND SCREWS

1. Turn ignition switch OFF.
2. Loosen and retighten engine ground screws.
   >> GO TO 2.

DTC P0122, P0123 Throttle Position Sensor-2 Circuit (Cont'd)

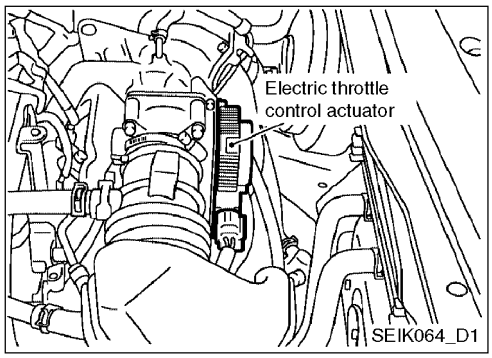

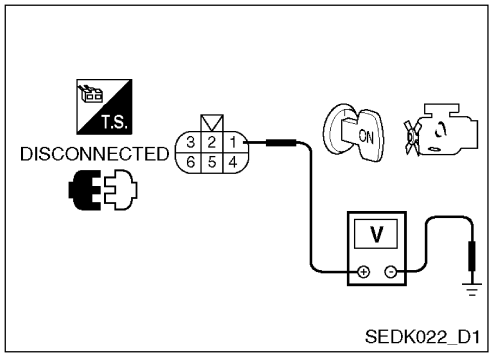

2. CHECK THROTTLE POSITION SENSOR 2 POWER SUPPLY CIRCUIT

1. Disconnect electric throttle control actuator harness connector.
2. Turn ignition switch ON.
3. Check voltage between electric throttle control actuator terminal 1 and ground with CONSULT-II or tester.

   Voltage: Approximately 5V

OK or NG

OK >> GO TO 3.

NG >> Repair open circuit or short to ground or short to power in harness or connectors.

3. CHECK THROTTLE POSITION SENSOR 2 GROUND CIRCUIT FOR OPEN AND SHORT

1. Turn ignition switch OFF.
2. Disconnect ECM harness connector.
3. Check harness continuity between ECM terminal 66 and electric throttle control actuator terminal 5.

   Refer to Wiring Diagram.

   Continuity should exist.

4. Also check harness for short to ground and short to power.

OK or NG

OK >> GO TO 4.

NG >> Repair open circuit or short to ground or short to power in harness or connectors.

4. CHECK THROTTLE POSITION SENSOR 2 INPUT SIGNAL CIRCUIT FOR OPEN AND SHORT

1. Check harness continuity between ECM terminal 68 and electric throttle control actuator terminal 2.

   Refer to Wiring Diagram.

   Continuity should exist.

2. Also check harness for short to ground and short to power.

OK or NG

OK >> GO TO 5.

NG >> Repair open circuit or short to ground or short to power in harness or connectors.

DTC P0122, P0123 Throttle Position Sensor-2 Circuit (Cont'd)

5. CHECK THROTTLE POSITION SENSOR

Refer to EC-150, "Component Inspection".

OK or NG

OK >> GO TO 7.

NG >> GO TO 6.

6. REPLACE ELECTRIC THROTTLE CONTROL ACTUATOR

1. Replace the electric throttle control actuator.
2. Perform EC-23, "Throttle Valve Closed Position Learning".
3. Perform EC-24, "Idle Air Volume Learning".

>> **INSPECTION END**

7. CHECK INTERMITTENT INCIDENT

Refer to EC-74, "TROUBLE DIAGNOSIS FOR INTERMITTENT INCIDENT".

>> **INSPECTION END**

Component Inspection

THROTTLE POSITION SENSOR

1. Reconnect all harness connectors disconnected.
2. Perform EC-23, "Throttle Valve Closed Position Learning".
3. Turn ignition switch ON.
4. Set selector lever to D position (A/T models) or 1st position (M/T models).
5. Check voltage between ECM terminals 49 (Throttle position sensor 1 signal), 68 (Throttle position sensor 2 signal) and engine ground under the following conditions.

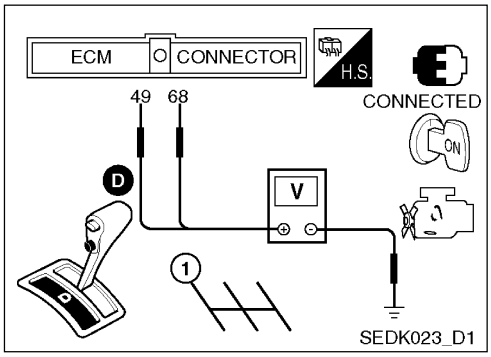

Terminal	Accelerator pedal	Voltage
49 (Throttle position sensor 1)	Fully released	More than 0.36 V
	Fully depressed	Less than 4.75 V
68 (Throttle position sensor 2)	Fully released	Less than 4.75 V
	Fully depressed	More than 0.36 V

6. If NG, replace electric throttle control actuator and go to the next step.
7. Perform EC-23, "Throttle Valve Closed Position Learning".
8. Perform EC-24, "Idle Air Volume Learning".

Remove and Installation

ELECTRIC THROTTLE CONTROL ACTUATOR

Refer to "OUTER COMPONENT PARTS" (QG16: EM-12).

DTC P1121 Electric Throttle Control Actuator

Component Description

Electric Throttle Control Actuator consists of throttle control motor, throttle position sensor, etc.

The throttle control motor is operated by the ECM and it opens and closes the throttle valve. The throttle position sensor detects the throttle valve position, and the opening and closing speed of the throttle valve and feeds the voltage signals to the ECM. The ECM judges the current opening angle of the throttle valve from these signals and the ECM controls the throttle control motor to make the throttle valve opening angle properly in response to driving condition.

On Board Diagnosis Logic

These self-diagnoses have the one trip detection logic.

DTC No.	Trouble Diagnosis Name	DTC Detecting Condition		Possible Cause
P1121 1121	Electric throttle control actuator	A	Electric throttle control actuator does not function properly due to the return spring malfunction.	Electric throttle control actuator
		B	Throttle valve opening angle in fail-safe mode is not in specified range.	
		C	ECM detect the throttle valve is stuck open.	

Fail-Safe Mode

When the malfunction is detected, the ECM enters fail-safe mode and the MIL lights up.

Detected Items	Engine Operating Condition In Fail-Safe Mode
Malfunction A	The ECM controls the electric throttle actuator by regulating the throttle opening around the idle position. The engine speed will not rise more than 2,000 rpm.
Malfunction B	ECM controls the electric throttle control actuator by regulating the throttle opening to 20 degrees or less.
Malfunction C	While the vehicle is driving, it slows down gradually by fuel cut. After the vehicle stops, the engine stalls. The engine can restart in N or P position, and engine speed will not exceed 1,000 rpm or more.

DTC Confirmation Procedure

NOTE:

- **Perform PROCEDURE FOR MALFUNCTION A AND B first. If the DTC cannot be confirmed, perform PROCEDURE FOR MALFUNCTION C.**
- **If DTC Confirmation Procedure has been previously conducted, always turn ignition switch OFF and wait at least 10 seconds before conducting the next test.**

Procedure for Malfunction A and B

With CONSULT-II

1. Turn ignition witch ON and wait at least 1 second.
2. Select “DATA MONITOR” mode with CONSULT-II.
3. Shift selector lever to D position (A/T models), 1st position (M/T models) and wait at least 2 seconds.
4. Turn ignition switch OFF and wait at least 10 seconds.
5. Turn ignition switch ON and wait at least 1 second.
6. Shift selector lever to D position (A/T models), 1st position (M/T models) and wait at least 2 seconds.
7. Turn ignition switch OFF, wait at least 10 seconds, and then turn ON.
8. If DTC is detected, go to EC-152, “Diagnostic Procedure”.

Without CONSULT-II

1. Turn ignition switch ON and wait at least 1 second.
2. Shift selector lever to D position (A/T models), 1st position (M/T models) and wait at least 2 seconds.
3. Turn ignition switch OFF, wait at least 10 seconds and then turn ON.

DTC P1121 Electric Throttle Control Actuator (Cont'd)

4. Shift selector lever to D position (A/T models), 1st position (M/T models) and wait at least 2 seconds.
5. Turn ignition switch OFF, wait at least 10 seconds, and then turn ON.
6. Perform Diagnostic Test Mode II (Self-diagnostic results).
7. If DTC is detected, go to EC-152, "Diagnostic Procedure".

Procedure for Malfunction C

With CONSULT-II

1. Turn ignition switch ON and wait at least 1 second.
2. Select "DATA MONITOR" mode with CONSULT-II.
3. Shift selector lever to D position (A/T models), 1st position (M/T models) and wait at least 2 seconds.
4. Shift selector lever to N or P position.
5. Start engine and let it idle for 3 seconds.
6. If DTC is detected, go to EC-152, "Diagnostic Procedure".

Without CONSULT-II

1. Turn ignition switch ON and wait at least 1 second.
2. Shift selector lever to D position (A/T models), 1st position (M/T models) and wait at least 2 seconds.
3. Shift selector lever to N or P position.
4. Start engine and let it idle for the 3 seconds.
5. Turn ignition switch OFF, wait at least 10 seconds and then turn ON.
6. Perform Diagnostic Test Mode II (Self-diagnostic results).
7. If DTC is detected, go to EC-152, "Diagnostic Procedure".

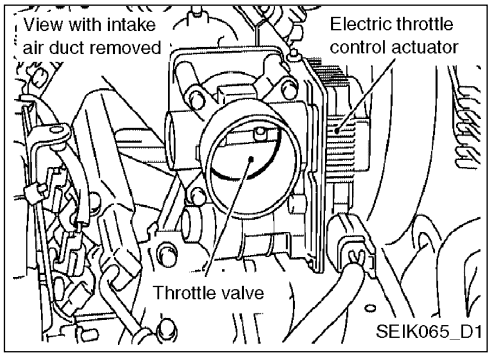

Diagnostic Procedure

1. CHECK ELECTRIC THROTTLE CONTROL ACTUATOR VISUALLY

1. Remove the intake air duct.
2. Check if a foreign matter is caught between the throttle valve and the housing.

OK or NG

OK >> GO TO 2.

NG >> Remove the foreign matter and clean the electric throttle control actuator inside.

2. REPLACE ELECTRIC THROTTLE CONTROL ACTUATOR

1. Replace the electric throttle control actuator.
2. Perform EC-23, "Throttle Valve Closed Position Learning".
3. Perform EC-24, "Idle Air Volume Learning".

>> **INSPECTION END**

Remove and Installation

Refer to "OUTER COMPONENT PARTS" (QG16: EM-12).

DTC P1122 Electric Throttle Control Performance Problem

Description

NOTE:

- **If DTC P1122 is displayed with DTC P1121 or 1126, first perform the trouble diagnosis for DTC P1121 or P1126. Refer to EC-151 or EC-160.**

Electric Throttle Control Actuator consists of throttle control motor, throttle position sensor, etc.

The throttle control motor is operated by the ECM and it opens and closes the throttle valve.

The current opening angle of the throttle valve is detected by the throttle position sensor and it provides feedback to the ECM to control the throttle control motor to make the throttle valve opening angle properly in response to driving condition.

On Board Diagnosis Logic

This self-diagnosis has the one trip detection logic.

DTC No.	Trouble Diagnosis Name	DTC Detecting Condition	Possible Cause
P1122 1122	Electric throttle control performance problem	Electric throttle control function does not operate properly.	• Harness or connectors (Throttle control motor circuit is open or shorted.) • Harness or connectors (Throttle control motor relay circuit is open or shorted.) • Electric throttle control actuator • Throttle control motor relay

Fail-Safe Mode

When the malfunction is detected, the ECM enters fail-safe mode and the MIL lights up.

Engine Operating Condition In Fail-Safe Mode
ECM stops the electric throttle control actuator control, throttle valve is maintained at a fixed opening (approx. 6.05 degrees) by the return spring.

DTC Confirmation Procedure

NOTE:

- **If DTC Confirmation Procedure has been previously conducted, always turn ignition switch OFF and wait at least 10 seconds before conducting the next test.**

With CONSULT-II

1. Turn ignition switch ON and wait at least 2 seconds.
2. Select “DATA MONITOR” mode with CONSULT-II.
3. Start engine and let it idle for 5 seconds.
4. If DTC is detected, go to EC-155, “Diagnostic Procedure”.

Without CONSULT-II

1. Turn ignition switch ON and wait at least 2 seconds.
2. Start engine and let it idle for 5 seconds.
3. Turn ignition switch OFF, wait at least 10 seconds and then turn ON.
4. Perform Diagnostic Test Mode II (Self-diagnostic results) with ECM.
5. If DTC is detected, go to EC-155, “Diagnostic Procedure”.

Wiring Diagram

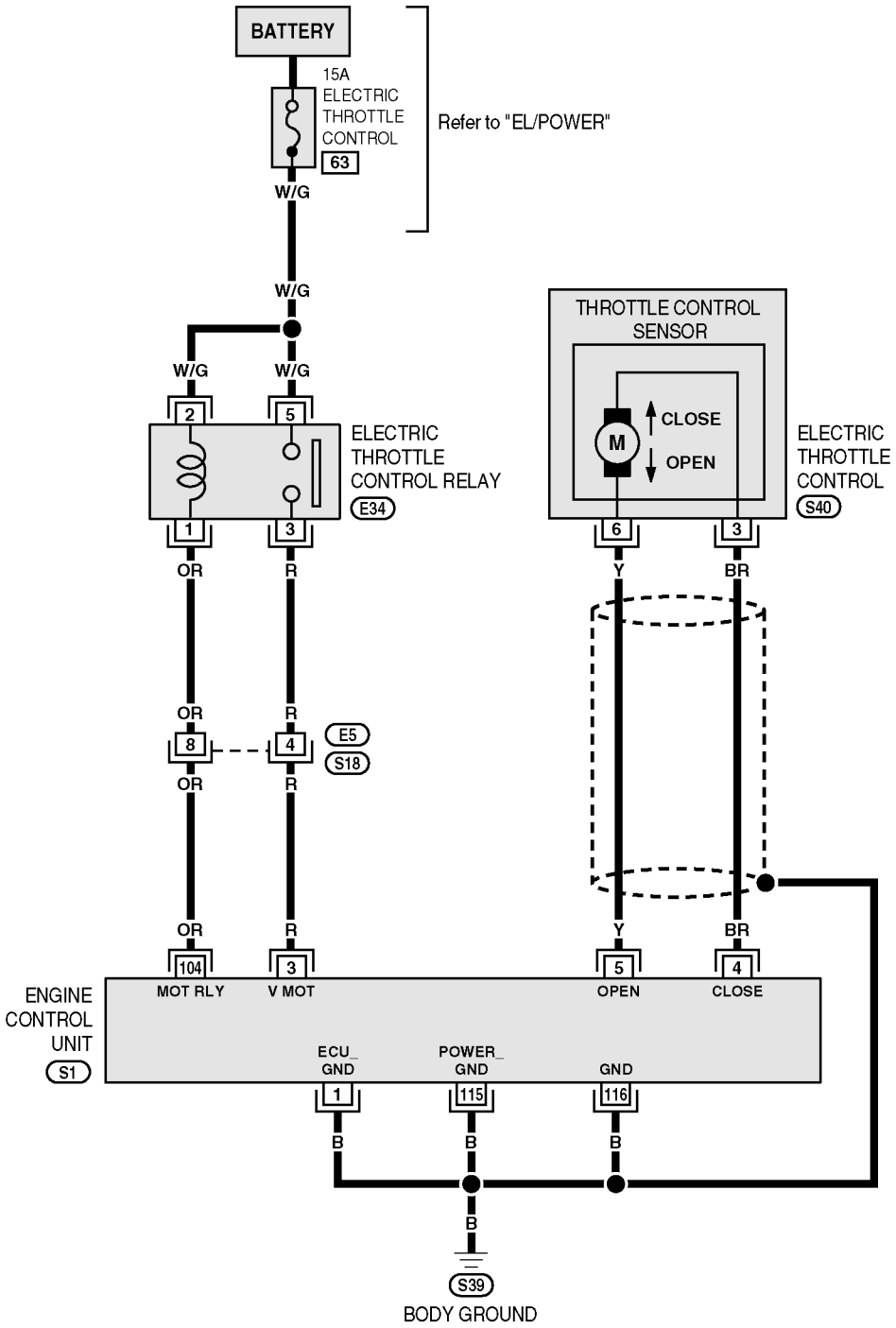

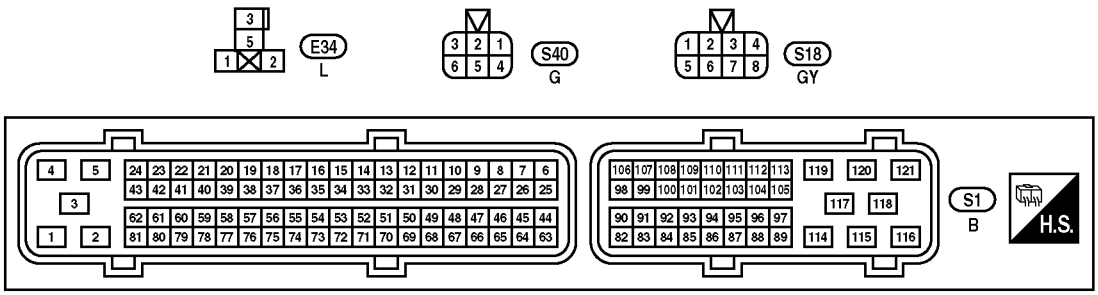

SEWK010_D1

DTC P1122 Electric Throttle Control Performance Problem (Cont'd)

Specification data are reference values and are measured between each terminal and ground.
Pulse signal is measured by CONSULT-II.

CAUTION:

- **Do not use ECM ground terminals when measuring input/output voltage. Doing so may result in damage to the ECM's transistor. Use a ground other than ECM terminals, such as the ground.**

Terminal No.	Wire Color	Item	Condition	Data (DC Voltage)
3	R	Throttle control motor power supply	**[Ignition switch ON]**	BATTERY VOLTAGE (11 - 14 V)
4	BR	Throttle control motor (Close)	**[Ignition switch ON]** ● Engine stopped ● Shift lever position is D (A/T models) ● Shift lever position is 1st (M/T models) ● Accelerator pedal is releasing	0 - 14 V ★ 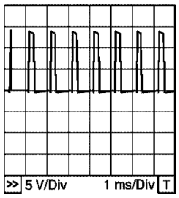
5	Y	Throttle control motor (Open)	**[Ignition switch ON]** ● Engine stopped ● Shift lever position is D (A/T models) ● Shift lever position is 1st (M/T models) ● Accelerator pedal is depressing	0 - 14 V ★ 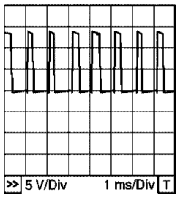
104	GR	Throttle control motor relay	**[Ignition switch OFF]**	BATTERY VOLTAGE (11 - 14 V)
			[Ignition switch ON]	Approximately 0 V

★: Average voltage for pulse signal (Actual pulse signal can be confirmed by oscilloscope.)

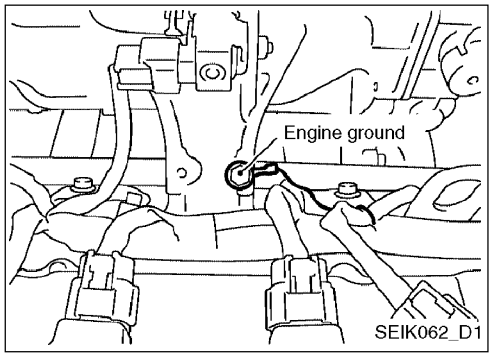

Diagnostic Procedure

1. RETIGHTEN GROUND SCREWS

1. Turn ignition switch OFF.
2. Loosen and retighten engine ground screws.
   >> GO TO 2.

DTC P1122 Electric Throttle Control Performance Problem (Cont'd)

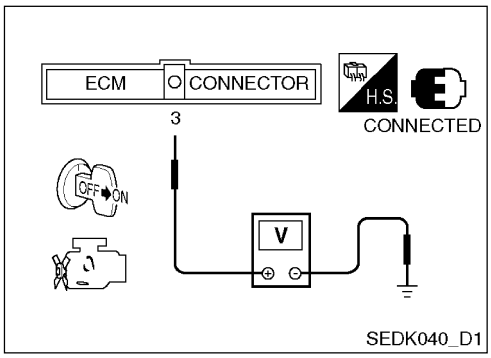

2. CHECK THROTTLE CONTROL MOTOR RELAY SIGNAL CIRCUIT

Check voltage between ECM terminal 3 and ground under the following conditions with CONSULT-II or tester.

Ignition switch	Voltage
OFF	Approximately 0 V
ON	Battery voltage (11 - 14 V)

OK or NG

OK >> GO TO 10.

NG >> GO TO 3.

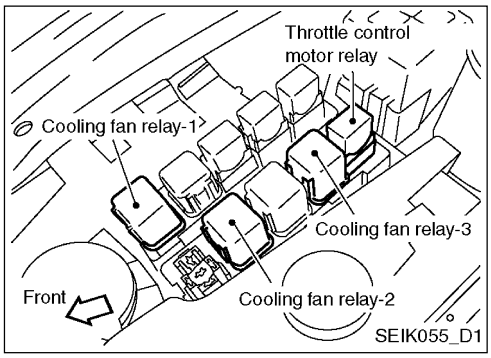

3. CHECK THROTTLE CONTROL MOTOR RELAY POWER SUPPLY CIRCUIT

1. Turn ignition switch OFF.
2. Disconnect throttle control motor relay.

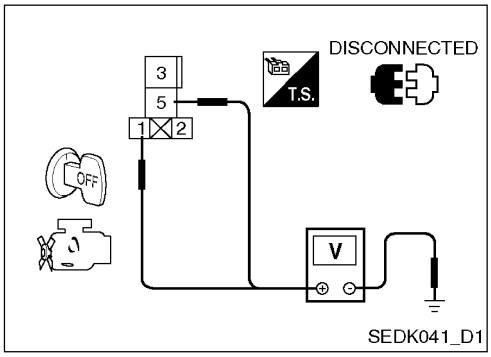

3. Check voltage between throttle control motor relay terminals 2, 5 and ground.

   Voltage: Battery voltage

OK or NG

OK >> GO TO 5.

NG >> GO TO 4.

4. DETECT MALFUNCTIONING PART

Check the following.

- 15A fuse
- Fusible link and fuse box connector
- Harness for open or short between throttle control motor relay and fuse

>> Repair open circuit or short to ground or short to power in harness or connectors.

DTC P1122 Electric Throttle Control Performance Problem (Cont'd)

5. CHECK THROTTLE CONTROL MOTOR RELAY INPUT SIGNAL CIRCUIT

1. Disconnect ECM harness connector.
2. Check harness continuity between ECM terminal 3 and throttle control motor relay terminal 3.
   Refer to Wiring Diagram.

   Continuity should exist.
3. Also check harness for short to ground and short to power.

OK or NG

OK >> GO TO 7.

NG >> GO TO 6.

6. DETECT MALFUNCTIONING PART

Check the following.

- Harness connectors E5, S18
- Harness for open or short between ECM and throttle control motor relay

>> Repair open circuit or short to ground or short to power in harness or connectors.

7. CHECK THROTTLE CONTROL MOTOR RELAY OUTPUT SIGNAL CIRCUIT

1. Check continuity between ECM terminal 104 and throttle control motor relay terminal 1.
   Refer to Wiring Diagram.

   Continuity should exist.
2. Also check harness for short to ground and short to power.

OK or NG

OK >> GO TO 9.

NG >> GO TO 8.

8. DETECT MALFUNCTIONING PART

Check the following.

- Harness connectors E5, S18
- Harness for open or short between ECM and throttle control motor relay

>> Repair open circuit or short to ground or short to power in harness or connectors.

9. CHECK THROTTLE CONTROL MOTOR RELAY

Refer to EC-159, "Component Inspection".

OK or NG

OK >> GO TO 13.

NG >> Replace throttle control motor relay.

DTC P1122 Electric Throttle Control Performance Problem (Cont'd)

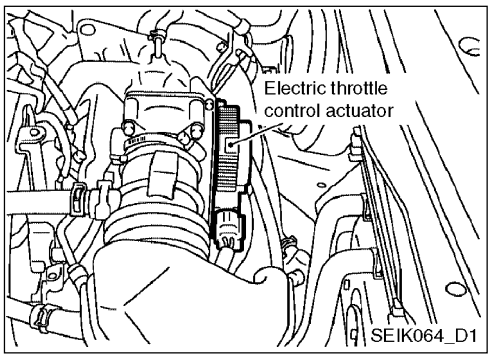

10. CHECK THROTTLE CONTROL MOTOR OUTPUT SIGNAL CIRCUIT FOR OPEN OR SHORT

1. Turn ignition switch OFF.
2. Disconnect electric throttle control actuator harness connector.
3. Disconnect ECM harness connector.
4. Check harness continuity between the following terminals.

Electric throttle control actuator terminal	ECM terminal	Continuity
3	4	Should exist
	5	Should not exist
6	4	Should not exist
	5	Should exist

5. Also check harness for short to ground and short to power.

OK or NG

OK >> GO TO 11.

NG >> Repair open circuit or short to ground or short to power in harness or connectors.

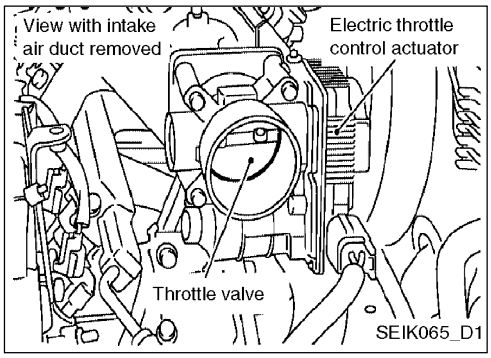

11. CHECK ELECTRIC THROTTLE CONTROL ACTUATOR VISUALLY

1. Remove the intake air duct.
2. Check if foreign matter is caught between the throttle valve and the housing.

OK or NG

OK >> GO TO 12.

NG >> Remove the foreign matter and clean the electric throttle control actuator inside.

12. CHECK THROTTLE CONTROL MOTOR

Refer to EC-159, "Component Inspection".

OK or NG

OK >> GO TO 13.

NG >> GO TO 14.

13. CHECK INTERMITTENT INCIDENT

Refer to EC-74, "TROUBLE DIAGNOSIS FOR INTERMITTENT INCIDENT".

OK or NG

OK >> GO TO 14.

NG >> Repair or replace harness or connectors.

14. REPLACE ELECTRIC THROTTLE CONTROL ACTUATOR

1. Replace the electric throttle control actuator.
2. Perform EC-23, "Throttle Valve Closed Position Learning".
3. Perform EC-24, "Idle Air Volume Learning".

>> **INSPECTION END**

DTC P1122 Electric Throttle Control Performance Problem (Cont'd)

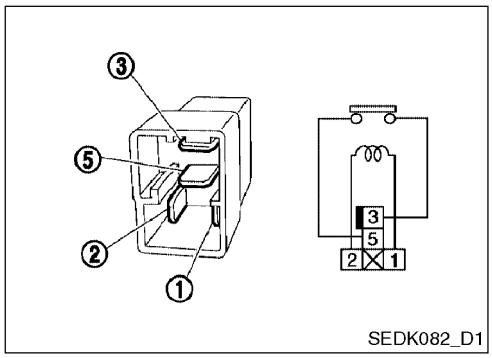

Component Inspection

THROTTLE CONTROL MOTOR RELAY

1. Apply 12V direct current between relay terminals 1 and 2.
2. Check continuity between throttle control motor relay terminals 3 and 5.

Conditions	Continuity
12V direct current supply between terminals 1 and 2	Yes
No current supply	No

3. If NG, replace throttle control motor relay.

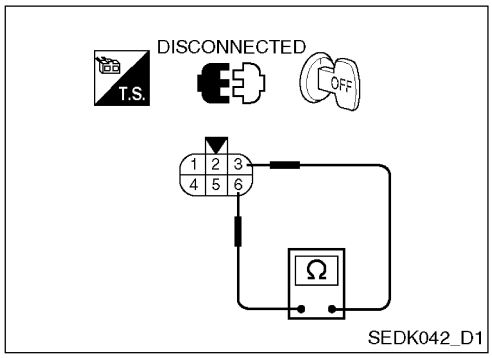

Throttle Control Motor

1. Disconnect electric throttle control actuator harness connector.
2. Check resistance between throttle control motor terminals 3 and 6.

   Resistance: Approximately 1 - 15 Ω [at 25°C (77°F)]
3. If NG, replace electric throttle control actuator and go to next step.
4. Perform EC-23, "Throttle Valve Closed Position Learning".
5. Perform EC-24, "Idle Air Volume Learning".

Remove and Installation

ELECTRIC THROTTLE CONTROL ACTUATOR

Refer to "OUTOR COMPONENT PARTS" (QG16: EM-12).

DTC P1124, P1126 Throttle Control Motor Relay Circuit

Component Description

Power supply for the Throttle Control motor is provided to the ECM via throttle control motor relay. The throttle control motor relay is ON/OFF controlled by the ECM. When the ignition switch is turned ON, the ECM sends an ON signal to throttle control motor relay and battery voltage is provided to the ECM. When the ignition switch is turned OFF, the ECM sends an OFF signal to throttle control motor relay and battery voltage is not provided to the ECM.

CONSULT-II REFERENCE VALUE IN DATA MONITOR MODE

Specification data are reference values.

Monitor Item	Condition	Specification
THRTL RELAY	● Ignition switch: ON	ON

On Board Diagnosis Logic

This Self-Diagnosis Has The One Trip Detection Logic.

DTC No.	Trouble Diagnosis Name	DTC Detecting Condition	Possible Cause
P1124 1124	Throttle control motor relay circuit short	ECM detect the throttle control motor relay is stuck ON.	● Harness or connectors (Throttle control motor relay circuit is shorted.) ● Throttle control motor relay
P1126 1126	Throttle control motor relay circuit open	ECM detects a voltage of power source for throttle control motor is excessively low.	● Harness or connectors (Throttle control motor relay circuit is open.) ● Throttle control motor relay

Fail-Safe Mode

When the malfunction is detected, the ECM enters fail-safe mode and the MIL lights up.

Engine Operating Condition In Fail-Safe Mode
ECM stops the electric throttle control actuator control, throttle valve is maintained at a fixed opening (approx. 6.05 degrees) by the return spring.

DTC Confirmation Procedure

NOTE:

- **If DTC Confirmation Procedure has been previously conducted, always turn ignition switch OFF and wait at least 10 seconds before conducting the next test.**

Procedure For DTC P1124

TESTING CONDITION:

Before performing the following procedure, confirm that battery voltage is more than 10V at idle.

With CONSULT-II

1. Turn ignition switch ON and wait at least 1 second.
2. Select “DATA MONITOR” mode with CONSULT-II.
3. If DTC is detected, go to EC-163, “Diagnostic Procedure”.

DTC P1124, P1126 Throttle Control Motor Relay Circuit (Cont'd)

Without CONSULT-II

1. Turn ignition switch ON and wait at least 1 second.
2. Turn ignition switch OFF, wait at least 10 seconds and then turn ON.
3. Perform Diagnostic Test Mode II (Self-diagnostic results) with ECM.
4. If DTC is detected, go to EC-163, "Diagnostic Procedure".

Procedure For DTC P1126

With CONSULT-II

1. Turn ignition switch ON and wait at least 2 seconds.
2. Select "DATA MONITOR" mode with CONSULT-II.
3. Start engine and let it idle for 5 seconds.
4. If DTC is detected, go to EC-163, "Diagnostic Procedure".

Without CONSULT-II

1. Turn ignition switch ON and wait at least 2 seconds.
2. Start engine and let it idle for 5 seconds.
3. Turn ignition switch OFF, wait at least 10 seconds and then turn ON.
4. Perform Diagnostic Test Mode II (Self-diagnostic results) with ECM.
5. If DTC is detected, go to EC-163, "Diagnostic Procedure".

Wiring Diagram

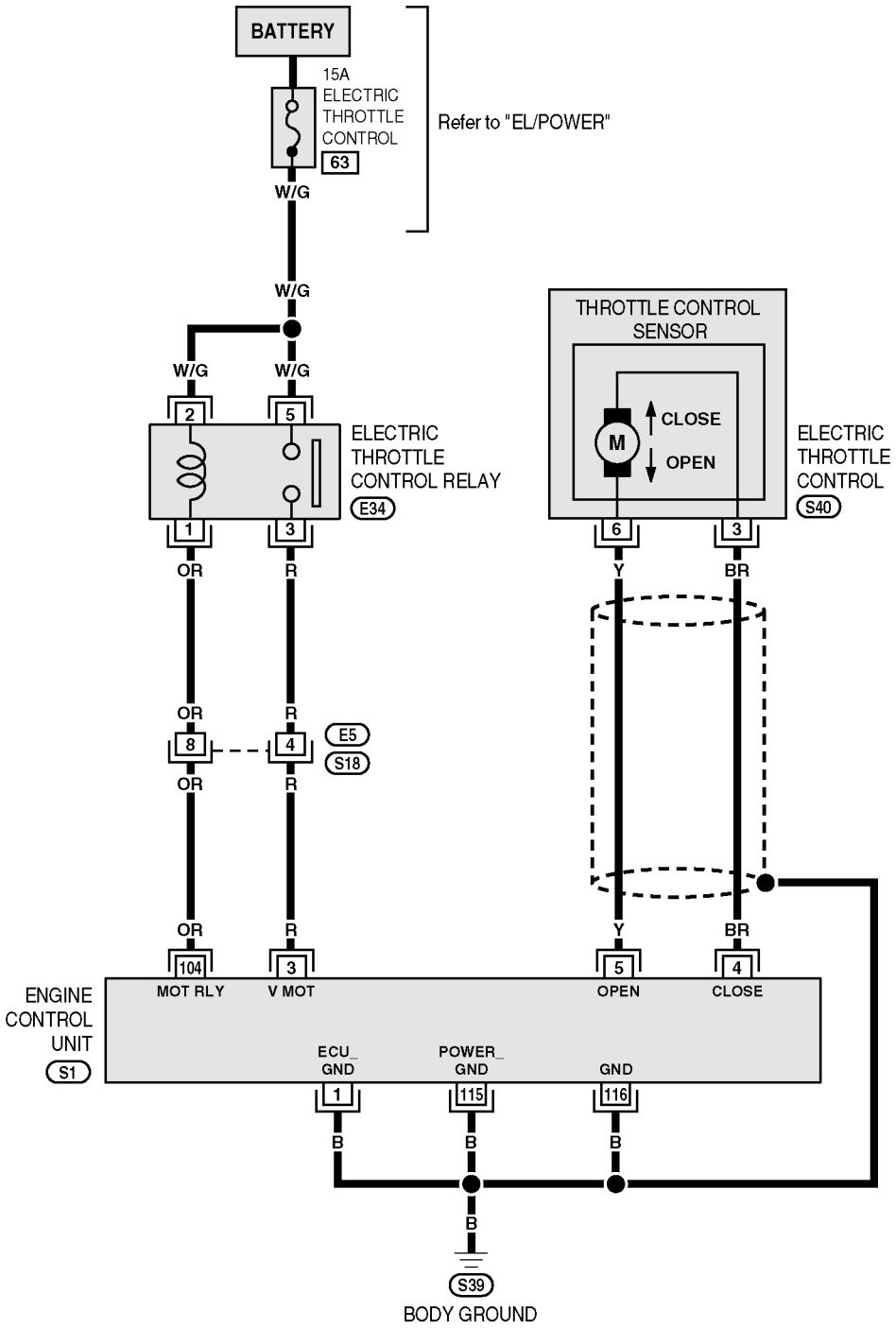

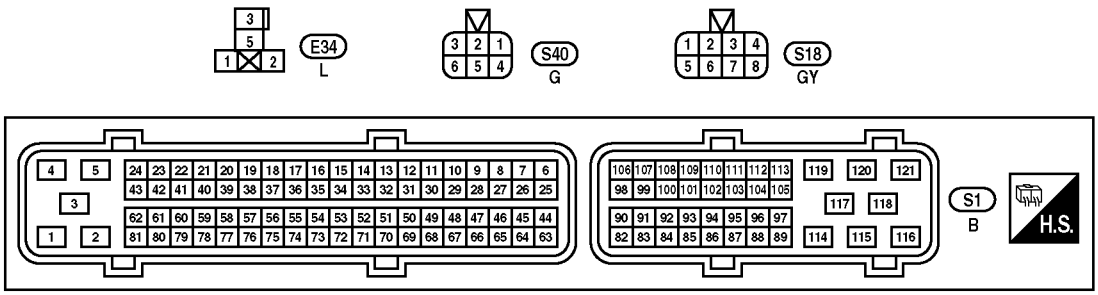

SEWK010_D1

DTC P1124, P1126 Throttle Control Motor Relay Circuit (Cont'd)

Specification data are reference values and are measured between each terminal and ground.

CAUTION:

- **Do not use ECM ground terminals when measuring input/output voltage. Doing so may result in damage to the ECM's transistor. Use a ground other than ECM terminals, such as the ground.**

Terminal No.	Wire Color	Item	Condition	Data (DC Voltage)
104	OR	Throttle control motor relay	**[Ignition switch OFF]**	BATTERY VOLTAGE (11 - 14 V)
			[Ignition switch ON]	Approximately 0 V
3	R	Throttle control motor power supply	**[Ignition switch ON]**	BATTERY VOLTAGE (11 - 14 V)

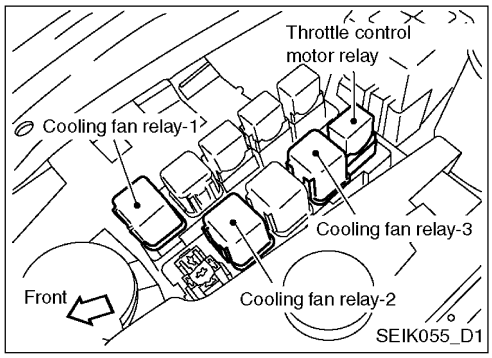

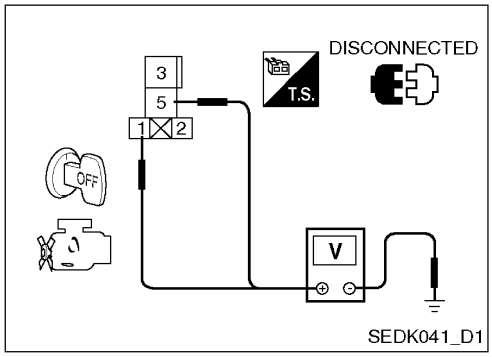

Diagnostic Procedure

1. CHECK THROTTLE CONTROL MOTOR RELAY POWER SUPPLY CIRCUIT

1. Turn ignition switch OFF.
2. Disconnect throttle control motor relay.
3. Check voltage between throttle control motor relay terminals 2, 5 and ground.

   Voltage: Battery voltage

OK or NG

OK >> GO TO 3.

NG >> GO TO 2.

2. DETECT MALFUNCTIONING PART

Check the following.

- 15A fuse
- Fusible link and fuse box connector
- Harness for open or short between throttle control motor relay and fuse

>> Repair open circuit or short to ground or short to power in harness or connectors.

DTC P1124, P1126 Throttle Control Motor Relay Circuit (Cont'd)

3. CHECK THROTTLE CONTROL MOTOR RELAY INPUT SIGNAL CIRCUIT

1. Disconnect ECM harness connector.
2. Check harness continuity between ECM terminal 3 and throttle control motor relay terminal 3. Refer to Wiring Diagram.
   Continuity should exist.
3. Also check harness for short to ground and short to power.

OK or NG

OK >> GO TO 5.

NG >> GO TO 4.

4. DETECT MALFUNCTIONING PART

Check the following.

- Harness connectors E5, S18
- Harness for open or short between ECM and throttle control motor relay

>> Repair open circuit or short to ground or short to power in harness or connectors.

5. CHECK THROTTLE CONTROL MOTOR RELAY OUTPUT SIGNAL CIRCUIT

1. Check continuity between ECM terminal 104 and throttle control motor relay terminal 1. Refer to Wiring Diagram.
   Continuity should exist.
2. Also check harness for short to ground and short to power.

OK or NG

OK >> GO TO 7.

NG >> GO TO 6.

6. DETECT MALFUNCTIONING PART

Check the following.

- Harness connectors E5, S18
- Harness for open or short between ECM and throttle control motor relay

>> Repair open circuit or short to ground short to power in harness or connectors.

7. CHECK THROTTLE CONTROL MOTOR RELAY

Refer to EC-165, "Component Inspection".

OK or NG

OK >> GO TO 8.

NG >> Replace throttle control motor relay.

8. CHECK INTERMITTENT INCIDENT

Refer to EC-74, "TROUBLE DIAGNOSIS FOR INTERMITTENT INCIDENT".

>> **INSPECTION END**

DTC P1124, P1126 Throttle Control Motor Relay Circuit (Cont'd)

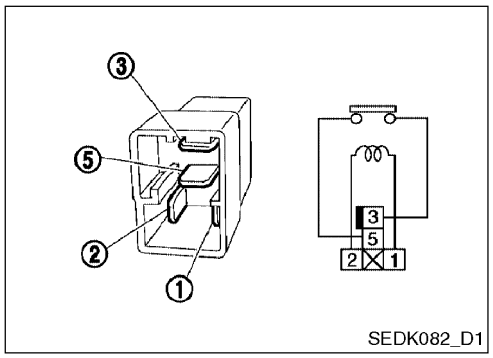

SEDK082_D1

Component Inspection

THROTTLE CONTROL MOTOR RELAY

1. Apply 12V direct current between relay terminals 1 and 2.
2. Check continuity between throttle control motor relay terminals 3 and 5.

Conditions	Continuity
12V direct current supply between terminals 1 and 2	Yes
No current supply	No

3. If NG, replace throttle control motor relay.

DTC P1128 Throttle Control Motor Circuit short

Component Description

The throttle control motor is operated by the ECM and it opens and closes the throttle valve.

The current opening angle of the throttle valve is detected by the throttle position sensor and it provides feedback to the ECM to control the throttle control motor to make the throttle valve opening angle properly in response to driving condition.

On Board Diagnosis Logic

This self-diagnosis has the one trip detection logic.

DTC No.	Trouble Diagnosis Name	DTC Detecting Condition	Possible Cause
P1128 1128	Throttle control motor circuit short	ECM detects short both circuits between ECM and throttle control motor.	● Harness or connectors (Throttle control motor circuit is shorted.) ● Electric throttle control actuator (Throttle control motor)

Fail-Safe Mode

When the malfunction is detected, the ECM enters fail-safe mode and the MIL lights up.

Engine operating condition in fail-safe mode
ECM stops the electric throttle control actuator control, throttle valve is maintained at a fixed opening (approx. 6.05 degrees) by the return spring.

DTC Confirmation Procedure

NOTE:

- **If DTC Confirmation Procedure has been previously conducted, always turn ignition switch OFF and wait at least 10 seconds before conducting the next test.**

With CONSULT-II

1. Turn ignition switch ON and wait at least 2 seconds.
2. Select “DATA MONITOR” mode with CONSULT-II.
3. Start engine and let it idle for 5 seconds.
4. If DTC is detected, go to EC-168, “Diagnostic Procedure”.

Without CONSULT-II

1. Turn ignition switch ON and wait at least 2 seconds.
2. Start engine and let it idle for 5 seconds.
3. Turn ignition switch OFF, wait at least 10 seconds and then turn ON.
4. Perform Diagnostic Test Mode II (Self-diagnostic results) with ECM.
5. If DTC is detected, go to EC-168, “Diagnostic Procedure”.

Wiring Diagram

EC/ETC-01

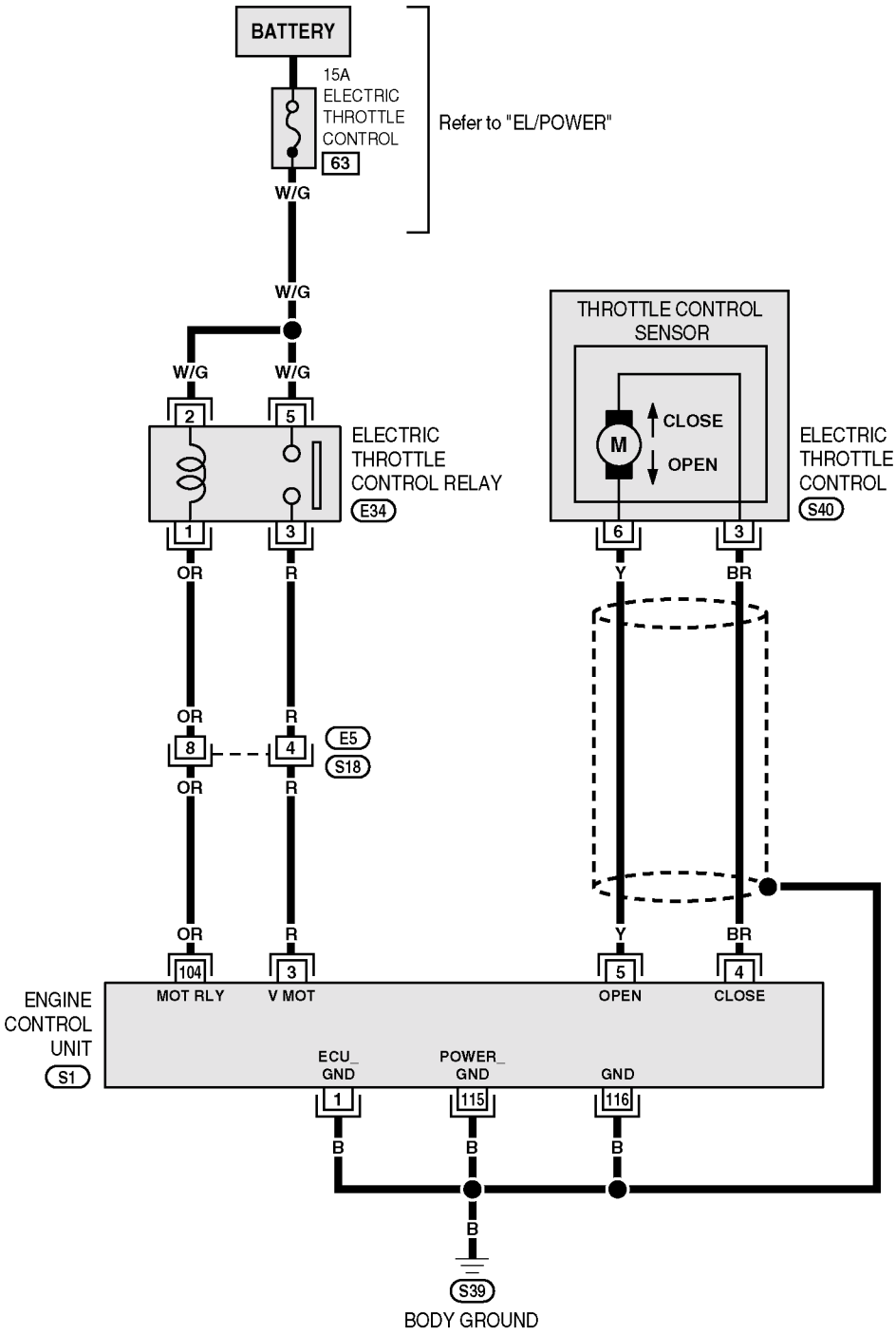

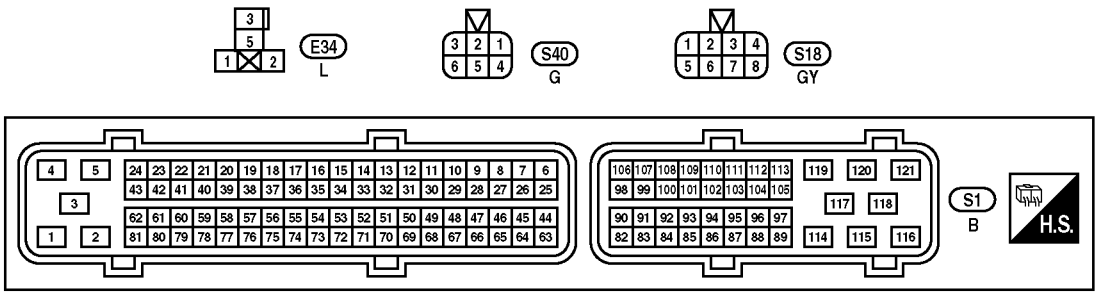

SEWK010_D1

DTC P1128 Throttle Control Motor Circuit short (Cont'd)

Specification data are reference values and are measured between each terminal and ground.
Pulse signal is measured by CONSULT-II.

CAUTION:

- **Do not use ECM ground terminals when measuring input/output voltage. Doing so may result in damage to the ECM's transistor. Use a ground other than ECM terminals, such as the ground.**

Terminal No.	Wire Color	Item	Condition	Data (DC Voltage)
4	BR	Throttle control motor (Close)	**[Ignition switch ON]** ● Engine stopped ● Shift lever position is D (A/T models) ● Shift lever position is 1st (M/T models) ● Accelerator pedal is releasing	0 - 14 V ★ 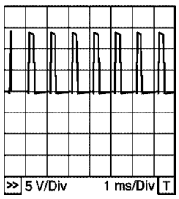
5	Y	Throttle control motor (Open)	**[Ignition switch ON]** ● Engine stopped ● Shift lever position is D (A/T models) ● Shift lever position is 1st (M/T models) ● Accelerator pedal is depressing	0 - 14 V ★ 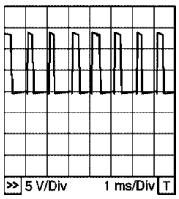

★: Average voltage for pulse signal (Actual pulse signal can be confirmed by oscilloscope.)

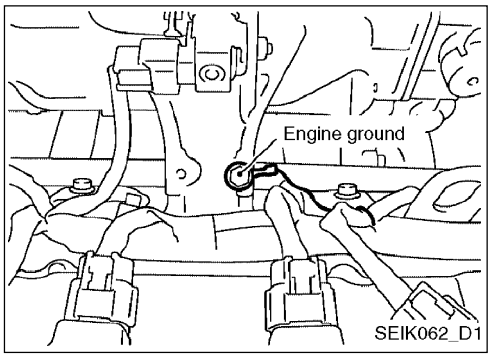

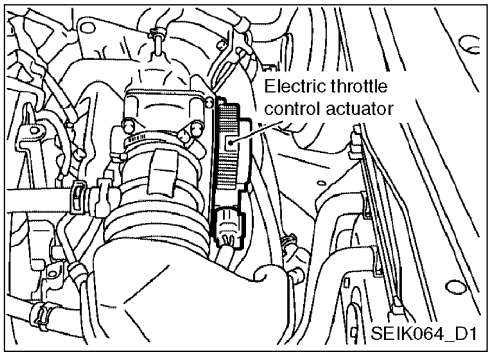

Diagnostic Procedure

1. RETIGHTEN GROUND SCREWS

1. Turn ignition switch OFF.
2. Loosen and retighten engine ground screws.
   >> GO TO 2.

2. CHECK THROTTLE CONTROL MOTOR OUTPUT SIGNAL CIRCUIT FOR OPEN OR SHORT

1. Disconnect electric throttle control actuator harness connector.
2. Disconnect ECM harness connector.
3. Check harness continuity between the following terminals.

Electric throttle control actuator terminal	ECM terminal	Continuity
3	4	Should exist
	5	Should not exist
6	4	Should not exist
	5	Should exist

DTC P1128 Throttle Control Motor Circuit short (Cont'd)

4. Also check harness for short to ground and short to power.

OK or NG

OK >> GO TO 3.

NG >> Repair open circuit or short to ground or short to power in harness connectors.

3. CHECK THROTTLE CONTROL MOTOR

Refer to EC-169, "Component Inspection".

OK or NG

OK >> GO TO 4.

NG >> GO TO 5.

4. CHECK INTERMITTENT INCIDENT

Refer to EC-74, "TROUBLE DIAGNOSIS FOR INTERMITTENT INCIDENT".

OK or NG

OK >> GO TO 5.

NG >> Repair or replace harness or connectors.

5. REPLACE ELECTRIC THROTTLE CONTROL ACTUATOR

1. Replace the electric throttle control actuator.
2. Perform EC-23, "Throttle Valve Closed Position Learning".
3. Perform EC-24, "Idle Air Volume Learning".

>> **INSPECTION END**

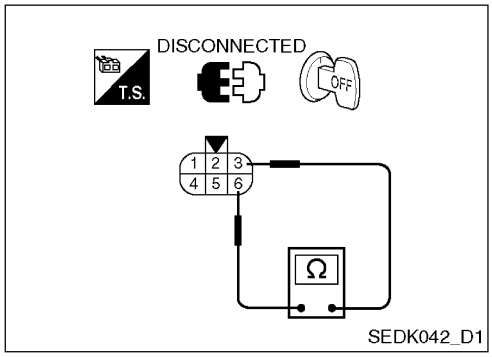

Component Inspection

THROTTLE CONTROL MOTOR

1. Disconnect electric throttle control actuator harness connector.
2. Check resistance between throttle control motor terminals 3 and 6.

   Resistance:
   Approximately 1 - 15 Ω [at 25°C (77°F)]
3. If NG, replace electric throttle control actuator and go to next step.
4. Perform EC-23, "Throttle Valve Closed Position Learning".
5. Perform EC-24, "Idle Air Volume Learning".

Remove and Installation

ELECTRIC THROTTLE CONTROL ACTUATOR

Refer to "OUTOR COMPONENT PARTS" (QG16: EM-12).

DTC P1225 Closed Throttle Position Learning Performance Problem

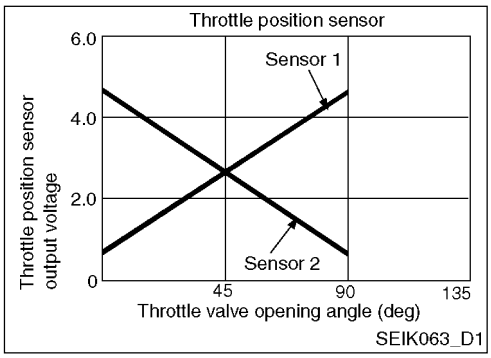

Component Description

Electric Throttle Control Actuator consists of throttle control motor, throttle position sensor, etc. The throttle position sensor responds to the throttle valve movement.

The throttle position sensor has the two sensors. These sensors are a kind of potentiometers which transform the throttle valve position into output voltage, and emit the voltage signal to the ECM. In addition, these sensors detect the opening and closing speed of the throttle valve and feed the voltage signals to the ECM. The ECM judges the current opening angle of the throttle valve from these signals and the ECM controls the throttle control motor to make the throttle valve opening angle properly in response to driving condition.

On Board Diagnosis Logic

The MIL will not light up for this diagnosis.

DTC No.	Trouble Diagnosis Name	DTC Detecting Condition	Possible Cause
P1225 1225	Closed throttle position learning performance problem	Closed throttle position learning value is excessively low.	● Electric throttle control actuator (Throttle position sensor 1 and 2)

DTC Confirmation Procedure

NOTE:

- **If DTC Confirmation Procedure has been previously conducted, always turn ignition switch OFF and wait at least 10 seconds before conducting the next test.**

TESTING CONDITION:

Before performing the following procedure, confirm that battery voltage is more than 10V at idle.

With CONSULT-II

1. Turn ignition switch ON.
2. Select “DATA MONITOR” mode with CONSULT-II.
3. Turn ignition switch OFF, wait at least 10 seconds.
4. Turn ignition switch ON.
5. If 1st trip DTC is detected, go to EC-171, “Diagnostic Procedure”.

Without CONSULT-II

1. Turn ignition switch ON.
2. Turn ignition switch OFF, wait at least 10 seconds and then turn ON.
3. Perform Diagnostic Test Mode II (Self-diagnostic results) with ECM.
4. If 1st trip DTC is detected, go to EC-171, “Diagnostic Procedure”.

DTC P1225 Closed Throttle Position Learning Performance Problem (Cont'd)

Diagnostic Procedure

1. CHECK ELECTRIC THROTTLE CONTROL ACTUATOR VISUALLY

1. Turn ignition switch OFF.
2. Remove the intake air duct.

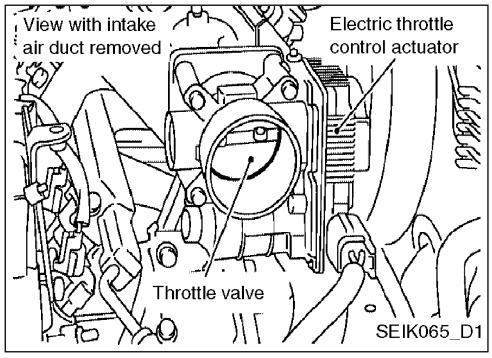

3. Check if foreign matter is caught between the throttle valve and the housing.

OK or NG

OK >> GO TO 2.

NG >> Remove the foreign matter and clean the electric throttle control actuator inside.

2. REPLACE ELECTRIC THROTTLE CONTROL ACTUATOR

1. Replace the electric throttle control actuator.
2. Perform EC-23, "Throttle Valve Closed Position Learning".
3. Perform EC-24, "Idle Air Volume Learning".

>> **INSPECTION END**

Remove and Installation

ELECTRIC THROTTLE CONTROL ACTUATOR

Refer to "OUTOR COMPONENT PARTS" (QG16: EM-12).

DTC P1226 Closed Throttle Position Learning Performance Problem

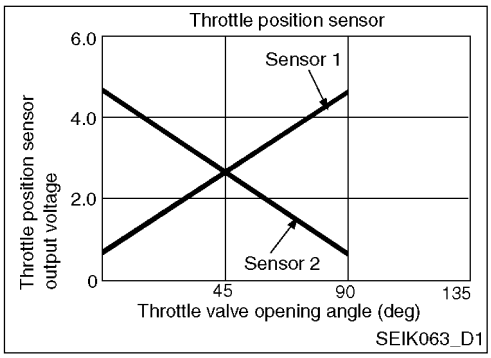

Component Description

Electric Throttle Control Actuator consists of throttle control motor, throttle position sensor, etc. The throttle position sensor responds to the throttle valve movement.

The throttle position sensor has the two sensors. These sensors are a kind of potentiometers which transform the throttle valve position into output voltage, and emit the voltage signal to the ECM. In addition, these sensors detect the opening and closing speed of the throttle valve and feed the voltage signals to the ECM. The ECM judges the current opening angle of the throttle valve from these signals and the ECM controls the throttle control motor to make the throttle valve opening angle properly in response to driving condition.

On Board Diagnosis Logic

The MIL will not light up for this diagnosis.

DTC No.	Trouble Diagnosis Name	DTC Detecting Condition	Possible Cause
P1226 1226	Closed throttle position learning performance problem	Closed throttle position learning is not performed successfully, repeatedly.	● Electric throttle control actuator (TP sensor 1 and 2)

DTC Confirmation Procedure

NOTE:

- **If "DTC Confirmation Procedure" has been previously conducted, always turn ignition switch "OFF" and wait at least 10 seconds before conducting the next test.**

TESTING CONDITION:

Before performing the following procedure, confirm that battery voltage is more than 10V at idle.

With CONSULT-II

1. Turn ignition switch ON.
2. Select "DATA MONITOR" mode with CONSULT-II.
3. Turn ignition switch OFF, wait at least 10 seconds.
4. Turn ignition switch ON.
5. Repeat steps 3 and 4 for 32 times.
6. If 1st trip DTC is detected, go to EC-173, "Diagnostic Procedure".

Without CONSULT-II

1. Turn ignition switch ON.
2. Turn ignition switch OFF, wait at least 10 seconds and then turn ON.
3. Repeat step 2 for 32 times.
4. Perform Diagnostic Test Mode II (Self-diagnostic results) with ECM.
5. If 1st trip DTC is detected, go to EC-173, "Diagnostic Procedure".

DTC P1226 Closed Throttle Position Learning Performance Problem (Cont'd)

Diagnostic Procedure

1. CHECK ELECTRIC THROTTLE CONTROL ACTUATOR VISUALLY

1. Turn ignition switch OFF.
2. Remove the intake air duct.

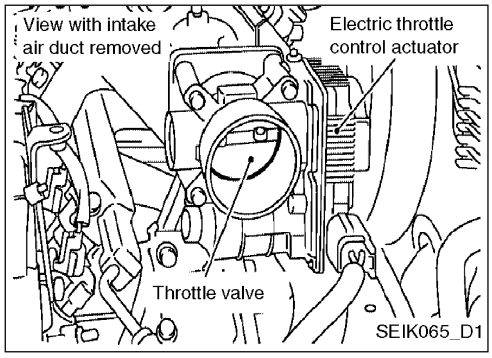

3. Check if foreign matter is caught between the throttle valve and the housing.

OK or NG

OK >> GO TO 2.

NG >> Remove the foreign matter and clean the electric throttle control actuator inside.

2. REPLACE ELECTRIC THROTTLE CONTROL ACTUATOR

1. Replace the electric throttle control actuator.
2. Perform EC-23, "Throttle Valve Closed Position Learning".
3. Perform EC-24, "Idle Air Volume Learning".

>> **INSPECTION END**

Remove and Installation

ELECTRIC THROTTLE CONTROL ACTUATOR

Refer to "OUTOR COMPONENT PARTS" (QG16: EM-12).

DTC P1229 Sensor Power Supply Circuit Short

On Board Diagnosis Logic

This self-diagnosis has the one trip detection logic.

DTC No.	Trouble Diagnosis Name	DTC Detecting Condition	Possible Cause
P1229 1229	Sensor power supply circuit short	ECM detects a voltage of power source for sensor is excessively low or high.	● Harness or connectors (The TP sensor 1 and 2 circuit is shorted.) ● Electric throttle control actuator (TP sensor 1 and 2)

Fail-Safe Mode

When the malfunction is detected, the ECM enters fail-safe mode and the MIL lights up.

Engine Operation Condition In Fail-Safe Mode
ECM stops the electric throttle control actuator control, throttle valve is maintained at a fixed opening (approx. 5 degrees) by the return spring.

DTC Confirmation Procedure

NOTE:

- **If DTC Confirmation Procedure has been previously conducted, always turn ignition switch OFF and wait at least 10 seconds before conducting the next test.**

TESTING CONDITION:

Before performing the following procedure, confirm that battery voltage is more than 10V at idle.

With CONSULT-II

1. Turn ignition switch ON.
2. Select “DATA MONITOR” mode with CONSULT-II.
3. Start engine and let it idle for 1 second.
4. If DTC is detected, go to EC-176, “Diagnostic Procedure”.

Without CONSULT-II

1. Start engine and let it idle for 1 seconds.
2. Turn ignition switch OFF, wait at least 10 seconds and then turn ON.
3. Perform Diagnostic Test Mode II (Self-diagnostic results) with ECM.
4. If DTC is detected, go to EC-176, “Diagnostic Procedure”.

Wiring Diagram

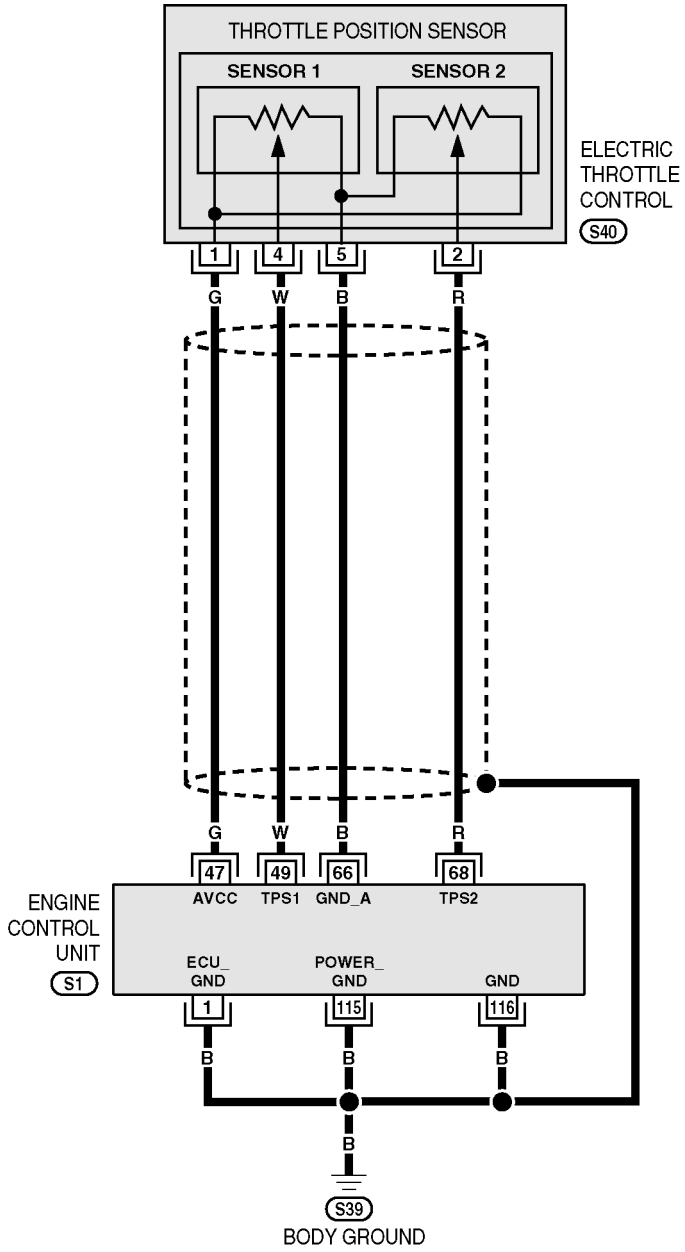

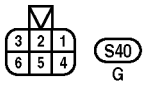

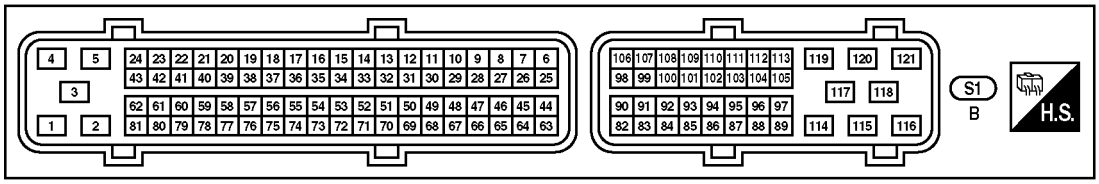

SEWK025_D1

DTC P1229 Sensor Power Supply Circuit Short (Cont'd)

Specification data are reference values and are measured between each terminal and ground.

CAUTION:

- **Do not use ECM ground terminals when measuring input/output voltage. Doing so may result in damage to the ECM's transistor. Use a ground other than ECM terminals, such as the ground.**

Terminal No.	Wire Color	Item	Condition	Data (DC Voltage)
47	G	Throttle position sensor power supply	**[Ignition switch ON]**	Approximately 5 V

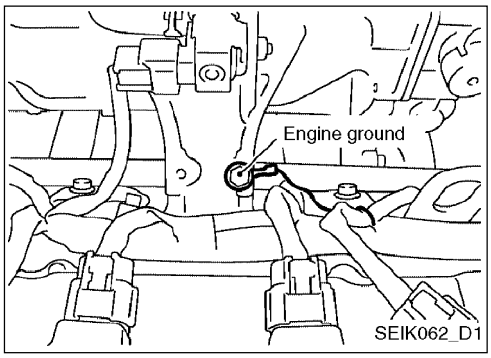

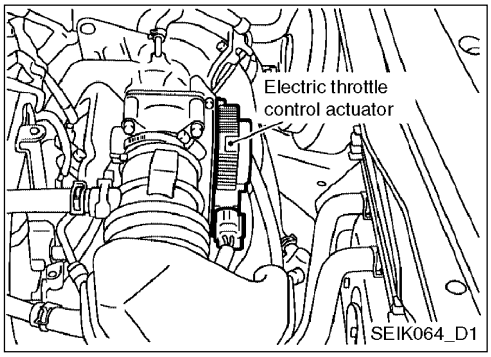

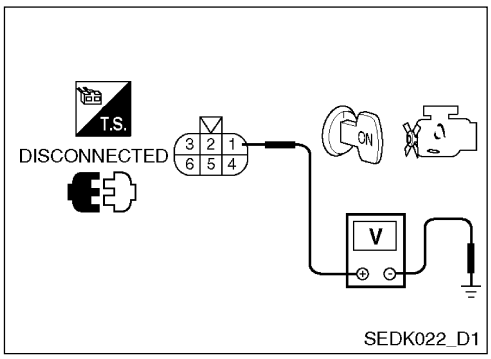

Diagnostic Procedure

1. RETIGHTEN GROUND SCREWS

1. Turn ignition switch OFF.
2. Loosen and retighten engine ground screws.

   >> GO TO 2.

2. CHECK THROTTLE POSITION SENSOR POWER SUPPLY CIRCUIT

1. Disconnect electric throttle control actuator harness connector.
2. Turn ignition switch ON.
3. Check voltage between electric throttle control actuator terminal 1 and ground with CONSULT-II or tester.

   Voltage: Approximately 5 V

OK or NG

OK >> GO TO 4.

NG >> GO TO 3.

DTC P1229 Sensor Power Supply Circuit Short (Cont'd)

3. CHECK SENSOR POWER SUPPLY CIRCUITS FOR SHORT

Check the following.

- Harness for short to power and short to ground between ECM terminal 47 and electric throttle control actuator terminal 1.
- ECM pin terminal.

OK or NG

OK >> GO TO 4.

NG >> Repair short to ground or short to power in harness or connectors.

4. CHECK THROTTLE POSITION SENSOR

Refer to EC-169, "Component Inspection".

OK or NG

OK >> GO TO 6.

NG >> GO TO 5.

5. REPLACE ELECTRIC THROTTLE CONTROL ACTUATOR

1. Replace electric throttle control actuator.
2. Perform EC-23, "Throttle Valve Closed Position Learning".
3. Perform EC-24, "Idle Air Volume Learning".

>> **INSPECTION END**

6. CHECK INTERMITTENT INCIDENT

Refer to EC-74, "TROUBLE DIAGNOSIS FOR INTERMITTENT INCIDENT".

>> **INSPECTION END**

DTC P2122, P2123 Accel Sensor - 1

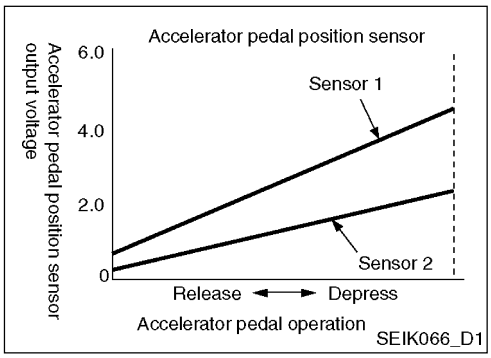

Component Description

The accelerator pedal position sensor is installed on the upper end of the accelerator pedal assembly. The sensor detects the accelerator position and sends a signal to the ECM.

Accelerator pedal position sensor has two sensors. These sensors are a kind of potentiometers which transform the accelerator pedal position into output voltage, and emit the voltage signal to the ECM.

In addition, these sensors detect the opening and closing speed of the accelerator pedal and feed the voltage signals to the ECM. The ECM judges the current opening angle of the accelerator pedal from these signals and controls the throttle control motor based on these signals.

Idle position of the accelerator pedal is determined by the ECM receiving the signal from the accelerator pedal position sensor. The ECM uses this signal for the engine operation such as fuel cut.

CONSULT-II REFERENCE VALUE IN DATA MONITOR MODE

Specification data are reference values.

Monitor Item	Condition		Specification
ACCEL SEN1	● Ignition switch: ON (engine stopped)	Accelerator pedal: Fully released	0.5 - 1.0 V
		Accelerator pedal: Fully depressed	4.0 - 4.8 V
ACCEL SEN2	● Ignition switch: ON (engine stopped)	Accelerator pedal: Fully released	0.3 - 1.2 V
		Accelerator pedal: Fully depressed	3.9 - 4.8 V
CLSD THL POS	● Ignition switch: ON	Accelerator pedal: Fully released	ON
		Accelerator pedal: Fully depressed	OFF

* : Accelerator pedal position sensor 2 signal is converted by ECM internally. Thus, it differs from ECM terminal voltage signal.

On Board Diagnosis Logic

These self-diagnoses have the one trip detection logic.

DTC No.	Trouble Diagnosis Name	DTC Detecting Condition	Possible Cause
P2122	Accelerator pedal position sensor 1 circuit low input	An excessively low voltage from the accelerator pedal position sensor 1 is sent to ECM.	● Harness or connectors (The accelerator pedal position sensor 1 circuit is open or shorted.)
P2123	Accelerator pedal position sensor 1 circuit high input	An excessively high voltage from the accelerator pedal position sensor 1 is sent to ECM.	● Accelerator pedal position sensor (Accelerator pedal position sensor 1)

Fail-Safe Mode

When the malfunction is detected, the ECM enters fail-safe mode and the MIL lights up.

Engine Operating Condition In Fail-Safe Mode
The ECM controls the electric throttle control actuator in regulating the throttle opening in order for the idle position to be within +10 degrees.
The ECM regulates the opening speed of throttle valve to be slower than the normal condition. So, the acceleration will be poor.

DTC P2122, P2123 Accel Sensor - 1 (Cont'd)

DTC Confirmation Procedure

NOTE:

- **If DTC Confirmation Procedure has been previously conducted, always turn ignition switch OFF and wait at least 10 seconds before conducting the next test.**

TESTING CONDITION:

Before performing the following procedure, confirm that battery voltage is more than 10V at idle.

With CONSULT-II

1. Turn ignition switch ON.
2. Select "DATA MONITOR" mode with CONSULT-II.
3. Start engine and let it idle for 1 second.
4. If DTC is detected, go to EC-181, "Diagnostic Procedure".

Without CONSULT-II

1. Start engine and let it idle for 1 second.
2. Turn ignition switch OFF, wait at least 10 seconds and then turn ON.
3. Perform Diagnostic Test Mode II (Self-diagnostic results) with ECM.
4. If DTC is detected, go to EC-181, "Diagnostic Procedure".

Wiring Diagram

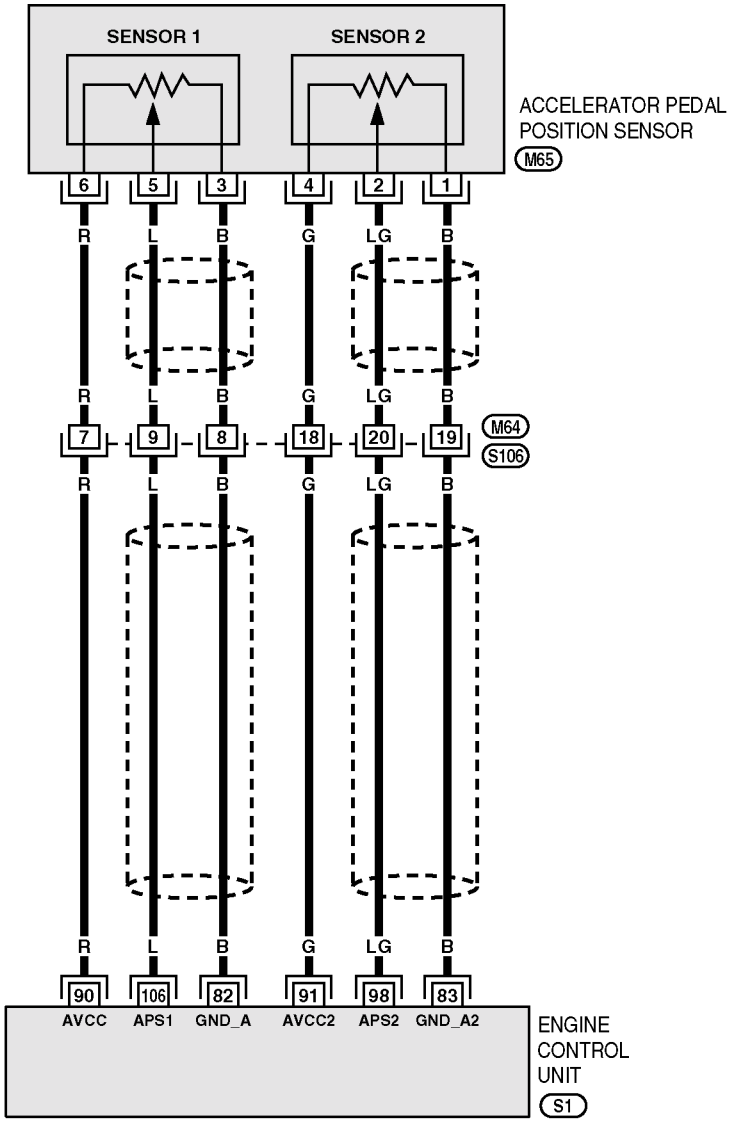

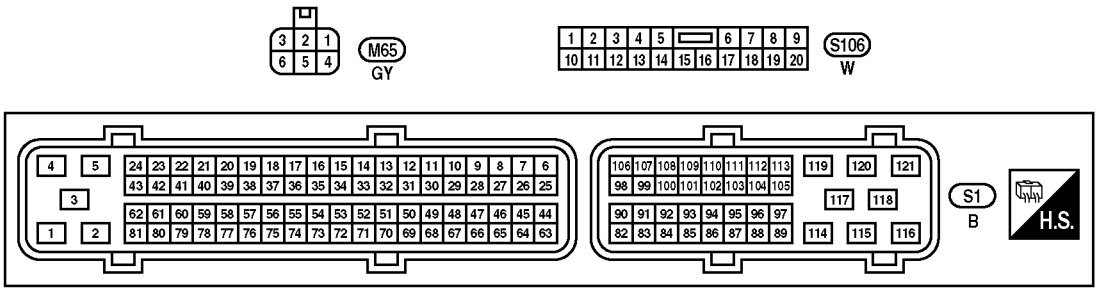

SEWK011_D1

DTC P2122, P2123 Accel Sensor - 1 (Cont'd)

Specification data are reference values and are measured between each terminal and ground.

CAUTION:

- **Do not use ECM ground terminals when measuring input/output voltage. Doing so may result in damage to the ECM's transistor. Use a ground other than ECM terminals, such as the ground.**

Terminal No.	Wire Color	Item	Condition	Data (DC Voltage)
82	B	Sensor ground (Accelerator pedal position sensor 1)	**[Engine is running]** ● Warm-up condition ● Idle speed	Approximately 0 V
83	B	Sensor ground (Accelerator pedal position sensor 2)	**[Ignition switch ON]**	Approximately 0 V
90	R	Sensor power supply (Accelerator pedal position sensor 1)	**[Ignition switch ON]**	Approximately 5 V
91	G	Sensor power supply (Accelerator pedal position sensor 2)	**[Ignition switch ON]**	Approximately 5 V
98	LG	Accelerator pedal position sensor 2	**[Ignition switch ON]** ● Engine stopped ● Accelerator pedal fully released	0.15 - 0.6 V
			[Ignition switch ON] ● Engine stopped ● Accelerator pedal fully depressed	1.95 - 2.4 V
106	L	Accelerator pedal position sensor 1	**[Ignition switch ON]** ● Engine stopped ● Accelerator pedal fully released	0.5 - 1.0 V
			[Ignition switch ON] ● Engine stopped ● Accelerator pedal fully depressed	3.9 - 4.7 V

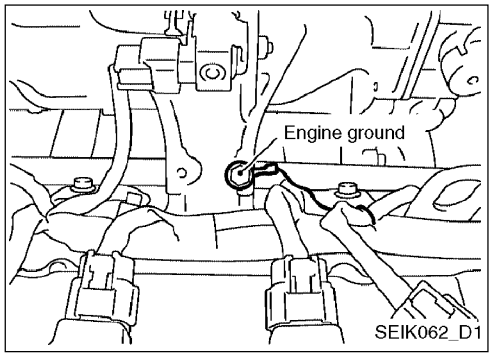

Diagnostic Procedure

1. RETIGHTEN GROUND SCREWS

1. Turn ignition switch OFF.
2. Loosen and retighten engine ground screws.
   >> GO TO 2.

DTC P2122, P2123 Accel Sensor - 1 (Cont'd)

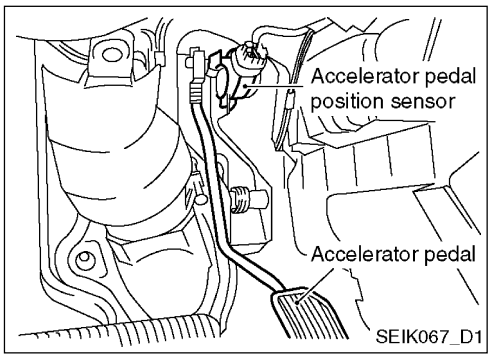

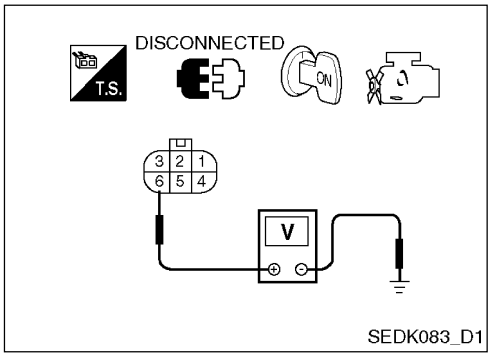

2. CHECK ACCELERATOR PEDAL POSITION SENSOR 1 POWER SUPPLY CIRCUIT

1. Disconnect accelerator pedal position (APP) sensor harness connector.
2. Turn ignition switch ON.
3. Check voltage between accelerator pedal position sensor terminal 6 and ground with CONSULT-II or tester.

   Voltage: Approximately 5V

OK or NG

OK >> GO TO 4.

NG >> GO TO 3.

3. DETECT MALFUNCTIONING PART

Check to following.

- Harness connectors M64, S106
- Harness for open or short between accelerator pedal position sensor and ECM

>> Repair open circuit or short to ground or short to power in harness or connectors.

4. CHECK ACCELERATOR PEDAL POSITION SENSOR 1 GROUND CIRCUIT FOR OPEN AND SHORT

1. Turn ignition switch OFF.
2. Disconnect ECM harness connector.
3. Disconnect TCM harness connector.
4. Check harness continuity between accelerator pedal position sensor terminal 3 and ECM terminal 82, TCM terminal 42. Refer to Wiring Diagram.

   Continuity should exist.

5. Also check harness for short to ground and short to power.

OK or NG

OK >> GO TO 6.

NG >> GO TO 5.

DTC P2122, P2123 Accel Sensor - 1 (Cont'd)

5. DETECT MALFUNCTIONING PART

Check to following.

- Harness connectors M64, S106
- Harness for open or short between accelerator pedal position sensor and ECM
- Harness for open or short between accelerator pedal position sensor and TCM

>> Repair open circuit or short to ground or short to power in harness or connectors.

6. CHECK ACCELERATOR PEDAL POSITION SENSOR 1 INPUT SIGNAL CIRCUIT FOR OPEN AND SHORT

1. Check harness continuity between ECM terminal 106 and accelerator pedal position sensor terminal 5.
   Refer to Wiring Diagram.
   Continuity should exist.
2. Also check harness for short to ground and short to power.

OK or NG

OK >> GO TO 8.
NG >> GO TO 7.

7. DETECT MALFUNCTIONING PART

Check to following.

- Harness connectors M64, S106
- Harness for open or short between accelerator pedal position sensor and ECM

>> Repair open circuit or short to ground or short to power in harness or connectors.

8. CHECK ACCELERATOR PEDAL POSITION SENSOR

Refer to EC-184, "Component Inspection".

OK or NG

OK >> GO TO 10.
NG >> GO TO 9.

9. REPLACE ACCELERATOR PEDAL POSITION SENSOR

1. Replace the accelerator pedal position sensor.
2. Perform EC-23, "Accelerator Pedal Released Position Learning".
3. Perform EC-23, "Throttle Valve Closed Position Learning".
4. Perform EC-24, "Idle Air Volume Learning".

>> **INSPECTION END**

10. CHECK INTERMITTENT INCIDENT

Refer to EC-74, "TROUBLE DIAGNOSIS FOR INTERMITTENT INCIDENT".

>> **INSPECTION END**

DTC P2122, P2123 Accel Sensor - 1 (Cont'd)

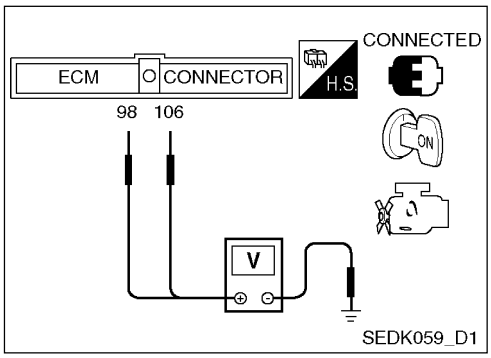

Component Inspection

ACCELERATOR PEDAL POSITION SENSOR

1. Reconnect all harness connectors disconnected.
2. Turn ignition switch ON.
3. Check voltage between ECM terminals 106 (accelerator pedal position sensor 1 signal), 98 (accelerator pedal position sensor 2 signal) and engine ground under the following conditions.

Terminal	Accelerator pedal	Voltage
106 (Accelerator pedal position sensor 1)	Fully released	0.5 - 1.0 V
	Fully depressed	3.9 - 4.7 V
98 (Accelerator pedal position sensor 2)	Fully released	0.15 - 0.6 V
	Fully depressed	1.95 - 2.4 V

4. If NG, replace accelerator pedal assembly and go to the next step.
5. Perform EC-23, "Accelerator Pedal Released Position Learning".
6. Perform EC-23, "Throttle Valve Closed Position Learning".
7. Perform EC-24, "Idle Air Volume Learning".

Remove and Installation

ACCELERATOR PEDAL

Refer to "ACCELERATOR CONTROL SYSTEM" (QG16: FE-3).

DTC P2127, P2128 Accel Sensor - 2

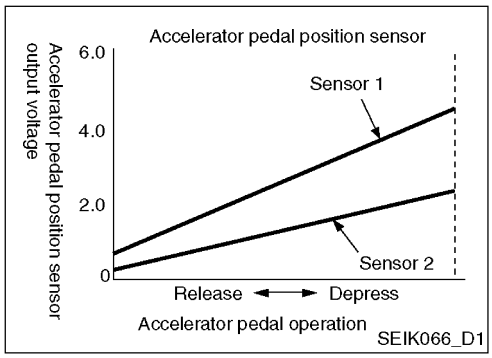

Component Description

The accelerator pedal position sensor is installed on the upper end of the accelerator pedal assembly. The sensor detects the accelerator position and sends a signal to the ECM.

Accelerator pedal position sensor has two sensors. These sensors are a kind of potentiometers which transform the accelerator pedal position into output voltage, and emit the voltage signal to the ECM.

In addition, these sensors detect the opening and closing speed of the accelerator pedal and feed the voltage signals to the ECM. The ECM judges the current opening angle of the accelerator pedal from these signals and controls the throttle control motor based on these signals.

Idle position of the accelerator pedal is determined by the ECM receiving the signal from the accelerator pedal position sensor. The ECM uses this signal for the engine operation such as fuel cut.

CONSULT-II REFERENCE VALUE IN DATA MONITOR MODE

Specification data are reference values.

Monitor Item	Condition		Specification
ACCEL SEN1	● Ignition switch: ON (engine stopped)	Accelerator pedal: Fully released	0.5 - 1.0 V
		Accelerator pedal: Fully depressed	4.0 - 4.8 V
ACCEL SEN2	● Ignition switch: ON (engine stopped)	Accelerator pedal: Fully released	0.3 - 1.2 V
		Accelerator pedal: Fully depressed	3.9 - 4.8 V
CLSD THL POS	● Ignition switch: ON	Accelerator pedal: Fully released	ON
		Accelerator pedal: Fully depressed	OFF

* : Accelerator pedal position sensor 2 signal is converted by ECM internally. Thus, it differs from ECM terminal voltage signal.

On Board Diagnosis Logic

These self-diagnoses have the one trip detection logic.

DTC No.	Trouble Diagnosis Name	DTC Detecting Condition	Possible Cause
P2127 2127	Accelerator pedal position sensor 2 circuit low input	An excessively low voltage from the accelerator pedal position sensor 2 is sent to ECM.	● Harness or connectors (The accelerator pedal position sensor 2 circuit is open or shorted.)
P2128 2128	Accelerator pedal position sensor 2 circuit high input	An excessively high voltage from the accelerator pedal position sensor 2 is sent to ECM.	● Accelerator pedal position sensor (Accelerator pedal position sensor 2)

Fail-Safe Mode

When the malfunction is detected, the ECM enters fail-safe mode and the MIL lights up.

Engine Operating Condition In Fail-Safe Mode
The ECM controls the electric throttle control actuator in regulating the throttle opening in order for the idle position to be within +10 degrees.
The ECM regulates the opening speed of throttle valve to be slower than the normal condition. So, the acceleration will be poor.

DTC P2127, P2128 Accel Sensor - 2 (Cont'd)

DTC Confirmation Procedure

NOTE:

- **If DTC Confirmation Procedure has been previously conducted, always turn ignition switch OFF and wait at least 10 seconds before conducting the next test.**

TESTING CONDITION:

Before performing the following procedure, confirm that battery voltage is more than 10V at idle.

With CONSULT-II

1. Turn ignition switch ON.
2. Select "DATA MONITOR" mode with CONSULT-II.
3. Start engine and let it idle for 1 second.
4. If DTC is detected, go to EC-188, "Diagnostic Procedure".

Without CONSULT-II

1. Start engine and let it idle for 1 second.
2. Turn ignition switch OFF, wait at least 10 seconds and then turn ON.
3. Perform Diagnostic Test Mode II (Self-diagnostic results) with ECM.
4. If DTC is detected, go to EC-188, "Diagnostic Procedure".

Wiring Diagram

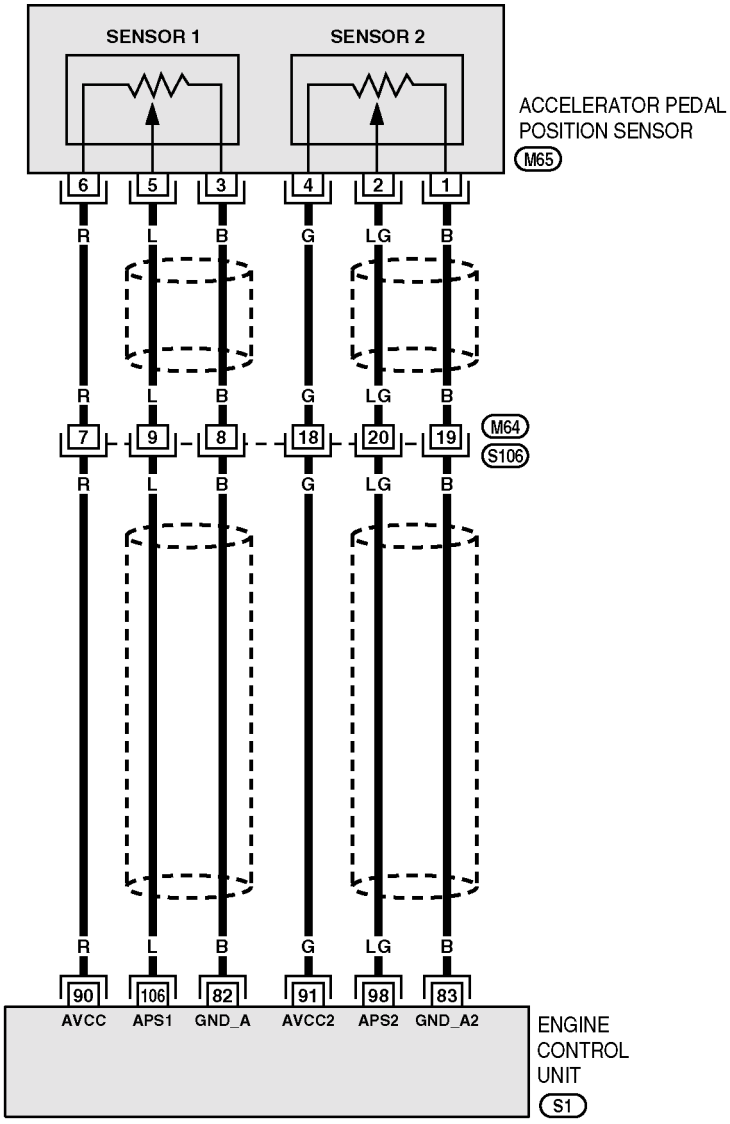

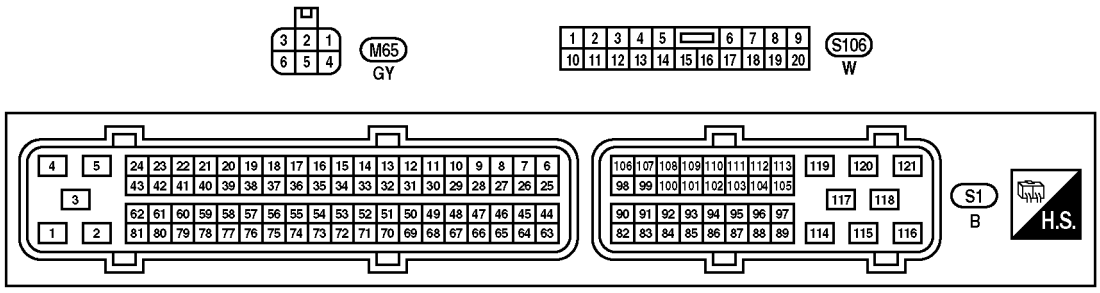

SEWK011_D1

DTC P2127, P2128 Accel Sensor - 2 (Cont'd)

Specification data are reference values and are measured between each terminal and ground.

CAUTION:

- **Do not use ECM ground terminals when measuring input/output voltage. Doing so may result in damage to the ECM's transistor. Use a ground other than ECM terminals, such as the ground.**

Terminal No.	Wire Color	Item	Condition	Data (DC Voltage)
82	B	Sensor ground (Accelerator pedal position sensor 1)	**[Engine is running]** ● Warm-up condition ● Idle speed	Approximately 0 V
83	B	Sensor ground (Accelerator pedal position sensor 2)	**[Ignition switch ON]**	Approximately 0 V
90	R	Sensor power supply (Accelerator pedal position sensor 1)	**[Ignition switch ON]**	Approximately 5 V
91	G	Sensor power supply (Accelerator pedal position sensor 2)	**[Ignition switch ON]**	Approximately 5 V
98	LG	Accelerator pedal position sensor 2	**[Ignition switch ON]** ● Engine stopped ● Accelerator pedal fully released	0.15 - 0.6 V
			[Ignition switch ON] ● Engine stopped ● Accelerator pedal fully depressed	1.95 - 2.4 V
106	L	Accelerator pedal position sensor 1	**[Ignition switch ON]** ● Engine stopped ● Accelerator pedal fully released	0.5 - 1.0 V
			[Ignition switch ON] ● Engine stopped ● Accelerator pedal fully depressed	3.9 - 4.7 V

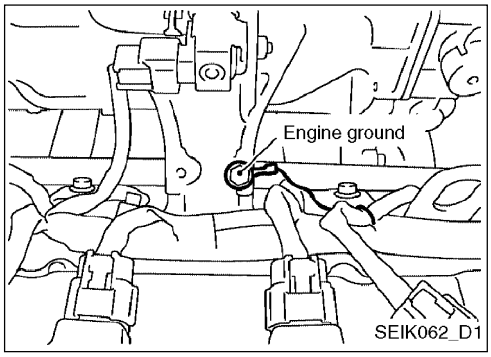

Diagnostic Procedure

1. RETIGHTEN GROUND SCREWS

1. Turn ignition switch OFF.
2. Loosen and retighten engine ground screws.
   >> GO TO 2.

DTC P2127, P2128 Accel Sensor - 2 (Cont'd)

2. CHECK ACCELERATOR PEDAL POSITION SENSOR 2 POWER SUPPLY CIRCUIT

1. Disconnect accelerator pedal position (APP) sensor harness connector.
2. Turn ignition switch ON.
3. Check voltage between accelerator pedal position sensor terminal 4 and ground with CONSULT-II or tester.

   Voltage: Approximately 5V

OK or NG

OK >> GO TO 4.

NG >> GO TO 3.

3. DETECT MALFUNCTIONING PART

Check to following.

Harness connectors M64, S106

Harness for open or short between accelerator pedal position sensor and ECM

>> Repair open circuit or short to ground or short to power in harness or connectors.

4. CHECK ACCELERATOR PEDAL POSITION SENSOR 2 GROUND CIRCUIT FOR OPEN AND SHORT

1. Turn ignition switch OFF.
2. Disconnect ECM harness connector.
3. Check harness continuity between accelerator pedal position sensor terminal 1 and ECM terminal 83. Refer to Wiring Diagram.

   Continuity should exist.

4. Also check harness for short to ground and short to power.

OK or NG

OK >> GO TO 6.

NG >> GO TO 5.

DTC P2127, P2128 Accel Sensor - 2 (Cont'd)

5. DETECT MALFUNCTIONING PART

Check to following.

Harness connectors M64, S106

Harness for open or short between accelerator pedal position sensor and ECM

Harness for open or short between accelerator pedal position sensor and TCM

>> Repair open circuit or short to ground or short to power in harness or connectors.

6. CHECK ACCELERATOR PEDAL POSITION SENSOR 2 INPUT SIGNAL CIRCUIT FOR OPEN AND SHORT

1. Check harness continuity between ECM terminal 98 and accelerator pedal position sensor terminal 2.

   Refer to Wiring Diagram.

   Continuity should exist.
2. Also check harness for short to ground and short to power.

OK or NG

OK >> GO TO 8.

NG >> GO TO 7.

7. DETECT MALFUNCTIONING PART

Check to following.

Harness connectors M64, S106

Harness for open or short between accelerator pedal position sensor and ECM

>> Repair open circuit or short to ground or short to power in harness or connectors.

8. CHECK ACCELERATOR PEDAL POSITION SENSOR

Refer to EC-191, "Component Inspection".

OK or NG

OK >> GO TO 10.

NG >> GO TO 9.

9. REPLACE ACCELERATOR PEDAL POSITION SENSOR

1. Replace the accelerator pedal position sensor.
2. Perform EC-23, "Accelerator Pedal Released Position Learning".
3. Perform EC-23, "Throttle Valve Closed Position Learning".
4. Perform EC-24, "Idle Air Volume Learning".

   >> INSPECTION END

10. CHECK INTERMITTENT INCIDENT

Refer to EC-74, "TROUBLE DIAGNOSIS FOR INTERMITTENT INCIDENT".

>> INSPECTION END

DTC P2127, P2128 Accel Sensor - 2 (Cont'd)

Component Inspection

ACCELERATOR PEDAL POSITION SENSOR

1. Reconnect all harness connectors disconnected.
2. Turn ignition switch ON.
3. Check voltage between ECM terminals 106 (accelerator pedal position sensor 1 signal), 98 (accelerator pedal position sensor 2 signal) and engine ground under the following conditions.

Terminal	Accelerator pedal	Voltage
106 (Accelerator pedal position sensor 1)	Fully released	0.5 - 1.0 V
	Fully depressed	3.9 - 4.7 V
98 (Accelerator pedal position sensor 2)	Fully released	0.15 - 0.6 V
	Fully depressed	1.95 - 2.4 V

4. If NG, replace accelerator pedal assembly and go to the next step.
5. Perform EC-23, "Accelerator Pedal Released Position Learning".
6. Perform EC-23, "Throttle Valve Closed Position Learning".
7. Perform EC-24, "Idle Air Volume Learning".

Remove and Installation

ACCELERATOR PEDAL

Refer to "ACCELERATOR CONTROL SYSTEM" (QG16: FE-3).

DTC P2135 Throttle Sensor Signal Discordance Problem

Component Description

Electric Throttle Control Actuator consists of throttle control motor, throttle position sensor, etc. The throttle position sensor responds to the throttle valve movement.

The throttle position sensor has the two sensors. These sensors are a kind of potentiometers which transform the throttle valve position into output voltage, and emit the voltage signal to the ECM. In addition, these sensors detect the opening and closing speed of the throttle valve and feed the voltage signals to the ECM. The ECM judges the current opening angle of the throttle valve from these signals and the ECM controls the throttle control motor to make the throttle valve opening angle properly in response to driving condition.

CONSULT-II REFERENCE VALUE IN DATA MONITOR MODE

Specification data are reference values.

Monitor Item	Condition		Specification
THRTL SEN1	Ignition switch: ON (Engine stopped)	Accelerator pedal: Fully released	More than 0.36V
THRTL SEN2*	Shift lever: D (A/T models) 1st (M/T models)	Accelerator pedal: Fully depressed	Less than 4.75V

*: Throttle position sensor 2 signal is converted by ECM internally. Thus, it differs from ECM terminal voltage signal.

On Board Diagnosis Logic

These self-diagnoses have the one trip detection logic.

DTC No.	Trouble Diagnosis Name	DTC Detecting Condition	Possible Cause
P2135 2135	Throttle position sensor circuit range/performance problem	Rationally incorrect voltage is sent to ECM compared with the signals from TP sensor 1 and TP sensor 2.	Harness or connector (The TP sensor 1 and 2 circuit is open or shorted.) Electric throttle control actuator (TP sensor 1 and 2)

Fail-Safe Mode

When the malfunction is detected, the ECM enters fail-safe mode and the MIL lights up.

Engine Operation Condition In Fail-Safe Mode
The ECM controls the electric throttle control actuator in regulating the throttle opening in order for the idle position to be within +10 degrees. The ECM regulates the opening speed of the throttle valve to be slower than the normal condition. So, the acceleration will be poor.

DTC Confirmation Procedure

NOTE:

If DTC Confirmation Procedure has been previously conducted, always turn ignition switch OFF and wait at least 10 seconds before conducting the next test.

TESTING CONDITION:

Before performing the following procedure, confirm that battery voltage is more than 10V at idle.

DTC P2135 Throttle Sensor Signal Discordance Problem (Cont'd)

With CONSULT-II

1. Turn ignition switch ON.
2. Select "DATA MONITOR" mode with CONSULT-II.
3. Start engine and let it idle for 1 second.
4. If DTC is detected, go to EC-195, "Diagnostic Procedure".

Without CONSULT-II

1. Start engine and let it idle for 1 second.
2. Turn ignition switch OFF, wait at least 10 seconds and then turn ON.
3. Perform Diagnostic Test Mode II (Self-diagnostic results) with ECM.
4. If DTC is detected, go to EC-195, "Diagnostic Procedure".

DTC P2135 Throttle Sensor Signal Discordance Problem (Cont'd)

Specification data are reference values and are measured between each terminal and ground.

CAUTION:

Do not use ECM ground terminals when measuring input/output voltage. Doing so may result in damage to the ECM's transistor. Use a ground other than ECM terminals, such as the ground.

Terminal No.	Wire Color	Item	Condition	Data (DC Voltage)
47	G	Throttle position sensor power supply	[Ignition switch ON]	Approximately 5 V
49	W	Throttle position sensor 1	[Ignition switch ON] Engine stopped Shift lever position is D (A/T models) Shift lever position is 1st (M/T models) Accelerator pedal fully released	More than 0.36 V
			[Ignition switch ON] Engine stopped Shift lever position is D (A/T models) Shift lever position is 1st (M/T models) Accelerator pedal fully depressed	Less than 4.75 V
66	B	Throttle position sensor ground	[Engine is running] Warm-up condition Idle speed	Approximately 0 V
68	R	Throttle position sensor 2	[Ignition switch ON] Engine stopped Shift lever position is D (A/T models) Shift lever position is 1st (M/T models) Accelerator pedal fully released	Less than 4.75 V
			[Ignition switch ON] Engine stopped Shift lever position is D (A/T models) Shift lever position is 1st (M/T models) Accelerator pedal fully depressed	More than 0.36 V

Diagnostic Procedure

1. RETIGHTEN GROUND SCREWS

1. Turn ignition switch OFF.
2. Loosen and retighten engine ground screws.
   >> GO TO 2.

DTC P2135 Throttle Sensor Signal Discordance Problem (Cont'd)

2. CHECK THROTTLE POSITION SENSOR POWER SUPPLY CIRCUIT

1. Disconnect electric throttle control actuator harness connector.
2. Turn ignition switch ON.
3. Check voltage between electric throttle control actuator terminal 1 and ground with CONSULT-II or tester.

   Voltage: Approximately 5V

OK or NG

OK >> GO TO 3.

NG >> Repair open circuit or short to ground or short to power in harness or connectors.

3. CHECK THROTTLE POSITION SENSOR GROUND CIRCUIT FOR OPEN AND SHORT

1. Turn ignition switch OFF.
2. Disconnect ECM harness connector.
3. Check harness continuity between ECM terminal 66 and electric throttle control actuator terminal 5.

   Refer to Wiring Diagram.

   Continuity should exist.

4. Also check harness for short to ground and short to power.

OK or NG

OK >> GO TO 4.

NG >> Repair open circuit or short to ground or short to power in harness or connectors.

4. CHECK THROTTLE POSITION SENSOR INPUT SIGNAL CIRCUIT FOR OPEN AND SHORT

1. Check harness continuity between ECM terminal 49 and electric throttle control actuator terminal 4, ECM terminal 68 and electric throttle control actuator terminal 2.

   Refer to Wiring Diagram.

   Continuity should exist.

2. Also check harness for short to ground and short to power.

OK or NG

OK >> GO TO 5.

NG >> Repair open circuit or short to ground or short to power in harness or connectors.

DTC P2135 Throttle Sensor Signal Discordance Problem (Cont'd)

5. CHECK THROTTLE POSITION SENSOR

Refer to EC-197, "Component Inspection".

OK or NG

OK >> GO TO 7.

NG >> GO TO 6.

6. REPLACE ELECTRIC THROTTLE CONTROL ACTUATOR

1. Replace the electric throttle control actuator.
2. Perform EC-23, "Throttle Valve Closed Position Learning".
3. Perform EC-24, "Idle Air Volume Learning".

   >> INSPECTION END

7. CHECK INTERMITTENT INCIDENT

Refer to EC-74, "TROUBLE DIAGNOSIS FOR INTERMITTENT INCIDENT".

>> INSPECTION END

Component Inspection

THROTTLE POSITION SENSOR

1. Reconnect all harness connectors disconnected.
2. Perform EC-23, "Throttle Valve Closed Position Learning".
3. Turn ignition switch ON.
4. Set selector lever to D position (A/T models) or 1st position (M/T models).
5. Check voltage between ECM terminals 49 (Throttle position sensor 1 signal), 68 (Throttle position sensor 2 signal) and engine ground under the following conditions.

Terminal	Accelerator pedal	Voltage
49 (Throttle position sensor 1)	Fully released	More than 0.36 V
	Fully depressed	Less than 4.75 V
68 (Throttle position sensor 2)	Fully released	Less than 4.75 V
	Fully depressed	More than 0.36 V

6. If NG, replace electric throttle control actuator and go to the next step.
7. Perform EC-23, "Throttle Valve Closed Position Learning".
8. Perform EC-24, "Idle Air Volume Learning".

Remove and Installation

ELECTRIC THROTTLE CONTROL ACTUATOR

Refer to "OUTER COMPONENT PARTS" (QG16: EM-12).

DTC P2138 Accelerator Pedal Position Sensor Circuit Range/ Performance Problem

Component Description

The accelerator pedal position sensor is installed on the upper end of the accelerator pedal assembly. The sensor detects the accelerator position and sends a signal to the ECM.

Accelerator pedal position sensor has two sensors. These sensors are a kind of potentiometers which transform the accelerator pedal position into output voltage, and emit the voltage signal to the ECM.

In addition, these sensors detect the opening and closing speed of the accelerator pedal and feed the voltage signals to the ECM. The ECM judges the current opening angle of the accelerator pedal from these signals and controls the throttle control motor based on these signals.

Idle position of the accelerator pedal is determined by the ECM receiving the signal from the accelerator pedal position sensor. The ECM uses this signal for the engine operation such as fuel cut.

CONSULT-II REFERENCE VALUE IN DATA MONITOR MODE

Specification data are reference values.

Monitor Item	Condition		Specification
ACCEL SEN1	Ignition switch: ON (engine stopped)	Accelerator pedal: Fully released	0.5 - 1.0 V
		Accelerator pedal: Fully depressed	4.0 - 4.8 V
ACCEL SEN2	Ignition switch: ON (engine stopped)	Accelerator pedal: Fully released	0.3 - 1.2 V
		Accelerator pedal: Fully depressed	3.9 - 4.8 V
CLSD THL POS	Ignition switch: ON	Accelerator pedal: Fully released	ON
		Accelerator pedal: Fully depressed	OFF

* : Accelerator pedal position sensor 2 signal is converted by ECM internally. Thus, it differs from ECM terminal voltage signal.

On Board Diagnosis Logic

These self-diagnoses have the one trip detection logic.

DTC No.	Trouble Diagnosis Name	DTC Detecting Condition	Possible Cause
P2138	Accelerator pedal position sensor circuit range/performance problem	Rationally incorrect voltage is sent to ECM compared with the signals from APP sensor 1 and APP sensor 2.	Harness or connector (The APP sensor 1 and 2 circuit is open or shorted.) Accelerator pedal position sensor 1 and 2

Fail-Safe Mode

When the malfunction is detected, the ECM enters fail-safe mode and the MIL lights up.

Engine Operating Condition In Fail-Safe Mode
The ECM controls the electric throttle control actuator in regulating the throttle opening in order for the idle position to be within +10 degrees.
The ECM regulates the opening speed of throttle valve to be slower than the normal condition. So, the acceleration will be poor.

DTC P2138 Accelerator Pedal Position Sensor Circuit Range/ Performance Problem (Cont'd)

DTC Confirmation Procedure

NOTE:

If DTC Confirmation Procedure has been previously conducted, always turn ignition switch OFF and wait at least 10 seconds before conducting the next test.

TESTING CONDITION:

Before performing the following procedure, confirm that battery voltage is more than 10V at idle.

With CONSULT-II

1. Turn ignition switch ON.
2. Select "DATA MONITOR" mode with CONSULT-II.
3. Start engine and let it idle for 1 second.
4. If DTC is detected, go to EC-201, "Diagnostic Procedure".

Without CONSULT-II

1. Start engine and let it idle for 1 second.
2. Turn ignition switch OFF, wait at least 10 seconds and then turn ON.
3. Perform Diagnostic Test Mode II (Self-diagnostic results) with ECM.
4. If DTC is detected, go to EC-201, "Diagnostic Procedure".

Wiring Diagram EC/AWJ

DTC P2138 Accelerator Pedal Position Sensor Circuit Range/ Performance Problem (Cont'd)

Specification data are reference values and are measured between each terminal and ground.

CAUTION:

Do not use ECM ground terminals when measuring input/output voltage. Doing so may result in damage to the ECM's transistor. Use a ground other than ECM terminals, such as the ground.

Terminal No.	Wire Color	Item	Condition	Data (DC Voltage)
82	B	Sensor ground (Accelerator pedal position sensor 1)	[Engine is running] Warm-up condition Idle speed	Approximately 0 V
83	B	Sensor ground (Accelerator pedal position sensor 2)	[Ignition switch ON]	Approximately 0 V
90	R	Sensor power supply (Accelerator pedal position sensor 1)	[Ignition switch ON]	Approximately 5 V
91	G	Sensor power supply (Accelerator pedal position sensor 2)	[Ignition switch ON]	Approximately 5 V
98	LG	Accelerator pedal position sensor 2	[Ignition switch ON] Engine stopped Accelerator pedal fully released	0.15 - 0.6 V
			[Ignition switch ON] Engine stopped Accelerator pedal fully depressed	1.95 - 2.4 V
106	L	Accelerator pedal position sensor 1	[Ignition switch ON] Engine stopped Accelerator pedal fully released	0.5 - 1.0 V
			[Ignition switch ON] Engine stopped Accelerator pedal fully depressed	3.9 - 4.7 V

Diagnostic Procedure

1. RETIGHTEN GROUND SCREWS

1. Turn ignition switch OFF.
2. Loosen and retighten engine ground screws.
   >> GO TO 2.

DTC P2138 Accelerator Pedal Position Sensor Circuit Range/ Performance Problem (Cont'd)

2. CHECK ACCELERATOR PEDAL POSITION SENSOR POWER SUPPLY CIRCUIT

1. Disconnect accelerator pedal position (APP) sensor harness connector.
2. Turn ignition switch ON.
3. Check voltage between accelerator pedal position sensor terminal 4, 6 and ground with CONSULT-II or tester.

   Voltage: Approximately 5V

OK or NG

OK >> GO TO 4.

NG >> GO TO 3.

3. DETECT MALFUNCTIONING PART

Check to following.

Harness connectors M64, S106

Harness for open or short between accelerator pedal position sensor and ECM

>> Repair open circuit or short to ground or short to power in harness or connectors.

4. CHECK ACCELERATOR PEDAL POSITION SENSOR GROUND CIRCUIT FOR OPEN AND SHORT

1. Turn ignition switch OFF.
2. Disconnect ECM harness connector.
3. Disconnect TCM harness connector.
4. Check harness continuity between accelerator pedal position sensor terminal 1 and ECM terminal 83, accelerator pedal position sensor terminal 3 and ECM terminal 82, TCM terminal 42. Refer to Wiring Diagram.

   Continuity should exist.

5. Also check harness for short to ground and short to power.

OK or NG

OK >> GO TO 6.

NG >> GO TO 5.

DTC P2138 Accelerator Pedal Position Sensor Circuit Range/ Performance Problem (Cont'd)

5. DETECT MALFUNCTIONING PART

Check to following.

Harness connectors M64, S106

Harness for open or short between accelerator pedal position sensor and ECM

Harness for open or short between accelerator pedal position sensor and TCM

>> Repair open circuit or short to ground or short to power in harness or connectors.

6. CHECK ACCELERATOR PEDAL POSITION SENSOR INPUT SIGNAL CIRCUIT FOR OPEN AND SHORT

1. Check harness continuity between ECM terminal 106 and accelerator pedal position sensor terminal 5, ECM terminal 98 and accelerator pedal position sensor terminal 2.

   Refer to Wiring Diagram.

   Continuity should exist.

2. Also check harness for short to ground and short to power.

OK or NG

OK >> GO TO 8.

NG >> GO TO 7.

7. DETECT MALFUNCTIONING PART

Check to following.

Harness connectors M64, S106

Harness for open or short between accelerator pedal position sensor and ECM

>> Repair open circuit or short to ground or short to power in harness or connectors.

8. CHECK ACCELERATOR PEDAL POSITION SENSOR

Refer to EC-204, "Component Inspection".

OK or NG

OK >> GO TO 10.

NG >> GO TO 9.

9. REPLACE ACCELERATOR PEDAL POSITION SENSOR

1. Replace the accelerator pedal position sensor.
2. Perform EC-23, "Accelerator Pedal Released Position Learning".
3. Perform EC-23, "Throttle Valve Closed Position Learning".
4. Perform EC-24, "Idle Air Volume Learning".

>> INSPECTION END

DTC P2138 Accelerator Pedal Position Sensor Circuit Range/ Performance Problem (Cont'd)

10. CHECK INTERMITTENT INCIDENT

Refer to EC-74, "TROUBLE DIAGNOSIS FOR INTERMITTENT INCIDENT".

>> INSPECTION END

Component Inspection

ACCELERATOR PEDAL POSITION SENSOR

1. Reconnect all harness connectors disconnected.
2. Turn ignition switch ON.
3. Check voltage between ECM terminals 106 (accelerator pedal position sensor 1 signal), 98 (accelerator pedal position sensor 2 signal) and engine ground under the following conditions.

Terminal	Accelerator pedal	Voltage
106 (Accelerator pedal position sensor 1)	Fully released	0.5 - 1.0 V
	Fully depressed	3.9 - 4.7 V
98 (Accelerator pedal position sensor 2)	Fully released	0.15 - 0.6 V
	Fully depressed	1.95 - 2.4 V

4. If NG, replace accelerator pedal assembly and go to the next step.
5. Perform EC-23, "Accelerator Pedal Released Position Learning".
6. Perform EC-23, "Throttle Valve Closed Position Learning".
7. Perform EC-24, "Idle Air Volume Learning".

Remove and Installation

ACCELERATOR PEDAL

Refer to "ACCELERATOR CONTROL SYSTEM" (QG16: FE-3).

DTC P0500 Vehicle Speed Sensor

Description

The vehicle speed sensor is installed in the transaxle. It contains a pulse generator which provides a vehicle speed signal to the combination meter. The combination meter then sends a signal to the ECM and TCM.

On Board Diagnosis Logic

DTC No.	Trouble Diagnosis Name	DTC Detecting Condition	Possible Cause
P0500 0500	Vehicle speed sensor	The almost 0 km/h (0 MPH) signal from vehicle speed sensor is sent to ECM even when vehicle is being driven.	Harness or connectors (The CAN communication line is open or shorted.) Harness or connectors (The vehicle speed sensor circuit is open or shorted.) Combination meter Vehicle speed sensor

DTC Confirmation Procedure

CAUTION:

Always drive vehicle at a safe speed.

NOTE:

If DTC Confirmation Procedure has been previously conducted, always turn ignition switch OFF and wait at least 10 seconds before conducting the next test.

TESTING CONDITION:

Steps 1 and 2 may be conducted with the drive wheels lifted in the shop or by driving the vehicle. If a road test is expected to be easier, it is unnecessary to lift the vehicle.

With CONSULT-II

1. Start engine.
2. Read “VHCL SPEED SE” in “DATA MONITOR” mode with CONSULT-II. The vehicle speed on CONSULT-II should exceed 10 km/h (6 MPH) when rotating wheels with suitable gear position.

   If NG, go to EC-208, “Diagnostic Procedure”.

   If OK, go to following step.
3. Select “DATA MONITOR” mode with CONSULT-II.
4. Warm engine up to normal operating temperature.
5. Maintain the following conditions for at least 60 consecutive seconds.

ENG SPEED	A/T	More then 1,800 rpm
	M/T	More then 2,100 rpm
COOLAN TEMP/S		70°C (158°F)

DTC P0500 Vehicle Speed Sensor (Cont'd)

B/FUEL SCHDL	A/T	4.3 - 8.7 msec
	M/T	3.7 - 7.1 msec
Selector lever		Suitable position
PW/ST SIGNAL		OFF

6. If DTC is detected, go to EC-208 "Diagnostic Procedure".

Overall Function Check

Use this procedure to check the overall function of the vehicle speed signal circuit. During this check, a DTC might not be confirmed.

Without CONSULT-II

1. Lift up drive wheels.
2. Start engine.
3. Read vehicle speed with combination meter.
   The vehicle speed indication should be able to exceed 10 km/h (6 MPH) when rotating wheels with suitable gear position.
4. If NG, go to EC-208 "Diagnostic Procedure".

Wiring Diagram EC/Vehicle Speed Sensor

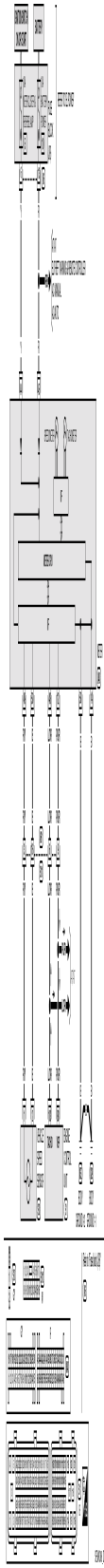

DTC P0500 Vehicle Speed Sensor (Cont'd)

Diagnostic Procedure

1. CHECK VEHICLE SPEED SENSOR

OK or NG

OK >> GO TO 2.

NG >> Repair or replace.

2. CHECK COMBINATION METER

Check combination meter function.

Refer to "COMBINATION METER - TROUBLE DIAGNOSIS" (EL-69).

>> INSPECTION END

DTC P1111 Intake Valve Timing Control Solenoid Valve Circuit

Description

Sensor	Input Signal to ECM	ECM Function	Actuator
Crankshaft position sensor (POS)	Engine speed	Intake valve timing control	Intake valve timing control solenoid valve
Camshaft position sensor (PHASE)	Engine coolant temperature		
Engine coolant temperature sensor	Vehicle speed		
Vehicle speed signal			

This mechanism hydraulically controls cam phases continuously with the fixed operating angle of the intake valve.

The ECM receives signals such as crankshaft position, camshaft position, engine speed, and engine coolant temperature. Then, the ECM sends ON/OFF pulse duty signals to the intake valve timing control solenoid valve depending on driving status. This makes it possible to control the shut/open timing of the intake valve to increase engine torque in low/mid speed range and output in high-speed range.

Component Description

Intake valve timing control solenoid valve is activated by ON/OFF pulse duty (ratio) signals from the ECM.

The intake valve timing control solenoid valve changes the oil amount and direction of flow through intake valve timing control unit or stops oil flow.

The longer pulse width advances valve angle.

The shorter pulse width retards valve angle.

When ON and OFF pulse widths become equal, the solenoid valve stops oil pressure flow to fix the intake valve angle at the control position.

DTC P1111 Intake Valve Timing Control Solenoid Valve Circuit (Cont'd)

CONSULT-II REFERENCE VALUE IN DATA MONITOR MODE

Specification data are reference values.

Monitor Item	Condition		Specification
INT/V SOL (B1)	Engine: After warming up Shift lever: N (A/T models) Neutral (M/T models) Air conditioner switch: OFF No-load	Idle	0% - 2%
		When revving engine up to 2,000 rpm quickly	Approx. 0% - 60%

On Board Diagnosis Logic

DTC No.	Trouble Diagnosis Name	DTC Detecting Condition	Possible Cause
P1111 1111	Intake valve timing control solenoid valve circuit	An improper voltage is sent to the ECM through intake valve timing control solenoid valve.	Harness or connectors (Solenoid valve circuit is open or shorted.) Intake valve timing control solenoid valve

DTC Confirmation Procedure

NOTE:

If DTC Confirmation Procedure has been previously conducted, always turn ignition switch OFF and wait at least 10 seconds before conducting the next test.

With CONSULT-II

1. Turn ignition switch ON.
2. Select "DATA MONITOR" mode with CONSULT-II.
3. Start engine and let it idle for 5 seconds.
4. If DTC is detected, go to EC-212, "Diagnostic Procedure".

Without CONSULT-II

1. Start engine and let it idle for 5 seconds.
2. Turn ignition switch OFF, wait at least 10 seconds and then turn ON.
3. Perform Diagnostic Test Mode II (Self-diagnostic results) with ECM.
4. If DTC is detected, go to EC-212, "Diagnostic Procedure".

Wiring Diagram EC/CVTC

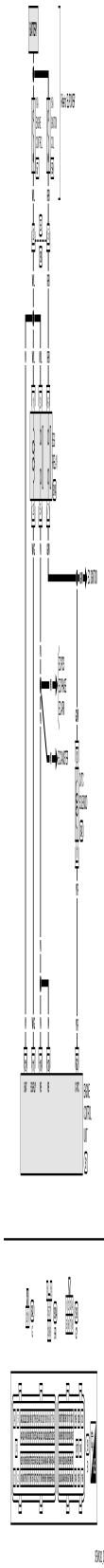

DTC P1111 Intake Valve Timing Control Solenoid Valve Circuit (Cont'd)

Specification data are reference values and are measured between each terminal and ground.
Pulse signal is measured by CONSULT-II.

CAUTION:

Do not use ECM ground terminals when measuring input/output voltage. Doing so may result in damage to the ECM's transistor. Use a ground other than ECM terminals, such as the ground.

Terminal No.	Wire Color	Item	Condition	Data (DC Voltage)
62	Y/R	Intake valve timing control solenoid valve	[Engine is running] Warm-up condition Idle speed	BATTERY VOLTAGE (11 - 14 V)
			[Engine is running] Warm-up condition When revving engine up to 2,000 rpm quickly	0 - 0.2 V

: Average voltage for pulse signal (Actual pulse signal can be confirmed by oscilloscope.)

Diagnostic Procedure

1. CHECK IVT CONTROL SOLENOID VALVE POWER SUPPLY CIRCUIT

1. Turn ignition switch OFF.
2. Disconnect intake valve timing control solenoid valve harness connector.
3. Turn ignition switch ON.

4. Check voltage between intake valve timing control solenoid valve terminal 2 and ground with CONSULT-II or tester.

   Voltage: Battery voltage

OK or NG

OK >> GO TO 2.

NG >> Repair open circuit or short to ground or short to power in harness or connectors.

DTC P1111 Intake Valve Timing Control Solenoid Valve Circuit (Cont'd)

2. CHECK IVT CONTROL SOLENOID VALVE OUTPUT SIGNAL CIRCUIT FOR OPEN AND SHORT

1. Turn ignition switch OFF.
2. Disconnect ECM harness connector.
3. Check harness continuity between ECM terminal 62 and intake valve timing control solenoid valve terminal 1. Refer to Wiring Diagram.

   Continuity should exist.

4. Also check harness for short to ground and short to power.

OK or NG

OK >> GO TO 3.

NG >> Repair open circuit or short to ground or short to power in harness or connectors.

3. CHECK INTAKE VALVE TIMING CONTROL SOLENOID VALVE

Refer to EC-213, "Component Inspection".

OK or NG

OK >> GO TO 4.

NG >> Replace intake valve timing control solenoid valve.

4. CHECK INTERMITTENT INCIDENT

Refer to EC-74, "TROUBLE DIAGNOSIS FOR INTERMITTENT INCIDENT".

>> INSPECTION END

Component Inspection

INTAKE VALVE TIMING CONTROL SOLENOID VALVE

1. Disconnect intake valve timing control solenoid valve harness connector.
2. Check resistance between intake valve timing control solenoid valve terminals 1 and 2 under the following conditions.

Terminals	Resistance
1 and 2	Approximately 8 at 20°C (68°F)
1 or 2 and ground	8 (Continuity should not exist)

Removal and Installation

INTAKE VALVE TIMING CONTROL SOLENOID VALVE

Refer to "CYLINDER HEAD" (QG16: EM-40).

EVAP Canister Purge Volume Control Solenoid Valve

Description

Sensor	Input Signal to ECM	ECM Function	Actuator
Crankshaft position sensor (POS)	Engine speed*2	EVAP canister purge flow control	EVAP canister purge volume control solenoid valve
Camshaft position sensor (PHASE)			
Mass air flow sensor	Amount of intake air		
Engine coolant temperature sensor	Engine coolant temperature		
Battery	Battery voltage*2		
Throttle position sensor	Throttle position		
Accelerator pedal position sensor	Closed throttle position		
Heated oxygen sensors 1	Density of oxygen in exhaust gas (Mixture ratio feedback signal)		
Vehicle speed signal*1	Vehicle speed		

*1: This input signal is sent to the ECM through CAN communication line.
*2: The ECM determines the start signal status by the signals of engine speed and battery voltage.

This system controls flow rate of fuel vapor from the EVAP canister. The opening of the vapor by-pass passage in the EVAP canister purge volume control solenoid valve changes to control the flow rate. The EVAP canister purge volume control solenoid valve repeats ON/OFF operation according to the signal sent from the ECM. The opening of the valve varies for optimum engine control. The optimum value stored in the ECM is determined by considering various engine conditions. When the engine is operating, the flow rate of fuel vapor from the EVAP canister is regulated as the air flow changes.

Component Description

The EVAP canister purge volume control solenoid valve uses a ON/OFF duty to control the flow rate of fuel vapor from the EVAP canister. The EVAP canister purge volume control solenoid valve is moved by ON/OFF pulses from the ECM. The longer the ON pulse, the greater the amount of fuel vapor that will flow through the valve.

CONSULT-II REFERENCE VALUE IN DATA MONITOR MODE

Specification data are reference values.

Monitor Item	Condition		Specification
PURG VOL C/V	Engine: After warming up Shift lever: N (A/T models) Neutral (M/T models) Air conditioner switch: OFF No-load	Idle	0%
		2,000 rpm	15 - 30%

EVAP Canister Purge Volume Control Solenoid Valve (Cont'd)

Specification data are reference values and are measured between each terminal and ground.
Pulse signal is measured by CONSULT-II.

CAUTION:

Do not use ECM ground terminals when measuring input/output voltage. Doing so may result in damage to the ECM's transistor. Use a ground other than ECM terminals, such as the ground.

Terminal No.	Wire Color	Item	Condition	Data (DC Voltage)
19	GY/L	EVAP canister purge volume control solenoid valve	[Engine is running] Idle speed	BATTERY VOLTAGE (11 - 14 V)
			[Engine is running] Engine speed is about 2,000 rpm	Approximately 7.0V

: Average voltage for pulse signal (Actual pulse signal can be confirmed by oscilloscope.)

EVAP Canister Purge Volume Control Solenoid Valve (Cont'd)

Diagnostic Procedure

1. CHECK OVERALL FUNCTION

With CONSULT-II

1. Turn ignition switch OFF.
2. Disconnect the EVAP purge hose connected to the EVAP canister.
3. Turn ignition switch ON.
4. Select "PURG VOL C/V" in "ACTIVE TEST" mode with CONSULT-II.
5. Start engine and let it idle.
6. Change the valve opening percentage with touching "Qu" or "Qd" on CONSULT-II screen, and check for vacuum existence at the EVAP purge hose under the following conditions.

Conditions (PURG VOL CONT/V valve)	Vacuum
0%	Should not exist.
100%	Should exist.

Without CONSULT-II

1. Turn ignition switch OFF.
2. Disconnect the EVAP purge hose connected to the EVAP canister.
3. Start engine and let it idle for at least 80 seconds.
4. Check for vacuum existence at the EVAP purge hose under the following conditions.

Conditions (PURG VOL CONT/V valve)	Vacuum
At idle	Should not exist.
Engine speed is about 2,000 rpm	Should exist.

OK or NG

OK >> GO TO 2.

NG >> GO TO 3.

2. CHECK EVAP CANISTER

Refer to EC-316, "Component Inspection".

OK or NG

OK >> INSPECTION END

NG >> Replace EVAP canister.

EVAP Canister Purge Volume Control Solenoid Valve (Cont'd)

3. CHECK EVAP PURGE LINE

Check EVAP purge line (pipe, rubber tube, fuel tank and EVAP canister) for cracks or improper connection.

Refer to EC-313, "EVAPORATIVE EMISSION SYSTEM".

OK or NG

OK >> GO TO 4.

NG >> Repair or reconnect the hose.

4. CHECK EVAP CANISTER PURGE VOLUME CONTROL SOLENOID VALVE POWER SUPPLY CIRCUIT

1. Turn ignition switch OFF.
2. Disconnect EVAP canister purge volume control solenoid valve harness connector.
3. Turn ignition switch ON.
4. Check voltage between EVAP canister purge volume control solenoid valve terminal 1 and ground with CONSULT-II or tester.

   Voltage: Battery voltage

OK or NG

OK >> GO TO 6.

NG >> GO TO 5.

5. DETECT MALFUNCTIONING PART

Check the following.

Harness for open or short between EVAP canister purge volume control solenoid valve and ECM

Harness for open or short between EVAP canister purge volume control solenoid valve and ECM relay

>> Repair open circuit or short to ground or short to power in harness or connectors.

EVAP Canister Purge Volume Control Solenoid Valve (Cont'd)

6. CHECK EVAP CANISTER PURGE VOLUME CONTROL SOLENOID VALVE OUTPUT SIGNAL CIRCUIT FOR OPEN AND SHORT

1. Turn ignition switch OFF.
2. Disconnect ECM harness connector.
3. Check harness continuity between ECM terminal 19 and EVAP canister purge volume control solenoid valve terminal 2. Refer to Wiring Diagram.

   Continuity should exist.

4. Also check harness for short to ground and short to power.

OK or NG

OK (With CONSULT-II)>>GO TO 7.

OK (Without CONSULT-II)>>GO TO 8.

NG >> Repair open circuit or short to ground and short to power in harness or connectors.

7. CHECK EVAP CANISTER PURGE VOLUME CONTROL SOLENOID VALVE OPERATION

With CONSULT-II

1. Reconnect all harness connectors disconnected.
2. Start engine.
3. Perform "PURG VOL CONT/V" in "ACTIVE TEST" mode with CONSULT-II. Check that engine speed varies according to the valve opening.

OK or NG

OK >> GO TO 9.

NG >> GO TO 8.

8. CHECK EVAP CANISTER PURGE VOLUME CONTROL SOLENOID VALVE

Refer to EC-220, "Component Inspection".

OK or NG

OK >> GO TO 9.

NG >> Replace EVAP canister purge volume control solenoid valve.

9. CHECK INTERMITTENT INCIDENT

Refer to EC-74, "TROUBLE DIAGNOSIS FOR INTERMITTENT INCIDENT".

>> INSPECTION END

EVAP Canister Purge Volume Control Solenoid Valve (Cont'd)

Component Inspection

EVAP CANISTER PURGE VOLUME CONTROL SOLENOID VALVE

With CONSULT-II

Check air passage continuity of EVAP canister purge volume control solenoid valve under the following conditions.

Conditions (PURG VOL CONT/V valve)	Vacuum
At idle	Should not exist.
Engine speed is about 2,000 rpm	Should exist.

Without CONSULT-II

Check air passage continuity of EVAP canister purge volume control solenoid valve under the following conditions.

Conditions (PURG VOL CONT/V valve)	Vacuum
At idle	Should not exist.
Engine speed is about 2,000 rpm	Should exist.

Removal and Installation

EVAP CANISTER PURGE VOLUME CONTROL SOLENOID VALVE

Refer to "OUTER COMPONENT PARTS" (QG16: EM-12).

Injector Circuit

Component Description

The fuel injector is a small, precise solenoid valve. When the ECM supplies a ground to the injector circuit, the coil in the injector is energized. The energized coil pulls the needle valve back and allows fuel to flow through the injector into the intake manifold. The amount of fuel injected depends upon the injection pulse duration. Pulse duration is the length of time the injector remains open. The ECM controls the injection pulse duration based on engine fuel needs.

CONSULT-II REFERENCE VALUE IN DATA MONITOR MODE

Specification data are reference values.

Monitor Item	Condition		Specification
B/FUEL SCHDL	Engine: After warming up Shift lever: N (A/T models) Neutral (M/T models) Air conditioner switch: OFF No-load	Idle	1.5 - 3.0 msec
		2,000 rpm	1.2 - 3.0 msec
INJ PULSE-B1	Engine: After warming up Shift lever: N (A/T models) Neutral (M/T models) Air conditioner switch: OFF No-load	Idle	2.0 - 3.5 msec
		2,000 rpm	1.5 - 3.5 msec

Injector Circuit (Cont'd)

Specification data are reference values and are measured between each terminal and ground.
Pulse signal is measured by CONSULT-II.

CAUTION:

Do not use ECM ground terminals when measuring input/output voltage. Doing so may result in damage to the ECM's transistor. Use a ground other than ECM terminals, such as the ground.

Terminal No.	Wire Color	Item	Condition	Data (DC Voltage)
22 23 41 42	G/B R/B L/B Y/B	Injector No. 3 Injector No. 1 Injector No. 4 Injector No. 2	[Engine is running] Warm-up condition Idle speed	BATTERY VOLTAGE (11 - 14 V)
			[Engine is running] Warm-up condition Engine speed is 2,000 rpm	BATTERY VOLTAGE (11 - 14 V)

: Average voltage for pulse signal (Actual pulse signal can be confirmed by oscilloscope.)

Diagnostic Procedure

1. INSPECTION START

Turn ignition switch to START.
Is any cylinder ignited?
Yes or No
Yes >> GO TO 2.
No >> GO TO 3.

Injector Circuit (Cont'd)

2. CHECK OVERALL FUNCTION

With CONSULT-II

1. Start engine.
2. Perform "POWER BALANCE" in "ACTIVE TEST" mode with CONSULT-II.
3. Make sure that each circuit produces a momentary engine speed drop.

Without CONSULT-II

1. Start engine.
2. Listen to each injector operating sound.
   Clicking noise should be heard.

OK or NG

OK >> INSPECTION END

NG >> GO TO 3.

Injector Circuit (Cont'd)

3. CHECK INJECTOR POWER SUPPLY CIRCUIT

1. Turn ignition switch OFF.
2. Disconnect injector harness connector.
3. Turn ignition switch ON.

4. Check voltage between injector terminal 1 and ground with CONSULT-II or tester.

   Voltage: Battery voltage

OK or NG

OK >> GO TO 5.

NG >> GO TO 4.

4. DETECT MALFUNCTIONING PART

Check the following.

Harness connectors M64, S106

Fuse block (J/B) connector M6

15A fuse

Harness for open or short between injector and fuse

>> Repair open circuit or short to ground or short to power in harness or connectors.

5. CHECK INJECTOR OUTPUT SIGNAL CIRCUIT FOR OPEN AND SHORT

1. Turn ignition switch OFF.
2. Disconnect ECM harness connector.
3. Check harness continuity between injector terminal 2 and ECM terminals 22, 23, 41, 42.

   Refer to Wiring Diagram.

   Continuity should exist.
4. Also check harness for short to ground and short to power.

OK or NG

OK >> GO TO 6.

NG >> Repair open circuit or short to ground or short to power in harness or connectors.

6. CHECK INJECTOR

Refer to EC-226, "Component Inspection".

OK or NG

OK >> GO TO 7.

NG >> Replace injector.

Injector Circuit (Cont'd)

7. CHECK INTERMITTENT INCIDENT

Refer to EC-74, "TROUBLE DIAGNOSIS FOR INTERMITTENT INCIDENT".

>> INSPECTION END

Component Inspection

INJECTOR

1. Disconnect injector harness connector.
2. Check resistance between injector terminals as shown in the figure.

   Resistance:
   13.5 - 17.5 [at 20°C (68°F)]

Removal and Installation

INJECTOR

Refer to EC-28, "Injector".

DTC P0171 Fuel Injection System Too Lean

On Board Diagnosis Logic

The mixture ratio feedback control system monitors the mixture ratio signal transmitted from heated oxygen sensor 1. This feedback signal is then sent to the ECM. The ECM controls the basic mixture ratio as close to the theoretical mixture ratio as possible. However, the basic mixture ratio is not necessarily controlled as originally designed. When the compensated air-fuel mixture ratio is too high due to lean condition, the ECM considers it as the malfunction of the fuel injection system and turns on the MIL.

Sensor	Input Signal to ECM	ECM Function	Actuator
Heated oxygen sensor 1	Density of oxygen in exhaust gas (mixture feedback signal)	Fuel injection control	Fuel injection

DTC No.	Trouble Diagnosis Name	DTC Detecting Condition	Possible Cause
P0171 0171	Fuel injection control system (too lean)	Fuel injection control system is not working properly. The compensated air-fuel mixture ratio is too high (the actual air-fuel mixture ratio is too lean).	Leakage of intake air Heated oxygen sensor 1 Injector Leakage of exhaust gas Abnormal fuel pressure Low fuel level Mass air flow sensor PCV hose connection

DTC Confirmation Procedure

NOTE:

If DTC Confirmation Procedure has been previously conducted, always turn ignition switch OFF and wait at least 10 seconds before conducting the next test.

With CONSULT-II

1. Start engine and warm it up until engine coolant temperature reaches at normal operating level.
2. Turn ignition switch OFF and wait at least 10 seconds.
3. Turn ignition switch ON and select “Self-Learning Control” in “Work Support” mode with CONSULT-II.
4. Eliminate the self learning control coefficient by touching “ERASE”.
5. Select “DATA MONITOR” mode with CONSULT-II.
6. Start engine again and let it idle for 10 minutes. If the system is defective, the DTC P0171 should be detected at this step. Refer to EC-229, “Diagnostic Procedure”.
7. If the engine cannot be started easily at step 6, this is also a malfunction of fuel injection system.
8. Crank engine with the accelerator pedal depressed. If the engine can be started, go to EC-229, “Diagnostic Procedure”. If the engine cannot be started, visually check the intake and exhaust system for leakage.

DTC P0171 Fuel Injection System Function Too Lean (Cont'd)

Diagnostic Procedure

1. CHECK EXHAUST SYSTEM FOR LEAKAGE

1. Start engine and let it idle.
2. Check whether the hiising sound of exhaust gas exists before the three way catalyst.

OK or NG

OK >> GO TO 2.

NG >> Fix the problems.

2. CHECK PCV HOSES AND INTAKE SYSTEM FOR LEAKAGE

1. Check whether the hiising sound of intake air exists after the mass air flow sensor.
2. Check whether the hiising sound of exhaust gas exists before the three way catalyst.

OK or NG

OK >> GO TO 3.

NG >> Fix the problems.

3. CHECK HEATED OXYGEN SENSOR 1 CIRCUIT FOR OPEN AND SHORT

1. Turn ignition switch OFF.
2. Disconnect heated oxygen sensor 1 (oxygen sensor (FR)) harness connector.
3. Disconnect ECM harness connector.
4. Check harness continuity between heated oxygen sensor 1 terminal 2 and ECM terminals 35.

   Refer to Wiring Diagram.

   Continuity should exist.
5. Check harness continuity between ECM terminals 35 or heated oxygen sensor 1 terminal 2 and ground.

   Refer to EC-249, "Wiring Diagram".

   Continuity should exist.
6. Check harness for short to power.

OK or NG

OK >> GO TO 4.

NG >> Repair open circuit or short to ground or short to power in harness or connectors.

4. CHECK FUEL PRESSURE

1. Release fuel pressure. Refer to EC-26, "FUEL PRESSURE RELEASE".
2. Install fuel pressure gauge and check fuel pressure. Refer to EC-26, "Fuel Pressure Check".

   At idling:

   Approximately 350 kPa (3.5 bar, 3.57 kg/cm ^{2}, 51 psi)

OK or NG

OK >> GO TO 5.

NG >> Fix the problems.

DTC P0171 Fuel Injection System Function Too Lean (Cont'd)

5. CHECK MASS AIR FLOW SENSOR

1. Install the removed components.
2. Check the mass air flow sensor in "DATA MONITOR" mode with CONSULT-II.

   At idling: 10 - 40 gm/sec

   At 2,500 rpm: 40 - 10 gm/sec

OK or NG

OK >> GO TO 6.

NG >> Check mass air flow sensor harness connection and engine ground connection for looseness. Check connector for corrosion. Refer to EC-108, "DTC P0102, P0103 MASS AIR FLOW SENSOR".

6. CHECK MASS AIR FLOW SENSOR

With CONSULT-II

1. Start engine.
2. Perform power balance operation in "ACTIVE TEST" mode in CONSULT-II.
3. Check sudden drop of engine speed in each injector.

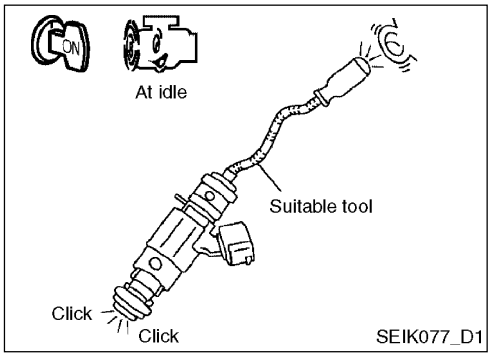

Without CONSULT-II

1. Start engine.
2. Listen to each injector operating sound.

OK or NG

OK >> GO TO 7.

NG >> Perform trouble diagnosis.
Refer to EC-223, "Diagnostic Procedure".

7. CHECK INJECTORS

1. Check if there are any possibilities of fire and the engine is cooled down.
2. Turn ignition switch OFF.
3. Disconnect injector harness connectors.
4. Remove injector gallery assembly. Refer to "OUTER COMPONENT PARTS" (QG16: EM-12). Do not remove fuel hoses and injectors from injector gallery. Do not disconnect injector harness connector.

DTC P0171 Fuel Injection System Function Too Lean (Cont'd)

5. Crank engine for about 3 seconds. Check fuel injection from injectors. The fuel should be injected.

OK or NG

OK >> GO TO 8.

NG >> Replace the injectors that cannot inject fuel with new ones. The O-rings should be replaced whenever the injector is removed.

8. CHECK INTERMITTENT INCIDENT

Refer to EC-74, "TROUBLE DIAGNOSIS FOR INTERMITTENT INCIDENT".

>> INSPECTION END

DTC P0172 Fuel Injection System Function Too Rich

On Board Diagnosis Logic

The mixture ratio feedback control system monitors the mixture ratio signal transmitted from heated oxygen sensor 1. This feedback signal is then sent to the ECM. The ECM controls the basic mixture ratio as close to the theoretical mixture ratio as possible. However, the basic mixture ratio is not necessarily controlled as originally designed. When the compensated air-fuel mixture ratio is too high due to lean condition, the ECM considers it as the malfunction of the fuel injection system and turns on the MIL.

Sensor	Input Signal to ECM	ECM Function	Actuator
Heated oxygen sensor 1	Density of oxygen in exhaust gas (mixture feedback signal)	Fuel injection control	Fuel injection

DTC No.	Trouble Diagnosis Name	DTC Detecting Condition	Possible Cause
P0172 0172	Fuel injection control system (too lean)	Fuel injection control system is not working properly. The compensated air-fuel mixture ratio is too high (the actual air-fuel mixture ratio is too lean).	Leakage of intake air Heated oxygen sensor 1 Injector Leakage of exhaust gas Abnormal fuel pressure Low fuel level Mass air flow sensor PCV hose connection

DTC Confirmation Procedure

NOTE:

If DTC Confirmation Procedure has been previously conducted, always turn ignition switch OFF and wait at least 10 seconds before conducting the next test.

With CONSULT-II

1. Start engine and warm it up until engine coolant temperature reaches at normal operating level.
2. Turn ignition switch OFF and wait at least 10 seconds.
3. Turn ignition switch ON and select “Self-Learing Control” in “Work Support” mode with CONSULT-II.
4. Eliminate the self learning control coefficient by touching “ERASE”.
5. Select “DATA MONITOR” mode with CONSULT-II.
6. Start engine again and let it idle for 10 minutes. If the system is defective, the DTC P0171 should be detected at this step. Refer to EC-234, “Diagnostic Procedure”.
7. If the engine cannot be started easily at step 6, this is also a malfunction of fuel injection system.
8. Crank engine with the accelerator pedal depressed. If the engine can be started, go to EC-234, “Diagnostic Procedure”. If the engine cannot be started, remove ignition plugs and check if there are any foreign materials and impurities.

Wiring Diagram EC/Injector

DTC P0172 Fuel Injection System Function Too Rich (Cont'd)

Diagnostic Procedure

1. CHECK EXHAUST SYSTEM FOR LEAKAGE

1. Start engine and let it idle.
2. Check whether the hiising sound of exhaust gas exists before the three way catalyst.

OK or NG

OK >> GO TO 2.

NG >> Fix the problems.

2. CHECK PCV HOSES AND INTAKE SYSTEM FOR LEAKAGE

1. Check whether the hiising sound of intake air exists after the mass air flow sensor.
2. Check whether the hiising sound of exhaust gas exists before the three way catalyst.

OK or NG

OK >> GO TO 3.

NG >> Fix the problems.

3. CHECK HEATED OXYGEN SENSOR 1 CIRCUIT FOR OPEN AND SHORT

1. Turn ignition switch OFF.
2. Disconnect heated oxygen sensor 1 (oxygen sensor (FR)) harness connector.
3. Disconnect ECM harness connector.
4. Check harness continuity between heated oxygen sensor 1 terminal 2 and ECM terminals 35.

   Refer to Wiring Diagram.

   Continuity should exist.
5. Check harness continuity between ECM terminals 35 or heated oxygen sensor 1 terminal 2 and ground.

   Refer to EC-249, "Wiring Diagram".

   Continuity should exist.
6. Check harness for short to power.

OK or NG

OK >> GO TO 4.

NG >> Repair open circuit or short to ground or short to power in harness or connectors.

4. CHECK FUEL PRESSURE

1. Release fuel pressure. Refer to EC-26, "FUEL PRESSURE RELEASE".
2. Install fuel pressure gauge and check fuel pressure. Refer to EC-26, "Fuel Pressure Check".

   At idling:

   Approximately 350 kPa (3.5 bar, 3.57 kg/cm ^{2}, 51 psi)

OK or NG

OK >> GO TO 5.

NG >> Fix the problems.

DTC P0172 Fuel Injection System Function Too Rich (Cont'd)

5. CHECK MASS AIR FLOW SENSOR

1. Install the removed components.
2. Check the mass air flow sensor in "DATA MONITOR" mode with CONSULT-II.

   At idling: 10 - 40 gm/sec

   At 2,500 rpm: 40 - 10 gm/sec

OK or NG

OK >> GO TO 6.

NG >> Check mass air flow sensor harness connection and engine ground connection for looseness. Check connector for corrosion. Refer to EC-108, "DTC P0102, P0103 MASS AIR FLOW SENSOR".

6. CHECK MASS AIR FLOW SENSOR

With CONSULT-II

1. Start engine.
2. Perform power balance operation in "ACTIVE TEST" mode in CONSULT-II.
3. Check sudden drop of engine speed in each injector.

Without CONSULT-II

1. Start engine.
2. Listen to each injector operating sound.

OK or NG

OK >> GO TO 7.

NG >> Perform trouble diagnosis.
Refer to EC-223, "Diagnostic Procedure".

DTC P0172 Fuel Injection System Function Too Rich (Cont'd)

7. CHECK INJECTORS

1. Remove injector assembly. Refer to "OUTER COMPONENT PARTS" (QG16: EM-12). Do not remove fuel hoses and injectors from injector gallery
2. Check if there are any possibilities of fire and the engine is cooled down.
3. Disconnect injector harness connector.
4. Disconnect all injector harness connectors.
5. Place a suitable container under each injector to collect fuel spilage.
6. Crank engine for about 3 seconds. There should not be fuel drops from injectors.

OK or NG

OK >> GO TO 8.

NG >> Replace the injectors that cannot inject fuel properly with new ones. The O-rings should be replaced whenever the injector is removed.

8. CHECK INTERMITTENT INCIDENT

Refer to EC-74, "TROUBLE DIAGNOSIS FOR INTERMITTENT INCIDENT".

>> INSPECTION END

Fuel Pump Circuit

Description

Sensor	Input Signal to ECM	ECM Function	Actuator
Crankshaft position sensor (POS)	Engine speed*	Fuel pump control	Fuel pump relay
Camshaft position sensor (PHASE)			
Battery	Battery voltage*		

*: The ECM determines the start signal status by the signals of engine speed and battery voltage.
The ECM controls ON/OFF duty of heated oxygen sensor 1 heater according to the engine speed and coolant temperature.
The ECM activates the fuel pump for several seconds after the ignition switch is turned on to improve engine startability. If the ECM receives a engine speed signal from the crankshaft position sensor (POS) and camshaft position sensor (PHASE), it knows that the engine is rotating, and causes the pump to operate. If the engine speed signal is not received when the ignition switch is ON, the engine stalls. The ECM stops pump operation and prevents battery discharging, thereby improving safety. The ECM does not directly drive the fuel pump. It controls the ON/OFF fuel pump relay, which in turn controls the fuel pump.

Condition	Fuel Pump Operation
Ignition switch is turned to ON	Operates for 1 second
Engine running and cranking	Operates
When engine is stopped	Stops in 1.5 seconds
Except as shown above	Stops

Component Description

A turbine type design fuel pump is used in the fuel tank.
Fuel pressure regulator integrated type

CONSULT-II REFERENCE VALUE IN DATA MONITOR MODE
Specification data are reference values.

Monitor Item	Condition	Specification
FUEL PUMP RLY	For 1 seconds after turning ignition switch ON Engine running or cranking	ON
	Except above conditions	OFF

Fuel Pump Circuit (Cont'd)

Specification data are reference values and are measured between each terminal and ground.

CAUTION:

Do not use ECM ground terminals when measuring input/output voltage. Doing so may result in damage to the ECM's transistor. Use a ground other than ECM terminals, such as the ground.

Terminal No.	Wire Color	Item	Condition	Data (DC Voltage)
113	B/P	Fuel pump relay	[Ignition switch ON] For 1 seconds after turning ignition switch ON [Engine is running]	Approximately 0 V
			[Ignition switch ON] More than 1 seconds after turning ignition switch	BATTERY VOLTAGE (11 - 14 V)

Diagnostic Procedure

1. CHECK OVERALL FUNCTION

1. Turn ignition switch ON.
2. Pinch fuel feed hose with two fingers.
   Fuel pressure pulsation should be felt on the fuel hose for 1 second after ignition switch is turned ON.

OK or NG

OK >> INSPECTION END

NG >> GO TO 2.

Fuel Pump Circuit (Cont'd)

2. CHECK FUEL PUMP RELAY POWER SUPPLY CIRCUIT

1. Turn ignition switch OFF.
2. Disconnect fuel pump relay harness connector.
3. Turn ignition switch ON.

4. Check voltage between fuel pump relay terminals 1, 5 and ground with CONSULT-II or tester.

   Voltage: Battery voltage

OK or NG

OK >> GO TO 4.

NG >> GO TO 3.

3. DETECT MALFUNCTIONING PART

Check the following.

Fuse block (J/B) connector B6

10A fuse

Harness for open or short between fuel pump relay and fuse

>> Repair open circuit or short to ground or short to power in harness or connectors.

4. CHECK FUEL PUMP POWER SUPPLY AND GROUND CIRCUIT FOR OPEN AND SHORT

1. Turn ignition switch OFF.
2. Disconnect fuel level sensor unit and fuel pump harness connector.
3. Check harness continuity between fuel pump relay terminal 3 and fuel level sensor unit and fuel pump terminal 5, fuel level sensor unit and fuel pump terminal 4 and body ground.

   Refer to Wiring Diagram.

   Continuity should exist.
4. Also check harness for short to ground and short to power.

OK or NG

OK >> GO TO 6.

NG >> GO TO 5.

Fuel Pump Circuit (Cont'd)

5. DETECT MALFUNCTIONING PART

Check the following.

Harness for open or short between fuel level sensor unit and fuel pump and fuel pump relay

Harness for open or short between fuel level sensor unit and fuel pump and body ground

>> Repair open circuit or short to ground or short to power in harness or connectors.

6. DETECT MALFUNCTIONING PART

Check the following.

Harness connectors B3, M15

Harness connectors M61, S101

Harness for open or short between ECM and fuel pump relay

>> Repair open circuit or short to ground or short to power in harness or connectors.

7. CHECK FUEL PUMP RELAY

Refer to EC-242, "Component Inspection".

OK or NG

OK >> GO TO 8.

NG >> Replace fuel pump relay.

8. CHECK FUEL PUMP

Refer to EC-242, "Component Inspection".

OK or NG

OK >> GO TO 9.

NG >> Replace fuel pump.

9. CHECK INTERMITTENT INCIDENT

Refer to EC-74, "TROUBLE DIAGNOSIS FOR INTERMITTENT INCIDENT".

>> INSPECTION END

Fuel Pump Circuit (Cont'd)

Component Inspection

FUEL PUMP RELAY

Check continuity between fuel pump relay terminals 3 and 5 under the following conditions.

Conditions	Continuity
12 V direct supply between terminal 1 and 2	Yes
No current supply	No

FUEL PUMP

1. Disconnect fuel level sensor unit and fuel pump harness connector.

2. Check resistance between fuel level sensor unit and fuel pump terminals 3 and 4.

   Resistance:

   Approximately 1.0 [at 25°C (77°F)]

DTC P0550 Power Steering Pressure Sensor Circuit

Component Description

Power steering pressure (PSP) sensor is installed to the power steering high-pressure tube and detects a power steering load. This sensor is a potentiometer which transforms the power steering load into output voltage, and emits the voltage signal to the ECM. The ECM controls the electric throttle control actuator and adjusts the throttle valve opening angle to increase the engine speed and adjusts the idle speed for the increased load.

CONSULT-II REFERENCE VALUE IN DATA MONITOR MODE

Specification data are reference values.

Monitor Item	Condition		Specification
PW/ST SIGNAL	Engine: After warming up, idle the engine	Steering wheel is in neutral position. (Forward direction)	OFF
		Steering wheel is turned.	ON

On Board Diagnosis Logic

The MIL will not light up for this diagnosis.

DTC No.	Trouble Diagnosis Name	DTC Detecting Condition	Possible Cause
P0550 0550	Power steering pressure sensor circuit	An excessively low or high voltage from the sensor is sent to ECM.	Harness or connectors (The sensor circuit is open or shorted.) Power steering pressure sensor

DTC Confirmation Procedure

NOTE:

If DTC Confirmation Procedure has been previously conducted, always turn ignition switch OFF and wait at least 10 seconds before conducting the next test.

With CONSULT-II

1. Turn ignition switch ON.
2. Select “DATA MONITOR” mode with CONSULT-II.
3. Start engine and let it idle for at least 5 seconds.
4. If DTC is detected, go to EC-245, “Diagnostic Procedure”.

Without CONSULT-II

1. Start engine and let it idle for at least 5 seconds.
2. Turn ignition switch OFF, wait at least 10 seconds and then turn ON.
3. Perform Diagnostic Test Mode II (Self-diagnostic results).
4. If DTC is detected, go to EC-245, “Diagnostic Procedure”.

Wiring Diagram EC/P•S-Signal

DTC P0550 Power Steering Pressure Sensor Circuit (Cont'd)

Specification data are reference values and are measured between each terminal and ground.

CAUTION:

Do not use ECM ground terminals when measuring input/output voltage. Doing so may result in damage to the ECM's transistor. Use a ground other than ECM terminals, such as the ground.

Terminal No.	Wire Color	Item	Condition	Data (DC Voltage)
12	W	Power steering pressure sensor	[Engine is running] Steering wheel is being turned.	0.5 - 4.0 V
			[Engine is running] Steering wheel is not being turned.	0.4 - 0.8 V
57	B	Sensors ground (Power steering pressure sensor/ Refrigerant pressure sensor)	[Engine is running] Idle speed	Approximately 0 V
65	G	Sensor power supply (Power steering pressure sensor)	[Ignition switch ON]	Approximately 5 V

Diagnostic Procedure

1. RETIGHTEN GROUND SCREWS

1. Turn ignition switch OFF.
2. Loosen and retighten engine ground screws.
   >> GO TO 2.

2. CHECK POWER STEERING PRESSURE SENSOR POWER SUPPLY CIRCUIT

1. Disconnect power steering pressure sensor harness connector.
2. Turn ignition switch ON.
3. Check voltage between power steering pressure sensor terminal 1 and ground with CONSULT-II or tester.
   Voltage: Approximately 5V

OK or NG

OK >> GO TO 3.

NG >> Repair open circuit or short to ground or short to power in harness or connectors.

DTC P0550 Power Steering Pressure Sensor Circuit (Cont'd)

3. CHECK PSP SENSOR GROUND CIRCUIT FOR OPEN AND SHORT

1. Turn ignition switch OFF.
2. Disconnect ECM harness connector.
3. Check harness continuity between ECM terminal 57 and power steering pressure sensor terminal 3.

   Refer to Wiring Diagram.

   Continuity should exist.
4. Also check harness for short to ground and short to power.

OK or NG

OK >> GO TO 4.

NG >> Repair open circuit or short to ground or short to power in harness or connectors.

4. CHECK PSP SENSOR INPUT SIGNAL CIRCUIT FOR OPEN AND SHORT

1. Check harness continuity between ECM terminal 12 and power steering pressure sensor terminal 2.

   Continuity should exist.
2. Also check harness for short to ground and short to power.

OK or NG

OK >> GO TO 5.

NG >> Repair open circuit or short to ground or short to power in harness or connectors.

5. CHECK POWER STEERING PRESSURE SENSOR

Refer to EC-246, "Component Inspection".

OK or NG

OK >> GO TO 6.

NG >> Replace power steering pressure sensor.

6. CHECK INTERMITTENT INCIDENT

Refer to EC-74, "TROUBLE DIAGNOSIS FOR INTERMITTENT INCIDENT".

>> INSPECTION END

Component Inspection

POWER STEERING PRESSURE SENSOR

1. Reconnect all harness connectors disconnected.
2. Start engine and let it idle.
3. Check voltage between ECM terminal 12 and ground under the following conditions.

Condition	Voltage
Steering wheel is being turned fully.	0.5 - 4.0 V
Steering wheel is not being turned.	0.4 - 0.8 V

DTC P0132 Heated Oxygen Sensor - FR Circuit High Voltage

Component Description

The heated oxygen sensor 1 is placed into the exhaust manifold. It detects the amount of oxygen in the exhaust gas compared to the outside air. The heated oxygen sensor 1 has a closed-end tube made of ceramic zirconia. The zirconia generates voltage from approximately 1 V in richer conditions to 0 V in leaner conditions. The heated oxygen sensor 1 signal is sent to the ECM. The ECM adjusts the injection pulse duration to achieve the ideal air-fuel ratio. The ideal air-fuel ratio occurs near the radical change from 1 V to 0 V.

CONSULT-II REFERENCE VALUE IN DATA MONITOR MODE

Specification data are reference values.

Monitor Item	Condition		Specification
HO2S1 (B1)	Engine: After warming up	Maintaining engine speed at 2,000 rpm	0 - 0.3V Approx. 0.6 - 1.0 V
HO2S1 MNTR (B1)			LEAN RICH Changes more than 5 times during 10 seconds.

On Board Diagnosis Logic

To judge the malfunction, the diagnosis checks that the heated oxygen sensor 1 output is not inordinately high.

DTC No.	Trouble Diagnosis Name	DTC Detecting Condition	Possible Cause
P0132 0132	Heated oxygen sensor 1 circuit high voltage	An excessively high voltage from the sensor is sent to ECM.	Harness or connectors (The sensor circuit is open or shorted.) Heated oxygen sensor 1

DTC P0132 Heated Oxygen Sensor - FR Circuit High Voltage (Cont'd)

DTC Confirmation Procedure

NOTE:

If DTC Confirmation Procedure has been previously conducted, always turn ignition switch OFF and wait at least 10 seconds before conducting the next test.

With CONSULT-II

1. Start engine and warm it up to normal operating temperature.
2. Turn ignition switch OFF and wait at least 10 seconds.
3. Turn ignition switch ON.
4. Select “DATA MONITOR” mode with CONSULT-II.
5. Restart engine and let it idle for 2 minutes.
6. If DTC is detected, go to EC-250, “Diagnostic Procedure”.

Without CONSULT-II

1. Start engine and warm it up to normal operating temperature.
2. Turn ignition switch OFF and wait at least 10 seconds.
3. Restart engine and let it idle for 2 minutes.
4. Turn ignition switch OFF and wait at least 10 seconds.
5. Perform Diagnostic Test Mode II (Self-diagnostic results) with ECM.
6. If DTC is detected, go to EC-250, “Diagnostic Procedure”.

Wiring Diagram EC/Oxygen Sensor - FR

DTC P0132 Heated Oxygen Sensor - FR Circuit High Voltage (Cont'd)

Specification data are reference values and are measured between each terminal and ground.

CAUTION:

Do not use ECM ground terminals when measuring input/output voltage. Doing so may result in damage to the ECM's transistor. Use a ground other than ECM terminals, such as the ground.

Terminal No.	Wire Color	Item	Condition	Data (DC Voltage)
35	W	Heated oxygen sensor 1	[Engine is running] Warm-up condition Engine speed is 2,000 rpm	0 - Approximately 1.0 V (Periodically change)
74	B	Heated oxygen sensor ground	[Engine is running] Idle speed	Approximately 0 V

Diagnostic Procedure

1. RETIGHTEN HEATED OXYGEN SENSOR 1

1. Turn ignition switch OFF.
2. Loosen and retighten heated oxygen sensor 1.
   Tightening torque:
   40 - 60 N·m (4.1 - 6.2 kg-m, 30 - 44 ft-lb)

>> GO TO 2.

2. CHECK HEATED OXYGEN SENSOR 1 (FR) GROUND CIRCUIT FOR OPEN AND SHORT

1. Disconnect heated oxygen sensor 1 harness connector.
2. Disconnect ECM harness connector.
3. Check harness continuity between ECM terminal 74 and heated oxygen sensor 1 (FR) terminal 4.
   Refer to Wiring Diagram.

   Continuity should exist.

4. Also check harness for short to ground and short to power.

OK or NG

OK >> GO TO 3.

NG >> Repair open circuit or short to ground or short to power in harness or connectors.

DTC P0132 Heated Oxygen Sensor - FR Circuit High Voltage (Cont 'd)

3. CHECK HEATED OXYGEN SENSOR 1 (FR) INPUT SIGNAL CIRCUIT FOR OPEN AND SHORT

1. Check harness continuity between ECM terminal 35 and heated oxygen sensor 1 (FR) terminal 2.
   Refer to Wiring Diagram.
   Continuity should exist.
2. Check harness continuity between ECM terminal 35 or heated oxygen sensor 1 (FR) terminal 2 and ground.
   Refer to Wiring Diagram.
   Continuity should not exist.
3. Also check harness for short to power.

OK or NG

OK >> GO TO 4.

NG >> Repair open circuit or short to ground or short to power in harness or connectors.

4. CHECK HEATED OXYGEN SENSOR 1 (FR) CONNECTOR FOR WATER

Check heated oxygen sensor 1 connectors for water.

Water should not exist.

OK or NG

OK >> GO TO 5.

NG >> Repair or replace harness or connectors.

5. CHECK HEATED OXYGEN SENSOR 1

Refer to EC-251, “Component Inspection”.

OK or NG

OK >> GO TO 6.

NG >> Replace heated oxygen sensor 1.

6. CHECK INTERMITTENT INCIDENT

Refer to EC-74, “TROUBLE DIAGNOSIS FOR INTERMITTENT INCIDENT”.

>> INSPECTION END

Component Inspection

HEATED OXYGEN SENSOR 1

With CONSULT-II

1. Start engine and warm it up to normal operating temperature.
2. Select “MANU TRIG” and adjust “TRIGGER POINT” to 100% in “DATA MONITOR” mode with CONSULT-II.
3. Select “HO2S1 (B1)” and “HO2S1 MNTR (B1)”.
4. Hold engine speed at 2,000 rpm under no load during the following steps.
5. Touch “RECORD” on CONSULT-II screen.

DTC P0132 Heated Oxygen Sensor - FR Circuit High Voltage (Cont 'd)

6. Check the following.

   "HO2S1 MNTR (B1)" in "DATA MONITOR" mode changes from "RICH" to "LEAN" to "RICH" more than 5 times in 10 seconds. 5 times (cycles) are counted as shown at right.

   "HO2S1 (FR) (B1)" voltage goes above 0.6 V at least once.

   "HO2S1 (FR) (B1)" voltage goes below 0.3 V at least once.

   "HO2S1 (FR) (B1)" voltage never exceeds 1.0 V.

CAUTION:

Discard any heated oxygen sensor which has been dropped from a height of more than 0.5 m (19.7 in) onto a hard surface such as a concrete floor; use a new one.

Before installing new oxygen sensor, clean exhaust system threads using oxygen sensor thread cleaner and approved anti-seize lubricant.

Without CONSULT-II

1. Start engine and warm it up to normal operating temperature.
2. Set voltmeter probes between ECM terminal 35 (HO2S1 (FR) signal) and engine ground.
3. Check the following with engine speed held at 2,000 rpm constant under no load.

   The voltage fluctuates between 0 to 0.3 V and 0.6 to 1.0 V more than 5 times within 10 seconds.

   The maximum voltage is over 0.6 V at least one time.

   The minimum voltage is below 0.3 V at least one time.

   The voltage never exceeds 1.0 V.

   1 time: 0 - 0.3 V 0.6 - 1.0 V 0 - 0.3 V

   2 times: 0 - 0.3 V 0.6 - 1.0 V 0 - 0.3 V 0.6 - 1.0 V

CAUTION:

Discard any heated oxygen sensor which has been dropped from a height of more than 0.5 m (19.7 in) onto a hard surface such as a concrete floor; use a new one. Before installing new oxygen sensor, clean exhaust system threads using oxygen sensor thread cleaner and approved anti-seize lubricant.

Removal and Installation

HEATED OXYGEN SENSOR 1

Refer to "OUTER COMPONENT PARTS" (QG16: EM-13).

DTC P0134 Heated Oxygen Sensor - FR Circuit No Activity Detected

Component Description

The heated oxygen sensor 1 is placed into the exhaust manifold. It detects the amount of oxygen in the exhaust gas compared to the outside air. The heated oxygen sensor 1 has a closed-end tube made of ceramic zirconia. The zirconia generates voltage from approximately 1 V in richer conditions to 0 V in leaner conditions. The heated oxygen sensor 1 signal is sent to the ECM. The ECM adjusts the injection pulse duration to achieve the ideal air-fuel ratio. The ideal air-fuel ratio occurs near the radical change from 1 V to 0 V.

CONSULT-II REFERENCE VALUE IN DATA MONITOR MODE

Specification data are reference values.

Monitor Item	Condition		Specification
HO2S1 (B1)	Engine: After warming up	Maintaining engine speed at 2,000 rpm	0 - 0.3V Approx. 0.6 - 1.0 V
HO2S1 MNTR (B1)			LEAN RICH Changes more than 5 times during 10 seconds.

On Board Diagnosis Logic

Under the condition in which the heated oxygen sensor 1 signal is not input, the ECM circuits will read a continuous approximately 0.3 V. Therefore, for this diagnosis, the time that output voltage is within 200 to 400 mV range is monitored, and the diagnosis checks that this time is not inordinately long.

DTC No.	Trouble Diagnosis Name	DTC Detecting Condition	Possible Cause
P0134 0134	Heated oxygen sensor 1 circuit no activity detected	The voltage from the sensor is constantly approx. 0.3V.	Harness or connectors (The sensor circuit is open or shorted.) Heated oxygen sensor 1

DTC P0134 Heated Oxygen Sensor - FR Circuit No Activity Detected (Cont'd)

Overall Function Check

Use this procedure to check the overall function of the heated oxygen sensor 1 circuit. During this check, a DTC might not be confirmed.

With CONSULT-II

1. Start engine and warm it up to normal operating temperature.
2. Select "MANU TRIG" in "DATA MONITOR" mode with CONSULT-II, and select "HO2S1 (B1)".
3. Hold engine speed at 2,000 rpm under no load.
4. Make sure that the indications do not remain in the range between 0.2 to 0.4 V.
5. If NG, go to EC-256, "Diagnostic Procedure".

Without CONSULT-II

1. Start engine and warm it up to normal operating temperature.
2. Set voltmeter probes between ECM terminal 35 (HO2S1 (FR) signal) and engine ground.
3. Check the following with engine speed held at 2,000 rpm constant under no load.

   The voltage does not remain in the range of 0.2 to 0.4 V.
4. If NG, go to EC-256, "Diagnostic Procedure".

Wiring Diagram EC/Oxygen Sensor - FR

DTC P0134 Heated Oxygen Sensor - FR Circuit No Activity Detected (Cont'd)

Specification data are reference values and are measured between each terminal and ground.

CAUTION:

Do not use ECM ground terminals when measuring input/output voltage. Doing so may result in damage to the ECM's transistor. Use a ground other than ECM terminals, such as the ground.

Terminal No.	Wire Color	Item	Condition	Data (DC Voltage)
35	W	Heated oxygen sensor 1	[Engine is running] Warm-up condition Engine speed is 2,000 rpm.	0 - Approximately 1.0 V (Periodically change)
74	B	Heated oxygen sensor ground	[Engine is running] Idle speed	Approximately 0 V

Diagnostic Procedure

1. INSPECTION START

1. Turn ignition switch OFF.
2. Loosen and retighten engine ground screws.

   >> GO TO 2.

2. CHECK HEATED OXYGEN SENSOR 1 (FR) GROUND CIRCUIT FOR OPEN AND SHORT

1. Disconnect heated oxygen sensor 1 harness connector.
2. Disconnect ECM harness connector.
3. Check harness continuity between ECM terminal 74 and heated oxygen sensor 1 (FR) terminal 1. Refer to Wiring Diagram.

   Continuity should exist.
4. Also check harness for short to ground and short to power.

<u>OK or NG</u>

OK >> GO TO 3.

NG >> Repair open circuit or short to ground or short to power in harness or connectors.

DTC P0134 Heated Oxygen Sensor - FR Circuit No Activity Detected (Cont'd)

3. CHECK HEATED OXYGEN SENSOR 1 (FR) INPUT SIGNAL CIRCUIT FOR OPEN AND SHORT

1. Check harness continuity between ECM terminal 35 and heated oxygen sensor 1 (FR) terminal 2.
   Refer to Wiring Diagram.
   Continuity should exist.
2. Check harness continuity between ECM terminal 74 or heated oxygen sensor 1 terminal 1 and ground.
   Refer to Wiring Diagram.
   Continuity should not exist.
3. Also check harness for short to power.

OK or NG

OK >> GO TO 4.

NG >> Repair open circuit or short to ground or short to power in harness or connectors.

4. CHECK HEATED OXYGEN SENSOR 1

Refer to EC-257, "Component Inspection".

OK or NG

OK >> GO TO 5.

NG >> Replace heated oxygen sensor 1.

5. CHECK INTERMITTENT INCIDENT

Refer to EC-74, "TROUBLE DIAGNOSIS FOR INTERMITTENT INCIDENT".

>> INSPECTION END

Component Inspection

HEATED OXYGEN SENSOR 1

With CONSULT-II

1. Start engine and warm it up to normal operating temperature.
2. Select "MANU TRIG" and adjust "TRIGGER POINT" to 100% in "DATA MONITOR" mode with CONSULT-II.
3. Select "HO2S1 (B1)" and "HO2S1 MNTR (B1)".
4. Hold engine speed at 2,000 rpm under no load during the following steps.
5. Touch "RECORD" on CONSULT-II screen.
6. Check the following.
   "HO2S1 MNTR (B1)" in "DATA MONITOR" mode changes from "RICH" to "LEAN" to "RICH" more than 5 times in 10 seconds. 5 times (cycles) are counted as shown at right.
   "HO2S1 (FR) (B1)" voltage goes above 0.6V at least once.
   "HO2S1 (FR) (B1)" voltage goes below 0.3V at least once.
   "HO2S1 (FR) (B1)" voltage never exceeds 1.0V.

DTC P0134 Heated Oxygen Sensor - FR Circuit No Activity Detected (Cont'd)

CAUTION:

Discard any heated oxygen sensor which has been dropped from a height of more than 0.5 m (19.7 in) onto a hard surface such as a concrete floor; use a new one.

Before installing new oxygen sensor, clean exhaust system threads using oxygen sensor thread cleaner and approved anti-seize lubricant.

Without CONSULT-II

1. Start engine and warm it up to normal operating temperature.
2. Set voltmeter probes between ECM terminal 35 (HO2S1 (FR) signal) and engine ground.
3. Check the following with engine speed held at 2,000 rpm constant under no load.

   The voltage fluctuates between 0 to 0.3 V and 0.6 to 1.0 V more than 5 times within 10 seconds.

   The maximum voltage is over 0.6 V at least one time.

   The minimum voltage is below 0.3 V at least one time.

   The voltage never exceeds 1.0 V.

   1 time: 0 - 0.3 V 0.6 - 1.0 V 0 - 0.3 V

   2 times: 0 - 0.3 V 0.6 - 1.0 V 0 - 0.3 V 0.6 - 1.0 V

CAUTION:

Discard any heated oxygen sensor which has been dropped from a height of more than 0.5 m (19.7 in) onto a hard surface such as a concrete floor; use a new one.

Before installing new oxygen sensor, clean exhaust system threads using oxygen sensor thread cleaner and approved anti-seize lubricant.

Removal and Installation

HEATED OXYGEN SENSOR 1

Refer to "OUTER COMPONENT PARTS" (QG16: EM-13).

Heated Oxygen Sensor 1 Heater (FR)

Description

Sensor	Input Signal to ECM	ECM Function	Actuator
Camshaft position sensor (PHASE)	Engine speed	Heated oxygen sensor 1 heater control	Heated oxygen sensor 1 heater
Crankshaft position sensor (POS)			
Engine coolant temperature sensor	Engine coolant temperature		

The ECM performs ON/OFF duty control of the heated oxygen sensor 1 heater corresponding to the engine speed and engine coolant temperature. The duty percent varies with engine coolant temperature when engine is started.

Operation

Engine speed rpm	Heated oxygen sensor 1 heater
Above 3,600	OFF
Below 3,600 after warming up	ON

Wiring Diagram

EC/Oxygen Sensor - FR

Heated Oxygen Sensor 1 Heater (FR) (Cont'd)

Specification data are reference values and are measured between each terminal and ground.
Pulse signal is measured by CONSULT-II.

CAUTION:

Do not use ECM ground terminals when measuring input/output voltage. Doing so may result in damage to the ECM's transistor. Use a ground other than ECM terminals, such as the ground.

Terminal No.	Wire Color	Item	Condition	Data (DC Voltage)
24	G	Heated oxygen sensor 1 heater	[Engine is running] Warm-up condition. Engine speed is below 3,600 rpm.	Approximately 7.0 V
			[Ignition switch ON] Engine stopped. [Engine is running] Engine speed is above 3,600 rpm.	BATTERY VOLTAGE (11 - 14 V)

: Average voltage for pulse signal (Actual pulse signal can be confirmed by oscilloscope.)

Diagnostic Procedure

1. CHECK OVERALL FUNCTION CHECK

1. Start engine and warm it up to normal operating temperature.
2. Turn ignition switch OFF and wait at least 10 seconds.
3. Turn ignition switch ON.
4. Set the tester probe between ECM terminal 24 (HO2S1 (FR) heater signal) and ground.
5. Start engine and let it idle.
6. Check the voltage under the following conditions.
   Verify that the oscilloscope screen shows the signal wave as shown below.

Conditions	Voltage
At idle	Approximately 7.0 V
Engine speed is above 3,600 rpm	BATTERY VOLTAGE (11 - 14 V)

: Average voltage for pulse signal (Actual pulse signal can be confirmed by oscilloscope.)

OK or NG

OK >> INSPECTION END.

NG >> GO TO 2.

Heated Oxygen Sensor 1 Heater (FR) (Cont'd)

2. CHECK HEATED OXYGEN SENSOR 1 (FR) POWER SUPPLY CIRCUIT

1. Turn ignition switch OFF.
2. Disconnect heated oxygen sensor 1 harness connector.
3. Turn ignition switch ON.

4. Check voltage between heated oxygen sensor 1 (FR) terminal 4 and ground with CONSULT-II or tester.

   Voltage: Battery voltage

OK or NG

OK >> GO TO 4.

NG >> GO TO 3.

3. DETECT MALFUNCTIONING PART

Check the following.

Harness connectors E5, S18 harness connector

Fuse block (J/B) connector E104

10A fuse

Harness for open or short between heated oxygen sensor 1 and fuse

>> Repair open circuit or short to ground or short to power in harness or connectors.

4. CHECK HEATED OXYGEN SENSOR 1 (FR) OUTPUT SIGNAL CIRCUIT FOR OPEN AND SHORT

1. Turn ignition switch OFF.
2. Disconnect ECM harness connector.
3. Check harness continuity between ECM terminal 24 and heated oxygen sensor 1 (FR) terminal 3.

   Refer to Wiring Diagram.

   Continuity should exist.
4. Also check harness for short to ground and short to power.

OK or NG

OK >> GO TO 5.

NG >> Repair open circuit or short to ground or short to power in harness or connectors.

Heated Oxygen Sensor 1 Heater (FR) (Cont'd)

5. CHECK HEATED OXYGEN SENSOR 1 (FR) HEATER

Refer to EC-263, "Component Inspection".

OK or NG

OK >> GO TO 6.

NG >> Replace heated oxygen sensor 1.

6. CHECK INTERMITTENT INCIDENT

Refer to EC-74, "TROUBLE DIAGNOSIS FOR INTERMITTENT INCIDENT".

>> INSPECTION END

Component Inspection

HEATED OXYGEN SENSOR 1 HEATER

1. Check resistance between heated oxygen sensor 1 terminals as follows.

Terminal No.	Resistance
3 and 4	3.3 - 4.0 at 25°C (77°F)
3 and 1, 2	(Continuity should not exist)
4 and 1, 2	

2. If NG, replace heated oxygen sensor 1.

CAUTION:

Discard any heated oxygen sensor which has been dropped from a height of more than 0.5 m (19.7 in) onto a hard surface such as a concrete floor; use a new one.

Before installing new oxygen sensor, clean exhaust system threads using oxygen sensor thread cleaner and approved anti-seize lubricant.

Removal and Installation

HEATED OXYGEN SENSOR 1

Refer to "OUTER COMPONENT PARTS" (QG16: EM-13).

Heated Oxygen Sensor 1 (FR)

Component Description

The heated oxygen sensor 1 is placed into the exhaust manifold. It detects the amount of oxygen in the exhaust gas compared to the outside air. The heated oxygen sensor 1 has a closed-end tube made of ceramic zirconia. The zirconia generates voltage from approximately 1 V in richer conditions to 0 V in leaner conditions. The heated oxygen sensor 1 signal is sent to the ECM. The ECM adjusts the injection pulse duration to achieve the ideal air-fuel ratio. The ideal air-fuel ratio occurs near the radical change from 1 V to 0 V.

CONSULT-II REFERENCE VALUE IN DATA MONITOR MODE

Specification data are reference values.

Monitor Item	Condition		Specification
HO2S1 (B1)	Engine: After warming up	Maintaining engine speed at 2,000 rpm	0 - 0.3V Approx. 0.6 - 1.0 V
HO2S1 MNTR (B1)			LEAN RICH Changes more than 5 times during 10 seconds.

Heated Oxygen Sensor 1 (FR) (Cont'd)

Specification data are reference values and are measured between each terminal and ground.

CAUTION:

Do not use ECM ground terminals when measuring input/output voltage. Doing so may result in damage to the ECM's transistor. Use a ground other than ECM terminals, such as the ground.

Terminal No.	Wire Color	Item	Condition	Data (DC Voltage)
35	W	Heated oxygen sensor 1	[Engine is running] Warm-up condition Engine speed is 2,000 rpm.	0 - Approximately 1.0 V (Periodically change)
74	B	Sensors ground (Heated oxygen sensor)	[Engine is running] Idle speed	Approximately 0 V

Diagnostic Procedure

1. INSPECTION START

Do you have CONSULT-II?

Yes or No

Yes >> GO TO 2.

No >> GO TO 3.

2. CHECK OVERALL FUNCTION

With CONSULT-II

1. Start engine and warm it up to normal operating temperature.
2. Select "HO2S1 MNTR (B1)" in "DATA MONITOR" mode with CONSULT-II.
3. Keep the engine speed at 2,000 rpm under no load, and make sure that the monitors fluctuate between LEAN and RICH more than five times in 10 seconds.

   1 time: RICH LEAN RICH

   2 times: RICH LEAN RICH LEAN RICH

OK or NG

OK >> INSPECTION END

NG >> GO TO 4.

3. CHECK OVERALL FUNCTION

Without CONSULT-II

1. Start engine and warm it up to normal operating temperature.
2. Set voltmeter probes between ECM terminal 35 (HO2S1 signal) and engine ground.
3. Keep the engine speed at 2,000 rpm under no load, and make sure that the voltage fluctuates between 0 to 0.3V and 0.6 to 1.0V more than five times in 10 seconds.

   1 time: 0 - 0.3 V 0.6 - 1.0 V 0 - 0.3 V

   2 times: 0 - 0.3 V 0.6 - 1.0 V 0 - 0.3 V 0.6 - 1.0 V 0 - 0.3 V

OK or NG

OK >> INSPECTION END

NG >> GO TO 4.

Heated Oxygen Sensor 1 (FR) (Cont'd)

4. RETIGHTEN GROUND SCREWS

1. Turn ignition switch OFF.
2. Loosen and retighten engine ground screws.
   >> GO TO 5.

5. RETIGHTEN HEATED OXYGEN SENSOR 1

Loosen and retighten heated oxygen sensor 1.

Tightening torque:

40 - 60 N·m (4.1 - 6.2 kg-m, 30 - 44 ft-lb)

>> GO TO 6.

6. CHECK FOR EXHAUST GAS LEAK

1. Start engine and run it at idle.
2. Listen for an exhaust gas leak before three way catalyst (Manifold).

OK or NG

OK >> GO TO 7.

NG >> Repair or replace.

7. CHECK FOR INTAKE AIR LEAK

Listen for an intake air leak after the mass air flow sensor.

OK or NG

OK >> GO TO 8.

NG >> Repair or replace.

Heated Oxygen Sensor 1 (FR) (Cont'd)

8. CHECK HEATED OXYGEN SENSOR 1 GROUND CIRCUIT FOR OPEN AND SHORT

1. Turn ignition switch OFF.
2. Disconnect heated oxygen sensor 1 harness connector.
3. Disconnect ECM harness connector.
4. Check harness continuity between ECM terminal 74 and heated oxygen sensor 1 (FR) terminal 1. Refer to Wiring Diagram.

   Continuity should exist.
5. Also check harness for short to ground and short to power.

OK or NG

OK >> GO TO 9.

NG >> Repair open circuit or short to ground or short to power in harness or connectors.

9. CHECK HEATED OXYGEN SENSOR 1 (FR) INPUT SIGNAL CIRCUIT FOR OPEN AND SHORT

1. Check harness continuity between ECM terminal 35 and heated oxygen sensor 1 (FR) terminal 2.

   Refer to Wiring Diagram.

   Continuity should exist.
2. Check harness continuity between ECM terminal 35 or heated oxygen sensor 1 (FR) terminal 2 and ground.

   Refer to Wiring Diagram.

   Continuity should not exist.
3. Also check harness for short to power.

OK or NG

OK >> GO TO 10.

NG >> Repair open circuit or short to ground or short to power in harness or connectors.

10. CHECK HEATED OXYGEN SENSOR 1 HEATER

Refer to EC-269, "Component Inspection".

OK or NG

OK >> GO TO 11.

NG >> Replace malfunctioning heated oxygen sensor 1.

11. CHECK MASS AIR FLOW SENSOR

Refer to EC-108, "Component Inspection".

OK or NG

OK >> GO TO 12.

NG >> Replace mass air flow sensor.

Heated Oxygen Sensor 1 (FR) (Cont'd)

12. CHECK PCV VALVE

Refer to EC-316, "Component Inspection".

OK or NG

OK >> GO TO 13.

NG >> Replace PCV valve.

13. CHECK HEATED OXYGEN SENSOR 1

Refer to EC-269, "Component Inspection".

OK or NG

OK >> GO TO 14.

NG >> Replace malfunctioning heated oxygen sensor 1.

14. CHECK INTERMITTENT INCIDENT

Refer to EC-74, "TROUBLE DIAGNOSIS FOR INTERMITTENT INCIDENT".

>> INSPECTION END

Component Inspection

HEATED OXYGEN SENSOR 1

With CONSULT-II

1. Start engine and warm it up to normal operating temperature.
2. Select "MANU TRIG" and adjust "TRIGGER POINT" to 100% in "DATA MONITOR" mode with CONSULT-II.
3. Select "HO2S1 (B1)" and "HO2S1 MNTR (B1)".
4. Hold engine speed at 2,000 rpm under no load during the following steps.
5. Touch "RECORD" on CONSULT-II screen.
6. Check the following.

   "HO2S1 MNTR (B1)" in "DATA MONITOR" mode changes from "RICH" to "LEAN" to "RICH" more than 5 times in 10 seconds. 5 times (cycles) are counted as shown at right.

   "HO2S1 (FR) (B1)" voltage goes above 0.6 V at least once.

   "HO2S1 (FR) (B1)" voltage goes below 0.3 V at least once.

   "HO2S1 (FR) (B1)" voltage never exceeds 1.0 V.

Heated Oxygen Sensor 1 (FR) (Cont'd)

CAUTION:

- Discard any heated oxygen sensor which has been dropped from a height of more than 0.5 m (19.7 in) onto a hard surface such as a concrete floor; use a new one.
- Before installing new oxygen sensor, clean exhaust system threads using oxygen sensor thread cleaner and approved anti-seize lubricant.

Without CONSULT-II

1. Start engine and warm it up to normal operating temperature.
2. Set voltmeter probes between ECM terminal 35 (HO2S1 (FR) signal) and engine ground.
3. Check the following with engine speed held at 2,000 rpm constant under no load.

   The voltage fluctuates between 0 to 0.3 V and 0.6 to 1.0 V more than 5 times within 10 seconds.

   The maximum voltage is over 0.6 V at least one time.

   The minimum voltage is below 0.3 V at least one time.

   The voltage never exceeds 1.0 V.

   1 time: 0 - 0.3 V 0.6 - 1.0 V 0 - 0.3 V

   2 times: 0 - 0.3 V 0.6 - 1.0 V 0 - 0.3 V 0.6 - 1.0 V

CAUTION:

Discard any heated oxygen sensor which has been dropped from a height of more than 0.5 m (19.7 in) onto a hard surface such as a concrete floor; use a new one.

Before installing new oxygen sensor, clean exhaust system threads using oxygen sensor thread cleaner and approved anti-seize lubricant.

Removal and Installation

HEATED OXYGEN SENSOR 1

Refer to "OUTER COMPONENT PARTS" (QG16: EM-13).

DTC P0138 Heated Oxygen Sensor - RR Circuit High Voltage

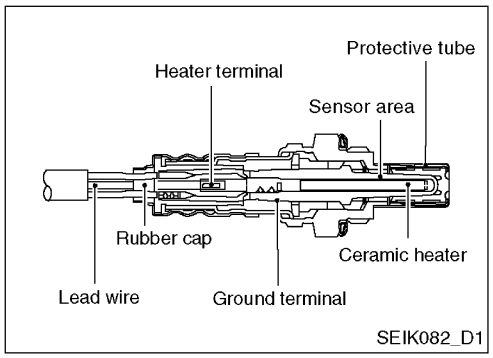

Component Description

The heated oxygen sensor 2 is placed after the three way catalyst. It detects the amount of oxygen in the exhaust gas. While the changing characteristics of the heated oxygen sensor 1 is changed, the mixture ratio is chemically controlled by the signals from the heated oxygen sensor 2. The heated oxygen sensor 2 is made of ceramic zirconia. The zirconia generates voltage from approximately 1 V in richer conditions to 0 V in leaner conditions. The heated oxygen sensor 2 is not used for engine control system when the operating conditions are normal.

CONSULT-II REFERENCE VALUE IN DATA MONITOR MODE

Specification data are reference values.

Monitor Item	Condition		Specification
HO2S2 (B1)	● Engine: After warming up	Maintaining engine speed at 2,000 rpm	0 - 0.3V ↔ Approx. 0.6 - 1.0 V

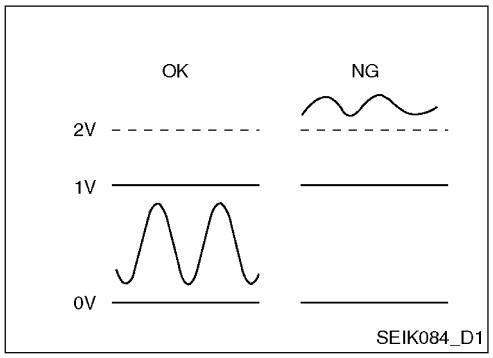

On Board Diagnosis Logic

The changing time between lean and rich conditions of the heated oxygen sensor 2 is much longer than that of heated oxygen sensor 1. This is caused by the oxygen reserving capacity before the three way catalyst. To judge the malfunction of heated oxygen sensor 2, ECM checks whether the voltage is excessivel high in various operating conditions such as shutting off the fuel.

DTC No.	Trouble Diagnosis Name	DTC Detecting Condition	Possible Cause
P0138 0138	Heated oxygen sensor 2 circuit high voltage	Current in heated oxygen sensor 2 heater circuit is not within normal operating range (An excessively high voltage from the heated oxygen sensor is sent to ECM.)	● Harness or connectors (The heated oxygen sensor heater circuit is open or shorted.) ● Heated oxygen sensor heater

DTC Confirmation Procedure

CAUTION:

Always operate in safe driving speed.

NOTE:

If DTC Confirmation Procedure has been previously conducted, always turn ignition switch OFF and wait at least 10 seconds before conducting the next test.

DTC P0138 Heated Oxygen Sensor - RR Circuit High Voltage (Cont'd)

With CONSULT-II

1. Turn ignition switch ON.
2. Select "DATA MONITOR" mode with CONSULT-II.
3. Start engine and drive vehicle for 2 minutes at least 70 km/h of driving speed.
4. Stop the vehicle and let the engine idle for 1 minute.
5. If DTC is detected, go to EC-274, "Diagnostic Procedure".

Wiring Diagram EC/Oxygen Sensor - RR

DTC P0138 Heated Oxygen Sensor - RR Circuit High Voltage (Cont'd)

Specification data are reference values and are measured between each terminal and ground.

CAUTION:

Do not use ECM ground terminals when measuring input/output voltage. Doing so may result in damage to the ECM's transistor. Use a ground other than ECM terminals, such as the ground.

Terminal No.	Wire Color	Item	Condition	Data (DC Voltage)
2	W	Heated oxygen sensor 2	[Engine is running] Warm-up condition Engine speed is 2,000 rpm.	0 - Approximately 1.0 V (Periodically change)

Diagnostic Procedure

1. RETIGHTEN GROUND SCREW

1. Turn ignition switch OFF.
2. Loosen and retighten engine ground screw.

   >> GO TO 2.

2. CHECK HEATED OXYGEN SENSOR 2 (RR) GROUND CIRCUIT FOR OPEN AND SHORT

1. Turn ignition switch OFF.
2. Disconnect heated oxygen sensor 2 harness connector.
3. Check harness continuity between engine ground and heated oxygen sensor 2 (FR) terminal 4.

   Refer to Wiring Diagram.

   Continuity should exist.
4. Also check harness for short to ground and short to power.

<u>OK or NG</u>

OK >> GO TO 3.

NG >> Repair open circuit or short to ground or short to power in harness or connectors.

DTC P0138 Heated Oxygen Sensor - RR Circuit High Voltage (Cont'd)

3. CHECK HEATED OXYGEN SENSOR 2 (RR) INPUT SIGNAL CIRCUIT FOR OPEN AND SHORT

1. Disconnect ECM harness connector.
2. Check harness continuity between ECM terminal 16 and heated oxygen sensor 2 (RR) terminal 2.
   Refer to Wiring Diagram.
   Continuity should exist.
3. Check harness continuity between ECM terminal 16 or heated oxygen sensor 2 (RR) terminal 2 and ground.
   Refer to Wiring Diagram.
   Continuity should not exist.
4. Also check harness for short to power.

OK or NG

OK >> GO TO 4.

NG >> Repair open circuit or short to ground or short to power in harness or connectors.

4. CHECK HEATED OXYGEN SENSOR 2 (RR) CONNECTOR FOR WATER

Check heated oxygen sensor 2 connectors for water.

Water should not exist.

OK or NG

OK >> GO TO 5.

NG >> Repair or replace harness or connectors.

5. CHECK HEATED OXYGEN SENSOR 2

Refer to EC-269 "Component Inspection".

OK or NG

OK >> GO TO 6.

NG >> Replace heated oxygen sensor 2.

6. CHECK INTERMITTENT INCIDENT

Refer to EC-74, "TROUBLE DIAGNOSIS FOR INTERMITTENT INCIDENT".

>> INSPECTION END

Component Inspection

HEATED OXYGEN SENSOR 2

With CONSULT-II

1. Start engine and drive vehicle for 2 minutes at least 70 km/h of driving speed.
2. Stop the vehicle and let the engine run.
3. Select "B/FUEL SCHDL" in "ACTIVE TEST" mode with CONSULT-II.

DTC P0138 Heated Oxygen Sensor - RR Circuit High Voltage (Cont'd)

4. Check heated oxygen sensor 2 (RR) in idle with 25% of fuel injection.

The voltage of oxygen sensor (RR) (B1) should be over 0.63 V at least once if the fuel injection is +25%.
The voltage of oxygen sensor (RR) (B1) should be below 0.5 V at least once if the fuel injection is -25%.

CAUTION:

Discard any heated oxygen sensor which has been dropped from a height of more than 0.5 m (19.7 in) onto a hard surface such as a concrete floor; use a new one.

Before installing new oxygen sensor, clean exhaust system threads using oxygen sensor thread cleaner and approved anti-seize lubricant.

Without CONSULT-II

1. Start engine and drive vehicle for 2 minutes at least 70 km/h of driving speed.
2. Stop the vehicle and let the engine run.
3. Set voltmeter probes between ECM terminal 16 (HO2S2 (RR) signal) and engine ground.
4. Check the following at least 10 times with engine speed held at 4,000 rpm constant under no load. (depress and release the accelerator pedal as quick as possible)
   a) The maximum voltage is over 0.63 V at least one time during this procedure.
   b) If the maximum voltage is over 0.63 V, no need to perform step 5.
5. Let the engine in idle for about 10 minutes and check the voltage. Or, check the voltage with the accelerator pedal released, vehicle speed 80 km/h, 3rd gear (manual transmission equipped vehicle), "D" position and overdrive OFF (automatic transmission equipped vehicle). Minimum voltage should be below 0.5 V at least one time during this procedure.
6. If NG, replace heated oxygen sensor 2 with new one.

CAUTION:

Discard any heated oxygen sensor which has been dropped from a height of more than 0.5 m (19.7 in) onto a hard surface such as a concrete floor; use a new one.

Before installing new oxygen sensor, clean exhaust system threads using oxygen sensor thread cleaner and approved anti-seize lubricant.

DTC P0031, P0032 Heated Oxygen Sensor Heater Control Circuit - FR

System Description

DESCRIPTION

Sensor	Input Signal to ECM	ECM Function	Actuator
Camshaft position sensor (PHASE)	Engine speed	Heated oxygen sensor 1 heater control	Heated oxygen sensor 1 heater
Crankshaft position sensor (POS)			
Engine coolant temperature sensor	Engine coolant temperature		

The ECM performs ON/OFF duty control of the heated oxygen sensor 1 heater corresponding to the engine speed and engine coolant temperature. The duty percent varies with engine coolant temperature when engine is started.

Operation

Engine speed rpm	Heated oxygen sensor 1 heater
Above 3,600	OFF
Below 3,600	ON

On Board Diagnosis Logic

DTC No.	Trouble Diagnosis Name	DTC Detecting Condition	Possible Cause
P0031 0031	Heated oxygen sensor 1 circuit low voltage	Current in heated oxygen sensor 1 heater circuit is not within normal operating range (An excessively low voltage from theheated oxygen sensor 1 is sent to ECM.)	Harness or connectors (The heated oxygen sensor 1 heater circuit is open or shorted.) Heated oxygen sensor 1 heater
P0032 0032	Heated oxygen sensor 1 circuit high voltage	Current in heated oxygen sensor 1 heater circuit is not within normal operating range (An excessively high voltage from theheated oxygen sensor 1 is sent to ECM.)	Harness or connectors (The heated oxygen sensor 1 heater circuit is shorted.) Heated oxygen sensor 1 heater

DTC Confirmation Procedure

NOTE:

If DTC Confirmation Procedure has been previously conducted, always turn ignition switch OFF and wait at least 10 seconds before conducting the next test.

TESTING CONDITION:

Before performing the following procedure, confirm that battery voltage is between 10.5 V and 16 V.

With CONSULT-II

1. Start engine and warm it up to normal operating temperature.
2. Turn ignition switch OFF and wait 10 seconds.

DTC P0031, P0032 Heated Oxygen Sensor Heater Control Circuit - FR (Cont'd)

3. Turn ignition switch ON and select "DATA MONITOR" mode with CONSULT-II.
4. Start engine and let it in idle for about 6 seconds.
5. If DTC is detected, go to EC-280, "Diagnostic Procedure".

Wiring Diagram EC/Oxygen Sensor - FR

DTC P0031, P0032 Heated Oxygen Sensor Heater Control Circuit - FR (Cont'd)

Specification data are reference values and are measured between each terminal and ground.
Pulse signal is measured by CONSULT-II.

CAUTION:

Do not use ECM ground terminals when measuring input/output voltage. Doing so may result in damage to the ECM's transistor. Use a ground other than ECM terminals, such as the ground.

Terminal No.	Wire Color	Item	Condition	Data (DC Voltage)
24	G	Heated oxygen sensor 1 heater	[Engine is running] Warm-up condition. Engine speed is below 3,600 rpm.	Approximately 7.0 V
			[Engine is running] Warm-up condition. Engine speed is above 2,000 rpm.	BATTERY VOLTAGE (11 - 14 V)

: Average voltage for pulse signal (Actual pulse signal can be confirmed by oscilloscope.)

Diagnostic Procedure

1. CHECK HEATED OXYGEN SENSOR 1 (FR) POWER SUPPLY CIRCUIT

1. Turn ignition switch OFF.
2. Disconnect heated oxygen sensor 1 harness connector.
3. Turn ignition switch ON.

4. Check voltage between heated oxygen sensor 1 (FR) terminal 4 and ground with CONSULT-II or tester.
   Voltage: Battery voltage

<u>OK or NG</u>

OK >> GO TO 3.

NG >> GO TO 2.

2. DETECT MALFUNCTIONING PART

Check the following.

Harness connectors S38

Fuse block (J/B) connector E103

10A fuse

Harness for open or short between heated oxygen sensor 1 and fuse

>> Repair open circuit or short to ground or short to power in harness or connectors.

DTC P0031, P0032 Heated Oxygen Sensor Heater Control Circuit - FR (Cont'd)

3. CHECK HEATED OXYGEN SENSOR 1 (FR) OUTPUT SIGNAL CIRCUIT FOR OPEN AND SHORT

1. Turn ignition switch OFF.
2. Disconnect ECM harness connector.
3. Check harness continuity between ECM terminal 35 and heated oxygen sensor 1 terminal 2.

   Refer to Wiring Diagram.

   Continuity should exist.
4. Also check harness for short to ground and short to power.

OK or NG

OK >> GO TO 4.

NG >> Repair open circuit or short to ground or short to power in harness or connectors.

4. CHECK HEATED OXYGEN SENSOR 1 HEATER

Refer to EC-281, "Component Inspection".

OK or NG

OK >> GO TO 5.

NG >> Replace heated oxygen sensor 1.

5. CHECK INTERMITTENT INCIDENT

Refer to EC-74, "TROUBLE DIAGNOSIS FOR INTERMITTENT INCIDENT".

>> INSPECTION END

Component Inspection

HEATED OXYGEN SENSOR 1 HEATER

1. Check resistance between HO2S1 terminals as follows.

Terminal No.	Resistance
3 and 4	2.3 - 4.3 at normal temperature
3 and 1, 2	(Continuity should not exist)
4 and 1, 2	

2. If NG, replace heated oxygen sensor 1.

CAUTION:

Discard any heated oxygen sensor which has been dropped from a height of more than 0.5 m (19.7 in) onto a hard surface such as a concrete floor; use a new one.

Before installing new oxygen sensor, clean exhaust system threads using oxygen sensor thread cleaner and approved anti-seize lubricant.

Removal and Installation

HEATED OXYGEN SENSOR 1

Refer to "OUTER COMPONENT PARTS" (QG16: EM-13).

DTC P0037, P0038 Heated Oxygen Sensor Heater Control Circuit - RR

System Description

DESCRIPTION

Sensor	Input Signal to ECM	ECM Function	Actuator
Camshaft position sensor (PHASE)	Engine speed	Heated oxygen sensor 2 heater control	Heated oxygen sensor 2 heater
Crankshaft position sensor (POS)			
Engine coolant temperature sensor	Engine coolant temperature		

The ECM performs ON/OFF duty control of the heated oxygen sensor 2 heater corresponding to the engine speed and engine coolant temperature. The duty percent varies with engine coolant temperature when engine is started.

Operation

Engine speed rpm	Heated oxygen sensor 2 heater
Above 3,600	OFF
Below 3,600	ON

On Board Diagnosis Logic

DTC No.	Trouble Diagnosis Name	DTC Detecting Condition	Possible Cause
P00371 0037	Heated oxygen sensor 2 circuit low voltage	Current in heated oxygen sensor 2 heater circuit is not within normal operating range (An excessively low voltage from the heated oxygen sensor 1 is sent to ECM.)	Harness or connectors (The heated oxygen sensor 1 heater circuit is open or shorted.) Heated oxygen sensor 1 heater
P0038 0038	Heated oxygen sensor 2 circuit high voltage	Current in heated oxygen sensor 2 heater circuit is not within normal operating range (An excessively high voltage from the heated oxygen sensor 1 is sent to ECM.)	Harness or connectors (The heated oxygen sensor 1 heater circuit is shorted.) Heated oxygen sensor 1 heater

DTC Confirmation Procedure

NOTE:

If DTC Confirmation Procedure has been previously conducted, always turn ignition switch OFF and wait at least 10 seconds before conducting the next test.

TESTING CONDITION:

Before performing the following procedure, confirm that battery voltage is between 10.5 V and 16 V.

With CONSULT-II

1. Turn ignition switch ON and select “DATA MONITOR” mode with CONSULT-II.
2. Start engine.
3. Drive vehicle for 2 minutes at least 70 km/h of driving speed.
4. Stop the vehicle and let the engine idle for over 6 seconds.
5. If DTC is detected, go to EC-284, “Diagnostic Procedure”.

Wiring Diagram EC/Oxygen Sensor - RR

DTC P0037, P0038 Heated Oxygen Sensor Heater Control Circuit - RR (Cont'd)

Specification data are reference values and are measured between each terminal and ground.
Pulse signal is measured by CONSULT-II.

CAUTION:

Do not use ECM ground terminals when measuring input/output voltage. Doing so may result in damage to the ECM's transistor. Use a ground other than ECM terminals, such as the ground.

Terminal No.	Wire Color	Item	Condition	Data (DC Voltage)
3	G	Heated oxygen sensor 2 heater	[Engine is running] Engine speed is below 3,600 rpm. After driving for 2 minutes with over 70 km/h of driving speed	0 - 1.0 V
			[Ignition switch "ON"] Engine stopped. [Engine is running] Warm-up condition. Engine speed is above 2,000 rpm.	BATTERY VOLTAGE (11 - 14 V)

: Average voltage for pulse signal (Actual pulse signal can be confirmed by oscilloscope.)

Diagnostic Procedure

1. CHECK HEATED OXYGEN SENSOR 2 (RR) POWER SUPPLY CIRCUIT

1. Turn ignition switch OFF.
2. Disconnect heated oxygen sensor 2 harness connector.
3. Turn ignition switch ON.

4. Check voltage between heated oxygen sensor 2 (RR) terminal 4 and ground with CONSULT-II or tester.
   Voltage: Battery voltage

OK or NG

OK >> GO TO 3.
NG >> GO TO 2.

2. DETECT MALFUNCTIONING PART

Check the following.

Harness connectors S38
Fuse block (J/B) connector E103
10A fuse
Harness for open or short between heated oxygen sensor 2 and fuse

>> Repair open circuit or short to ground or short to power in harness or connectors.

DTC P0037, P0038 Heated Oxygen Sensor Heater Control Circuit - RR (Cont'd)

3. CHECK HEATED OXYGEN SENSOR 2 (RR) OUTPUT SIGNAL CIRCUIT FOR OPEN AND SHORT

1. Turn ignition switch OFF.
2. Disconnect ECM harness connector.
3. Check harness continuity between ECM terminal 16 and heated oxygen sensor 2 terminal 2.

   Refer to Wiring Diagram.

   Continuity should exist.
4. Also check harness for short to ground and short to power.

OK or NG

OK >> GO TO 4.

NG >> Repair open circuit or short to ground or short to power in harness or connectors.

4. CHECK HEATED OXYGEN SENSOR 2 HEATER

Refer to EC-285, "Component Inspection".

OK or NG

OK >> GO TO 5.

NG >> Replace heated oxygen sensor 2.

5. CHECK INTERMITTENT INCIDENT

Refer to EC-74, "TROUBLE DIAGNOSIS FOR INTERMITTENT INCIDENT".

>> INSPECTION END

Component Inspection

HEATED OXYGEN SENSOR 2 HEATER

1. Check resistance between heated oxygen sensor 2 terminals as follows.

Terminal No.	Resistance
3 and 4	2.3 - 4.3 at normal temperature
3 and 1, 2	(Continuity should not exist)
4 and 1, 2	

2. If NG, replace heated oxygen sensor 1.

CAUTION:

Discard any heated oxygen sensor which has been dropped from a height of more than 0.5 m (19.7 in) onto a hard surface such as a concrete floor; use a new one.

Before installing new oxygen sensor, clean exhaust system threads using oxygen sensor thread cleaner and approved anti-seize lubricant.

Electrical Load Signal

CONSULT-II REFERENCE VALUE IN DATA MONITOR MODE

Specification data are reference values.

Monitor Item	Condition		Specification
LOAD SIGNAL	Ignition switch: ON	Rear window defogger switch is ON	ON
		Rear window defogger switch is OFF	OFF
HEATER FAN SW	Engine: After warming up, idle the engine	Heater fan is operating.	ON
		Heater fan is not operating.	OFF

Wiring Diagram EC/Blower Fan Signal

Electrical Load Signal (Cont'd)

Specification data are reference values and are measured between each terminal and ground.

CAUTION:

Do not use ECM ground terminals when measuring input/output voltage. Doing so may result in damage to the ECM's transistor. Use a ground other than ECM terminals, such as the ground.

Terminal No.	Wire Color	Item	Condition	Data (DC Voltage)
84	R/W	Electrical load signal (Headlamp signal)	[Ignition switch ON] Lighting switch is 2ND position	BATTERY VOLTAGE (11 - 14 V)
			[Ignition switch "ON"] Lighting switch is OFF	Approximately 0 V
93	L/R	Electrical load signal (Rear window defogger signal)	[Ignition switch ON] Rear window defogger switch is ON	BATTERY VOLTAGE (11 - 14 V)
			[Ignition switch ON] Rear window defogger switch is OFF	Approximately 0 V
96	LG/B	Heater fan switch signal	[Ignition switch ON] Heater fan control switch is ON	Approximately 0 V
			[Ignition switch ON] Heater fan control switch is OFF	BATTERY VOLTAGE (11 - 14 V)

Diagnostic Procedure

1. INSPECTION START

Do you have CONSULT-II?

Yes or No

Yes >> GO TO 2.

No >> GO TO 5.

2. CHECK LOAD SIGNAL CIRCUIT OVERALL FUNCTION-I

With CONSULT-II

1. Turn ignition switch ON.
2. Check "LOAD SIGNAL" in "DATA MONITOR" mode with CONSULT-II under the following conditions.

Condition	LOAD SIGNAL
Lighting switch ON at 2nd position	ON
Lighting switch OFF	OFF

OK or NG

OK >> GO TO 3.

NG >> GO TO 8.

Electrical Load Signal (Cont'd)

3. CHECK LOAD SIGNAL CIRCUIT OVERALL FUNCTION-II

With CONSULT-II

1. Turn ignition switch ON.
2. Check "LOAD SIGNAL" in "DATA MONITOR" mode with CONSULT-II under the following conditions.

Condition	LOAD SIGNAL
Rear window defogger switch ON	ON
Rear window defogger switch OFF	OFF

OK or NG

OK >> GO TO 4.

NG >> GO TO 12.

4. CHECK HEATER FAN SIGNAL CIRCUIT OVERALL FUNCTION

With CONSULT-II

1. Turn ignition switch ON.
2. Check "LOAD SIGNAL" in "DATA MONITOR" mode with CONSULT-II under the following conditions.

Condition	LOAD SIGNAL
Heater fan control switch ON	ON
Heater fan control switch OFF	OFF

OK or NG

OK >> INSPECTION END

NG >> GO TO 16.

5. CHECK LOAD SIGNAL CIRCUIT OVERALL FUNCTION-I

Without CONSULT-II

1. Turn ignition switch ON.
2. Check voltage between ECM terminal 84 and ground under the following conditions.

Condition	LOAD SIGNAL
Lighting switch ON at 2nd position	BATTERY VOLTAGE
Lighting switch OFF	0 V

OK or NG

OK >> GO TO 6.

NG >> GO TO 8.

Electrical Load Signal (Cont'd)

6. CHECK LOAD SIGNAL CIRCUIT OVERALL FUNCTION-II

Without CONSULT-II

1. Turn ignition switch ON.
2. Check voltage between ECM terminal 93 and ground under the following conditions.

Condition	LOAD SIGNAL
Rear window defogger switch ON	BATTERY VOLTAGE
Rear window defogger switch OFF	0 V

OK or NG

OK >> GO TO 7.

NG >> GO TO 12.

7. CHECK HEATER FAN CONTROL CIRCUIT OVERALL FUNCTION

Without CONSULT-II

1. Turn ignition switch ON.
2. Check voltage between ECM terminal 96 and ground under the following conditions.

Condition	LOAD SIGNAL
Heater fan control switch ON	BATTERY VOLTAGE
Heater fan control switch OFF	0 V

OK or NG

OK >> GO TO 6.

NG >> GO TO 8.

8. CHECK HEADLAMP FUNCTION

1. Start engine.
2. Turn the lighting switch ON at 2nd position.
3. Check that headlamps are illuminated.

OK or NG

OK >> GO TO 9.

NG >> Refer to "HEADLAMP" (EL-37).

9. CHECK HEADLAMP INPUT SIGNAL CIRCUIT FOR OPEN OR SHORT

1. Stop engine.
2. Disconnect ECM harness connector.
3. Disconnect lighting switch harness connectors.
4. Check harness continuity between ECM terminal 84 and lighting switch terminal 12.

   Refer to Wiring Diagram.

   Continuity should exist
5. Also check harness for short to ground and short to power.

OK or NG

OK >> GO TO 11.

NG >> GO TO 10.

Electrical Load Signal (Cont'd)

10. DETECT MALFUNCTIONING PART

Check the following.

- Harness connectors M61, S101.
- Harness for open and short between ECM and lighting switch.

>> Repair open circuit or short to ground or short to power in harness or connectors.

11. CHECK INTERMITTENT INCIDENT

Perform EC-75, "TROUBLE DIAGNOSIS FOR INTERMITTENT INCIDENT".

>> **INSPECTION END**

12. CHECK REAR WINDOW DEFOGGER FUNCTION

1. Start engine.
2. Turn ON the rear window defogger switch.
3. Check the rear windshield. Is the rear windshield heated up?

Yes or No

Yes >> GO TO 13.

No >> Refer to "COMBINATION METER - TROUBLE DIAGNOSIS" (EL-69).

13. CHECK REAR WINDOW DEFOGGER INPUT SIGNAL CIRCUIT FOR OPEN OR SHORT

1. Stop engine.
2. Disconnect ECM harness connector.
3. Disconnect rear window defogger relay.
4. Check harness continuity between ECM terminal 93 and rear window defogger relay terminal 5.

   Refer to Wiring Diagram.

   Continuity should exist.
5. Also check harness for short to ground and short to power.

OK or NG

OK >> GO TO 15.

NG >> GO TO 14.

14. DETECT MALFUNCTIONING PART

Check the following.

- Harness connectors B3, M15.
- Harness connectors M01, S101.
- Harness for open and short between ECM and harness rear window defogger relay.

>> Repair open circuit or short to ground or short to power in harness or connectors.

Electrical Load Signal (Cont'd)

15. CHECK INTERMITTENT INCIDENT

Perform EC-74, "TROUBLE DIAGNOSIS FOR INTERMITTENT INCIDENT".

>> INSPECTION END

16. CHECK HEATER FAN CONTROL FUNCTION

1. Start engine.
2. Turn ON the fan control switch.
3. Check the blower fan motor. Does the blower fan motor activate?

Yes or No

Yes >> GO TO 17.

No >> Refer to "Blower Fan Motor System" (AC-66).

17. CHECK HEATER FAN SIGNAL CIRCUIT FOR OPEN OR SHORT

1. Stop engine.
2. Disconnect ECM harness connector.
3. Disconnect heater control panel harness connector.
4. Check harness continuity between following.

   ECM terminal 96 and heater control panel terminal 29 (without auto A/C).

   ECM terminal 96 and heater control panel terminal 2 (with auto A/C).

   Refer to wiring diagram.

   Continuity should exist.
5. Also check harness for short to ground and short to power.

OK or NG

OK >> GO TO 19.

NG >> GO TO 18.

18. DETECT MALFUNCTIONING PART

Check the following.

Harness connectors M64, S106.

Harness for open and short between ECM and heater control panel.

>> Repair open circuit or short to ground or short to power in harness or connectors.

19. CHECK INTERMITTENT INCIDENT

Perform EC-74, "TROUBLE DIAGNOSIS FOR INTERMITTENT INCIDENT".

>> INSPECTION END

DTC P1805 Brake Switch

Description

Brake switch signal is applied to the ECM through the stop lamp switch when the brake pedal is depressed. This signal is used mainly to decrease the engine speed when the vehicle is driving.

CONSULT-II REFERENCE VALUE IN DATA MONITOR MODE

Specification data are reference values.

Monitor Item	Condition		Specification
BRAKE SW	Ignition switch: ON	Brake pedal: Fully released	OFF
		Brake pedal: Slightly depressed	ON

On Board Diagnosis Logic

This self-diagnosis has the one trip detection logic.

DTC No.	Trouble Diagnosis Name	DTC Detecting Condition	Possible Cause
P1805 1805	Brake switch	A brake switch signal is not sent to ECM for an extremely long time while the vehicle is driving.	Harness or connectors (Stop lamp switch circuit is open or shorted.) Stop lamp switch

Fail-Safe Mode

When the malfunction is detected, the ECM enters fail-safe mode and the MIL lights up.

Engine operating condition in fail-safe mode	
ECM controls the electric throttle control actuator by regulating the throttle opening to a small range. Therefore, acceleration will be poor.	
Vehicle condition	Driving condition
When engine is idling	Normal
When accelerating	Poor acceleration

DTC Confirmation Procedure

With CONSULT-II

1. Turn ignition switch ON.
2. Fully depress the brake pedal for at least 5 seconds.
3. Erase the DTC with CONSULT-II.
4. Select “DATA MONITOR” mode with CONSULT-II.
5. If DTC is detected, go to EC-296, “Diagnostic Procedure”.

Without CONSULT-II

1. Turn ignition switch ON.
2. Fully depress the brake pedal at least 5 seconds.
3. Erase the Diagnostic Test Mode II (Self-diagnostic results) memory.
4. Turn ignition switch OFF, wait at least 10 seconds and then turn ON.
5. Perform Diagnostic Test Mode II (Self-diagnostic results) with ECM.
6. If DTC is detected, go to EC-296, “Diagnostic Procedure”.

Wiring Diagram EC/Stop Lamp

DTC P1805 Brake Switch (Cont'd)

Specification data are reference values and are measured between each terminal and ground.

CAUTION:

Do not use ECM ground terminals when measuring input/output voltage. Doing so may result in damage to the ECM's transistor. Use a ground other than ECM terminals, such as the ground.

Terminal No.	Wire Color	Item	Condition	Data (DC Voltage)
101	R/G	Stop lamp switch	[Ignition switch OFF] Brake pedal fully released	Approximately 0 V
			[Ignition switch OFF] Brake pedal depressed	BATTERY VOLTAGE (11 - 14 V)

Diagnostic Procedure

1. CHECK STOP LAMP SWITCH CIRCUIT

1. Turn ignition switch OFF.
2. Check the stop lamp when depressing and releasing the brake pedal.

Brake pedal	Stop lamp
Fully released	Not illuminated
Depressed	Illuminated

OK or NG

OK >> GO TO 4.

NG >> GO TO 2.

DTC P1805 Brake Switch (Cont'd)

2. CHECK STOP LAMP SWITCH POWER SUPPLY CIRCUIT

1. Disconnect stop lamp switch harness connector.

2. Check voltage between stop lamp switch terminal 1 and ground with CONSULT-II or tester.

   Voltage: Battery voltage

OK or NG

OK >> GO TO 4.

NG >> GO TO 3.

DTC P1805 Brake Switch (Cont'd)

3. DETECT MALFUNCTIONING PART

Check the following.

10A fuse

Fuse block (J/B) connector M7

Harness for open and short between stop lamp switch and battery.

>> Repair open circuit or short to ground or short to power in harness or connectors.

4. CHECK STOP LAMP SWITCH INPUT SIGNAL CIRCUIT FOR OPEN AND SHORT

1. Disconnect ECM harness connector.
2. Disconnect stop lamp switch harness connector.
3. Check harness continuity between ECM terminal 101 and stop lamp switch terminal 2.

   Refer to Wiring Diagram.

   Continuity should exist.
4. Also check harness for short to ground and short to power.

OK or NG

OK >> GO TO 5.

NG >> Repair open circuit or short to ground or short to power in harness or connectors.

5. CHECK STOP LAMP SWITCH

Refer to EC-299, "Component Inspection".

OK or NG

OK >> GO TO 6.

NG >> Replace stop lamp switch.

6. CHECK INTERMITTENT INCIDENT

Refer to EC-74, "TROUBLE DIAGNOSIS FOR INTERMITTENT INCIDENT".

>> INSPECTION END

DTC P1805 Brake Switch (Cont'd)

Component Inspection

STOP LAMP SWITCH

M/T Models

1. Disconnect stop lamp switch harness connector.

2. Check continuity between stop lamp switch terminals 1 and 2 under the following conditions.

Conditions	Continuity
Brake pedal fully released	Should not exist
Brake pedal depressed	Should exist

If NG, adjust brake pedal installation, refer to "BRAKE PEDAL" (BR-5), and perform step 2 again.

A/T Models

1. Disconnect stop lamp switch harness connector.

2. Check continuity between stop lamp switch terminals 1 and 2 under the following conditions.

Conditions	Continuity
Brake pedal fully released	Should not exist
Brake pedal depressed	Should exist

If NG, adjust brake pedal installation, refer to "BRAKE PEDAL" (BR-5), and perform step 2 again.

Park/Neutral Position (PNP) Switch

Component Description

When the gear position is P (A/T models only) or N, park/neutral position (PNP) switch is ON.
ECM detects the position because the continuity of the line (the ON signal) exists.

CONSULT-II REFERENCE VALUE IN DATA MONITOR MODE

Specification data are reference values.

Monitor Item	Condition		Specification
P/N POSI SW	Ignition switch: ON	Shift lever:	ON
		P or N (A/T models)	OFF
		Neutral (M/T models)	
		Shift lever: Except above	

Wiring Diagram EC/Park/Neutral Position Signal

Park/Neutral Position (PNP) Switch (Cont'd)

Specification data are reference values and are measured between each terminal and ground.

CAUTION:

Do not use ECM ground terminals when measuring input/output voltage. Doing so may result in damage to the ECM's transistor. Use a ground other than ECM terminals, such as the ground.

Terminal No.	Wire Color	Item	Condition	Data (DC Voltage)
102	G/OR	Neutral position (PNP) Switch	[Ignition switch ON] Shift lever position is P or N (A/T models) Neutral (M/T models).	A/T models: BATTERY VOLTAGE (11 - 14 V) M/T models: BATTERY VOLTAGE (11 - 14 V)
			[Ignition switch "ON"] Except the above gear position	Approximately 0 V

Diagnostic Procedure

1. CHECK OVERALL FUNCTION

With CONSULT-II

1. Turn ignition switch ON.
2. Select "P/N POSI SW" in "DATA MONITOR" mode with CONSULT-II.
3. Check the "P/N POSI SW" signal under the following conditions.

Selector lever position	P/N POSI SW signal
P and N position (A/T models) Neutral position (M/T models)	ON
Except the above position	OFF

Without CONSULT-II

1. Turn ignition switch ON.
2. Check voltage between ECM terminal 102 and ground under the following conditions.

Selector lever position	P/N POSI SW signal
P and N position (A/T models) Neutral position (M/T models)	Approximately 0 V
Except the above position	A/T models: Battery voltage M/T models: Battery voltage

OK or NG

OK >> INSPECTION END

NG >> GO TO 2.

Park/Neutral Position (PNP) Switch (Cont'd)

2. CHECK PARK/NEUTRAL POSITION (PNP) SWITCH GROUND CIRCUIT FOR OPEN AND SHORT

1. Turn ignition switch OFF.
2. Disconnect neutral position switch harness connector.
3. Check harness continuity between Park/Neutral position switch terminal 2 and body ground. Refer to Wiring Diagram.

   Continuity should exist.
4. Also check harness for short to power.

OK or NG

OK >> GO TO 4.

NG >> GO TO 3.

3. DETECT MALFUNCTIONING PART

Check the following.

Harness connectors M20, E104

Harness for open or short between Park/Neutral position (PNP) switch and ground

>> Repair open circuit or short to power in harness or connectors.

4. CHECK PARK/NEUTRAL POSITION (PNP) SWITCH INPUT SIGNAL CIRCUIT FOR OPEN AND SHORT

1. Disconnect ECM harness connector.
2. Check harness continuity between ECM terminal 102 and Park/Neutral position (PNP) switch terminal 1.

   Refer to Wiring Diagram.

   Continuity should exist.
3. Also check harness for short to ground and short to power.

OK or NG

OK >> GO TO 5.

NG >> Repair open circuit or short to ground or short to power in harness or connectors.

5. CHECK PARK/NEUTRAL POSITION (PNP) SWITCH

Refer to "INHIBITOR SWITCH" (AT-79) or "POSITION SWITCH" (MT-6).

OK or NG

OK >> GO TO 6.

NG >> Replace PNP switch.

6. CHECK INTERMITTENT INCIDENT

Refer to EC-74, "TROUBLE DIAGNOSIS FOR INTERMITTENT INCIDENT".

>> INSPECTION END

Refrigerant Pressure Sensor

Component Description

The refrigerant pressure sensor is installed at the receiver tank of the air conditioner system. The sensor uses an electrostatic volume pressure transducer to convert refrigerant pressure to voltage. The voltage signal is sent to ECM, and ECM controls cooling fan system.

Wiring Diagram EC/Refrigerant Pressure Sensor

Refrigerant Pressure Sensor (Cont'd)

Specification data are reference values and are measured between each terminal and ground.

CAUTION:

Do not use ECM ground terminals when measuring input/output voltage. Doing so may result in damage to the ECM's transistor. Use a ground other than ECM terminals, such as the ground.

Terminal No.	Wire Color	Item	Condition	Data (DC Voltage)
46	R	Sensor power supply (Refrigerant pressure sensor)	[Ignition switch ON]	Approximately 5 V
57	B	Sensors ground (Power steering pressure sensor/Refrigerant pressure sensor)	[Engine is running] Warm-up condition Idle speed	Approximately 0 V
69	R/L	Refrigerant pressure sensor	[Engine is running] Warm-up condition Both A/C switch and blower switch are ON. (Compressor operates.)	1.0 - 4.0 V

Diagnostic Procedure

1. CHECK REFRIGERANT PRESSURE SENSOR OVERALL FUNCTION

1. Start engine and warm it up to normal operating temperature.
2. Turn A/C switch and blower switch ON.
3. Check voltage between ECM terminal 69 and ground with CONSULT-II or tester.

   Voltage: 1.0 - 4.0 V

OK or NG

OK >> INSPECTION END

NG >> GO TO 2.

Refrigerant Pressure Sensor (Cont'd)

2. CHECK REFRIGERANT PRESSURE SENSOR POWER SUPPLY CIRCUIT

1. Turn A/C switch and blower switch OFF.
2. Stop engine.
3. Disconnect refrigerant pressure sensor harness connector.
4. Turn ignition switch ON.

5. Check voltage between refrigerant pressure sensor terminal 1 and ground with CONSULT-II or tester.

   Voltage: Approximately 5 V

OK or NG

OK >> GO TO 4.

NG >> GO TO 3.

3. DETECT MALFUNCTIONING PART

Check the following.

Harness connectors E42, S41

Harness for open or short between refrigerant pressure sensor and ECM

>> Repair open circuit or short to ground or short to power in harness or connectors

4. CHECK REFRIGERANT PRESSURE SENSOR GROUND CIRCUIT FOR OPEN AND SHORT

1. Turn ignition switch OFF.
2. Disconnect ECM harness connector.
3. Check harness continuity between ECM terminal 57 and refrigerant pressure sensor terminal 1.

   Refer to Wiring Diagram.

   Continuity should exist.
4. Also check harness for short to ground and short to power.

OK or NG

OK >> GO TO 6.

NG >> GO TO 5.

5. DETECT MALFUNCTIONING PART

Check the following.

Harness connectors E42, S41

Harness for open or short between refrigerant pressure sensor and ECM

>> Repair open circuit or short to ground or short to power in harness or connectors

Refrigerant Pressure Sensor (Cont'd)

6. CHECK REFRIGERANT PRESSURE SENSOR INPUT SIGNAL CIRCUIT FOR OPEN AND SHORT

1. Check harness continuity between ECM terminal 69 and refrigerant pressure sensor terminal 2.

   Refer to Wiring Diagram.

   Continuity should exist.

2. Also check harness for short to ground and short to power.

OK or NG

OK >> GO TO 8.

NG >> GO TO 7.

7. DETECT MALFUNCTIONING PART

Check the following.

Harness connectors E42, S41

Harness for open or short between refrigerant pressure sensor and ECM

>> Repair open circuit or short to ground or short to power in harness or connectors

8. CHECK INTERMITTENT INCIDENT

Refer to EC-74, "TROUBLE DIAGNOSIS FOR INTERMITTENT INCIDENT".

OK or NG

OK >> Replace refrigerant pressure sensor.

NG >> Repair or replace.

DTC P0605 Engine Control Module

Component Description

The ECM consists of a microcomputer and connectors for signal input and output and for power supply. The ECM controls the engine.

On Board Diagnosis Logic

This self-diagnosis has one or tow trip detection logic.

DTC No.	Trouble Diagnosis Name	DTC Detecting Condition		Possible Cause
P0605 0605	Engine control module (ECM)	A	ECM calculation function is malfunctioning.	ECM
		B	ECM EEP-ROM system is malfunctioning.	
		C	ECM self shut-off function is malfunctioning.	

Fail-Safe Mode

ECM enters fail-safe mode when malfunction A is detected.

Detected Items	Engine Operating Condition In Fail-Safe Mode
Malfunction A	ECM stops the electric throttle control actuator control, throttle valve is maintained at a fixed opening (approx. 6.05 degrees) by the return spring.

DTC Confirmation Procedure

Perform PROCEDURE FOR MALFUNCTION A first. If the DTC cannot be confirmed, perform PROCEDURE FOR MALFUNCTION B. If there is no problem on PROCEDURE FOR MALFUNCTION B, perform PROCEDURE FOR MALFUNCTION C.

NOTE:

If DTC Confirmation Procedure has been previously conducted, always turn ignition switch OFF and wait at least 10 seconds before conducting the next test.

PROCEDURE FOR MALFUNCTION A

With CONSULT-II

1. Turn ignition switch ON.
2. Select “DATA MONITOR” mode with CONSULT-II.
3. If DTC is detected, go to EC-311, “Diagnostic Procedure”.

DTC P0605 Engine Control Module (Cont'd)

Without CONSULT-II

1. Turn ignition switch ON.
2. Turn ignition switch OFF, wait at least 10 seconds and then turn ON.
3. Perform Diagnostic Test Mode II (Self-diagnostic results) with ECM.
4. If DTC is detected, go to EC-311, "Diagnostic Procedure".

PROCEDURE FOR MALFUNCTION B

With CONSULT-II

1. Turn ignition switch ON and wait at least 1 second.
2. Select "DATA MONITOR" mode with CONSULT-II.
3. Turn ignition switch OFF, wait at least 10 seconds, and then turn ON.
4. If DTC is detected, go to EC-311, "Diagnostic Procedure".

Without CONSULT-II

1. Turn ignition switch ON and wait at least 1 second.
2. Turn ignition switch OFF, wait at least 10 seconds and then turn ON.
3. Perform Diagnostic Test Mode II (Self-diagnostic results) with ECM.
4. If DTC is detected, go to EC-311, "Diagnostic Procedure".

PROCEDURE FOR MALFUNCTION C

With CONSULT-II

1. Turn ignition switch ON and wait at least 1 second.
2. Select "DATA MONITOR" mode with CONSULT-II.
3. Turn ignition switch OFF, wait at least 10 seconds, and then turn ON.
4. Repeat step 3 for 32 times.
5. If DTC is detected, go to EC-311, "Diagnostic Procedure".

Without CONSULT-II

1. Turn ignition switch ON and wait at least 1 second.
2. Turn ignition switch OFF wait at least 10 seconds and then turn ON.
3. Repeat step 2 for 32 times.
4. Perform Diagnostic Test Mode II (Self-diagnostic results) with ECM.
5. If DTC is detected, go to EC-311, "Diagnostic Procedure".

DTC P0605 Engine Control Module (Cont'd)

Diagnostic Procedure

1. INSPECTION START

With CONSULT-II

1. Turn ignition switch ON.
2. Select "SELF DIAG RESULTS" mode with CONSULT-II.
3. Touch "ERASE".
4. Perform EC-309, "DTC Confirmation Procedure".
5. Is the DTC P0605 displayed again?

Without CONSULT-II

1. Turn ignition switch ON.
2. Erase the Diagnostic Test Mode II (Self-diagnostic results) memory.
3. Perform EC-309, "DTC Confirmation Procedure".
4. Is the DTC P0605 displayed again?

Yes or No

Yes >> GO TO 2.

No >> INSPECTION END

2. REPLACE ECM

1. Replace ECM.
2. Perform EC-23, "Accelerator Pedal Released Position Learning".
3. Perform EC-23, "Throttle Valve Closed Position Learning".
4. Perform EC-24, "Idle Air Volume Learning".

>> INSPECTION END

Evaporative Emission System

Description

SYSTEM DESCRIPTION

The evaporative emission system is used to reduce hydrocarbons emitted into the atmosphere from the fuel system. This reduction of hydrocarbons is accomplished by activated charcoals in the EVAP canister.

The fuel vapor in the sealed fuel tank is led into the EVAP canister which contains activated carbon and the vapor is stored there when the engine is not operating or when refueling to the fuel tank.

The vapor in the EVAP canister is purged by the air through the purge line to the intake manifold when the engine is operating. EVAP canister purge volume control solenoid valve is controlled by ECM. When the engine operates, the flow rate of vapor controlled by EVAP canister purge volume control solenoid valve is proportionally regulated as the air flow increases.

EVAP canister purge volume control solenoid valve also shuts off the vapor purge line during decelerating and idling.

Evaporative Emission System (Cont'd)

Vacuum Lines in Evaporative Emission System

Evaporative Emission System (Cont'd)

Component Inspection

EVAP CANISTER

1. Visually check EVAP canister for crack and damage.
2. Block port B with a finger. The port A doesn't have a vacuum air pressure even when applying the vacuum air pressure through port A with a hand pump.
3. Block port B with a finger. The hissing sound should be exist when opening port B with vacuum air pressure applied to port C.

FUEL CHECK VALVE

1. Blow air through connector on fuel tank side. A considerable resistance should be felt and a portion of air flow should be directed toward the EVAP canister side.
2. Blow air through connector on EVAP canister side. Air flow should be smoothly directed toward fuel tank side.
3. If fuel check valve is suspected of not properly functioning in steps 1 and 2 above, replace it.

FUEL TANK VACUUM RELIEF VALVE (BUILT INTO FUEL FILLER CAP)

1. Wipe clean valve housing.
2. Check valve opening pressure and vacuum.

   Pressure:

   15.3 - 20.0 kPa (0.153 - 0.200 bar, 0.156 - 0.204 kg/cm ^{2}, 2.22 - 2.90 psi)

   Vacuum:

   -6.0 to -3.3 kPa (-0.060 to -0.033 bar, -0.061 to -0.034 kg/cm ^{2}, -0.87 to -0.48 psi)
3. If out of specification, replace fuel filler cap as an assembly.

EVAP CANISTER PURGE VOLUME CONTROL SOLENOID VALVE

Refer to EC-316, "Component Inspection".

Positive Crankcase Ventilation

Description

SYSTEM DESCRIPTION

This system returns blow-by gas to the intake manifold.

The positive crankcase ventilation (PCV) valve is provided to conduct crankcase blow-by gas to the intake manifold. During partial throttle operation of the engine, the intake manifold sucks the blow-by gas through the PCV valve. Normally, the capacity of the valve is sufficient to handle any blow-by and a small amount of ventilating air. The ventilating air is then drawn from the air inlet tubes into the crankcase. In this process the air passes through the hose connecting air inlet tubes to rocker cover. Under full-throttle condition, the manifold vacuum is insufficient to draw the blow-by flow through the valve. The flow goes through the hose connection in the reverse direction.

On vehicles with an excessively high blow-by, the valve does not meet the requirement. This is because some of the flow will go through the hose connection to the air inlet tubes under all conditions.

Component Inspection

PCV (POSITIVE CRANKCASE VENTILATION) VALVE

With engine running at idle, remove PCV valve from rocker cover. A properly working valve makes a hissing noise as air passes through it. A strong vacuum should be felt immediately when a finger is placed over the valve inlet.

Positive Crankcase Ventilation (Cont'd)

PCV VALVE VENTILATION HOSE

1. Check hoses and hose connections for leaks.
2. Disconnect all hoses and clean with compressed air. If any hose cannot be freed of obstructions, replace.

Service Data and Specifications (SDS)

Fuel Pressure

Fuel pressure at idle	Approximately 350 kPa (3.5 bar, 3.57 kg/cm^2, 51 psi)

Idle Speed and Ignition Timing

			QG16DE
Target idle speed	A/T	No-load*1 (in P or N position)	700 ± 50 rpm
	M/T	No-load*1 (in Neutral position)	630 ± 50 rpm
Air conditioner: ON	A/T	In P or N position	850 rpm or more
	M/T	In Neutral position	800 rpm or more
Ignition timing	A/T	In P or N position	6 ± 2° BTDC
	M/T	In Neutral position	6 ± 2° BTDC

*1: Under the following conditions:
Air conditioner switch: OFF
Electric load: OFF (Lights, heater fan & rear window defogger)
Steering wheel: Kept in straight-ahead position

Mass Air Flow Sensor

Supply Voltage	Battery Voltage (11 - 14 V)
Output voltage at idle	Approximately 0.8 V*

* : Engine is warmed up to normal operating temperature and running under no-load.

Intake Air Temperature Sensor

Temperature °C (°F)	Resistance k
25 (77)	1.94 - 2.06
80 (176)	0.295 - 0.349

Engine Coolant Temperature Sensor

Temperature °C (°F)	Resistance k
20 (68)	2.1 - 2.9
50 (122)	0.68 - 1.00
90 (194)	0.236 - 0.260

Engine Coolant Temperature Sensor

Resistance [at 25°C (77°F)]	3.3 - 4.0

Crankshaft Position Sensor (POS)

Refer to EC-96, “Component Inspection”.

Camshaft Position Sensor (PHASE)

Refer to EC-89, “Component Inspection”.

Throttle Control Motor

Resistance [at 25° (77°F)]	Approximately 1 - 15

Service Data and Specifications (SDS) (Cont'd)

Injector

Resistance [at 20°C (68°F)]	13.5 - 17.5

Fuel Pump

Resistance [at 25°C (77°F)]	Approximately 1.0