BYD e6A AUTO Owner's Manual

BYD AUTO

Downloaded from www.Manualslib.com manuals search engine

Downloaded from www.Manualslib.com manuals search engine

Foreword

Thank you for choosing BYD e6A AUTO. For correct use and maintenance of your BYD e6A, please read this Manual carefully.

BYD e6A is the first electric vehicle in China to use ET-Power as its power source. It has a complicated high-voltage and low-voltage wiring structure. Please do NOT disassemble any high-voltage cables and high-voltage electronic components or add any electrical appliances, such as an anti-theft system, central locking system, electric window system, audio equipment, etc. without permission; any failure incurred thereof will not be covered by the "Warranty" of BYD.

Please follow the instructions where "Warning", "Caution" and "Tips" are indicated in this Manual to avoid the possibility of injury or damage.
The notice types and their purposes are as follows:

WARNING
Precautions to avoid severe personal injury or vehicle damage

NOTE
May possibly cause general personal injury or vehicle damage

Tips
Assist the owner use the vehicle more easily or skillfully

Safety Sign

The safety sign indicated above means "Do NOT do it" or "Do NOT let it happen".

The illustrations provided in this manual are for reference only.
BYD Auto Co., Ltd. reserves the right for revising technical characteristics and contents of this manual without prior notice.

Thank you for choosing BYD e6A AUTO. Your comments and opinions are valuable and are warmly welcomed.

Downloaded from www.Manualslib.com manuals search engine

WARNING

Precautions in Use of Pure Electric Vehicle (EV)

The high-voltage DC power generated by the vehicle power battery is very dangerous, it may cause electric shock or severe burns, serious injury or even death.

- ✓ To avoid personal injury, please do NOT touch the high-voltage cable (orange) or its connectors.
- ✓ Please follow the instructions indicated on warning labels attached to the high-voltage components.
- ✓ Please do NOT disassemble or replace any high-voltage components; such as motor controller located in the front motor compartment and high-voltage power distribution box in the trunk.
- ✓ In emergency, you may pull off the emergency service switch beneath the console and keep the plug properly. Do NOT touch the socket with your hand or an uninsulated object.

WARNING

In event of an accident

- ✓ Pull off the emergency service switch beneath the console, and tow the vehicle away from the road.
- ✓ To avoid personal injury, please do NOT touch any high-voltage cables, their connectors or any high-voltage component.
- ✓ Do NOT touch any exposed electric wires.
- ✓ If the battery pack on the vehicle chassis is damaged, and fluids leak or flow into other parts and components of the vehicle, please do not touch those fluids, because they might contain electrolyte from the battery pack. In event of battery leakage onto your skin or into your eyes, please flush immediately with plenty of water and consult a doctor.
- ✓ In event of a vehicle fire, please extinguish it using a special fire extinguisher for electric fires.

Downloaded from www.Manualslib.com manuals search engine

Table of Contents

Vehicle Performance Parameters of BYD e6A 1
Chapter 1 Operation of Instruments and Controllers 1-1
1.1 Combination instrument 1-1
1.2 Doors and Keys 1-15
1.3 Seats, seat belts and airbags 1-37
1.4 Steering Wheel and Rearview Mirror 1-53
1.5 Switch 1-59
1.6 Automobile Multimedia System 1-69
1.7 Air Conditioning System 1-79
1.8 Other Equipment 1-91
Chapter 2 BYD e6A Operation and Driving 2-1
2.1 e6A Operation Tips 2-1
2.2 Starting and Driving 2-11
Chapter 3 Emergency Treatment 3-1
Chapter 4 Vehicle Service & Maintenance 4-1
4.1 Anti-corrosion and Auto Exterior Maintenance 4-1
4.2 Maintenance Instructions 4-9

Downloaded from www.Manualslib.com manuals search engine

Chapter 5 Self-maintenance..... 5-1
5.1 Foreword 5-1
5.2 Motor and Chassis..... 5-7
5.3 Electric Appliance 5-17
5.4 Part Specifications 5-25

Downloaded from www.Manualslib.com manuals search engine

Vehicle Performance Parameters of BYD e6A

Product Model			e6A	e6B
Dimensions	Length	mm	4560	
	Width	mm	1822	
	Height	mm	1630/1723 (with antenna)	
Wheelbase		mm	2830	
Tread	Front	mm	1556	
	Rear	mm	1558	
Curb Weight		kg	2315	
Gross Weight		kg	2690	
Tire Size			225/65R17 or T145/90R17 (spare tire)	
Approach Angle		(degree)	21 (e6A)	20 (e6B)
Departure Angle		° (degree)	25 (e6A)	32 (e6B)
Front Overhang		mm	920	

Downloaded from www.Manualslib.com manuals search engine

Rear Overhang	mm	810
Seating Capacity		5
Maximum speed	km/h	≥ 140 ≥ 160
Motor Model		BYD-TYC120A
Type		Permanent magnetic synchronous motor
Maximum output power	kw	120
Maximum torque	Nm	450
Maximum Gradeability	%	≥ 30
100 km energy consumption *	kWh/100 km	≤ 15 (Constant speed metering method 60 km/h) ≤ 20.5 (Working condition method)

The actual power consumption depends on factors such as car and road conditions, driving patterns, etc.

Downloaded from www.Manualslib.com manuals search engine

Vehicle Identification of BYD e6A

The vehicle identification number (VIN) is marked on the beam of co-driver's seat. A flexible label is available on the lower left of front windshield. The VIN is also marked on the vehicle nameplate to facilitate the owner's registration.

VIN identification:

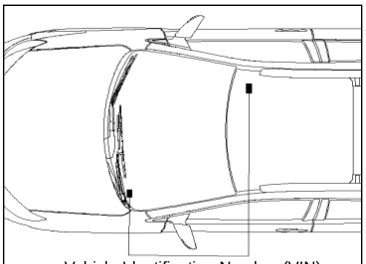

Vehicle Identification Number (VIN)

VIN plate -- Lower left corner of the front windshield		

Downloaded from www.Manualslib.com manuals search engine

Other signs and warnings:		
Front nameplate -- On the guard plate of right shock absorber inside the motor compartment		
Warning sign of cooling fan -- In the middle of front beam of front motor compartment		

Downloaded from www.Manualslib.com manuals search engine

Indication sign of motor coolant -- On the front beam of motor compartment, right opposite the coolant filler		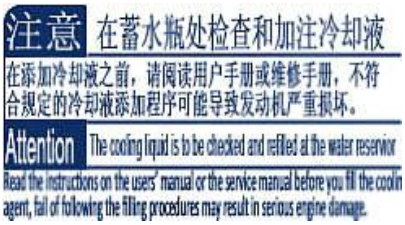
Warning sign of the air conditioning system -- On the sheet metal above the shock absorber on the rear right of front motor compartment and behind the air-conditioning pipe bracket		

Downloaded from www.Manualslib.com manuals search engine

Transparent warning label on the windshield -- On the upper right corner inside the front windshield		Safety Precautions This car is equipped with an airbag system • Do not place children on front seats in rear facing child seats; it is recommended that children below 12 years old be seated in rear seats for safety. • Please fasten your seat belt properly and keep an appropriate distance from the airbag. • Do NOT squeeze, pierce or disassemble the airbag without permission. • Do NOT repair the airbag without permission or use thermal energy or electric power not mentioned in the service manual. • Please refer to this Manual for other safety precautions.
SRS airbag label -- On the reverse of left sun visor		Precautions: Please read this Manual carefully before use. a. When warning lamps on the instrument panel light up, please drive the car to a BYD authorized service station for inspection. b. This car is equipped with SRS (airbag system) and seat belt pretensioning system. Please abide by the following precautions: c. SRS is an auxiliary device for seat belts, which is provided to ensure safety in event of an accident while driving. Please fasten your seat belt properly and maintain a correct posture! d. Do NOT touch any part relating to SRS without permission. e. Do NOT put any article above SRS or between SRS and the seat. f. If SRS warning lamp lights while driving, please drive the car to a BYD authorized service station for inspection in time. g. A regular inspection should be conducted to maintain the performance of SRS. The first inspection should be carried out on the 10th anniversary from the installation date, and afterwards a regular inspection should be conducted once every 5 years. h. Please read this Manual for details about SRS.

Downloaded from www.Manualslib.com manuals search engine

Indication sign of air filter for air-conditioning system -- Posted on the right cover of instrument panel		
Warning sign of service switch -- Inside the central storage box		

Downloaded from www.Manualslib.com manuals search engine

Anti-theft system label -- On the lower inner side of front door glass		
Tire pressure indication sign -R17 -- Below the lock ring of left front door		

Downloaded from www.Manualslib.com manuals search engine

Warning sign for auxiliary passenger airbag -- On the right side of the instrument panel		
Fuse label -- Inside the lower guard plate of the left A pillar		

Downloaded from www.Manualslib.com manuals search engine

Warning sign for power battery -- On the sheet metal underneath the rear seats		
Indicator sign for child protection device -- Below the rear door striker		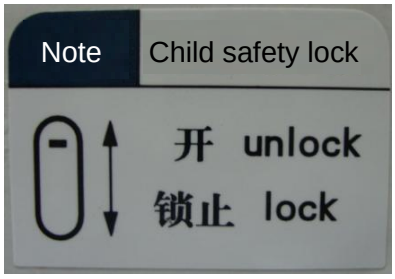

Downloaded from www.Manualslib.com manuals search engine

Battery charging warning sign -- On the lower surface of charging socket		

Downloaded from www.Manualslib.com manuals search engine

Downloaded from www.Manualslib.com manuals search engine

Chapter 1

Operation of Instruments and Controllers

Combination instrument

Instrument Panel Appearance.....1-2
Combination Instrument Appearance.....1-4

Downloaded from www.Manualslib.com manuals search engine

Instrument Panel Appearance

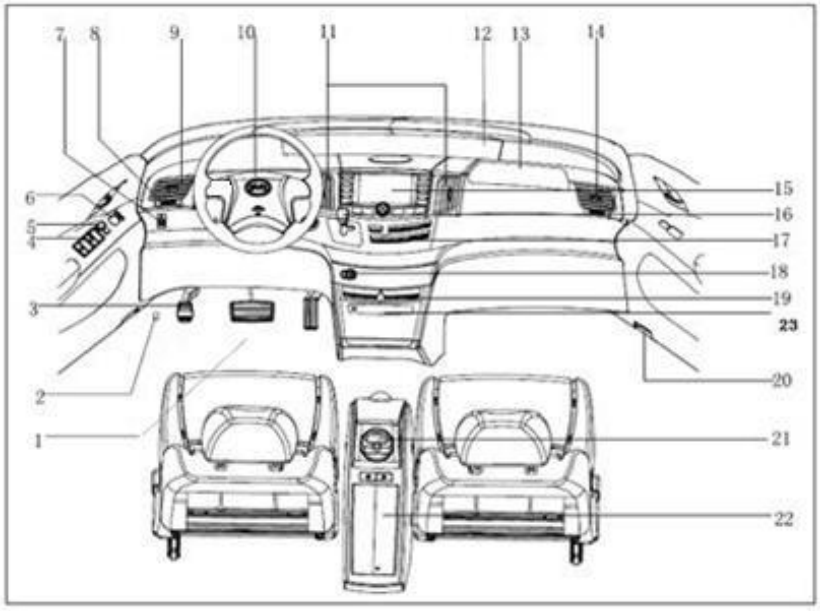

1. Brake pedal
2. Motor compartment latch cable
3. Parking pedal
4. Power window switch
5. Power door lock switch
6. Power rear view mirror control switch (optional)
7. Headlight adjustment switch (optional)
8. Air duct adjustment knob
9. Side air vent
10. Front driver airbag
11. Central air vent
12. Combination instrument
13. Front passenger airbag
14. Side air vent
15. DVD display screen (optional)
16. Gear shift handle
17. Air-conditioning control panel
18. Cigar Lighter
19. Switch Group
20. Door light
21. In-car mobile phone (optional)
22. Central glove box
23. DVD/CD player

Downloaded from www.Manualslib.com manuals search engine

Switch Group

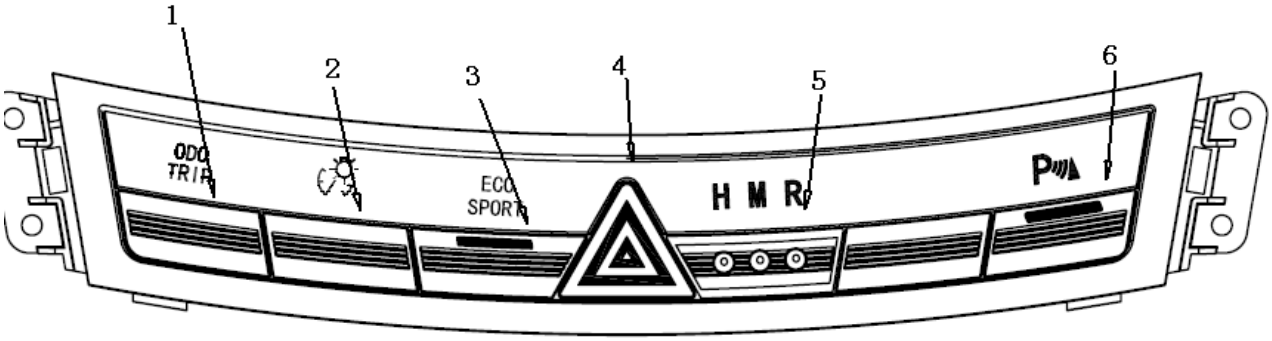

1. Mileage changeover switch
2. Backlight brightness adjustment switch
3. Power/economy mode changeover switch
4. Emergency warning light switch
5. Clock adjustment switch
6. Reversing radar power switch (optional)

Downloaded from www.Manualslib.com manuals search engine

Combination Instrument Appearance

Indication Signs on the Combination Instrument

Items marked with "*" are service reminder indicators. Refer to "Service reminder indicators and warning buzzers" in Section 1-5 for details.

	Braking system Malfunction Indicator *		Door/Trunk Status Indicator *
	Seat Belt Indicator *		SRS Malfunction Indicator *
DC	DC Warning Indicator *		Width-indicating Light Indicator
	Front Fog Light Indicator		High Beam Headlight Indicator
ABS	ABS Malfunction Indicator *		Rear Fog Light Indicator
	Motor Coolant Overheat Indicator *		Power System Malfunction Indicator *
	Turn Signal Light Indicator		Anti-theft Indicator

Downloaded from www.Manualslib.com manuals search engine

P/S	EPS Malfunction Indicator		Power Battery Overheat Indicator *
	Power Battery Charging Connective Indicator *		Power Battery Low Power Indicator *
OK	READY Indicator *		Power Battery Fault Indicator
	Motor Overheat Indicator *		Reversing radar information
	Smart key, key position indicator		Front passenger airbag on and off indicator *
SPORT	Sport mode indicator		

Downloaded from www.Manualslib.com manuals search engine

Speedometer

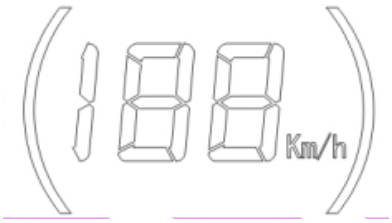

This meter will indicate the vehicle speed while the power switch is on

Battery power meter

This meter will indicate the remaining power of the power battery while the power switch is on. The indication is symmetrical on both left and right sides and changes simultaneously.

Tips
The power battery must be charged as soon as possible when the indicator bar has entered or is going to enter into the red zone.

Power meter

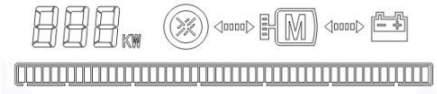

The power meter indicated the power of the vehicle in kw.

The power indication might be negative while the vehicle is driving downhill or running on inertia. That is a normal condition.

Downloaded from www.Manualslib.com manuals search engine

Odometer and Dual Trip Odometer

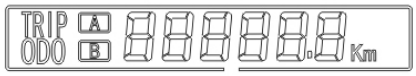

This screen displays the following information.

a. Odometer - display the total mileage of the car.

b. Dual Trip Odometer - display the different mileages since the two trip odometers were reset to zero respectively.

You can use one to calculate remaining battery power (TRIP A) and use the other to record the mileage of each trip (TRIP B).

c. Trip odometer reset button - reset the reading of the dual trip odometer to zero; rotate the display.

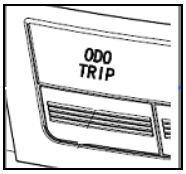

To rotate the display of the odometer, press and then release the switch quickly. For each press, the meter display will rotate from odometer to Trip A, from Trip A to Trip B, or from Trip B to odometer.

To reset a trip odometer to zero, first switch the information displayed on the screen to the desired reading (Trip A/Trip B), and then press the button until it is reset to zero.

Remaining Mileage Meter

The remaining mileage is the driving distance that can be supported by the remaining power, which is calculated based on the remaining power and the vehicle operating conditions.

Tips
Please charge the vehicle promptly when the power indicator bar has dropped into the red zone.

Downloaded from www.Manualslib.com manuals search engine

Service Reminder Indicators & Warning Buzzers

If an indicator comes on or the buzzer buzzes		What to do
(a)		If the parking brake is not applied, please stop the car immediately and contact a BYD authorized service station.
(b)	(Indicator and buzzer)	Fasten the driver's safety belt.
(c)		Send the car to a specified service station. Please contact a BYD authorized service station.
(d)		Send the car to a specified service station. If the braking system warning light also illuminates, please contact a BYD authorized service station.
(e)		Close all doors.
(f)		Contact a BYD authorized service station.

1-8 Operation of Instruments and Controllers

Downloaded from www.Manualslib.com manuals search engine

If an indicator comes on or the buzzer buzzes		What to do
(g)		Please drive the car to a specified service station, and park the car to let the power motor cool down. Please contact BYD staff in event of frequent occurrence.
(h)		Please drive the car to a specified service station; Please contact BYD staff for inspection.
(i)		Please drive the car to a specified service station if such a fault is detected; check whether the coolant is sufficient and park the car to let the power motor cool down. Please contact BYD staff in event of frequent occurrence.
(j)	P/S	Please drive the car to a specified service station; please contact BYD staff.
(k)		Please send the car to a specified service station; please contact BYD staff.
(l)		Please drive the car to a specified service station; Please contact BYD staff for inspection.
(m)		The power battery must be charged.
(n)	OK	The vehicle is ready to drive; pay attention to the surrounding conditions.
(o)		Turn on the airbag for the front passenger seat if that seat is occupied by an adult.

Downloaded from www.Manualslib.com manuals search engine

(a) Braking system Warning Light

This light will come on in the following conditions when the power switch is at "ON" position.

- When the brake fluid level is low.
- When the parking brake is applied.
- When there is a fault with the vacuum pressure.
- When there is an EBD fault.
- When the brake fluid level is low.

Tips
It is very dangerous to continue to drive while the brake fluid level is low.

Please have the vehicle inspected by a BYD authorized service station in the following conditions:

- When the power position is "ON", this light does not come on even if the parking brake is applied.
- When the parking brake is released, this light keeps turning on even if the power position is switched to "ON.

Tips
Please park the vehicle in the safe place immediately and contact a BYD service station if any of the following conditions occur. ● When the power position is ON, this light does not go off even if the parking brake is released. That might indicate that the brake does not work properly and the braking distance will be extended. Step on the brake pedal with force to stop the vehicle. ● The braking system warning light remains on while the ABS warning light comes on. The anti-lock braking system will not work when braking and the vehicle will also become extremely unstable in such a condition.

The instantaneous flashing of the warning light during operation is a normal condition.

(b) Seat Belt Indicator

This indicator light will remind the driver to fasten the seat belt.

When the ignition key is turned to "ON" position, this indicator light will come on if the driver's seat belt is not fastened. The light will remain on unless the driver's seat belt is fastened.

(c) DC fault warning light

The function of this light is to warn of the operating condition of the DC module.

If this light comes on while driving, it suggests that there is problem with the DC system.

Turn off the A/C system, fan and radio, etc. Drive the vehicle to the nearest BYD service station for repair.

Downloaded from www.Manualslib.com manuals search engine

(d) "ABS" warning light

This light will come on when the power position is switched "ON". It will go out in a few seconds if the ABS system is working properly. This light will come on again if there is a fault with the system.

When the "ABS" warning light comes on (and the braking system warning light is off), the ABS system will not work but the braking system will still work normally.

When the "ABS" warning light comes on (and the braking system warning light is off), the wheels will lock in event of emergency braking or braking on a slippery road because the ABS system will not work.

If any of the following conditions occur, it suggests that there is a fault with the components monitored by the warning indicator system. Please contact a BYD service station for an inspection of the vehicle:

- This light does not come on or remains on when the power is switched to "ON" position.
- This light comes on while driving.

The instantaneous flashing of the warning light during operation is a normal condition.

Tips
If the "ABS" warning light is still on when the braking system warning light comes on, please park the vehicle in a safe place immediately and contact a BYD service station. The anti-lock braking system will not work when braking and the vehicle will also become extremely unstable in such a condition.

(e) Door ajar warning light

This light will remain on until all the doors are closed properly.

(f) SRS Warning Indicator*

This light will come on when the power is switched to "ON" position. It will go off in approximately 5 seconds, which indicates that the airbag system is working properly.

The warning indicator system monitors the airbag ECU, collision sensor, air inflation device, wiring and power supply.

If any of the following conditions occur, it suggests that there is a fault with the components monitored by the warning indicator system. Please contact a BYD service station for an inspection of the vehicle:

- This light does not come on or remains on when the power is switched to "ON" position.
- This light comes on or flashes while driving.

Downloaded from www.Manualslib.com manuals search engine

(g) Motor Coolant Overheat Indicator

When this light comes on, it means that the motor coolant temperature is too high. The vehicle must be stopped to let the motor cool down.

The motor may get overheated in the following operating conditions:

- Driving uphill for a long distance in hot whether.
- Frequent sudden braking and harsh acceleration.
- When the vehicle is used to tow another one.

(h) Power System Malfunction Indicator

This light will come on when the power position is switched "ON". It will distinguish in a few seconds if the power system works properly. This light will come on again if there a fault with the system afterwards.

If any of the following conditions occur, it suggests that there is a fault with the components monitored by the warning indicator system. Please contact a BYD service station for an inspection of the vehicle:

- This light does not come on or remains on when the power is switched to "ON" position.
- This light comes on while driving.

The instantaneous flashing of the warning light during operation is a normal condition.

NOTE
Do not drive the vehicle while the warning indicator is on - even for a short distance. Otherwise the motor could be damaged.

(i) Motor Overheat Warning Indicator

When this light comes on, it means that the motor temperature is too high. The vehicle must be stopped to let the motor cool down.

The motor may get overheated in the following operating conditions:

- Driving uphill for a long distance in hot whether.
- The vehicle stops and starts frequently in jammed traffic; frequent harsh acceleration and sudden braking; or the vehicle keeps running for a long time without a break.
- When the car is used to tow another one.

P/S (j) EPS Malfunction Indicator

This light will come on when the power position is switched "ON". It will go out in a few seconds if the EPS system works properly. This light will come on if there a fault with the system.

Downloaded from www.Manualslib.com manuals search engine

If any of the following conditions occur, it suggests that there is a fault with the components monitored by the warning indicator system. Please contact a BYD service station for an inspection of the vehicle:

- This light does not come on or remains on when the power is switched to "ON" position.
- This light comes on while driving.

The instantaneous flashing of the warning light during operation is a normal condition.

Tips
Please park the vehicle in a safe place immediately and contact a BYD service station if the following conditions occur. ● This light does not come on or remains on when the power is switched to "ON" position. That means that the EPS system may not work properly; please park the vehicle in a safe place immediately. ● This light comes on while driving.

(k) Power Battery Fault Indicator

If this indicator comes on, it suggests that there is a fault with the power battery. Please contact a BYD service station as soon as possible for an inspection of the vehicle.

(l) Power Battery Overheat Indicator

When this light comes on, it means that the power battery temperature is too high. The vehicle must be stopped to let the battery cool down.

The power battery may overheat in the following operating conditions:

- Driving uphill for a long distance in hot whether.
- The vehicle stops and starts frequently in heavy traffic; frequent harsh acceleration and sudden braking; or the vehicle keeps running for a long time without a break.
- When the vehicle is used to tow another one.

(m) Power Battery Charging Connection Status Indicator

This light will come on when the power battery is nearly out of power. The power battery must be charged as soon as possible.

(n) READY Indicator

This light indicates that all the vehicle systems are in a proper condition and the vehicle is ready to go.

(o) Front passenger airbag on and off indicator

If this indicator comes on, it means that the airbag system at the front passenger seat is in the off status.

Downloaded from www.Manualslib.com manuals search engine

Tips
● Please turn on the airbag system for the front passenger seat when that seat is occupied by an adult to ensure the safety of the passenger. ● Please turn off the airbag system for the front passenger seat when that seat is occupied by a child to ensure the safety of the passenger, because inflation of the airbag might cause injury to the child.

Downloaded from www.Manualslib.com manuals search engine

Chapter 1
Section 2

Doors and Keys

Keys 1-16
Intelligent Access and Starting System 1-22
Front Doors 1-26
Trunk lid 1-27
Charger socket cover 1-28
Front motor compartment cover 1-28
Power windows 1-33

Downloaded from www.Manualslib.com manuals search engine

Keys

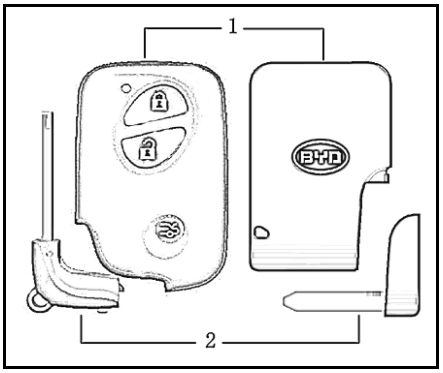

Intelligent Keys and Mechanical Keys

1. Intelligent Key - used to open/lock all doors and available in two types: electronic intelligent key and card-type intelligent key. Electronic intelligent key can be used to open/lock doors, make an emergency alarm and search for the car at a distance.
2. Mechanical key (in electronic intelligent key and car-type intelligent key) - is used to open/lock doors and trunk.

WARNING

- People with heart pacemakers and defibrillators must be kept away from the antenna of intelligent access and starting system, as the electromagnetic wave may affect normal use of these devices. For information on the position of the antenna, please refer to "Antenna Position" in this section.
- Drivers with heart pacemakers and defibrillators and people using other medical electronic devices must ask manufacturer about the dangers of interference to these device posed by electromagnetic waves. Electromagnetic wave may cause unexpected results to these devices.

NOTE

Pay attention to the following items when using intelligent keys:

- Do not attach any object which may block electromagnetic waves (such as a metal container) to the key.
- Do not knock the key forcibly on other projects.
- Do not place the intelligent key in high temperature, direct sunlight or on motor hood for a long time.
- Do not clean the key in water or an ultrasonic washer.
- Do not put the intelligent key near any device which may produce electromagnetic wave, such as a cell phone.

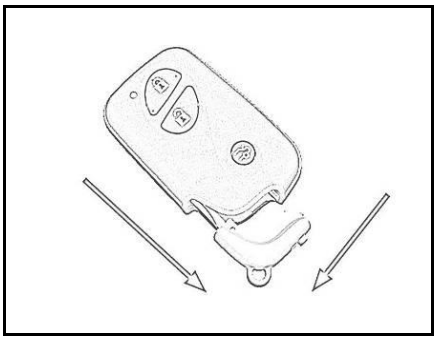

Using the Mechanical Key inside the Electronic Intelligent Key

To use mechanical key in electronic intelligent key, pull down the switch to release the key as shown in the figure. Make sure to put back the mechanical key after use.

Downloaded from www.Manualslib.com manuals search engine

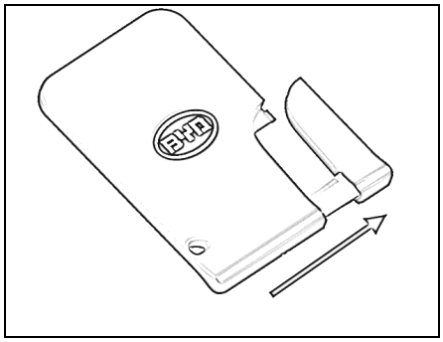

Using the Mechanical Key inside the Card-type Intelligent Key

To use mechanical key in card-type intelligent key, pull out the key as shown in the figure. Make sure to put back the mechanical key after use.

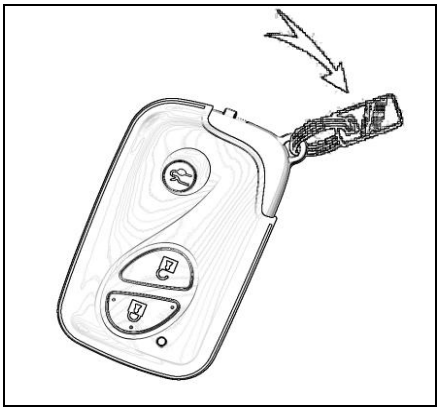

Key Number Plate

The key number is indicated on the number plate, which must be kept separately in a safe place other than in the vehicle.

If the key is lost or you need to make a spare key, the BYD authorized service station can reproduce a key according to the key number.

It is recommended to take note of the key number and keep it at a safe place.

Wireless Remote Control

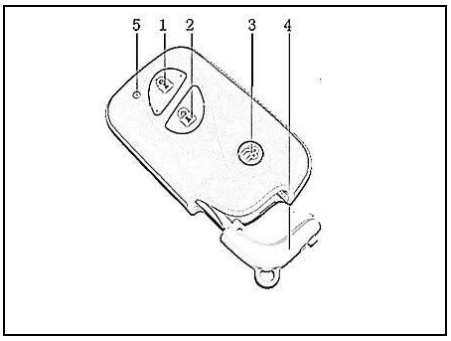

Electronic Intelligent Key

1. Lock UP Switch
2. Unlock Switch
3. Remote trunk lid switch
4. Mechanical key
5. Indicator

Wireless remote control system is designed to open/lock all side doors at a distance of some 1 m from the car together with some additional functions. It is available only on electronic intelligent key.

Downloaded from www.Manualslib.com manuals search engine

When operating, please press the switch slowly and firmly.

Electronic intelligent key includes electronic components. Please follow the following instructions to avoid any damage to the key.

- Do not place the key in high temperature, such as on the instrument panel.
- Do not disassemble it.
- Do not knock the key forcibly and drop it to ground.
- Do not submerge the key in water.

You can register spare keys for the car. For more detailed information, please contact a BYD authorized service station.

If the electronic key cannot function well in normal operation range, or when the indicator on the key is dim or off:

- Check whether there is radio station or transmitter nearby which may interfere with the key.
- Battery may have depleted. Check the battery in the key. To replace the battery, please see "Replace Battery of Electronic Intelligent Key".

  If you lose the electronic intelligent key, please contact a BYD authorized service station as soon as possible to prevent the car from being stolen.

Locking Operation

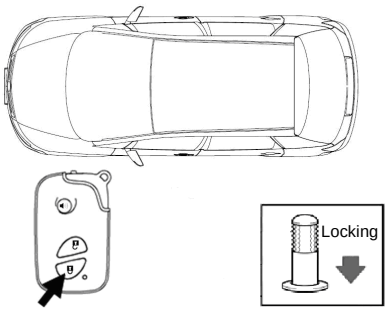

Unlocking Operation

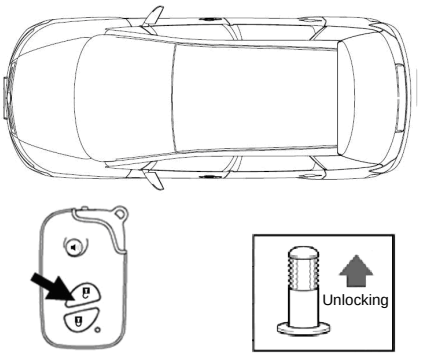

When locking/unlocking, press down the switch on the key slowly and firmly.

Lock: press down locking switch to lock all doors. The turn signal lights will flash once.

Check whether all doors have been locked up firmly.

If any door is still open, use lock-up switch to unlock all door locks. When unlocking, the turn signal lights will not flash but the warning buzzer beeps once.

Unlock: press down unlocking switch to unlock all doors. The turn signal lights will flash twice.

Downloaded from www.Manualslib.com manuals search engine

If power supply is at ACC or ON, the doors cannot be opened/locked by the key.

When unlocking all doors with electronic intelligent key, even if the doors are not opened, the interior lights will be turned on and remain on for 15 seconds before going out.

When using electronic intelligent key to unlock doors, please pull open a door manually in 30 seconds. Otherwise all doors will be locked up automatically.

If you press and hold the locking/unlocking switch, the key will not function repeatedly. You must release the switch first for repeated operation.

Finding Car Operation

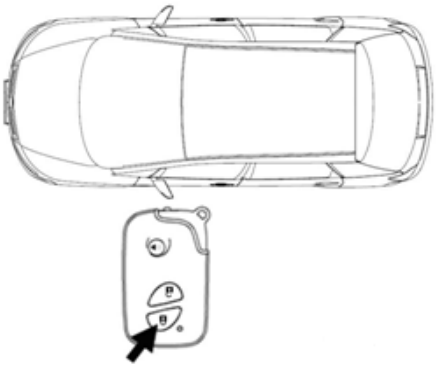

When the car is under anti-theft state, press down locking switch and the car will give out a long sound with the turning signal lights flashing for 15 seconds. When you can not find your car, this function is useful to locate it.

Under searching state, press the locking switch again to enter into the search state for the second time.

Replace Card-type Intelligent Key Battery

The replacement of battery for the card-type key is simple and you can do it yourself. You must use CR2025 lithium battery or equivalent for replacement.

WARNING

Pay close attention to prevent the battery from being swallowed by children.

NOTE

- Only use batteries recommended by BYD service station or their equivalent for replacement.
- Dispose of depleted batteries according to local laws.

Downloaded from www.Manualslib.com manuals search engine

Replace the battery for the card-type intelligent key in the following steps.

a. Pull out the mechanical key in the arrow direction.

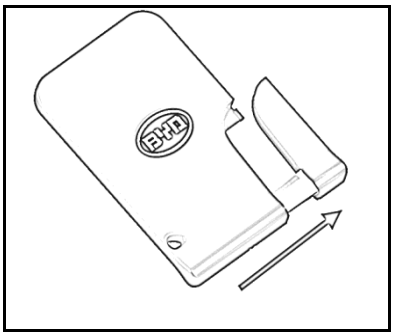

b. Take out battery.

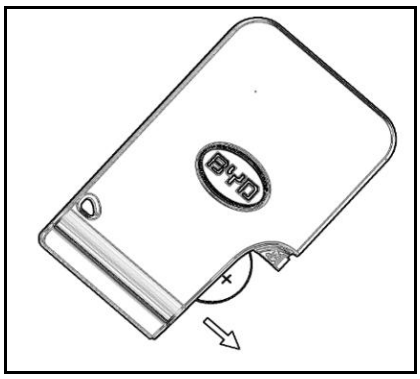

c. Insert the new battery into the intelligent key, and then put back the mechanical key into the card-type intelligent key.

NOTE

- Make sure that the battery poles are installed properly.
- Do not operate the battery with wet hands, which may cause rusting.
- The card-type key is not waterproof; do not let water enter it.

After battery replacement, check whether the card-type intelligent key can work normally. If it still cannot work, please contact a BYD authorized service station.

NOTE

- Do not alter the emission frequency, increase the emission power (including but not limited to adding emission frequency amplifiers), equip with an external antenna or use other emission antennas without permission.
- Use of the electronic intelligent key should not produce any harmful interference to any legal wireless communication services; stop use of it immediately if any interference is found and do not use it until the interference has been eliminated.
- When using a micropower radio device, there might be interference from radio services and radiation interference from industrial, scientific and medical devices.
- Do not use the electronic intelligent key on board aircraft or at airports.

Downloaded from www.Manualslib.com manuals search engine

Replace Electronic Intelligent Key Battery

Replacement of the battery may damage the key. It is recommended to have a BYD authorized service station replace the battery. If you have to replace it by yourself, please use a flat screwdriver and CR1632 lithium battery or equivalent.

WARNING

Pay close attention to prevent the battery or components from being swallowed by children.

NOTE

- Do not touch the circuit with your hands, otherwise the static produced may damage the key.
- Do not leave out any components when replacing the key battery.
- Only use batteries recommended by BYD service station or their equivalent for replacement.
- Dispose of depleted batteries according to local laws.

Replace the electronic intelligent key battery in the following steps.

a. Pull down release switch and take out mechanical key.

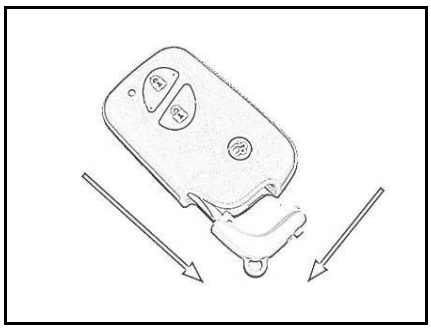

b. Open electronic key cover with a flat screwdriver or similar tools.

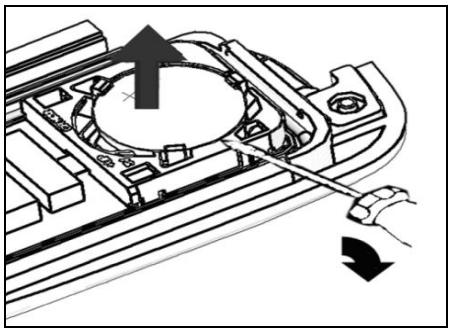

c. Remove the depleted electronic intelligent key with a flat screwdriver or similar tools. Insert the tool into the guide groove and apply force in the direction shown in the figure above to remove the battery.

Downloaded from www.Manualslib.com manuals search engine

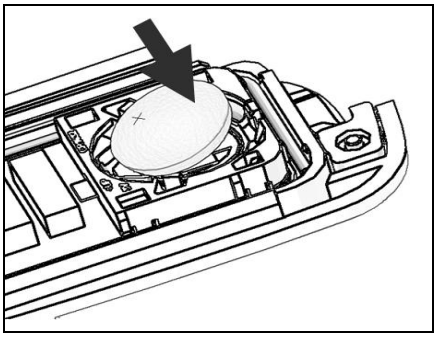

d. Put the battery with positive terminal (+) on the top into the battery box, then firmly install the cover of the electronic intelligent key and insert the mechanical key into the electronic intelligent key.

After battery replacement, check whether the electronic intelligent key works normally. If it still does not work, please contact a BYD authorized service station.

NOTE

- ◆ Do not amend the battery cover to avoid fault.
- ◆ Make sure that the battery poles are installed properly.
- ◆ Do not operate the battery with wet hands, which may cause rusting.
- ◆ Do not touch or move any component or part inside the electronic key, otherwise its normal function may be affected.
- ◆ Take care not to bend the terminals when inserting the battery. The battery box must be free of dust or oil taint.
- ◆ Reinstall the key cover firmly.

Intelligent Access and Starting System

The intelligent access and starting system has the following main features.

- Wireless remote control function (See "Wireless Remote Control" in this Section for details)
- Access function and starting function (see "Access Function and Starting Function" in this Section)
- Steering lock function (refer to "Steering Lock Function" in this Section)
- Button Starting function (for details, please see "Vehicle Starting Method" in this Section)

WARNING

- People with heart pacemakers and defibrillators must be kept away from the antenna of intelligent access and keyless starting system, as electromagnetic waves may affect normal use of these devices. For information on the position of the antenna, please refer to "Antenna Position" in this section.
- Drivers with heart pacemakers and defibrillators and people using other medical electronic devices must ask the manufacturer about interference posed by electromagnetic waves to these devices. Electromagnetic waves may cause unexpected results to these devices.

Downloaded from www.Manualslib.com manuals search engine

Access and Starting Function

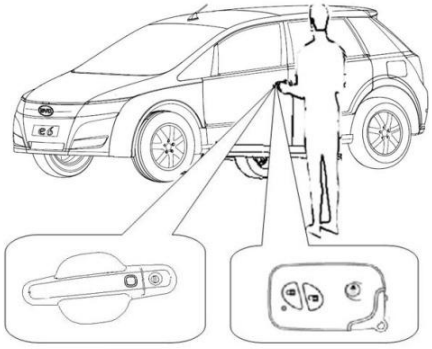

Access Function

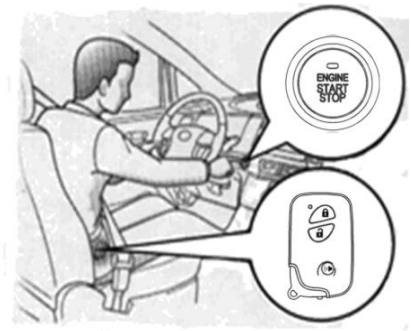

Starting Function

Intelligent key (electronic or card-type) can unlock/lock doors and start the vehicle.

Access Function - unlock/lock doors. For detailed information, please see "Front Doors" in this Section.

Starting function - The motor can be started while the intelligent key is within the vehicle. Please refer to "How to Start Motor" in "Starting and Driving" for details.

Steering Lock Function

When the doors are locked through wireless remote control or microswitch, the steering wheel will be locked.

The steering lock will be automatically released when the "ENGINE START STOP" switch is pressed when the key is inside the vehicle. If the green indicator on the "ENGINE START STOP" switch flashes, that means that the steering lock is stuck. To release the lock, please turn the steering wheel slightly while pressing down "ENGINE START STOP". If the green indicator still flashes, that means that the steering lock is faulty and the vehicle should be inspected at a BYD authorized service station.

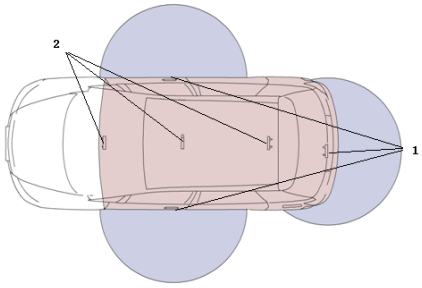

Antenna Position

1. Antenna out of carriage
2. Antenna in carriage

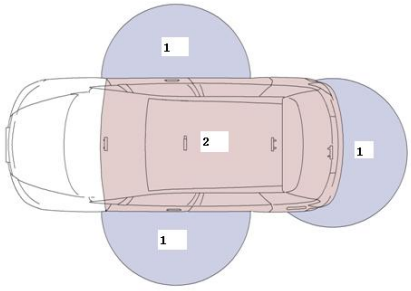

Downloaded from www.Manualslib.com manuals search engine

Active Region

After an intelligent key is registered, the access and starting engine function is available in the active region.

a. Access function active region - some 0.7 m from the handle microswitch of the front outer door. If the key is too far away from the door handle or window, the access function may not be activated.

b. Starting engine function active region - in carriage.

If the key is on instrument panel or floor, or in trunk or glove box, the starting engine function may not be activated.

In the following cases, intelligent access and engine starting function may not work normally:

- When there are facilities nearby which give out strong electromagnetic waves, such as broadcast towers, power plants, radio stations and telecommunication signal towers.
- When you take the intelligent key together with mobile telecommunication devices, such as a two-way radio device or cell phone.
- When the intelligent key is touched or covered by metal objects.
- When you operate the door handle quickly.
- When the intelligent key is close to the door handle.
- When somebody else operates a wireless remote control function on a car nearby.
- When the battery is depleted. (To replace battery, please see "Replace Card-type Intelligent Key Battery" and "Replace Electronic Intelligent Key Battery" in this Section.)
- When the intelligent key is near high voltage devices or noise-generating devices.
- When you take the intelligent key together with a key for intelligent access and motor starting system of another car or other radio devices.
- The intelligent key may not work normally even in the active region due to your location or profile of the car.

If you cannot get in the car when the intelligent access and keyless starting system can not function normally, you can use wireless remote control function to unlock/lock all doors.

When the intelligent key of another car is near to the intelligent key of your car, it may take a longer time to unlock the doors, which is normal.

If the battery in the intelligent key runs out of power

If the indicator for the electronic intelligent key does not flash and its starting function cannot start the vehicle, the battery may have depleted. You must replace the battery as soon as possible. (Please see "Replace Battery of Electronic Intelligent Key" in this section.)

In this case, you can start the vehicle with card-type intelligent key.

Downloaded from www.Manualslib.com manuals search engine

NOTE

- Do not place the key in a high temperature area.
- Do not hit the key with any article or drop the key.
- Keep the key away from any magnetic field.
- When the doors are locked and the vehicle is in anti-theft status, please keep the key away from the vehicle, as the automatic searching feature will consume the battery power.

If the card-type intelligent key is not available or also has a depleted battery, you can start the vehicle with the following steps:

1. Step on brake pedal or press down "ENGINE START STOP" switch, the key position indicator of the intelligent key system on the combination instrument will come on with the buzzer beeping once.
2. Put the electronic intelligent key near "ENGINE START STOP" switch within 30 seconds after the buzzer beeps, the buzzer will beeps once again, indicating that you can start the vehicle.
3. Start the vehicle within 5 seconds after the buzzer beeps.

You can also conduct the procedure above with a card-type intelligent key which has a depleted battery to start the vehicle.

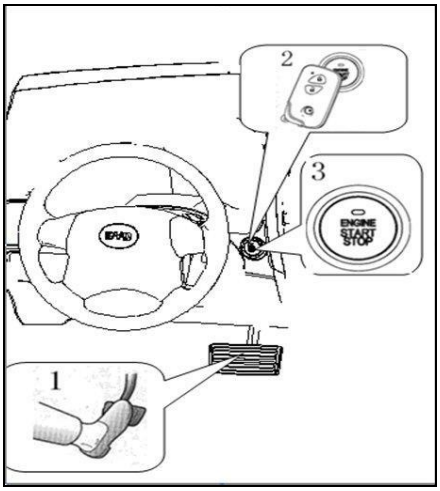

If you cannot access the car or start the vehicle with the card-type intelligent key, the battery may have depleted. Please replace the battery as soon as possible. (Please see "Replace Battery of Card-type Intelligent Key" in this section.)

Save Battery Power

The key will communicate with the car even when you are not driving the it. Do not leave the key near the car (within 2 m).

If the car is not used for a long time, the on-vehicle battery may deplete. To prevent battery over discharge, please disconnect the negative terminal of the battery.

To activate intelligent access and starting system again, please make any of the following actions:

a. When the intelligent key is available, press the microswitch on the door handle of the front outer door.

b. Make radio remote control operation.

Downloaded from www.Manualslib.com manuals search engine

If an intelligent key receives strong electromagnetic waves for long period, the battery will run low quickly. Intelligent keys must be kept at least 1m away from the following devices:

- TV sets
- PCs
- Cellphone chargers
- Lamp holders
- Fluorescent lights

WARNING

Unauthorized amendment and alteration may result in failure of some devices.

If the intelligent access and starting system fails, please contact a BYD authorized service station. You must take all intelligent keys with you, which are required in repairing this system.

NOTE

- Do not alter the emission frequency, increase the emission power (including but not limited to adding emission frequency amplifiers), equip with an external antenna or use other emission antennas without permission.
- Use of the electronic intelligent key should not produce any harmful interference to any legal wireless communication services; stop use of it immediately if any interference is found and do not use it until the interference has been eliminated.
- When using a micropower radio device, it must withstand interference of radio services and radiation interference from industrial, scientific and medical devices.
- Do not use the electronic intelligent key on board aircraft or at airports.

Front Door

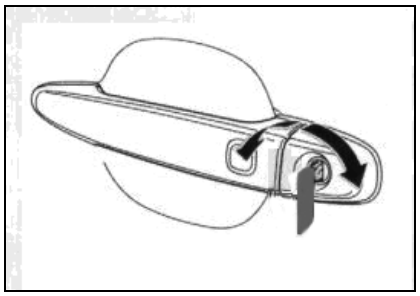

Unlocking/Locking with Mechanical Key

Insert the key into lock hole and rotate it.
Lock up: turn the key clockwise.
Unlock: turn the key anticlockwise.

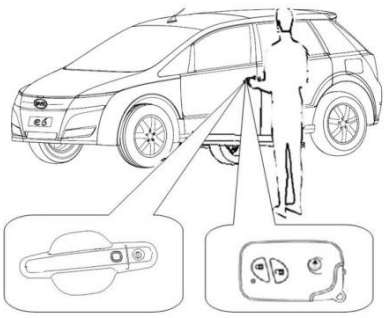

Downloaded from www.Manualslib.com manuals search engine

Lock and Unlock

When you enter active region with a registered intelligent key (electronic or card-type, the former is shown in the figure) for the intelligent access and starting system, you can lock/unlock all doors without using the key.

Locking Operation

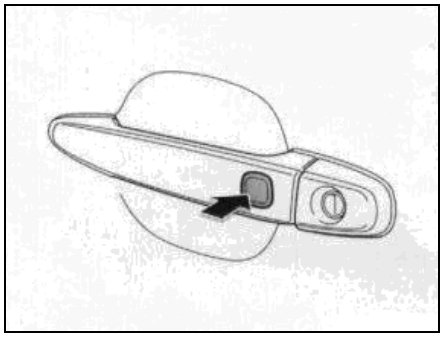

Press down the microswitch button on the outer door handle slowly and firmly. All doors will be locked at the same time. The turn signal lights will flash once.

In the following cases the doors will not be locked when pressing the microswitch.

- When any door is not ajar.
- Pressing the locking button while opening/closing any door.
- When the motor is not shut down.
- When the power supply is at ACC or ON.

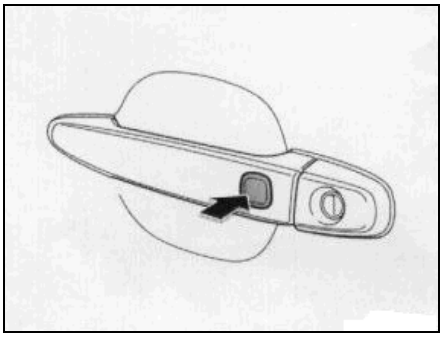

Unlocking Operation

Press down the microswitch button on the outer door handle slowly and firmly. All doors will be unlocked at the same time. The turn signal lights will flash twice.

When the doors are unlocked, you shall open a door in 30 seconds. Otherwise all doors will be locked up automatically.

Tips
All the doors will be locked or unlocked when you use the key to lock or unlock the front door on the driver's side.

Trunk lid --

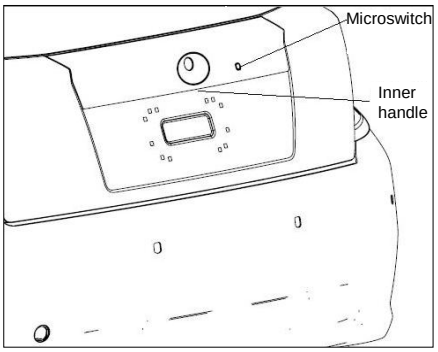

When you wish to open the trunk lid from tne outside, unlock the lid with the remote key and then open the lid by pulling the inner handle.

To close the trunk lid, pull and press it down.

Downloaded from www.Manualslib.com manuals search engine

When the trunk lid has been closed, attempt it pull it up to confirm that it is closed tightly.

Tips
Keep the trunk lid closed while the vehicle is driving. It can prevent the luggage from being thrown out, and prevent any dust or unfiltered air from entering into the cabin.

-- Charger socket cover

To open the charger socket cover from the driver's seat，pull up the control handle for the charger socket cover.

Front motor hood

The opening handle of front motor hood

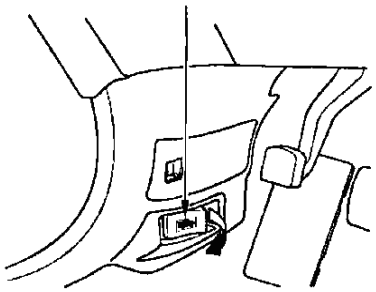

To open the front motor hood:

a. Change to park or neutral gear and apply the parking brake. Pull up the front motor hood opening handle that is located at the lower left corner of the instrument panel, and the motor hood will pop up slightly.

Tips
Please confirm that the motor hood is closed and locked firmed before driving the vehicle. Otherwise the front motor hood could suddenly open while driving and cause incidents.

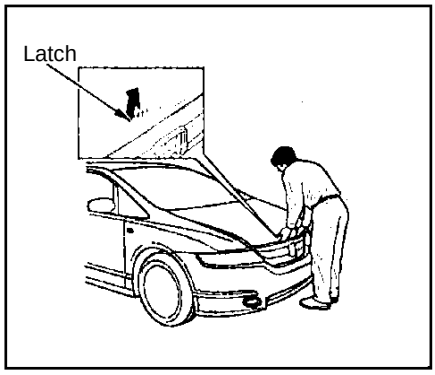

b. Stand in front of the vehicle and insert the fingers between the front edge of the front motor hood and the front grille. Push the latch up until it touches the motor hood, and then open the hood.

Downloaded from www.Manualslib.com manuals search engine

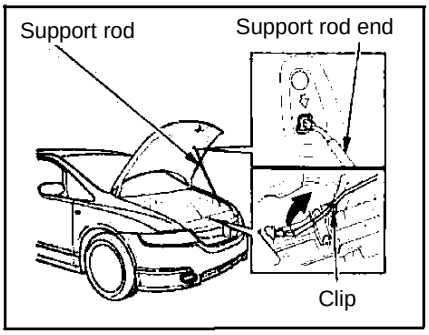

c. Hold the support rod end to pull the rod out of the clip and then insert the rod end into the hole in the front left section of the motor hood.

To close the motor hood, lift it up slightly, remove the support rod from the hole at the hood and put it back into the clip. Lower the hood and release it at a height approximately 30 cm above the fender panel to let it drop freely.

Check that the latch is secured after closing the motor hood.

Tips
Make sure that the hood is securely supported by the support rod after the rod is inserted into the groove, in order to prevent physical injuries that could be caused by the hood falling.

Anti-theft System

To prevent the car from theft, under anti-theft status, if any door is opened the system will give out alarm sound.

While the alarm system gives out sound, the turn signal lights will flash.

System Settings

a. Shut down the motor.

b. All passengers shall get off.

c. Lock all doors.

When all doors are locked, the anti-theft indicator will remains on. The anti-theft system will be set up automatically after 10 seconds. The anti-theft indicator will flash after the system is set up.

d. Make sure the indicator is flashing before you leave the car.

If anyone in the car unlocks the door, the anti-theft system will be activated. So do not leave anybody in the car.

Activate Anti-theft System

The system will give out alarm sound in the following cases:

- Any door is unlocked when the intelligent key access function is not used.
- The power supply is turned on when the intelligent key starting function is not used.

Downloaded from www.Manualslib.com manuals search engine

Disable Anti-theft System

You can use the following means to disable anti-theft alarm:

- Unlock doors with remote control.
- Unlock doors with microswitch.

Starting the vehicle

Before starting the vehicle

a. Check the environment around the car before getting in.

b. Adjust seat position, seatback angle, seat cushion height, head protection device height, steering wheel angle and height.

c. Adjust interior and exterior rear-view mirror.

d. Make sure all doors are closed.

e. Fasten seat belts.

How to Start the Electric Vehicle

(a) Before Starting

a. Place the gearshift handle at "P" position.

b. Shut down all unwanted lights and electrical devices.

c. Release the parking brake.

d. Depress the brake pedal completely until driving away.

NOTE

- Wait a few seconds after starting; the vehicle should not be operated until the OK light comes on.
- If the OK light does not come on after several starting attempts, please note any fault indicators on the combination instrument. Contact a BYD authorized service station if necessary.

(b) Start motor

Button Starting Function

To start the electric vehicle, press the "ENGINE START STOP" switch while the intelligent key is inside the vehicle. The OK light will come on when the vehicle has been successfully started.

Before starting the motor, you must always follow instructions in "(a) Before Starting Motor".

Normal Starting Steps

The motor can be started only when an intelligent key is in the car.

The green indicator on the "ENGINE START STOP" switch will turn green when the brake pedal is pressed down with a force. Press the "ENGINE START STOP" switch to start the motor.

The "ENGINE START STOP" should be pressed down slowly and firmly.

Downloaded from www.Manualslib.com manuals search engine

If the motor fails to start (the OK light does not come on)

Restart the engine in the normal starting procedure.

NOTE

After starting, wait for a few seconds until the OK light comes on; then slowly release the brake pedal and the vehicle can be driven away.

WARNING

- While operating the "ENGINE START STOP" switch, please stop operating the switch if it is faulty and contact a BYD authorized service station immediately.

When Motor Cannot Start

The motor cannot be started in the following conditions:

- When pressing down "ENGINE START STOP" switch, if the key position indicator of the intelligent key system is on with the buzzer giving out warning tone and "Key is not detected" is displayed on the right information screen, it means the key is not in place.
- Even if the intelligent key is in the car (for example, on floor, in cup holder, trunk or glove box), the motor cannot be started under such conditions.

When pressing down "ENGINE START STOP" switch, if the starting function is not normal, the possible causes are:

- The battery in the intelligent key might have depleted. The motor can be started by holding the intelligent key and approaching it to the "ENGINE START STOP" switch.

  Please replace intelligent key battery. (Please see "Replace Card-type Intelligent Key Battery" and "Replace Electronic Intelligent Key Battery" in this Section.)
- The motor is started repeatedly in a short period.

  Wait for 10 seconds before starting the motor again.

  If starting fails, an orange indicator on the "ENGINE START STOP" switch will flash.

Downloaded from www.Manualslib.com manuals search engine

- If the green indicator on the "ENGINE START STOP" switch flashes, it means that steering lock function may have a fault.

  Please contact a BYD authorized service station to inspect the car and all keys.

In some cases, the intelligent access and keyless starting system cannot function normally due to environment factors. For details, please refer to "Intelligent Access and Starting System" in this section.

Drive and Parking with Intelligent Access and Starting System

Tips on Using Intelligent Access and Starting System

With the Intelligent Access and Starting System, you can start the motor only when an intelligent key is available.

In some cases, the intelligent key may have been taken away by a passenger and thus the motor cannot be started. In addition, the driver may have ignored that the power supply switch was not at OFF when leaving the car.

Before leaving and entering the car, the driver shall make sure the intelligent key is on the hand.

NOTE
Do not touch the "ENGINE START STOP" switch while driving.

If the motor must be stopped while driving, hold the "ENGINE START STOP" switch for more than 3 seconds.

Key Position Indicator of Intelligent Key System

System Function Indicator

If any of the following warning, please follow the instructions below:

(a) When pressing down "ENGINE START STOP" switch to connect the power, the instrument warning buzzer gives out a tone with "Key is not detected" displayed on the right information display

It means the driver does not take the intelligent key when entering the car. The key position indicator of intelligent key system on the instrument panel will be on for 8 seconds with "Key is not detected" displayed on the right information screen. Make sure the intelligent key is in the car before operating the "ENGINE START STOP" switch.

(b) When pressing down "ENGINE START STOP" switch to disconnect the power, the instrument warning buzzer gives out a tone with the indicator flashing and "Key battery is low" is displayed on the right information screen.

Downloaded from www.Manualslib.com manuals search engine

It means the intelligent key battery is low. Replace intelligent key battery in time to ensure that Intelligent Access and Starting System function normally.

(c) When pressing down the "ENGINE START STOP" switch to connect power, the green indicator on the "ENGINE START STOP" switch flashes

It means that the steering lock is locked up; to release it, press down "ENGINE START STOP" switch and shake the steering wheel slightly at the same time.

Power windows

The windows can be operated by switches on each door.

The power supply is at the position of ACC or On.

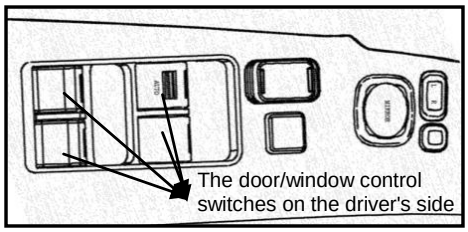

Window lifter switch for left front door

Operation of the windows on the driver's side

There are four buttons at the window control switch at the driver's side, which control the window lifters at the left front door, right front door, left rear door and right rear door respectively. The control has precedence over the window lifter switches in the right front door, the left rear door or the right rear door.

Lifting - pull up the switch gently and the window will rise by a distance corresponding to the pulling time. Release the switch and the window will stay at current position; or keep pulling and the window will completely close.

Lowering - push down the switch gently and the window will lower down by a distance corresponding to the pressing time. Release the switch and the window will stay at current position; or keep pressing and the window will completely open.

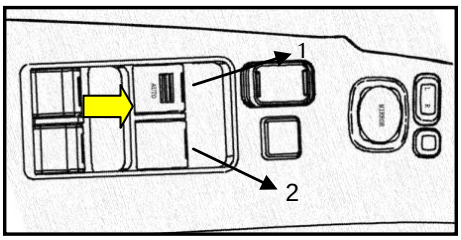

Downloaded from www.Manualslib.com manuals search engine

Tips
● Please be aware of safety as the power windows are not provided with anti-clamping feature. ● Please use the windows locking switch when there is a child in the vehicle to prevent any accidental operation of the power window switch.

Automatic rising/lowering of the windows at the driver's side - completely press down the switch (AUTO) and then release it, and the window glass will automatically lower down until the window is completely open. When it is desired to stop the glass in the halfway to let the window partly open, pull up the switch gently and then release it to stop the glass being lowered.

a. Door locking switches: Two such switches are located at the window lifter switches at the left front door and right front door respectively. They are used to lock or unlock all the vehicle doors. The switch has two positions; press the front part of the switch to lock the doors, or press the rear part to unlock the doors.

b. Windows main switch: It is used to enable or disable the window lifter switches at the right front door, the left rear door and the right rear door. When this switch is pressed, the window lifter switches at the right front door, the left rear door and the right rear door will be disabled.

Operation of the windows on passenger's side

The windows on the passenger's side can be controlled either by the switches at the respective doors or by the switch on the driver's door.

Open: Press the switch.

Close: Pull up the switch.

The windows will not be controlled by the switches at passenger's side if the window locking switch at the driver's side is pressed.

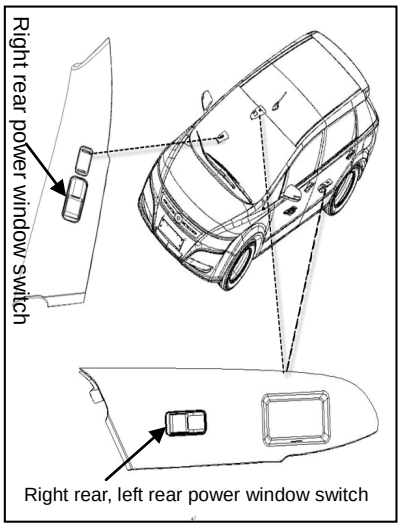

Downloaded from www.Manualslib.com manuals search engine

Child lock

Child protection lock system (CPLS): When CPLS is set, the rear passengers will not be able to open the doors from inside, as the doors can only be opened from outside. Therefore, the doors are prevented from accidental opening by a child or in event of a collision accident. The child lock can be released by simply pulling up latch.

Downloaded from www.Manualslib.com manuals search engine

Downloaded from www.Manualslib.com manuals search engine

Chapter 1
Section 3

Seats, seat belts and airbags

Front Seats 1-40
Rear seats 1-40
Head restraint 1-40
Seat Belts 1-41
Driver and front passenger SRS airbags 1-45

Downloaded from www.Manualslib.com manuals search engine

Seats and seat belts

All the passengers should keep their seatbacks upright, be seated against the seatback and keep seat belts fastened while the vehicle is driving.

WARNING

- Do not drive the vehicle before every passenger is properly seated. No passengers may sit on the folded seatback or inside the trunk. Passengers who are not properly seated or protected by a seat belt could suffer from severe injury or even death in event of emergency braking or collision.
- The passengers are not allowed to stand up or move between the seats while the vehicle is driving. Otherwise severe injuries or even death could happen in event of emergency braking or collision.

Cautions about adjustment of the front seats

- Do not adjust the seat while the vehicle is driving; or else the driver may lose control of the vehicle due to accidental moving of the seat.
- Do not let the seat hit any passenger or luggage.
- Do not overly tilt the seatback. The seat belt can provide the maximum protection in event of front or rear collision only when the passengers are seated upright and against the seatback. If the passenger leans on the seatback in an inclined position, the seat belt at the waist may slide over the hips and apply direct pressure on the abdomen, or the neck may hit the shoulder section of the seat belt. In event of a front collision accident, the more inclined the seat is, the higher chances the passenger will be hurt or even killed.
- Do not put any article underneath the seat, or else the seat locking mechanic device will be affected, or the seat position adjusting rod might be accidentally pushed up, leading to a sudden movement of the seat that could make the driver lose control of the vehicle.
- Do not put the hand underneath the seat or close to any moving partd when adjusting the seat, or else the hand could be clamped and be hurt.

Adjustment of the driver's seat

Notes:

- Adjustments to the seat should be completed before driving the vehicle.
- After your seat has been adjusted to the correct position, push it backward to ensure that it is properly locked.

Downloaded from www.Manualslib.com manuals search engine

Back and forth adjustment to the driver's seat

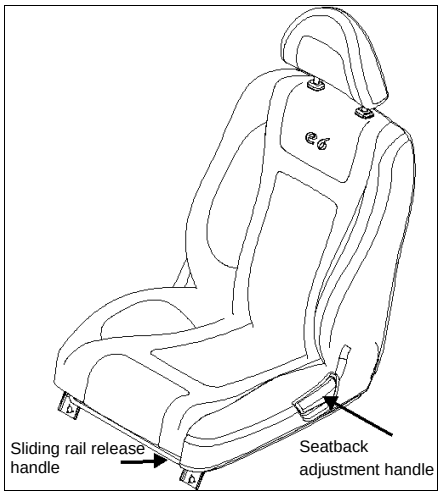

To move the seat forward or backward, just pull up the sliding track unlocking handle under the front edge of seat cushion (the position of the unlocking handle is shown in the above figure). After the seat is moved to the desired position, release the unlocking handle. Shake the seat to ensure the seat backrest is locked adequately.

Adjustment to the driver's seatback

To change the angle of the seat backrest, just pull up the backrest adjusting handle on the external side of seat bottom (the position of the adjusting handle is shown in the figure). After the backrest is moved to the desired position, release the adjusting handle and lock the backrest in the new position.

Driver seat lumbar support adjustment

To adjust the position of the lumbar support, just use the lumbar adjusting handwheel on the right of the seat. The support will rise if the handwheel is turned clockwise; it will move lower if the handwheel is turned counterclockwise.

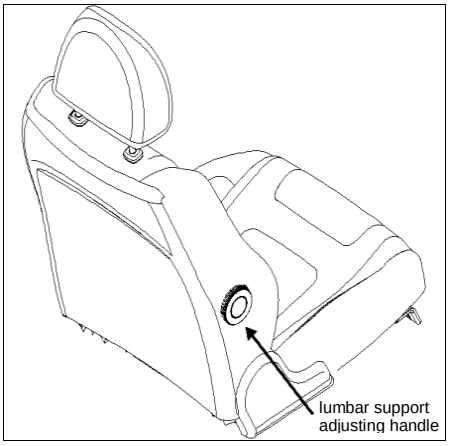

Adjustment of the front passenger seat

Back and forth adjustment to the front passenger seat

Downloaded from www.Manualslib.com manuals search engine

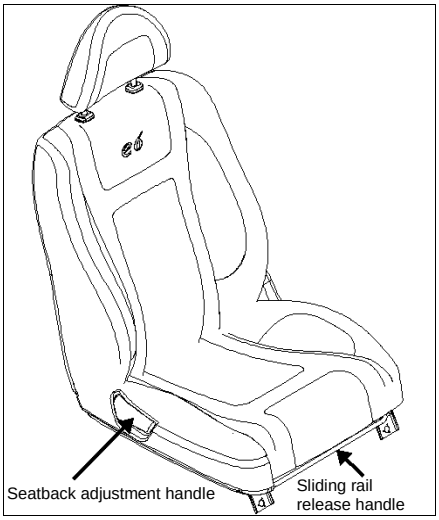

To move the seat forward or backward, just pull up the sliding track unlocking handle under the front edge of the seat cushion (the position of the unlocking handle is shown in the figure). After the seat is moved to the desired position, release the unlocking handle. Shake the seat to ensure the seat backrest is locked adequately.

Adjustment to the front passenger seatback

To change the angle of the seat backrest, just pull up the backrest adjusting handle on the external side of seat bottom (the position of the adjusting handle is shown in the figure). After the backrest is moved to the desired position, release the adjusting handle and lock the backrest in the new position.

Adjustment of back seats

The rear seats of the car are of the separate type., i.e. the seat cushion assembly is separate from the backrest assembly. When the retaining ring lock between two headrests on the backrest is pulled up, the left and right retaining rings will be opened. Press down the backrest to the seat cushion to save space inside the car.

Adjustment of seat headrest

For safety and comfort, the head protection device, i.e. headrest, should be well adjusted before driving.

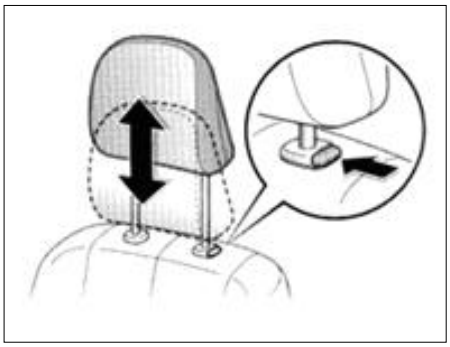

Upwards: hold the headrest and pull it upwards directly;

Downwards: press down the headrest adjusting button and press down the headrest.

After the headrest is adjusted to the appropriate position, seat headrest again to ensure it is locked in the new position.

Note: Its protection effect will be better when the headrest gets closer to the head.

Downloaded from www.Manualslib.com manuals search engine

Thus, it is not recommended that a pad is used on the seat backrest.

WARNING

- Adjust the height of headrest to make its center align with the upper part of the ears.
- After the headrest is adjusted, ensure it is locked in the new position.
- Don't drive cars without headrests.

Seat Belts

Two types of seat belts are provided for the car, i.e. the two-point seat belt and the three-point seat belt. The two-point seat belt is just one lap belt that strides over the hips of a passenger. It is mounted on the middle seat of the rear seats. The three-point seat belt consists of a shoulder belt and a lap belt as shown in the figure below:

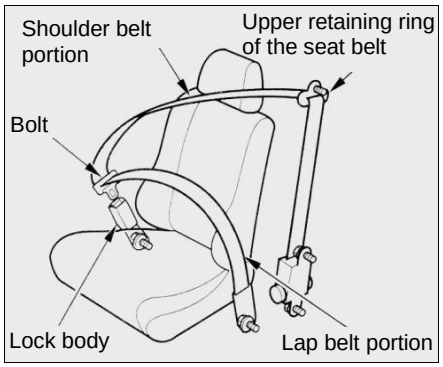

With this type of seat belt, there is a single belt over the shoulder, the front chest and the hip. It is mounted on the front seats and the left and right rear seats of the car.

To fasten the seat belt, the tongue should be inserted into the lock body. Pull the seat belt forcefully to ensure the tongue is locked firmly by the lock body.

To unfasten the seat belt, just press down the red button "PRESS" on the lock body.

Tips

- The seat belt is designed to support the human skeletal system. Therefore, when worn, it should ride over the front of pelvis as low as possible, i.e. it should ride over the pelvis, the front chest and the shoulder. The lap belt should avoid riding over the abdomen.
- When the seat belt is worn, the principle of comfort should be followed. However, it should be pulled as tight as possible, so the designed protection role can be brought into full play. A loose seat belt will greatly reduce the protection effect on the wearer.
- Distorted seat belts cannot be used.
- Each seat belt can only be used by one passenger. It is very dangerous to pass the seat belt over the child in the arms of a passenger.

BYD specially reminds drivers and passengers that seat belts should be used correctly at all times. Otherwise, possibility or seriousness of injury will be increased in accidents. The seat belts installed in the car are designed for adults. They are long enough if used correctly.

Notice for use of the seat belts by several special groups:

Downloaded from www.Manualslib.com manuals search engine

Children:

- Appropriate children's protection devices should be used until the children grow old enough to use seat belts.
- If a child has a large body and children's protection devices are not applicable, he/she should be seated on the back seat, and the seat belt should be used for protection. According to the statistics on accidents, it is safer for a child to sit on the back seat and use the seat belt correctly than to sit on the front seat.
- If a child has to sit on the front seat, the seat belt should be used correctly. Otherwise, in the event of an accident, strength generated by the rapid expansion of the air bag will cause serious injury and even death to the child.
- Children are not allowed to stand or kneel down on the front or back seats. In the event of emergency braking or collision, the unprotected children could be seriously injured and even killed. In addition, don't seat children on the legs of adults. No adequate protection will be provided either even when children are held in arms.

Pregnant women:

BYD suggests that the seat belt be used. Please refer to the relevant notices for details. The lap belt should be fastened tightly in the position lower than the hip rather than in the waist position.

Injured persons:

BYD suggests that the seat belt be used. Please consult the doctors for details based on the conditions of the injury.

WARNING

When the car is running, passengers should sit on the seats and wear the seat belts at all times. Otherwise, serious injury and even death are liable to be caused in the event of emergency braking or collision. Please follow the cautions below when the seat belts are used:

- A seat belt cannot be shared, even by two or more children together.
- Do not overly tilt the seatback. The seat belt can provide the maximum protection in event of front or rear collision only when the driver and passengers are seated upright and against the seatback. If the passenger leans on the seatback in an inclined position, the seat belt at the waist may slide over the hips and apply direct pressure on the abdomen, or the neck may hit the shoulder section of the seat belt. In event of a front collision accident, the more inclined the seat is, the higher chances the passenger will be hurt or even killed.
- Prevent the seat belt or the hardware from being damaged. Make sure they are not stuck or locked in the seats or the car doors.
- Inspect the seat belt system periodically. Check whether the seat belt parts are broken, loose or worn. The damaged part should be replaced. The seat belt system cannot be disassembled or modified.
- Keep the seat belts clean and dry. If they have to be cleaned, please use a neutral soap or the slightly warm water. Don't use the bleach, dye or lapping compound or let them contact the seat belts. Otherwise, the seat belts will be damaged seriously.
- If the seat belt system has been used in a serious collision accident, the seat belt assembly (including bolts) should be replaced, even if no remarkable damage is caused.

Downloaded from www.Manualslib.com manuals search engine

Use and adjustment of seat belts

Fasten seat belts

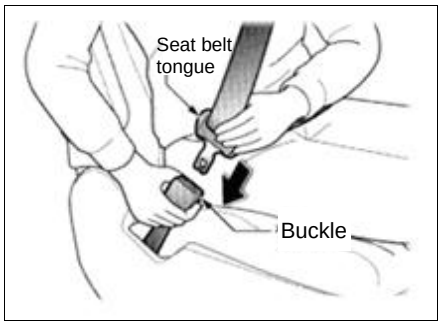

- Adjust the seat as necessary. Sit on the seat well and straight. Pull the seat belt out of the retractor and insert the tongue into the buckle to fasten the seat belt.
- A clicking sound will be made when the plug is locked in the buckle.
- The seat belt length will be adjusted automatically according to your body size and the seat position.
- In the event of emergency parking or collision, the retractor will lock the seat belt. If you incline forward too quickly, the seat belt will be locked as well. The seat belt can be extended by slow and smooth movement to allow you to act flexibly.
- When the seat belt is released, allow it to retract completely before pulling it out again.
- If the seat belt cannot be pulled out of the retractor, pull it forcefully and then release it. Then it can be pulled out smoothly from the retractor.

Adjustment of the position of the three-point seat belt

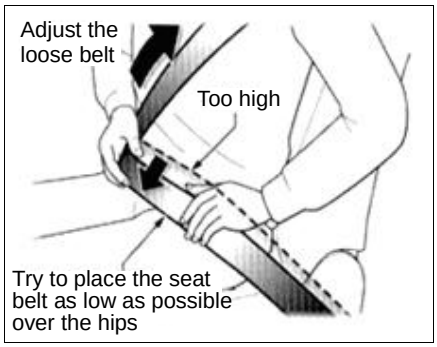

The position of the lap belt should be placed as low as possible over the hips rather than in the waist position. Then pull up the shoulder seat belt that passes the tongue plate and adjust it to the appropriate position.

WARNING

- If the lap belt is too high or too loose, serious injury and even death may be caused to the passenger due to the body moving in the event of vehicle collision or other accidents. Try to keep the lap belt on the hips.
- Don't place the shoulder belt under the arm.

Downloaded from www.Manualslib.com manuals search engine

Seat belt with the adjustable shoulder height device

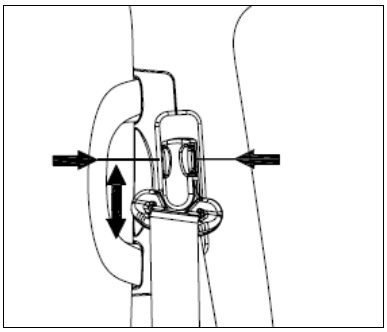

Adjust the shoulder height device to the position suitable for the body size.

Ascending: press down the lock-release button and slide the height device upward.

Descending: press down the lock-release button and slide the height device downward.

After adjustment is finished, ensure the height device is locked in the appropriate position.

Use and adjustment of two-point seat belts

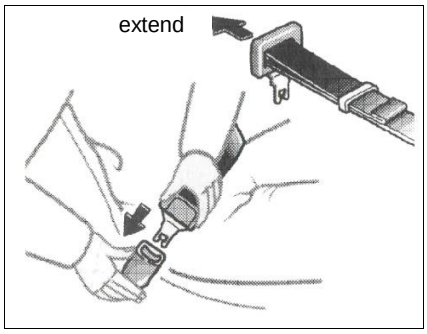

The two-point seat belt is used on the back middle seat. Sit straight on the seat, rest on the backrest, fasten the seat belt, and insert the tongue into the buckle.

A clicking sound will be made after the tongue is inserted into the buckle.

If the seat belt is not long enough, keep the plug and seat belt at a right angle and then pull the tongue.

Retract the excess part of seat belt, adjust the seat belt position and try to keep it on the hips.

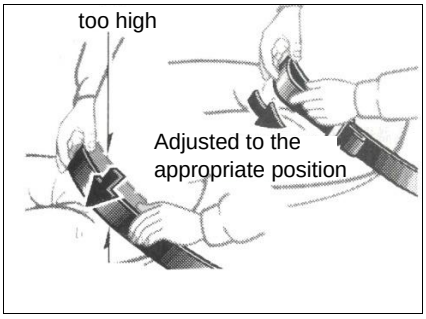

To shorten the seat belt, just pull the unfixed end of seat belt.

WARNING

A seat belt which is in the high position or is loose may cause severe injury to the passenger in a collision or other accident, as the lap belt may slide down to the waist. Try to keep the lap belt below the hips.

Downloaded from www.Manualslib.com manuals search engine

Airbags for driver and front passenger (if provided)

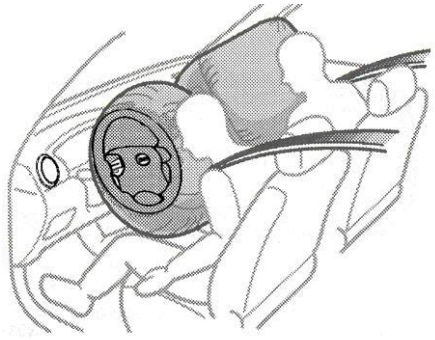

As a supplemental restraint system (SRS), airbag system is a supplement to seat belts. It can provide extra protection for heads and chests of the driver and passenger and reduce casualties in severe frontal crashes.

The airbag system cannot take the place of seat belts and is only a part of the whole passive safety protection system of the car. Note that the airbag system provides optimum protection performance only when working together with fastened seat belts. For the safety of yourself and your family, please pay special attention to the "Notice" and "Tips" in this section.

- Please keep the seat belt fastened while driving.
- Please keep sitting in correct posture so that the protection effect of the seat belt and airbag system can be taken into full play.
- Children shall be seated in rear seats.
- Do not dismount parts of the airbag without permission.

System components

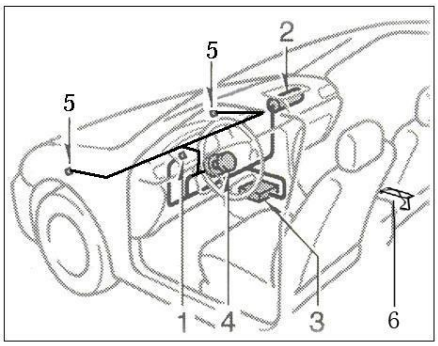

The SRS airbag system mainly consists of the following components and their positions are shown in the figure.

1. SRS warning light
2. Front passenger airbag components (airbag and inflation device)
3. Airbag ECU (electronic control unit)
4. Driver airbag components (airbag and inflation device)
5. Collision sensor
6. seatbelt alarm sensor (if equipped)

Downloaded from www.Manualslib.com manuals search engine

Airbag Warning Indicator

Airbag system is monitored by ECU and integrates self-diagnosis function. Its status is indicated by warning indicator on instrument panel.

- After the power switch is turned on every time, the airbag warning light will be on for about 5 s and then be off for over 5 s, which indicates that the system is normal.
- If the airbag is disabled by BYD service station, the warning indicator still functions as described in the above procedure, but it does not provides protection any more.

This warning indicator is intended to monitor airbag ECU, impact sensor, air inflation device, warning light, connecting wire and power supply. (For details, please refer to "Service Reminder Indicators and Warning Buzzer" in Section 1-1)

NOTE

If any of the following conditions, airbag system may have trouble:

- After the power switch is turned on, the warning indicator is not on.
- After the power switch is turned on, the warning indicator is still on after 5 s or flashes and is on again after it is off.
- After the power switch is turned off, the warning indicator is on again.
- The indicator turns on or flashes in driving.

Tips

If any trouble with airbag system, please send the car to BYD service station for check and repair. Or in case of an accident, the airbag system can not provide protection as designed.

Airbag Triggering Conditions

The airbag is designed to be triggered under the following conditions: severe frontal collision accidents and some special collision accidents.

In case of minor front collision, side collision, rear collision or roll-over, generally airbag system won't be triggered. In such accidents, the seat belt, if fastened, can protect the driver and passenger in the normal way.

The decisive factor for triggering the airbag system is the result of judgment through comprehensive intelligent comparison of the deceleration curve, which is produced in a collision and acquired by the electronic control unit (ECU), with the set value. If the signals, such as deceleration, produced and

Downloaded from www.Manualslib.com manuals search engine

detected in the collision is lower than the set reference value in the ECU, the airbag won't be triggered even though the car may have been severely deformed in the accident.

ECU setting of BYD airbag system has taken various common misuse and domestic road conditions into full consideration. However, as causes and conditions of crashes are widely variable, for the sake of your safety, please strictly abide by this manual to use the car correctly and avoid misuse; otherwise, the expected protection effect of the airbag cannot be ensured.

Airbag protection course

Once the airbag system is triggered, air will fill the airbags and the airbags will be inflated and fully filled rapidly in front of the drivers and passengers. The drivers and passengers will move into the deployed air bags, so their forward inertia will be neutralized and chances of injury to their heads, necks and chests will be greatly reduced.

The air bag which is developed specially will absorb energy to discharge air at a certain speed and thus reduce the action effect on the drivers and passengers and reduce the injury to them, after it is deployed and is impacted by the driver and passenger bodies. After the accident, the deployed airbag will discharge the air completely and will not the obscure the front view.

The airbag deployment can be finished in milliseconds, so as to provide extra protection for the driver and passengers in an accident.

A loud noise will be caused when the air bag is deployed. Generally, no injury will be caused (however, it is not excluded that tinnitus or temporary threshold shift may be caused, but it will be recovered quickly). Gas caused by the air bag effect may be have some odor and affect the appetite, but will not lead to poisoning of passengers. After the air bag acts, a small amount of smoke will be released, which is a normal event and doesn't indicate a fire in the car. Do not be panicked by it.

Conditions to Trigger Airbag

The car contacts the ground when going down the steep slope.

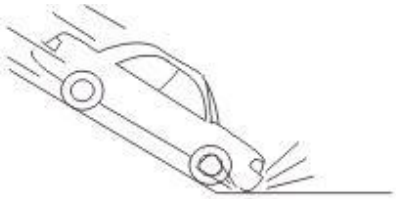

The car knocks into the deep cavity.

Downloaded from www.Manualslib.com manuals search engine

In the events where the car hits a projecting object on the road sides, a traffic island or stones on the road sides, etc.

- In event of the conditions described in the figures above, SRS airbag may be deployed.
- If the car has a severe impact from the bottom, SRS airbag may be deployed.
- In the following cases, the SRS airbag may not be deployed. Examples are shown in the figure below.

Downloaded from www.Manualslib.com manuals search engine

Conditions That Will Not Trigger Airbag Generally

The car crashes into a concrete column, a tree or other long and thin objects.

The car rolls laterally.

Other vehicles hit the sides of car.

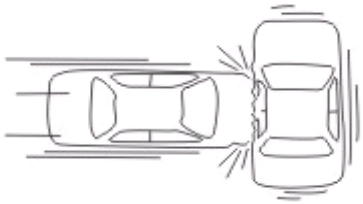

The car bumps into a truck.

Other vehicles hit the rear of the car.

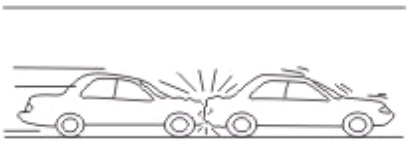

The car crashes into a wall with a non-head-on collision.

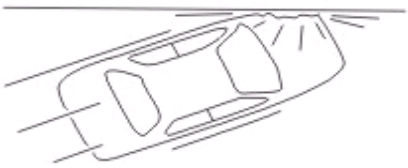

Downloaded from www.Manualslib.com manuals search engine

NOTE

- The airbag is designed to match certain vehicle models, any variation in suspension, tire size, bumper, chassis and other original equipments may adversely affect the function of the airbag. In addition, it is strictly prohibited to apply any airbag parts to other vehicle models; otherwise it might lead to airbag system failure, resulting in personal injuries.
- In driving, please wear the seat belt properly and maintain a correct sitting posture. In driving, if you do not wear the seat belt and lean forward or sit in an incorrect posture, airbag deployment may increase the risk of injuries in accidents.
- It's very important for the driver to maintain a distance of at least 25cm between the chest and the steering wheel, which allows maximum protection when the airbag system is triggered. That is to say, it's necessary to adjust the front seats and the headrest according to the figure of each occupant; in addition, the driver's arms shall only bend slightly, stretching nearly straight.
- Do not paste or cover the surface of the steering wheel lid or the surface near the airbag on the right of the instrument panel with any objects; and do not make any other decorative treatment at such places. There two places shall be cleaned only with dry or slightly wetted cloth, and it is prohibited to knocked at such places violently.
- It is prohibited to let child sit in the front seat without protection. If a collision triggers the air bag, the child passenger may get seriously injured or even killed.
- Don't leave any person, animal or object between the driver/front seat passenger and the air bag deployment range. It is extremely dangerous for an adult to hold a child on the lap.
- Any accessories, such as phone holder, cup holder and ashtray, shall not be installed on airbag decoration lid or within airbag deployment range. Otherwise in airbag deployment there may be increased risk of personal injury.
- Don't make any modification to any part of the airbag system, including labels.
- All operation to the airbag, including removal of airbag required for repairing other parts (such as detachment of the steering wheel), can only be made by BYD authorized service stations.
- The airbag system must be replaced in a BYD authorized service station within 15 years as of the date of delivery (manufacture date indicated in the quality certificate). If the airbag is replaced before that date, it must be recorded in the Repair Manual.
- The airbag can only provide protection in one accident. Once the air bag is triggered or damaged, the system must be replaced.
- Please hand over all material supplied with the car to the next owner when transferring the car.

  Please note that if the airbag is disabled, the material shall be handed over to the next owner as well.

Downloaded from www.Manualslib.com manuals search engine

- When disposing the car or the airbag system parts, please comply with applicable safety regulations and disposal procedures. BYD service stations have a good knowledge of these regulations and the detailed disposal procedure is also available on Repair Manual.
- The air bag system has strong resistance capacity against the surrounding electromagnetic interference. However, to avoid accidents, please do not use the vehicle beyond the electromagnetic environment specified by national laws.
- The airbag system of BYD e6A has taken various misuses and road conditions into full consideration. However, avoid serious impact to the bottom of the car and do not drive toughly in poor road conditions in order to prevent accidents.

Tips
If the air bag system needs to be disabled on special occasions, please have it done in a BYD authorized service station. Otherwise, it may cause serious injuries or death! To restore the protection function of the air bag, you should re-open the closed air bag as quickly as possible!

Disable Airbag

According to applicable regulations, airbags for the driver and the front passenger can only be disabled in the cases below:

- When it is impossible to keep a 25cm distance between the center of the steering wheel and the chest of the driver even though the driver seat is adjusted properly.
- When special equipment needs to be installed for the disabled within the range of the steering wheel.
- When adjustment of the front seat is required for specific reasons, the seat cannot be kept within the scope set by the manufacturer.

Disabling of the airbag system shall be conducted by a BYD authorized service station. After a certain airbag is disabled, the BYD authorized service station will paste a label on the corresponding position and make a record in Repair Manual.

Supplemental Information

- Please read this manual thoroughly. If you want to sell or dismantle the car, please notify the owner or the demolition unit that the car is equipped with airbag system, and recommend them to read the manual carefully.
- After the airbag system is deployed, please don't touch any part of the airbag module to avoid burning, and ask a BYD authorized service station to remove it. Once the air bag system has deployed, please install a new airbag system as soon as possible.

Downloaded from www.Manualslib.com manuals search engine

- The airbag system only functions in case of serious frontal collisions. It doesn't mean that the airbag system has problems when it doesn't respond to the collision, but improper maintenance or failure to repair faulty parts may affect the normal performance of the airbag system.

In the following cases, please contact the BYD authorized service stations immediately.

- SRS Airbag is inflated.
- The steering wheel pad cross-section or the front passenger airbag cover has been scratched, cracked or been damaged in other ways.

Downloaded from www.Manualslib.com manuals search engine

Chapter 1
Section 4

Steering Wheel and Rearview Mirror

Steering Wheel Adjustment 1-54
Inner Rearview Mirror 1-54
Outer Power Rearview Mirrors 1-56

Downloaded from www.Manualslib.com manuals search engine

Steering Wheel

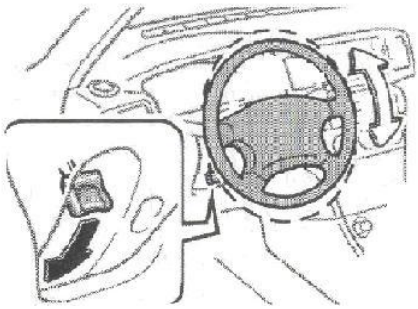

To change the angle of steering wheel, hold the steering wheel and press down the steering column adjustment handle, then adjust the steering wheel to the desired angle and finally release the adjustment handle to the original position.

Tips

- Do not adjust the steering wheelwhile driving. It may cause incorrect operation of the car and result in an accident.
- After adjustment, shake the steering wheel upward and downward to make sure it is locked firmly.

Inner rearview mirror

Tips

- Keep the inner and outer rearview mirrors clean, and adjust them to the optimum visual angle. The rearview mirrors should be well adjusted before driving.
- If the inner rearview mirror is frozen, don't scratch its surface. Instead, a spray deicer or other methods should be used first before adjusting.
- Do not adjust the rearview mirrors while driving. It may cause incorrect operation of the car and result in an accident.

Automatic anti-glare function (if provided)

a. In the AUTO mode, the sensor is used to detect the headlights of the vehicles behind and reduce the reflection light automatically.

b. Prevent the sensor from malfunction

Please don't touch or cover the sensor to ensure it works normally.

c. When the AUTO mode is applied, the indicator light will be on. The default mode of the anti-glare rearview mirror is AUTO.

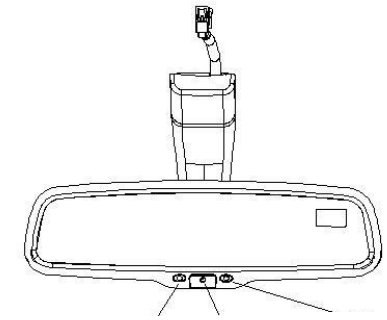

Downloaded from www.Manualslib.com manuals search engine

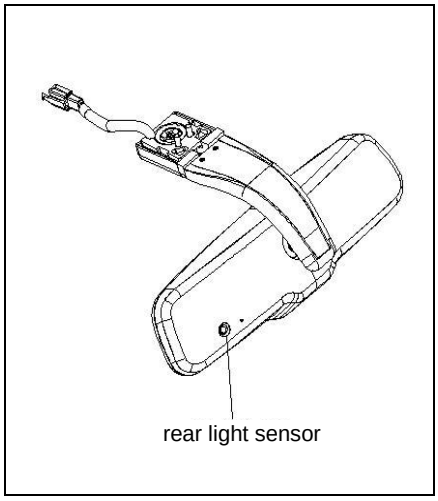

Direction display

An LCD is mounted on the right top of the inner rearview mirror (as shown in the figure) to indicate the present direction of vehicle heading. If the car is used for the first time or is just overhauled, the direction should be calibrated.

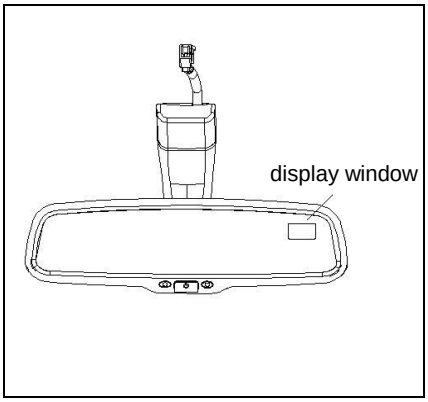

Inner rearview mirror direction calibration methods and steps

Please pay attention to the following three items before direction calibration:

The direction indicatedin the inner rearview mirror is the direction pointed to by the vehicle heading, and the display state is called the normal display state. However, in the state of calibration, the direction indicated in the inner rearview mirror just acts as the role of indication and doesn't represent the direction of vehicle heading. Then the state is called the calibration display state;

It is suggested that a clip is used as the calibration tool;

Before calibration, select an open & smooth square, a closed-loop block, or an annular driveway and identify the directions of east, south, west and north (as shown in the figure).

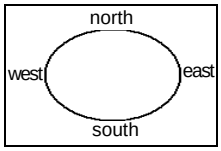

Calibration steps

Step 1: Start the car. Then a word will appear in the displaywindowon the top right of inner rearview mirror. The word may be any one of east, south, west, north, northwest, southwest, northeast, and southeast.

Step 2: select the starting position. It may be east, south, west or north.

Step 3: press the button "Enter" (as shown in the figure) on the back of inner rearview mirror with a clip to enter the direction calibration display state.

Downloaded from www.Manualslib.com manuals search engine

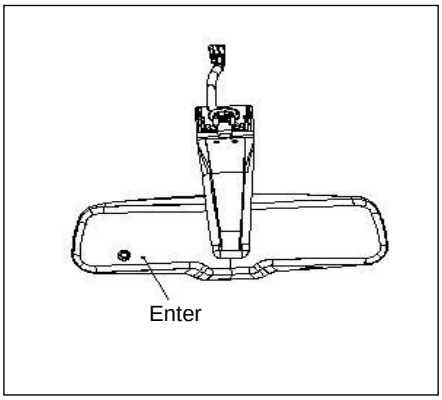

Then the word "North" will flash twice in the display window and then stop.

Step 4: drive the car back to the starting point in two rounds at a low speed (less than 8km/hr) (ensure the motor doesn't stall during driving. The car may drive clockwise or counterclockwise).

Step 5: adjust the vehicle heading to point exactly south. Press the button of "Enter". Then the word "South" will appear in the display window. Press the button "Enter" again. If the word "South" flashes twice and then stops, the calibration is finished, the display window will exit the calibration display state and enter the normal display state.

Otherwise, if the word "West" appears after the button "Enter" is pressed for the second time, the motor should be stopped first and the calibration should be started again from Step 1. If other words appear, the motor doesn't have to be stopped and the calibration can be restarted from Step 2.

Step 6: verification. After the calibration is finished, drive the car for one round to identify whether every direction is correct. If incorrect or inaccurate indication is found, re-start the calibration from Step 1.

Outer power rearview mirrors (if equipped)

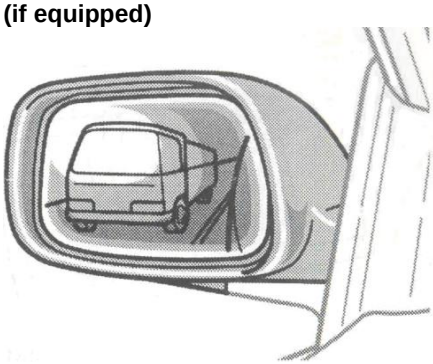

Adjust the outer rearview mirrors to an angle where you can just see the side view of the car.

Tips
Do not adjust rear-view mirror while driving. It may cause incorrect operation of the car and result in an accident.

Downloaded from www.Manualslib.com manuals search engine

Adjustment of outer power rearview mirrors

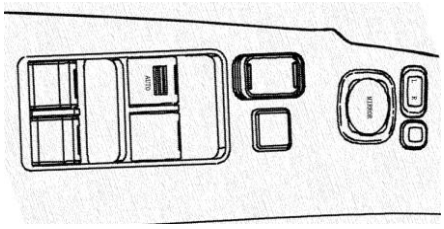

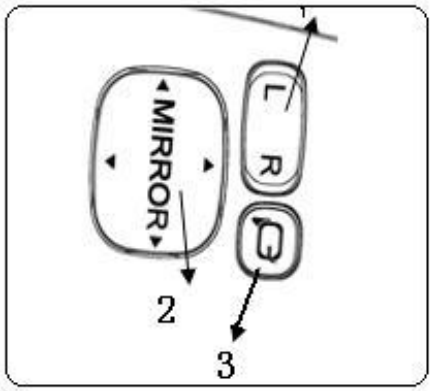

Adjust the outer rear-view mirrors with this switch.

1. Selection switch-it is used to select the outer rearview mirror to be adjusted. Press the switch to "L" (left) or "R" (right).
2. Control switch-it is used to adjust the outer rearview mirror. Press the switch according to the required direction.
3. Folding switch-it is used to control the folding of outer rearview mirrors.

When the key is in the position "ACC" or "ON", the outer rearview mirrors can be adjusted.

NOTE
If the rear-view mirror is frozen, do not manipulate the controller or scrape the surface of the rearview mirror. Use a spraying deicer to remove the ice on the surface of the rearview mirror.

Downloaded from www.Manualslib.com manuals search engine

Downloaded from www.Manualslib.com manuals search engine

Chapter 1
Section 5

Switch

Front headlight..... 1-60
Instrument switch..... 50
Left Combination Switch..... 1-62
Right Combination Switch..... 1-65
Wiper and Washer..... 1-65
Outer Power Rearview Mirror Switch..... 1-66
Window lifter switch for left front door..... 1-67

Downloaded from www.Manualslib.com manuals search engine

Front headlight

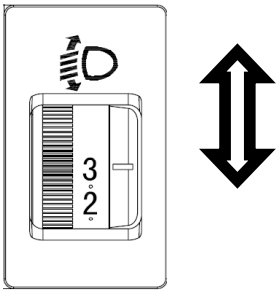

The switch is used to adjust the up/down beam angle of the front headlights. After the low beam lights are turned on, the switch can start to work.

6 gears are provided for the switch. When the switch is turned upward, the front headlight beam angle will move upward; when the switch is turned downward, the angle will move downward.

vehicle load conditions	Recommended gear
One person in the driver seat, and one each in the driver seat and the front passenger seat	Gear 0
fully seated	Gear 0.5
fully seated and cargo loaded	gear 0.5 or gear 1
driver plus trunk loaded with the maximum load for the rear axle	gear 2

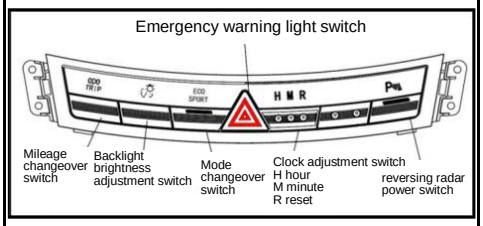

1. Mileage change over/reset (ODO/TRIP) switch

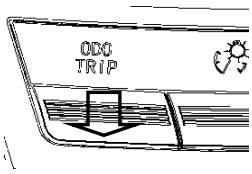

In the ACC gear, every time the switch of "ODO/TRIP" is pressed, the mileage display mode in the combination instrument will be changed once in the following order: odometer-TRIP A-TRIP B-odometer.

2. Backlight brightness adjustment switch

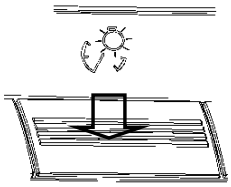

In the gear ON, the brightness of the vehicle backlight can be adjusted by pressing the button.

a) Daylight mode: before the combination switch is turned to the position , press down the backlight adjustment button to adjust the backlight brightness of the combination instrument. Five levels of brightness (1-5) are provided. Brightness can be adjusted from level 1 to level 5 in a circulating way.

Downloaded from www.Manualslib.com manuals search engine

b) Night mode: in the gear ACC or ON, when the combination switch is turned to the position , press down the backlight brightness adjustment switch to adjust the brightness of the combination instrument and the instrument board synchronously (including the air conditioner and stereo panel backlight, steering wheel button backlight, 1# switch backlight, and the front headlight adjustment switch backlight). Five levels of brightness are provided. Brightness can be adjusted form level 1 to level 5 in a circulating way.

3. Reversing radar power switch (optional)

When the switch is pressed down, the yellowish green indicator light on the switch will be on, the reversing radar power will be connected, the display alarm function will be started, and the vehicle shape indicator light on the instrument will be on; if the switch is pressed again, the switch will spring back, the indicator light will be off, the reversing radar power will be disconnected, the display alarm function will be disabled, and the vehicle shape indicator light will be off.

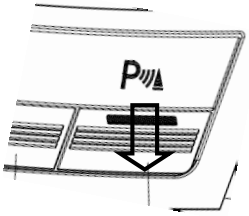

4. Emergency warning light switch

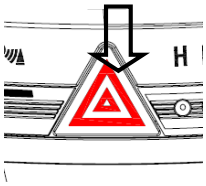

When something is wrong with the car, surrounding people may be endangered. In this event, press down the emergency alarm light switch. All steering lights of the vehicle will keep flashing at the frequency of 85 min-1 until the emergency alarm light switch is pressed again.

5. Clock adjustment switch

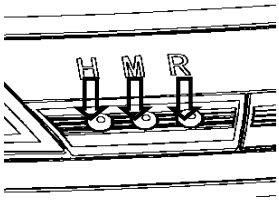

In gear ACC or ON:

Press H to adjust the hours displayed in the clock. The hour number will increase by 1 within 00-23 in a circulating way every time the button is pressed;

Press M to adjust the minutes displayed in the clock. The minute number will increase by 1 within 00-59 in a circulating way every time the button is pressed;

The hours can be set to the adjacent value rapidly by pressing R. For example, 1:06 is changed into 1:00, or 1:56 is changed into 2:00 (≤ 30,current hours will be selected; otherwise, the next hours will be selected).

Downloaded from www.Manualslib.com manuals search engine

6. Mode changeover switch

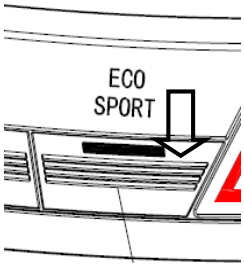

In gear ON, the car will enter SPORT MODE by pressing the button and the SPORT MODE indicator light will be on; when the switch is in the natural state, the car will be in the economy mode (ECO MODE).

Door light switch

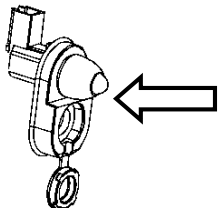

Each of the four car doors is equipped with a door light. When the door is opened, the internal circuit of switch will be connected and the door light will be on; when the door is closed, the internal circuit of switch will be disconnected and the door light will be off. Meanwhile, the state will be displayed in the instrument as well.

Left combination switch (light control handle assembly)

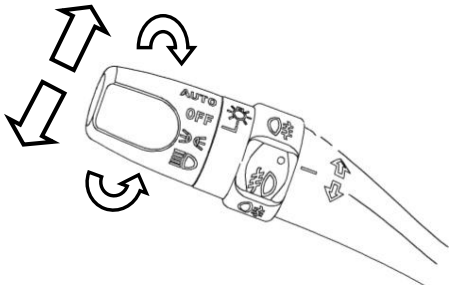

Turn the dimmer knob clockwise to "AUTO": running lights and front headlights will be on automatically according to the ambient illumination conditions.

Small light

Turn the dimmer knob anticlockwise to : running lights and all backlight lamps of vehicle will be on.

Low beam light

Turn the dimmer knob anticlockwise to : the low beam lights will be on.

High beam light

When the light handle is pushed forward from its original position (opposite to the side of steering wheel), the high beam lights will be on; when the light handle is pulled back, the lights will be off.

Headlight flashing (low beam headlight)

When the light handle is pulled back from its original position (close to the side of steering wheel), the high beam lights will be on; when the light handle is released, it will return to the original position and the lights will be off.

Downloaded from www.Manualslib.com manuals search engine

Front and Rear Fog Light

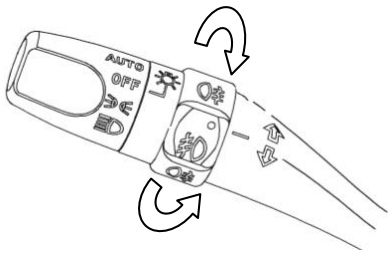

When the vehicle light control switch is in the position or , turn the fog light switch upward from the position OFF (●) to the position , the front fog lights will be on. When the switch is turned downward from the position back to the position OFF (●), the front fog lights will be off.

When the vehicle light control switch is in the position , turn the fog light switch downward from the position OFF (●), the rear fog lights will be on and the switch will return to the position ● automatically. When the switch is turned downward from the position OFF (●) again, the rear fog lights will be off.

After the front fog lights are on, if the rear fog lights have to be turned on as well, turn the fog light switch upward by a gear from the position , and the rear fog lights will be on (at this moment, the front fog lights are still on as well) and the fog light switch will return to the position automatically. If the fog light switch is turned upward by a gear again, the rear fog lights will be off (at this moment, the front fog lights are still on) and the fog light switch will return to the position automatically.

a. In the event that the rear fog lights are turned on and the front fog lights are off, the rear fog lights will be off when the front headlights are turned off;

b. When the car light control switch is turned to the position OFF, both the front and the rear fog lights will be off. They will be on again when the control switch is turned to the position again.

c. Turn the fog light switch downward to the position (●), and all the fog lights will be turned off.

When the combination switch is in the gear AUTO, the front fog light switch will be turned on; in this event, if the automatic control running lights are turned on, the front fog lights will be on; if the automatic control running lights are turned off, the front fog lights will be off.

Automatic light switch-off function

Initiation conditions for the automatic light switch-off function: when the front headlight switch is in the position or and the key is retreated from Gear II to Gear I, the function is initiated.

After the automatic light switch-off function is initiated, if the two front doors are closed, the turned-on front headlights, running lights and

Downloaded from www.Manualslib.com manuals search engine

front & rear fog lights and high beam lights will be switched off automatically in 10 s.

After the automatic light switch-off function is initiated, if either of the two front doors is opened, the turned-on front headlights, running lights and front & rear fog lights and high beam lights will be switched off automatically in 10 minutes.

After the lights are switched off automatically, if the light gear state is changed, the lights will be turned on according to the new state. In this event, if the automatic light switch-off function initiation conditions are still satisfied, the automatic light switch-off function will be started again.

After the lights are switched off automatically, if either of the front two doors is opened, the turned off lights will be turned on automatically.

Ending of the automatic light switch-off function: only after the key is engaged in Gear II, the automatic light switch-off function will be disabled and the light knobs will work normally.

With the function of automatic light switch-off, the lights can be switched off. Moreover, after the anti-theft function is initiated first and then be disabled, the turned off lights will be on again automatically. If the two front doors are not opened, the lights will be turned off automatically in 10 s. If the car doors are opened, the lights will be turned off automatically in 10 minutes.

Steering light switch

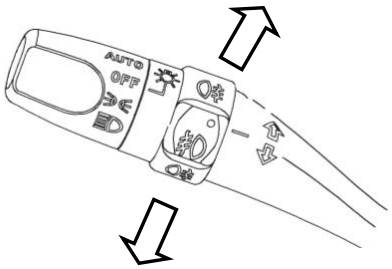

If the steering signal handle is pushed slightly upward and downward, the steering lights will flash. The handle will

recover automatically after release. If the handle is pushed to the uppermost or lowermost end, the steering lights will keep flashing even if it is released, but will be off automatically after turning is completely finished.

Downloaded from www.Manualslib.com manuals search engine

Right combination switch (wiper cleaning control handle assembly)

Configuration 1:

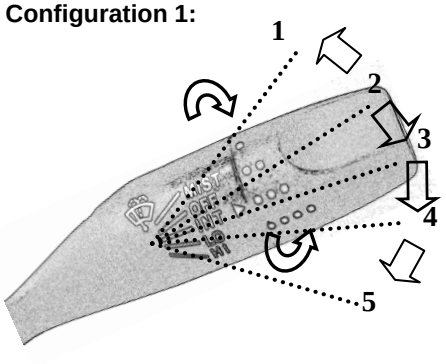

Front wiper

Position 1 (MIST): single wipe mode. The wiper handle is pushed upward from the position OFF. By pressing the handle once and then releasing it, the wiper will wipe once at low speed and then return to the original position. By holding the handle for longer (for over 0.5s), the wiper will start wiping at high speed until the handle is released.

Position 2 (OFF): stop wiping

Position 3(INT): intermittent gear. The gear is divided into four grades, whose wiping frequency is 7s, 5s, 3s and 1s respectively.

a. Turn the switch knob to gear ●, the wiper will start wiping at low speed every 7 s;

b. Turn the switch knob to gear ●●, the wiper will start wiping at low speed every 5 s;

c. Turn the switch knob to gear ●●●, the wiper will start wiping at low speed every 3 s;

d. Turn the switch knob to gear ●●●●, the wiper will start wiping at low speed every 1s.

Position 4 (LO): wiping at low speed.

Position 5 (HI): wiping at high speed.

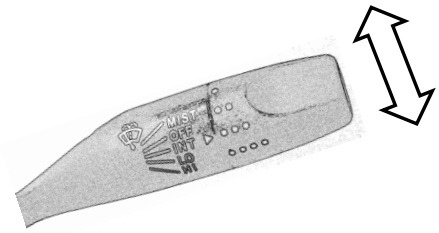

Front washer

If the wiper handle is pulled back (close to the side of steering wheel), the washer will just spray water and will not wipe water when the acting time is short (within 0.5s); when the acting time is long, the washer will keep spraying water and wiping water at low speed; moreover, it will wipe water automatically three times and return to the original position when the handle is released.

Downloaded from www.Manualslib.com manuals search engine

Configuration 2:

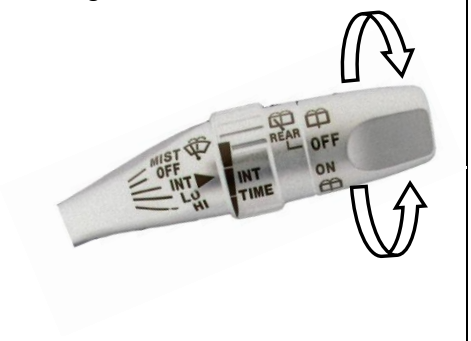

The methods of use for the front wiper and washer are the same as that for Configuration 1.

Rear Wiper and Washer

a. By turning the switch knob to the position "ON", the rear wiper will be started.

b. By turning the switch knob to the position "OFF", the rear wiper will be stopped.

c. If the switch knob is turned downward from "ON" to the position , or upward from "OFF" to the position , the rear wiper and the rear washer will be started at the same time.

Outer Power Rearview Mirror Switch

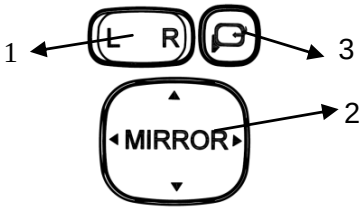

Adjust the outer rear-view mirrors with this switch.

1. Selection switch - it is used to select which rear-view mirror shall be adjusted.

   Press the switch to "L" (left) or "R" (right).

2. Control switch - it is used to adjust the outer rearview mirror.

   Press switch as per your demand.

3. Folding switch-it is used for folding outer rearview mirrors.

When the key is in the position "ACC" or "ON", the outer rearview mirrors can be adjusted.

NOTE

If the rear-view mirror is frozen, do not manipulate the controller or scrape the surface of the rearview mirror. Use a spraying deicer to remove the ice on the surface of the rearview mirror.

Power windows

The windows can be operated by switches on each door.

The key should be in the position "ON".

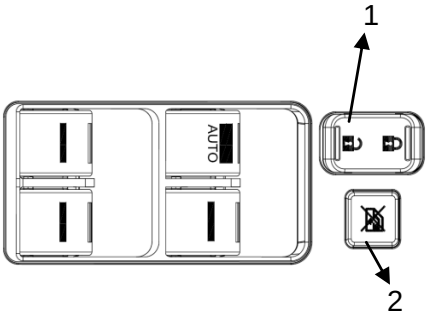

Downloaded from www.Manualslib.com manuals search engine

Window lifter switch for left front door

Operation of the windows on the driver's side

There are four buttons at the window control switch at the driver's side, which control the window lifters at the left front door, right front door, left rear door and right rear door respectively. The control has precedence over the window lifter switches in the right front door, the left rear door or the right rear door.

Lifting - pull up the switch gently and the window will rise by a distance corresponding to the pulling time. Release the switch and the window will stay at current position; or keep pulling and the window will completely close.

Lowering - push down the switch gently and the window will lower down by a distance corresponding to the pressing time. Release the switch and the window will stay at current position; or keep pressing and the window will completely open.

Automatic descending of driver's side window-press the switch (AUTO) completely and then release it. Then the window will be completely opened. If the window is to be stopped midway, just pull the switch upward slightly and then release it.

a. Door locking switches: Two such switches are located at the window lifter switches at the left front door and right front door respectively. They are used to lock or unlock all the vehicle doors. The switch has two positions; press the front part of the switch to lock the doors, or press the rear part to unlock the doors.

b. Windows main switch: It is used to enable or disable the window lifter switches at the right front door, the left rear door and the right rear door. When this switch is pressed, the window lifter switches at the right front door, the left rear door and the right rear door will be disabled.

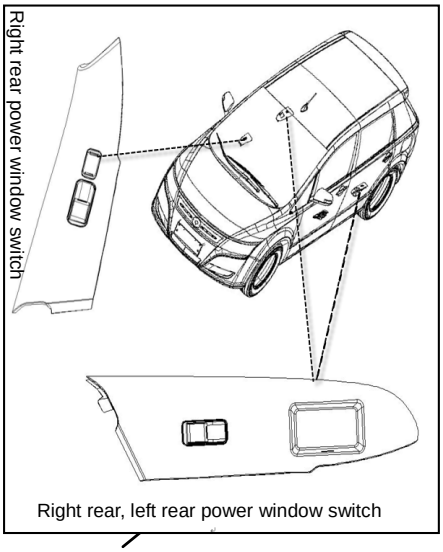

Right rear, left rear power window switch

Downloaded from www.Manualslib.com manuals search engine

Operation of the windows on passenger's side

The windows on the passenger's side can be controlled either by the switches at the respective doors or by the switch on the driver's door.

Open: Press the switch.

Close: Pull up the switch.

The windows will not be controlled by the switches at passenger's side if the window locking switch at the driver's side is pressed.

Tips
● Please be aware of safety as the power windows are not provided with anti-clamping feature. ● Please use the windows locking switch when there is a child in the vehicle to prevent any accidental operation of the power window switch.

Downloaded from www.Manualslib.com manuals search engine

Chapter 1
Section 6

Automobile Multimedia System

Use of On-vehicle CD 1-70

Downloaded from www.Manualslib.com manuals search engine

Use of in-vehicle CD

Function and Characteristics

a. Play CD and mp3, etc

b. AM/FM radio is provided.

c. anti-shake mechanism

d. Maximum output power 45W×4

Major technical parameters

Item	Parameter	Unit
Working Voltage	DC: 11~16	V
Maximum output power	45Wx4	W
Maximum Working Current	10	A
FM Frequency Range	87.5~108.0	MHZ
AM Frequency Range	522~1620	KHZ

Downloaded from www.Manualslib.com manuals search engine

Description of the in-vehicle CD panel function

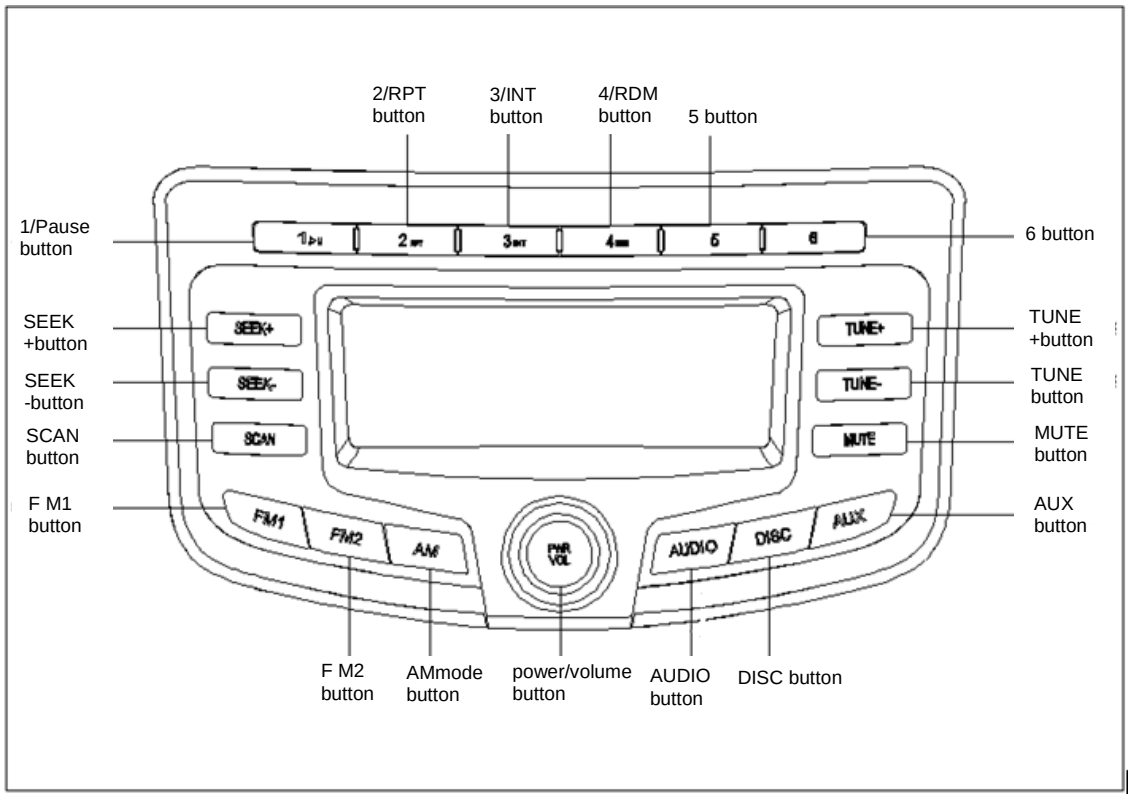

Downloaded from www.Manualslib.com manuals search engine

Instruction for use of the in-vehicle CD panel

"Power/Volume Switch" knob: the volume can be adjusted by turning the knob; the player can be turned on/off by pressing the knob.

"SEEK+" button: in the CD mode, press the button shortly to select the next program and press the button long to forward fast; in the radio mode, press the button shortly to search for a strong certain radio channel in the direction of higher frequencies automatically.

"SEEK-" button: in the CD mode, press the button shortly to select the last program and press the button long to rewind fast; in the radio mode, press the button shortly to search a strong certain radio channel in the direction of lower frequencies automatically.

"SCAN" button: in the radio mode, press the button shortly to scan the saved radio channels quickly; press the button long to search channels automatically, and after the search is finished, the automatically-locked frequency bands will be saved in the preset buttons 1-6.

"FM1" button: press the button to switch to the "FM1" radio function in all modes.

"FM2" button: press the button to switch to the "FM2" radio function in all modes.

"AM" button: press the button to switch to the "AM" radio function in all modes.

"AUDIO" button: press the button to switch to sound effect setting. The setting options are treble, bass, fader and balance.

"DISC" button: press the button to switch to the CD mode in all modes. "NO DISC" will be displayed under the event of no disc being inserted.

"AUX" button: press the button to switch to the AUX mode in all modes and "NO AUX" will be displayed if there is no data connection cable. Insert one end of the audio cable into the output end of the external audio equipment (e.g. MP3), and insert the other end into the AUX input hole. Turn on the CD player power, press the button AUX, and ensure the external audio equipment is set to ON. Then music programs in the external audio equipment can be played by the on-vehicle CD player. Under other playing modes, press the button AUX to switch to the playing mode of external audio equipment automatically. In this event, if there is no external audio equipment, the player will return to the previous playing mode before the button was pressed. When the CD player is on, if the external audio equipment is inserted, the system will switch to the playing mode of external audio equipment.

"TUNE+" button: under the radio mode, press the button shortly to search the next frequency (higher frequencies) manually; by holding the button, the frequency will get higher continuously and quickly; when the button is released, it will stop in the current position.

Downloaded from www.Manualslib.com manuals search engine

"TUNE-" button: under the radio mode, press the button shortly to search the next frequency (lower frequencies) manually; by holding the button, the frequency will get lower continuously and quickly; when the button is released, it will stop in the current position.

"MUTE" button: by pressing the button, the player will be mute in all modes.

"1/ ▷|| " button:

CD mode: Disc Play/Pause

Radio mode: press the button shortly to select radio channel 1; hold the button to save the present frequency in channel 1.

"2/RPT" button:

CD mode: repeat playing a track.

Radio mode: press the button shortly to select radio channel 2; hold the button to save the present frequency in channel 2.

"3/INT" button:

CD mode: track scanning; every track will be played for 10s from the beginning in sequence.

Radio mode: press the button shortly to select radio channel 3; hold the button to save the present frequency in channel 3.

"4/RDM" button:

CD mode: tracks are played randomly

Radio mode: press the button shortly to select radio channel 4; hold the button to save the present frequency in channel 4.

"5" button:

Radio mode: press the button shortly to select radio channel 5; hold the button to save the present frequency in channel 5.

"6" button:

Radio mode: press the button shortly to select radio channel 6; hold the button to save the present frequency in channel.

Instructions for Multimedia system operation

NOTE

CD mode: the CD plays.

Radio mode: the radio plays.

CD ejection button: as the CD mainframe is independent from the control panel; the ejection button is installed in the mainframe; only one CD can be inserted into the player; the ejection button controls the CD escape, but cannot control its input, so the CD has to be inserted manually.

NOTE

To ensure the multimedia system is operated correctly:

a. Take care not to spill drink over the multimedia system;
b. Don't insert anything other than CD into the disc compartment;
c. The playing speaker will be affected by a cellphone being used, which is normal; normal use of the speaker will not be affected.

Downloaded from www.Manualslib.com manuals search engine

Protect your CDplayer

- Only 12 cm CDsare applicable to the CDplayer.
- The excessive high temperature will lead to abnormal function of the CD player. In the summer, please turn on the air conditioner when the CD player is working.
- If the CD player vibrates severely due to driving on a rough road, the disc may skip.
- If the running of CD player seems normal but no sound comes out because of moisture, please allow the CD player to dry and then play it properly.

WARNING

CD optical head belongs to the laser product category, which may produce radiation. Ensure the the CD player is operated properly.

- Use only CD shown in the above pictures. The following CD cannot be played.

  CD that are copy protected
  CD-R
  CD-RW
  CD-ROM

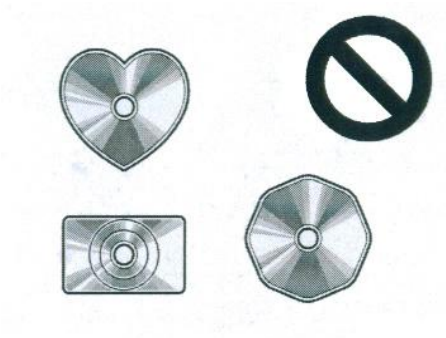

Uniquely-shaped discs

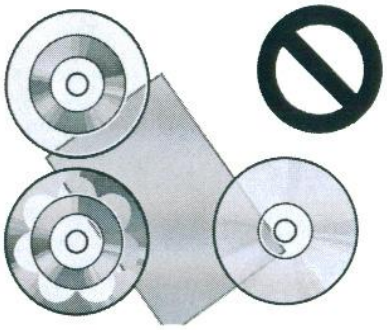

Transparent or translucent discs

Downloaded from www.Manualslib.com manuals search engine

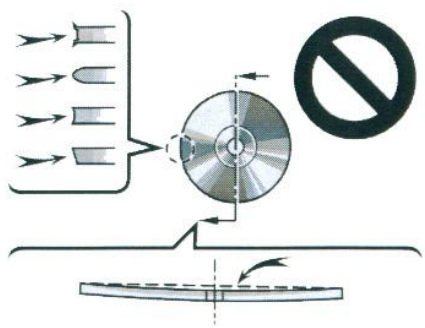

Discs of inferior quality

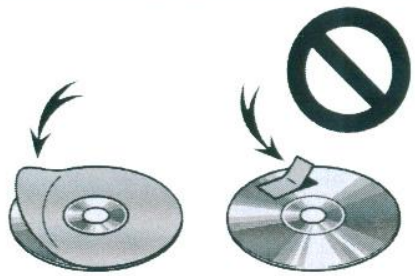

Discs with labels

NOTICE

Do not use uniquely-shaped, transparent, translucent, inferior quality or labelled discs as shown in the above four illustrations, since they may damage the CD player or be ejected by CD player.

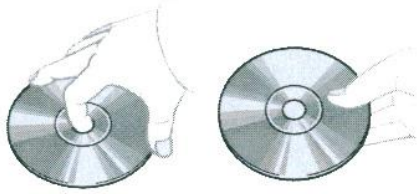

Correct Wrong

- Be careful when holding CD, especially when putting it in the CD player. Please hold the edge of CD, and do not leave fingerprints on the CD, especially the CD side stored with data.

- If the disc is dirty, broken or or otherwise defective, it may lead to skipping or playing a segment repeatedly.
- When not using a disc, please take the disc out of the CD player and store it in a CD box. Keep the discs away from oil, thermal sources and direct sunlight.

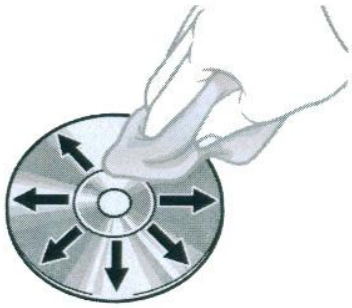

To clean CD: dampen a dry, soft cloth in water and wipe the CD disc surface carefully. And then wipe it clean with another dry, soft cloth. Do not use alcohol or other cleaners.

Downloaded from www.Manualslib.com manuals search engine

Trouble shooting guide for on-board CD player

	Problem symptoms	Cause analysis	Actions
a	No power supply or no sound	a. The power switch is OFF	a. Please switch power supply to ACC or ON
b	The disc has been loaded, but no sound comes	a. The disc is put on the reverse side b. The disc is dirty or severely scratched.	a. Put it in the correct direction b. Clean it or replace with a new one
c	skipping because of vibration	a. The player isn't installed securely b. The disc is dirty or scratched	a. Install the player securely with fixing parts b. Clean the disc or replace with a new one
d	Preset radio stations disappear and cannot be stored	The battery cable is connected incorrectly	Connect the battery cable to a live terminal
e	FM stereo and mono radio broadcasts received very noisily	Radio station is too far or the signal is too weak	Select a station with clear signals

Downloaded from www.Manualslib.com manuals search engine

Audio/video remote control

Steering switch

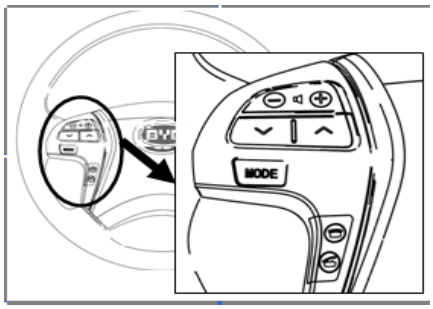

Audio/video systems can be remote controlled via the switches on the steering wheel.

For the functions of these switches, as described below.

a. Volume control switch

b. "∨" and "∧" switches

c. "MODE" switch

d. Telephone switch (if equipped)

a. Volume control switch

Press "+" side to increase volume. If you press and hold it, you increase volume continuously.

Press "-" side to decrease volume. If you press and hold it, you decrease volume continuously.

b. "∨" and "∧" switches

Radio mode

Select Preset stations:
Quickly press and release "∨" or "∧" switch to select next or above preset station.

Radio scanning

Press and hold "∨" or "∧" switch to scan a station at close frequency and stop when receiving clear signals. If you want to scan another station, please repeat above operation. In scanning mode, you may press "∨" or "∧" switch to cancel this mode.

CD/DVD player mode

Select a desired track/program:

Quickly press and release "∨" or "∧" switch.

Select the next track/above track.

Vehicle digital television mode (if equipped)

Select Preset channels:

Quickly press and release "∨" or "∧" switch to select next or previous preset channel to play.

Television stations scanning (if equipped)

Press and hold "∨" or "∧" switch to scan a station at close frequency and stop when receiving clear signals. If you want to scan another station, please repeat above operation.

c. "MODE" switch

Once the "MODE" switch is pressed, the audio mode will change.

To turn audio/video system on, press the "MODE" switch.

To turn audio/video system off, press and hold the "MODE" switch.

Downloaded from www.Manualslib.com manuals search engine

Downloaded from www.Manualslib.com manuals search engine

Chapter 1
Section 7

Air Conditioning System

Automatic air-conditioning control panel..... 1-80
Automatic air conditioning information display..... 1-84
Operation Gist 1-85
Side air vent..... 1-88
Check and replace air filter 1-88

Downloaded from www.Manualslib.com manuals search engine

-- Automatic air-conditioning control panel

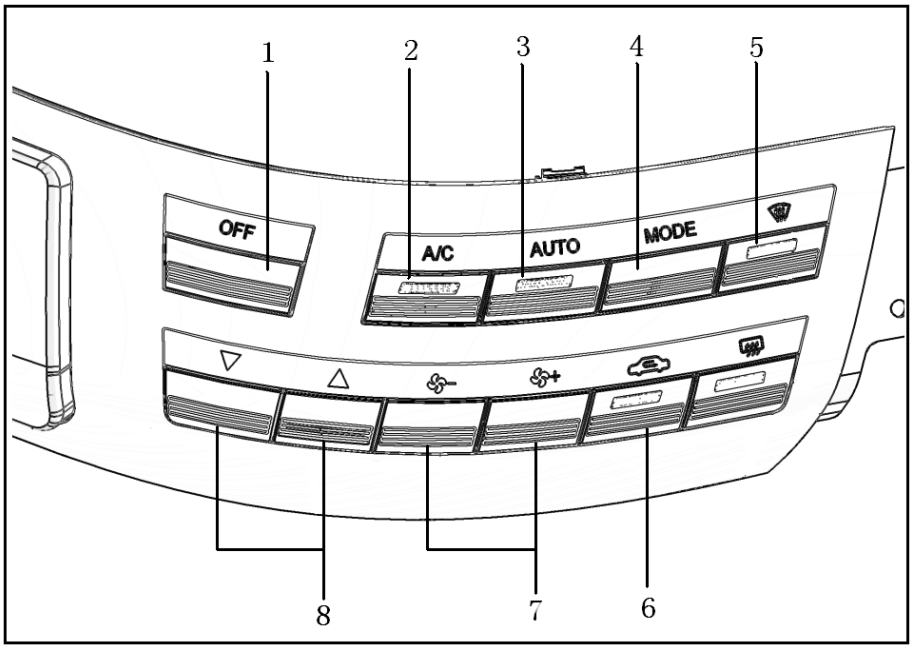

1. "OFF" button
2. "A/C" button
3. "AUTO" button
4. "MODE" button
5. Front defrost button
6. Air suction mode selection button
7. Fan speed control button
8. Temperature control button

Downloaded from www.Manualslib.com manuals search engine

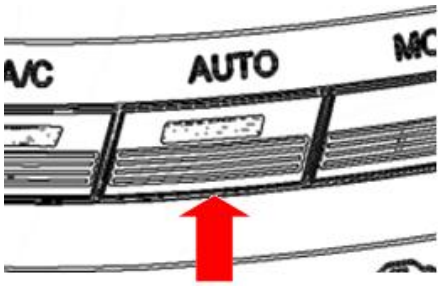

"AUTO" button

Press "AUTO" button to make the air conditioning operate automatically. If the indicator lights, it shows that the automatic operation mode is functioning.

The air conditioning system will choose optimal fan speed, air supply mode and operation time according to the set temperature under this mode.

If a manual control button is pressed under automatic operation mode, the corresponding status will be set, and other functions will still be adjusted automatically.

Press "OFF" button to turn air conditioning system off.

- When the temperature is set to L0 position or HI position, the air conditioning system will run in cooling mode or heating mode, and cannot control the climate in the vehicle.

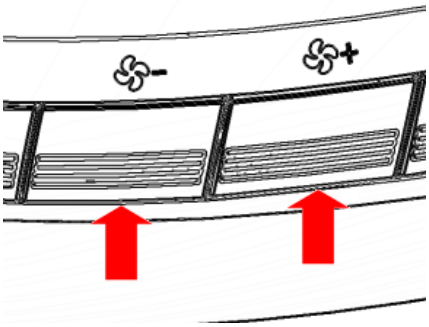

Fan speed control button

Press a proper fan speed control button to set the fan at the desired speed. the higher the fan speed is, the more air flows in. Press "+" (up) or "-" (down) button to adjust the fan speed.

Press "OFF" button to turn the fan off.

To defrost or defog inside the windshield, please set the fan at high speed.

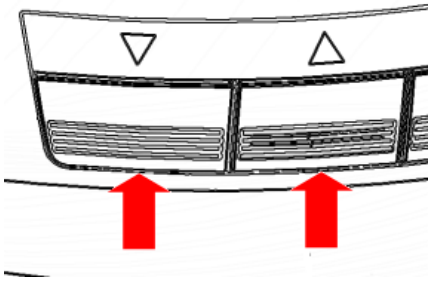

Temperature control button

To adjust the temperature in the cab.

Press "△" to increase the temperature. Press "▽" to decrease the temperature.

When adjusting to the lowest temperature, it displays "L0". When adjusting to the warmest temperature, it displays "HI".

Downloaded from www.Manualslib.com manuals search engine

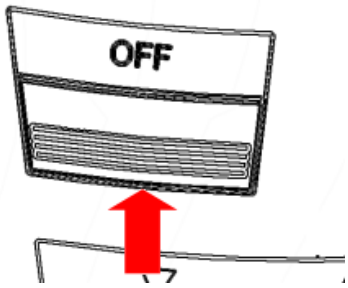

"OFF" button

Press "OFF" button to turn the air conditioning system off.

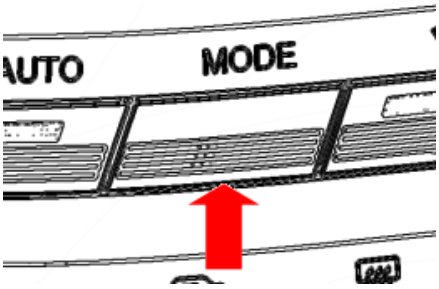

"MODE" knob

Press the air supply selection button to choose air supply mode.

Do not operate the air supply selection button unless you want to select another air supply mode during automatic operation.

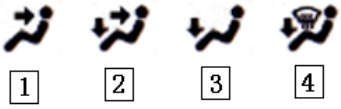

1. - Air mainly flows to the upper body.

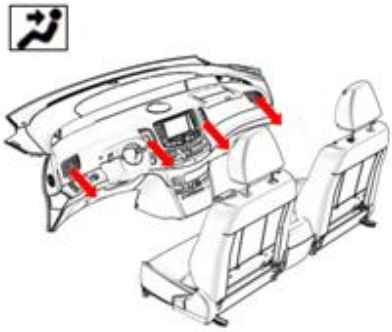

2. - Air mainly flows to the upper body and footwells.

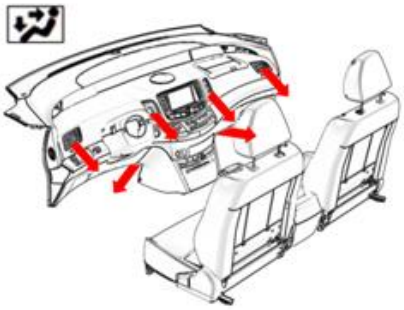

3. - Air mainly flows to the footwells.

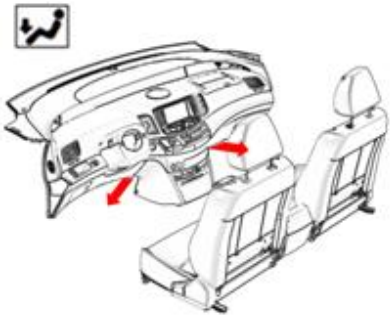

Downloaded from www.Manualslib.com manuals search engine

4. - Air mainly flows to the footwells and front windshield.

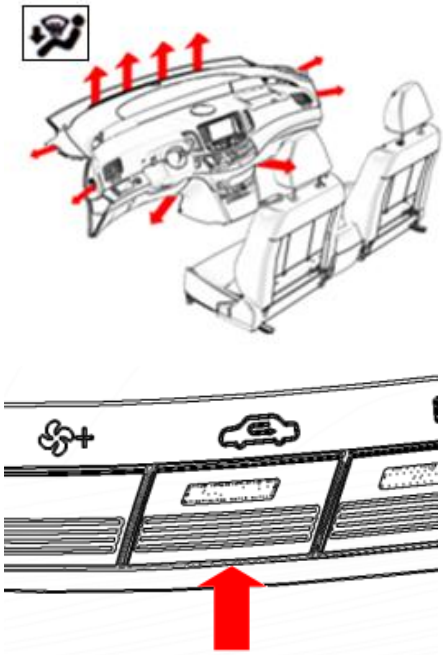

Air suction mode selection button

a Internal recirculation - to recycle the air in the car.

b External recirculation - to absorb the air outside into the system.

When you press this button, the indicator (green) is on and the air suction mode is internal recirculation; press the button again, the indicator is off and the air suction mode is external recirculation.

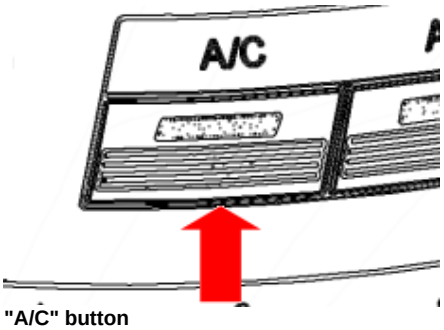

"A/C" button

Press the "A/C" button to switch on the air conditioner, then the "A/C" button indicator will turn on. Press it again to switch off the air conditioner.

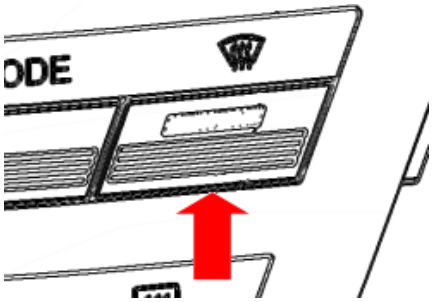

Front defrost button

The indicator will turn on when the button is pressed, and the air will mainly flow out from the windshield vents. When pressed again, the indicator will go off and the air supply mode will return to the last mode.

Press this button to enable the defrost and defog function and the air conditioner will run as well. That is to say, whether or not the "A/C" button is pressed, the "A/C" indicator will come on. Thus, the forward view of a driver will become clearer quickly.

Downloaded from www.Manualslib.com manuals search engine

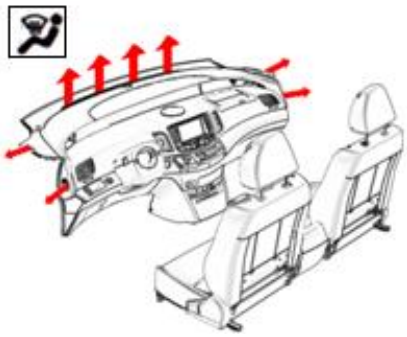

-- Automatic air conditioning information display (If equipped)

a. For Advanced model (there is pull-down menu for the air conditioner displayed on the DVD screen): when operating the air conditioner, the pull-down menu, which contains the information of the air conditioner set temperature, outlet mode and air volume, will appear at the top of the DVD display (if no actions for a while, the menu will be retracted automatically).

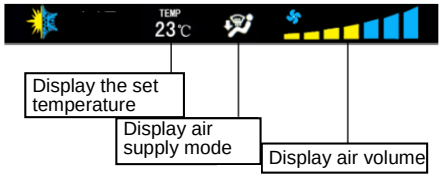

b. For standard model (the information of air conditioner displays on the CD player screen); when operating the air conditioner, the information including A/C status, AUTO status, air volume, set temperature, air supply mode and suction mode will be shown on the bottom of the CD display.

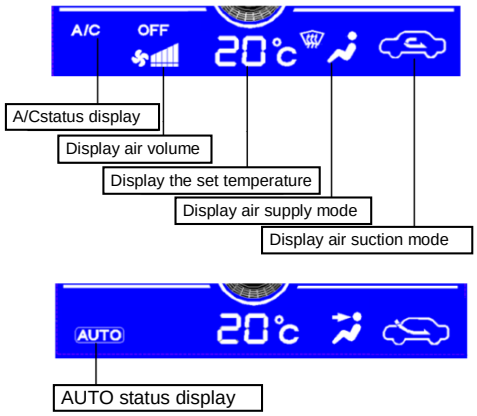

Downloaded from www.Manualslib.com manuals search engine

-- Operation Gist

- To cool down the vehicle after being parked under the hot sunlight, open the windows and drive for several minutes to let the hot air flow out, and then raise the windows to cool using the air conditioner in a short time.
- Confirm that the air suction grid in the front of windshield is not blocked (such as leaves or snow).
- When it is moist, do not cool the windshield. Otherwise, condensation may fog on the windshield due to the temperature difference between the inside and outside of the vehicle.
- You must keep it ventilated under the front seat so as to make the air fully recycled in the car.
- In cold weather, you must set the rotating speed of blower to a high speed for one minute so as to clear the snow or moisture in the air inlet channel. By doing so, you can reduce fogging on the windows.
- When following other vehicles on a dusty road or driving in windy and dusty conditions, it is recommended to select the internal air recirculation mode temporarily. Thus the external air suctions are closed to prevent external air and dust entering the vehicle as well.

Heating

To get best effect, set the panel of air conditioner to the following:

Automatic operation **--**

Press "AUTO" button
Temperature -- set to the desired temperature
Air suction mode -- external recirculation (ambient air)
Air conditioner -- OFF

Manual operation --

Fan speed -- set to the desired fan speed
Temperature -- set to high temperature
Air suction mode -- external recirculation (ambient air)
Air supply mode --
Air conditioner -- OFF

- To speed warm up, enable internal air recirculation for a few minutes. To prevent fog on the windows, enable external air recirculation after the car has warmed up.
- Press the "A/C" button down when warming up, it may minimize the moisture in air flow.
- To warm up when performing defrost or defog operation for windshield, you may choose " " mode.

Downloaded from www.Manualslib.com manuals search engine

Air Conditioning System

To get best effect, set the panel of the air conditioner to the following:

Automatic operation **--**

Press "AUTO" button
Temperature -- set to the desired temperature
Air suction mode -- external recirculation (ambient air)
Air conditioner -- ON

Manual operation **--**

Fan speed -- set to the desired fan speed
Temperature -- set to low temperature
Air suction mode -- external recirculation (ambient air)
Air supply mode --
Air conditioner -- ON

- To speed cooling, turn the temperature control knob to LO position, and enable internal air recirculation for a few minutes.

Ventilation

To get best effect, set the panel of the air conditioner to the following:

Automatic operation **--**

Press "AUTO" button
Temperature -- set to low temperature
Air suction mode -- external recirculation (ambient air)
Air conditioner -- OFF

Manual operation **--**

Fan speed -- set to the desired fan speed
Temperature -- set to low temperature
Air suction mode -- external recirculation (ambient air)
Air supply mode --
Air conditioner -- OFF

Defog & defrost

-- Inside of windshield

To get best effect, set the panel of the air conditioner to the following:

Automatic operation --

Temperature -- set to high temperature (heating);
set to low temperature (cooling)
Air suction mode -- external recirculation (ambient air)
Air supply mode --

Manual operation --

Fan speed -- set to the desired fan speed
Temperature -- set to high temperature (heating);
set to low temperature (cooling)
Air flow mode -- external recirculation (ambient air)
Air supply mode --

Press " " button down, and the air flow will be supplied from windshield vents.

To keep a clear forward view, you may activate defog function.

Downloaded from www.Manualslib.com manuals search engine

Press " " button to enable the defog function and the air conditioner will run as well. That is to say, whether or not the "A/C" button is pressed, the "A/C" indicator will turn on. Thus, the forward view of a driver will become clearer quickly.

Press " " button again, the air supply mode will return to the previous mode.

- When it is moist, do not cool the windshield. Otherwise, more condensation fog may form on the windshield due to the temperature difference between the inside and outside of the vehicle.

-- Outside of windshield

To get best effect, set the panel of the air conditioner to the following:

Automatic operation **--**

Temperature -- set to high temperature Air flow mode -- external recirculation (ambient air) Air supply mode --

Manual operation -

Fan speed -- set to the desired fan speed Temperature -- set to high temperature Air flow mode -- external recirculation (ambient air) Air supply mode --

Press " " button down, and the air flow will be supplied from windshield vents.

To keep a clear forward view, you may activate defog function.

Press " " button to enable the defog function and the air conditioner will run as well. That is to say, whether or not the "A/C" button is pressed, the "A/C" indicator will turn on. Thus, the forward view of a driver will become clearer quickly.

Press " " button again, the air supply mode will return to the previous mode.

- To warm up when performing defrost or defog operation for windshield, you may choose

" " the air supply mode.

Downloaded from www.Manualslib.com manuals search engine

-- Side air vent

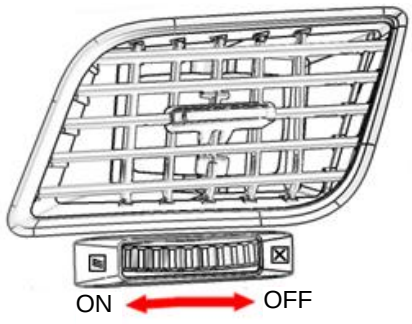

► Left side air vent

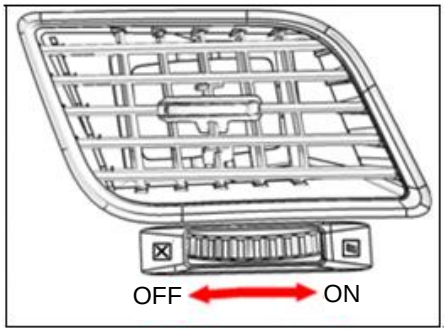

► Right side air vent

If you are not satisfied with the air flow, check the side and central vents, which may be opened or closed as shown in the figure.

-- Check and replace air filter

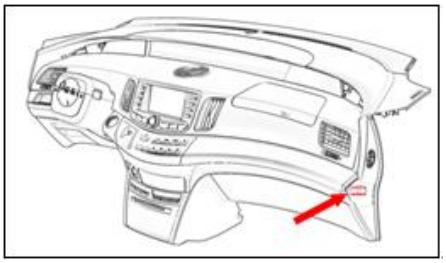

The label for air filter shown in the figure is located on the right side of the instrument panel. It indicates that there is an air filter installed.

Air filter can prevent dust getting into the vehicle from the vents of air conditioning system.

Downloaded from www.Manualslib.com manuals search engine

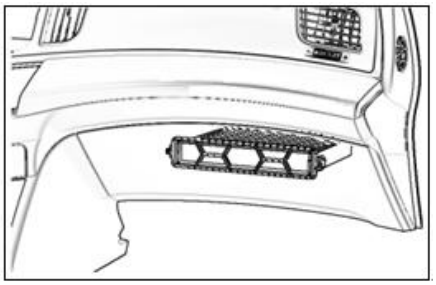

The air filter is located behind the lower protector RH.

The air filter may be clogged after an extended period of operation time. If the air flow from air conditioner decreases suddenly, or the window glass fogs easily during external air recirculation air suction mode, replace the air filter.

To maintain the efficiency of air conditioner, you must check and replace air filter according to the maintenance program. (refer to "BYD Maintenance Program")

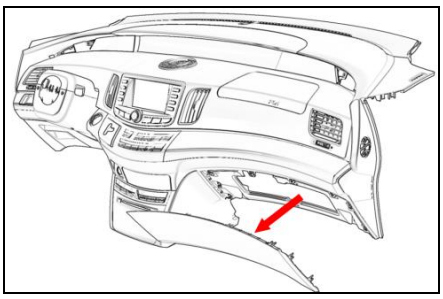

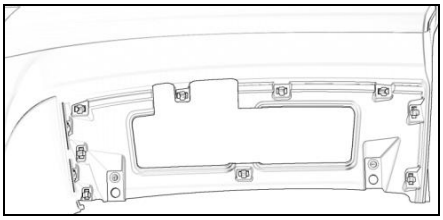

a. Remove the instrument panel lower protector RH (9 clamps used to assembly lower protector RH and instrument panel).

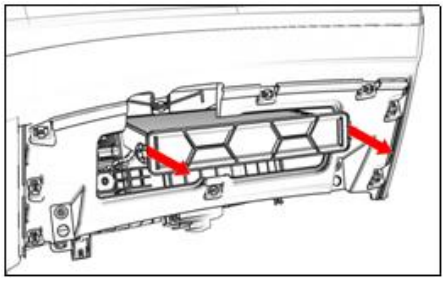

b. Take out the filter box from the outlet of filter as shown in the figure.

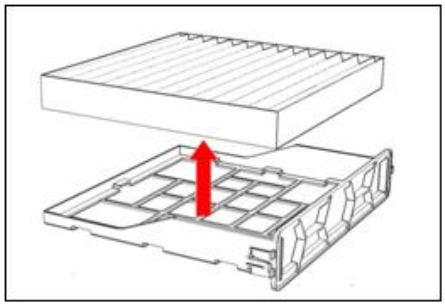

c. Remove the strainer from the filter box

d. Check the surface of the filter. Use compressed air to blow common dust against the opposite side. Do not wash the filter in water or apply grease to it. If it is dirty, replace with a new one.

Downloaded from www.Manualslib.com manuals search engine

When installing filter and filter box, keep the arrow upward.

Tips:
The air filter must be in place. Using the air conditioner without the air filter will reduce the dust-proof effect and also affect the performance of the air conditioner.

-- Defogger for the rear window and outer rear view mirror (if equipped)

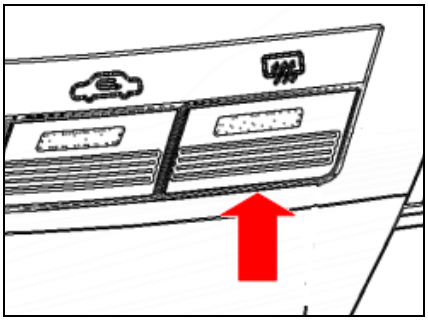

Press this button switch down to enable the defogger for the power rear window and outer rear view mirror to operate.

The power supply should be ON.

The thin heater wires inside the rear window will clear the glass surface quickly. When the defogger is operating, the indicator light will come on.

The defogger turns off automatically after approximately 15 minutes.

WARNING

Do not touch the outer rear view mirror surface when the defogger is operating, because the mirror surface will be hot.

When the glass surface is clear, press this button switch again to turn the defogger off. If the defogger continues operating for a long time, it may cause battery discharging, especially during stop-go driving. The defogger is not intended to dry rain and melt snow.

NOTICE

When cleaning the inside of the rear window, do not scratch or damage heater wires or their connectors.

To prevent the battery discharging unnecessarily, turn the defogger switch off when the power supply is not ON.

Downloaded from www.Manualslib.com manuals search engine

Chapter 1
Section 8

Other Equipment

Clock and Temperature Adjustment.....1-92
Reversing Radar System 1-93
Cigarette Lighter and Ashtray.....1-94
Service Switch.....1-94
Sun Visors.....1-95
Vanity mirror.....1-95

Downloaded from www.Manualslib.com manuals search engine

Electronic Clock Adjustment

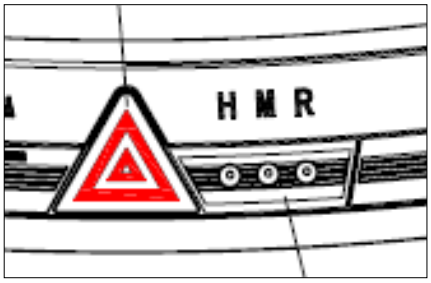

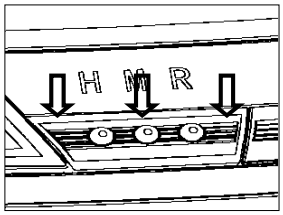

In gear ACC or ON:

Press H to adjust the hours displayed in the clock. The hour number will increase by 1 within 00-23 in a circulating way every time the button is pressed;

Press M to adjust the minutes displayed in the clock. The minute number will increase by 1 within 00-59 in a circulating way every time the button is pressed;

The hours can be set to the adjacent value rapidly by pressing R. For example, 1:06 is changed into 1:00, or 1:56 is changed into 2:00 (≤ 30,the current hours will be selected; otherwise, the next hours will be selected)

Electronic clock and external temperature display

Time and temperature are shown on the combination meter

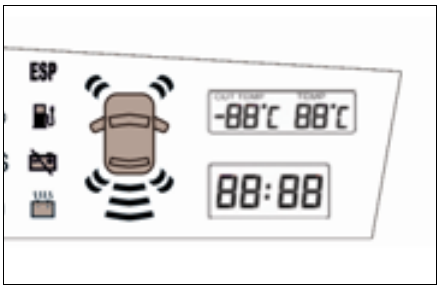

Reversing Radar System (if equipped)

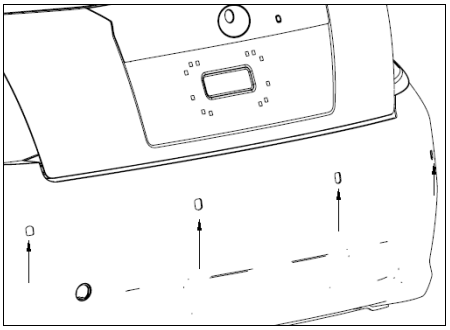

During reversing, it will remind the driver of the approximate distance between the car and barrier through indicator and buzzer. A sensor is used in this system to detect the barrier.

When power switch is at "ON" position and selection lever stays at reverse gear, the system is in operating conditions.

Downloaded from www.Manualslib.com manuals search engine

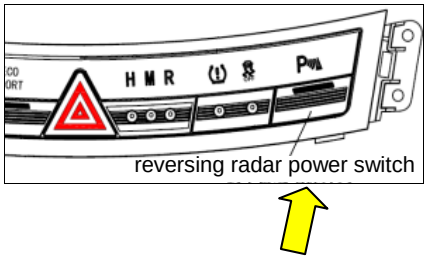

ON: press the switch.
Indicator is on and buzzer sounds.

OFF: press the switch again.

This system reminds the driver of the distance between car and barrier through indicator and buzzer.

ADistance illustrated by A mm	Indicator	Buzzer
About 1000-750	Flicker	Sound intermittently
About 750-500	Flicker	Fast sound intermittently
About 500or less than 500	ON	Sound continuously

Reversing Radar System

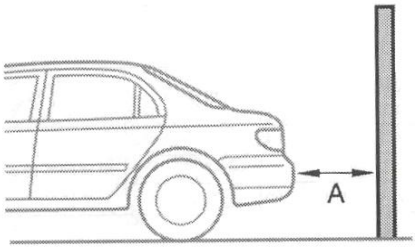

Sensing Range

Sensing range means the maximum value is about 1000 mm to probe A.

Due to limited sensing range, you must check around the car before driving and start driving quite slowly.

Tips
Do not stick accessories or other things on the sensor used for probing barriers. Otherwise, it will interfere with the accurate operation of the system, which may cause unexpected accidents.

The system cannot work normally under the following conditions.

- Things such as ice, snow and mud are stuck on the sensor.
- Stop the car in the environment of high or low temperature for a long time.
- Drive on the rough path, muddy road or road with deep grass.
- Be close to the horn of other vehicles, engine of motorcycle or any object which may generate supersonic wave.
- Drive in the heavy rain or with water splashed on the car.
- Be equipped with two-channel radio antenna or buffer rod.
- Car weight is tilt.
- Cover the sensor with hands.
- Be too close to the object.
- Beat the sensor heavily.

Downloaded from www.Manualslib.com manuals search engine

When the following objects approach the sensor, the system may not work.

- Metal line, rope or thinner objects
- Cotton, snowflake or absorbent things
- Smaller objects
- Objects with sharp edges
- High and protruding objects

In the following conditions you must entrust authorized BYD Service Station to check the system.

- Bumper den.
- Indicator continues to be on but the buzzer does not sound.

Cigarette Lighter and Ashtray

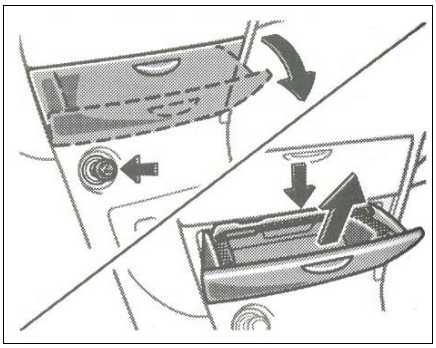

Cigarette lighter and ashtray

Cigar Lighter

To use cigar lighter, just press it. After cigar lighter lights up, it will pop up for use.

If the motor is not running, the key must be in the position of "ACC".

Do not press and hold the cigar lighter.

Ashtray

To use ashtray, pull it out.

Make sure to extinguish the cigarette thoroughly after smoking in order to prevent fire caused by the lit cigarettes. Push back the ashtray to its original position after use.

To take out the ashtray,press the locking spring plate and pull it out.

Tips
Close the ashtray completely after use,so as to reduce the possibility of accidents while driving or injury during emergency braking.

Service Switch

Make sure the service switch is turned off by professionals before maintenance. Thus, high voltage power is cut off to prevent electric shocks.

Downloaded from www.Manualslib.com manuals search engine

a. To pull out the maintenance switch, rotate the handle by 90 degrees to its limit position, then pull up.

b. After the switch is pulled out, you may see an opening on the switch housing. There is a connector port inside the housing. Never insert your finger or make contact with the port.

c. To insert the switch, plug the handle in and rotate it by 90 degrees to the limit position.

Sun Visors

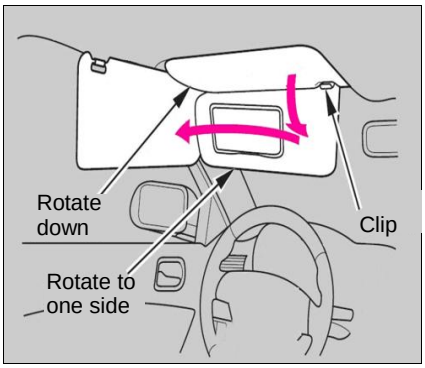

Pull down the sun visors for usage. Remove the sun visors from clips, and turn them to the side window. Thus, they can also be used as the side window sun visors.

Make sure the sun visors have been put back to their original positions when entering or leaving the vehicle.

Vanity mirror (if equipped)

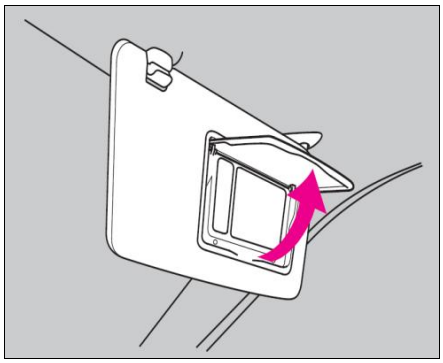

Open the cover to use the vanity cosmetic mirror in the sun visors. The lamp beside the mirror will light on when the cover is opened.

Downloaded from www.Manualslib.com manuals search engine

NOTICE
● The high voltage in BYD e6A pure electric vehicle could be 220 V or more. For the sake of safety, remember to pull the service switch out when performing maintenance work. ● During charging, the emergency switch can be pulled out in an emergency. The switch service life while charging is only once. ● To insert or pull the service switch, make sure that the overall low voltage supply is switched off and the start button is not enabled (Never insert or pull the emergency switch when the overall low voltage is on, otherwise the controller may be damaged).

Downloaded from www.Manualslib.com manuals search engine

Chapter 2

BYD e6A Operation and Driving

e6A Operation Tips

Gear Actuator 2-2
Electric Power Steering 2-3
Cooling System 2-4
Brake System 2-7
Precautions on Luggage Loading 2-9
Charging Introduction & Precautions on Electric Vehicle
High Voltage System 2-9

Downloaded from www.Manualslib.com manuals search engine

Gear selection and operation

The gears for automatic transmission are marked on the shift handle, P is park. When the brake pedal is pressed, and the READY indicator lights on after starting, you may shift from P to other gears; R is reverse, which can function after the vehicle is stationary. Nis neutral, which can function when temporarily stopped. D is driving, which can be used in normal driving. The gear shifting can be realized easily by shift handle, except that the brake pedal has to be pressed down when starting. The shift handle will return to the central position after releasing your hand and gear shifting successfully.

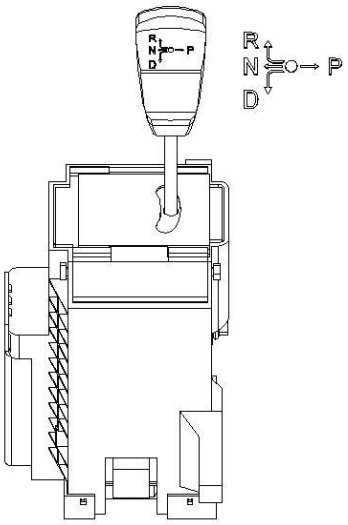

NOTICE

- Do not depress the accelerator pedal when shifting the lever, or depress it at once even if gear shifting is completed successfully, to prevent damage to the transmission.
- Never shift to reverse position when the vehicle is driving forward to prevent parts damage. Be sure that the vehicle is stationary before shifting into reverse position.
- Do not brake only using P gear to prevent damage from the excessive force. And do not coast in neutral gear for a long time to prevent damage to the transmission.
- When idling, please release the brake pedal slowly after shifting to D or R gear in order to achieve a steady driving speed.

Downloaded from www.Manualslib.com manuals search engine

Tips
Be sure that the brake pedal is depressed before starting, and then move the shift handle to start and drive. It is preferred to move the shift handle to the desired position after the motor has run for a few seconds, and release the parking brake, then release the brake pedal slowly to start the vehicle when it creeps forward. Keep the brake pedal depressed firmly and move your foot away from the accelerator pedal, when stopping in D, N or R position. Do remember to switch gear to park position whenever leaving the vehicle. Please keep a proper driving speed in order to comply with the local regulations.

Electric-hydraulic power steering system

An electric-hydraulic power steering system is adopted in this vehicle model.

When the power switch is at ON position, EHPSwill be activated.

The steering system warning lamp is as shown in the illustration below:

You may feel the steering wheel is hard to operate while the warning lamp of electrical power steering system doesn't come on under the following conditions, but this is not a malfunction.

Operate or turn the steering wheel frequently for a long time

The motor may be overheating when operating the steering wheel for an extended period of time. To protect the mechanical units in the motor, the overheat protection function may be activated in the ECU, so the amount of power assistance will be reduced or cancelled. At this time, please stop turning the steering wheel or stop the vehicle and put the power switch to ACC or OFF position. The steering system will cool down and restore power assistance in 10 minutes.

In addition, the steering wheel is also hard to turn when the battery lacks power.

When the battery lacks power

The minimum voltage for EPS ECU is 10 V. When the battery lacks power and deviates from the operating voltage range for ECU, there will be no power assistance. At this point, check the condition of battery. And then charge the battery or replace a new one if necessary.

Warning lamp for electrical power steering system

When any of the situations below occur, there may be a malfunction with the steering system indicated by the warning lamp.

When the power switch is at ON position, this lamp will remain on or not come on.

1. This lamp will remain on when driving.

In the above cases, please have the vehicle repaired by the authorized BYD service station as soon as possible. You have to hold the steering wheel tightly and operate it with more force under such conditions.

Downloaded from www.Manualslib.com manuals search engine

Cooling System

Refill motor coolant

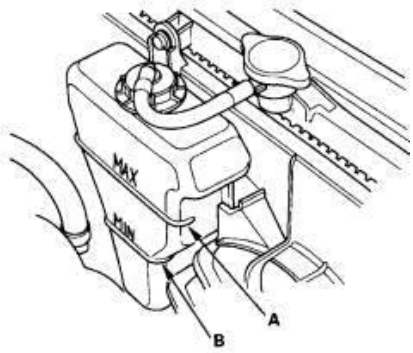

If the coolant level is not higher than the expansion tank Low limit scale (MIN), refill the coolant or distilled water to the High limit scale (MAX). Check the cooling system for leakage. Please replace the specified coolant after consulting the service personnels in the BYD service station.

Always use the BYD original long-life antifreeze coolant. It is unnecessary to add any mixture. If it cannot be obtained then any coolant not containing silicate from a reputable brand could be used as a substitute.

Only use use recommended and qualified coolants which are suitable for aluminum motors. Otherwise, corrosion may occur and will result the malfunction of the cooling system or even failure if non-original coolant is used for a long period. In this case, please drain the cooling system in good time and refill using BYD original antifreeze coolant. Do not mix and use the coolants with different brands and types.

If the expansion tank is drained completely, check the radiator coolant level as well.

Tips
If the radiator cap is opened when the motor hasn't cooled down thoroughly, the coolant may spill out, resulting in serious burn injuries.

Before opening the radiator cap, make sure the motor, DC-DC, motor controller and radiator have all cooled down.

a. Confirm that the motor, DC-DC, motor controller and radiator have cooled down.

b. Turn the radiator cap counterclockwise (without pressing down), until it cannot be turned any more. The residual pressure in the cooling system can be released completely.

c. To remove the radiator cap, turn the cap counterclockwise while pressing it.

d. The coolant level should reach the lower edge of coolant filler neck. If the coolant amount is still insufficient, please refill it again.

Refill the coolant slowly and carefully to prevent from spilling out. Since the spilled coolant could damage the components in the engine cabin. If it spills, clean it up immediately and completely.

e. Install and tighten the radiator cap securely.

f. Refill coolant into the expansion tank, until the level reaches between the upper limit scale (MAX) and Lower limit scale (MIN). Then install the radiator cap.

Downloaded from www.Manualslib.com manuals search engine

NOTICE

Never add any rust inhibitor or other additives to the cooling system, since the additives may not be compatible with the coolant or motor components.

Replace coolant

Clean and refill the coolant based on the time elapsed or miles driven recommended in the regular maintenance chart. Only use BYD original long-life antifreeze coolant. Any use of non-original coolant or water could result in cooling system rusting and deposits accumulating.

The operation of coolant draining is performed under the vehicle. Therefore, it should be done by an experienced technician unless you are familiar with it and have proper tools.

a. Adjust the power switch to ON. Make sure the DUAL indicator lamp has been off.

b. Open the engine cabin. Confirm that the motor, DC-DC, motor controller and radiator have cooled down and can be touched by hand.

c. Turn the radiator cap counterclockwise (without pressing down), until it cannot be turned any more. Hence, the residual pressure in the cooling system can be discharged completely.

d. To remove the radiator cap, turn the cap counterclockwise while pressing it.

e. Unscrew the coolant drain valve at the bottom of radiator, from which the coolant will be drained out.

f. Remove the expansion tank assembly bolts.

g. Remove the expansion tank from the bracket (pull it upward), and install it in place when the coolant is drained. Reinstall the assembly bolts.

h. Retighten the coolant drain valve at the bottom of radiator after the coolant is drained completely.

i. Refill the radiator with BYD original glycol-based long-life antifreeze coolant until the coolant level reaches the lower edge of the coolant filler neck. The coolant does not require Premix.

Cooling System capacity 7 L.

j. Power the water pump to run for approximately 5 minutes, and then power it off.

k. Refill the radiator with coolant until the coolant level reaches the lower edge of coolant filler neck.

l. Refill the expansion tank with coolant until the coolant level reaches the upper limit mark (MAX), and install the expansion tank cover.

Downloaded from www.Manualslib.com manuals search engine

m. Install the radiator cap and tighten it to the first stop position.

n. Power the water pump to run, and then power it off.

o. Remove the radiator cap, and refill coolant until the level reaches the lower edge of coolant filler neck and the upper limit mark (MAX) of expansion tank.

p. Power on until the radiator cooling fan starts running, and then power off. Check the coolant level in the radiator. Refill coolant if necessary.

q. Install the radiator cap and tighten it.

r. If necessary, refill the expansion tank with coolant until the level reaches the upper limit mark (MAX), and install the expansion tank cover.

Front-wheel drive transmission

General maintenance of front/rear-wheel drive transmissions:

After running in a new transmission, drain the lubricant in the transmission case and refill with fresh lubricant. Wash the transmission case and clean any dirty matter in it before replacing lubricant.

Pay attention to check the lubricant amount in the transmission case during daily operation. Refill the lubricant when it decreases; replace the lubricant in the transmission case regularly. To secure the quality of lubricant, wash and clean the transmission case before replacing lubricant.

Check the bolts outside of the transmission for looseness or absence during daily operation. If a bolt is found loose, tighten it timely; if there is any bolt missing, reinstall it. Keep the bolts and transmission case clean in order to facilitate heat dissipation.

Check the components of ventilation pipes on the transmission frequently to keep them providing a stable performance. Precautions on the operation of P gear (parking system):

For the transmission with P gear (parking system), Do not forcibly start the control motor for P gear to lock the transmission in P gear before the vehicle is stationary or run the motor driving the transmission before the locking of transmission by the P gear is released. Otherwise, the transmission may be seriously damaged.

Downloaded from www.Manualslib.com manuals search engine

Brake System

Design of Brake System

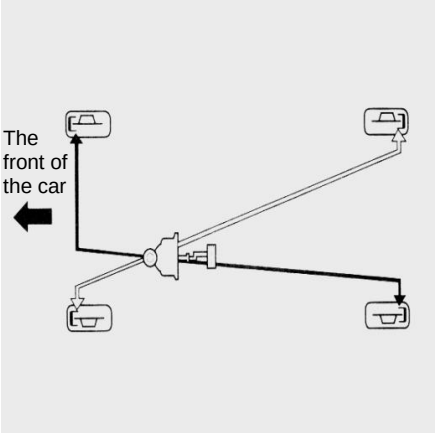

The hydraulic system driving the brake has two independent loops. Each loop acts in the diagonal direction across the car, linking the left front wheel and right rear wheel, ect. If one loop has fault, another two wheels still have brake function.

Disc Parking Brake

The car is equipped with disc parking brake. This kind of brake system requires running-in to the brake pad regularly or when the brake pad is replaced.

Running-in must be conducted by BYD authorized service station.

Anti-lock Brake System

ABS helps to prevent the wheels from locking during hard braking, allowing steering control while braking.

When the front wheels are skidding, steering control is not available, which means even if you rotate the steering wheel, the car keeps running ahead straightly. ABS helps to prevent wheel locking, and keeps the steering control available as the quick-acting pulse brake responds much faster than the driver.

ABS also distributes braking forces on all wheels according to the load status of the car.

Do not step on the brake pedal repeatedly in a short time, otherwise ABS may fail. When steering the car to avoid danger, you must keep applying stable and strong pressure on the brake pedal so as to give full play to ABS. Sometimes it is called "Step stably, steer accurately".

When ABS acts, you will feel a shake on the brake pedal and sometimes you will hear noise. This is normal when ABS makes quick-acting pulse braking.

The ABS response time depends on tires' driving force (adhesive force). On dry and paved road, you shall step on the brake pedal forcibly to enable ABS. But if you want to stop the car on snowy or freezing road, you can feel that ABS acts quickly.

Downloaded from www.Manualslib.com manuals search engine

WARNING

ABS can not reduce the time and distance required for braking. Its function is to maintain steering control in braking. You shall always keep safe distance away from other vehicles.

ABS cannot prevent skidding caused by sudden change of vehicle direction, such as sharp turning or sudden lane changing. Drive the car carefully at safe speed regardless of the road and weather conditions.

ABS cannot prevent reduction in vehicle stability. In hard braking, the steering shall be moderate. Sharp turn in driving may cause the car to smash into the traffic flow in the opposite direction or rush off the road.

On soft or rugged road (such as sandy or snowy road), a vehicle with ABS may need longer braking distance than a vehicle without ABS. Under this condition, you shall slow down the car while keeping larger distance from other vehicles.

ABS Indicator

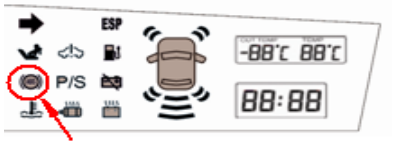

The ABS system has a self-check function. If any malfunction occurs, the ABS indicator (refer to the description of combination meter) on the instrument panel will come on. It shows that the ABS is non-functional. In this case, the brake can only perform common braking like vehicles without ABS systems. You should contact an authorized BYD service station to inspect your vehicle as soon as possible.

If the ABS (the anti-lock braking device) indicator and brake system indicator come on at the same time, while the hand brake lever is released completely, it shows that the brake force distribution system is also non-functional.

Press the brake pedal slightly to check if it feels normal; if normal, check the braking fluid level when charging at the next time. If the level is low, drive your car to BYD authorized service station to check whether brake system has leakage and check the brake wear section.

If the brake pedal feels abnormal, you shall take measures immediately. As the brake system adopts dual loop design, even if part of the system fails, you can still control braking of the other two wheels. But at this time you shall step the brake pedal deeper to brake the car, and the brake distance will be longer.

Slow down the vehicle, and park it at the roadside. As the braking distance is longer, driving the vehicle in this condition is dangerous. You must have it towed away and repaired as soon as possible.

If you have to drive the car for a short trip, you must drive with extreme care at a low speed.

Downloaded from www.Manualslib.com manuals search engine

Brake Wearing Piece Warning Plate

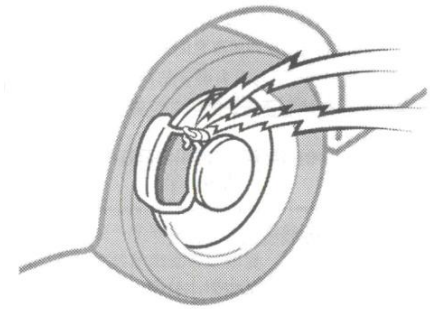

The warning plate of the brake wear section gives an alarm sound when the wear section needs replacement.

If you hear an alarm sound or friction noise in driving, you must immediately call BYD authorized service station for check and replacement of brake wear section.

Do not continue driving your car when there is an alarm sound.

Precautions on Luggage Loading

When shipping luggage or goods by the car, follow the instructions below:

- It is recommended to load the luggage or goods in the trunk. Make sure all items are fastened in place.
- Keep proper weight balance across the car. It is recommended to place heavy articles in the front part to keep weight balance,
- To save power do not ship unnecessary heavy objects.

Suspension and Chassis

Tips
Do not amend the suspension/ chassis with lifting tools, spacers, springs, etc., which may cause the car to lose control.

Charging introduction & precautions on electric vehicle high voltage system

Charging Introduction

When the hand of the charging display in the meter is pointed to the red warning area, please have your vehicle charged by a charging station.

Basic charging steps:

a. Turn off the charging switch and make sure the vehicle is deenergized;

b. The user gets off the charging vehicle, lock his/her electric vehicle and keep away from the safety line specified by the charging station.

c. Have the vehicle charged by the charging station personnel.

d. Leave the charging station after charging is complete.

Downloaded from www.Manualslib.com manuals search engine

NOTICE

To avoid being stranded due to insufficient power and also for the sake of battery service life, it is recommended that the vehicle is charged when the handle is pointed to the red warning area. Do not charge when the battery is depleted.

Please leave the charging vehicle and observe the guidelines specified by the charging station during charging. Stand away from the safety line due to the risk of high voltage.

Precautions on Electric vehicle High Voltage System

- Battery

The DC high voltage created by the vehicle power battery is very dangerous. It may result in electric shock, serious burn injuries or even death. It is prohibited to dismantle the electric vehicle power battery without permission.

- High-voltage circuits

All high-voltage wire harnesses in the vehicle are colored bright orange. Never touch the high-voltage wires and their connectors.

- High-voltage components, such as motor controller and DC-DC.

Please do NOT disassemble or replace any high-voltage components, such as motor controller and DC-DC located in the front motor cabin or the high-voltage power distribution box in the trunk, without permission.

- Service switch

In an emergency, power the vehicle off, pull out the emergency service switch under the console, and place the plug securely.

Never touch the socket by hand or conductive objects

Notice: make sure that the vehicle is powered off overall before pulling the emergency service switch out. Otherwise, it may cause negative effects to the vehicle, and even lead to an accident.

- When charging

Make sure that the vehicle is powered off overall before charging. Please stand behind the yellow safety line of the charging station when charging.

WARNING

Make sure that the vehicle is powered off overall before charging, that is to say, the power supply switch should be off. Please keep away from the vehicle and stand behind the yellow safety line of charging station when charging.

Downloaded from www.Manualslib.com manuals search engine

Chapter 2
Section 2

Starting and Driving

Before Starting Motor 2-12
How to Start Motor.....2-12
Safety Check Before Driving 2-12
Precautions on Charging.....2-13
Driving Tips Under Certain Conditions 2-14
Driving Tips in Winter 2-15
Tow Trailer 2-15
How to Save Power and Extend Auto Service Life.....2-16

Downloaded from www.Manualslib.com manuals search engine

Before starting the vehicle

a. Check the environment around the car before getting in.

b. Adjust seat position, seatback angle, height of the head protection device, steering wheel angle.

c. Adjust inner and outer rear view mirrors.

d. Lock all doors.

e. Fasten seat belts.

Once the vehicle anti-theft system is set by the "LOCK" button on the wireless remote controller, it must be cancelled by pressing the "UNLOCK" button again before starting the vehicle. Otherwise, the vehicle cannot be started.

Vehicle Starting Method

(a) Before Staring

a. Disable the vehicle anti-theft system.

b. Depress the service braking pedal.

c. Release the parking brake pedal.

d. Set the shift handle to Dgear.

(b) Starting the vehicle

Confirm that the procedures in "(a) Before Vehicle Starting" have been completed before cranking the power assembly.

Normal Starting Procedures

The motor controller program controls the proper distribution of starting voltages and currents automatically. Please follow the procedures below to start the vehicle.

To start the electric vehicle, press the "ENGINE START STOP" switch while the intelligent key is inside the vehicle. The OK light will come on when the vehicle has been successfully started.

If the vehicle cannot be started normally, please refer to "If Vehicle Cannot be Started Normally" in chapter 3.

Safety Check Before Driving

It is recommended to perform a vehicle safety check before driving.

The check takes just a few minutes and allows you enjoy to a safe and comfortable driving experience. You need some general knowledge about vehicle systems and a pair of sharp eyes!

Check Before Starting the Power Assembly

Vehicle Exterior Conditions

Tires: check tire pressure with a gauge, and check if there are any cuts, damage or excessive wear.

Wheel Nuts: make sure there no nuts are loose or missing.

Leakage: if the vehicle has been parked for a while, you must check if there is brake fluid, engine oil, coolant or other fluid leakage under the vehicle (Water drops produced by AC system are normal).

Lighting: make sure headlights, parking lights, width-indicator lights, turn signal lights and other lights work normally. Check illumination intensity of headlights.

Downloaded from www.Manualslib.com manuals search engine

Vehicle Interior Conditions

Spare tire, jack and wheel nut wrench: check tire pressure and make sure the jack and wrench are in place.

Seat belt: check whether buckle can fasten seat belt firmly. Make sure seat belt has no wear or scratching.

Instruments and Controllers: take special care to make sure service reminder indicator, instrument lighting and defroster work normally.

Brake: make sure the pedal has enough clearance.

Motor Compartment Interior Conditions

Spare Fuse: make sure all types of fuses are available. The fuse specifications must be in compliance with the rated values.

Coolant level: confirm that the coolant level is between the Max and Min scale lines in the expansion tank.

Hydraulic fluid: confirm that the fluid level is between the two scale lines.

Battery and Cables: all cells of the battery must be filled with distilled water to the proper level. Check whether there are corroded or loose terminals, and whether the battery box has cracks. Check whether cables and connection are proper.

Cables: check whether there are damaged, loose or disconnected cables.

Brake Pipe: check whether there is a leakage or bad connection in the brake pipe.

Tips
Do not leave children's toys in the vehicle, which may pose potential danger though providing fun for the children, especially in event ofhard braking and collision, when the toys may not only affect the safety of driving but also cause injury to the children.

After Motor Starting

Instruments: observe the indicators on the meters. Start the vehicle after confirming there are no illuminated warning lights.

In Driving

Instruments: make sure service reminder indicators and speedometer work normally.

Brake: under safe traffic conditions, make sure braking does not result in deviation of the vehicle.

Other abnormal symptoms: check the connections for leakage, looseness or abnormal noises.

If no abnormality is found out, you can enjoy your driving now.

Precautions on charging

a. Charge the battery when the vehicle power displayed on the instrument decreases into red zone. All of the new models can be charged in BYD specified charging stations.

b. Perform vehicle charging only when the parking brake pedal is depressed, nobody in the vehicle, vehicle not started, charging sensor switched off and water pump functioning normally.

Downloaded from www.Manualslib.com manuals search engine

Tips

To avoid being stranded due to insufficient power and also for the sake of battery service life, it is recommended that the vehicle is charged when the handle is pointed to the red warning area. Do not charge when the battery is depleted.

Please leave the charging vehicle and observe the guidelines specified by the charging station during charging. Stand away from the safety line due to the risk of high voltage.

Driving Tips Under Certain Conditions

- Driving slowly in head wind, which is helpful for operating of the car.
- When driving the car to climb the roadside curbstone, keep low speed and proper direction) Avoid driving on any objects with sharp edges or on any road block. Otherwise the tires may suffer severe damage such as explosion.
- Slow down vehicle speed on rugged roads. Otherwise tires and/or wheels will suffer severe damage.
- The brakes may be wet when cleaning the vehicle or driving through deep water. To check if they are wet, make sure it is safe around the vehicle at first, then depress the brake pedal slowly. If there is no proper braking force, the brakes may be wet. In this case, it is recommended that you not proceed to driving until they have dried.

Tips

- Before driving, make sure that parking brake is released fully and the parking brake indicator goes out.
- Do not rest your feet on brake pedal while driving, which may cause dangerous overheating, wear and power energy consumption.
- Take special care when speeding up, shifting to higher/lower gear, or braking on slippery road. Hard acceleration may result in skidding or spinning of the vehicle.
- Do not continue driving when the brake is wet. Wet brake requires longer braking distance and may cause deviation of the direction of the car. Also, in this case parking brake can not stop the car firmly.

NOTICE

When driving on a wet road, keep away from the deep water if possible. Wading depth should not be over the height of battery tray. The minimum ground clearance of battery tray with capacity load is 138 mm. Hence, the wading depth should be lower than this value. When the battery pack is soaked by water, the electrical components, such as the battery pack, will be damaged.

Do not climb when the battery power is low (soc is below 20%).

Downloaded from www.Manualslib.com manuals search engine

Driving Tips in Winter

Make sure coolant is suitable for use in winter.

Only use the BYD specified coolant. Select the suitable coolant according to the ambient temperature.

Improper coolant could damage the cooling system components, such as the motor.

NOTICE
Do not use purified water in cold winter, otherwise the motor cooling system could be damaged.

Check Battery and Cable Status

Cold weather may reduce battery performance, and you must keep the battery charge high enough for starting in the winter. Visual check of the battery is described in the next chapters of this manual. BYD authorized service station can check charging status of the battery for you.

Avoid Door Lock Freezing

Spray some deicing agent or glycerin in door lock hole to prevent the lock from freezing.

Use Cleanser with Antifreeze

It is available in BYD authorized service stations and all auto part stores. Mixing ratio of water and anti-freeze must follow the anti-freeze manufacturer's instructions.

If the parking brake appears frozen, do not drive immediately. Please wait until the parking brake has defrosted.

When parking in winter, switch the gear handle to P gear and chock the rear wheels or the wheels that may move with wedges. Do not use the parking brake, to prevent it from freezing due to the accumulated water or snow, resulting in difficulty in releasing the brake under such conditions.

Prevent snow from staying under mudguard.

Snow or ice under mudguard may make steering difficult. When driving in winter, you shall stop the check regularly to check whether there is ice or snow under mudguard.

You are recommended to keep certain emergency tools on the car according to your region.

Examples of such articles are tire chains, window wiper, a bag of sand or salt, flasher signaling device, shovel and connection cables.

Tow Trailer

BYD e6A electric vehicle is designed for transportation of passengers. Towing a trailer may have a bad effect on operation, performance, braking, endurance and energy economy of the vehicle. Safety and comfort in driving depend on proper use of devices and the driver's habitual care in driving. For the sake of safety of yourself and others, do not over load the car or tow a trailer. Damage or failure caused by towing a trailer for business purpose is not covered by BYD warranty.

Downloaded from www.Manualslib.com manuals search engine

Weight Limit

Before towing a trailer, make sure it is within the vehicle's capacity. You can contact the local BYD authorized service station to check the trailer's capacity.

Towing capacity is measured on a level road. In regions with high altitudes, please take note that the motor power and its towing capacity will reduce.

Tips
Towing trailer shall not exceed the maximum rated load of the two-hook, or it may cause an accident and severe personal injury. As towing a trailer may require longer braking distance, you must maintain a larger distance to other vehicles. For every 10km/h, the distance between your vehicle and the vehicle in front of you must be no less than the total length of your vehicle and the trailer. Avoid hard braking to prevent the vehicle from skidding, which may cause the vehicle to get out of control.

Tire

- Make sure the tire air pressures are appropriate in each tire.
- Taking the total weight of a trailer into consideration, keep its tires with proper pressure as specified by its manufacturer.

Running-in Procedure

- For a new auto or after undergoing replacement of driving system parts (motor, transmission, differential mechanism, wheel bearing, driving shaft, etc.), do not tow any trailer in the first 2000 km travel.

Maintenance

- When towing a trailer, the increased load requires more frequent maintenance of the car.

How to Save Power and Extend Auto Service Life

In simple and easy way you can save power. Fuel-saving is also helpful to extend service life of the vehicle. Here are some tips on saving power and maintenance expense:

- Maintain proper pressure in tires. Insufficient tire pressure may cause excessive tire wear and waste power. Refer to description in section 5-4.
- Do not leave unnecessary articles in the vehicle. Weight of unwanted articles will increase power assembly load and consume more energy.
- Accelerate slowly in a stable manner. It is recommended to avoid starting, accelerating and decelerating suddenly.
- Avoid unnecessary stopping or braking. During driving, keep a steady vehicle speed while taking traffic signals into consideration; and if possible, take a road without traffic lights. Keep a proper distance from the vehicle in front of you to avoid hard braking, which is also helpful to reduce brake wear.
- Avoid driving in traffic peak hours or traffic jam areas.
- Maintain an appropriate speed on a freeway. The higher the vehicle speed is, the greater the energy consumption. Keeping an appropriate speed can reduce energy consumption.

Downloaded from www.Manualslib.com manuals search engine

- Keep front wheels in proper alignment. Do not impact on curbstone, and slow down on rugged roads. Bad alignment of front wheels may cause excessive wear of tires, and also increase the load of power assembly and energy consumption.
- Keep the chassis clean and free of mud and similar materials. It helps to reduce vehicle weight and prevent corrosion.
- Adjust and keep the vehicle under the best working conditions. Regular maintenance needs to be conducted so as to keep a long service life of all components as well as to reduce the operating costs. If always driving in severe conditions, please have the vehicle maintained more frequently (see chapter 4).
- To extend the battery service life, please adopt the shallow charge-discharge method (keep the battery charge within the range of 15% and 80%).

Downloaded from www.Manualslib.com manuals search engine

Downloaded from www.Manualslib.com manuals search engine

Chapter 3

Emergency Treatment

If the Vehicle Cannot Start Up 3-2
If No Power Outputs in Driving 3-2
If the Vehicle Is Overheated 3-3
If the Vehicle Has Flat Tires 3-4
If the Vehicle Gets Stuck 3-10
If the Vehicle Has to Be Towed 3-10
Emergency Treatment 3-11

Downloaded from www.Manualslib.com manuals search engine

If the Vehicle Cannot Start Up -- Simple Check

Before checking, confirm that the vehicle is started according to the procedures described in "Vehicle Starting Method" in chapter 2, and check if the battery power is sufficient. Meanwhile, check whether the power assembly can also be started with the other keys. If starting operation is possible, the key may be damaged or the battery power is insufficient. Replace the battery (see "Keys" in chapter 1-2) or have the key checked by the BYD authorized service station. If the keys are all unavailable, the vehicle control system may be failed. In this case, please contact the BYD authorized service station (see "Keys" in chapter 1-2).

If the Vehicle Cannot Start Up --

a. Open the motor compartment and confirm the cooling fan is operating. If not, check if the cooling fan connectors are loose;

b. Check if the coolant level is proper. If not, refill the coolant to a proper scale line.

If the vehicle cannot be started even though the items above are all normal, contact the BYD authorized service station.

WARNING

Keep hands and clothes away from the fan to avoid danger in case of sudden starting of the cooling fan.

WARNING

To avoid personal injury, please keep the motor compartment closed until there is no steam coming out. The spouting of steam or coolant means high pressure.

If No Power Assembly Outputs in Driving

a. Please slow down the vehicle slowly, keep moving in a straight way and run off the road to a safe place.

b. Turn on the emergency hazard warning lights.

c. Start the vehicle again according to "Power Assembly Starting Method".

Tips
When the motor in power assembly is not running, the brake and steering device boosters do not work, which makes steering and braking more difficult than usual.

Downloaded from www.Manualslib.com manuals search engine

If the Car Is Overheated

If the coolant thermometer indicates overheating, or the motor, controller or the battery are overheated, the power assembly or controller maybe overheated. Take measurements according to the following procedures:

a. Drive the vehicle off the road, stop it and turn on the emergency hazard warning lights. Set the transmission to N, and apply the parking brake. Shut down air conditioning if it is running.

b. If coolant or steam spilled out of the radiator or expansion tank, shut down the power assembly, then open the motor compartment until there is no steam coming out; If there is no spilled coolant or steam, keep the power assembly running and confirm the cooling fan is operating. If not, there may be something wrong with the fan. Turn off the power switch and have the fan repaired.

Tips
To avoid personal injury, please keep the motor compartment closed until there is no steam coming out. Spouting of steam or coolant means high pressure.

c. Check whether there is obvious coolant leakage under the radiator, hose and the vehicle. Water drops produced by AC system in use are normal.

Tips
Keep hands and clothes away from the fan to avoid danger in case of sudden starting of the cooling fan.

d. If there is coolant leakage, please shut down the power assembly at once and contact BYD authorized service station for help.

e. If there is no obvious leakage, check the coolant level in the expansion tank. If there is no coolant in the expansion tank, refill it to the MAX scale line with the power assembly running.

Tips
High temperature steam and fluid may spill out due to high pressure in system and result in serious burning injury. Therefore, do not take off the radiator cap when the power assembly and radiator are still hot.

f. After the coolant temperature has dropped to the normal level, recheck the coolant level in the expansion tank. If it is lower than the MIN scale line, refill to the MAX scale line. A considerable decrease means that the system has leaked. Contact a BYD authorized service station and have it checked immediately.

Downloaded from www.Manualslib.com manuals search engine

If the Car Has Flat Tires

a. Please slow down the vehicle slowly, keep moving in a straight line and run off the road to a safe place. Do not park your vehicle on the turnout track separating the middle of a highway. Park the vehicle on firm and flat ground.

b. Shut down the motor and turn on the emergency hazard warning lights.

c. Apply the parking brake and set the transmission to N.

d. All people should get out of the vehicle and go to a place away from traffic.

e. Read the following instructions carefully:

Tips

To reduce the possibility of serious personal injury, please obey the instructions below when you lift the car by jack.

- Follow the manufacturer's instructions on using the jack.
- No part of your body may stay under a vehicle lifted by the jack, or there may be bodily injury.
- When the vehicle is lifted by jack, do not start the motor or leave it in running.
- Park the car on flat and solid ground, pull up parking brake firmly and shift the transmission to N gear. If necessary, lay chock blocks under the tire which is diagonally opposite to the tire to be replaced.
- Make sure the jack is placed on the right lifting point. Lifting up the car by a jack not placed properly may damage the car or cause the car dropping down from the jack, which may result in personal injuries.
- When the car is supported completely by jack, no one is allowed to stay under the car.
- Lifting up the car only for tire replacement purpose.
- Do not lift up the car when someone is in it.
- Do not put any thing at the top or bottom of the jack while lifting.
- Just lift the car to a height that allows tire removal and replacement.

NOTICE

Do not continue driving the vehicle with a flat tire. Even a short trip may damage the tire permanently.

Downloaded from www.Manualslib.com manuals search engine

Tools Required and Spare Tire

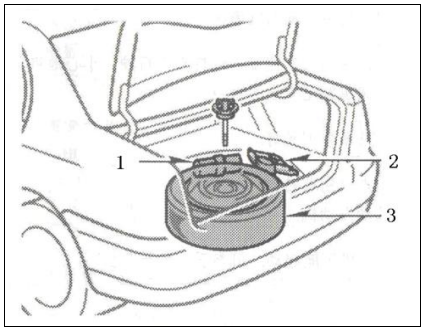

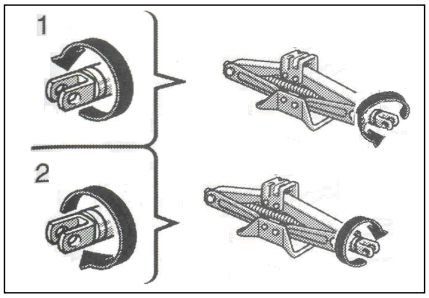

a. Take out tools required and the spare tire.

1. Toolkit
2. Jack
3. Spare tire

In emergency conditions, you may have to repair the car by yourself. Please well know the use method and storage location of the jack and various tools.

Rotate the terminal of the jack manually

Remove: rotate the terminal in direction 1 until the jack become flexible.

Storage: rotate the terminal in direction 2 until the jack is fixed tightly to prevent it from being thrown forward when there is crash or emergency braking.

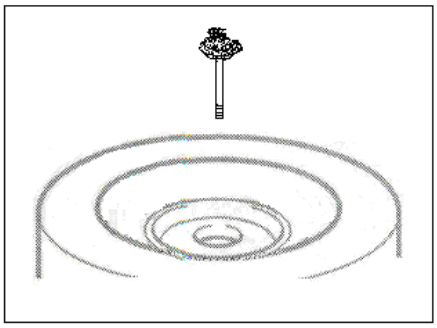

To remove the spare tire, loosen and remove the spare tire support, then take out the spare tire.

To store the tire, please put the outside of the tire downward in place, and then fasten the tire in the opposite order to prevent it from being thrown forward when there is crash or emergency braking.

Notice: Pay attention to the spare tire support fixing method, and make sure the higher boss facing upwards when fastening the original spare tire.

Downloaded from www.Manualslib.com manuals search engine

Block Wheels

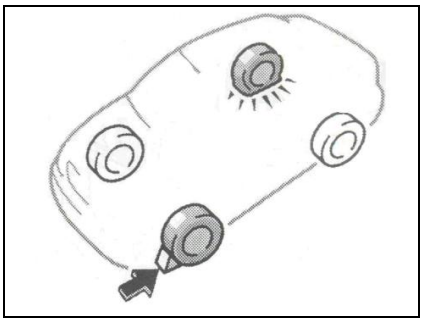

b. While lifting, please lay the chock block under the wheel in the diagonal direction of the flat tire to prevent the car sliding.

Put the chock block in front of a front wheel or behind a rear wheel.

Unscrew Bolts on Wheel with a Flat Tire

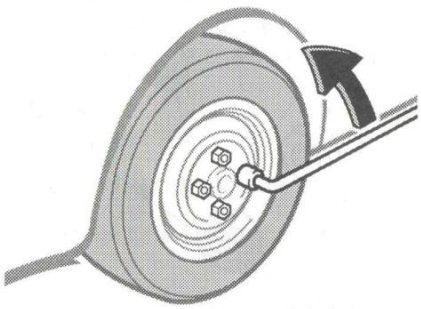

c. Unscrew all bolts on the wheel with a flat tire.

Before lifting up the car, please loosen bolts on the wheel by rotating them anticlockwise.

Loosen bolts on the wheel by rotating them counterclockwise. For maximum torque, you can fit a wrench onto the bolt with its handle on the right as shown in the figure above. Grip at the end of the wrench handle and pull upwards. Please avoid the wrench slipping out of the bolt.

Do not remove the bolts - just loosen them by rotating one cycle and a half.

Tips
Do not apply engine oil or lubricant on the bolts, or they will get loose, which may cause the wheel detached and lead to serious accident.

Downloaded from www.Manualslib.com manuals search engine

Jack Positioning

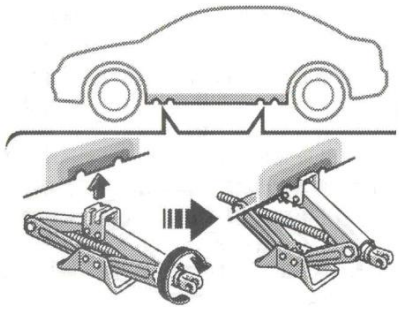

d. Place the jack under the proper lifting point.

Make sure that the jack is placed on flat and solid ground.

Lift Up Vehicle

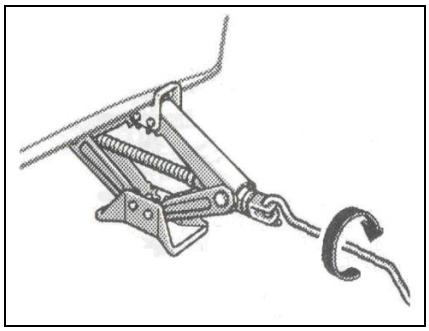

e. Make sure nobody is in the car, and lift up the car to a height that allows installation of spare tire.

Please notice that it needs larger clearance to install the spare tire than remove the flat tire.

To lift up the car, please insert the jack handle into the jack (loose joint) and rotate it clockwise. When the jack touches the car and starts lifting, please check again if the jack is at the right position.

Tips
When the car is supported completely by jack, no one is allowed to stay under the car.

Replace Wheels

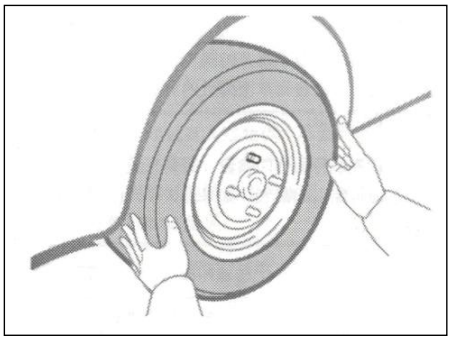

Downloaded from www.Manualslib.com manuals search engine

f. Remove wheel bolts and replace the tire.

Take off the flat tire and put it aside.

Roll the spare tire to the installation position, align the bolt to the tire hole, and then raise the tire until the top bolt fits into the screw hole. Rotate the tire. Install all bolts into the corresponding screw holes.

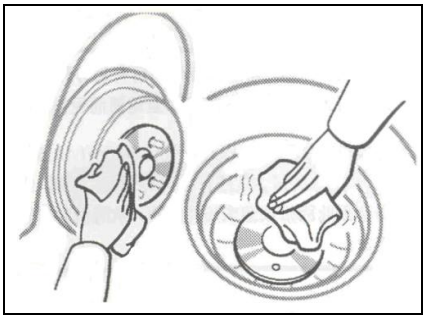

Before installation, please brush off all corrosive materials on the installation surface with a wire brush. During installation, the metal area on the installation surfaces must be in well contact with each other, or the wheel bolts may get loose, which may cause the tire falling off in driving.

Reinstall Wheel Bolts

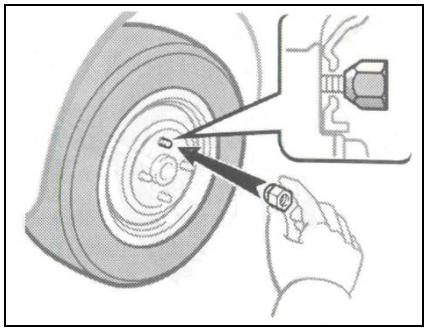

g. Reinstall all wheel bolts manually.

To reinstall bolts, please manually tighten them with wedged end inward first. Push the wheel backward and try to further tighten the bolts manually.

Tips
Do not apply engine oil or lubricant on the bolts, or they will get loose, which may cause the wheel detached and lead to serious accident. If there is engine oil or lubricant on the bolts or nuts, clean them immediately.

Lower Down Vehicle

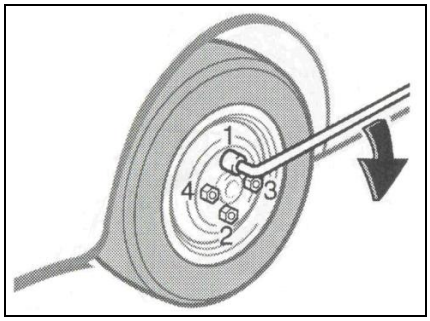

Downloaded from www.Manualslib.com manuals search engine

h. Lower down the car to ground and tighten the wheel bolts.

To lower the vehicle, please rotate the jack handle counterclockwise.

Please use a spanner for wheel bolt to tighten the bolts. Do not use any other tools or lever, like hammer, tube, or your feet. Make sure the spanner is fitted onto the bolts firmly.

As per the order shown in the figure above, tighten the bolts slightly one by one, repeat the procedure until all the bolts are fastened firmly.

Tips
● Please make sure no part of your body and no one nearby will get injured while laying down the car onto the ground. ● When the tire is replaced, please use the wrench with a torque of 110 Nm (10.5 kgf·m) to fasten the bolts. Otherwise the bolts will become loose, which may cause the tire to fall off and result in serious accident.

-- After Tire Replacement

i. The tire pressure after replacement.

Adjust the tire pressure to the value specified in Chapter 5. If the current pressure is lower than specified value, please drive the car slowly to the nearby service station for air charging.

Do not forget to install the tire valve cap, or dust and moisture will enter the valve core to cause possible air leakage. If the tire valve cap is missing, please use a new one immediately.

j. Store all of the tools including jack and flat tires in place. Fix the flat tire onto the trunk with spare tire support.

When the tire is replaced, please use the wrench to tighten the wheel nuts with a torque of 110 Nm as soon as possible. Have the flat tire repaired by a technician. Fasten the original flat tire according to the following methods, and make sure the spare tire lower boss faces upwards. See the figure below.

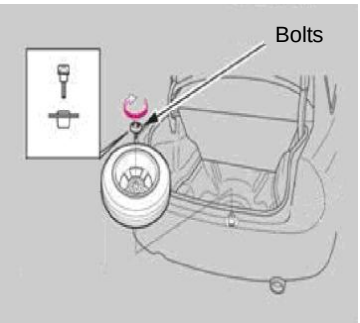

Tips
● Before driving, please make sure all tools, jack, and flat tire are fixed in their storage position so as to reduce the possibility of personal injury in case of a crash or emergency braking. ● After the spare tire is replaced, please drive at a speed lower than 70 km/h, and the single trip should not exceed 100 km. Drive to a nearby BYD service station slowly and have the tire replaced. Otherwise, serious accidents may happen, such as tire puncture and loss of control.

Downloaded from www.Manualslib.com manuals search engine

If the Car Gets Stuck

If the car gets stuck in snow, mud, or sand, please try to get it out by pushing it forward or backward.

Tips
If there are persons or objects near the vehicle while driving, please do not try to move the vehicle by pushing it forward and backward. If not, once the vehicle gets out and suddenly moves forward or backward, there may be personal injury or damage to objects.

If the vehicle has to be towed

Tow from front

Tow from behind

Use a platform truck

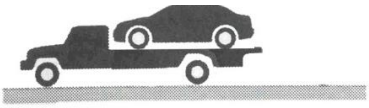

Use proper towing devices to tow the car to avoid damage.

Improper towing may damage the car. Most personnel handling towing know the right method, but something may go wrong accidentally. To avoid damage to the car, please follow the precautions below.

Precautions for Towing:

Towing should use safety chain system and abide to applicable national and local laws. The wheels touching the ground and their axle should be in good condition. If they are damaged, you shall use platform truck for towing.

Downloaded from www.Manualslib.com manuals search engine

Emergency Towing

For emergency towing, you can contact BYD authorized service station to handle it on your behalf.

If you can not find a towing company under emergency situation, please tie the towing cable or chain to the emergency towing hook at the bottom of the car for temporary towing. In this case, you shall be extremely careful.

NOTICE

- Please use the specified towing hook, or the car may be damaged.
- Do not tow the vehicle from the rear side with all four wheels on the ground, or it will seriously damage the transmission.

The driver should sit inside steering the car and controlling the brake.

Towing in this way may only move the car slowly for a short distance on a hard road. Meanwhile it requires that the wheels, shafts, transmission, drivetrain, steering wheel, and brake be in good condition.

Tips

Take special care when towing the car. Please avoid sudden startup and unstable driving operation, which may exert great stress on emergency towing hook, and towing cable/chain. The hook, towing cable/chain may crack, in which case there may be serious personal injury or damage to the car.

NOTICE

Please use the towing cable or chain designed specifically for car towing. Tie the cable or chain to the towing hook firmly.

Before towing, please release the parking brake and set the transmission to N. The key should be at "ACC" (motor off) or "ON" (motor on).

Tips

When the motor is not running, brake and steering device boosters do not work, which makes steering and bracking more difficult than usual.

Emergency Treatment

When the following accidents happen:

- Fire
- Battery leakage due to an accident
- Collision

Please perform operation shown as follows firstly:

a. Turn off the power switch.

b. Take off the service switch under vice console.

c. Call for help and feedback to the BYD service station immediately. We will deal with it as soon as possible.

Downloaded from www.Manualslib.com manuals search engine

3-12 Emergency Treatment

Downloaded from www.Manualslib.com manuals search engine

Chapter 4

Vehicle Service & Maintenance

Anti-corrosion and Auto Exterior Maintenance

Anti-corrosion for BYD e6A 4-2
Tips on Maintenance of Paint Surface..... 4-3
Washing and Waxing..... 4-4
Inside Cleaning..... 4-6

Downloaded from www.Manualslib.com manuals search engine

Prevent BYD e6A from corrosion

Proper maintenance can protect the car against corrosion for a long time.

The common causes for car corrosion are:

- Saline-alkali, dust, and moisture concentrates at unaccessible part under the bottom of the car.
- The paint film or base coating is scratched by slight crash or foreign bodies such as sand.

If operating the car under special circumstance or environment, please take special care:

- Dust on roads that contains with saline-alkali or chemical substances will speed up corrosion; the air along a seacoast or in regions polluted by industries is also saline.
- High moisture will speed up corrosion, especially at a site with a temperature just over 0 °C.
- When certain parts of the vehicle are always exposed to moisture or humidity, even if the rest parts are kept dry, corrosion will occur.
- High compartment temperature may cause corrosion to the parts which can not get dry quickly due to lack of proper ventilation.

The above items show that it is very important to keep the vehicle, especially its bottom, clean and repair the damaged paint and protective coating as soon as possible.

To prevent corrosion of BYD e6A, please follow the instructions below:

Wash the vehicle regularly. Washing your vehicle regularly can keep it clean. But for anti-corrosion purposes, please abide by the following points:

- In winter if you drive the vehicle on the road with saline-alkali or live by the sea, please wash the running parts of the vehicle at least once per month to reduce corrosion.
- High pressure water or steam is effective for cleaning chassis and wheel covers. But pay attention to the battery pack under the chassis when washing, and do not flush it directly. Slush and dirt in these positions are difficult to remove; you need to pay extra attention as getting the slush and debris wet without removing them may cause severe damage. Please avoid the dust blocking the drain holes on the lower edges of the doors, sill plates and frame, otherwise accumulated water will lead to corrosion.
- Arrange a thorough cleaning for the chassis when winter is over.

For more hints, refer to "Washing and Waxing".

NOTICE

Prevent the electrical elements, such as motor controller and battery, from water spilling when washing the vehicle in order not to damage these electrical elements.

Downloaded from www.Manualslib.com manuals search engine

Check the vehicle's paint and decorative pieces. When there is any fragment or crack on the paint film, please repair it at once to avoid commencement of corrosion at this location. If the fragments or cracks peel off the metal surface, please contact the BYD service station for repair.

Check inside the carriage. Moisture and dust will concentrate beneath the floor mats and cause corrosion, please check the underside of the floor mats frequently and make sure it is dry. When you transport chemicals, detergent, fertilizer, salt and similar materials, please pay particular attention and use proper containers. In case of any spillage or leakage, please clean and dry the affected part immediately.

Use mudguards. When driving in alkaline areas or on a gravel road, The mudguard can protect the vehicle. The larger and lower the mudguard, the better the protective effect.

Park the vehicle in a well ventilated garage rather than in a damp or unventilated place. Washing your vehicle in the garage or parking after a drive on a wet or snowy road will get the garage damp and thus cause corrosion. Even though the garage is dry, the vehicle will also get damp and suffer corrosion if it is poorly ventilated.

Tips on Maintenance of Paint Surface

Pay attention to the following points in use and maintenance of the vehicle:

(a) Whenever it is driven, prior to driving, or after driving, clean the dust on the body and keep the body static electricity as far away from the dust as possible.

(b) Wash the vehicle after rain. The rain spots on vehicle body will concentrate and reduce gradually. Otherwise, the painting finish may be damaged.

(c) Before washing, please wait until the motor has cooled down. Do not clean the vehicle under direct sunlight or in high temperatures to avoid leaving dried cleaning agent traces behind on the paint. If cleaning by yourself usually, use the special cleaners and neutral running water instead of washing powder, soap solution or scour which contains a high proportion of alkali so as to prevent from wiping away the paint grease and speeding up the paint deterioration. If cleaning in a car wash, do not let the workers use dewaxing agent to avoid paint damage. Clean once a day specially after driving along the seacoast or serious polluted areas.

(d) Use a piece of soft and clean cloth or sponge to clean, make sure there is no metal particles or sand grains. Do not use dry cloth, towel or sponge to avoid scratches. Wipe slightly along the running water direction, and do not wipe in circles or laterally.

(e) Get rid of particularly strong corrosive matter (such as asphalt, bird droppings and insects etc.) immediately. In this case, it is necessary to use special cleaning agent. Do not scratch the paint with a blade or clean with petrol, otherwise, it could be damaged.

Downloaded from www.Manualslib.com manuals search engine

(f) Note that touching the paint with dirty hands or cleaning with an oiled rag is absolutely forbidden. Do not put the oiled tools or rag dampened with organic solvent onto the vehicle body in order to avoid chemical reactions.

(g) If there are no obvious scratches, do not paint again in case of fusion incompatibility and poor combination.

(h) If the vehicle will not be driven for a long period, park it in a garage or a well ventilated place. Cover with a special integral body shell in winter. Choose a shaded place if just parking for a short time.

(i) Prevent strong impact, bump or scratch to the paint film. If there are any scratches, dents or peeling, repair as soon as possible. It is better to have it repaired in a specialVehicle valeting establishment).

(j) Clean the metal-plated light parts with carbon cleaning agent and polish with wax regularly.

(k) Clean the vehicle decorations with detergents and polish slightly with wax to avoid exposing the paint undersides due to the damage.

Polish the vehicle occasionally and have it maintained in a Vehicle valeting establishment regularly (once a quarter). Hence, the paint will be returned to its original brightness.

Washing and Waxing

Cleaning for BYD e6A

Clean the vehicle in normal way.

In the cases below, the paint may peel off and there will be corrosion in the vehicle body and parts. Please clean the vehicle immediately.

- Driving along the seacoast.
- Driving on the road covered with anti-freezer.
- Stuck with coal tar, resin, bird manure, and insect remains.
- Driving in an area with heavy smoke, coal ash, dust, iron scurf, or chemical substances.
- The car is obviously covered with dust and slurry.

Manual cleaning for BYD e6A

Clean the vehicle in a shaded place when the body does not feel hot.

Tips
Please protect your hands while cleaning the underside of the floor or chassis.

a. Use water pipe to wash away the loose dirt, slush and saline-alkali at the bottom of the vehicle and in the recessed areas of the wheels.

Downloaded from www.Manualslib.com manuals search engine

b. Use neutral detergent to wash the vehicle, following the manufacturer's instructions when mixing the detergent with water. Dip a soft cloth into the detergent to wipe the vehicle gently, and use soap water and clean water to remove the dirt.

c. Flushing with running water thoroughly, otherwise when soap water gets dry, it will leave taints. Especially, please use clean water to flush each part of the vehicle after washing in the summer.

d. To avoid leaving water mark, please wipe dry with a clean soft towel. Do not wipe or press too hard, or the paint surface may be damaged.

WARNING

Avoid flushing the high-voltage electronics during cleaning.

Decorative plastic parts on wheels: the decorative plastic parts can easily be damaged by organic substances. If any organic substance spills onto the decorative parts, please wash away by clean water and check if the parts are damaged.

Tips

Do not install plastic decorative pieces which have been seriously damaged on wheels, or they may drop off the wheel while driving and thus lead to an accident.

Aluminum wheel: Wash it only with neutral soap water or neutral detergent.

Plastic bumper: be careful washing it. Do not use detergent containing grinding medium to wipe it, because its front side is soft.

Asphalt from the road: wash it using turpentine or detergent marked as non-harmful to painted surfaces.

NOTE

Do not use such organic substances as gasoline, kerosene, naphtha, and strong solvent as they may cause poisoning or damage.

Auto Car Washing

You can clean your car in a automatic car wash. However, you should still take care that some procedures will damage the paint and impair its durability and glossiness, especially for those deep color vehicles. Usually, the workers will tell you the safest procedures for the vehicle paint. Pay special attention to not flushing the electric vehicle battery pack on the chassis, so as to reduce the possibility of water penetration.

Waxing for BYD e6A

To keep the glossy surface as new, we suggest you to polish and wax the vehicle regularly.

Waxing must be done once per month or when the vehicle body shows poor water-resistant performance.

Downloaded from www.Manualslib.com manuals search engine

a. Before waxing, please wash and dry the vehicle body even if you use the mixture of detergent and wax.

b. Please use quality polish and car wax. When the polishing coat has been weathered seriously, please use the cleaning polish which is separated from the car wax. Follow the instructions and precautions from the manufacturer. The chrome plated surface also needs polishing and waxing.

c. On a large surface, if the water cannot form beads but stays on the surface, you must wax the vehicle.

NOTICE

When the car is placed in painting & polishing workshop with high temperature for repainting, please remove the plastic bumper from the car, or the heat may damage the bumper.

Inside Cleaning

Tips

Do not wash the floor with water or allow the water to flow onto the floor while cleaning the vehicle inside or outside; otherwise water may enter the audio devices or other electric appliances on or under the carpet (mat), which may result in malfunction of the devices and corrosion of the vehicle body

Carpet

Please use quality foam detergent to clean the carpet.

First use the dust collector to absorb the dust. Several kinds of foam detergents are applicable: some are packed in aerosol cans, and some are powders or liquids which must be mixed with water to generate foam. Use a sponge or brush dipped with foam to wash the carpet by moving in circle.

Do not use water to keep the carpet dry. Please read and strictly follow the instructions from the detergent manufacturer.

Seat Belts

The seat belt can be washed with neutral soap water or warm water.

Use a sponge or soft cloth to clean it. Check if the seat belt has excessive wear, tears or cuts.

NOTICE

- The seat belt must not be cleaned with coloring agent or bleacher, or its strength will be weakened.
- Do not use the seat belt until it is dry.

Doors and Windows

Doors and windows can be cleaned with any normal household detergent.

Downloaded from www.Manualslib.com manuals search engine

NOTICE

When cleaning the internal side of the rear window, pay attention to not scratching or damaging heating wire or its connector.

Please use a damp, soft cloth to clean the air conditioning control panel, multimedia system, instrument panel, control panel, and switches.

Dip a clean, soft cloth into the water or warm water, and then wipe away the dust gently.

NOTICE

- Do not use organic substances (like solvent, kerosene, alcohol, or gasoline) and acid-base solutions, because these chemicals will lead to color change, taint, and peeling on the surface.
- Before using detergent or polish, first please make sure they do not include the substances mentioned above.
- If you use new liquid detergent, please do not spill the liquid onto the inside surface of the vehicle as it may contain harmful substance. If there is any spillage, please clean up the spilled liquid at once in the way described previously.

Leather Trimming inside the Car

For leather trimming, you can use neutral detergent intended for woolen fabrics to clean them.

Use a soft cloth dipped with 5% of neutral detergent intended for woolen fabrics to erase the dust, and then wipe off the residual detergent with a clean, wet cloth.

If any part of the leather gets wet after cleaning, please wipe it dry with a clean, soft cloth and keep it in the ventilated shade for drying.

Downloaded from www.Manualslib.com manuals search engine

NOTICE

- If stains cannot be removed with the neutral cleanser, cleanser free of organic solvent can be used.
- Don't wash leather with organic substances at all, like volatile oil, alcohol, gasoline, or acid or alkaline solution, etc, as they will cause leather to fade.
- The nylon brush or the synthetic fiber cloth etc will sratch and damage the good texture on the leather surface.
- Dirty decorative leather pieces will cause mildew. Especially, keep the decorative pieces clean and protected from oil stains.
- Exposure to the sunshine for a long time will make the leather surface be hardened or shrink. Thus, the car should be parked in the cool and shady place, especially in the summer.
- In the hot summer, as the temperature inside the car rises easily, objects made from ethylene plastics, plastics, or wax-included materials, which may stick to leather in the high-temperature environment.
- Incorrect cleaning of decorative leather pieces will result in color fading or stains.

If you have any question about vehicle cleaning, please consult your local BYD authorized service stations.

Downloaded from www.Manualslib.com manuals search engine

Chapter 4
Section 2

Maintenance Instructions

Maintenance..... 4-10
How to judge when the vehicle needs maintenance? 4-11
BYD e6A Maintenance Program 4-12

Downloaded from www.Manualslib.com manuals search engine

Maintenance

Scheduled maintenance is very important

BYD Auto Company strongly recommends that users protect their new BYD e6A cars by following the maintenance program, because scheduled maintenance serves the following purposes:

- Power saving:
- Extend its operating life
- Enjoy driving
- Drive safely
- Drive stably
- Conform to regulations on maintenance
- Conform to governmental regulations

NOTICE

Please refer to BYD e6A Maintenance & Repair Manual and turn to BYD authorized service station regularly for vehicle maintenance.

The BYD e6A car has been designed to be an economical and easy to maintain vehicle which dispenses with many of the maintenance services required before. To ensure your vehicle runs with the best efficiency, you must follow the maintenance program.

Where can you get maintenance service?

It is best to have the vehicle maintained by a local BYD authorized service station.

Technicians in BYD are all well-trained professionals. They will get the latest service information, such as proceedings about technique, maintenance gist and internal training program of special repair shop. They have completed study in BYD Auto Company before working, instead of study while working. Isn't it the best way?

BYD authorized service stations have spent a large amount of money on special tools and maintenance equipment for BYD cars, which helps to better complete tasks as well as reduce expenses.

The maintenance department of BYD authorized service stations can perform all the maintenance program for your vehicle - reliably and economically.

Which maintenance items can be completed by driver himself?

Many maintenance items can be easily completed by driver himself, as long as he has some knowledge about mechanical maintenance and also has some basic auto tools. For easy operations, you can refer to section 7.

Notice: special tools and professional skills are required for part of maintenance operation. These items must be maintained by qualified technicians. Even though the driver is a well-experienced technician, BYD Auto Company still recommends you contact BYD authorized service station for repair and maintenance. What's more, they can keep a record of maintenance for your vehicle, which will be very helpful when you need maintenance service.

Downloaded from www.Manualslib.com manuals search engine

How to judge when the vehicle need maintenance?

Pay attention to changes in vehicle performance and sound, as well as visual signs for necessary repair. Some important conditions are shown as below:

- Abnormal motor starting noise
- Coolant temperature stays high, still or leaked
- The motor is stuck or has abnormal noises
- The motor shakes violently during operation
- The motor cannot be started
- The power assembly has leaked
- There is an abnormal smell from the power assembly
- Driving force is reduced obviously
- The vehicle is leaking from underneath (yet air conditioning water drops are normal)
- Exhaust sound changes (it may indicate carbon monoxide leak) You must drive with windows opened and check the exhaust system immediately.
- Flat tire; excessive noise made by tires while turning a corner; uneven tire wear
- The vehicle leans to one side while driving in a straight line on the flat ground.
- Abnormal noises related to movement of suspension
- Braking is disabled; brake pedal or clutch pedal feels like sponge; brake pedal almost touches the floor; when braking, the vehicle pulls to one side.
- Temperature of motor coolant still continues to be too high
- The battery capacity decreases obviously
- Battery temperature still continues to be very high, over-heated protection, no power output

If any conditions are as above, drive your vehicle to BYD authorized service station as soon as possible, as your vehicle may need adjustment or repair.

Tips
Do not keep on driving without any inspection, or it may cause serious car damage and human injury.

Downloaded from www.Manualslib.com manuals search engine

BYD e6A Maintenance Program

BYD e6A maintenance program is designed for ensuring stable driving, reducing faults and driving safely and economically.

You can refer to the schedule for intervals of maintenance, which is almost scheduled according to the reading on odometer or time interval. It is subject to what comes first.

For maintenance item out of the last expiration date, it can also be maintained at the same interval.

Maintenance interval for each item are all recorded in the maintenance program.

Rubber hose (used for cooling and heating system, brake system and fuel system) must be checked by qualified technicians according to the BYD e6A maintenance program.

These are extremely important maintenance items. If any deterioration or damage, the hose must be replaced immediately. Notes: rubber hose will be deteriorated with the passing years, thus it may cause expansion, abrasion or breakage.

Requirements for Maintenance Program

BYD e6A auto must be maintained according to the normal maintenance program (you can refer to "Maintenance Program").

If the vehicle is operated under the following one or more special conditions, some maintenance items are required to be performed more frequently.

A. Road Conditions

a. Driving on rugged, muddy or snowmelt affected roads
b. Driving on dusty roads

B. Driving Conditions

a. When the vehicle has towed a trailer; used a camping trailer or top clamping bracket
b. When the vehicle has run at a short distance repeatedly below 0 °C, within 8 km.
c. When the vehicle has idled for a long time or long run at a low speed such as police car, taxi or delivery car.

Downloaded from www.Manualslib.com manuals search engine

Maintenance Program

Maintenance Intervals / Maintenance Items		Reading on odometer or months, subject to what comes first														
	×1000 km	3	8	13	18	23	28	33	38	43	48	53	58	63	68	73
	Months	First maintenance	6	9	12	15	18	21	24	27	30	33	36	39	42	45
Power assembly																
a. Check if the cooling water pipe is damaged and confirm that the pipe joint is locked tightly		I		I		I		I		I		I		I		I
b. Check the coolant level in the expansion tank		I		I		I		I		I		I		I		I
c. Replace coolant		Replace every 2 years or 40,000 km														
d. Check and replace the gear oil in the transmission	General using conditions	I	R			R		I		R		I		R		I
	Rigorous using conditions	R: Shorten the cycle as required														
Chassis and Car Body																
e. Check and tighten the chassis set screws		I		I		I		I		I		I		I		I
f. Brake pedal and parking brake		I		I		I		I		I		I		I		I
g. Brake pad and brake disc		I		I		I		I		I		I		I		I
h. Replace brake fluid		Replace every 2 years or 30,000 km														
i. Pipeline and hose of brake system		I		I		I		I		I		I		I		I

Downloaded from www.Manualslib.com manuals search engine

j. Steering wheel, draw bar	I		I		I		I		I		I		I		I
k. Transmission shaft dust cover	I		I		I		I		I		I		I		I
l. Ball pin and dust cover	I		I		I		I		I		I		I		I
m. Front and rear suspension	I		I		I		I		I		I		I		I
n. Tire and inflation pressure	I	I	I	I	I	I	I	I	I	I	I	I	I	I	I
o. Check the front and rear wheel alignment	I		I		I		I		I		I		I		I
p. Check if the wheel bearing has end play	I		I		I		I		I		I		I		I
q. Cooling or heating system	I		I		I		I		I		I		I		I
r. Air filter of air conditioner	I		R		R		R		R		R		R		R
s. Air conditioner refrigerant	I		I		I		I		I		I		I		I
t. Check the SRS system	I		I		I		I		I		I		I		I
u. Inspect the vehicle body damage conditions	Every year														

Note:

Downloaded from www.Manualslib.com manuals search engine

(a) Definition for the symbols in the forms

I = Inspect and correct or replace as necessary; R = Replace, change or lubricate; C = Clean.

(b) Rigorous using conditions refer to:

- Frequent driving on dusty roads or exposure to the air rich in saline matters.
- Frequent driving on bumpy roads, slopes, water-accumulated roads or mountain paths.
- Driving in cold areas.
- Use the brakes frequently and often slam on the brakes.
- Use it as a tow vehicle frequently.
- Use it as a taxi.
- Above 32 °C, drive the vehicle in the crowded urban area for more than 50% running time.
- Above 30 °C, drive the vehicle at a speed over 120 km/h for more than 50% running time.
- Frequent driving under overloaded conditions.

Downloaded from www.Manualslib.com manuals search engine

Downloaded from www.Manualslib.com manuals search engine

Chapter 5

Self-maintenance

Foreword

Motor compartment Exterior 5-2
Fuse Location 5-3
Precautions on Self-maintenance 5-4
Location of Jack 5-5

Downloaded from www.Manualslib.com manuals search engine

Motor compartment Exterior

1. Distribution box assembly
2. Battery
3. DC-DC
4. Expansion tank with coolant
5. Drive motor controller

Downloaded from www.Manualslib.com manuals search engine

Fuse Location

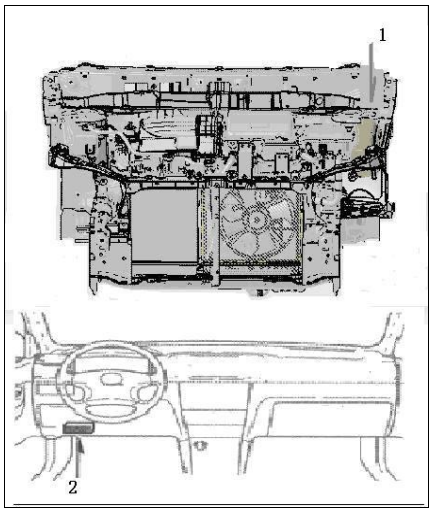

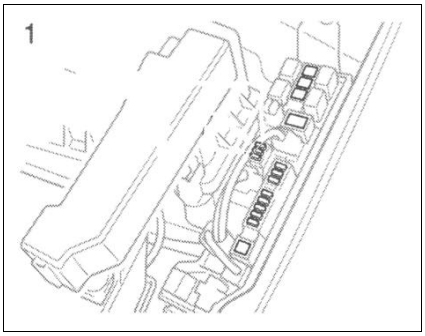

Please refer to section 5-4 "Fuse and Relay" for the name of the electric appliance protected by each fuse.

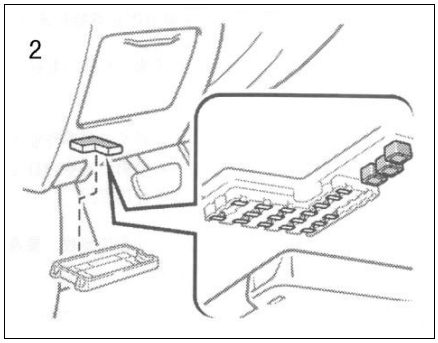

Downloaded from www.Manualslib.com manuals search engine

Precautions on Self-maintenance

In case of self maintenance, you must follow the correct procedures in this section.

It is important to note that any incorrect or incomplete maintenance may cause malfunctions of the electric vehicle.

This section only gives explanations for maintenance operations that can be easily carried out by yourself. Some items must still be maintained by qualified technicians with special tools.

It is important to avoid any accidents or injury. Please observe the following special tips.

Tips

- When the motor is running, you must keep your hands, clothes and tools away from the running fans. (It is best to remove items such as rings, watches and neckties.)
- The motor in the motor compartment, DC-DC, motor controller and radiator are very hot immediately after the vehicle has been running. Be careful and do not touch them, nor the liquid in the pipelines.
- If the motor is very hot, do not take down the radiator cover or unscrew the drain plug to avoid burning.
- Do not leave any flammable material in the motor compartment such as paper or cloth.
- If you are working near an electric cooling fan or radiator grille, you must confirm that the power switch has been turned off. When turning on the power switch, if the temperature of the motor coolant rises and/or turning on the air conditioner, the electric cooling fan of motor will start running automatically.
- Handle the storage battery with special care, as it contains poisonous gas and corrosive sulfuric acid.
- The car shall only be lifted by a jack. Do not crawl under the car; lift it with car lifting jack or other firm braces.
- No matter whether operating on the top or bottom of the vehicle, you must use eye protection to avoid dust and splashes of fluid getting into your eyes.
- Used engine oil contains potentially harmful contaminants which may cause dermatitis or skin cancer. Be careful not to keep prolonged and repeated contact with used engine oil. Skin should be washed with soap and water, to remove any used engine oil thoroughly.

Downloaded from www.Manualslib.com manuals search engine

- Do not put the used engine oil in the place within the reach of children.
- Dispose of the used engine oil and filter by some safe and satisfactory means and do not dispose together with the household garbage, in the sewer or on the ground. Refer to BYD authorized service station for recycling or disposing methods.
- Since brake fluid may damage the eyes as well as the paint finish, you must be very careful in filling brake fluid; if it splashes into the eyes, wash with fresh water immediately; if your eyes still feel uncomfortable, you must go to see a doctor.

NOTICE

- Be careful to avoid battery short due to accident.
- If the brake fluid overflows, you must wipe it up completely, to avoid damaging the components or paint finish.
- If the brake fluid overflows, you must wipe it up completely, to avoid damaging the components or paint finish.
- Note: do not scratch the glass by the wiper bracket.
- Before closing the motor compartment, check again that you have not left any tools or a piece of cloth inside.

Location of Jack

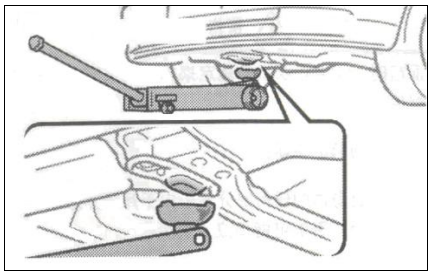

Front

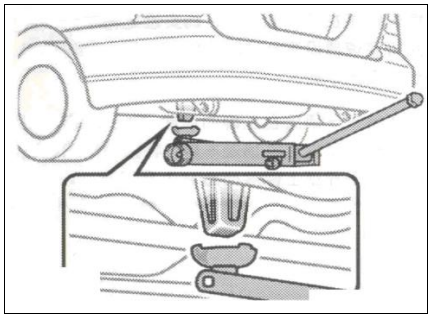

Back

Downloaded from www.Manualslib.com manuals search engine

When lifting a car with jack, place it in proper position as shown in the figure.

WARNING

In lifting, you must follow the regulations below to reduce the possibility of human injuries:

- Do not place any part of your body under the car lifted by a jack. Otherwise, it may cause human injuries.
- When the vehicle is lifted by jack, do not start the motor or leave it in running.
- Stop the car on the flat ground, make sure the parking brake is applied and block the wheels opposite the lifting point, when necessary.
- Make sure the jack is placed in the correct lifting point. Lifting the car in incorrect lifting point will damage the car or the car may drop from the jack to cause human injuries.
- When the car is only lifted by a jack, do not crawl under the car; a car supporting bracket is required.
- Do not lift the car if any people in it.
- In lifting the car, do not put any thing on the top or bottom of the jack.

NOTICE

Make sure the jack is stored properly, or it may damage the vehicle.

Downloaded from www.Manualslib.com manuals search engine

Chaper 5
Section 2

Motor and Chassis

Service and Maintenance for Transmission Case 5-8
Check Coolant Level 5-10
Check Radiator and Condenser 5-10
Check Tire Pressure 5-11
Check and Replace Tire 5-12
Tire Rotation 5-13
Replace Wheels 5-14
Precautions with Aluminum Wheels 5-15

Downloaded from www.Manualslib.com manuals search engine

Replace lubricant for front drive transmission

After running in a new transmission, drain the lubricant in the transmission case and refill with fresh lubricant. Unscrew the drain bolt 1 to drain the lubricant and tighten it again. Then unscrew the filler bolt 2 to refill fresh lubricant. SAE80W-90 is recommended for use; When the outside air temperature is lower than -15 °C, SAE75W-90 is recommended for use. Please keep the filling amount at about 3.5L. It is recommended to replace lubricant at the specified service station.

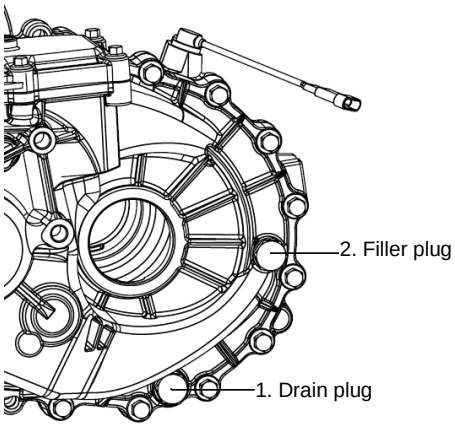

Check lubricant for front drive transmission

Check the lubricant amount in the transmission case during daily operation. Remove the filler plug, and touch the fluid level in the bolt hole. The normal level should be up to the edge of the plug hole. Otherwise, please refill fresh lubricant until it over flows from the filler opening. Then screw the filler plug and tighten it. Replace the lubricant in the transmission case regularly. To secure the quality of lubricant, wash and clean the transmission case before replacing lubricant.

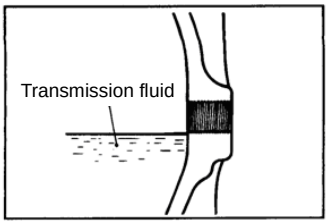

Gear oil level

Check the bolts outside of the transmission for looseness or absence during daily operation. If a bolt found is found loose, tighten it timely; if there is any bolt missing, reinstall it. Keep the bolt and transmission case clean to facilitate heat dissipation.

Downloaded from www.Manualslib.com manuals search engine

Check the breather tubes on the transmission frequently to ensure the normal performance of these components.

If BYD original transmission fluid is not available, you can use API certified gear oil as substitute. For specific specifications, please refer to Maintenance Manual or contact BYD authorized service station.

Transmission fluid shall be replaced by mileage or interval as specified in Periodic Maintenance Table. The existing transmission fluid shall be drained completely before filling new transmission fluid.

Please contact BYD authorized service station if you have any doubt about checking fluid level or filling fluid inbox.

Maintenance for rear drive transmission (if equipped)

After running in a new transmission, drain the lubricant in the transmission case. Unscrew the drain plug1 to drain the lubricant and tighten it again. Then unscrew the filler plug 2 to refill fresh lubricant. ATF220 is recommended to use. Please keep the filling amount at about 1.5 L. It is recommended to replace lubricant at the specified service station.

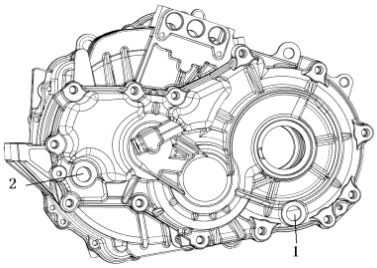

Pay attention to check the lubricant amount in the transmission case during daily operation. Remove the filler plug, and touch the fluid level in the plug hole. The normal level should be up to the edge of the plug hole. Otherwise, please refill fresh oil approved by BYD until it over flows from the filler opening. Then screw the filler plug and tighten it. Replace the lubricant in the transmission case regularly. To secure the quality of lubricant, wash and clean the transmission case before replacing lubricant.

Check the bolts outside of the transmission for looseness or absence during daily operation. If a bolt is found loose, tighten it timely; if there is any bolt missing, reinstall it. Keep the bolts and transmission case clean in order to facilitate heat dissipation.

Check the components of vent ducts on the transmission frequently to ensure the normal performance of these components.

Downloaded from www.Manualslib.com manuals search engine

Check Coolant Level

Check the transparent overflow tank of the cooling fluid when the motor is cold. If the cooling fluid level is located between "FULL" and "LOW" line on the tank, it is in compliance with the requirement. If the fluid level is low, additional cooling fluid must be added. (Refer to section "Choose Cooling Fluid" below for information on usable type of cooling fluid.)

The cooling fluid level in the overflow tank varies with the temperature of the motor. But if the fluid level is under "MIN" line, more fluid must be added until fluid level reaches "MAX" line.

After adding cooling fluid, if the fluid level drops in short period, there may be leakage in the system. You shall conduct visual check to radiator, hose, radiator cap, drain cock and pump.

If visual check cannot find any leakage, please contact BYD authorized service station to check cap pressure and whether there is leakage in the cooling system.

Tips
To avoid scorching, do not remove the radiator cap when the motor is hot.

Choose Cooling Fluid

Only use cooling fluid authorized by BYD authorized service station. Choose and add suitable type of cooling fluid into cooling system according to environment temperature.

Improper coolant could damage the cooling system, such as motor.

NOTICE
Do not over use water, which may damage motor cooling system in winter.

For more detailed information, please contact BYD authorized service station.

Check Radiator and Condenser

If radiator or condenser becomes very dirty or you can not determine their status, please send the vehicle to BYD authorized service station.

Tips
To avoid scorching, do not touch radiator or condenser when motor is hot.

NOTICE
Do not remove radiator or condenser by yourself to avoid damage.

Downloaded from www.Manualslib.com manuals search engine

Check Tire Pressure

Maintain proper pressure in tires.

For information on recommended cold tire pressure and tire dimension, please refer to Section 5-4.

Tips
The spare tire inflation pressure should be 420 kpa as required

You shall check the tire pressure every two weeks, or, at least, every month. Spare tire pressure shall also be checked.

Improper tire pressure may increase gas consumption, reduce driving comfort, tire service life, and pose danger to road safety.

If the tires need air filling frequently, please contact BYD authorized service station for a check.

Tips
Please keep standard tire inflation pressure. Otherwise, the following conditions may happen, and even cause serious injury accidents. Low tire pressure (insufficient air filling) -- ● Excessive wear ● Abnormal wear ● Difficulty in operation ● Air leakage due to overheat of tires ● Deteriorated sealability at the edge of tire ● Deformation of wheel and/or detachment of tire and wheel High Tire Pressure (excessive air filling) -- ● Difficulty in operation ● Excessive wear of center of tire tread ● Increased possibility that hard road may do damage to tire

Follow the instructions below when checking tire pressure:

- Check tire pressure only when the tire is cold. The vehicle must be parked for over 3 hours, or driving no longer than 1.5 km, you may measure the exact tire pressure readings.
- Tire pressure gauge must be used. Judgment of tire pressure based on experience may lead to severe error. In addition, several pounds difference in tire pressure may reduce driving operability and comfort.
- Do not release air in tire or reduce tire pressure after driving. It is normal that tire pressure is higher after travel.
- Make sure valve cap is installed on tire. It blocks dust, damp from entering tire and prevents air leakage. Install a new one if the valve cap gets missing.

Downloaded from www.Manualslib.com manuals search engine

Check and Replace Tire

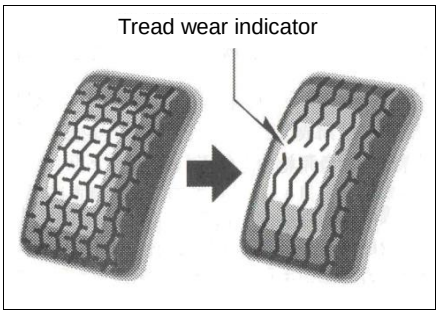

Check Tire

Check tread wear according to tire wear indicator If the wear indicator is visible, the tire shall be replaced.

Tire wear indicator is embedded in the tire of BYD e6A to indicate when to replace it. When wear depth reaches 1.6 mm or less, the wear indicator will be exposed. If two or more wear indicators in contiguous tread grooves are visible, the tire must be replaced. The shallower the tread, the greater danger of tire skid.

If the tread wears down 4 mm or more on tires, the effectiveness of tires is lost when driving on snow.

In case of a cut, rupture or crack exposing the cord fabric or abnormal tire inflation, it means there is internal damage in the tire and the tire must be replaced.

In case of frequent air leakage or cut or other damage unrepairable due to the severity or position, the tire must be replaced. When you are not sure about tire conditions, please contact BYD authorized service station.

If air leakage occurs on the road, stop driving immediately. Even a small travel after air leakage may cause permanent damage to the tire.

After 6 years' use, the tire, even if it has no obvious damage, must be inspected by qualified technician.

The tire may deteriorate due to aging even it has not been used heavily.

This rule also applies to spare tires and tires in storage.

Replace Tires

Only use a tire with the same dimension and structure, and the same or higher load capacity to replace the tire installed on the car.

Any difference in dimensions and structure may have serious effect on operability, passenger comfort, calibration of speedometer / odometer, ground clearance and clearance between vehicle body and tire or tire chain.

Tips
Please follow the instructions below. Or it may result in severe injury. ● Never use a combination of radial ply tire, bias belted tire and diagonal-ply tire on the same vehicle, or it may lose operability in driving, leaving the driver in great danger. ● Only use tires with dimensions recommended by the manufacturer. Or the car may lose control in driving.

Downloaded from www.Manualslib.com manuals search engine

Never use old tires on BYD e6A.

Tires from unknown origin may pose great danger.

You are recommended to replace four tires at one time, or at least, you shall replace two front/rear tires at the same time.

For steps of replacing tire, please refer to "When Tire Has Air Leakage" in Chapter 3.

Keep the wheels in balance after replacing tires.

Unbalanced tire may pose adverse effect on auto operability and tire service life. The tire may lose balance during normal use. As a result, irregular check is required to keep the tire in good balance.

Tire Rotation

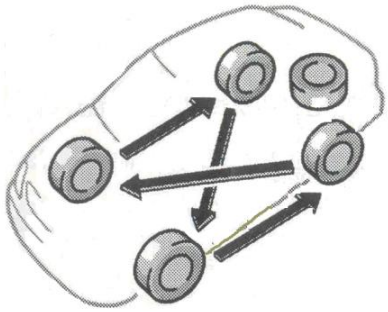

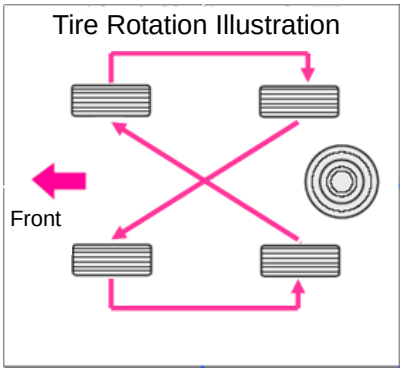

To equalize tire wear and extend its service life, you are recommended to rotate tire positions every 10,000 km. But the optimum time to rotate tires depends on driving habit and road conditions.

Tips
Do not perform tire rotation for spare tire.

Before tire rotation, check for uneven wear or damage. Improper tire pressure and wheel alignment, unbalanced wheel and frequent braking may lead to abnormal tire wear.

Choose Tire Chain

Use tire chain with proper dimension.

The rule to choose tire chain varies with locations and road conditions. Please refer to local rule before choosing tire chain.

Downloaded from www.Manualslib.com manuals search engine

Install Tire Chain

When possible, tire chain must be installed on front wheels. Do not install tire chain on rear wheels. Tighten tire chain again after driving for 0.5 - 1.0 km.

Follow strictly the instruction from the manufacturer when installing tire chain.

If wheel housing is installed on the car, remove it before installing tire chain, otherwise it may be damaged by tire chain.

Tips
● When tire chain is installed, the driving speed must not exceed 50km/h or the speed limit specified by the manufacturer, whichever is lower. ● Drive carefully when tire chain is installed and avoid protrusions, holes and sharp turns in the road, which may jolt the vehicle. ● When tire chain is installed, avoid sharp turn or braking with wheels locked, which may pose adverse effect to car operability. ● When tire chain is installed, slow down the car before turning to prevent losing control of the car, which may cause accident.

Replace Wheels

When to Replace Wheels

When the wheel has damage such as buckling, cracking or severe corrosion, it must be replaced.

If damaged wheel is not replaced timely, the tire may detach from the wheel or the car may lose control.

Choose Wheels

Only replace the wheel installed on the car with a wheel with the same load capacity, diameter, rim width and offset.

BYD authorized service station can replace wheels correctly.

Wheels with different dimensions and structure may have serious effect on operability, service life of wheels and bearings, cooling of brake, calibration of speedometer and odometer, brake performance, headlight alignment, bumper height, ground clearance and clearance between car body/chassis and tire /tire chain.

Do not replace the wheel with a used wheel, which may have undergone treatment or long mileage, getting the vehicle into trouble without prior warning. Do not use a wheel which is repaired after buckling, as it may have structural damage.

Tips
Do not use a wheel with specifications other than that recommended by the manufacturer, or the car may lose control in driving, which may result in severe injury or death.

Downloaded from www.Manualslib.com manuals search engine

Precautions on Aluminum Wheel

- It is recommended to use aluminum wheels depending on corresponding specifications. For the detail information, please refer to the next chapter.
- For a vehicle with aluminum wheels, the nuts on the wheels must be checked after the first 1600 km travel to make sure they remain tight.
- After tires are rotated, repaired or replaced, the nuts on the wheels must be checked after the first 1600 km travel to make sure they remain tight.
- Do not damage the wheels when using tire chain.
- Use only wheel nuts and wrenches designed for use with your aluminum wheels in the in-vehicle tools.
- When adjusting wheel balance using tire chain, please use the counter balance, plastic mallet or rubber mallet specified by BYD service station.
- As with all autos, aluminum wheels shall be checked regularly, and replaced if any damage.

Downloaded from www.Manualslib.com manuals search engine

Downloaded from www.Manualslib.com manuals search engine

Chapter 5
Section 3

Electric Appliance

Check Battery Status 5-18
Check and Replace Fuses 5-20
Add Washer fluid.....5-21
Replace Bulb.....5-22

Downloaded from www.Manualslib.com manuals search engine

Check Battery Status Precautions

Tips
Precautions on Battery The battery produces flammable and explosive hydrogen during operation. ● When using tools, prevent the battery from generating spark. ● Do not smoke or use matches near battery. Electrolyte contains toxic and corrosive sulphuric acid. ● Prevent electrolyte from touching eye, skin or clothing. ● Do not drink electrolyte by mistake. ● Wear eye protector when working near battery. ● Keep children away from battery.

Emergency Treatment
● When electrolyte enters eyes, immediately wash eyes with running clean water and then go to hospital. If possible, clean the affected area with sponge or cloth soaked in water on the way to the hospital. ● When electrolyte touches skin, immediately wash the affected area thoroughly with clean water. If you feel burning or pain, go to hospital immediately. ● When electrolyte is splashed on your clothes, it may penetrate and touch the skin. Please take off the clothes with electrolyte immediately, if necessary, treat it as per the previous method. ● If you drink battery electrolyte by mistake, you must drink a lot of water or milk immediately. Milk containing magnesia, uncooked egg and plant oils are recommended to be eaten immediately. You must go the hospital for emergency medical treatment.

Check Battery Appearance

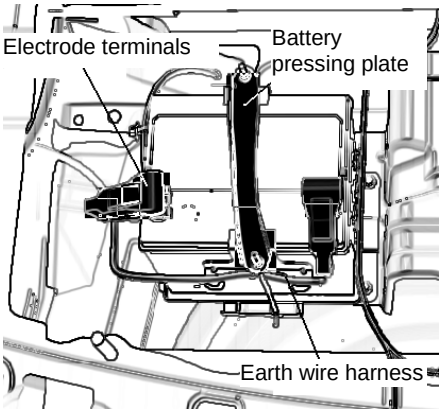

Check whether battery and its terminal is corroded, loose, cracked or has loose fixture.

a. If battery is corroded, clean it with mixture liquid of soda and warm water. Apply grease lubricant on the outer surface of terminals to prevent further corrosion.

b. If terminals are loose, tighten the nuts of the clamps.

Downloaded from www.Manualslib.com manuals search engine

c. Tighten the fixture properly to allow the battery fixed on proper place. Tighten the fixture too much may damage the battery box.

NOTICE

- Make sure motor and all auxiliary devices are turned off before maintenance of the battery.
- Before checking the battery, remove grounding wire on negative terminal (with "-" mark) first; after completion of service, connect it at the last step.
- Do not connect the positive and negative terminals of the battery, to avoid short circuit.
- When cleaning the battery, prevent any liquid from entering it.

Check Internal Status of Battery

Check the internal status of the battery according to instructions on the outer shell and status indicators of the battery.

NOTICE

- Charging the battery without disconnecting the wires on it may seriously damage ECU and other electrical devices on the car. Remove the battery wires first before connecting the battery to charger.
- When motor is not running, using electrical devices for a long time may cause over discharge of the battery, which may lead to difficulty in starting the vehicle or even permanent damage to the battery.
- Before leaving the car, make sure the doors are closed and all electric appliances, such as lights, are turned off.

Tips

When electrolyte runs low in the battery, replace it with a new one and do not add electrolyte by yourself.

Downloaded from www.Manualslib.com manuals search engine

Check and Replace Fuses

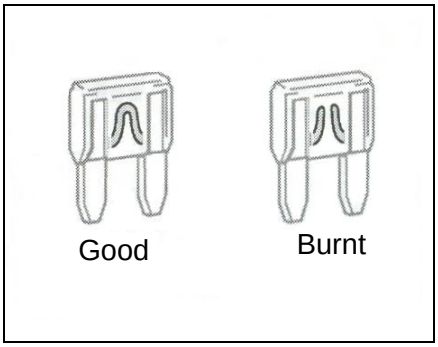

A Type

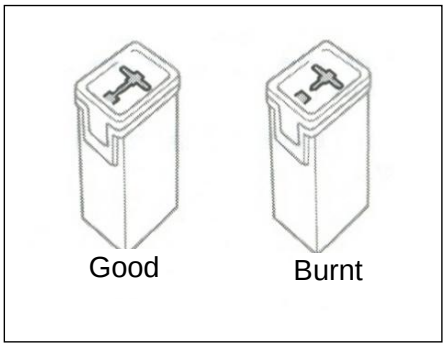

B Type

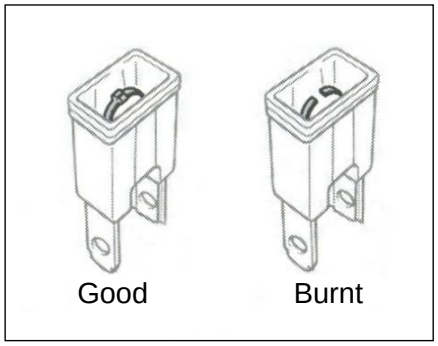

C Type

Downloaded from www.Manualslib.com manuals search engine

If the headlights or other electric devices do not work, please check the fuses. When necessary, replace the fuses.

For information on location of fuses, refer to section 5-1"Location of Fuses".

Turn off power switch and other malfunctioning devices. Pull out the fuses with potential malfunction vertically and check them.

Find out which fuse has trouble. Circuit name of each fuse is indicated on cover of the fuse box. See Section 5-4 for control function of each circuit.

Use an extraction tool to pull A type fuse out.

Tips
Never use a fuse with higher amperage than the rating amperage or use any other objects to replace the fuse, otherwise it may cause serious damage and may lead to fire

If you are not sure whether the fuse is burnt out, replace it with a good one.

If the fuse is burnt out, insert a new fuse into the fuse socket.

Only install a fuse with amperage specified on the fuse box.

If there is no spare fuse in emergency situation, you can pull out "29. Indoor Light" fuse, which is not essential in driving, and use it as a substitute for a fuse with the same amperage.

If there is no fuse of the same amperage, you should choose a fuse with lower amperage; try to get a fuse with the amperage as close to the rated amperage as possible. If you use a fuse with lower amperage, it may be burned out again, but this doesn't mean the vehicle has a problem. You must install a proper fuse as soon as possible, and put back the substitute fuse.

It is recommended that you keep a set of spare fuses on the vehicle for emergency use.

If a new replaced fuse is burnt out immediately, the electrical system may have problem. Contact BYD service station for a check as soon as possible.

Add Cleanser

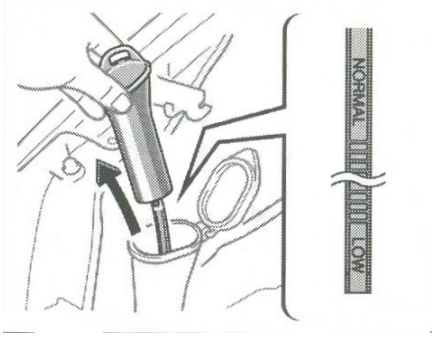

If the washer fluid does not work, the washer fluid tank may have been empty. Check the washer fluid level on the content gauge. If the level is below "LOW" mark, you must add washer fluid.

Downloaded from www.Manualslib.com manuals search engine

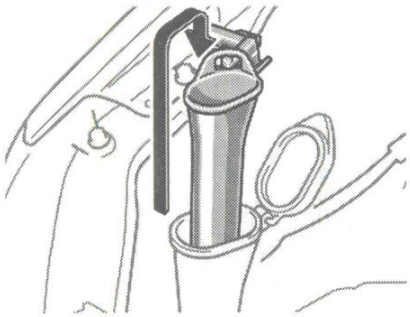

Before Adding Cleanser

Pull out washer fluid funnel and hang it on the motor hood support.

Water can be used as washer fluid. But in cold region where the temperature is below zero degrees, you must use washer fluid with an anti-freeze agent. It is available in BYD authorized service stations and most auto part stores. For the mixing ratio of water and anti-freeze agent, please refer to manufacturer's instructions.

Put the funnel back in place after filling the washer fluid tank.

Replace Bulb

The following figures shows the method to remove the bulbs. Make sure the power switch and light switches are turned off when replacing bulbs. Use bulbs with rated power shown in the table below:

Parking light and rear parking light consists of a group of LEDs. When the number of burnt out LED affects the vehicle's compliance with local laws, please send the vehicle to BYD authorized service station to replace bulbs.

Tips
● Do not replace bulb when it is hot to avoid burning. ● The halogen bulb is filled with pressurized gas, please be particularly careful. If the bulb is scratched or falls to ground, it may explode or crack. Only hold the bulb on its plastic or metal part. Do not touch the glass part of the bulb with bare hands.

When traveling in rain or when the light lens is wet after washing, the inside of lamp lens of an external light such as a headlight will temporarily fog. As with fog on the windshield in rainy days, the fog inside the light lens is due to the temperature difference between the inside and the outside of light lens, and isn't a problem. But if there is water droplet or water pool in the light lens, please contact BYD authorized service station.

Headlight

NOTICE		
Only the bulbs specified in the following table can be used.		
Bulb	W	Type
Headlight (low beam)	55	H7
Headlight (high beam)	60	HB3
Front fog light	55	H3
Parking light	5	W5W

Downloaded from www.Manualslib.com manuals search engine

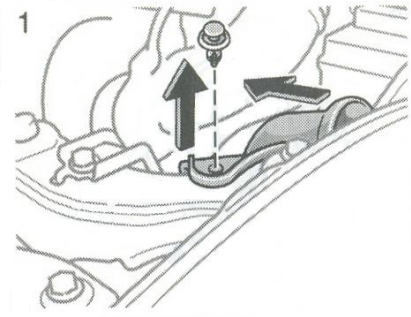

1. Headlight LH: remove the clamps.

The removal and installation of the cover lamp is shown in the figures below.

Remove Clamp

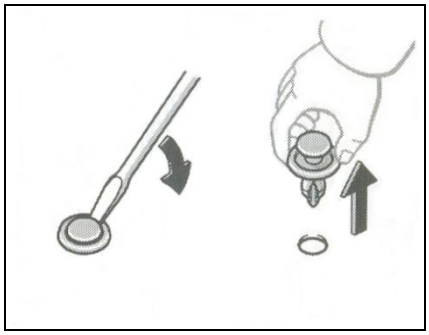

Install Clamp

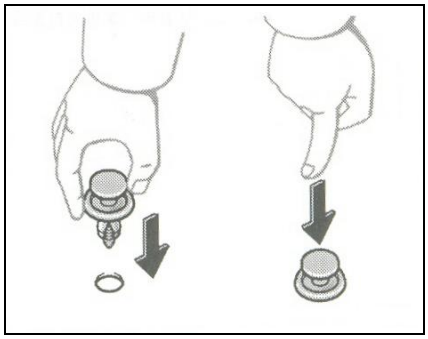

2. Pull off the connector while pressing down the buckle.

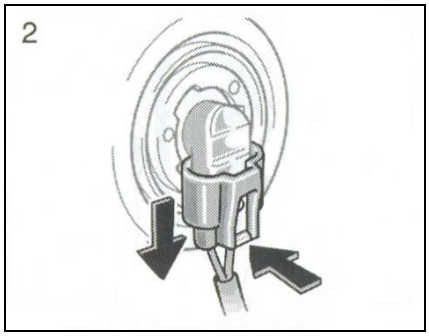

If the connector is too tight, shake it first.

3. Rotate the bulb counterclockwise to remove it.

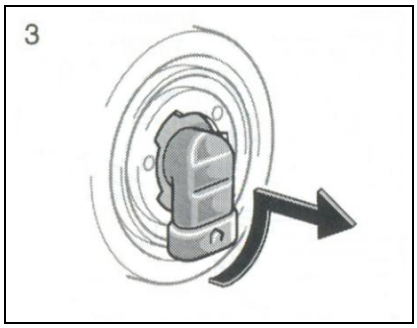

4. Install the new bulb in the mounting hole by rotating clockwise.

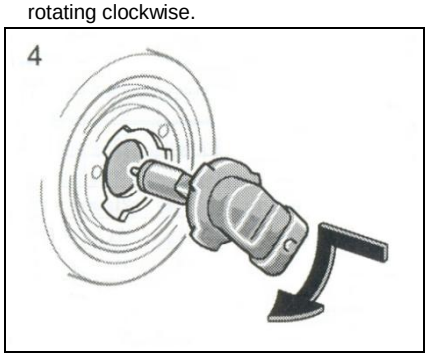

Downloaded from www.Manualslib.com manuals search engine

You need not adjust the headlight after replacing the bulb. In event that you need to adjust the headlight, please contact BYD authorized service station.

Tips
● If other lights or illumination source need to replace the light assembly due to malfunction, please contact BYD authorized service station.

Downloaded from www.Manualslib.com manuals search engine

Chapter 5
Section 4

Part Specifications

Maintenance Specifications.....5-26
Fuse and Relay.....5-26

Downloaded from www.Manualslib.com manuals search engine

Maintenance Specifications

Lubrication for Power Assembly

Maintenance Parameters for Motor:
Lubricant amount of front drive transmission: 3.5 L.
Lubricant amount of rear drive transmission: 1.5 L.
Lubricant specification for front drive transmission: SAE80W-90 is recommended for use, and under -15 °C in winter, gear oil SAE75W-90 is recommended for use.
Lubricant specification for rear drive transmission: ATF220.
Motor fluid specification: ATF220.

Cooling System

Total Capacity, L (liter) 6.8 L

Tire specification and inflation pressure

	Bias tire	Spare tire
Tyre specification	225/65 R17	T145/90R17
Tyre pressure Kpa (kg/cm^2)	250 Kpa~270 Kpa	420 Kpa

Aluminum wheels specification
Wheel nut torque, Nm (kilogram force·m) 110 (10.5)

Downloaded from www.Manualslib.com manuals search engine

Fuse and Relay

I. Instrument panel distribution box

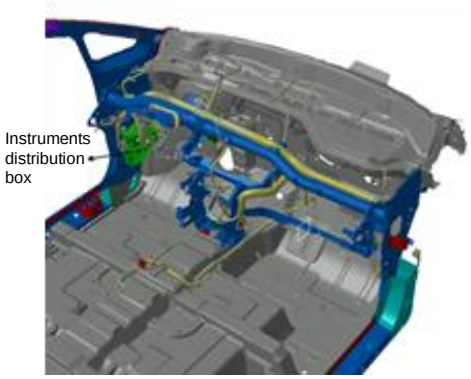

Connectors code illustration

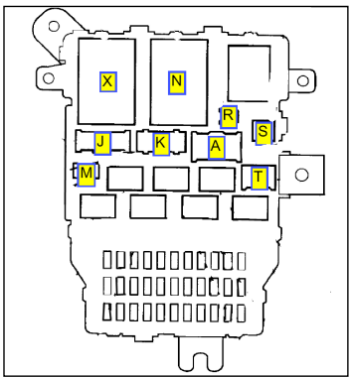

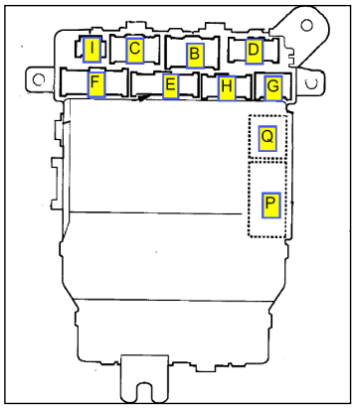

Fuse code and specification

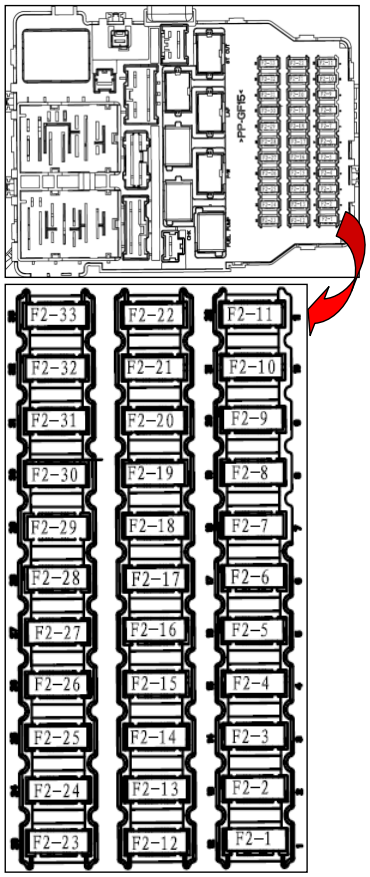

Downloaded from www.Manualslib.com manuals search engine

Code	F2/1	F2/2	F2/3	F2/4	F2/5	F2/6	F2/7	F2/8	F2/9	F2/10	F2/11	F2/12
Specification	20A	7.5A	10A	10A	15A	7.5A	7.5A	7.5A	7.5A	7.5A	7.5A	7.5A
Description	Door Lock Motor	Inner Illumination	Combination instrument	Audio and Video System	Cigar Lighter	Rear Fog Light	Central Control System		Battery Control Unit with Constant Electricity	Keyless	Motor controller	Defroster for Outer Rear View Mirror LH&RH
Code	F2/13	F2/14	F2/15	F2/16	F2/17	F2/18	F2/19	F2/20	F2/21	F2/22	F2/23	F2/24
Specification	7.5A	7.5A	20A	20A	20A	20A	20A	7.5A	20A	7.5A	15A	7.5A
Description	Steering shaft lock unlocking	IG2	Reservation	Motor for front window LH	Motor for rear window RH	Motor for front window RH	Motor for rear window LH	Auxiliary power supply	Spare	High voltage contactor	Motor relay for P gear	DLC
Code	F2/25	F2/26	F2/27	F2/28	F2/29	F2/30	F2/31	F2/32	F2/33			
Specification	7.5A	15A	7.5A	15A	15A	10A	10A	7.5A	30A			
Description	DC	Vacuum pump 1	EPS	Modules 2 stages power supply	Vacuum pump 2	ABS ECU	Switch 2 stages power supply	SRS	Front wiper			

Downloaded from www.Manualslib.com manuals search engine

Relay code and description

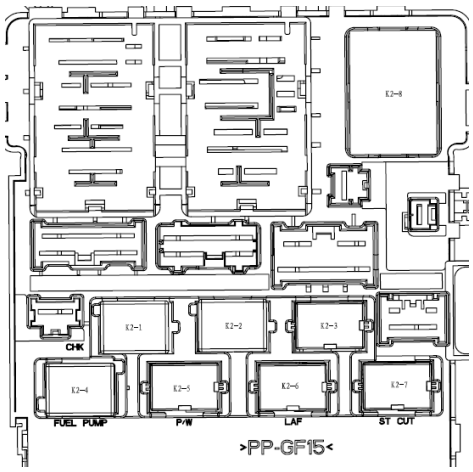

Code	K2-1	K2-2	K2-3	K2-4	K2-5	K2-6	K2-7	K2-2	
Specification	30 A	30 A	20 A	30 A	20 A	20 A	20 A		
Description	Vacuum pump 1	Vacuum pump 2	Cigar Lighter	Motor for P gear	Power windows	DC	Reservation	Flashing	

Downloaded from www.Manualslib.com manuals search engine

II Distribution box in the motor compartment

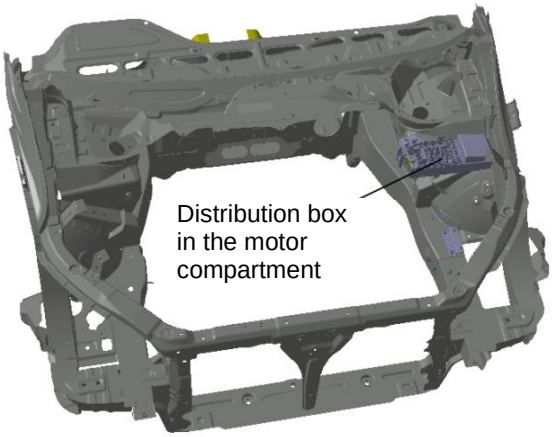

2.1. Connectors code illustration

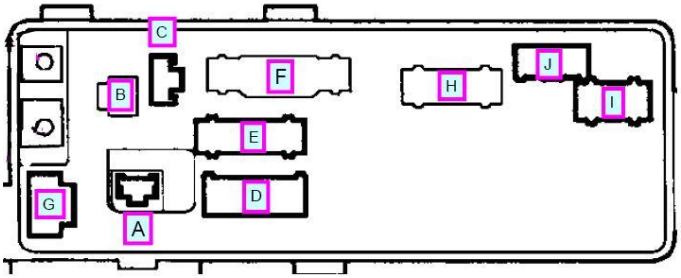

2.2. Fuses illustration for distribution box in the motor compartment

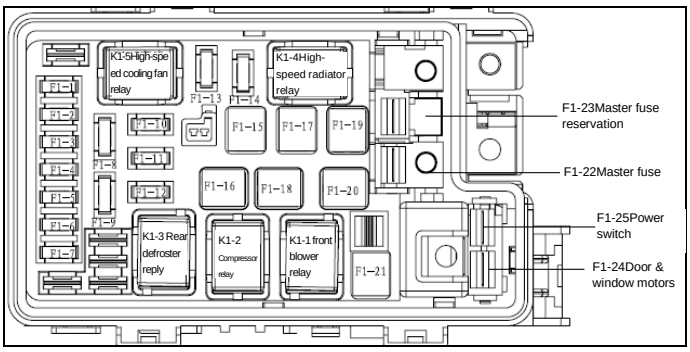

Downloaded from www.Manualslib.com manuals search engine

Code	F1/1	F1/2	F1/3	F1/4	F1/5	F1/6	F1/7	F1/8	F1/9	F1/10	F1/11	F1/12
Specification	10A	10A	10A	10A	30A	15A	7.5A	20A	15A	30A	20A	10A
Description	right high beam light	left high beam light	left low beam light	right low beam light	Spare	width-indicator	MCU	Front Fog Light	High-voltage module with constant electricity	Low(High)-speed radiator fan	Cooling fan	Water pump
Code	F1/13	F1/14	F1/15	F1/16	F1/17	F1/18	F1/19	F1/20	F1/21	F1/22-1	F1/22-2	F1/23-1
Specification	15A	20A	30A	40A	25A	40A	40A	40A	40A	100A	70	50
Description	Steering lights	Horn, Stop lights	Rear defroster	Illustration, CAN module, auxiliary	ABS	Motor for P gear	ABS	Battery control unit	Front blower	Master fuse	Reservation	Window control system
Code	F1/23-2											
Specification	50											
Description	Power switch											

Downloaded from www.Manualslib.com manuals search engine

2.3. Relay code illustration for distribution box in the motor compartment

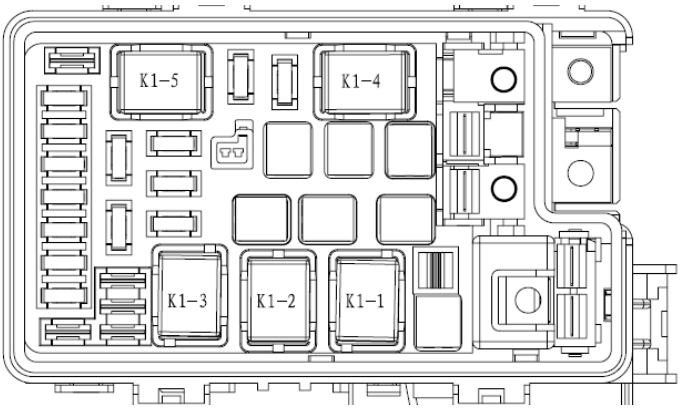

Code	K1-1	K1-2	K1-3	K1-4	K1-5		
Specification	30A	20A	30A	20A	20A		
Description	Front blower	Water pump motor	Rear defroster	High-speed radiator fan	High-speed cooling fan		

Downloaded from www.Manualslib.com manuals search engine

2.4 High-voltage cables illustration

No.	Content
1	Drive motor controller DC bus I
2	Drive motor controller DC bus II
3	Wire for DC and A/C driver
4	To DC and A/C driver
5	To motor controller negative
6	To motor controller positive

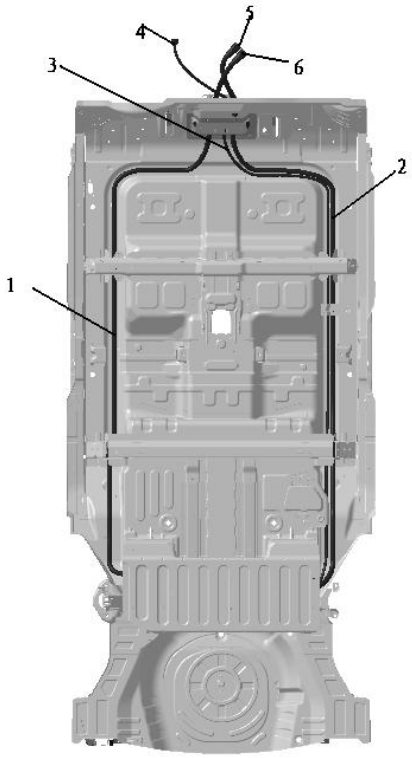

(Do not touch the high-voltage cables and connectors casually)

Downloaded from www.Manualslib.com manuals search engine

比亚迪汽车
BYD AUTO

Security classification: secrecy (III) No.: BYD—SY-××

BYD xx AUTO Owner's Manual

Version number/Number of amendment: A/0

(Organization name, Simsun, size 2, font-weight)

Month Date Year (size 3, Simsun, front-weight)

Downloaded from www.Manualslib.com manuals search engine

Document name, size 3, Simsun, font-weight	Code	.	
	Pages		Page
	Version number/number of amendment		

Draft: _____

Proofreading: _____

Audit: _____

Inter department check: _____

Standard checking: _____

Approval: _____

Marks	Number	Reversion No.	Signature	Date	Marks	Number	Reversion No.	Signature	Date

Downloaded from www.Manualslib.com manuals search engine