Protected by copyright. Copying for private or commercial purposes, in part or in whole, is not permitted unless authorised by AUDI AG. AUDI AG does not guarantee or accept any liability with respect to the correctness of information in this document. Copyright by AUDI AG.

Workshop Manual

Audi A8 2003 ➤

Auxiliary Heater

Edition 03.2008

List of Workshop Manual Repair GroupsList of Workshop Manual Repair GroupsList of Workshop Manual Repair Groups

Repair Group

82 - Auxiliary heating

Protected by copyright. Copying for private or commercial purposes, in part or in whole, is not permitted unless authorised by AUDI AG. AUDI AG does not guarantee or accept any liability with respect to the correctness of information in this document. Copyright by AUDI AG.

Technical information should always be available to the foremen and mechanics, because their careful and constant adherence to the instructions is essential to ensure vehicle road-worthiness and safety. In addition, the normal basic safety precautions for working on motor vehicles must, as a matter of course, be observed.

All rights reserved.
No reproduction without prior agreement from publisher.

Copyright © 2010 Audi AG, Ingolstadt

A0051006220

Contents

82 - Auxiliary heating 1

1 Servicing auxiliary/additional heater 1
1.1 Contact corrosion 1
1.2 Notes on auxiliary/additional heater 1
1.3 Note on operation of auxiliary/additional heater in vehicles with diesel engine 5

2 Safety precautions when working on vehicles fitted with auxiliary/additional heater 7

3 Notes on general repair work on vehicles fitted with auxiliary/additional heater 8

4 Rules for cleanliness when working on auxiliary/additional heater (and fuel system) 9

5 Layout of components for auxiliary/additional heater in vehicle 10
5.1 Auxiliary heater remote control buttons and indicator lamp 16
5.2 Checking and replacing auxiliary heater remote control batteries 20
5.3 Adaption of remote control hand transmitter in additional heater control unit J364 20
5.4 Activating/deactivating auxiliary heater/auxiliary ventilation via Multi Media Interface (MMI) 21

6 Diverting fuel for auxiliary/additional heater 23
6.1 Filling fuel pipe to metering pump V54 with fuel (bleeding) 25
6.2 Diverting fuel (for auxiliary/additional heater) from fuel tank 25
6.3 Checking fuel delivery of metering pump V54 27
6.4 Removing and installing metering pump V54 32
6.5 Routing of fuel pipe to auxiliary/additional heater 34
6.6 Checking actuation and electrical connections of auxiliary/additional heater 34

7 Checking and adjusting CO2 content in auxiliary/additional heater exhaust gas 39
7.1 Checking CO2 content in auxiliary/additional heater exhaust gas 41
7.2 Adjusting CO2 content in auxiliary/additional heater exhaust gas 44
7.3 Removing residue from burner element of auxiliary/additional heater (operation with vegetable-oil or rape-oil methylester fuel only) 49

8 Incorporation of auxiliary/additional heater into coolant circuit 53
8.1 Incorporation of supplementary heater into coolant circuit 53
8.2 Incorporation of auxiliary/supplementary heater into coolant circuit 55
8.3 Incorporation of auxiliary/supplementary heater into coolant circuit 57
8.4 Operation of and removing/installing heater coolant shutoff valve N279 58
8.5 Bleeding coolant circuit 60
8.6 Note for vehicles with the problem “poor heat output” with engine running 61

9 Removing and installing auxiliary/additional heater 64
9.1 Removing and installing auxiliary/additional heater 65
9.2 Checking components of auxiliary/additional heater 70

10 Dismantling and assembling auxiliary/additional heater 73
10.1 Detaching and re-attaching add-on components from/to additional heater 73
10.2 Removing and installing auxiliary/supplementary heater exhaust system 76
10.3 Detaching and re-attaching add-on components from/to auxiliary/additional heater 76
10.4 Attaching intake hose with intake air silencer 81
10.5 Attaching bracket for auxiliary/additional heater with bonded rubber element 81
10.6 Types of bracket for auxiliary/additional heater 82
10.7 Auxiliary/additional heater exhaust system 82
10.8 Attaching spacer and insulating sleeve to exhaust system of auxiliary/additional heater 83
10.9 Routing wiring to circulation pump V55 84
10.10 Dismantling and assembling auxiliary/additional heater 84
10.11 Removing and installing connector console cover 86
10.12 Assignment of auxiliary/additional heater connector console 86
10.13 Removing and installing combustion air blower V6 87
10.14 Removing and installing burner element 87
10.15 Removing and installing glow plug with flame monitor Q8 88

Protected by copyright. Copying for private or commercial purposes, in part or in whole, is not permitted unless authorised by AUDI AG. AUDI AG does not guarantee or accept any liability with respect to the correctness and completeness of this document's contents.

11 Block diagram of auxiliary/additional heater 91
11.1 Incorporation of auxiliary/additional heater into vehicle electrics 91
11.2 Fitting location of temperature sensor G18 in auxiliary/additional heater 93
12 Block diagram of auxiliary/additional heater actuation with remote control 94
12.1 Fitting location for auxiliary heating radio receiver R64 99
13 Functional description of auxiliary/additional heater 101
13.1 Sequence of operation 102
13.2 Required heating output between 50 and 100 % 111
13.3 Required heating output less than 50 % 111

Protected by copyright. Copying for private or commercial purposes, in part or in whole, is not permitted unless authorised by AUDI AG. AUDI AG does not guarantee or accept any liability with respect to the correctness of information in this document. Copyright by AUDI AG.

82 – Auxiliary heating

1 Servicing auxiliary/additional heater

1.1 Contact corrosion

Contact corrosion can occur if use is made of unsuitable connecting elements (bolts, nuts, washers), rivets, plugs, grommets, adhesives, etc.

For this reason, only connecting elements with a special surface coating are fitted at the factory (e.g. bolts, which can be recognised at present from their greenish colour), as well as non-conductive rubber components, plastic parts and adhesives.

Always use genuine parts!

Always fit new parts in cases of doubt about reusability.

Accessories must be approved by Audi AG.

Damage caused by contact corrosion is not covered by warranty.

1.2 Notes on auxiliary/additional heater

- Various encoding options are provided in the additional heater control unit -J364- . Only undervoltage shutoff at a fixed value is however to be encoded for the supplementary heater ⇒ "Guided fault-finding" function of vehicle diagnostic, testing and information system VAS 5051 (encoding control unit).
- If a fault occurs several times in succession (e.g. fault “flame interruption”), auxiliary/additional heater is interlocked. Reactivation is only possible after erasing fault memory. If a specific fault (e.g. no flame on starting) occurs 3 times in succession, interlocking is implemented in additional heater control unit -J364- . This interlock must be cancelled by way of the “Adaption” function ⇒ "Guided fault-finding" function of vehicle diagnostic, testing and information system VAS 5051.
- At start of production, auxiliary/additional heater was installed with additional heater control unit -J364- with data level less than “0280” (hardware and software version). The fault “Link with remote control - implausible signal” may erroneously be displayed with these auxiliary/supplementary heaters. If necessary, check operation of remote control, if a fault is found, erase fault memory (this fault will then have no effect on operation of auxiliary / additional heater).
- At start of production, auxiliary/additional heater was installed with additional heater control unit -J364- with data level less than “0280” (hardware and software version). With these auxiliary / additional heaters, “incorrect control unit installed” fault (petrol version for vehicle with diesel engine and vice-versa) can be erroneously displayed. If applicable, check the assignment of the supplementary heater control unit -J364- (display in measured value block). If the type of fuel indicated corresponds to the vehicle, erase the fault memory (this fault then has no influence on auxiliary/supplementary heater operation) ⇒ "Guided fault-finding" function of vehicle diagnostic, testing and information system VAS 5051.
- If, depending on the version of the supplementary heater control unit -J364- , the auxiliary/supplementary heater cannot be activated on a new vehicle or in the case of a newly installed auxiliary/supplementary heater, the component protection function may be active (if a large number of faults occurred simultaneously at some point, this fault is no longer displayed although it is still active). If necessary, perform re-adaption of

Protected by copyright. Copying for private or commercial purposes, in part or in whole, is not permitted unless authorised by AUDI AG. Audi AG does not guarantee or accept any liability with respect to the correctness of information in this document. Copyright by AUDI AG.

the component protection function as for a newly installed auxiliary/supplementary heater to cancel component protection ⇒ "Guided fault-finding" function of vehicle diagnostic, testing and information system VAS 5051.

- Up to Model Year 2005, auxiliary/supplementary heaters were fitted on which there was a delay of 10 seconds between the reception of a corresponding request from the front operating and display unit, Climatronic control unit -J255- and implementation of the heating mode deactivation time by the supplementary heater control unit -J364- . With such auxiliary/supplementary heaters, there is a risk of overheating of the coolant in the auxiliary heater under certain usage conditions. In the event of a complaint of this nature, the adaption is therefore to be checked and corrected if necessary ⇒ "Guided fault-finding" function of vehicle diagnostic, testing and information system VAS 5051.
- If an attempt is made to match a remote control hand transmitter on a vehicle with supplementary heater only (no auxiliary heater), the fault memory entry “Remote control receiver for auxiliary heater - no communication” is made in the supplementary heater control unit -J364- . This fault can no longer be erased. As it has no connection with any supplementary heater function however, this fault memory entry does not have any influence on operation and can therefore be ignored.

At start of production, auxiliary/additional heater was installed with additional heater control unit -J364- with data level up to and including “0280” (hardware and software version). With these control units, faults (data bus diagnostic interface -J533- , central convenience system control unit -J393- , energy management control unit -J644-) with the fault type (“no signal”, “no communication”) can be displayed (and cannot initially be erased). For these faults, proceed as follows:

– Erase the fault memory.
– Terminate guided fault-finding.
– Switch off all electrical equipment and lock the vehicle.
– Wait at least 5 minutes (the data bus system must be switched to idle state).
– Interrogate the fault memory and erase the faults displayed.

1.2.1 Notes on auxiliary/supplementary heater guided fault-finding

- Auxiliary/additional heater control functions remain in operation during self-diagnosis.
- Auxiliary/supplementary heater self-diagnosis is to be performed by way of the “Guided fault-finding” function using the vehicle diagnostic, testing and information system -VAS 5051 A- ⇒ "Guided fault-finding" function of vehicle diagnostic, testing and information system VAS 5051.
- Auxiliary/additional heater self-diagnosis can only be started with ignition on (data bus diagnostic interface -J533- is only active after switching on ignition). Once auxiliary/additional heater has switched to diagnostic mode, self-diagnosis can be continued with ignition switched off.
- Different auxiliary/supplementary heater versions are available. Heed the exact assignment when replacing an auxiliary/supplementary heater ⇒ page 1 and ⇒ Electronic parts catalogue .
- The design of the supplementary heater control unit -J364- (for petrol or diesel) is displayed in the measured value block ⇒

Reproduction or copying for private or commercial purposes, in part or in whole, is not permitted without the consent of AUDI AG. AUDI AG does not guarantee or accept any liability with respect to the correctness of information in this document. Copyright by AUDI AG.

"Guided fault-finding" function of vehicle diagnostic, testing and information system VAS 5051.

- If the auxiliary/supplementary heater is to be replaced, interrogate the encoding and adaption of the supplementary heater control unit -J364- by way of the “Control unit replacement” function of the guided fault-finding routine prior to removal (the supplementary heater control unit -J364- is installed in the heater) ⇒ "Guided fault-finding" function of vehicle diagnostic, testing and information system VAS 5051.
- It may be necessary to change the adaption in order to erase certain faults which result in interlocking ⇒ "Guided fault-finding" function of vehicle diagnostic, testing and information system VAS 5051.

Proceed as follows if the fault “Group convenience data bus - no communication / no link” cannot be erased (⇒ "Guided fault-finding" function of vehicle diagnostic, testing and information system VAS 5051):

Protected by copyright. Copying for private or commercial purposes, in part or in whole, is not permitted unless authorised by AUDI AG. AUDI AG does not guarantee or assume any liability with respect to the correctness of information in this document. Copyright by AUDI AG.

– First interrupt the link between the data bus system and the auxiliary/supplementary heater (unplug the 6-pin connector from the supplementary heater control unit -J364-) for at least one minute ⇒ Current flow diagrams, Electrical fault finding and Fitting locations.
– The next step is to unplug the power supply connection of the auxiliary/supplementary heater (unplug the 2-pin connector from the supplementary heater control unit -J364-). Then plug first the 2-pin and then the 6-pin connector back in at the supplementary heater control unit -J364- .
– Interrogate the fault memory and erase the fault ⇒ "Guided fault-finding" function of vehicle diagnostic, testing and information system VAS 5051.

Depending on the version of the supplementary heater control unit -J364- , certain faults occurring several times in succession cannot be erased immediately (e.g. the “repeated flame interruption”, “control unit defective” fault). Additional heater control unit -J364- is interlocked and the following procedure is required:

– If the fault “Control unit defective” occurs (deactivation of the auxiliary/supplementary heater on account of excessive coolant temperature, coolant temperature higher than 125 °C for a certain time or briefly higher than 135°C), bleed the coolant circuit and check the incorporation of the auxiliary/supplementary heater into the coolant circuit.
– If the fault “Repeated flame interruption” occurs, check the fuel supply to the auxiliary/supplementary heater.
– Perform adaption of the auxiliary/supplementary heater (to cancel the interlock) ⇒ "Guided fault-finding" function of vehicle, diagnostic, testing and information system VAS 5051.
– Erase the fault memory ⇒ "Guided fault-finding" function of vehicle diagnostic, testing and information system VAS 5051.
– Check operation of the auxiliary/supplementary heater.

1.2.2 General information on auxiliary/supplementary heater

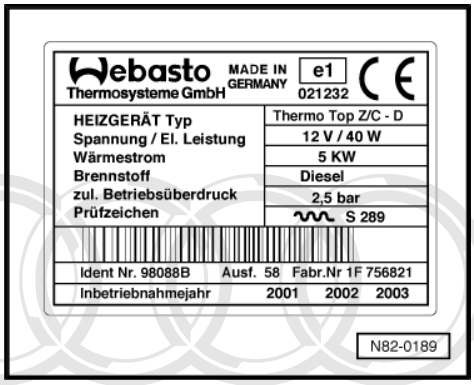

- There are different versions of the auxiliary/additional heater.
- Pay attention to the exact assignment when replacing an auxiliary/supplementary heater ⇒ Electronic parts catalogue
- The heater rating plate indicates the version concerned:
- Rating plate for diesel Thermo Top Z / C- D = auxiliary/additional heater or additional heater only (only for vehicles with diesel engine, without circulation pump -V55-)
- Rating plate for petrol Thermo Top Z/C- B = auxiliary heater (only for vehicles with petrol engine)

Protected by copyright. Copying for commercial purposes, in part or in whole, is not permitted unless authorised by AUDI AG. AUDI AG does not guarantee or accept any liability with respect to the correctness of information in this document. Copyright by AUDI AG.

Note

- *The most important technical data can be found in the upper section of the rating plate.*
- *The year of initial commissioning is entered below the technical data.*
- *The year of initial commissioning must be entered on the "Genuine replacement part" rating plate.*

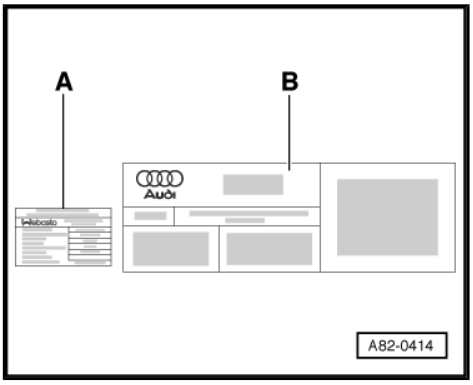

- A second rating plate (duplicate) -A- is affixed to the bonnet in the engine compartment (next to air conditioner label -B-). In cases of doubt concerning auxiliary/additional heater model, always observe rating plate attached to auxiliary/additional heater.
- “Adaption” function can be used to switch additional heater control unit -J364- to a different type of fuel (e.g. from petrol to diesel and vice versa). As, however, the internal design of the auxiliary/additional heater differs depending on type of fuel, auxiliary/additional heater conversion work is also required if it is to be fitted in a vehicle using the other type of fuel. Attention is therefore to be paid to the rating plate affixed to the auxiliary/additional heater.
- If the assignment of the auxiliary/supplementary heater (rating plate) differs from the information given on the fault reader display, check the assignment (reading measured value block). The corresponding type of fuel must be displayed ⇒ "Guided fault-finding" function of vehicle diagnostic, testing and information system VAS 5051.
- Heaters of type “Z / C- D” without circulation pump -V55- are installed as additional heater on vehicles with 6-cyl. or 8-cyl. diesel engine. As additional heater, the unit has no circulation pump -V55- and no heater coolant shutoff valve -N279- . Front operating and display unit (Climatronic control unit -J255-) activates the additional heater as soon as the specified activation conditions are met. ⇒ Air Conditioner; Rep. Gr. 87
- If vehicles with 6-cyl. or 8-cyl. diesel engine are fitted with an auxiliary heater (as optional extra), this will be a heater of type “Z / C- D” with circulation pump -V55- and heater coolant shutoff valve -N279- . This auxiliary/additional heater is also operated as additional heater.
- At present, the “Supplementary heating” function of the auxiliary/supplementary heater is only available for vehicles with a diesel engine. It is switched in automatically by the air conditioner front operating and display unit, Climatronic control unit -J255- by way of the convenience data bus system, provided that the front operating and display unit, Climatronic control unit -J255- is in operation (“Off” mode not selected) and that this function has not been deactivated via the MMI (Multi Media Interface) ⇒ Owner's manual , ⇒ Operating instructions for “Infotainment / MMI” and ⇒ Air conditioning; Rep. Gr. 87 .
- With the “Adaption” function it is possible to make an entry in the front operating and display unit, Climatronic control unit -J255- for deactivation of the supplementary heater on selecting “Econ” mode on the front operating and display unit, Climatronic control unit -J255- or for deactivation of the supplementary heater in the MMI (Multi Media Interface) ⇒ Air conditioning; Rep. Gr. 87 and ⇒ "Guided fault-finding" function of vehicle diagnostic, testing and information system VAS 5051 (for the air conditioner).
- The “Adaption” function can be used to enter various changes relating to auxiliary/supplementary heater actuation in the front operating and display unit, Climatronic control unit -J255- . It is also possible to alter certain settings for control action in auxiliary heater mode ⇒ "Guided fault-finding" function of vehicle diagnostic, testing and information system VAS 5051 (for the air conditioner).

Protected by copyright. Copying for private or commercial purposes, in part or in whole, is not permitted unless authorised by AUDI AG. AUDI AG does not guarantee or accept any liability with respect to the correctness of information in this document. Copyright by AUDI AG.

1.3 Note on operation of auxiliary/additional heater in vehicles with diesel engine

Problems with auxiliary/additional heater operation may be encountered in cold weather (usually the only conditions under which auxiliary/additional heater is switched on or actuated as

additional heater) if use is made of vegetable-oil or rape-oil methylester as fuel.

Reason:

– Due to the physical properties, deposits may form in the auxiliary/additional heater combustion chamber (burner element ⇒ page 87) during operation with vegetable-oil or rape-oil methylester. These deposits can then cause combustion problems if the vehicle is run for lengthy periods on vegetable-oil or rape-oil methylester (no flame formation and deflagration in combustion chamber).

– At low temperatures (below 0 °C), the fluidity of vegetable-oil and rape-oil methylester deteriorates to a far greater extent than that of diesel fuel, thus resulting in a reduced supply of fuel and problems with auxiliary/additional heater operation.

Protected by copyright. Copying for private or commercial purposes, in part or in whole, is not permitted unless authorised by AUDI AG. AUDI AG does not guarantee or accept any liability with respect to the correctness of information in this document. Copyright by AUDI AG.

2 Safety precautions when working on vehicles fitted with auxiliary/additional heater

- ♦ Auxiliary/additional heater must not be switched on in areas where there is a danger of fire or explosion (switch off auxiliary/additional heater, e.g. by pressing “Econ” or “OFF” button on front operating and display unit (Climatronic control unit -J255-) for air conditioner or on Multi Media Interface.
- ♦ Auxiliary/additional heater must not be switched on in enclosed areas without the use of an exhaust-gas extractor.
- ♦ Always observe the relevant safety regulations when working on the fuel system. ⇒ Fuel supply system; Rep. Gr. 20
- ♦ Engine must not be started if parts of the fuel system (e.g. metering pump, fuel pipe or fuel gauge sender) have been removed or opened.
- ♦ After completing repair work on auxiliary/additional heater or fuel system, operation of auxiliary/additional heater must be checked.
- ♦ Before starting repair work on auxiliary/additional heater:

– Dissipate pressure in cooling system by opening the plug on the coolant expansion tank

– Interrupt power and fuel supply for auxiliary/additional heater (e.g. by removing fuse for auxiliary/additional heater). ⇒ Current flow diagrams, Electrical fault finding and Fitting locations

– If the auxiliary/supplementary heater is to be replaced, interrogate the encoding and adaption of the supplementary heater control unit -J364- by way of the “Control unit replacement” function of the guided fault-finding routine ⇒ "Guided fault-finding" function of vehicle diagnostic, testing and information system VAS 5051.

- ♦ Self-diagnosis is to be performed on completion of auxiliary/supplementary heater repair work (check encoding, interrogate fault memory and perform adaption) ⇒ "Guided fault-finding" function of vehicle diagnostic, testing and information system VAS 5051.
- ♦ Avoid repeated activation of auxiliary/additional heater without intermediate heater operation (repeated deactivation of auxiliary/additional heater during start sequence can cause fuel to accumulate in combustion chamber and result in intense auxiliary/additional heater smoke generation on subsequent attempted starting).

Protected by copyright. Copying for private or commercial purposes, in part or in whole, is not permitted unless authorised by AUDI AG. AUDI AG does not guarantee or accept any liability with respect to the correctness of information in this document. Copyright by AUDI AG.

3 Notes on general repair work on vehicles fitted with auxiliary/additional heater

- Disconnect the negative and positive terminals of the battery -A- before starting electric welding work on the vehicle.
- If coolant has been drained, bleed auxiliary/additional heater after filling cooling system ⇒ page 60 .
- If parts of fuel system have been removed or replaced, ensure that all components used for diverting fuel to auxiliary/additional heater are properly installed. Then activate auxiliary/additional heater and check operation.
- After performing repairs in area of fuel pipe to auxiliary/additional heater:

– Make sure there is no air in the fuel pipe to the auxiliary/supplementary heater

– that the fuel pipes are flush with the floor of the vehicle, and are routed so as to protect them from mechanical damage

– that the fuel pipe to the auxiliary/additional heater is protected from heat generation that could impair operation

– the fuel pipe does not come into contact with hot vehicle components

- When performing repair work in area of fuel delivery unit, ensure correct routing of fuel diversion pipe for auxiliary/additional heater in fuel tank. If pipe is not routed properly, metering pump -V54- may only supply fuel if tank is completely full (if this is not the case, no fuel is supplied and auxiliary/additional heater is deactivated on account of a fault).

Copyright by AUDI AG. Any reproduction, duplication or other use for purposes, in part or in whole, is not permitted without the express consent of AUDI AG. AUDI AG does not guarantee or accept any liability with respect to the correctness of information in this document. Copyright by AUDI AG.

- If there is not enough fuel in the tank (fuel gauge in control unit in dash panel insert -J285- in “red zone”), additional heater control unit -J364- does not activate auxiliary heater.
- Prior to activation and during auxiliary/supplementary heater operation, the supplementary heater control unit -J364- interrogates the energy management control unit -J644- by way of the data bus system. As soon as the energy management control unit -J644- transmits energy saving information on account of inadequate charging of the battery -A- or insufficient electrical system voltage, the supplementary heater control unit -J364- switches off the auxiliary/supplementary heater.
- After removing and installing fuel system components, the auxiliary/supplementary heater is to be switched on and operated at full load for at least 10 minutes to ensure complete bleeding of the fuel pipe.

4 Rules for cleanliness when working on auxiliary/additional heater (and fuel system)

Protected by copyright. Copying for private or commercial purposes, in part or in whole, is not permitted unless authorised by AUDI AG. AUDI AG does not guarantee or accept any liability with respect to the correctness of information in this document. Copyright by AUDI AG.

- ♦ Thoroughly clean all unions and the adjacent areas before disconnecting.
- ♦ Place dismantled components on a clean surface (use plastic sheeting or paper, lint-free cloths) and cover over.
- ♦ Carefully cover over or seal open components if repairs cannot be performed immediately.
- ♦ Only install clean components:
  - Do not remove replacement parts from their wrapping until immediately prior to installation.
  - Do not use parts that have been stored without their packaging (e.g. in tool boxes etc.).
- ♦ When the fuel system is open:
  - Do not work with compressed air.
  - Do not move the vehicle.
  - Do not start the engine.
  - Do not activate auxiliary/additional heater (also applies to activation via self-diagnosis “Basic setting” function).

5 Layout of components for auxiliary/ additional heater in vehicle

Note

- *Fitting locations of various relays and fuses for auxiliary/additional heater ⇒ Current flow diagrams, Electrical fault finding and Fitting locations*
- *Auxiliary/supplementary heater self-diagnosis procedure ⇒ "Guided fault-finding" function of vehicle diagnostic, testing and information system VAS 5051.*
- *The auxiliary heater radio remote control is available in various versions. Exclusive use was made up to 05.2004 of the "Telestart T70" version. As of 05.2004 the "Telestart T90" version was gradually introduced instead ⇒ Electronic parts catalogue . To enable the auxiliary heater to implement the additional functions of the "Telestart T90" (feedback of confirmation of reception of activation and deactivation signals), use is made of a modified remote control receiver for auxiliary heater -R64- and a modified auxiliary/supplementary heater ⇒ Electronic parts catalogue .*
- *In Model Year 2008 production is gradually being switched from the Telestart "T90" version of the remote control to the Telestart "T91" type. Thanks to the identical transmission protocol, the hand transmitters and the remote control receiver for auxiliary heater -R64- of the two Telestart "T90" and "T91" versions can exchange information with one another (the "T90" remote control receiver for auxiliary heater -R64- can be actuated by the "T91" hand transmitter and vice versa with no loss of function). In the case of vehicles fitted with the Telestart "T91" remote control version, use is however only ever to be made of the components developed for the Telestart "T91" version (slightly larger range) ⇒ Electronic parts catalogue .*
- *Different auxiliary heater remote control hand transmitter versions are available (Telestart "T90" / "T91" and "T70"). The Audi A8 is only to be fitted with the version approved for this vehicle ⇒ page 16 and ⇒ Electronic parts catalogue .*

Protected by copyright. Copying for private or commercial purposes, in part or in whole, is not permitted unless authorised by AUDI AG. AUDI AG does not guarantee or accept any liability with respect to the correctness of information in this document. Copyright by AUDI AG.

1 - Multi Media Interface (MMI)

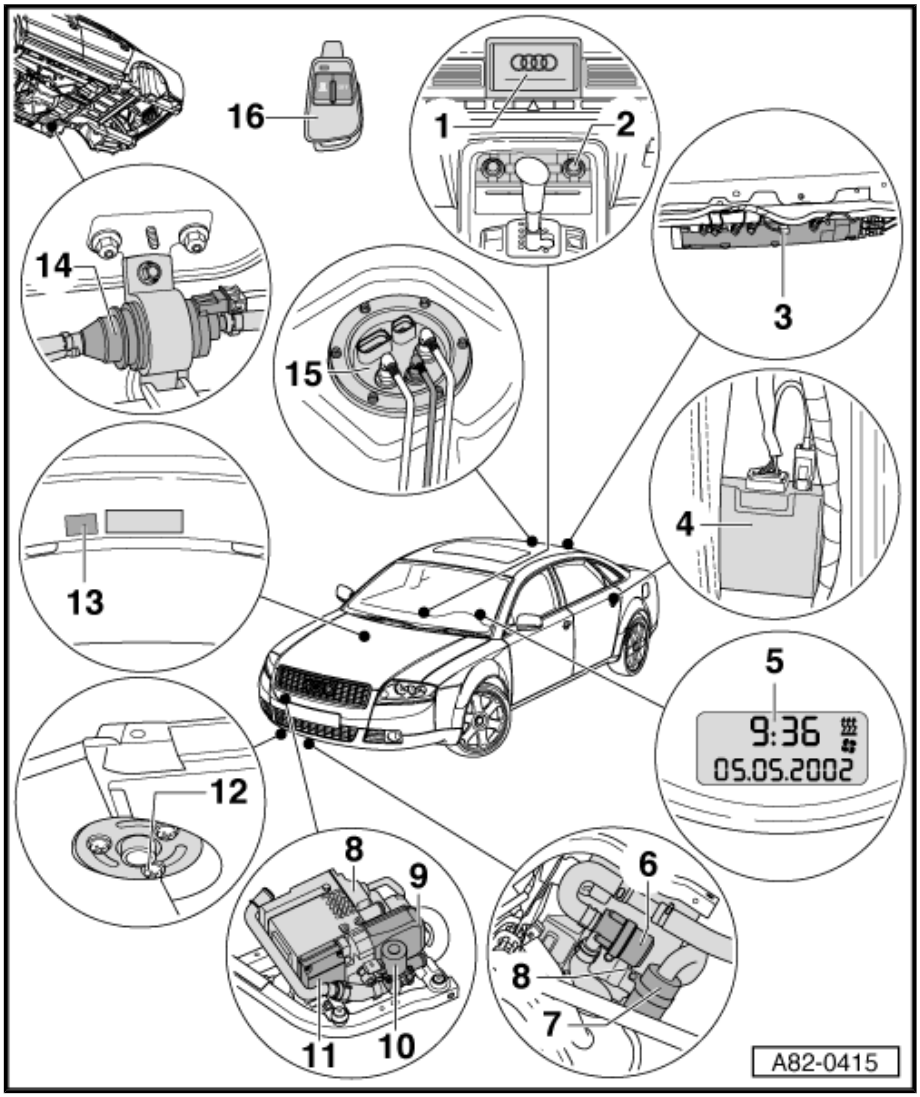

- MMI is used to enter and display the various auxiliary/additional heater and auxiliary ventilation actuation functions
- After pressing the “Set-up” button on the front operating and display unit, Climatronic control unit -J255- or selecting the “A/C” function via the Multi Media Interface (MMI) terminal, the various auxiliary heating and auxiliary ventilation actuation functions are presented on the MMI display ⇒ Owner's manual and ⇒ Operating instructions for “Infotainment / MMI” .
- Operation of the auxiliary/supplementary heater via the MMI and the corresponding displays are described in the owner's manual ⇒ Owner's manual and ⇒ Operating instructions for “Infotainment / MMI” .
- If there is insufficient fuel in the tank (fuel gauge in red zone), the auxiliary heater cannot be switched on (the tick in the MMI for the “Immediate auxiliary heater activation” function and the symbol for auxiliary heater mode in the clock cannot be activated or go out again) ⇒ Electrical system; Rep. Gr. 90 and ⇒ Owner's manual .

Protected by copyright. Copying for private or commercial purposes, in part or in whole, is not permitted unless authorised by AUDI AG. AUDI AG does not guarantee or accept any liability with respect to the correctness of information in this document. Copyright by AUDI AG.

Note

- *As of Model Year 2009, modified front operating and display units, Climatronic control unit -J255- are being gradually introduced ⇒ Electronic parts catalogue and ⇒ Air conditioning; Rep. Gr. 87 . These operating and display units have for example an A/C button instead of the Setup button ⇒ Owner's manual .*
- *On vehicles with a front operating and display unit, Climatronic control unit -J255- with no Set-up button, the additional air conditioner and auxiliary/supplementary heater functions are selected by way of the "Multi Media Interface (MMI) terminal" ⇒ Owner's manual and ⇒ Operating instructions for "Infotainment / MMI" .*
- *Pay attention to correct assignment of the front operating and display unit, Climatronic control unit -J255- to control unit 1 for information electronics -J794- ⇒ Electronic parts catalogue (different versions). In the event of incorrect assignment, the various air conditioner and auxiliary/supplementary heater functions cannot be displayed in the MMI and selected.*

Protected by copyright. Copying for private or commercial purposes, in part or in whole, is not permitted unless authorised by AUDI AG. AUDI AG does not guarantee or accept any liability with respect to the correctness of information in this document. Copyright by AUDI AG.

2 - Front operating and display unit (Climatronic control unit -J255-)

- Actuated by way of the convenience data bus system
- When operating the auxiliary heater by way of the "Timer" function or remote control, this determines the mode in which the auxiliary/supplementary heater starts up (auxiliary ventilation or auxiliary heating) ⇒ "Guided fault-finding" function of vehicle diagnostic, testing and information system VAS 5051.
- In order that auxiliary heater can be activated via "Timer" function or remote control, a temperature greater than "Lo" must be set on front operating and display unit (Climatronic control unit -J255-).
- To de-ice the windows as quickly as possible, it is appropriate to set as high a temperature as possible on the front operating and display unit, Climatronic control unit -J255- before switching off the ignition. In auxiliary heater mode, front operating and display unit (Climatronic control unit -J255-) adopts last set temperature and regulates passenger compartment temperature according to set specified temperature.

Note

- *As of Model Year 2009, modified front operating and display units, Climatronic control unit -J255- are being gradually introduced ⇒ Electronic parts catalogue and ⇒ Air conditioning; Rep. Gr. 87 . These front operating and display units have for example an A/C button instead of the Set-up button ⇒ Owner's manual .*
- *Pay attention to correct assignment of the front operating and display unit, Climatronic control unit -J255- to control unit 1 for information electronics -J794- ⇒ Electronic parts catalogue (different versions). In the event of incorrect assignment, the various air conditioner and auxiliary/supplementary heater functions cannot be displayed in the MMI and selected.*

3 - Aerial selection control unit

- ❑ Different versions depending on vehicle equipment
- ❑ Designation in current flow diagram, e.g. aerial amplifier -R24- ⇒ Current flow diagrams, Electrical fault finding and Fitting locations
- ❑ With an additional connection for the aerial wire to the remote control receiver for auxiliary heater -R64- ⇒ page 94 and ⇒ Communication; Rep. Gr. 91
- ❑ Depending on vehicle equipment, the remote control receiver for auxiliary heater -R64- may be connected to an additional roof aerial instead of to the aerial in the rear window (via the aerial amplifier -R24-) ⇒ Current flow diagrams, Electrical fault finding and Fitting locations and ⇒ Communication; Rep. Gr. 91 .

Protected by copyright. Copying for private or commercial purposes, in part or in whole, is not permitted unless authorised by AUDI AG. AUDI AG does not guarantee or assume any liability with respect to the correctness of information in this document. Copyright by AUDI AG.

4 - Auxiliary heating radio receiver -R64-

- ❑ Fitting location, removing and installing ⇒ page 99 and ⇒ Communication; Rep. Gr. 91
- ❑ Different versions ⇒ page 99 and ⇒ Electronic parts catalogue
- ❑ Depending on vehicle equipment, the remote control receiver for auxiliary heater -R64- may be connected to an additional roof aerial instead of to the aerial in the rear window (via the aerial amplifier -R24-) ⇒ Communication; Rep. Gr. 91 .
- ❑ The auxiliary heater radio remote control is available in various versions. Exclusive use was made up to 05.2004 of the “Telestart T70” version. As of 05.2004 the Telestart “T90” version was gradually introduced instead. In Model Year 2008 production is gradually being switched from the Telestart “T90” version of the remote control to the Telestart “T91” type ⇒ page 10 and ⇒ Electronic parts catalogue . To enable the auxiliary heater to implement the additional functions of the “Telestart T90” / “Telestart T91” (feedback of confirmation of reception of activation and deactivation signals), use is made of a modified remote control receiver for auxiliary heater -R64- and a modified auxiliary/supplementary heater ⇒ page 10 and ⇒ Electronic parts catalogue .

5 - Clock

- ❑ Installed in dash panel insert
- ❑ Depending on the version, the “Auxiliary heater” optional extra must have been adapted by way of the “Adaption” function in the control unit with display in dash panel insert -J285- ⇒ "Guided fault-finding" function of vehicle diagnostic, testing and information system VAS 5051.
- ❑ If there is insufficient fuel in the tank (fuel gauge in red zone), the auxiliary heater cannot be switched on (the tick in the MMI for the “Immediate auxiliary heater activation” function and the symbol for auxiliary heater mode in the clock cannot be activated or go out again) ⇒ Electrical system; Rep. Gr. 91 and ⇒ Owner's manual .
- ❑ Depending on operating status of auxiliary/additional heater (auxiliary heating/auxiliary ventilation mode) or if timer function has been selected, one of the symbols for auxiliary heating/auxiliary ventilation is permanently actuated or both symbols flash ⇒ Owner's Manual

- ❑ If remote control is fitted for the auxiliary heater (as optional extra), this actuates the supplementary heater control unit -J364- , which in turn transmits the information “Switch auxiliary heating/auxiliary ventilation on or off” via the convenience data bus system to the control unit with display in dash panel insert -J285- and the front operating and display unit, Climatronic control unit -J255- . For further information, refer to ⇒ page 94 .

6 - Circulation pump -V55-

- ❑ Checking ⇒ page 70 and ⇒ "Guided fault-finding" function of vehicle diagnostic, testing and information system VAS 5051
- ❑ Removing and installing ⇒ page 76 .

Note

- ♦ *Currently only fitted to vehicles with “Auxiliary heater” optional extra.*
- ♦ *Not fitted to vehicles with diesel engine on which auxiliary/additional heater is only used as additional heater.*

7 - Intake air silencer

8 - Auxiliary/additional heater

- ❑ Removing and installing ⇒ page 64 .
- ❑ Incorporation into coolant circuit ⇒ page 53
- ❑ Dismantling and assembling ⇒ page 73 .
- ❑ Checking electrical components of auxiliary/supplementary heater ⇒ page 70 and ⇒ "Guided fault-finding" function of vehicle diagnostic, testing and information system VAS 5051
- ❑ Block diagram of auxiliary/additional heater ⇒ page 91 .
- ❑ The radio remote control for the auxiliary heater and auxiliary/additional heater is available in various versions. Exclusive use was made up to 05.2004 of the “Telestart T70” remote control version. As of 05.2004 the Telestart “T90” version was gradually introduced instead. In Model Year 2008 production is gradually being switched from the Telestart “T90” version of the remote control to the Telestart “T91” type ⇒ page 10 and ⇒ Electronic parts catalogue . To enable the auxiliary/supplementary heater to implement the additional functions of the Telestart “T90” / “T91” version (feedback of confirmation of reception of activation and deactivation signals), use is made of a modified remote control receiver for auxiliary heater -R64- and a modified auxiliary/supplementary heater ⇒ Electronic parts catalogue . As of part number 4E0 265 081 with index “J” (as of hardware and software number “0710”), the auxiliary/supplementary heater is designed for the Telestart “T90” / “T91” remote control ⇒ "Guided fault-finding" function of vehicle diagnostic, testing and information system VAS 5051.

Note

On replacement, pay attention to the correct version (different models for petrol and diesel as well as for the different types of remote control) ⇒ page 84 and ⇒ Electronic parts catalogue .

The auxiliary/additional heater is fitted with the following electrical components:

- ♦ Combustion air blower -V6- .
- ♦ Glow plug with flame monitor -Q8-
- ♦ Overheating fuse -S24-
- ♦ Temperature sensor -G18-
- ♦ Supplementary heater control unit -J364-

Protected by copyright. Copying for private or commercial purposes, in part or in whole, is not permitted unless authorised by AUDI AG. AUDI AG does not guarantee or accept any liability with respect to the correctness of information in this document. Copyright by AUDI AG.

9 - Combustion air blower -V6-

- ❑ Checking ⇒ page 70 and ⇒ "Guided fault-finding" function of vehicle diagnostic, testing and information system VAS 5051
- ❑ Removing and installing ⇒ page 87 .

10 - Heater coolant shutoff valve -N279-

- ❑ Actuated in auxiliary heater mode by additional heater control unit -J364-
- ❑ Removing and installing ⇒ page 58 .
- ❑ Checking wiring ⇒ page 34 and ⇒ "Guided fault-finding" function of vehicle diagnostic, testing and information system VAS 5051
- ❑ Operation ⇒ page 112

Note

- ♦ *Currently only fitted to vehicles with "Auxiliary heater" optional extra.*
- ♦ *Not fitted on vehicles with diesel engine on which auxiliary/additional heater is only used as additional heater.*

11 - Additional heater control unit -J364-

- ❑ Control unit is permanently connected to auxiliary/additional heater and cannot currently be replaced as a separate item; dismantling and assembling auxiliary/additional heater ⇒ page 84

Protected by copyright. Copying for private or commercial purposes, in part or in whole, is not permitted unless authorised by AUDI AG. AUDI AG does not guarantee or assume any liability with respect to the correctness and completeness of this document or its contents.

- ❑ If the auxiliary/supplementary heater is replaced together with the supplementary heater control unit -J364-, check operation of at least one hand transmitter and re-adapt all hand transmitters if necessary ⇒ page 20 and ⇒ "Guided fault-finding" function of vehicle diagnostic, testing and information system VAS 5051.
- ❑ Checking power supply ⇒ page 34 and ⇒ "Guided fault-finding" function of vehicle diagnostic, testing and information system VAS 5051
- ❑ On replacing the auxiliary/supplementary heater, pay attention to the correct version (different models for petrol and diesel) as well as the two remote control versions) ⇒ page 84 and ⇒ Electronic parts catalogue .

12 - Auxiliary/additional heater exhaust gas outlet

- ❑ Outlet of exhaust gas from exhaust pipe must not be impeded (e.g. by parking front end of vehicle over edge of pavement)

13 - Duplicate auxiliary/additional heater rating plate

- ❑ Indicates auxiliary/additional heater model in addition to technical data

14 - Metering pump -V54-

- ❑ Removing and installing ⇒ page 32
- ❑ Diverting fuel for the auxiliary/supplementary heater ⇒ page 23
- ❑ Checking fuel delivery ⇒ page 27
- ❑ Checking actuation ⇒ page 34 and ⇒ "Guided fault-finding" function of vehicle diagnostic, testing and information system VAS 5051
- ❑ Checking wiring ⇒ page 34 and ⇒ "Guided fault-finding" function of vehicle diagnostic, testing and information system VAS 5051

15 - Fuel delivery unit

- ❑ Different fuel delivery units depending on the vehicle model (petrol or diesel engine, FWD or 4WD) ⇒ Fuel supply system; Rep. Gr. 20 .
- ❑ With connection for diverting fuel for auxiliary/additional heater (vehicles with auxiliary/additional heater only) ⇒ Fuel supply system; Rep. Gr. 20
- ❑ Diverting fuel for auxiliary/additional heater ⇒ page 23 .

Note

After removing and installing fuel system components, the auxiliary/supplementary heater is to be switched on and operated at full load for at least 10 minutes to ensure complete bleeding of the fuel pipe.

16 - Remote control hand transmitter

- For activating and deactivating “auxiliary heater” or “auxiliary ventilation” function of auxiliary/additional heater ⇒ page 16
- Indicator lamp lights or flashes when buttons are pressed ⇒ Owner's Manual
- Replacing batteries ⇒ page 20
- Relevant button must be pressed for at least 3 s for remote control to detect actuation of buttons and transmit radio signal ⇒ Owner's Manual
- If the auxiliary/supplementary heater is replaced together with the supplementary heater control unit -J364- , check operation of at least one hand transmitter and re-adapt all hand transmitters if necessary ⇒ page 20 and ⇒ "Guided fault-finding" function of vehicle diagnostic, testing and information system VAS 5051
- The auxiliary heater radio remote control is available in various versions. Exclusive use was made up to 05.2004 of the “Telestart T70” version. As of 05.2004 the Telestart “T90” version was gradually introduced instead. In Model Year 2008 production is gradually being switched from the Telestart “T90” version of the remote control to the Telestart “T91” type ⇒ page 10 and ⇒ Electronic parts catalogue . To enable the auxiliary heater to implement the additional functions of the Telestart “T90” / “T91” (feedback of confirmation of reception of activation and deactivation signals), use is made of a modified remote control receiver for auxiliary heater -R64- and a modified auxiliary/supplementary heater ⇒ Electronic parts catalogue and ⇒ "Guided fault-finding" function of vehicle diagnostic, testing and information system VAS 5051 .
- The remote control hand transmitter version can be seen after removing the batteries ⇒ page 16 from the sticker indicating the part number ⇒ Electronic parts catalogue .

5.1 Auxiliary heater remote control buttons and indicator lamp

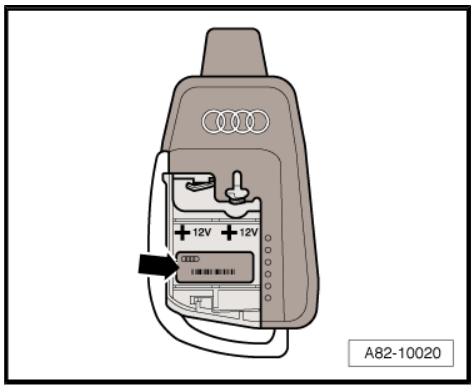

Note

- *The auxiliary heater radio remote control is available in various versions. Exclusive use was made up to 05.2004 of the “Telestart T70” version. As of 05.2004 the Telestart “T90” version was gradually introduced instead. In Model Year 2008 production is gradually being switched from the Telestart “T90” version of the remote control to the Telestart “T91” type ⇒ page 10 and ⇒ Electronic parts catalogue . To enable the auxiliary heater to implement the additional functions of the Telestart “T90” / “T91” (feedback of confirmation of reception of activation and deactivation signals), use is made of a modified remote control receiver for auxiliary heater -R64- and a modified auxiliary/supplementary heater ⇒ Electronic parts catalogue and ⇒ "Guided fault-finding" function of vehicle diagnostic, testing and information system VAS 5051 .*
- *The remote control version can be seen after removing the batteries ⇒ page 20 from the sticker -arrow- indicating the part number ⇒ Electronic parts catalogue .*
- *The range of the remote control is approx. 600 m. The range can be significantly reduced due to obstacles (e.g. buildings) between the remote control and the vehicle.*

Protected by copyright. Copying for private or commercial purposes, in part or in whole, is not permitted unless authorised by AUDI AG. AUDI AG does not guarantee or accept any liability with respect to the correctness of information in this document. Copyright by AUDI AG.

5.1.1 “Telestart T70” remote control hand transmitter version

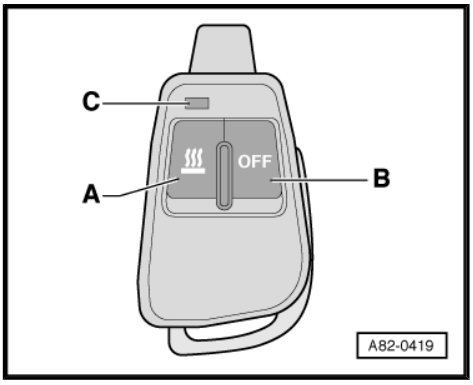

-A- On button

-B- Off button

-C- Indicator lamp (only flashes red)

Note

- *Indicator lamp -C- lights or flashes briefly (approx. 3 s) after pressing buttons -A- or -B- as a functional check or as a check of set activation time (depending on version). ⇒ Owner's Manual*
- *Relevant button must be pressed for at least 3 s for remote control to detect actuation of buttons and transmit radio signal. ⇒ Owner's Manual*
- *The remote control unit is a transmitter and receiver. The vehicle is fitted with different versions of the remote control receiver for auxiliary heater -R64- (Telestart “T70” and Telestart “T90” / “T91”). However only the Telestart“T90” / “T91” version transmits confirmation of reception of the activation or deactivation signal as feedback ⇒ page 99 and ⇒ "Guided fault-finding" function of vehicle diagnostic, testing and information system VAS 5051.*
- *In Model Year 2008 production is gradually being switched from the Telestart “T90” version of the remote control to the Telestart “T91” type ⇒ page 10 and ⇒ Electronic parts catalogue .*
- *Keep remote control vertical (transmission aerial at top) whilst pressing buttons.*
- *When pressing remote control buttons, ensure adequate distance from vehicle aerial (excessively strong radio signal can lead to reception problems; if necessary, cover transmission aerial with hand or maintain minimum distance of 10 m from vehicle).*
- *The remote control receiver for auxiliary heater -R64- can be switched to power saving mode by the supplementary heater control unit -J364- (radio signal can no longer be received, the no-load current input decreases from approx. 1 mA to approx. 0.04 mA) ⇒ "Guided fault-finding" function of vehicle diagnostic, testing and information system VAS 5051 (reading measured value block).*

5.1.2 Telestart “T90” / “T91” remote control hand transmitter version

Note

In Model Year 2008 production is gradually being switched from the Telestart “T90” version of the remote control to the Telestart “T91” type ⇒ page 10 and ⇒ Electronic parts catalogue .

Protected by copyright. Copying for private or commercial purposes, in part or in whole, is not permitted unless authorised by AUDI AG. AUDI AG does not guarantee or accept any liability with respect to the correctness of information in this document. Copyright by AUDI AG.

-A- On button

-B- Off button

-C- Indicator lamp (flashes red or green)

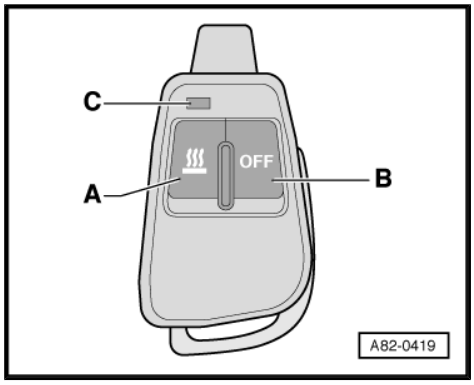

Protected by copyright. Copying for private or commercial purposes, in part or in whole, is not permitted unless authorised by AUDI AG. AUDI AG does not guarantee or accept any liability with respect to the correctness of information in this document. Copyright by AUDI AG.

Note

- *In order that remote control detects pressing of a button and transmits a radio signal, the relevant button must be pressed for approx. 2 seconds ⇒ Owner's Manual*
- *If remote control batteries are discharged to such an extent that radio signal can no longer be transmitted with sufficient strength, indicator lamp -C- no longer illuminates on pressing ON button -A- or OFF button -B-.*
- *As a functional check, indicator lamp -C- lights (green) briefly (approx. 2 seconds) after pressing ON button -A-.*
- *If activation signal has been properly received by additional heater control unit -J364- and there are no auxiliary heater faults present, additional heater control unit -J364- transmits confirmation and indicator lamp -C- then flashes (green) 30 times at approx. one Hz (1 pulse per second) (as acknowledgement).*
- *If activation signal has not been properly received by additional heater control unit -J364- e.g. on account of excessive distance from vehicle (and link cannot be established with control unit), indicator lamp -C- flashes (red) 30 times.*
- *In the event of a fault in the vehicle or auxiliary heater (auxiliary heater cannot be switched on e.g. on account of empty fuel tank), additional heater control unit -J364- transmits a fault message and indicator lamp -C- flashes (red) 30 times.*
- *As a functional check, indicator lamp -C- lights (red) briefly (approx. 2 seconds) after pressing OFF button -B-. Indicator lamp -C- then flashes (red) 30 times at approx. one Hz (1 pulse per second).*
- *If deactivation signal has not been properly received by additional heater control unit -J364- e.g. on account of excessive distance from vehicle (and link cannot be established with control unit), indicator lamp -C- then flashes (red) for 10 seconds at approx. 4 Hz (4 pulses per second).*
- *The remote control hand transmitter is transmitter and receiver. As of 05.2004, the Audi A8 is gradually being fitted with a remote control receiver for auxiliary heater -R64- of the Telestart "T90" type. In Model Year 2008 production is gradually being switched from the Telestart "T90" version of the remote control to the Telestart "T91" type ⇒ page 10 and ⇒ Electronic parts catalogue . With the Telestart "T90" / "T91" remote control receivers, the supplementary heater control unit -J364- provides feedback to the remote control hand transmitter. To enable the auxiliary/supplementary heater to implement the additional functions of the Telestart "T90" / "T91" (feedback of confirmation of reception of activation and deactivation signals), use is made of a modified remote control receiver for auxiliary heater -R64- and a modified auxiliary/supplementary heater ⇒ Electronic parts catalogue . As of part number 4E0 265 081 with index "J" (as of hardware and software number "0710"), the auxiliary/supplementary heater is designed for the Telestart "T90" / "T91" remote control. The auxiliary/supplementary heater must however have been adapted accordingly by way of the "Adaption" function ⇒ "Guided fault-finding" function of vehicle diagnostic, testing and information system VAS 5051.*
- *When transmitting, hold radio remote control with transmission aerial upwards.*
- *On pressing remote control hand transmitter buttons, ensure sufficient distance from vehicle aerial (problems with reception may be encountered if radio signal is too strong; if necessary, cover transmission aerial with hand or maintain minimum distance of 10 m from vehicle).*
- *The remote control receiver for auxiliary heater -R64- can be switched to power saving mode by the supplementary heater control unit -J364- (radio signal can no longer be received, the no-load current input decreases from approx. 1 mA to approx.*

Reproduction or copying, in whole or in part, of this publication, including copying for private or commercial purposes, in part or in whole, is not permitted without the express consent of AUDI AG. We do not guarantee or accept any liability for the accuracy of the information contained in this publication. Copyright by AUDI AG.

5.2 Checking and replacing auxiliary heater remote control batteries

– Carefully detach battery cover -A- from remote control -C-.

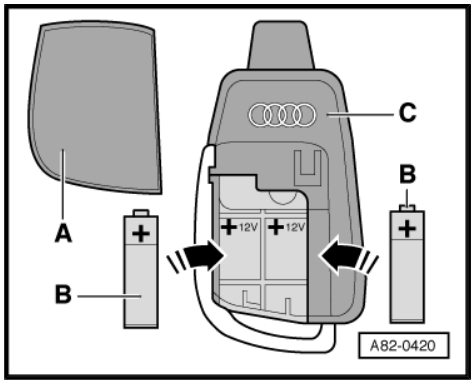

Note

- *On fitting, pay attention to correct position of batteries (marked in battery compartment, both positive terminals at same connection, parallel arrangement).*
- *Always replace both batteries -B-.*
- *Only fit batteries -B- with specifications corresponding to original batteries (e.g. 12V high voltage special batteries of type 23). Such batteries can be obtained for example from electronics dealers or from parts range. ⇒ Electronic parts catalogue*
- *If battery is not installed properly, remote control will not function correctly and both batteries soon become discharged.*

5.3 Adaption of remote control hand transmitter in additional heater control unit -J364-

Note

- *Keep remote control vertical (transmission aerial at top) whilst pressing buttons.*
- *At present, a maximum of 3 remote control units can be adapted in the remote control receiver for auxiliary heater -R64- (by way of the supplementary heater control unit -J364-). Adaption of a fourth remote control unit causes the first matched remote control to be erased.*
- *Remote control adaption is performed in auxiliary heating radio receiver -R64- . If this is replaced, all remote control units must be consecutively re-adapted.*
- *The auxiliary heater remote control hand transmitter is to be adapted using the "Adaption" function by way of the supplementary heater control unit -J364- ⇒ "Guided fault-finding" function of vehicle diagnostic, testing and information system VAS 5051.*
- *Should it not be possible to activate the auxiliary heater by way of the remote control, check the fuel level in the fuel tank (there must be a sufficient amount of fuel) and the operating status of the vehicle (transportation mode must not be active). If these two shut-off criteria were recently active, e.g. on a new vehicle, it may be necessary to briefly interrupt the power supply to the auxiliary heater and the remote control receiver for auxiliary heater -R64- to re-establish proper operation (auxiliary heater reset).*

Reproduction of this document or parts thereof for commercial purposes, in part or in whole, is not permitted. Audi AG does not guarantee or accept any liability with respect to the correctness of information in this document. Copyright by AUDI AG.

5.4 Activating/deactivating auxiliary heater/ auxiliary ventilation via Multi Media Interface (MMI)

5.4.1 Requirements

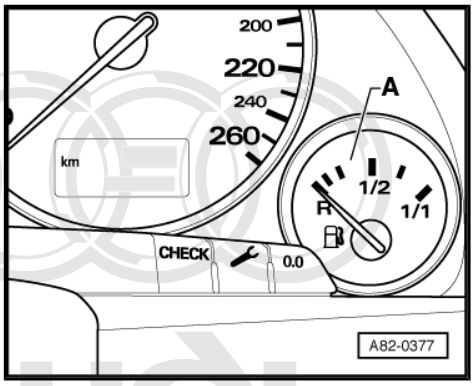

- Auxiliary heater adapted in the front operating and display unit, Climatronic control unit -J255- (checking and performing encoding) ⇒ "Guided fault-finding" function of vehicle diagnostic, testing and information system VAS 5051
- The auxiliary heater can only be switched on by the supplementary heater control unit -J364- /the “Auxiliary heating on” function can only be activated if:

– There is sufficient fuel in the fuel tank. With the ignition on, the fuel gauge -A- must not be in the “red zone” ⇒ "Guided fault-finding" function of vehicle diagnostic, testing and information system VAS 5051 (reading measured value block).

– No faults must be stored in additional heater control unit -J364- .

– The battery -A- (vehicle battery) is sufficiently charged.

– There are no faults stored in the vehicle data bus system.

Protected by copyright. Copying for private or commercial purposes, in part or in whole, is not permitted unless authorised by AUDI AG. AUDI AG does not guarantee or accept any liability with respect to the correctness of information in this document. Copyright by AUDI AG.

5.4.2 Switching auxiliary heating/auxiliary ventilation on and off

– Switch on ignition.

Depending on the vehicle model, auxiliary heating/auxiliary ventilation is set with the ignition switched on either by way of the front operating and display unit, Climatronic control unit -J255- (version with Setup button) or via the rotary knob/pushbutton for operation of the MMI (version with no Setup button on the front operating and display unit) and the MMI (Multi Media Interface) display.

Note

- *After pressing the Setup button on the front operating and display unit, Climatronic control unit -J255- or by selecting the "A/C" function on the MMI display (different versions), the desired functions can be set by turning one of the two rotary knobs/pushbuttons of the front operating and display unit, Climatronic control unit -J255- or the rotary knob/pushbutton for MMI operation ⇒ Owner's manual and ⇒ Operating instructions for "Infotainment / MMI" .*
- *On vehicles with a front operating and display unit, Climatronic control unit -J255- with a Setup button, the auxiliary heating/ auxiliary ventilation functions cannot be controlled by way of the rotary knob/pushbutton for MMI operation (installed in the centre console) ⇒ Owner's manual .*
- *The function selected can be activated by pressing the same rotary knob/pushbutton of the front operating and display unit, Climatronic control unit -J255- or the rotary knob/pushbutton for MMI operation.*
- *Auxiliary heating/auxiliary ventilation is controlled via settings made on MMI display.*
- *A full description of auxiliary heater/auxiliary ventilation control is given in the owner's manual. ⇒ Owner's manual and ⇒ Operating instructions for "Infotainment / MMI"*

Protected by copyright. Copying for private or commercial purposes, in part or in whole, is not permitted unless authorised by AUDI AG. AUDI AG does not guarantee or accept any liability with respect to the correctness of information in this document. Copyright by AUDI AG.

6 Diverting fuel for auxiliary/additional heater

WARNING

Observe the applicable rules for cleanliness, take the appropriate precautions and heed the relevant safety measures when working on open fuel system. ⇒ Fuel supply system; Rep. Gr. 20

Note

- *Air in the auxiliary/supplementary heater fuel supply can lead to problems in auxiliary/supplementary heater operation. To stop air being drawn in by the metering pump -V54- and conveyed to the auxiliary/supplementary heater when the auxiliary/supplementary heater is first switched on after working on the fuel tank or fuel delivery unit, the fuel diversion pipe is to be filled with fuel (bled) after working in this area* *⇒ page 25* .
- *After removing and installing fuel system components, the auxiliary/supplementary heater is to be switched on and operated at full load for at least 10 minutes to ensure complete bleeding of the fuel pipe.*
- *Vehicles with and without auxiliary/supplementary heater have different fuel delivery units fitted in the fuel tank ⇒ Fuel supply system; Rep. Gr. 20 and ⇒ Electronic parts catalogue .*

The following are prerequisites for operation of auxiliary/additional heater:

Protected by copyright. Copying for private or commercial purposes, in part or in whole, is not permitted unless authorised by AUDI AG. AUDI AG does not guarantee or accept any liability with respect to the correctness of information in this document. Copyright by AUDI AG.

- No air in the fuel pipe to the auxiliary/supplementary heater.
- Fuel pipe flush with bottom of vehicle and routed to protect against mechanical damage.
- Fuel pipe to auxiliary/additional heater is protected against heat generation which could affect operation.
- Fuel pipe does not come into contact with hot vehicle components.

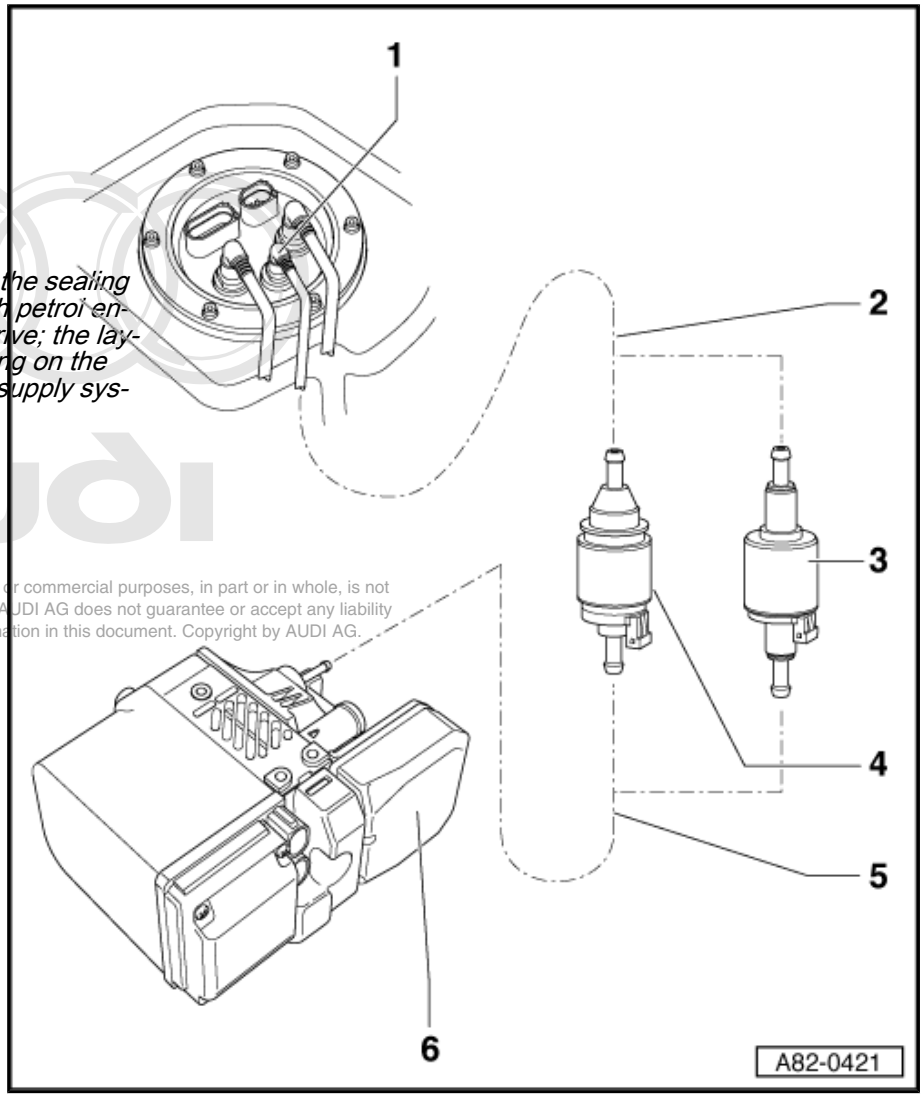

1 - Fuel delivery unit with connection for diverting fuel for auxiliary/additional heater

- ❑ Removing and installing ⇒ Fuel supply system; Rep. Gr. 20

Note

This illustration shows the sealing flange on a vehicle with petrol engine and front wheel drive; the layout may differ depending on the vehicle model ⇒ Fuel supply system; Rep. Gr. 20 .

2 - Fuel pipe

- ❑ For routing of the fuel pipe between the fuel delivery unit and the metering pump -V54- , refer to ⇒ page 34 and ⇒ Fuel supply system; Rep. Gr. 20 .
- ❑ Filling the fuel pipe to the metering pump -V54- with fuel (bleeding) ⇒ page 25

Protected by copyright. Copying for private or commercial purposes, in part or in whole, is not permitted unless authorised by AUDI AG. AUDI AG does not guarantee or accept any liability with respect to the correctness of information in this document. Copyright by AUDI AG.

3 - Metering pump -V54- (vehicles with diesel engine only)

- ❑ Removing and installing ⇒ page 32
- ❑ Different versions (introduction of this version not yet finalised) ⇒ Electronic parts catalogue
- ❑ Checking fuel delivery ⇒ page 27
- ❑ Checking actuation ⇒ "Guided fault-finding" function of vehicle diagnostic, testing and information system VAS 5051

Note

Metering pump version (type “DP 30.2”) intended only for vehicles with diesel engine; not to be fitted on vehicles with petrol engine.

4 - Metering pump -V54- (for vehicles with diesel or petrol engine)

- ❑ Removing and installing ⇒ page 32
- ❑ Different versions (this version was fitted for all vehicles at start of production) ⇒ Electronic parts catalogue

Note

This metering pump version (type “DP 2”) is fitted on vehicles with petrol and diesel engine (less running noise under Audi A8 operating conditions in comparison with type “DP 30.2”, particularly when using petrol).

- ❑ Checking fuel delivery ⇒ page 27 .
- ❑ Checking actuation ⇒ "Guided fault-finding" function of vehicle diagnostic, testing and information system VAS 5051

5 - Fuel pipe

- ❑ Routing of fuel pipe between metering pump and auxiliary/additional heater ⇒ page 34 and ⇒ Fuel supply system; Rep. Gr. 20

6 - Auxiliary/additional heater

- ❑ Different versions for vehicles with petrol or diesel engine ⇒ page 84

6.1 Filling fuel pipe to metering pump -V54- with fuel (bleeding)

Note

- ♦ *Air in the auxiliary/supplementary heater fuel supply can lead to problems in auxiliary/supplementary heater operation. To stop air being drawn in by the metering pump -V54- and conveyed to the auxiliary/supplementary heater when the auxiliary/supplementary heater is first switched on after working on the fuel tank or fuel delivery unit, the fuel diversion pipe is to be filled with fuel (bled) after working in this area.*
- ♦ *After working on the fuel system, switch on the auxiliary/supplementary heater and let it run for some time in full load mode to check operation (at least 10 minutes).*

Bleeding fuel pipe

- Auxiliary/supplementary heater switched off (the metering pump -V54- is not actuated)

– Switch off ignition.

– Unfasten the clip -C- and detach the fuel pipe.

– Connect the fuel pipe detached to the diesel extraction unit -VAS 5226- .

– Connect the diesel extraction unit -VAS 5226- to the workshop compressed air system ⇒ Fuel supply system; Rep. Gr. 20 .

– Completely fill the fuel pipe detached with fuel by briefly extracting the air.

– Re-connect the fuel pipe detached to the metering pump -V54- .

– After re-installing all the components removed, switch on the auxiliary/supplementary heater and let it operate in full load mode for roughly 10 minutes.

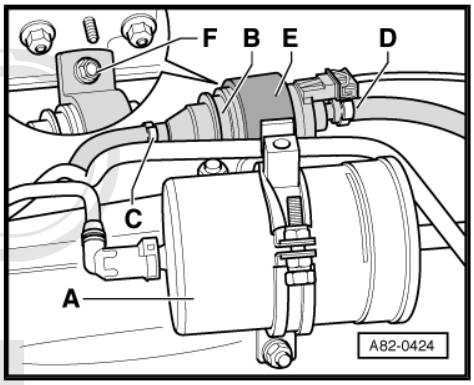

6.2 Diverting fuel (for auxiliary/additional heater) from fuel tank

Protected by copyright. Copying for private or commercial purposes, in part or in whole, is not permitted unless authorised by AUDI AG. AUDI AG does not guarantee or accept any liability with respect to the correctness of information in this document. Copyright by AUDI AG.

WARNING

Observe the applicable rules for cleanliness, take the appropriate precautions and heed the relevant safety measures when working on open fuel system. ⇒ Fuel supply system; Rep. Gr. 20

Protected by copyright. Copying for private or commercial purposes, in part or in whole, is not permitted unless authorised by AUDI AG. AUDI AG does not guarantee or accept any liability with respect to the correctness of information in this document. Copyright by AUDI AG.

Note

- *Vehicles with no auxiliary/supplementary heater are fitted with a fuel delivery unit with no additional connection for "auxiliary/ supplementary heater" fuel diversion and with no suction pipe in the fuel tank ⇒ Electronic parts catalogue .*
- *Incorrect routing of fuel diversion pipe in fuel tank can lead to auxiliary/additional heater operating problems, if fuel tank is not completely full (fault message: "No flame" or "Repeated flame interruption").*
- *After removing and installing fuel system components, the fuel pipe to the metering pump -V54- is to be filled with fuel and the auxiliary/supplementary heater then switched on and operated at full load for at least 10 minutes to ensure complete bleeding of the fuel pipe* *⇒ page 25* *.*

6.2.1 Diverting fuel from fuel tank

Fuel for auxiliary/additional heater is drawn out of fuel tank via connection -A- and riser -B-.

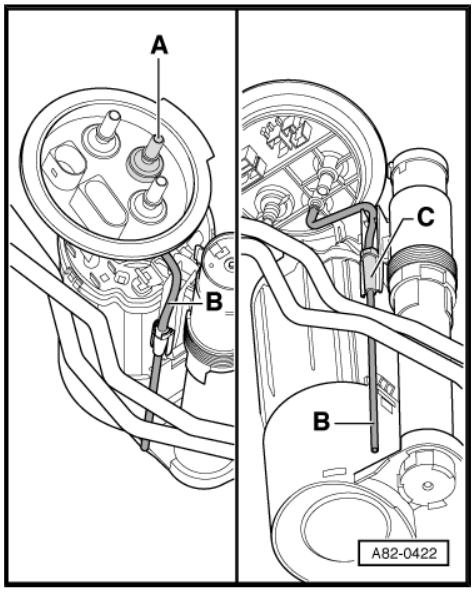

Note

- *Riser -B- is attached to fuel delivery unit (item -C-). This ensures that auxiliary/additional heater operation can still be maintained even if fuel tank is nearly empty.*
- *To stop any deposits on the bottom of the fuel tank being drawn in by the auxiliary/supplementary heater metering pump -V54- , the riser -B- ends above the bottom of the tank.*
- *To prevent fuel tank from emptying completely in auxiliary heater mode, auxiliary heater is no longer activated if fuel gauge control unit in dash panel insert -J285- is in "red zone".*
- *If the auxiliary/additional heater functions correctly when the fuel tank is completely full and problems are encountered if the tank is only partially full (fault message: "No flame" or "Repeated flame interruption"), this is an indication of incorrect routing of suction pipe -B-.*
- *If fuel tank is less than 15% full and vehicle is parked for example in an underground garage such that the lowest point of the vehicle is at front left, it is possible that no more fuel will be conveyed.*

To ensure auxiliary/additional heater operation even under unfavourable operating conditions, the fuel diversion pipe can be lengthened to cope with such exceptional circumstances. Proceed as described below.

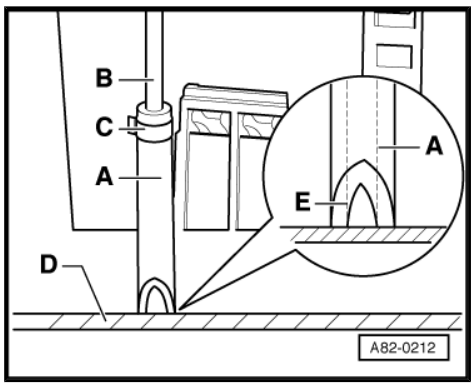

- To avoid having to replace the entire fuel delivery unit in these vehicles if problems occur, the suction pipe -B- can be extended using a fuel-resistant hose -A- (e.g. N 101 207 01).
- The hose -A- should be cut to length so that when it is pushed approx. 5 cm onto suction pipe -B- it just touches bottom of fuel tank.
- To ensure that fuel diversion is still possible if hose -A- rests vertically on bottom of fuel tank -D-, end of hose -E- must have depicted swallow-tail shape.
- Push hose -A- onto suction pipe -B- and secure in position with clip -C-.

6.3 Checking fuel delivery of metering pump -V54-

WARNING

Observe the applicable rules for cleanliness, take the appropriate precautions and heed the relevant safety measures when working on open fuel system. ⇒ Fuel supply system; Rep. Gr. 20

6.3.1 Test requirements:

- Coolant temperature less than 30° C
- The ambient temperature is less than 25 ° C.

Note

A higher ambient temperature can lead to errors as regards measured fuel quantity on account of fuel evaporation.

- Sufficient fuel in tank (fuel gauge in dash panel insert not in red zone)
- Battery -A- (vehicle battery) fully charged
- Auxiliary/additional heater fully installed and connected to vehicle electrics
- All auxiliary/supplementary heater fuses OK as per current flow diagram ⇒ Current flow diagrams, Electrical fault finding and Fitting locations
- Encoding and adaption of the supplementary heater control unit -J364- OK ⇒ "Guided fault-finding" function of vehicle diagnostic, testing and information system VAS 5051
- Auxiliary/additional heater off

6.3.2 Preparation

Test requirements satisfied ⇒ page 27

– With the ignition switched off, connect up the vehicle diagnostic, testing and information system -VAS 5051 A- with the diagnostic cable -VAS 5051/5A- to the 16-pin diagnosis socket in the vehicle ⇒ "Guided fault-finding" function of vehicle diagnostic, testing and information system VAS 5051.

– Switch on ignition.

– Read out the fault memories of all systems with self-diagnosis capability, paying particular attention to the following vehicle systems ⇒ "Guided fault-finding" function of vehicle diagnostic, testing and information system VAS 5051 :

Copyright by AUDI AG. No part of this publication may be reproduced or transmitted in any form or by any means, including photocopying and microfilm, is not permitted without the written authorization of AUDI AG. AUDI AG does not guarantee or accept any liability with respect to the correctness of information in this document. Copyright by AUDI AG.

- Dash panel insert
- Air conditioner/heater electronics
- Supplementary/auxiliary heater
- Data bus diagnostic interface -J533-
- Energy management control unit -J644-

– Eliminate the cause of any faults displayed and erase the fault memory ⇒ "Guided fault-finding" function of vehicle diagnostic, testing and information system VAS 5051.

– Select the function “Supplementary/auxiliary heater guided fault-finding” on the vehicle diagnostic, testing and information system -VAS 5051 A- ⇒ "Guided fault-finding" function of vehicle diagnostic, testing and information system VAS 5051.

– Check and if necesssary correct the encoding and adaption of the supplementary heater control unit -J364- ⇒ "Guided fault-finding" function of vehicle diagnostic, testing and information system VAS 5051.

Note

Auxiliary/supplementary heater self-diagnosis can only be started with the ignition switched on (the data bus diagnostic interface -J533- is only active when the ignition is on). Once the auxiliary/supplementary heater has switched to diagnostic mode, it is possible to continue with self-diagnosis even with the ignition switched off.

– Switch off ignition.

– If the vehicle is fitted with an air cleaner above the auxiliary/supplementary heater for example, remove the cleaner together with the air cleaner housing (a different component may also be fitted here depending on the engine version) ⇒ Injection and ignition system; Rep. Gr. 24 and ⇒ Injection and glow plug system; Rep. Gr. 23 .

– If necessary for ease of access, remove the right headlight ⇒ Electrical system; Rep. Gr. 94 .

Protected copyright. Copying for private or commercial purposes, in part or in whole, is not permitted unless authorised by AUDI AG. AUDI AG does not guarantee or accept any liability with respect to the correctness of information in this document. Copyright by AUDI AG.

– Detach the fuel pipe -A- from the auxiliary/supplementary heater.

– Attach measuring cup -B- in area of fuel pipe -A- (e.g. with wire) and insert fuel pipe into cup.

– Extend fuel pipe -A- if necessary with hose -C-.

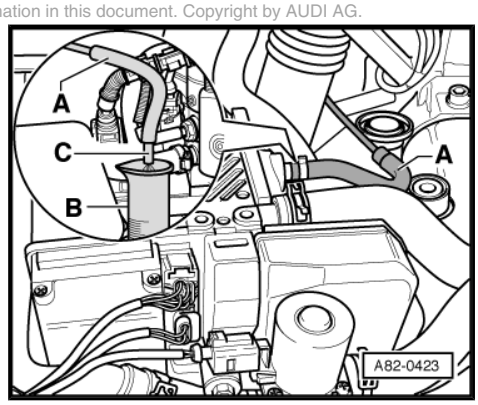

6.3.3 Complete filling of fuel pipe

Test requirements satisfied ⇒ page 27 and test preparation performed ⇒ page 27

– Switch ignition on and all electrical equipment off.

– Select the function “Supplementary/auxiliary heater guided fault-finding” on the vehicle diagnostic, testing and information system -VAS 5051 A- ⇒ "Guided fault-finding" function of vehicle diagnostic, testing and information system VAS 5051.

Note

Auxiliary/supplementary heater self-diagnosis can only be started with the ignition switched on (the data bus diagnostic interface -J533- is only active when the ignition is on). Once the auxiliary/supplementary heater has switched to diagnostic mode, it is possible to continue with self-diagnosis even with the ignition switched off.

– Completely fill the fuel pipe -A- (from the metering pump -V54- to the graduated beaker -B-) with fuel ⇒ "Guided fault-finding" function of vehicle diagnostic, testing and information system VAS 5051.

Note

- *The delivery rate can only be checked by way of the Basic setting function. This does however involve using the "Adaption" function to enter the actuation time of the metering pump -V54- and enabling the "Pipe filling" function in a further adaption channel ⇒ "Guided fault-finding" function of vehicle diagnostic, testing and information system VAS 5051.*
- *For replacement auxiliary heaters (with a new supplementary heater control unit -J364-) for which basic setting has not yet been performed using the "Pipe filling" function, the value displayed for the pipe filling time may for example not be "0", but rather a different value e.g. "200" ⇒ "Guided fault-finding" function of vehicle diagnostic, testing and information system VAS 5051.*
- *The delivery rate can only be checked by way of the "Basic setting" function if the value "0" has been entered in the adaption channel for enabling "Pipe filling". When the "Pipe filling" function is implemented, the adaption value is reset to "1" and this function is thus disabled ⇒ "Guided fault-finding" function of vehicle diagnostic, testing and information system VAS 5051.*
- *In the case of replacement auxiliary/supplementary heaters (with a new supplementary heater control unit -J364-) for which basic setting has yet to be performed with the "Pipe filling" function, the value "0" may also be displayed.*
- *Following implementation of the "Pipe filling" function, the display in the measured value block is reset to the factory setting for the auxiliary heater. On completion of the necessary work, the auxiliary heater must therefore be actuated with the "Basic setting" function ⇒ "Guided fault-finding" function of vehicle diagnostic, testing and information system VAS 5051.*
- *The metering pump -V54- is actuated for 30 s at 5 hertz (5 pulses per second) in the "Pipe filling" function if e.g. "30" has been entered in the adaption channel for the "Pipe filling" function (the fuel pipe is then completely filled with fuel).*
- *Once "Pipe filling" function has been started, it cannot be aborted and is implemented in full by control unit regardless of any entries made via tester.*
- *There may be several reasons for the display "Function unknown or cannot be implemented at present" appearing in the display zone ⇒ "Guided fault-finding" function of vehicle diagnostic, testing and information system VAS 5051 .*

– Wait until the display changes from "Pipe filling" to "End" (with certain control units, "Function unknown or cannot be implemented at present" is displayed on completion of actuation) ⇒ "Guided fault-finding" function of vehicle diagnostic, testing and information system VAS 5051.

Protected by copyright. Copying for private or commercial purposes, in part or in whole, is not permitted unless authorised by AUDI AG. AUDI AG does not guarantee or accept any liability with respect to the correctness of information in this document. Copyright by AUDI AG.

– Drain measuring cup -B- and reattach.

– Terminate guided fault-finding ⇒ "Guided fault-finding" function of vehicle diagnostic, testing and information system VAS 5051 .

To stop too much fuel being conveyed into the auxiliary/supplementary heater, the supplementary heater control unit -J364- is programmed as follows:

♦ It may only be possible to perform “Pipe filling” once in the “Basic setting” function in the course of guided fault-finding depending on the version of the supplementary heater control unit -J364- (not necessary for all versions of the supplementary heater control unit -J364- , terminate guided fault-finding and re-start if necessary) ⇒ "Guided fault-finding" function of vehicle diagnostic, testing and information system VAS 5051.

♦ Once “Pipe filling” has been performed in the “Basic setting” function, the supplementary heater control unit -J364- resets the time entered in the adaption channel for “Pipe filling” to “0” (actuation time of the metering pump -V54- in the “Pipe filling” function) and, in a further adaption channel, the value is set to “1” (pipe filling disabled as already implemented) ⇒ "Guided fault-finding" function of vehicle diagnostic, testing and information system VAS 5051.

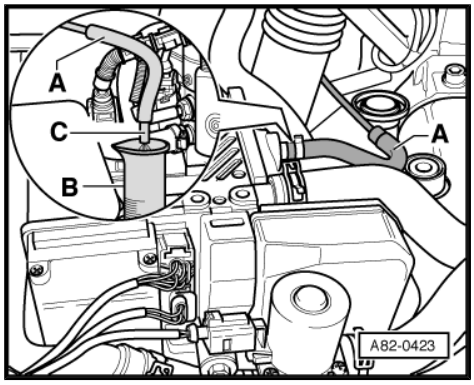

Note

For the actual test it is therefore necessary to exit from guided fault-finding and to repeat the entire procedure for test purposes.

6.3.4 Testing:

Test preparation performed ⇒ page 27 and fuel pipe completely filled ⇒ page 28

– Select the supplementary heater control unit -J364- in the “Guided fault-finding” function ⇒ "Guided fault-finding" function of vehicle diagnostic, testing and information system VAS 5051.

– Check the delivery rate of the metering pump -V54- ⇒ "Guided fault-finding" function of vehicle diagnostic, testing and information system VAS 5051.

Metering pump -V54- is actuated at a fixed clock frequency.

Protected by copyright. Copying for private or commercial purposes, in part or in whole, is not permitted unless authorised by AUDI AG. AUDI AG does not guarantee or accept any liability with respect to the correctness of information in this document. Copyright by AUDI AG.

– Observe the fuel entering the graduated beaker -B- from the fuel pipe -C-. It must not contain any vapour bubbles.

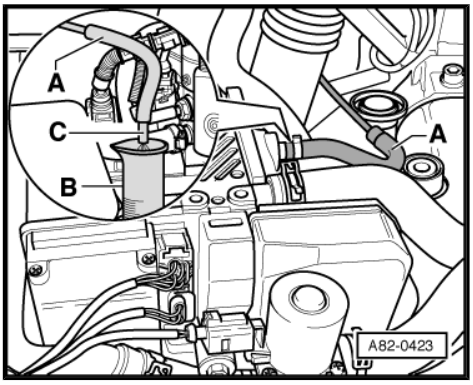

Note

- *The metering pump -V54- is actuated at a fixed clock frequency for the set time. During this test, fuel delivery is independent of instantaneous battery voltage.*
- *If the auxiliary/supplementary heater does not respond, switch on the ignition if applicable before selecting the supplementary heater control unit -J364- again with the address word "Supplementary/auxiliary heater".*
- *Auxiliary/supplementary heater guided fault-finding can only be started with the ignition switched on or within a specified period after switching off the ignition or following the last exchange of data between the tester and a control unit (the data bus diagnostic interface -J533- is not constantly active).*
- *On diesel vehicles with supplementary heater (without "Auxiliary heater" optional extra), the ignition must be left switched on, as otherwise self-diagnosis will be terminated.*
- *With the supplementary heater control unit -J364- fitted at present, the maximum value which can be entered is "255".*
- *When checking the delivery rate, the metering pump -V54- is actuated for 250 s at 5 hertz (5 pulses per second).*
- *The metering pump -V54- actuation time is entered in seconds in the adaption channel. When the "Pipe filling" function is next selected in "Basic setting", the metering pump -V54- is actuated for this period. The "Pipe filling" function can however only be performed in "Basic setting" if this has been enabled in a further adaption channel ⇒ "Guided fault-finding" function of vehicle diagnostic, testing and information system VAS 5051.*
- *Depending on the supplementary heater control unit -J364- , rounding errors on conversion after entering the encoded display value, e.g. "250", may lead to the following message being displayed "Note: Value to be stored 250, value actually stored 249". If this display appears, enter e.g. "251" instead of "250" if necessary to store the exact value and confirm the display.*
- *Values entered which are not within the specified limits are displayed but not implemented.*
- *If the value entered is too high or too low, the display is automatically reset (to the lowest or highest value still permitted).*
- *In the "Pipe filling" routine of the "Basic setting" function, the metering pump -V54- is actuated at a frequency of 5 hertz (5 pulses per second). The delivery rate set in the metering pump -V54- is approx. 0.064 ml per stroke (0.064/1000 litres).*
- *There may be several reasons for the display "Function unknown or cannot be implemented at present" appearing in the display zone ⇒ "Guided fault-finding" function of vehicle diagnostic, testing and information system VAS 5051 .*
- *Once the "Pipe filling" function has been started, it cannot be terminated. It is implemented in full by the control unit regardless of any entries made by way of the tester.*

– Wait until set time has elapsed and metering pump -V54- is no longer actuated.

Protected by copyright. Copying for private or commercial purposes, in part or in whole, is not permitted unless authorised by AUDI AG. AUDI AG does not guarantee or accept any liability with respect to the correctness of information in this document. Copyright by AUDI AG.

Note

Depending on the control unit version, the vehicle diagnostic system display switches from e.g. “Pipe filling” to “End” or “Function unknown or cannot be implemented at present”.

– Terminate guided fault-finding ⇒ "Guided fault-finding" function of vehicle diagnostic, testing and information system VAS 5051 .

Protected by copyright. Copying for private or commercial purposes, in part or in whole, is not permitted unless authorised by AUDI AG. AUDI AG does not guarantee or accept any liability with respect to the correctness of information in this document. Copyright by AUDI AG.

– Measure the fuel delivery of the metering pump -V54- on completion of the “Basic setting” “Pipe filling” function.

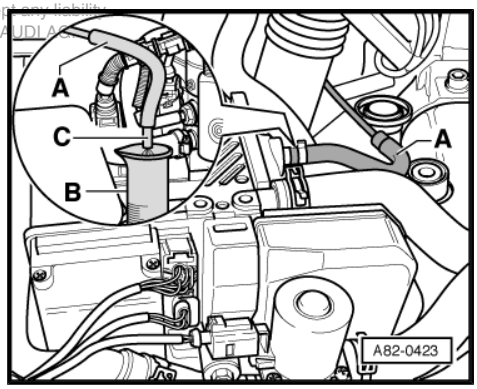

Specification:

80 ml +/-8 ml (permissible tolerance range 72 to 88 ml)

Note

- *One millilitre (ml) corresponds to 1/1000 litre or cm^3.*
- *The specified delivery rate is obtained from the following arithmetic value (0.064 ml per stroke x 5 pulses per sec. x 250 sec.).*

– Re-install all the components removed on completion of the envisaged work.

If the fuel delivery rate is outside the tolerance range:

– Check the fuel pipe (from the fuel tank via the metering pump -V54- to the auxiliary/supplementary heater) for damage and proper routing ⇒ page 23 .

– If no fault is found, replace metering pump -V54- ⇒ page 32 .

– In the event of auxiliary/additional heater starting problems despite correct fuel delivery, check CO_2 content in exhaust gas ⇒ page 39 .

– If the fuel delivery is in the lower tolerance range (less than 74 ml) and there are starting problems with the auxiliary/supplementary heater or “Poor heat output” has been registered ⇒ page 61 , replace the metering pump -V54- if necessary ⇒ page 32 .

6.4 Removing and installing metering pump -V54-

Note

- *Fit the metering pump -V54- and the corresponding fuel pipes such that they do not make contact with other components (noise).*
- *The sections of the fuel pipe are to be butt-jointed to stop vapour bubbles accumulating at the connections.*

WARNING

Observe the applicable rules for cleanliness, take the appropriate precautions and heed the relevant safety measures when working on open fuel system. ⇒ Fuel supply system; Rep. Gr. 20

Removing

– Switch off ignition.

– Remove cover beneath fuel filter (illustration shows layout for vehicles with petrol engine; vehicles with diesel engine do not have a fuel filter -A- at this location). ⇒ Fuel supply system; Rep. Gr. 20

– On vehicles with petrol engine, detach fuel filter -A- from fuel tank or remove fuel filter. ⇒ Fuel supply system; Rep. Gr. 20

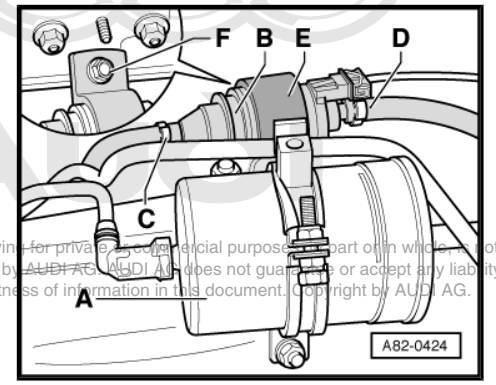

Protected by copyright. Copying for private and commercial purposes, in part or in whole, is not permitted unless authorised by AUDI AG. AUDI AG does not guarantee or accept any liability with respect to the correctness of information in this document. Copyright by AUDI AG.

– Unplug connector from metering pump -V54- -B-.

– Unfasten clip and detach fuel pipe -C-.

– Seal fuel pipe -C-.

– Unfasten clip and detach fuel pipe -D-.

– Seal fuel pipe -D-.

– Remove the metering pump -V54- -B- from the rubber element holder -E-.

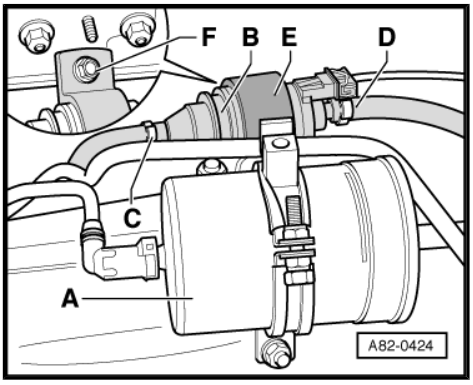

Installing

Installation is carried out in the reverse order; note the following:

– Replace the hose clamps on the fuel lines and secure them using suitable pliers.

– Make sure fuel pipes are not twisted.

– Secure fuel pipes at attachment points provided.

♦ Different metering pump versions may be fitted depending on the type of fuel (petrol or diesel, other version for vehicles with diesel engine gradually being introduced). Attention is therefore to be paid to correct assignment ⇒ Electronic parts catalogue .

Note

♦ *Metering pump (type "DP 2") is fitted on vehicles with petrol and diesel engine (less running noise under Audi A8 operating conditions in comparison with type "DP 30.2", particularly when using petrol).*

♦ *Metering pump version (type "DP 30.2") intended only for vehicles with diesel engine; not to be fitted on vehicles with petrol engine.*

6.5 Routing of fuel pipe to auxiliary/additional heater

Note

- *Fit the metering pump -V54- and the corresponding fuel pipes such that they do not make contact with other components (noise).*
- *The sections of the fuel pipe are to be butt-jointed to stop vapour bubbles accumulating at the connections.*

The fuel pipe between the metering pump -V54- and the auxiliary/supplementary heater -A- is routed on the floor of the vehicle.

The brackets -B- not only hold the fuel pipe to the auxiliary/additional heater -A- in position, but also the fuel pipes to the engine.
⇒ Fuel supply system; Rep. Gr. 20

Fuel pipe -A- must be routed such that it does not come into contact with components which become warm and must be protected against heat generation which could affect operation.

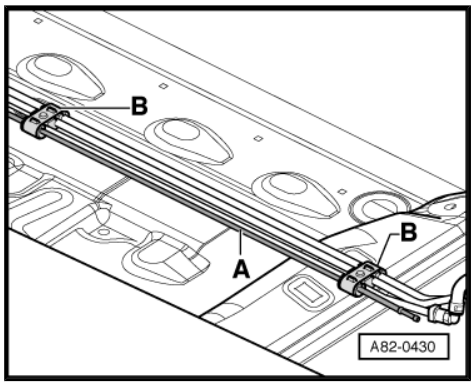

In area behind front right wheel housing liner, fuel pipe to auxiliary/additional heater -A- is routed as illustrated for vehicles with petrol engine (routing may differ from that shown in the case of vehicles with diesel engine).

Fuel pipe -A- and fuel hose -B- must be routed so that they do not come into contact with components which become warm and must be protected against heat generation which could affect operation.

Brackets -C- and -D- hold fuel pipe in position.

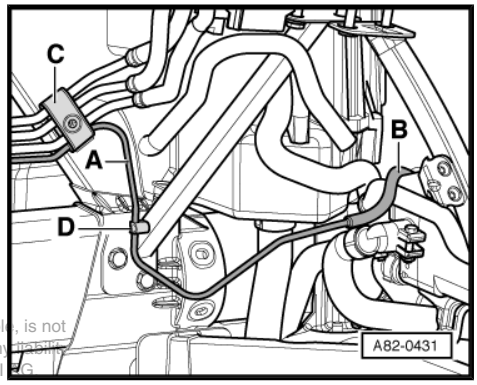

Protected by copyright. Copying for private or commercial purposes, in part or in whole, is not permitted unless authorised by AUDI AG. AUDI AG does not guarantee or accept any liability with respect to the correctness of information in this document. Copyright by AUDI AG

6.6 Checking actuation and electrical connections of auxiliary/additional heater

Special tools and workshop equipment required

- Vehicle diagnostic, testing and information system -VAS 5051 A- with multimeter leads -VAS 5051/7- , probe -VAS 5051/8- and current probe 50 A -VAS 5051/9-
- Voltage tester -V.A.G 1527 B-
- Adapter set -V.A.G 1594 C-

Test conditions

– All fuses OK as per current flow diagram ⇒ Current flow diagrams, Electrical fault finding and Fitting locations

– Battery -A- adequately charged

– Fault memory interrogated and any faults displayed eliminated ⇒ "Guided fault-finding" function of vehicle diagnostic, testing and information system VAS 5051

Note

- *“Electrical check” function is not described in this Workshop Manual. The Manual merely gives a brief outline of the checking of individual components.*
- *Electrical checking is to be performed as described in the guided fault-finding routine ⇒ "Guided fault-finding" function of vehicle diagnostic, testing and information system VAS 5051.*

– Switch off ignition.

– Move the lock carrier to service position ⇒ General body repairs, exterior; Rep. Gr. 50 .

– Remove the right headlight ⇒ Electrical system; Rep. Gr. 94 .

Protected by copyright. Copying for private or commercial purposes, in part or in whole, is not permitted unless authorised by AUDI AG. AUDI AG does not guarantee or accept any liability with respect to the correctness of information in this document. Copyright by AUDI AG.

– Unplug the connectors -B- and -A- from the heater.

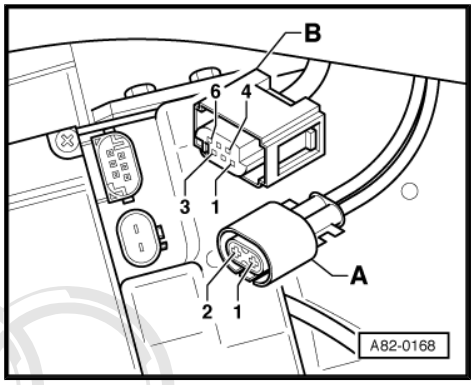

Note

- *Pay attention to the correct sequence when unplugging connectors -B- and -A-. If connector -A- is unplugged first, a fault may be stored in the supplementary heater control unit -J364- and this can only be erased after unplugging the connectors and plugging them back in in the right order.*
- *Plug in connector -A- and then connector -B- at the supplementary heater control unit -J364- .*

- Checking power supply and earth connection to auxiliary/supplementary heater ⇒ page 36
- Checking connection between auxiliary/supplementary heater and metering pump -V54- ⇒ page 37
- Checking actuation of heater coolant shut-off valve -N279- (only fitted on vehicles with “auxiliary heater” as optional extra) ⇒ page 37

Checking power supply and earth connection to auxiliary/supplementary heater

Protected by copyright. Copying for private or commercial purposes, in part or in whole, is not permitted unless authorised by AUDI AG. AUDI AG does not guarantee or accept any liability with respect to the correctness of information in this document. Copyright by AUDI AG.

Vehicle diagnostic, testing and information system -VAS 5051 A- , measurement mode: Multimeter, voltage measurement (20 VDC)				
Heater connection	**Testing of**	**• Test conditions – Additional operations**	**Specified value**	**Remedies if specified value not attained**
Connecor “A”, contact “1” and connector “A” contact “2”	Terminal “30” and “earth connection” at supplementary heater control unit -J364-	• Ignition switched off.	– Approx. battery voltage	– Use current flow diagram to check and repair power supply and earth connection ⇒ Current flow diagrams, Electrical fault finding and Fitting locations

Note

- *Depending on last operating status and coolant temperature in auxiliary/additional heater, no-load current input of auxiliary/ additional heater may be up to max. 60 mA for a period of up to 5 hours following switch-off. During this period, cooling of coolant is calculated by additional heater control unit -J364- for time following switch-off.*
- *At the latest 5 hours after switch-off, no-load current input of additional heater control unit -J364- is less than 2 mA.*
- *The no-load current input of the remote control receivers for auxiliary heater -R64- (Telestart "T70" and Telestart "T90" / "T91" version) is less than 1 mA (the current input increases as soon as a transmission signal is received).*

Checking connection between auxiliary/supplementary heater and metering pump -V54-

Vehicle diagnostic, testing and information system -VAS 5051 A- , measurement mode: Multimeter, resistance measurement (0...100 Ω)				
Connection at heater	**Checking of**	• **Test conditions** – **Additional operations**	**Specification**	**Measures to be taken if reading does not match specification**
Connecor "B", contact "6" and connector "A" contact "2"	Wiring to metering pump -V54-	• Ignition switched off.	– Greater than 3 and less than 20 Ω	– Use current flow diagram to check and repair wiring ⇒ Current flow diagrams, Electrical fault finding and Fitting locations – Replace the metering pump -V54-

Protected by copyright. Copying for private or commercial purposes, in part or in whole, is not permitted unless authorised by AUDI AG. AUDI AG does not guarantee or accept any liability with respect to the correctness of information in this document. Copyright by AUDI AG.

Note

- *Internal resistance of metering pump -V54- = 4.1 Ω +/- 0.2 Ω*
- *Checking actuation of the metering pump -V54- ⇒ "Guided fault-finding" function of vehicle diagnostic, testing and information system VAS 5051.*

Checking actuation of heater coolant shut-off valve -N279-

Vehicle diagnostic, testing and information system -VAS 5051 A- , measurement mode: Multimeter, resistance measurement (0...100 Ω)				
Connection at heater	**Checking of**	• **Test conditions** – **Additional operations**	**Specification**	**Measures to be taken if reading does not match specification**
Connecor "B", contact "4" and connector "A" contact "2"	Wiring to heater coolant shutoff valve -N279-	• Ignition switched off.	– Greater than 10 and less than 30 Ω	– Use current flow diagram to check and repair wiring ⇒ Current flow diagrams, Electrical fault finding and Fitting locations – Replace heater coolant shutoff valve -N279-

Note

- *Heater coolant shutoff valve -N279- is only fitted on vehicles with “Auxiliary heater” optional extra.*
- *Checking actuation of the heater coolant shut-off valve -N279- ⇒ "Guided fault-finding" function of vehicle diagnostic, testing and information system VAS 5051.*
- *Current input of heater coolant shutoff valve -N279- is approx. 1 A*

Protected by copyright. Copying for private or commercial purposes, in part or in whole, is not permitted unless authorised by AUDI AG. AUDI AG does not guarantee or accept any liability with respect to the correctness of information in this document. Copyright by AUDI AG.

7 Checking and adjusting CO_2 content in auxiliary/additional heater exhaust gas

Special tools and workshop equipment required

- Exhaust emission test station -VAS 6300-

Note

Protected by copyright. Copying or distribution of this document is not permitted unless authorised by AUDI AG. AUDI AG does not guarantee or accept any liability with respect to the correctness of information in this document. Copyright by AUDI AG.

- *The CO_2 content in the exhaust gas can be set in the "Adaption" function ⇒ "Guided fault-finding" function of vehicle diagnostic, testing and information system VAS 5051.*
- *The supplementary heater control unit -J364- can be used in the adaption function to alter actuation of the combustion air blower -V6- . This changes the delivery rate and more or less combustion air is conveyed into the auxiliary/supplementary heater.*
- *Vehicles with a diesel engine are fitted with a supplementary heater with no circulation pump -V55- and no heater coolant shut-off valve -N279- (as supplementary heater without "Auxiliary heater" optional extra). This version acts as additional heater and is only actuated by front operating and display unit (Climatronic control unit -J255-) with engine running if heat generated by diesel engine is not sufficient to warm the passenger compartment.*
- *As soon as front operating and display unit (Climatronic control unit -J255-) is activated (by auxiliary/additional heater), it must be set to maximum heating output (temperature preselection "Hi").*
- *Additional heater (auxiliary heater without circulation pump -V55-) must only be activated with engine running, as heat generated is not dissipated via coolant when engine is stopped.*
- *On vehicles with a diesel engine and supplementary heater (without the "Auxiliary heater" optional extra), the engine is to be started before switching on the supplementary heater by way of the "Basic setting" function. As of a coolant temperature of greater than 40 °C the air conditioner is additionally to be set to "Hi" ⇒ "Guided fault-finding" function of vehicle diagnostic, testing and information system VAS 5051 .*
- *In the "Basic setting" function, the auxiliary/supplementary heater can be operated up to a coolant temperature of 110 ° C and starting from the control interval is possible. The operating time is then restricted to a maximum of 10 minutes ⇒ "Guided fault-finding" function of vehicle diagnostic, testing and information system VAS 5051 .*

Test requirements

- At the start of testing, the coolant temperature should be less than 30° C (if the starting temperature is too high, the auxiliary/supplementary heater may switch to part load operation during testing or setting).
- The ambient temperature is less than 25 ° C.
- Sufficient fuel in tank (fuel gauge in dash panel insert not in red zone)
- Battery -A- (vehicle battery) fully charged

- Auxiliary/supplementary heater fully installed and connected to the vehicle electrical system
- All auxiliary/supplementary heater fuses OK as per current flow diagram ⇒ Current flow diagrams, Electrical fault finding and Fitting locations
- Encoding and adaption of the supplementary heater control unit -J364- OK ⇒ "Guided fault-finding" function of vehicle diagnostic, testing and information system VAS 5051
- Auxiliary/additional heater off

Preparation

– With the ignition switched off, connect up the vehicle diagnostic, testing and information system -VAS 5051 A- , for example, with the diagnostic wire -VAS 5051/5A- to the 16-pin diagnostic socket in the vehicle ⇒ "Guided fault-finding" function of vehicle diagnostic, testing and information system VAS 5051 .

Protected by copyright. Copying for private or commercial purposes, in part or in whole, is not permitted unless authorised by AUDI AG. AUDI AG does not guarantee or accept any liability with respect to the correctness of information in this document. Copyright by AUDI AG.

– Switch on ignition (vehicles with auxiliary/supplementary heater).

– Start engine (vehicles with diesel engine with additional heater only, without “auxiliary heater” optional extra).

Note

- *Auxiliary/additional heater self-diagnosis can only be started with ignition on (data bus diagnostic interface -J533- is only active after switching on ignition). Once auxiliary/additional heater has switched to diagnostic mode, self-diagnosis can be continued with ignition switched off.*
- *Vehicles with a diesel engine with supplementary heater only (no “Auxiliary heater” optional extra) are not fitted with a circulation pump -V55- . On such vehicles the engine must be running to circulate the auxiliary/supplementary heater coolant and to prevent overheating.*

– Select the “Guided fault-finding” function ⇒ "Guided fault-finding" function of vehicle diagnostic, testing and information system VAS 5051.

– Read out the fault memories of all systems with self-diagnosis capability, paying particular attention to the following vehicle systems ⇒ "Guided fault-finding" function of vehicle diagnostic, testing and information system VAS 5051 :

- Dash panel insert
- Air conditioner/heater electronics
- Supplementary/auxiliary heater
- Energy management control unit -J644-
- Data bus diagnostic interface -J533-

– Eliminate the cause of any faults displayed in the vehicle systems and erase the fault memory ⇒ "Guided fault-finding" function of vehicle diagnostic, testing and information system VAS 5051.

– Select the supplementary heater control unit -J364- in the “Guided fault-finding” function ⇒ "Guided fault-finding" function of vehicle diagnostic, testing and information system VAS 5051.

– Switch on the exhaust emission test station -VAS 6300- and insert the appropriate exhaust probe hose -B- in the auxiliary/ supplementary heater exhaust pipe -A-.

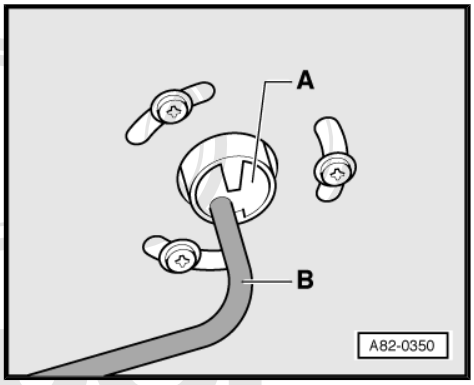

7.1 Checking CO_2 content in auxiliary/additional heater exhaust gas

Protected by copyright. Copying for private or commercial purposes, in part or in whole, is not permitted unless authorised by AUDI AG. AUDI AG does not guarantee or accept any liability with respect to the correctness of information in this document. Copyright by AUDI AG.

Note

- *For this test, the auxiliary/supplementary heater can be switched on by way of the rotary knob/pushbutton of the front operating and display unit, Climatronic control unit -J255- , via the Multi Media Interface (MMI) or using the remote control. For activation with remote control, the temperature setting on the front operating and display unit, Climatronic control unit -J255- of the air conditioner must however be "Hi", as otherwise, depending on the ambient temperature, the "auxiliary ventilation" function is activated and the auxiliary heater does not start up ⇒ Owner's manual and ⇒ Operating instructions for "Infotainment / MMI" .*
- *For this check, the auxiliary/supplementary heater can also be switched on by way of the "Basic setting" function ⇒ "Guided fault-finding" function of vehicle diagnostic, testing and information system VAS 5051.*
- *In the "Basic setting" function, the auxiliary/supplementary heater can be operated up to a coolant temperature of 110° C and starting from the control interval is possible. In this case, the operating time is limited to max. 10 minutes.*

Checking

- Necessary test requirements satisfied ⇒ page 39
- Preliminary work performed as described ⇒ page 40

– Switch on the exhaust emission test station -VAS 6300- and insert the appropriate exhaust probe hose -B- in the auxiliary/ supplementary heater exhaust pipe -A-.

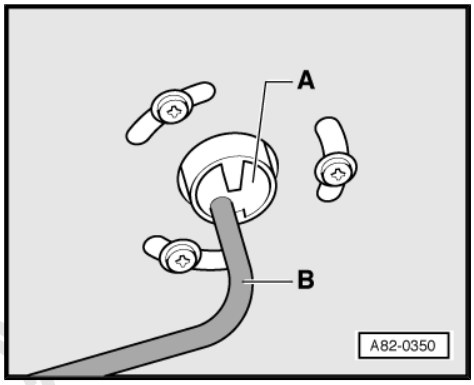

Note

Hose -B- of exhaust probe must not stop exhaust gas emerging from exhaust pipe -A- during test.

– Switch on ignition (vehicles with auxiliary/additional heater).

– Start engine (vehicles with diesel engine with additional heater only, without “auxiliary heater” optional extra).

– Set maximum heat output on front operating and display unit (Climatronic control unit -J255-).

– Restrict fresh-air blower speed by setting front operating and display unit to approx. 50 % of maximum fresh-air blower speed.

– Switch on the auxiliary/supplementary heater by way of one of the two rotary knobs/pushbuttons of the front operating and display unit, Climatronic control unit -J255- , via the Multi Media Interface (MMI) or by way of the vehicle diagnostic, testing and information system -VAS 5051 A- (“Basic setting” function) on vehicles with auxiliary heater ⇒ Owner's manual ; ⇒ Operating instructions for “Infotainment / MMI” and ⇒ "Guided fault-finding" function of vehicle diagnostic, testing and information system VAS 5051.

Publication of this document or any part of it for commercial purposes, in part or in whole, is not permitted unless authorised by AUDI AG. AUDI AG does not guarantee or accept any liability with respect to the correctness of information in this document. Copyright by AUDI AG.

– Switch on the supplementary heater by way of the vehicle diagnostic, testing and information system -VAS 5051 A- (“Basic setting” function) (vehicles with diesel engine with supplementary heater only - no “Auxiliary heater” optional extra) ⇒ "Guided fault-finding" function of vehicle diagnostic, testing and information system VAS 5051.

– Wait until auxiliary/additional heater switches from starting to full load mode (approx. 4 minutes).

Note

The instantaneous operating status of the auxiliary/supplementary heater can be seen from the measured value block ⇒ "Guided fault-finding" function of vehicle diagnostic, testing and information system VAS 5051.

– Wait at least another minute after auxiliary/additional heater has switched to full load mode.

– Read off measured value for CO_2 (carbon dioxide) content in exhaust gas from CO_2 measuring instrument (as of approx. 4 minutes after switch-on; auxiliary/additional heater must be in full load mode).

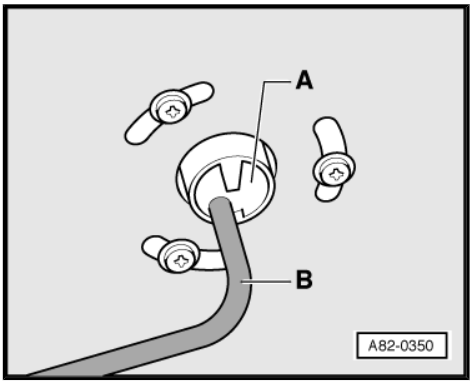

Note

Hose -B- of exhaust probe must not stop exhaust gas emerging from exhaust pipe -A- during test.

Specifications:

- For vehicles with diesel engine: 8 to 13 % CO_2 by volume.
- For vehicles with petrol engine: 7 to 12 % CO_2 by volume.

Protected by copyright. Copying or distribution is not permitted unless authorised by AUDI AG. AUDI AG does not guarantee or accept any liability with respect to the correctness of information in this document. Copyright by AUDI AG.

Note

- *If measured value is in lower range (less than 9%), problems with auxiliary/additional heater combustion may be encountered under unfavourable operating conditions (e.g. high vehicle speed with auxiliary/additional heater switched on). Set CO_2 content in exhaust gas to a higher value* ⇒ page 44 *.*
- *If value displayed by CO_2 measuring instrument fluctuates slightly, calculate mean value from highest and lowest measured values.*
- *If value displayed by CO_2 measuring instrument fluctuates considerably (more than approx. +/- 0.6% depending on measuring instrument), check position of probe in exhaust pipe of auxiliary/additional heater.*

If the measurement is outside the permitted range:

– Check fresh-air intake hose with intake silencer and auxiliary/additional heater exhaust system for dirt or cross-sectional constriction and clean components concerned (replace if necessary).

– Check fuel delivery for metering pump -V54- ⇒ page 27 .

– If the CO_2 content of the exhaust gas and the delivery of the metering pump -V54- are in the lower specified range, replace metering pump -V54- ⇒ page 32 .

If CO_2 content in exhaust gas is not OK, but fuel delivery is OK:

– Check fresh-air intake hose with intake silencer and auxiliary/additional heater exhaust system for dirt or cross-sectional constriction and clean components concerned (replace if necessary).

If no fault is found:

– Check the combustion air blower -V6- ⇒ "Guided fault-finding" function of vehicle diagnostic, testing and information system VAS 5051.

– Adjust CO_2 content in exhaust gas ⇒ page 44 .

– If CO_2 content in exhaust gas cannot be adjusted, replace combustion air blower -V6- ⇒ page 87 .

If starting problems are encountered with auxiliary/additional heater although fuel delivery and CO_2 content in exhaust gas are OK:

– Check the glow plug with flame monitor -Q8- ⇒ page 70 and ⇒ page 88 .

– Remove any residue from auxiliary/additional heater combustion chamber (this is particularly important for vehicles with diesel engines and when running engine and thus auxiliary/additional heater on rape-oil or vegetable-oil methylester fuel) ⇒ page 84

7.2 Adjusting CO_2 content in auxiliary/additional heater exhaust gas

Prerequisites for adjusting the CO_2 content of the exhaust gas:

The reproduction, distribution and utilization of this document for commercial purposes, in part or in whole, is not permitted unless authorised by AUDI AG. AUDI AG does not guarantee or accept any liability with respect to the correctness of information in this document. Copyright by AUDI AG.

– Auxiliary/supplementary heater in full load mode

– Vehicle diagnostic, testing and information system -VAS 5051 A- connected to vehicle and auxiliary/supplementary heater self-diagnosis started ⇒ "Guided fault-finding" function of vehicle diagnostic, testing and information system VAS 5051

– CO_2 measuring instrument ready for operation and exhaust probe -B- positioned in auxiliary heater exhaust pipe -A- such that it does not impede emergence of exhaust gas

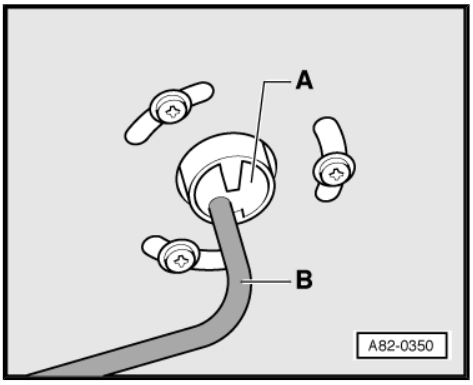

Note

- *If the auxiliary/supplementary heater switches from full to part load operation during CO_2 adjustment on account of an excessive coolant temperature, full load operation of the auxiliary/supplementary heater can be maintained up to a coolant temperature of approx. 110°C and for max. approx. 10 minutes by making an entry in the "Basic setting" function ⇒ "Guided fault-finding" function of vehicle diagnostic, testing and information system VAS 5051.*
- *If there is not sufficient time, the process can be repeated.*

Adjusting

- Necessary test requirements satisfied ⇒ page 39
- Preliminary work performed as described ⇒ page 40

– Switch on the auxiliary/supplementary heater by way of one of the two rotary knobs/pushbuttons of the front operating and display unit, Climatronic control unit -J255- , via the Multi Media Interface (MMI) or by way of the vehicle diagnostic, testing and information system -VAS 5051 A- ("Basic setting" function) on vehicles with auxiliary heater ⇒ Owner's manual , ⇒ Operating instructions for "Infotainment / MMI" and ⇒ "Guided fault-finding" function of vehicle diagnostic, testing and information system VAS 5051.

– Switch on the supplementary heater by way of the vehicle diagnostic, testing and information system -VAS 5051 A- ("Basic setting" function) (vehicles with diesel engine with supplementary heater only - no "Auxiliary heater" optional extra) ⇒ "Guided fault-finding" function of vehicle diagnostic, testing and information system VAS 5051.

– Check CO_2 (carbon dioxide) content in auxiliary/additional heater exhaust gas ⇒ page 41 .

Protected by copyright. Copying for private or commercial purposes, in part or in whole, is not permitted unless authorised by AUDI AG. AUDI AG does not guarantee or accept any liability with respect to the correctness of information in this document. Copyright by AUDI AG.

Note

- *Auxiliary/additional heater must have been operating for at least 1 minute in full load mode to enable adjustment to be implemented.*
- *When adjusting the CO_2 content in the exhaust gas, the CO_2 measuring instrument must be ready for operation and the exhaust measurement probe -B- fitted in the exhaust pipe -A- of the auxiliary heater such that it does not stop exhaust gas emerging.*
- *If the auxiliary heater switches from full to part load operation during CO_2 adjustment on account of an excessive coolant temperature, full load operation of the auxiliary heater can be maintained up to a coolant temperature of approx. 110°C and for max. approx. 10 minutes in the "Basic setting" function. If this period is not sufficient, the procedure can be repeated ⇒ "Guided fault-finding" function of vehicle diagnostic, testing and information system VAS 5051.*
- *Alteration of the CO_2 content of the exhaust gas involves changing the actuation voltage for the combustion air blower -V6- by way of the "Adaption" function ⇒ "Guided fault-finding" function of vehicle diagnostic, testing and information system VAS 5051. .*

– Exit from the "Basic setting" function if this function has been used to activate the auxiliary/supplementary heater.

– Select the "Adaption" function ⇒ "Guided fault-finding" function of vehicle diagnostic, testing and information system VAS 5051.

– Use the input keypad to enter the adaption channel for adjusting the "CO_2 content in the exhaust gas" and confirm the entry ⇒ "Guided fault-finding" function of vehicle diagnostic, testing and information system VAS 5051.

Reproduced by Sonnen. Copying for private or commercial purposes, in part or in whole, is not permitted unless authorised by AUDI AG. AUDI AG does not guarantee or accept any liability with respect to the correctness of information in this document. Copyright by AUDI AG.

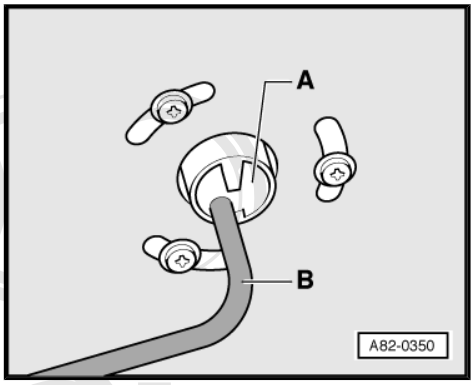

Note

The hose -B- of the exhaust probe must not stop exhaust gas emerging from the exhaust pipe -A- during testing and setting.

There may be several reasons for the display “Function unknown or cannot be implemented at present” appearing in the display zone of the vehicle diagnostic, testing and information system ⇒ "Guided fault-finding" function of vehicle diagnostic, testing and information system VAS 5051 .

Auxiliary/supplementary heater in starting routine

– Wait until the auxiliary/supplementary heater switches to full load mode.

Auxiliary/supplementary heater in part load mode or control interval

Protected by copyright. Copying for private or commercial purposes, in part or in whole, is not permitted unless authorised by AUDI AG. AUDI AG does not guarantee or accept any liability with respect to the correctness of information in this document. Copyright by AUDI AG.

– Switch off the auxiliary/supplementary heater by way of the front operating and display unit, Climatronic control unit -J255- and on again using the vehicle diagnostic, testing and information system (“Basic setting” function). In this setting, full load operation is then possible up to a coolant temperature of 110 °C ⇒ "Guided fault-finding" function of vehicle diagnostic, testing and information system VAS 5051.

Note

On vehicles with a diesel engine and supplementary heater (no “Auxiliary heater” optional extra), it may be necessary to switch off the engine and wait for the coolant to cool down sufficiently. Setting work can then be performed without interruption with the engine running (initial coolant temperature less than 40 °C and air conditioner set to “Hi”).

Auxiliary/supplementary heater in full load operation for at least one minute since the setting was last changed

– Read the measured value for the CO_2 (carbon dioxide) content in the exhaust gas off the CO_2 measuring instrument (as of approx. 5 minutes after switch-on, the auxiliary/supplementary heater must be in full load operation).

Setting for CO_2 content in exhaust gas:

- 9 to 12 % by vol. CO_2 for vehicles with diesel engine
- 8 to 11 % by vol. CO_2 for vehicles with petrol engine

Note

- *If value displayed by CO_2 measuring instrument fluctuates slightly, calculate mean value from highest and lowest measured values.*
- *If value displayed by CO_2 measuring instrument fluctuates considerably (more than approx. +/- 0.6% depending on measuring instrument), check position of probe in exhaust pipe of auxiliary/additional heater.*

– Use the input keypad in the display zone to alter the value for this adaption channel for re-adaption of the supplementary heater control unit -J364- and thus the CO_2 content in the exhaust gas ⇒ "Guided fault-finding" function of vehicle diagnostic, testing and information system VAS 5051.

Note

The CO_2 content of the exhaust gas changes by approx. 0.05 % by vol. per unit (higher display value = lower CO_2 content or lower display value = higher CO_2 content).

Example:

- Measured CO_2 content in exhaust gas is 8.8 % by vol.
- “185” is displayed as adaption value.
- New adaption value “169” (for CO_2 content in exhaust gas of 9.6 % by volume).

Note

- *If the CO_2 content in the exhaust gas is to be increased, a lower value must be entered in the adaption channel (the combustion air blower -V6- is actuated at a slightly lower voltage and less air is thus conveyed to the combustion chamber) ⇒ "Guided fault-finding" function of vehicle diagnostic, testing and information system VAS 5051.*
- *If the CO_2 content in the exhaust gas is to be reduced, a higher value must be entered in the adaption channel (the combustion air blower -V6- is actuated at a higher voltage and more air is conveyed to the auxiliary/supplementary heater). If the value in the adaption channel is increased by 10 units, the CO_2 content in the exhaust gas is decreases by approx. 0.5 volume %. If the value in the adaption channel is reduced by 10 units, the CO_2 content in the exhaust gas is increased by approx. 0.5 volume %.*
- *With additional heater control unit -J364- fitted at present, values from “100” to “250” can be entered. Values entered via the keypad or bar which are not within the specified limits are displayed but not implemented.*
- *If the value entered is too high or too low, the display is automatically reset to the initial value or to the lowest/highest value still permitted.*
- *The value applicable prior to adjustment remains stored if the auxiliary/supplementary heater is shut off during the “Adaption” function (CO_2 adjustment) or on exiting from full load mode. In this case, repeat the procedure again.*

Protected by copyright. Copying for private or commercial purposes, in part or in whole, is not permitted unless authorised by AUDI AG. AUDI AG does not guarantee or accept any liability with respect to the correctness of information in this document. Copyright by AUDI AG.

– Adopt and store the entry ⇒ "Guided fault-finding" function of vehicle diagnostic, testing and information system VAS 5051.

Wait at least one minute (for exhaust gas value to adjust to new setting).

– Read the measured value for the CO_2 (carbon dioxide) content in the exhaust gas off the CO_2 measuring instrument (as of approx. 1 minute after confirmation of the last entry, the auxiliary/supplementary heater must be in full load operation).

If the new CO_2 measured value does not correspond to the desired setting, repeat the adjustment procedure.

Setting for CO_2 content in exhaust gas:

- ♦ For vehicles with diesel engine: 9 to 12 % CO_2 by volume.
- ♦ For vehicles with petrol engine: 8 to 11 % CO_2 by volume.
- – If new CO_2 measured value corresponds to desired setting:
- – Switch off auxiliary/additional heater.
- – Terminate self-diagnosis and unplug the diagnostic connector ⇒ "Guided fault-finding" function of vehicle diagnostic, testing and information system VAS 5051.

Protected by copyright. Copying for private or commercial purposes, in part or in whole, is not permitted unless authorised by AUDI AG. AUDI AG does not guarantee or accept any liability with respect to the correctness of information in this document. Copyright by AUDI AG.

Note

If the auxiliary/supplementary heater has been switched on via the "Basic setting" function, it can also be switched off again by way of the "Basic setting" function ⇒ "Guided fault-finding" function of vehicle diagnostic, testing and information system VAS 5051 .

If setting for CO_2 content is not achieved within permissible adaption value range:

- – Check fresh-air intake hose and auxiliary/additional heater exhaust system for dirt or cross-sectional constriction and clean relevant components or replace if necessary.

If no fault is found:

- – Check fuel delivery of metering pump -V54- ⇒ page 27 .
- – Check the combustion air blower -V6- ⇒ "Guided fault-finding" function of vehicle diagnostic, testing and information system VAS 5051.
- – If no fault is found and CO_2 content in exhaust gas cannot be adjusted, dismantle auxiliary/additional heater and clean combustion chamber ⇒ page 84 . If there are no major deposits in combustion chamber, replace combustion air blower -V6- .

7.3 Removing residue from burner element of auxiliary/additional heater (operation with vegetable-oil or rape-oil methylester fuel only)

Problems with auxiliary/additional heater operation may be encountered in cold weather on vehicles with diesel engines if use is predominantly made of vegetable-oil or rape-oil methylester as fuel.

Reason:

- – On account of the physical properties, deposits may form during operation at the evaporation fabric in the burner element. These deposits can then cause combustion problems if the vehicle is run for lengthy periods on vegetable-oil or rape-oil methylester.
- – If it is still possible to start auxiliary/additional heater, such residue can be dissolved and thus eliminated to a certain extent via petrol combustion.

Note

If evaporation fabric in burner element is so clogged that no flame can be produced, replace burner element ⇒ page 84 .

Preconditions:

– Fault memory interrogated and any auxiliary/additional faults displayed located and eliminated ⇒ "Guided fault-finding" function of vehicle diagnostic, testing and information system VAS 5051

– Coolant temperature is lower than 30° C at start of test.

Removing deposits.

– Switch off ignition.

– Remove the cover beneath the fuel filter (this illustration shows the layout for vehicles with petrol engine; vehicles with diesel engine are not fitted with a fuel filter -A- at this location) ⇒ Fuel supply system; Rep. Gr. 20

– Detach the fuel pipe -C- from the metering pump -V54- and seal it with a plug.

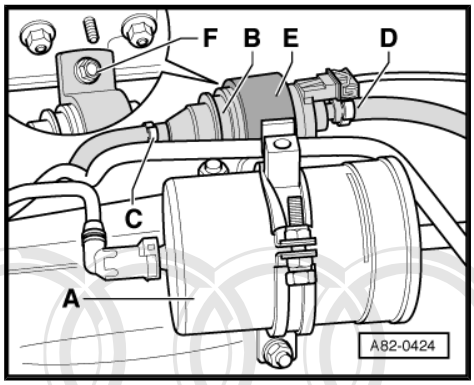

Protected by copyright. Copying for private or commercial purposes, in part or in whole, is not permitted unless authorised by AUDI AG. AUDI AG does not guarantee or accept any liability with respect to the correctness of information in this document. Copyright by AUDI AG.

– Pour approx. 1 litre of fuel (petrol) into container -D- (e.g. bottle for additional heater -VAS 5086/-).

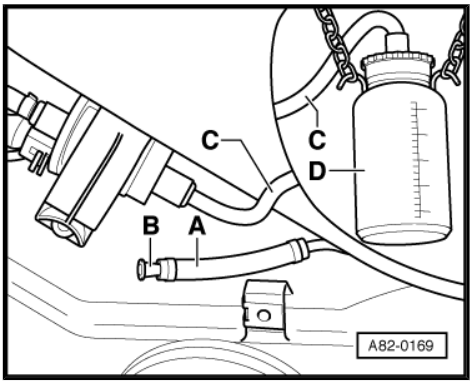

Note

- *Container -D- must contain a riser which reaches to bottom of container.*
- *There must be an opening in container lid to prevent a vacuum from forming when fuel is removed.*

– Attach the container -D- (bottle for supplementary heater -VAS 5086/-) to the vehicle in the area of the metering pump -V54- .

– Squeeze the container -D- until fuel reaches the end of the hose -C- and then connect the hose -C- to the metering pump -V54- .

On vehicles with additional heater (without “Auxiliary heater” optional extra, heater without circulation pump -V55-).

– Start the engine.

– Set maximum heat output on front operating and display unit (Climatronic control unit -J255-) (temperature preselection “Hi”).

– Open all windows.

– Start supplementary heater self-diagnosis and switch on the supplementary heater by way of the “Basic setting” function (vehicles with supplementary heater only - no “Auxiliary heater” optional extra) ⇒ "Guided fault-finding" function of vehicle diagnostic, testing and information system VAS 5051.

– Run additional heater with petrol for at least 30 min.

Note

- *If the coolant temperature increases to above 75° C within 30 minutes and the supplementary heater switches to part load operation, it can be switched on again by way of the “Basic setting” function and operated up to a coolant temperature of 110° C (starting from the control interval is possible). For this purpose, the supplementary heater is first to be switched off by way of the “Basic setting” function and then switched on again by way of the “Basic setting” function ⇒ "Guided fault-finding" function of vehicle diagnostic, testing and information system VAS 5051.*
- *As the supplementary heater operating time is limited to max. 10 minutes in the “Basic setting” function, in which the heater is operated up to a coolant temperature of 110° C, the “Basic setting” function is to be implemented a total of 3 times in this case. For this purpose, the supplementary heater is first to be switched off on completion of the activation time and at the end of the run-on time by way of the “Basic setting” function and then back on again by way of the “Basic setting” function.*

Reproduction, copyright copying for private or commercial purposes, in part or in whole, is not permitted unless authorised by AUDI AG. AUDI AG does not guarantee or accept any liability with respect to the correctness of information in this document. Copyright by AUDI AG.

On vehicles with auxiliary/additional heater (heater with circulation pump -V55-):

Special tools and workshop equipment required

- Battery charger, 60 A -VAS 5904-

– Switch on ignition.

– Set maximum heat output on front operating and display unit (Climatronic control unit -J255-) (temperature preselection “Hi”).

Note

So as not to overload the vehicle battery, it is appropriate to connect a suitable battery charger to it.

– Switch on the auxiliary/supplementary heater by way of the front operating and display unit, Climatronic control unit -J255- on the MMI (Multi Media Interface) or via the Multi Media Interface (MMI) (depending on the vehicle model) ⇒ Owner's manual and ⇒ Operating instructions for “Infotainment / MMI” .

– Switch off ignition.

– Open all windows if necessary.

– Run auxiliary/additional heater with petrol for at least 30 min.

Protected by copyright. Copying for private or commercial purposes, in part or in whole, is not permitted unless authorised by AUDI AG. AUDI AG does not guarantee or accept any liability with respect to the correctness of information in this document. Copyright by AUDI AG.

8 Incorporation of auxiliary/additional heater into coolant circuit

Note

Up to Model Year 2005, auxiliary/supplementary heaters were fitted on which there was a delay of 10 seconds between the reception of a corresponding request from the front operating and display unit, Climatronic control unit -J255- and implementation of the heating mode deactivation time by the supplementary heater control unit -J364- . With such auxiliary/supplementary heaters, there is a risk of overheating of the coolant in the auxiliary heater under certain usage conditions. In the event of a complaint of this nature, the adaption is therefore to be checked and corrected if necessary ⇒ "Guided fault-finding" function of vehicle diagnostic, testing and information system VAS 5051.

8.1 Incorporation of supplementary heater into coolant circuit

Note

- *Vehicles with diesel engine without "Auxiliary heater" optional extra are fitted with additional heater (auxiliary heater without circulation pump -V55-).*
- *If vehicles with diesel engine are fitted with auxiliary heater as optional extra, this is also actuated as additional heater.*
- *For all components not mentioned, refer to ⇒ Engine, mechanics; Rep. Gr. 19 .*
- *Tubing from engine to additional heater and from pump/valve unit to engine differs depending on engine version. ⇒ Engine, mechanics; Rep. Gr. 19*

Protected by copyright. Copying for private or commercial purposes, in part or in whole, is not permitted unless authorised by AUDI AG. AUDI AG does not guarantee or accept any liability with respect to the correctness of information in this document. Copyright by AUDI AG.

⇒Direction of coolant flow (with engine running and in additional heater mode)

1 - Additional heater

2 - Air conditioner pump/valve unit

- ❑ Incorporation into coolant circuit ⇒ Air conditioning; Rep. Gr. 87

3 - Right heat exchanger of air conditioner unit

4 - Left heat exchanger of air conditioner unit

5 - Coolant return to engine

- ❑ Incorporation into engine coolant circuit ⇒ Engine, mechanics; Rep. Gr. 19

6 - Coolant supply from engine

- ❑ Incorporation into engine coolant circuit ⇒ Engine, mechanics; Rep. Gr. 19

Protected by copyright. Copying for private or commercial purposes, in part or in whole, is not permitted unless authorised by AUDI AG. AUDI AG does not guarantee or accept any liability with respect to the correctness of information in this document. Copyright by AUDI AG.

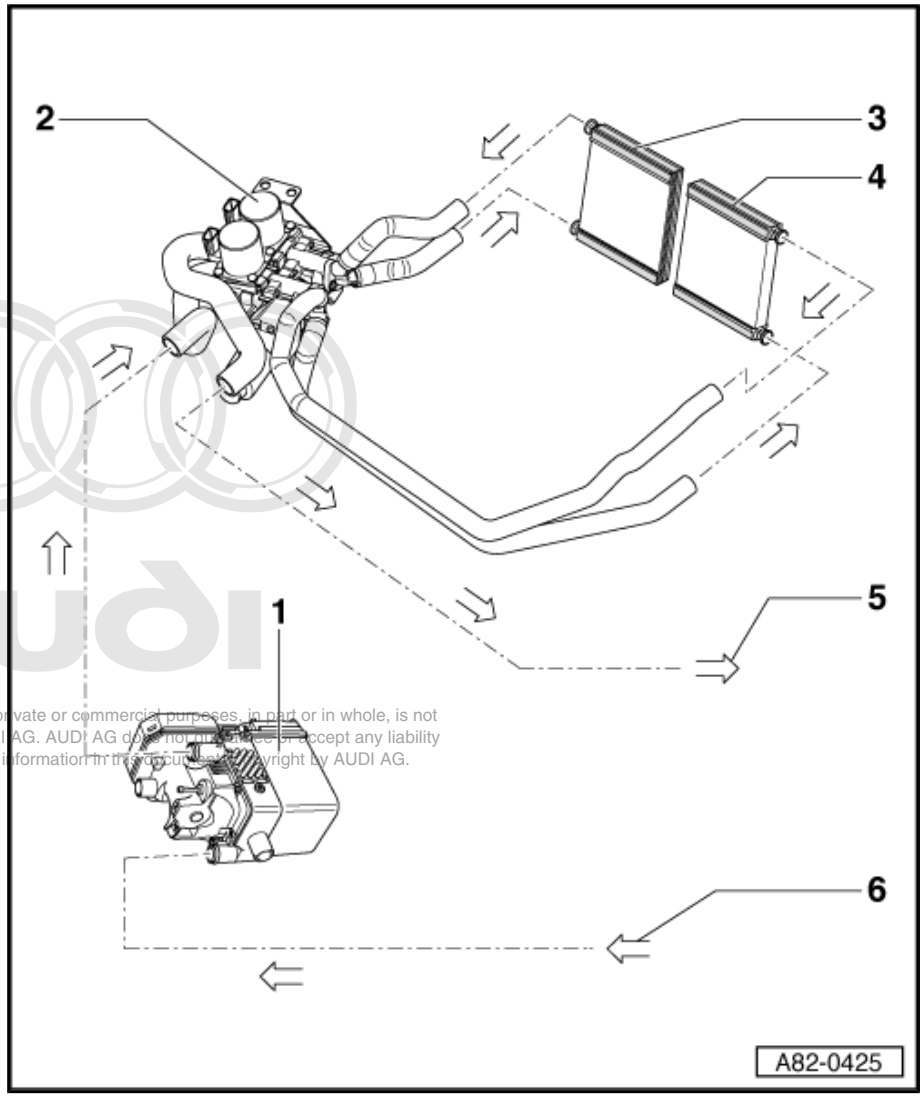

8.2 Incorporation of auxiliary/supplementary heater into coolant circuit

Vehicles with 6, 8 or 10-cyl. engine

Note

- *If vehicles with diesel engine are fitted with auxiliary heater as optional extra, this is also actuated as additional heater.*
- *Actuation of auxiliary heater as additional heater is not intended for vehicles with petrol engine.*
- *Tubing from engine to auxiliary/additional heater and from pump/valve unit to engine differs depending on engine version. ⇒ Engine, mechanics; Rep. Gr. 19*
- *All components not mentioned ⇒ Engine, mechanics; Rep. Gr. 19*
- *Up to Model Year 2005, auxiliary/supplementary heaters were fitted on which there was a delay of 10 seconds between the reception of a corresponding request from the front operating and display unit, Climatronic control unit -J255- and implementation of the heating mode deactivation time by the supplementary heater control unit -J364- . With such auxiliary/supplementary heaters, there is a risk of overheating of the coolant in the auxiliary heater under certain usage conditions. In the event of a complaint of this nature, the adaption is therefore to be checked and corrected if necessary ⇒ "Guided fault-finding" function of vehicle diagnostic, testing and information system VAS 5051.*

Reproduction of this document or any part of this document in whole, is not permitted unless authorised by AUDI AG. AUDI AG does not guarantee or accept any liability with respect to the correctness of information in this document. Copyright by AUDI AG.

Direction of coolant flow

⇒ With engine running and in supplementary heating mode on vehicles with a diesel engine

⇒ In auxiliary heating mode with no actuation of the heater coolant shut-off valve -N279- (temperature-dependent actuation ⇒ page 112 and ⇒ page 58)

→ In auxiliary heating mode with actuation of the heater coolant shut-off valve -N279- (temperature-dependent actuation ⇒ page 112 and ⇒ page 58)

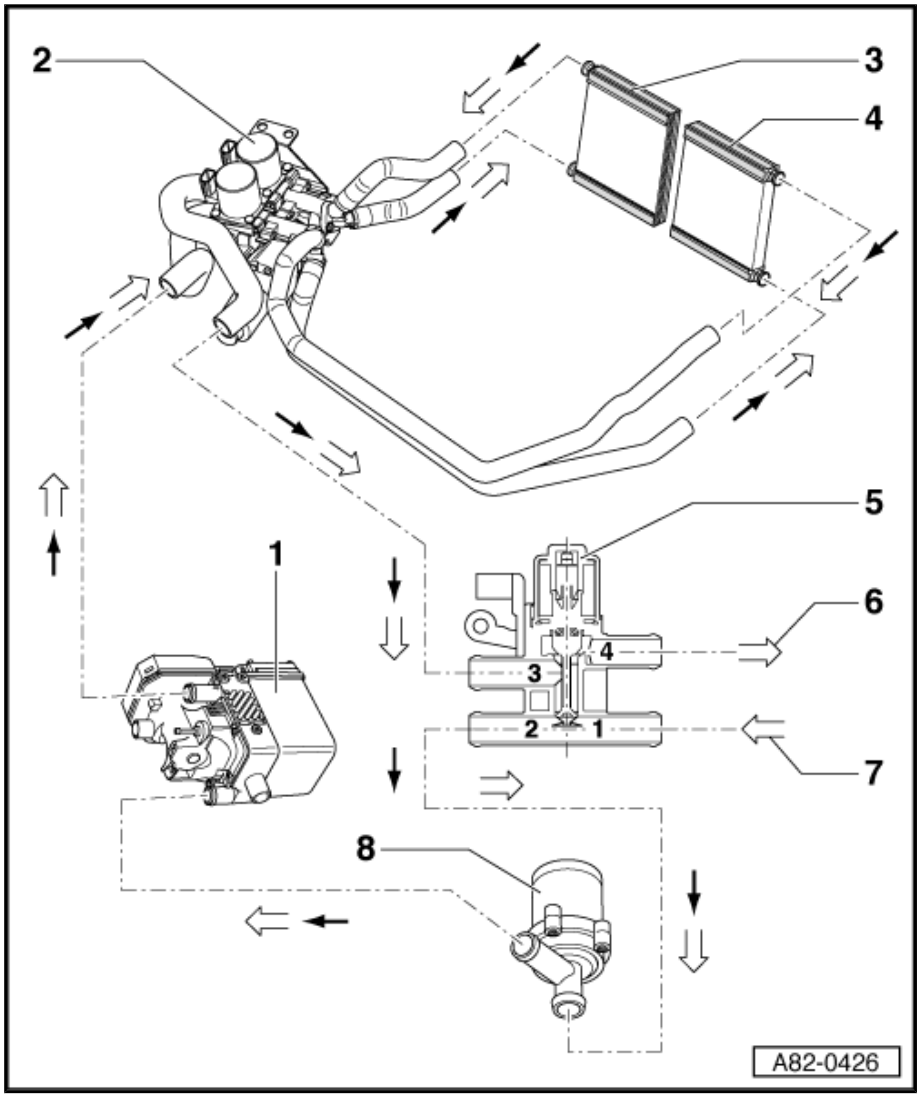

1 - Auxiliary/supplementary heater

2 - Air conditioner pump/valve unit

- ❑ Incorporation into coolant circuit ⇒ Air conditioning; Rep. Gr. 87

3 - Right heat exchanger of air conditioner unit

4 - Left heat exchanger of air conditioner unit

5 - Heater coolant shutoff valve -N279-

- ❑ Removing and installing ⇒ page 58 .
- ❑ The shutoff valve is actuated by the additional heater control unit -J364- ⇒ page 112 .
- ❑ The illustration shows the shut-off valve in non-actuated condition (coolant flow from connection “3” to connection “4” and from connection “1” to connection “2”).
- ❑ Actuation of shutoff valve causes coolant to flow from connection “3” to connection “2”

6 - Coolant return to engine

- ❑ Incorporation into engine coolant circuit ⇒ Engine, mechanics; Rep. Gr. 19

7 - Coolant supply from engine

- ❑ Incorporation into engine coolant circuit ⇒ Engine, mechanics; Rep. Gr. 19

8 - Circulation pump -V55-

- ❑ Under certain conditions, circulation pump is also actuated with engine running to assist engine coolant pump ⇒ page 61

Protected by copyright. Copying for private or commercial purposes, in part or in whole, is not permitted unless authorised by AUDI AG. AUDI AG does not guarantee or accept any liability with respect to the correctness of information in this document. Copyright by AUDI AG.

8.3 Incorporation of auxiliary/supplementary heater into coolant circuit

Vehicles with 12-cyl. engine

Note

- *Actuation of auxiliary heater as additional heater is not intended for vehicles with petrol engine.*
- *Tubing from engine to auxiliary/additional heater and from pump/valve unit to engine differs depending on engine version. ⇒ Engine, mechanics; Rep. Gr. 19*
- *For all components not mentioned, refer to ⇒ Engine, mechanics; Rep. Gr. 19*
- *Up to Model Year 2005, auxiliary/supplementary heaters were fitted on which there was a delay of 10 seconds between the reception of a corresponding request from the front operating and display unit, Climatronic control unit -J255- and implementation of the heating mode deactivation time by the supplementary heater control unit -J364- . With such auxiliary/supplementary heaters, there is a risk of overheating of the coolant in the auxiliary heater under certain usage conditions. In the event of a complaint of this nature, the adaption is therefore to be checked and corrected if necessary ⇒ "Guided fault-finding" function of vehicle diagnostic, testing and information system VAS 5051.*

Protected by copyright. Copying for private or commercial purposes, in part or in whole, is not permitted unless authorised by AUDI AG. AUDI AG does not guarantee or accept any liability with respect to the correctness of information in this document. Copyright by AUDI AG.

Direction of coolant flow

⇒ With engine running (and in supplementary heating mode if the auxiliary heater was switched on for example via the MMI)

⇒ In auxiliary heating mode with no actuation of the heater coolant shut-off valve -N279- (temperature-dependent actuation ⇒ page 112 and ⇒ page 58)

→ In auxiliary heating mode with actuation of the heater coolant shut-off valve -N279- (temperature-dependent actuation ⇒ page 112 and ⇒ page 58)

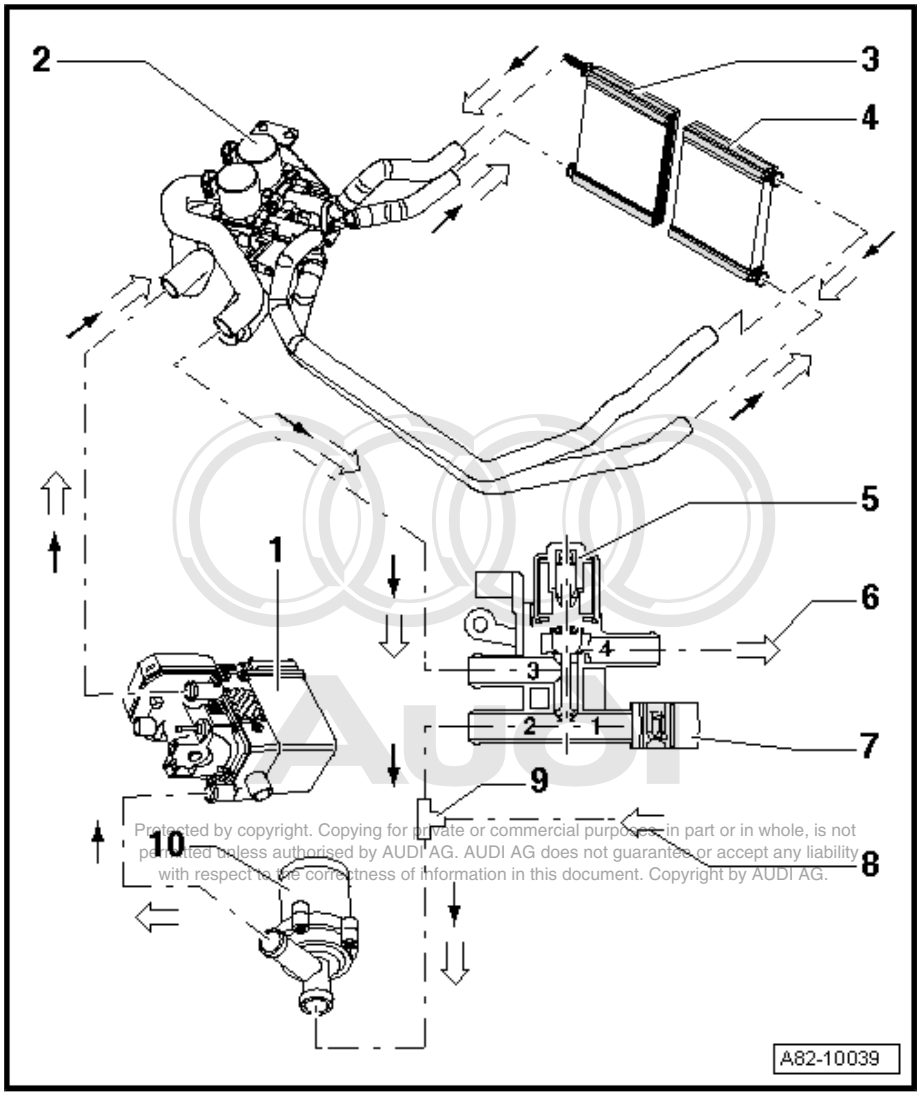

Protected by copyright. Copying for private or commercial purposes, in part or in whole, is not permitted unless authorised by AUDI AG. AUDI AG does not guarantee or accept any liability with respect to the correctness of information in this document. Copyright by AUDI AG.

1 - Auxiliary/additional heater

2 - Air conditioner pump/valve unit

- ❑ Incorporation into coolant circuit ⇒ Air conditioning; Rep. Gr. 87

3 - Right heat exchanger of air conditioner unit

4 - Left heat exchanger of air conditioner unit

5 - Heater coolant shutoff valve -N279-

- ❑ Removing and installing ⇒ page 58 .
- ❑ The shutoff valve is actuated by the additional heater control unit -J364- ⇒ page 112 .
- ❑ The illustration shows the shut-off valve in non-actuated condition (coolant flow from connection “3” to connection “4”).
- ❑ Actuation of shutoff valve causes coolant to flow from connection “3” to connection “2”

6 - Coolant return to engine

- ❑ Incorporation into engine coolant circuit ⇒ Engine, mechanics; Rep. Gr. 19

7 - Cap

8 - Coolant supply from engine

- ❑ Incorporation into engine coolant circuit ⇒ Engine, mechanics; Rep. Gr. 19

9 - Connector for coolant hoses

10 - Circulation pump -V55-

- ❑ Under certain conditions, circulation pump is also actuated with engine running to assist engine coolant pump ⇒ page 61

8.4 Operation of and removing/installing heater coolant shutoff valve -N279-

Function

Note

- ♦ *Currently only fitted to vehicles with “Auxiliary heater” optional extra.*
- ♦ *Not fitted on vehicles with diesel engine on which the auxiliary/supplementary heater is only used as supplementary heater (vehicles without “Auxiliary heater” optional extra).*

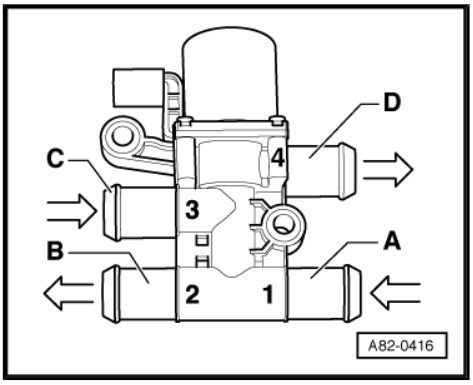

- If voltage is not applied to heater coolant shutoff valve -N279- (large coolant circuit), coolant can flow from connection -C- (from pump/valve unit) to connection -D- (to engine). Coolant (from engine) flows via connection -A- to connection -B- and from there to auxiliary/additional heater.
- If voltage is applied to heater coolant shutoff valve -N279- (small coolant circuit), coolant can flow from connection for hose -C- (from pump/valve unit) to connection -B- (to auxiliary/ additional heater).
- There is no flow-regulating component fitted between connections -A- and -B-.
- With certain engine versions, connection -A- is sealed by means of a cap (e.g. in vehicles with 12-cyl. engine). In these vehicles, coolant from engine flows to auxiliary/additional heater via a T-piece installed between connection -B- and auxiliary/additional heater.
- In auxiliary heater mode, heater coolant shutoff valve -N279- is actuated by additional heater control unit -J364- until coolant temperature in auxiliary heater has reached a specified value ⇒ page 112 .
- The display in the measured value block for actuation of the heater coolant shut-off valve -N279- differs and depends on the vehicle model and the version of the supplementary heater control unit -J364- . On the Audi A8 at present for example, a display of 100 % indicates that 100 % of the coolant is being conveyed in the large circuit and that the heater coolant shut-off valve -N279- is not being actuated ⇒ Vehicle diagnostic, testing and information system -VAS 5051 A- , "Guided fault-finding" function.

Removing

Special tools, testers and auxiliary equipment required

- Hose clamps up to Ø 40 mm -3093- or hose clamps up to Ø 25 mm -3094-

Note

- *On removal, note down bolt lengths and assignment for re-installation.*
- *All cable ties and other wiring harness fasteners released or cut open on removing shutoff valve must be re-attached in same position on installation.*

Protected by copyright. Copying for private or commercial purposes, in part or in whole, is not permitted unless authorised by AUDI AG. AUDI AG does not guarantee or accept any liability with respect to the correctness of information in this document. Copyright by AUDI AG.

– Switch off ignition.
– Dissipate pressure in coolant circuit by opening cap at coolant expansion tank. ⇒ Engine, mechanics; Rep. Gr. 19
– If the vehicle is fitted with an air cleaner above the auxiliary/ supplementary heater, remove the cleaner together with the air cleaner housing ⇒ Injection and ignition system; Rep. Gr. 24 and ⇒ Injection and glow plug system; Rep. Gr. 23 .
– Remove noise insulation and front right wheel housing liner ⇒ General body repairs, Exterior; Rep. Gr. 50
– Remove right headlight. ⇒ Electrical system; Rep. Gr. 94
– Move the lock carrier to service position ⇒ General body repairs, Exterior; Rep. Gr. 50

– Pinch off the coolant hoses -A-, -B- and -C- (to the heater coolant shut-off valve -N279-) and -D- (to the auxiliary/supplementary heater).
– Detach coolant hoses -B- and -C- from heater coolant shutoff valve -N279- .

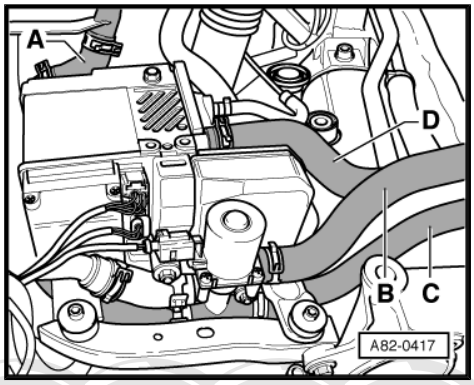

– Detach coolant hoses -A- and -C- from heater coolant shutoff valve -N279- .
– Unplug connector -C-.
– Remove hexagon nuts -D-.
– Remove heater coolant shutoff valve -N279- -E-.

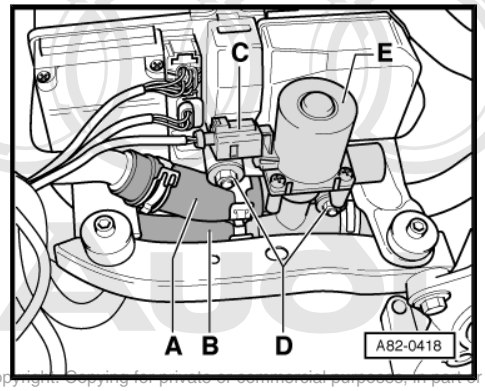

Installing

– Re-install components removed in reverse order.
– Bleed the coolant circuit ⇒ page 60 and ⇒ Engine, mechanics; Rep. Gr. 19 .
– If applicable, check actuation and operation of the heater coolant shut-off valve -N279- ⇒ "Guided fault-finding" function of vehicle diagnostic, testing and information system VAS 5051.

Protected by copyright. Copying for private or commercial purposes, in part or in whole, is not permitted unless authorised by AUDI AG. AUDI AG does not guarantee or accept any liability with respect to the correctness of information in this document. Copyright by AUDI AG.

8.5 Bleeding coolant circuit

– Bleed engine coolant circuit as specified ⇒ Engine, mechanics; Rep. Gr. 19

Note

Up to Model Year 2005, auxiliary/supplementary heaters were fitted on which there was a delay of 10 seconds between the reception of a corresponding request from the front operating and display unit, Climatronic control unit -J255- and implementation of the heating mode deactivation time by the supplementary heater control unit -J364- . With such auxiliary/supplementary heaters, there is a risk of overheating of the coolant in the auxiliary heater under certain usage conditions. In the event of a complaint of this nature, the adaption is therefore to be checked and corrected if necessary ⇒ "Guided fault-finding" function of vehicle diagnostic, testing and information system VAS 5051.

Further procedure for vehicles with diesel engine and additional heater (without “Auxiliary heater” optional extra)

– No additional operations are required (constant flow through additional heater with engine running).

Further procedure for vehicles with auxiliary heater (for petrol engines) or auxiliary/additional heater (for diesel engines)

– On vehicles with heater coolant shutoff valve -N279- , switch auxiliary/additional heater on and off again after approx. 3 min. following initial starting of engine (in warm-up phase).
– Once engine has reached operating temperature, set air conditioner to maximum heating output (e.g. temperature preselection “Hi”) on front operating and display unit (Climatronic

control unit -J255-) on vehicles with auxiliary heater (auxiliary/ additional heater on vehicles with diesel engine).

– Allow engine to run for approx. 3 minutes at increased idle speed (e.g. 2300 rpm).

– Activate auxiliary/additional heater.

– Switch off the engine (leave the ignition switched off).

– If applicable, wait until the front operating and display unit, Climatronic control unit -J255- is started up by the auxiliary/ supplementary heater and then set the air conditioner to maximum heat output (e.g. “Hi” temperature setting).

– Wait roughly 5 minutes (leave auxiliary/additional heater switched on).

Note

- *Auxiliary/additional heater may not start depending on coolant temperature (may switch to control interval)* *⇒ page 101* *.*
- *If air is present in coolant circuit, auxiliary/additional heater may overheat and “Control unit defective” fault is stored. If this fault occurs once (or several times in succession depending on the auxiliary/supplementary heater version), the supplementary heater control unit -J364- is interlocked and the fault cannot be erased again until the interlock has been cancelled by way of the “Adaption” function ⇒ "Guided fault-finding" function of vehicle diagnostic, testing and information system VAS 5051.*

- With ignition switched on, front operating and display unit (Climatronic control unit -J255-) can actuate valves of pump/valve unit, depending upon set temperature (close, as heat output is no longer required). As coolant can no longer flow through the auxiliary/supplementary heater when the valves are closed, set the temperature on the front operating and display unit, Climatronic control unit -J255- for example to “Hi”.
- It is sufficient for circulation pump -V55- of auxiliary/additional heater to be running (if auxiliary/additional heater is in control interval due to coolant temperature).

– Start engine again and allow it to run for approx. 3 minutes at increased idle speed (e.g. 2300 rpm).

– Switch off auxiliary heater.

– Switch off engine.

– Top up coolant if necessary ⇒ Engine, mechanics; Rep. Gr. 19 .

Protected by copyright. Copying for private or commercial purposes, in part or in whole, is not permitted unless authorised by AUDI AG. AUDI AG does not guarantee or accept any liability with respect to the [illegible] AG

8.6 Note for vehicles with the problem “poor heat output” with engine running

In the event of problems relating to poor or inadequate heat output at low engine speeds on vehicles fitted with an auxiliary heater as optional extra (or auxiliary/supplementary heater on vehicles with a diesel engine), check actuation of the auxiliary/supplementary heater circulation pump -V55- by the supplementary heater control unit -J364- ⇒ "Guided fault-finding" function of vehicle diagnostic, testing and information system VAS 5051.

- Actuation of circulation pump -V55- increases flow of coolant through the air conditioner heat exchanger at low engine speeds and thus improves heat output.
- Circulation pump -V55- is activated by additional heater control unit -J364- as soon as all activation conditions are met. To

stop circulation pump being constantly switched on and off, it remains activated for at least 30 s even if - for example in the event of rapid changes in vehicle speed - a request is only applied for several seconds (e.g. on accelerating after standing at traffic lights).

- The supplementary heater control unit -J364- only switches on the circulation pump -V55- if the activation conditions stored in the supplementary heater control unit -J364- are satisfied ⇒ "Guided fault-finding" function of vehicle diagnostic, testing and information system VAS 5051 (reading measured value block).

Protected by copyright. Copying for private or commercial purposes, in part or in whole, is not permitted unless authorised by AUDI AG. AUDI AG does not guarantee or accept any liability with respect to the correctness of information in this document. Copyright by AUDI AG.

Protected by copyright. Copying for private or commercial purposes, in part or in whole, is not permitted unless authorised by AUDI AG. AUDI AG does not guarantee or accept any liability with respect to the correctness of information in this document. Copyright by AUDI AG.

9 Removing and installing auxiliary/additional heater

Note

- *On replacing the auxiliary/supplementary heater, pay attention to the correct version (different models for vehicles with petrol and diesel engine as well as for the different remote control versions) ⇒ page 84 and ⇒ Electronic parts catalogue .*
- *The radio remote control for the auxiliary heater and auxiliary/additional heater is available in various versions. Exclusive use was made up to 05.2004 of the "Telestart T70" remote control version. As of 05.2004 the "Telestart T90" version was gradually introduced instead. In Model Year 2008 production is gradually being switched from the Telestart "T90" version of the remote control to the Telestart "T91" type ⇒ page 10 and ⇒ Electronic parts catalogue . To enable the auxiliary/supplementary heater to implement the additional functions of the Telestart "T90" / "T91" (feedback of confirmation of reception of activation and deactivation signals), use is made of a modified remote control receiver for auxiliary heater -R64- and a modified auxiliary/supplementary heater ⇒ Electronic parts catalogue . As of part number 4E0 265 081 with index "J" (as of hardware and software number "0710"), the auxiliary/supplementary heater is designed for the Telestart "T90" / "T91" remote control ⇒ Electronic parts catalogue and ⇒ "Guided fault-finding" function of vehicle diagnostic, testing and information system VAS 5051.*
- *If the auxiliary/supplementary heater is replaced (together with the supplementary heater control unit -J364-), check operation of at least one remote control hand transmitter (if operation is not OK, all hand transmitters are to be re-adapted by way of the supplementary heater control unit -J364-) ⇒ page 20 and ⇒ "Guided fault-finding" function of vehicle diagnostic, testing and information system VAS 5051.*
- *If the assignment of the supplementary heater control unit -J364- (rating plate) differs from the information given on the fault reader display, check the display in the measured value block ⇒ "Guided fault-finding" function of vehicle diagnostic, testing and information system VAS 5051.*
- *If the auxiliary/supplementary heater has been replaced (together with the supplementary heater control unit -J364-), perform auxiliary/supplementary heater self-diagnosis after installing the auxiliary/supplementary heater (interrogate fault memory, check encoding and adaption etc.) ⇒ "Guided fault-finding" function of vehicle diagnostic, testing and information system VAS 5051.*
- *If auxiliary/additional heater components have been replaced (e.g. combustion air blower -V6-), check and if necessary adjust CO_2 content in auxiliary/additional heater exhaust gas ⇒ page 39*
- *If, depending on the version of the supplementary heater control unit -J364- , the auxiliary/supplementary heater cannot be activated on a new vehicle or in the case of a newly installed auxiliary/supplementary heater, the component protection function may be active (if a large number of faults occurred simultaneously at some point, this fault is no longer displayed although it is still active). If necessary, perform re-adaption of the component protection function as for a newly installed auxiliary/supplementary heater to cancel component protection ⇒ "Guided fault-finding" function of vehicle diagnostic, testing and information system VAS 5051.*

The electronic document is intended for private or commercial purposes. In part or in whole, is not permitted unless authorized by AUDI AG. AUDI AG does not warrant nor accept any liability with respect to the correctness of information in this document. Copyright by AUDI AG.

9.1 Removing and installing auxiliary/additional heater

Special tools and workshop equipment required

- Hose clamps up to Ø 40 mm -3093- or hose clamps up to Ø 25 mm -3094-

Note

- *On removal, note down bolt lengths and assignment for re-installation.*
- *All cable ties and other wiring harness fasteners released or cut open on removing auxiliary/additional heater must be re-attached in same position on installation.*

Removing

– Interrogate encoding and adaption of additional heater control unit -J364- in “Control unit replacement” function of guided fault-finding routine ⇒ "Guided fault-finding" function of vehicle diagnostic, testing and information system VAS 5051. .

– Switch off ignition and auxiliary/additional heater.

– Detach auxiliary/additional heater exhaust tailpipe -A- from noise insulation -B- by removing screws -C- (version for e.g. vehicles with 6-cyl. or 8-cyl. petrol engine)

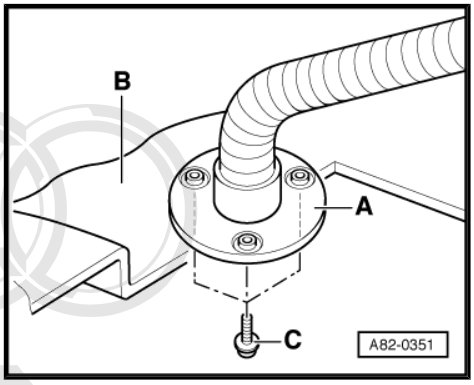

– Detach auxiliary/additional heater rubber grommet -A- (for exhaust tailpipe -C-) from noise insulation -B- (version for e.g. vehicles with 6-cyl. or 8-cyl. diesel engine and 10 or 12-cyl. petrol engine).

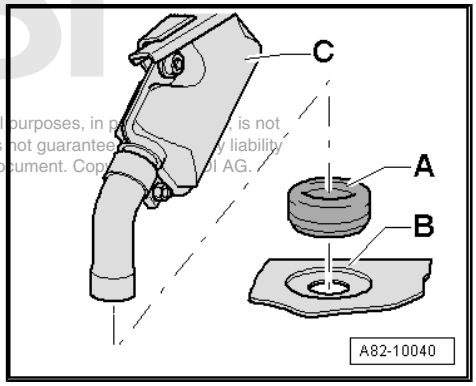

Protected by copyright. Copying for private or commercial purposes, in part or in whole, is not permitted unless authorised by AUDI AG. AUDI AG does not guarantee or assume any liability with respect to the correctness of information in this document. Copyright by AUDI AG.

– Remove the noise insulation ⇒ General body repairs, exterior; Rep. Gr. 63 .

– Remove the front right wheel housing liner ⇒ General body repairs, exterior; Rep. Gr. 63 .

– Dissipate the pressure in the coolant circuit by opening the cap at the coolant expansion tank ⇒ Engine, mechanics; Rep. Gr. 19 .

– If the vehicle is fitted with an air cleaner above the auxiliary/supplementary heater, remove the cleaner together with the air cleaner housing ⇒ Injection and ignition system; Rep. Gr. 24 and ⇒ Injection and glow plug system; Rep. Gr. 23 .

– Remove the secondary air pump -V101- on the appropriate vehicles ⇒ Engine, mechanics; Rep. Gr. 26 .

– Move the lock carrier to service position ⇒ General body repairs, exterior; Rep. Gr. 50 .

– On vehicles with e.g. 6-cyl. or 8-cyl. diesel engine and 10-cyl. or 12-cyl. petrol engine, unfasten the clip -A- and remove the bolts -B- (or -D- if the holder -E- is to be removed as well).

– On vehicles with e.g. 6-cyl. or 8-cyl. diesel engine and 10-cyl. or 12-cyl. petrol engine, remove the exhaust system -C-.

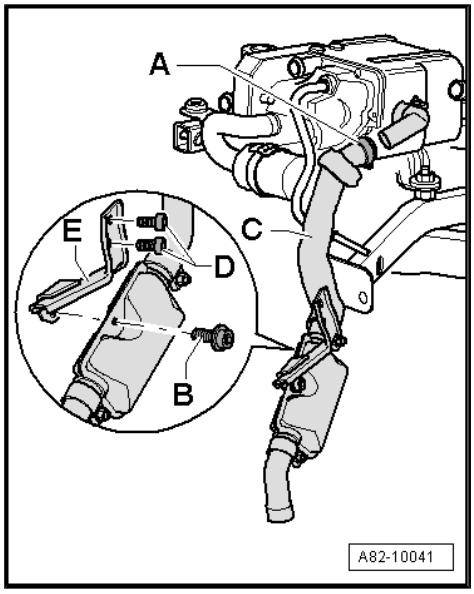

– On vehicles with e.g. 6-cyl. or 8-cyl. petrol engine, release clip -A- and remove exhaust tailpipe -B-.

– Remove right headlight. ⇒ Electrical system; Rep. Gr. 94

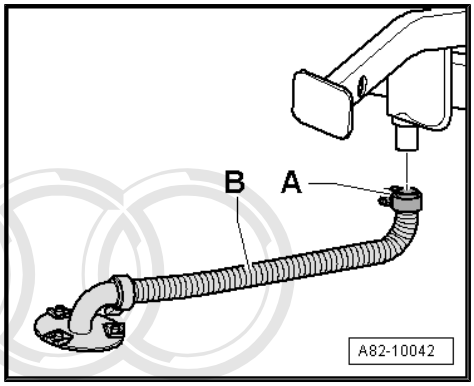

– Mark positions of coolant hoses -A- to -D- for auxiliary/additional heater.

– Pinch off the coolant hoses -A-, -B- and -C- (to the heater coolant shut-off valve -N279-) and -D- (to the auxiliary/supplementary heater).

– Detach coolant hoses -A- to -D-.

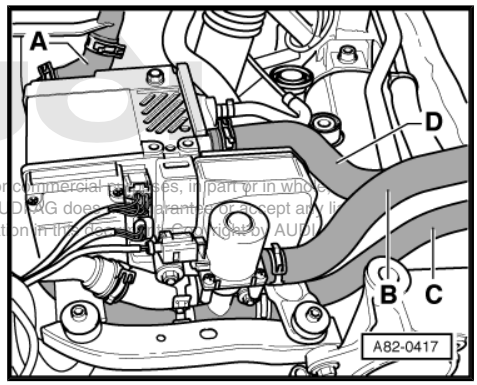

Protected by copyright. Copying for private or commercial purposes, in part or in whole, is not permitted unless authorised by AUDI AG. AUDI AG does not guarantee or accept any liability with respect to the correctness of information in this document. Copyright by AUDI AG.

Note

- *This illustration shows an auxiliary/supplementary heater (the supplementary heater version is not fitted with a heater coolant shut-off valve -N279-).*
- *On vehicles with diesel engine fitted only with an additional heater (auxiliary heater without circulation pump and heater coolant shutoff valve -N279-), only 2 coolant hoses must be clamped off and detached (from engine to additional heater -C- and from additional heater to pump/valve unit -D-). ⇒ Engine, mechanics; Rep. Gr. 19*

– Release and unplug the connector -A-.

– Release and consecutively unplug the connectors -B- and -C-.

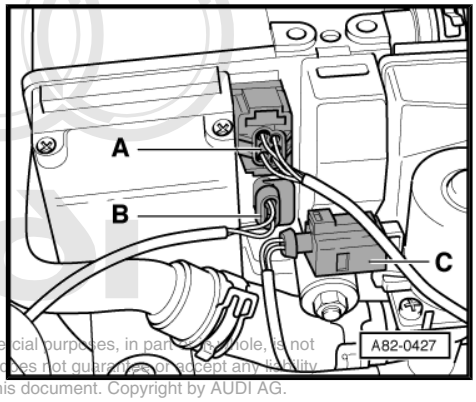

Copyright by AUDI AG. Copying for private or commercial purposes, in part or whole, is not permitted unless authorised by AUDI AG. AUDI AG does not guarantee or accept any liability with respect to the correctness of information in this document. Copyright by AUDI AG.

Note

- *Pay attention to the correct sequence when unplugging connectors -A- and -B-. If connector -B- is unplugged first, a fault may be stored in the supplementary heater control unit -J364- and this can only be erased after unplugging the connectors and plugging them back in in the right order.*
- *Plug in connector -B- and then connector -A- at the supplementary heater control unit -J364- .*
- *Connectors are released by pressing them towards component and releasing catch whilst pressing connector (e.g. pull on tab).*
- *Connector -C- (to heater coolant shutoff valve -N279-) is only fitted on vehicles with auxiliary/additional heater.*

– Release clip -A-, hexagon nut on exhaust silencer -B- (e.g. on vehicles with 6-cyl. or 8-cyl. petrol engine) and bolt on exhaust silencer ⇒ page 82).

– Remove hexagon nut -C- (accessible from wheel housing) and detach together with corresponding washer.

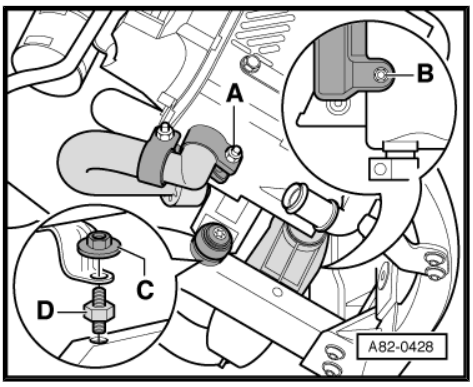

Note

- *Illustration shows exhaust system for auxiliary heater in vehicle with 8-cyl. petrol engine. For other engines, exhaust system arrangement differs from this illustration.*
- *Bonded rubber element -D- remains installed.*

– Detach fuel pipe -A- from auxiliary/additional heater and seal off pipe.

– Remove bolts -B-.

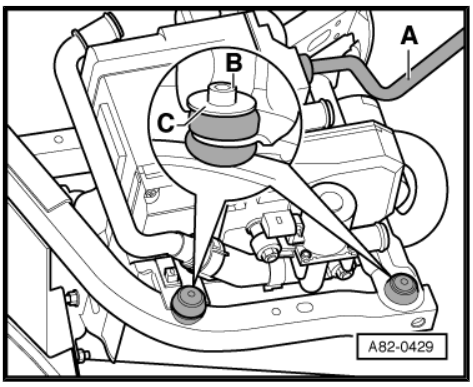

Note

- *Illustration shows auxiliary heater in vehicle with 8-cyl. petrol engine. For other engines, arrangement may differ from this illustration.*
- *Instead of bolts -B- and rubber elements -C-, hexagon nuts and bonded rubber elements may be fitted.*

– Remove auxiliary/additional heater.

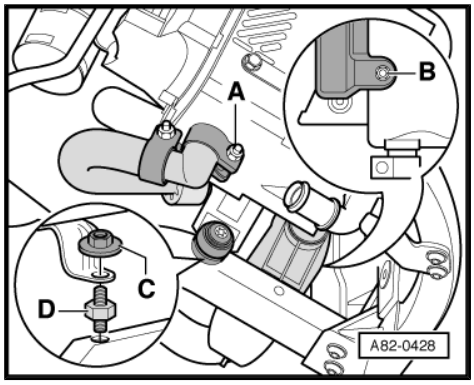

Installing

– Install in reverse order, paying attention to the following:

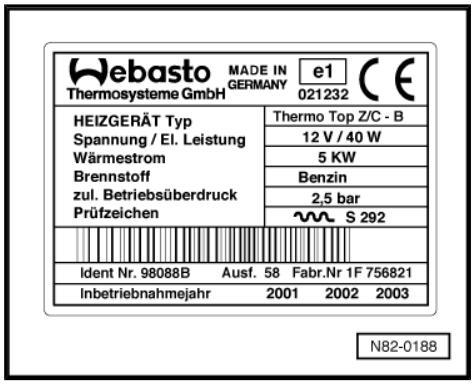

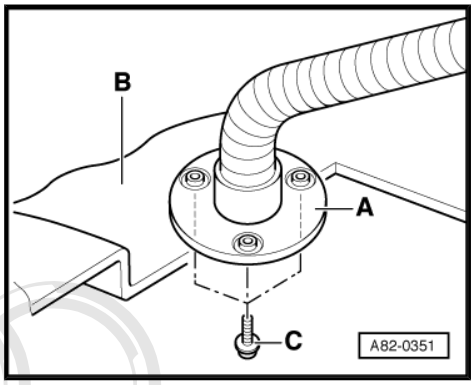

Protected by copyright. Copying for private or commercial purposes, in part or in whole, is not permitted unless authorised by AUDI AG. AUDI AG does not guarantee or accept any liability with respect to the correctness of information in this document. Copyright by AUDI AG.

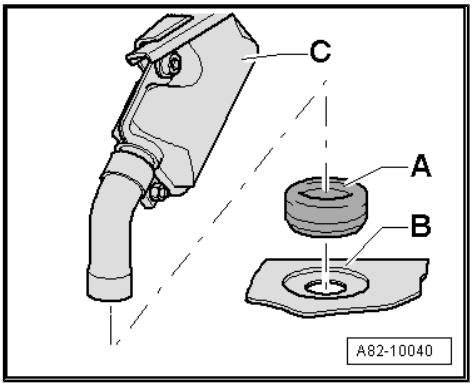

- Different auxiliary/supplementary heater versions are available. Heed the exact assignment when replacing an auxiliary/supplementary heater ⇒ page 1 and ⇒ Electronic parts catalogue .
- After installation, check exhaust pipe, coolant hoses, fuel pipe and wires to auxiliary/additional heater; there must be no contact with other components.
- Before starting up auxiliary/additional heater (also prior to start-up via “Basic setting” function), bleed coolant circuit ⇒ page 60 .
- If auxiliary/additional heater has been replaced, enter year of initial commissioning for newly installed heater on rating plate of heater and on new “duplicate rating plate” (illustration shows rating plate for auxiliary heater in vehicle with petrol engine).
- Check installation position of brackets/spacers on corrugated exhaust pipe; they must be attached such they prevent pipe contact with other components.
- When installing the noise insulation, check exhaust tailpipe -A- of auxiliary/additional heater; it must be positioned so that it can be secured to the noise insulation -B- without pretension (e.g. vehicles with 6-cyl. or 8-cyl. petrol engine).
- On vehicles with e.g. 6-cyl. or 8-cyl. diesel engine and 10-cyl. or 12-cyl. petrol engine, check the tailpipe -C- on installing the noise insulation. It must be positioned centrally in the opening of the noise insulation -B- to permit stress-free fitting of the rubber grommet -A-.
- Check position of air intake and intake air silencer of auxiliary/additional heater (unimpeded air intake must be possible).

After installing auxiliary/additional heater, perform following checks/make following settings depending on repair work performed ⇒ "Guided fault-finding" function of vehicle diagnostic, testing and information system VAS 5051.

Protected by copyright. Copying for private or commercial purposes, in part or in whole is not permitted unless authorised by AUDI AG. AUDI AG does not guarantee or accept any liability with respect to the correctness and completeness of this document.

- Check or enter the encoding of the supplementary heater control unit -J364- .
- Interrogate the adaption of the supplementary heater control unit -J364- and adapt the supplementary heater control unit -J364- if necessary (paying attention to possible customer-specific settings).
- Use the “Adaption” function to match any remote control units to the supplementary heater control unit -J364- .
- Interrogate the fault memory of the supplementary heater control unit -J364- and erase any faults displayed.
- Interrogate the adaption of the supplementary heater control unit -J364- and if necessary reset the adaption in the adaption channels “Pipe filling” and “Metering pump actuation time in pipe filling function”.
- Start the engine and interrogate the fault memory of all control units fitted (faults may also have been entered for other control units by way of the convenience data bus).
- Switch on the auxiliary/supplementary heater and check both operation and the CO_2 content of the auxiliary/supplementary heater exhaust gas.

- After replacing certain auxiliary/supplementary heater components, switch on the auxiliary/supplementary heater before handing over the vehicle to the customer and allow the auxiliary/supplementary heater to run for a few minutes (at least 10 minutes) in full load operation. Residue of e.g. lubricants used during production may still be found in components. This residue evaporates after initial switch-on as soon as components have warmed up.

Protected by copyright. Copying for private or commercial purposes, in part or in whole, is not permitted unless authorised by AUDI AG. AUDI AG does not guarantee or accept any liability with respect to the correctness of information in this document. Copyright by AUDI AG.

Note

- *Up to Model Year 2005, auxiliary/supplementary heaters were manufactured on which there was a delay of 10 seconds between the reception of a corresponding request from the front operating and display unit, Climatronic control unit -J255- and implementation of the heating mode deactivation time by the supplementary heater control unit -J364- . With such auxiliary/supplementary heaters, there is a risk of overheating of the coolant in the auxiliary heater under certain usage conditions. Following installation of the auxiliary/supplementary heater, the adaption is therefore to be checked and corrected if necessary ⇒ "Guided fault-finding" function of vehicle diagnostic, testing and information system VAS 5051.*
- *After removing and installing fuel system components or the auxiliary/supplementary heater, the auxiliary/supplementary heater is to be switched on and operated at full load for at least 10 minutes to ensure complete bleeding of the fuel pipe.*

9.2 Checking components of auxiliary/additional heater

Note

- *The "Electrical check" function for the auxiliary/supplementary heater is not described in this Workshop Manual. This Workshop Manual only gives a brief outline of the checking of individual components.*
- *Electrical checking of the auxiliary/supplementary heater is to be performed as described in the guided fault-finding routine ⇒ "Guided fault-finding" function of vehicle diagnostic, testing and information system VAS 5051.*

Special tools and workshop equipment required

- Voltage tester -V.A.G 1527 B-
- Adapter set -V.A.G 1594 C-

Checking

– Remove auxiliary/additional heater ⇒ page 64 .

– Detach holder from auxiliary/additional heater ⇒ page 73 and ⇒ page 76 .

– Use screwdriver to lever off cover -A-.

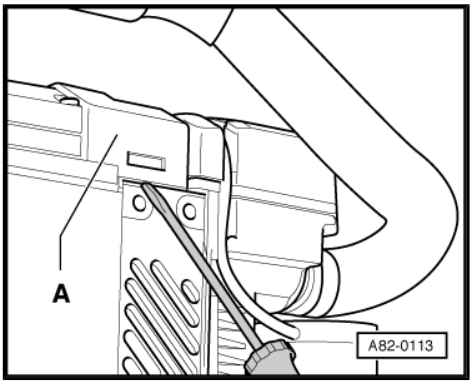

- Checking glow plug with flame monitor -Q8- ⇒ page 71
- Checking combustion air blower -V6- ⇒ page 71
- Checking circulation pump -V55- (only fitted with auxiliary heater optional extra) ⇒ page 72

Checking glow plug with flame monitor -Q8-

– Unplug connector -C- from auxiliary/additional heater.

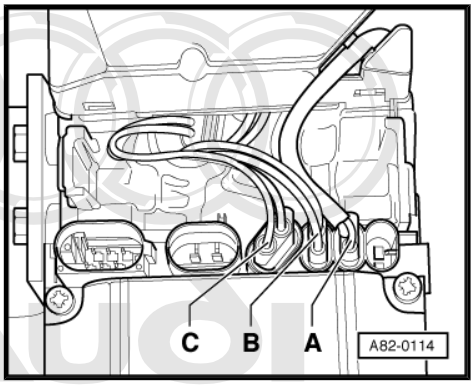

– Measure the resistance at connector -C- between contact “1” and the “heater housing”.

Specification:

∞ Ω

– Measure the resistance at connector -C- between contacts “1” and “2”.

Protected by copyright. Copying for private or commercial purposes, in part or whole, is not permitted unless authorised by AUDI AG. AUDI AG does not guarantee or accept any liability with respect to the correctness of information in this document. Copyright by AUDI AG.

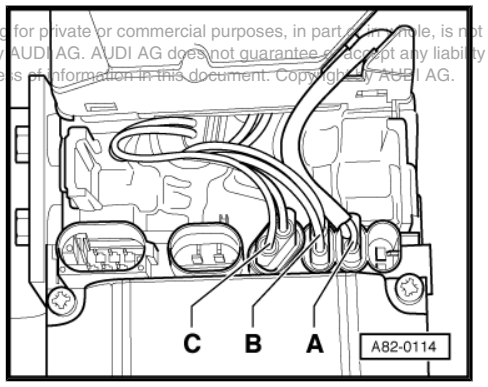

Specification:

Less than 1 Ω

Rated value:

0,236 Ω + / - 0.033 Ω~(at 25 °C)

Note

- *Resistances of less than 1 Ω can no longer be measured with the required accuracy using workshop equipment. This test can therefore only be used to detect major component damage.*
- *Resistance characteristic curve of glow plug with flame monitor -Q8- enables additional heater control unit -J364- to detect whether a flame has formed in heater.*
- *If a voltage of 9 V is applied to the glow plug with flame detector, the current input is between 9 and 12 A.*

Checking combustion air blower -V6-

– Unplug connector -B- from auxiliary/additional heater.

– Measure the resistance at connector -B- between contact “1” and the “heater housing”.

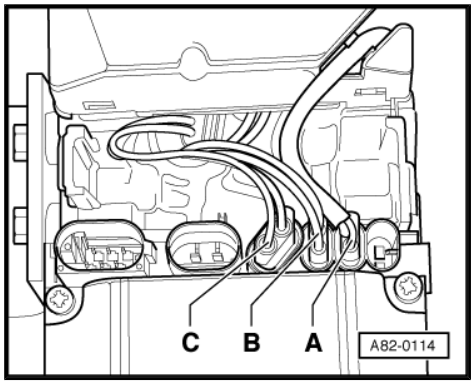

Specification:

∞ Ω

Note

- *If a voltage of 12 V is applied to combustion air blower -V6- the current input is between 2 and 3 A.*
- *The internal resistance of the combustion air blower -V6- is between 3 and 6 Ω~(40 Ω~if the combustion air blower has not been in operation for a lengthy period). Since resistances of less than 10 Ω can no longer be measured with the required degree of accuracy using workshop equipment, internal resistance testing can only be used to detect serious component damage.*

Checking
circulation pump -V55-

Note

A circulation pump is only fitted with auxiliary or auxiliary/additional heater version. Heaters used exclusively as additional heater have no circulation pump -V55- .

– Unplug connector -A- from auxiliary/additional heater.

– Measure the resistance at connector -A- between the two contacts (contacts “1” and “2”) and the “heater housing”.

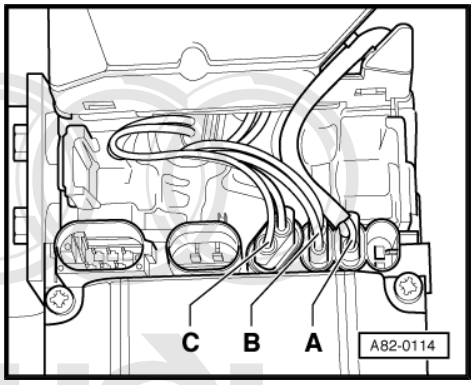

Specification:

∞ Ω

Note

Protected by copyright. Copying for private or commercial purposes, in part or in whole, is not permitted unless authorised by AUDI AG. AUDI AG does not guarantee or accept any liability with respect to the correctness of information in this document. Copyright by AUDI AG.

- *If a voltage of 12 V is applied to circulation pump -V55- the current input is between 1 and 1.5 A.*
- *Internal resistance cannot be measured at recirculation pump -V55- (this is prevented by the electronics in the circulation pump).*

10 Dismantling and assembling auxiliary/additional heater

There are different versions of the auxiliary/additional heater:

- Version “1” auxiliary heater (without additional heater) is installed as optional extra on vehicles with petrol engine.
- Version “2” auxiliary/additional heater is installed as optional extra on vehicles with diesel engine.
- Version “3” additional heater (without auxiliary heater) is installed (as standard) on vehicles with diesel engine.

– Auxiliary/additional heater ⇒ page 64

Note

Protected by copyright. Copying for private or commercial purposes, in part or in whole, is not permitted unless authorised by AUDI AG. AUDI AG does not guarantee or accept any liability with respect to the correctness of information in this document. Copyright by AUDI AG.

- *Depending on the type of engine, use is made of different brackets to secure the auxiliary/supplementary heater in position in the vehicle ⇒ page 82 and ⇒ Electronic parts catalogue .*
- *The auxiliary/supplementary heater brackets are attached to the vehicle with bolts, rubber grommets and bushings as well as with bonded rubber elements. If applicable, the fastening elements are to be ordered as well on replacing the bracket ⇒ page 82 , ⇒ page 81 and ⇒ Electronic parts catalogue*
- *On replacing the auxiliary/supplementary heater, pay attention to the correct version (different models for vehicles with petrol and diesel engine) as well as the two different remote control versions ⇒ page 84 and ⇒ "Guided fault-finding" function of vehicle diagnostic, testing and information system VAS 5051.*
- *There are different versions of the auxiliary heater remote control and of the auxiliary/supplementary heater. Exclusive use was made up to 05.2004 of the Telestart “T70” remote control version. As of 05.2004 the Telestart “T90” version was gradually introduced instead. In Model Year 2008 production is gradually being switched from the Telestart “T90” version of the remote control to the Telestart “T91” type ⇒ page 10 and ⇒ Electronic parts catalogue . To enable the auxiliary/supplementary heater to implement the additional functions of the Telestart “T90” / “T91” (feedback of confirmation of reception of activation and deactivation signals), use is made of a modified remote control receiver for auxiliary heater -R64- and a modified auxiliary/supplementary heater ⇒ Electronic parts catalogue . As of part number 4E0 265 081 with index “J” (as of hardware and software number “0710”), the auxiliary/supplementary heater is designed for the Telestart “T90” / “T91” remote control ⇒ "Guided fault-finding" function of vehicle diagnostic, testing and information system VAS 5051.*

10.1 Detaching and re-attaching add-on components from/to additional heater

– Removing additional heater ⇒ page 64

Note

- *At the start of production, auxiliary heater control unit -J364- was identical with auxiliary/additional heater control unit installed with version for vehicles with diesel engine. At a later date, control units may be fitted which no longer feature certain functions with the additional heater version (introduction not yet finalised) ⇒ Electronic parts catalogue*
- *In contrast to the auxiliary/additional heater, the additional heater has no circulation pump -V55- .*
- *Illustration shows additional heater as installed e.g. in vehicles with 6-cyl. diesel engine at start of production. For additional heaters which are installed in e.g. vehicles with 8-cyl. diesel engine or in vehicles with 6-cyl. diesel engine gradually introduced in model year 2004, design of exhaust system differs (Items "11" to "21") from this illustration ⇒ page 76 .*

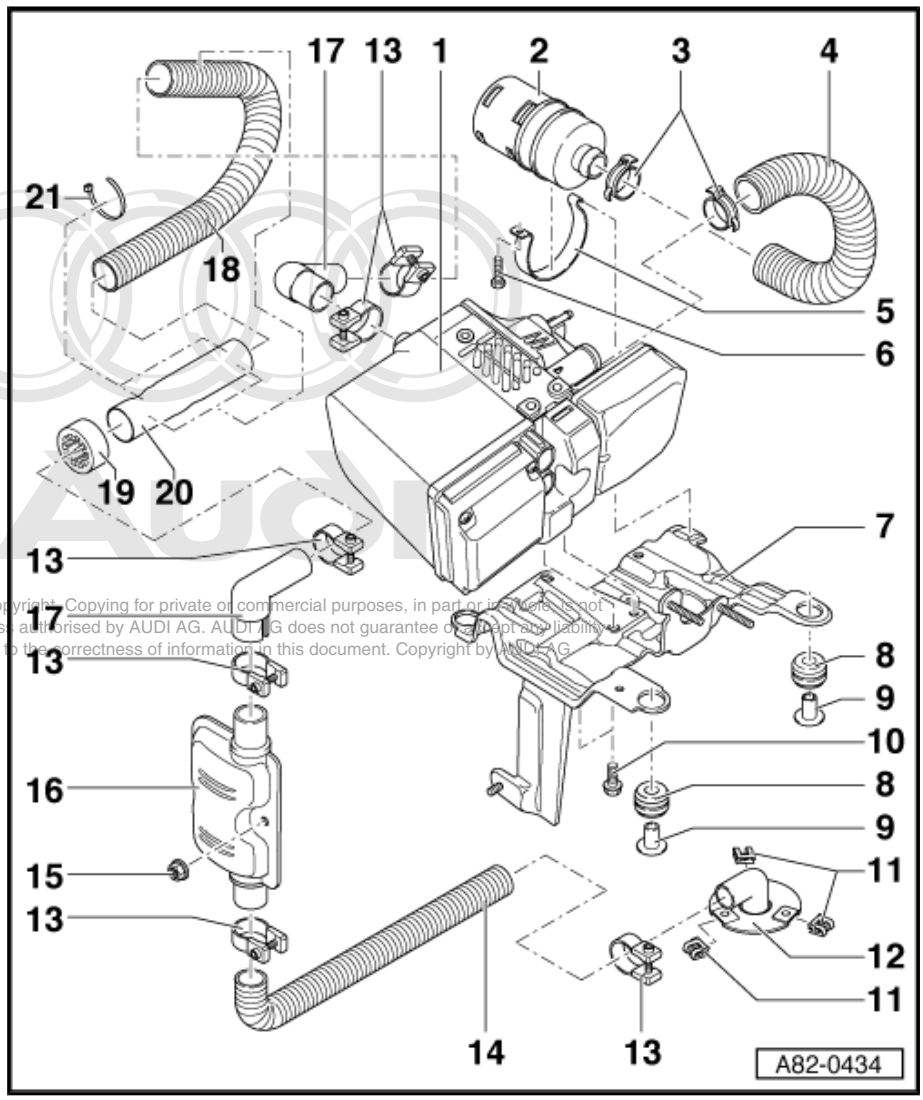

1 - Additional heater

- ❑ The design may differ for vehicles with diesel engine with auxiliary/ supplementary heater and supplementary heater without auxiliary heater ⇒ page 84 and ⇒ Electronic parts catalogue .
- ❑ Dismantling and assembling ⇒ page 84

2 - Intake air silencer

- ❑ Air intake must be unimpeded; if necessary check for dirt and clean
- ❑ Attaching ⇒ page 81

3 - Clamp

4 - Intake hose

- ❑ Attaching ⇒ page 81

5 - Bracket

- ❑ For intake air silencer

6 - Bolt

7 - Bracket

- ❑ For additional heater
- ❑ Different versions ⇒ page 82
- ❑ Illustration shows bracket for vehicles with 6-cyl. diesel engine for which rubber grommets and bushings are used for attachment in vehicle

Protected by copyright. Copying for private or commercial purposes, in part or in whole, is not permitted unless authorised by AUDI AG. AUDI AG does not guarantee or accept any liability with respect to the correctness of information in this document. Copyright by AUDI AG.

8 - Rubber grommet

- ❑ Not fitted if bracket for additional heater is secured in position in vehicle with bonded rubber element ⇒ page 82 and ⇒ page 81 .

9 - Bushing

- ❑ Not fitted if bracket for additional heater is secured in position in vehicle with bonded rubber element ⇒ page 82 and ⇒ page 81 .

10 - Hexagon bolt

- ❑ Special bolt with self-tapping thread

11 - Snap-on nut

12 - Tailpipe

- ❑ With thermal insulation mat

13 - Clip

14 - Corrugated exhaust pipe

Protected by copyright. Copying for private or commercial purposes, in part or in whole, is not permitted unless authorised by AUDI AG. AUDI AG does not guarantee or accept any liability with respect to the correctness of information in this document. Copyright by AUDI AG.

- ❑ Different versions ⇒ page 82
- ❑ Illustration shows corrugated pipe installed in vehicles with 6-cyl. diesel engine at start of production.
- ❑ For vehicles with 6-cyl. engine (from model year 2004 gradual introduction) or 8-cyl. engine ⇒ page 76 and ⇒ page 82

15 - Hexagon nut

- ❑ Illustration shows hexagon bolt installed in vehicles with 6-cyl. diesel engine at start of production.
- ❑ For vehicles with 6-cyl. engine (from model year 2004 gradual introduction) or 8-cyl. engine, exhaust silencer is secured in position at a different location using a hexagon bolt ⇒ page 76 and ⇒ page 82

16 - Exhaust silencer

17 - Exhaust pipe

- ❑ 90° angled
- ❑ Illustration shows exhaust pipe installed in vehicles with 6-cyl. diesel engine at start of production.
- ❑ For vehicles with 6-cyl. engine (from model year 2004 gradual introduction) or 8-cyl. engine, there is no exhaust pipe elbow at exhaust silencer ⇒ page 76 and ⇒ page 82

18 - Corrugated exhaust pipe

- ❑ Different versions ⇒ page 82
- ❑ Illustration shows corrugated pipe installed in vehicles with 6-cyl. diesel engine at start of production.
- ❑ For vehicles with 6-cyl. engine (from model year 2004 gradual introduction) or 8-cyl. engine ⇒ page 76 and ⇒ page 82

19 - Spacer

- ❑ Arrangement in exhaust system ⇒ page 83
- ❑ Illustration shows spacer installed in vehicles with 6-cyl. diesel engine at start of production.
- ❑ On vehicles with 6-cyl. engine (from model year 2004 gradual introduction) or 8-cyl. engine, not fitted - different exhaust routing ⇒ page 76 and ⇒ page 82

20 - Insulating sleeve

- ❑ Arrangement in exhaust system ⇒ page 83
- ❑ Illustration shows insulating sleeve installed in vehicles with 6-cyl. diesel engine at start of production.
- ❑ For vehicles with 6-cyl. engine (from model year 2004 gradual introduction) or 8-cyl. engine, not fitted - different exhaust routing ⇒ page 76 and ⇒ page 82

21 - Cable ties

- ❑ Arrangement in exhaust system ⇒ page 83
- ❑ Illustration shows cable tie installed in vehicles with 6-cyl. diesel engine at start of production.
- ❑ For vehicles with 6-cyl. engine (from model year 2004 gradual introduction) or 8-cyl. engine, not fitted - different exhaust routing ⇒ page 76 and ⇒ page 82

10.2 Removing and installing auxiliary/supplementary heater exhaust system

For vehicles with 6-cyl. or 8-cyl. diesel engine and 10-cyl. or 12-cyl. petrol engine

Note

- *For vehicles with 6-cyl. diesel engine which built at start of production, exhaust system (from model year 2004 gradual introduction) with different exhaust routing installed* ⇒ page 73 .
- *On vehicles with 10-cyl. petrol engine, the exhaust system differs from the version shown, however the detachment and attachment operations are identical.*

1 - Clip

2 - Exhaust pipe
- ❑ with heat insulation

3 - Bolt

4 - Bracket

5 - Exhaust silencer

6 - Tailpipe

7 - Rubber grommet
- ❑ Inserted in noise insulation

Protected by copyright. Copying for private or commercial purposes, in part or in whole, is not permitted unless authorised by AUDI AG. AUDI AG does not guarantee or accept any liability with respect to the correctness of information in this document. Copyright by AUDI AG.

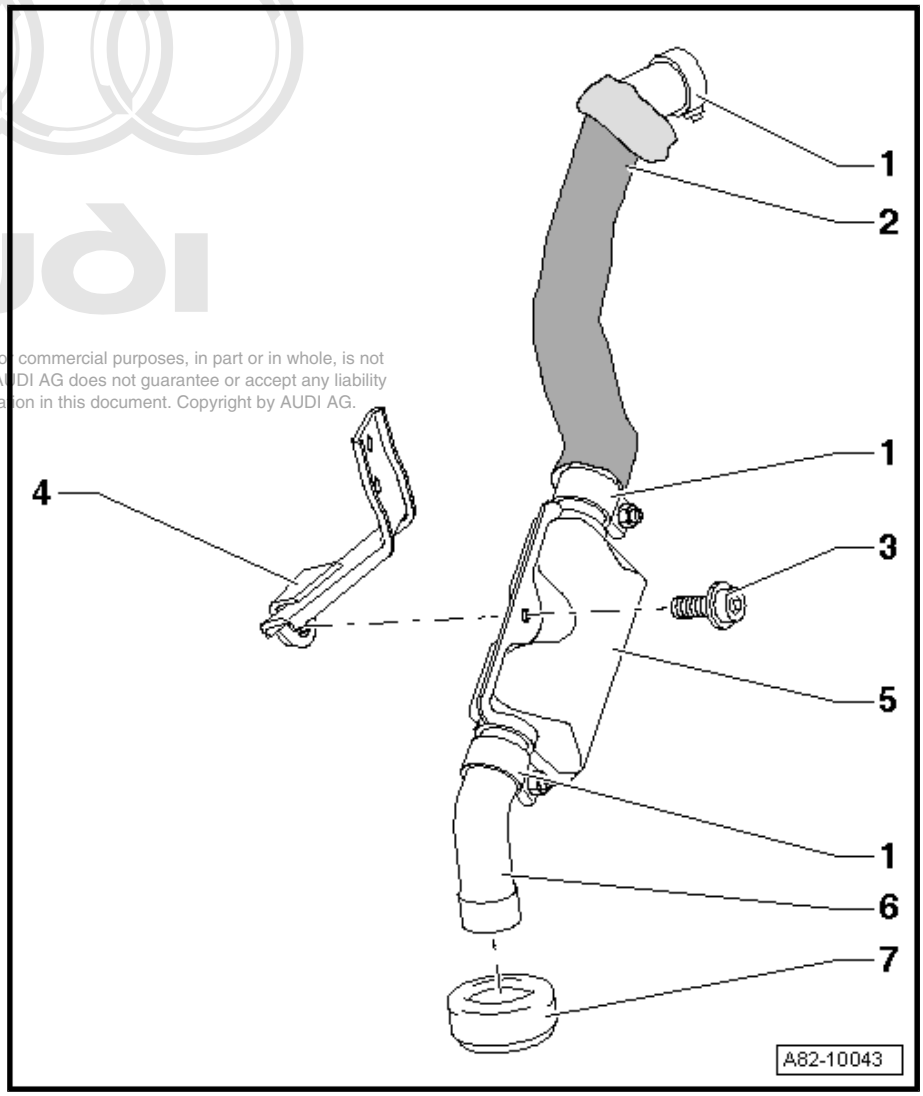

10.3 Detaching and re-attaching add-on components from/to auxiliary/additional heater

– Removing auxiliary/supplementary heater ⇒ page 64

Note

- *At the start of production, the design of the supplementary heater control unit -J364- for the "Supplementary heater without auxiliary heater" version was the same as that of the auxiliary/supplementary heater control unit installed with the version for vehicles with diesel engine. At a later date, the "Supplementary heater without auxiliary heater" version may be fitted with control units no longer featuring certain functions for the "Supplementary heater without auxiliary heater" version (introduction not yet finalised) ⇒ Electronic parts catalogue*
- *Additional heater control unit -J364- is of different design for petrol and diesel versions (certain functions are set differently (e.g pre-heating times). ⇒ Electronic parts catalogue*
- *On replacing the auxiliary/supplementary heater, pay attention to the correct version (different models for petrol and diesel) as well as the different remote control versions ⇒ Electronic parts catalogue and ⇒ "Guided fault-finding" function of vehicle diagnostic, testing and information system VAS 5051.*
- *There are different versions of the auxiliary heater remote control and of the auxiliary/supplementary heater. Exclusive use was made up to 05.04 of the Telestart "T70" remote control version. As of 05.2004 the Telestart "T90" version was gradually introduced instead. In Model Year 2008 production is gradually being switched from the Telestart "T90" version of the remote control to the Telestart "T91" type ⇒ page 10 and ⇒ Electronic parts catalogue . To enable the auxiliary/supplementary heater to implement the additional functions of the Telestart "T90" / "T91" (feedback of confirmation of reception of activation and deactivation signals), use is made of a modified remote control receiver for auxiliary heater -R64- and a modified auxiliary/supplementary heater ⇒ Electronic parts catalogue . As of part number 4E0 265 081 with index "J" (as of hardware and software number "0710"), the auxiliary/supplementary heater is designed for the Telestart "T90" / "T91" remote control ⇒ "Guided fault-finding" function of vehicle diagnostic, testing and information system VAS 5051.*

Protected by copyright. Copying for private or commercial purposes, in part or in whole, is not permitted unless authorised by AUDI AG. AUDI AG does not guarantee or accept any liability with respect to the correctness of information in this document. Copyright by AUDI AG.

10.3.1 Detaching and re-attaching exhaust system and circulation pump -V55-

Note

Illustration shows auxiliary/additional heater as installed e.g. in vehicles with 6-cyl. or 8-cyl. petrol engine (and 6-cyl. diesel engine at start of production. For auxiliary/additional heaters installed in vehicles with 6-cyl. diesel engine (gradual conversion in Model Year 2004), 8-cyl. diesel engine or 10 or 12-cyl. engine, the design of the exhaust system (Items "8" to "11" and "13" to "19") differs from this illustration ⇒ page 76 .

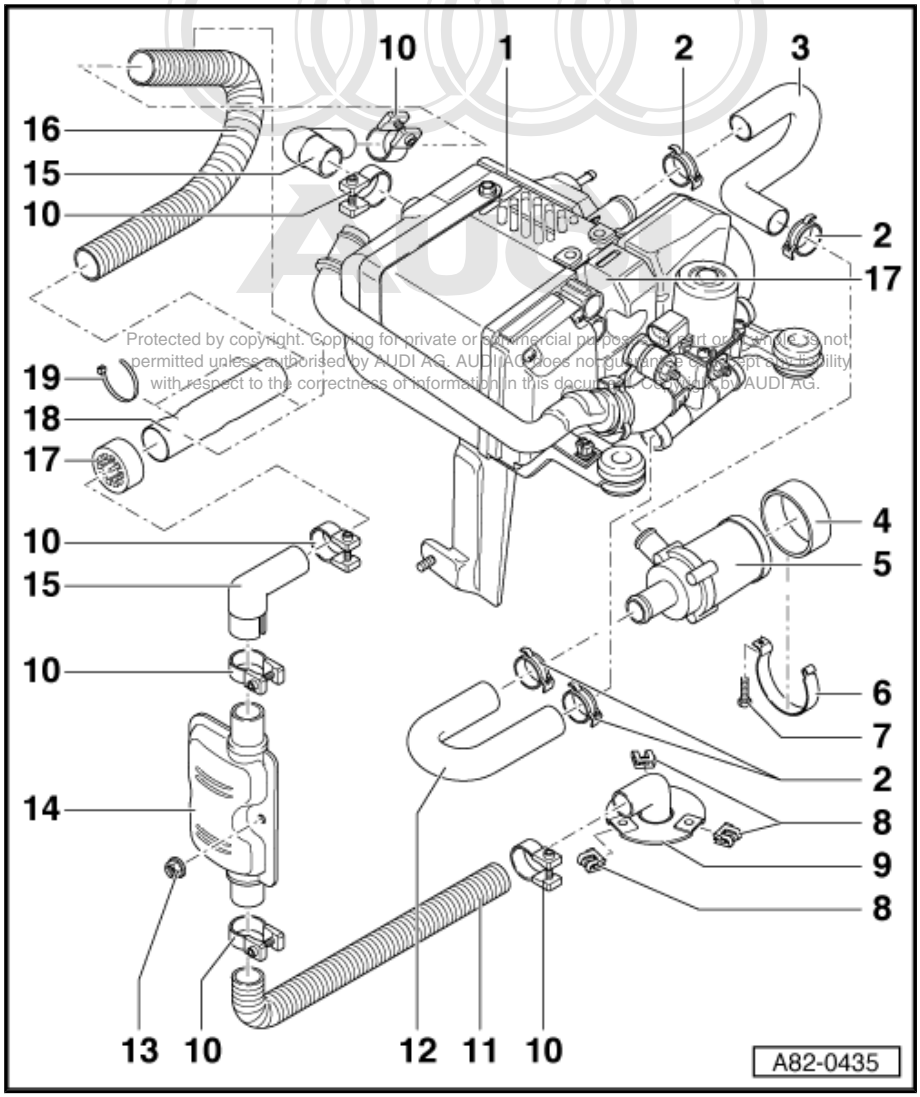

Protected by copyright. Copying for private or commercial purposes, in part or in whole, is not permitted unless authorised by AUDI AG. AUDI AG does not guarantee or accept any liability with respect to the correctness of information in this document. Copyright by AUDI AG.

1 - Auxiliary/additional heater

- ❑ Detaching and re-attaching bracket, coolant shutoff valve and intake air silencer ⇒ page 80
- ❑ Different design of burner unit and different control unit for vehicles with petrol or diesel engine ⇒ page 84 and ⇒ Electronic parts catalogue

2 - Clamp

3 - Coolant hose

4 - Rubber grommet

- ❑ Fitted between circulation pump and corresponding bracket

5 - Circulation pump -V55-

- ❑ Wiring to connector console ⇒ page 84
- ❑ bracket must be detached from auxiliary/additional heater to replace circulation pump

6 - Bracket

- ❑ For circulation pump

7 - Bolt

8 - Snap-on nut

9 - Tailpipe

- ❑ with thermal insulation mat

10 - Clip

11 - Corrugated exhaust pipe

- ❑ Different versions ⇒ page 76 and ⇒ page 82
- ❑ Illustration shows corrugated pipe installed in vehicles with 6-cyl. or 8-cyl. petrol engine (and 6-cyl. diesel engine at start of production.
- ❑ For vehicles with 6-cyl. diesel engine (from model year 2004 gradual introduction) or 8-cyl. diesel engine and 10-cyl. or 12-cyl. petrol engine, the exhaust routing is different ⇒ page 76 and ⇒ page 82 .

12 - Coolant hose

13 - Hexagon nut

- ❑ Different versions ⇒ page 76 and ⇒ page 82
- ❑ Illustration shows exhaust routing in vehicles with 6-cyl. or 8-cyl. petrol engine (and 6-cyl. diesel engine at start of production.
- ❑ For vehicles with 6-cyl. diesel engine (from model year 2004 gradual introduction) or 8-cyl. diesel engine and 10-cyl. or 12-cyl. petrol engine, the exhaust routing is different ⇒ page 76 and ⇒ page 82 .

14 - Exhaust silencer

15 - Exhaust pipe

- ❑ 90° angled
- ❑ For vehicles with 6-cyl. diesel engine (from model year 2004 gradual introduction) or 8-cyl. diesel engine and 10-cyl. or 12-cyl. petrol engine the exhaust silencer is not fitted with an angled exhaust pipe ⇒ page 76 and ⇒ page 82 .

16 - Corrugated exhaust pipe

- Different versions ⇒ page 82
- Illustration shows exhaust routing in vehicles with 6-cyl. or 8-cyl. petrol engine (and 6-cyl. diesel engine at start of production.
- For vehicles with 6-cyl. diesel engine (from model year 2004 gradual introduction) or 8-cyl. diesel engine and 10-cyl. or 12-cyl. petrol engine, the exhaust routing is different ⇒ page 76 and ⇒ page 82 .

17 - Spacer

- Arrangement in exhaust system ⇒ page 83
- Illustration shows exhaust routing in vehicles with 6-cyl. or 8-cyl. petrol engine (and 6-cyl. diesel engine at start of production.
- For vehicles with 6-cyl. diesel engine (from model year 2004 gradual introduction) or 8-cyl. diesel engine and 10-cyl. or 12-cyl. petrol engine, not fitted - different exhaust routing ⇒ page 76 and ⇒ page 82 .

18 - Insulating sleeve

- Arrangement in exhaust system ⇒ page 83
- Illustration shows exhaust routing in vehicles with 6-cyl. or 8-cyl. petrol engine (and 6-cyl. diesel engine at start of production.
- For vehicles with 6-cyl. diesel engine (from model year 2004 gradual introduction) or 8-cyl. diesel engine and 10-cyl. or 12-cyl. petrol engine, not fitted - different exhaust routing ⇒ page 76 and ⇒ page 82 .

19 - Cable ties

- Arrangement in exhaust system ⇒ page 83
- Illustration shows exhaust routing in vehicles with 6-cyl. or 8-cyl. petrol engine (and 6-cyl. diesel engine at start of production.
- For vehicles with 6-cyl. diesel engine (from model year 2004 gradual introduction) or 8-cyl. diesel engine and 10-cyl. or 12-cyl. petrol engine, not fitted - different exhaust routing ⇒ page 76 and ⇒ page 82 .

Protected by copyright. Copying for private or commercial purposes, in part or in whole, is not permitted unless authorised by AUDI AG. AUDI AG does not guarantee or accept any liability with respect to the correctness of information in this document. Copyright by AUDI AG.

10.3.2 Detaching and re-attaching bracket, coolant shutoff valve and intake air silencer

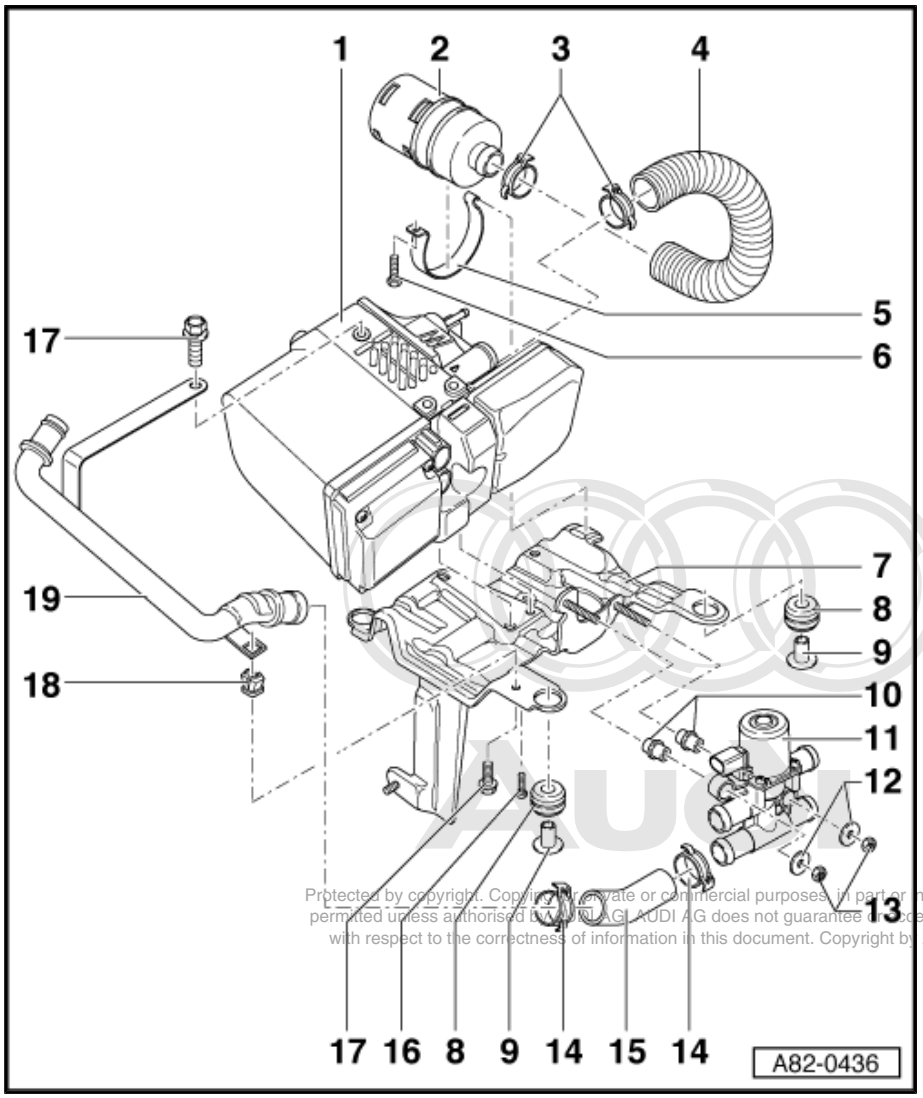

Protected by copyright. Copying for private or commercial purposes, in part or in whole, is not permitted unless authorised by AUDI AG. AUDI AG does not guarantee or accept any liability with respect to the correctness of information in this document. Copyright by AUDI AG.

1 - Auxiliary/additional heater

- ❑ Different design of burner unit and different control unit for vehicles with petrol or diesel engine ⇒ page 84 and ⇒ Electronic parts catalogue
- ❑ Dismantling and assembling ⇒ page 84

2 - Intake air silencer

- ❑ Air intake must be unimpeded; if necessary check for dirt and clean
- ❑ Attaching ⇒ page 81

3 - Clamp

4 - Intake hose

- ❑ Attaching ⇒ page 81

5 - Bracket

- ❑ For intake air silencer

6 - Bolt

7 - Bracket

- ❑ For auxiliary/additional heater
- ❑ Different versions ⇒ page 82
- ❑ Illustration shows bracket for vehicles with 6-cyl. or 8-cyl. petrol engine (and for vehicles with 6-cyl. diesel engine at start of production) for which rubber grommets and bushings are used for attachment in vehicle ⇒ page 82

8 - Rubber grommet

- ❑ Not fitted if bracket for auxiliary/additional heater is secured in position in vehicle with bonded rubber element ⇒ page 82 and ⇒ page 81 .

9 - Bushing

- ❑ Not fitted if bracket for auxiliary/additional heater is secured in position in vehicle with bonded rubber element ⇒ page 82 and ⇒ page 81 .

10 - Bushings

- ❑ Install in correct position

11 - Heater coolant shutoff valve -N279-

- ❑ Actuated in auxiliary heating mode by additional heater control unit -J364- ⇒ page 112
- ❑ Removing and installing ⇒ page 58 .

12 - Washer

13 - Hexagon nut

14 - Clamp

15 - Coolant hose

16 - Hexagon bolt

17 - Hexagon bolt

- ❑ Special bolt with self-tapping thread

18 - Bolt clip

19 - Coolant pipe

10.4 Attaching intake hose with intake air silencer

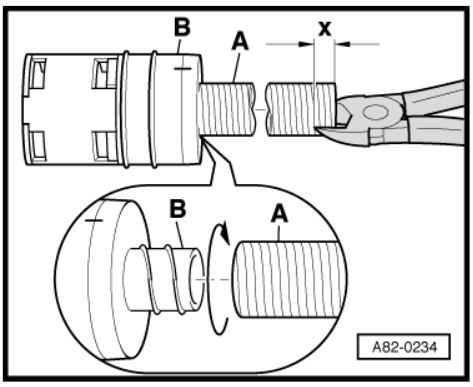

Note

- *Intake hose -A- is attached to the intake air silencer -B-.*
- *To facilitate fitting and attachment of intake hose -A- with clamp to auxiliary/additional heater intake pipe, two cuts of approx. 10 mm each can be made (dimension X) using side-cutting pliers.*

Protected by copyright. Copying for private or commercial purposes, in part or in whole, is not permitted unless authorised by AUDI AG. AUDI AG does not guarantee or accept any liability with respect to the correctness of information in this document. Copyright by AUDI AG.

10.5 Attaching bracket for auxiliary/additional heater with bonded rubber element

– Hexagon combi nut (with washer) -B-

– Bonded rubber element -C-

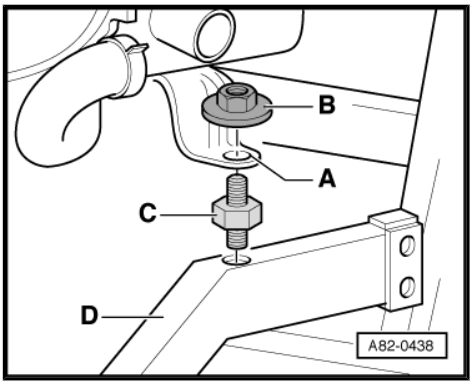

Note

- *Bonded rubber element -C- is bolted to brace -D- and remains in vehicle when removing auxiliary/additional heater.*
- *Tolerance equalisation between vehicle and bracket is achieved via oversize hole for threaded pin of bonded rubber element in bracket -A-.*

10.6 Types of bracket for auxiliary/additional heater

Note

- *Bracket -A- is installed in vehicles with 6-cyl. or 8-cyl. petrol engine (and for vehicles with 6-cyl. diesel engine at start of production (exhaust silencer is attached to bracket)*
- *Bracket -B- is installed in vehicles with 6-cyl. (gradual introduction in model year 2004), 8-cyl. diesel engine and 10-cyl. or 12-cyl. petrol engine (the exhaust silencer is not attached to the bracket), different exhaust routing ⇒ page 76 and ⇒ page 82 .*
- *Auxiliary/additional heater brackets (-A- and -B-) are secured in position in vehicle at holes -C- and -D- with bolts, rubber grommets and bushings. Hole -E- is used for attachment with bonded rubber element, washer and hexagon nut (tolerance equalisation between vehicle and bracket is achieved via hole -E-). If applicable, the fastening elements are also to be ordered on replacing the bracket ⇒ page 81 and ⇒ Electronic parts catalogue .*

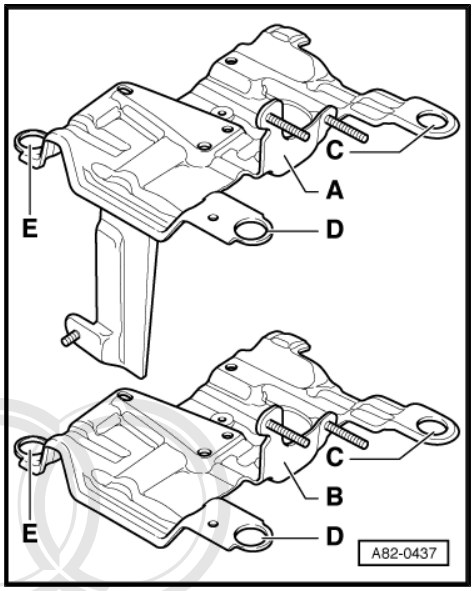

10.7 Auxiliary/additional heater exhaust system

10.7.1 Exhaust system for vehicles with 6-cyl. or 8-cyl. petrol engine (and 6-cyl. diesel engine at start of production)

Protected by copyright. Copying for private or commercial purposes, in part or in whole, is not permitted unless authorised by AUDI AG. AUDI AG does not guarantee or accept any liability with respect to the correctness of information in this document. Copyright by AUDI AG.

- Corrugated exhaust pipe -A- (with spacer and insulating sleeve)
- Exhaust silencer -B-
- Corrugated exhaust pipe -C- with exhaust tailpipe

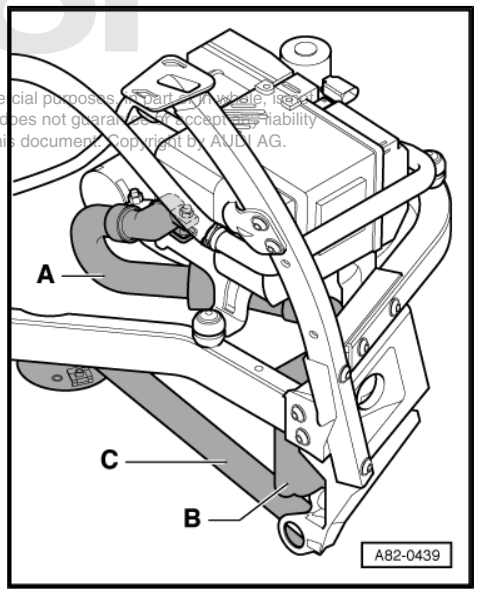

10.7.2 Exhaust system for vehicles with 6-cyl. diesel engine (gradual introduction in model year 2004), 8-cyl. diesel engine and 10-cyl. or 12-cyl. petrol engine

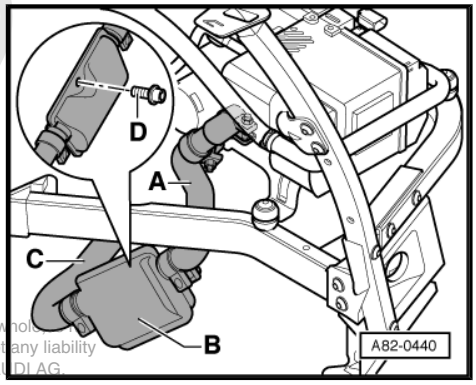

- Exhaust gas corrugated pipe -A-
- Exhaust silencer -B-
- Corrugated exhaust pipe -C- with exhaust tailpipe
- Hexagon bolt -D-

Protected by copyright. Copying for private or commercial purposes, in part or in whole, is not permitted unless authorised by AUDI AG. AUDI AG does not guarantee or accept any liability with respect to the correctness of information in this document. Copyright by AUDI AG.

Note

- *Arrangement of exhaust system* *⇒ page 82*
- *On vehicles with 10-cyl. petrol engine, the design differs from this illustration, however the detachment and attachment operations are identical.*

10.8 Attaching spacer and insulating sleeve to exhaust system of auxiliary/additional heater

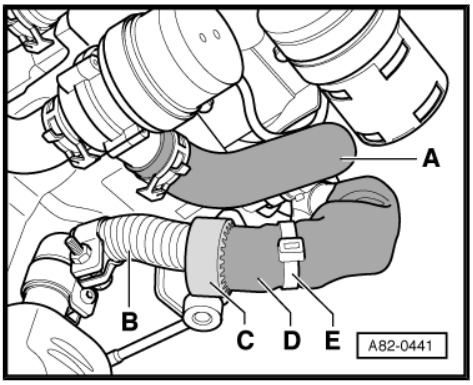

Note

- *Illustration shows arrangement of exhaust system for vehicles with 6-cyl. or 8-cyl. petrol engine (and 6-cyl. diesel engine at start of production).*
- *Coolant hose -A- and corrugated exhaust pipe -B- must not make contact.*
- *Spacer -C- must be attached so that contact between exhaust system and coolant hose -A- is precluded in the event of vibration.*
- *The insulating sleeve -D- is held in position with two temperature-resistant cable ties -E- ⇒ Electronic parts catalogue .*
- *If coolant hose makes contact with exhaust pipe, it will be damaged as a result of the high temperatures at the exhaust system during auxiliary/additional heater operation.*
- *Illustration shows exhaust system installed in vehicles with 6-cyl. or 8-cyl. petrol engine and a coolant hose as installed in vehicles with auxiliary heater or auxiliary/additional heater.*

10.9 Routing wiring to circulation pump -V55-

– Insert wiring -A- into groove as shown

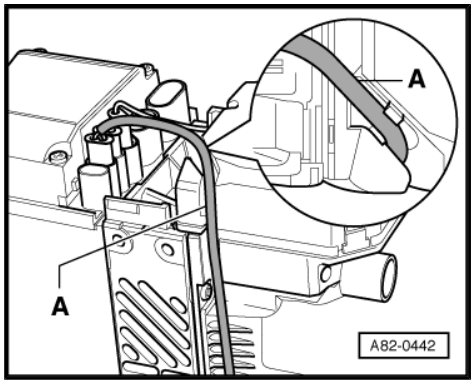

10.10 Dismantling and assembling auxiliary/ additional heater

Note

- *On replacing the auxiliary/supplementary heater, pay attention to the correct version (different models for petrol and diesel) as well as the different remote control versions ⇒ Electronic parts catalogue and ⇒ "Guided fault-finding" function of vehicle diagnostic, testing and information system VAS 5051.*
- *There are different versions of the auxiliary heater remote control and of the auxiliary/supplementary heater. Exclusive use was made up to 05.2004 of the Telestart "T70" remote control version. As of 05.2004 the Telestart "T90" version was gradually introduced instead. In Model Year 2008 production is gradually being switched from the Telestart "T90" version of the remote control to the Telestart "T91" type ⇒ page 10 and ⇒ Electronic parts catalogue . To enable the auxiliary/supplementary heater to implement the additional functions of the Telestart "T90" / "T91" (feedback of confirmation of reception of activation and deactivation signals), use is made of a modified remote control receiver for auxiliary heater -R64- and a modified auxiliary/supplementary heater ⇒ Electronic parts catalogue . As of part number 4E0 265 081 with index "J" (as of hardware and software number "0710"), the auxiliary/supplementary heater is designed for the Telestart "T90" / "T91" remote control ⇒ "Guided fault-finding" function of vehicle diagnostic, testing and information system VAS 5051.*
- *There are different versions of the supplementary heater control unit -J364- for petrol and diesel (certain functions are set differently, e.g. pre-heating times) ⇒ Electronic parts catalogue .*
- *At the start of production, the design of the supplementary heater control unit -J364- for the "Supplementary heater without auxiliary heater" version was the same as that of the auxiliary/supplementary heater control unit installed with the version for vehicles with diesel engine. At a later date, the "Supplementary heater without auxiliary heater" version may be fitted with control units no longer featuring certain functions for the "Supplementary heater without auxiliary heater" version (introduction not yet finalised) ⇒ Electronic parts catalogue .*

Protected by copyright. Copying for private or commercial purposes, in part or in whole, is not permitted unless authorised by AUDI AG. AUDI AG does not guarantee or accept any liability with respect to the correctness of information in this document. Copyright by AUDI AG.

– Removing auxiliary/supplementary heater ⇒ page 64
– Detaching add-on components from additional heater ⇒ page 73

– Detaching add-on components from auxiliary/additional heater ⇒ page 76

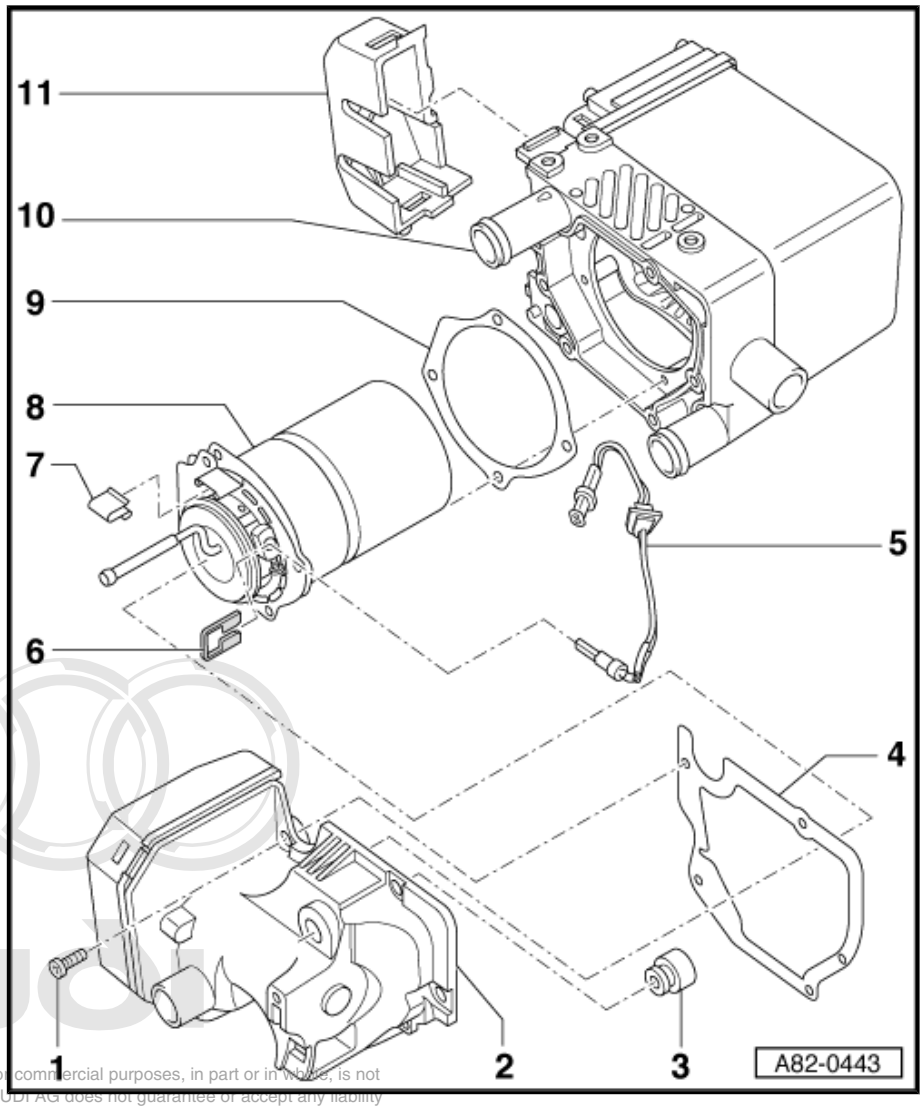

1 - Bolt

2 - Combustion air blower -V6-

- ❑ Checking ⇒ page 70
- ❑ Removing and installing ⇒ page 87 .
- ❑ Different versions ⇒ page 87 and ⇒ Electronic parts catalogue

3 - Seal

4 - Moulded gasket

- ❑ Renew
- ❑ Different versions (with additional holes for locating pins) ⇒ page 87 and ⇒ Electronic parts catalogue

5 - Glow plug with flame monitor -Q8-

- ❑ with internal filament (sheathed element).
- ❑ Different versions for attachment with bolt or clip ⇒ page 88 .
- ❑ Different design depending on production period ⇒ page 87 and ⇒ Electronic parts catalogue
- ❑ Checking ⇒ page 70
- ❑ Removing and installing ⇒ page 88 .

Protected by copyright. Copying for private or commercial purposes, in part or in whole, is not permitted unless authorised by AUDI AG. AUDI AG does not guarantee or accept any liability with respect to the correctness of information in this document. Copyright by AUDI AG.

6 - Clamp

- ❑ For securing glow plug with flame monitor -Q8- in burner element
- ❑ Removing and installing ⇒ page 88 .
- ❑ Different versions ⇒ page 87 and ⇒ Electronic parts catalogue

7 - Clip

- ❑ For securing wiring for glow plug with flame monitor -Q8- to burner element

8 - Burner element

- ❑ Different versions for vehicles with petrol or diesel ⇒ Electronic parts catalogue
- ❑ Different design depending on production period ⇒ page 87 and ⇒ Electronic parts catalogue
- ❑ With certain restrictions, diesel fuel version can also be designed for auxiliary/additional heater operation with vegetable-oil or rape-oil methylester fuels ⇒ page 5
- ❑ Different methods of attachment of the glow plug with flame monitor -Q8- (with screw or clip) ⇒ page 88
- ❑ Removing and installing ⇒ page 87 .

9 - Moulded gasket

- ❑ Renew

10 - Burner housing, heat exchanger and additional heater control unit -J364-

- ❑ Do not dismantle

- At the start of production, the design of the supplementary heater control unit -J364- for the “Supplementary heater without auxiliary heater” version was the same as that of the auxiliary/supplementary heater control unit installed with the version for vehicles with diesel engine. At a later date, the “Supplementary heater without auxiliary heater” version may be fitted with control units no longer featuring certain functions for the “Supplementary heater without auxiliary heater” version (introduction not yet finalised) ⇒ Electronic parts catalogue
- There are different versions of the supplementary heater control unit -J364- for petrol and diesel (certain functions are set differently, e.g. pre-heating times) ⇒ Electronic parts catalogue .
- Different versions depending on production period ⇒ page 87 and ⇒ Electronic parts catalogue

Note

At present the supplementary heater control unit -J364- , the burner housing and the heat exchanger are not available as replacement parts (on account of component protection, introduction not yet finalised) ⇒ Electronic parts catalogue .

11 - Cover

- For connector console.
- Removing and installing ⇒ page 86
- Assignment of connector console ⇒ page 86

10.11 Removing and installing connector console cover

– Remove auxiliary/additional heater ⇒ page 64 .

– Use screwdriver to lever off cover -A-.

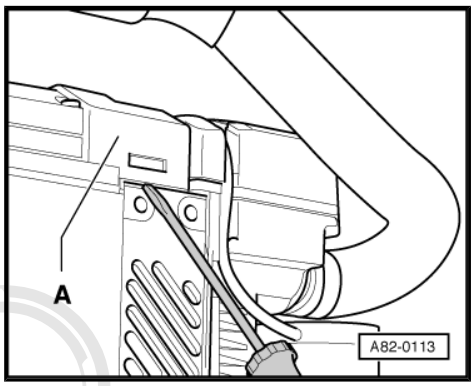

10.12 Assignment of auxiliary/additional heater connector console

– Connector -A- for circulation pump -V55- .

Note

Only fitted on “Auxiliary heater” or “Auxiliary/additional heater” version.

– Connector -B- for combustion air blower -V6- .

– Connector -C- for glow plug with flame monitor -Q8- .

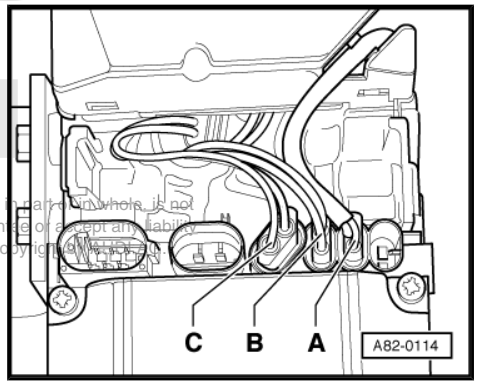

Protected by copyright. Copying for private or commercial purposes, in part or in whole, is not permitted unless authorised by AUDI AG. AUDI AG does not guarantee or accept any liability with respect to the correctness of information in this document. Copyright by AUDI AG.

10.13 Removing and installing combustion air blower -V6-

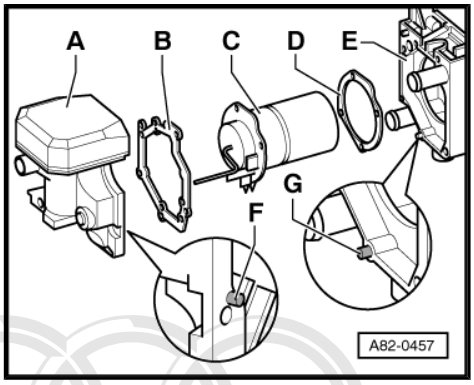

Note

- *Delivery of combustion air blower is subject to certain tolerances. During production of auxiliary/additional heater, CO_2 content in exhaust gas is set (on a test stand) at additional heater control unit -J364- . Replacement of combustion air blower on these heaters could lead to CO_2 content in exhaust gas exceeding permitted range.*
- *After replacing combustion air blower, CO_2 content in exhaust gas must be checked and, if necessary, adjusted ⇒ page 39 .*
- *As of 02.2003 modified auxiliary/supplementary heaters were gradually introduced. On these heaters, the combustion air blower -V6- -A- and the burner housing -E- are each fitted with an additional locating pin -F- and -G-. In addition, combustion air blower -V6- -A- is attached to burner housing -E- using only 4 bolts. Additional bores are provided in gasket -B- for locating pins. Furthermore, burner element -C- and corresponding glow plug with flame monitor -Q8- have also been modified ⇒ page 87*

– Remove auxiliary/additional heater ⇒ page 64 .

– Detach add-on components from auxiliary/additional heater ⇒ page 73 and ⇒ page 76

Protected by copyright. Copying for private or commercial purposes, in part or in whole, is not permitted unless authorised by AUDI AG. AUDI AG does not guarantee or accept any liability with respect to the correctness of information in this document. Copyright by AUDI AG.

– Detach cover for connector console and detach connector for combustion air blower from connector console ⇒ page 86 .

– Remove bolts -A-.

– Detach combustion air blower -B- from heater unit -E-.

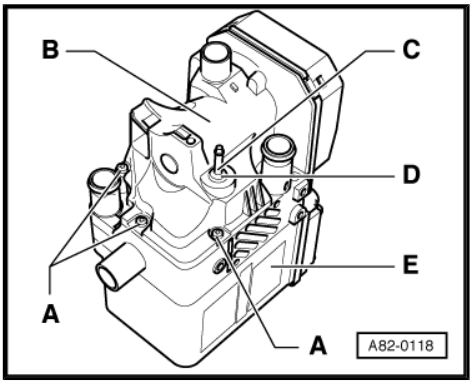

Note

- *Before fitting combustion air blower, replace moulded gasket (between combustion air blower and heater).*
- *When inserting the fuel pipe -C-, ensure that grommet -D- is properly seated in combustion air blower -B-.*

10.14 Removing and installing burner element

– Remove combustion air blower -V6- ⇒ page 87 .

– Remove bolts -A-.

– Pull burner element -B- with glow plug with flame monitor -Q8- upwards out of heater unit -C-.

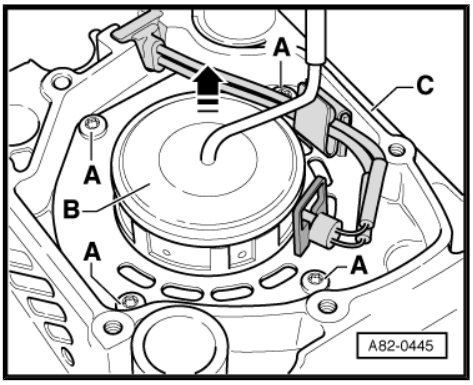

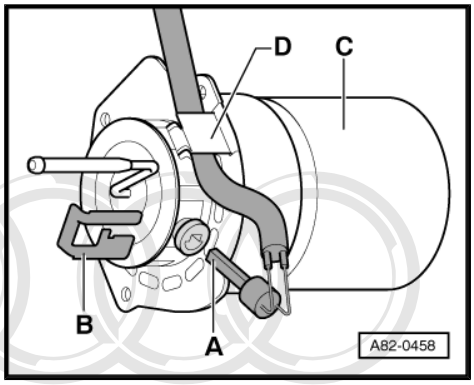

Note

- *Before installing burner element, replace moulded gasket (between burner element and heater).*
- *Remove glow plug with flame monitor -Q8- ⇒ page 88 .*
- *If burner element is defective, also replace glow plug with flame monitor -Q8- .*
- *Problems with auxiliary/additional heater operation may be encountered in cold weather on vehicles with diesel engines using predominantly vegetable-oil or rape-oil methylester as fuel ⇒ page 5 .*
- *Check the burner element and replace this as well in the event of a defective glow plug with flame monitor -Q8- if deposits have formed in the burner element which affect heater operation and cannot be removed with workshop equipment.*
- *As of 02.2003 modified auxiliary/supplementary heaters were gradually introduced ⇒ page 87 . These heaters feature a modified burner element -C-, a modified clip -B- (pay attention to correct installation position) and an appropriately adapted glow plug with flame monitor -Q8- -A-. Observe assignment; these components can only be installed together (no mixed installation possible). ⇒ Electronic parts catalogue*
- *Different replacement burner element versions are available (for attachment of the glow plug with flame monitor -Q8- with a screw or clip). Heed the assignment ⇒ page 88 and ⇒ Electronic parts catalogue .*
- *With certain restrictions, diesel fuel versions of burner element can also be designed for auxiliary/additional heater operation with vegetable-oil or rape-oil methylester fuels ⇒ page 5 . Replacement burner elements for diesel are available which are not designed for operation of auxiliary/additional heater with vegetable-oil or rape-oil fuels. Therefore, observe assignment. ⇒ Electronic parts catalogue*

Copyright. Copying for private or commercial purposes, in part or in whole, is not permitted unless authorised by AUDI AG. AUDI AG does not guarantee or accept any liability with respect to the correctness of information in this document. Copyright by AUDI AG.

10.15 Removing and installing glow plug with flame monitor -Q8-

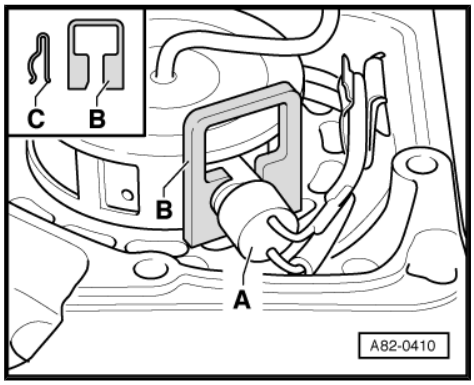

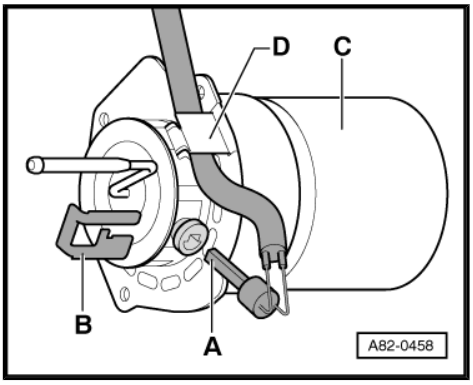

Note

- *Different burner element versions (for securing glow plug with flame monitor -Q8- using bolt or clamp) are available as replacement parts. ⇒ Electronic parts catalogue*
- *Clamp -B- dissipates the heat generated at the glow plug with flame monitor -Q8- better than clamp -C-; therefore, install only those burner elements in which glow plug is secured clamp -B-.*
- *As of 02.2003 modified auxiliary/supplementary heaters were gradually introduced at the factory with a burner element -C-, the clip -B- and the glow plug -A-. These components are adapted to one another and may only be installed together (no mixed installation permitted).*

– Remove burner element ⇒ page 87 .

– Remove clamp -B-.

– Pull glow plug with flame monitor -A- out of burner element.

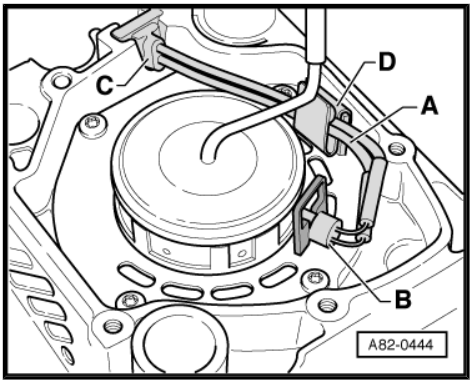

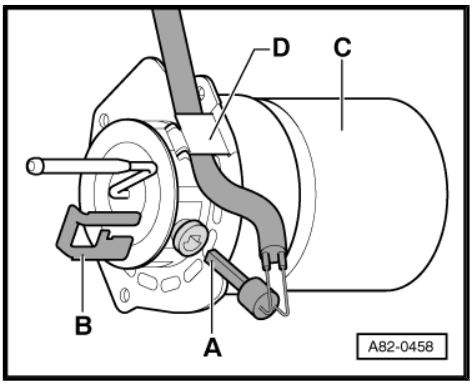

Protected by copyright. Copying for private or commercial purposes, in part or in whole, is not permitted unless authorised by AUDI AG. AUDI AG does not guarantee or accept any liability with respect to the correctness of information in this document. Copyright by AUDI AG.

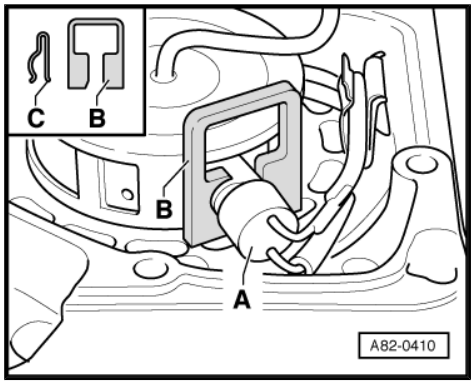

Note

- *Check burner element and also replace element in event of a defective glow plug with flame monitor -Q8- if deposits have formed in burner element which would affect operation and cannot be removed using workshop equipment.*
- *Observe secure attachment of clamp -B-.*
- *Route wiring -A- as shown and fix in position in clip -D-.*
- *Check for secure attachment of grommets -C- following installation.*
- *With the version gradually introduced as of 02.2003, pay attention to the correct installation position (see Fig.) and proper attachment of the clip -B-.*
- *Check non-insulated part of wiring to glow plug glow plug with flame monitor -Q8- -A- before installing combustion air blower. Wires must not contact each other or contact other components (danger of short circuit).*

Protected by copyright. Copying for private or commercial purposes, in part or in whole, is not permitted unless authorised by AUDI AG. AUDI AG does not guarantee or assume any liability with respect to the correctness of information in this document. Copyright by AUDI AG.

11 Block diagram of auxiliary/additional heater

Note

- *Incorporation of auxiliary/additional heater into vehicle electrics ⇒ Current flow diagrams, Electrical fault finding and Fitting locations*
- *Checking auxiliary/supplementary heater components ⇒ page 70 and ⇒ "Guided fault-finding" function of vehicle diagnostic, testing and information system VAS 5051*
- *At the start of production, the design of the supplementary heater control unit -J364- for the "Supplementary heater without auxiliary heater" version was the same as that of the auxiliary/supplementary heater control unit installed with the version for vehicles with diesel engine. At a later date, the "Supplementary heater without auxiliary heater" version may be fitted with control units no longer featuring certain functions for the "Supplementary heater without auxiliary heater" version (introduction not yet finalised) ⇒ Electronic parts catalogue*
- *Climatronic control unit -J255- is of different design for petrol and diesel versions (certain functions are set differently (e.g pre-heating times). ⇒ Electronic parts catalogue*

11.1 Incorporation of auxiliary/additional heater into vehicle electrics

Note

Incorporation of auxiliary/additional heater into vehicle electrics ⇒ Current flow diagrams, Electrical fault finding and Fitting locations

Protected by copyright. Copying for private or commercial purposes, in part or in whole, is not permitted unless authorised by AUDI AG. AUDI AG does not guarantee or accept any liability with respect to the correctness of information in this document. Copyright by AUDI AG.

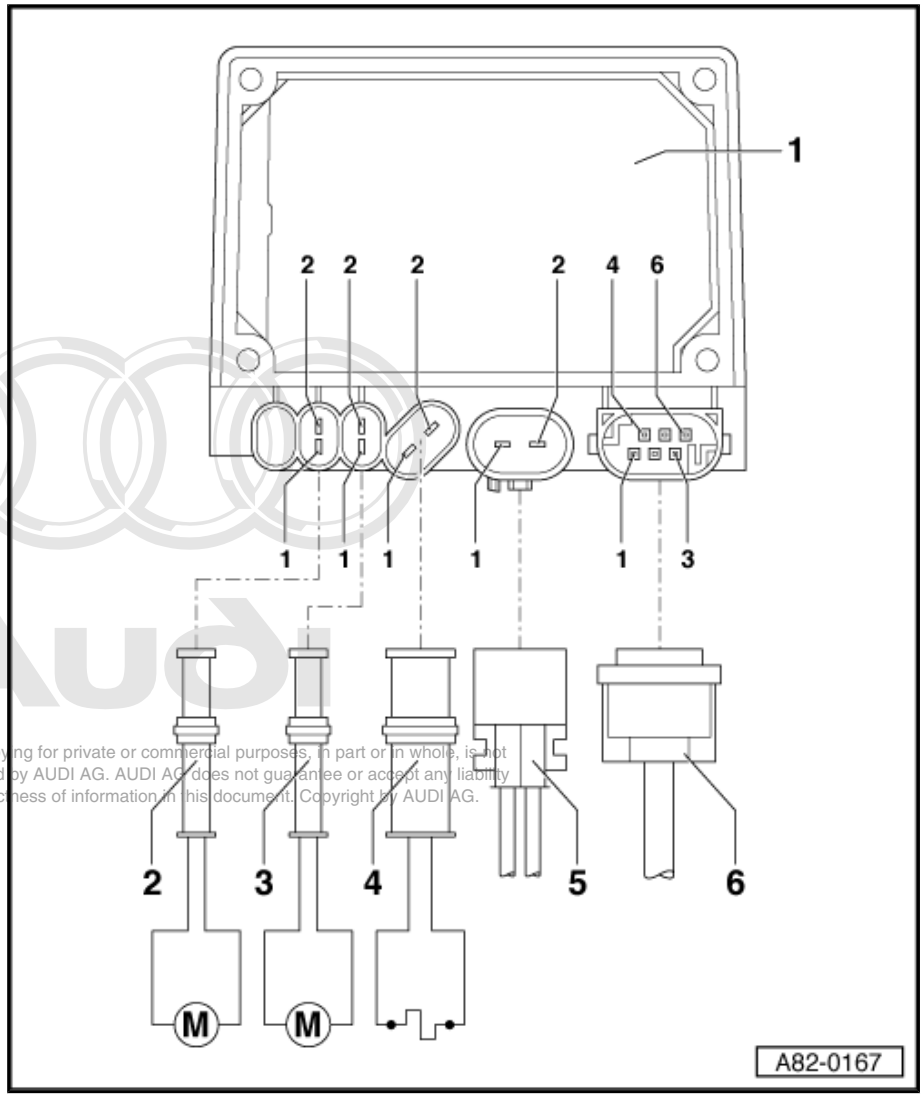

1 - Additional heater control unit -J364- with connector console

- ❑ Control unit is fitted with temperature sensors for determining coolant temperature and to safeguard against overheating
- ❑ Additional heater control unit -J364- design may vary between auxiliary/additional heater and additional heater (without auxiliary heater; additional heater version does not feature certain functions).
- ❑ Additional heater control unit -J364- is connected to burner housing/heat exchanger and is not to be replaced as individual component at present.

2 - Circulation pump -V55-

- ❑ Only fitted on auxiliary/additional heater version
- ❑ Not fitted on vehicles with additional heater (without “Auxiliary heater” optional extra).

Protected by copyright. Copying for private or commercial purposes, in part or in whole, is not permitted unless authorised by AUDI AG. AUDI AG does not guarantee or accept any liability whatsoever for the correctness of information in this document. Copyright by AUDI AG.

3 - Combustion air blower -V6-

4 - Glow plug with flame monitor -Q8-

5 - 2-way connector

- ❑ Contact 1
- – Power supply, terminal 30 (via fuse)
- ❑ Contact 2
- – Earth connection

6 - 6-way connector

- ❑ Contact 1
- – Signal wire from auxiliary heating radio receiver -R64-
- – Not used on additional heater version (fitted on vehicles with diesel engine without “Auxiliary heater” optional extra).
- ❑ Contact 2
- – Signal wire to convenience data bus system (CAN high) ⇒ Current flow diagrams, Electrical fault finding and Fitting locations
- ❑ Contact 3
- – Signal wire to convenience data bus system (CAN low) ⇒ Current flow diagrams, Electrical fault finding and Fitting locations
- ❑ Contact 4
- – Actuation of heater coolant shutoff valve -N279-

– Not used on additional heater version (fitted on vehicles with diesel engine without “Auxiliary heater” optional extra).

❑ Contact 5

– Not used at present

❑ Contact 6

– Actuation of metering pump -V54-

– Metering pump delivery rate is controlled by frequency of square-wave signal (number of voltage pulses per sec.).

11.2 Fitting location of temperature sensor - G18- in auxiliary/additional heater

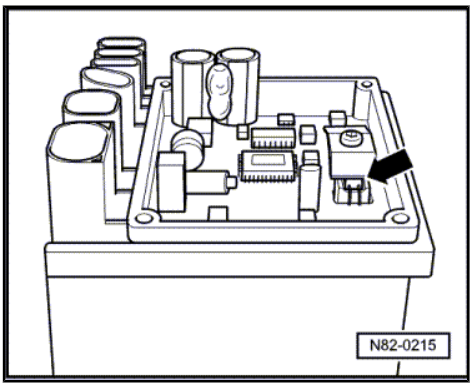

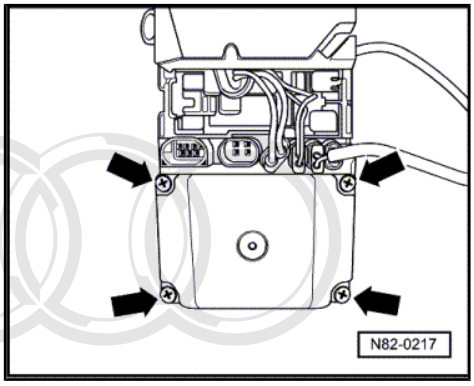

Note

- *Temperature sensor -G18- -arrow- is attached directly to additional heater control unit -J364- and cannot be replaced separately.*
- *Clip pre-tensions temperature sensor -G18- -arrow- against burner housing (heat transfer is ensured due to pre-tension).*
- *Moulded gaskets provide seal between cover, frame of additional heater control unit -J364- and burner housing. These connections must be absolutely leakproof and are thus checked for leaks during auxiliary/additional heater production. As checking cannot be performed as part of service work, bolts -arrows- of control unit cover must not be removed. This is also the reason why additional heater control unit -J364- cannot currently be replaced as a separate component.*

Protected by copyright. Copying for private or commercial purposes, in part or in whole, is not permitted unless authorised by AUDI AG. AUDI AG does not guarantee or accept any liability with respect to the correctness of information in this document. Copyright by AUDI AG.

12 Block diagram of auxiliary/additional heater actuation with remote control

Note

- *At present, the remote control is only available for vehicles with "auxiliary heater" optional extra or with "auxiliary/supplementary heater" optional extra.*
- *The remote control receiver for auxiliary heater -R64- is installed in the passenger compartment on the left in the direction of travel beneath the trim in the area next to the seat backrest ⇒ page 99 and ⇒ Communication; Rep. Gr. 91 .*
- *Auxiliary heater remote control hand transmitter only transmits on/off signal. Whether auxiliary heating mode is necessary to attain the specified temperatures set in the front operating and display unit, Climatronic control unit -J255- or whether auxiliary ventilation mode is sufficient is determined by the front operating and display unit, Climatronic control unit -J255- on the basis of the actual temperatures measured and the specified temperature set ⇒ Air conditioning; Rep. Gr. 87 .*
- *There are different versions of the auxiliary heater remote control and of the auxiliary/supplementary heater. Exclusive use was made up to 05.2004 of the Telestart "T70" remote control version. As of 05.2004 the Telestart "T90" version was gradually introduced instead. In Model Year 2008 production is gradually being switched from the Telestart "T90" version of the remote control to the Telestart "T91" type ⇒ page 10 and ⇒ Electronic parts catalogue . To enable the auxiliary/supplementary heater to implement the additional functions of the Telestart "T90" / "T91" (feedback of confirmation of reception of activation and deactivation signals), use is made of a modified remote control receiver for auxiliary heater -R64- and a modified auxiliary/supplementary heater ⇒ Electronic parts catalogue . As of part number 4E0 265 081 with index "J" (as of hardware and software number "0710"), the auxiliary/supplementary heater is designed for the Telestart "T90" / "T91" remote control ⇒ "Guided fault-finding" function of vehicle diagnostic, testing and information system VAS 5051.*
- *Different auxiliary heater remote control hand transmitter versions are available (Telestart "T90" / "T91" and "T70"). The Audi A8 is only to be fitted with the version approved for this vehicle ⇒ page 16 and ⇒ Electronic parts catalogue .*

This document is for internal use only. Any commercial use, in part or in whole, is not permitted. Audi AG does not guarantee or accept any liability with respect to the correctness of information in this document. Copyright by AUDI AG.

Depending upon decision of front operating and display unit (Climatronic control unit -J255-)

- The front operating and display unit, Climatronic control unit -J255- starts up without transmitting a request for activation of the auxiliary heater via the convenience data bus system to the supplementary heater control unit -J364- (auxiliary ventilation mode).
- The front operating and display unit, Climatronic control unit -J255- transmits the request for activation of the auxiliary heater via the convenience data bus system to the supplementary heater control unit -J364- . Additional heater control unit -J364- activates auxiliary heater and, as soon as coolant temperature in auxiliary heater exceeds approx. 30 °C, provides feedback to front operating and display unit (Climatronic control unit -J255-) which starts up.
- On vehicles fitted with a remote control receiver for auxiliary heater -R64- of the Telestart "T90" / "T91" type, the supplementary heater control unit -J364- provides the remote control

hand transmitter with feedback ⇒ Owner's manual and ⇒ "Guided fault-finding" function of vehicle diagnostic, testing and information system VAS 5051.

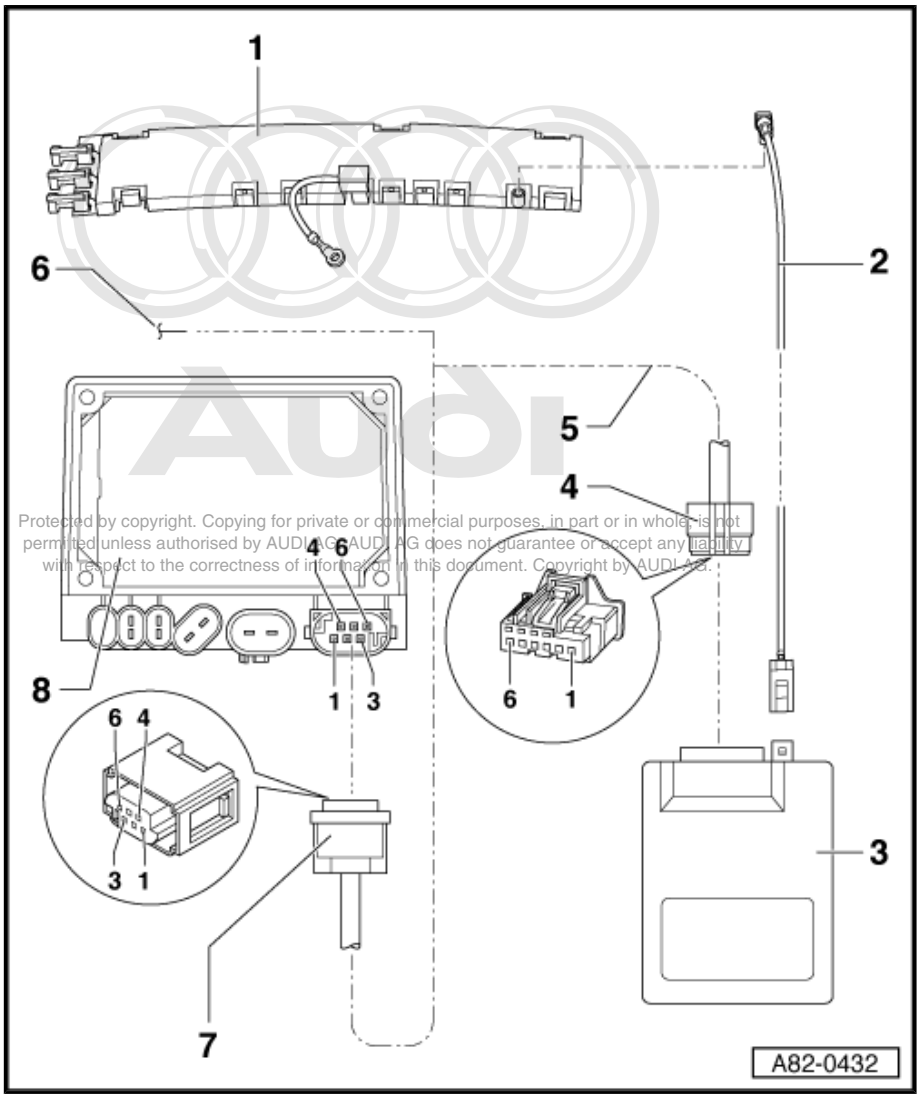

Protected by copyright. Copying for private or commercial purposes, in part or in whole is not permitted unless authorised by AUDI AG. AUDI AG does not guarantee or accept any liability with respect to the correctness of information in this document. Copyright by AUDI AG.

1 - Rear window aerial module

- The designation in the current flow diagram depends on the vehicle equipment (e.g. aerial amplifier -R24-) ⇒ Current flow diagrams, Electrical fault finding and Fitting locations
- Depending on version, vehicles with auxiliary heater remote control have an additional output ⇒ Electronic parts catalogue
- Depending on version, connection for auxiliary heater may, for example, be marked “TS” for Telestart
- Fitting location ⇒ Communication; Rep. Gr. 91
- Depending on vehicle equipment, the remote control receiver for auxiliary heater -R64- may be connected to an additional roof aerial instead of to the aerial in the rear window (via the aerial amplifier -R24-) ⇒ Communication; Rep. Gr. 91 .

2 - Aerial wire from aerial module to auxiliary heating radio receiver -R64-

3 - Auxiliary heating radio receiver -R64-

- Fitting location, removing and installing ⇒ page 99
- Transmits appropriate information to additional heater control unit -J364- on receipt of radio signals (activation or deactivation of auxiliary heating/auxiliary ventilation).
- Different versions: A Telestart “T70” remote control receiver was fitted at the start of production. A Telestart “T90” remote control receiver was gradually introduced as of 05.2004. In Model Year 2008 production is gradually being switched from the Telestart “T90” version of the remote control to the Telestart “T91” type ⇒ page 10 and ⇒ Electronic parts catalogue .
- The Telestart “T90” / “T91” version can be deactivated by the supplementary heater control unit -J364- (thus reducing the no-load current input).
- In the case of auxiliary/supplementary heaters with a supplementary heater control unit -J364- with data level “0250” (hardware/software version), the fault “Link with remote control - implausible signal” may erroneously be displayed. If applicable, check the encoding of the supplementary heater control unit -J364- and operation of the remote control. If no fault is found, erase the fault memory (this fault then has no influence on operation of the auxiliary/supplementary heater).
- Adaption of the remote control receiver version is to be performed in the supplementary heater control unit -J364- (“Adaption” function) ⇒ "Guided fault-finding" function of vehicle diagnostic, testing and information system VAS 5051.
- If auxiliary heater is switched off due to undervoltage of energy management control unit -J644- in vehicles fitted with “Telestart T70” receiver, additional heater control unit -J364- additionally stores fault “No auxiliary heating radio receiver communication”.

- ❑ Checking signals from the remote control receiver for auxiliary heater -R64- ⇒ "Guided fault-finding" function of vehicle diagnostic, testing and information system VAS 5051 (reading measured value block).

Note

- ♦ *The remote control hand transmitter is adapted in the remote control receiver for auxiliary heater -R64- and not in the supplementary heater control unit -J364- ⇒ "Guided fault-finding" function of vehicle diagnostic, testing and information system VAS 5051.*
- ♦ *The signals from the remote control hand transmitter are only relayed by the remote control receiver for auxiliary heater -R64- . The signals are then processed by the supplementary heater control unit -J364- ⇒ "Guided fault-finding" function of vehicle diagnostic, testing and information system VAS 5051 (reading measured value block).*
- ♦ *Depending on vehicle equipment, the remote control receiver for auxiliary heater -R64- may be connected to an additional roof aerial instead of to the aerial in the rear window (via the aerial amplifier -R24-) ⇒ Communication; Rep. Gr. 91 .*

4 - 6-pin connector to auxiliary heating radio receiver -R64-

- ❑ Contact 1
- – Power supply (terminal “30”)

Protected by copyright. Copying for private or commercial purposes, in part or in whole, is not permitted unless authorised by AUDI AG. AUDI AG does not guarantee or accept any liability with respect to the correctness of information in this document. Copyright by AUDI AG.

- ❑ Contact 2
- – Signal wire to auxiliary/additional heater (to additional heater control unit -J364-)
- – Checking output for activation and deactivation signal to the supplementary heater control unit -J364- ⇒ "Guided fault-finding" function of vehicle diagnostic, testing and information system VAS 5051 (reading measured value block)
- – If the remote control receiver is in energy saving mode, no signal is supplied after/on pressing the remote control hand transmitter ON or OFF button ⇒ "Guided fault-finding" function of vehicle diagnostic, testing and information system VAS 5051 (reading measured value block).
- ❑ Contacts 3, 4 and 5
- – Vacant
- ❑ Contact 6
- – Earth

5 - Wiring to additional heater control unit -J364-

- ❑ Incorporated into vehicle wiring harness ⇒ Current flow diagrams, Electrical fault finding and Fitting locations

6 - Connection to vehicle wiring harness

- ❑ Incorporation into vehicle electrical system ⇒ Current flow diagrams, Electrical fault finding and Fitting locations

7 - 6-pin connector to additional heater control unit -J364-

- ❑ Contact 1

– Signal wire from remote control receiver for auxiliary heater -R64- (input for activation and deactivation signal in supplementary heater control unit -J364-) ⇒ "Guided fault-finding" function of vehicle diagnostic, testing and information system VAS 5051 (reading measured value block)

– If the remote control receiver is in energy saving mode, no signal is supplied after/on pressing the remote control hand transmitter ON or OFF button ⇒ "Guided fault-finding" function of vehicle diagnostic, testing and information system VAS 5051 (reading measured value block).

– Electrical checking at the connector ⇒ page 34 and ⇒ "Guided fault-finding" function of vehicle diagnostic, testing and information system VAS 5051

❑ Further pin assignment ⇒ page 34 and ⇒ Current flow diagrams, Electrical fault finding and Fitting locations

8 - Additional heater control unit -J364-

❑ Adaption of remote control hand transmitter via the supplementary heater control unit -J364- ⇒ "Guided fault-finding" function of vehicle diagnostic, testing and information system VAS 5051

❑ If auxiliary heating/auxiliary ventilation is operated via remote control, front operating and display unit (Climatronic control unit -J255-) determines whether “Auxiliary heater” or “Auxiliary ventilation” mode is activated.

❑ Remote control adaption is performed in the remote control receiver for auxiliary heater -R64- . If this is replaced, all remote control hand transmitters must be consecutively re-adapted ⇒ "Guided fault-finding" function of vehicle diagnostic, testing and information system VAS 5051.

❑ Different models depending on the version of the remote control (Telestart “T70” or “T90” / “T91”) ⇒ Electronic parts catalogue

Protected by copyright. Copying for private or commercial purposes, in part or in whole, is not permitted unless authorised by AUDI AG. AUDI AG does not guarantee or accept any liability with respect to the correctness of information in this document. Copyright by AUDI AG.

Note

- *In Model Year 2008 production is gradually being switched from the Telestart “T90” version of the remote control to the Telestart “T91” type ⇒ page 10 and ⇒ Electronic parts catalogue .*
- *At present, a maximum of 3 remote controls can be adapted in the remote control receiver for auxiliary heater -R64- . Adaption of a fourth remote control causes the first matched remote control to be erased.*
- *The signals from the remote control hand transmitter are only relayed by the remote control receiver for auxiliary heater -R64- . The signals are then processed by the supplementary heater control unit -J364- ⇒ "Guided fault-finding" function of vehicle diagnostic, testing and information system VAS 5051 (reading measured value block).*
- *The remote control receiver for auxiliary heater -R64- can be deactivated by the supplementary heater control unit -J364- (thus reducing the no-load current input) ⇒ "Guided fault-finding" function of vehicle diagnostic, testing and information system VAS 5051 (reading measured value block).*
- *Checking signals from the remote control receiver for auxiliary heater -R64- ⇒ "Guided fault-finding" function of vehicle diagnostic, testing and information system VAS 5051 (reading measured value block).*

Protected by copyright. Copying for private or commercial purposes, in part or in whole, is not permitted unless authorised by AUDI AG. AUDI AG does not guarantee or accept any liability with respect to the correctness of information in this document. Copyright by AUDI AG.

12.1 Fitting location for auxiliary heating radio receiver -R64-

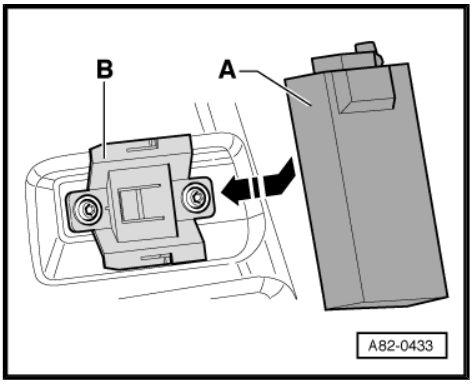

Note

- *The remote control receiver -A- is installed in the passenger compartment on the left in the direction of travel beneath the trim in the area of the "C" pillar next to the rear seat backrest ⇒ Communication; Rep. Gr. 91 .*
- *There are different versions of the remote control receiver for auxiliary heater -R64- . The Telestart "T70" version was fitted at the start of production. The Telestart "T90" version was gradually introduced as of 05.2004. In Model Year 2008 production is gradually being switched from the Telestart "T90" version of the remote control to the Telestart "T91" type ⇒ page 10 and ⇒ Electronic parts catalogue .*
- *Radio receiver -A- is clipped into mount -B-.*
- *Remove "C" pillar trim. ⇒ Body Repairs; Rep. Gr. 70*
- *On vehicles fitted with a remote control receiver for auxiliary heater -R64- of the Telestart "T90" type (gradual introduction from 05.2004 to Model Year 2008) or of the Telestart "T91" type (gradual introduction in Model Year 2008), the supplementary heater control unit -J364- provides the remote control hand transmitter with feedback ⇒ Owner's manual and ⇒ "Guided fault-finding" function of vehicle diagnostic, testing and information system VAS 5051.*
- *Adaption of the remote control receiver version is to be performed in the supplementary heater control unit -J364- (Telestart "T70" and Telestart "T90" / "T91" versions) ⇒ "Guided fault-finding" function of vehicle diagnostic, testing and information system VAS 5051.*
- *The Telestart "T90" / "T91" version can be deactivated by the supplementary heater control unit -J364- (thus reducing the no-load current input) ⇒ "Guided fault-finding" function of vehicle diagnostic, testing and information system VAS 5051.*
- *The no-load current input of the remote control receivers (Telestart "T70" and Telestart "T90" / "T91" versions) is less than 1 mA (the current input increases as soon as a transmission signal is received).*
- *Remote control hand transmitter adaption is performed in the remote control receiver for auxiliary heater -R64- . If the remote control receiver for auxiliary heater -R64- is replaced, all remote control hand transmitters must be consecutively re-adapted ⇒ "Guided fault-finding" function of vehicle diagnostic, testing and information system VAS 5051.*
- *Depending on vehicle equipment, the remote control receiver for auxiliary heater -R64- may be connected to an additional roof aerial instead of to the aerial in the rear window (via the aerial amplifier -R24-) ⇒ Communication; Rep. Gr. 91 and ⇒ Current flow diagrams, Electrical fault finding and Fitting locations.*

Protected by copyright. Copying for private or commercial purposes, in part or in whole, is not permitted unless authorised by AUDI AG. AUDI AG does not guarantee or accept any liability with respect to the correctness of information in this document. Copyright by AUDI AG.

Protected by copyright. Copying for private or commercial purposes, in part or in whole, is not permitted unless authorised by AUDI AG. AUDI AG does not guarantee or accept any liability with respect to the correctness of information in this document. Copyright by AUDI AG.

13 Functional description of auxiliary/ additional heater

Note

- *The temperature sensor (for the coolant temperature in the heater) is permanently installed (in the additional heater control unit -J364-) (cannot be checked or removed).*
- *Auxiliary/additional heater is switched on and off via data bus system by MMI (Multi Media Interface) or front operating and display unit (Climatronic control unit -J255- .*
- *If "auxiliary heating/auxiliary ventilation" function has been set via "Timer" function in MMI (Multi Media Interface) or if auxiliary heating/auxiliary ventilation is activated via remote control, air conditioner front operating and display unit (Climatronic control unit -J255-) determines on the basis of set "specified temperatures" and measured "actual temperature" whether auxiliary heater is switched on or only "auxiliary ventilation" function is activated.*
- *On vehicles in which auxiliary/additional heater is actuated as additional heater (currently only vehicles with diesel engine), actuation is implemented by air conditioner front control and display unit (Climatronic control unit -J255- ,(via data bus system) if additional heating output is required to attain set temperature in passenger compartment. This "Supplementary heating" function can be deactivated by the driver via the MMI if no additional heat output is required.*
- *Heater may remain in full load/part load operation (control mode) or control interval for lengthy periods depending on amount of heat generated in auxiliary/additional heater (and engine) and supplied by heat exchangers of air conditioner unit.*
- *Circulation pump -V55- can be activated to assist engine coolant pump even with auxiliary/additional heater switched off* *⇒ page 61* .
- *To ensure best possible combustion in heater, metering pump -V54- (clock frequency) and combustion air blower -V6- (voltage) are regulated over the entire sequence.*
- *The temperatures given in the functional sequence and function chart are approximate.*
- *If the heater has been interlocked (fully deactivated) on account of a fault (e.g. flame interruption or overheating), it cannot be re-activated until the fault memory has been read out, the content of the fault memory erased and - depending on the cause of the trouble - the interlock cancelled by way of the "Adaption" function ⇒ "Guided fault-finding" function of vehicle diagnostic, testing and information system VAS 5051.*
- *If first attempted start does not produce a flame, additional heater control unit -J364- terminates sequence and attempts another start after any combustion residue has been blown out with combustion air blower -V6- . Additional heater control unit -J364- is deactivated if repeated starting also fails to produce a flame.*
- *If the heater is to be switched off during the start procedure, the instantaneous position reached in the start sequence governs whether the heater is switched off immediately or whether run-on is necessary. (burning off, cooling down).*
- *The heater switches to control interval if the coolant temperature exceeds 81 °C before reaching full-load mode (e.g. with a hot engine).*
- *Various auxiliary/supplementary heater functions are constantly monitored during operation (the auxiliary/supplementary heater is switched off as soon as a fault occurs).*
- *Auxiliary/additional heating operation can be monitored via*

Copyright by AUDI AG. Reproduction for private or commercial purposes, in part or in whole, is not permitted. Please observe the legal notes at www.audi.com. AUDI AG does not guarantee or accept any liability with respect to the correctness of information in this document. Copyright by AUDI AG.

Note

- *As additional heater can only be switched on with engine running, circulation pump -V55- is not necessary. Circulation pump does however operate in additional heater mode if vehicle is fitted with auxiliary/additional heater.*
- *As the additional heater only operates when the engine is running, it is scarcely perceptible in heating mode. Heater run-on is audible if engine is switched off.*

13.1 Sequence of operation

13.1.1 Prerequisites for sequence described on the following pages (when switching on heater):

- Coolant circuit bled and coolant temperature less than 20 °C
- Battery -A- (vehicle battery) sufficiently charged
- Sufficient fuel in tank.
- No faults stored in fault memory of heater
- Ignition off and “auxiliary heating” mode set (heater with circulation pump -V55-).
- Engine running (heater without circulation pump -V55- , additional heater)

Note

- *Only the main items in the function sequence are presented on the following pages. Sequences taking place in the background are marked with a “ ”and perceptible sequences (audible or measurable)with “•”*
- *As the supplementary heater is only switched on at ambient temperatures below + 5 °C, it must be activated by way of the vehicle diagnostic, testing and information system -VAS 5051 A- (“Basic setting” function) for the procedure described on the following pages ⇒ "Guided fault-finding" function of vehicle diagnostic, testing and information system VAS 5051.*

No.	Control sequence	Possible cause of deviation	Continuation of sequence following deviation
1	Cut-in signal		
	Auxiliary heater • From front operating and display unit (Climatronic control unit -J255-) (via data bus system; setting is made on MMI) • From radio receiver -R64- – Front operating and display unit (Climatronic control unit -J255-) interrogation (via data bus system)	Front operating and display unit (Climatronic control unit -J255-) decides heating mode is not required to attain specified temperature in passenger compartment	Auxiliary ventilation (summer mode) ⇒ page 108

Protected by copyright. Copying for private or commercial purposes, in part or in whole, is not permitted unless authorised by AUDI AG. AUDI AG does not guarantee or accept any liability with respect to the correctness of information in this document. Copyright by AUDI AG.

No.	Control sequence	Possible cause of deviation	Continuation of sequence following deviation
	Additional heater • From front operating and display unit (Climatronic control unit -J255-) interrogation (via data bus system) • From Vehicle diagnostic, testing and information system -VAS 5051 A- (via basic setting function)		

No.	Control sequence	Possible cause of deviation	Continuation of sequence following deviation
2	Initiation of start procedure		
	– Interrogation of fault memory	– Fault interlock entered	– Termination of starting procedure/fault/off
	– Interrogation of voltage at heater	– Voltage is or becomes lower than specified cut-out voltage	– Termination of starting procedure (entry in fault memory)/fault/off
	– Interrogation of information from energy management control unit -J644-		
	– Monitoring of all electrical components and input signals.	– Fault detected	– see above
	– Interrogation of glow plug with flame monitor -Q8-	– Resistance of glow plug with flame monitor -Q8- outside specified range	– see above
	– Interrogation of coolant temperature in heater (less than 81 °C)	– Coolant temperature (greater than 81 °C)	– Switching to control interval ⇒ page 105

Protected by copyright. Copying for private or commercial purposes, in part or in whole, is not permitted unless authorised by AUDI AG. AUDI AG does not guarantee or assume any liability with respect to the correctness of information in this document. Copyright by AUDI AG.

No.	Control sequence	Possible cause of deviation	Continuation of sequence following deviation
3	Start		
	– Monitoring as for no. 2	⇒ page 103	⇒ page 103
	• Circulation pump -V55- on (with auxiliary/additional heater) • Actuation of front operating and display unit (Climatronic control unit -J255-) on (auxiliary heater only) – As soon as coolant temperature exceeds +30 °C		

No.	Control sequence	Possible cause of deviation	Continuation of sequence following deviation
	• Actuation of glow plug with flame monitor -Q8- (regulated) • Actuation of combustion air blower -V6- (regulated) • Actuation of metering pump -V54- (regulated) • Actuation of coolant shutoff valve -N279- (regulated, auxiliary heater only) Stabilisation time • Start of full load heating • Switching of glow plug with flame monitor -Q8- from glow plug to flame monitor	Resistance of glow plug with flame monitor -Q8- outside specified range	⇒ page 103
	– Interrogation of resistance of glow plug with flame monitor -Q8- (remains hot)	Resistance of glow plug with flame monitor -Q8- outside specified range even after start repetition	Termination of starting procedure (1 x repeated starting) ⇒ page 103 Termination of starting procedure (entry in fault memory)/fault/off

Note

- *"Start" sequence ⇒ page 109 .*
- *Actuation of circulation pump -V55- is governed by encoding and adaption.*
- *Actuation of heater coolant shutoff valve -N279- is temperature-dependent ⇒ page 112 .*

No.	Control sequence	Possible cause of deviation	Continuation of sequence following deviation
4	Full load heating (max. heating output)		
	– Monitoring as for no. 2	⇒ page 103	⇒ page 103
	– Voltage (at heater) remains in excess of that required	– Voltage drops below specified cut-out voltage	– Burn-off (entry in fault memory)/fault/off
	– No interruption of heating	– Flame goes out	– Burn-off and re-start ⇒ page 103
	– Coolant temperature increases and reaches 75 °C	– Coolant temperature remains below 75 °C	– Heater remains in full load mode until switched off

Note

"Full and partial load operation" sequence ⇒ page 109

Protected by copyright. Copying for private or commercial purposes, in part or in whole, is not permitted unless authorised by AUDI AG. AUDI AG does not guarantee or accept any liability with respect to the correctness of information in this document. Copyright by AUDI AG.

No.	Control sequence	Possible cause of deviation	Continuation of sequence following deviation
5	Part load heating (approx. 50% of heating output)		
	– Monitoring as for no. 4	⇒ page 104	⇒ page 104
	• Actuation of metering pump -V54- with reduced clock frequency • Actuation of combustion air blower -V6- at reduced voltage	– Coolant temperature remains between 73 and 81 °C	– Heater remains in part load operation until switched off
		– Coolant temperature drops below 73 °C	– Switching from part load to full load operation ⇒ page 104
	– Coolant temperature increases and reaches 81 °C ⇒ page 105		

Note

"Full and partial load operation" sequence ⇒ page 109 .

Protected by copyright. Copying for private or commercial purposes, in part or in whole, is not permitted unless authorised by AUDI AG. AUDI AG does not guarantee or accept any liability with respect to the correctness of information in this document. Copyright by AUDI AG.

No.	Control sequence	Possible cause of deviation	Continuation of sequence following deviation
6	Burn-off/run-on		
	– Monitoring as for no. 2	⇒ page 103	⇒ page 103
	• Metering pump -V54- off • Actuation of combustion air blower -V6- at regulated voltage • Actuation of glow plug with flame monitor -Q8- (post-glow, regulated) • Actuation of glow plug with flame monitor -Q8- off		
	– Interrogation of resistance of glow plug with flame monitor -Q8- (becomes colder) ⇒ page 105	Resistance of glow plug with flame monitor -Q8- outside specified range	Burn-off (entry in fault memory)/fault/off

Note

"Burn-off/run-on" sequence ⇒ page 110 .

No.	Control sequence	Possible cause of deviation	Continuation of sequence following deviation
7	Control interval		
	– Monitoring as for no. 2	⇒ page 103	⇒ page 103

No.	Control sequence	Possible cause of deviation	Continuation of sequence following deviation
	– Coolant temperature drops below 77 °C ⇒ page 106	– Coolant temperature continues to increase (engine runs and heats up coolant) – Coolant temperature remains between 77 and 81 °C – The coolant temperature rises above 125 °C for a certain time or briefly above 135° C	– Heater remains in control interval until switched off – Fault (entry in fault memory)/ off/fault interlock

No.	Control sequence	Possible cause of deviation	Continuation of sequence following deviation
8	Starting from control interval		
	– Monitoring as for no. 2	⇒ page 103	⇒ page 103
	• Actuation of glow plug with flame monitor -Q8- (regulated) • Actuation of combustion air blower -V6- (regulated) • Actuation of metering pump -V54- (regulated) Stabilisation time • Start of full or part-load heating (depending on coolant temperature) • Switching of glow plug with flame monitor -Q8- from glow plug to flame monitor		
	– Interrogation of resistance of glow plug with flame monitor -Q8- (remains hot)	Resistance of glow plug with flame monitor -Q8- outside specified range Resistance of glow plug with flame monitor -Q8- outside specified range also after repeated starting	Termination of starting procedure (1 x repeated starting) ⇒ page 103 Termination of starting procedure (entry in fault memory)/fault/off
	– Heating (then as for no. 4)		

Note

The starting procedure from the control interval corresponds to that on initial activation ⇒ page 109 . However, as the heater has already attained operating temperature, the times for the various sequences differ from those on initial activation (e.g. pre-heating 20 instead of 40 sec., fuel conveyed for 30 instead of 56 sec.).

No.	Control sequence	Possible cause of deviation	Continuation of sequence following deviation
9	Switch off		

Protected by copyright. Copying for private or commercial purposes, in part or in whole, is not permitted unless authorised by AUDI AG. AUDI AG does not guarantee or accept any liability with respect to the correctness of information in this document. Copyright by AUDI AG.

No.	Control sequence	Possible cause of deviation	Continuation of sequence following deviation
	Auxiliary heater • Shutoff signal from front operating and display unit (Climatronic control unit -J255-) (via data bus system; setting is made on MMI) • Shutoff signal from radio receiver -R64-		
	Additional heater • Shutoff signal from front operating and display unit (Climatronic control unit -J255-) interrogation (via data bus system) • Shutoff signal from Vehicle diagnostic, testing and information system -VAS 5051 A- (via basic setting function)		

Protected by copyright. Copying for private or commercial purposes, in part or in whole, is not permitted unless authorised by AUDI AG. AUDI AG does not guarantee or accept any liability with respect to the correctness of information in this document. Copyright by AUDI AG.

Note

- *In "auxiliary heating mode", auxiliary/additional heater is deactivated automatically after max. 60 minutes by MMI or by operating and display unit (Climatronic control unit -J255-). Auxiliary heater/auxiliary ventilation operating time is set on MMI (Multi Media Interface).*
- *If heater is in control interval when switched off, it cuts out without burn-off and run-on.*
- *"Burn-off/run-on" sequence* ⇒ page 110 .

No.	Control sequence	Possible cause of deviation	Continuation of sequence following deviation
10	Burn-off		
	– Monitoring as for no. 2	⇒ page 103	⇒ page 103
	• Metering pump -V54- off • Circulation pump -V55- off • Actuation of front operating and display unit (Climatronic control unit -J255-) off • Actuation of combustion air blower -V6- at regulated voltage • Actuation of glow plug with flame monitor -Q8- (post-glow, regulated) • Actuation of glow plug with flame monitor -Q8- off		

No.	Control sequence	Possible cause of deviation	Continuation of sequence following deviation
	– Interrogation of resistance of glow plug with flame monitor -Q8- (becomes colder) • OFF	Resistance of glow plug with flame monitor -Q8- outside specified range	Burn-off (entry in fault memory)/fault/off

No.	Control sequence	Possible cause of deviation	Continuation of sequence following deviation
11	Auxiliary ventilation (with auxiliary/additional heater only)		
	Cut-in signal • From radio receiver -R64- – Front operating and display unit (Climatronic control unit -J255-) interrogation (via data bus system) • Front operating and display unit (Climatronic control unit -J255- interrogation (via data bus system) • Auxiliary ventilation mode	Front operating and display unit (Climatronic control unit -J255-) decides heating mode is not required to attain specified temperature in passenger compartment	Auxiliary heating (winter mode) ⇒ page 102
	Cut-out signal • From radio receiver -R64- – Information to front operating and display unit (Climatronic control unit -J255-) (via data bus system) • Actuation of front operating and display unit (Climatronic control unit -J255-) off.		

Protected by copyright. Copying for private or commercial purposes, in part or in whole, is not permitted unless authorised by AUDI AG. AUDI AG does not guarantee or accept any liability with respect to the correctness of information in this document. Copyright by AUDI AG.

Note

- *In auxiliary ventilation mode, the supplementary heater control unit -J364- is only required to switch the signal from the remote control receiver for auxiliary heater -R64- to the data bus system.*
- *If auxiliary ventilation mode has been set in MMI (Multi Media Interface) or if front operating and display unit (Climatronic control unit -J255-) has decided that auxiliary heating mode is not required to achieve specified temperature in passenger compartment, additional heater control unit -J364- is not actuated.*

13.1.2 “Heater starting” sequence

Sequence	Duration approx.	Actuation			Resistance measurement
		Combustion air blower - V6- with	Metering pump - V54- with	Glow plug with flame monitor - Q8- with	Glow plug with flame monitor -Q8-
– Commence starting sequence	-	0 V	0 Hz	0 V	no
– Flame detector interrogation	1 second	8 V	0 Hz	0 V	yes
• Preheating	40 seconds	8 V	0 Hz	10 V	no
• Fuel pre-supply	3 seconds	0 V	2 Hz	9 V	no
• Fuel delivery	56 seconds	2 to 5 V	1 Hz	9 V	no
– Stabilisation time	15 seconds	5 V	1 Hz	9 V	no
• Fuel delivery	50 seconds	4 to 12 V	1 to 3 Hz	9 V	no
– Flame detector interrogation	45 seconds	12 V	3 Hz	0 V	yes
– End of starting sequence – Start of “Full-load” combustion ⇒ page 109					

Note

- *1 Hertz (Hz) corresponds to 1 pulse per second*
- *The voltages, times and frequencies listed in the table are approximate values regulated by the control unit on the basis of measured values (voltage, temperature etc.).*

13.1.3 “Heater full/part load heating” sequence

Sequence	Duration approx.	Actuation			Resistance measurement
		Combustion air blower - V6- with	Metering pump - V54- with	Glow plug with flame monitor - Q8- with	Glow plug with flame monitor -Q8-
– End of starting sequence	-	12 V	3 Hz	0 V	yes
– Full load combustion	Until coolant temperature in heater reaches 75 °C	12 V	3 Hz	0 V	yes
• Switching from full load to part load mode	5 seconds	from 12 V to 7 V	from 3 Hz to 1.5 Hz	0 V	yes
• Part load heating	Until coolant temperature in heater drops below 73 °C or reaches 81 °C	7 V	1.5 Hz	0 V	yes

Protected by copyright. Copying for private or commercial purposes, in part or in whole, is not permitted unless authorised by AUDI AG. AUDI AG does not guarantee or accept any liability with respect to the correctness of information in this document. Copyright by AUDI AG.

Sequence	Duration approx.	Actuation			Resistance measurement
		Combustion air blower -V6- with	Metering pump -V54- with	Glow plug with flame monitor -Q8- with	Glow plug with flame monitor -Q8-
• Switching from part load to full load operation if coolant temperature drops below 73 °C) – Full load heating (⇒ page 109)	Up to 50 sec.	from 7 V to 12 V	from 1.5 Hz to 3 Hz	0 V	yes
– Switching from part load operation to control interval if coolant temperature reaches 81 °C • Burn-off/run-on (⇒ page 110)	-	7 V	1.5 Hz	0 V	yes

Protected by copyright. Copying for private or commercial purposes, in part or in whole, is not permitted unless authorised by AUDI AG. AUDI AG does not guarantee or accept any liability with respect to the correctness of information in this document. Copyright by AUDI AG.

Note

- *1 Hertz (Hz) corresponds to 1 pulse per second*
- *The voltages, times and frequencies listed in the table are approximate values regulated by the control unit on the basis of measured values (voltage, temperature etc.).*

13.1.4 “Burn-off/run-on” sequence

Sequence	Duration approx.	Actuation			Resistance measurement
		Combustion air blower -V6- with	Metering pump -V54- with	Glow plug with flame monitor -Q8- with	Glow plug with flame monitor -Q8-
– Switching from partial load operation to control interval – Switch-off of heater during full or part load mode – Starting procedure terminated because of fault	-	7 12 V	1.5 or 3 Hz	0 V	yes
• Burn-off (of heater)	15 to 60 sec.	4 to 12 V	0 Hz	6 to 8 V	no
• Cooling-down (of heater)	0 to 120 sec.	8 to 12 V	0 Hz	0 V	no
• Switching to control interval • OFF	-	0 V	0 Hz	0 V	no

Note

- *1 Hertz (Hz) corresponds to 1 pulse per second*
- *The voltages, times and frequencies listed in the table are approximate values regulated by the control unit on the basis of measured values (voltage, temperature etc.) and last operating status.*

13.2 Required heating output between 50 and 100 %

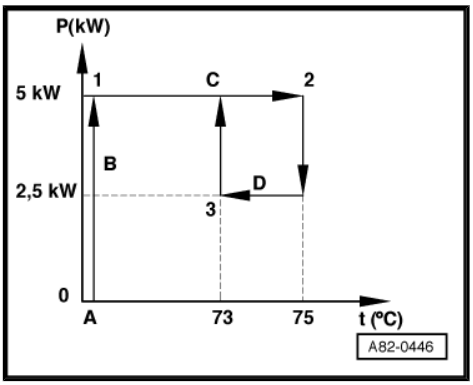

P (kW) = Heat output in kilowatts

-t (°C-) = Temperature of coolant in heater

-A- = Commencement of starting

– Coolant temperature in heater must be below 77 °C.

-B- = Starting

-C- = Full load operation

-D- = Part load operation

-1- = Start of full load operation

-2- = Switchover from full to part load operation

-3- = Switchover from part to full load operation

13.3 Required heating output less than 50 %

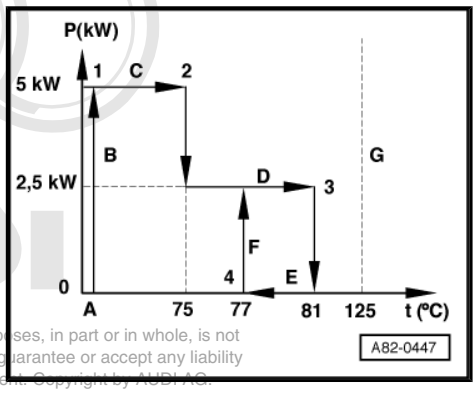

P (kW) = Heat output in kilowatts

-t (°C)- = Temperature of coolant in heater

-A- = Commencement of starting (coolant temperature in heater must be less than 73 °C)

-B- = Starting

-C- = Full load operation

-D- = Part load operation

-E- = Control interval

-F- = Starting from control interval

-G- = Shut-off on account of excess temperature

-1- = Start of full load operation

-2- = Switchover from full to part load operation

-3- = Switchover from part load operation to control interval

-4- = End of control interval

Protected by copyright. Copying for private or commercial purposes, in part or in whole, is not permitted unless authorised by AUDI AG. AUDI AG does not guarantee or accept any liability with respect to the correctness of information in this document. Copyright by AUDI AG.

13.3.1 Heater coolant shutoff valve -N279- actuation

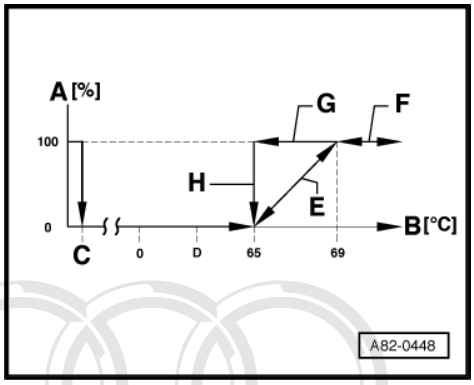

-A- = This proportion of the coolant in % is conveyed in the large coolant circuit

- If coolant shutoff valve -N279- is not actuated, 100 % of coolant flows in large circuit (via engine)
- If coolant shutoff valve -N279- is permanently actuated, 100 % of coolant flows in small circuit (directly from pump/valve unit to auxiliary/additional heater)
- Heater coolant shutoff valve -N279- is actuated by additional heater control unit -J364- in accordance with coolant temperature and request set.

-B- = Temperature of coolant in auxiliary/supplementary heater in °C

-C- = ON signal for auxiliary/supplementary heater (also as supplementary heater) via data bus system

-D- = The auxiliary/supplementary heater is in auxiliary heating full load mode. The coolant temperature increases (or remains constant). The entire coolant drawn in by the circulation pump -V55- comes from the air conditioner pump valve unit.

-E- = The auxiliary/supplementary heater is in auxiliary heating full load mode. The coolant temperature increases (or remains constant) and the proportion of the coolant (drawn in by the circulation pump -V55-) which flows back to the auxiliary/supplementary heater via the engine is regulated by the supplementary heater control unit -J364- .

-F- = All the coolant drawn in by the circulation pump -V55- flows back via the engine to the auxiliary/supplementary heater. The coolant temperature continues to increase (less heat is emitted by the air conditioner heat exchangers than is generated by the auxiliary/supplementary heater or, for example, with the engine running).

-G- = All the coolant drawn in by the circulation pump -V55- flows back via the engine to the auxiliary/supplementary heater. The coolant temperature decreases (more heat is emitted by the air conditioner heat exchangers or the engine than is generated by the auxiliary/supplementary heater and the engine).

-H- = The coolant temperature drops below 65 °C.

Protected by copyright. Copying for private or commercial purposes, in part or in whole, is not permitted unless authorised by AUDI AG. AUDI AG does not guarantee or accept any liability with respect to the correctness of information in this document. Copyright by AUDI AG.

Note

- *Depending on ambient temperature and amount of heat dissipated by air conditioner heat exchanger, heater coolant shutoff valve -N279- actuation may remain in the various operating statuses for a lengthy period.*
- *Actuation of heater coolant shutoff valve -N279- is also maintained even if engine is started with auxiliary heater running.*
- *At a coolant temperature of approx. 81 °C auxiliary/additional heater switches from control mode to control interval. During control interval, heater coolant shutoff valve -N279- is not actuated and coolant flows in large coolant circuit (via engine).*
- *The display in the measured value block for actuation of the heater coolant shut-off valve -N279- differs and depends on the vehicle model and the version of the supplementary heater control unit -J364- . On the Audi A8 at present for example, a display of 100 % indicates that 100 % of the coolant is being conveyed in the large circuit and that the heater coolant shut-off valve -N279- is not being actuated ⇒ Vehicle diagnostic, testing and information system -VAS 5051 A- , "Guided fault-finding" function.*

Protected by copyright. Copying for private or commercial purposes, in part or in whole, is not permitted unless authorised by AUDI AG. AUDI AG does not guarantee or accept any liability with respect to the correctness of information in this document. Copyright by AUDI AG.