DODGE

2016

Viper

OWNER'S MANUAL

Downloaded from www.Manualslib.com manuals search engine

VEHICLES SOLD IN CANADA

With respect to any Vehicles Sold in Canada, the name FCA US LLC shall be deemed to be deleted and the name FCA Canada Inc. used in substitution therefore.

DRIVING AND ALCOHOL

Drunken driving is one of the most frequent causes of accidents.

Your driving ability can be seriously impaired with blood alcohol levels far below the legal minimum. If you are drinking, don't drive. Ride with a designated non-drinking driver, call a cab, a friend, or use public transportation.

WARNING!
Driving after drinking can lead to an accident. Your perceptions are less sharp, your reflexes are slower, and your judgment is impaired when you have been drinking. Never drink and then drive.

This manual illustrates and describes the operation of features and equipment that are either standard or optional on this vehicle. This manual may also include a description of features and equipment that are no longer available or were not ordered on this vehicle. Please disregard any features and equipment described in this manual that are not on this vehicle.

FCA US LLC reserves the right to make changes in design and specifications, and/or make additions to or improvements to its products without imposing any obligation upon itself to install them on products previously manufactured.

Copyright © 2015 FCA US LLC

Downloaded from www.Manualslib.com manuals search engine

TABLE OF CONTENTS

SECTION		PAGE
1	INTRODUCTION	3
2	THINGS TO KNOW BEFORE STARTING YOUR VEHICLE	9
3	UNDERSTANDING THE FEATURES OF YOUR VEHICLE	89
4	UNDERSTANDING YOUR INSTRUMENT PANEL	141
5	STARTING AND OPERATING	235
6	WHAT TO DO IN EMERGENCIES	309
7	MAINTAINING YOUR VEHICLE	331
8	MAINTENANCE SCHEDULES	385
9	IF YOU NEED CONSUMER ASSISTANCE	393
10	INDEX	403

Downloaded from www.Manualslib.com manuals search engine

Downloaded from www.Manualslib.com manuals search engine

INTRODUCTION

CONTENTS

■ INTRODUCTION 4
■ HOW TO USE THIS MANUAL 4
■ WARNINGS AND CAUTIONS 6
■ VEHICLE IDENTIFICATION NUMBER 6
■ VEHICLE MODIFICATIONS/ALTERATIONS 7

Downloaded from www.Manualslib.com manuals search engine

INTRODUCTION

Congratulations on selecting your new FCA US LLC vehicle. Be assured that it represents precision workmanship, distinctive styling, and high quality - all essentials that are traditional to our vehicles.

This Owner's Manual has been prepared with the assistance of service and engineering specialists to acquaint you with the operation and maintenance of your vehicle. It is supplemented by Warranty Information, and various customer-oriented documents. Please take the time to read these publications carefully. Following the instructions and recommendations in this manual will help assure safe and enjoyable operation of your vehicle.

NOTE: After reviewing the owner information, it should be stored in the vehicle for convenient referencing and remain with the vehicle when sold.

When it comes to service, remember that your authorized dealer knows your vehicle best, has factory-trained technicians and genuine MOPAR® parts, and cares about your satisfaction.

DODGE is a registered trademark of FCA US LLC.

HOW TO USE THIS MANUAL

Consult the Table of Contents to determine which section contains the information you desire.

Since the specification of your vehicle depends on the items of equipment ordered, certain descriptions and illustrations may differ from your vehicle's equipment.

The detailed index at the back of this Owner's Manual contains a complete listing of all subjects.

Consult the following table for a description of the symbols that may be used on your vehicle or throughout this Owner's Manual:

Downloaded from www.Manualslib.com manuals search engine

Downloaded from www.Manualslib.com manuals search engine

WARNINGS AND CAUTIONS

This Owner's Manual contains **WARNINGS** against operating procedures that could result in a collision or bodily injury. It also contains **CAUTIONS** against procedures that could result in damage to your vehicle. If you do not read this entire Owner's Manual, you may miss important information. Observe all Warnings and Cautions.

VEHICLE IDENTIFICATION NUMBER

The Vehicle Identification Number (VIN) is on the left front corner of the instrument panel and is visible from outside the vehicle through the windshield. This number also appears on the top surface of the right-hand side tunnel frame rail near the center of the vehicle, the outboard facing surface of the right-hand side B-Pillar frame rail, as well as the Automobile Information Disclosure Label affixed to a window on your vehicle, the vehicle registration, and the title.

Downloaded from www.Manualslib.com manuals search engine

Vehicle Identification Number

NOTE: It is illegal to remove or alter the VIN.

VEHICLE MODIFICATIONS/ALTERATIONS

WARNING!

Any modifications or alterations to this vehicle could seriously affect its roadworthiness and safety and may lead to a collision resulting in serious injury or death.

Downloaded from www.Manualslib.com manuals search engine

Downloaded from www.Manualslib.com manuals search engine

THINGS TO KNOW BEFORE STARTING YOUR VEHICLE

CONTENTS

■ A WORD ABOUT YOUR KEYS 11
- □ Keyless Push Button Ignition 11
- □ Key Fob 12
- □ Ignition Or Accessory On Message 13

■ SENTRY KEY 14
- □ Replacement Keys 15
- □ Customer Key Programming 16
- □ General Information 16

■ VEHICLE SECURITY ALARM SYSTEM 17
- □ Rearming Of The System 17
- □ To Arm The System. 17
- □ To Disarm The System. 18

■ ILLUMINATED ENTRY 19

■ REMOTE KEYLESS ENTRY (RKE) 20
- □ To Unlock The Doors. 20
- □ To Lock The Doors 22
- □ To Unlatch The Liftgate 22
- □ Using The Panic Alarm 22
- □ Programming Additional Transmitters 23
- □ Transmitter Battery Replacement 23

Downloaded from www.Manualslib.com manuals search engine

- General Information 24

■ DOOR LOCKS 25

- Power Door Locks 26

■ WINDOWS 28

- Power Windows 28
- Auto-Down Feature 29
- AUTO-Up Feature With Anti-Pinch Protection . . .30
- Reset Auto-Up 30

■ LIFTGATE 31

■ OCCUPANT RESTRAINT SYSTEMS 33

- Important Safety Precautions 33
- Seat Belt Systems 34
- Supplemental Restraint System (SRS) 46
- Child Restraints 72
- Transporting Pets 83

■ SRT ENGINE BREAK-IN RECOMMENDATIONS 84

■ SAFETY TIPS 85

- Transporting Passengers. 85
- Exhaust Gas 86
- Safety Checks You Should Make Inside The Vehicle 87
- Periodic Safety Checks You Should Make Outside The Vehicle 88

Downloaded from www.Manualslib.com manuals search engine

A WORD ABOUT YOUR KEYS

Your vehicle uses a keyless ignition system. This system consists of a Key Fob with Remote Keyless Entry (RKE) transmitter and a Keyless Push Button Ignition.

Keyless Enter-N-Go Feature

This vehicle is equipped with the Keyless Enter-N-Go ignition feature.

Keyless Push Button Ignition

This feature allows the driver to operate the ignition with the push of a button, as long as the Remote Keyless Entry (RKE) transmitter is in the passenger compartment.

The Keyless Push Button Ignition has four operating positions; three of which are labeled and will illuminate when in position. The three positions are OFF, ACC, and ON/RUN. The fourth position is START, during start RUN will illuminate.

NOTE: In case the ignition does not change with the push of a button, the RKE transmitter (Key Fob) may have a low or dead battery.

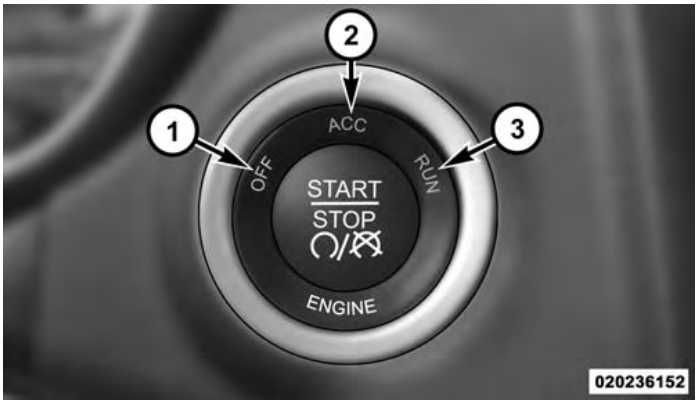

Keyless Push Button Ignition

1 — OFF
2 — ACC (ACCESSORY)
3 — ON/RUN

Downloaded from www.Manualslib.com manuals search engine

Key Fob

The Key Fob also contains the Remote Keyless Entry (RKE) transmitter and an emergency key, which stores in the rear of the Key Fob.

The emergency key allows for entry into the vehicle should the battery in the vehicle or the Key Fob go dead. You can keep the emergency key with you when valet parking.

To remove the emergency key, slide the mechanical latch on the back of the Key Fob sideways with your thumb and then pull the key out with your other hand.

NOTE: In the event that the FOB does not start the vehicle ("FOB not Found" message) use the FOB nose (furthest point from key ring) and push the start button. FOB replaces the finger.

Remote Keyless Entry (RKE) Transmitter

X2 — RKE Liftgate Button

— RKE Door Unlock Button

— RKE Door Lock Button

PANIC — RKE PANIC Alarm Button

Downloaded from www.Manualslib.com manuals search engine

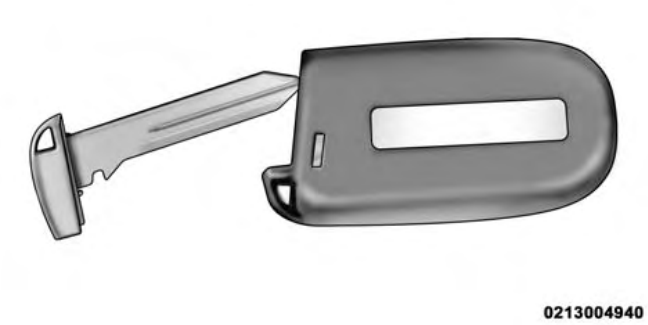

Emergency Key Removal

Ignition Or Accessory On Message

Opening the driver's door when the ignition is in ACC or ON (engine not running), a chime will sound to remind you to cycle the ignition to OFF. In addition to the chime, the ignition or accessory on message will display in the cluster.

NOTE: With the Uconnect system, the power window switches, radio and power outlets will remain active for up to 10 minutes after the ignition is cycled to the OFF position. Opening either front door will cancel this feature. The time for this feature is programmable. Refer to "Uconnect Settings" in "Understanding Your Instrument Panel" for further information.

WARNING!

- **When leaving the vehicle, always make sure the keyless ignition node is in the "OFF" mode, remove the Key Fob from the vehicle and lock the vehicle.**
- **Never leave children alone in a vehicle, or with access to an unlocked vehicle.**
- **Allowing children to be in a vehicle unattended is dangerous for a number of reasons. A child or**

(Continued)

Downloaded from www.Manualslib.com manuals search engine

WARNING! ***(Continued)***

others could be seriously or fatally injured. Children should be warned not to touch the parking brake, brake pedal or the gear selector.

- **Do not leave the Key Fob in or near the vehicle, or in a location accessible to children, and do not leave the ignition of a vehicle equipped with Keyless Enter-N-Go in the ACC or ON/RUN mode. A child could operate power windows, other controls, or move the vehicle.**
- **Do not leave children or animals inside parked vehicles in hot weather. Interior heat build-up may cause serious injury or death.**

CAUTION!

An unlocked car is an invitation to thieves. Always remove the Key Fob from vehicle, place the ignition in the OFF position and lock all doors when leaving the vehicle unattended.

SENTRY KEY

The Sentry Key Immobilizer system prevents unauthorized vehicle operation by disabling the engine. The system does not need to be armed or activated. Operation is automatic, regardless of whether the vehicle is locked or unlocked.

The system uses a Key Fob with a factory-mated Remote Keyless Entry (RKE) transmitter, a Keyless Push Button Ignition and a RF receiver to prevent unauthorized vehicle operation. Therefore, only Key Fobs that are

Downloaded from www.Manualslib.com manuals search engine

programmed to the vehicle can be used to start and operate the vehicle. The system will not allow the engine to crank with an invalid Key Fob.

After placing the ignition to the ON/RUN position, the Vehicle Security Light will turn on for three seconds for a bulb check. If the light remains on after the bulb check, it indicates that there is a problem with the system. In addition, if the light begins to flash after the bulb check, it indicates that someone tried to use an invalid Key Fob to start the engine. Either of these conditions will result in the engine being shut off after two seconds.

If the Vehicle Security Light turns on during normal vehicle operation (vehicle running for longer than 10 seconds), it indicates that there is a fault in the system. Should this occur, have the vehicle serviced as soon as possible by an authorized dealer.

CAUTION!

- **Do not make modifications or alterations to the immobilizer system. Modifications or alterations to the immobilization system may result in a loss of security protection.**
- **The Sentry Key Immobilizer system is not compatible with some aftermarket remote starting systems. Use of these systems may result in vehicle starting problems and loss of security protection.**

All of the Key Fobs provided with your new vehicle have been programmed to the vehicle electronics.

Replacement Keys

NOTE: Only Key Fobs that are programmed to the vehicle electronics can be used to start and operate the vehicle. Once a Key Fob is programmed to a vehicle, it cannot be programmed to any other vehicle.

Downloaded from www.Manualslib.com manuals search engine

CAUTION!

- **Always remove the Key Fobs from the vehicle and lock all doors when leaving the vehicle unattended.**
- **For vehicles equipped with Keyless Enter-N-Go, always remember to place the ignition in the OFF position.**

NOTE: Duplication of Key Fobs may be performed at an authorized dealer. This procedure consists of programming a blank Key Fob to the vehicle electronics. A blank Key Fob is one that has never been programmed.

When having the Sentry Key Immobilizer System serviced, bring all vehicle keys with you to an authorized dealer.

Customer Key Programming

Programming Key Fobs or RKE transmitters may be performed at an authorized dealer.

General Information

The Sentry Key system complies with FCC rules part 15 and with RSS-210 of Industry Canada. Operation is subject to the following conditions:

- This device may not cause harmful interference.
- This device must accept any interference that may be received, including interference that may cause undesired operation.

NOTE: Changes or modifications not expressly approved by the party responsible for compliance could void the user's authority to operate the equipment.

Downloaded from www.Manualslib.com manuals search engine

VEHICLE SECURITY ALARM SYSTEM

The Vehicle Security Alarm monitors the doors, liftgate, and hood for unauthorized entry and the ignition for unauthorized operation. If something triggers the alarm, the Vehicle Security Alarm will prevent the vehicle from starting. It will also sound the horn and flash the park lights, and taillights.

Rearming Of The System

If something triggers the alarm, and no action is taken to disarm it, the Vehicle Security Alarm will turn off the horn after three minutes, turn off all of the visual signals (flashing lights) after 15 minutes, and then rearm itself.

To Arm The System

Follow these steps to arm the Vehicle Security Alarm:

1. Make sure the vehicle ignition system is in the "OFF" position.
2. Perform one of the following methods to lock the vehicle:
   - Push the LOCK button on the interior power door lock switch with the driver and/or passenger door open.
   - Push the LOCK the button on the Remote Keyless Entry (RKE) transmitter.
3. If any doors are open, close them.

Entering The Liftgate With The System Armed

NOTE: Using the key to open the liftgate while the Vehicle Security Alarm is armed will trigger the alarm.

Push the LIFTGATE release button on the RKE transmitter twice to allow access without triggering the alarm or having to disarm the Vehicle Security Alarm. Then, within 30 seconds, open the liftgate by using the key cylinder or the LIFTGATE release switch located in the exterior liftgate handle.

Downloaded from www.Manualslib.com manuals search engine

To Disarm The System

The Vehicle Security Alarm can be disarmed using any of the following methods:

- Push the UNLOCK button on the Remote Keyless Entry (RKE) transmitter.
- Cycle the vehicle ignition system out of the OFF position:
  - Push the Keyless Enter-N-Go Start/Stop button

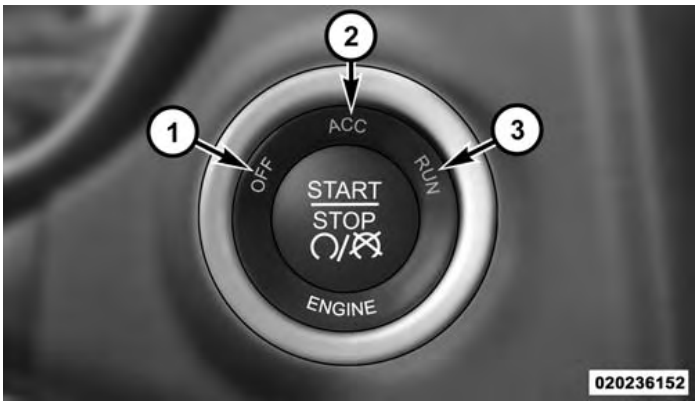

(requires at least one valid Key Fob in the vehicle).

NOTE:

- The liftgate key cylinder cannot arm or disarm the Vehicle Security Alarm.
- When the Vehicle Security Alarm is armed, the interior Power Door Lock switches will not unlock the doors.

Downloaded from www.Manualslib.com manuals search engine

The Vehicle Security Alarm is designed to protect your vehicle. However, you can create conditions where the system will give you a false alarm. If one of the previously described arming sequences has occurred, the Vehicle Security Alarm will arm regardless of whether you are in the vehicle or not. If you remain in the vehicle and open a door, the alarm will sound. If this occurs, disarm the Vehicle Security Alarm.

If the Vehicle Security Alarm is armed and the battery becomes disconnected, the Vehicle Security Alarm will remain armed when the battery is reconnected; the exterior lights will flash, and the horn will sound. If this occurs, disarm the Vehicle Security Alarm.

Tamper Alert

If something has triggered the Vehicle Security Alarm in your absence, the horn will sound three times, and the exterior lights will blink three times when you disarm the Vehicle Security Alarm. Check the vehicle for tampering.

Electronic Immobilization System

The Electronic Immobilization system prevents unauthorized vehicle operation by disabling the engine. The system does not need to be armed or activated. Operation is automatic, regardless of whether the vehicle is locked or unlocked.

ILLUMINATED ENTRY

The interior lights will turn on whenever a door is opened or the liftgate is opened and the dimmer switch is not in the defeat position.

The interior lights will turn on, remain on for approximately 30 seconds, and then fade to off if any of the following occur:

- A door is opened using the outside door handle and then closed.

Downloaded from www.Manualslib.com manuals search engine

- A door is unlocked using the Remote Keyless Entry (RKE) transmitter.

The interior lights will turn on, remain on for about four seconds, and then fade to off if a door is opened using the inside door handle.

NOTE: None of the courtesy lights will operate if the dimmer control is in the "defeat" position (extreme downward position), unless the overhead map/reading lights are turned on manually.

REMOTE KEYLESS ENTRY (RKE)

The RKE system allows you to lock or unlock the doors and liftgate, or activate the Panic Alarm from distances up to approximately 66ft (20 m) using a hand-held Key Fob with RKE transmitter. The RKE transmitter does not need to be pointed at the vehicle to activate the system.

Remote Keyless Entry (RKE) Transmitter

To Unlock The Doors

Push and release the UNLOCK button on the RKE transmitter once to unlock the driver's door or twice to unlock both doors and the liftgate. The park lights and turn signal lights will flash to acknowledge the signal,

Downloaded from www.Manualslib.com manuals search engine

and the illuminated entry system will turn on. Refer to "Uconnect Settings" in "Understanding Your Instrument Panel" for further information.

NOTE: The Door Unlock Indicator will illuminate in the instrument cluster when one or both doors are unlocked.

Remote Key Unlock, Driver Door/Both Doors First

This feature lets you program the system to unlock either the driver's door or all doors on the first push of the UNLOCK button on the RKE transmitter. To change the current setting, refer to "Uconnect Settings" in "Understanding Your Instrument Panel" for further information.

Flash Lights With Lock

This feature lets you program the lights to flash when the doors are locked with the Remote Keyless Entry (RKE) transmitter. Refer to "Uconnect Settings" in "Understanding Your Instrument Panel" for further information.

Unlock On 1st Press

This feature lets you program the system to unlock either the driver's door or all doors on the first push of the UNLOCK button on the RKE transmitter. To change the current setting, refer to "Uconnect Settings" in "Understanding Your Instrument Panel" for further information.

Autolock

This vehicle is equipped with Autolock. If the vehicle is unlocked while the Key Fob is outside the vehicle and the door is not opened for 30 seconds, the car will relock.

Downloaded from www.Manualslib.com manuals search engine

To Lock The Doors

Push and release the LOCK button on the RKE transmitter to lock the doors. The horn will chirp once, and the park lights and turn signal lights will flash to acknowledge the signal.

Sound Horn With Remote Key Lock

This feature will cause the horn to chirp when the doors are locked with the RKE transmitter. This feature can be turned on or turned off. To change the current setting, refer to "Uconnect Settings" in "Understanding Your Instrument Panel" for further information.

To Unlatch The Liftgate

Push the LIFTGATE button on the RKE transmitter two times within five seconds to unlatch the liftgate. Push and hold the liftgate release button while pulling up on the trunk/hatch to open.

Using The Panic Alarm

To turn the Panic Alarm feature on or off, push and hold the PANIC button on the RKE transmitter for at least one second and release. When the Panic Alarm is on, the headlights will turn on, the park lights will flash, the horn will pulse on and off, and the interior lights will turn on.

The Panic Alarm will stay on for three minutes unless you turn it off by either pushing the PANIC button a second time or drive the vehicle at a speed of 15 MPH (24 km/h) or greater.

NOTE: The interior lights will turn off if you cycle the ignition switch to the ACC or ON/RUN position while the Panic Alarm is activated. However, the exterior lights and horn will remain on.

Downloaded from www.Manualslib.com manuals search engine

Programming Additional Transmitters

Programming Key Fobs or RKE transmitters may be performed at an authorized dealer.

Transmitter Battery Replacement

The recommended replacement battery is one CR2032 battery.

NOTE:

- Perchlorate Material — special handling may apply. See www.dtsc.ca.gov/hazardouswaste/perchlorate
- Do not touch the battery terminals that are on the back housing or the printed circuit board.

1. Remove the emergency key by sliding the mechanical latch on the back of the RKE transmitter sideways with your thumb and then pull the key out with your other hand.

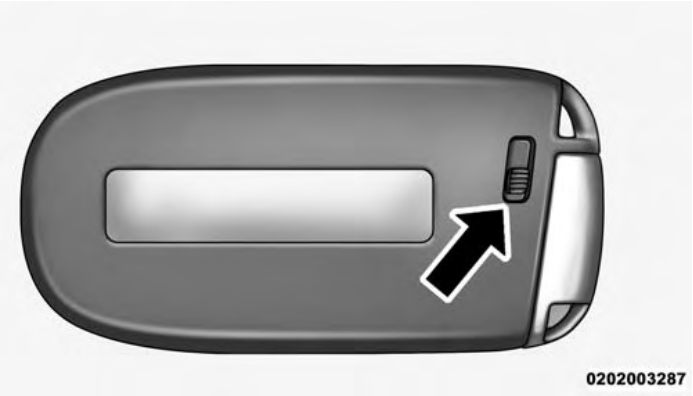

Emergency Key Removal

2. Insert the tip of the emergency key or a #2 flat blade screwdriver into the slot and gently pry the two halves of the RKE transmitter apart. Make sure not to damage the seal during removal.

Downloaded from www.Manualslib.com manuals search engine

Separating The RKE Transmitter Case

3. Remove the battery by turning the back cover over (battery facing downward) and tapping it lightly on a solid surface such as a table or similar, then replace the battery. When replacing the battery, match the + sign on the battery to the + sign on the inside of the battery clip, located on the back cover. Avoid touching the new battery with your fingers. Skin oils may cause battery deterioration. If you touch a battery, clean it with rubbing alcohol.
4. To assemble the RKE transmitter case, snap the two halves together.

General Information

This device complies with Part 15 of the FCC rules and RSS-210 of Industry Canada. Operation is subject to the following conditions:

- This device may not cause harmful interference.
- This device must accept any interference received, including interference that may cause undesired operation.

NOTE: Changes or modifications not expressly approved by the party responsible for compliance could void the user's authority to operate the equipment.

Downloaded from www.Manualslib.com manuals search engine

If your RKE transmitter fails to operate from a normal distance, check for these two conditions:

1. A weak battery in the transmitter. The expected life of the battery is a minimum of three years with normal usage.
2. Closeness to a radio transmitter such as a radio station tower, airport transmitter, and some mobile or CB radios.

Gulf Coast Countries (GCC)

Key Fob

Registered NO: ER36613/15

Dealer NO: DA36975/14

RFHUB

Registered NO: ER36600/15

Dealer NO: DA36975/14

KIN

Registered NO: ER0113955/13

Dealer NO: 0019345/09

DOOR LOCKS

WARNING!

- **Do not touch the exhaust pipe sill covers when entering or exiting your vehicle. They can be hot enough to burn you. Observe the warning labels on each door closure panel.**
- **When leaving the vehicle, always make sure the keyless ignition node is in the "OFF" mode, remove the Key Fob from the vehicle and lock the vehicle.**

(Continued)

Downloaded from www.Manualslib.com manuals search engine

WARNING! *(Continued)*

- **When leaving the vehicle, always cycle the ignition to the OFF mode lock, and lock your vehicle. Unsupervised use of vehicle equipment may cause severe personal injuries and death.**
- **Never leave children alone in a vehicle. Leaving unattended children in a vehicle is dangerous for a number of reasons. A child or others could be injured seriously or fatally. Don't leave the ignition in the ACC or ON/RUN mode. A child could operate power windows, other controls, or move the vehicle.**

Power Door Locks

A power door lock switch is on each door trim panel. Use this switch to lock or unlock the doors.

WARNING!

- **For personal security and safety in the event of a collision, lock the vehicle doors before you drive as well as when you park and leave the vehicle.**
- **Never leave children alone in a vehicle, or with access to an unlocked vehicle. Allowing children to be in a vehicle unattended is dangerous for a number of reasons. A child or others could be seriously or fatally injured. Children should be warned not to touch the parking brake, brake pedal or the gear selector.**
- **Do not leave the Key Fob in or near the vehicle, or in a location accessible to children. A child could operate power windows, other controls, or move the vehicle.**

Downloaded from www.Manualslib.com manuals search engine

Power Door Lock Switch

If you push the power door lock switch while the ignition is in the ACC or ON/RUN position, and any front door is open, the power locks will not operate. This prevents you from accidentally locking the Key Fob in the vehicle. Cycling the ignition to the OFF position or closing the door will allow the locks to operate. If a door is open, and the ignition is in the ACC or ON/RUN position, a chime will sound as a reminder to remove the Key Fob.

NOTE: The Door Unlock Indicator will illuminate in the instrument cluster when one or both doors are unlocked.

Automatic Door Locks

The auto door lock feature default condition is enabled. When enabled, the door locks will lock automatically when the vehicle's speed exceeds 5 mph (8 km/h). The auto door lock feature can be enabled or disabled by your authorized dealer per written request of the customer. Please see your authorized dealer.

Downloaded from www.Manualslib.com manuals search engine

Automatic Unlock Doors On Exit

The doors will unlock automatically on vehicles with power door locks if:

1. The Automatic Unlock Doors On Exit feature is enabled.
2. The driver door is opened.
3. The doors were not previously unlocked.

Automatic Unlock Doors On Exit Programming

To change the current setting, refer to "Uconnect Settings" in "Understanding Your Instrument Panel" for further information.

NOTE: Use the Automatic Unlock Doors On Exit feature in accordance with local laws.

WINDOWS

Power Windows

The window controls on the driver's door control both of the door windows.

Power Window Switches

Downloaded from www.Manualslib.com manuals search engine

There are single window controls on the passenger door trim panel, which operate the passenger door window. The window controls will operate only when the ignition is in the ACC or ON/RUN position.

The power window switches will remain active for up to 10 minutes after the ignition is cycled to the OFF position. Opening either front door will cancel this feature. The time is programmable. Refer to "Uconnect Settings" in "Understanding Your Instrument Panel" for further information.

WARNING!

Never leave children unattended in a vehicle, and do not let children play with power windows. Do not leave the Key Fob in or near the vehicle, or in a location accessible to children, and do not leave the

(Continued)

WARNING! ***(Continued)***

ignition of a vehicle equipped with Keyless Enter-N-Go in the ACC or ON/RUN mode. Occupants, particularly unattended children, can become entrapped by the windows while operating the power window switches. Such entrapment may result in serious injury or death.

Auto-Down Feature

Both power window switches have an AUTO-down feature. Push the window switch to the second detent, release, and the window will go down automatically.

To open the window part way, push the window switch to the first detent and release it when you want the window to stop.

To stop the window from going all the way down during the AUTO-down operation, pull up on the switch briefly.

Downloaded from www.Manualslib.com manuals search engine

AUTO-Up Feature With Anti-Pinch Protection

Lift the window switch to the second detent, release, and the window will go up automatically.

To stop the window from going all the way up during the auto-up operation, push down on the switch briefly.

To close the window part way, lift the window switch to the first detent, and release it when you want the window to stop.

NOTE:

- If the window runs into any obstacle during auto-closure, it will reverse direction and then go back down. Remove the obstacle and use the window switch again to close the window.
- Any impact due to rough road conditions may trigger the auto-reverse function unexpectedly during auto-closure. If this happens, pull the switch lightly to the first detent and hold to close the window manually.
- If the window detects an obstacle 10 times in a row, the auto–up feature unlearns.

WARNING!

There is no anti-pinch protection when the window is almost closed. Be sure to clear all objects from the window before closing.

Reset Auto-Up

Should the Auto Up feature stop working, the window may need to be reset. To reset Auto Up:

1. Make sure the door is fully closed.
2. Pull the window switch up to close the window completely and continue to hold the switch up for an additional two seconds after the window is closed.

Downloaded from www.Manualslib.com manuals search engine

3. Push the window switch down firmly to the second detent to open the window completely and continue to hold the switch down for an additional two seconds after the window is fully open.

LIFTGATE

The liftgate can be unlocked or locked by the Remote Keyless Entry (RKE) transmitter, the manual lock cylinder located on the rear panel, or by activating either of the power door lock switches located on the door trim panels.

Rear Panel Manual Lock Cylinder

To unlock the liftgate with the RKE transmitter, push the LIFTGATE button on the RKE transmitter two times.

Once unlocked, the liftgate can be opened or closed. To open the liftgate, push the LIFTGATE RELEASE switch

Downloaded from www.Manualslib.com manuals search engine

located under the right side of the tail panel, which is located below the liftgate, then pull the liftgate open with one fluid motion.

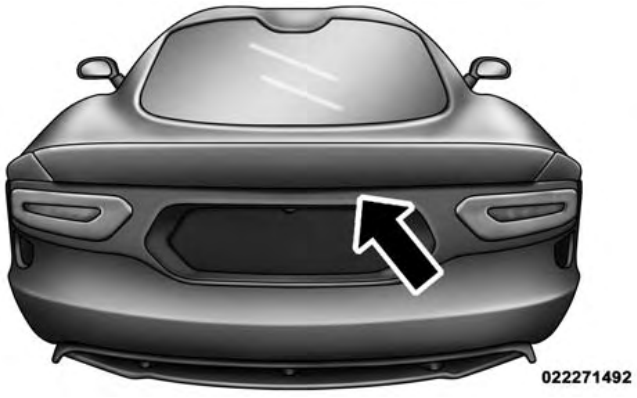

Pull Up On The Liftgate

NOTE: The liftgate release switch will be ignored under the following conditions:

- When vehicle speed is not 0 MPH (0 km/h).
- When all doors are locked (except for RKE transmitter liftgate access). Refer to "Entering the Liftgate with the System Armed" under "Vehicle Security Alarm System" for additional information.

The liftgate ajar icon will illuminate in the Driver Information Display (DID) when the liftgate is open.

WARNING!

- **Driving with the liftgate open can allow poisonous exhaust gases into your vehicle. You and your passengers could be injured by these fumes. Keep the liftgate closed when you are operating the vehicle.**
- **If you are required to drive with the liftgate open, make sure that all windows are closed, and the climate control blower switch is set at high speed. Do not use the recirculation mode.**

Downloaded from www.Manualslib.com manuals search engine

Gas props support the liftgate in the open position. However, because the gas pressure drops with temperature, it may be necessary to assist the props when opening the liftgate in cold weather.

OCCUPANT RESTRAINT SYSTEMS

Some of the most important safety features in your vehicle are the restraint systems:

- Seat Belt Systems
- Supplemental Restraint Systems (SRS) Air Bags
- Child Restraints

Important Safety Precautions

Please pay close attention to the information in this section. It tells you how to use your restraint system properly, to keep you and your passengers as safe as possible.

Here are some simple steps you can take to minimize the risk of harm from a deploying air bag:

1. Children 12 years old and under should always ride buckled up in a vehicle with a rear seat.
2. If a child from 2 to 12 years old (not in a rear-facing child restraint) must ride in the front passenger seat, move the seat as far back as possible and use the proper child restraint. (Refer to “Child Restraints”)
3. Children that are not big enough to wear the vehicle seat belt properly (Refer to ″Child Restraints″) should be secured in a vehicle with a rear seat in child restraints or belt-positioning booster seats. Older children who do not use child restraints or belt-positioning booster seats should ride properly buckled up in a vehicle with a rear seat
4. Never allow children to slide the shoulder belt behind them or under their arm.

Downloaded from www.Manualslib.com manuals search engine

5. You should read the instructions provided with your child restraint to make sure that you are using it properly.
6. All occupants should always wear their lap and shoulder belts properly.
7. The driver and front passenger seats should be moved back as far as practical to allow the Advanced Front Air Bags room to inflate.
8. Do not lean against the door or window. If your vehicle has side air bags, and deployment occurs, the side air bags will inflate forcefully into the space between occupants and the door and occupants could be injured.
9. If the air bag system in this vehicle needs to be modified to accommodate a disabled person, contact the Customer Center. Phone numbers are provided under "If You Need Assistance."

WARNING!

- **Never place a rear-facing child restraint in front of an air bag. A deploying passenger Advanced Front Air Bag can cause death or serious injury to a child 12 years or younger, including a child in a rear-facing child restraint.**
- **Only use a rear-facing child restraint in a vehicle with a rear seat.**

Seat Belt Systems

Buckle up even though you are an excellent driver, even on short trips. Someone on the road may be a poor driver and could cause a collision that includes you. This can happen far away from home or on your own street.

Research has shown that seat belts save lives, and they can reduce the seriousness of injuries in a collision. Some of the worst injuries happen when people are thrown from the vehicle. Seat belts reduce the possibility of

Downloaded from www.Manualslib.com manuals search engine

ejection and the risk of injury caused by striking the inside of the vehicle. Everyone in a motor vehicle should be belted at all times.

Driver And Passenger BeltAlert (If Equipped)

BeltAlert is a feature intended to remind the driver and outboard front seat passenger (if equipped with outboard front passenger seat BeltAlert) to buckle their seat belts. The Belt Alert feature is active whenever the ignition switch is in the START or ON/RUN position.

Initial Indication

If the driver is unbuckled when the ignition switch is first turned to the START or ON/RUN position, an intermittent chime will signal for a few seconds. If the driver or outboard front seat passenger (if equipped with outboard front passenger seat BeltAlert) is unbuckled when the ignition switch is first turned to the START or ON/RUN position the Seat Belt Reminder Light will turn on and remain on until both outboard front seat belts are buckled. The outboard front passenger seat BeltAlert is not active when an outboard front passenger seat is unoccupied.

BeltAlert Warning Sequence

The BeltAlert warning sequence is activated when the vehicle is moving above a specified vehicle speed range and the driver or outboard front seat passenger is unbuckled (if equipped with outboard front passenger seat BeltAlert). The BeltAlert warning sequence starts by blinking the Seat Belt Reminder Light and sounding an intermittent chime. Once the BeltAlert warning sequence has completed, the Seat Belt Reminder Light will remain on until the seat belts are buckled. The BeltAlert warning sequence may repeat based on vehicle speed until the

Downloaded from www.Manualslib.com manuals search engine

driver and occupied outboard front seat passenger seat belts are buckled. The driver should instruct all occupants to buckle their seat belts.

Change Of Status

If the driver or outboard front seat passenger (if equipped with outboard front passenger seat BeltAlert) unbuckles their seat belt while the vehicle is traveling, the BeltAlert warning sequence will begin until the seat belts are buckled again.

The outboard front passenger seat BeltAlert is not active when the outboard front passenger seat is unoccupied. BeltAlert may be triggered when an animal or heavy object is on the outboard front passenger seat or when the seat is folded flat (if equipped). It is recommended that pets be restrained in the rear seat (if equipped) in pet harnesses or pet carriers that are secured by seat belts, and cargo is properly stowed.

BeltAlert can be activated or deactivated by your authorized dealer. FCA US LLC does not recommend deactivating BeltAlert.

NOTE: If BeltAlert has been deactivated and the driver or outboard front seat passenger (if equipped with outboard front passenger seat BeltAlert) is unbuckled the Seat Belt Reminder Light will turn on and remain on until the driver and outboard front seat passenger seat belts are buckled.

Lap/Shoulder Belts

All seating positions in your vehicle are equipped with lap/shoulder belts.

The seat belt webbing retractor will lock only during very sudden stops or collisions. This feature allows the shoulder part of the seat belt to move freely with you under normal conditions. However, in a collision the seat belt

Downloaded from www.Manualslib.com manuals search engine

will lock and reduce your risk of striking the inside of the vehicle or being thrown out of the vehicle.

WARNING!

- **Relying on the air bags alone could lead to more severe injuries in a collision. The air bags work with your seat belt to restrain you properly. In some collisions, the air bags won't deploy at all. Always wear your seat belt even though you have air bags.**
- **In a collision, you and your passengers can suffer much greater injuries if you are not properly buckled up. You can strike the interior of your vehicle or other passengers, or you can be thrown out of the vehicle. Always be sure you and others in your vehicle are buckled up properly.**

(Continued)

WARNING! ***(Continued)***

- **It is dangerous to ride in a cargo area, inside or outside of a vehicle. In a collision, people riding in these areas are more likely to be seriously injured or killed.**
- **Do not allow people to ride in any area of your vehicle that is not equipped with seats and seat belts.**
- **Be sure everyone in your vehicle is in a seat and using a seat belt properly.**
- **Wearing your seat belt incorrectly could make your injuries in a collision much worse. You might suffer internal injuries, or you could even slide out of the seat belt. Follow these instructions to wear your seat belt safely and to keep your passengers safe, too.**

(Continued)

Downloaded from www.Manualslib.com manuals search engine

WARNING! *(Continued)*

- **Two people should never be belted into a single seat belt. People belted together can crash into one another in a collision, hurting one another badly. Never use a lap/shoulder belt or a lap belt for more than one person, no matter what their size.**
- **A lap belt worn too high can increase the risk of injury in a collision. The seat belt forces won't be at the strong hip and pelvic bones, but across your abdomen. Always wear the lap part of your seat belt as low as possible and keep it snug.**
- **A twisted seat belt may not protect you properly. In a collision, it could even cut into you. Be sure the seat belt is flat against your body, without twists. If you can't straighten a seat belt in your vehicle, take it to your authorized dealer immediately and have it fixed.**

(Continued)

WARNING! *(Continued)*

- **A seat belt that is buckled into the wrong buckle will not protect you properly. The lap portion could ride too high on your body, possibly causing internal injuries. Always buckle your seat belt into the buckle nearest you.**
- **A seat belt that is too loose will not protect you properly. In a sudden stop, you could move too far forward, increasing the possibility of injury. Wear your seat belt snugly.**
- **A seat belt that is worn under your arm is dangerous. Your body could strike the inside surfaces of the vehicle in a collision, increasing head and neck injury. A seat belt worn under the arm can cause internal injuries. Ribs aren't as strong as shoulder bones. Wear the seat belt over your shoulder so that**

(Continued)

Downloaded from www.Manualslib.com manuals search engine

WARNING! ***(Continued)***

your strongest bones will take the force in a collision.

- **A shoulder belt placed behind you will not protect you from injury during a collision. You are more likely to hit your head in a collision if you do not wear your shoulder belt. The lap and shoulder belt are meant to be used together.**
- **A frayed or torn seat belt could rip apart in a collision and leave you with no protection. Inspect the seat belt system periodically, checking for cuts, frays, or loose parts. Damaged parts must be replaced immediately. Do not disassemble or modify the seat belt system. Seat belt assemblies must be replaced after a collision.**

Lap/Shoulder Belt Operating Instructions

1. Enter the vehicle and close the door. Sit back and adjust the seat.
2. The seat belt latch plate is above the back of the front seat, and next to your arm in the rear seat (for vehicles equipped with a rear seat). Grasp the latch plate and pull out the seat belt. Slide the latch plate up the webbing as far as necessary to allow the seat belt to go around your lap.

Downloaded from www.Manualslib.com manuals search engine

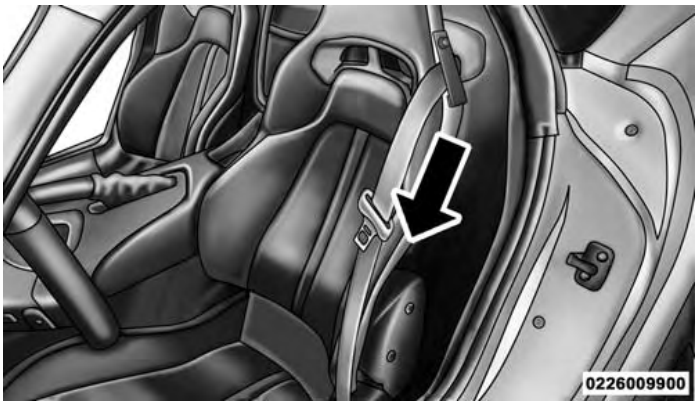

Pulling Out The Latch Plate

3. When the seat belt is long enough to fit, insert the latch plate into the buckle until you hear a "click."

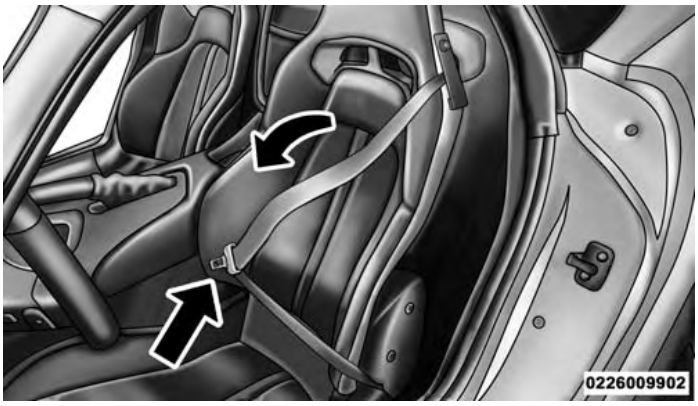

Inserting Latch Plate Into Buckle

4. Position the lap belt so that it is snug and lies low across your hips, below your abdomen. To remove slack in the lap belt portion, pull up on the shoulder belt. To loosen the lap belt if it is too tight, tilt the latch plate and pull on the lap belt. A snug seat belt reduces the risk of sliding under the seat belt in a collision.

Downloaded from www.Manualslib.com manuals search engine

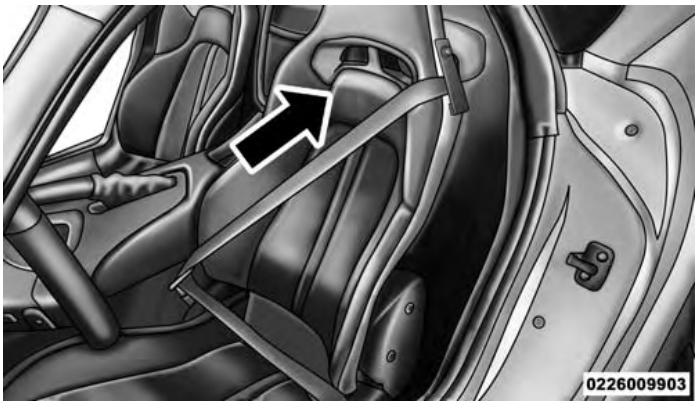

Positioning The Lap Belt

5. Position the shoulder belt across the shoulder and chest with minimal, if any slack so that it is comfortable and not resting on your neck. The retractor will withdraw any slack in the shoulder belt.

6. To release the belt, push the red button on the buckle. The seat belt will automatically retract to its stowed position. If necessary, slide the latch plate down the webbing to allow the seat belt to retract fully.

Lap/Shoulder Belt Untwisting Procedure

Use the following procedure to untwist a twisted lap/shoulder belt.

1. Position the latch plate as close as possible to the anchor point.

2. At about 6 to 12 in (15 to 30 cm) above the latch plate, grasp and twist the seat belt webbing 180 degrees to create a fold that begins immediately above the latch plate.

3. Slide the latch plate upward over the folded webbing. The folded webbing must enter the slot at the top of the latch plate.

4. Continue to slide the latch plate up until it clears the folded webbing and the seat belt is no longer twisted.

Downloaded from www.Manualslib.com manuals search engine

Seat Belt Extender

If a seat belt is not long enough to fit properly, even when the webbing is fully extended and the adjustable upper shoulder belt anchorage (if equipped) is in its lowest position, your authorized dealer can provide you with a Seat Belt Extender. The Seat Belt Extender should be used only if the existing seat belt is not long enough. When the Seat Belt Extender is not required for a different occupant, it must be removed.

WARNING!

- **ONLY use a Seat Belt Extender if it is physically required in order to properly fit the original seat belt system. DO NOT USE the Seat Belt Extender if, when worn, the distance between the front edge of the Seat Belt Extender buckle and the center of the occupant's body is LESS than 6 inches.**
- **Using a Seat Belt Extender when not needed can increase the risk of serious injury or death in a collision. Only use the Seat Belt Extender when the lap belt is not long enough and only use in the recommended seating positions. Remove and store the Seat Belt Extender when not needed.**

Downloaded from www.Manualslib.com manuals search engine

Seat Belts And Pregnant Women

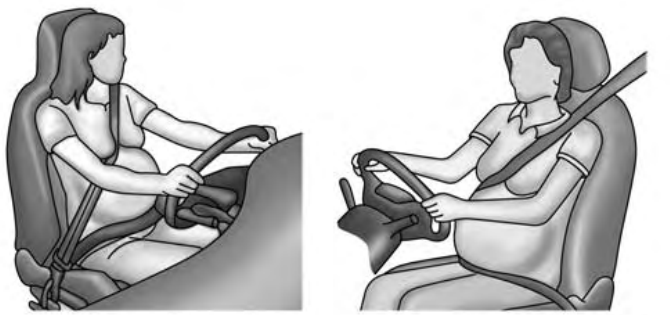

0226075266

Pregnant Women And Seat Belts

Seat belts must be worn by all occupants including pregnant women: the risk of injury in the event of an accident is reduced for the mother and the unborn child if they are wearing a seat belt.

Position the lap belt snug and low below the abdomen and across the strong bones of the hips. Place the shoulder belt across the chest and away from the neck. Never place the shoulder belt behind the back or under the arm .

Seat Belt Pretensioner

The front seat belt system is equipped with pretensioning devices that are designed to remove slack from the seat belt in the event of a collision. These devices may improve the performance of the seat belt by removing slack from the seat belt early in a collision. Pretensioners work for all size occupants, including those in child restraints.

NOTE: These devices are not a substitute for proper seat belt placement by the occupant. The seat belt still must be worn snugly and positioned properly.

Downloaded from www.Manualslib.com manuals search engine

The pretensioners are triggered by the Occupant Restraint Controller (ORC). Like the air bags, the pretensioners are single use items. A deployed pretensioner or a deployed air bag must be replaced immediately.

Energy Management Feature

This vehicle has a seat belt system with an Energy Management feature in the front seating positions that may help further reduce the risk of injury in the event of a collision. This seat belt system has a retractor assembly that is designed to release webbing in a controlled manner.

Switchable Automatic Locking Retractor (ALR)

The seat belt in the passenger seating position is equipped with a Switchable Automatic Locking Retractor (ALR) which is used to secure a child restraint system. For additional information, refer to "Installing Child Restraints Using The Vehicle Seat Belt" under the "Child Restraints" section of this manual. The table below defines the type of feature for each seating position.

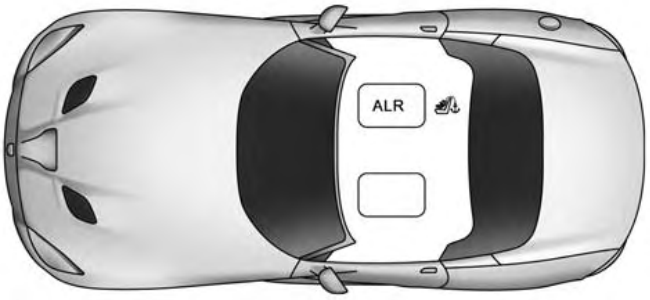

0226039335

- ALR = Switchable Automatic Locking Retractor

Downloaded from www.Manualslib.com manuals search engine

If the passenger seating position is equipped with an ALR and is being used for normal usage, only pull the seat belt webbing out far enough to comfortably wrap around the occupant's mid-section so as to not activate the ALR. If the ALR is activated, you will hear a clicking sound as the seat belt retracts. Allow the webbing to retract completely in this case and then carefully pull out only the amount of webbing necessary to comfortably wrap around the occupant's mid-section. Slide the latch plate into the buckle until you hear a "click."

In Automatic Locking Mode, the shoulder belt is automatically pre-locked. The seat belt will still retract to remove any slack in the shoulder belt. Use the Automatic Locking Mode anytime a child restraint is installed in a seating position that has a seat belt with this feature. Children 12 years old and under should always be properly restrained in a vehicle with a rear seat.

WARNING!

- **Never place a rear-facing child restraint in front of an air bag. A deploying Passenger Advanced Front Air Bag can cause death or serious injury to a child 12 years or younger, including a child in a rear-facing child restraint.**
- **Only use a rear-facing child restraint in a vehicle with a rear seat.**

How To Engage The Automatic Locking Mode

1. Buckle the combination lap and shoulder belt.
2. Grasp the shoulder portion and pull downward until the entire seat belt is extracted.
3. Allow the seat belt to retract. As the seat belt retracts, you will hear a clicking sound. This indicates the seat belt is now in the Automatic Locking Mode.

Downloaded from www.Manualslib.com manuals search engine

How To Disengage The Automatic Locking Mode

Unbuckle the combination lap/shoulder belt and allow it to retract completely to disengage the Automatic Locking Mode and activate the vehicle sensitive (emergency) locking mode.

WARNING!

- **The seat belt assembly must be replaced if the switchable Automatic Locking Retractor (ALR) feature or any other seat belt function is not working properly when checked according to the procedures in the Service Manual.**
- **Failure to replace the seat belt assembly could increase the risk of injury in collisions.**
- **Do not use the Automatic Locking Mode to restrain occupants who are wearing the seat belt or children who are using booster seats. The locked mode is**

(Continued)

WARNING! ***(Continued)***

only used to install rear-facing or forward-facing child restraints that have a harness for restraining the child.

Supplemental Restraint System (SRS)

Air Bag System Components

Your vehicle may be equipped with the following air bag system components:

- Occupant Restraint Controller (ORC)
- Air Bag Warning Light
- Steering Wheel and Column
- Instrument Panel
- Knee Impact Bolsters
- Advanced Front Air Bags

Downloaded from www.Manualslib.com manuals search engine

- Supplemental Side Air Bags
- Front and Side Impact Sensors
- Seat Belt Pretensioners
- Seat Belt Buckle Switch
- Seat Track Position Sensors
- Occupant Classification System

Advanced Front Air Bags

This vehicle has Advanced Front Air Bags for both the driver and front passenger as a supplement to the seat belt restraint systems. The driver's Advanced Front Air Bag is mounted in the center of the steering wheel. The passenger's Advanced Front Air Bag is mounted in the instrument panel, above the glove compartment. The words "SRS AIRBAG" or "AIRBAG" are embossed on the air bag covers.

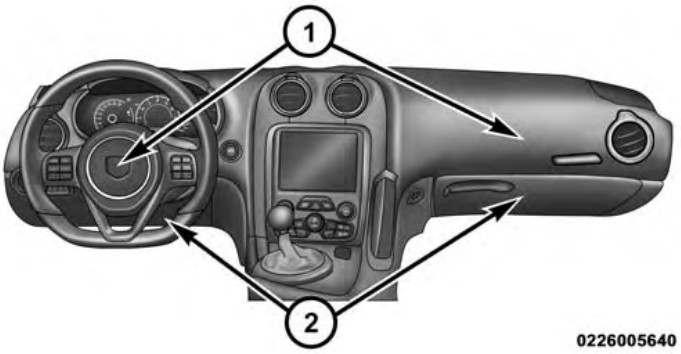

Advanced Front Air Bag And Knee Impact Bolster Locations

1 — Driver And Passenger Advanced Front Air Bags
2 — Driver And Passenger Knee Impact Bolster

Downloaded from www.Manualslib.com manuals search engine

WARNING!

- **Being too close to the steering wheel or instrument panel during Advanced Front Air Bag deployment could cause serious injury, including death. Air bags need room to inflate. Sit back, comfortably extending your arms to reach the steering wheel or instrument panel.**
- **Never place a rear-facing child restraint in front of an air bag. A deploying Passenger Advanced Front Air Bag can cause death or serious injury to a child 12 years or younger, including a child in a rear-facing child restraint.**
- **Only use a rear-facing child restraint in a vehicle with a rear seat.**

Advanced Front Air Bag Features

The Advanced Front Air Bag system has multistage driver and front passenger air bags. This system provides output appropriate to the severity and type of collision as determined by the Occupant Restraint Controller (ORC), which may receive information from the front impact sensors or other system components.

The first stage inflator is triggered immediately during an impact that requires air bag deployment. A low energy output is used in less severe collisions. A higher energy output is used for more severe collisions.

This vehicle may be equipped with driver and/or front passenger seat track position sensors that may adjust the inflation rate of the Advanced Front Air Bags based upon seat position.

This vehicle may be equipped with a driver and/or front passenger seat belt buckle switch that detects whether the driver or front passenger seat belt is buckled. The seat belt buckle switch may adjust the inflation rate of the Advanced Front Air Bags.

Downloaded from www.Manualslib.com manuals search engine

Advanced Air Bag Features

This vehicle has an Occupant Classification System ("OCS") in the front passenger seat. The OCS is designed to activate or deactivate the Passenger Advanced Front Air Bag depending on the occupant's seated weight. It is designed to deactivate the Passenger Advanced Front Air Bag for an unoccupied seat and for occupants whose seated weight classifies them in a category other than a properly seated adult. This could be a child, teenager, or even an adult.

The Passenger Air Bag Disable ("PAD") Indicator Light (an amber light located in the center of the instrument panel) tells the driver and front passenger when the Passenger Advanced Front Air Bag is deactivated. The PAD Indicator Light illuminates the words "PASSENGER AIR BAG OFF" to show that the Passenger Advanced Front Air Bag will not deploy during a collision.

NOTE: When the front passenger seat is empty or when very light objects are placed on the seat, the Passenger Advanced Front Air Bag will not deploy even though the Passenger Air Bag Disable (PAD) System Indicator Light is NOT illuminated.

WARNING!

- **No objects should be placed over or near the air bag on the instrument panel or steering wheel, because any such objects could cause harm if the vehicle is in a collision severe enough to cause the air bags to inflate.**
- **Do not put anything on or around the air bag covers or attempt to open them manually. You may damage the air bags and you could be injured because the air bags may no longer be functional. The protective covers for the air bag cushions are**

(Continued)

Downloaded from www.Manualslib.com manuals search engine

WARNING! ***(Continued)***

designed to open only when the air bags are inflating.

- **Relying on the air bags alone could lead to more severe injuries in a collision. The air bags work with your seat belt to restrain you properly. In some collisions, air bags won't deploy at all. Always wear your seat belts even though you have air bags.**

Advanced Front Air Bag Operation

Advanced Front Air Bags are designed to provide additional protection by supplementing the seat belts. Advanced Front Air Bags are not expected to reduce the risk of injury in rear, side, or rollover collisions. The Advanced Front Air Bags will not deploy in all frontal collisions, including some that may produce substantial vehicle damage — for example, some pole collisions, truck underrides, and angle offset collisions.

On the other hand, depending on the type and location of impact, Advanced Front Air Bags may deploy in crashes with little vehicle front-end damage but that produce a severe initial deceleration.

Because air bag sensors measure vehicle deceleration over time, vehicle speed and damage by themselves are not good indicators of whether or not an air bag should have deployed.

Seat belts are necessary for your protection in all collisions, and also are needed to help keep you in position, away from an inflating air bag.

When the ORC detects a collision requiring the Advanced Front Air Bags, it signals the inflator units. A large quantity of non-toxic gas is generated to inflate the Advanced Front Air Bags.

Downloaded from www.Manualslib.com manuals search engine

The steering wheel hub trim cover and the upper right side of the instrument panel separate and fold out of the way as the air bags inflate to their full size. The Advanced Front Air Bags fully inflate in less time than it takes to blink your eyes. The air bags then quickly deflate while helping to restrain the driver and front passenger.

Occupant Classification System (OCS) - Front Passenger Seat

The OCS is part of a Federally regulated safety system for this vehicle. It is designed to activate or deactivate the Passenger Advanced Front Air Bag depending on the occupant's seated weight. It is designed to deactivate the Passenger Advanced Front Air Bag for an unoccupied seat and for occupants whose seated weight classifies them in a category other than a properly seated adult. This could be a child, teenager, or even an adult.

WARNING!

- **If an occupant in the front passenger seat is seated improperly, the occupant may provide an output signal to the OCS that is different from the occupant's properly seated weight input. This may result in serious injury or death in a collision.**
- **Always wear your seat belt and sit properly, with the seatback in an upright position, your back against the seatback, sitting upright, facing forward, in the center of the seat, with your feet comfortably on or near the floor.**
- **Do not carry or hold any objects (e.g., backpacks, boxes, etc.) while seated in the front passenger seat. Holding an object may provide an output signal to the OCS that is different than the occupant's properly seated weight input, which may result in serious injury or death in a collision.**

Downloaded from www.Manualslib.com manuals search engine

The Occupant Classification System (OCS) consists of the following:

- Occupant Restraint Controller (ORC)
- Occupant Classification Module (OCM) and Sensor located in the front passenger seat
- Passenger Air Bag Disabled (PAD) Indicator Light – an amber light located in the center of the instrument panel (show icon)
- Air Bag Warning Light

Occupant Classification Module (OCM) And Sensor

The Occupant Classification Module (OCM) is located underneath the front passenger seat. The Sensor is located beneath the passenger seat cushion foam. Any weight on the seat will be sensed by the Sensor. The OCM uses input from the Sensor to determine the front passenger's most probable classification. The OCM communicates this information to the ORC. The ORC uses the classification to determine whether it should activate or deactivate the Passenger Advanced Front Air Bag. In order for the OCS to operate as designed, it is important for the front passenger to be seated properly and properly wearing the seat belt. Properly seated passengers are:

- Sitting upright
- Facing forward
- Sitting in the center of the seat with their feet comfortably on or near the floor.

Downloaded from www.Manualslib.com manuals search engine

- Sitting with their back against the seat back and the seat back in an upright position

Seated Properly

The OCS may deactivate the deployment of the Passenger Advanced Front Air Bag if the OCS estimates that:

- The front passenger seat is unoccupied or has very light objects in it.
- The front passenger seat is occupied by a rear-facing child restraint.
- The front passenger seat is occupied by a child, including a child seated in a forward-facing child restraint or booster seat.
- The front passenger seat is occupied by a small passenger, including a child or small adult.
- The front passenger is not properly seated or his or her weight is taken off of the seat for a period of time.

Downloaded from www.Manualslib.com manuals search engine

Passenger Air Bag Disable (PAD) System

Front Passenger Seat Occupant Status	Front Passenger Advanced Air Bag Disabled Indicator Light ("PAD") Status	Front Passenger Air Bag Status
Unoccupied seat *	NOT ILLUMINATED	DEACTIVATED
Grocery bags, heavy briefcases, and other relatively light objects	"PASSENGER AIR BAG OFF"	DEACTIVATED
Rearward facing infant seat**	"PASSENGER AIR BAG OFF"	DEACTIVATED
Child, including a child seated in a forward-facing child restraint or booster seat**	"PASSENGER AIR BAG OFF"	DEACTIVATED
Small adult	"PASSENGER AIR BAG OFF"	DEACTIVATED
Properly seated adult	NOT ILLUMINATED	ACTIVATED

Downloaded from www.Manualslib.com manuals search engine

* When the front passenger seat is empty or when very light objects are placed on the seat, the Passenger Advanced Front Air Bag will not deploy even though the PAD System Indicator Light is NOT illuminated.

** It is possible for a child to be classified as an adult, allowing the deployment of the Passenger Advanced Front Air Bag. Never allow children to ride in the front passenger seat and never install a child restraint system, including a rear-facing child restraint, in this vehicle.

WARNING!

- **Never place a rear-facing child restraint in front of an air bag. A deploying Passenger Advanced Front Air Bag can cause death or serious injury to a child 12 years or younger, including a child in a rear-facing child restraint.**

(Continued)

WARNING! ***(Continued)***

- **Only use a rear-facing child restraint in a vehicle with a rear seat.**
- **Children 12 years or younger should always ride buckled up in a rear seat.**

Passenger Advanced Front Air Bag Disabled (PAD) Indicator Light

The Passenger Advanced Front Air Bag (PAD) Indicator Light (an amber light located in the center of the instrument panel) tells the driver and front passenger when the Passenger Advanced Front Air Bag is deactivated. The PAD Indicator light illuminates the words "PASSENGER AIR BAG OFF" to show that the Passenger Advanced Front Air Bag will not deploy during a collision. When the front passenger seat is empty or when very light objects are placed on the seat, the Passenger Advanced Front Air Bag will not deploy even though the PAD indicator light is NOT illuminated.

Downloaded from www.Manualslib.com manuals search engine

The PAD indicator light should not be illuminated when an adult passenger is properly seated in the front passenger seat. The driver and adult passenger should verify that the PAD Indicator Light is not illuminated when an adult is riding in the front passenger seat. If an adult is not seated properly, the Passenger Advanced Front Air Bag may deactivate and the PAD Indicator Light will be illuminated.

The PAD Indicator Light should be illuminated and the Passenger Advanced Front Air Bag should be deactivated for most properly seated and restrained children in the passenger seat and for most properly installed child restraint systems. However, under certain conditions, even with a properly installed child restraint system, the PAD Indicator Light may not be illuminated, even though the Passenger Advanced Front Air Bag is deactivated. This can occur if the child restraint is lighter than the lightest weight necessary to illuminate the PAD Indicator Light. **NEVER** assume the Passenger Advanced Front Air Bag is deactivated unless the PAD Indicator Light is illuminated with the words "PASSENGER AIR BAG OFF."

If the PAD Indicator Light is Illuminated for an Adult Passenger:

If an adult passenger is seated in the front passenger seat and the PAD Indicator Light is illuminated, the passenger may be sitting improperly. Follow the steps below to allow the OCS to detect the adult passenger's seated weight to activate the Passenger Advanced Front Air Bag:

1. Turn off the vehicle and have the adult passenger step out of the vehicle.
2. Remove any extra materials from the passenger seat, such as cushions, pads, seat covers, seat massagers, blankets, extra clothing, etc.
3. Place the seatback in the full upright position.

Downloaded from www.Manualslib.com manuals search engine

4. Have the adult passenger sit in the center of the seat, with the passenger's feet comfortably on or near the floor, and with their back against the seatback.
5. Restart the vehicle and have the passenger remain in this seated position for two to three minutes after restarting the vehicle.

WARNING!

If the PAD Indicator Light remains illuminated for an adult passenger, have an authorized dealer service the air bag system immediately. Failure to do so may cause serious injury or death. If the PAD Indicator Light is illuminated with the words "PASSENGER AIR BAG OFF" the Passenger Advanced Front Air Bag will not inflate in the event of a collision.

WARNING!

- **Never place a rear-facing child restraint in front of an air bag. A deploying Passenger Advanced Front Air Bag can cause death or serious injury to a child 12 years or younger, including a child in a rear-facing child restraint.**
- **Only use a rear-facing child restraint in a vehicle with a rear seat.**
- **Children 12 years or younger should always ride buckled up in a rear seat.**

Lighter Weight Passengers (Including Small Adults)

When a lighter weight passenger, including a small adult occupies the passenger seat, the Passenger Advanced Front Air Bag may be deactivated. Therefore, the Passenger Advanced Front Air Bag may or may not be activated for a lighter weight passenger, including a small adult

Downloaded from www.Manualslib.com manuals search engine

(depending on size) who is seated in the passenger seat. This does not mean that the OCS is working improperly.

The driver and passenger must always use the PAD Indicator Light as a determination of whether the Passenger Advanced Front Air Bag is activated or deactivated. If the PAD Indicator Light is illuminated with the words "PASSENGER AIR BAG OFF" when an adult is in the front passenger seat, have the passenger reposition his or her body in the seat until the PAD Indicator Light goes out.

If the PAD Indicator Light is illuminated with the words "PASSENGER AIR BAG OFF" the Passenger Advanced Front Air Bag will not inflate in the event of a collision.

Do not decrease OR increase the front passenger's seated weight on the front passenger seat

The front passenger's seated weight must be properly positioned on the front passenger seat. Failure to do so may result in serious injury or death. The OCS determines the most probable classification of the occupant that it detects. The OCS will detect the front passenger's decreased or increased seated weight, which may result in deactivation or activation of the Passenger Advanced Front Air Bag in a collision. This does not mean that the OCS is working improperly. Decreasing the front passenger's seated weight on the front passenger seat may result in deactivation of the Passenger Advanced Front Air Bag causing serious injury or death. Increasing the front passenger's seated weight on the front passenger seat may result in activation of the Passenger Advanced Front Air Bag. Examples of improper front passenger seating include:

- The front passenger's weight is transferred to another part of the vehicle (like the door, arm rest or instrument panel).

Downloaded from www.Manualslib.com manuals search engine

- The front passenger leans forward, sideways or turns to face the rear of the vehicle.
- The front passenger's seatback is not in the full upright position.
- The front passenger carries or holds an object while seated (e.g., backpack, box, etc.).
- Objects are lodged under the front passenger seat.
- Objects are lodged between the front passenger seat and center console.
- Accessories that may change the seated weight on the front passenger seat are attached to the front passenger seat.
- Anything that may decrease or increase the front passenger's seated weight.

The OCS determines the front passenger's most probable classification. If an occupant in the front passenger seat is seated improperly, the occupant may provide an output signal to the OCS that is different from the occupant's properly seated weight input, for example:

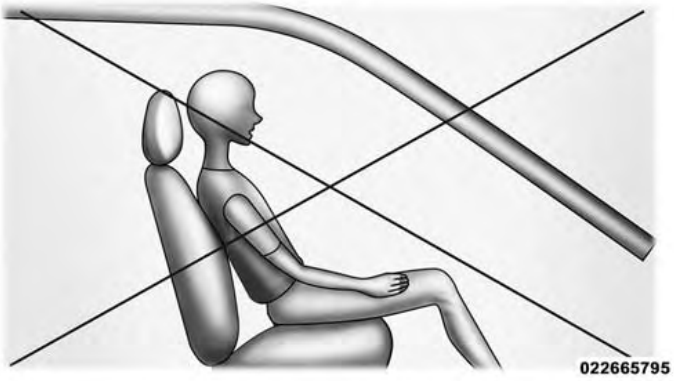

Not Seated Properly

Downloaded from www.Manualslib.com manuals search engine

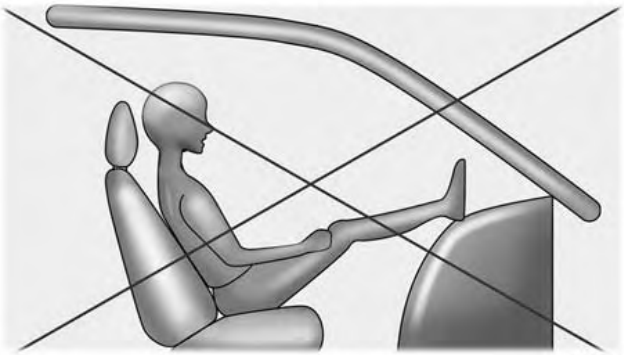

Not Seated Properly

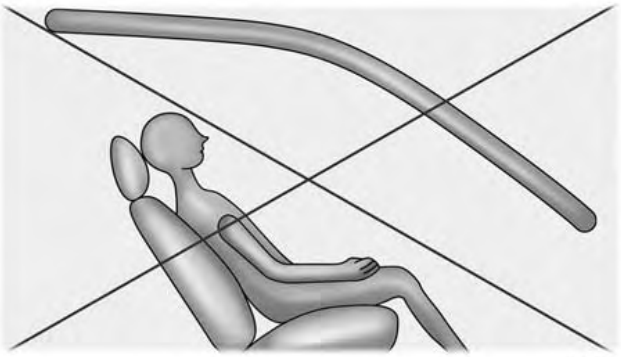

Not Seated Properly

Downloaded from www.Manualslib.com manuals search engine

WARNING!

- **If an occupant in the front passenger seat is seated improperly, the occupant may provide an output signal to the OCS that is different from the occupant's properly seated weight input. This may result in serious injury or death in a collision.**
- **Always wear your seat belt and sit properly, with the seatback in an upright position, your back against the seatback, sitting upright, facing forward, in the center of the seat, with your feet comfortably on or near the floor.**
- **Do not carry or hold any objects (e.g., backpacks, boxes, etc.) while seated in the front passenger seat. Holding an object may provide an output signal to the OCS that is different than the occupant's properly seated weight input, which may result in serious injury or death in a collision.**

The Air Bag Warning Light will illuminate whenever the OCS is unable to classify the front passenger seat status. A malfunction in the OCS may affect the operation of the air bag system.

If the Air Bag Warning Light does not come on, or stays on after you start the vehicle, or it comes on as you drive, take the vehicle to an authorized dealer for service immediately.

WARNING!

Ignoring the Air Bag Warning Light in your instrument panel could mean you won't have the air bags to protect you in a collision. If the light does not come on as a bulb check when the ignition is first turned on, stays on after you start the vehicle, or if it comes on as you drive, have an authorized dealer service the air bag system immediately.

(Continued)

Downloaded from www.Manualslib.com manuals search engine

WARNING! ***(Continued)***

Placing an object on the floor under the front passenger seat may prevent the OCS from working properly, which may result in serious injury or death in a collision. Do not place any objects on the floor under the front passenger seat.

If there is a fault present in the OCS, both the PAD Indicator Light and the Air Bag Warning Light will illuminate to show that the Passenger Advanced Front Air Bag is deactivated. Should this occur, the Passenger Advanced Front Air Bag will remain deactivated until the fault is cleared. This indicates that you should take the vehicle to an authorized dealer for service immediately.

The passenger seat assembly contains critical OCS components that may affect Passenger Advanced Front Air Bag inflation. In order for the OCS to properly classify the seated weight of a front seat passenger, the OCS components must function as designed. Do not make any modifications to the front passenger seat components, assembly, or to the seat cover. If the seat, trim cover, or cushion needs service for any reason, take the vehicle to your authorized dealer. Only FCA US LLC approved seat accessories may be used.

The following requirements must be strictly followed:

- Do not modify the front passenger seat assembly or components in any way.
- Do not use prior or future model year seat covers or cushions not designated by FCA US LLC for the specific model being repaired. Always use the correct seat cover and cushion specified for the vehicle.
- Do not replace the seat cover or cushion with an aftermarket seat cover or cushion.
- Do not add a secondary seat cover or mat.

Downloaded from www.Manualslib.com manuals search engine

- At no time should any supplemental restraint system (SRS) component or SRS related component or fastener be modified or replaced with any part except those which are approved by FCA US LLC.

WARNING!

Unapproved modifications or service procedures to the passenger seat assembly, its related components, seat cover or cushion may inadvertently change the air bag deployment in case of a frontal collision. This could result in death or serious injury to the front passenger if the vehicle is involved in a collision. A modified vehicle may not comply with required Federal Motor Vehicle Safety Standards (FMVSS) and/or Canadian Motor Vehicle Safety Standards (CMVSS).

Knee Impact Bolsters

The Knee Impact Bolsters help protect the knees of the driver and front passenger, and position the front occupants for improved interaction with the Advanced Front Air Bags.

WARNING!

- **Do not drill, cut, or tamper with the knee impact bolsters in any way.**
- **Do not mount any accessories to the knee impact bolsters such as alarm lights, stereos, citizen band radios, etc.**

Supplemental Door-Integrated Side Air Bags

This vehicle is equipped with Supplemental Door-Integrated Side Air Bag Inflatable Curtains (SABICs).

SABICs may help reduce the risk of head and other injuries to front seat occupants in certain side impacts, in

Downloaded from www.Manualslib.com manuals search engine

addition to the injury reduction potential provided by the seat belts and body structure. The SABICs are located in the door trim below the side windows. The trim covering the SABICs is labeled "SRS AIRBAG" or "AIRBAG."

Supplemental Door-Integrated Side Air Bag Label

The SABICs may help reduce the risk of partial or complete ejection of vehicle occupants through side windows in certain side impact events.

The SABICs deploy upward, covering the side windows. An inflating SABIC pushes the outside edge of the trim out of the way and covers the window. The SABICs inflate with enough force to injure occupants if they are not belted and seated properly, or if items are positioned in the area where the SABICs inflate. Children are at an even greater risk of injury from a deploying air bag.

SABICs are designed to activate in certain side impacts. The Occupant Restraint Controller ("ORC") determines whether the deployment of the SABIC in a particular impact event is appropriate, based on the severity and type of collision. The side impact sensors aid the ORC in determining the appropriate response to impact events. The system is calibrated to deploy the SABIC on the impact side of the vehicle during impacts that require

Downloaded from www.Manualslib.com manuals search engine

SABIC occupant protection. In side impacts, the SABICs deploy independently; a left side impact deploys the left side SABIC only and a right-side impact deploys the right side SABIC only. Vehicle damage by itself is not a good indicator of whether or not SABICs should have deployed.

SABICs will not deploy in all side collisions, including some collisions at certain angles, or some side collisions that do not impact the area of the passenger compartment. SABICs may deploy during angled or offset frontal collisions where the Advanced Front Air Bags deploy.

SABICs are a supplement to the seat belt restraint system. SABICs deploy in less time than it takes to blink your eyes. Occupants, including children, who are up against or very close to SABICs can be seriously injured or killed. Occupants, including children, should never lean on or sleep against the door, side windows, or area where the side air bags inflate, even if they are in an infant or child restraint.

Seat belts (and child restraints where appropriate) are necessary for your protection in all collisions. They also help keep you in position, away from an inflating SABIC. To get the best protection from the SABICs, occupants must wear their seat belts properly and sit upright with their backs against the seats. Children must be properly restrained in a child restraint or booster seat that is appropriate for the size of the child.

WARNING!

- **Your vehicle is equipped with left and right Supplemental Door-Integrated Side Air Bag Inflatable Curtains (SABICs). Do not stack luggage or**

(Continued)

Downloaded from www.Manualslib.com manuals search engine

WARNING! ***(Continued)***

other cargo up high enough to block the deployment of the SABICs. The door trim below the side windows where the SABIC and its deployment path are located, should remain free from any obstructions.

- **SABICs need room to inflate. Do not lean against the door or window. Sit upright in the center of the seat.**
- **Being too close to the SABICs during deployment could cause you to be severely injured or killed.**
- **Relying on the SABICs alone could lead to more severe injuries in a collision. The SABICs work with your seat belt to restrain you properly. In some collisions, SABICs won't deploy at all. Always wear your seat belt even though you have SABICs.**

NOTE: Air bag covers may not be obvious to you, but they will open during air bag deployment.

If A Deployment Occurs

The Advanced Front Air Bags are designed to deflate immediately after deployment.

NOTE: Front and/or side air bags will not deploy in all collisions. This does not mean something is wrong with the air bag system.

If you do have a collision which deploys the air bags, any or all of the following may occur:

- The air bag material may sometimes cause abrasions and/or skin reddening to the occupants as the air bags deploy and unfold. The abrasions are similar to friction rope burns or those you might get sliding along a carpet or gymnasium floor. They are not caused by contact with chemicals. They are not permanent and

Downloaded from www.Manualslib.com manuals search engine

normally heal quickly. However, if you haven't healed significantly within a few days, or if you have any blistering, see your doctor immediately.

- As the air bags deflate, you may see some smoke-like particles. The particles are a normal by-product of the process that generates the non-toxic gas used for air bag inflation. These airborne particles may irritate the skin, eyes, nose, or throat. If you have skin or eye irritation, rinse the area with cool water. For nose or throat irritation, move to fresh air. If the irritation continues, see your doctor. If these particles settle on your clothing, follow the garment manufacturer's instructions for cleaning.

Do not drive your vehicle after the air bags have deployed. If you are involved in another collision, the air bags will not be in place to protect you.

WARNING!

Deployed air bags and seat belt pretensioners cannot protect you in another collision. Have the air bags, seat belt pretensioners, and the seat belt retractor assemblies replaced by an authorized dealer immediately. Also, have the Occupant Restraint Controller System serviced as well.

NOTE:

- Air bag covers may not be obvious in the interior trim, but they will open during air bag deployment.
- After any collision, the vehicle should be taken to an authorized dealer immediately.

Enhanced Accident Response System

In the event of an impact, if the communication network remains intact, and the power remains intact, depending

Downloaded from www.Manualslib.com manuals search engine

on the nature of the event, the ORC will determine whether to have the Enhanced Accident Response System perform the following functions:

- Cut off fuel to the engine.
- Flash hazard lights as long as the battery has power or until the hazard light button is pressed. The hazard lights can be deactivated by pressing the hazard light button.
- Turn on the interior lights, which remain on as long as the battery has power.
- Unlock the power door locks.

Enhanced Accident Response System Reset Procedure

In order to reset the Enhanced Accident Response System functions after an event, the ignition switch must be changed from ignition START or ON/RUN to ignition OFF. Carefully check the vehicle for fuel leaks in the engine compartment and on the ground near the engine compartment and fuel tank before resetting the system and starting the engine.

Air Bag Warning Light

The air bags must be ready to inflate for your protection in a collision. The Occupant Restraint Controller (ORC) monitors the internal circuits and interconnecting wiring associated with air bag system electrical components.

The ORC monitors the readiness of the electronic parts of the air bag system whenever the ignition switch is in the START or ON/RUN position. If the ignition switch is in the OFF position or in the ACC position, the air bag system is not on and the air bags will not inflate.

Downloaded from www.Manualslib.com manuals search engine

The ORC contains a backup power supply system that may deploy the air bags even if the battery loses power or it becomes disconnected prior to deployment.

The ORC turns on the Air Bag Warning Light in the instrument panel for approximately four to eight seconds for a self-check when the ignition switch is first turned to the ON/RUN position. After the self-check, the Air Bag Warning Light will turn off. If the ORC detects a malfunction in any part of the system, it turns on the Air Bag Warning Light, either momentarily or continuously. A single chime will sound to alert you if the light comes on again after initial startup.

The ORC also includes diagnostics that will illuminate the instrument panel Air Bag Warning Light if a malfunction is detected that could affect the air bag system. The diagnostics also record the nature of the malfunction. While the air bag system is designed to be maintenance free, if any of the following occurs, have an authorized dealer service the air bag system immediately.

- The Air Bag Warning Light does not come on during the four to eight seconds when the ignition switch is first turned to the ON/RUN position.
- The Air Bag Warning Light remains on after the four to eight-second interval.
- The Air Bag Warning Light comes on intermittently or remains on while driving.

NOTE: If the speedometer, tachometer, or any engine related gauges are not working, the Occupant Restraint Controller (ORC) may also be disabled. In this condition the air bags may not be ready to inflate for your protection. Have an authorized dealer service the air bag system immediately.

Downloaded from www.Manualslib.com manuals search engine

WARNING!

Ignoring the Air Bag Warning Light in your instrument panel could mean you won't have the air bags to protect you in a collision. If the light does not come on as a bulb check when the ignition is first placed in the on position, and stays on after you start the vehicle, or if it comes on as you drive, have an authorized dealer service the air bag system immediately.

Maintaining Your Air Bag System

WARNING!

- **Modifications to any part of the air bag system could cause it to fail when you need it. You could be injured if the air bag system is not there to**

(Continued)

WARNING! ***(Continued)***

protect you. Do not modify the components or wiring, including adding any kind of badges or stickers to the steering wheel hub trim cover or the upper right side of the instrument panel. Do not modify the front bumper, vehicle body structure, or add aftermarket side steps or running boards.
- **It is dangerous to try to repair any part of the air bag system yourself. Be sure to tell anyone who works on your vehicle that it has an air bag system.**
- **Do not attempt to modify any part of your air bag system. The air bag may inflate accidentally or may not function properly if modifications are made. Take your vehicle to an authorized dealer for any air bag system service. If your seat, including your trim cover and cushion, needs to be serviced in any way (including removal or loosening/tightening of**

(Continued)

Downloaded from www.Manualslib.com manuals search engine

WARNING! ***(Continued)***

seat attachment bolts), take the vehicle to your authorized dealer. Only manufacturer approved seat accessories may be used. If it is necessary to modify the air bag system for persons with disabilities, contact your authorized dealer.

Event Data Recorder (EDR)

This vehicle is equipped with an event data recorder (EDR). The main purpose of an EDR is to record, in certain crash or near crash-like situations, such as an air bag deployment or hitting a road obstacle, data that will assist in understanding how a vehicle's systems performed. The EDR is designed to record data related to vehicle dynamics and safety systems for a short period of time, typically 30 seconds or less. The EDR in this vehicle is designed to record such data as:

- How various systems in your vehicle were operating;
- Whether or not the driver and passenger safety belts were buckled/fastened;
- How far (if at all) the driver was depressing the accelerator and/or brake pedal; and,
- How fast the vehicle was traveling.

These data can help provide a better understanding of the circumstances in which crashes and injuries occur.

NOTE: EDR data are recorded by your vehicle only if a non-trivial crash situation occurs; no data are recorded by the EDR under normal driving conditions and no personal data (e.g., name, gender, age, and crash location) are recorded. However, other parties, such as law enforcement, could combine the EDR data with the type of personally identifying data routinely acquired during a crash investigation.

Downloaded from www.Manualslib.com manuals search engine

To read data recorded by an EDR, special equipment is required, and access to the vehicle or the EDR is needed. In addition to the vehicle manufacturer, other parties, such as law enforcement, that have the special equipment, can read the information if they have access to the vehicle or the EDR.

Child Restraints

Everyone in your vehicle needs to be buckled up at all times, including babies and children.

Every state in the United States, and every Canadian province, requires that small children ride in proper restraint systems. This is the law, and you can be prosecuted for ignoring it.

Children 12 years or younger should ride properly buckled up in a rear seat, if available. According to crash statistics, children are safer when properly restrained in the rear seats rather than in the front.

WARNING!

In a collision, an unrestrained child can become a projectile inside the vehicle. The force required to hold even an infant on your lap could become so great that you could not hold the child, no matter how strong you are. The child and others could be badly injured. Any child riding in your vehicle should be in a proper restraint for the child's size.

Downloaded from www.Manualslib.com manuals search engine

There are different sizes and types of restraints for children from newborn size to the child almost large enough for an adult safety belt. Always check the child seat Owner's Manual to make sure you have the correct seat for your child. Carefully read and follow all the instructions and warnings in the child restraint Owner's Manual and on all the labels attached to the child restraint.

Before buying any restraint system, make sure that it has a label certifying that it meets all applicable Safety Standards. You should also make sure that you can install it in the vehicle where you will use it.

NOTE:

- For additional information, refer to www.seatcheck.org or call 1–866–732–8243.
- Canadian residents should refer to Transport Canada's website for additional information: www.tc.gc.ca/eng/motorvehiclesafety/safedrivers-childsafety-index-53.htm

Downloaded from www.Manualslib.com manuals search engine

Summary Of Recommendations For Restraining Children In Vehicles

	Child Size, Height, Weight Or Age	Recommended Type Of Child Restraint
Infants and Toddlers	Children who are two years old or younger and who have not reached the height or weight limits of their child restraint	Either an Infant Carrier or a Convertible Child Restraint, facing rearward in the rear seat of the vehicle
Small Children	Children who are at least two years old or who have out-grown the height or weight limit of their rear-facing child restraint	Forward-Facing Child Restraint with a five-point Harness, facing forward in the rear seat of the vehicle
Larger Children	Children who have out-grown their forward-facing child restraint, but are too small to properly fit the vehicle's seat belt	Belt Positioning Booster Seat and the vehicle seat belt, seated in the rear seat of the vehicle
Children Too Large for Child Restraints	Children 12 years old or younger, who have out-grown the height or weight limit of their booster seat	Vehicle Seat Belt, seated in the rear seat of the vehicle

Downloaded from www.Manualslib.com manuals search engine

Infants And Child Restraints

Safety experts recommend that children ride rear-facing in the vehicle until they are two years old or until they reach either the height or weight limit of their rear-facing child restraint. Two types of child restraints can be used rear-facing: infant carriers and convertible child seats.

The infant carrier is only used rear-facing in the vehicle. It is recommended for children from birth until they reach the weight or height limit of the infant carrier. Convertible child seats can be used either rear-facing or forward-facing in the vehicle. Convertible child seats often have a higher weight limit in the rear-facing direction than infant carriers do, so they can be used rear-facing by children who have outgrown their infant carrier but are still less than at least two years old. Children should remain rear-facing until they reach the highest weight or height allowed by their convertible child seat.

WARNING!

- **Never place a rear-facing child restraint in front of an air bag. A deploying passenger Advanced Front Air Bag can cause death or serious injury to a child 12 years or younger, including a child in a rear-facing child restraint.**
- **Only use a rear-facing child restraint in a vehicle with a rear seat.**

Older Children And Child Restraints

Children who are two years old or who have outgrown their rear-facing convertible child seat can ride forward-facing in the vehicle. Forward-facing child seats and convertible child seats used in the forward-facing direction are for children who are over two years old or who have outgrown the rear-facing weight or height limit of their rear-facing convertible child seat. Children should

Downloaded from www.Manualslib.com manuals search engine

remain in a forward-facing child seat with a harness for as long as possible, up to the highest weight or height allowed by the child seat.

All children whose weight or height is above the forward-facing limit for the child seat should use a belt-positioning booster seat until the vehicle's seat belts fit properly. If the child cannot sit with knees bent over the vehicle's seat cushion while the child's back is against the seatback, they should use a belt-positioning booster seat. The child and belt-positioning booster seat are held in the vehicle by the seat belt.

WARNING!

- **Improper installation can lead to failure of an infant or child restraint. It could come loose in a collision. The child could be badly injured or killed. Follow the child restraint manufacturer's**

(Continued)

WARNING! ***(Continued)***

directions exactly when installing an infant or child restraint.

- **After a child restraint is installed in the vehicle, do not move the vehicle seat forward or rearward because it can loosen the child restraint attachments. Remove the child restraint before adjusting the vehicle seat position. When the vehicle seat has been adjusted, reinstall the child restraint.**
- **When your child restraint is not in use, secure it in the vehicle with the seat belt or LATCH anchorages, or remove it from the vehicle. Do not leave it loose in the vehicle. In a sudden stop or accident, it could strike the occupants or seatbacks and cause serious personal injury.**

Downloaded from www.Manualslib.com manuals search engine

Children Too Large For Booster Seats

Children who are large enough to wear the shoulder belt comfortably, and whose legs are long enough to bend over the front of the seat when their back is against the seatback, should use the seat belt in a rear seat. Use this simple 5-step test to decide whether the child can use the vehicle's seat belt alone:

1. Can the child sit all the way back against the back of the vehicle seat?
2. Do the child's knees bend comfortably over the front of the vehicle seat – while they are still sitting all the way back?
3. Does the shoulder belt cross the child's shoulder between their neck and arm?
4. Is the lap part of the belt as low as possible, touching the child's thighs and not their stomach?
5. Can the child stay seated like this for the whole trip?

If the answer to any of these questions was "no," then the child still needs to use a booster seat in this vehicle. If the child is using the lap/shoulder belt, check seat belt fit periodically and make sure the seat belt buckle is latched. A child's squirming or slouching can move the belt out of position. If the shoulder belt contacts the face or neck, move the child closer to the center of the vehicle, or use a booster seat to position the seat belt on the child correctly.

WARNING!

Never allow a child to put the shoulder belt under an arm or behind their back. In a crash, the shoulder belt will not protect a child properly, which may result in serious injury or death. A child must always wear both the lap and shoulder portions of the seat belt correctly.

Downloaded from www.Manualslib.com manuals search engine

Installing Child Restraints Using The Vehicle Seat Belt

The seat belts in the passenger seating positions are equipped with a Switchable Automatic Locking Retractor (ALR) that is designed to keep the lap portion of the seat belt tight around the child restraint so that it is not necessary to use a locking clip. The ALR retractor can be "switched" into a locked mode by pulling all of the webbing out of the retractor and then letting the webbing retract back into the retractor. If it is locked, the ALR will make a clicking noise while the webbing is pulled back into the retractor. Refer to the "Automatic Locking Mode" description under "Occupant Restraints" for additional information on ALR.

Lap/Shoulder Belt Systems For Installing Child Restraints In This Vehicle

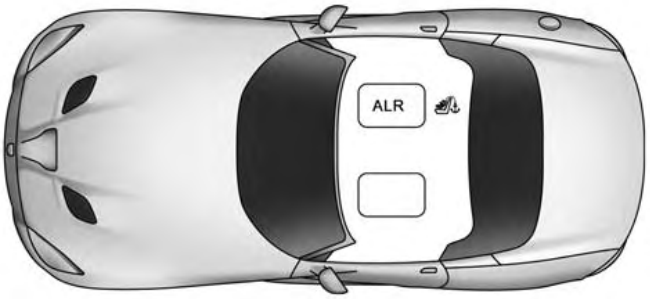

0226039335

- ALR = Switchable Automatic Locking Retractor

Downloaded from www.Manualslib.com manuals search engine

What is the weight limit (child's weight + weight of the child restraint) for using the Tether Anchor with the seat belt to attach a forward facing child restraint?	Weight limit of the Child Restraint	Always use the tether anchor when using the seat belt to install a forward facing child restraint, up to the recommended weight limit of the child restraint.
Can the head restraints be removed?	No	
Can the buckle stalk be twisted to tighten the seat belt against the belt path of the child restraint?	No	Do not twist the buckle stalk in a seating position with an ALR retractor.

Installing A Child Restraint with A Switchable Automatic Locking Retractor (ALR):

1. Place the child seat in the center of the seating position. For some second row seats, you may need to recline the seat and/or raise the head restraint to get a better fit. If the rear seat can be moved forward and rearward in the vehicle, you may wish to move it to its rear-most position to make room for the child seat. You may also move the front seat forward to allow more room for the child seat.
2. Pull enough of the seat belt webbing from the retractor to pass it through the belt path of the child restraint. Do not twist the belt webbing in the belt path.

Downloaded from www.Manualslib.com manuals search engine

3. Slide the latch plate into the buckle until you hear a "click."
4. Pull on the webbing to make the lap portion tight against the child seat.
5. To lock the seat belt, pull down on the shoulder part of the belt until you have pulled all the seat belt webbing out of the retractor. Then, allow the webbing to retract back into the retractor. As the webbing retracts, you will hear a clicking sound. This means the seat belt is now in the Automatic Locking mode.
6. Try to pull the webbing out of the retractor. If it is locked, you should not be able to pull out any webbing. If the retractor is not locked, repeat step 5.
7. Finally, pull up on any excess webbing to tighten the lap portion around the child restraint while you push the child restraint rearward and downward into the vehicle seat.
8. If the child restraint has a top tether strap and the seating position has a top tether anchorage, connect the tether strap to the anchorage and tighten the tether strap. See the section "Installing Child Restraints Using the Top Tether Anchorage" for directions to attach a tether anchor.
9. Test that the child restraint is installed tightly by pulling back and forth on the child seat at the belt path. It should not move more than 1 inch (25.4 mm) in any direction.

Any seat belt system will loosen with time, so check the belt occasionally, and pull it tight if necessary.

Downloaded from www.Manualslib.com manuals search engine

Installing Child Restraints Using The Top Tether Anchorage

WARNING!

Do not attach a tether strap for a rear-facing car seat to any location in front of the car seat, including the seat frame or a tether anchorage. Only attach the tether strap of a rear-facing car seat to the tether anchorage that is approved for that seating position, located behind the top of the vehicle seat. See the section "Lower Anchors and Tethers for CHildren (LATCH) Restraint System" for the location of approved tether anchorages in your vehicle.

There is a tether strap anchor located behind the child tether access cover behind the passenger seat. To attach a child restraint tether strap to the anchor:

1. Move the seat forward.
2. Move the seatback to its full forward position.
3. Remove the child tether access cover by prying either side with a screwdriver or similar tool, as shown.

Downloaded from www.Manualslib.com manuals search engine

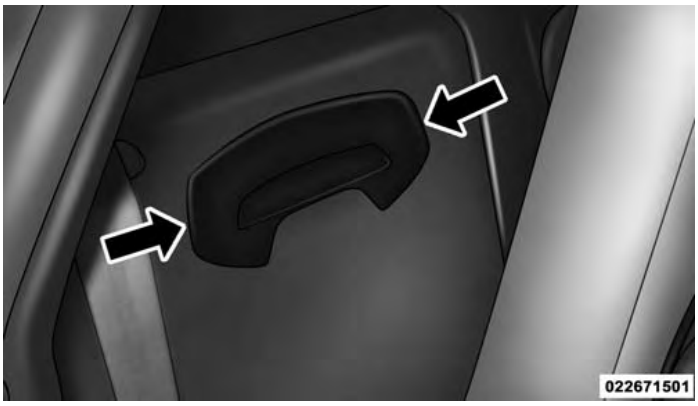

Child Seat Tether Access Cover

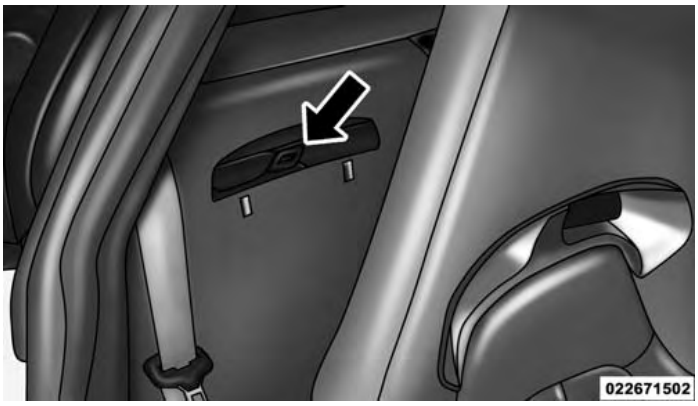

Child Seat Tether Anchor

NOTE: While the child tether is in use, keep the access cover in a safe place so that it can be replaced after use of the child tether.

Downloaded from www.Manualslib.com manuals search engine

4. Pass the child restraint tether hook through either opening in the seatback underneath the head restraint.
5. Attach the tether hook to the anchor loop.

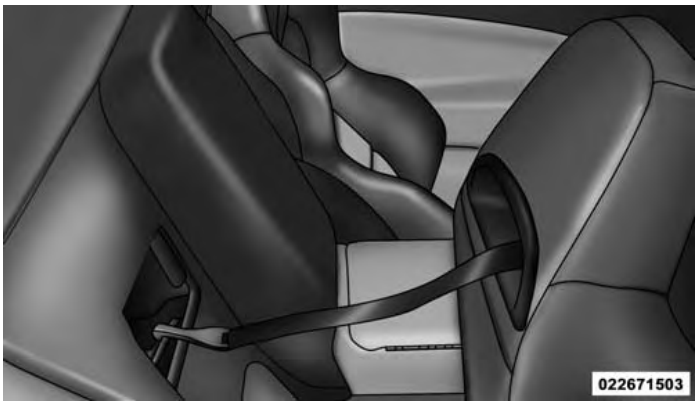

Tether Hook

6. Move the seat to its farthest rearward position. Apply body pressure to the seat to be sure the seat adjusters have latched.
7. Return the seatback to an upright position.
8. Remove slack from the tether strap according to the child restraint manufacturer's directions.

WARNING!

An incorrectly anchored tether strap could lead to increased head motion and possible injury to the child. Use only the anchorage position directly behind the child seat to secure a child restraint top tether strap.

Transporting Pets

Air Bags deploying in the front seat could harm your pet. An unrestrained pet will be thrown about and possibly injured, or injure a passenger during panic braking or in a collision.

Pets should be restrained in the rear seat in pet harnesses or pet carriers that are secured by seat belts.

Downloaded from www.Manualslib.com manuals search engine

SRT ENGINE BREAK-IN RECOMMENDATIONS

SRT Engine Break-In Recommendations: The following tips will be helpful in obtaining optimum performance and maximum durability for your new SRT Vehicle.

Despite modern technology and World Class manufacturing methods, the moving parts of the vehicle must still wear in with each other. This wearing in occurs mainly during the first 500 miles (805 km) and continues through the first oil change interval.

It is recommended for the operator to observe the following driving behaviors during the new vehicle break-in period:

0 to 100 miles (0 to 161 km):

- Do not allow the engine to operate at idle for an extended period of time.
- Depress the accelerator pedal slowly and not more than halfway to avoid rapid acceleration.
- Avoid aggressive braking.
- Drive with the engine speed less than 3,500 RPM.
- Maintain vehicle speed below 55 mph (88 km/h) and observe local speed limits.

100 to 300 miles (161 to 483 km):

- Depress the accelerator pedal slowly and not more than halfway to avoid rapid acceleration in lower gears (1st to 3rd gears).
- Avoid aggressive braking.
- Drive with the engine speed less than 5,000 RPM.
- Maintain vehicle speed below 70 mph (112 km/h) and observe local speed limits.

Downloaded from www.Manualslib.com manuals search engine

300 to 500 miles (483 to 805 km):

- Exercise the full engine rpm range, shifting manually (paddles or gear shift) at higher rpms when possible.
- Do not perform sustained operation with the accelerator pedal at wide open throttle.
- Maintain vehicle speed below 85 mph (136 km/h) and observe local speed limits.

For the first 1500 mi (2414 km):

- Do not participate in track events, sport driving schools, or similar activities during the first 1500 mi (2414 km).

NOTE: Check engine oil with every refueling and add if necessary. Oil and fuel consumption may be higher through the first oil change interval. Running the engine with an oil level below the add mark can cause severe engine damage

SAFETY TIPS

Transporting Passengers

NEVER TRANSPORT PASSENGERS IN THE CARGO AREA.

WARNING!

- **Do not leave children or animals inside parked vehicles in hot weather. Interior heat build-up may cause serious injury or death.**
- **It is extremely dangerous to ride in a cargo area, inside or outside of a vehicle. In a collision, people riding in these areas are more likely to be seriously injured or killed.**
- **Do not allow people to ride in any area of your vehicle that is not equipped with seats and seat belts.**
- **Be sure everyone in your vehicle is in a seat and using a seat belt properly.**

Downloaded from www.Manualslib.com manuals search engine

Exhaust Gas

WARNING!

Exhaust gases can injure or kill. They contain carbon monoxide (CO), which is colorless and odorless. Breathing it can make you unconscious and can eventually poison you. To avoid breathing (CO), follow these safety tips:

- **Do not run the engine in a closed garage or in confined areas any longer than needed to move your vehicle in or out of the area.**
- **If you are required to drive with the trunk/liftgate/ rear doors open, make sure that all windows are closed and the climate control BLOWER switch is set at high speed. DO NOT use the recirculation mode.**

(Continued)

WARNING! ***(Continued)***

- **If it is necessary to sit in a parked vehicle with the engine running, adjust your heating or cooling controls to force outside air into the vehicle. Set the blower at high speed.**

The best protection against carbon monoxide entry into the vehicle body is a properly maintained engine exhaust system.

Whenever a change is noticed in the sound of the exhaust system, when exhaust fumes can be detected inside the vehicle, or when the underside or rear of the vehicle is damaged, have a competent mechanic inspect the complete exhaust system and adjacent body areas for broken, damaged, deteriorated, or mispositioned parts. Open seams or loose connections could permit exhaust fumes to seep into the passenger compartment. In addition, inspect the exhaust system each time the vehicle is raised for lubrication or oil change. Replace as required.

Downloaded from www.Manualslib.com manuals search engine

Safety Checks You Should Make Inside The Vehicle

Seat Belts

Inspect the belt system periodically, checking for cuts, frays, and loose parts. Damaged parts must be replaced immediately. Do not disassemble or modify the system.

Front seat belt assemblies must be replaced after a collision. Seat belt assemblies must be replaced after a collision if they have been damaged (i.e., bent retractor, torn webbing, etc.). If there is any question regarding belt or retractor condition, replace the belt.

Air Bag Warning Light

The light should come on and remain on for four to eight seconds for a bulb check when the ignition is first cycled to ON. If the light is not lit during starting, see your authorized dealer. If the light stays on, flickers, or comes on while driving, have the system checked by an authorized dealer.

Defroster

Check operation by selecting the defrost mode and place the blower control on high speed. You should be able to feel the air directed against the windshield. See your authorized dealer for service if your defroster is inoperable.

Floor Mat Safety Information

Always use floor mats designed to fit the foot well of your vehicle. Use only floor mats that leave the pedal area unobstructed and that are firmly secured so that they cannot slip out of position and interfere with the pedals or impair safe operation of your vehicle in other ways.

Downloaded from www.Manualslib.com manuals search engine

Periodic Safety Checks You Should Make Outside The Vehicle

Tires

Examine tires for excessive tread wear and uneven wear patterns. Check for stones, nails, glass, or other objects lodged in the tread. Inspect the tread and sidewall for cuts and cracks. Check the wheel nuts for tightness. Check the tires for proper pressure.

Lights

Have someone observe the operation of brake lights and exterior lights while you work the controls. Check turn signal and high beam indicator lights on the instrument panel.

Door Latches

Check for proper closing, latching, and locking.

Fluid Leaks

Check area under vehicle after overnight parking for fuel, engine coolant, oil, or other fluid leaks. Also, if gasoline fumes are detected or if fuel, power steering fluid (if equipped), or brake fluid leaks are suspected. The cause should be located and corrected immediately.

Downloaded from www.Manualslib.com manuals search engine

UNDERSTANDING THE FEATURES OF YOUR VEHICLE

CONTENTS

■ MIRRORS 92
- □ Automatic Dimming Mirror 92
- □ Outside Mirrors 96
- □ Power Mirrors 96
- □ Vanity Mirror 97

■ SEATS 98
- □ Manual Seats 98
- □ Power Seats 100
- □ Non-Adjustable Head Restraints 102

■ TO OPEN AND CLOSE THE HOOD 103

■ LIGHTS 105
- □ Headlight Switch 105
- □ Automatic Headlights 106
- □ Headlights On With Wipers (Available With Automatic Headlights Only) 106
- □ Headlight Time Delay 106
- □ Daytime Running Lights 107
- □ Lights-On Reminder 107
- □ Multifunction Lever 108
- □ Turn Signals 108

Downloaded from www.Manualslib.com manuals search engine

- High/Low Beam Switch 109
- Flash-To-Pass 109
- Interior Lights 109

■ WINDSHIELD WIPERS AND WASHERS 111
- Intermittent Wiper System 111
- Wiper Operation 112
- Mist Feature 112
- Windshield Washers 113
- Headlights On With Wipers (Available With Automatic Headlights Only) 114

■ TILT STEERING COLUMN 114

■ ADJUSTABLE PEDALS 115
- Adjustable Foot Rest 117

■ ELECTRONIC SPEED CONTROL 117
- To Activate 118
- To Set A Desired Speed 119
- To Deactivate. 119
- To Resume Speed. 119
- To Vary The Speed Setting 119
- To Accelerate For Passing 121

■ PARKVIEW REAR BACK UP CAMERA — IF EQUIPPED 121

■ GARAGE DOOR OPENER — IF EQUIPPED . . .123
- Before You Begin Programming HomeLink . . .124
- Programming A Rolling Code 125
- Programming A Non-Rolling Code 127

Downloaded from www.Manualslib.com manuals search engine

- Canadian/Gate Operator Programming 128
- Using HomeLink 130
- Security 130
- Troubleshooting Tips 130
- General Information. 131

■ ELECTRICAL POWER OUTLETS 132
- Auxiliary Jumper Harness 134

■ CUPHOLDERS — IF EQUIPPED 136

■ STORAGE 136
- Glove Compartment 136
- Console Features 137
- Door Storage. 139

■ REAR WINDOW FEATURES 140
- Rear Window Defroster 140

Downloaded from www.Manualslib.com manuals search engine

MIRRORS

Automatic Dimming Mirror

This mirror automatically adjusts for headlight glare from vehicles behind you. This feature will be defaulted on, and only be disabled when the vehicle is moving in reverse.

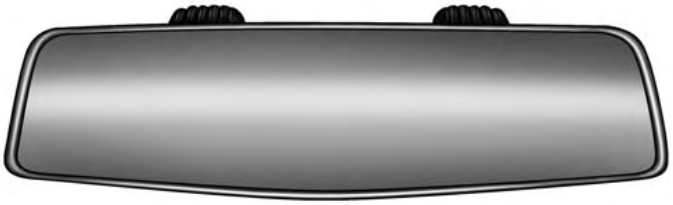

Automatic Dimming Mirror

If Equipped, the rearview mirror contains an ASSIST and a 9-1-1 button.

Downloaded from www.Manualslib.com manuals search engine

WARNING!

ALWAYS obey traffic laws and pay attention to the road. Some Uconnect Access services, including 9-1-1 and Assist, will NOT work without an operable 1X (voice/data) or 3G (data) network connection.

NOTE:

- Your vehicle may be transmitting data as authorized by the subscriber.
- The 9–1–1 and ASSIST buttons will only function if you are connected to an operable 1X(voice/data) or 3G(data) network. Other Uconnect services will only be operable if your Uconnect Access service is active and you are connected to an operable 1X(voice/data) or 3G(data) network.

Assist Calls

The ASSIST Button is used for contacting Roadside Assistance, Vehicle Care and Uconnect Care. The 9-1-1 Button connects you to emergency services to someone who can help. Roadside Assistance will know what vehicle you're driving and its location. Additional fees may apply for roadside Assistance.

- Uconnect Access Customer Care – In-vehicle support for Uconnect Access and Uconnect Access Via Mobile features.
- Vehicle Customer Care – Total support for all other vehicle issues.

9-1-1 Call

Push the 9-1-1 Call button on the Rearview Mirror.

Downloaded from www.Manualslib.com manuals search engine

NOTE: In case the 9-1-1 Call button is pushed in error, there will be a 10 second delay before the 9-1-1 Call system initiates a call to a 9-1-1 operator. To cancel the 9-1-1 Call connection, push the 9-1-1 Call button on the Rearview Mirror or press the cancellation button on the touch screen.

WARNING!

ALWAYS obey traffic laws and pay attention to the road. Some Uconnect Access services, including 9-1-1 and Assist, will NOT work without an operable 1X (voice/data) or 3G (data) network connection.

NOTE:

- Your vehicle may be transmitting data as authorized by the subscriber.
- Once a connection is made between the vehicle's 9-1-1 Call system and the 9-1-1 operator, the 9-1-1 operator may be able to open a voice connection with the vehicle to determine if additional help is needed. Once the 9-1-1 operator opens a voice connection with the vehicle's 9-1-1 Call system, the operator should be able to speak with you or other vehicle occupants and hear sounds occurring in the vehicle. The vehicle's 9-1-1 Call system will attempt to remain connected with the 9-1-1 operator until the 9-1-1 operator terminates the connection.

WARNING!

- **If anyone in the vehicle could be in danger (e.g., fire or smoke is visible, dangerous road conditions or location), do not wait for voice contact from a 9-1-1 operator. All occupants should exit the vehicle immediately and move to a safe location.**

(Continued)

Downloaded from www.Manualslib.com manuals search engine

WARNING! *(Continued)*

- Never place anything on or near the vehicle's operable 1X (voice/data) or 3G(data) network and GPS antennas. You could prevent operable 1X (voice/data) or 3G(data) network and GPS signal reception, which can prevent your vehicle from placing an emergency call. An operable 1X (voice/data) or 3G(data) network and GPS signal reception is required for the 9-1-1 Call system to function properly.
- The 9-1-1 Call system is embedded into the vehicle's electrical system. Do not add aftermarket electrical equipment to the vehicle's electrical system. This may prevent your vehicle from sending a signal to initiate an emergency call. To avoid interference that can cause the 9-1-1 Call system to fail, never add aftermarket equipment (e.g., two-way mobile radio, CB radio, data recorder, etc.) to your

(Continued)

WARNING! *(Continued)*

vehicle's electrical system or modify the antennas on your vehicle. IF YOUR VEHICLE LOSES BATTERY POWER FOR ANY REASON (INCLUDING DURING OR AFTER AN ACCIDENT), THE UCONNECT FEATURES, APPS AND SERVICES, AMONG OTHERS, WILL NOT OPERATE.

- Modifications to any part of the 9-1-1 Call system could cause the air bag system to fail when you need it. You could be injured if the air bag system is not there to help protect you.

CAUTION!

To avoid damage to the mirror during cleaning, never spray any cleaning solution directly onto the mirror. Apply the solution onto a clean cloth and wipe the mirror clean.

Downloaded from www.Manualslib.com manuals search engine

Outside Mirrors

To receive maximum benefit, adjust the outside mirrors to center on the adjacent lane of traffic and a slight overlap of the view obtained from the inside mirror.

NOTE: The passenger side convex outside mirror will give a much wider view to the rear, and especially of the lane next to your vehicle.

WARNING!

Vehicles and other objects seen in the passenger side convex mirror will look smaller and farther away than they really are. Relying too much on your passenger side mirror could cause you to collide with another vehicle or other object. Use your inside mirror when judging the size or distance of a vehicle seen in the passenger side mirror.

Power Mirrors

The power mirror controls are located on the driver-side door trim panel.

Power Mirror Controls

Downloaded from www.Manualslib.com manuals search engine

The power mirror controls consist of mirror select buttons and a four-way mirror control switch. To adjust a mirror, push either the L (left) or R (right) to select the mirror that you want to adjust.

NOTE: A light in the selected button will illuminate indicating the mirror is activated and can be adjusted.

Using the mirror control switch, push on any of the four arrows for the direction that you want the mirror to move.

Vanity Mirror

A vanity mirror is on the passenger side sun visor. To use the mirror, rotate the sun visor downward and swing the mirror cover upward.

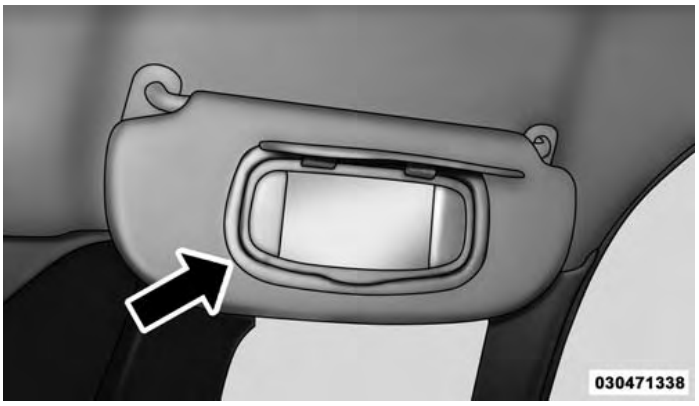

Vanity Mirror

Downloaded from www.Manualslib.com manuals search engine

SEATS

Seats are a part of the Occupant Restraint System of the vehicle.

WARNING!

- **It is dangerous to ride in a cargo area, inside or outside of a vehicle. In a collision, people riding in these areas are more likely to be seriously injured or killed.**
- **Do not allow people to ride in any area of your vehicle that is not equipped with seats and seat belts. In a collision, people riding in these areas are more likely to be seriously injured or killed.**
- **Be sure everyone in your vehicle is in a seat and using a seat belt properly.**

Manual Seats

Forward And Rearward Adjustment

Seat Adjustment Bar

The adjusting bar is at the front of the seat, near the floor. Pull the bar upward to move the seat forward or rearward. Release the bar once the seat is in the desired position. Then, using body pressure, move forward and rearward on the seat to be sure that the seat adjusters have latched.

Downloaded from www.Manualslib.com manuals search engine

Seat Height Adjustment

Height Adjustment Lever

The seat height adjustment lever is located on the outboard side of the seat. Pull upward on the lever to raise the seat height or push downward on the lever to lower the seat height.

Recliner Adjustment

Recline Lever

The recliner lever is located on the outboard side of the seat. To recline the seat, lean forward slightly, pull the recliner lever upward, lean backward until the seat is in the desired position, and release the lever. To return the

Downloaded from www.Manualslib.com manuals search engine

seat to its full upright position, lean forward, pull the recliner lever upward and hold it until the seat returns to its full upright position.

WARNING!

- **Adjusting a seat while driving may be dangerous. Moving a seat while driving could result in loss of control which could cause a collision and serious injury or death.**
- **Seats should be adjusted before fastening the seat belts and while the vehicle is parked. Serious injury or death could result from a poorly adjusted seat belt.**
- **Do not ride with the seatback reclined so that the shoulder belt is no longer resting against your chest. In a collision you could slide under the seat belt, which could result in serious injury or death.**

Power Seats

On models equipped with power seats, the power seat switch is located on the outboard side of the seat near the floor.

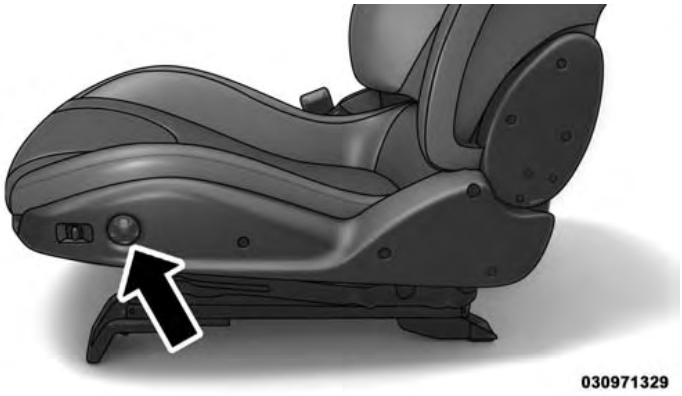

Power Seat Switch

Downloaded from www.Manualslib.com manuals search engine

Adjusting The Seat Forward Or Rearward

The seat can be adjusted both forward and rearward. Push the seat switch forward or rearward. The seat will move in the direction of the switch. Release the switch when the desired position has been reached.

Adjusting The Seat Up Or Down

The height of the seats can be adjusted up or down. Pull upward or push downward on the seat switch, the seat will move in the direction of the switch. Release the switch when the desired position is reached.

Reclining The Seatback Forward Or Rearward

The seatback can be reclined both forward and rearward. Push the power seat recliner switch forward or rearward, the seatback will move in the direction of the switch. Release the switch when the desired position has been reached.

Power Seat Recliner Switch

WARNING!

- **Adjusting a seat while driving may be dangerous. Moving a seat while driving could result in loss of control which could cause a collision and serious injury or death.**

(Continued)

Downloaded from www.Manualslib.com manuals search engine

WARNING! *(Continued)*

- **Seats should be adjusted before fastening the seat belts and while the vehicle is parked. Serious injury or death could result from a poorly adjusted seat belt.**
- **Do not ride with the seatback reclined so that the shoulder belt is no longer resting against your chest. In a collision you could slide under the seat belt, which could result in serious injury or death.**

CAUTION!

Do not place any article under a power seat or impede its ability to move as it may cause damage to the seat controls. Seat travel may become limited if movement is stopped by an obstruction in the seat's path.

Non-Adjustable Head Restraints

The non-adjustable head restraints are form fitted into the upper structure of the seatback and are designed to reduce the risk of injury by restricting head movement in the event of a rear impact. The seatback should be properly adjusted to an upright position where the head restraint is positioned as close as possible to the back of your head.

WARNING!

Be certain that the seatback is locked securely into position. Otherwise, the seat will not provide the proper stability for passengers. An improperly latched seatback could cause serious injury.

Downloaded from www.Manualslib.com manuals search engine

TO OPEN AND CLOSE THE HOOD

1. Reach into the back side area of the drivers front fender to gain access to the hood release lever.

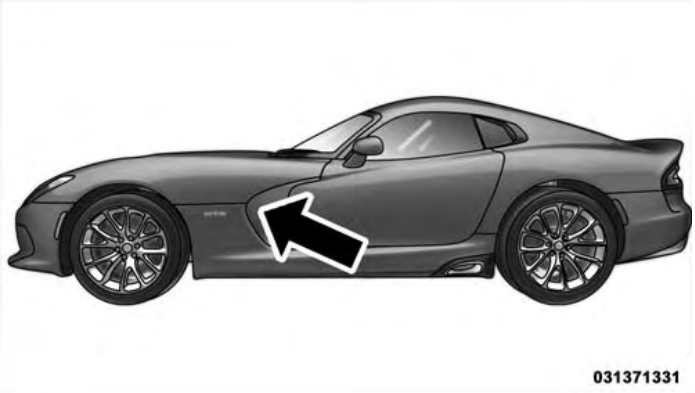

Hood Release Lever Location

2. Pull the hood release lever rearward to release the hood latches.

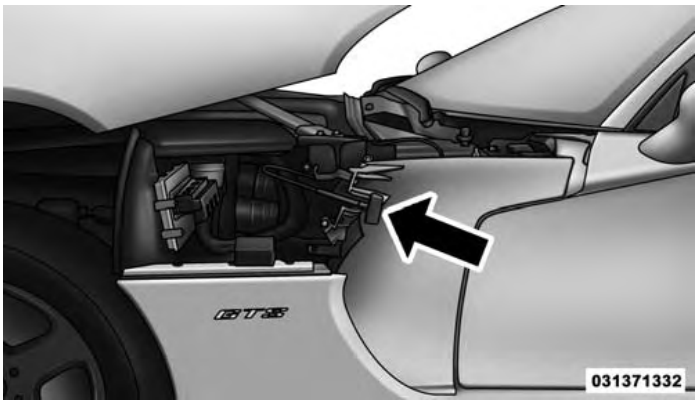

Hood Release Lever

Downloaded from www.Manualslib.com manuals search engine

3. Lift the hood upward to the full forward position.

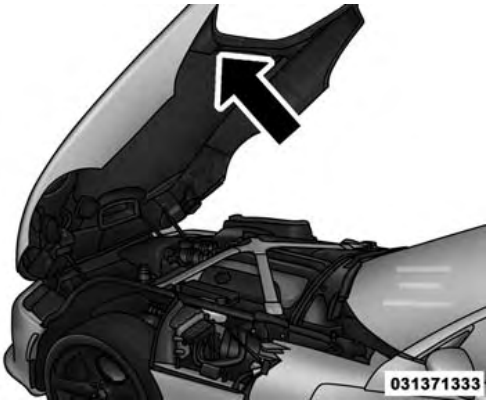

Opened Hood

NOTE: The recommended lift point is to place the lifting hand forward of one of the wiper arms and pull up. The assist props will help raise and hold the hood to a normal usage position.

CAUTION!

- **Do not leave the hood open in areas where strong gust of wind are likely. Such a place might be by the side of the road where large trucks pass by. Strong gusts of wind may damage the hood. Always close the hood in such situations.**
- **To prevent possible damage, do not slam the hood to close it. Simply lower the hood until it is open approximately 18 in (46 cm) and then drop it. This should secure both latches. If both latches did not secure, a slight push effort in the same area used for opening the hood (front of wiper arm) needs to be applied to secure the latches. Never drive the vehicle unless the hood is fully closed with both latches engaged.**

Downloaded from www.Manualslib.com manuals search engine

WARNING!

Be sure the hood is fully latched before driving your vehicle. If the hood is not fully latched, it could open when the vehicle is in motion and block your vision. Failure to follow this warning could result in serious injury or death.

LIGHTS

Headlight Switch

The headlight switch is located on the left side of the instrument panel. This switch controls the operation of the headlights, parking lights, instrument panel lights, instrument panel light dimming and interior lights.

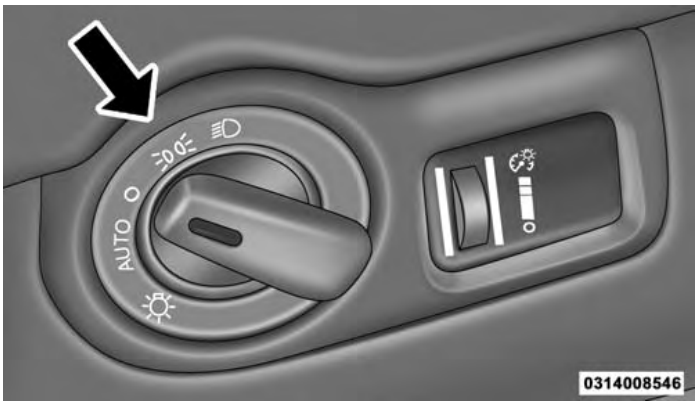

Headlight Switch

Rotate the headlight switch clockwise to the first detent for parking light and instrument panel light operation. Rotate the headlight switch to the second detent for headlight, parking light and instrument panel light operation.

Downloaded from www.Manualslib.com manuals search engine

Automatic Headlights

This system automatically turns the headlights on or off according to ambient light levels. To turn the system on, rotate the headlight switch counterclockwise to the A (AUTO) position. When the system is on, the headlight time delay feature is also on. This means the headlights will stay on for up to 90 seconds after placing the ignition in the OFF position. To turn the Automatic system off, move the headlight switch out of the AUTO position.

NOTE: The engine must be running before the headlights will come on in the automatic mode.

Headlights On With Wipers (Available With Automatic Headlights Only)

When this feature is active, the headlights will turn on after the wipers are turned on if the headlight switch is placed in the AUTO position and programmable feature is set to ON. In addition, the headlights will turn off when the wipers are turned off if they were turned on by this feature.

NOTE: The Headlights On with Wipers feature can be turned on or off using the Uconnect System. Refer to "Uconnect Settings/Customer Programmable Features" in "Understanding Your Instrument Panel" for further information.

Headlight Time Delay

This feature provides the safety of headlight illumination for up to 90 seconds (programmable) when leaving your vehicle in an unlit area.

To activate the delay feature, place the ignition in the OFF position while the headlights are still on. Then, turn off the headlights within 45 seconds. The delay interval begins when the headlight switch is turned off.

Downloaded from www.Manualslib.com manuals search engine

If you turn the headlights or parking lights on, or place the ignition in ACC or RUN, the system will cancel the delay.

If you turn the headlights off before the ignition, they will turn off in the normal manner.

NOTE:

- The lights must be turned off within 45 seconds of placing the ignition in the OFF position to activate this feature.
- The headlight delay time is programmable using the Uconnect System, refer to "Uconnect Settings" in "Understanding Your Instrument Panel" for further information.

Daytime Running Lights

The LED Daytime Running Lights will come on whenever the engine is running and the park brake is off. The headlight switch must be used for normal nighttime driving.

NOTE: If allowed by law in the country in which the vehicle was purchased the Daytime Running Lights can be turned on and off using the Uconnect System, refer to "Uconnect Settings" in "Understanding Your Instrument Panel" for further information.

Lights-On Reminder

If the headlights or parking lights are on after the ignition is placed in the OFF position, a chime will sound to alert the driver when the driver's door is opened.

Downloaded from www.Manualslib.com manuals search engine

Multifunction Lever

The multifunction lever controls the operation of the turn signals, headlight beam selection and passing lights. The multifunction lever is located on the left side of the steering column.

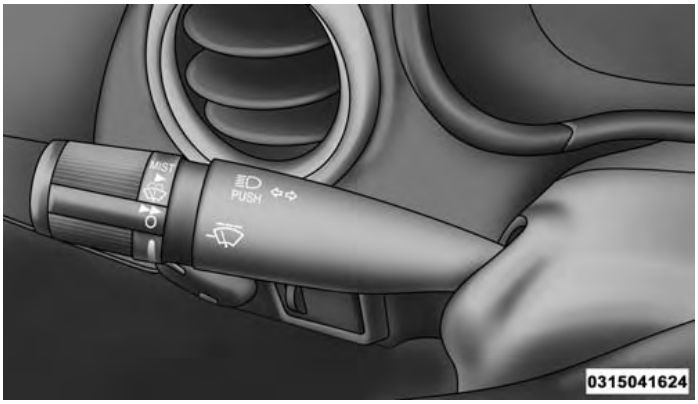

Multifunction Lever

Turn Signals

Move the multifunction lever up or down and the arrows on each side of the instrument cluster flash to show proper operation of the front and rear turn signal lights.

NOTE:

- If either light remains on and does not flash, or there is a very fast flash rate, check for a defective outside light bulb. If an indicator fails to light when the lever is moved, it would suggest that the indicator bulb is defective.
- A "Turn Signal On" message will appear in the Driver Information Display (DID) and a continuous chime will sound if the vehicle is driven more than 1 mile (1.6 km) with either turn signal on.

Downloaded from www.Manualslib.com manuals search engine

High/Low Beam Switch

Push the multifunction lever away from you to switch the headlights to high beam. Pull the multifunction lever toward you to switch the headlights back to low beam.

Flash-To-Pass

You can signal another vehicle with your headlights by lightly pulling the multifunction lever toward you. This will turn on the high beams headlights until the lever is released.

Interior Lights

The interior lights come on when a door is opened.

To protect the battery, the interior lights will turn off automatically 10 minutes after the ignition is moved to the LOCK position. This will occur if the interior lights were switched on manually or are on because a door is open. This includes the glove box light and the trunk light. To restore interior light operation, either place the ignition in the ON/RUN position or cycle the light switch.

Downloaded from www.Manualslib.com manuals search engine

Dimmer Controls

The dimmer control is part of the headlight switch and is located on the left side of the instrument panel. Rotating the dimmer control upward with the parking lights or headlights on will increase the brightness of the instrument panel lights and ambient lighting.

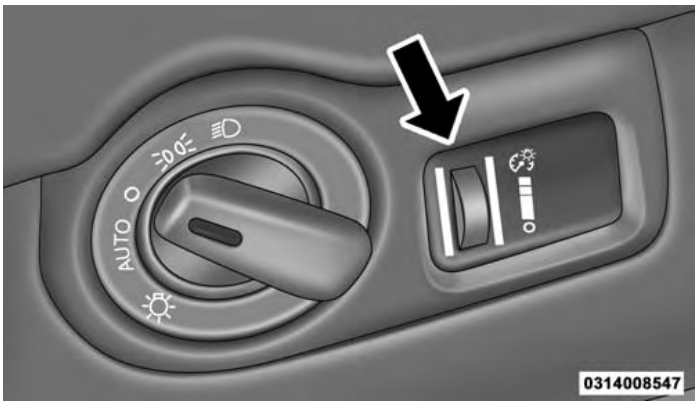

Dimmer Control

Interior Light Control

Rotate the dimmer control completely upward to the second detent to turn on the interior lights. The interior lights will remain on when the dimmer control is in this position.

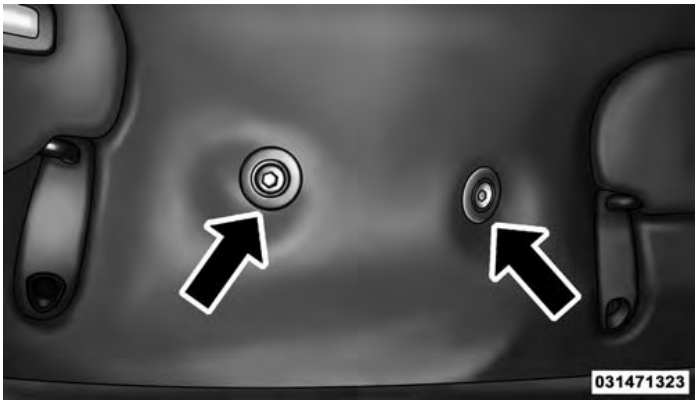

Interior Lights

Downloaded from www.Manualslib.com manuals search engine

Interior Light Defeat (OFF)

Rotate the dimmer control to the extreme bottom OFF position. The interior lights will remain off when the doors are open.

Parade Mode (Daytime Brightness Feature)

Rotate the instrument panel dimmer control upward to the first detent. This feature brightens all text displays such as the odometer, Driver Information Display (DID), and radio when the position lights or headlights are on.

WINDSHIELD WIPERS AND WASHERS

The multifunction lever operates the windshield wipers and washer when the ignition is placed in the ON/RUN or ACC position. The multifunction lever is located on the left side of the steering column.

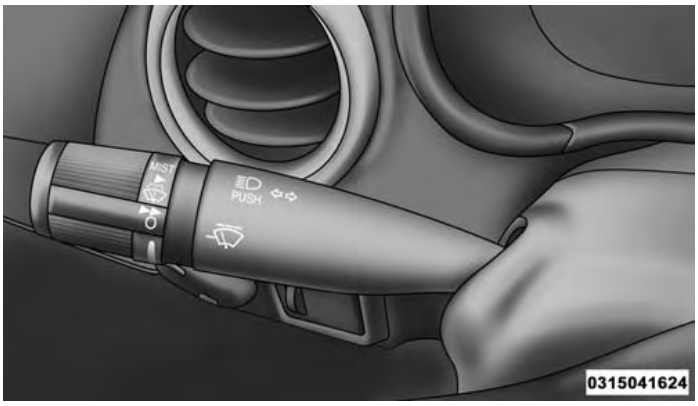

Windshield Wiper/Washer Control

Intermittent Wiper System

Use the intermittent wiper when weather conditions make a single wiping cycle with a variable pause between cycles desirable. Rotate the end of the multifunction lever to the first detent position, and then turn the end of the lever to select the desired delay interval. There

Downloaded from www.Manualslib.com manuals search engine

are four delay settings, which allow you to regulate the wipe interval from a minimum of one cycle every second to a maximum of approximately 36 seconds between cycles. The delay intervals will double in duration when the vehicle speed is 10 mph (16 km/h) or less.

Wiper Operation

Rotate the end of the multifunction lever to the first detent, past the intermittent settings for low-speed wiper operation, or to the second detent past the intermittent settings for high-speed wiper operation.

CAUTION!

- **Turn the windshield wipers off when driving through an automatic car wash. Damage to the windshield wipers may result if the wiper control is left in any position other than off.**

(Continued)

CAUTION! ***(Continued)***

- **In cold weather, always turn off the wiper switch and allow the wipers to return to the "Park" position before turning off the engine. If the wiper switch is left on and the wipers freeze to the windshield, damage to the wiper motor may occur when the vehicle is restarted.**
- **Always remove any buildup of snow that prevents the windshield wiper blades from returning to the off position. If the windshield wiper control is turned off and the blades cannot return to the off position, damage to the wiper motor may occur.**

Mist Feature

When a single wipe to clear off road mist or spray from a passing vehicle is needed, push the washer knob,

Downloaded from www.Manualslib.com manuals search engine

located on the end of the multifunction lever, inward to the first detent and release. The wipers will cycle one time and automatically shut off.

NOTE: The mist feature does not activate the washer pump; therefore, no washer fluid will be sprayed on the windshield. The wash function must be used in order to spray the windshield with washer fluid.

Windshield Washers

To use the windshield washer, push the washer knob, located on the end of the multifunction lever, inward to the second detent. Washer fluid will be sprayed and the wiper will operate for two to three cycles after the washer knob is released from this position.

If the washer knob is depressed while in the delay range, the wiper will operate for several seconds after the washer knob is released. It will then resume the intermittent interval previously selected. If the washer knob is pushed while in the off position, the wiper will turn on and cycle approximately three times after the wash knob is released.

To prevent freeze-up of your windshield washer system in cold weather, select a solution or mixture that meets or exceeds the temperature range of your climate. This rating information can be found on most washer fluid containers.

WARNING!

Sudden loss of visibility through the windshield could lead to a collision. You might not see other vehicles or other obstacles. To avoid sudden icing of the windshield during freezing weather, warm the windshield with the defroster before and during windshield washer use.

Downloaded from www.Manualslib.com manuals search engine

Headlights On With Wipers (Available With Automatic Headlights Only)

When this feature is active, the headlights will turn on after the wipers are turned on if the headlight switch is placed in the AUTO position and programmable feature is set to ON. In addition, the headlights will turn off when the wipers are turned off if they were turned on by this feature.

NOTE: The Headlights On with Wipers feature can be turned on or off using the Uconnect System. Refer to "Uconnect Settings/Customer Programmable Features" in "Understanding Your Instrument Panel" for further information.

TILT STEERING COLUMN

The tilt release lever is located below the multifunction lever on the left side of the steering column. To tilt the column, simply pull the release lever rearward toward you and then move the steering wheel upward or downward as desired. When the column is in the desired position, push the release lever forward to lock the column firmly in place.

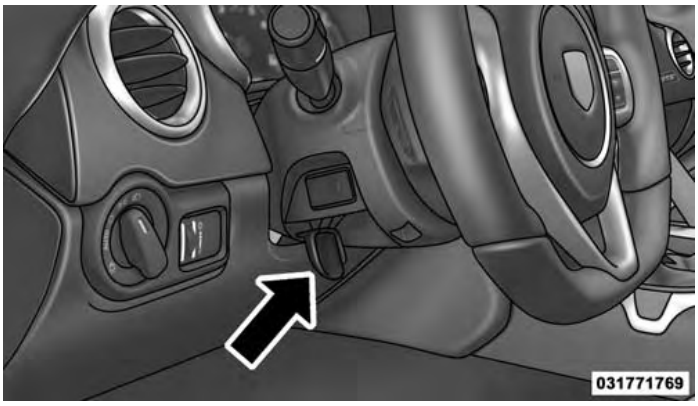

Tilt Steering Column Lever

Downloaded from www.Manualslib.com manuals search engine

WARNING!

Do not adjust the steering column while driving. Adjusting the steering column while driving or driving with the steering column unlocked, could cause the driver to lose control of the vehicle. Failure to follow this warning may result in serious injury or death.

ADJUSTABLE PEDALS

The adjustable pedals system is designed to allow a greater range of driver comfort for steering wheel tilt and seat position. This feature allows the brake, accelerator, and clutch pedal to move toward or away from the driver to provide improved position with the steering wheel.

The adjustable pedal switch is located to the left side of the steering column.

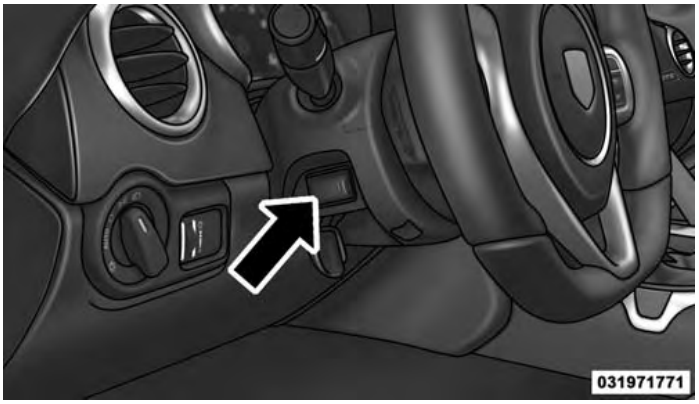

Adjustable Pedals Switch

Downloaded from www.Manualslib.com manuals search engine

Push the switch forward to move the pedals forward (toward the front of the vehicle).

Push the switch rearward to move the pedals rearward (toward the driver).

NOTE:

- The pedals can be adjusted with the ignition OFF.
- Always adjust the pedals to a position that allows full pedal travel.
- Further small adjustments may be necessary to find the best possible seat/pedal position.

CAUTION!

Do not place any article under the adjustable pedals or impede its ability to move as it may cause damage to the pedal controls. Pedal travel may become limited if movement is stopped by an obstruction in the adjustable pedal's path.

WARNING!

Do not adjust the pedals while the vehicle is moving. You could lose control and have an accident. Always adjust the pedals while the vehicle is parked.

Downloaded from www.Manualslib.com manuals search engine

Adjustable Foot Rest

This feature allows the driver to adjust the foot rest forward or backward and to rotate it upward or downward to allow for greater driving comfort.

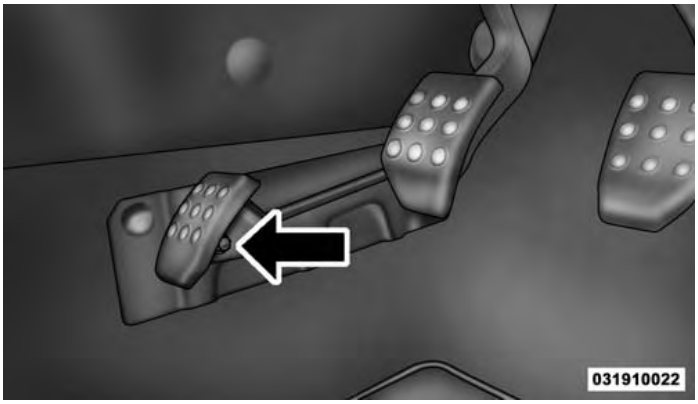

Adjustable Foot Rest

To adjust the pedal:

1. Adjust the seat and steering column to a comfortable position.
2. Using a socket wrench, loosen the nut on the pedal.
3. Slide the pedal either forward or backward and rotate it upward or downward as desired.
4. Tighten the nut, being careful not to over tighten it.

ELECTRONIC SPEED CONTROL

When engaged, the Electronic Speed Control takes over accelerator operations at speeds greater than 25 mph (40 km/h).

The Electronic Speed Control buttons are located on the right side of the steering wheel.

Downloaded from www.Manualslib.com manuals search engine

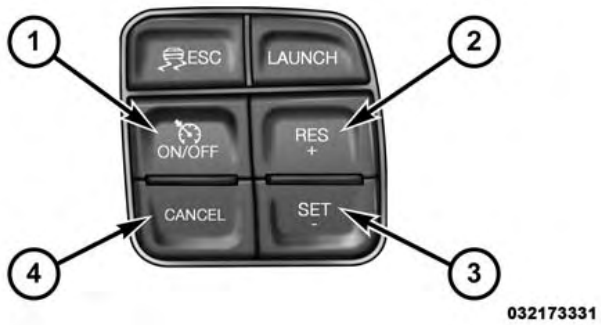

Electronic Speed Control Buttons

1 — ON/OFF	2 — RES +
4 — CANCEL	3 — SET -

NOTE: In order to ensure proper operation, the Electronic Speed Control System has been designed to shut down if multiple speed control buttons are pushed at the same time. If this occurs, the Electronic Speed Control System can be reactivated by pushing the Electronic Speed Control ON/OFF button and resetting the desired vehicle set speed.

To Activate

Push the ON/OFF button to activate the Electronic Speed Control. The Cruise Indicator Light in the Driver Information Display (DID) will illuminate. To turn the system off, push the ON/OFF button a second time. The Cruise Indicator Light will turn off. The system should be turned off when not in use.

Downloaded from www.Manualslib.com manuals search engine

WARNING!

Leaving the Electronic Speed Control system on when not in use is dangerous. You could accidentally set the system or cause it to go faster than you want. You could lose control and have an accident. Always leave the system OFF when you are not using it.

To Set A Desired Speed

Turn the Electronic Speed Control ON. When the vehicle has reached the desired speed, push the SET (-) button and release. Release the accelerator and the vehicle will operate at the selected speed.

NOTE: The vehicle should be traveling at a steady speed and on level ground before pushing the SET (-) button.

To Deactivate

A soft tap on the brake pedal, pushing the CANCEL button, manually accelerating 10 mph (16 km/h) above the set speed or normal brake pressure while slowing the vehicle will deactivate the Electronic Speed Control without erasing the set speed memory.

Pushing the ON/OFF button or turning the ignition switch OFF erases the set speed memory.

To Resume Speed

To resume a previously set speed, push the RES (+) button and release. Resume can be used at any speed above 20 mph (32 km/h).

To Vary The Speed Setting

To Increase Speed

When the Electronic Speed Control is set, you can increase speed by pushing the RES (+) button.

The drivers preferred units can be selected through the instrument panel settings if equipped. Refer to "Understanding Your Instrument Panel" for more information.

Downloaded from www.Manualslib.com manuals search engine

The speed increment shown is dependent on the selected speed unit of U.S. (mph) or Metric (km/h):

U.S. Speed (mph)

- Pushing the RES (+) button once will result in a 1 mph increase in set speed. Each subsequent tap of the button results in an increase of 1 mph.
- If the button is continually pushed, the set speed will continue to increase until the button is released, then the new set speed will be established.

Metric Speed (km/h)

- Pushing the RES (+) button once will result in a 1 km/h increase in set speed. Each subsequent tap of the button results in an increase of 1 km/h.
- If the button is continually pushed, the set speed will continue to increase until the button is released, then the new set speed will be established.

To Decrease Speed

When the Electronic Speed Control is set, you can decrease speed by pushing the SET (-) button.

The drivers preferred units can be selected through the instrument panel settings if equipped. Refer to "Understanding Your Instrument Panel" for more information. The speed decrement shown is dependant on the selected speed unit of U.S. (mph) or Metric (km/h):

U.S. Speed (mph)

- Pushing the SET (-) button once will result in a 1 mph decrease in set speed. Each subsequent tap of the button results in a decrease of 1 mph.
- If the button is continually pushed, the set speed will continue to decrease until the button is released, then the new set speed will be established.

Downloaded from www.Manualslib.com manuals search engine

Metric Speed (km/h)

- Pushing the SET (-) button once will result in a 1 km/h decrease in set speed. Each subsequent tap of the button results in a decrease of 1 km/h.
- If the button is continually pushed, the set speed will continue to decrease until the button is released, then the new set speed will be established.

To Accelerate For Passing

Push the accelerator as you would normally. When the pedal is released, the vehicle will return to the set speed.

NOTE: If the accelerated speed goes above 10 mph (16 km/h) of the set speed, the Electronic Speed Control will deactivate.

PARKVIEW REAR BACK UP CAMERA — IF EQUIPPED

Your vehicle may be equipped with the ParkView Rear Back Up Camera that allows you to see an on-screen image of the rear surroundings of your vehicle whenever the shift lever/gear selector is put into REVERSE. The ParkView camera is located on the rear of the vehicle above the rear license plate. The image will be displayed in the touchscreen display along with a caution note to "check entire surroundings" across the top of the screen. After five seconds this note will disappear.

NOTE: The ParkView Rear Back Up Camera has programmable modes of operation that may be selected through the Uconnect System. Refer to "Uconnect Settings" in "Understanding Your Instrument Panel" for further information.

Downloaded from www.Manualslib.com manuals search engine

If your vehicle is equipped with the Camera Delay feature and it is turned ON, the rear camera image will be displayed for up to 10 seconds when the vehicle is shifted out of REVERSE unless the forward vehicle speed exceeds 8 mph (13 km/h), the transmission is shifted into "PARK" or the vehicle's ignition is cycled to the OFF position.

When the Vehicle is shifted out of REVERSE (with camera delay turned OFF) the rear camera mode is exited and the last touchscreen appears again.

The active guide lines are overlaid on the image to illustrate the width of the vehicle and its projected backup path based on the steering wheel position.

Different colored zones indicate the distance to the rear of the vehicle.

The following table shows the approximate distances for each zone:

WARNING!

Drivers must be careful when backing up even when using the ParkView Rear Back Up Camera. Always check carefully behind your vehicle, and be sure to check for pedestrians, animals, other vehicles, obstructions, or blind spots before backing up. You are responsible for the safety of your surroundings and must continue to pay attention while backing up. Failure to do so can result in serious injury or death.

Downloaded from www.Manualslib.com manuals search engine

CAUTION!

- **To avoid vehicle damage, ParkView should only be used as a parking aid. The ParkView camera is unable to view every obstacle or object in your drive path.**
- **To avoid vehicle damage, the vehicle must be driven slowly when using ParkView to be able to stop in time when an obstacle is seen. It is recommended that the driver look frequently over his/her shoulder when using ParkView.**

NOTE: If snow, ice, mud, or any foreign substance builds up on the camera lens, clean the lens, rinse with water, and dry with a soft cloth. Do not cover the lens.

GARAGE DOOR OPENER — IF EQUIPPED

HomeLink replaces up to three hand-held transmitters that operate devices such as garage door openers, motorized gates, lighting or home security systems. The HomeLink unit is powered by your vehicles 12 Volt battery.

The HomeLink buttons, located on the sunvisor, designate the three different HomeLink channels. The HomeLink indicator is located above the center button.

Downloaded from www.Manualslib.com manuals search engine

HomeLink Buttons Sunvisor

NOTE: HomeLink is disabled when the Vehicle Security Alarm is active.

Before You Begin Programming HomeLink

Ensure your vehicle is parked outside of the garage before you begin programming.

For more efficient programming and accurate transmission of the radio-frequency signal it is recommended that a new battery be placed in the hand-held transmitter of the device that is being programmed to the HomeLink system.

To erase the channels place the ignition in the ON/RUN position and push and hold the two outside HomeLink buttons (I and III) for up 20 seconds, or until the red indicator flashes.

NOTE:

- Erasing all channels should only be performed when programming HomeLink for the first time. Do not erase channels when programming additional buttons.
- If you have any problems, or require assistance, please call toll-free 800-355-3515 or, on the Internet at HomeLink.com for information or assistance.

Downloaded from www.Manualslib.com manuals search engine

Programming A Rolling Code

For programming garage door openers that were manufactured after 1995. These garage door openers can be identified by the "LEARN" or "TRAIN" button located where the hanging antenna is attached to the garage door opener. It is NOT the button that is normally used to open and close the door. The name and color of the button may vary by manufacturer.

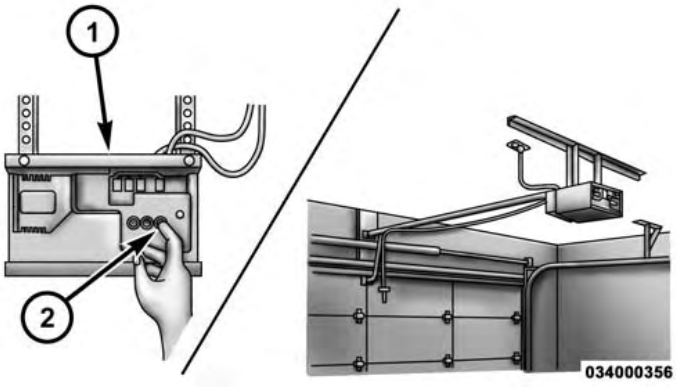

Training The Garage Door Opener

1 — Door Opener
2 — Training Button

1. Place the ignition in the ON/RUN position.

Downloaded from www.Manualslib.com manuals search engine

2. Place the hand-held transmitter 1 to 3 inches (3 to 8 cm) away from the HomeLink button you wish to program while keeping the HomeLink indicator light in view.
3. Push and hold the HomeLink button you want to program while you push and hold the hand-held transmitter button.
4. Continue to hold both buttons and observe the indicator light. The HomeLink indicator will flash slowly and then rapidly after HomeLink has received the frequency signal from the hand-held transmitter. Release both buttons after the indicator light changes from slow to rapid.
5. At the garage door opener motor (in the garage), locate the "LEARN" or "TRAINING" button. This can usually be found where the hanging antenna wire is attached to the garage door opener/device motor. Firmly push and release the "LEARN" or "TRAINING" button. On some garage door openers/devices there may be a light that blinks when the garage door opener/device is in the LEARN/TRAIN mode.

NOTE: You have 30 seconds in which to initiate the next step after the LEARN button has been pushed.

6. Return to the vehicle and push the programmed HomeLink button twice (holding the button for two seconds each time). If the garage door opener/device activates, programming is complete.

NOTE: If the garage door opener/device does not activate, push the button a third time (for two seconds) to complete the training.

To program the remaining two HomeLink buttons, repeat each step for each remaining button. DO NOT erase the channels.

Downloaded from www.Manualslib.com manuals search engine

Reprogramming A Single HomeLink Button (Rolling Code)

To reprogram a channel that has been previously trained, follow these steps:

1. Cycle the ignition to the ON/RUN position.
2. Push and hold the desired HomeLink button until the indicator light begins to flash after 20 seconds. **Do not release the button.**
3. **Without releasing the button** proceed with "Programming A Rolling Code" step 2 and follow all remaining steps.

Programming A Non-Rolling Code

For programming Garage Door Openers manufactured before 1995.

1. Cycle the ignition to the ON/RUN position.
2. Place the hand-held transmitter 1 to 3 inches (3 to 8 cm) away from the HomeLink button you would like to program while keeping the HomeLink indicator light in view.
3. Push and hold the HomeLink button you want to program while you push and hold the hand-held transmitter button.
4. Continue to hold both buttons and observe the indicator light. HomeLink indicator will flash slowly and then rapidly after HomeLink has received the frequency signal from the hand-held transmitter. Release both buttons after the indicator light changes from slow to rapid.
5. Push and hold the programmed HomeLink button and observe the indicator light.
   - If the indicator light stays on constantly, programming is complete and the garage door/device should activate when the HomeLink button is pressed.

Downloaded from www.Manualslib.com manuals search engine

- To program the remaining two HomeLink buttons, repeat each step for each remaining button. DO NOT erase the channels.

Reprogramming A Single HomeLink Button (Non — Rolling Code)

To reprogram a channel that has been previously trained, follow these steps:

1. Cycle the ignition to the ON/RUN position.
2. Push and hold the desired HomeLink button until the indicator light begins to flash after 20 seconds. **Do not release the button.**
3. **Without releasing the button** proceed with "Programming A Non-Rolling Code" step 2 and follow all remaining steps.

Canadian/Gate Operator Programming

For programming transmitters in Canada/United States that require the transmitter signals to "time-out" after several seconds of transmission.

Canadian radio frequency laws require transmitter signals to time-out (or quit) after several seconds of transmission – which may not be long enough for HomeLink to pick up the signal during programming. Similar to this Canadian law, some U.S. gate operators are designed to time-out in the same manner.

It may be helpful to unplug the device during the cycling process to prevent possible overheating of the garage door or gate motor.

1. Cycle the ignition to the ON/RUN position.

Downloaded from www.Manualslib.com manuals search engine

2. Place the hand-held transmitter 1 to 3 inches (3 to 8 cm) away from the HomeLink button you wish to program while keeping the HomeLink indicator light in view.
3. Continue to push and hold the HomeLink button, while you press and release ("cycle") your hand-held transmitter every two seconds until HomeLink has successfully accepted the frequency signal. The indicator light will flash slowly and then rapidly when fully trained.
4. Watch for the HomeLink indicator to change flash rates. When it changes, it is programmed. It may take up to 30 seconds or longer in rare cases. The garage door may open and close while you are programming.
5. Push and hold the programmed HomeLink button and observe the indicator light.

NOTE:

- If the indicator light stays on constantly, programming is complete and the garage door/device should activate when the HomeLink button is pushed.
- To program the two remaining HomeLink buttons, repeat each step for each remaining button. DO NOT erase the channels.

If you unplugged the garage door opener/device for programming, plug it back in at this time.

Reprogramming A Single HomeLink Button (Canadian/Gate Operator)

To reprogram a channel that has been previously trained, follow these steps:

1. Cycle the ignition to the ON/RUN position.

Downloaded from www.Manualslib.com manuals search engine

2. Push and hold the desired HomeLink button until the indicator light begins to flash after 20 seconds. **Do not release the button.**
3. **Without releasing the button** proceed with "Canadian/Gate Operator Programming" step 2 and follow all remaining steps.

Using HomeLink

To operate, push and release the programmed HomeLink button. Activation will now occur for the programmed device (i.e., garage door opener, gate operator, security system, entry door lock, home/office lighting, etc.,). The hand-held transmitter of the device may also be used at any time.

Security

It is advised to erase all channels before you sell or turn in your vehicle.

To do this, push and hold the two outside buttons for 20 seconds until the red indicator flashes. Note that all channels will be erased. Individual channels cannot be erased.

The HomeLink Universal Transceiver is disabled when the Vehicle Security Alarm is active.

Troubleshooting Tips

If you are having trouble programming HomeLink, here are some of the most common solutions:

- Replace the battery in the original hand-held transmitter.
- Push the LEARN button on the Garage Door Opener to complete the training for a Rolling Code.
- Did you unplug the device for programming and remember to plug it back in?

Downloaded from www.Manualslib.com manuals search engine

If you have any problems, or require assistance, please call toll-free 800-355-3515 or, on the Internet at HomeLink.com for information or assistance.

WARNING!

- **Vehicle exhaust contains carbon monoxide, a dangerous gas. Do not run your vehicle in the garage while programming the transceiver. Exhaust gas can cause serious injury or death.**
- **Your motorized door or gate will open and close while you are programming the universal transceiver. Do not program the transceiver if people, pets or other objects are in the path of the door or gate. Only use this transceiver with a garage door opener that has a "stop and reverse" feature as required by Federal safety standards. This includes most garage door opener models manufactured**

(Continued)

WARNING! ***(Continued)***

after 1982. Do not use a garage door opener without these safety features. Call toll-free 800-355-3515 or, on the Internet at HomeLink.com for safety information or assistance.

General Information

This device complies with FCC rules Part 15 and Industry Canada RSS-210. Operation is subject to the following two conditions:

1. This device may not cause harmful interference.
2. This device must accept any interference that may be received including interference that may cause undesired operation.

Downloaded from www.Manualslib.com manuals search engine

NOTE:

- The transmitter has been tested and it complies with FCC and IC rules. Changes or modifications not expressly approved by the party responsible for compliance could void the user's authority to operate the device.
- The term IC before the certification/registration number only signifies that Industry Canada technical specifications were met.

ELECTRICAL POWER OUTLETS

Your vehicle is equipped with two 12 Volt (13 Amp) power outlet that can be used to power cellular phones, small electronics and other low powered electrical accessories.

One power outlet is located on the center console to the right of the shifter. Push down on the power outlet to access the opening. Push down on it again to close. This power outlet is powered when the ignition is in the ON or ACC position.

Front Power Outlet

The second power outlet is located between the seat backs above the cup holders. This power outlet is connected directly by the battery and powered at all times.

Downloaded from www.Manualslib.com manuals search engine

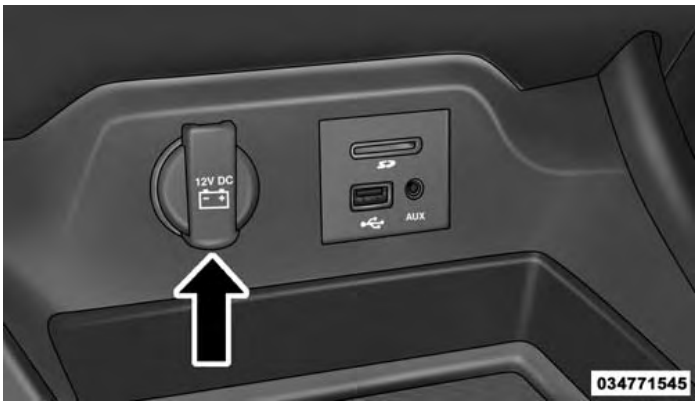

Center Console Outlet

NOTE: Do not exceed the maximum power of 160 Watts (13 Amps) at 12 Volts. If the 160 Watt (13 Amp) power rating is exceeded the fuse protecting the system will need to be replaced.

WARNING!

To avoid serious injury or death:

- **Only devices designed for use in this type of outlet should be inserted into any 12 Volt outlet.**
- **Do not touch with wet hands.**
- **Close the lid when not in use and while driving the vehicle.**
- **If this outlet is mishandled, it may cause an electric shock and failure.**

CAUTION!

- **Many accessories that can be plugged in draw power from the vehicle's battery, even when not in use (i.e., cellular phones, etc.). Eventually, if plugged in long enough, the vehicle's battery will discharge sufficiently to degrade battery life and/or prevent the engine from starting.**

(Continued)

Downloaded from www.Manualslib.com manuals search engine

CAUTION! ***(Continued)***

- **Accessories that draw higher power (i.e., coolers, vacuum cleaners, lights, etc.) will degrade the battery even more quickly. Only use these intermittently and with greater caution.**
- **After the use of high power draw accessories, or long periods of the vehicle not being started (with accessories still plugged in), the vehicle must be driven a sufficient length of time to allow the generator to recharge the vehicle's battery.**

Auxiliary Jumper Harness

The Viper is equipped with an auxiliary power jumper, allowing an electronic device to be directly connected to the vehicle without having to use the console power outlets. Power to the device will be controlled by the ignition switch.

NOTE: The electronic device must draw less than five amps to prevent damage.

To install, remove the mirror cover by pulling straight down and separating the cover pieces.

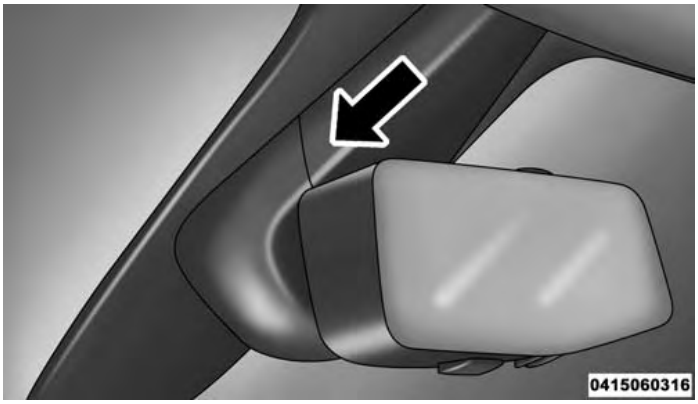

Mirror Cover Removal

Downloaded from www.Manualslib.com manuals search engine

Connect the auxiliary port jumper into the unused connector taped to the wiring bundle. Connect the other end of the auxiliary port jumper to the electronic device.

NOTE: The red wire in the bundle is the power wire and will provide the positive 12 volts to the electronic device.

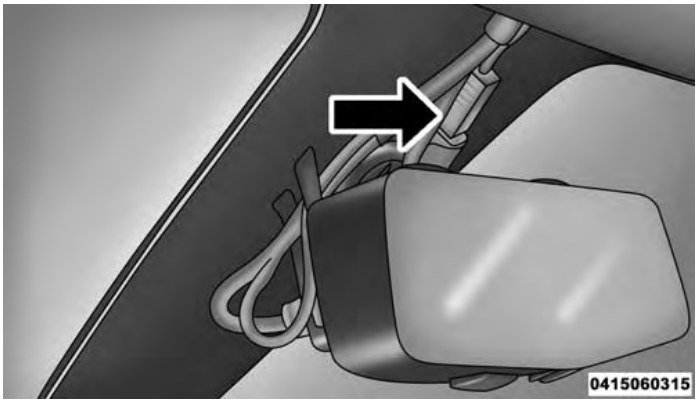

Auxiliary Port Jumper

Re-install the mirror cover and be sure to not pinch the wires that go into the electronic device.

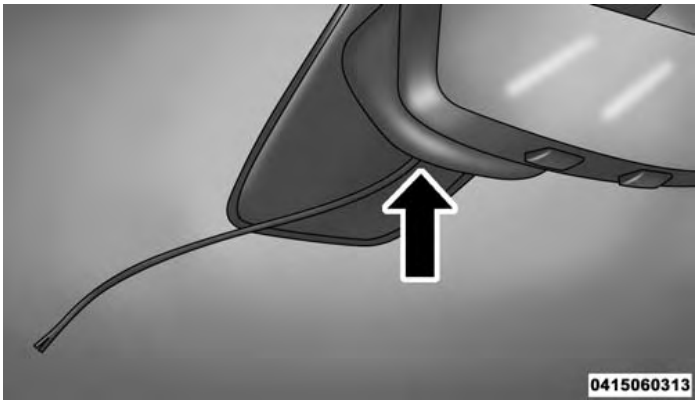

Mirror Cover Installation

Downloaded from www.Manualslib.com manuals search engine

CUPHOLDERS — IF EQUIPPED

There are two cupholders located in the rear of the center console.

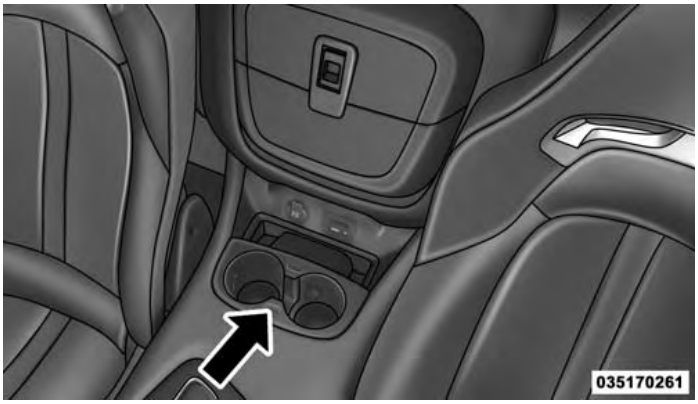

Center Console Cupholders

STORAGE

Glove Compartment

An electronic glove compartment is located on the passenger side of the instrument panel. Push in the button to open the glove compartment.

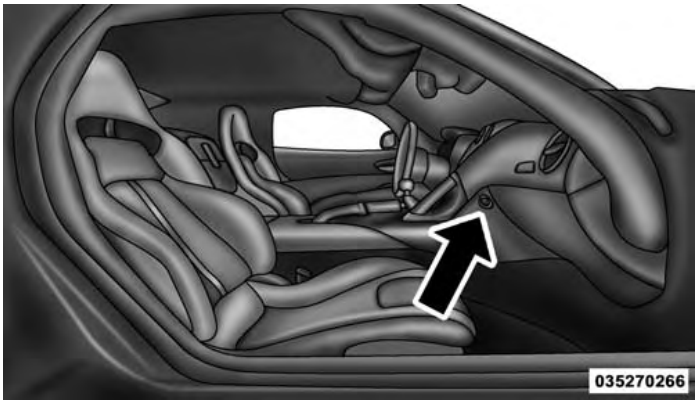

Glove Compartment

Downloaded from www.Manualslib.com manuals search engine

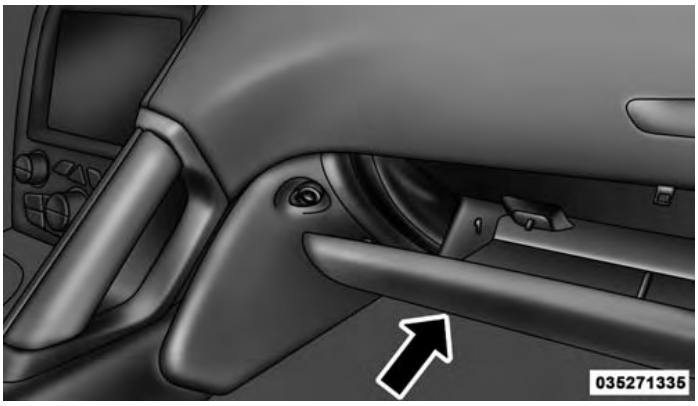

Opened Glove Compartment

NOTE: The glove compartment will lock with the door locks unless the key fob is detected inside the vehicle.

Console Features

Console Cubby Bin — If Equipped

An open storage area, or cubby bin, is located in the center console rearward of the shift lever.

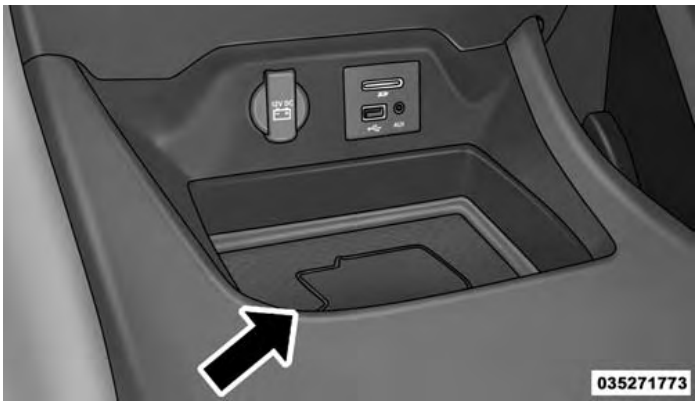

Center Console Cubby Bin Location

Downloaded from www.Manualslib.com manuals search engine

Cargo Net Storage — If Equipped

There is a cargo net storage area located between the driver and passengers seat.

Cargo Net Storage Location

Storage Bin — If Equipped

There is a storage bin located between the driver and passengers seat. Pull up on the release lever to open the storage bin.

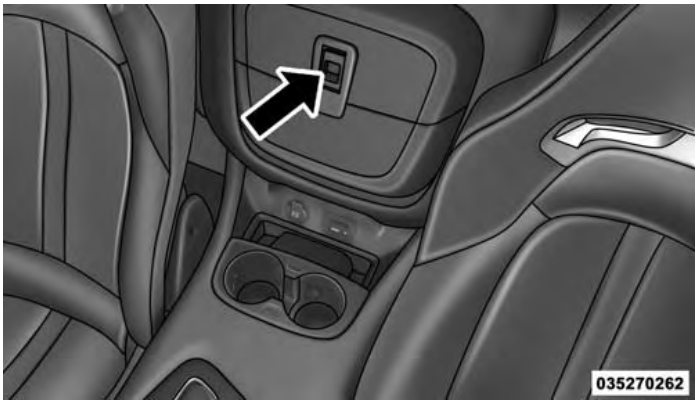

Storage Bin Location

Downloaded from www.Manualslib.com manuals search engine

WARNING!

Do not operate this vehicle with a console compartment lid in the open position. Driving with the console compartment lid open may result in injury in a collision.

Door Storage

The door panels contain storage areas located in the lower center area of the door panel.

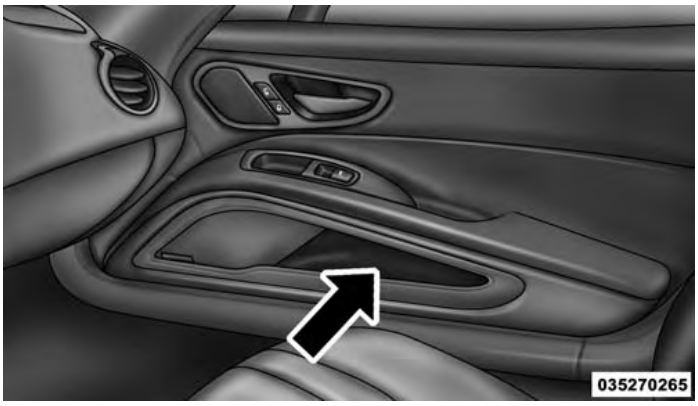

Door Panel Storage

Downloaded from www.Manualslib.com manuals search engine

REAR WINDOW FEATURES

Rear Window Defroster

The rear window defroster button is located on the climate control panel. Push this button to turn on the rear window defroster. An indicator in the button will illuminate when the rear window defroster is on. The rear window defroster automatically turns off after approximately 10 minutes. For an additional five minutes of operation, push the button a second time.

NOTE: To prevent excessive battery drain, use the rear window defroster only when the engine is operating.

CAUTION!

Failure to follow these cautions can cause damage to the heating elements:

- **Use care when washing the inside of the rear window. Do not use abrasive window cleaners on the interior surface of the window. Use a soft cloth and a mild washing solution, wiping parallel to the heating elements. Labels can be peeled off after soaking with warm water.**
- **Do not use scrapers, sharp instruments, or abrasive window cleaners on the interior surface of the window.**
- **Keep all objects a safe distance from the window.**

Downloaded from www.Manualslib.com manuals search engine

UNDERSTANDING YOUR INSTRUMENT PANEL

CONTENTS

- INSTRUMENT PANEL FEATURES 144
- INSTRUMENT CLUSTER 145
- WARNING AND INDICATOR LIGHTS 147
  - Red Telltale Indicator Lights 148
  - Yellow Telltale Indicator Lights 158
  - Green Telltale Indicator Lights 166
  - White Telltale Indicator Light 168
  - Blue Telltale Indicator Light 169
- DRIVER INFORMATION DISPLAY (DID) 170
  - DID Display 172
  - Driver Information Display (DID) Messages . . .175
  - DID Selectable Menu Items. 176
- UCONNECT SETTINGS 185
  - Buttons On The Faceplate. 186
  - Buttons On The Touchscreen. 186
  - Customer Programmable Features/Personal Settings — Uconnect 8.4 System Settings 186
  - SRT Performance Pages 199
- UCONNECT RADIOS — IF EQUIPPED 203
- iPod/USB/MP3 CONTROL — IF EQUIPPED . . .204

Downloaded from www.Manualslib.com manuals search engine

■ STEERING WHEEL AUDIO CONTROLS 204
□ Radio Operation 205
■ RADIO ANTENNA 206
■ RADIO OPERATION AND MOBILE DEVICES . .206
□ General Information 206
■ CLIMATE CONTROLS 206
□ Automatic Temperature Control (ATC). 207
□ Summer Operation 212
□ Winter Operation. 212
□ Vacation/Storage 213
□ Window Fogging and Frosting 213
□ Outside Air Intake. 213
□ Control Setting Suggestions For Various Weather Conditions 214
■ PERSONALIZED MENU BAR 215
■ UCONNECT VOICE RECOGNITION QUICK TIPS 215
□ Introducing Uconnect. 215
□ Get Started 216
□ Basic Voice Commands. 217
□ Radio 218
□ Media. 219
□ Phone. 220
□ Voice Text Reply 221
□ Climate (8.4AN) 223
□ Navigation (8.4AN) 224

Downloaded from www.Manualslib.com manuals search engine

- Uconnect Access (8.4AN) 225
- Register (8.4A/8.4AN) 226
- Mobile App (8.4A/8.4AN) 227
- Voice Texting (8.4A/8.4AN) 228
- Yelp (8.4A/8.4AN). 229
- SiriusXM Travel Link (8.4AN). 231
- Siri Eyes Free — If Equipped 231
- Do Not Disturb 232
- General Information. 233
- Additional Information 234

Downloaded from www.Manualslib.com manuals search engine

INSTRUMENT PANEL FEATURES

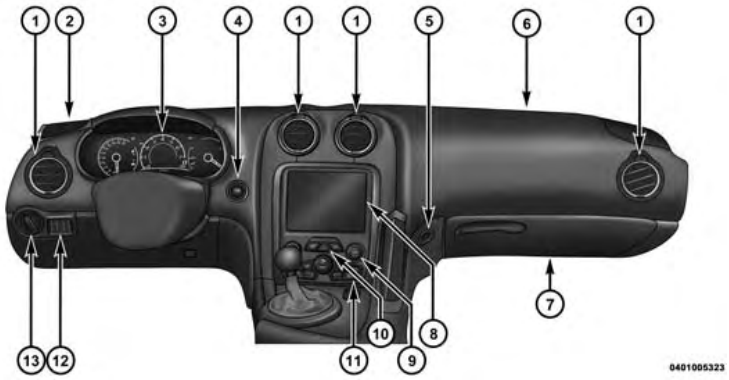

1 — Air Outlet
2 — Sound System Speaker
3 — Instrument Cluster
4 — Keyless Enter-N-Go Start/Stop Button
5 — Glove Compartment Lock
6 — Passenger Air Bag
7 — Glove Compartment
8 — Uconnect System
9 — Uconnect System Hard Controls
10 — Switch Bank (Screen Off, Hazard Switch, Back Button)
11 — Climate Controls
12 — Dimmer Controls
13 — Headlight Switch

Downloaded from www.Manualslib.com manuals search engine

INSTRUMENT CLUSTER

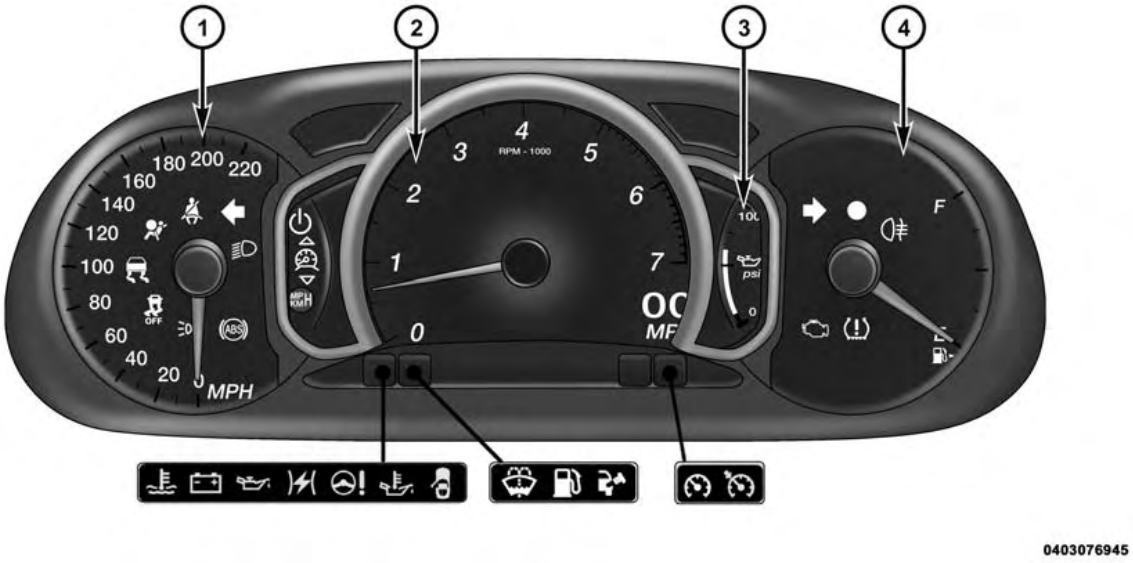

Instrument Cluster

Downloaded from www.Manualslib.com manuals search engine

1. Speedometer
   - Indicates vehicle speed
2. Tachometer
   - Indicates the engine speed in revolutions per minute (RPM x 1000).
3. Temperature Gauge
   - The temperature gauge shows engine coolant temperature. Any reading within the normal range indicates that the engine cooling system is operating satisfactorily.
   - The gauge pointer will likely indicate a higher temperature when driving in hot weather or up mountain grades. It should not be allowed to exceed the upper limits of the normal operating range.

CAUTION!

Driving with a hot engine cooling system could damage your vehicle. If the temperature gauge reads "H" pull over and stop the vehicle. Idle the vehicle with the air conditioner turned off until the pointer drops back into the normal range. If the pointer remains on the "H" and you hear continuous chimes, turn the engine off immediately and call an authorized dealer for service.

Downloaded from www.Manualslib.com manuals search engine

WARNING!

A hot engine cooling system is dangerous. You or others could be badly burned by steam or boiling coolant. You may want to call an authorized dealer for service if your vehicle overheats. If you decide to look under the hood yourself, see "Maintaining Your Vehicle". Follow the warnings under the Cooling System Pressure Cap paragraph.

4. Fuel Gauge
   - The pointer shows the level of fuel in the fuel tank when the ignition switch is in the ON/RUN position

WARNING AND INDICATOR LIGHTS

IMPORTANT: The warning / indicator light switches on in the instrument panel together with a dedicated message and/or acoustic signal when applicable. These indications are indicative and precautionary and as such must not be considered as exhaustive and/or alternative to the information contained in the Owner Manual, which you are advised to read carefully in all cases. Always refer to the information in this chapter in the event of a failure indication.

All active telltales will display first if applicable. The system check menu may appear different based upon equipment options and current vehicle status. Some telltales are optional and may not appear.

Downloaded from www.Manualslib.com manuals search engine

Red Telltale Indicator Lights

Seat Belt Reminder Warning Light

Red Telltale Light	What It Means
	Seat Belt Reminder Warning Light When the ignition switch is first turned to ON/RUN, this light will turn on for four to eight seconds as a bulb check. During the bulb check, if the driver's seat belt is unbuckled, a chime will sound. After the bulb check or when driving, if the driver seat belt remains unbuckled, the Seat Belt Reminder Light will flash or remain on continuously. Refer to "Occupant Restraints" in "Things To Know Before Starting Your Vehicle" for further information.

Downloaded from www.Manualslib.com manuals search engine

Air Bag Warning Light

Red Telltale Light	What It Means
	Air Bag Warning Light This light will turn on for four to eight seconds as a bulb check when the ignition switch is first turned to ON/RUN. If the light is either not on during starting, stays on, or turns on while driving, have the system inspected at an authorized dealer as soon as possible. Refer to “Occupant Restraints” in “Things To Know Before Starting Your Vehicle” for further information.

Downloaded from www.Manualslib.com manuals search engine

Brake Warning Light

Red Telltale Light	What It Means
BRAKE	**Brake Warning Light** This light monitors various brake functions, including brake fluid level and parking brake application. If the brake light turns on it may indicate that the parking brake is applied, that the brake fluid level is low, or that there is a problem with the anti-lock brake system reservoir. If the light remains on when the parking brake has been disengaged, and the fluid level is at the full mark on the master cylinder reservoir, it indicates a possible brake hydraulic system malfunction or that a problem with the Brake Booster has been detected by the Anti-Lock Brake System (ABS) / Electronic Stability Control (ESC) system. In this case, the light will remain on until the condition has been corrected. If the problem is related to the brake booster, the ABS pump will run when applying the brake, and a brake pedal pulsation may be felt during each stop.

The dual brake system provides a reserve braking capacity in the event of a failure to a portion of the hydraulic system. A leak in either half of the dual brake system is indicated by the Brake Warning Light, which will turn on when the brake fluid level in the master cylinder has dropped below a specified level.

Downloaded from www.Manualslib.com manuals search engine

The light will remain on until the cause is corrected.

NOTE: The light may flash momentarily during sharp cornering maneuvers, which change fluid level conditions. The vehicle should have service performed, and the brake fluid level checked.

If brake failure is indicated, immediate repair is necessary.

WARNING!

Driving a vehicle with the red brake light on is dangerous. Part of the brake system may have failed. It will take longer to stop the vehicle. You could have a collision. Have the vehicle checked immediately.

Vehicles equipped with the Anti-Lock Brake System (ABS) are also equipped with Electronic Brake Force Distribution (EBD). In the event of an EBD failure, the Brake Warning Light will turn on along with the ABS Light. Immediate repair to the ABS system is required.

Operation of the Brake Warning Light can be checked by turning the ignition switch from the OFF position to the ON/RUN position. The light should illuminate for approximately two seconds. The light should then turn off unless the parking brake is applied or a brake fault is detected. If the light does not illuminate, have the light inspected by an authorized dealer.

The light also will turn on when the parking brake is applied with the ignition switch in the ON/RUN position.

NOTE: This light shows only that the parking brake is applied. It does not show the degree of brake application.

Downloaded from www.Manualslib.com manuals search engine

Vehicle Security Warning Light — If Equipped

Red Telltale Light	What It Means
●	**Vehicle Security Warning Light** This light will flash at a fast rate for approximately 15 seconds when the vehicle security alarm is arming, and then will flash slowly until the vehicle is disarmed.

Engine Temperature Warning Light

Red Warning Light	What It Means
	Engine Temperature Warning Light This light warns of an overheated engine condition. As engine coolant temperatures rise and the gauge approaches **H,** this indicator will illuminate and a single chime will sound after reaching a set threshold. Further overheating will cause the temperature gauge to pass **H,** a continuous chime will occur until the engine is allowed to cool or the 4 minutes duration is expired, whichever come first.

Downloaded from www.Manualslib.com manuals search engine

Red Warning Light	What It Means
	If the light turns on while driving, safely pull over and stop the vehicle. If the A/C system is on, turn it off. Also, shift the transmission into NEUTRAL and idle the vehicle. If the temperature reading does not return to normal, turn the engine off immediately and call for service. Refer to "If Your Engine Overheats" in "What To Do In Emergencies" for further information.

Charging System Warning Light

Red Telltale Light	What It Means
	Charging System Warning Light This light shows the status of the electrical charging system. The light should come on when the ignition switch is first turned to ON/RUN and remain on briefly as a bulb check. If the light stays on or comes on while driving, turn off some of the vehicle's nonessential electrical devices or increase engine speed (if at idle). If the charging system light remains on, it means that the vehicle is experiencing a problem with the charging system. Obtain SERVICE IMMEDIATELY. See an authorized dealer.

Downloaded from www.Manualslib.com manuals search engine

Red Telltale Light	What It Means
	If jump starting is required, refer to “Jump Starting Procedures” in “What To Do In Emergencies.”

Oil Pressure Warning Light

Red Telltale Light	What It Means
	Oil Pressure Warning Light This light indicates low engine oil pressure. The light should turn on momentarily when the engine is started; if the bulb does not come on, have the system checked by an authorized dealer. If the light turns on while driving, stop the vehicle and shut off the engine as soon as possible. A chime will sound when this light turns on. Do not operate the vehicle until the cause is corrected. This light does not indicate how much oil is in the engine. The engine oil level must be checked under the hood.

Downloaded from www.Manualslib.com manuals search engine

Electronic Throttle Control (ETC) Warning Light

Red Telltale Light	What It Means
	Electronic Throttle Control (ETC) Warning Light This light informs you of a problem with the Electronic Throttle Control (ETC) system. If a problem is detected while the engine is running, the light will either stay on or flash depending on the nature of the problem. Cycle the ignition key when the vehicle is safely and completely stopped and the shift lever is placed in the PARK position. The light should turn off. If the light remains on with the engine running, your vehicle will usually be drivable; however, see an authorized dealer for service as soon as possible. If the light continues to flash when the engine is running, immediate service is required and you may experience reduced performance, an elevated/rough idle, or engine stall and your vehicle may require towing. The light will come on when the ignition is first turned to ON/RUN and remain on briefly as a bulb check. If the light does not come on during starting, have the system checked by an authorized dealer.

Downloaded from www.Manualslib.com manuals search engine

Electric Power Steering Fail Warning

Red Telltale Light	What It Means
	Electric Power Steering Fail Warning This light is used to manage the electrical warning of the EPS (Power Steering System). Refer to “Power Steering” in “Starting and Operating” for further information.

Oil Temperature Warning Light

Red Telltale Light	What It Means
	Oil Temperature Warning Light This telltale indicates engine oil temperature is high. If the light turns on while driving, stop the vehicle and shut off the engine as soon as possible.

Downloaded from www.Manualslib.com manuals search engine

Door Open Warning Light

Red Telltale Light	What It Means
	Door Open Warning Light This indicator will illuminate when a door is ajar/open and not fully closed.

Trunk Open Warning Light

Red Telltale Light	What It Means
	Trunk Open Warning Light This indicator will illuminate when the trunk is open and not fully closed.

Downloaded from www.Manualslib.com manuals search engine

Yellow Telltale Indicator Lights

Engine Check/Malfunction Indicator Light (MIL)

Yellow Telltale Light	What It Means
	Engine Check/Malfunction Indicator Light (MIL) The Engine Check/Malfunction Indicator Light (MIL) is a part of an Onboard Diagnostic System called OBD II that monitors engine and automatic transmission control systems. The light will illuminate when the ignition is in the ON position before engine start. If the bulb does not come on when turning the key from OFF to ON/RUN, have the condition checked promptly. Certain conditions, such as a loose or missing gas cap, poor quality fuel, etc., may illuminate the light after engine start. The vehicle should be serviced if the light stays on through several typical driving styles. In most situations, the vehicle will drive normally and will not require towing. When the engine is running, the MIL may flash to alert serious conditions that could lead to immediate loss of power or severe catalytic converter damage. The vehicle should be serviced as soon as possible if this occurs.

Downloaded from www.Manualslib.com manuals search engine

CAUTION!

Prolonged driving with the Malfunction Indicator Light (MIL) on could cause damage to the engine control system. It also could affect fuel economy and driveability. If the MIL is flashing, severe catalytic converter damage and power loss will soon occur. Immediate service is required.

WARNING!

A malfunctioning catalytic converter, as referenced above, can reach higher temperatures than in normal operating conditions. This can cause a fire if you drive slowly or park over flammable substances such as dry plants, wood, cardboard, etc. This could result in death or serious injury to the driver, occupants or others.

Downloaded from www.Manualslib.com manuals search engine

Electronic Stability Control (ESC) Indicator Light — If Equipped

Yellow Telltale Light	What It Means
	Electronic Stability Control (ESC) Indicator Light The "ESC Indicator Light" in the instrument cluster will come on when the ignition switch is turned to the ON/RUN position. It should go out with the engine running. If the "ESC Indicator Light" comes on continuously with the engine running, a malfunction has been detected in the ESC system. If this light remains on after several ignition cycles, and the vehicle has been driven several miles (kilometers) at speeds greater than 30 mph (48 km/h), see your authorized dealer as soon as possible to have the problem diagnosed and corrected. • The "ESC Off Indicator Light" and the "ESC Indicator Light" come on momentarily each time the ignition switch is turned to ON/RUN. • Each time the ignition is turned to ON/RUN, the ESC system will be ON, even if it was turned off previously. • The ESC system will make buzzing or clicking sounds when it is active. This is normal; the sounds will stop when ESC becomes inactive following the maneuver that caused the ESC activation.

Downloaded from www.Manualslib.com manuals search engine

Electronic Stability Control (ESC) OFF Indicator Light — If Equipped

Yellow Telltale Light	What It Means
	Electronic Stability Control (ESC) OFF Indicator Light This light indicates the Electronic Stability Control (ESC) is off.

Low Washer Fluid Indicator Light — If Equipped

Yellow Telltale Light	What It Means
	Low Washer Fluid Indicator Light This indicator will illuminate when the windshield washer fluid is low.

Downloaded from www.Manualslib.com manuals search engine

Loose Fuel Filler Cap Indicator Light

Yellow Telltale Light	What It Means
	Loose Fuel Filler Cap Indicator Light This light will illuminate when fuel filler cap is loose. Properly close the filler cap to disengage the light. If the light does not turn off, please see your authorized dealer.

Tire Pressure Monitoring Indicator Light

Yellow Telltale Light	What It Means
	Tire Pressure Monitoring Indicator Light The warning light switches on and a message is displayed to indicate that the tire pressure is lower than the recommended value and/or that slow pressure loss is occurring. In these cases, optimal tire duration and fuel consumption may not be guaranteed. Should two or more tires be in the condition mentioned above, the display will show the indications corresponding to each tire in sequence.

Downloaded from www.Manualslib.com manuals search engine

Yellow Telltale Light	What It Means
	In any situation in which the message on the display is "See manual", it is ESSENTIAL to refer to the contents of the "Wheels" paragraph in the "Technical data" chapter, strictly complying with the indications that you find there.

IMPORTANT: Do not continue driving with one or more flat tires as handling may be compromised. Stop the vehicle, avoiding sharp braking and steering. Repair immediately using the dedicated tire repair kit and contact your authorized dealership as soon as possible.

Each tire, including the spare (if provided), should be checked monthly when cold and inflated to the inflation pressure recommended by the vehicle manufacturer on the vehicle placard or tire inflation pressure label. If your vehicle has tires of a different size than the size indicated on the vehicle placard or tire inflation pressure label, you should determine the proper tire inflation pressure for those tires.

As an added safety feature, your vehicle has been equipped with a Tire Pressure Monitoring System (TPMS) that illuminates a low tire pressure telltale when one or more of your tires is significantly under-inflated. Accordingly, when the low tire pressure telltale illuminates, you should stop and check your tires as soon as possible and inflate them to the proper pressure. Driving on a significantly under-inflated tire causes the tire to overheat and can lead to tire failure. Under-inflation also reduces fuel efficiency and tire tread life, and may affect the vehicle's handling and stopping ability.

Please note that the TPMS is not a substitute for proper tire maintenance, and it is the driver's responsibility to

Downloaded from www.Manualslib.com manuals search engine

maintain correct tire pressure, even if under-inflation has not reached the level to trigger illumination of the TPMS low tire pressure telltale.

Your vehicle has also been equipped with a TPMS malfunction indicator to indicate when the system is not operating properly. The TPMS malfunction indicator is combined with the low tire pressure telltale. When the system detects a malfunction, the telltale will flash for approximately one minute and then remain continuously illuminated. This sequence will continue upon subsequent vehicle start-ups as long as the malfunction exists. When the malfunction indicator is illuminated, the system may not be able to detect or signal low tire pressure as intended. TPMS malfunctions may occur for a variety of reasons, including the installation of replacement or alternate tires or wheels on the vehicle that prevent the TPMS from functioning properly. Always check the TPMS malfunction telltale after replacing one or more tires or wheels on your vehicle, to ensure that the replacement or alternate tires and wheels allow the TPMS to continue to function properly.

CAUTION!

The TPMS has been optimized for the original equipment tires and wheels. TPMS pressures and warning have been established for the tire size equipped on your vehicle. Undesirable system operation or sensor damage may result when using replacement equipment that is not of the same size, type, and/or style. Aftermarket wheels can cause sensor damage. Using aftermarket tire sealants may cause the Tire Pressure Monitoring System (TPMS) sensor to become inoperable. After using an aftermarket tire sealant it is recommended that you take your vehicle to an authorized dealership to have your sensor function checked.

Downloaded from www.Manualslib.com manuals search engine

Low Fuel Indicator Light

Yellow Telltale Light	What It Means
	Low Fuel Indicator Light When the fuel level reaches approximately 3.0 gal (11.0 L) this light will turn on, and remain on until fuel is added.

Anti-Lock Brake (ABS) Indicator Light

Yellow Telltale Light	What It Means
	Anti-Lock Brake (ABS) Indicator Light After the ignition is turned on, the Anti-Lock Brake System (ABS) light illuminates to indicate function check at vehicle startup. If the light remains on after startup or comes on and stays on at road speeds, it may indicate that the ABS has detected a malfunction or has become inoperative. The system reverts to standard non-anti-lock brakes. If both the Brake Warning Light and the ABS Warning Light are on, see an authorized dealer

Downloaded from www.Manualslib.com manuals search engine

Yellow Telltale Light	What It Means
	immediately. Refer to “Anti-Lock Brake System” in “Starting And Operating” for further information.

Green Telltale Indicator Lights

Park/Headlight ON Indicator Light

Green Telltale Light	What It Means
	Park/Headlight ON Indicator Light This indicator will illuminate when the park lights or headlights are turned on.

Downloaded from www.Manualslib.com manuals search engine

Turn Signal Indicator Lights

Green Telltale Light	What It Means
	Turn Signal Indicator Lights The instrument cluster arrow will flash independently for the LEFT or RIGHT turn signal as selected, as well as the exterior turn signal lamp(s) (front and rear) as selected when the multifunction lever is moved down (LEFT) or up (RIGHT). **NOTE:** • A continuous chime will sound if the vehicle is driven more than 1 mile (1.6 km) with either turn signal on. • Check for an inoperative outside light bulb if either indicator flashes at a rapid rate.

Downloaded from www.Manualslib.com manuals search engine

Electronic Speed Control Set Indicator Light

Green Telltale Light	What It Means
	Electronic Speed Control Set Indicator Light This light will turn on when the electronic speed control has been set.

White Telltale Indicator Light

Electronic Speed Control ON Indicator Light

White Telltale Light	What It Means
	Electronic Speed Control ON Indicator Light This light will turn on when the electronic speed control is ON.

Downloaded from www.Manualslib.com manuals search engine

Blue Telltale Indicator Light

High Beam Indicator Light

Blue Telltale Light	What It Means
	High Beam Indicator Light This indicator shows that the high beam headlights are on. Push the multifunction control lever away from you to switch the headlights to high beam. Pull the lever toward you to switch the headlights back to low beam. If the driver's door is open, and the headlights or park lights are left on, the high beam indicator light will remain illuminated, and a chime will sound.

Downloaded from www.Manualslib.com manuals search engine

DRIVER INFORMATION DISPLAY (DID)

Driver Information Display (DID)

The Driver Information Display (DID) features a driver-interactive display that is located in the instrument cluster.

This system allows the driver to select a variety of useful information by pushing the switches mounted on the steering wheel. The DID consists of the following:

- Tachometer
- MPH/KMH
- Vehicle Information
- Fuel Economy
- Trip A
- Trip B
- Audio
- Stored Messages
- Screen Setup
- Performance
- Diagnostics

Downloaded from www.Manualslib.com manuals search engine

- Hibernation

The system allows the driver to select information by pushing the following buttons mounted on the steering wheel:

040971549

DID Steering Wheels Controls

- *UP Arrow Button*

△ Push and release the **UP** arrow button to scroll upward through the main menu and submenus (Fuel Economy, Trip A, Trip B, Audio, Stored Messages, Screen Set Up).

- *DOWN Arrow Button*

▽ Push and release the **DOWN** arrow button to scroll downward through the main menu and submenus (Fuel Economy, Trip A, Trip B, Audio, Stored Messages, Screen Set Up).

Downloaded from www.Manualslib.com manuals search engine

- *RIGHT Arrow Button*

▷ Push and release the **RIGHT** arrow button to access/select the information screens or sub-menu screens of a main menu item. Push and hold the **RIGHT** arrow button for two seconds to reset displayed/selected features that can be reset.

- *LEFT Arrow Button*

◁ Push and release the **LEFT** arrow button to return to the main menu from an info screen or submenu item.

NOTE: Pushing any arrow will override the DID "pop up" messages and return you to the menu screen.

DID Display

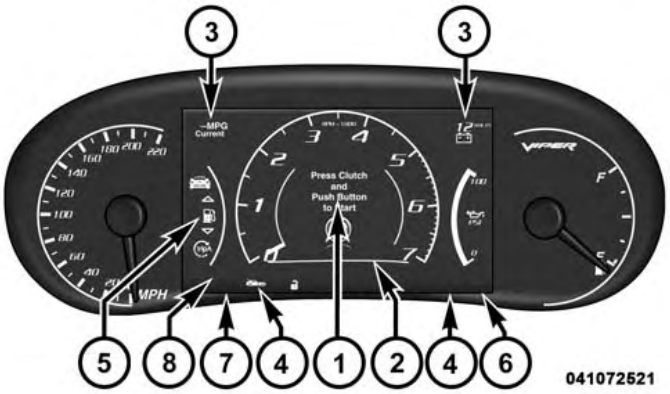

DID Display

Downloaded from www.Manualslib.com manuals search engine

The DID display is located in the center portion of the instrument cluster and consists of the following sections:

1. Main Screen — The inner ring of the display will illuminate in grey under normal conditions, yellow for non critical warnings, red for critical warnings, and white for on demand information.
2. Audio / Phone Information and Sub-menu Information — Whenever there are sub-menus available, the position within the sub-menus is shown here.
3. Reconfigurable Telltales/Information
4. Telltales/Indicators
5. Selectable Information (Tach, Mph/Kmh, Vehicle Info, Fuel Economy, Trip A, Trip B, Audio, Stored Messages, Screen Setup, Performance, Diagnostics, Hibernation)
6. Suspension Status — The suspension status icon will illuminate in this area. Refer to “Starting And Operating” for further information.
7. ESC Status — The ESC status icon will illuminate in this area. Refer to “Electronic Brake Control System” in “Starting And Operating” for further information.
8. Launch Control status when launch control mode is entered. Refer to “Launch Mode” in “Starting And Operating” for further information.

Downloaded from www.Manualslib.com manuals search engine

The main display area will normally display the main menu or the screens of a selected feature of the main menu. The main display area also displays "pop up" messages that consist of approximately 60 possible warning or information messages. These pop up messages fall into several categories:

- ***Five Second Stored Messages***

When the appropriate conditions occur, this type of message takes control of the main display area for five seconds and then returns to the previous screen. Most of the messages of this type are then stored (as long as the condition that activated it remains active) and can be reviewed from the "Messages" main menu item. As long as there is a stored message, an "i" will be displayed in the DID's compass/outside temp line. Examples of this message type are "Right Front Turn Signal Lamp Out" and "Low Tire Pressure."

NOTE: Pushing the LEFT arrow button will override the DID "pop up" messages and return you to the menu screen.

- ***Unstored Messages***

This message type is displayed indefinitely or until the condition that activated the message is cleared. Examples of this message type are "Turn Signal On" (if a turn signal is left on) and "Lights On" (if driver leaves the vehicle).

- ***Five Second Unstored Messages***

When the appropriate conditions occur, this type of message takes control of the main display area for five seconds and then returns to the previous screen. An example of this message type is "Automatic High Beams On."

Downloaded from www.Manualslib.com manuals search engine

Driver Information Display (DID) Messages

- Front Seat Belts Unbuckled
- Driver Seat Belt Unbuckled
- Passenger Seat Belt Unbuckled
- Key Fob Battery Low
- Service Air Bag System
- ESC Status (ESC OFF, ESC ON, ESC SPORT, ESC TRACK, RAIN MODE) — Refer to "Electronic Brake Control System" in "Starting And Operating" for further information.
- Oil Pressure Low
- Fuel Low
- Service Antilock Brake System
- Service Electronic Throttle Control
- Cruise Off
- Cruise Ready
- Cruise Set To XXX MPH
- Tire Pressure Screen With Low Tire Pressure Warnings
- Service Tire Pressure System
- Parking Brake Engaged
- Brake Fluid Low
- Service Electronic Braking System
- Engine Temperature Hot
- Battery Voltage Low
- Brake Wear
- Service Electronic Throttle Control
- Lights On

Downloaded from www.Manualslib.com manuals search engine

- Right Turn Signal Light Out
- Left Turn Signal Light Out
- Turn Signal On
- Service Air Bag System
- Service Air Bag Warning Light
- Driver Seat Belt Unbuckled
- Passenger Seat Belt Unbuckled
- Front Seat Belts Unbuckled
- Door Open
- Doors Open
- Park Brake Engaged

DID Selectable Menu Items

Push and release the **UP** or **DOWN** arrow buttons until the desired Selectable Menu icon is highlighted in the DID.

Tachometer

Push and release the **UP** or **DOWN** arrow button until the Tachometer icon is highlighted in the DID. Push and release the **RIGHT** arrow button to change the display between full tachometer or tachometer with digital speedometer.

Downloaded from www.Manualslib.com manuals search engine

MPH To km/h

Push and release the **UP** or **DOWN** arrow button until the MPH to km/h icon is highlighted in the DID. Push and release the **OK** button to change the display between MPH or km/h.

Vehicle Info (Customer Information Features)

Push and release the **UP** or **DOWN** arrow button until the Vehicle Info icon is highlighted in the DID. Push and release the **RIGHT** arrow button to display the following information submenus:

Tire Pressure

Push and release the **UP** or **DOWN** arrow button until "Tire Pressure" is highlighted in the DID. Push and release the **RIGHT** arrow button, and one of the following will be displayed:

- If tire pressure is **OK** for all tires a vehicle ICON is displayed with tire pressure values in each corner of the ICON.
- If one or more tires have low pressure, the tire pressure values in each corner of the ICON with the pressure value of the low tire displayed in a different color than the other tire pressure value.
- If the Tire Pressure system requires service, "Service Tire Pressure System" is displayed.

Tire PSI is an information only function and cannot be reset. Push and release the **LEFT** arrow button to return to the main menu.

Downloaded from www.Manualslib.com manuals search engine

Refer to "Tire Pressure Monitoring System (TPMS)" under "Starting and Operating" for further information.

Coolant Temperature

Push and release the **UP** or **DOWN** arrow button until "Coolant Temperature" is highlighted in the DID. Push and release the **RIGHT** arrow button, and the coolant temperature will be displayed.

Oil Temperature

Push and release the **UP** or **DOWN** arrow button until "Oil Temperature" is highlighted in the DID. Push and release the **RIGHT** arrow button, and the oil temperature will be displayed.

Engine Hours

Push and release the **UP** or **DOWN** arrow button until "Engine Hours" is highlighted in the DID. Push and release the **RIGHT** arrow button, and the engine hours will be displayed.

Intake Air Temp.

Push and release the **UP** or **DOWN** arrow button until "Intake Air Temp." is highlighted in the DID. Push and release the **RIGHT** arrow button, and the intake air temperature will be displayed.

Current Torque

Push and release the **UP** or **DOWN** arrow button until "Current Torque" is highlighted in the DID. Push and release the **RIGHT** arrow button, and the current torque will be displayed.

Downloaded from www.Manualslib.com manuals search engine

Current Power

Push and release the **UP** or **DOWN** arrow button until "Current Power" is highlighted in the DID. Push and release the **RIGHT** arrow button, and the current power will be displayed.

Fuel Economy

Push and release the **UP** or **DOWN** arrow button until the Fuel Economy icon is highlighted and the following will display:

Range To Empty (RTE)

Average Fuel Economy/Miles Per Gallon (MPG Bargraph)

Current Miles Per Gallon (MPG)

Trip A

Push and release the **UP** or **DOWN** arrow button until the Trip A icon is highlighted in the DID. The Trip A information will display the following:

- Distance
- Average Speed
- Elapsed Time

Hold the **RIGHT** arrow button to reset all the information.

Downloaded from www.Manualslib.com manuals search engine

Trip B — If Equipped

Push and release **UP** or **DOWN** arrow button until the Trip B icon is highlighted in the DID. The Trip B information will display the following:

- Distance
- Average Speed
- Elapsed Time

Hold the **RIGHT** arrow button to reset all the information.

Audio

Push and release the **UP** or **DOWN** arrow button until the Audio display icon is highlighted in the DID. Push and release the **RIGHT** arrow button to display the active source.

Stored Messages

Push and release the **UP** or **DOWN** arrow button until the Messages Menu item is highlighted in the DID. This feature shows the number of stored warning messages. Pushing the **RIGHT** arrow button will allow you to see what the stored messages are.

When no messages are present, main menu icon will be a closed envelope.

Downloaded from www.Manualslib.com manuals search engine

Screen Setup Driver Selectable Items

Upper Left

- None
- Compass
- Temperature
- Range To Empty (RTE)
- Average Fuel
- Current Fuel
- Trip A
- Trip B
- Elapsed Time
- Oil Pressure
- Oil Temperature
- Battery
- Coolant Temperature

Upper Right

- None
- Compass
- Temperature
- Range To Empty (RTE)
- Average Fuel
- Current Fuel
- Trip A
- Trip B
- Elapsed Time
- Oil Pressure

Downloaded from www.Manualslib.com manuals search engine

- Oil Temperature
- Battery
- Coolant Temperature
- *RIGHT Arrow Button*

Restore To Defaults (Restores All Settings To Default Settings)

▷ Push and release the **RIGHT** arrow button to confirm.

Digital Speed

- On
- Off

Tach. Peak Hold

When enabled, the Tach. Peak Hold function marks the peak Revolutions Per Minute (RPM) on the tachometer gauge for 3 seconds when the RPM is above 4000. Using the **UP** and **DOWN** arrow switches on the left side of the steering wheel, select the gauges icon from the menu on the left side of the cluster (highlighted red is the active menu item). Use the **RIGHT** arrow to enter the gauges setup screen and the **UP/DOWN** arrows to select Tach Peak from the menu of gauge options.

Tach. Peak Hold

Downloaded from www.Manualslib.com manuals search engine

Select up and down to toggle between "ON" and "OFF."

SRT Performance

SRT

WARNING!

Measurement of vehicle statistics with the Performance Features is intended for off-highway or off-road use only and should not be done on any public roadways. It is recommended that these features be used in a controlled environment and within the limits of the law. The capabilities of the vehicle as measured by the performance pages must never be exploited in a reckless or dangerous manner, which

(Continued)

WARNING! ***(Continued)***

can jeopardize the user's safety or the safety of others. Only a safe, attentive, and skillful driver can prevent accidents.

Push and release the **UP** or **DOWN** arrow button until the SRT icon is highlighted in the DID. Push and release the **RIGHT** arrow button, and 0–60 MPH Duration will be displayed. Push and release the **LEFT** and **RIGHT** arrow button to scroll through the following information sub-menus:

0–60 Time

Push and release the **LEFT** and **RIGHT** arrow button until the last 0–60 MPH information is displayed.

Braking Distance

Push and release the **LEFT** and **RIGHT** arrow button until the last Braking Distance information is displayed.

Downloaded from www.Manualslib.com manuals search engine

1/4 Mile Elapsed Time

Push and release the **LEFT** and **RIGHT** arrow button until the last 1/4 Mile Top Speed & Duration information is displayed.

1/8 Mile Elapsed Time

Push and release the **LEFT** and **RIGHT** arrow button until the last 1/8 Mile Top Speed & Duration information is displayed.

G-Force Instant

Push and release the **LEFT** and **RIGHT** arrow button until the Current G-Forces are displayed.

G-Force Peak

Push and release the **LEFT** and **RIGHT** arrow button until the Peak G-Forces are displayed.

Diagnostic Codes

Push and release the **UP** or **DOWN** arrow button until the Diagnostic Code icon is highlighted in the DID. Push and release the **RIGHT** arrow button to display any present diagnostic trouble codes along with a brief definition.

Vehicle Hibernation

To Activate Hibernation Mode

1. Cycle the ignition switch to (ACC).
2. Select Hibernation mode within the Driver Information Display (DID).
3. Push the **RIGHT** arrow button on the steering wheel controls for one second. Vehicle will countdown from ten seconds and enter Hibernation Mode.

Downloaded from www.Manualslib.com manuals search engine

NOTE: You may push the **RIGHT** arrow button on the steering wheel controls during the countdown to abort Hibernation Mode.

To Deactivate Hibernation Mode

1. Push the RKE UNLOCK button to unlock the vehicle.
2. Push the Keyless Push Button Ignition to the ON/RUN position.

UCONNECT SETTINGS

The Uconnect system uses a combination of buttons on the touchscreen and buttons on the faceplate located on the center of the instrument panel that allow you to access and change the customer programmable features.

NOTE: Features can vary by vehicle, depending on vehicle configuration.

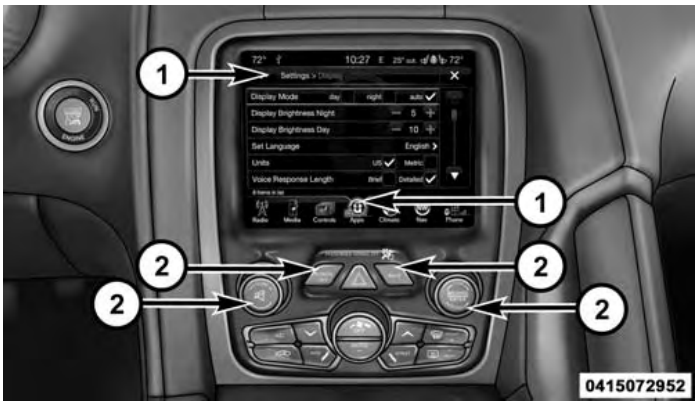

Uconnect 8.4AN Buttons On The Touchscreen And Buttons On The Faceplate

1 — Uconnect Buttons On The Touchscreen
2 — Uconnect Buttons On The Faceplate

Downloaded from www.Manualslib.com manuals search engine

Buttons On The Faceplate

Buttons on the faceplate are located below the Uconnect system in the center of the instrument panel. In addition, there is a Scroll/Enter control knob located on the right side of the Climate Controls in the center of the instrument panel. Turn the control knob to scroll through menus and change settings (i.e., 30, 60, 90), push the center of the control knob one or more times to select or change a setting (i.e., ON, OFF).

Buttons On The Touchscreen

Buttons on the touchscreen are accessible on the Uconnect display.

Customer Programmable Features/Personal Settings — Uconnect 8.4 System Settings

Press the "Apps" button on the touchscreen, then press the "Settings" button on the touchscreen to display the menu setting screen. In this mode the Uconnect system allows you to access programmable features that may be equipped such as Display, Voice, Clock, Safety & Driving Assistance, Lights, Doors & Locks, Engine Off Options, Audio, Phone/Bluetooth, SiriusXM Setup, Restore Settings, Clear Personal Data, and System Information.

NOTE: Only one category may be selected at a time.

To adjust the setting of a programmable feature, press the desired setting option. Once in the desired setting option, press and release the preferred setting until a check-mark appears next to the setting, showing that the setting has been selected.

Once the setting is complete, press the Back Arrow button on the touchscreen to return to the previous menu or press the X button on the touchscreen to close out of the settings screen. Pressing the Up or Down Arrow button on the right side of the screen will allow you to toggle up or down through the list of available settings.

Downloaded from www.Manualslib.com manuals search engine

Display

After pressing the Display button on the touchscreen the following settings will be available.

- ***Display Mode***

This feature will allow you to select one of the auto display settings. To change Mode status, press and release the Auto or Manual button on the touchscreen. Then press the arrow back button on the touchscreen, or push the back button on the faceplate.

- ***Display Brightness With Headlights ON***

This feature will allow you to select the display brightness when the headlights are on. Adjust the brightness with the "+" and "–" setting buttons on the touchscreen, then press the arrow back button on the touchscreen, or push the back button on the faceplate.

NOTE: The usage of the Parade Mode feature will cause the radio to activate the "Display Brightness With Headlights OFF" control even though the headlights are on.

- ***Display Brightness With Headlights OFF***

This feature will allow you to select the display brightness when the headlights are off. Adjust the brightness with the "+" and "–" setting buttons on the touchscreen, then press the arrow back button on the touchscreen, or push the back button on the faceplate.

- ***Set Theme — If Equipped***

This feature will allow you to choose a theme for the display screen. The theme will change the background color, highlight color, and button color of the display screen.

- ***Set Language***

This feature will allow you to select one of the languages for all display nomenclature, including the trip functions

Downloaded from www.Manualslib.com manuals search engine

and the navigation system (if equipped). Press the Set Language button on the touchscreen and then press the desired language button on the touchscreen until a check-mark appears next to the language, showing that setting has been selected. Press the back arrow button on the touchscreen to return to the previous menu, or push the back button on the faceplate.

- *Units*

This feature will allow you to have the DID, odometer, and navigation system (if equipped) changed between US and Metric units of measure. Press US or Metric until a check-mark appears next to the setting, showing that setting has been selected. Press the back arrow button on the touchscreen to return to the previous menu, or push the back button on the faceplate.

- *Touchscreen Beep*

This feature will allow you to turn on or shut off the sound heard when a touchscreen button is pressed. Press the Touchscreen Beep button on the touchscreen until a check-mark appears next to the setting, showing that setting has been selected. Press the back arrow button on the touchscreen to return to the previous menu, or push the back button on the faceplate.

- *Control Screen Time-Out — If Equipped*

When this feature is selected, the Controls Screen will stay open for five seconds before the screen times out. With the feature deselected, the screen will stay open until it is manually closed. Press the Control Screen Time-Out button on the touchscreen until a check-mark appears next to the setting, showing that setting has been selected. Press the back arrow button on the touchscreen to return to the previous menu, or push the back button on the faceplate.

- *Navigation Turn-By-Turn In Cluster — If Equipped*

When this feature is selected, the turn-by-turn directions will appear in the DID as the vehicle approaches a

Downloaded from www.Manualslib.com manuals search engine

designated turn within a programmed route. To turn on or enable, press the Navigation Turn-By-Turn In Cluster button on the touchscreen, until a check-mark appears next to the setting, showing that setting has been selected. Press the back arrow button on the touchscreen to return to the previous menu or push the back button on the faceplate.

Voice

After pressing the "Voice" button on the touchscreen the following settings will be available:

- ***Voice Response Length***

When in this display, you may change the Voice Response Length settings. To change the Voice Response Length, press the "Brief" or "Detailed" button on the touchscreen until a check-mark appears next to the setting, showing that setting has been selected. Press the back arrow button on the touchscreen to return to the previous menu.

- ***Show Command List***

When in this display, you may choose to Always, With Help, or Never display the Teleprompter with possible options while in a voice session. To change the Show Command List settings, press the "Always," "With Help," or "Never" button on the touchscreen until a check-mark appears next to the setting, showing that setting has been selected. Press the back arrow button on the touchscreen to return to the previous menu.

Clock

After pressing the "Clock" button on the touchscreen the following settings will be available:

- ***Sync Time With GPS***

This feature will allow you to automatically have the radio set the time. To change the Sync Time setting, press the "Sync with GPS Time" button on the touchscreen until a check-mark appears next to the setting, showing

Downloaded from www.Manualslib.com manuals search engine

that setting has been selected. Press the back arrow button on the touchscreen to return to the previous menu, or push the back button on the faceplate.

- *Set Time Hours*

This feature will allow you to adjust the hours. The "Sync with GPS Time" button on the touchscreen must be unchecked. To make your selection, press the "+" or "–" buttons on the touchscreen to adjust the hours up or down. Press the back arrow button on the touchscreen to return to the previous menu or press the" X" button on the touchscreen to close out of the settings screen.

- *Set Time Minutes*

This feature will allow you to adjust the minutes. The "Sync with GPS Time" button on the touchscreen must be unchecked. To make your selection, press the "+" or "–" buttons on the touchscreen to adjust the minutes up or down. Press the back arrow button on the touchscreen to return to the previous menu or press the "X" button on the touchscreen to close out of the settings screen.

- *Time Format*

This feature will allow you to select the time format display setting. Press the "Time Format" button on the touchscreen until a check-mark appears next to the 12hrs or 24hrs setting, showing that setting has been selected. Press the back arrow button on the touchscreen to return to the previous menu, or push the back button on the faceplate.

Safety & Driving Assistance — If Equipped

After pressing the Safety & Driving Assistance button on the touchscreen the following settings will be available:

- *ParkView Backup Camera Delay*

When the vehicle is shifted out of REVERSE (with camera delay turned OFF), the rear camera mode is exited and the previous screen appears again. When the vehicle is

Downloaded from www.Manualslib.com manuals search engine

shifted out of REVERSE (with camera delay turned ON), the rear view image with dynamic grid lines will be displayed for up to 10 seconds after shifting out of "REVERSE" unless the forward vehicle speed exceeds 8 mph (12 km/h), the transmission is shifted into "PARK" or the ignition is switched to the OFF position. To set the ParkView Backup Camera Delay press the "settings" button, then the "Safety & Driving Assistance" button on the touchscreen. Press the "Parkview Backup camera Delay" button on the touchscreen to turn the ParkView Delay ON or OFF.

- ***Hill Start Assist — If Equipped***

When this feature is selected, the Hill Start Assist (HSA) system is active. To make your selection, press the "Hill Start Assist" button on the touchscreen until a check-mark appears next to setting, indicating that the setting has been selected. Press the back arrow/Done button on the touchscreen to return to the previous menu.

Lights

After pressing the Lights button on the touchscreen the following settings will be available.

- ***Headlight Off Delay***

When this feature is selected, the driver can choose to have the headlights remain on for 0, 30, 60, or 90 seconds when exiting the vehicle. To change the Headlight Off Delay status, press the "+" or "-" button on the touch-screen to select your desired time interval. Press the back arrow button on the touchscreen to return to the previous menu, or push the back button on the faceplate.

- ***Headlight Illumination On Approach***

When this feature is selected, the headlights will activate and remain on for 0, 30, 60, or 90 seconds when the doors are unlocked with the Remote Keyless Entry (RKE) transmitter. To change the Illuminated Approach status, press the "+" or "-" button on the touchscreen to select

Downloaded from www.Manualslib.com manuals search engine

your desired time interval. Press the back arrow button on the touchscreen to return to the previous menu, or push the back button on the faceplate.

- *Headlights With Wipers*

When this feature is selected, and the headlight switch is in the AUTO position, the headlights will turn on approximately 10 seconds after the wipers are turned on. The headlights will also turn off when the wipers are turned off if they were turned on by this feature. To make your selection, press the Headlights With Wipers button on the touchscreen, until a check-mark appears next to setting, showing that setting has been selected. Press the back arrow button on the touchscreen to return to the previous menu, or push the back button on the faceplate.

- *Daytime Running Lights*

When this feature is selected, the headlights will turn on whenever the vehicle is set in motion. To make your selection, press the Daytime Running Lights button on the touchscreen, until a check-mark appears next to setting, showing that setting has been selected. Press the back arrow button on the touchscreen to return to the previous menu, or push the back button on the faceplate.

- *Flash Lights With Lock*

When this feature is selected, the exterior lights will flash when the doors are locked or unlocked with the Remote Keyless Entry (RKE) transmitter. This feature may be selected with or without the sound horn on lock feature selected. To make your selection, press the Flash Lights with Lock button on the touchscreen, until a check-mark appears next to setting, showing that setting has been selected. Press the back arrow button on the touchscreen to return to the previous menu, or push the back button on the faceplate.

Doors & Locks

After pressing the Doors & Locks button on the touchscreen the following settings will be available.

Downloaded from www.Manualslib.com manuals search engine

- ***Auto Door Locks***

When this feature is selected, all doors will lock automatically when the vehicle reaches a speed of 15 mph (24 km/h). To make your selection, press the "Auto Door Locks" button on the touchscreen, until a check-mark appears next to setting, showing that setting has been selected. Press the back arrow button on the touchscreen to return to the previous menu, or push the back button on the faceplate.

- ***Auto Unlock On Exit***

When this feature is selected, all doors will unlock when the vehicle is stopped, the transmission is in the PARK or NEUTRAL position and the driver's door is opened. To make your selection, press the Auto Unlock On Exit button on the touchscreen, until a check-mark appears next to setting, showing that setting has been selected. Press the back arrow button on the touchscreen to return to the previous menu, or push the back button on the faceplate.

- ***Flash Lights With Lock***

When this feature is selected, the exterior lights will flash when the doors are locked or unlocked with the Remote Keyless Entry (RKE) transmitter or the Passive Entry Feature. To make your selection, press the Flash Lights With Lock button on the touchscreen, until a check-mark appears next to setting, showing that setting has been selected. Press the back arrow button on the touchscreen to return to the previous menu, or push the back button on the faceplate.

- ***Sound Horn With Lock***

When this feature is selected, the horn will sound when the Key Fob Lock button is pressed. To make your selection, push the Sound Horn With Remote Lock button on the touchscreen, until a check-mark appears

Downloaded from www.Manualslib.com manuals search engine

next to setting, showing that setting has been selected. Press the back arrow button on the touchscreen to return to the previous menu, or push the back button on the faceplate.

- ***1st Press Of Key Fob Unlocks***

When "Driver Door" is selected with 1st Press Of Key Fob Unlocks, only the driver's door will unlock with the first press of the Remote Keyless Entry (RKE) transmitter UNLOCK button. You must press the RKE transmitter UNLOCK button twice to unlock the passenger's doors. When "All Doors" is selected for 1st Press Of Key Fob Unlocks, all doors will unlock on the first press of the RKE transmitter UNLOCK button.

NOTE: If the vehicle is programmed 1st Press Of Key Fob Unlocks "All Doors," all doors will unlock no matter which Passive Entry equipped door handle is grasped. If 1st Press Of Key Fob Unlocks "Driver Door" is programmed, only the driver's door will unlock when the driver's door is grasped. With Passive Entry, if 1st Press Of Key Fob Unlocks "Driver Door" is programmed, touching the handle more than once will only result in the driver's door opening. If "Driver Door" is selected, once the driver door is opened, the interior door lock/unlock switch can be used to unlock all doors (or use RKE transmitter).

- ***Passive Entry***

This feature allows you to lock and unlock the vehicles door(s) without having to press the Remote Keyless Entry (RKE) transmitter lock or unlock buttons. To make your selection, press the "Passive Entry" button on the touchscreen, until a check-mark appears next to setting,

Downloaded from www.Manualslib.com manuals search engine

showing that setting has been selected. Press the back arrow button on the touchscreen to return to the previous menu, or push the back button on the faceplate. Refer to "Keyless Enter-N-Go" in "Things To Know Before Starting Your Vehicle".

Engine Off Options

After pressing the Engine Off Options button on the touchscreen the following settings will be available.

- *Engine Off Power Delay*

When this feature is selected, the power window switches, radio, Uconnect phone system (if equipped), DVD video system (if equipped), power sunroof (if equipped), and power outlets will remain active for up to 10 minutes after the ignition is cycled to OFF. Opening either front door will cancel this feature. To change the "Engine Off Power Delay" status, press the 0 seconds, 45 seconds, 5 minutes or 10 minutes button on the touchscreen. Then press the back arrow/Done button on the touchscreen.

- *Headlight Off Delay*

When this feature is selected, the driver can choose to have the headlights remain on for 0, 30, 60, or 90 seconds when exiting the vehicle. To change the "Headlight Off Delay" status, press the "Up" or "Down" arrow button on the touchscreen to select your desired time interval. Press the back arrow/Done button on the touchscreen to return to the previous menu.

Audio

After pressing the Audio button on the touchscreen the following settings will be available.

Downloaded from www.Manualslib.com manuals search engine

- ***Balance/Fade***

This feature allows you to adjust the Balance and Fade settings. Press and drag the speaker icon, use the arrows to adjust, or tap the 'C' icon to readjust to the center.

- ***Equalizer***

This feature allows you to adjust the Bass, Mid and Treble settings. Adjust the settings with the "+" and "–" setting buttons on the touchscreen or by selecting any point on the scale between the "+" and "–" buttons on the touchscreen. Then press the arrow back button on the touchscreen.

NOTE: Bass/Mid/Treble allow you to simply slide your finger up or down to change the setting as well as press directly on the desired setting.

- ***Speed Adjusted Volume***

This feature increases or decreases volume relative to vehicle speed. To change the Speed Adjusted Volume press the "Off," "1," "2," or "3" button on the touchscreen. Then press the arrow back button on the touchscreen.

- ***Surround Sound***

This feature provides simulated surround sound mode. To make your selection, press the Surround Sound button on the touchscreen, select "On" or "Off" followed by pressing the arrow back button on the touchscreen.

- ***Loudness***

Loudness improves sound quality at lower volumes. To make your selection, press the "Loudness" button on the touchscreen, then choose "Yes" or "No." The button will highlight indicating that the setting has been selected. Press the back arrow/Done button on the touchscreen

- ***AUX Volume Offset***

This feature provides the ability to tune the audio level for portable devices connected through the AUX input.

Downloaded from www.Manualslib.com manuals search engine

To make your selection, press the "AUX Volume Match" button on the touchscreen, choose a level from –3 to +3 followed by pressing the back arrow button on the touchscreen.

Phone/Bluetooth

After pressing the "Phone/Bluetooth" button on the touchscreen the following settings will be available:

- ***Paired Phones***

This feature shows which phones are paired to the Phone/Bluetooth system. For further information, refer to the Uconnect Supplement Manual.

- ***Paired Audio Sources***

This feature shows which audio devices are paired to the Phone/Bluetooth system. For further information, refer to the Uconnect Supplement Manual.

SiriusXM Setup — If Equipped

After pressing the "SiriusXM Setup" button on the touchscreen, the following settings will be available:

- ***Channel Skip***

SiriusXM can be programmed to designate a group of channels that are the most desirable to listen to or to exclude undesirable channels while scanning. To make your selection, press the "Channel Skip" button on the touchscreen, select the channels you would like to skip followed by pressing the back arrow button on the touchscreen.

- ***Subscription Information***

New vehicle purchasers or lessees will receive a free limited time subscription to SiriusXM Satellite Radio with your radio. Following the expiration of the free services, it will be necessary to access the information on the Subscription Information screen to re-subscribe.

Downloaded from www.Manualslib.com manuals search engine

Press the "Subscription Info" button on the touchscreen to access the Subscription Information screen.

Write down the SIRIUS ID numbers for your receiver. To reactivate your service, either call the number listed on the screen or visit the provider online.

NOTE: SiriusXM Travel Link is a separate subscription and is available for U.S. residents only.

Restore Settings

After pressing the "Restore Settings" button on the touchscreen the following settings will be available:

- *Restore Settings*

When this feature is selected it will reset the Display, Clock, Audio, and Radio Settings to their default settings. To restore the settings to their default setting, press the Restore Settings button. A pop-up will appear asking "Are you sure you want to reset your settings to default?" select "Yes" to restore, or "Cancel" to exit. Once the settings are restored, a pop up appears stating "settings reset to default." Press the okay button on the touchscreen to exit.

Clear Personal Data

After pressing the "Clear Personal Data Settings" button on the touchscreen the following settings will be available:

- *Clear Personal Data*

When this feature is selected it will remove personal data including Bluetooth devices and presets. To remove personal information, press the "Clear Personal Data" button and a pop-up will appear asking "Are you sure you want to clear all personal data?" select "OK" to Clear, or "Cancel" to exit. Once the data has been cleared, a pop up appears stating "Personal data cleared."

Downloaded from www.Manualslib.com manuals search engine

System Information

After pressing the "System Information" button on the touchscreen the following settings will be available:

- *System Information*

When System Information is selected, a System Information screen will appear displaying the system software version.

SRT Performance Pages

To access the SRT Performance Pages, press the "Apps" button on the touchscreen then select the "SRT Performance Pages" App from the list. Press the UP or DOWN buttons on the touchscreen to cycle through the list.

WARNING!

Measurement of vehicle statistics with the SRT Performance Pages is intended for off-highway or off-road use only and should not be done on any public roadways. It is recommended that these features be used in a controlled environment and within the limits of the law. The capabilities of the vehicle as measured by the Performance Pages must never be exploited in a reckless or dangerous manner, which can jeopardize the user's safety or the safety of others. Only a safe, attentive, and skillful driver can prevent accidents.

Downloaded from www.Manualslib.com manuals search engine

CAUTION!

Check engine oil level at every fuel fill-up. Running an engine with a low oil level can cause severe engine damage. Engine oil level must be maintained within the safe zone on the engine oil dipstick or severe engine damage may occur. Refer to the "Maintenance Schedule" for further information.

The SRT Performance Pages include the following:

- Home
- Timers
- G-Force
- Gauges 1
- Gauges 2
- Engine
- Options

The following describes each feature and its operation:

Timers

When the Timers Page is selected you will be able to select from following "Tickets":

- ***Current***

Pressing the "Current" button displays a "real time" summary of performance timers.

- ***Last***

Pressing the "Last" button displays the last recorded run of performance timers.

- ***Best***

Pressing the "Best" button displays the best recorded run of performance timers, except for braking data.

Downloaded from www.Manualslib.com manuals search engine

- ***Save***

Pressing the "Save" button will let you save the last run. Any saved run over 10, will overwrite the last saved run for Uconnect System storage. The operation of the Save feature is listed below:

- With a USB jump drive installed, press the "USB" button to save runs to the jump drive.
- With an SD Card installed, press the "SD Card" to save runs to the SD Card.
- Press the "Uconnect" button to save the runs to the Owner web page.
- Press the "Cancel" button to view the last timer "Ticket."

The "Tickets" contain the timers listed below:

- ***0-60 MPH (0-100 km/h)***

Displays the time it takes for the vehicle to go from 0 to 60 mph (0 to 100 km/h).

- ***⅛ Mile (200 meter)***

Displays the time it takes for the vehicle to go an ⅛ Mile (200 meters).

- ***¼ mile (400 meter)***

Displays the time it takes for the vehicle to go an ¼ mile (400 meters).

- ***Brake Distance***

Displays the distance it takes the vehicle to make a full stop. Contains current and last data for distance and start – from speed.

Downloaded from www.Manualslib.com manuals search engine

NOTE: The distance measurement will be aborted if the brake pedal is released before the vehicle comes to a complete stop.

- ***Brake Speed***

Displays the speed the vehicle is traveling when the brake pedal is depressed.

NOTE: Brake Distance and Speed timers will only display "ready" when vehicle is traveling at greater than 30 MPH (48 km/h).

G-Force

When selected, this screen displays all four G-Force values (two lateral and two longitudinal) as well as steering angle.

When a G-Force greater than zero is measured, the display will update the value real-time.

Gauges 1

When selected, this screen displays the following values:

- ***Oil Temperature***

Displays the actual oil temperature.

- ***Oil Pressure***

Displays the actual oil pressure.

- ***Battery Voltage***

Displays the actual battery voltage.

Gauges 2

When selected, this screen displays the following values:

- ***Coolant Temperature***

Displays the actual coolant temperature.

- ***Oil Temperature***

Displays the actual oil temperature.

Downloaded from www.Manualslib.com manuals search engine

- *Intake Air Temperature*

Displays the actual intake air temperature.

- *Oil Pressure*

Displays the actual oil pressure.

- *Battery Voltage*

Displays the actual battery voltage.

Engine

When selected, this screen displays the following values:

- *Speed (mph)*

Displays the actual speed.

- *Horsepower (hp)*

Displays the actual horsepower.

- *Torque (ft-lb)*

Displays the actual torque.

- *Oil Pressure (psi)*

Displays the actual oil pressure.

Options

When selected, this screen allows you to set your SRT home page picture, and configure the vehicle color shown in the G-Force screen.

UCONNECT RADIOS — IF EQUIPPED

For detailed information about your Uconnect radio, refer to your Uconnect Supplement Manual.

Downloaded from www.Manualslib.com manuals search engine

iPod/USB/MP3 CONTROL — IF EQUIPPED

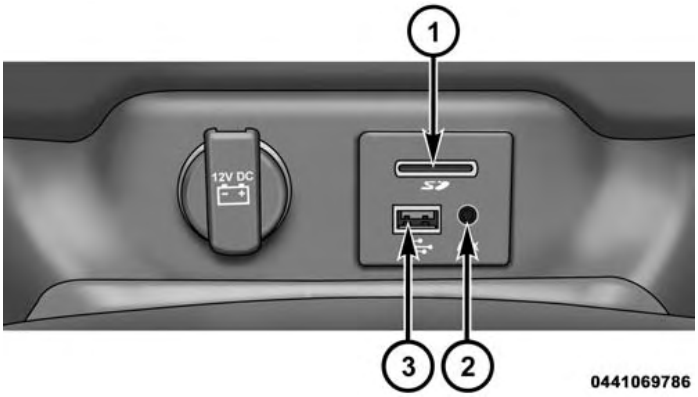

SD Card Slot, AUX Jack, And USB Port

1 — SD Card Slot
2 — AUX Jack
3 — USB Port

Located at the rear area of the center console, this feature allows an iPod or external USB device to be plugged into the USB port.

iPod control supports Mini, 4G, Photo, Nano, 5G iPod and iPhone devices. Some iPod software versions may not fully support the iPod control features. Please visit Apple's website for software updates.

For further information, refer to the Uconnect Supplement Manual.

STEERING WHEEL AUDIO CONTROLS

The remote sound system controls are located on the rear surface of the steering wheel. Reach behind the wheel to access the switches.

Downloaded from www.Manualslib.com manuals search engine

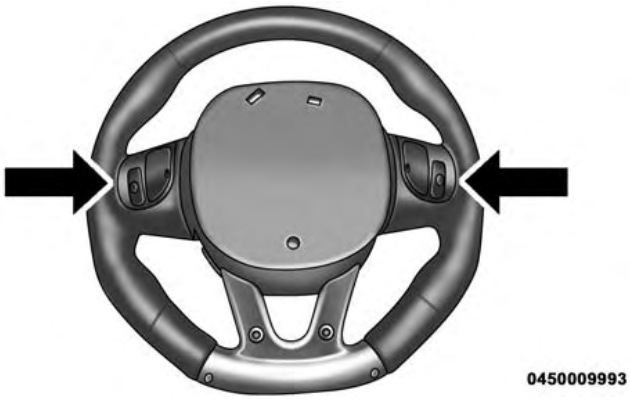

Remote Sound System Controls (Back View Of Steering Wheel)

The right hand control is a rocker type switch with a push-button in the center. Pushing the top of the switch will increase the volume, and pushing the bottom of the switch will decrease the volume.

The button located in the center of the right hand control will switch modes to Radio or other valid audio source.

The left hand control is a rocker type switch with a push-button in the center. The function of the left hand control is different depending on which mode you are in.

The following describes the left hand control operation in each mode.

Radio Operation

Pushing the top of the switch will SEEK up for the next listenable station and pushing the bottom of the switch will SEEK down for the next listenable station.

The button located in the center of the left hand control will tune to the next pre-set station that you have programmed in the radio pre-set buttons.

Downloaded from www.Manualslib.com manuals search engine

RADIO ANTENNA

The am/fm radio antenna is located in the windshield.

The Satellite/Navigation antenna is located in the rear liftgate, while the cellular phone antenna is on the windshield behind the interior rearview mirror.

RADIO OPERATION AND MOBILE DEVICES

Under certain conditions, the mobile device being on in your vehicle can cause erratic or noisy performance from your radio. This condition may be lessened or eliminated by relocating the mobile device antenna. This condition is not harmful to the radio. If your radio performance does not satisfactorily "clear" by the repositioning of the antenna, it is recommended that the radio volume be turned down or off during mobile device operation when not using Uconnect (if equipped).

General Information

This device complies with Part 15 of the FCC rules and RSS 210 of Industry Canada. Operation is subject to the following conditions:

- Changes or modifications not expressly approved by the party responsible for compliance could void the user's authority to operate the equipment.
- This device may not cause harmful interference.
- This device must accept any interference received, including interference that may cause undesired operation.

CLIMATE CONTROLS

The Climate Control System allows you to regulate the temperature, amount, and direction of air circulating throughout the vehicle. The controls are located on the instrument panel below the radio.

Downloaded from www.Manualslib.com manuals search engine

Automatic Temperature Control (ATC)

Buttons On The Faceplate

The buttons on the faceplate are located below the Uconnect touchscreen.

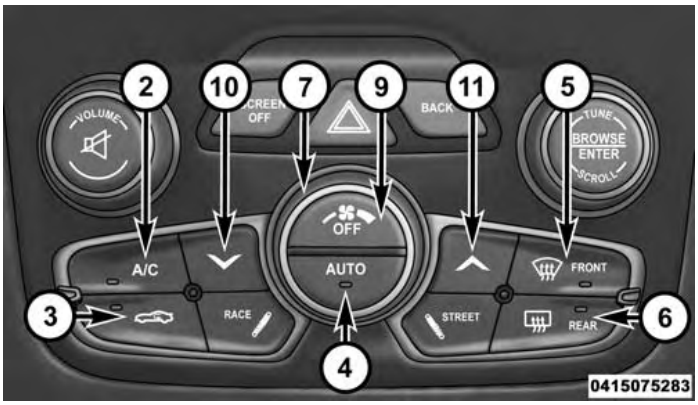

Automatic Climate Controls

Buttons On The Touchscreen

Buttons on the touchscreen are accessible on the Uconnect system touchscreen.

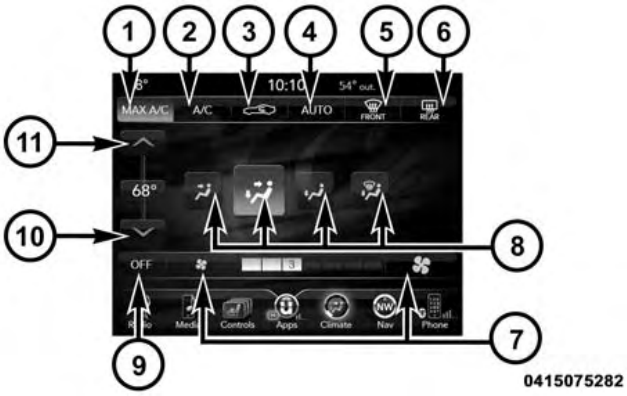

Uconnect Temperature Controls

Downloaded from www.Manualslib.com manuals search engine

Button Descriptions (Applies To Both Buttons On The Faceplate And Buttons On The Touchscreen)

1. MAX A/C Button

Press and release to change the current setting, the indicator illuminates when MAX A/C is ON. Performing this function again will cause the MAX A/C operation to switch into manual mode and the MAX A/C indicator will turn off.

2. A/C Button

Press and release to change the current setting, the indicator illuminates when A/C is ON. Performing this function again will cause the A/C operation to switch into manual mode and the A/C indicator will turn off.

3. Recirculation Button

Press and release to change the current setting, the indicator illuminates when ON.

4. AUTO Temperature Control

Controls airflow temperature, distribution, volume, and the amount of air recirculation automatically. Press and release to select. Refer to "Automatic Operation" for more information. Performing this function will cause the ATC to switch between manual mode and automatic modes.

5. Front Defrost Button

Press and release to change the current airflow setting to Defrost mode. The indicator illuminates when this feature is ON. Performing this function will cause the ATC to switch into manual mode. The blower speed may increase when Defrost mode is selected. If the front defrost mode is turned off the climate system will return the previous setting.

Downloaded from www.Manualslib.com manuals search engine

6. Rear Defrost Button

Press and release this button to turn on the rear window defroster and the heated outside mirrors (if equipped). An indicator will illuminate when the rear window defroster is on. The rear window defroster automatically turns off after 10 minutes.

CAUTION!

Failure to follow these cautions can cause damage to the heating elements:

- **Use care when washing the inside of the rear window. Do not use abrasive window cleaners on the interior surface of the window. Use a soft cloth and a mild washing solution, wiping parallel to the heating elements. Labels can be peeled off after soaking with warm water.**

(Continued)

CAUTION! ***(Continued)***

- **Do not use scrapers, sharp instruments, or abrasive window cleaners on the interior surface of the window.**
- **Keep all objects a safe distance from the window.**

7. Blower Control

Blower control is used to regulate the amount of air forced through the climate system. There are seven blower speeds available. Adjusting the blower will cause automatic mode to switch to manual operation. The speeds can be selected using either the buttons on the faceplate or the buttons on the touchscreen as follows:

Button On The Faceplate

The blower speed increases as you turn the control clockwise from the lowest blower setting. The blower speed decreases as you turn the knob counterclockwise.

Downloaded from www.Manualslib.com manuals search engine

Button On The Touchscreen

Use the small blower icon to reduce the blower setting and the large blower icon to increase the blower setting. Blower can also be selected by pressing the blower bar area between the icons.

8. Modes

The airflow distribution mode can be adjusted so air comes from the instrument panel outlets, floor outlets, demist outlets and defrost outlets. The Mode settings are as follows:

- ***Panel Mode***

  Air comes from the outlets in the instrument panel. Each of these outlets can be individually adjusted to direct the flow of air. The air vanes of the center outlets and outboard outlets can be moved up and down or side to side to regulate airflow direction. There is a shut off wheel located below the air vanes to shut off or adjust the amount of airflow from these outlets.

- ***Bi-Level Mode***

  Air comes from the instrument panel outlets and floor outlets. A slight amount of air is directed through the defrost and side window demister outlets.

NOTE: BI-LEVEL mode is designed under comfort conditions to provide cooler air out of the panel outlets and warmer air from the floor outlets.

- ***Floor Mode***

  Air comes from the floor outlets. A slight amount of air is directed through the defrost and side window demister outlets.

Downloaded from www.Manualslib.com manuals search engine

- *Mix Mode*

Air comes from the floor, defrost and side window demist outlets. This mode works best in cold or snowy conditions.

9. Climate Control OFF Button

Press and release this button to turn the Climate Control ON/OFF.

10. Temperature Control Down Button

Push the button for cooler temperature settings.

11. Temperature Control Up Button

Push the button for warmer temperature settings.

Automatic Operation

1. Push the AUTO button on the faceplate, or the AUTO button on the touchscreen on the Automatic Temperature Control (ATC) Panel.
2. Next, adjust the temperature you would like the system to maintain by adjusting the driver and passenger temperature control buttons. Once the desired temperature is displayed, the system will achieve and automatically maintain that comfort level.
3. When the system is set up for your comfort level, it is not necessary to change the settings. You will experience the greatest efficiency by simply allowing the system to function automatically.

NOTE:

- It is not necessary to move the temperature settings for cold or hot vehicles. The system automatically adjusts the temperature, mode, and blower speed to provide comfort as quickly as possible.
- The temperature can be displayed in U.S. or Metric units by selecting the US/M customer-programmable

Downloaded from www.Manualslib.com manuals search engine

feature. Refer to the "Customer Programmable Features — Uconnect System Settings" in this section of the manual.

To provide you with maximum comfort in the Automatic mode during cold start-ups, the blower fan will remain on low until the engine warms up. The blower will increase in speed and transition into Auto mode.

Recirculation Control

When outside air contains smoke, odors, or high humidity, or if rapid cooling is desired, you may wish to recirculate interior air by pressing the RECIRCULATION control button. Recirculation mode should only be used temporarily. The recirculation LED will illuminate on the blower control knob when this button is selected. Push the button a second time to turn off the Recirculation mode LED and allow outside air into the vehicle.

NOTE: In cold weather, use of Recirculation mode may lead to excessive window fogging. The Recirculation mode is not allowed in Defrost mode to improve window clearing operation. Recirculation will be disabled automatically if these modes are selected.

Summer Operation

The engine cooling system must be protected with a high-quality antifreeze coolant to provide proper corrosion protection and to protect against engine overheating. OAT coolant (conforming to MS.90032) is recommended. Refer to "Maintenance Procedures" in "Maintaining Your Vehicle" for proper coolant selection.

Winter Operation

To ensure the best possible heater and defroster performance, make sure the engine cooling system is functioning properly and the proper amount, type, and concentration of coolant is used. Refer to "Maintenance Procedures" in "Maintaining Your Vehicle" for proper

Downloaded from www.Manualslib.com manuals search engine

coolant selection. Use of the air Recirculation mode during Winter months is not recommended because it may cause window fogging.

Vacation/Storage

Any time you store your vehicle or keep it out of service (i.e., vacation) for two weeks or more, run the air conditioning system at idle for about five minutes in fresh air with the blower setting in high. This will ensure adequate system lubrication to minimize the possibility of compressor damage when the system is started again.

Window Fogging and Frosting

Vehicle windows tend to fog on the inside of the glass in mild, rainy and/or humid weather. Windows may frost on the inside of the glass in very cold weather. To clear the windows, select Defrost or Mix mode and increase the front blower speed. Do not use the Recirculation mode without A/C for long periods, as fogging may occur.

NOTE: Automatic Temperature Controls (ATC) will automatically adjust the climate control settings to reduce or eliminate window fogging on the front windshield. When this occurs, recirculation will be unavailable.

Outside Air Intake

Make sure the air intake, located directly in front of the windshield, is free of obstructions such as leaves. Leaves collected in the air intake may reduce airflow, can cause odor, and if they enter the plenum they could plug the water drains. In winter months, ensure the air intake is clear of ice, slush and snow.

Downloaded from www.Manualslib.com manuals search engine

Control Setting Suggestions For Various Weather Conditions

WEATHER	CONTROL SETTINGS
HOT WEATHER AND VEHICLE INTERIOR IS VERY HOT	Start vehicle and put Mode Control in position and turn on A/C. Set Fan Control to High. Roll windows down to flush out hot air. Roll windows up after hot air is flushed out. Turn Mode Control to and set Fan and Temp Knobs as desired once car has cooled.
WARM WEATHER	Set the Mode Control to position and turn A/C on in sunny weather. Choose the position for cloudy or dark conditions with A/C on.
COOL OR COLD HUMID CONDITIONS	Set the Mode Control to position and turn the A/C on in sunny weather. Choose the position and turn on the A/C in cloudy or dark conditions.
COLD DRY CONDITIONS	Use the position in sunny weather, the position in cloudy or dark weather, and the Mode Knob setting for snowy or very cold weather that requires extra heat to the windshield. 815193c4

Downloaded from www.Manualslib.com manuals search engine

PERSONALIZED MENU BAR

The Uconnect features and services in the main menu bar are easily changed for your convenience. Simply follow these steps:

Uconnect 8.4A/8.4AN Main Menu

1. Press the "Apps ⓤ" button to open the App screen.
2. Press and hold, then drag the selected App to replace an existing shortcut in the main menu bar.
3. The replaced shortcut will now be an active App/shortcut on the main menu bar.

UCONNECT VOICE RECOGNITION QUICK TIPS

Introducing Uconnect

Start using Uconnect Voice Recognition with these helpful quick tips. It provides the key Voice Commands and tips you need to know to control your Uconnect 8.4AN system.

Downloaded from www.Manualslib.com manuals search engine

Uconnect 8.4AN

If you see the icon on your touchscreen, you have the Uconnect 8.4AN system.

Get Started

1. Visit UconnectPhone.com to check mobile device and feature compatibility and to find phone pairing instructions.
2. Reduce background noise. Wind and passenger conversations are examples of noise that may impact recognition.
3. Speak clearly at a normal pace and volume while facing straight ahead. The microphone is positioned on the rearview mirror and aimed at the driver.
4. Each time you give a Voice Command, you must first push either the VR or Phone button, wait until **after** the beep, then say your Voice Command.
5. You can interrupt the help message or system prompts by pushing the VR or Phone button and saying a Voice Command from current category.

Downloaded from www.Manualslib.com manuals search engine

Two buttons are all you need to control your Uconnect system with your voice.

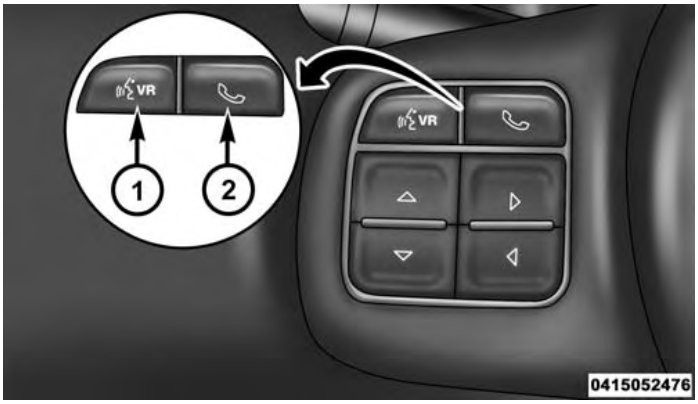

Voice Recognition (VR)/Phone Buttons

1 — Push To Begin Radio, Media, Navigation, Apps And Climate Functions
2 — Push To Initiate Or To Answer A Phone Call, Send Or Receive A Text

Basic Voice Commands

The basic Voice Commands below can be given at any point while using your Uconnect system.

Push the VR button VR. After the beep, say:

- **Cancel** to stop a current voice session
- **Help** to hear a list of suggested Voice Commands
- **Repeat** to listen to the system prompts again

Notice the visual cues that inform you of your voice recognition system's status. Cues appear on the touch-screen.

Downloaded from www.Manualslib.com manuals search engine

Uconnect 8.4AN

Radio

Use your voice to quickly get to the AM, FM or SiriusXM Satellite Radio stations you would like to hear. (Subscription or included SiriusXM Satellite Radio trial required.)

Push the VR button VR. After the beep, say:

- **Tune to** ninety-five-point-five FM
- **Tune to** Satellite Channel Hits 1

TIP: At any time, if you are not sure of what to say or want to learn a Voice Command, push the VR button VR and say **"Help."** The system will provide you with a list of commands.

Uconnect 8.4AN Radio

Downloaded from www.Manualslib.com manuals search engine

Media

Uconnect offers connections via USB, SD, Bluetooth and auxiliary ports (If Equipped). Voice operation is only available for connected USB and iPod devices. (Remote CD player optional and not available on all vehicles.)

Push the VR button VR. After the beep, say one of the following commands and follow the prompts to switch your media source or choose an artist.

- **Change source** to Bluetooth
- **Change source** to iPod
- **Change source** to USB
- **Play artist** Beethoven; **Play album** Greatest Hits; **Play song** Moonlight Sonata; **Play genre** Classical

TIP: Press the Browse button on the touchscreen to see all of the music on your iPod or USB device. Your Voice Command must match **exactly** how the artist, album, song and genre information is displayed.

Uconnect 8.4AN Media

4

Downloaded from www.Manualslib.com manuals search engine

Phone

Making and answering hands-free phone calls is easy with Uconnect. When the Phonebook button is illuminated on your touchscreen, your system is ready. Check UconnectPhone.com for mobile phone compatibility and pairing instructions.

Push the Phone button . After the beep, say one of the following commands:

- **Call** John Smith
- **Dial** 123-456-7890 and follow the system prompts
- **Redial** (call previous outgoing phone number)
- **Call back** (call previous incoming phone number)

TIP: When providing a Voice Command, push the Phone button and say **"Call,"** then pronounce the name **exactly** as it appears in your phone book. When a contact has multiple phone numbers, you can say **"Call** John Smith **work."**

Uconnect 8.4AN Phone

Downloaded from www.Manualslib.com manuals search engine

Voice Text Reply

Uconnect will announce **incoming** text messages. Push the Phone button and say **Listen.** (Must have compatible mobile phone paired to Uconnect system.)

1. Once an incoming text message is read to you, push the Phone button . After the beep, say: **"Reply."**
2. Listen to the Uconnect prompts. After the beep, repeat one of the pre-defined messages and follow the system prompts.

PRE-DEFINED VOICE TEXT REPLY RESPONSES		
Yes.	Stuck in traffic.	See you later.
No.	Start without me.	I'll be late.
Okay.	Where are you?	I will be <number> minutes late.
Call me.	Are you there yet?	
I'll call you later.	I need directions.	See you in <number> of minutes.
I'm on my way.	Can't talk right now.	
I'm lost.		Thanks.

TIP: Your mobile phone must have the full implementation of the **Message Access Profile (MAP)** to take advantage of this feature. For details about MAP, visit UconnectPhone.com.

Downloaded from www.Manualslib.com manuals search engine

Apple iPhone iOS 6 or later supports reading **incoming** text messages only. To enable this feature on your Apple iPhone, follow these 4 simple steps:

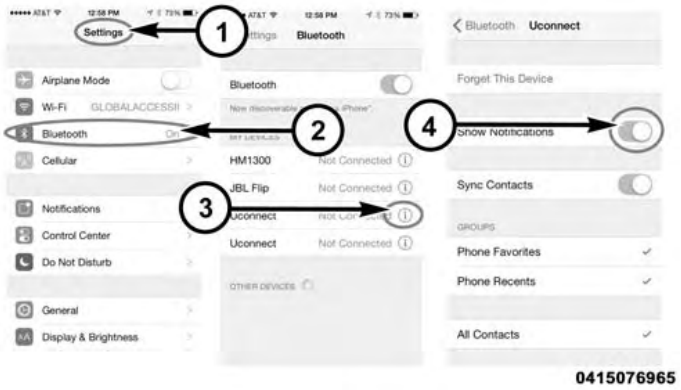

iPhone Notification Setting

1 — Select “Settings”
2 — Select “Bluetooth”
3 — Select the (i) for the paired vehicle
4 — Turn on “Show Notifications”

Downloaded from www.Manualslib.com manuals search engine

TIP: Voice Text Reply is not compatible with iPhone, but if your vehicle is equipped with Siri Eyes Free, you can use your voice to send a text message.

Climate (8.4AN)

Too hot? Too cold? Adjust vehicle temperatures hands-free and keep everyone comfortable while you keep moving ahead.

Push the VR button VR. After the beep, say one of the following commands:

- **Set temperature to** 70 **degrees**

TIP: Voice Command for Climate may only be used to adjust the interior temperature of your vehicle.

Uconnect 8.4AN Climate

Downloaded from www.Manualslib.com manuals search engine

Navigation (8.4AN)

The Uconnect navigation feature helps you save time and become more productive when you know exactly how to get to where you want to go.

1. To enter a destination, push the VR button . After the beep, say:
   - For the 8.4AN Uconnect System, say: **"Navigate to** 800 Chrysler Drive Auburn Hills, Michigan."
2. Then follow the system prompts.

TIP: To start a POI search, push the VR button . After the beep, say: " **Find nearest** coffee shop."

Uconnect 8.4AN Navigation

Downloaded from www.Manualslib.com manuals search engine

Uconnect Access (8.4AN)

WARNING!

ALWAYS obey traffic laws and pay attention to the road. Some Uconnect Access services, including 9-1-1 and Assist, will NOT work without an operable 1X (voice/data) or 3G (data) network connection.

NOTE: Your vehicle may be transmitting data as authorized by the subscriber.

An included trial and/or subscription is required to take advantage of the Uconnect Access services in the next section of this guide. To register with Uconnect Access, press the "Apps" button on the 8.4-inch touchscreen to get started. Detailed registration instructions can be found on the next page.

NOTE: Uconnect Access is available only on equipped vehicles purchased within the continental United States, Alaska and Hawaii. Services can only be used where coverage is available; see coverage map for details.

- 9-1-1 Call
- Theft Alarm Notification
- Remote Door Lock/Unlock
- Stolen Vehicle Assistance
- Remote Horn and Lights
- Yelp Search
- Voice Texting
- Roadside Assistance Call
- Wi-Fi Hotspot***

***Extra charges apply.

Downloaded from www.Manualslib.com manuals search engine

Register (8.4A/8.4AN)

To unlock the full potential of Uconnect Access in your vehicle, you first need to register with Uconnect Access.

1. Push the ASSIST button on your rearview mirror.

0401020352

2. Press the "Uconnect Care" button on the touchscreen.
3. A helpful Uconnect Care Agent will register your vehicle and handle all of the details.

Signing up is easy! Simply follow the steps above. Or, press the "Apps ⓤ" button on the touchscreen to "Register By Web" to complete the process using your smartphone or computer.

For further information please visit www.driveuconnect.com

Downloaded from www.Manualslib.com manuals search engine

Mobile App (8.4A/8.4AN)

You're only a few steps away from using remote commands and playing your favorite music in your car.

0307077996

Mobile App

To link your internet radio accounts:

1. Download the Uconnect Access App to your mobile device.
2. Press the Via Mobile icon on the navigation bar at the bottom of the app.
3. Press the app you'd like to connect to your vehicle.
4. Enter your login information for the selected app and press Link.
5. Next time you're in your vehicle, enable Bluetooth, pair your phone and select the Via Mobile app you want to play from the Uconnect touchscreen to stream your personalized music.

Downloaded from www.Manualslib.com manuals search engine

NOTE:

- You can also complete this process on the web. Simply visit moparownerconnect.com log in and click Set Up Via Mobile Profile (under Quick Links).
- Once you download the app to your compatible mobile device, you will also be able to start your vehicle and lock/unlock its doors from virtually anywhere.

Voice Texting (8.4A/8.4AN)

1. To send a message, push the Phone button . After the beep, say the following command: **"Send message** to John Smith."
2. Listen to the prompt. After the beep, dictate the message you would like to send. Wait for Uconnect to process your message.
3. The Uconnect system will repeat your message and provide a variety of options to add to, delete, send or hear the message again. After the beep, tell Uconnect what you'd like to do. For instance, if you're happy with your message, after the beep, say: **"Send."**

You must be registered with Uconnect Access and have a compatible MAP – enabled smartphone to use your voice to send a personalized text message. For details about MAP, visit UconnectPhone.com.

Apple iPhone iOS6 or later supports reading **incoming** text messages only. To enable this feature on your Apple iPhone, follow these 4 simple steps:

Downloaded from www.Manualslib.com manuals search engine

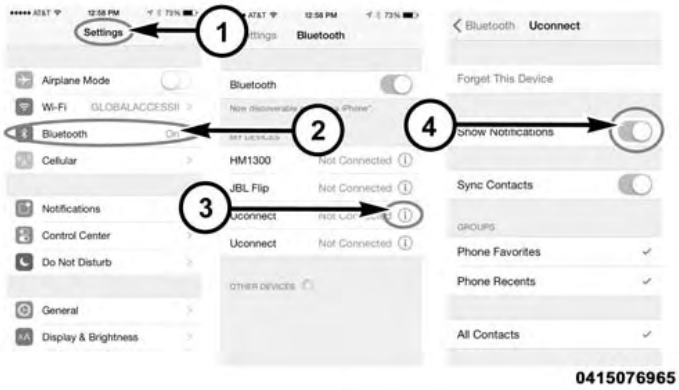

iPhone Notification Setting

1 — Select "Settings"
2 — Select "Bluetooth"
3 — Select the (i) for the paired vehicle
4 — Turn on "Show Notifications"

TIP:

- Voice Texting is not compatible with iPhone, but if your vehicle is equipped with Siri Eyes Free, you can use your voice to send a text message.
- Messages are limited to 140 characters.
- The Messaging button on the touchscreen must be illuminated to use the feature.

Yelp (8.4A/8.4AN)

Once registered with Uconnect Access, you can use your voice to search for the most popular places or things around you.

1. Press the "Apps " button on the touchscreen.
2. Press the "Yelp" button on the touchscreen.

Downloaded from www.Manualslib.com manuals search engine

3. Once the YELP home screen appears on the touchscreen, push the VR button, then say: **"YELP search."**

4. Listen to the system prompts and after the beep, tell Uconnect the place or business that you'd like Uconnect to find.

TIP: Once you perform a search, you can reorganize the results by selecting either the Best Match, Rating or Distance tab on the top of the touchscreen display.

Yelp

Downloaded from www.Manualslib.com manuals search engine

SiriusXM Travel Link (8.4AN)

Need to find a gas station, view local movie listings, check a sports score or the 5 - day weather forecast? SiriusXM Travel Link is a suite of services that brings a wealth of information right to your Uconnect 8.4AN system.

Push the VR button VR. After the beep, say one of the following commands:

- **Show fuel prices**
- **Show 5 - day weather forecast**
- **Show extended weather**

TIP: Traffic alerts are not accessible with Voice Command.

SiriusXM Travel Link

Siri Eyes Free — If Equipped

If your vehicle is equipped with Siri Eyes Free, you can use your voice to send text messages, schedule meetings, set reminders, and more.

Downloaded from www.Manualslib.com manuals search engine

Do Not Disturb

With Do Not Disturb, you can disable notifications from incoming calls and texts, allowing you to keep your eyes on the road and hands on the wheel. For your convenience there is a counter display to keep track of your missed calls and text messages while you were using Do Not Disturb.

Do Not Disturb can automatically reply with a text message, a call or both, when declining an incoming call and send it to voicemail.

Automatic reply messages can be:

- "I am driving right now, I will get back to you shortly."
- Create a custom auto reply message up to 160 characters.

NOTE: Only the first 25 characters can been seen on the touchscreen while typing a custom message.

While in Do Not Disturb, Conference Call can be selected so you can still place a second call without being interrupted by incoming calls.

NOTE:

- Reply with text message is not compatible with iPhones.
- Auto reply with text message is only available on phones that supporting Bluetooth MAP.

Downloaded from www.Manualslib.com manuals search engine

General Information

This device complies with FCC rules Part 15 and Industry Canada RSS-210. Operation is subject to the following two conditions:

1. This device may not cause harmful interference.
2. This device must accept any interference that may be received including interference that may cause undesired operation.

NOTE:

- The transmitter has been tested and it complies with FCC and IC rules. Changes or modifications not expressly approved by the party responsible for compliance could void the user's authority to operate the device.
- The term IC before the certification/registration number only signifies that Industry Canada technical specifications were met.

Gulf Coast Countries (GCC)

Bluetooth

TRA

Register No: ER0095499/12

Dealer No: 0028019/10

Downloaded from www.Manualslib.com manuals search engine

Additional Information

2015 FCA US LLC. All rights reserved. Mopar and Uconnect are registered trademarks and Mopar Owner Connect is a trademark of FCA US LLC. Android is a trademark of Google Inc. SiriusXM and all related marks and logos are trademarks of SiriusXM Radio Inc. Yelp, Yelp logo, Yelp burst and related marks are registered trademarks of Yelp.

Uconnect System Support:

- U.S. residents call 877-855-8400 or visit DriveUconnect.com
- Canadian residents call 800-465-2001 (English) or 800-387-9983 (French) or visit DriveUconnect.ca

Mon. – Fri., 7:00 am – 12:00 am, ET

Sat., 8:00 am – 10:00 pm, ET

Sun., 9:00 am – 5:00 pm, ET

Uconnect Access Services Support 855-792-4241. Please have your Uconnect Security PIN ready when you call.

Downloaded from www.Manualslib.com manuals search engine

STARTING AND OPERATING

CONTENTS

■ STARTING PROCEDURES 238
- □ Normal Starting. 238
- □ If Engine Fails To Start 240
- □ After Starting 241

■ MANUAL TRANSMISSION 241
- □ Shifting. 242
- □ Recommended Shift Speeds 244
- □ Skip Shift Indicator Light 244

■ STREET/RACE MODE — IF EQUIPPED 245

■ LAUNCH MODE 247

■ TRACK USE 249
- □ Guidelines For Track Use 249

■ DRIVING ON SLIPPERY SURFACES 250
- □ Acceleration 250
- □ Traction 251

■ DRIVING THROUGH WATER 251
- □ Flowing/Rising Water 252
- □ Shallow Standing Water 252

■ POWER STEERING 253
- □ Power Steering Fluid Check 254

Downloaded from www.Manualslib.com manuals search engine

■ PARKING BRAKE 255
■ BRAKE SYSTEM 257
□ Brake Pad Break-In 258
■ ELECTRONIC BRAKE CONTROL SYSTEM 259
□ Anti-Lock Brake System 259
□ Traction Control System (TCS) 262
□ Electronic Stability Control 262
■ TIRE SAFETY INFORMATION 266
□ Tire Markings 266
□ Tire Identification Number (TIN). 270
□ Tire Terminology And Definitions 272
□ Tire Loading And Tire Pressure 273
■ TIRES — GENERAL INFORMATION 278
□ Tire Pressure 278
□ Tire Inflation Pressures 279
□ Tire Pressures For High Speed Operation 281
□ Radial Ply Tires 281
□ Tire Types. 282
□ Run Flat Tires — If Equipped 283
□ Spare Tires — If Equipped 283
□ Tire Spinning 286
□ Tread Wear Indicators 286
□ Life Of Tire 287
□ Replacement Tires 288
■ TIRE CHAINS (TRACTION DEVICES) 290
■ TIRE ROTATION RECOMMENDATIONS 290

Downloaded from www.Manualslib.com manuals search engine

■ TIRE PRESSURE MONITOR SYSTEM (TPMS) . .291
□ Premium System 294
■ FUEL REQUIREMENTS 297
□ 8.4L Engine. 297
□ Reformulated Gasoline 297
□ Gasoline/Oxygenate Blends 298
□ E-85 Usage In Non-Flex Fuel Vehicles 298
□ MMT In Gasoline 299
□ Materials Added To Fuel 299
□ Fuel System Cautions. 300
□ Carbon Monoxide Warnings 301
■ ADDING FUEL 301
□ Emergency Fuel Filler Door Release. 303
■ TRAILER TOWING 306
■ RECREATIONAL TOWING (BEHIND MOTORHOME, ETC.) 306
□ Towing This Vehicle Behind Another Vehicle (Flat Towing With All Four Wheels On The Ground) 306
■ GROUND CLEARANCE 307

Downloaded from www.Manualslib.com manuals search engine

STARTING PROCEDURES

Before starting your vehicle, adjust your seat, adjust the inside and outside mirrors, fasten your seat belt, and if present, instruct any other occupant to buckle their seat belt.

WARNING!

Never leave children alone in a vehicle. Leaving unattended children in a vehicle is dangerous for a number of reasons. A child or others could be seriously or fatally injured. Do not leave the Key Fob in or near the vehicle (or in a location accessible to children), and do not leave the ignition of a vehicle equipped with Keyless Enter-N-Go in the ACC or ON/RUN mode. A child could operate power windows, other controls, or move the vehicle.

CAUTION!

- **Long periods of engine idling, especially at higher than normal engine idle speeds, can cause excessive exhaust temperatures, which can damage your vehicle. Do not leave your vehicle unattended with the engine running.**
- **Running an engine with a low oil level can cause severe damage. Check the engine oil level at every fuel fill-up.**

Normal Starting

CAUTION!

The engine in your vehicle is designed for operation down to 0°F (-18°C). Starting the engine below 0°F (-18°C) coolant temperature creates a potential for

(Continued)

Downloaded from www.Manualslib.com manuals search engine

CAUTION! ***(Continued)***

scuffing or seizing of internal components in this high performance engine. To prevent engine damage, do not start the engine at temperatures below 0°F (-18°C).

NOTE:

- You must disarm the security system in order to start the engine. Refer to "Security Alarm System" in "Things To Know Before Starting Your Vehicle" for further information.
- Normal starting of either a cold or a warm engine does not require pumping or pressing the accelerator pedal. However, if the engine has not started within three seconds, slightly press the accelerator pedal while continuing to crank. If the engine fails to start within 15 seconds, wait five seconds, then repeat the "Normal Starting" procedure.

To Start The Engine:

1. Fully apply the parking brake.
2. Press the clutch pedal to the floor.

NOTE: The engine will not start unless the clutch pedal is pressed to the floor.

3. Place the shift lever in NEUTRAL.

Downloaded from www.Manualslib.com manuals search engine

4. Push the red ENGINE START/STOP button located on the instrument panel. Release the button when the engine starts.

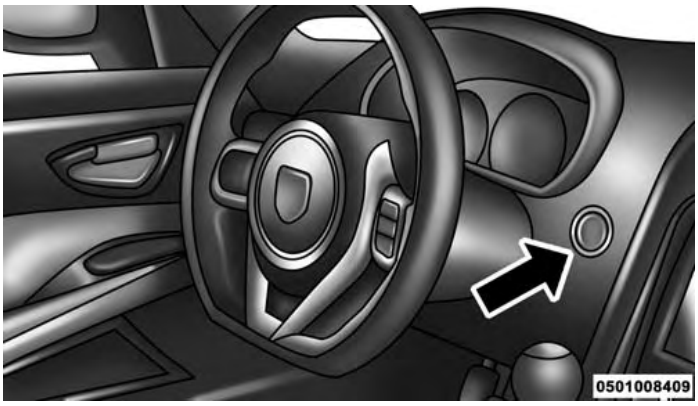

Engine START/STOP Button

If Engine Fails To Start

CAUTION!

To prevent damage to the starter, do not crank the engine for more than 15 seconds at a time. Wait 10 to 15 seconds before trying again.

WARNING!

- **Never pour fuel or other flammable liquids into the throttle body air inlet opening in an attempt to start the vehicle. This could result in a flash fire causing serious personal injury.**
- **Do not attempt to push or tow your vehicle to get it started. Unburned fuel could enter the catalytic converter and once the engine has started, ignite**

(Continued)

Downloaded from www.Manualslib.com manuals search engine

WARNING! ***(Continued)***

and damage the converter and vehicle. If the vehicle has a discharged battery, booster cables may be used to obtain a start from a booster battery or the battery in another vehicle. This type of start can be dangerous if done improperly, so follow this procedure carefully. Refer to "Jump-Starting" in "What To Do In Emergencies" for further information.

If the engine is flooded, it may start to run, but not have enough power to continue running when the ENGINE START button is released. If this occurs, continue cranking up to 15 seconds with the accelerator pedal pushed all the way to the floor. Release the accelerator pedal and the ENGINE START button once the engine is running smoothly.

If the engine shows no sign of starting after two 15 second periods of cranking with the accelerator pedal held to the floor, the "Normal Starting" procedure should be repeated.

After Starting

The idle speed is controlled automatically and it will decrease as the engine warms up.

MANUAL TRANSMISSION

NOTE: The parking brake should be engaged and the shift lever placed into REVERSE before leaving the vehicle, especially when parked on an incline.

Your vehicle is equipped with a high torque capacity dual disc clutch. The clutch pedal must be fully pressed to the floor during each shift. As you release the clutch pedal, lightly press the accelerator pedal.

Downloaded from www.Manualslib.com manuals search engine

CAUTION!

- **Never drive with your foot resting on the clutch pedal, or try to hold the vehicle on a hill with the clutch pedal partially engaged, as this will cause abnormal wear on the clutch.**
- **Failure to press the clutch pedal fully to the floor may cause increased shift efforts, and may result in damage to the clutch and transmission.**
- **Do not rest your hand on the shift lever while driving, as this may result in transmission damage.**
- **Do not attempt to shift the transmission if the rear wheels are spinning due to loss of traction. Damage to the transmission may occur.**

Ensure the transmission is in first gear when moving forward from a standing position.

CAUTION!

Failure to start out in first gear when moving forward from a starting position may result in damage to the clutch.

Shifting

Fully press the clutch pedal and lift your foot off the accelerator pedal before shifting gears. As you release the clutch pedal, lightly press the accelerator pedal. Damage to the transmission or clutch may occur if you do not fully press the clutch pedal and lift off of the accelerator pedal when shifting.

The six-speed manual transmission has a spring that centers the shift lever near third and fourth gear. This spring helps you know which gear you are in when you are shifting. Be careful when shifting from first to second or downshifting from sixth to fifth.

Downloaded from www.Manualslib.com manuals search engine

The spring will try to pull the shift lever toward third and fourth gear. Make sure you move the shift lever into second or fifth gear. If you let the shift lever move in the direction of the pulling, you may end shifting from first to fourth or from sixth to third gear.

You will find it easier to use only the lower gears for most city driving. For steady highway driving with light accelerations, sixth gear is recommended.

Never drive with your foot resting on the clutch pedal, or try to hold the vehicle on a hill with the clutch pedal partially engaged. This will cause abnormal wear on the clutch.

Never shift into REVERSE until the vehicle has come to a complete stop.

NOTE:

- Your vehicle is equipped with a transmission reverse inhibitor system. When vehicle speed is greater than 3 mph (5 km/h), the reverse inhibitor activates to help prevent shifts into REVERSE. When at a complete stop, you may notice light shift efforts into REVERSE with the ignition in the ON position, and increased shift efforts into REVERSE with the ignition in the OFF position. This is normal operation of the transmission reverse inhibitor system.
- Shifting gears during cold weather may require an increased effort until the transmission lubricant is warm. This is normal and not harmful to the transmission.
- Due to the high performance nature of your drivetrain, a certain amount of noise from the transmission is normal. This noise can be most noticeable when the vehicle is idling in NEUTRAL with the clutch engaged

Downloaded from www.Manualslib.com manuals search engine

(clutch pedal released), but it may also be heard when driving. The noise may also be more noticeable when the transmission is warm. This noise is normal and is not an indication of a problem with your clutch or transmission.

- You must always use first gear (or REVERSE) when starting from a standing position.

CAUTION!

Always make sure the vehicle comes to a complete stop before shifting into REVERSE. Failure to do so may result in transmission damage.

Recommended Shift Speeds

To use your manual transmission for fuel economy it should be upshifted as listed below. Shift at the vehicle speeds listed for acceleration. Earlier upshifts during cruise conditions (relatively steady speeds) will result in increased fuel economy, and may be used as indicated.

MANUAL TRANSMISSION RECOMMENDED SHIFT SPEEDS			
	1-4	4-5	5-6
mph (km/h)	17 (27)	45 (72)	50 (80)

Higher upshift speeds may be used to obtain a desired acceleration rate.

Skip Shift Indicator Light

There are times when you must shift the transmission directly from first gear into fourth gear instead of from first gear into second gear. This is to help you get the best possible fuel economy from your vehicle. This occurs when engine

Downloaded from www.Manualslib.com manuals search engine

coolant is higher than 107°F (42°C), and vehicle speed is greater than 16 mph (26 km/h) but less than 18 mph (29 km/h), and engine speed is less than 1,550 RPM, and the transmission is in first gear, and the accelerator is at 20% throttle or less. The "Skip Shift Indicator Light" located in the tachometer will illuminate during these times.

When the "Skip Shift Indicator Light" illuminates, the shift mechanism will only allow shifts from first gear to fourth gear. After you shift the transmission into fourth gear, you can press the clutch in and shift to another forward gear.

Downshifting - Proper downshifting will improve fuel economy and prolong engine life.

To maintain a safe speed and prolong brake life, downshift to maintain a safe speed when descending a steep grade.

CAUTION!

If you skip more than one gear while downshifting or downshift at too high a vehicle speed, you could damage the engine, transmission, or clutch.

WARNING!

Skipping more than one gear while downshifting, could cause you to lose control of your vehicle. You could have a collision.

STREET/RACE MODE — IF EQUIPPED

This vehicle is equipped with a two mode electronic controlled damping system. This system allows for a compliant street suspension damping setting or a firmer race suspension damping setting. When in street mode

Downloaded from www.Manualslib.com manuals search engine

the system will automatically shift the suspension dampers to the firmer Race damping setting during some hard acceleration and braking situations. There are two modes of operation:

- Street Mode — This mode will give a sporty, but comfortable ride. This mode is driver selectable when the vehicle is placed in STREET mode (push the "STREET" button on the Instrument Panel). This mode is intended for a smoother ride on the various types of pavement and road conditions while still providing damping levels appropriate extreme capabilities.
- Race Mode — This mode is driver selectable when the vehicle is placed in RACE mode (push the "RACE" button on the Instrument Panel). This mode is for track use only and will supply maximum grip to the tires.

NOTE:

- With the ignition in the ON/RUN position, the suspension damping system will be in the last mode the system was in when the vehicle was turned off. The driver can select either Street or Race damping mode at any time.
- The suspension mode will lock and stay in whatever the driver selects even when the ignition is turned off and the car restarted.
- The RACE setting will provide a much firmer ride.
- When RACE mode is enabled, a Shock symbol with "RACE" next to it will light up in the instrument cluster.

Downloaded from www.Manualslib.com manuals search engine

LAUNCH MODE

This system maximizes acceleration traction for straight line racing.

1. Bring the vehicle to complete stop on a level track surface with the engine running.
2. Set the steering wheel for straight ahead driving.
3. Fully depress the clutch and select the first gear position.
4. Push and release the "LAUNCH" button (located on the steering wheel controls).

LAUNCH Button

5. Rapidly press the accelerator pedal to the floor within one second.

Downloaded from www.Manualslib.com manuals search engine

NOTE: If the cluster launch DID message indicates all conditions are correct for launch and the throttle is pressed to the floor quickly (within approximately 1/2 second) the system will hold the engine speed to a preset speed (below the engine rev limiter speed).

6. Release the clutch aggressively. Do not ride the clutch.

Release the accelerator pedal to deactivate launch control. Pushing the launch control button or actuating the brakes will also deactivate launch control.

NOTE:

- Launch Mode brings the engine to optimum launch RPM and waits for the driver to release the clutch. Launch Mode then uses engine throttle only to achieve controlled wheelslip for maximum acceleration through first gear.
- Launch Mode can be used in any of the Electronic Stability Control (ESC) Modes.
- Launch Mode should not be used within the first 500 miles (805 km) of engine break-in.

WARNING!

Launch Mode is intended for off-highway or off-road use only and should not be used on any public roadways. It is recommended that this feature be used in a controlled environment, and within the limits of the law. The capabilities of the vehicle as measured by the performance pages must never be exploited in a reckless or dangerous manner, which can jeopardize the user's safety or the safety of others. Only a safe, attentive, and skillful driver can prevent accidents.

Downloaded from www.Manualslib.com manuals search engine

TRACK USE

Guidelines For Track Use

NOTE: Because of the extreme conditions encountered during track use, any damage or wear associated with track use is not covered by warranty.

- It is recommended that the shocks be operated in RACE mode, if equipped.
- ESC is track capable in all modes.

Prior To Each Track Event/Day

- Verify all fluids are at the correct levels. Refer to "Fluid Capacities" in "Maintaining Your Vehicle" for further information.
- Verify the front and rear brake pads have more than ½ pad thickness remaining. If the brake pads require changing, please burnish prior to track outing at full pace.
- Tire pressure:
  - 35psi hot recommended. This typically can be achieved with cold pressures between 25 and 29 psi, depending on driver, track, and ambient conditions.

Conclusion Of Each Track Event

- It is recommended that a brake bleed procedure is performed to maintain the pedal feel and stopping capability of your brake system.
- It is recommended that each track outing should end with a minimum of 1 cool down lap using minimal braking.
- Following each track session, tires should be inspected for wear.

Downloaded from www.Manualslib.com manuals search engine

NOTE:

- All SRT vehicles are track tested for 24 hours of endurance, however, it is recommended that suspension system, brake system, prop shaft, and ½ shaft boots should be checked for wear or damage after every track event.
- Track usage results in increased operating temperatures of the engine, transmission, clutch, driveline and brake system. This may affect noise (NVH) countermeasures designed into your vehicle. New components may need to be installed to return the system to the original NVH performance.

For ACR models, please review the supplemental manual for track tips.

DRIVING ON SLIPPERY SURFACES

Acceleration

WARNING!

Rapid acceleration on slippery surfaces is dangerous. You could lose control of the vehicle and possibly have a collision. Accelerate slowly and carefully whenever there is likely to be poor traction (ice, snow, wet, mud, loose sand, etc.).

Downloaded from www.Manualslib.com manuals search engine

Traction

When driving on wet or slushy roads, it is possible for a wedge of water to build up between the tire and road surface. This is hydroplaning and may cause partial or complete loss of vehicle control and stopping ability. To reduce this possibility, the following precautions should be observed:

1. Slow down during rainstorms or when roads are slushy.
2. Slow down if road has standing water or puddles.

CAUTION!

Driving your vehicle through deep puddles at speeds over 5 mph (8 km/h), may cause water to be ingested into the engine. This can cause severe engine damage.

3. Replace tires when tread wear indicators first become visible.
4. Keep tires properly inflated.
5. Maintain enough distance between your vehicle and the vehicle in front of you to avoid a collision in a sudden stop.

DRIVING THROUGH WATER

Driving through water more than a few inches/centimeters deep will require extra caution to ensure safety and prevent damage to your vehicle.

Downloaded from www.Manualslib.com manuals search engine

Flowing/Rising Water

WARNING!

Do not drive on or across a road or path where water is flowing and/or rising (as in storm run-off). Flowing water can wear away the road or path's surface and cause your vehicle to sink into deeper water. Furthermore, flowing and/or rising water can carry your vehicle away swiftly. Failure to follow this warning may result in injuries that are serious or fatal to you, your passengers, and others around you.

Shallow Standing Water

Although your vehicle is capable of driving through shallow standing water, consider the following Cautions and Warnings before doing so.

WARNING!

- **Driving through standing water limits your vehicle's traction capabilities. Do not exceed 5 mph (8 km/h) when driving through standing water.**
- **Driving through standing water limits your vehicle's braking capabilities, which increases stopping distances. Therefore, after driving through standing water, drive slowly and lightly press on the brake pedal several times to dry the brakes.**
- **Failure to follow these warnings may result in injuries that are serious or fatal to you, your passengers, and others around you.**

CAUTION!

- **Always check the depth of the standing water before driving through it. Never drive through**

(Continued)

Downloaded from www.Manualslib.com manuals search engine

CAUTION! *(Continued)*

standing water that is deeper than the bottom of the tire rims mounted on the vehicle.

- **Determine the condition of the road or the path that is under water and if there are any obstacles in the way before driving through the standing water.**
- **Do not exceed 5 mph (8 km/h) when driving through standing water. This will minimize wave effects.**
- **Driving through standing water may cause damage to your vehicle's drivetrain components. Always inspect your vehicle's fluids (i.e., engine oil, transmission, axle, etc.) for signs of contamination (i.e., fluid that is milky or foamy in appearance) after driving through standing water. Do not continue to operate the vehicle if any fluid appears contaminated, as this may result in further damage. Such**

(Continued)

CAUTION! *(Continued)*

damage is not covered by the New Vehicle Limited Warranty.

- **Getting water inside your vehicle's engine can cause it to lock up and stall out, and cause serious internal damage to the engine. Such damage is not covered by the New Vehicle Limited Warranty.**

POWER STEERING

The standard power steering system will give you good vehicle response and increased ease of maneuverability in tight spaces. The system will provide mechanical steering capability if power assist is lost.

If for some reason the power assist is interrupted, it will still be possible to steer your vehicle. Under these conditions, you will observe a substantial increase in steering effort, especially at very low vehicle speeds and during parking maneuvers.

Downloaded from www.Manualslib.com manuals search engine

NOTE:

- Increased noise levels at the end of the steering wheel travel are considered normal and do not indicate that there is a problem with the power steering system.
- Upon initial start-up in cold weather, the power steering pump may make noise for a short amount of time. This is due to the cold, thick fluid in the steering system. This noise should be considered normal, and it does not in any way damage the steering system.

CAUTION!

Prolonged operation of the steering system at the end of the steering wheel travel will increase the steering fluid temperature and it should be avoided when possible. Damage to the power steering pump may occur.

Power Steering Fluid Check

Checking the power steering fluid level at a defined service interval is not required. The fluid should only be checked if a leak is suspected, abnormal noises are apparent, and/or the system is not functioning as anticipated. Coordinate inspection efforts through an authorized dealer.

CAUTION!

Do not use chemical flushes in your power steering system as the chemicals can damage your power steering components. Such damage is not covered by the New Vehicle Limited Warranty.

Downloaded from www.Manualslib.com manuals search engine

WARNING!

Fluid level should be checked on a level surface and with the engine off to prevent injury from moving parts and to ensure accurate fluid level reading. Do not overfill. Use only manufacturer's recommended power steering fluid.

If necessary, add fluid to restore to the proper indicated level. With a clean cloth, wipe any spilled fluid from all surfaces. Refer to "Fluids, Lubricants, And Genuine Parts" in "Maintaining Your Vehicle" for further information.

PARKING BRAKE

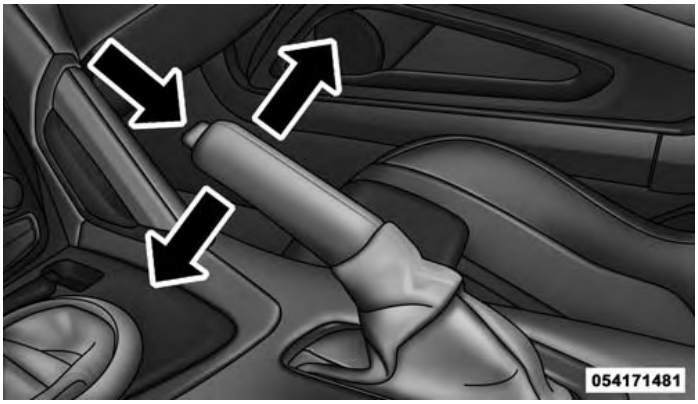

Parking Brake Lever

The parking brake should always be applied when the driver is not in the vehicle.

Downloaded from www.Manualslib.com manuals search engine

WARNING!

Before leaving the vehicle, make sure you fully apply the parking brake and shift the transmission into REVERSE. Failure to do so may cause the vehicle to roll and cause damage or injury.

As an added precaution when parking the vehicle, turn the front wheels toward the curb on a downhill grade and away from the curb on an uphill grade.

To apply the parking brake, grasp the handle and pull it rearward until you feel resistance. To release the parking brake, grasp the handle and pull it slightly while pushing the button on the end of the handle. When the button drops into the handle (releasing the lock), guide the handle downward to its stop and then release the button and the handle.

The "Brake System Warning Light" in the instrument cluster will turn on when the ignition is in the ON/RUN position and the parking brake is applied.

NOTE:

- This light only shows that the parking brake is applied or a brake/ABS system fault. It does not show the degree of brake application. If the "Brake System Warning Light" is illuminated when the parking brake is not applied, please see your authorized dealer.
- Each time the parking brake is applied, the instrument cluster will automatically go to the highest illumination setting regardless of the dimmer control setting.

Downloaded from www.Manualslib.com manuals search engine

WARNING!

- **Never leave children alone in a vehicle, or with access to an unlocked vehicle. Allowing children to be in a vehicle unattended is dangerous for a number of reasons. A child or others could be injured seriously or fatally. Do not leave the key fob in or near the vehicle (or in a location accessible to children), and do not leave the ignition of a vehicle equipped with Keyless Enter-N-Go in the ACC or ON/RUN mode. A child could operate power windows, other controls, or move the vehicle.**
- **Ensure the parking brake is fully disengaged before driving. Failure to do so can lead to brake failure, and an accident.**

BRAKE SYSTEM

BRAKE

Your vehicle is equipped with dual hydraulic brake systems. If either of the two hydraulic systems loses normal capability, the remaining system will still function. However, there will be some loss of overall braking effectiveness. You may notice increased pedal travel during application, greater pedal force required to slow or stop, and potential activation of the "Brake System Warning Light."

In the event power assist is lost for any reason (i.e., repeated brake applications with the engine off) the brakes will still function. However, the effort required to brake the vehicle will be much greater than that required with the power system operating.

Downloaded from www.Manualslib.com manuals search engine

Brake Pad Break-In

NOTE: Your vehicle is equipped with a high performance braking system. The brake pads are a semi-metallic compound, which offer superior fade resistance for consistent operation. A compromise to using this type of brake pad is that the brakes may squeal slightly under certain weather and operating conditions (.i.e., during light brake applications).

The brakes on your new vehicle do not require a long break-in period. However, you should avoid repeated hard brake applications from high speeds during initial break-in. In addition, you should avoid severe brake loading, such as may be encountered when descending long mountain grades.

Safe Operating Tips

WARNING!

To use your brakes and accelerator more safely, follow these tips:

- **Do not "ride" the brakes by resting your foot on the pedal. This could overheat the brakes and result in unpredictable braking action, longer stopping distances, or brake damage.**
- **When descending mountains or hills, repeated braking can cause brake fade with loss of braking control. Avoid repeated heavy braking by downshifting the transmission whenever possible.**

(Continued)

Downloaded from www.Manualslib.com manuals search engine

WARNING! ***(Continued)***

- **Do not drive too fast for road conditions, especially when roads are wet or slushy. A wedge of water can build up between the tire tread and the road. This hydroplaning action can cause loss of traction, braking ability, and control.**
- **After going through deep water or a car wash, brakes may become wet, resulting in decreased performance and unpredictable braking action. Dry the brakes by gentle, intermittent pedal action while driving at very slow speeds.**

ELECTRONIC BRAKE CONTROL SYSTEM

Your vehicle is equipped with an advanced electronic brake control system that includes the Anti-Lock Brake System (ABS), Traction Control System (TCS), and Electronic Stability Control (ESC). All of these systems work together to enhance vehicle stability and control in various driving conditions.

Anti-Lock Brake System

The Anti-Lock Brake System (ABS) is designed to aid the driver in maintaining vehicle control under adverse braking conditions. The system operates with a separate computer to modulate hydraulic pressure to prevent wheel lock-up and help avoid skidding on slippery surfaces.

NOTE: During severe braking conditions, a pulsing sensation may occur and a clicking noise will be heard. This is normal, indicating that the ABS is functioning.

Downloaded from www.Manualslib.com manuals search engine

The ABS conducts a low-speed self-test at approximately 12 mph (20 km/h). If you have your foot lightly on the brake pedal while this test is occurring, you may feel a slight pedal movement. The movement can be more apparent on ice and snow and be considered normal.

The ABS pump motor runs during the self-test at 12 mph (20 km/h) and during an ABS stop. The pump motor makes a low humming noise during operation, which is normal.

CAUTION!

The Anti-Lock Brake System is subject to possible detrimental effects of electronic interference caused by improperly installed aftermarket radios or telephones.

WARNING!

- **The Anti-Lock Brake System (ABS) contains sophisticated electronic equipment that may be susceptible to interference caused by improperly installed or high output radio transmitting equipment. This interference can cause possible loss of anti-lock braking capability. Installation of such equipment should be performed by qualified professionals.**
- **Pumping of the Anti-Lock Brakes will diminish their effectiveness and may lead to a collision. Pumping makes the stopping distance longer. Just press firmly on your brake pedal when you need to slow down or stop.**

(Continued)

Downloaded from www.Manualslib.com manuals search engine

WARNING! *(Continued)*

- **The Anti-Lock Brake System (ABS) cannot prevent the natural laws of physics from acting on the vehicle, nor can it increase braking or steering efficiency beyond that afforded by the condition of the vehicle brakes and tires or the traction afforded.**
- **The Anti-Lock Brake System (ABS) cannot prevent collisions, including those resulting from excessive speed in turns, following another vehicle too closely, or hydroplaning.**
- **The capabilities of an Anti-Lock Brake System (ABS) equipped vehicle must never be exploited in a reckless or dangerous manner, that could jeopardize the user's safety or the safety of others.**

All vehicle wheels and tires must be the same size and type as the original equipment and the tires must be properly inflated to produce accurate signals for the computer.

WARNING!

Significant over or underinflation of tires, or mixing sizes of tires or wheels on the vehicle can lead to loss of braking effectiveness.

Anti-Lock Brake Warning Light

The "Anti-Lock Brake Warning Light" will turn on and stay on briefly as a bulb check when the ignition is first turned on. If the light does not turn on during starting, have it repaired promptly.

This light also illuminates at vehicle start-up to indicate that the ABS self-check is in process. If the light remains on after start-up, or turns on and remains on at road speeds, it may indicate a system malfunction or that the system is inoperative. In this case, the system reverts to standard non-anti-lock brakes. If this occurs, safely bring

Downloaded from www.Manualslib.com manuals search engine

the vehicle to a complete stop as soon as possible and cycle the ignition to attempt to reset the ABS. If the light remains on, see your authorized dealer immediately to have the system serviced. Also, if the "BRAKE Warning Light" and the "ABS Warning Light" are on, and the parking brake is fully released, see your authorized dealer immediately.

Traction Control System (TCS)

The TCS system monitors the amount of wheel spin of each driven wheel. If wheel spin is detected, brake pressure is applied to the slipping wheel(s) and engine power is reduced to provide enhanced acceleration and stability.

Electronic Stability Control

In full on mode the TCS system enhances directional control and stability of the vehicle under various driving conditions. The ESC corrects for oversteering and understeering the vehicle by applying the brake of the appropriate wheel. Engine power may also be reduced to assist in counteracting the condition of oversteer or understeer and help the vehicle maintain the desired path.

In full on mode ESC utilizes sensors in the vehicle to determine the path that the driver intends to steer the vehicle and compares it to the actual path of the vehicle. When the actual path does not match the intended path, the ESC applies the brake of the appropriate wheel to assist in counteracting the condition of oversteer or understeer.

- Oversteer – when the vehicle is turning more than appropriate for the steering wheel position.

Downloaded from www.Manualslib.com manuals search engine

- Understeer – when the vehicle is turning less than appropriate for the steering wheel position.

WARNING!

The Electronic Stability Control System (ESC) cannot prevent the natural laws of physics from acting on the vehicle, nor can it increase the traction afforded by prevailing road conditions. ESC cannot prevent all accidents, including those resulting from excessive speed in turns, driving on very slippery surfaces, or hydroplaning. ESC also cannot prevent accidents resulting from loss of vehicle control due to inappropriate driver input for the conditions. Only a safe, attentive, and skillful driver can prevent accidents. The capabilities of an ESC equipped vehicle must never be exploited in a reckless or dangerous manner which could jeopardize the user's safety or the safety of others.

Electronic Stability Control (ESC) Operating Modes

The ESC system may have five available operating modes:

ESC Button

Downloaded from www.Manualslib.com manuals search engine

ESC On

This is the normal operating mode for the ESC system. Whenever the vehicle is started, the ESC system will be in this mode. The ESC On mode should be used for most driving situations. The ESC should only be turned OFF for specific reasons as noted in the following paragraphs.

ESC Full Off

The ESC Off mode is intended for off-highway or off-road use only and should not be used on any public roadways. In this mode, all TCS and ESC stability features are turned OFF. To enter the "Full Off" mode, push and hold the "ESC" switch for five seconds while the vehicle is stopped with the engine running. After five seconds, a chime will sound, the "ESC OFF" telltale will illuminate, and the "ESC OFF" message will display in the vehicle cluster (left of the odometer). The "ESC OFF" message may appear in the Driver Information Display (DID). Refer to "Driver Information Display (DID)" in "Understanding Your Instrument Panel" for further information. To turn ESC ON again, momentarily push the "ESC" switch.

WARNING!

With the ESC switched OFF, the enhanced vehicle stability offered by ESC is unavailable. In an emergency evasive maneuver, the ESC system will not engage to assist in maintaining stability. The "Full Off" ESC mode is intended for off-highway or off-road only.

Sport Mode — If Equipped

Sport mode has reduced traction control and reduced stability control. To enter the "Sport Mode" mode, push the "ESC" switch once (located on the steering wheel). The "ESC OFF" telltale will illuminate, and the "ESC SPORT" message will display in the vehicle cluster (left

Downloaded from www.Manualslib.com manuals search engine

of the odometer). Refer to "Driver Information Display (DID)" in "Understanding Your Instrument Panel" for further information.

WARNING!

When in Sport Mode, the TCS functionality of ESC, (except for the limited slip feature described in the TCS section), has been disabled, the "ESC Sport Light" will illuminate, and the "ESC SPORT" message will display in the vehicle cluster. When in Sport Mode, the engine power reduction feature of TCS is disabled, and the enhanced vehicle stability offered by the ESC system is reduced.

Track Mode — If Equipped

Track Mode has no traction control and has reduced stability control. To enter the "Track Mode" mode, push the "ESC" switch twice. The "ESC OFF" telltale will illuminate, and the "ESC TRACK" message will display in the vehicle cluster (left of the odometer). Refer to "Driver Information Display (DID)" in "Understanding Your Instrument Panel" for further information.

WARNING!

When in Track Mode, the TCS functionality of ESC, (except for the limited slip feature described in the TCS section), has been disabled, the "ESC Track Light" will illuminate, and the "ESC TRACK" message will display in the vehicle cluster. When in Track Mode, the engine power reduction feature of TCS is disabled, and the enhanced vehicle stability offered by the ESC system is greatly reduced. Track Mode is intended for off-highway or off-road only.

Downloaded from www.Manualslib.com manuals search engine

Rain Mode

Rain mode offers increased traction control and stability control for low traction conditions such as wet roads, dry roads during cold temperatures, or when the driver wants enhanced stability due to lack of familiarity or experience with the vehicle's response. To enter the "Rain Mode" mode, push the "ESC" switch three times. The "ESC Rain Light" will illuminate, and the "ESC RAIN" message will display in the vehicle cluster (left of the odometer). Refer to "Driver Information Display (DID)" in "Understanding Your Instrument Panel" for further information.

NOTE: Some models may not offer "Sport" or "Track" Mode.

TIRE SAFETY INFORMATION

Tire Markings

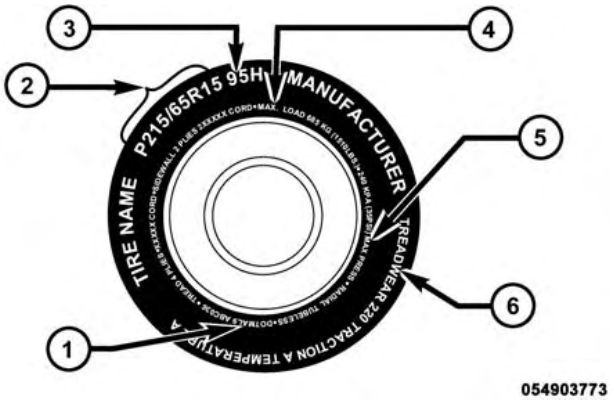

1 — U.S. DOT Safety Standards Code (TIN)	4 — Maximum Load
2 — Size Designation	5 — Maximum Pressure
3 — Service Description	6 — Treadwear, Traction and Temperature Grades

Downloaded from www.Manualslib.com manuals search engine

NOTE:

- P (Passenger) — Metric tire sizing is based on U.S. design standards. P-Metric tires have the letter "P" molded into the sidewall preceding the size designation. Example: P215/65R15 95H.
- European — Metric tire sizing is based on European design standards. Tires designed to this standard have the tire size molded into the sidewall beginning with the section width. The letter "P" is absent from this tire size designation. Example: 215/65R15 96H.
- LT (Light Truck) — Metric tire sizing is based on U.S. design standards. The size designation for LT-Metric tires is the same as for P-Metric tires except for the letters "LT" that are molded into the sidewall preceding the size designation. Example: LT235/85R16.
- Temporary spare tires are designed for temporary emergency use only. Temporary high pressure compact spare tires have the letter "T" or "S" molded into the sidewall preceding the size designation. Example: T145/80D18 103M.
- High flotation tire sizing is based on U.S. design standards and it begins with the tire diameter molded into the sidewall. Example: 31x10.5 R15 LT.

Downloaded from www.Manualslib.com manuals search engine

Tire Sizing Chart

EXAMPLE:

Example Size Designation: P215/65R15XL 95H, 215/65R15 96H, LT235/85R16C, T145/80D18 103M, 31x10.5 R15 LT
P = Passenger car tire size based on U.S. design standards, or **"....blank...."** = Passenger car tire based on European design standards, or **LT** = Light truck tire based on U.S. design standards, or **T or S** = Temporary spare tire or **31** = Overall diameter in inches (in)
215, 235, 145 = Section width in millimeters (mm)
65, 85, 80 = Aspect ratio in percent (%) – Ratio of section height to section width of tire, or **10.5** = Section width in inches (in)
R = Construction code – "R" means radial construction, or – "D" means diagonal or bias construction
15, 16, 18 = Rim diameter in inches (in)

Downloaded from www.Manualslib.com manuals search engine

EXAMPLE:

Service Description:
95 = Load Index – A numerical code associated with the maximum load a tire can carry
H = Speed Symbol – A symbol indicating the range of speeds at which a tire can carry a load corresponding to its load index under certain operating conditions – The maximum speed corresponding to the speed symbol should only be achieved under specified operating conditions (i.e., tire pressure, vehicle loading, road conditions, and posted speed limits)

Downloaded from www.Manualslib.com manuals search engine

EXAMPLE:

Load Identification:
Absence of the following load identification symbols on the sidewall of the tire indicates a Standard Load (SL) tire:

- **XL** = Extra load (or reinforced) tire, or
- **LL** = Light load tire or
- **C, D, E, F, G** = Load range associated with the maximum load a tire can carry at a specified pressure

Maximum Load – Maximum load indicates the maximum load this tire is designed to carry

Maximum Pressure – Maximum pressure indicates the maximum permissible cold tire inflation pressure for this tire

Tire Identification Number (TIN)

The TIN may be found on one or both sides of the tire, however, the date code may only be on one side. Tires with white sidewalls will have the full TIN, including the date code, located on the white sidewall side of the tire. Look for the TIN on the outboard side of black sidewall tires as mounted on the vehicle. If the TIN is not found on the outboard side, then you will find it on the inboard side of the tire.

Downloaded from www.Manualslib.com manuals search engine

EXAMPLE:
DOT MA L9 ABCD 0301
DOT = Department of Transportation – This symbol certifies that the tire is in compliance with the U.S. Department of Transportation tire safety standards and is approved for highway use
MA = Code representing the tire manufacturing location (two digits)
L9 = Code representing the tire size (two digits)
ABCD = Code used by the tire manufacturer (one to four digits)
03 = Number representing the week in which the tire was manufactured (two digits) – 03 means the 3rd week
01 = Number representing the year in which the tire was manufactured (two digits) – 01 means the year 2001 – Prior to July 2000, tire manufacturers were only required to have one number to represent the year in which the tire was manufactured. Example: 031 could represent the 3rd week of 1981 or 1991

Downloaded from www.Manualslib.com manuals search engine

Tire Terminology And Definitions

Term	Definition
B-Pillar	The vehicle B-Pillar is the structural member of the body located behind the front door.
Cold Tire Inflation Pressure	Cold tire inflation pressure is defined as the tire pressure after the vehicle has not been driven for at least three hours, or driven less than 1 mile (1.6 km) after sitting for a minimum of three hours. Inflation pressure is measured in units of PSI (pounds per square inch) or kPa (kilopascals).
Maximum Inflation Pressure	The maximum inflation pressure is the maximum permissible cold tire inflation pressure for this tire. The maximum inflation pressure is molded into the sidewall.
Recommended Cold Tire Inflation Pressure	Vehicle manufacturer's recommended cold tire inflation pressure as shown on the tire placard.
Tire Placard	A label permanently attached to the vehicle describing the vehicle's loading capacity, the original equipment tire sizes and the recommended cold tire inflation pressures.

Downloaded from www.Manualslib.com manuals search engine

Tire Loading And Tire Pressure

Tire And Loading Information Placard Location

NOTE: The proper cold tire inflation pressure is listed on the driver's side B-Pillar or the rear edge of the driver's side door.

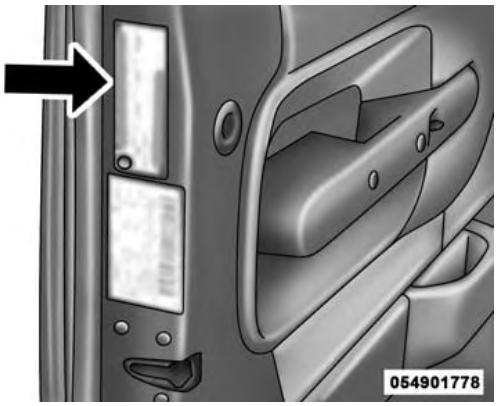

Example Tire Placard Location (Door)

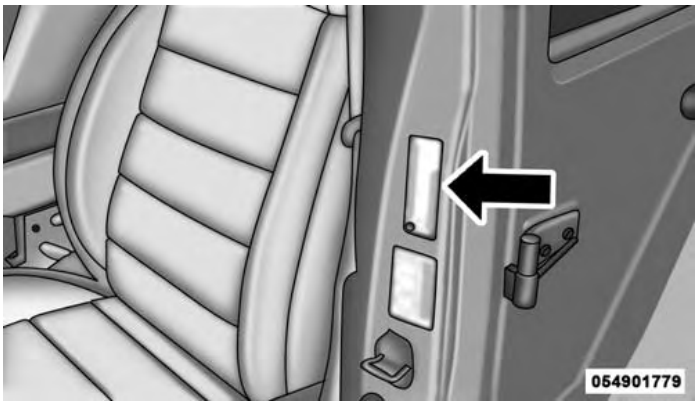

Example Tire Placard Location (B-Pillar)

Downloaded from www.Manualslib.com manuals search engine

Tire And Loading Information Placard

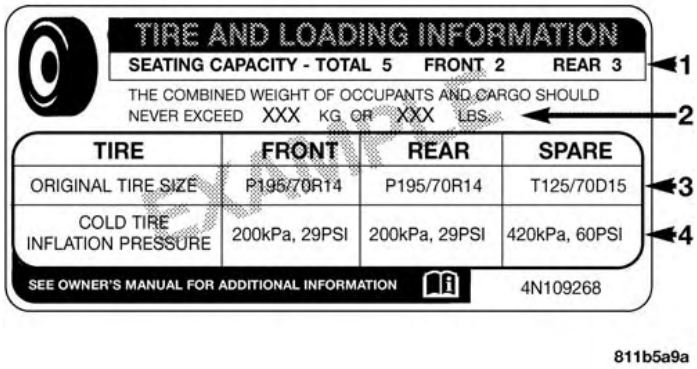

Tire And Loading Information Placard

This placard tells you important information about the:

1. Number of people that can be carried in the vehicle.
2. Total weight your vehicle can carry.
3. Tire size designed for your vehicle.
4. Cold tire inflation pressures for the front, rear, and spare tires.

Loading

The vehicle maximum load on the tire must not exceed the load carrying capacity of the tire on your vehicle. You will not exceed the tire's load carrying capacity if you adhere to the loading conditions, tire size, and cold tire inflation pressures specified on the Tire and Loading Information placard and in the "Vehicle Loading" section of this manual.

Downloaded from www.Manualslib.com manuals search engine

NOTE: Under a maximum loaded vehicle condition, gross axle weight ratings (GAWRs) for the front and rear axles must not be exceeded. For further information on GAWRs, vehicle loading, and trailer towing, refer to "Vehicle Loading" in this manual.

To determine the maximum loading conditions of your vehicle, locate the statement "The combined weight of occupants and cargo should never exceed XXX lbs or XXX kg" on the Tire and Loading Information placard. The combined weight of occupants, cargo/luggage and trailer tongue weight (if applicable) should never exceed the weight referenced here.

Steps For Determining Correct Load Limit

1. Locate the statement "The combined weight of occupants and cargo should never exceed XXX lbs or XXX kg" on your vehicle's placard.
2. Determine the combined weight of the driver and passengers that will be riding in your vehicle.
3. Subtract the combined weight of the driver and passengers from XXX lbs or XXX kg.

Downloaded from www.Manualslib.com manuals search engine

4. The resulting figure equals the available amount of cargo and luggage load capacity. For example, if "XXX" amount equals 1,400 lbs (635 kg) and there will be five 150 lb (68 kg) passengers in your vehicle, the amount of available cargo and luggage load capacity is 650 lbs (295 kg) (since 5 x 150 lbs (68 kg) = 750 lbs (340 kg), and 1400 lbs (635 kg) – 750 lbs (340 kg) = 650 lbs [295 kg]).

5. Determine the combined weight of luggage and cargo being loaded on the vehicle. That weight may not safely exceed the available cargo and luggage load capacity calculated in step 4.

NOTE:

- If your vehicle will be towing a trailer, load from your trailer will be transferred to your vehicle. The following table shows examples on how to calculate total load, cargo/luggage, and towing capacities of your vehicle with varying seating configurations and number and size of occupants. This table is for illustration purposes only and may not be accurate for the seating and load carry capacity of your vehicle.

- For the following example, the combined weight of occupants and cargo should never exceed 865 lbs (392 kg).

Downloaded from www.Manualslib.com manuals search engine

Occupants			Combined weight of occupants and cargo from Tire Placard	MINUS	Combined Occupant's weight	=	AVAILABLE Cargo/Luggage and Trailer Tongue Weight
TOTAL	FRONT	REAR					
EXAMPLE 1							
5	2	3	865 lbs	minus	Occupant 1: 200 lbs Occupant 2: 130 lbs Occupant 3: 160 lbs Occupant 4: 100 lbs Occupant 5: 80 lbs TOTAL WEIGHT: 670 lbs 670 lbs	=	195 lbs
EXAMPLE 2							
3	2	1	865 lbs	minus	Occupant 1: 210 lbs Occupant 2: 180 lbs Occupant 3: 150 lbs TOTAL WEIGHT: 540 lbs 540 lbs	=	325 lbs
EXAMPLE 3							
2	2	0	865 lbs	minus	Occupant 1: 200 lbs Occupant 2: 200 lbs TOTAL WEIGHT: 400 lbs 400 lbs	=	465 lbs

EXAMPLE

811a4d11

5

Downloaded from www.Manualslib.com manuals search engine

WARNING!

Overloading of your tires is dangerous. Overloading can cause tire failure, affect vehicle handling, and increase your stopping distance. Use tires of the recommended load capacity for your vehicle. Never overload them.

TIRES — GENERAL INFORMATION

Tire Pressure

Proper tire inflation pressure is essential to the safe and satisfactory operation of your vehicle. Four primary areas are affected by improper tire pressure:

- Safety and Vehicle Stability
- Economy
- Tread Wear
- Ride Comfort

Safety

WARNING!

- **Improperly inflated tires are dangerous and can cause collisions.**
- **Underinflation increases tire flexing and can result in overheating and tire failure.**
- **Overinflation reduces a tire's ability to cushion shock. Objects on the road and chuckholes can cause damage that result in tire failure.**
- **Overinflated or underinflated tires can affect vehicle handling and can fail suddenly, resulting in loss of vehicle control.**
- **Unequal tire pressures can cause steering problems. You could lose control of your vehicle.**

(Continued)

Downloaded from www.Manualslib.com manuals search engine

WARNING! ***(Continued)***

- **Unequal tire pressures from one side of the vehicle to the other can cause the vehicle to drift to the right or left.**
- **Always drive with each tire inflated to the recommended cold tire inflation pressure.**

Both under-inflation and over-inflation affect the stability of the vehicle and can produce a feeling of sluggish response or over responsiveness in the steering.

NOTE:

- Unequal tire pressures from side to side may cause erratic and unpredictable steering response.
- Unequal tire pressure from side to side may cause the vehicle to drift left or right.

Fuel Economy

Underinflated tires will increase tire rolling resistance resulting in higher fuel consumption.

Tread Wear

Improper cold tire inflation pressures can cause abnormal wear patterns and reduced tread life, resulting in the need for earlier tire replacement.

Ride Comfort And Vehicle Stability

Proper tire inflation contributes to a comfortable ride. Over-inflation produces a jarring and uncomfortable ride.

Tire Inflation Pressures

The proper cold tire inflation pressure is listed on the driver's side B-Pillar or rear edge of the driver's side door.

Downloaded from www.Manualslib.com manuals search engine

At least once a month:

- Check and adjust tire pressure with a good quality pocket-type pressure gauge. Do not make a visual judgement when determining proper inflation. Tires may look properly inflated even when they are under-inflated.
- Inspect tires for signs of tire wear or visible damage.

CAUTION!

After inspecting or adjusting the tire pressure, always reinstall the valve stem cap. This will prevent moisture and dirt from entering the valve stem, which could damage the valve stem.

Inflation pressures specified on the placard are always "cold tire inflation pressure". Cold tire inflation pressure is defined as the tire pressure after the vehicle has not been driven for at least three hours, or driven less than 1 mile (1.6 km) after sitting for a minimum of three hours. The cold tire inflation pressure must not exceed the maximum inflation pressure molded into the tire sidewall.

Check tire pressures more often if subject to a wide range of outdoor temperatures, as tire pressures vary with temperature changes.

Tire pressures change by approximately 1 psi (7 kPa) per 12°F (7°C) of air temperature change. Keep this in mind when checking tire pressure inside a garage, especially in the Winter.

Example: If garage temperature = 68°F (20°C) and the outside temperature = 32°F (0°C) then the cold tire inflation pressure should be increased by 3 psi (21 kPa), which equals 1 psi (7 kPa) for every 12°F (7°C) for this outside temperature condition.

Downloaded from www.Manualslib.com manuals search engine

Tire pressure may increase from 2 to 6 psi (13 to 40 kPa) during operation. DO NOT reduce this normal pressure build up or your tire pressure will be too low.

Tire Pressures For High Speed Operation

The manufacturer advocates driving at safe speeds and within posted speed limits. Where speed limits or conditions are such that the vehicle can be driven at high speeds, maintaining correct tire inflation pressure is very important. Increased tire pressure and reduced vehicle loading may be required for high-speed vehicle operation. Refer to your authorized tire dealer or original equipment vehicle dealer for recommended safe operating speeds, loading and cold tire inflation pressures.

WARNING!

High speed driving with your vehicle under maximum load is dangerous. The added strain on your tires could cause them to fail. You could have a serious collision. Do not drive a vehicle loaded to the maximum capacity at continuous speeds above 75 mph (120 km/h).

Radial Ply Tires

WARNING!

Combining radial ply tires with other types of tires on your vehicle will cause your vehicle to handle poorly. The instability could cause a collision. Always use radial ply tires in sets of four. Never combine them with other types of tires.

Downloaded from www.Manualslib.com manuals search engine

Tire Repair

If your tire becomes damaged, it may be repaired if it meets the following criteria:

- The tire has not been driven on when flat.
- The damage is only on the tread section of your tire (sidewall damage is not repairable).
- The puncture is no greater than a ¼ of an inch (6 mm).

Consult an authorized tire dealer for tire repairs and additional information.

Damaged Run Flat tires, or Run Flat tires that have experienced a loss of pressure should be replaced immediately with another Run Flat tire of identical size and service description (Load Index and Speed Symbol).

Tire Types

All Season Tires — If Equipped

All Season tires provide traction for all seasons (Spring, Summer, Fall and Winter). Traction levels may vary between different all season tires. All season tires can be identified by the M+S, M&S, M/S or MS designation on the tire sidewall. Use all season tires only in sets of four; failure to do so may adversely affect the safety and handling of your vehicle.

Summer Or Three Season Tires — If Equipped

Summer tires provide traction in both wet and dry conditions, and are not intended to be driven in snow or on ice. If your vehicle is equipped with Summer tires, be aware these tires are not designed for Winter or cold driving conditions. Install Winter tires on your vehicle when ambient temperatures are less than 40°F (5°C) or if roads are covered with ice or snow. For more information, contact an authorized dealer.

Downloaded from www.Manualslib.com manuals search engine

Summer tires do not contain the all season designation or mountain/snowflake symbol on the tire sidewall. Use Summer tires only in sets of four; failure to do so may adversely affect the safety and handling of your vehicle.

WARNING!

Do not use Summer tires in snow/ice conditions. You could lose vehicle control, resulting in severe injury or death. Driving too fast for conditions also creates the possibility of loss of vehicle control.

Snow Tires

There are no snow tires that are compatible with the wheels on this vehicle.

Run Flat Tires — If Equipped

Run Flat tires allow you the capability to drive 50 miles (80 km) at 50 mph (80 km/h) after a rapid loss of inflation pressure. This rapid loss of inflation is referred to as the Run Flat mode. A Run Flat mode occurs when the tire inflation pressure is of/or below 14 psi (96 kPa). Once a Run Flat tire reaches the run flat mode it has limited driving capabilities and needs to be replaced immediately. A Run Flat tire is not repairable.

It is not recommended driving a vehicle loaded at full capacity or to tow a trailer while a tire is in the run flat mode.

See the tire pressure monitoring section for more information.

Spare Tires — If Equipped

NOTE: For vehicles equipped with Tire Service Kit instead of a spare tire, please refer to "Tire Service Kit" in "What To Do In Emergencies" for further information.

Downloaded from www.Manualslib.com manuals search engine

CAUTION!

Because of the reduced ground clearance, do not take your vehicle through an automatic car wash with a compact or limited-use temporary spare installed. Damage to the vehicle may result.

Spare Tire Matching Original Equipped Tire And Wheel — If Equipped

Your vehicle may be equipped with a spare tire and wheel equivalent in look and function to the original equipment tire and wheel found on the front or rear axle of your vehicle. This spare tire may be used in the tire rotation for your vehicle. If your vehicle has this option, refer to an authorized tire dealer for the recommended tire rotation pattern.

Compact Spare Tire — If Equipped

The compact spare is for temporary emergency use only. You can identify if your vehicle is equipped with a compact spare by looking at the spare tire description on the Tire and Loading Information Placard located on the driver's side door opening or on the sidewall of the tire. Compact spare tire descriptions begin with the letter "T" or "S" preceding the size designation. Example: T145/80D18 103M.

T, S = Temporary Spare Tire

Since this tire has limited tread life, the original equipment tire should be repaired (or replaced) and reinstalled on your vehicle at the first opportunity.

Do not install a wheel cover or attempt to mount a conventional tire on the compact spare wheel, since the wheel is designed specifically for the compact spare tire.

Downloaded from www.Manualslib.com manuals search engine

Do not install more than one compact spare tire and wheel on the vehicle at any given time.

WARNING!

Compact spares are for temporary emergency use only. With these spares, do not drive more than 50 mph (80 km/h). Temporary use spares have limited tread life. When the tread is worn to the tread wear indicators, the temporary use spare tire needs to be replaced. Be sure to follow the warnings, which apply to your spare. Failure to do so could result in spare tire failure and loss of vehicle control.

Full Size Spare — If Equipped

The full size spare is for temporary emergency use only. This tire may look like the originally equipped tire on the front or rear axle of your vehicle, but it is not. This spare tire may have limited tread life. When the tread is worn to the tread wear indicators, the temporary use full size spare tire needs to be replaced. Since it is not the same as your original equipment tire, replace (or repair) the original equipment tire and reinstall on the vehicle at the first opportunity.

Limited-Use Spare — If Equipped

The limited-use spare tire is for temporary emergency use only. This tire is identified by a label located on the limited-use spare wheel. This label contains the driving limitations for this spare. This tire may look like the original equipped tire on the front or rear axle of your vehicle, but it is not. Installation of this limited-use spare tire affects vehicle handling. Since it is not the same as your original equipment tire, replace (or repair) the original equipment tire and reinstall on the vehicle at the first opportunity.

Downloaded from www.Manualslib.com manuals search engine

WARNING!

Limited-use spares are for emergency use only. Installation of this limited-use spare tire affects vehicle handling. With this tire, do not drive more than the speed listed on the limit-use spare wheel. Keep inflated to the cold tire inflation pressures listed on your Tire and Loading Information Placard located on the driver's side B-Pillar or the rear edge of the driver's side door. Replace (or repair) the original equipment tire at the first opportunity and reinstall it on your vehicle. Failure to do so could result in loss of vehicle control.

Tire Spinning

When stuck in mud, sand, snow, or ice conditions, do not spin your vehicle's wheels above 30 mph (48 km/h) or for longer than 30 seconds continuously without stopping.

Refer to "Freeing A Stuck Vehicle" in "What To Do In Emergencies" for further information.

WARNING!

Fast spinning tires can be dangerous. Forces generated by excessive wheel speeds may cause tire damage or failure. A tire could explode and injure someone. Do not spin your vehicle's wheels faster than 30 mph (48 km/h) for more than 30 seconds continuously when you are stuck, and do not let anyone near a spinning wheel, no matter what the speed.

Tread Wear Indicators

Tread wear indicators are in the original equipment tires to help you in determining when your tires should be replaced.

Downloaded from www.Manualslib.com manuals search engine

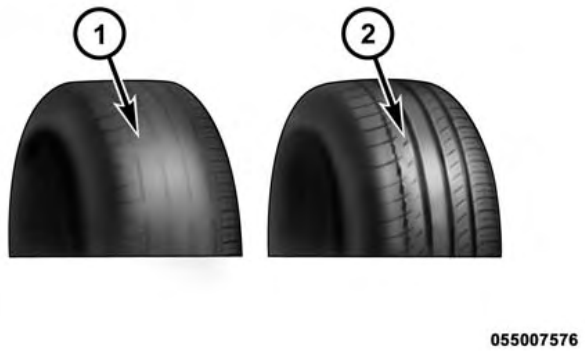

1 — Worn Tire
2 — New Tire

These indicators are molded into the bottom of the tread grooves. They will appear as bands when the tread depth becomes a 1/16 of an inch (1.6 mm). When the tread is worn to the tread wear indicators, the tire should be replaced. Refer to "Replacement Tires" in this section for further information.

Life Of Tire

The service life of a tire is dependent upon varying factors including, but not limited to:

- Driving style.
- Tire pressure - Improper cold tire inflation pressures can cause uneven wear patterns to develop across the tire tread. These abnormal wear patterns will reduce tread life, resulting in the need for earlier tire replacement.
- Distance driven.
- Performance tires, tires with a speed rating of V or higher, and Summer tires typically have a reduced tread life. Rotation of these tires per the vehicle maintenance schedule is highly recommended.

Downloaded from www.Manualslib.com manuals search engine

WARNING!

Tires and the spare tire should be replaced after six years, regardless of the remaining tread. Failure to follow this warning can result in sudden tire failure. You could lose control and have a collision resulting in serious injury or death.

Keep dismounted tires in a cool, dry place with as little exposure to light as possible. Protect tires from contact with oil, grease, and gasoline.

Replacement Tires

The tires on your new vehicle provide a balance of many characteristics. They should be inspected regularly for wear and correct cold tire inflation pressures. The manufacturer strongly recommends that you use tires equivalent to the originals in size, quality and performance when replacement is needed. Refer to the paragraph on "Tread Wear Indicator". Refer to the Tire and Loading Information placard or the Vehicle Certification Label for the size designation of your tire. The Load Index and Speed Symbol for your tire will be found on the original equipment tire sidewall. See the Tire Sizing Chart example found in the "Tire Safety Information" section of this manual for more information relating to the Load Index and Speed Symbol of a tire.

It is recommended to replace the two front tires or two rear tires as a pair. Replacing just one tire can seriously affect your vehicle's handling. If you ever replace a wheel, make sure that the wheel's specifications match those of the original wheels.

It is recommended you contact your authorized tire dealer or original equipment dealer with any questions you may have on tire specifications or capability. Failure to use equivalent replacement tires may adversely affect the safety, handling, and ride of your vehicle.

Downloaded from www.Manualslib.com manuals search engine

WARNING!

- **Do not use a tire, wheel size or rating other than that specified for your vehicle. Some combinations of unapproved tires and wheels may change suspension dimensions and performance characteristics, resulting in changes to steering, handling, and braking of your vehicle. This can cause unpredictable handling and stress to steering and suspension components. You could lose control and have a collision resulting in serious injury or death. Use only the tire and wheel sizes with load ratings approved for your vehicle.**
- **Never use a tire with a smaller load index or capacity, other than what was originally equipped on your vehicle. Using a tire with a smaller load index could result in tire overloading and failure. You could lose control and have a collision.**

(Continued)

WARNING! ***(Continued)***

- **Failure to equip your vehicle with tires having adequate speed capability can result in sudden tire failure and loss of vehicle control.**

CAUTION!

Replacing original tires with tires of a different size may result in false speedometer and odometer readings.

Downloaded from www.Manualslib.com manuals search engine

TIRE CHAINS (TRACTION DEVICES)

Due to limited clearance, tire chains or traction devices are not recommended.

CAUTION!

Damage to the vehicle may result if tire chains are used.

TIRE ROTATION RECOMMENDATIONS

Tires on the front and rear axles of vehicles operate at different loads and perform different steering, driving, and braking functions. For these reasons, they wear at unequal rates.

These effects can be reduced by timely rotation of tires. The benefits of rotation are especially worthwhile with aggressive tread designs such as those on all season type tires. Rotation will increase tread life, help to maintain mud, snow, and wet traction levels, and contribute to a smooth, quiet ride.

Refer to the "Maintenance Schedule" for the proper maintenance interval. Remember, more frequent rotation is permissible if desired. Also, correct for anything causing rapid or unusual wear prior to performing the tire rotation.

NOTE: Each wheel on your vehicle contains a tire pressure sensor. The Tire Pressure Monitor System (TPMS) learns the location of each sensor though system programming. Although not required, the manufacturer recommends reprogramming the TPMS after rotating the tires so that the system can relearn each sensor's location. See your authorized dealer for system reprogramming.

The front and rear tires are different sizes and cannot be used in place of each other. Rotate the tires "side-to-side" as shown in the diagram.

Downloaded from www.Manualslib.com manuals search engine

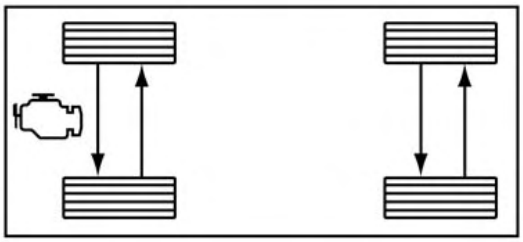

81f10b20

Tire Rotation

TIRE PRESSURE MONITOR SYSTEM (TPMS)

The Tire Pressure Monitor System (TPMS) uses wireless technology with wheel rim mounted electronic sensors to monitor tire pressure levels. Sensors mounted to each wheel as part of the valve stem transmit tire pressure readings to the receiver module. It is particularly important for you to check the tire pressure in all of the tires on your vehicle monthly and to maintain the proper pressure. The TPMS consists of the following components:

- Receiver module
- Four TPM sensors
- Various TPMS messages, which display in the Driver Information Display (DID)
- TPM Telltale Light

The Tire Pressure Monitor System (TPMS) will warn the driver of a low tire pressure based on the vehicle recommended cold placard pressure.

The tire pressure will vary with temperature by about 1 psi (7.0 kPa) for every 12°F (6.5°C). This means that when the outside temperature decreases, the tire pressure will decrease. Tire pressure should always be set based on

Downloaded from www.Manualslib.com manuals search engine

cold inflation tire pressure. This is defined as the tire pressure after the vehicle has not been driven for at least three hours, or driven less than 1 mile (1.6 km) after a three hour period. The cold tire inflation pressure must not exceed the maximum inflation pressure molded into the tire sidewall. Refer to "Tires – General Information" in "Starting And Operating" for information on how to properly inflate the vehicle's tires. The tire pressure will also increase as the vehicle is driven - this is normal and there should be no adjustment for this increased pressure.

The TPMS will warn the driver of a low tire pressure if the tire pressure falls below the low-pressure warning limit for any reason, including low temperature effects and natural pressure loss through the tire.

The TPMS will continue to warn the driver of low tire pressure as long as the condition exists, and will not turn off until the tire pressure is at or above the recommended cold placard pressure. Once the low tire pressure warning (Tire Pressure Monitoring [TPM] Telltale Light) illuminates, you must increase the tire pressure to the recommended cold placard pressure in order for the TPM Telltale Light to turn off. The system will automatically update and the TPM Telltale Light will turn off once the system receives the updated tire pressures. The vehicle may need to be driven for up to 20 minutes above 15 mph (24 km/h) in order for the TPMS to receive this information.

For example, your vehicle may have a recommended cold (parked for more than three hours) placard pressure of 30 psi (207 kPa). If the ambient temperature is 68°F (20°C) and the measured tire pressure is 27 psi (186 kPa), a temperature drop to 20°F (-7°C) will decrease the tire pressure to approximately 23 psi (158 kPa). This tire pressure is sufficiently low enough to urn ON the TPM Telltale Light. Driving the vehicle may cause the tire pressure to rise to approximately 27 psi (186 kPa), but the

Downloaded from www.Manualslib.com manuals search engine

TPM Telltale Light will still be ON. In this situation, the TPM Telltale Light will turn OFF only after the tires are inflated to the vehicle's recommended cold placard pressure value.

CAUTION!

- **The TPMS has been optimized for the original equipment tires and wheels. TPMS pressures and warning have been established for the tire size equipped on your vehicle. Undesirable system operation or sensor damage may result when using replacement equipment that is not of the same size, type, and/or style. Aftermarket wheels can cause sensor damage.**
- **Using aftermarket tire sealants may cause the Tire Pressure Monitoring System (TPMS) sensor to become inoperable. After using an aftermarket tire**

(Continued)

CAUTION! ***(Continued)***

sealant it is recommended that you take your vehicle to an authorized dealership to have your sensor function checked.

- **After inspecting or adjusting the tire pressure always reinstall the valve stem cap. This will prevent moisture and dirt from entering the valve stem, which could damage the TPMS sensor.**

NOTE:

- The TPMS is not intended to replace normal tire care and maintenance or to provide warning of a tire failure or condition.
- The TPMS should not be used as a tire pressure gauge while adjusting your tire pressure.
- Driving on a significantly under-inflated tire causes the tire to overheat and can lead to tire failure.

Downloaded from www.Manualslib.com manuals search engine

Under-inflation also reduces fuel efficiency and tire tread life, and may affect the vehicle's handling and stopping ability.

- The TPMS is not a substitute for proper tire maintenance, and it is the driver's responsibility to maintain correct tire pressure using an accurate tire pressure gauge, even if under-inflation has not reached the level to trigger illumination of the TPM Telltale Light.
- Seasonal temperature changes will affect tire pressure, and the TPMS will monitor the actual tire pressure in the tire.

Premium System

The Tire Pressure Monitor System (TPMS) uses wireless technology with wheel rim mounted electronic sensors to monitor tire pressure levels. Sensors mounted to each wheel as part of the valve stem transmit tire pressure readings to the receiver module. It is particularly important for you to check the tire pressure in all of the tires on your vehicle monthly and to maintain the proper pressure. The TPMS consists of the following components:

- Receiver module
- Four TPM sensors
- Various TPMS messages which display in the Driver Information Display (DID)
- TPM Telltale Light

Tire Pressure Monitoring Low Pressure Warnings

The TPM Telltale Light will illuminate in the instrument cluster and a chime will sound when tire pressure is low in one or more of the four active road tires. In addition, the Driver Information Display (DID) will display a "LOW TIRE" message and a graphic

Downloaded from www.Manualslib.com manuals search engine

showing the pressure values of each tire with the low tire pressure values changing color. An "Inflate to XX" message will also be displayed.

Should this occur, you should stop as soon as possible and inflate the tires with a low pressure condition (those in a different color in the DID graphic) to the vehicle's recommended cold placard pressure inflation value as shown in the "Inflate to XX" message. Once the system receives the updated tire pressures, the system will automatically update, the graphic display in the DID will change color back to the original color, and the TPM Telltale Light will turn off. The vehicle may need to be driven for up to 20 minutes above 15 mph (24 km/h) in order for the TPMS to receive this information.

Service TPMS Warning

If a system fault is detected, the TPM Telltale Light will flash on and off for 75 seconds and then remain on solid. The system fault will also sound a chime. In addition, the Driver Information Display (DID) will display a "SERVICE TPM SYSTEM" message for a minimum of five seconds and then display dashes (- -) in place of the pressure value to indicate which sensor is not being received.

If the ignition switch is cycled, this sequence will repeat, providing the system fault still exists. If the system fault no longer exists, the TPM Telltale Light will no longer flash, and the "SERVICE TPM SYSTEM" message will no longer display, and a pressure value will display in place of the dashes. A system fault can occur due to any of the following:

1. Signal interference due to electronic devices or driving next to facilities emitting the same radio frequencies as the TPM sensors.
2. Installing aftermarket window tinting that contains materials that may block radio wave signals.

Downloaded from www.Manualslib.com manuals search engine

3. Accumulation of snow or ice around the wheels or wheel housings.
4. Using tire chains on the vehicle.
5. Using wheels/tires not equipped with TPM sensors.

The DID will also display a "SERVICE TPM SYSTEM" message for a minimum of five seconds when a system fault related to an incorrect sensor location fault is detected. In this case, the "SERVICE TPM SYSTEM" message is then followed with a graphic display with pressure values still shown. This indicates that the pressure values are still being received from the TPM sensors but they may not be located in the correct vehicle position. The system still needs to be serviced as long as the "SERVICE TPM SYSTEM" message is displayed.

General Information

This device complies with Part 15 of the FCC rules and RSS-210 of Industry Canada. Operation is subject to the following two conditions:

(1) This device may not cause harmful interference.

(2) This device must accept any interference received, including interference that may cause undesired operation.

NOTE: Changes or modifications not expressly approved by the party responsible for compliance could void the user's authority to operate the equipment.

Gulf Coast Countries (GCC)

TPMS

TRA

REGISTERED No: ER0097573/12

DEALER No: DA0047074/10

Downloaded from www.Manualslib.com manuals search engine

CORAX3

TRA

REGISTERED No: ER37066/15

DEALER No: DA0047074/10

FUEL REQUIREMENTS

8.4L Engine

The 8.4L engine is designed to meet all emissions regulations, provide optimal fuel economy and performance when using high-quality unleaded "Premium" gasoline having a posted octane number of 91 as specified by the (R+M)/2 method. The use of 91 or higher octane "Premium" gasoline is required for in this engine.

While operating on gasoline with the required octane number, hearing a light knocking sound from the engine is not a cause for concern. However, if the engine is heard making a heavy knocking sound, see your dealer immediately. Use of gasoline with a lower than recommended octane number can cause engine failure and may void or not be covered by the New Vehicle Limited Warranty.

Poor quality gasoline can cause problems such as hard starting, stalling, and hesitations. If you experience these symptoms, try another brand of gasoline before considering service for the vehicle.

Reformulated Gasoline

Many areas of the country require the use of cleaner burning gasoline referred to as "Reformulated Gasoline". Reformulated gasoline contains oxygenates and are specifically blended to reduce vehicle emissions and improve air quality.

Downloaded from www.Manualslib.com manuals search engine

The use of reformulated gasoline is recommended. Properly blended reformulated gasoline will provide improved performance and durability of engine and fuel system components.

Gasoline/Oxygenate Blends

Some fuel suppliers blend unleaded gasoline with oxygenates such as ethanol.

CAUTION!

DO NOT use gasoline containing methanol or gasoline containing more than 10% ethanol (E-10). Use of these blends may result in starting and drivability problems, damage critical fuel system components, cause emissions to exceed the applicable standard, and/or cause the "Malfunction Indicator Light" to illuminate. Please observe pump labels as they should clearly communicate if a fuel contains greater than 10% ethanol (E-10).

Problems that result from using gasoline containing more than 10% ethanol (E-10) or gasoline containing methanol are not the responsibility of the manufacturer and may void or not be covered under New Vehicle Limited Warranty.

E-85 Usage In Non-Flex Fuel Vehicles

Non-Flex Fuel Vehicles (FFV) are compatible with gasoline containing up to 10% ethanol (E-10). Gasoline with higher ethanol content may void the New Vehicle Limited Warranty.

If a Non-FFV vehicle is inadvertently fueled with E-85 fuel, the engine will have some or all of these symptoms:

- Operate in a lean mode.
- OBD II "Malfunction Indicator Light" on.
- Poor engine performance.
- Poor cold start and cold drivability.
- Increased risk for fuel system component corrosion.

Downloaded from www.Manualslib.com manuals search engine

MMT In Gasoline

Methylcyclopentadienyl Manganese Tricarbonyl (MMT) is a manganese-containing metallic additive that is blended into some gasoline to increase octane. Gasoline blended with MMT provides no performance advantage beyond gasoline of the same octane number without MMT. Gasoline blended with MMT reduces spark plug life and reduces emissions system performance in some vehicles. The manufacturer recommends that gasoline without MMT be used in your vehicle. The MMT content of gasoline may not be indicated on the gasoline pump, therefore, you should ask your gasoline retailer whether the gasoline contains MMT. MMT is prohibited in Federal and California reformulated gasoline.

Materials Added To Fuel

Besides using unleaded gasoline with the proper octane rating, gasolines that contain detergents, corrosion and stability additives are recommended. Using gasolines that have these additives will help improve fuel economy, reduce emissions, and maintain vehicle performance. Designated TOP TIER Detergent Gasoline contains a higher level of detergents to further aide in minimizing engine and fuel system deposits. When available the usage of Top Tier Detergent gasoline is recommended. Visit www.toptiergas.com for a list of TOP TIER Detergent Gasoline Retailers.

Indiscriminate use of fuel system cleaning agents should be avoided. Many of these materials intended for gum and varnish removal may contain active solvents or similar ingredients. These can harm fuel system gasket and diaphragm materials.

Downloaded from www.Manualslib.com manuals search engine

Fuel System Cautions

CAUTION!

Follow these guidelines to maintain your vehicle's performance:

- **The use of leaded gasoline is prohibited by Federal law. Using leaded gasoline can impair engine performance and damage the emissions control system.**
- **An out-of-tune engine or certain fuel or ignition malfunctions can cause the catalytic converter to overheat. If you notice a pungent burning odor or some light smoke, your engine may be out of tune or malfunctioning and may require immediate service. Contact your authorized dealer for service assistance.**

(Continued)

CAUTION! ***(Continued)***

- **The use of fuel additives, which are now being sold as octane enhancers, is not recommended. Most of these products contain high concentrations of methanol. Fuel system damage or vehicle performance problems resulting from the use of such fuels or additives is not the responsibility of the manufacturer and may void or not be covered under the New Vehicle Limited Warranty.**

NOTE: Intentional tampering with the emissions control system can result in civil penalties being assessed against you.

Downloaded from www.Manualslib.com manuals search engine

Carbon Monoxide Warnings

WARNING!

Carbon monoxide (CO) in exhaust gases is deadly. Follow the precautions below to prevent carbon monoxide poisoning:

- **Do not inhale exhaust gases. They contain carbon monoxide, a colorless and odorless gas, which can kill. Never run the engine in a closed area, such as a garage, and never sit in a parked vehicle with the engine running for an extended period. If the vehicle is stopped in an open area with the engine running for more than a short period, adjust the ventilation system to force fresh, outside air into the vehicle.**

(Continued)

WARNING! ***(Continued)***

- **Guard against carbon monoxide with proper maintenance. Have the exhaust system inspected every time the vehicle is raised. Have any abnormal conditions repaired promptly. Until repaired, drive with all side windows fully open.**

ADDING FUEL

1. Push the fuel filler door release switch (located in the driver's door map pocket).
2. Open the fuel filler door.

NOTE: In certain cold conditions, ice may prevent the fuel door from opening. If this occurs, lightly push on the fuel door to break the ice buildup and re-release the fuel door using the inside release button. Do not pry on the door.

Downloaded from www.Manualslib.com manuals search engine

3. There is no fuel filler cap. A flapper door inside the pipe seals the system.
4. Insert the fuel nozzle fully into the filler pipe – the nozzle opens and holds the flapper door while refueling.

NOTE: Only the correct size nozzle opens the latches allowing the flapper door to open.

5. Fill the vehicle with fuel – when the fuel nozzle "clicks" or shuts off the fuel tank is full.
6. Remove the fuel nozzle and close the fuel door.

NOTE: A funnel is provided (located in the trunk in the spare tire area) to open the flapper door to allow for emergency refueling with a gas can.

CAUTION!

To avoid fuel spillage and overfilling, do not "top off" the fuel tank after filling.

WARNING!

- **Never have any smoking materials lit in or near the vehicle when the fuel door is open or the tank is being filled.**
- **Never add fuel when the engine is running. This is in violation of most state and federal fire regulations and may cause the "Malfunction Indicator Light" to turn on.**
- **A fire may result if fuel is pumped into a portable container that is inside of a vehicle. You could be burned. Always place fuel containers on the ground while filling.**

Downloaded from www.Manualslib.com manuals search engine

Emergency Fuel Filler Door Release

If you are unable to open the fuel filler door, use the fuel filler door emergency release procedure by following the proceeding steps.

1. Open the liftgate.
2. Locate the carpet access door (on the right side inner trim panel of the trunk).

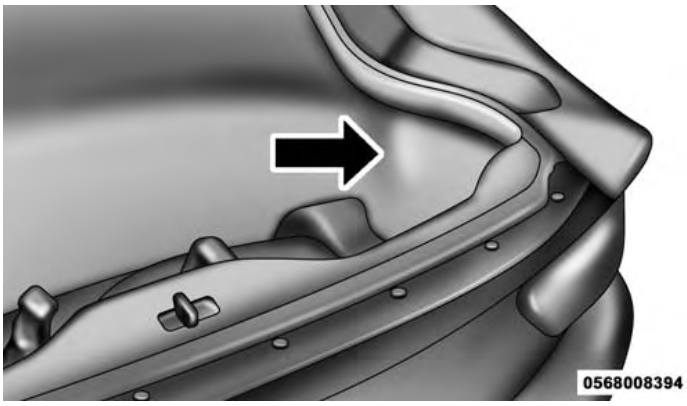

Carpet Access Door

Downloaded from www.Manualslib.com manuals search engine

3. Pull the edge of the access door on the right side inner trim panel to expose the emergency release cable.

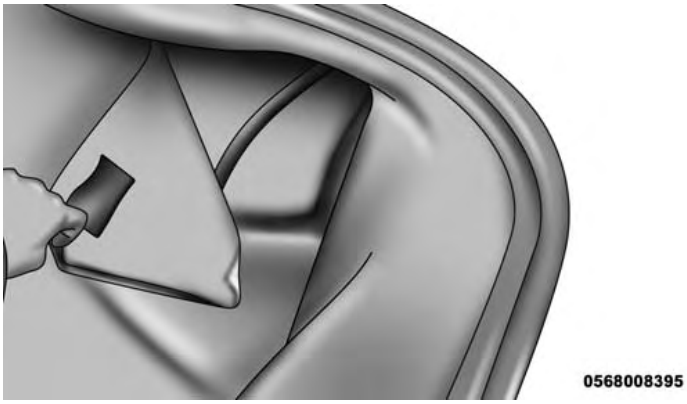

Edge Of Access Door

4. Pull the release cable to release the fuel door.

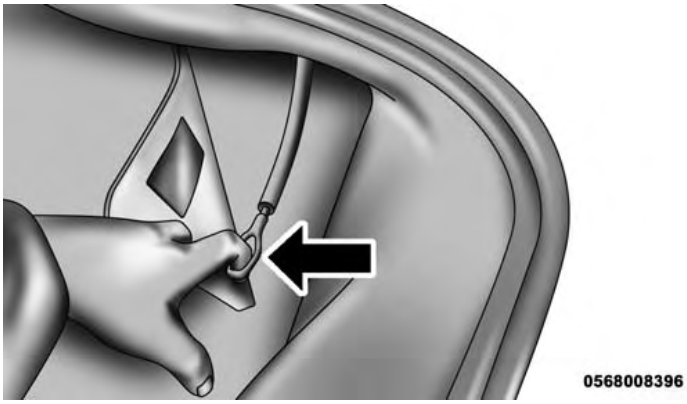

Release Cable

Downloaded from www.Manualslib.com manuals search engine

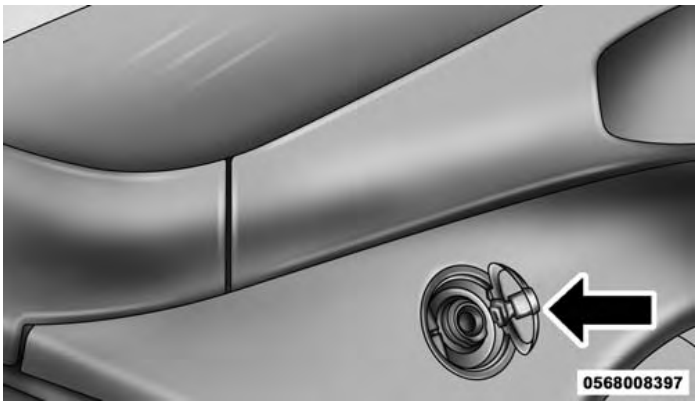

Fuel Door Open

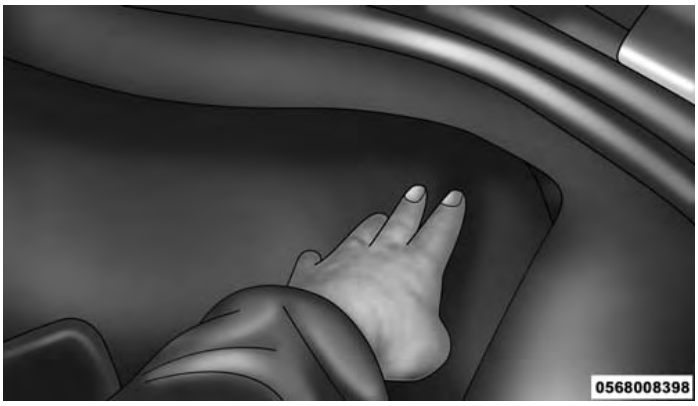

Carpet Into Original Position

5. Return the release cable to the original position (inside the inner trim panel) and push the carpet back into the original position.

Downloaded from www.Manualslib.com manuals search engine

TRAILER TOWING

Trailer towing with this vehicle is not recommended.

RECREATIONAL TOWING (BEHIND MOTORHOME, ETC.)

Towing This Vehicle Behind Another Vehicle (Flat Towing With All Four Wheels On The Ground)

Towing Condition	Wheels OFF The Ground	Manual Transmission
Flat Tow	None	**NOT ALLOWED**
Dolly Tow	Front	**NOT ALLOWED**
	Rear	**NOT RECOMMENDED**
On Trailer	All	OK

NOTE: If the vehicle requires towing, make sure all four wheels are off the ground.

CAUTION!

Towing this vehicle in violation of the above requirements can cause severe transmission damage. Damage from improper towing is not covered under the New Vehicle Limited Warranty.

Downloaded from www.Manualslib.com manuals search engine

GROUND CLEARANCE

The front and rear fascias and side sills ride low and ground clearance is limited.

CAUTION!

Damage to the front and rear fascias and side sills can occur if you disregard the low ground clearance in these areas of your vehicle. Pay close attention when parking to avoid running into parking curbs. Exercise caution when entering or exiting steep driveways, or when pulling off the road onto soft shoulders.

Downloaded from www.Manualslib.com manuals search engine

Downloaded from www.Manualslib.com manuals search engine

WHAT TO DO IN EMERGENCIES

CONTENTS

- HAZARD WARNING FLASHER 310
- IF YOUR ENGINE OVERHEATS 310
- WHEEL AND TIRE TORQUE SPECIFICATIONS 311
  - Torque Specifications 311
- TIRE SERVICE KIT — IF EQUIPPED 313
  - Tire Service Kit Storage 313
  - Tire Service Kit Components And Operation . .314
  - Tire Service Kit Usage Precautions. 315
  - Sealing A Tire With Tire Service Kit 317
- JUMP-STARTING PROCEDURES 323
- FREEING A STUCK VEHICLE 327
- TOWING A DISABLED VEHICLE 329

Downloaded from www.Manualslib.com manuals search engine

HAZARD WARNING FLASHER

The Hazard Warning flasher switch is located in the center of the instrument panel above the climate controls.

Push the switch to turn on the Hazard Warning flasher. When the switch is activated, all directional turn signals will flash on and off to warn oncoming traffic of an emergency. Push the switch a second time to turn off the Hazard Warning flasher.

This is an emergency warning system and it should not be used when the vehicle is in motion. Use it when your vehicle is disabled and it is creating a safety hazard for other motorists.

When you must leave the vehicle to seek assistance, the Hazard Warning flasher will continue to operate even though the ignition is placed in the OFF position.

NOTE: With extended use the Hazard Warning flasher may wear down your battery.

IF YOUR ENGINE OVERHEATS

In any of the following situations, you can reduce the potential for overheating by taking the appropriate action.

- **On the highways —** Slow down and use the highest gear possible.
- **In city traffic —** While stopped, put the transmission in NEUTRAL, but do not increase engine idle speed.
- **In city traffic —** While moving, shift into the highest gear possible to reduce engine RPM.

NOTE: There are steps that you can take to slow down an impending overheat condition:

Downloaded from www.Manualslib.com manuals search engine

- If your air conditioner (A/C) is on, turn it off. The A/C system adds heat to the engine cooling system and turning the A/C off can help remove this heat.
- You can also turn the temperature control to maximum heat, the mode control to floor and the blower control to high. This allows the heater core to act as a supplement to the radiator and aids in removing heat from the engine cooling system.

WARNING!

You or others can be badly burned by hot engine coolant (antifreeze) or steam from your radiator. If you see or hear steam coming from under the hood, do not open the hood until the radiator has had time to cool. Never try to open a cooling system pressure cap when the radiator or coolant bottle is hot.

WHEEL AND TIRE TORQUE SPECIFICATIONS

Proper lug nut/bolt torque is very important to ensure that the wheel is properly mounted to the vehicle. Any time a wheel has been removed and reinstalled on the vehicle the lug nuts/bolts should be torqued using a properly calibrated torque wrench.

Torque Specifications

Lug Nut/Bolt Torque	**Lug Nut/ Bolt Size	Lug Nut/ Bolt Socket Size
107 Ft-Lbs (145 N·m)	1/2″ x 20	19 mm

**Use only your Authorized Dealer recommended lug nuts/bolts and clean or remove any dirt or oil before tightening.

Inspect the wheel mounting surface prior to mounting the tire and remove any corrosion or loose particles.

Downloaded from www.Manualslib.com manuals search engine

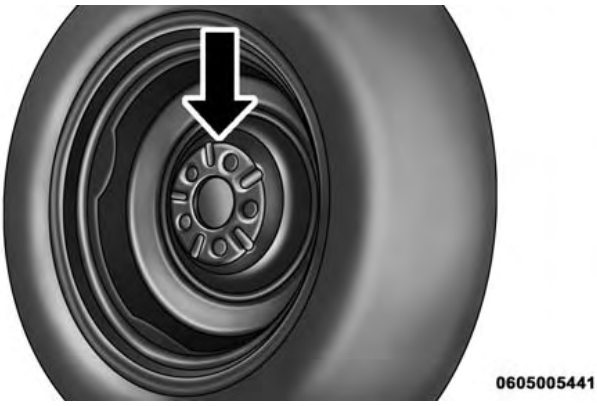

Wheel Mounting Surface

Tighten the lug nuts/bolts in a star pattern until each nut/bolt has been tightened twice.

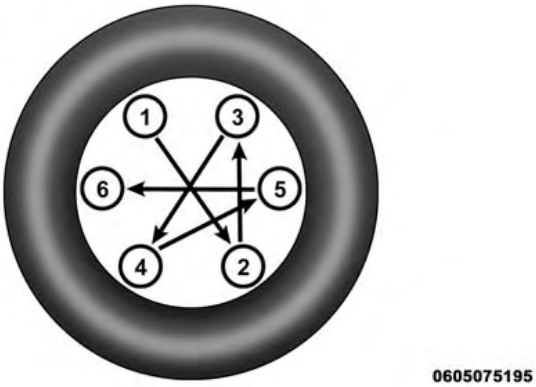

Torque Patterns

After 25 miles (40 km) check the lug nut/bolt torque to be sure that all the lug nuts/bolts are properly seated against the wheel.

Downloaded from www.Manualslib.com manuals search engine

WARNING!

To avoid the risk of forcing the vehicle off the jack, do not tighten the lug nuts fully until the vehicle has been lowered. Failure to follow this warning may result in personal injury.

TIRE SERVICE KIT — IF EQUIPPED

Small punctures up to 1/4 inch (6 mm) in the tire tread can be sealed with Tire Service Kit. Foreign objects (e.g., screws or nails) should not be removed from the tire. Tire Service Kit can be used in outside temperatures down to approximately -4°F (-20°C).

This kit will provide a temporary tire seal, allowing you to drive your vehicle up to 100 miles (160 km) with a maximum speed of 55 mph (90 km/h).

Tire Service Kit Storage

The Tire Service Kit is located in the left side of the trunk.

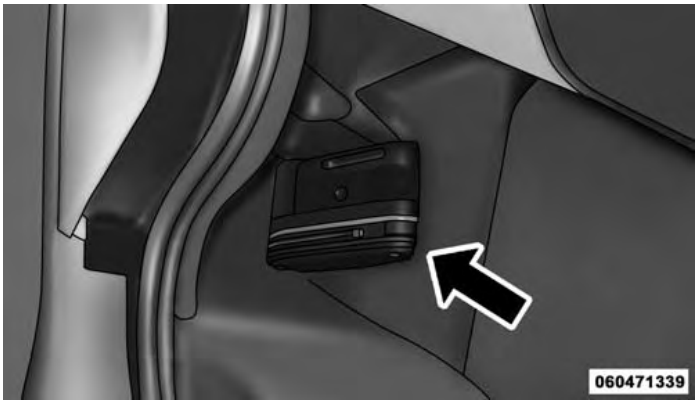

Tire Service Kit Location

Downloaded from www.Manualslib.com manuals search engine

Tire Service Kit Components And Operation

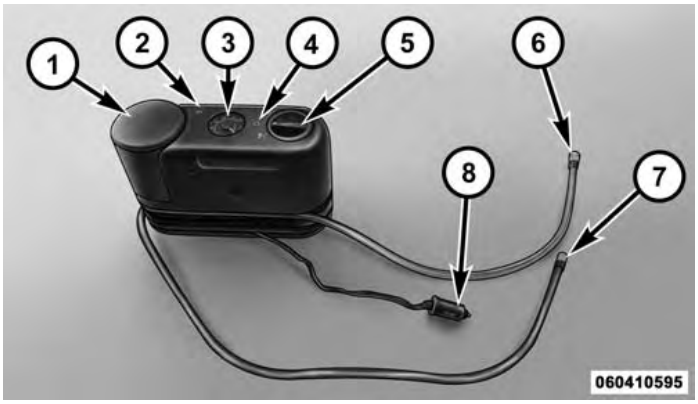

Tire Service Kit Components

1 — Sealant Bottle	5 — Mode Select Knob
2 — Deflation Button	6 — Sealant Hose (Clear)
3 — Pressure Gauge	7 — Air Pump Hose (Black)
4 — Power Button	8 — Power Plug (located on the bottom side of the Tire Service Kit)

Using The Mode Select Knob And Hoses

Your Tire Service Kit is equipped with the following symbols to indicate the air or sealant mode.

Selecting Air Mode

Push in the Mode Select Knob (5) and turn to this position for air pump operation only. Use the Black Air Pump Hose (7) when selecting this mode.

Selecting Sealant Mode

Push in the Mode Select Knob (5) and turn to this position to inject the Tire Service Kit Sealant and to inflate the tire. Use the Sealant Hose (clear hose) (6) when selecting this mode.

Downloaded from www.Manualslib.com manuals search engine

Using The Power Button

Push and release the Power Button (4) once to turn On the Tire Service Kit. Push and release the Power Button (4) again to turn Off the Tire Service Kit.

Using The Deflation Button

Push the Deflation Button (2) to reduce the air pressure in the tire if it becomes over-inflated.

Tire Service Kit Usage Precautions

- Replace the Tire Service Kit Sealant Bottle (1) and Sealant Hose (6) prior to the expiration date (printed at the lower right hand corner on the bottle label) to assure optimum operation of the system. Refer to "Sealing a Tire with Tire Service Kit" section (F) "Sealant Bottle and Hose Replacement".

Tire Service Kit Expiration Date Location

- The Sealant Bottle (1) and Sealant Hose (6) are a one tire application use and need to be replaced after each use. Always replace these components immediately at your original equipment vehicle dealer.
- When the Tire Service Kit sealant is in a liquid form, clean water, and a damp cloth will remove the material

Downloaded from www.Manualslib.com manuals search engine

from the vehicle or tire and wheel components. Once the sealant dries, it can easily be peeled off and properly discarded.

- For optimum performance, make sure the valve stem on the wheel is free of debris before connecting the Tire Service Kit.
- You can use the Tire Service Kit air pump to inflate bicycle tires. The kit also comes with two needles, located in the Accessory Storage Compartment (on the bottom of the air pump) for inflating sport balls, rafts, or similar inflatable items. However, use only the Air Pump Hose (7) and make sure the Mode Select Knob (5) is in the Air Mode when inflating such items to avoid injecting sealant into them. The Tire Service Kit Sealant is only intended to seal punctures less than 1/4 inch (6 mm) diameter in the tread of your vehicle.
- Do not lift or carry the Tire Service Kit by the hoses.

WARNING!

- **Do not attempt to seal a tire on the side of the vehicle closest to traffic. Pull far enough off the road to avoid the danger of being hit when using the Tire Service Kit.**
- **Do not use Tire Service Kit or drive the vehicle under the following circumstances:**
  - **If the puncture in the tire tread is approximately 1/4 inch (6 mm) or larger.**
  - **If the tire has any sidewall damage.**
  - **If the tire has any damage from driving with extremely low tire pressure.**
  - **If the tire has any damage from driving on a flat tire.**
  - **If the wheel has any damage.**
  - **If you are unsure of the condition of the tire or the wheel.**

(Continued)

Downloaded from www.Manualslib.com manuals search engine

WARNING! ***(Continued)***

- **Keep Tire Service Kit away from open flames or heat source.**
- **A loose Tire Service Kit thrown forward in a collision or hard stop could endanger the occupants of the vehicle. Always stow the Tire Service Kit in the place provided. Failure to follow these warnings can result in injuries that are serious or fatal to you, your passengers, and others around you.**
- **Take care not to allow the contents of Tire Service Kit to come in contact with hair, eyes, or clothing. Tire Service Kit sealant is harmful if inhaled, swallowed, or absorbed through the skin. It causes skin, eye, and respiratory irritation. Flush immediately with plenty of water if there is any contact with eyes or skin. Change clothing as soon as possible, if there is any contact with clothing.**

(Continued)

WARNING! ***(Continued)***

- **Tire Service Kit Sealant solution contains latex. In case of an allergic reaction or rash, consult a physician immediately. Keep Tire Service Kit out of reach of children. If swallowed, rinse mouth immediately with plenty of water and drink plenty of water. Do not induce vomiting! Consult a physician immediately.**

Sealing A Tire With Tire Service Kit

(A) Whenever You Stop To Use Tire Service Kit:

1. Pull over to a safe location and turn on the vehicle's Hazard Warning flashers.
2. Verify that the valve stem (on the wheel with the deflated tire) is in a position that is near to the ground. This will allow the Tire Service Kit Hoses (6) and (7) to reach the valve stem and keep the Tire Service Kit flat

Downloaded from www.Manualslib.com manuals search engine

on the ground. This will provide the best positioning of the kit when injecting the sealant into the deflated tire and running the air pump. Move the vehicle as necessary to place the valve stem in this position before proceeding.

3. Place the transmission in PARK (auto transmission) or in Gear (manual transmission) and place the ignition in the OFF position.
4. Set the parking brake.

(B) Setting Up To Use Tire Service Kit:

1. Push in the Mode Select Knob (5) and turn to the Sealant Mode position.
2. Uncoil the Sealant Hose (6) and then remove the cap from the fitting at the end of the hose.
3. Place the Tire Service Kit flat on the ground next to the deflated tire.
4. Remove the cap from the valve stem and then screw the fitting at the end of the Sealant Hose (6) onto the valve stem.
5. Uncoil the Power Plug (8) and insert the plug into the vehicle's 12 Volt power outlet.

NOTE: Do not remove foreign objects (e.g., screws or nails) from the tire.

(C) Injecting Tire Service Kit Sealant Into The Deflated Tire:

- Always start the engine before turning ON the Tire Service Kit.

NOTE: Manual transmission vehicles must have the parking brake engaged and the shift lever in NEUTRAL.

- After pushing the Power Button (4), the sealant (white fluid) will flow from the Sealant Bottle (1) through the Sealant Hose (6) and into the tire.

Downloaded from www.Manualslib.com manuals search engine

NOTE: Sealant may leak out through the puncture in the tire.

If the sealant (white fluid) does not flow within 0 – 10 seconds through the Sealant Hose (6):

1. Push the Power Button (4) to turn Off the Tire Service Kit. Disconnect the Sealant Hose (6) from the valve stem. Make sure the valve stem is free of debris. Reconnect the Sealant Hose (6) to the valve stem. Check that the Mode Select Knob (5) is in the Sealant Mode position and not Air Mode. Push the Power Button (4) to turn On the Tire Service Kit.
2. Connect the Power Plug (8) to a different 12 Volt power outlet in your vehicle or another vehicle, if available. Make sure the engine is running before turning ON the Tire Service Kit.
3. The Sealant Bottle (1) may be empty due to previous use. Call for assistance.

NOTE: If the Mode Select Knob (5) is on Air Mode and the pump is operating, air will dispense from the Air Pump Hose (7) only, not the Sealant Hose (6).

If the sealant (white fluid) does flow through the Sealant Hose (6):

1. Continue to operate the pump until sealant is no longer flowing through hose (typically takes 30 - 70 seconds). As the sealant flows through the Sealant Hose (6), the Pressure Gauge (3) can read as high as 70 psi (4.8 Bar). The Pressure Gauge (3) will decrease quickly from approximately 70 psi (4.8 Bar) to the actual tire pressure when the Sealant Bottle (1) is empty.
2. The pump will start to inject air into the tire immediately after the Sealant Bottle (1) is empty. Continue to operate the pump and inflate the tire to the pressure indicated on the tire pressure label on the driver-side latch pillar (recommended pressure). Check the tire pressure by looking at the Pressure Gauge (3).

Downloaded from www.Manualslib.com manuals search engine

If the tire does not inflate to at least 26 psi (1.8 Bar) pressure within 15 minutes:

- The tire is too badly damaged. Do not attempt to drive the vehicle further. Call for assistance.

NOTE: If the tire becomes over-inflated, push the Deflation Button to reduce the tire pressure to the recommended inflation pressure before continuing.

If the tire inflates to the recommended pressure or is at least 26 psi (1.8 Bar) pressure within 15 minutes:

1. Push the Power Button (4) to turn off the Tire Service Kit.
2. Remove the Speed Limit sticker from the top of the Sealant Bottle (1) and place the sticker on the instrument panel.
3. Immediately disconnect the Sealant Hose (6) from the valve stem, reinstall the cap on the fitting at the end of the hose, and place the Tire Service Kit in the vehicle storage location. Quickly proceed to (D) "Drive Vehicle."

CAUTION!

- **The metal end fitting from Power Plug (8) may get hot after use, so it should be handled carefully.**
- **Failure to reinstall the cap on the fitting at the end of the Sealant Hose (6) can result in sealant contacting your skin, clothing, and the vehicle's interior. It can also result in sealant contacting internal Tire Service Kit components which may cause permanent damage to the kit.**

Downloaded from www.Manualslib.com manuals search engine

(D) Drive Vehicle:

Immediately after injecting sealant and inflating the tire, drive the vehicle 5 miles (8 km) or 10 minutes to ensure distribution of the Tire Service Kit Sealant within the tire. Do not exceed 55 mph (90 km/h).

WARNING!

Tire Service Kit is not a permanent flat tire repair. Have the tire inspected and repaired or replaced after using Tire Service Kit. Do not exceed 55 mph (90 km/h) until the tire is repaired or replaced. Failure to follow this warning can result in injuries that are serious or fatal to you, your passengers, and others around you.

(E) After Driving:

Pull over to a safe location. Refer to "Whenever You Stop to Use Tire Service Kit" before continuing.

1. Push in the Mode Select Knob (5) and turn to the Air Mode position.
2. Uncoil the power plug and insert the plug into the vehicle's 12 Volt power outlet.
3. Uncoil the Air Pump Hose (7) (black in color) and screw the fitting at the end of hose (7) onto the valve stem.
4. Check the pressure in the tire by reading the Pressure Gauge (3).

If tire pressure is less than 19 psi (1.3 Bar):

The tire is too badly damaged. Do not attempt to drive the vehicle further. Call for assistance.

Downloaded from www.Manualslib.com manuals search engine

If the tire pressure is 19 psi (1.3 Bar) or higher:

1. Push the Power Button (4) to turn on Tire Service Kit and inflate the tire to the pressure indicated on the tire and loading information label on the driver-side door opening.

NOTE: If the tire becomes over-inflated, push the Deflation Button to reduce the tire pressure to the recommended inflation pressure before continuing.

2. Disconnect the Tire Service Kit from the valve stem, reinstall the cap on the valve stem and unplug from 12 Volt outlet.
3. Place the Tire Service Kit in its proper storage area in the vehicle.
4. Have the tire inspected and repaired or replaced at the earliest opportunity at an authorized dealer or tire service center.
5. Remove the Speed Limit sticker from the instrument panel after the tire has been repaired.
6. Replace the Sealant Bottle (1) and Sealant Hose (6) assembly at your authorized dealer as soon as possible. Refer to (F) "Sealant Bottle and Hose Replacement".

NOTE: When having the tire serviced, advise the authorized dealer or service center that the tire has been sealed using the Tire Service Kit.

(F) Sealant Bottle And Hose Replacement:

1. Uncoil the Sealant Hose (6) (clear in color).
2. Locate the round Sealant Bottle release button in the recessed area under the sealant bottle.
3. Push the Sealant Bottle release button. The Sealant Bottle (1) will pop up. Remove the bottle and dispose of it accordingly.

Downloaded from www.Manualslib.com manuals search engine

4. Clean any remaining sealant from the Tire Service Kit housing.
5. Position the new Sealant Bottle (1) in the housing so that the Sealant Hose (6) aligns with the hose slot in the front of the housing. Push the bottle into the housing. An audible click will be heard indicating the bottle is locked into place.
6. Verify that the cap is installed on the fitting at the end of the Sealant Hose (6) and return the hose to its storage area (located on the bottom of the air pump).
7. Return the Tire Service Kit to its storage location in the vehicle.

JUMP-STARTING PROCEDURES

WARNING!

- **Take care to avoid the radiator cooling fan whenever the hood is raised. It can start anytime the ignition switch is ON. You can be hurt by the fan.**
- **Do not attempt to push or tow your vehicle to get it started. Unburned fuel could enter the catalytic converter and once the engine has started, ignite and damage the converter and vehicle. If the vehicle has a discharged battery, booster cables may be used to obtain a start from another vehicle. This type of start can be dangerous if done improperly, so follow this procedure carefully.**
- **Wear eye protection and remove any metal jewelry such as watch bands or bracelets that might make an inadvertent electrical contact. You could be seriously injured.**

Downloaded from www.Manualslib.com manuals search engine

NOTE: The battery is located underneath an access panel inside the rear compartment on the left side of the vehicle. A remote battery terminal is located in the engine compartment for jump-starting.

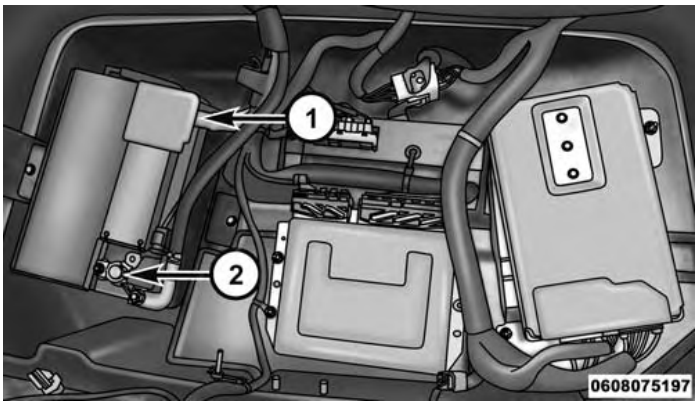

Battery Location

1 — Positive Battery Post
2 — Negative Battery Post

Downloaded from www.Manualslib.com manuals search engine

Connecting The Jumper Cables

1. Wear eye protection and remove any metal jewelry such as watchbands or bracelets that might make an inadvertent electrical contact.
2. When boost is provided by a battery in another vehicle, park that vehicle within booster cable reach, but without allowing the vehicles to touch one another.
3. Set the parking brake, place the transmission in NEUTRAL, and turn the ignition OFF on both vehicles.
4. Turn off the heater, radio, and all unnecessary electrical loads.
5. Remove the plastic fuse cover to gain access to the remote jump-start positive **(+)** post in the engine compartment. Refer to the following illustration for remote jump-starting connections.

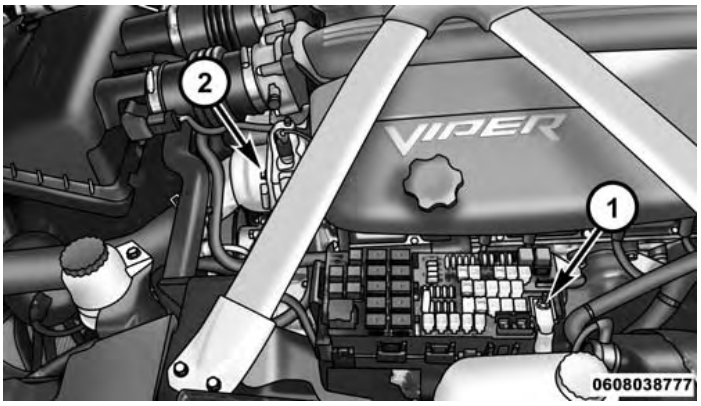

Remote Jump Start Connections

1 — Remote Positive (+) Post
2 — Remote Negative (-) Post

Downloaded from www.Manualslib.com manuals search engine

CAUTION!

Failure to follow these procedures could result in damage to the charging system of the booster vehicle or the discharged vehicle.

6. Connect the positive **(+)** end of the jumper cable to the remote positive **(+)** post of the discharged vehicle.
7. Connect the opposite end of the positive **(+)** jumper cable to the positive **(+)** post of the booster battery.
8. Connect the negative **(-)** end of the jumper cable to the negative **(-)** post of the booster battery.
9. Connect the opposite end of the negative **(-)** jumper cable to the remote negative **(-)** post of the vehicle with the discharged battery.

WARNING!

Do not connect the jumper cable to the negative (-) post of the discharged battery. The resulting electrical spark could cause the battery to explode and could result in personal injury. Only use the specific ground point, do not use any other exposed metal parts.

10. Start the engine in the vehicle that has the booster battery, let the engine idle a few minutes, and then start the engine in the vehicle with the discharged battery.

Downloaded from www.Manualslib.com manuals search engine

11. Once the engine is started, remove the jumper cables in the reverse sequence:

Disconnecting The Jumper Cables

1. Disconnect the negative **(-)** end of the jumper cable from the remote negative **(-)** post of the vehicle with the discharged battery.
2. Disconnect the opposite end of the negative **(-)** jumper cable from the negative **(-)** post of the booster battery.
3. Disconnect the positive **(+)** end of the jumper cable from the positive **(+)** post of the booster battery.
4. Disconnect the opposite end of the positive **(+)** jumper cable from the remote positive **(+)** post of the vehicle with the discharged battery.

If frequent jump-starting is required to start your vehicle you should have the battery and charging system inspected at your authorized dealer.

CAUTION!

Accessories plugged into the vehicle power outlets draw power from the vehicle's battery, even when not in use (i.e., cellular phones, etc.). Eventually, if plugged in long enough without engine operation, the vehicle's battery will discharge sufficiently to degrade battery life and/or prevent the engine from starting.

FREEING A STUCK VEHICLE

If your vehicle becomes stuck in mud, sand, or snow, it can often be moved using a rocking motion. Turn your steering wheel right and left to clear the area around the front wheels. Then shift back and forth between 1st gear and REVERSE, while gently pushing the accelerator. Use the least amount of pressure to maintain the rocking motion, without spinning the wheels, or racing the engine.

Downloaded from www.Manualslib.com manuals search engine

CAUTION!

- When "rocking" a stuck vehicle by shifting between 1st gear and REVERSE, do not spin the wheels faster than 15 mph (24 km/h), or drivetrain damage may result.
- Revving the engine or spinning the wheels too fast may lead to transmission overheating and failure. It can also damage the tires. Do not spin the wheels above 30 mph (48 km/h) while in gear (no transmission shifting occurring).

WARNING!

Fast spinning tires can be dangerous. Forces generated by excessive wheel speeds may cause damage, or even failure, of the axle and tires. A tire could explode and injure someone. Do not spin your vehicle's wheels faster than 30 mph (48 km/h) or for longer than 30 seconds continuously without stopping when you are stuck. And do not let anyone near a spinning wheel, no matter what the speed.

Downloaded from www.Manualslib.com manuals search engine

TOWING A DISABLED VEHICLE

Do not tow with sling-type equipment. Only use flatbed equipment. Always comply with applicable state or local towing ordinances.

CAUTION!

Towing this vehicle in violation of the above requirements can cause severe transmission damage. Damage from improper towing is not covered under the New Vehicle Limited Warranty.

Downloaded from www.Manualslib.com manuals search engine

Downloaded from www.Manualslib.com manuals search engine

MAINTAINING YOUR VEHICLE

CONTENTS

- ENGINE COMPARTMENT — 8.4L 333
- ONBOARD DIAGNOSTIC SYSTEM (OBD II) . . .334
- EMISSIONS INSPECTION AND MAINTENANCE PROGRAMS 334
- REPLACEMENT PARTS 336
- DEALER SERVICE 336
- MAINTENANCE PROCEDURES 337
  - Engine Oil 337
  - Engine Oil Filter 339
  - Engine Air Cleaner Filter 340
  - Maintenance-Free Battery 341
  - Hibernation Mode 342
  - Air Conditioner Maintenance 343
  - Body Lubrication 345
  - Wiper Blades 345
  - Adding Washer Fluid 346
  - Exhaust System 346
  - Cooling System 349
  - Brake System 355
  - Manual Transmission 357

Downloaded from www.Manualslib.com manuals search engine

- Hydraulic Clutch 358
- Rear Axle 358
- Appearance Care And Protection From Corrosion 359

■ FUSES 366
- Power Distribution Center 367

■ VEHICLE STORAGE 374

■ REPLACEMENT BULBS 377

■ BULB REPLACEMENT 379
- Front Headlamp, Front Park/Turn Signal Lamp 379
- Front/Rear Side Marker Lamp 379
- Taillamp, Tail/Stop Lamp. 379
- Rear Turn Signal Lamp 379
- Backup Lamps. 379

■ FLUID CAPACITIES 380

■ FLUIDS, LUBRICANTS, AND GENUINE PARTS 381
- Engine 381
- Chassis 383

Downloaded from www.Manualslib.com manuals search engine

ENGINE COMPARTMENT — 8.4L

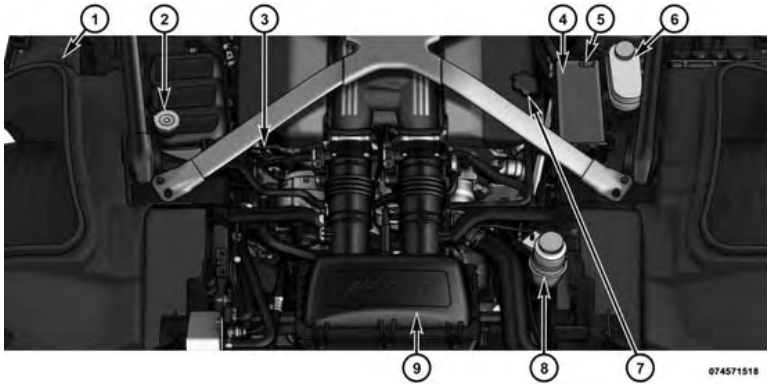

1 — Washer Fluid Reservoir
2 — Coolant Pressure Cap
3 — Engine Oil Dipstick
4 — Power Distribution Center
5 — Remote Jump Start Positive Battery Post
6 — Brake/Clutch Fluid Reservoir
7 — Engine Oil Fill
8 — Power Steering Fluid Reservoir
9 — Air Cleaner Filter

Downloaded from www.Manualslib.com manuals search engine

ONBOARD DIAGNOSTIC SYSTEM (OBD II)

To meet new government regulations and promote cleaner air, your vehicle is equipped with a sophisticated onboard diagnostic system called OBD II. This system monitors the performance of the emissions and engine control systems. When these systems are operating properly, your vehicle will provide excellent performance and fuel economy, as well as engine emissions well within current government regulations.

If any of these systems require service, the OBD II system will turn on the Malfunction Indicator Light. It will also store diagnostic codes and other information to assist your service technician in making repairs. Although your vehicle will usually be drivable and not need towing, see your authorized dealer for service as soon as possible.

CAUTION!

Prolonged driving with the light on could cause further damage to the emission control system. It could also affect fuel economy and driveability. The vehicle must be serviced before any state emissions tests can be performed.

If the light is flashing, severe catalytic converter damage and power loss will soon occur. Immediate service is required.

EMISSIONS INSPECTION AND MAINTENANCE PROGRAMS

In some localities, it may be a legal requirement to pass an inspection of your vehicle's emissions control system. Failure to pass could prevent vehicle registration.

For states that require an Inspection and Maintenance (I/M), this check verifies the "Malfunction

Downloaded from www.Manualslib.com manuals search engine

Indicator Light (MIL)" is functioning and is not on when the engine is running, and that the OBD II system is ready for testing.

Normally, the OBD II system will be ready. The OBD II system may **not** be ready if your vehicle was recently serviced, recently had a dead battery or a battery replacement. If the OBD II system should be determined not ready for the I/M test, your vehicle may fail the test.

Your vehicle has a simple ignition actuated test, which you can use prior to going to the test station. To check if your vehicle's OBD II system is ready, you must do the following:

1. Cycle the ignition switch to the ON position, but do not crank or start the engine.

NOTE: If you crank or start the engine, you will have to start this test over.

2. As soon as you cycle the ignition switch to the ON position, you will see the Malfunction Indicator Light (MIL) symbol come on as part of a normal bulb check.
3. Approximately 15 seconds later, one of two things will happen:

- The MIL will flash for about 10 seconds and then return to being fully illuminated until you turn OFF the ignition or start the engine. This means that your vehicle's OBD II system is **not ready** and you should **not** proceed to the I/M station.
- The MIL will not flash at all and will remain fully illuminated until you place the ignition in the off position or start the engine. This means that your vehicle's OBD II system is **ready** and you can proceed to the I/M station.

If your OBD II system is **not ready,** you should see your authorized dealer or repair facility. If your vehicle was

Downloaded from www.Manualslib.com manuals search engine

recently serviced or had a battery failure or replacement, you may need to do nothing more than drive your vehicle as you normally would in order for your OBD II system to update. A recheck with the above test routine may then indicate that the system is **now ready**.

Regardless of whether your vehicle's OBD II system is ready or not, if the MIL is illuminated during normal vehicle operation you should have your vehicle serviced before going to the I/M station. The I/M station can fail your vehicle because the MIL is on with the engine running.

REPLACEMENT PARTS

Use of genuine MOPAR parts for normal/scheduled maintenance and repairs is highly recommended to ensure the designed performance. Damage or failures caused by the use of non-MOPAR parts for maintenance and repairs will not be covered by the New Vehicle Limited Warranty.

DEALER SERVICE

Your authorized dealer has the qualified service personnel, special tools, and equipment to perform all service operations in an expert manner. Service Manuals are available which include detailed service information for your vehicle. Refer to these Service Manuals before attempting any procedure yourself.

NOTE: Intentional tampering with emissions control systems may void your warranty and could result in civil penalties being assessed against you.

WARNING!

You can be badly injured working on or around a motor vehicle. Only do service work for which you have the knowledge and the proper equipment. If you have any doubt about your ability to perform a service job, take your vehicle to a competent mechanic.

Downloaded from www.Manualslib.com manuals search engine

MAINTENANCE PROCEDURES

The pages that follow contain the **required** maintenance services determined by the engineers who designed your vehicle.

Besides those maintenance items specified in the fixed "Maintenance Schedule", there are other components which may require servicing or replacement in the future.

CAUTION!

- **Failure to properly maintain your vehicle or perform repairs and service when necessary could result in more costly repairs, damage to other components or negatively impact vehicle performance. Immediately have potential malfunctions examined by an authorized dealer or qualified repair center.**

(Continued)

CAUTION! *(Continued)*

- **Your vehicle has been built with improved fluids that protect the performance and durability of your vehicle and also allow extended maintenance intervals. Do not use chemical flushes in these components as the chemicals can damage your engine, transmission, power steering or air conditioning. Such damage is not covered by the New Vehicle Limited Warranty. If a flush is needed because of component malfunction, use only the specified fluid for the flushing procedure.**

Engine Oil

Checking Oil Level

To assure proper engine lubrication, the engine oil must be maintained at the correct level. Check the oil level at regular intervals, such as every fuel stop. The best time to check the oil level is approximately five minutes after a

Downloaded from www.Manualslib.com manuals search engine

fully warmed engine is shut off. Do not check oil level before starting the engine after it has sat overnight. Checking engine oil level when the engine is cold will give you an incorrect reading.

Checking the oil while the vehicle is on level ground also will improve the accuracy of the oil level readings. Add oil only when the level is below the SAFE mark.

CAUTION!

Overfilling or underfilling will cause oil aeration or loss of oil pressure. This could damage your engine.

Change Engine Oil

Refer to the "Maintenance Schedule" for the proper maintenance intervals.

NOTE: Under no circumstances should oil change intervals exceed 6,000 miles (10,000 km) or six months, whichever occurs first.

Engine Oil Selection

For best performance and maximum protection under all types of operating conditions, the manufacturer only recommends full synthetic engine oils that meet the requirements of FCA US Material Standard MS-12633.

The manufacturer recommends the use of a full synthetic 0W-40 or equivalent engine oil.

CAUTION!

Do not use chemical flushes in your engine oil as the chemicals can damage your engine. Such damage is not covered by the New Vehicle Limited Warranty.

Downloaded from www.Manualslib.com manuals search engine

Engine Oil Viscosity (SAE Grade)

Use MOPAR SAE 0W-40 engine oil approved to FCA US Material Standard MS-12633 such as Pennzoil Ultra equivalent is recommended for all operating temperatures.

The engine oil filler cap also shows the recommended engine oil viscosity for your engine. For information on engine oil filler cap location, refer to "Engine Compartment" in this section.

Lubricants which do not have both the engine oil certification mark and the correct SAE viscosity grade number should not be used.

Materials Added To Engine Oil

The manufacturer strongly recommends against the addition of any additives (other than leak detection dyes) to the engine oil. Engine oil is an engineered product and its performance may be impaired by supplemental additives.

Disposing Of Used Engine Oil And Oil Filters

Care should be taken in disposing of used engine oil and oil filters from your vehicle. Used oil and oil filters, indiscriminately discarded, can present a problem to the environment. Contact your authorized dealer, service station or governmental agency for advice on how and where used oil and oil filters can be safely discarded in your area.

Engine Oil Filter

The engine oil filter should be replaced with a new filter at every engine oil change.

Engine Oil Filter Selection

This manufacturer's engines have a full-flow type oil filter. Use a filter of this type for replacement. The quality of replacement filters varies considerably. Only high quality filters should be used to assure most efficient service. MOPAR engine oil filters are a high quality oil filter and are recommended.

Downloaded from www.Manualslib.com manuals search engine

Engine Air Cleaner Filter

Refer to the "Maintenance Schedule" for the proper maintenance intervals.

WARNING!

The air induction system (air cleaner, hoses, etc.) can provide a measure of protection in the case of engine backfire. Do not remove the air induction system (air cleaner, hoses, etc.) unless such removal is necessary for repair or maintenance. Make sure that no one is near the engine compartment before starting the vehicle with the air induction system (air cleaner, hoses, etc.) removed. Failure to do so can result in serious personal injury.

Engine Air Cleaner Filter Selection

The quality of replacement engine air cleaner filters varies considerably. Only high quality filters should be used to assure most efficient service. MOPAR engine air cleaner filters are a high quality filter and are recommended.

CAUTION!

Some aftermarket air cleaners and filters can cause mass air flow sensor issues which can lead to a driveability problem or a limp home condition.

Downloaded from www.Manualslib.com manuals search engine

Maintenance-Free Battery

The top of the maintenance-free battery is vented, and must be replaced with a vented battery.

The battery is located underneath an access panel inside the rear compartment on the left side of the vehicle. A remote battery terminal is located in the engine compartment for jump-starting. Refer to "Jump-Starting Procedures" in "What To Do In Emergencies" for further information.

To gain access to the battery, remove the floor portion of the rear compartment carpet.

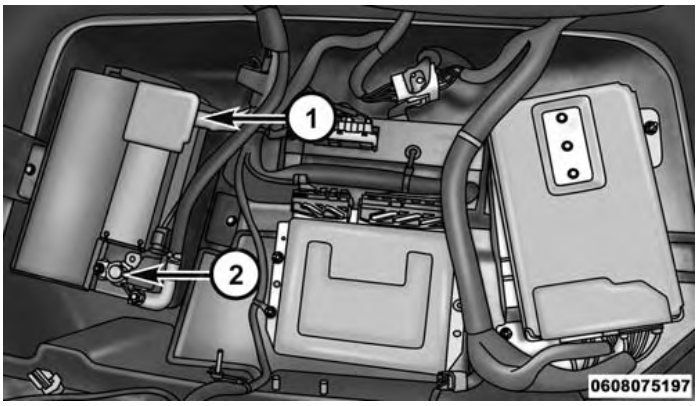

Battery Location

1 — Positive Battery Post
2 — Negative Battery Post

Downloaded from www.Manualslib.com manuals search engine

WARNING!

- **Battery fluid is a corrosive acid solution and can burn or even blind you. Do not allow battery fluid to contact your eyes, skin, or clothing. Do not lean over a battery when attaching clamps. If acid splashes in eyes or on skin, flush the area immediately with large amounts of water.**
- **Battery gas is flammable and explosive. Keep flame or sparks away from the battery. Do not use a booster battery or any other booster source with an output greater than 12 Volts. Do not allow cable clamps to touch each other.**
- **Battery posts, terminals, and related accessories contain lead and lead compounds. Wash hands after handling.**

CAUTION!

- **It is essential when replacing the cables on the battery that the positive cable is attached to the positive post and the negative cable is attached to the negative post. Battery posts are marked positive (+) and negative (-) and are identified on the battery case. Cable clamps should be tight on the terminal posts and free of corrosion.**
- **If a "fast charger" is used while the battery is in the vehicle, disconnect both vehicle battery cables before connecting the charger to the battery. Do not use a "fast charger" to provide starting voltage.**

Hibernation Mode

The Hibernation mode feature conserves battery power when storing the vehicle. It allows for up to three months

Downloaded from www.Manualslib.com manuals search engine

of storage time without losing radio and engine controller adaptive memory. Using this feature is an alternative to disconnecting the battery.

NOTE: This vehicle is designed to sit in storage with a fully charged battery for up to 30 days. If you plan to store the vehicle longer than 30 days, we recommend doing one of the following:

- Disconnect the battery.
- Use the battery charger.
- Put the vehicle into Hibernation mode (3-month charge).

To Activate Hibernation Mode

1. Cycle the ignition switch to (ACC).
2. Select Hibernation mode within the Driver Information Display (DID).
3. Push the right arrow button on the steering wheel controls for one second. Vehicle will countdown from ten seconds and enter Hibernation Mode.

NOTE: You may push the right arrow button on the steering wheel controls during the countdown to abort Hibernation Mode.

To Deactivate Hibernation Mode

1. Push the RKE UNLOCK button to unlock the vehicle.
2. Push the ignition switch to the ON/RUN position.

Air Conditioner Maintenance

For best possible performance, your air conditioner should be checked and serviced by an authorized dealer at the start of each warm season. This service should include cleaning of the condenser fins and a performance test. Drive belt tension should also be checked at this time.

Downloaded from www.Manualslib.com manuals search engine

WARNING!

- **Use only refrigerants and compressor lubricants approved by the manufacturer for your air conditioning system. Some unapproved refrigerants are flammable and can explode, injuring you. Other unapproved refrigerants or lubricants can cause the system to fail, requiring costly repairs. Refer to Warranty Information Book, located on the DVD, for further warranty information.**
- **The air conditioning system contains refrigerant under high pressure. To avoid risk of personal injury or damage to the system, adding refrigerant or any repair requiring lines to be disconnected should be done by an experienced technician.**

CAUTION!

Do not use chemical flushes in your air conditioning system as the chemicals can damage your air conditioning components. Such damage is not covered by the New Vehicle Limited Warranty.

Refrigerant Recovery And Recycling

R-134a Air Conditioning Refrigerant is a hydrofluorocarbon (HFC) that is endorsed by the Environmental Protection Agency and is an ozone-saving product. However, the manufacturer recommends that air conditioning service be performed by authorized dealer or other service facilities using recovery and recycling equipment.

NOTE: Use only manufacturer approved A/C system PAG compressor oil and refrigerants.

Downloaded from www.Manualslib.com manuals search engine

Body Lubrication

Locks and all body pivot points, including such items as seat tracks, door hinge pivot points and rollers, liftgate, tailgate, decklid, sliding doors and hood hinges, should be lubricated periodically with a lithium based grease, such as MOPAR Spray White Lube to assure quiet, easy operation and to protect against rust and wear. Prior to the application of any lubricant, the parts concerned should be wiped clean to remove dust and grit; after lubricating excess oil and grease should be removed. Particular attention should also be given to hood latching components to ensure proper function. When performing other underhood services, the hood latch, release mechanism and safety catch should be cleaned and lubricated.

The external lock cylinders should be lubricated twice a year, preferably in the Fall and Spring. Apply a small amount of a high quality lubricant, such as MOPAR Lock Cylinder Lubricant directly into the lock cylinder.

Wiper Blades

Clean the rubber edges of the wiper blades and the windshield and rear window periodically with a sponge or soft cloth and a mild nonabrasive cleaner. This will remove accumulations of salt, waxes, or road film, and help reduce streaking and smearing.

Operation of the wipers on dry glass for long periods may cause deterioration of the wiper blades. Always use washer fluid when using the wipers to remove salt or dirt from a dry windshield or rear window.

Avoid using the wiper blades to remove frost or ice from the windshield or rear window. Make sure that they are not frozen to the glass before turning them on to avoid damaging the blade. Keep the wiper blade out of contact with petroleum products such as engine oil, gasoline, etc.

Downloaded from www.Manualslib.com manuals search engine

NOTE: Life expectancy of wiper blades varies depending on geographical area and frequency of use. Poor performance of blades may be present with chattering, marks, water lines or wet spots. If any of these conditions are present, clean the wiper blades or replace as necessary.

Adding Washer Fluid

The windshield washer fluid reservoir is located in the front of the engine compartment on the passenger side of the vehicle. Be sure to check the fluid level in the reservoir at regular intervals. Fill the reservoir with windshield washer solvent (not engine coolant (anti-freeze) and operate the system for a few seconds to flush out the residual water.

WARNING!

Commercially available windshield washer solvents are flammable. They could ignite and burn you. Care must be exercised when filling or working around the washer solution.

Exhaust System

The best protection against carbon monoxide entry into the vehicle body is a properly maintained engine exhaust system.

If you notice a change in the sound of the exhaust system; or if the exhaust fumes can be detected inside the vehicle; or when the underside or rear of the vehicle is damaged; have an authorized technician inspect the complete exhaust system and adjacent body areas for broken, damaged, deteriorated, or mispositioned parts. Open seams or loose connections could permit exhaust fumes to seep into the passenger compartment. In addition, have the

Downloaded from www.Manualslib.com manuals search engine

exhaust system inspected each time the vehicle is raised for lubrication or oil change. Replace as required.

WARNING!

- **Exhaust gases can injure or kill. They contain carbon monoxide (CO), which is colorless and odorless. Breathing it can make you unconscious and can eventually poison you. To avoid breathing CO, refer to "Safety Tips/Exhaust Gas" in "Things To Know Before Starting Your Vehicle" for further information.**
- **A hot exhaust system can start a fire if you park over materials that can burn. Such materials might be grass or leaves coming into contact with your exhaust system. Do not park or operate your vehicle in areas where your exhaust system can contact anything that can burn.**

CAUTION!

- **The catalytic converter requires the use of unleaded fuel only. Leaded gasoline will destroy the effectiveness of the catalyst as an emissions control device and may seriously reduce engine performance and cause serious damage to the engine.**
- **Damage to the catalytic converter can result if your vehicle is not kept in proper operating condition. In the event of engine malfunction, particularly involving engine misfire or other apparent loss of performance, have your vehicle serviced promptly. Continued operation of your vehicle with a severe malfunction could cause the converter to overheat, resulting in possible damage to the converter and vehicle.**

Downloaded from www.Manualslib.com manuals search engine

Under normal operating conditions, the catalytic converter will not require maintenance. However, it is important to keep the engine properly tuned to assure proper catalyst operation and prevent possible catalyst damage.

NOTE: Intentional tampering with emissions control systems can result in civil penalties being assessed against you.

In unusual situations involving grossly malfunctioning engine operation, a scorching odor may suggest severe and abnormal catalyst overheating. If this occurs, stop the vehicle, turn off the engine and allow it to cool. Service, including a tune-up to manufacturer's specifications, should be obtained immediately.

To minimize the possibility of catalytic converter damage:

- Do not shut off the engine or interrupt the ignition, when the transmission is in gear and the vehicle is in motion.
- Do not try to start the engine by pushing or towing the vehicle.
- Do not idle the engine with any spark plug wires disconnected or removed, such as when diagnostic testing, or for prolonged periods during very rough idle or malfunctioning operating conditions.

Downloaded from www.Manualslib.com manuals search engine

Cooling System

WARNING!

- **When working near the radiator cooling fan, disconnect the fan motor lead or cycle the ignition switch to the LOCK position. The fan is temperature controlled and can start at any time the ignition switch is in the ON position.**
- **You or others can be badly burned by hot engine coolant (antifreeze) or steam from your radiator. If you see or hear steam coming from under the hood, do not open the hood until the radiator has had time to cool. Never try to open a cooling system pressure cap when the radiator is hot.**

Coolant Checks

Check engine coolant (antifreeze) protection every 12 months (before the onset of freezing weather, where applicable). If the engine coolant (antifreeze) is dirty, the system should be drained, flushed, and refilled with fresh OAT coolant (conforming to MS.90032) by an authorized dealer. Check the front of the A/C condenser/radiator for any accumulation of bugs, leaves, etc. If dirty, clean by gently spraying water from a garden hose vertically down the face of the condenser/radiator.

Check the coolant recovery bottle tubing for brittle rubber, cracking, tears, cuts, and tightness of the connection at the bottle and radiator. Inspect the entire system for leaks.

With the engine at normal operating temperature (but not running), check the cooling system pressure cap for proper vacuum sealing by draining a small amount of engine coolant (antifreeze) from the radiator drain cock. If the cap is sealing properly, the engine coolant (antifreeze) will begin to drain from the coolant recovery

Downloaded from www.Manualslib.com manuals search engine

bottle. DO NOT REMOVE THE COOLANT PRESSURE CAP WHEN THE COOLING SYSTEM IS HOT.

Cooling System — Drain, Flush And Refill

NOTE: Some vehicles require special tools to add coolant properly. Failure to fill these systems properly could lead to severe internal engine damage. If any coolant is needed to be added to the system please contact your local authorized dealer.

If the engine coolant (antifreeze) is dirty or contains visible sediment, have an authorized dealer clean and flush with OAT coolant (antifreeze) (conforming to MS.90032).

Refer to the "Maintenance Schedule" for the proper maintenance intervals.

Selection Of Coolant

Refer to "Fluids, Lubricants, And Genuine Parts" in "Maintaining Your Vehicle" for further information.

CAUTION!

- **Mixing of engine coolant (antifreeze) other than specified Organic Additive Technology (OAT) engine coolant (antifreeze), may result in engine damage and may decrease corrosion protection. Organic Additive Technology (OAT) engine coolant is different and should not be mixed with Hybrid Organic Additive Technology (HOAT) engine coolant (antifreeze) or any "globally compatible" coolant (antifreeze). If a non-OAT engine coolant (antifreeze) is introduced into the cooling system in an emergency, the cooling system will need to be drained, flushed, and refilled with fresh**

(Continued)

Downloaded from www.Manualslib.com manuals search engine

CAUTION! ***(Continued)***

OAT coolant (conforming to MS.90032), by an authorized dealer as soon as possible.

- **Do not use water alone or alcohol-based engine coolant (antifreeze) products. Do not use additional rust inhibitors or antirust products, as they may not be compatible with the radiator engine coolant and may plug the radiator.**
- **This vehicle has not been designed for use with propylene glycol-based engine coolant (antifreeze). Use of propylene glycol-based engine coolant (antifreeze) is not recommended.**

Adding Coolant

Your vehicle has been built with an improved engine coolant (OAT coolant conforming to MS.90032) that allows extended maintenance intervals. This engine coolant (antifreeze) can be used up to ten years or 150,000 miles (240,000 km) before replacement. To prevent reducing this extended maintenance period, it is important that you use the same engine coolant (OAT coolant conforming to MS.90032) throughout the life of your vehicle.

Please review these recommendations for using Organic Additive Technology (OAT) engine coolant (antifreeze) that meets the requirements of FCA Material Standard MS.90032. When adding engine coolant (antifreeze):

- We recommend using MOPAR Antifreeze/Coolant 10 Year/150,000 Mile Formula OAT (Organic Additive Technology) that meets the requirements of FCA Material Standard MS.90032.
- Mix a minimum solution of 50% OAT engine coolant that meets the requirements of FCA Material Standard MS.90032 and distilled water. Use higher concentrations (not to exceed 70%) if temperatures below –34°F (–37°C) are anticipated.

Downloaded from www.Manualslib.com manuals search engine

- Use only high purity water such as distilled or deionized water when mixing the water/engine coolant (antifreeze) solution. The use of lower quality water will reduce the amount of corrosion protection in the engine cooling system.

Please note that it is the owner's responsibility to maintain the proper level of protection against freezing according to the temperatures occurring in the area where the vehicle is operated.

NOTE:

- Some vehicles require special tools to add coolant properly. Failure to fill these systems properly could lead to severe internal engine damage. If any coolant is needed to be added to the system, please contact your local authorized dealer.
- Mixing engine coolant (antifreeze) types is not recommended and can result in cooling system damage. If HOAT and OAT coolant are mixed in an emergency, have a authorized dealer drain, flush, and refill with OAT coolant (conforming to MS.90032) as soon as possible.

Cooling System Pressure Cap

The cap must be fully tightened to prevent loss of engine coolant (antifreeze), and to insure that engine coolant (antifreeze) will return to the radiator from the coolant recovery bottle.

The cap should be inspected and cleaned if there is any accumulation of foreign material on the sealing surfaces.

WARNING!

- **The warning words "DO NOT OPEN HOT" on the cooling system pressure cap are a safety precaution. Never add engine coolant (antifreeze) when the**

(Continued)

Downloaded from www.Manualslib.com manuals search engine

WARNING! ***(Continued)***

engine is overheated. Do not loosen or remove the cap to cool an overheated engine. Heat causes pressure to build up in the cooling system. To prevent scalding or injury, do not remove the pressure cap while the system is hot or under pressure.

- **Do not use a pressure cap other than the one specified for your vehicle. Personal injury or engine damage may result.**

Disposal Of Used Engine Coolant

Used ethylene glycol-based engine coolant (antifreeze) is a regulated substance requiring proper disposal. Check with your local authorities to determine the disposal rules for your community. To prevent ingestion by animals or children, do not store ethylene glycol-based engine coolant (antifreeze) in open containers or allow it to remain in puddles on the ground. If ingested by a child or pet, seek emergency assistance immediately. Clean up any ground spills immediately.

Coolant Level

The coolant bottle provides a quick visual method for determining that the coolant level is adequate. With the engine OFF and cold, the level of the engine coolant (antifreeze) in the bottle should be between the ranges indicated on the bottle.

The radiator normally remains completely full, so there is no need to remove the radiator/coolant pressure cap unless checking for engine coolant (antifreeze) freeze point or replacing coolant. Advise your service attendant of this. As long as the engine operating temperature is satisfactory, the coolant bottle need only be checked once a month.

Downloaded from www.Manualslib.com manuals search engine

When additional engine coolant (antifreeze) is needed to maintain the proper level, only OAT coolant that meets the requirements of FCA Material Standard MS.90032 should be added to the coolant bottle. Do not overfill.

Points To Remember

NOTE: When the vehicle is stopped after a few miles/kilometers of operation, you may observe vapor coming from the front of the engine compartment. This is normally a result of moisture from rain, snow, or high humidity accumulating on the radiator and being vaporized when the thermostat opens, allowing hot engine coolant (antifreeze) to enter the radiator.

If an examination of your engine compartment shows no evidence of radiator or hose leaks, the vehicle may be safely driven. The vapor will soon dissipate.

- Do not overfill the coolant expansion bottle.
- Check the coolant freeze point in the radiator and in the coolant expansion bottle. If engine coolant (antifreeze) needs to be added, the contents of the coolant expansion bottle must also be protected against freezing.
- If frequent engine coolant (antifreeze) additions are required, the cooling system should be pressure tested for leaks.
- Maintain engine coolant (antifreeze) concentration at a minimum of 50% OAT coolant (conforming to MS.90032) and distilled water for proper corrosion protection of your engine which contains aluminum components.
- Make sure that the coolant expansion bottle overflow hoses are not kinked or obstructed.
- Keep the front of the radiator clean. If your vehicle is equipped with air conditioning, keep the front of the condenser clean.

Downloaded from www.Manualslib.com manuals search engine

- Do not change the thermostat for Summer or Winter operation. If replacement is ever necessary, install ONLY the correct type thermostat. Other designs may result in unsatisfactory engine coolant (antifreeze) performance, poor gas mileage, and increased emissions.

Brake System

To ensure brake system performance, all brake system components should be inspected periodically. Refer to "Maintenance Schedule" for the proper maintenance intervals.

WARNING!

Riding the brakes can lead to brake failure and possibly an accident. Driving with your foot resting or riding on the brake pedal can result in abnormally

(Continued)

WARNING! *(Continued)*

high brake temperatures, excessive lining wear, and possible brake damage. You would not have your full braking capacity in an emergency.

Master Cylinder — Brake Fluid Level Check

Check the fluid level in the master cylinder immediately if the brake system warning light indicates system failure.

Check the fluid level in the master cylinder when performing underhood services.

Clean the top of the master cylinder area before removing the cap. If necessary, add fluid to bring the fluid level up to the requirements described on the brake fluid reservoir.

Overfilling of fluid is not recommended because it may cause leaking in the system.

Downloaded from www.Manualslib.com manuals search engine

With disc brakes, fluid level can be expected to fall as the brake pads wear. However, low fluid level may be caused by a leak and a checkup may be needed.

Use only the manufacturer's recommended brake fluid. Refer to "Fluids, Lubricants, And Genuine Parts" in "Maintaining Your Vehicle" for further information. Use of a brake fluid that may have a lower initial boiling point or unidentified as to specification, may result in sudden brake failure during hard prolonged braking.

WARNING!

- **Use only manufacturer's recommended brake fluid. Refer to "Fluids, Lubricants, And Genuine Parts" in "Maintaining Your Vehicle" for further information. Using the wrong type of brake fluid can severely damage your brake system and/or impair its performance. The proper type of brake fluid for your**

(Continued)

WARNING! ***(Continued)***

vehicle is also identified on the original factory installed hydraulic master cylinder reservoir.

- **To avoid contamination from foreign matter or moisture, use only new brake fluid or fluid that has been in a tightly closed container. Keep the master cylinder reservoir cap secured at all times. Brake fluid in a open container absorbs moisture from the air resulting in a lower boiling point. This may cause it to boil unexpectedly during hard or prolonged braking, resulting in sudden brake failure. This could result in a accident.**
- **Overfilling the brake fluid reservoir can result in spilling brake fluid on hot engine parts, causing the brake fluid to catch fire. Brake fluid can also damage painted and vinyl surfaces, care should be taken to avoid its contact with these surfaces.**

(Continued)

Downloaded from www.Manualslib.com manuals search engine

WARNING! ***(Continued)***

- **Do not allow petroleum based fluid to contaminate the brake fluid. Brake seal components could be damaged, causing partial or complete brake failure. This could result in an accident.**

Change Brake Fluid

Brake fluid will tend to absorb moisture from the atmosphere over time. If the fluid becomes contaminated with water, brake performance will deteriorate. Therefore, the brake fluid must be changed at the intervals specified in the "Maintenance Schedule." Refer to "Maintenance Schedule" for further information. See your authorized dealer for service.

Manual Transmission

Transmission Fluid Level Check

Check the fluid in the transmission when performing other underbody services.

Check the fluid level by removing the fill plug located on the left side of the transmission. The fluid level should be approximately 1/4 in (6.4 mm) below the bottom of the fill hole. Add fluid, if necessary, to maintain the proper level. Refer to "Fluids, Lubricants, And Genuine Parts" in "Maintaining Your Vehicle" for further information.

NOTE: DO NOT overfill transmission, damage can occur.

Downloaded from www.Manualslib.com manuals search engine

CAUTION!

Using a transmission fluid other than the manufacturer's recommended fluid may cause deterioration in transmission shift quality and/or damage to the transmission. Refer to "Fluids, Lubricants, And Genuine Parts" in this section for fluid specifications.

Change Transmission Fluid

Refer to "Maintenance Schedule" for the proper maintenance intervals. If contaminated with water, change the fluid immediately. See your authorized dealer for service.

Hydraulic Clutch

Master Cylinder — Clutch Fluid Level Check

The clutch hydraulic system is fed by a segregated volume of fluid within the brake system master cylinder reservoir. In the event of leakage or wear, use only the manufacturer's recommended brake fluid. Refer to "Fluids, Lubricants, And Genuine Parts" in "Maintaining Your Vehicle" for further information.

Rear Axle

Axle Lubricant Level Check

Check the exterior of the axle for evidence of gear oil leakage every 12 months or 6,000 miles (10 000 km). This check should be made with the vehicle level and on the ground or raised on an axle and wheel type hoist. The axle lubricant level should be between the bottom of the filler plug and a point approximately 3/8 inch (9.5 mm) below the filler plug. If adding axle lubricant, use only the manufacturer's recommended axle lubricant. Refer to "Fluids, Lubricants, And Genuine Parts" in "Maintaining Your Vehicle" for further information.

Downloaded from www.Manualslib.com manuals search engine

CAUTION!

Using axle fluid other than the manufactured recommended fluid may cause a shudder/noise issue. refer to "Fluids, Lubes, And Genuine Parts" in " Maintaining Your Vehicle" for further information.

Change Axle Lubricant

Refer to "Maintenance Schedule" for the proper maintenance intervals. Change the lubricant immediately if contaminated with water. See your authorized dealer for service.

Appearance Care And Protection From Corrosion

Protection Of Body And Paint From Corrosion

Vehicle body care requirements vary according to geographic locations and usage. Chemicals that make roads passable in snow and ice, and chemicals that are sprayed on trees and road surfaces during other seasons, are highly corrosive to the metal in your vehicle. Outside parking, which exposes your vehicle to airborne contaminants, road surfaces on which the vehicle is operated, extreme hot or cold weather and other extreme conditions will have an adverse effect on paint, metal trim, and underbody protection.

The following maintenance recommendations will enable you to obtain maximum benefit from the corrosion resistance built into your vehicle.

Washing

- Wash your vehicle regularly. Always wash your vehicle in the shade using MOPAR Car Wash, or a mild car wash soap, and rinse the panels completely with clear water.
- If insects, tar, or other similar deposits have accumulated on your vehicle, use MOPAR Super Kleen Bug and Tar Remover to remove.

Downloaded from www.Manualslib.com manuals search engine

- Use a high quality cleaner wax, such as MOPAR Cleaner Wax to remove road film, stains and to protect your paint finish. Take care never to scratch the paint.
- Avoid using abrasive compounds and power buffing that may diminish the gloss or thin out the paint finish.

CAUTION!

- **Do not use abrasive or strong cleaning materials such as steel wool or scouring powder that will scratch metal and painted surfaces.**
- **Use of power washers exceeding 1,200 psi (8 274 kPa) can result in damage or removal of paint and decals.**

Wheel And Wheel Trim Care

- All wheels and wheel trim, especially aluminum and chrome plated wheels, should be cleaned regularly with a mild soap and water to prevent corrosion.
- To remove heavy soil and/or excessive brake dust, use MOPAR Wheel Cleaner or equivalent or select a non-abrasive, non-acidic cleaner.

CAUTION!

Do not use scouring pads, steel wool, a bristle brush, or metal polishes. Do not use oven cleaner. These products may damage the wheel's protective finish. Avoid automatic car washes that use acidic solutions or harsh brushes that may damage the wheel's protective finish. Only MOPAR Wheel Cleaner or equivalent is recommended.

Downloaded from www.Manualslib.com manuals search engine

NOTE: If your vehicle is equipped with Dark Vapor Chrome wheels DO NOT USE wheel cleaners, abrasives or polishing compounds. They will permanently damage this finish and such damage is not covered by the New Vehicle Limited Warranty. USE ONLY MILD SOAP AND WATER WITH A SOFT CLOTH. Used on a regular basis this is all that is required to maintain this finish.

Interior Care

Use MOPAR Total Clean to clean fabric upholstery and carpeting.

Use MOPAR Total Clean to clean vinyl upholstery.

MOPAR Total Clean is specifically recommended for leather upholstery.

Your leather upholstery can be best preserved by regular cleaning with a damp soft cloth. Small particles of dirt can act as an abrasive and damage the leather upholstery and should be removed promptly with a damp cloth. Stubborn soils can be removed easily with a soft cloth and MOPAR Total Clean. Care should be taken to avoid soaking your leather upholstery with any liquid. Please do not use polishes, oils, cleaning fluids, solvents, detergents, or ammonia-based cleaners to clean your leather upholstery. Application of a leather conditioner is not required to maintain the original condition.

WARNING!

Do not use volatile solvents for cleaning purposes. Many are potentially flammable, and if used in closed areas they may cause respiratory harm.

CAUTION!

Direct contact of air fresheners, insect repellents, suntan lotions, or hand sanitizers to the plastic, painted, or decorated surfaces of the interior may cause permanent damage. Wipe away immediately.

Downloaded from www.Manualslib.com manuals search engine

CAUTION!

Damage caused by these type of products may not be covered by your New Vehicle Limited Warranty.

CAUTION!

Do not use Alcohol and Alcohol-based and/or Keton based cleaning products to clean leather seats, as damage to the seat may result.

Leather Or Vinyl Seat/Trim Care And Cleaning

Leather is best preserved by regular cleaning with a damp soft cloth. Small particles of dirt can act as an abrasive and damage the leather surface and should be removed immediately with a damp cloth. Stubborn soils can be removed easily with a soft cloth and MOPAR Total Clean or equivalent. Care should be taken to avoid soaking the leather with any liquid. Please do not use polishes, oils, cleaning fluids, solvents, detergents, or ammonia-based cleaners to clean the leather. Application of a leather conditioner is not required to maintain the original condition.

Glass Surfaces

All glass surfaces should be cleaned on a regular basis with MOPAR Glass Cleaner, or any commercial household-type glass cleaner. Never use an abrasive type cleaner. Use caution when cleaning the inside rear window equipped with electric defrosters or windows equipped with radio antennas. Do not use scrapers or other sharp instrument that may scratch the elements.

When cleaning the rear view mirror, spray cleaner on the towel or cloth that you are using. Do not spray cleaner directly on the mirror.

Downloaded from www.Manualslib.com manuals search engine

Cleaning Plastic Instrument Cluster Lenses

The lenses in front of the instruments in this vehicle are molded in clear plastic. When cleaning the lenses, care must be taken to avoid scratching the plastic.

1. Clean with a wet soft cloth. A mild soap solution may be used, but do not use high alcohol content or abrasive cleaners. If soap is used, wipe clean with a clean damp cloth.
2. Dry with a soft cloth.

Seat Belt Maintenance

Do not bleach, dye or clean the belts with chemical solvents or abrasive cleaners. This will weaken the fabric. Sun damage can also weaken the fabric.

If the belts need cleaning, use a mild soap solution or lukewarm water. Do not remove the belts from the car to wash them. Dry with a soft cloth.

Replace the belts if they appear frayed or worn or if the buckles do not work properly.

WARNING!

A frayed or torn belt could rip apart in a collision and leave you with no protection. Inspect the belt system periodically, checking for cuts, frays, or loose parts. Damaged parts must be replaced immediately. Do not disassemble or modify the system. Seat belt assemblies must be replaced after a collision if they have been damaged (i.e., bent retractor, torn webbing, etc.).

Aero Group (Front Splitter) — If Equipped

The front splitter will not flex or compress against impacts from the front. If an impact does occur, have the splitter inspected. A cracked or delaminated splitter should be replaced.

Downloaded from www.Manualslib.com manuals search engine

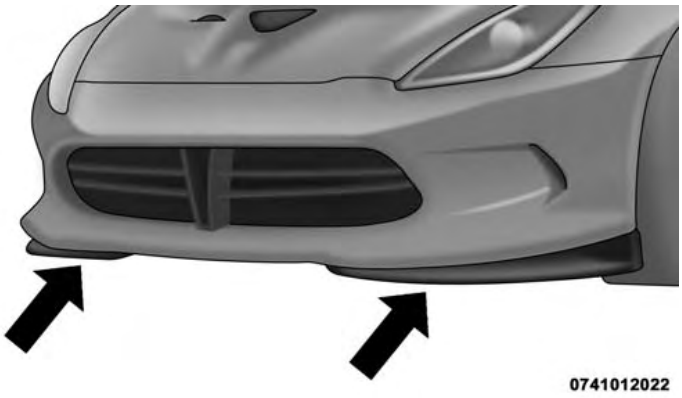

Front Splitter

Always leave ample room and be sure to educate anyone you allow to operate the vehicle.

CAUTION!

Use care when approaching parking blocks, tall speed bumps and garage curbs. These surfaces can damage your splitter and fascia.

Use caution when driving up to sloped surfaces or over speed bumps. Approaching a speed bump or a slope at a slight angle may improve your clearance.

CAUTION!

- **Hard contact with steep ramps may cause damage to your splitter and fascia.**
- **Replace rub strips when they are worn down to 1/8 inch (3 mm) on the front edge. This will avoid damage to the carbon fiber panel.**

Refer to the ACR Owner's Manual Supplement for information specific to the ACR.

Downloaded from www.Manualslib.com manuals search engine

Rear Wing — If Equipped

Do not operate the vehicle with the rear wing removed. The aerodynamic balance of this set up is unstable and can cause a loss of control.

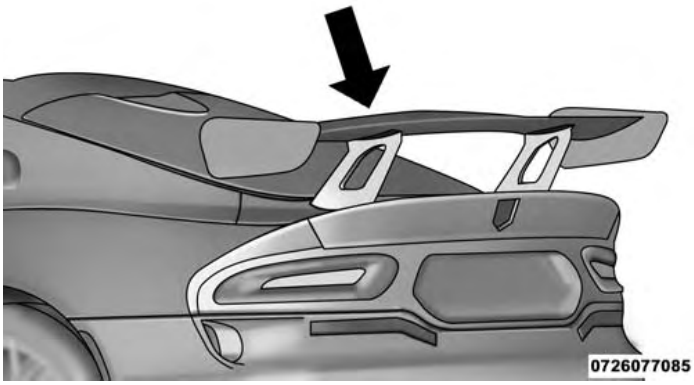

Rear Wing

Water may drain slowly from the ends of the wing after washing or exposure to rain, this is normal. Opening the liftgate will expedite drainage.

WARNING!

Use extra caution when closing the rear deck lid on a vehicle equipped with a rear wing. Due to the added weight of the rear wing the deck lid will close at a higher rate of speed and can cause injury.

Carbon Fiber — If Equipped

The clear coated carbon fiber panels will have some variation and minor waviness in the woven pattern. This is inherent to the process and a sign of its authenticity.

All carbon fiber materials are susceptible to UV degradation during long exposure to the sun. The woven carbon components use the latest technology in the resin

Downloaded from www.Manualslib.com manuals search engine

system and the clear coat. As with any automotive coating, storing your vehicle in a covered location will guarantee a long lasting finish.

The rear wing is molded with unidirectional carbon fiber and painted in body color. Some patterned or linear conditions may be visible in the painted carbon fiber surfaces. This is also a normal result of the carbon fiber process.

FUSES

WARNING!

- **When replacing a blown fuse, always use an appropriate replacement fuse with the same amp rating as the original fuse. Never replace a fuse with another fuse of higher amp rating. Never replace a blown fuse with metal wires or any other**

(Continued)

WARNING! ***(Continued)***

material. Failure to use proper fuses may result in serious personal injury, fire and/or property damage.

- **Before replacing a fuse, make sure that the ignition is off and that all the other services are switched off and/or disengaged.**
- **If the replaced fuse blows again, contact an authorized dealer.**
- **If a general protection fuse for safety systems (air bag system, braking system), power unit systems (engine system, gearbox system) or steering system blows, contact an authorized dealer.**

Downloaded from www.Manualslib.com manuals search engine

Power Distribution Center

The Power Distribution Center is located in the engine compartment on the driver's side of the vehicle. This center contains fuses and relays.

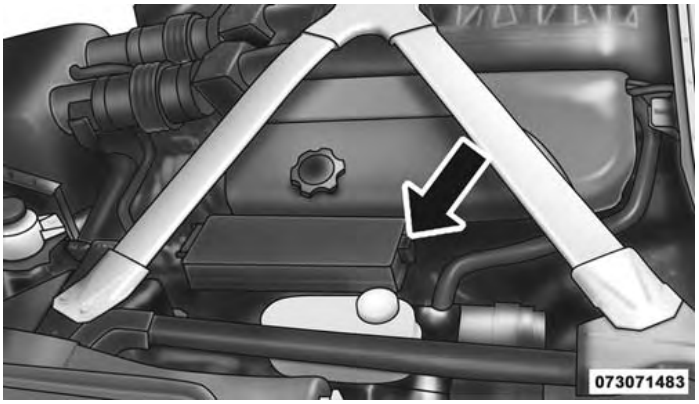

Power Distribution Center

Cavity	Relay	Cartridge Fuse	Mini-Fuse	Description
3	—	40 Amp Green	—	Rad Fan
4	—	40 Amp Green	—	Rad Fan Rly High
5	—	40 Amp Green	—	ABS/ESP Pump Feed
6	—	40 Amp Green	—	Starter

Downloaded from www.Manualslib.com manuals search engine

Cavity	Relay	Cartridge Fuse	Mini-Fuse	Description
7	—	40 Amp Green	—	CBC (Ext. Lighting #1)
8	—	40 Amp Green	—	CBC (Ext. Lighting #2)
9	—	30 Amp Pink	—	CBC (Lighting, Washer Pump)
10	—	30 Amp Pink	—	CBC (Power Lock)
11	—	Jumper Black	—	B+ Jumper
12	—	25 Amp Clear	—	ABS/ESP Valve Feed
13	—	—	20 Amp Yellow	Horn
14	—	—	10 Amp Red	A/C Clutch
15	—	—	10 Amp Red	Diagnostic, Fuel Door, Stop Switch
16	—	—	15 Amp Blue	KIN, RF Hub
17	—	—	25 Amp circuit breaker	Power Seats
18	—	30 Amp Pink	—	Driver Door Mod

Downloaded from www.Manualslib.com manuals search engine

Cavity	Relay	Cartridge Fuse	Mini-Fuse	Description
19	—	30 Amp Pink	—	Passenger Door Mod
20	—	30 Amp Pink	—	Rear Window Defroster
21	—	20 Amp Blue	—	Wiper
22	—	Jumper Black	—	B+ Jumper
23	—	—	15 Amp Blue	HVAC MOD, Cluster, ICS-Switch Bank
24	—	—	25 Amp Clear	PCM-Powertrain Control Module
25	—	—	25 Amp Clear	Fuel Pump
26	—	—	20 Amp Yellow	ASD #1
27	—	—	20 Amp Yellow	ASD #2
28	—	—	—	Spare

Downloaded from www.Manualslib.com manuals search engine

Cavity	Relay	Cartridge Fuse	Mini-Fuse	Description
29	—	40 Amp Green	—	HVAC Blower
30	—	20 Amp Yellow	—	RR Power Outlet, Adj. Pedals, UCI
31	—	Jumper Black	—	B+ Jumper
32	—	—	—	Spare
33	—	20 Amp Blue	—	Run Acc relay
34	—	Jumper Black	—	B+ Jumper
35	—	—	—	Spare
36	—	—	10 Amp Red	ORC Mod Run
37	—	—	15 Amp Blue	Cluster, Camera
38	—	—	20 Amp Yellow	Active Damping Suspension
39	—	—	10 Amp Red	HVAC Module, In Car Temp, Blower Relay
40	—	—	—	Spare
41	G8VA	—	—	Run/Start

Downloaded from www.Manualslib.com manuals search engine

Cavity	Relay	Cartridge Fuse	Mini-Fuse	Description
42	G8VA	—	—	Fuel Door
43AC (Forward Fuse)	—	—	2 Amp Grey	SCCM
43BE (Rearward Fuse)	—	—	10 Amp Red	Corax
44AC (Forward Fuse)	—	—	10 Amp Red	Rear View Mirror, Aux Port Jumper.
44BE (Rearward Fuse)	—	—	10 Amp Red	IBS
45	—	—	10 Amp Red	PCM-Powertrain Control Module, Fuel Pump Relay.
46	—	—	10 Amp Red	ESC Module, Stop Lamp Switch
47	—	—	10 Amp Red	ORC Module, Passenger Seat OCM
48	—	—	10 Amp Red	SCCM

Downloaded from www.Manualslib.com manuals search engine

Cavity	Relay	Cartridge Fuse	Mini-Fuse	Description
49	—	—	25 Amp Clear	Amplifier
50	HC Micro	—	—	Rad Fan
51	HC Micro	—	—	Rad Fan Relay SER/PAR
52	HC Micro	—	—	Starter Relay
53	HC Micro	—	—	Rear Window Defroster Relay
54	HC Relay	—	—	Rad Fan Relay High
55	HC Micro	—	—	Wiper ON/OFF
56	HC Micro	—	—	Wiper LO/HI
57	G8VA	—	—	Horn Relay
58	G8VA	—	—	A/C Clutch Relay
59	HC Micro	—	—	HVAC Blower
60	HC Micro	—	—	Fuel Pump
61	G8VA	—	—	Run Relay #1
62	G8VA	—	—	Run Relay #2

Downloaded from www.Manualslib.com manuals search engine

Cavity	Relay	Cartridge Fuse	Mini-Fuse	Description
63	HC Micro	—	—	ASD #1
64	HC Micro	—	—	ASD #2
65	G8VA	—	—	Run Accy #1, Pop Up, Driver Door Window Switch
66	—	—	—	Spare

NOTE: A 15 Amp fuse for the radio system is located in-line at the battery positive terminal.

Downloaded from www.Manualslib.com manuals search engine

CAUTION!

- **When installing the power distribution center cover, it is important to ensure the cover is properly positioned and fully latched. Failure to do so may allow water to get into the power distribution center and possibly result in an electrical system failure.**
- **When replacing a blown fuse, it is important to use only a fuse having the correct amperage rating. The use of a fuse with a rating other than indicated may result in a dangerous electrical system overload. If a properly rated fuse continues to blow, it indicates a problem in the circuit that must be corrected.**

VEHICLE STORAGE

We recommend that you follow these guidelines for storing your vehicle for extended periods.

- Fill the fuel tank. This will prevent water condensation inside the tank. If you plan to store your vehicle more than two months, add an anti-oxidant fuel stabilizer to the fuel tank.
- Change the oil to remove any corrosive combustion related acids in the crankcase.
- Check that the radiator coolant level of protection is to at least -20°F (-29°C).
- Make sure that all tires are inflated to the optimum pressure.
- Wash and wax the vehicle to protect the finish.
- Store the vehicle in a dry, well-ventilated location.
- Move the wiper blades away from the windshield.

Downloaded from www.Manualslib.com manuals search engine

- Block the wheels. Do not apply the parking brake.
- Cut blocks of plywood about the same size of the tires. Cover each block with indoor/outdoor carpeting and place them between the tires and concrete. This will prevent tire flat spotting.
- For long-term storage, remove the tires and put the vehicle up on blocks. Stack the tires on plywood and cover with a tarp to prevent flat spotting.
- If the vehicle will be subjected to freezing temperatures, either remove the battery and store it in a dry, well ventilated area or connect a trickle charger (1.5 Amp) with automatic shutdown / overcharge protection to the battery. However, do not leave the trickle charger hooked up to the battery without being plugged in to a 110 Volt AC outlet, as this will result in further drain on the vehicle's battery. If the vehicle is not going to be driven in the next three weeks, perform the battery recharge procedure in the Service Manual. Then, either disconnect the battery at the negative terminal or use the "Battery Save Feature" to conserve battery power. Refer to "Maintenance Procedures/ Battery Save Feature" in "Maintaining Your Vehicle" for further information.
- Cover the vehicle whenever possible to prevent accidental damage to the finish.

NOTE: Disconnecting the battery causes the engine control system to lose memory of some "learned" functions. After reconnecting the battery, the engine may run rough until the control module "relearns" these functions. Using the Battery Save Feature will prevent the engine controller from loosing its memory.

Downloaded from www.Manualslib.com manuals search engine

CAUTION!

Use care when disconnecting the remote positive cable. It is connected to the battery and can short out to any metal on the vehicle. Always tape or wrap the exposed cable end to prevent electrical shorts.

Check the battery every four to six weeks to ensure that the voltage is above 12.10 Volts. The voltage will drop more rapidly in hot temperatures. If battery voltage drops below 12.10 Volts, follow the battery recharge procedure in the Service Manual.

NOTE: To help prevent the battery from discharging during shorter periods of inactivity, perform the following:

1. Make sure that the liftgate, hood, doors, windows are completely closed.
2. Make sure that Remote Keyless Entry (RKE) transmitter is operating and that the battery is good.
3. Make sure that the HOOD, LIFTGATE, and DOOR switches are in adjustment. Perform the quick system check, which follows:

Use the remote transmitter to set the alarm. If the alarm SET light comes on and flashes, the system is operating properly. If not, there is a problem with a switch or the system. See your authorized dealer for service.

If you plan to store the vehicle longer than 30 days, we recommend using Hibernation Mode to conserve battery power. Refer to "Hibernation Mode" in Maintenance Procedures for further information.

Downloaded from www.Manualslib.com manuals search engine

REPLACEMENT BULBS

Interior Bulbs

	Bulb Number
Message Center Indicators	Serviced at Authorized Dealer
Cluster	LED (Serviced at Authorized Dealer)
Gauge Pack	Serviced at Authorized Dealer
Heater Control	Serviced at Authorized Dealer
Interior Lamp	LED (Serviced at Authorized Dealer)
Courtesy Foot Well Lights	W3W
Cargo Lamp (Coupe Liftgate)	LED (Serviced at Authorized Dealer)

Downloaded from www.Manualslib.com manuals search engine

Exterior Bulbs

	Bulb Number
Low/High Beam Headlamp	HID (Serviced at Authorized Dealer)
Front Park/Turn Signal Lamp	LED (Serviced at Authorized Dealer)
Daytime Running Lamp (DRL)	LED (Serviced at Authorized Dealer)
Front Side Marker Lamp	2821M
Center High Mounted Stop Lamp (CHMSL)	LED (Serviced at Authorized Dealer)
Tail/Stop/Turn Signal Lamp	LED (Serviced at Authorized Dealer)
Rear Marker Lamp	2821M
Backup Lamp	LED (Serviced at Authorized Dealer)
License Lamp	LED (Serviced at Authorized Dealer)

Downloaded from www.Manualslib.com manuals search engine

BULB REPLACEMENT

NOTE: Lens fogging can occur under certain atmospheric conditions. This will usually clear as atmospheric conditions change to allow the condensation to change back into a vapor. Turning the lamps on will usually accelerate the clearing process.

Front Headlamp, Front Park/Turn Signal Lamp

For bulb replacement, see your authorized dealer.

Front/Rear Side Marker Lamp

For bulb replacement, see your authorized dealer.

Taillamp, Tail/Stop Lamp

For bulb replacement, see your authorized dealer.

Rear Turn Signal Lamp

For bulb replacement, see your authorized dealer.

Backup Lamps

For bulb replacement, see your authorized dealer.

Downloaded from www.Manualslib.com manuals search engine

FLUID CAPACITIES

	U.S.	Metric
Fuel (Approximate)	16 Gallons	60.6 Liters
Engine Oil With Filter		
We recommend you use synthetic SAE 0W-40, API Certified.	11 Quarts	10.4 Liters
Transmission		
We recommend you use MOPAR ATF+4 Automatic Transmission Fluid.	3.4 Quarts	3.2 Liters
Rear Axle		
We recommend you use Castrol SAF-XJ/SAE 75W-140 Synthetic Gear and Axle Lubricant.	1.5 Quarts	1.4 Liters
Cooling System *		
We recommend you use MOPAR Antifreeze/Engine Coolant (OAT coolant conforming to MS.90032) 10 Year/150,000 Mile Formula or equivalent).	16 Quarts	15 Liters
* Includes heater and coolant recovery bottle filled to MAX level.		

Downloaded from www.Manualslib.com manuals search engine

FLUIDS, LUBRICANTS, AND GENUINE PARTS

Engine

Component	Fluid, Lubricant, or Genuine Part
Engine Coolant	We recommend you use MOPAR Antifreeze/Coolant 10 Year/150,000 Mile Formula OAT coolant conforming to MS.90032.
Engine Oil	We recommend you use a full synthetic 0W-40 engine oil such as MOPAR or Pennzoil Ultra or equivalent engine oil.
Engine Oil Filter	We recommend you use MOPAR Engine Oil Filters.
Spark Plugs	We recommend you use MOPAR Spark Plugs.
Fuel Selection	We recommend you use Unleaded 91 Octane Only or Higher, 0-10% Ethanol.

Downloaded from www.Manualslib.com manuals search engine

CAUTION!

- **Mixing of engine coolant (antifreeze) other than specified Organic Additive Technology (OAT) engine coolant (antifreeze), may result in engine damage and may decrease corrosion protection. Organic Additive Technology (OAT) engine coolant is different and should not be mixed with Hybrid Organic Additive Technology (HOAT) engine coolant (antifreeze) or any "globally compatible" coolant (antifreeze). If a non-OAT engine coolant (antifreeze) is introduced into the cooling system in an emergency, the cooling system will need to be drained, flushed, and refilled with fresh OAT coolant (conforming to MS.90032), by an authorized dealer as soon as possible.**

(Continued)

CAUTION! ***(Continued)***

- **Do not use water alone or alcohol-based engine coolant (antifreeze) products. Do not use additional rust inhibitors or antirust products, as they may not be compatible with the radiator engine coolant and may plug the radiator.**
- **This vehicle has not been designed for use with propylene glycol-based engine coolant (antifreeze). Use of propylene glycol-based engine coolant (antifreeze) is not recommended.**

Downloaded from www.Manualslib.com manuals search engine

Chassis

Component	Fluid, Lubricant, or Genuine Part
Transmission	We recommend you use MOPAR ATF+4 Automatic Transmission Fluid.
Rear Axle	We recommend you use Castrol SAF-XJ/SAE 75W-140 Synthetic Gear and Axle Lubricant.
Brake/Clutch Master Cylinder	We recommend you use MOPAR Brake and Clutch Fluid DOT 4 Motor Vehicle.
Power Steering Reservoir	We recommend you use MOPAR Power Steering Fluid + 4, MOPAR or ATF+4 Automatic Transmission Fluid.

Downloaded from www.Manualslib.com manuals search engine

Downloaded from www.Manualslib.com manuals search engine

MAINTENANCE SCHEDULES

CONTENTS

■ MAINTENANCE SCHEDULES 386
□ MAINTENANCE CHART 388

Downloaded from www.Manualslib.com manuals search engine

MAINTENANCE SCHEDULES

The Scheduled Maintenance services listed in this manual must be done at the times or mileages specified to protect your vehicle warranty and ensure the best vehicle performance and reliability. More frequent maintenance may be needed for vehicles in severe operating conditions, such as dusty areas and very short trip driving. Inspection and service should also be done anytime a malfunction is suspected.

NOTE: Under no circumstances should oil change intervals exceed 6,000 miles (10 000 km) or six months, whichever comes first.

CAUTION!

Failure to perform the required maintenance items may result in damage to the vehicle.

At Each Stop For Fuel

- Check the engine oil level about five minutes after a fully warmed engine is shut off. Checking the oil level while the vehicle is on level ground will improve the accuracy of the oil level reading. Add oil only when the level is at or below the ADD or MIN mark.
- Check the windshield washer solvent and add if required.

Downloaded from www.Manualslib.com manuals search engine

Once A Month

- Check tire pressure and look for unusual wear or damage. Rotate tires at the first sign of irregular wear, even if it occurs before your next scheduled service.
- Inspect the battery, and clean and tighten the terminals as required.
- Check the fluid levels of the coolant reservoir, brake master cylinder, power steering, and transmission, and add as needed.
- Check all lights and all other electrical items for correct operation.

At Each Oil Change

- Change the engine oil filter.
- Inspect the exhaust system.

NOTE: Also, inspect the exhaust system if you notice a change in the sound of the exhaust system, or if the exhaust fumes can be detected inside the vehicle.

- Inspect the brake hoses.
- Inspect the suspension components.
- Lubricate door hinges and check springs.
- Check the engine coolant level, hoses, and clamps.
- Check power steering fluid level.

Downloaded from www.Manualslib.com manuals search engine

MAINTENANCE CHART

Miles:	**6,000**	**12,000**	**18,000**	**24,000**	**30,000**	**36,000**	**42,000**	**48,000**	**54,000**	**60,000**	**66,000**	**72,000**	**78,000**	**84,000**	**90,000**	**96,000**	**102,000**	**108,000**	**114,000**	**120,000**	**126,000**	**132,000**	**138,000**	**144,000**	**150,000**
Or Months:	**6**	**12**	**18**	**24**	**30**	**36**	**42**	**48**	**54**	**60**	**66**	**72**	**78**	**84**	**90**	**96**	**102**	**108**	**114**	**120**	**126**	**132**	**138**	**144**	**150**
Or Kilometers:	**10,000**	**20,000**	**30,000**	**40,000**	**50,000**	**60,000**	**70,000**	**80,000**	**90,000**	**100,000**	**110,000**	**120,000**	**130,000**	**140,000**	**150,000**	**160,000**	**170,000**	**180,000**	**190,000**	**200,000**	**210,000**	**220,000**	**230,000**	**240,000**	**250,000**
Change the engine oil and engine oil filter.	**X**	**X**	**X**	**X**	**X**	**X**	**X**	**X**	**X**	**X**	**X**	**X**	**X**	**X**	**X**	**X**	**X**	**X**	**X**	**X**	**X**	**X**	**X**	**X**	**X**
Rotate the tires, rotate at the first sign of irregular wear, even if it occurs before scheduled maintenance.	X	X	X	X	X	X	X	X	X	X	X	X	X	X	X	X	X	X	X	X	X	X	X	X	X
Inspect the brake linings; replace if necessary.		X		X		X		X		X		X		X		X		X		X		X		X	
Inspect the exhaust system.		X		X		X		X		X		X		X		X		X		X		X		X	
Change Brake Fluid				X				X				X				X				X				X	
Adjust the parking brake on vehicles equipped with four wheel disc brakes.					X					X					X					X					X

Downloaded from www.Manualslib.com manuals search engine

Miles:	**6,000**	**12,000**	**18,000**	**24,000**	**30,000**	**36,000**	**42,000**	**48,000**	**54,000**	**60,000**	**66,000**	**72,000**	**78,000**	**84,000**	**90,000**	**96,000**	**102,000**	**108,000**	**114,000**	**120,000**	**126,000**	**132,000**	**138,000**	**144,000**	**150,000**
Or Months:	**6**	**12**	**18**	**24**	**30**	**36**	**42**	**48**	**54**	**60**	**66**	**72**	**78**	**84**	**90**	**96**	**102**	**108**	**114**	**120**	**126**	**132**	**138**	**144**	**150**
Or Kilometers:	**10,000**	**20,000**	**30,000**	**40,000**	**50,000**	**60,000**	**70,000**	**80,000**	**90,000**	**100,000**	**110,000**	**120,000**	**130,000**	**140,000**	**150,000**	**160,000**	**170,000**	**180,000**	**190,000**	**200,000**	**210,000**	**220,000**	**230,000**	**240,000**	**250,000**
Change the engine oil and engine oil filter.	**X**	**X**	**X**	**X**	**X**	**X**	**X**	**X**	**X**	**X**	**X**	**X**	**X**	**X**	**X**	**X**	**X**	**X**	**X**	**X**	**X**	**X**	**X**	**X**	**X**
Change the manual transmission fluid.						X						X						X						X	
Inspect the manual transmission fluid, add as necessary.		X		X				X		X				X		X				X		X			
Change the rear axle fluid.			X			X			X			X			X			X			X			X	
Inspect front suspension, tie rod ends, and boot seals, for cracks or leaks and all parts for damage, wear, improper looseness or end play; replace if necessary.		X		X		X		X		X		X		X		X		X		X		X		X	
Replace the engine air cleaner.					X					X					X					X						X
Inspect and replace the PCV Valve if necessary															X										

Downloaded from www.Manualslib.com manuals search engine

Miles:	6,000	12,000	18,000	24,000	30,000	36,000	42,000	48,000	54,000	60,000	66,000	72,000	78,000	84,000	90,000	96,000	102,000	108,000	114,000	120,000	126,000	132,000	138,000	144,000	150,000
Or Months:	6	12	18	24	30	36	42	48	54	60	66	72	78	84	90	96	102	108	114	120	126	132	138	144	150
Or Kilometers:	10,000	20,000	30,000	40,000	50,000	60,000	70,000	80,000	90,000	100,000	110,000	120,000	130,000	140,000	150,000	160,000	170,000	180,000	190,000	200,000	210,000	220,000	230,000	240,000	250,000
Change the engine oil and engine oil filter.	X	X	X	X	X	X	X	X	X	X	X	X	X	X	X	X	X	X	X	X	X	X	X	X	X
Replace the spark plugs **																X									
Flush and replace the engine coolant at 120 months if not done at 150,000 miles (240,000 km).																				X					X

** The spark plug change interval is mileage based only, monthly intervals do not apply.

Downloaded from www.Manualslib.com manuals search engine

WARNING!

- **You can be badly injured working on or around a motor vehicle. Do only service work for which you have the knowledge and the right equipment. If you have any doubt about your ability to perform a service job, take your vehicle to a competent mechanic.**
- **Failure to properly inspect and maintain your vehicle could result in a component malfunction and effect vehicle handling and performance. This could cause an accident.**

Downloaded from www.Manualslib.com manuals search engine

Downloaded from www.Manualslib.com manuals search engine

IF YOU NEED CONSUMER ASSISTANCE

CONTENTS

- SUGGESTIONS FOR OBTAINING SERVICE FOR YOUR VEHICLE 395
  - Prepare For The Appointment. 395
  - Prepare A List 395
  - Be Reasonable With Requests 395
- IF YOU NEED ASSISTANCE 395
  - FCA US LLC Customer Center 396
  - FCA Canada Inc. Customer Center 396
  - In Mexico Contact 397
  - Customer Assistance For The Hearing Or Speech Impaired (TDD/TTY). 397
  - Service Contract 397
- WARRANTY INFORMATION 398
- MOPAR PARTS 399
- REPORTING SAFETY DEFECTS 399
  - In The 50 United States And Washington, D.C. . .399
  - In Canada. 399
- PUBLICATION ORDER FORMS 400

Downloaded from www.Manualslib.com manuals search engine

■ DEPARTMENT OF TRANSPORTATION UNIFORM TIRE QUALITY GRADES 401
- Treadwear. 401
- Traction Grades 401
- Temperature Grades. 402

Downloaded from www.Manualslib.com manuals search engine

SUGGESTIONS FOR OBTAINING SERVICE FOR YOUR VEHICLE

Prepare For The Appointment

If you are having warranty work done, be sure to have the right papers with you. Take your warranty folder. All work to be performed may not be covered by the warranty. Discuss additional charges with the service manager. Keep a maintenance log of your vehicle's service history. This can often provide a clue to the current problem.

Prepare A List

Make a written list of your vehicle's problems or the specific work you want done. If you've had an accident or work done that is not on your maintenance log, let the service advisor know.

Be Reasonable With Requests

If you list a number of items and you must have your vehicle by the end of the day, discuss the situation with the service advisor and list the items in order of priority. At many authorized dealers, you may obtain a rental vehicle at a minimal daily charge. If you need a rental, it is advisable to make these arrangements when you call for an appointment.

IF YOU NEED ASSISTANCE

The manufacturer and its authorized dealer are vitally interested in your satisfaction. We want you to be happy with our products and services.

Warranty service must be done by an authorized dealer. We strongly recommend that you take the vehicle to an authorized dealer. They know your vehicle the best, and are most concerned that you get prompt and high quality service. The manufacturer's authorized dealer have the

Downloaded from www.Manualslib.com manuals search engine

facilities, factory-trained technicians, special tools, and the latest information to ensure the vehicle is fixed correctly and in a timely manner.

This is why you should always talk to an authorized dealer service manager first. Most matters can be resolved with this process.

- If for some reason you are still not satisfied, talk to the general manager or owner of the authorized dealer. They want to know if you need assistance.
- If an authorized dealer is unable to resolve the concern, you may contact the manufacturer's customer center.

Any communication to the manufacturer's customer center should include the following information:

- Owner's name and address
- Owner's telephone number (home and office)
- Authorized dealer name
- Vehicle Identification Number (VIN)
- Vehicle delivery date and mileage

FCA US LLC Customer Center

P.O. Box 21–8004

Auburn Hills, MI 48321–8004

Phone: (855) SRT–TEAM

FCA Canada Inc. Customer Center

P.O. Box 1621

Windsor, Ontario N9A 4H6

Phone: (800) 465-2001 English / (800) 387-9983 French

Downloaded from www.Manualslib.com manuals search engine

In Mexico Contact

Av. Prolongacion Paseo de la Reforma, 1240

Sante Fe C.P. 05109

Mexico, D. F.

In Mexico City: 5081-7568

Outside Mexico City: 1-800-505-1300

Customer Assistance For The Hearing Or Speech Impaired (TDD/TTY)

To assist customers who have hearing difficulties, the manufacturer has installed special TDD (Telecommunication Devices for the Deaf) equipment at its customer center. Any hearing or speech impaired customer, who has access to a TDD or a conventional teletypewriter (TTY) in the United States, can communicate with the manufacturer by dialing 1-800-380-CHRY.

Canadian residents with hearing difficulties that require assistance can use the special needs relay service offered by Bell Canada. For TTY teletypewriter users, dial 711 and for Voice callers, dial 1-800-855-0511 to connect with a Bell Relay Service operator.

Service Contract

You may have purchased a service contract for a vehicle to help protect you from the high cost of unexpected repairs after the manufacturer's New Vehicle Limited Warranty expires. The manufacturer stands behind only the manufacturer's service contracts. If you purchased a manufacturer's service contract, you will receive Plan Provisions and an Owner Identification Card in the mail within three weeks of the vehicle delivery date. If you have any questions about the service contract, call the manufacturer's Service Contract National Customer Hotline at 1-800-521-9922 (Canadian residents, call (800) 465-2001 English / (800) 387-9983 French).

Downloaded from www.Manualslib.com manuals search engine

The manufacturer will not stand behind any service contract that is not the manufacturer's service contract. It is not responsible for any service contract other than the manufacturer's service contract. If you purchased a service contract that is not a manufacturer's service contract, and you require service after the manufacturer's New Vehicle Limited Warranty expires, please refer to the contract documents, and contact the person listed in those documents.

We appreciate that you have made a major investment when you purchased the vehicle. An authorized dealer has also made a major investment in facilities, tools, and training to assure that you are absolutely delighted with the ownership experience. You will be pleased with their sincere efforts to resolve any warranty issues or related concerns.

WARNING!

Engine exhaust (internal combustion engines only), some of its constituents, and certain vehicle components contain, or emit, chemicals known to the State of California to cause cancer and birth defects, or other reproductive harm. In addition, certain fluids contained in vehicles and certain products of component wear contain, or emit, chemicals known to the State of California to cause cancer and birth defects, or other reproductive harm.

WARRANTY INFORMATION

See the Warranty Information Booklet, located on the DVD, for the terms and provisions of FCA US LLC warranties applicable to this vehicle and market.

Downloaded from www.Manualslib.com manuals search engine

MOPAR PARTS

MOPAR fluids, lubricants, parts, and accessories are available from an authorized dealer. They are recommended for your vehicle in order to help keep the vehicle operating at its best.

REPORTING SAFETY DEFECTS

In The 50 United States And Washington, D.C.

If you believe that your vehicle has a defect that could cause a crash or cause injury or death, you should immediately inform the National Highway Traffic Safety Administration (NHTSA) in addition to notifying the manufacturer.

If NHTSA receives similar complaints, it may open an investigation, and if it finds that a safety defect exists in a group of vehicles, it may order a recall and remedy campaign. However, NHTSA cannot become involved in individual problems between you, your authorized dealer, and the manufacturer.

To contact NHTSA, you may either call the Auto Safety Hotline toll free at 1-888-327-4236 (TTY: 1-800-424-9153), or go to http://www.safercar.gov; or write to: Administrator, NHTSA, 1200 New Jersey Avenue, SE., West Building, Washington, D.C. 20590.

You can also obtain other information about motor vehicle safety from http://www.safercar.gov.

In Canada

If you believe that your vehicle has a safety defect, you should contact the Customer Service Department immediately. Canadian customers who wish to report a safety defect to the Canadian government should contact Transport Canada, Motor Vehicle Defect Investigations and Recalls at 1-800-333-0510 or go to http://www.tc.gc.ca/roadsafety/

Downloaded from www.Manualslib.com manuals search engine

PUBLICATION ORDER FORMS

To order the following manuals, you may use either the website or the phone numbers listed below. Visa, Mastercard, American Express, and Discover orders are accepted. If you prefer mailing your payment, please call for an order form.

NOTE: A street address is required when ordering manuals (no P.O. Boxes).

Service Manuals

These comprehensive Service Manuals provide the information that students and professional technicians need in diagnosing/troubleshooting, problem solving, maintaining, servicing, and repairing FCA US LLC vehicles. A complete working knowledge of the vehicle, system, and/or components is written in straightforward language with illustrations, diagrams, and charts.

Diagnostic Procedure Manuals

Diagnostic Procedure Manuals are filled with diagrams, charts and detailed illustrations. These practical manuals make it easy for students and technicians to find and fix problems on computer-controlled vehicle systems and features. They show exactly how to find and correct problems the first time, using step-by-step troubleshooting and drivability procedures, proven diagnostic tests and a complete list of all tools and equipment.

Owner's Manuals

These Owner's Manuals have been prepared with the assistance of service and engineering specialists to acquaint you with specific FCA US LLC vehicles. Included are starting, operating, emergency and maintenance procedures as well as specifications, capabilities and safety tips.

Downloaded from www.Manualslib.com manuals search engine

Call toll free at:

- **1-800-890-4038 (U.S.)**
- **1-800-387-1143 (Canada)**

Or

Visit us on the Worldwide Web at:

- www.techauthority.com

DEPARTMENT OF TRANSPORTATION UNIFORM TIRE QUALITY GRADES

The following tire grading categories were established by the National Highway Traffic Safety Administration. The specific grade rating assigned by the tire's manufacturer in each category is shown on the sidewall of the tires on your vehicle.

All passenger car tires must conform to Federal safety requirements in addition to these grades.

Treadwear

The Treadwear grade is a comparative rating, based on the wear rate of the tire when tested under controlled conditions on a specified government test course. For example, a tire graded 150 would wear one and one-half times as well on the government course as a tire graded 100. The relative performance of tires depends upon the actual conditions of their use, however, and may depart significantly from the norm due to variations in driving habits, service practices, and differences in road characteristics and climate.

Traction Grades

The Traction grades, from highest to lowest, are AA, A, B, and C. These grades represent the tire's ability to stop on wet pavement, as measured under controlled conditions on specified government test surfaces of asphalt and concrete. A tire marked C may have poor traction performance.

Downloaded from www.Manualslib.com manuals search engine

WARNING!

The traction grade assigned to this tire is based on straight-ahead braking traction tests, and does not include acceleration, cornering, hydroplaning, or peak traction characteristics.

Temperature Grades

The temperature grades are A (the highest), B, and C, representing the tire's resistance to the generation of heat and its ability to dissipate heat, when tested under controlled conditions on a specified indoor laboratory test wheel. Sustained high temperature can cause the material of the tire to degenerate and reduce tire life, and excessive temperature can lead to sudden tire failure. The grade C corresponds to a level of performance, which all passenger car tires must meet under the Federal Motor Vehicle Safety Standard No. 109. Grades B and A represent higher levels of performance on the laboratory test wheel, than the minimum required by law.

WARNING!

The temperature grade for this tire is established for a tire that is properly inflated and not overloaded. Excessive speed, under-inflation, or excessive loading, either separately or in combination, can cause heat buildup and possible tire failure.

Downloaded from www.Manualslib.com manuals search engine

INDEX

Downloaded from www.Manualslib.com manuals search engine

About Your Brakes 257
ABS (Anti-Lock Brake System) 259
Adding Engine Coolant (Antifreeze) 351
Adding Fuel 301
Adding Washer Fluid 346
Additives, Fuel 299
Adjustable Pedals 115
Air Bag. 46, 47
  Advance Front Air Bag 47, 48
  Air Bag Operation 50
  Air Bag Warning Light 68
  Enhanced Accident Response 67
  Event Data Recorder (EDR) 71
  Front Air Bag 46, 47
  If A Deployment Occurs 66
  Knee Impact Bolsters 63
  Maintaining Your Air Bag System 70
  Transporting Pets 83
Air Bag Deployment 46
Air Bag Light 68, 87, 149
Air Bag Maintenance 70
Air Cleaner, Engine (Engine Air Cleaner Filter) 340
Air Conditioner Maintenance 343
Air Conditioning, Operating Tips 214
Air Conditioning Refrigerant 343, 344
Air Conditioning System 343
Air Pressure, Tires. 279
Alarm (Security Alarm) 152
Alarm System (Security Alarm) 17
Alterations/Modifications, Vehicle 7
Antenna. 206
Antifreeze (Engine Coolant). 350, 380
  Capacities 380
  Disposal 353
Anti-Lock Brake System (ABS) 259
Anti-Lock Warning Light 261
Appearance Care 359
Auto Down Power Windows 29

Downloaded from www.Manualslib.com manuals search engine

Automatic Door Locks 27, 28
Automatic Headlights 106
Auto Unlock, Doors 28
Auto Up Power Windows 30
Auxiliary Electrical Outlet (Power Outlet) 132
Auxiliary Power Outlet 132

Battery 153, 341
Charging System Light 153
Emergency Starting 323
Jump Starting 323
Keyless Transmitter Replacement (RKE) 23
Location 341
Remote Battery Replacement 23
Saving Feature (Protection) 342
Storing Vehicle 342
Transmitter Battery Replacement 23
Belts, Seat 87
Body Mechanism Lubrication 345
B-Pillar Location 273
Brake Control System, Electronic 259
Brake, Parking 255
Brake System 257, 355
Anti-Lock (ABS) 257, 259
Fluid Check 355, 383
Master Cylinder 355
Warning Light 150
Break-In Recommendations, New Vehicle 258
Brightness, Interior Lights 110
Bulb Replacement 379
Bulbs, Light 88, 377

Camera, Rear 121
Capacities, Antifreeze (Engine Coolant) 380
Capacities, Fluid 380
Caps, Filler
Oil (Engine) 339
Power Steering 254

Downloaded from www.Manualslib.com manuals search engine

Radiator (Coolant Pressure) 352
Carbon Monoxide Warning 86, 301
Car Washes 359
Chains, Tire 290
Chart, Tire Sizing 268
Check Engine Light (Malfunction Indicator Light) . .334
Checking Your Vehicle For Safety 85
Checks, Safety 85
Child Restraint 72
Child Restraints
Booster Seats 77
Child Restraints 72
Infants And Child Restraints 75
Installing Child Restraints Using The Vehicle Seat Belt 78
Older Children And Child Restraints 75
Using The Top Tether Anchorage 81
Clean Air Gasoline 297
Cleaning
Wheels 360
Windshield Wiper Blades 345
Climate Control 206
Clutch Fluid 358
Compact Spare Tire 284
Contract, Service 397
Coolant Pressure Cap (Radiator Cap) 352
Cooling System 349
Adding Coolant (Antifreeze) 351
Coolant Capacity 380
Coolant Level 349, 353
Disposal Of Used Coolant 353
Drain, Flush, And Refill 350
Inspection 353
Points To Remember 354
Pressure Cap 352
Radiator Cap 352
Selection Of Coolant (Antifreeze) 350, 380, 381

Downloaded from www.Manualslib.com manuals search engine

Corrosion Protection 359
Cruise Light 168
Cupholders 136
Customer Assistance 395

Data Recorder, Event 71
Daytime Brightness, Interior Lights 111
Daytime Running Lights 107
Dealer Service. 336
Defroster, Rear Window. 140
Defroster, Windshield 87
Delay (Intermittent) Wipers 111
Diagnostic System, Onboard 334
Dimmer Switch, Headlight. 109
Dipsticks
  Power Steering 254
Disposal
  Antifreeze (Engine Coolant) 353
Door Ajar. 157
Door Ajar Light 157
Door Locks 25
  Key Fob Emergency Key 23
Door Locks, Automatic 27
Door Opener, Garage. 123
Doors 25
Driving
  Through Flowing, Rising, Or Shallow Standing Water 251

Electrical Outlet, Auxiliary (Power Outlet). 132
Electric Remote Mirrors. 96
Electronic Brake Control System 259
  Traction Control System 262
Electronic Speed Control (Cruise Control) 117
Electronic Stability Control (ESC) 262
Electronic Throttle Control Warning Light 155
Emergency Brake 255

Downloaded from www.Manualslib.com manuals search engine

Emergency, In Case Of
Freeing Vehicle When Stuck 327
Hazard Warning Flasher 310
Jump Starting 323
Overheating 310
Towing 329
Emission Control System Maintenance 334
Engine 333
Air Cleaner 340
Checking Oil Level 337
Compartment 333
Coolant (Antifreeze) 349, 381
Cooling 349
Exhaust Gas Caution 86, 301
Fails To Start 240
Flooded, Starting 240
Fuel Requirements 297, 380
Oil 337, 380, 381
Oil Change Interval 338
Oil Filler Cap 339
Oil Filter 339
Oil Selection 338, 380
Overheating 310
Engine Oil Viscosity 339, 380
Enhanced Accident Response Feature 67
Ethanol 298
Event Data Recorder 71
Exhaust Gas Caution 86, 301
Exhaust System 86, 346
Exterior Lighting. 105
Exterior Lights 88

Filters
Air Cleaner 340
Engine Oil 339, 381
Engine Oil Disposal 339
Flashers
Hazard Warning 310

Downloaded from www.Manualslib.com manuals search engine

Turn Signal 88, 108, 167
Flash-To-Pass 109
Flooded Engine Starting 240
Fluid Capacities 380
Fluid Leaks 88
Fluid Level Checks
Brake 355, 383
Capacities 380
Clutch Fluid 358
Cooling System 349
Engine Oil 337
Manual Transmission 357, 383
Power Steering 254, 383
Fluids, Lubricants And Genuine Parts 381
Four-Way Hazard Flasher 310
Freeing A Stuck Vehicle 327
Fuel 297
Additives 299
Clean Air 297
Ethanol 298
Gasoline 297
Light 165
Materials Added 299
Methanol 298
Octane Rating 297, 381
Requirements 297, 380
Tank Capacity 380
Fuses 366

Garage Door Opener (HomeLink) 123, 130
Gasoline, Clean Air 297
Gasoline (Fuel) 297
Gasoline, Reformulated 297
General Information 206
Glass Cleaning 362
Ground Clearance 307

Downloaded from www.Manualslib.com manuals search engine

Hazard
Driving Through Flowing, Rising, Or Shallow Standing Water 251
Hazard Warning Flasher 310
Headlights
Automatic 106
Delay 106
High Beam/Low Beam Select Switch 109
Lights On Reminder 107
On With Wipers 106, 114
Passing 109
Switch 105
Time Delay 106
Head Restraints 102
High Beam/Low Beam Select (Dimmer) Switch 109
Holder, Cup 136
HomeLink (Garage Door Opener). 123
Hood Release 103
Hydraulic Clutch Fluid 358

Illuminated Entry 19
Immobilizer (Sentry Key) 14
Inside Rearview Mirror 92
Instrument Cluster 145, 152, 156, 167
Instrument Panel And Controls 144
Instrument Panel Lens Cleaning 363
Interior Appearance Care. 361
Interior Lights 109
Intermittent Wipers (Delay Wipers) 111
Introduction 4

Jump Starting 323

Key Fob. 11
Programming Additional Key Fobs 16
Programming Additional Transmitters 16
Remote Battery Replacement 23

Downloaded from www.Manualslib.com manuals search engine

Key-In Reminder 13
Keyless Entry System 11, 20
Keyless Go 11
Key, Replacement 15
Key, Sentry (Immobilizer) 14

Lane Change And Turn Signals 108
Lap/Shoulder Belts 36
Latches 88
  Hood 103
Lead Free Gasoline 297
Leaks, Fluid 88
Life Of Tires 287
Liftgate 31
Light Bulbs 88
Lights 88, 105
  Air Bag 68, 87, 149
  Anti-Lock 261
  Automatic Headlights 106
Brake Warning 150
Bulb Replacement 377, 379
Cruise 168
Daytime Running 107
Dimmer Switch, Headlight 108, 109
Engine Temperature Warning 152
Exterior 88
Hazard Warning Flasher 310
Headlights 105
Headlights On Reminder 107
Headlights On With Wipers 106, 114
Headlight Switch 105
High Beam 109
High Beam/Low Beam Select 109
Illuminated Entry 19
Instrument Cluster 105
Intensity Control 110
Interior 109
Lights On Reminder 107

Downloaded from www.Manualslib.com manuals search engine

Low Fuel 165
Malfunction Indicator (Check Engine) 158
Parade Mode (Daytime Brightness) 111
Park 166
Passing 109
Seat Belt Reminder 148
Security Alarm 152
Service 377, 379
Tire Pressure Monitoring (TPMS) 162, 291
Turn Signal 88, 108, 167
Vanity Mirror 97
Warning (Instrument Cluster Description) . . .152, 167
Loading Vehicle
Tires 273
Locks 25
Automatic Door 27
Auto Unlock 28
Door 25
Power Door 26
Low Tire Indicator 291
Low Tire Pressure System 291
Lubrication, Body 345
Lug Nuts 311

Maintenance Free Battery. 341
Maintenance Procedures 337
Maintenance Schedule 385, 386, 388
Malfunction Indicator Light (Check Engine) . . .158, 334
Manual, Service 400
Manual Transmission 241, 358
Fluid Level Check 357, 383
Lubricant Selection 383
Shift Speeds 244
Methanol 298
Mirrors 92
Electric Remote 96
Outside 96
Rearview 92

Downloaded from www.Manualslib.com manuals search engine

Vanity 97
Modifications/Alterations, Vehicle 7
Monitor, Tire Pressure System 291
MOPAR Parts. 336, 399
MTBE/ETBE 298
Multi-Function Control Lever. 108

Occupant Restraints 33
Octane Rating, Gasoline (Fuel) 297
Oil, Engine 337, 380, 381
Capacity 380
Change Interval 338
Checking 337
Dipstick 337
Disposal 339
Filter 339, 381
Filter Disposal 339
Materials Added To 339
Pressure Warning Light 154
Recommendation 338, 380
Viscosity 339, 380
Oil Filter, Change 339
Oil Filter, Selection 339
Oil Pressure Light 154
Onboard Diagnostic System 334
Opener, Garage Door (HomeLink) 123
Operator Manual (Owner's Manual) 4
Outside Rearview Mirrors 96
Overheating, Engine 310
Owner's Manual (Operator Manual) 4, 400

Paint Care 359
Panic Alarm. 22
Parking Brake. 255
Parking On Hill 255
Passing Light 109
Pedals, Adjustable. 115
Pets. 83

Downloaded from www.Manualslib.com manuals search engine

Placard, Tire And Loading Information 274
Power
  Brakes 257
  Door Locks 26
  Mirrors 96
  Outlet (Auxiliary Electrical Outlet) 132
  Steering 253, 254
  Windows 28
Pregnant Women And Seat Belts 43
Pretensioners
  Seat Belts 43
Programming Transmitters (Remote Keyless Entry) . .23

Radial Ply Tires 281
Radiator Cap (Coolant Pressure Cap) 352
Radio Antenna 206
Radio Operation 206
Radio (Sound Systems) 203
Rear Camera 121
Rear Liftgate 31
Rear Window Defroster 140
Rear Window Features 140
Reclining Front Seats 99
Recorder, Event Data 71
Recreational Towing 306
Reformulated Gasoline 297
Refrigerant 344
Reminder, Lights On 107
Reminder, Seat Belt 35
Remote Keyless Entry (RKE) 20
  FCC General Information 24
  Programming Additional Key Fobs 16
  Programming Additional Transmitters 16
  Remote Battery Replacement 23
  Transmitter Battery Replacement 23
Remote Sound System (Radio) Controls 204
Replacement Keys 15
Replacement Parts. 336

Downloaded from www.Manualslib.com manuals search engine

Replacement Tires 288
Reporting Safety Defects 399
Restraint, Head 102
Restraints, Child 72
Restraints, Occupant 33
Rocking Vehicle When Stuck 327
Rotation, Tires 290

Safety Checks Inside Vehicle 87
Safety Checks Outside Vehicle 88
Safety Defects, Reporting 399
Safety, Exhaust Gas 86
Safety Information, Tire 266
Safety Tips 85
Schedule, Maintenance 385, 386
Seat Belt
  Automatic Locking Retractor (ALR) 44
  Energy Management Feature 44
  Lap/Shoulder Belt Operation 39
  Lap/Shoulder Belts 36
  Lap/Shoulder Belt Untwisting 41
  Pregnant Women 43
  Seat Belt Extender 42
  Seat Belt Pretensioner 43
  Seat Belt Reminder 35
  Seat Belt System 33
Seat Belt Maintenance 363
Seat Belt Reminder 35
Seat Belts 34, 87
  Child Restraint 72
  Extender 42
  Front Seat 34, 36, 39
  Inspection 87
  Operating Instructions 39
  Pregnant Women 43
  Pretensioners 43
  Rear Seat 36
  Reminder 148

Downloaded from www.Manualslib.com manuals search engine

Untwisting Procedure 41
Seats 98
Adjustment 98, 100
Reclining 99
Security Alarm. 17, 152
Selection Of Coolant (Antifreeze) 381
Selection Of Oil 338
SENTRY KEY
FCC General Information 16
Key Programming 16
Sentry Key (Immobilizer) 14
Sentry Key Replacement 15
Service Assistance 395
Service Contract 397
Service Manuals 400
Shift Indicator Light 244
Shift Speeds 241, 244
Shoulder Belts 36
Signals, Turn. 88, 108, 167
Snow Chains (Tire Chains). 290
Spare Tire 284, 285
Spark Plugs 381
Speed Control (Cruise Control). 117
Starting 238
Emergency (Jump Starting) 323
Engine Fails To Start 240
Starting And Operating 238
Starting Procedures 238
Steering
Column Controls 108
Power 253, 254
Tilt Column 114
Steering Wheel Audio Controls 204
Steering Wheel Mounted Sound System Controls . . .204
Storage 374
Storage, Vehicle. 213
Stuck, Freeing. 327

Downloaded from www.Manualslib.com manuals search engine

Supplemental Restraint System - Air Bag 47

Tilt Steering Column 114
Time Delay, Headlight 106
Tire And Loading Information Placard 273, 274
Tire Markings 266
Tires. 88, 278, 401
Aging (Life Of Tires) 287
Air Pressure 278
Chains 290
Compact Spare 284
General Information 278
High Speed 281
Inflation Pressures 279
Life Of Tires 287
Load Capacity 273, 274
Pressure Monitor System (TPMS) 291
Pressure Warning Light 162
Quality Grading 401
Radial 281
Replacement 288
Rotation 290
Safety 266, 278
Sizes 268
Spinning 286
Tread Wear Indicators 286
Tire Safety Information 266
Tire Service Kit 313
Towing 306, 329
Disabled Vehicle 329
Recreational 306
Towing Vehicle Behind A Motorhome 306
Traction 250, 251
Traction Control 262
Trailer Towing 306
Transmission 357
Fluid 383
Shifting 241, 244

Downloaded from www.Manualslib.com manuals search engine

Transmitter Battery Service (Remote Keyless Entry) . .23
Transmitter Programming (Remote Keyless Entry) . . .23
Transmitter, Remote Keyless Entry (RKE) 20
Transporting Pets 83
Tread Wear Indicators 286
Turn Signals. 108, 167

Uconnect
  Operation 203
Uconnect Settings 28
Uconnect Voice Command 215
Uniform Tire Quality Grades 401
Universal Transmitter 123
Unleaded Gasoline 297
Untwisting Procedure, Seat Belt 41
Upholstery Care 362

Vanity Mirrors 97
Vehicle Identification Number (VIN) 6
Vehicle Loading 274
Vehicle Modifications/Alterations 7
Vehicle Security Alarm (Security Alarm) 17
Vehicle Storage. 213, 374
Vinyl Trim 362
Viscosity, Engine Oil 339, 380
Voice Recognition System (VR). 215

Warning Flasher, Hazard 310
Warnings And Cautions 6
Warranty Information 398
Washer
  Adding Fluid 346
Washers, Windshield. 113, 346
Washing Vehicle 359
Water
  Driving Through 251
Wheel And Wheel Trim 360
Wheel And Wheel Trim Care 360

Downloaded from www.Manualslib.com manuals search engine

Window Fogging 213
Windows 28
Power 28
Reset Auto-Up 30
Windshield Defroster 87
Windshield Washers 111, 113, 346
Windshield Wiper Blades. 345
Windshield Wipers 111
Wiper Blade Replacement 345
Wipers, Intermittent. 111

Downloaded from www.Manualslib.com manuals search engine

INSTALLATION OF RADIO TRANSMITTING EQUIPMENT

Special design considerations are incorporated into this vehicle's electronic system to provide immunity to radio frequency signals. Mobile two-way radios and telephone equipment must be installed properly by trained personnel. The following must be observed during installation.

The positive power connection should be made directly to the battery and fused as close to the battery as possible. The negative power connection should be made to body sheet metal adjacent to the negative battery connection. This connection should not be fused.

Antennas for two-way radios should be mounted on the roof or the rear area of the vehicle. Care should be used in mounting antennas with magnet bases. Magnets may affect the accuracy or operation of the compass on vehicles so equipped.

The antenna cable should be as short as practical and routed away from the vehicle wiring when possible. Use only fully shielded coaxial cable.

Carefully match the antenna and cable to the radio to ensure a low Standing Wave Ratio (SWR).

Mobile radio equipment with output power greater than normal may require special precautions.

All installations should be checked for possible interference between the communications equipment and the vehicle's electronic systems.

Downloaded from www.Manualslib.com manuals search engine

STICK WITH THE SPECIALISTS®

16ZD-126-AA
©2015 FCA US LLC. All Rights Reserved.
Dodge is a registered trademark of FCA US LLC.

First Edition
Printed in U.S.A.

Downloaded from www.Manualslib.com manuals search engine