ENGINE MOUNTING

22 11 011 REPLACING LEFT ENGINE MOUNT (N20)

Necessary preliminary tasks:

- Remove LEFT ENGINE SUPPORT ARM.

Release screws (1) and remove engine mount (2).

Tightening torque 22 11 1AZ .

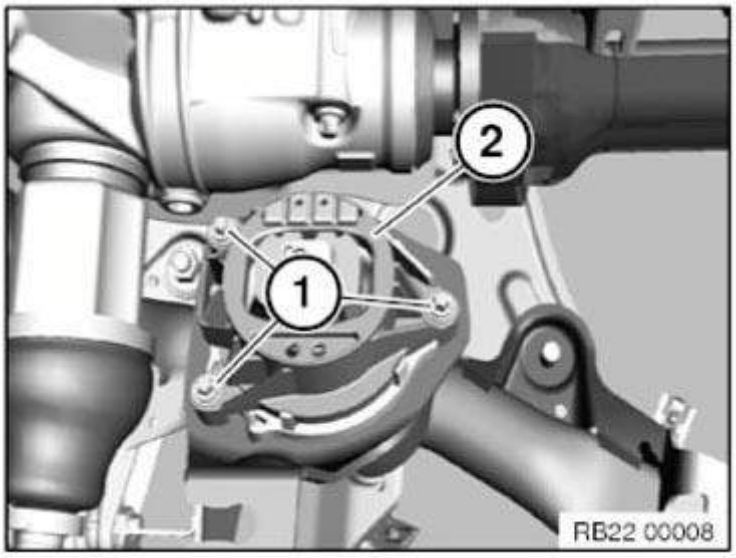

Fig. 1: Identifying Engine Mount Screws
Courtesy of BMW OF NORTH AMERICA, INC.

Installation note:

Rubber buffer (1) on engine mount must point towards center of vehicle.

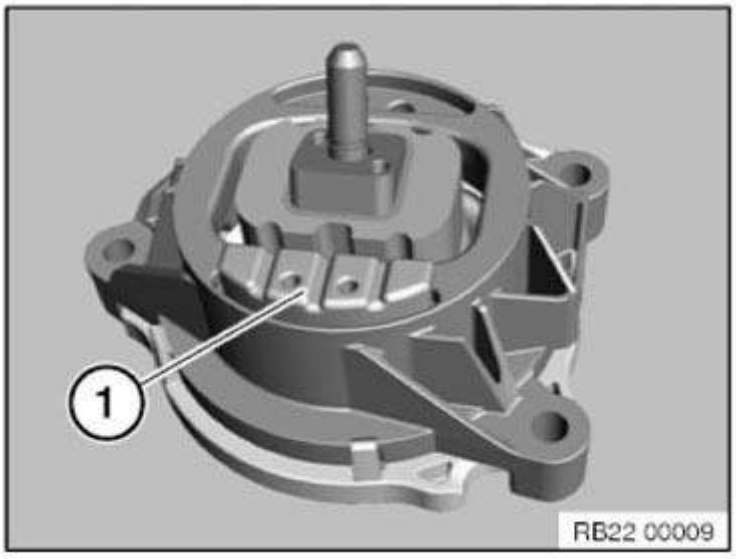

Fig. 2: Identifying Engine Mount Buffer

cardiagn.com

Courtesy of BMW OF NORTH AMERICA, INC.

22 11 011 REPLACING LEFT ENGINE MOUNT (N47)

Necessary preliminary tasks:

- Remove **LEFT ENGINE SUPPORT ARM**.

Release screws (1) and remove engine mount (2).

Tightening torque **22 11 1AZ** .

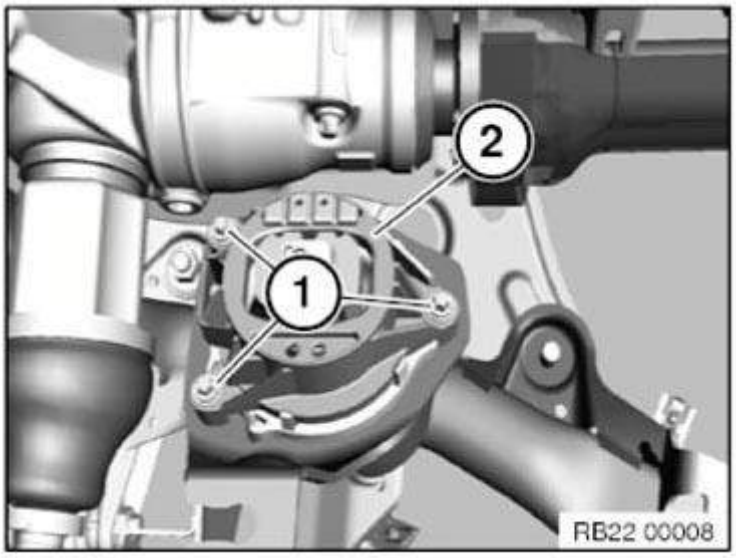

Fig. 3: Identifying Engine Mount Screws
Courtesy of BMW OF NORTH AMERICA, INC.

Installation note:

Rubber buffer (1) on engine mount must point towards center of vehicle.

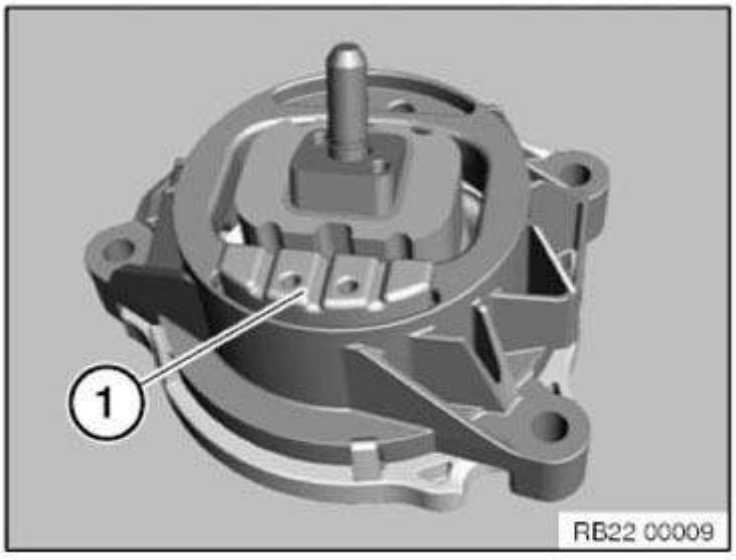

Fig. 4: Identifying Engine Mount Buffer
Courtesy of BMW OF NORTH AMERICA, INC.

22 11 011 REPLACING LEFT ENGINE MOUNT (N52)

Necessary preliminary work:

cardiagn.com

- Remove **LEFT ENGINE SUPPORT ARM**.

Release screws (1) and remove engine mount (2).

Tightening torque **22 11 1AZ** .

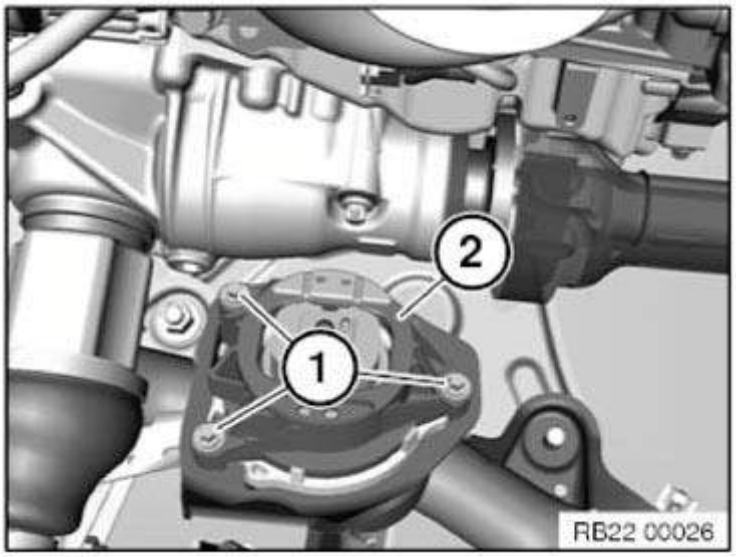

Fig. 5: Identifying Engine Mount Screws
Courtesy of BMW OF NORTH AMERICA, INC.

Installation note:

Rubber buffer (1) on engine mount must point towards center of vehicle.

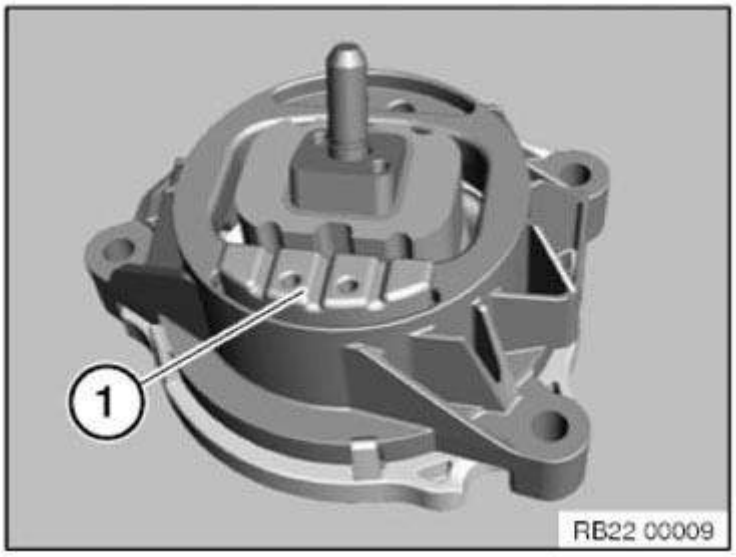

Fig. 6: Identifying Engine Mount Buffer
Courtesy of BMW OF NORTH AMERICA, INC.

22 11 011 REPLACING LEFT ENGINE MOUNT (N55)

Necessary preliminary work:

- Remove **LEFT ENGINE SUPPORT ARM**.

Release screws (1) and remove engine mount (2).

Tightening torque **22 11 1AZ** .

cardiagn.com

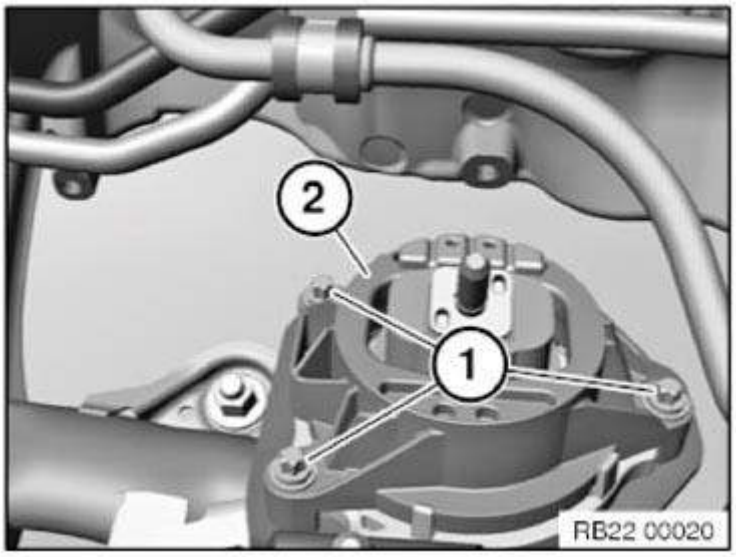

Fig. 7: Identifying Engine Mount Screws
Courtesy of BMW OF NORTH AMERICA, INC.

Installation note:

Rubber buffer (1) on engine mount must point towards center of vehicle.

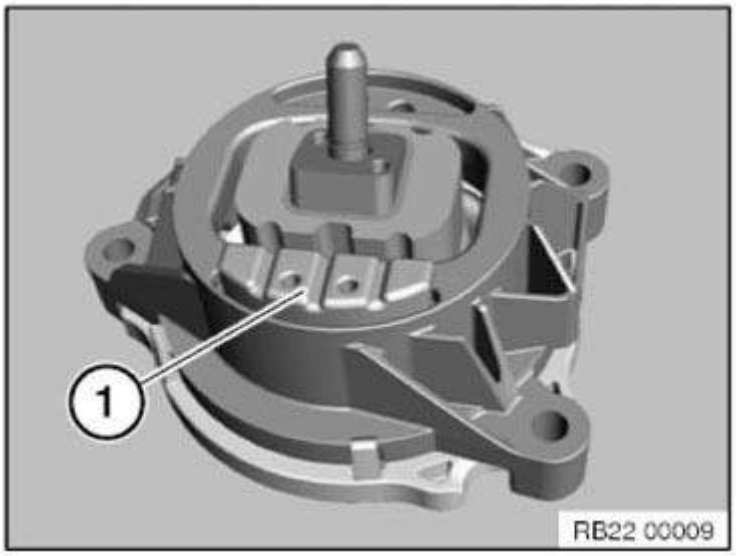

Fig. 8: Identifying Engine Mount Buffer
Courtesy of BMW OF NORTH AMERICA, INC.

22 11 110 REPLACING LEFT ENGINE SUPPORT ARM (N20)

Necessary preliminary tasks:

- Secure engine in **INSTALLATION POSITION**
- Remove rear **UNDERBODY PROTECTION ASSEMBLY**
- Remove **REINFORCEMENT PLATE**
- Partially detach wheel arch trim panel on rear left

Release screws (1).

Remove engine support arm.

Tightening torque **22 11 3AZ** .

cardiagn.com

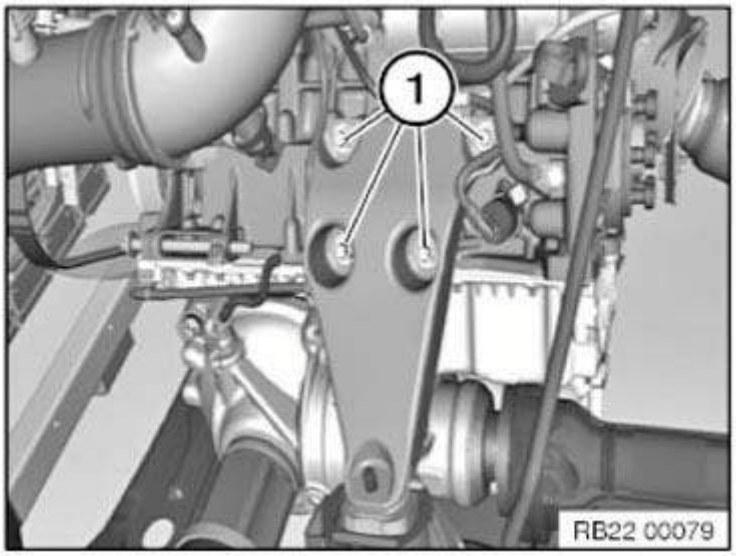

Fig. 9: Identifying Engine Support Arm Screws
Courtesy of BMW OF NORTH AMERICA, INC.

22 11 110 REPLACING LEFT ENGINE SUPPORT ARM (N47)

Necessary preliminary tasks:

- Secure engine in **INSTALLATION POSITION** .
- Remove **GUIDE TUBE** of dip stick.
- Remove rear underbody protection.
- Partially detaching the front left wheel arch panel.

Release screws (1).

Remove engine support arm.

Tightening torque **22 11 3AZ** .

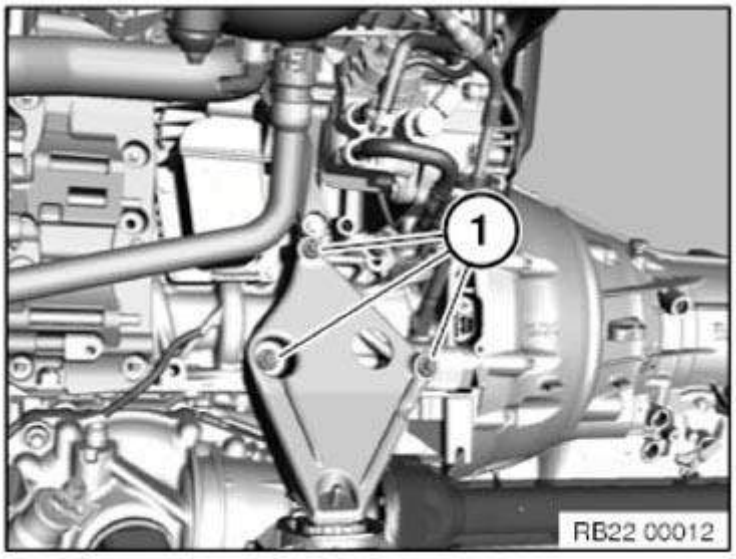

Fig. 10: Identifying Engine Support Arm Screws
Courtesy of BMW OF NORTH AMERICA, INC.

22 11 110 REPLACING LEFT ENGINE SUPPORT ARM (N52)

cardiagn.com

Necessary preliminary work:

- Secure engine in **INSTALLATION POSITION**
- Remove **THROTTLE BODY**
- Remove rear underguard
- Remove **REINFORCEMENT PLATE**
- Partially detach wheel arch trim panel on rear left

Release screw (1).

Unfasten screws (2).

Remove engine support arm.

Tightening torque **22 11 3AZ** .

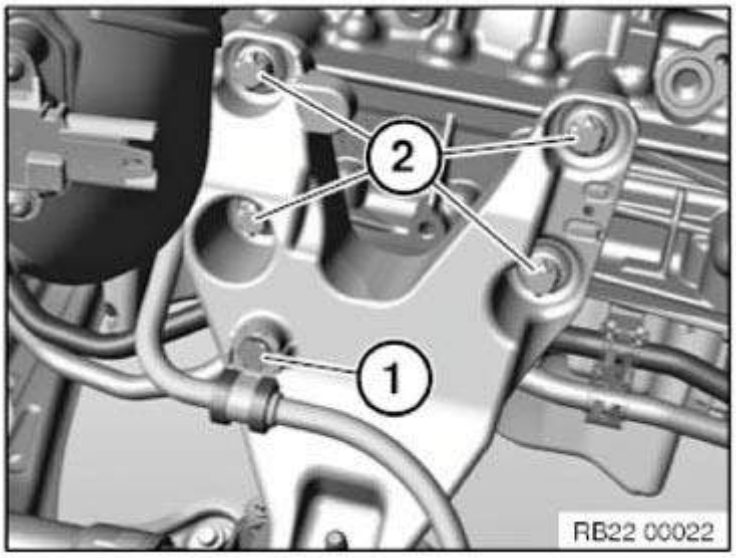

Fig. 11: Identifying Engine Support Arm Screws
Courtesy of BMW OF NORTH AMERICA, INC.

22 11 110 REPLACING LEFT ENGINE SUPPORT ARM (N55)

Necessary preliminary work:

- Secure engine in **INSTALLATION POSITION**
- Remove left **CHARGE AIR DUCT**
- Remove rear underguard
- Remove **REINFORCEMENT PLATE**
- Partially detach wheel arch trim panel on rear left

Release screw (1).

Unfasten screws (2).

Remove engine support arm.

Tightening torque **22 11 3AZ** .

cardiagn.com

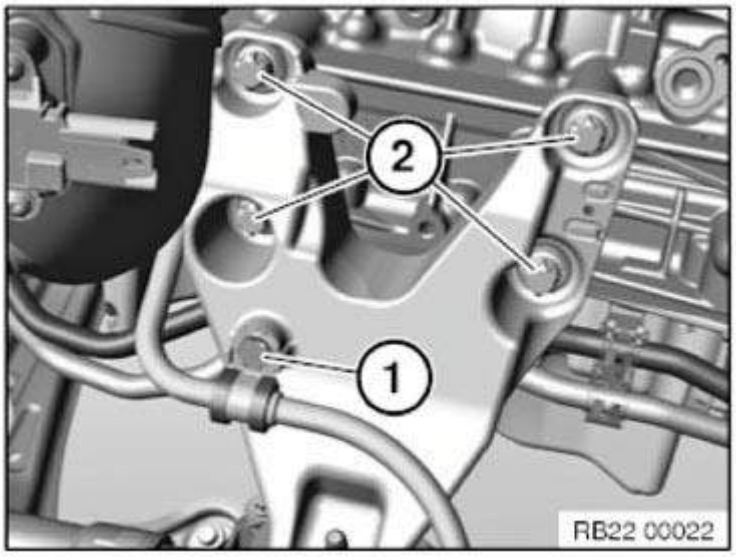

Fig. 12: Identifying Engine Support Arm Screws
Courtesy of BMW OF NORTH AMERICA, INC.

22 11 001 REPLACING RIGHT ENGINE MOUNT (N20)

Necessary preliminary tasks:

- Remove **RIGHT ENGINE SUPPORT ARM**

Release screws (1) and remove engine mount (2).

Tightening torque **22 11 1AZ** .

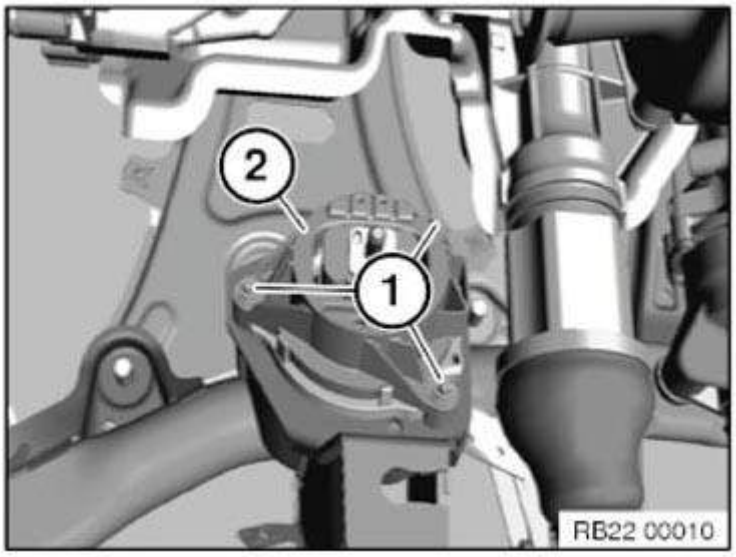

Fig. 13: Identifying Engine Mount Screws
Courtesy of BMW OF NORTH AMERICA, INC.

Installation note:

Rubber buffer (1) on engine mount must point towards center of vehicle.

cardiagn.com

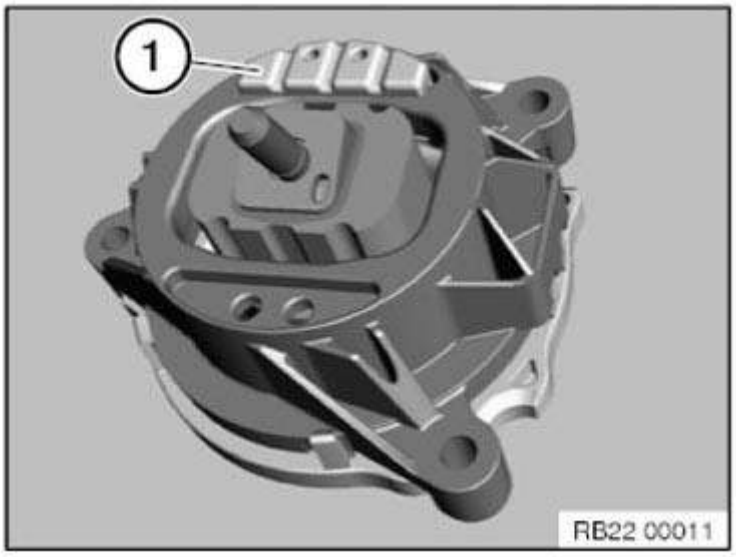

Fig. 14: Identifying Engine Mount Buffer
Courtesy of BMW OF NORTH AMERICA, INC.

22 11 001 REPLACING RIGHT ENGINE MOUNT (N47)

Necessary preliminary tasks:

- **REMOVE** right engine support arm.

Release screws (1) and remove engine mount (2).

Tightening torque **22 11 1AZ** .

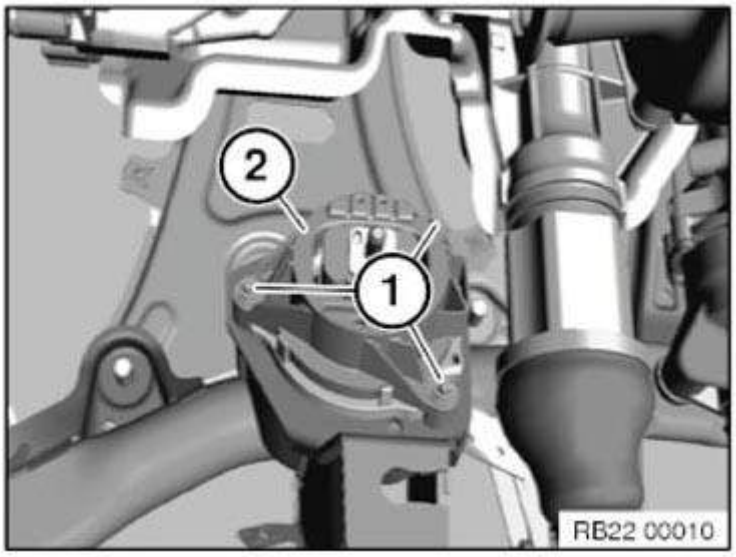

Fig. 15: Identifying Engine Mount Screws
Courtesy of BMW OF NORTH AMERICA, INC.

Installation note:

Rubber buffer (1) on engine mount must point towards center of vehicle.

cardiagn.com

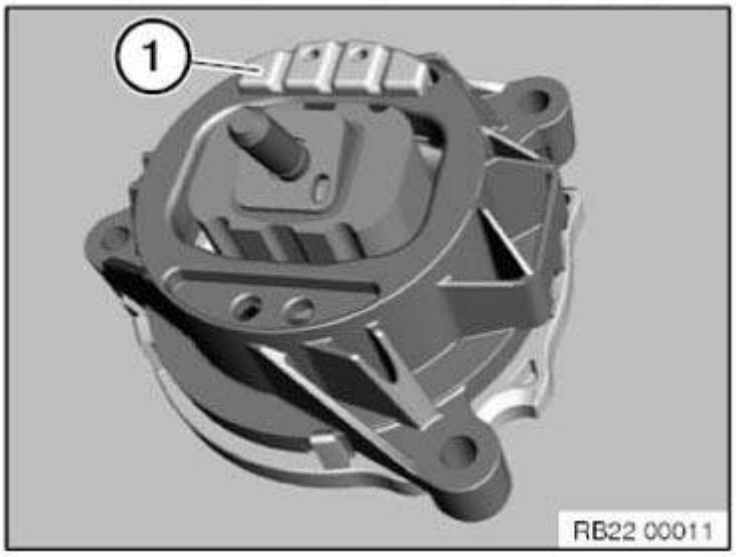

Fig. 16: Identifying Engine Mount Buffer
Courtesy of BMW OF NORTH AMERICA, INC.

22 11 001 REPLACING RIGHT ENGINE MOUNT (N52)

Necessary preliminary work:

- Remove **RIGHT ENGINE SUPPORT ARM**

Release screws (1) and remove engine mount (2).

Tightening torque **22 11 1AZ** .

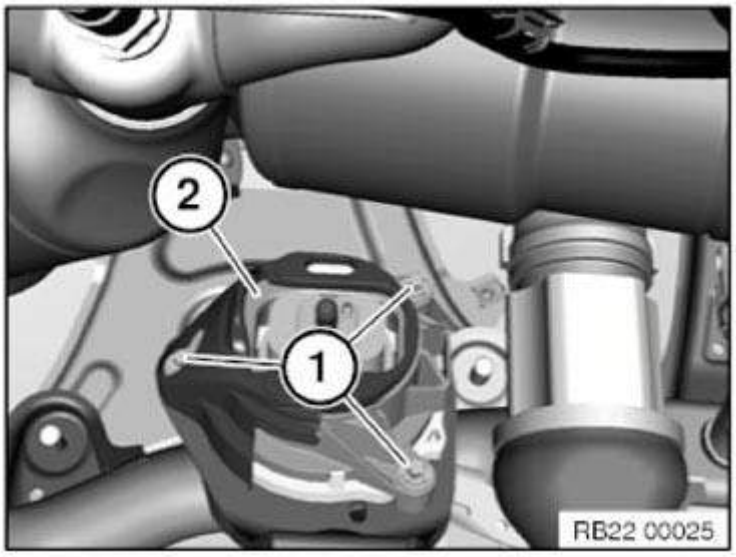

Fig. 17: Identifying Engine Mount Screws
Courtesy of BMW OF NORTH AMERICA, INC.

Installation note:

Rubber buffer (1) on engine mount must point towards center of vehicle.

cardiagn.com

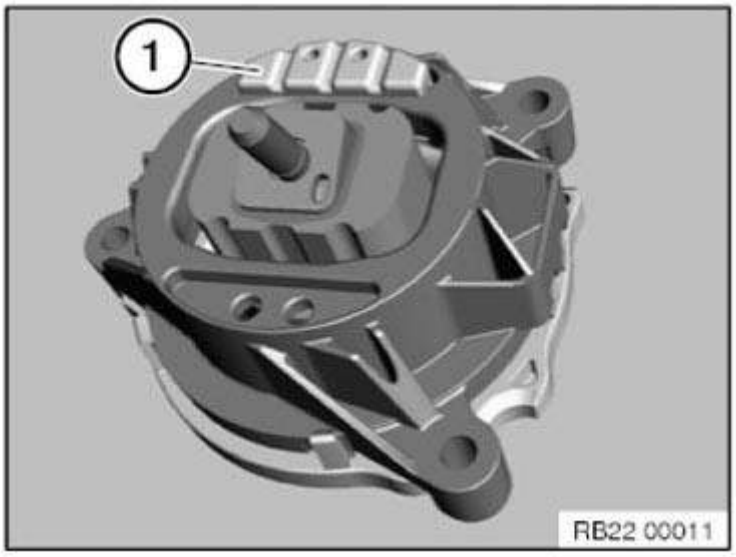

Fig. 18: Identifying Engine Mount Buffer
Courtesy of BMW OF NORTH AMERICA, INC.

22 11 001 REPLACING RIGHT ENGINE MOUNT (N55)

Necessary preliminary work:

- Remove **RIGHT ENGINE SUPPORT ARM**

Release screws (1) and remove engine mount (2).

Tightening torque **22 11 1AZ** .

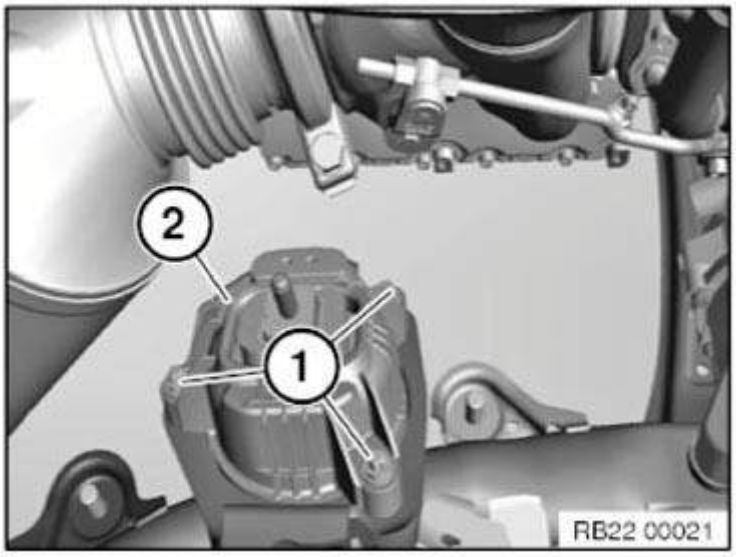

Fig. 19: Identifying Engine Mount Screws
Courtesy of BMW OF NORTH AMERICA, INC.

Installation note:

Rubber buffer (1) on engine mount must point towards center of vehicle.

cardiagn.com

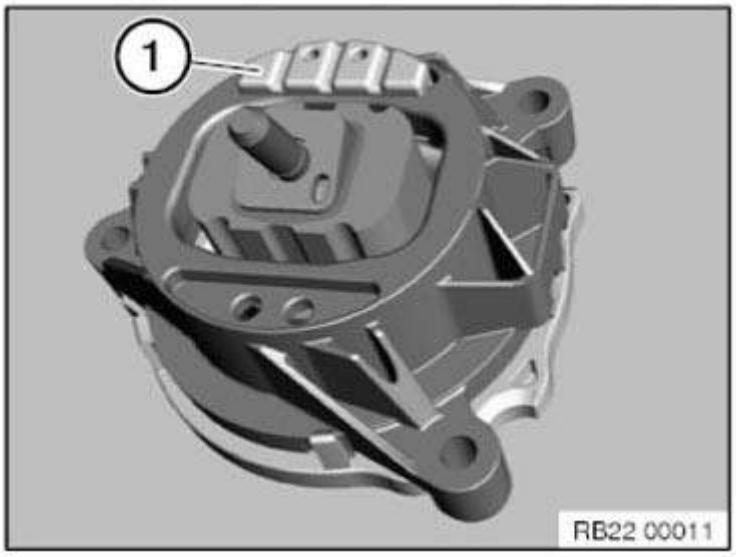

Fig. 20: Identifying Engine Mount Buffer
Courtesy of BMW OF NORTH AMERICA, INC.

22 11 100 REPLACING RIGHT ENGINE SUPPORT ARM (N20)

Necessary preliminary tasks:

- Secure engine in **INSTALLATION POSITION**
- Remove the **REAR UNDERBODY PROTECTION**
- Remove **REINFORCEMENT PLATE**

Release screws (1).

Remove engine support arm.

Tightening torque **22 11 3AZ** .

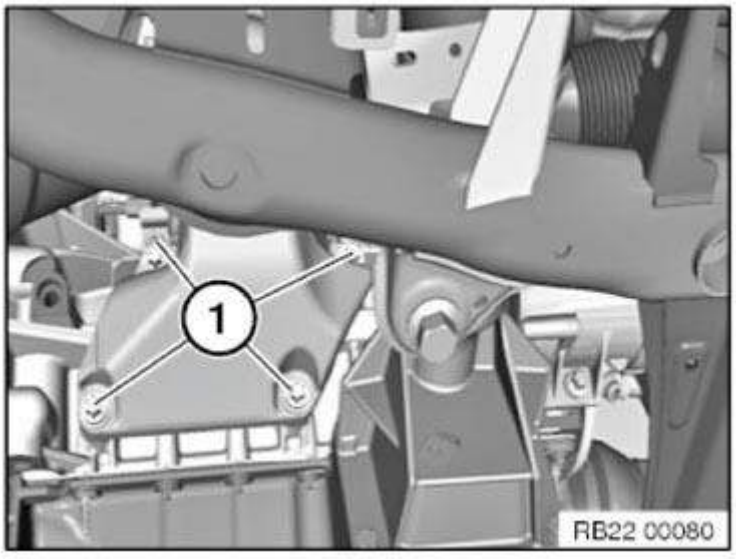

Fig. 21: Identifying Engine Support Arm Screws
Courtesy of BMW OF NORTH AMERICA, INC.

22 11 100 REPLACING RIGHT ENGINE SUPPORT ARM (N47)

Necessary preliminary tasks:

cardiagn.com

- Secure engine in **INSTALLATION POSITION** .
- Remove **REINFORCEMENT PLATE** .

Release screws (1).

Remove engine support arm.

Tightening torque **22 11 3AZ** .

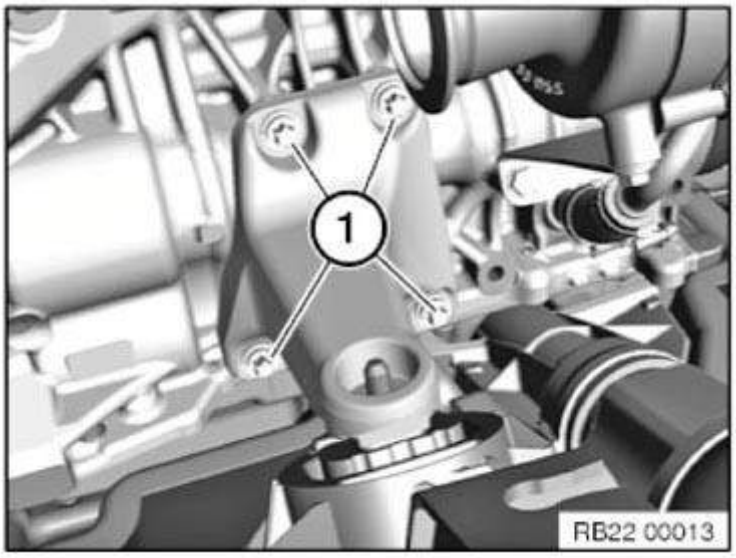

Fig. 22: Identifying Engine Support Arm Screws
Courtesy of BMW OF NORTH AMERICA, INC.

22 11 100 REPLACING RIGHT ENGINE SUPPORT ARM (N52)

Necessary preliminary work:

- Secure engine in **INSTALLATION POSITION**
- Remove rear underguard
- Remove **REINFORCEMENT PLATE**

Release screws (1).

Remove engine support arm.

Tightening torque **22 11 3AZ** .

cardiagn.com

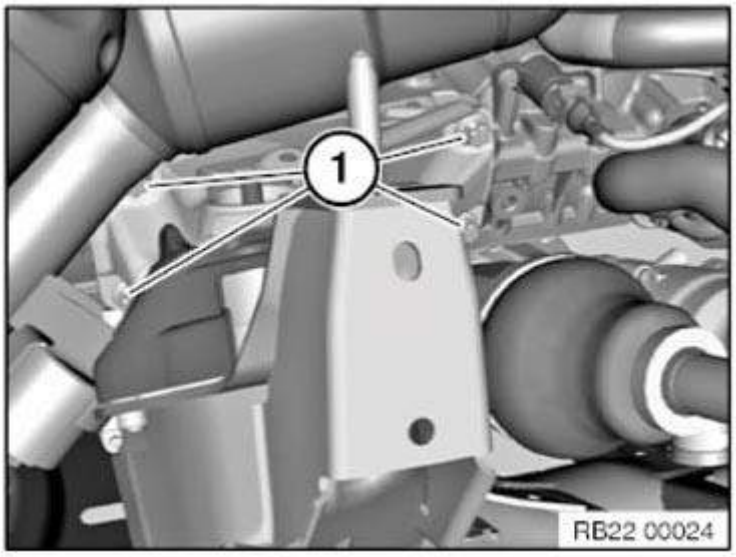

Fig. 23: Identifying Engine Support Arm Screws
Courtesy of BMW OF NORTH AMERICA, INC.

22 11 100 REPLACING RIGHT ENGINE SUPPORT ARM (N55)

Necessary preliminary work:

- Secure engine in INSTALLATION POSITION
- Remove rear underguard
- Remove REINFORCEMENT PLATE

Release screws (1).

Remove engine support arm.

Tightening torque 22 11 3AZ .

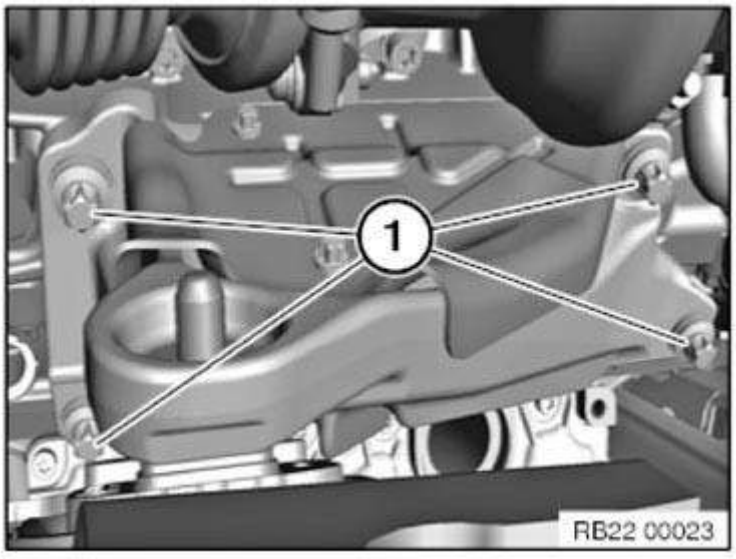

Fig. 24: Identifying Engine Support Arm Screws
Courtesy of BMW OF NORTH AMERICA, INC.

TRANSMISSION SUSPENSION, AUTOMATIC. TRANSMISSION

22 32 050 REPLACING CROSS MEMBER FOR TRANSMISSION MOUNTING

cardiagn.com

Special tools required:

- 00 2 030
- 23 4 050

Necessary preliminary tasks:

- Remove REAR UNDERBODY PROTECTION .
- Remove LEFT UNDERBODY PANELLING .

Supporting transmission:

Support transmission with special tools 23 4 050 , 00 2 030 .

Secure transmission to mounting with tensioning strap (1).

Tasks are described in GEARBOX HOLDER .

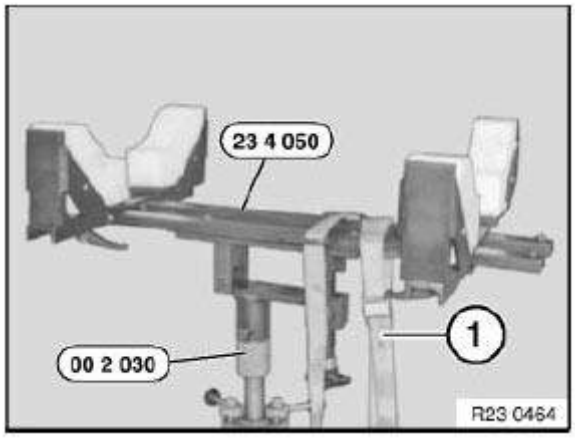

Fig. 25: Supporting Transmission Using Special Tools (23 4 050)
Courtesy of BMW OF NORTH AMERICA, INC.

Unfasten ground strap (1).

Release screws.

Remove cross member.

Tightening torque 22 32 3/6AZ .

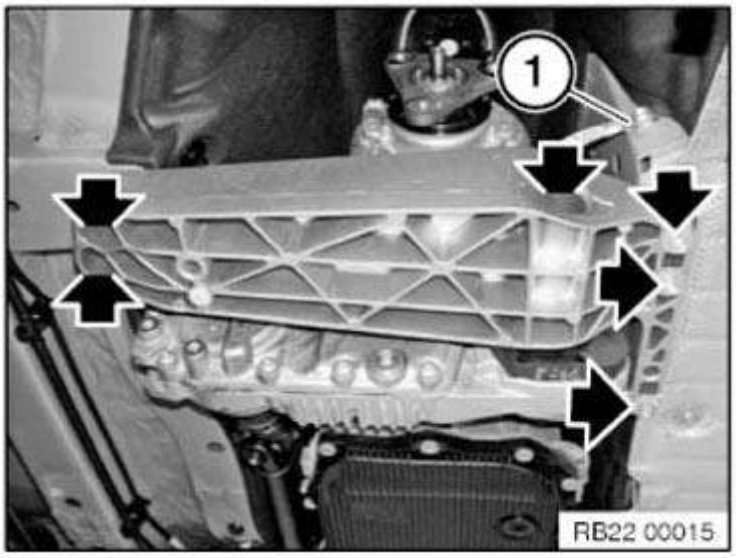

cardiagn.com

Fig. 26: Locating Transmission Mounting Ground Strap
Courtesy of BMW OF NORTH AMERICA, INC.

22 31 001 REPLACING RUBBER MOUNT FOR TRANSMISSION MOUNTING

Special tools required:

- 22 1 051
- 22 1 052
- 33 4 465
- 33 4 466
- 22 1 046
- 22 1 053

Necessary preliminary tasks:

- Remove CROSS MEMBER for transmission mounting.

Attach special tool 22 1 051 with screw (1) on the housing.

Pull out rubber mount with special tools 22 1 052 /33 4 465 and 33 4 466 .

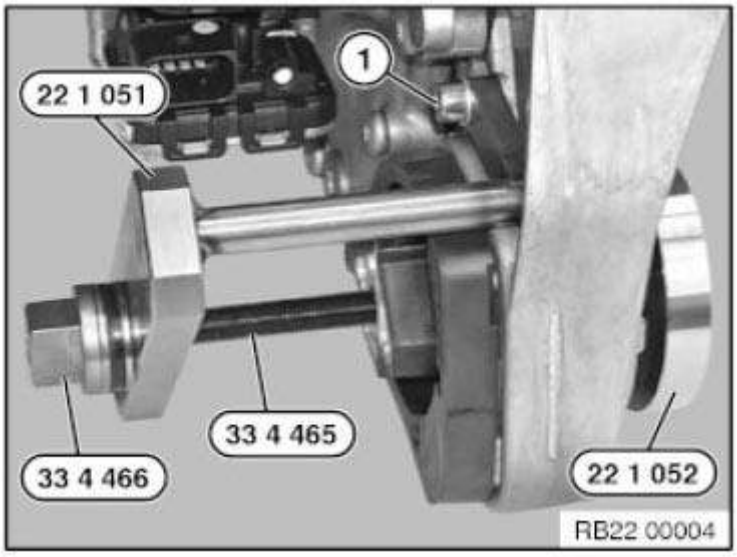

Fig. 27: Attaching Special Tool (22 1 051)
Courtesy of BMW OF NORTH AMERICA, INC.

Installation note:

Observe installation position of rubber mount.

Arrow on rubber mount must point to arrow on housing.

Coat housing bore and rubber mount with Circolight.

cardiagn.com

Fig. 28: Identifying Rubber Mount Installation Position
Courtesy of BMW OF NORTH AMERICA, INC.

Insert special tool **22 1 046** with bolt into recesses of rubber mount.

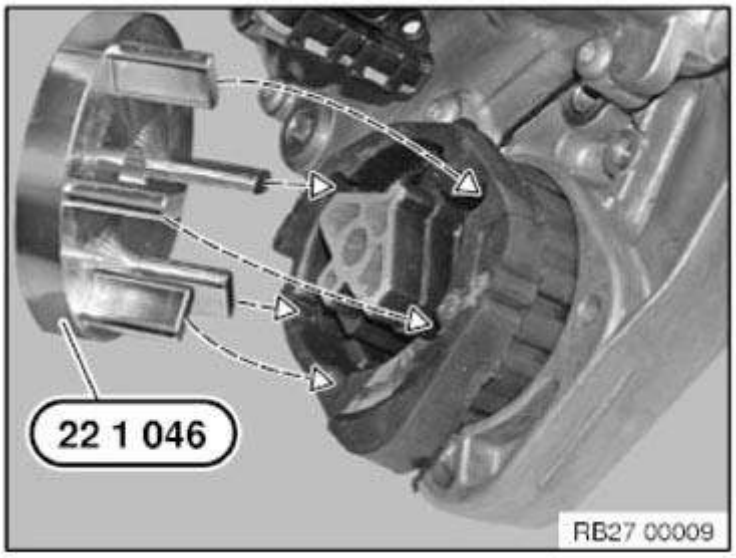

Fig. 29: Inserting Special Tool (22 1 046)
Courtesy of BMW OF NORTH AMERICA, INC.

Draw in rubber mount with special tools **22 1 046** /**22 1 053** /**33 4 465** and **33 4 466** .

cardiagn.com

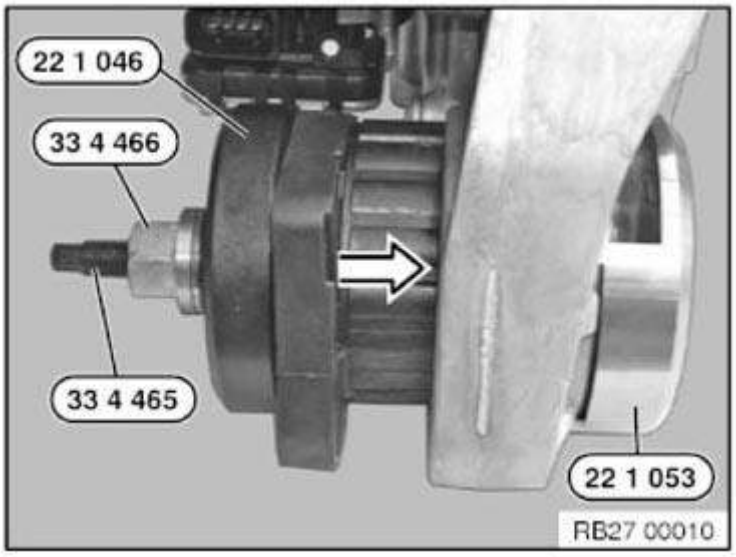

Fig. 30: Installing Rubber Mount Using Special Tools (22 1 046)
Courtesy of BMW OF NORTH AMERICA, INC.

22 32 001 REPLACING RUBBER MOUNT FOR TRANSMISSION MOUNTING (ATC 450)

Special tools required:

- 22 1 051
- 22 1 052
- 33 4 465
- 33 4 466
- 22 1 046
- 22 1 053

Necessary preliminary work:

- Remove CROSS MEMBER for transmission mounting

Attach special tool 22 1 051 with screw (1) on the housing.

Pull out rubber mount with special tools 22 1 052 /33 4 465 and 33 4 466 .

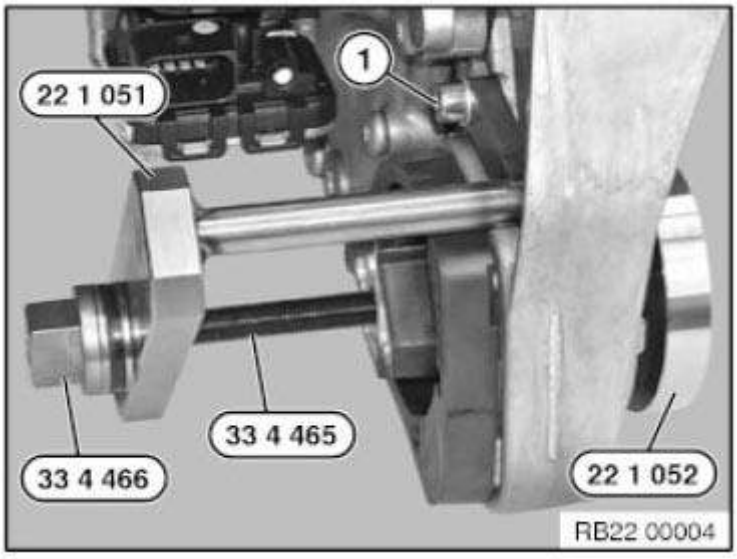

Fig. 31: Attaching Special Tool (22 1 051)

cardiagn.com

Courtesy of BMW OF NORTH AMERICA, INC.

Installation note:

Observe installation position of rubber mount.

Arrow on rubber mount must point to arrow on housing.

Coat housing bore and rubber mount with Circolight.

Fig. 32: Identifying Rubber Mount Installation Position
Courtesy of BMW OF NORTH AMERICA, INC.

Insert special tool **22 1 046** with bolt into recesses of rubber mount.

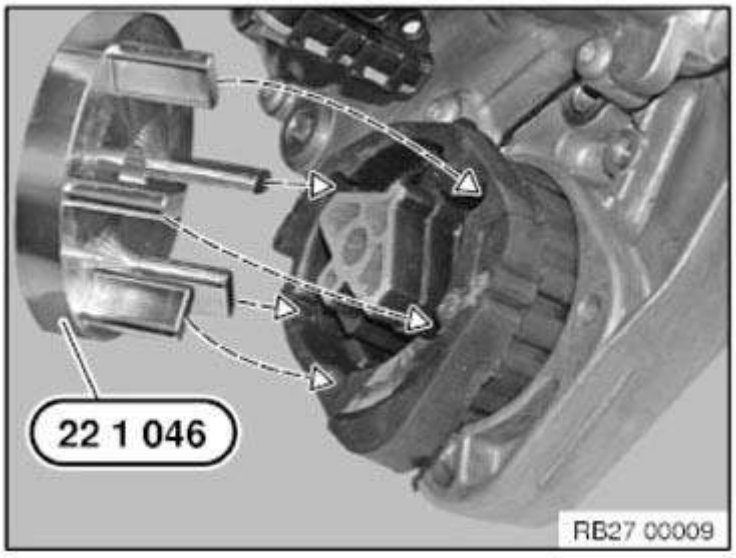

Fig. 33: Inserting Special Tool (22 1 046)
Courtesy of BMW OF NORTH AMERICA, INC.

Draw in rubber mount with special tools **22 1 046** /**22 1 053** /**33 4 465** and **33 4 466** .

cardiagn.com

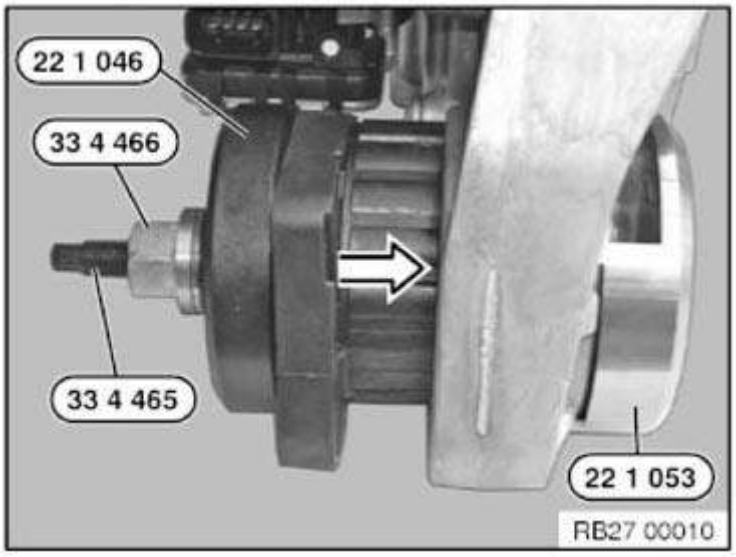

Fig. 34: Installing Rubber Mount Using Special Tools (22 1 046)
Courtesy of BMW OF NORTH AMERICA, INC.

22 32 001 REPLACING RUBBER MOUNT FOR TRANSMISSION MOUNTING (ATC 45L)

Special tools required:

- 22 1 051
- 22 1 052
- 33 4 465
- 33 4 466
- 22 1 046
- 22 1 053

Necessary preliminary tasks:

- Remove CROSS MEMBER for transmission mounting

Attach special tool 22 1 051 with screw (1) on the housing.

Pull out rubber mount with special tools 22 1 052 /33 4 465 and 33 4 466 .

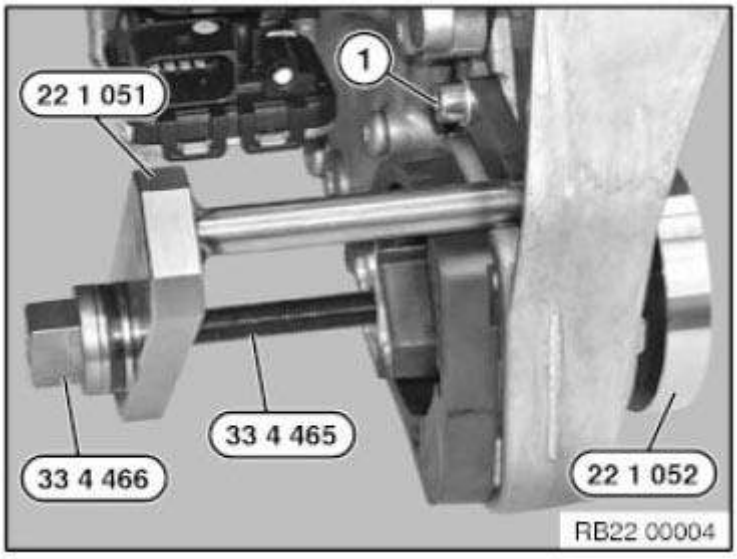

Fig. 35: Attaching Special Tool (22 1 051)

cardiagn.com

Courtesy of BMW OF NORTH AMERICA, INC.

Installation note:

Observe installation position of rubber mount.

Arrow on rubber mount must point to arrow on housing.

Coat housing bore and rubber mount with Circolight.

Fig. 36: Identifying Rubber Mount Installation Position
Courtesy of BMW OF NORTH AMERICA, INC.

Insert special tool 22 1 046 with bolt into recesses of rubber mount.

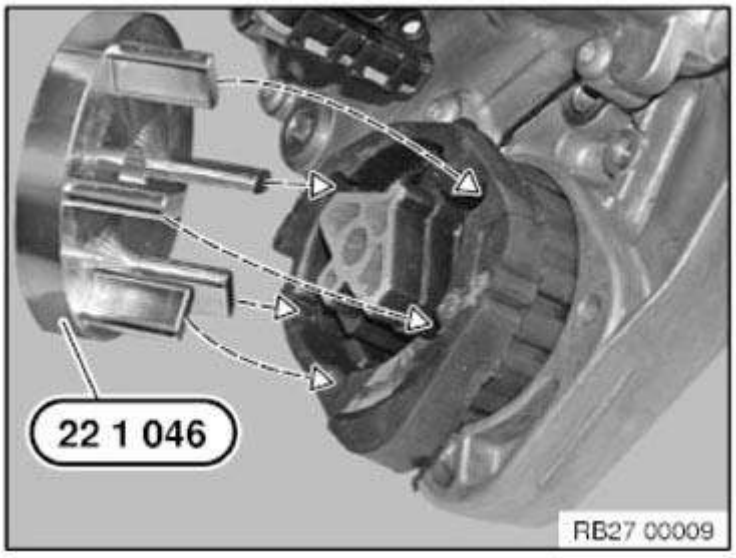

Fig. 37: Inserting Special Tool (22 1 046)
Courtesy of BMW OF NORTH AMERICA, INC.

Draw in rubber mount with special tools 22 1 046 /22 1 053 /33 4 465 and 33 4 466 .

cardiagn.com

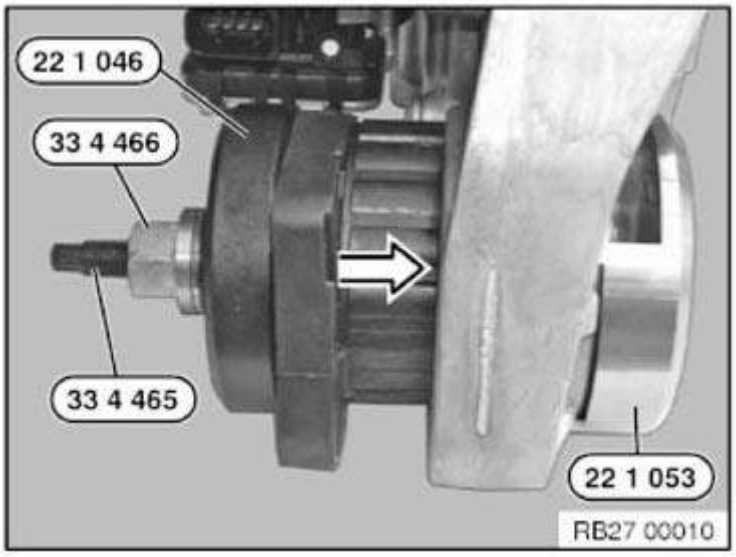

Fig. 38: Installing Rubber Mount Using Special Tools (22 1 046)
Courtesy of BMW OF NORTH AMERICA, INC.

Copyright 2016 Mitchell Repair Information Company, LLC. All Rights Reserved.

Article GUID: A00702205

cardiagn.com

ENGINE AND GEARBOX SUSPENSION

0493702 BRIDGE

0493702 221016 Bridge Minimum set: Mechanical tools AM

NOTE: For pulling out the transfer box rubber mount. Series: E46/16, E83

Storage Location

B9

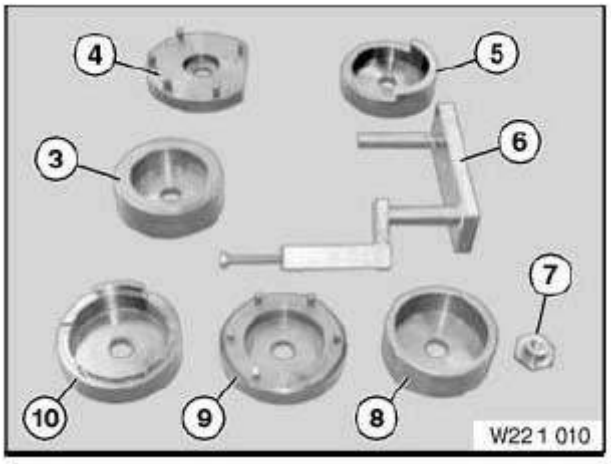

Fig. 1: Identifying Bridge (0493702)
Courtesy of BMW OF NORTH AMERICA, INC.

0495263 BRIDGE

0495263 221041 Bridge Minimum set: Mechanical tools AM

NOTE: Available as part of set of special tools 22 1 040-22 1 040 -> (83 30 0 495 240) only.

Storage Location

B50

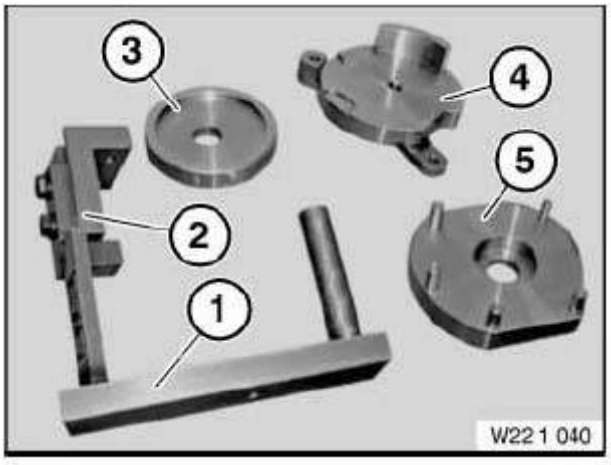

cardiagn.com

Fig. 2: Identifying Bridge (0495263)
Courtesy of BMW OF NORTH AMERICA, INC.

0496928 BRIDGE

0496928 221051 Bridge AM

NOTE: **For removing rubber mount.**

Storage Location

C28

Fig. 3: Identifying Bridge (0496928)
Courtesy of BMW OF NORTH AMERICA, INC.

0493807 BUSH

0493807 221018 Bush Minimum set: Mechanical tools AM

NOTE: **For pulling out the transfer box rubber mount - series: E53, E83, E90**

Storage Location

C9

cardiagn.com

Fig. 4: Identifying Bush (0493807)
Courtesy of BMW OF NORTH AMERICA, INC.

0496851 DEVICE

0496851 221050 Device AM

In conjunction with: 33 4 465/466, 22 1 102, 22 1 046 = 0496792

NOTE: **For removing and installing the rubber mount.**

Storage Location

C28

SI number

01 03 10 (619)

Consisting of:

Fig. 5: Identifying Device (0496851)
Courtesy of BMW OF NORTH AMERICA, INC.

1. 0496928 Bridge

   NOTE: **For removing rubber mount.**

2. 0496929 Washer

   NOTE: **For removing rubber mount**

3. 0496930 Washer

   NOTE: **For fitting rubber mount.**

0495240 DEVICE

0495240 221040 Device Minimum set: Mechanical tools AM

NOTE: **For removing and installing rubber mount on transfer box: ATC300, ATC350, ATC450**

cardiagn.com

Storage Location

B50

SI number

01 04 05 (175)

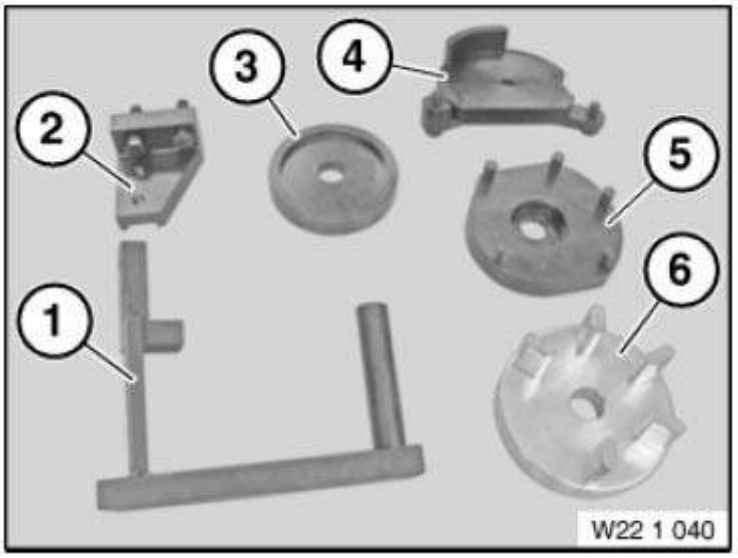

Fig. 6: Identifying Device (0495240)
Courtesy of BMW OF NORTH AMERICA, INC.

Consisting of:

1. 0495263 Bridge

   NOTE: **Available as part of set of special tools 22 1 040-22 1 040 -> (83 30 0 495 240) only.**

2. 0495264 Holder

   NOTE: **Available as part of set of special tools 22 1 040-22 1 040 -> (83 30 0 495 240) only.**

3. 0495265 Washer

   NOTE: **(Thrust washer) Available as part of set of special tools 22 1 040-22 1 040 -> (83 30 0 495 240) only.**

4. 0495266 Washer

   NOTE: **(Profile washer) Only available via complete tool set 22 1 040 -> (83 30 0 495 240).**

5. 0495267 Washer

   NOTE: **(Washer with cylindrical pins) Only available via complete tool set 22 1 040 -> (83 30 0 495 240).**

6. 0496792 Washer

cardiagn.com

NOTE: **For installing rubber mount in transfer box housing.**

In conjunction with: 22 1 044, 33 4 465/466 = 0495266

0495264 HOLDER

0495264 221042 Holder Minimum set: Mechanical tools AM

NOTE: **Available as part of set of special tools 22 1 040-22 1 040 -> (83 30 0 495 240) only.**

Storage Location

B50

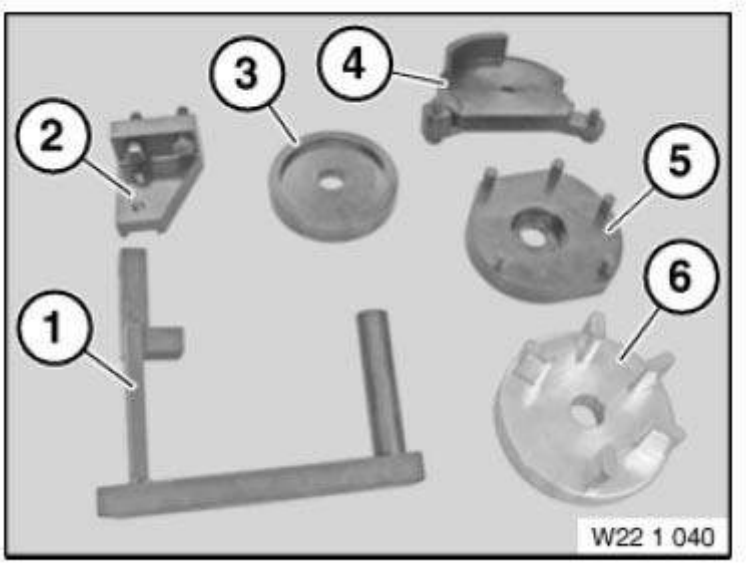

Fig. 7: Identifying Holder (0495264)
Courtesy of BMW OF NORTH AMERICA, INC.

2184136 MOBILE EQUIPMENT TABLE LIFT

2184136 Mobile equipment table lift Mechanical tool

NOTE: **Table lift Gruse MHT 1200**

SI number

06 01 10 (649)

cardiagn.com

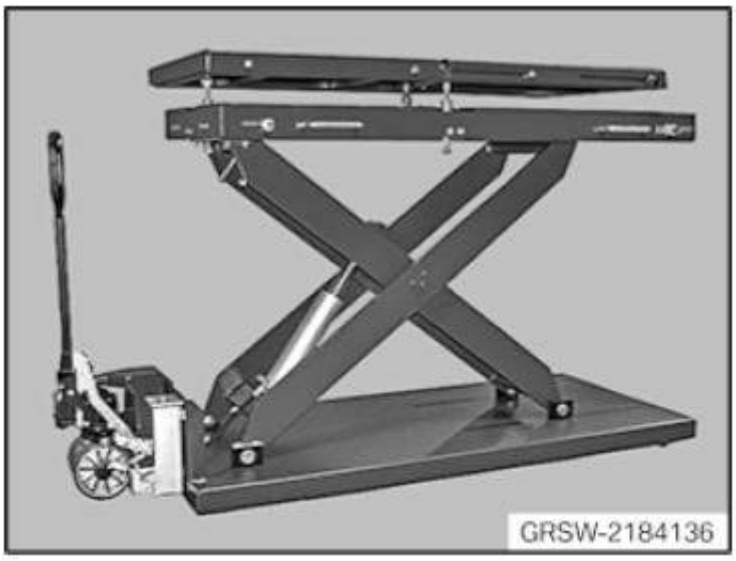

Fig. 8: Identifying Mobile Equipment Table Lift (2184136)
Courtesy of BMW OF NORTH AMERICA, INC.

0493806 NUT

0493806 221017 Nut Minimum set: Mechanical tools AM

NOTE: **For installing and removing the transfer box rubber mount - series: E46/16**

Storage Location

B9

Fig. 9: Identifying Nut (0493806)
Courtesy of BMW OF NORTH AMERICA, INC.

0493700 SYNCHRONIZING KEY

0493700 221013 Synchronizing key Minimum set: Mechanical tools AM

NOTE: **For installing the transfer box rubber mount - series: E53**

Storage Location

B9

cardiagn.com

C9

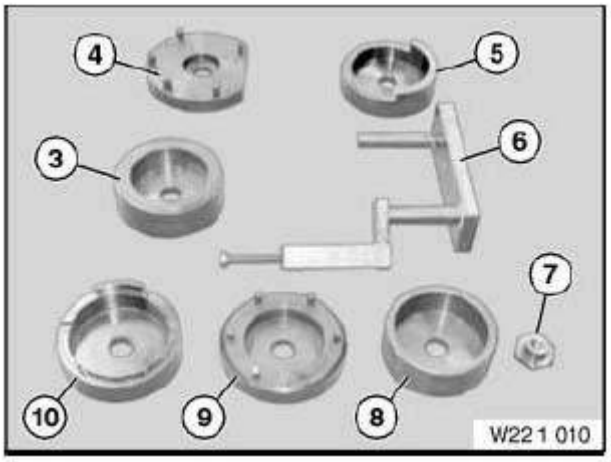

Fig. 10: Identifying Synchronizing Key (0493700)
Courtesy of BMW OF NORTH AMERICA, INC.

0493701 SYNCHRONIZING KEY

0493701 221014 Synchronizing key Minimum set: Mechanical tools AM

NOTE: **For installing the transfer box rubber mount - series: E46/16, E83**

Storage Location

B9

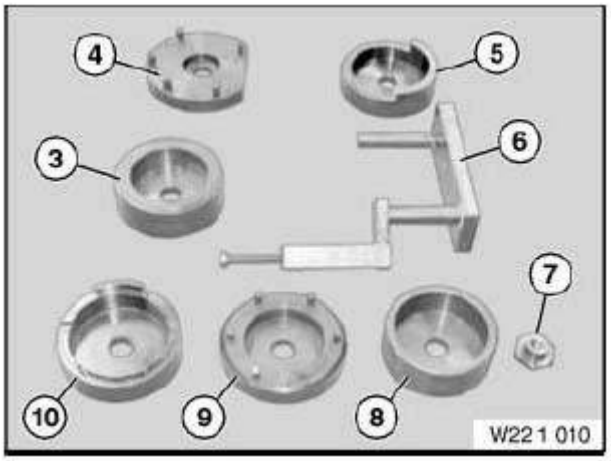

Fig. 11: Identifying Synchronizing Key (0493701)
Courtesy of BMW OF NORTH AMERICA, INC.

0493698 SYNCHRONIZING KEY

0493698 221011 Synchronizing key Minimum set: Mechanical tools AM

Replaced by: 83300493807

NOTE: **For pulling out the transfer box rubber mount - Replaced by 22 1 018 (0 493 807)**

cardiagn.com

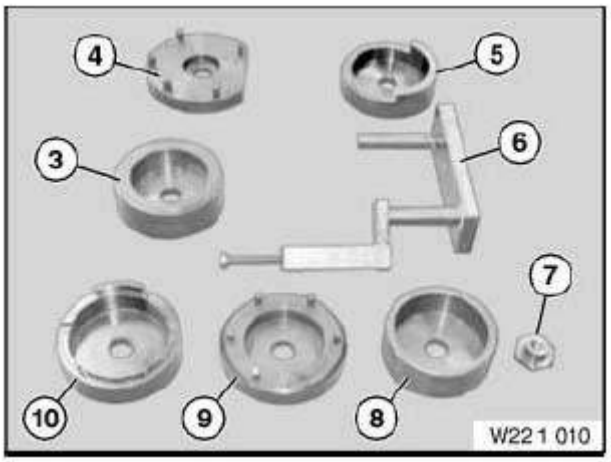

Fig. 12: Identifying Synchronizing Key (0493698)
Courtesy of BMW OF NORTH AMERICA, INC.

0493597 TOOL

0493597 221010 Tool Minimum set: Mechanical tools AM

NOTE: **(Tool set) For removing and installing the transfer box rubber mount 22 1 018 for E46/16, E67 and RR**

Storage Location

B9

SI number

01 15 99 (483)

Consisting of:

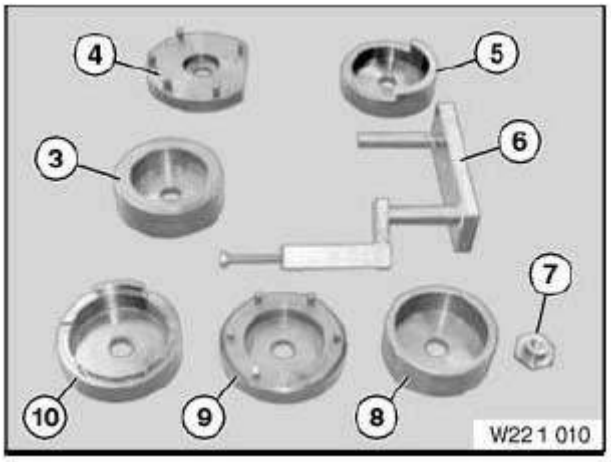

Fig. 13: Identifying Tool (0493597)
Courtesy of BMW OF NORTH AMERICA, INC.

3 = 0493698 Synchronizing key

NOTE: **For pulling out the transfer box rubber mount - Replaced by 22 1 018 (0 493 807)**

3 = 0493699 Washer

cardiagn.com

NOTE: **(Support disc) For installing the transfer box rubber mount - series: E53 - Replaced by 22 1 019 (0 493 808)**

3 = **0493700** Synchronizing key

NOTE: **For installing the transfer box rubber mount - series: E53**

4 = **0493701** Synchronizing key

NOTE: **For installing the transfer box rubber mount - series: E46/16, E83**

6 = **0493702** Bridge

NOTE: **For pulling out the transfer box rubber mount. Series: E46/16, E83**

5 = **0493746** Washer

NOTE: **Series: E46/16**

7 = **0493806** Nut

NOTE: **For installing and removing the transfer box rubber mount - series: E46/16**

8 = **0493807** Bush

NOTE: **For pulling out the transfer box rubber mount - series: E53, E83, E90**

9 = **0493808** Washer

NOTE: **For installing the transfer box rubber mount - series: E53**

10 = **0494780** Washer

NOTE: **For installing the rubber mount in the transfer box-transfer box: ATC400 Model series: E83**

0493746 WASHER

0493746 221015 Washer Minimum set: Mechanical tools AM

NOTE: **Series: E46/16**

Storage Location

B9

C9

cardiagn.com

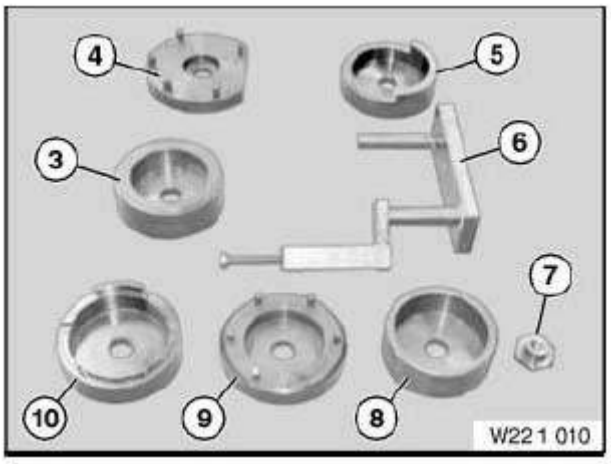

Fig. 14: Identifying Washer (0493746)
Courtesy of BMW OF NORTH AMERICA, INC.

0493808 WASHER

0493808 221019 Washer Minimum set: Mechanical tools AM

NOTE: **For installing the transfer box rubber mount - series: E53**

Storage Location

C9

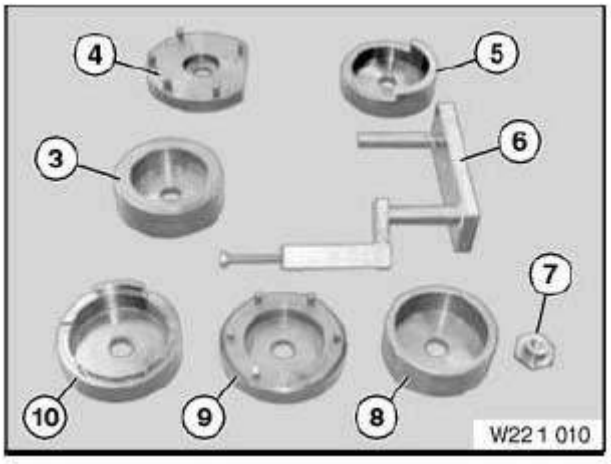

Fig. 15: Identifying Washer (0493808)
Courtesy of BMW OF NORTH AMERICA, INC.

0495267 WASHER

0495267 221045 Washer Minimum set: Mechanical tools AM

NOTE: **(Washer with cylindrical pins) Only available via complete tool set 22 1 040 - > (83 30 0 495 240).**

Storage Location

B50

cardiagn.com

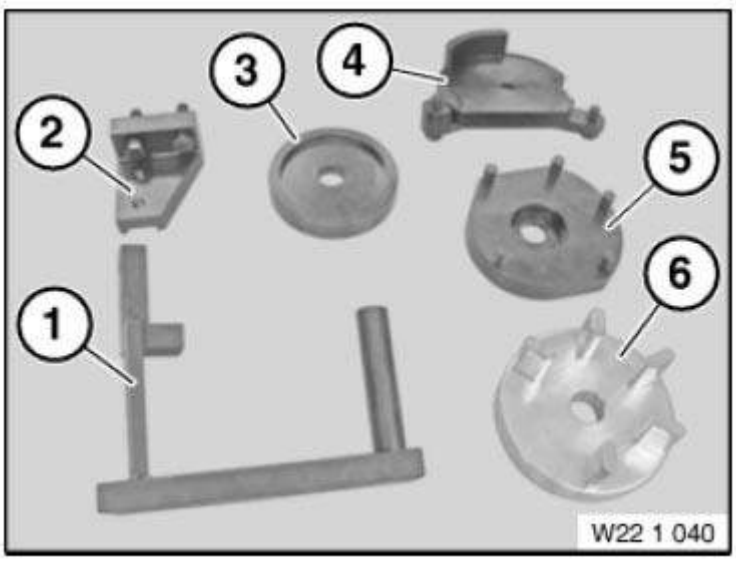

Fig. 16: Identifying Washer (0495267)
Courtesy of BMW OF NORTH AMERICA, INC.

0496792 WASHER

0496792 221046 Washer Minimum set: Mechanical tools AM

In conjunction with: 22 1 044, 33 4 465/466 = 0495266

NOTE: **For installing rubber mount in transfer box housing.**

Storage Location

B28

SI number

01 25 09 (591)

Fig. 17: Identifying Washer (0496792)
Courtesy of BMW OF NORTH AMERICA, INC.

0494780 WASHER

0494780 221021 Washer Minimum set: Mechanical tools AM

cardiagn.com

NOTE: **For installing the rubber mount in the transfer box-transfer box: ATC400 Model series: E83**

Storage Location

C9

Fig. 18: Identifying Washer (0494780)
Courtesy of BMW OF NORTH AMERICA, INC.

0495265 WASHER

0495265 221043 Washer Minimum set: Mechanical tools AM

NOTE: **(Thrust washer) Available as part of set of special tools 22 1 040-22 1 040 -> (83 30 0 495 240) only.**

Storage Location

B50

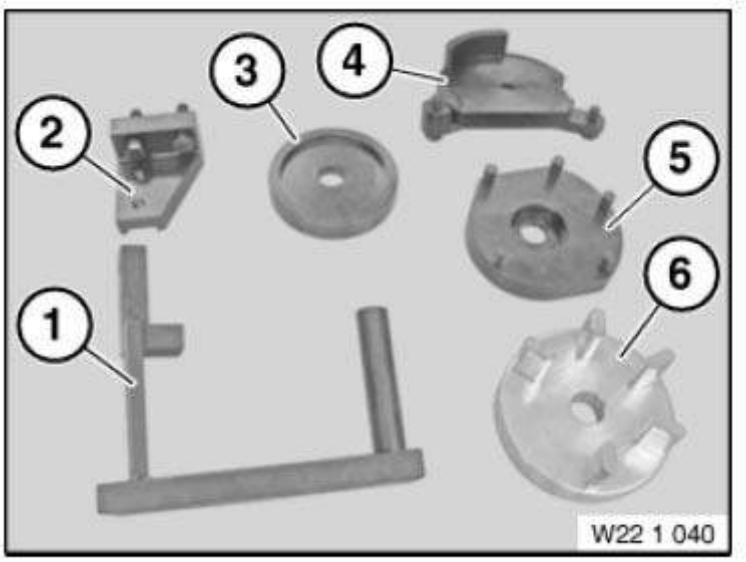

Fig. 19: Identifying Washer (0495265)
Courtesy of BMW OF NORTH AMERICA, INC.

0495266 WASHER

cardiagn.com

0495266 221044 Washer Minimum set: Mechanical tools AM

NOTE: **(Profile washer) Only available via complete tool set 22 1 040 -> (83 30 0 495 240).**

Storage Location

C50

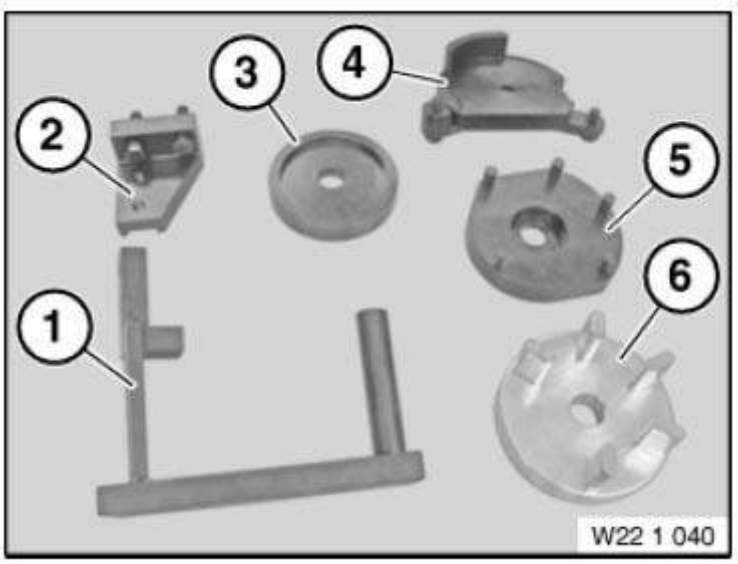

Fig. 20: Identifying Washer (0495266)
Courtesy of BMW OF NORTH AMERICA, INC.

0493699 WASHER

0493699 221012 Washer Minimum set: Mechanical tools AM

Replaced by: 83300493808

NOTE: **(Support disc) For installing the transfer box rubber mount - series: E53 - Replaced by 22 1 019 (0 493 808)**

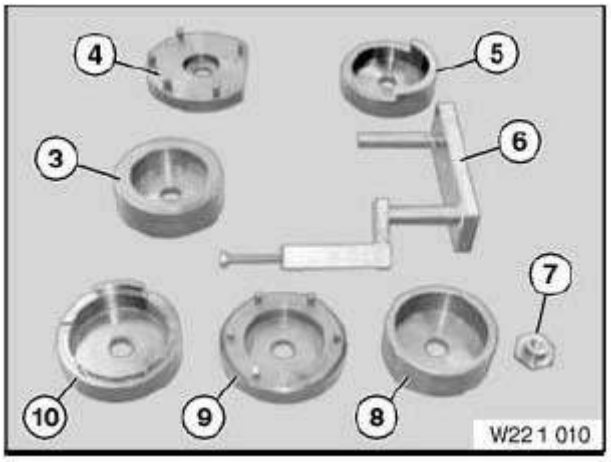

Fig. 21: Identifying Washer (0493699)
Courtesy of BMW OF NORTH AMERICA, INC.

0496929 WASHER

0496929 221052 Washer AM

cardiagn.com

NOTE: **For removing rubber mount**

Storage Location

C28

0496930 WASHER

0496930 221053 Washer AM

NOTE: **For fitting rubber mount.**

Storage Location

C28

Copyright 2016 Mitchell Repair Information Company, LLC. All Rights Reserved.

Article GUID: A00702117

cardiagn.com

ENGINE MOUNTING

22 11 ENGINE MOUNTING

TIGHTENING TORQUE SPECIFICATION - ENGINE MOUNTING

Â		Type	Thread	Tightening specifications
1AZ	Engine mount to front axle support	F01/F02/F03/F04/F06/F07/F10/F10 HY/F11/F12/F13/F18/F20/F21/F22/F23/F25 N57/F30/F30 HY/F31/F32/F33/F34/F35/F36/F80/F82/F83/F18 PHEV	M8 8.8	Â
		F25/F26	M8X45	Â
		F15/F16/F26/F25	M10X30	Â
2AZ	Engine mount to engine support arm	F01/F02/F03/F04/F06/F07/F10/F10 HY/F11/F12/F13/F18/F80/F82/F83/F18 PHEV	M12 10.9	Â
		F15 F16 N57 (right engine mount)/F25/F30 N57 (right engine mount)	M12 10.9	Â
		F20/F21/F22/F23/F25/F30 (without N57)/F32/F33/F34/F36/F80/F82/F83	M10	Â
		F25, F30 N57 (left engine mount)	M10	Â
		F25/F26	M12	Â
		F30, F31 N47T/F30 HY	M10	Â
		F35	M10	Â
		F15, F16 N57 (left engine mount)/F15, F16 N63/F15, F16 N55	M12	Â
3AZ	Engine support arm to engine	F01/F02/F03/F04/F06/F07/F10/F10 HY/F11/F12/F13/F15, F16 N63/F18/F20/F21/F22/F23/F25/F26/F30/F31/F32/F33 N47/F34/F35/F36/F80/F82/F83/F18 PHEV	M10 8.8	Â
		F01 N54/F02 N54/F07 N55/F10 N55/F11 N55/F15, F16 N55/F20 N55/F21 N55/F22 N55/F23 N55/F25 N55/F26 N55/F30 N55/F30 HY/F34 N55/F33 N55/F80/F82/F83	M12 8.8	Â
		F01/F02/F10, F11 N52T, F10/F11, N53/F25 N52T	M12x46	Replace screws, jointing torque and angle of rotation must be observed without fail. 1. Jointing torque 2. Angle of rotation
		F20 N13/F30 N13/F31 N13	M10x70, M10x35	Â
		F15 F16 N57 (right engine support arm)	M10 10.9	Â
		F15 F16 N57 (left engine support arm)	M10 8.8	Â
		F80/F82	M10 10.9	Â
4AZ	Additional mass to engine support arm, left	F01/F02/F06/F07/F10/F10 HY/F11/F18/F15/F16/F25/F26/F30/F31/F80/F82/F83	M8 8.8	Replace screw
5AZ	Engine support arm to front axle differential (reinforcing plate)	F01, F02, F07/F25, (all-wheel drive vehicle)	M8	Â
6AZ	Tank ventilation line to engine support arm	F20/F21/F30/F31/F33/F34/F35	M6	Â
7AZ	Holder, electric vacuum pump to engine support arm	F30Hyb.	Â	Â

TRANSMISSION MOUNTING

22 32 TRANSMISSION MOUNTING

TIGHTENING TORQUE SPECIFICATION - TRANSMISSION MOUNTING

Â		Type	Thread	Ti sp
1AZ	Transmission bearing support to transmission	F01/F02/F03/F04/F06/F07/F10/F11/F12/F13/F15/F16/F18/F20/F21/F22/F23/F25/F26/F30/F31/F32/F33/F34/F35/F36/F80/F82/F83/F18 PHEV	M10	Â
2AZ	Rubber mount to transmission bearing support	F01/F02/F03/F04/F06/F07/F10/F11/F12/F13/F18/F20/F21/F22/F23/F25/F26/F30/F31/F32/F33/F34/F35/F36/F80/F82/F83/F18 PHEV	M8	Â
3AZ	Transmission cross member to body	F01/F02/F03/F04/F06/F07/F10/F11/F12/F13/F18/F20/F21/F22/F23/F25/F26/F30/F31/F32/F33/F34/F35/F36/F80/F82/F83/F18 PHEV	M8	Â
4AZ	Transmission cross member to rubber mounts	F01/F02/F03/F04/F06/F07/F10/F11/F12/F13/F18/F20/F21/F22/F23/F25/F26/F30/F31/F32/F33/F34/F35/F36/F80/F82/F83/F18 PHEV	M8	Â
5AZ	Vibration absorber to transmission cross	F01/F02 N54/F10	Â	Â

cardiagn.com

	member			
6AZ	Transmission cross member to rubber mounts (AWD)	F01/F02/F06/F07/F10/F11/F25/F12/F13/F15/F16/F20/F21/F30/F31/F32/F34/F36/F80/F82/F83	M12	Â
7AZ	Transmission bearing block to transmission (AWD)	F01/F06/F07/F10/F11	M8	Â
8AZ	Rubber mount to transmission bearing block (AWD)	F01/F06/F07/F10/F11	M8	Â
9AZ	Rubber mount to transmission bearing block (AWD)	F01/F06/F07/F10/F11	M8	Â
10AZ	Transmission bearing block to body (AWD)	F01/F06/F07/F10/F11	M8	Â
11AZ	Transmission cross member to body	F15/F16/F15 PHEV	M10	Â

Copyright 2016 Mitchell Repair Information Company, LLC. All Rights Reserved.

Article GUID: A00702166

cardiagn.com

Back To Article

TRANSMISSION IN GENERAL

00 DANGER OF POISONING IF OIL IS INGESTED/ABSORBED THROUGH THE SKIN

Danger of poisoning!

Ingesting oil or absorbing through the skin may cause poisoning!

Possible symptoms are:

- Headaches
- Dizziness
- Stomach aches
- Vomiting
- Diarrhoea
- Cramps/fits
- Unconsciousness

Protective measures/rules of conduct:

- Pour oil only into appropriately marked containers
- Do **not** pour oil into drinking vessels (drinks bottles, glasses, cups or mugs)
- Observe country-specific safety regulations

First aid measures:

- Do not induce vomiting.

  If the person affected is still conscious, he/she must rinse out their mouth with water, drink plenty of water and consult a doctor immediately.

  If the person affected is unconscious, do not administer anything by mouth, place the person in the recovery position and seek immediate medical attention.

00 11 500 CHECKING/TOPPING UP OIL LEVEL IN AUTOMATIC TRANSMISSION (GA8HP45Z, GA8HP50Z, GA8HP90Z)

IMPORTANT:

- Do not let skin come in contact with transmission oil and do not inhale fuel vapors.
- Wear protective gloves.
- Ensure adequate ventilation

Use only the approved **TRANSMISSION OIL** .
To set the correct level, it is **mandatory** that the service function "Transmission control unit: oil adjustment" is performed using the diagnosis system.
Failure to comply with this requirement will result in serious damage to the automatic transmission.

IMPORTANT: **Conditions for the oil adjustment:**

- Initial condition: Transmission oil temperature 30 Â° C to 40 Â°C

cardiagn.com

- Final condition: Transmission oil temperature 40 Â° C to 50 Â°C

IMPORTANT: Transmission GA8HP70Z with N57 engine from 03/2011!!

Precondition for oil adjustment

- Transmission oil temperature 30Â°C to maximum 40Â°C.

(The transmission oil temperature **must** be maintained. This will increase the oil quantity in the transmission.)

Performing oil-level adjustment:

An oil-level adjustment is necessary for certain fault code entries in the automatic transmission and after repair (e.g. mechatronic replacement, converter replacement, transmission replacement).

- Connect diagnosis and information system.
- Service function (transmission control unit: Oil adjustment) call up
- Carry out oil level check in accordance with instructions

Adding transmission oil:

Stand vehicle on a level surface and secure against rolling off.

Undo oil filler plug (1).

Add automatic transmission fluid according to instructions in the BMW diagnosis system.

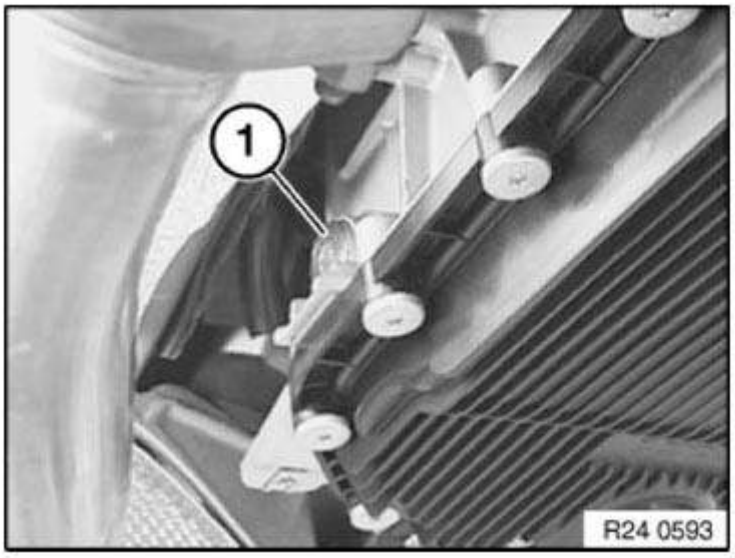

Fig. 1: Identifying Oil Filler Plug
Courtesy of BMW OF NORTH AMERICA, INC.

Installation note:

Replace sealing ring/oil filler plug

Tightening torque: **24 11 3AZ**

Tighten down oil filler plug using

1. Hexagon socket wrench AF 8
2. Torque wrench

cardiagn.com

3. Socket AF 8

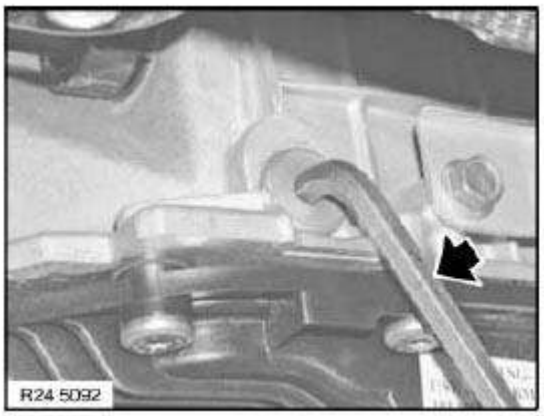

Fig. 2: Tightening Oil Filler Plug
Courtesy of BMW OF NORTH AMERICA, INC.

24 00 054 INSTALLING EXCHANGE TRANSMISSION (GA8HP45Z) (N52, N55, N47)

IMPORTANT:

- Do not let skin come in contact with transmission oil and do not inhale transmission oil vapors.
- Wear protective gloves.
- Ensure adequate ventilation

Drain automatic transmission fluid at oil drain plug.

Tightening torque 24 11 2AZ .

IMPORTANT: After completion of work, program control transmission control unit.

Recycling:

Catch and dispose of escaping transmission oil.

Observe country-specific waste disposal regulations.

IMPORTANT:

- Before installing exchange transmission, always flush TRANSMISSION OIL COOLER TOGETHER WITH LINES .
- After completion of work, CHECK TRANSMISSION OIL LEVEL .
- Use only approved TRANSMISSION OIL .

  Failure to comply with this requirement will result in serious damage to the automatic transmission

  Exchange transmissions come filled with oil

Necessary preliminary tasks:

- Remove **automatic transmission** . See 24 00 033 REMOVING AND INSTALLING AUTOMATIC TRANSMISSION (GA8HP45Z) N47, 24 00 033 REMOVING AND INSTALLING AUTOMATIC TRANSMISSION (GA8HP45Z) N55 or 24 00 033 REMOVING AND INSTALLING AUTOMATIC TRANSMISSION (GA8HP45Z) N52

cardiagn.com

- Remove **transfer box** . See 27 10 010 REMOVING AND INSTALLING TRANSFER BOX (ATC 450) or 27 10 010 REMOVING AND INSTALLING TRANSFER BOX (ATC 45L) (all-wheel drive vehicle)

Modify transportation retainers.

Convert all cable clips.

Convert all seal plugs.

Convert protective cap on output shaft.

IMPORTANT: After removing transportation retainer, secure torque converter against slipping out.

Transmission identification:

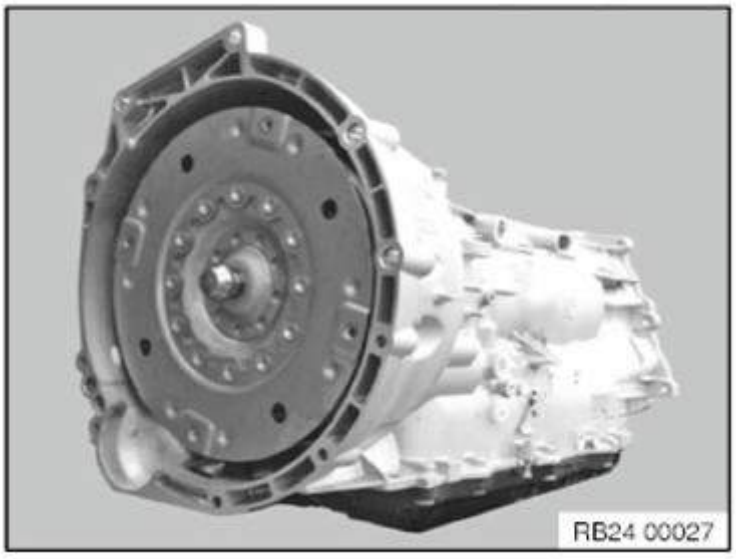

Fig. 3: Identifying Transmission
Courtesy of BMW OF NORTH AMERICA, INC.

- On type plate

24 00 054 INSTALLING EXCHANGE TRANSMISSION (GA8HP45Z) (N20)

IMPORTANT:
- Do not let skin come in contact with transmission oil and do not inhale fuel vapors.
- Wear protective gloves.
- Ensure adequate ventilation.

Drain automatic transmission fluid at oil drain plug.

Tightening torque 24 11 2AZ .

IMPORTANT: After completion of work, program control transmission control unit.

Recycling:

Catch and dispose of escaping transmission oil.

Observe country-specific waste disposal regulations.

cardiagn.com

- Before installing exchange transmission, always flush **TRANSMISSION OIL COOLER TOGETHER WITH LINES** .
- After completion of work, **CHECK TRANSMISSION OIL LEVEL** .
- Use only approved **TRANSMISSION OIL** .

IMPORTANT:

Failure to comply with this requirement will result in serious damage to the automatic transmission

Exchange transmissions come filled with oil

Necessary preliminary tasks:

- Remove **AUTOMATIC TRANSMISSION**.
- Modify **TRANSFER CASE** .

Modify transportation retainers.

Convert all cable clips.

Convert all seal plugs.

Convert protective cap on output shaft.

IMPORTANT: After removing transportation retainer, secure torque converter against slipping out.

Transmission identification:

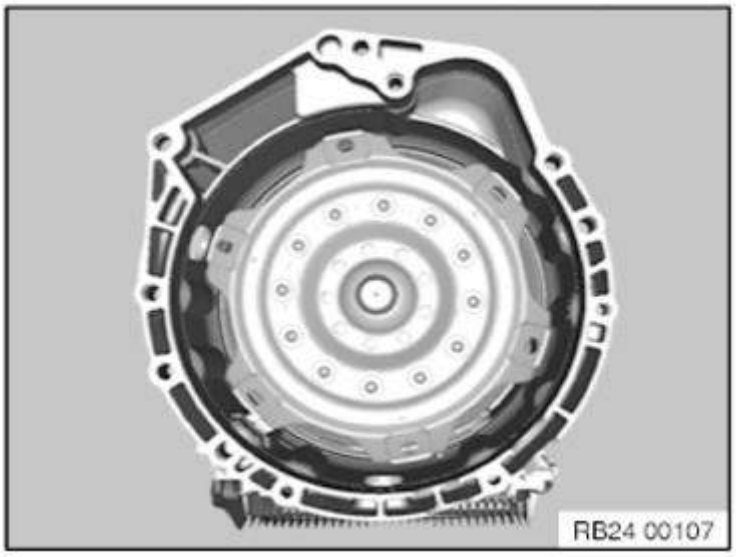

Fig. 4: Identifying Transportation Retainers
Courtesy of BMW OF NORTH AMERICA, INC.

- On type plate

24 00... OVERVIEW OF TRANSMISSION HOUSING (GA8HP45Z)

cardiagn.com

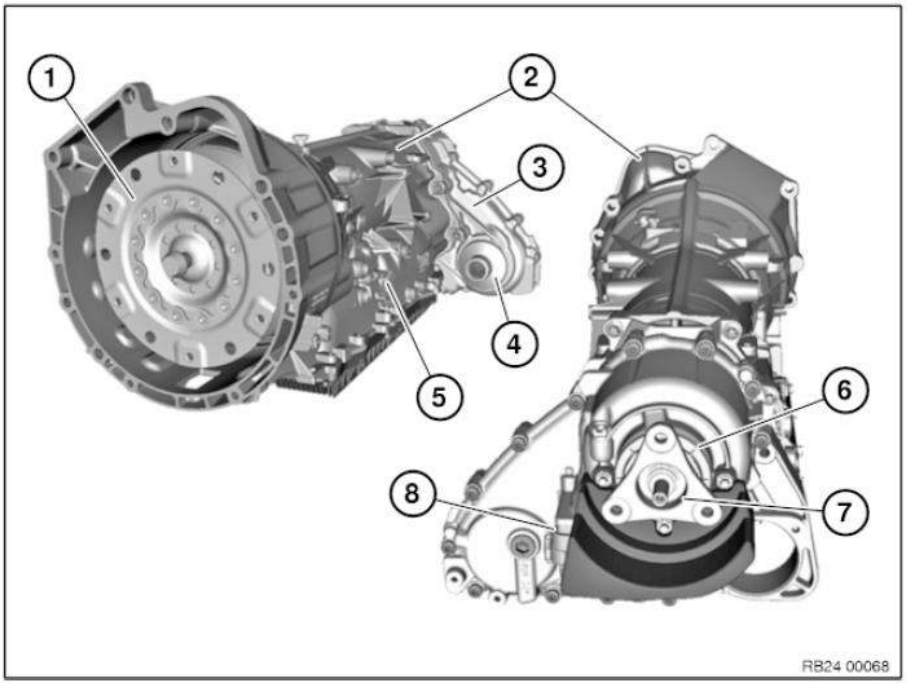

0 General information	Complete transmission, transmission oil change, transmission designations
1 Torque converter	
2 Transmission housing, front section	
3 Transfer case	
4 Radial shaft seal	For front axle output
5 Radial seal	For selector shaft
6 Radial seal	For output flange
7 Output flange	
8 Control modules	Longitudinal torque module

Fig. 5: Overview Of Transmission Housing (GA8HP45Z)
Courtesy of BMW OF NORTH AMERICA, INC.

Complete transmission, transmission oil change, transmission designations

24 00 033 REMOVING AND INSTALLING AUTOMATIC TRANSMISSION (GA8HP45Z) (N20)

Special tools required:

- 2 222 741
- 24 2 390
- 23 4 050

cardiagn.com

- 00 2 030

IMPORTANT: To prevent heavy damage to the engine block, the protruding thread of the transmission bolts absolutely must be checked for damage and corrosion **before removal.**
If there are signs of corrosion, the rust must be removed and the threads must be cleaned **before removal.**
Replace rusted, damaged screws.

Failure to comply with this instruction will result in serious damage to the engine block and transmission.

IMPORTANT: After completion of repair work, check TRANSMISSION OIL LEVEL .
Use only the approved TRANSMISSION OIL .
Failure to comply with this requirement will result in serious damage to the automatic transmission!

Necessary preliminary tasks:

- Clamp off BATTERY .
- Remove **underbody protection** . See 51 47 490 REMOVING AND INSTALLING/REPLACING FRONT UNDERBODY PROTECTION or 51 47 491 REMOVING AND INSTALLING/REPLACING REAR UNDERBODY PROTECTION at front and rear.
- Remove REINFORCEMENT PLATE .

  Important notes on installation are described in this work step.

- Remove EXHAUST SYSTEM .
- Remove front PROPELLER SHAFT .
- Disconnect PROPELLER SHAFT at transmission, release center mount.
- **Note:**
- Bending the propeller shaft by an excessive angle can cause premature damage to the joint/propeller shaft!
- Tie up the propeller shaft to the vehicle underbody.
- Support engine with lifter when removing transmission.

Release screw (1).

Remove holder (2).

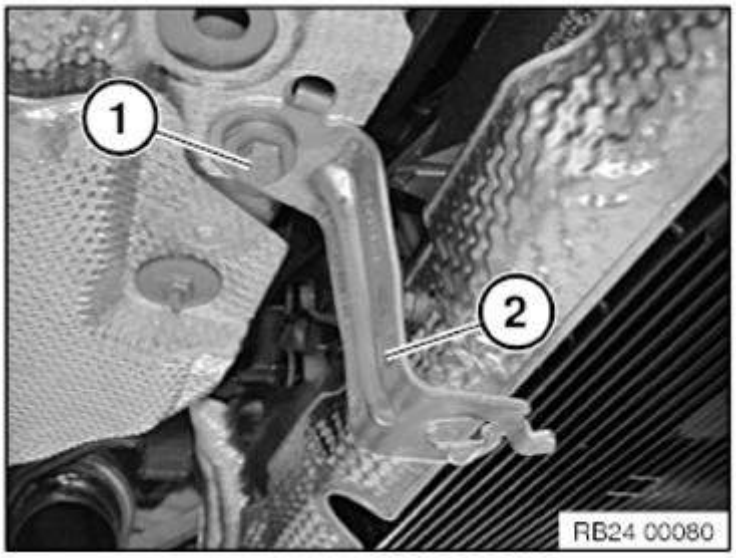

Fig. 6: Identifying Automatic Transmission Holder And Screw

cardiagn.com

Courtesy of BMW OF NORTH AMERICA, INC.

Release screws (1).

Tightening torque **24 11 6AZ** .

Remove the protective plate (2).

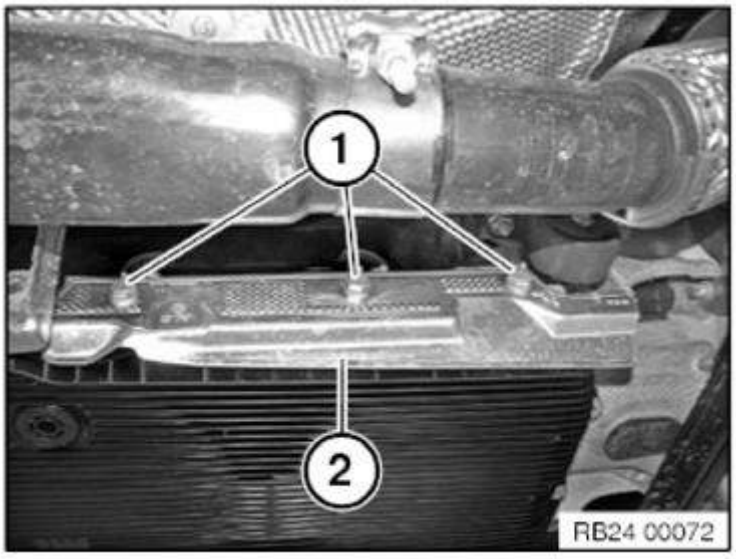

Fig. 7: Identifying Protective Plate Screws
Courtesy of BMW OF NORTH AMERICA, INC.

Release screw (1).

Disconnect hydraulic lines (2) to transmission oil cooler.

Tightening torque **17 22 3AZ** .

Installation note:

Replace sealing rings.

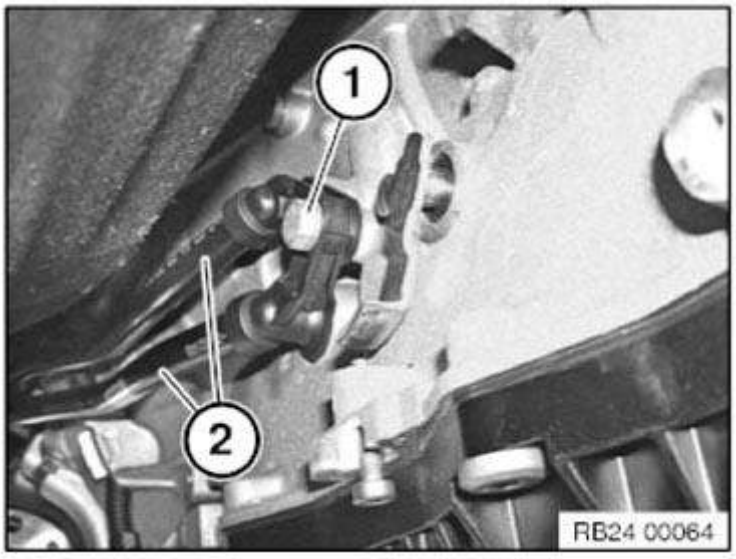

Fig. 8: Identifying Hydraulic Lines To Transmission Oil Cooler And Screw
Courtesy of BMW OF NORTH AMERICA, INC.

Unscrew nuts (1).

cardiagn.com

Tightening torque **18 20 1AZ** .

Unfasten screws (2).

Tightening torque **18 20 2AZ** .

Remove bracket (3) and catalytic converter (5).

Unscrew nuts (4).

Tightening torque **18 20 1AZ** .

Remove rubber mounts for catalytic converter.

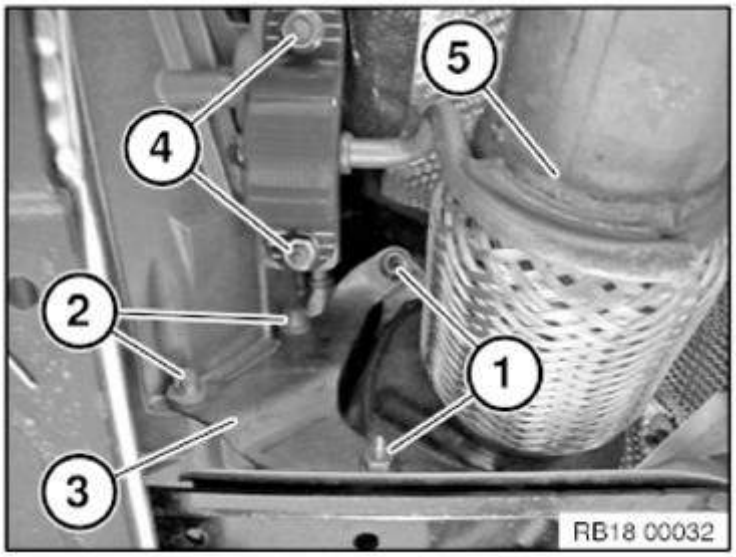

Fig. 9: Identifying Catalytic Converter, Bracket, Nut And Screw
Courtesy of BMW OF NORTH AMERICA, INC.

Release screws (1).

Tightening torque **24 00 3AZ** .

Remove cover plate (2) downwards.

Remove cover.

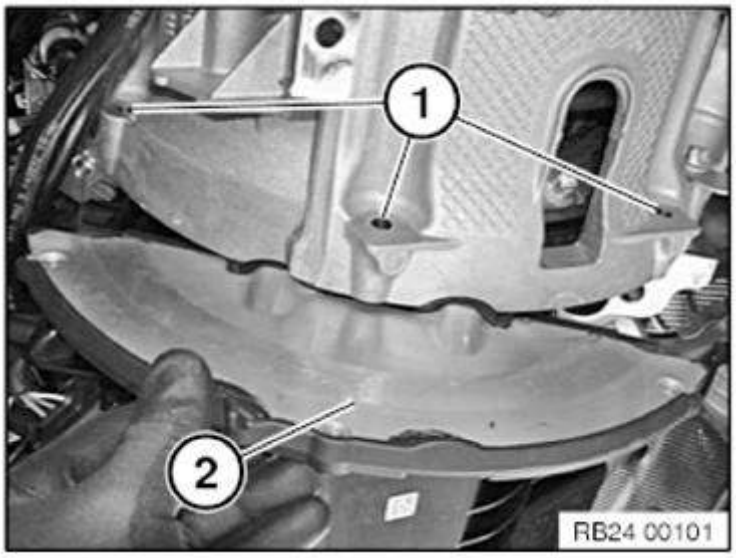

cardiagn.com

Fig. 10: Identifying Cover Plate Screw
Courtesy of BMW OF NORTH AMERICA, INC.

Crank engine at vibration damper in direction of rotation until screw (1) is visible in recess.

Undo all 6 bolts on torque converter.

Tightening torque **24 40 1AZ** .

IMPORTANT: Replace all 6 bolts on torque converter.

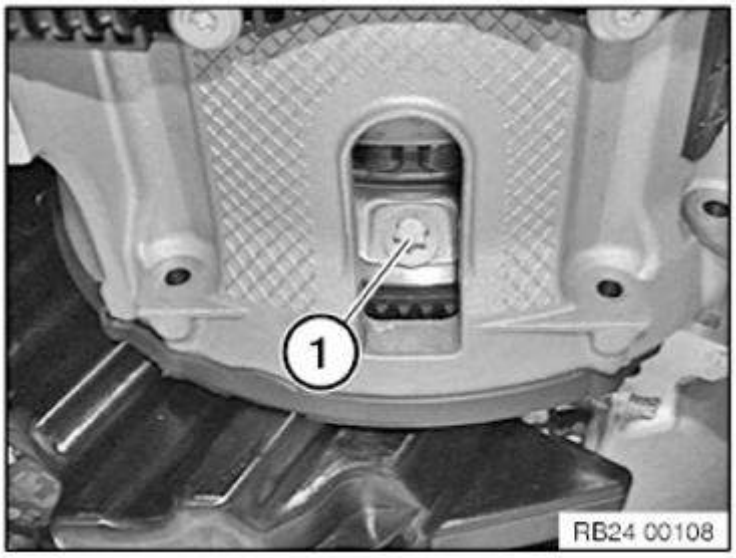

Fig. 11: Identifying Vibration Damper Screw
Courtesy of BMW OF NORTH AMERICA, INC.

Unscrew knurled screw (1) from special tool **2 222 741** (do not remove completely) before inserting in the recess of the transmission housing.

Insert special tool **2 222 741** and shaped element (3) in the recess.

Slightly tighten knurled nut (2).

Screw in knurled screw (1) fully.

- Locating pin (4) must be located between converter and engine.

Move special tool **2 222 741** in the recess until the locating pin (4) rests against the converter.

Use knurled nut (2) to fix special tool **2 222 741** and converter in position.

cardiagn.com

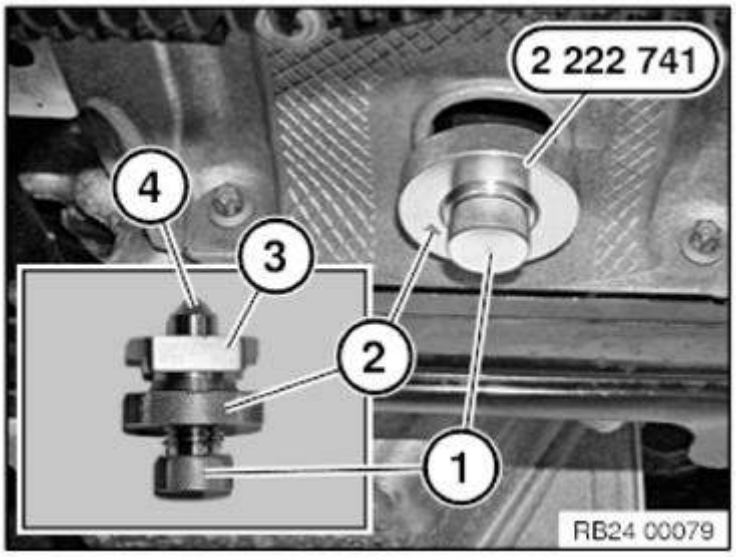

Fig. 12: Inserting Special Tool (2 222 741)
Courtesy of BMW OF NORTH AMERICA, INC.

- Unlock and disconnect connector (1) by turning.
- Do not touch pins.
- Release cable from brackets.
- Insert special tool **24 2 390** in sealing cup.

Tasks are described in Gearbox holder.

NOTES ON MECHATRONICS

IMPORTANT: Read and comply with important note.

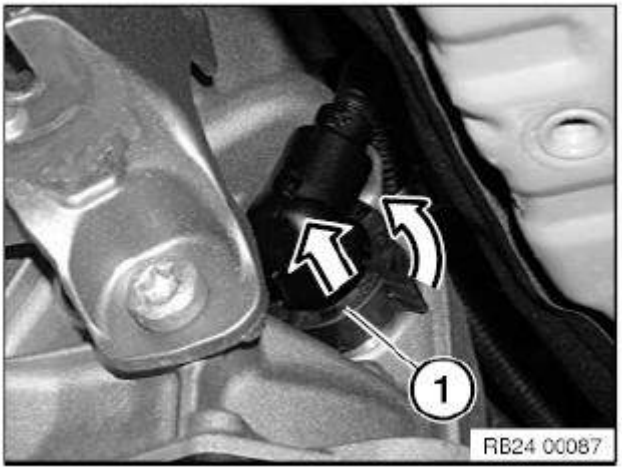

Fig. 13: Disconnecting Connector
Courtesy of BMW OF NORTH AMERICA, INC.

Supporting transmission:

Support transmission with special tools **23 4 050** , **00 2 030** .

Secure transmission to mounting with tensioning strap (1).

Tasks are described in **TRANSMISSION BRACKET**.

cardiagn.com

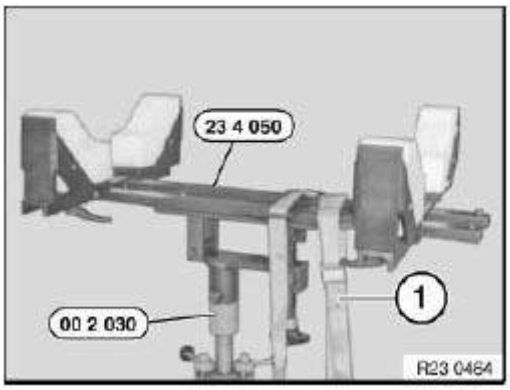

Fig. 14: Supporting Transmission Using Special Tools
Courtesy of BMW OF NORTH AMERICA, INC.

Release screws.

Tightening torque **22 32 3/6AZ** .

Remove cross member.

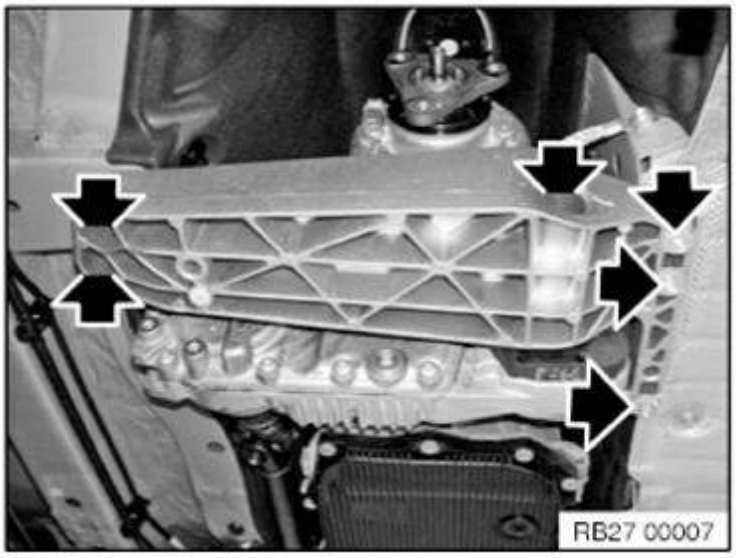

Fig. 15: Locating Cross Member Screws
Courtesy of BMW OF NORTH AMERICA, INC.

Unplug connector (1) from transfer box control unit (longitudinal torque module).

Release screw (2).

Remove earth strap (3).

cardiagn.com

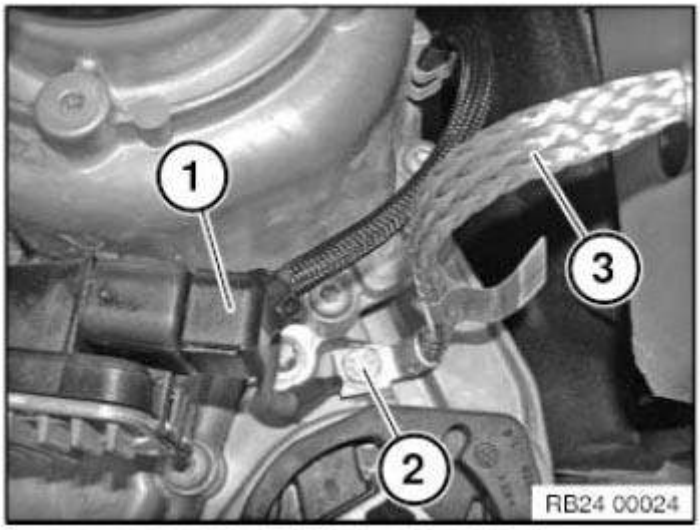

Fig. 16: Identifying Transfer Box Control Unit Connector, Earth Strap And Screw
Courtesy of BMW OF NORTH AMERICA, INC.

Release screws.

Tightening torque **24 00 1AZ**

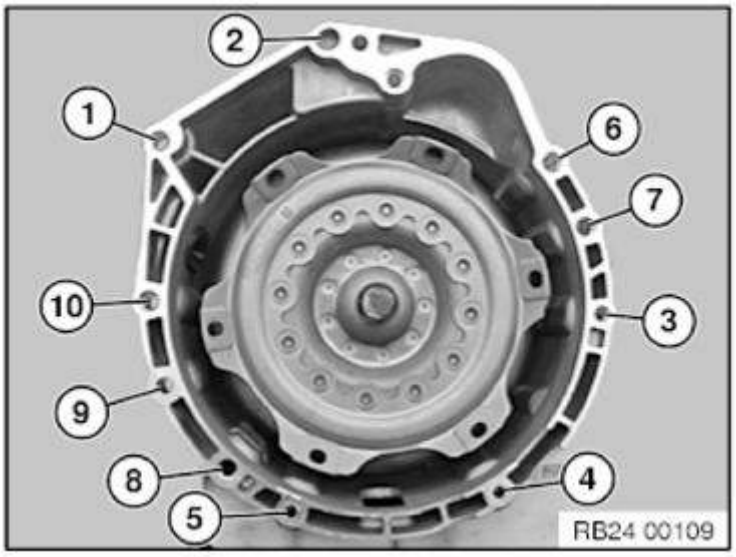

Fig. 17: Automatic Transmission Screws Tightening Sequence
Courtesy of BMW OF NORTH AMERICA, INC.

Installation note:

Check that fitting sleeves (1) are correctly seated.

Replace damaged fitting sleeves.

cardiagn.com

Fig. 18: Identifying Fitting Sleeves
Courtesy of BMW OF NORTH AMERICA, INC.

Installation note:

Twist torque converter until bore hole in torque converter is flush with bore hole of flywheel.

Flange automatic transmission to engine.

24 00 033 REMOVING AND INSTALLING AUTOMATIC TRANSMISSION (GA8HP45Z) (N47)

Special tools required:

- 24 4 161
- 24 4 166
- 24 4 160
- 24 2 390
- 23 4 050
- 00 2 030
- 11 6 480
- 24 1 110

IMPORTANT: To prevent heavy damage to the engine block, the protruding thread of the transmission bolts absolutely must be checked for damage and corrosion **before removal.**
If there are signs of corrosion, the rust must be removed and the threads must be cleaned **before removal.**
Replace rusted, damaged screws.

Failure to comply with this instruction will result in serious damage to the engine block and transmission.

IMPORTANT: After completion of repair work, check TRANSMISSION OIL LEVEL .
Use only the approved TRANSMISSION OIL .
Failure to comply with this requirement will result in serious damage to the automatic transmission!

Necessary preliminary tasks:

- Disconnect the BATTERY
- Remove underbody protection

cardiagn.com

- Remove **REINFORCEMENT PLATE**

  Important installation notes are described in this job item

- Remove **EXHAUST SYSTEM**
- Remove heat shields
- **REMOVE STARTER MOTOR**
- Remove **PROPELLER SHAFT FROM FRONT AXLE DIFFERENTIAL**
- Detach **PROPELLER SHAFT** at gearbox, release center bearing
- **Note:**
- Bending the propeller shaft by an excessive angle can cause premature damage to the joint/propeller shaft!
- Tie up propeller shaft to underbody.
- Support engine with jack when removing gearbox

Release screw (1).

Disconnect hydraulic lines (2) to transmission oil cooler.

Tightening torque **17 22 3AZ** .

Installation note:

Replace sealing rings.

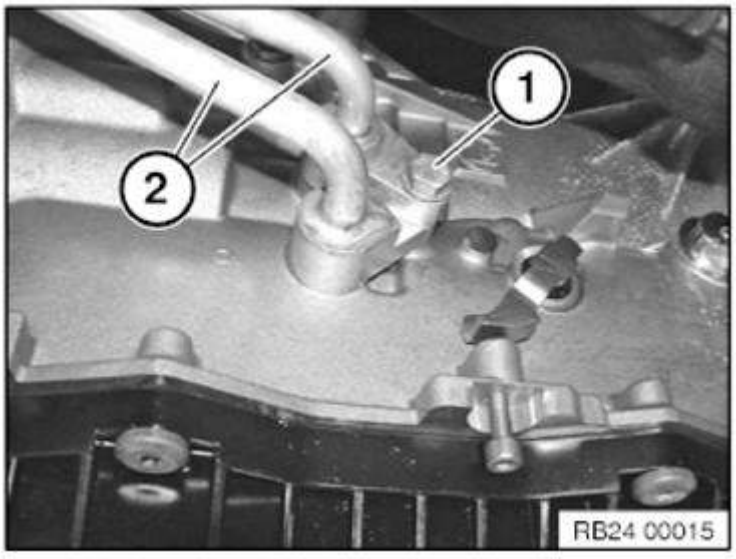

Fig. 19: Identifying Transmission Oil Cooler Hydraulic Lines And Screw
Courtesy of BMW OF NORTH AMERICA, INC.

Detach cable holder (1) from gearbox.

Unfasten screws (2).

Tightening torque **24 00 1AZ** .

Unscrew nuts (3).

Remove holder (4).

Tightening torque **18 20 1AZ** .

cardiagn.com

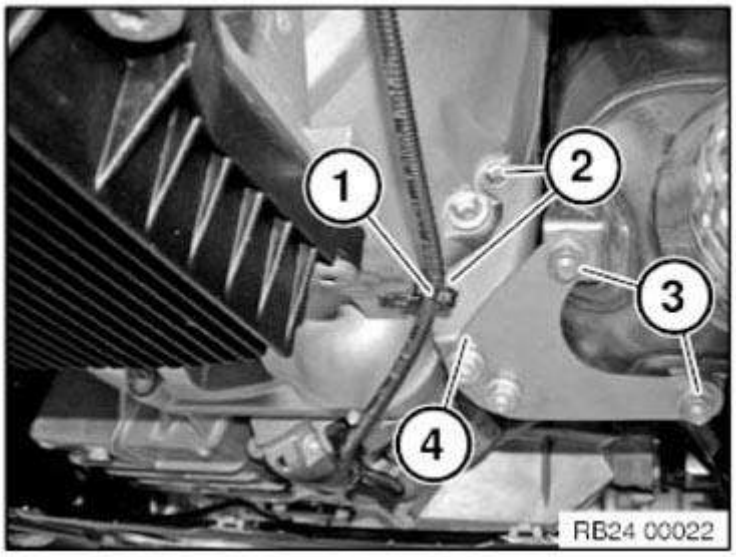

Fig. 20: Identifying Cable Holder From Gearbox, Screws And Nuts
Courtesy of BMW OF NORTH AMERICA, INC.

Prepare special tool (1) **24 4 161** (A) with shaped element (2) **24 4 166** as pictured.

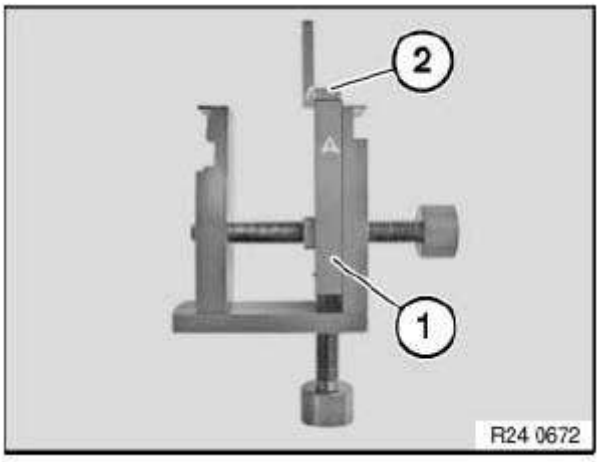

Fig. 21: Identifying Special Tool 24 4 161
Courtesy of BMW OF NORTH AMERICA, INC.

Insert special tool **24 4 160** into recess of transmission housing and clamp gently with screw (1).

Raise by turning screw (2) and clamp down.

Then tighten down screw (1).

cardiagn.com

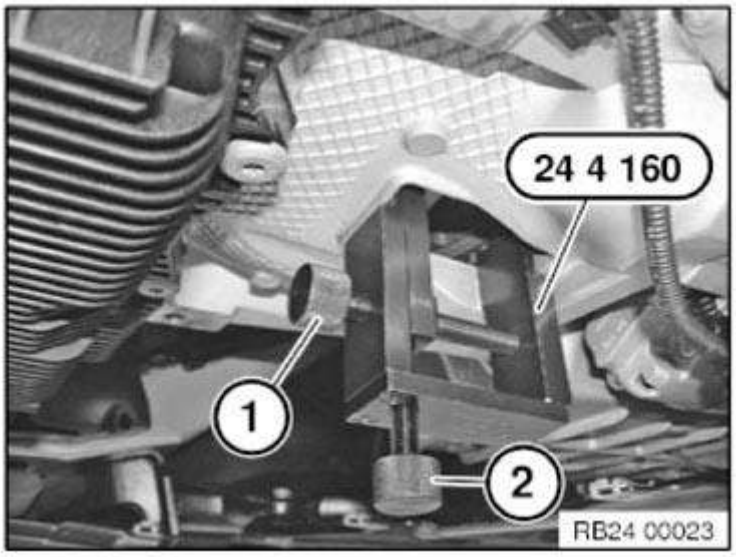

Fig. 22: Inserting Special Tool 24 4 160 Into Recess Of Transmission Housing
Courtesy of BMW OF NORTH AMERICA, INC.

- Unlock and disconnect connector (1) by turning.
- Do not touch pins.
- Release cable from brackets.
- Insert special tool **24 2 390** in sealing cup.

Tasks are described in Gearbox holder.

NOTES ON MECHATRONICS

IMPORTANT: Read and comply with important note.

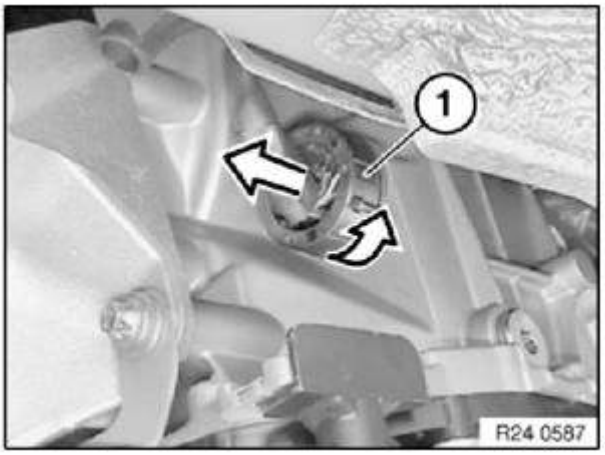

Fig. 23: Disconnecting Connector
Courtesy of BMW OF NORTH AMERICA, INC.

Supporting transmission:

Support transmission with special tools **23 4 050** , **00 2 030** .

Secure transmission to mounting with tensioning strap (1).

Tasks are described in **TRANSMISSION BRACKET**.

After completion of work, check transmission fluid level.

cardiagn.com

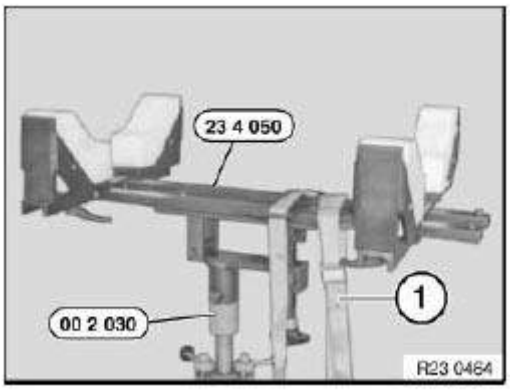

Fig. 24: Supporting Transmission Using Special Tools
Courtesy of BMW OF NORTH AMERICA, INC.

Release screws.

Tightening torque **22 32 3/6AZ** .

Remove cross member.

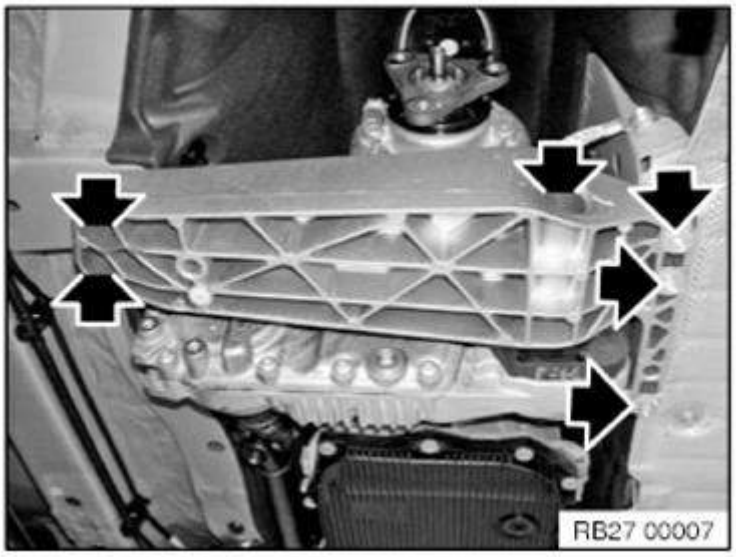

Fig. 25: Locating Cross Member Screws
Courtesy of BMW OF NORTH AMERICA, INC.

Unplug connector (1) from transfer box control unit (longitudinal torque module).

Release screw (2).

Remove earth strap (3).

cardiagn.com

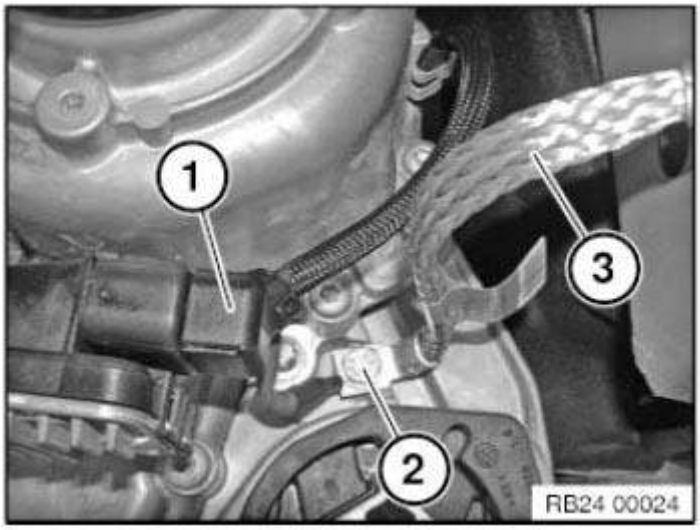

Fig. 26: Identifying Transfer Box Control Unit Connector, Earth Strap And Screw
Courtesy of BMW OF NORTH AMERICA, INC.

Crank engine with special tool **11 6 480** at the vibration damper in direction of rotation until screw (1) is visible in the recess.

Release all 4 bolts of torque converter with special tool **24 1 110** .

Installation note:

Replace converter screws. Remove any remaining adhesive residue from the thread.

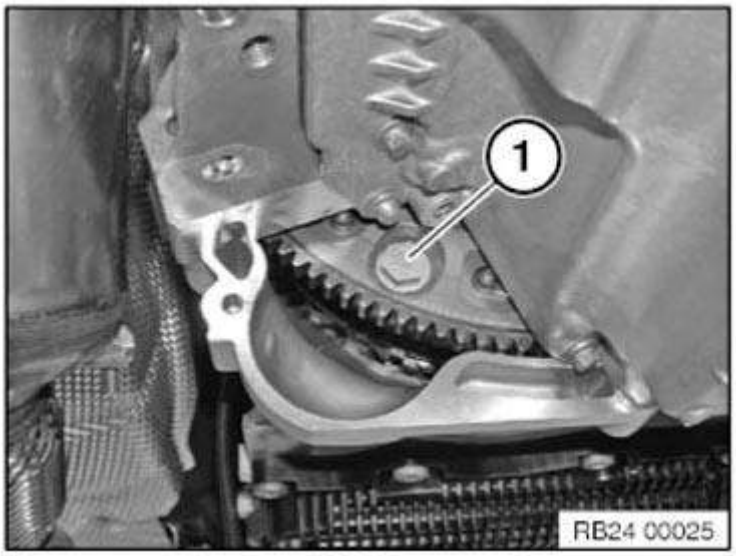

Fig. 27: Identifying Vibration Damper Screws
Courtesy of BMW OF NORTH AMERICA, INC.

Tightening torque **24 40 1AZ** .

Release bolts and remove transmission.

Tightening torque **24 40 1AZ** .

NOTE: **Graphic similar**

cardiagn.com

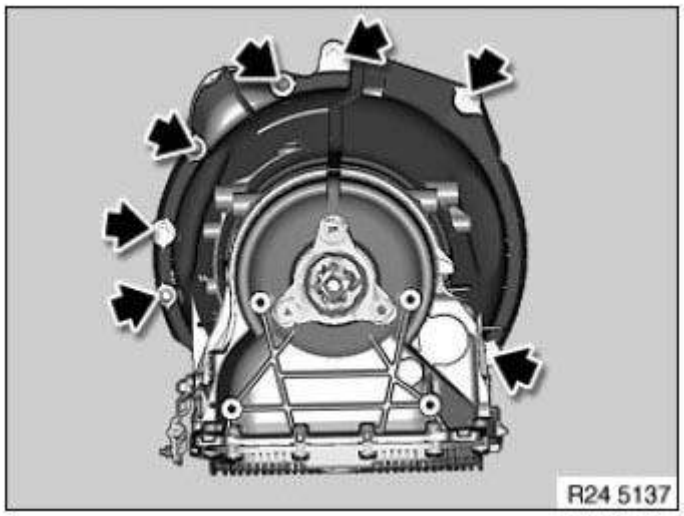

Fig. 28: Locating Transmission Bolts
Courtesy of BMW OF NORTH AMERICA, INC.

Installation note:

Bore hole (1) of driving plate must be accessible from recess on engine oil sump. Check that fitting sleeves (2...3) are correctly seated.

Replace damaged fitting sleeves.

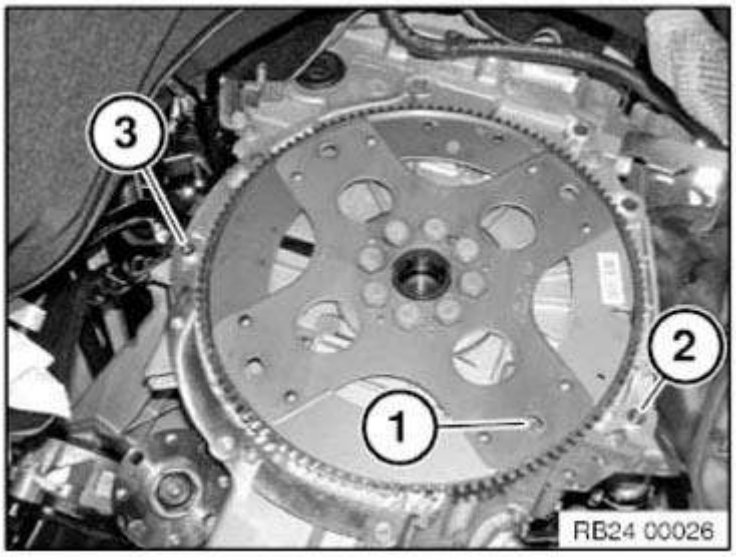

Fig. 29: Identifying Driving Plate Bore Hole And Fitting Sleeves
Courtesy of BMW OF NORTH AMERICA, INC.

Installation note:

Rotate torque converter until bore hole in torque converter is flush with bore hole in drive plate.

Flange automatic transmission to engine.

24 00 033 REMOVING AND INSTALLING AUTOMATIC TRANSMISSION (GA8HP45Z) (N52)

Special tools required:

- 24 4 161
- 24 4 166

cardiagn.com

- 24 4 160
- 24 2 390
- 23 4 050
- 00 2 030
- 24 1 110

IMPORTANT: To prevent heavy damage to the engine block, the protruding thread of the transmission bolts absolutely must be checked for damage and corrosion **before removal.**
If there are signs of corrosion, the rust must be removed and the threads must be cleaned **before removal.**
Replace rusted, damaged screws.

Failure to comply with this instruction will result in serious damage to the engine block and transmission.

IMPORTANT: After completion of repair work, check TRANSMISSION OIL LEVEL .
Use only the approved TRANSMISSION OIL .
Failure to comply with this requirement will result in serious damage to the automatic transmission!

IMPORTANT: Aluminium screws/bolts must be replaced each time they are **released.**
Aluminium screws/bolts are permitted with and without color coding (blue).
For reliable identification:
Aluminium screws/bolts are **not magnetic.**
Jointing torque and angle of rotation must be observed without fail **(risk of damage).**

Necessary preliminary tasks:

- Disconnect the BATTERY
- Remove FAN COWL
- Remove underbody protection
- Remove REINFORCEMENT PLATE

  Important installation notes are described in this job item

- Remove EXHAUST SYSTEM
- Remove heat shields
- Remove PROPELLER SHAFT FROM FRONT AXLE DIFFERENTIAL
- Detach PROPELLER SHAFT at gearbox, release center bearing
- Tie up propeller shaft to underbody.
- **Note:**
- Bending the propeller shaft by an excessive angle can cause premature damage to the joint/propeller shaft!
- Support engine with jack when removing gearbox

Disconnect connectors (1) and (2) from bracket (3) and detach.

cardiagn.com

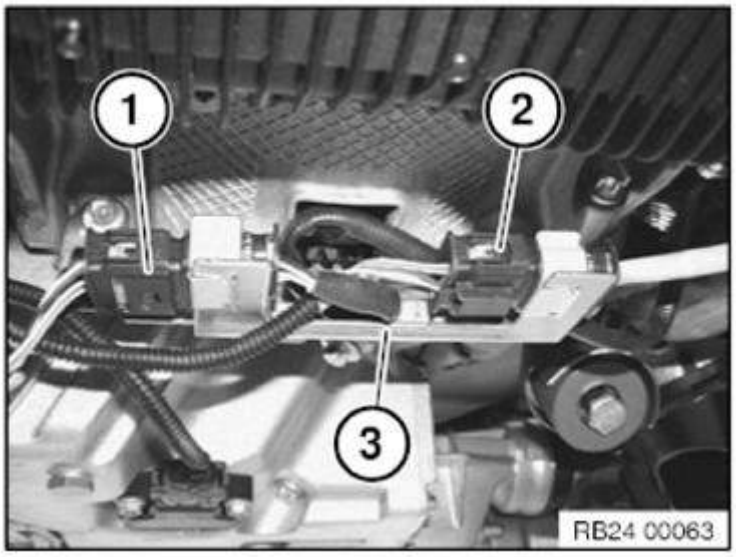

Fig. 30: Identifying Connectors From Bracket
Courtesy of BMW OF NORTH AMERICA, INC.

Release screw (1).

Disconnect hydraulic lines (2) to transmission oil cooler.

Tightening torque **17 22 3AZ** .

Installation note:

Replace sealing rings.

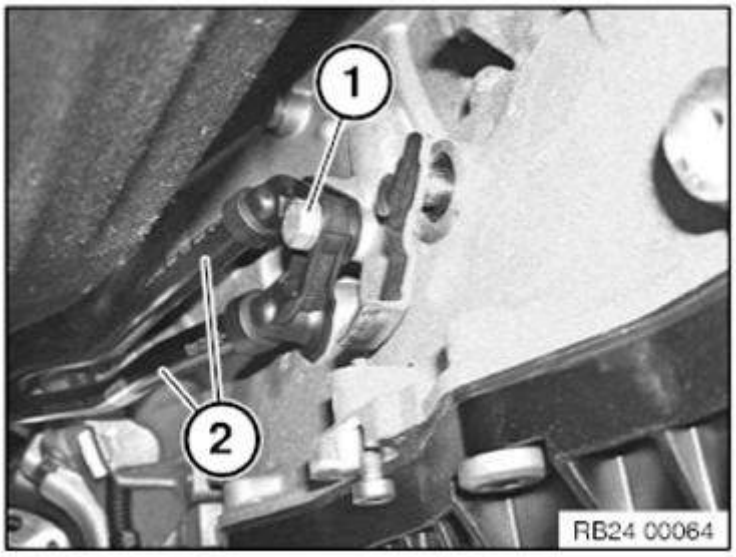

Fig. 31: Identifying Hydraulic Lines To Transmission Oil Cooler And Screw
Courtesy of BMW OF NORTH AMERICA, INC.

Release holder (1).

Detach hydraulic lines (2) from bracket (1).

cardiagn.com

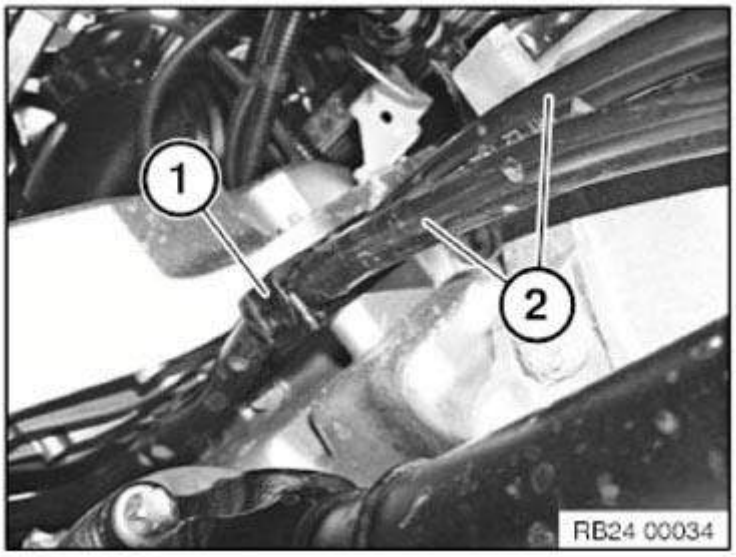

Fig. 32: Identifying Hydraulic Lines From Bracket
Courtesy of BMW OF NORTH AMERICA, INC.

Release screws (1).

Tightening torque **24 00 1AZ** .

Slacken nut (2).

Remove bracket (3).

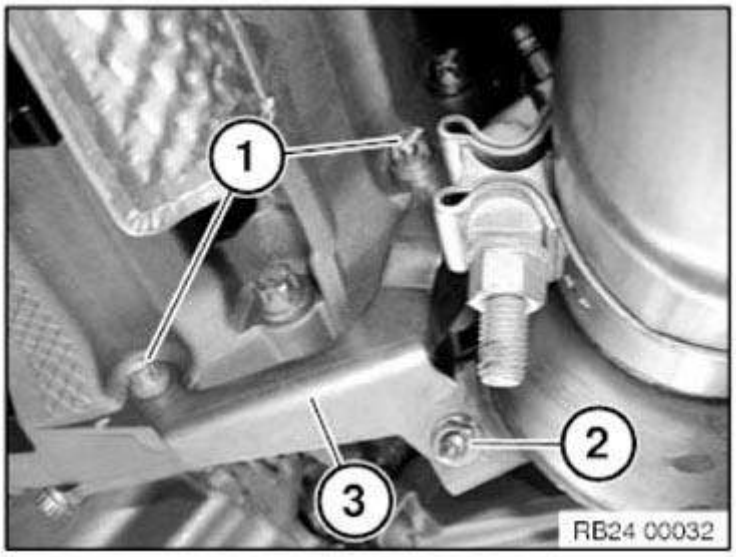

Fig. 33: Identifying Bracket, Nut And Screws
Courtesy of BMW OF NORTH AMERICA, INC.

Remove holder (1).

cardiagn.com

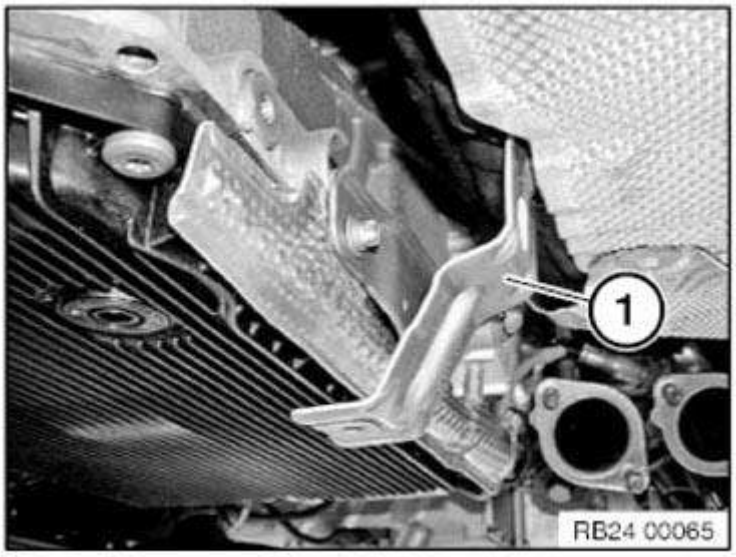

Fig. 34: Identifying Holder
Courtesy of BMW OF NORTH AMERICA, INC.

Release screws (1).

Remove holder (2).

Remove heat shield (3).

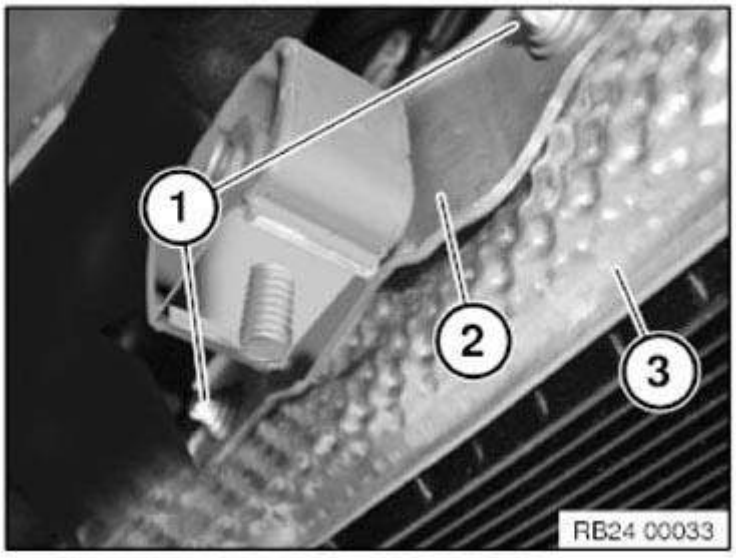

Fig. 35: Identifying Heat Shield, Holder And Screws
Courtesy of BMW OF NORTH AMERICA, INC.

Prepare special tool (1) **24 4 161** (A) with shaped element (2) **24 4 166** as pictured.

cardiagn.com

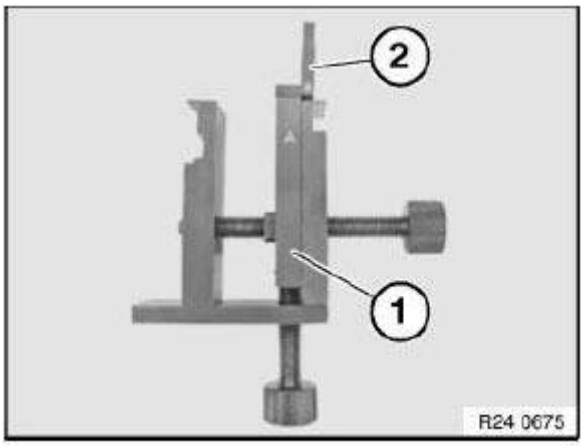

Fig. 36: Identifying Special Tool (24 4 161)
Courtesy of BMW OF NORTH AMERICA, INC.

Insert special tool **24 4 160** into recess of transmission housing and clamp gently with screw (1).

Raise by turning screw (2) and clamp down.

Then tighten down screw (1).

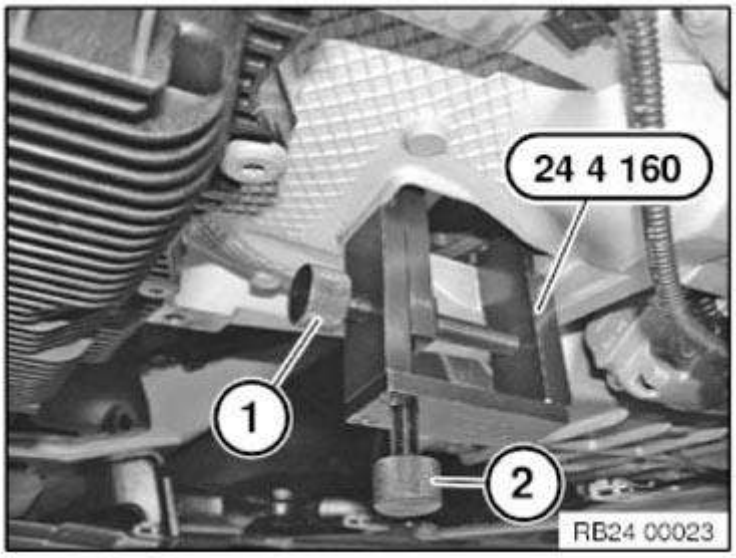

Fig. 37: Inserting Special Tool 24 4 160 Into Recess Of Transmission Housing
Courtesy of BMW OF NORTH AMERICA, INC.

- Unlock and disconnect connector (1) by turning.
- Do not touch pins.
- Release cable from brackets.
- Insert special tool **24 2 390** in sealing cup.

Tasks are described in Gearbox holder.

NOTES ON MECHATRONICS

IMPORTANT: Read and comply with important note.

cardiagn.com

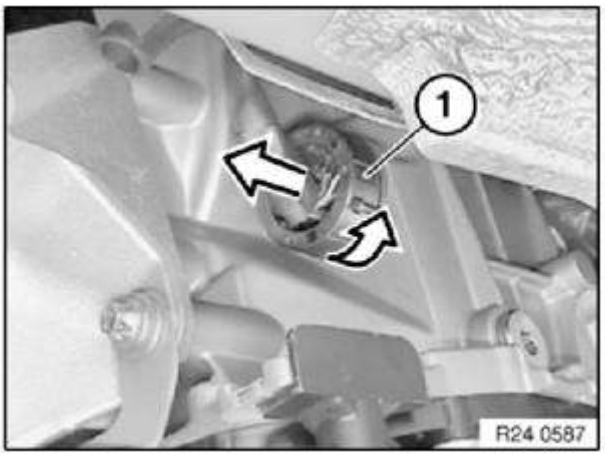

Fig. 38: Disconnecting Connector
Courtesy of BMW OF NORTH AMERICA, INC.

Supporting transmission:

Support transmission with special tools **23 4 050** , **00 2 030** .

Secure transmission to mounting with tensioning strap (1).

Tasks are described in **TRANSMISSION BRACKET**.

After completion of work, check transmission fluid level.

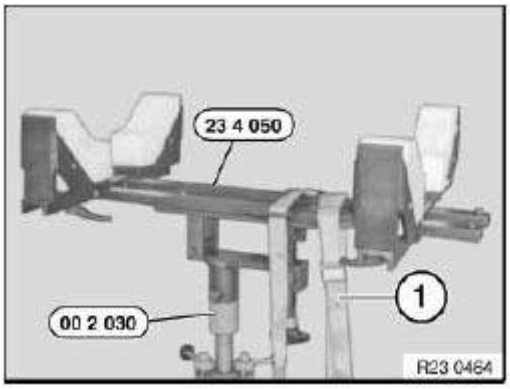

Fig. 39: Supporting Transmission Using Special Tools
Courtesy of BMW OF NORTH AMERICA, INC.

Release screws.

Tightening torque **22 32 3/6AZ** .

Remove cross member.

cardiagn.com

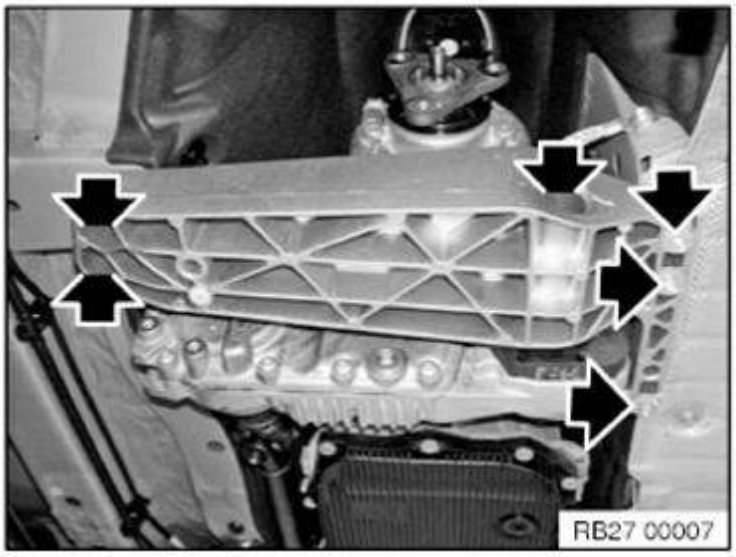

Fig. 40: Locating Cross Member Screws
Courtesy of BMW OF NORTH AMERICA, INC.

Unplug connector (1) from transfer box control unit (longitudinal torque module).

Release screw (2).

Remove earth strap (3).

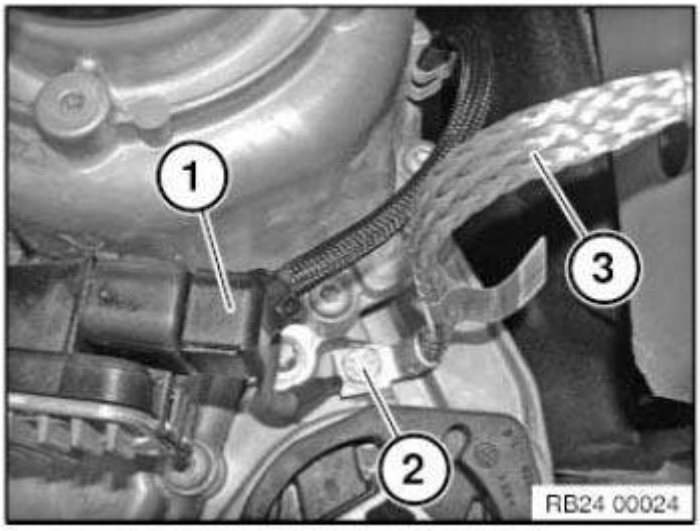

Fig. 41: Identifying Transfer Box Control Unit Connector, Earth Strap And Screw
Courtesy of BMW OF NORTH AMERICA, INC.

Crank engine at vibration damper in direction of rotation until screw (1) is visible in recess.

Release all 6 bolts of torque converter with special tool **24 1 110** .

Installation note:

Replace converter screws. Remove any remaining adhesive residue from the thread.

Tightening torque **24 40 1AZ** .

cardiagn.com

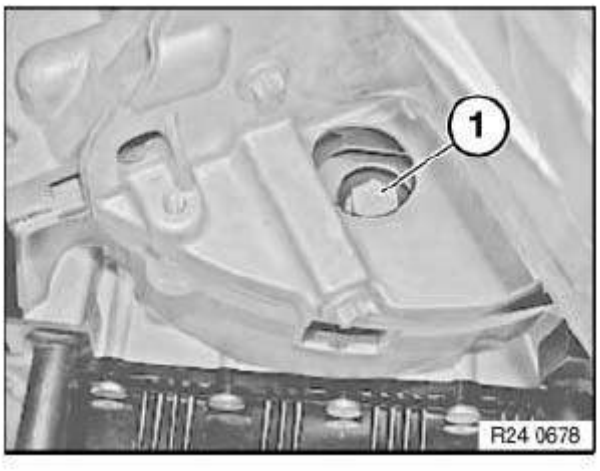

Fig. 42: Identifying Vibration Damper Screw
Courtesy of BMW OF NORTH AMERICA, INC.

Note installed position of brackets (1 and 2) when removing gearbox.

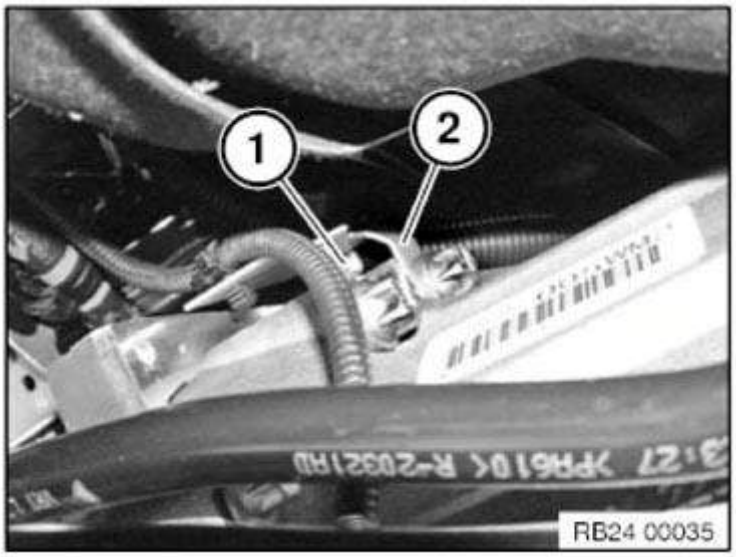

Fig. 43: Identifying Gearbox Brackets
Courtesy of BMW OF NORTH AMERICA, INC.

Release screws.

Installation note:

Observe **screw fastening sequence** without fail.

Tightening torque, steel screws **24 00 1AZ** .

Aluminium screws **must** be replaced.

Tightening torque and angle of rotation

Aluminium screws **24 00 2AZ** (6, 7, 8, 9)

cardiagn.com

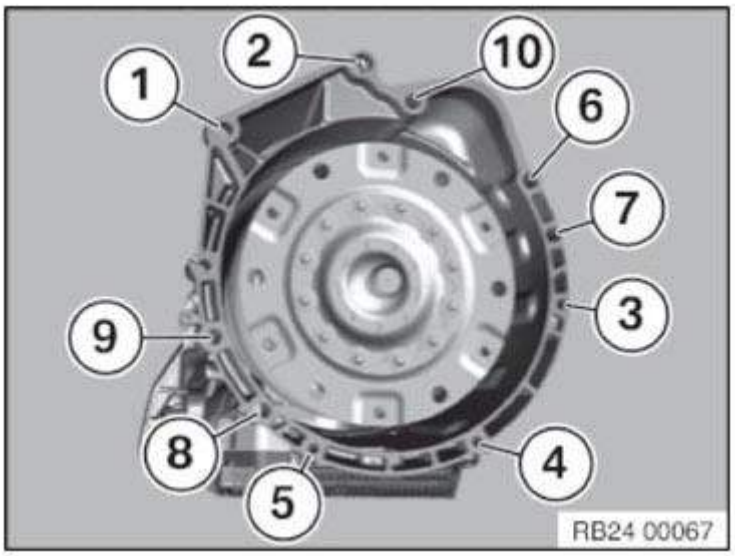

Fig. 44: Transmission Fastening Screw Tightening Sequence
Courtesy of BMW OF NORTH AMERICA, INC.

Installation note:

Bore hole (1) of driving plate must be accessible from recess on engine oil sump. Check that fitting sleeves (2...3) are correctly seated.

Replace damaged fitting sleeves.

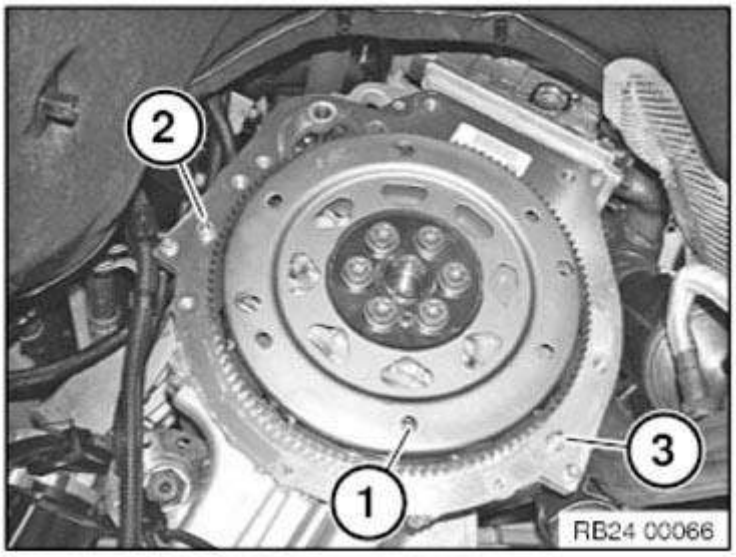

Fig. 45: Identifying Fitting Sleeves And Driving Plate Bore Hole
Courtesy of BMW OF NORTH AMERICA, INC.

Installation note:

Rotate torque converter until bore hole in torque converter is flush with bore hole in drive plate.

Flange automatic transmission to engine.

24 00 033 REMOVING AND INSTALLING AUTOMATIC TRANSMISSION (GA8HP45Z) (N55)

Special tools required:

- 24 4 161

cardiagn.com

- 24 4 166
- 24 4 160
- 24 2 390
- 23 4 050
- 00 2 030
- 24 1 110

IMPORTANT: To prevent heavy damage to the engine block, the protruding thread of the transmission bolts absolutely must be checked for damage and corrosion **before removal.**
If there are signs of corrosion, the rust must be removed and the threads must be cleaned **before removal.**
Replace rusted, damaged screws.

Failure to comply with this instruction will result in serious damage to the engine block and transmission.

IMPORTANT: After completion of repair work, check TRANSMISSION OIL LEVEL .
Use only the approved TRANSMISSION OIL .
Failure to comply with this requirement will result in serious damage to the automatic transmission!

IMPORTANT: For vehicles with N54/N55 engine up to production date 09/2012, aluminum bolts for the for the securing of the transmission are also installed.

As of production date 09/2012, **only** steel bolts are installed for the securing of the transmission.

NOTE: Aluminium screws/bolts must be replaced each time they are released .

Aluminium screws/bolts are permitted with and without color coding (blue).

For reliable identification:

Aluminium screws/bolts are **not magnetic.**

Jointing torque and angle of rotation must be observed without fail **(risk of damage)** .

The aluminum bolts can be optionally replaced by steel bolts.

Necessary preliminary tasks:

- Disconnect the BATTERY
- Remove FAN COWL
- Remove underbody protection
- Remove REINFORCEMENT PLATE

  Important installation notes are described in this job item

- Release hose socket from charge air cooler on left and right.
- Remove EXHAUST SYSTEM
- Remove heat shields
- Remove PROPELLER SHAFT FROM FRONT AXLE DIFFERENTIAL
- Detach PROPELLER SHAFT at gearbox, release center bearing
- Tie up propeller shaft to underbody.
- **Note:**
- Bending the propeller shaft by an excessive angle can cause premature damage to the joint/propeller

cardiagn.com

shaft!

- Support engine with jack when removing gearbox

Remove upper part of cable duct (1).

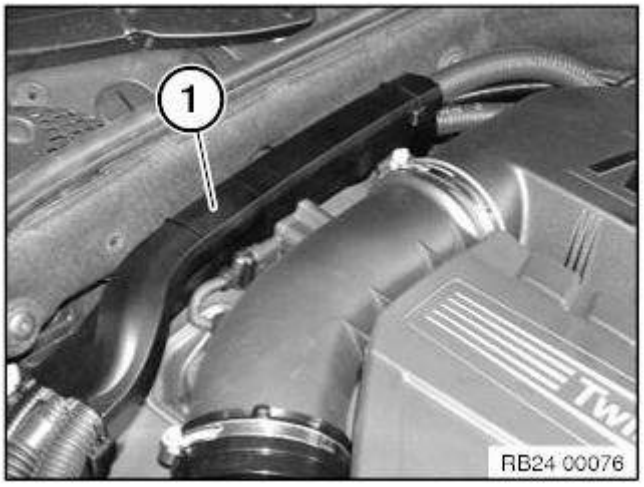

Fig. 46: Identifying Cable Duct Upper Part
Courtesy of BMW OF NORTH AMERICA, INC.

Release screw (1).

Disconnect hydraulic lines (2) to transmission oil cooler.

Tightening torque **17 22 3AZ** .

Installation note:

Replace sealing rings.

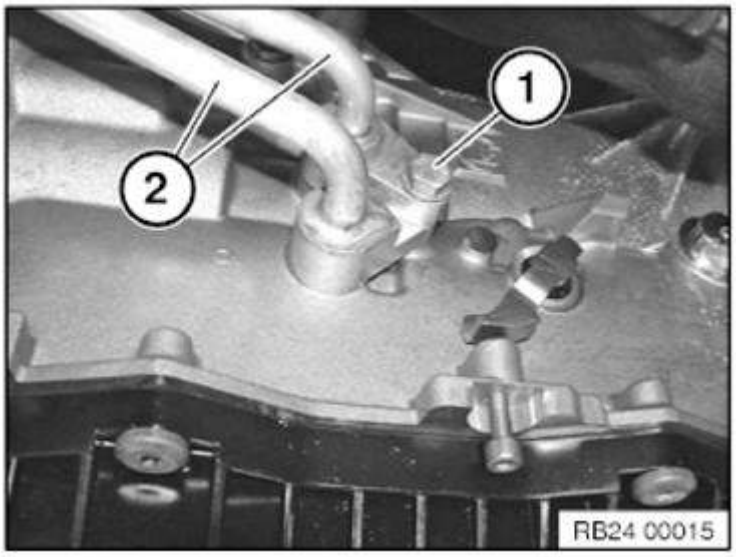

Fig. 47: Identifying Transmission Oil Cooler Hydraulic Lines And Screw
Courtesy of BMW OF NORTH AMERICA, INC.

Release holder (1).

Detach hydraulic lines (2) from bracket (1).

cardiagn.com

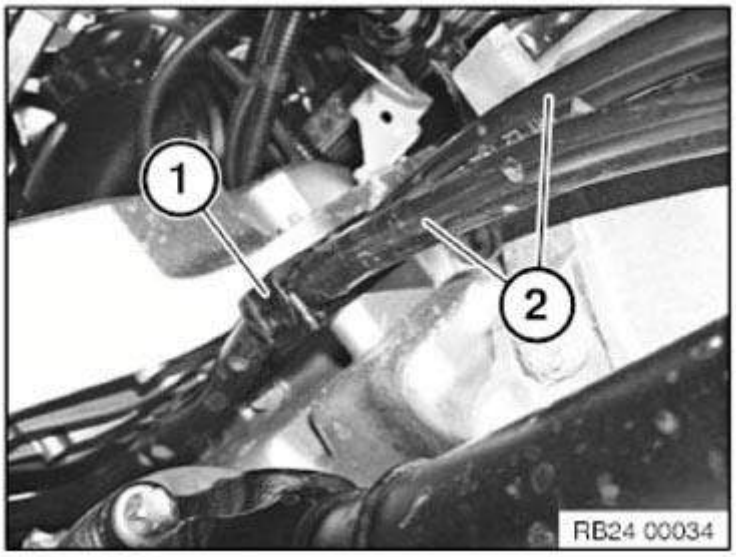

Fig. 48: Identifying Hydraulic Lines From Bracket
Courtesy of BMW OF NORTH AMERICA, INC.

Release screws (1).

Tightening torque **24 00 1AZ** .

Slacken nut (2).

Remove bracket (3).

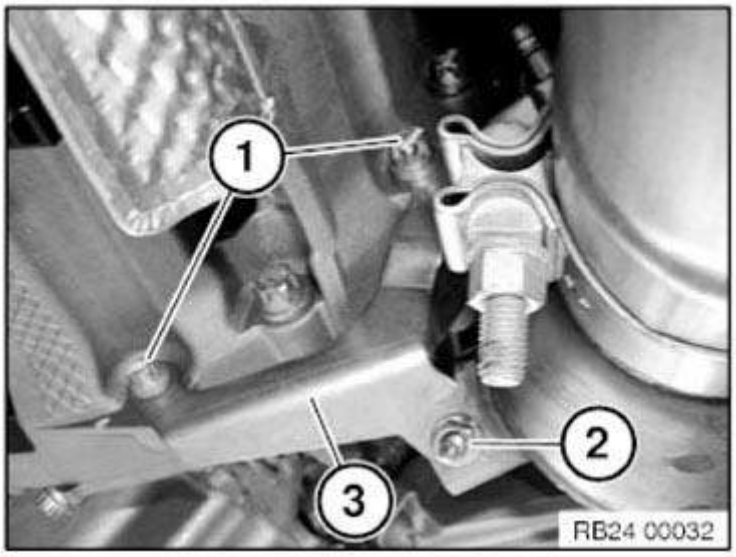

Fig. 49: Identifying Bracket, Nut And Screws
Courtesy of BMW OF NORTH AMERICA, INC.

Release screws (1).

Remove holder (2).

Remove heat shield (3).

cardiagn.com

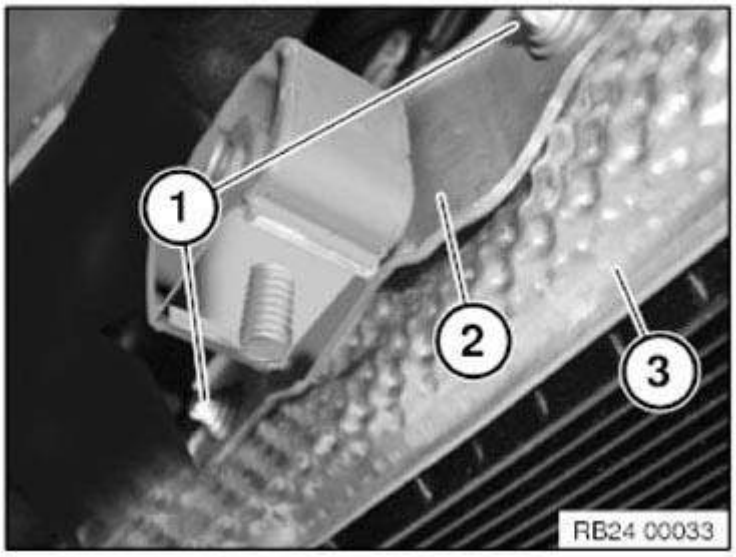

Fig. 50: Identifying Heat Shield, Holder And Screws
Courtesy of BMW OF NORTH AMERICA, INC.

Prepare special tool (1) **24 4 161** (A) with shaped element (2) **24 4 166** as pictured.

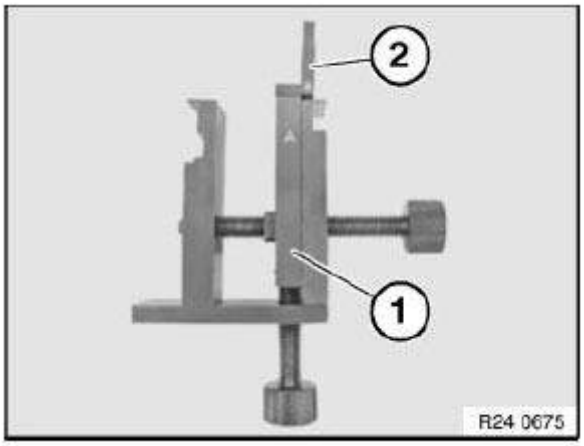

Fig. 51: Identifying Special Tool (24 4 161)
Courtesy of BMW OF NORTH AMERICA, INC.

Insert special tool **24 4 160** into recess of transmission housing and clamp gently with screw (1).

Raise by turning screw (2) and clamp down.

Then tighten down screw (1).

cardiagn.com

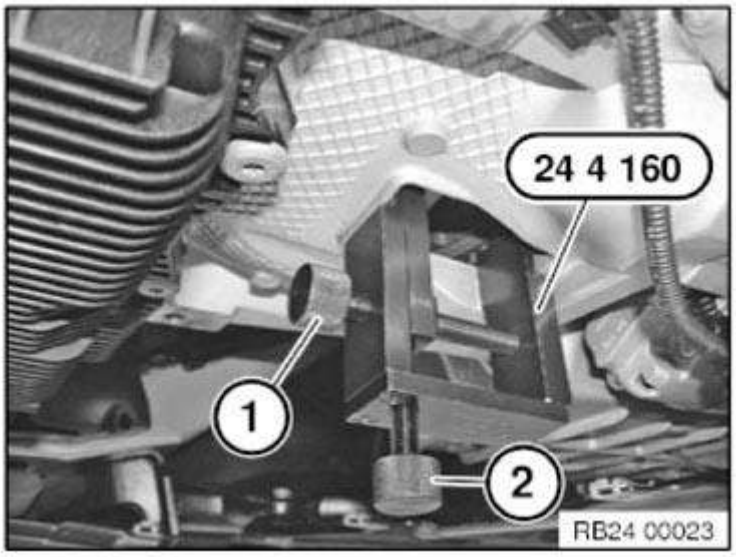

Fig. 52: Inserting Special Tool 24 4 160 Into Recess Of Transmission Housing
Courtesy of BMW OF NORTH AMERICA, INC.

- Unlock and disconnect connector (1) by turning.
- Do not touch pins.
- Release cable from brackets.
- Insert special tool **24 2 390** in sealing cup.

Tasks are described in Gearbox holder.

NOTES ON MECHATRONICS

IMPORTANT: Read and comply with important note.

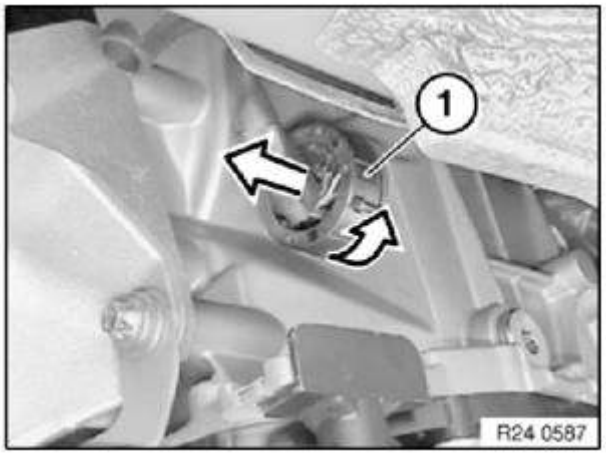

Fig. 53: Disconnecting Connector
Courtesy of BMW OF NORTH AMERICA, INC.

Supporting transmission:

Support transmission with special tools **23 4 050** , **00 2 030** .

Secure transmission to mounting with tensioning strap (1).

Tasks are described in **TRANSMISSION BRACKET**.

After completion of work, check transmission fluid level.

cardiagn.com

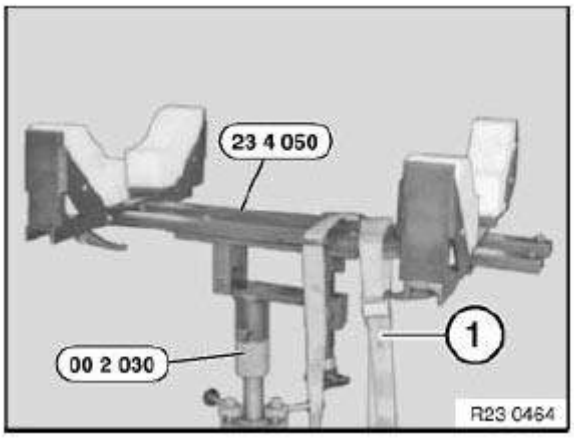

Fig. 54: Supporting Transmission Using Special Tools
Courtesy of BMW OF NORTH AMERICA, INC.

Release screws.

Tightening torque **22 32 3/4AZ** .

Remove cross member.

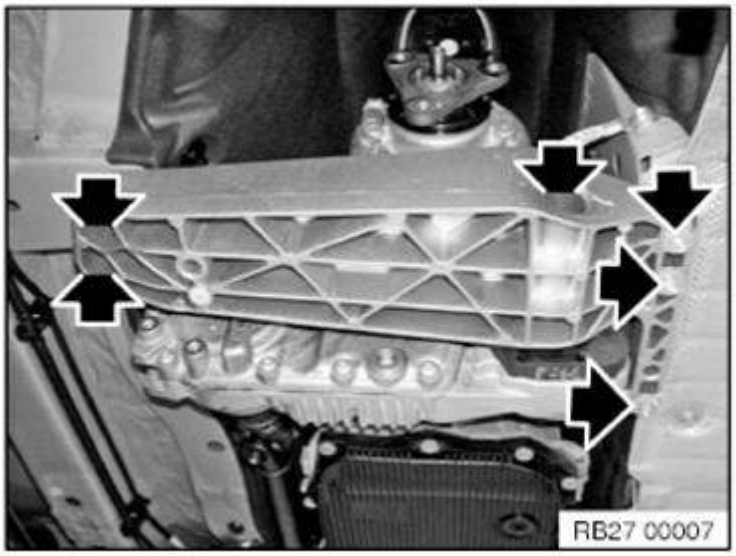

Fig. 55: Locating Cross Member Screws
Courtesy of BMW OF NORTH AMERICA, INC.

Unplug connector (1) from transfer box control unit (longitudinal torque module).

Release screw (2).

Remove earth strap (3).

cardiagn.com

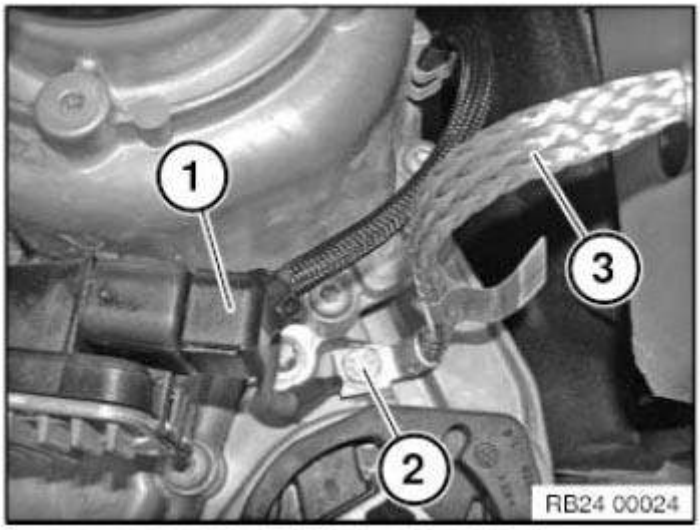

Fig. 56: Identifying Transfer Box Control Unit Connector, Earth Strap And Screw
Courtesy of BMW OF NORTH AMERICA, INC.

Crank engine at vibration damper in direction of rotation until screw (1) is visible in recess.

Release all 6 bolts of torque converter with special tool **24 1 110** .

Installation note:

Replace converter screws. Remove any remaining adhesive residue from the thread.

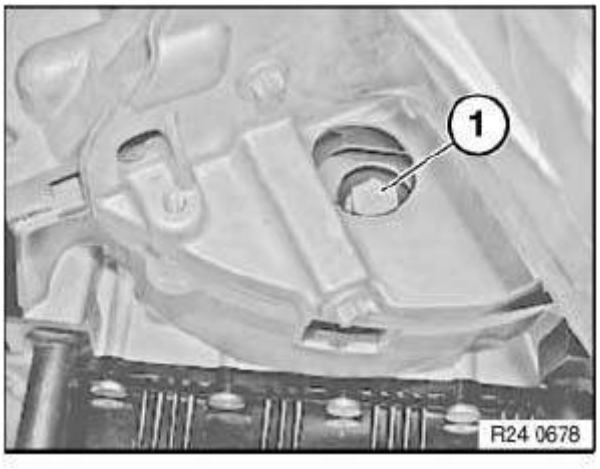

Fig. 57: Identifying Vibration Damper Screw
Courtesy of BMW OF NORTH AMERICA, INC.

Tightening torque **24 40 1AZ** .

Note installed position of brackets (1 and 2) when removing gearbox.

cardiagn.com

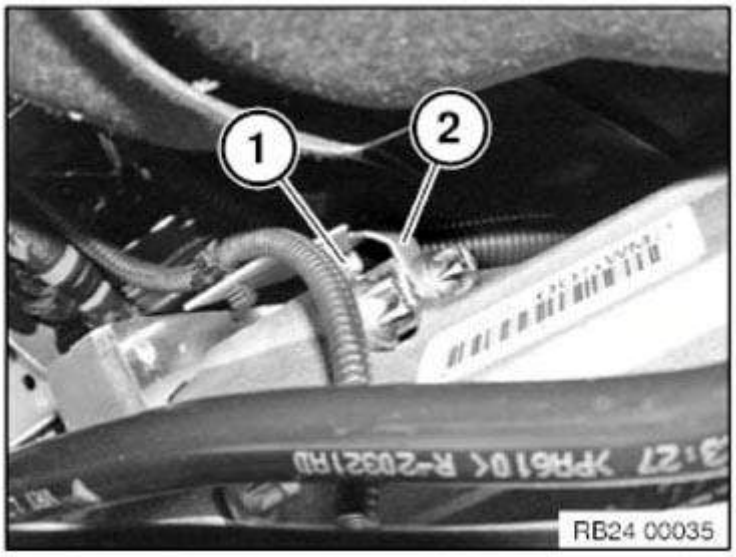

Fig. 58: Identifying Gearbox Brackets
Courtesy of BMW OF NORTH AMERICA, INC.

Release screws.

Installation note:

Observe **screw fastening sequence** without fail.

Tightening torque, steel screws **24 00 1AZ** .

Aluminium screws **must** be replaced.

Tightening torque and angle of rotation

Aluminium screws **24 00 2AZ** (7, 8, 9, 10, 11)

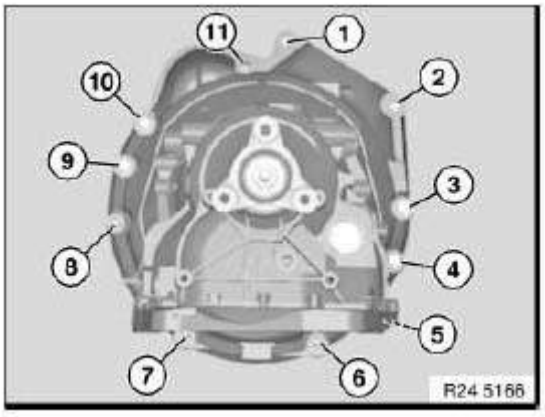

Fig. 59: Automatic Transmission Screws Tightening Sequence
Courtesy of BMW OF NORTH AMERICA, INC.

Installation note:

Bore hole (1) of driving plate must be accessible from recess on engine oil sump. Check that fitting sleeves (2...3) are correctly seated.

Replace damaged fitting sleeves.

NOTE: **Similar to graphic.**

cardiagn.com

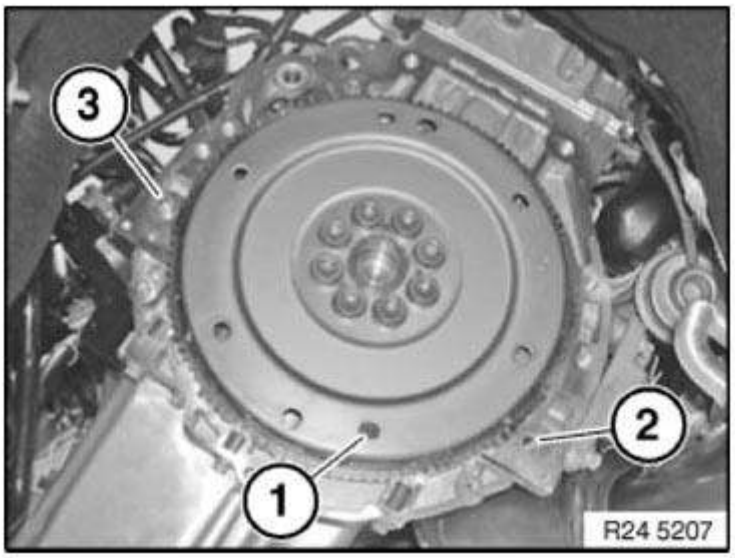

Fig. 60: Identifying Driving Plate Bore Hole And Sleeves
Courtesy of BMW OF NORTH AMERICA, INC.

Installation note:

Rotate torque converter until bore hole in torque converter is flush with bore hole in drive plate.

Flange automatic transmission to engine.

00 RISK OF INJURY IF OIL COMES INTO CONTACT WITH EYES AND SKIN

Danger of injury!

Contact with eyes or skin may result in injury!

Possible symptoms are:

- Impaired sight
- Irritation of the eyes
- Reddening of the skin
- Rough and cracked skin

Protective measures/rules of conduct:

- Wear safety goggles
- Wear oil-resistant protective gloves
- Observe country-specific safety regulations

First aid measures:

- **Eye contact:** Rinse eyes immediately with plenty of water for at least 15 minutes; if available, use an eye-rinsing bottle. If irritation of the eyes persists, consult a doctor.
- **Skin contact:** Wash off with soap and water immediately. If irritation persists, consult a doctor.

NOTE: **Do not use solvents/thinners.**

00 SAFETY INSTRUCTIONS FOR HANDLING OIL

WARNING: **DANGER OF POISONING if oil is ingested/absorbed through the skin!**
RISK OF INJURY if oil comes into contact with eyes and skin!

cardiagn.com

Recycling:

Observe country-specific waste disposal regulations.

Measures if oil is unintentionally released:

- **Personal precautionary measures:** Danger of slipping! Keep noninvolved persons away from the work area. Wear personal protective clothing/equipment.
- **Environmental protection measures:** Prevent oil from draining into drain channels, sewerage systems, pits, cellars, water and the ground.
- **Limiting spread:** Use oil blocks to prevent the surface spread of oil.
- **Cleaning procedure:** Bind and dispose of escaped oil with nonflammable absorbents.

NOTE: **Do not flush oil away with water or aqueous cleaning agents.**

23 TRANSMISSION DESIGNATIONS

Breakdown of BMW designation:

A5S 300J (former designation)		
A	Transmission type	• S = Manual gearbox • A = Automatic transmission
5	Number of forward gears	Â
S	Type of top gear	• D = Direct gear • S = Overdrive gear
300	Max. input torque (Nm)	Â
J	Code letter of transmission manufacturer	• G = Getrag • J = Jatco • R = GMPT (General Motors Powertrain) • Z = ZF (Zahnradfabrik Friedrichshafen)
SMG Notes	SMG = Sequential M gearbox/transmission	Â

GS6-37BZ (new designation according to BMW Group Standard GS 90007)		
G	Transmission	Â
S	Transmission type	• S = Manual gearbox • A = Automatic transmission
6	Number of forward gears	Â
-	Â	• - = Standard with manual gearshift • HP = Hydraulic planetary gear • DKG = twin-clutch gearbox
		• 26 = D-transmission • 31 = C-transmission

cardiagn.com

37	Transmission type	• 39 = F-transmission • 37 = H-transmission • 53 = G-transmission • 17 = I-transmission • 47 = J transmission SMG -7-speed • 45 = K transmission • 36 = Transmission DKG
B	Gear set	• B = Petrol gear ratio • D = Diesel gear ratio • S = Sport gear ratio
Z	Code letter of transmission manufacturer	• G = Getrag • Z = ZF (Zahnradfabrik Friedrichshafen)

Manual gearbox:

BMW designation	Manufacturer	Manufacturer designation	Remarks
S5D 200G	Getrag	B transmission (220/5)	Â
S5D 200G	Getrag	B transmission (221/5)	for M41 engine only
S5D 250G	Getrag	B transmission (220/5)	Reinforced version
S5D 260Z	ZF	C-transmission (S5-31 D)	for M51 engine only
S5D 280Z	ZF	C-transmission (S5-31)	Â
S5D 310Z	ZF	C-transmission (S5-31)	up to 9.95
S5D 320Z	ZF	C-transmission (S5-31)	from 9.95 (reinforced version)
GS5S31BZ (SMG)	ZF	C transmission	SMG
GS5-39DZ	ZF	F transmission	Â
S6S 420G	Getrag	D-transmission (226/6)	Â
S6S 420G (SMG)	Getrag	D transmission	SMG
S6S 560G	Getrag	E-transmission (286/6)	Â
GS6-37BZ	ZF	H-transmission	Â
GS6S37BZ (SMG)	ZF	H-transmission	Â
GS6-37DZ	ZF	H-transmission	Â
GS6-37BG	Getrag	H-transmission	Â
GS6-53BZ	ZF	G-transmission	Â
GS6-53DZ	ZF	G-transmission	Â
GS6-17BG	Getrag	I-transmission	Â
GS6-17DG	Getrag	I-transmission	Â
GS7S47BG (SMG)	Getrag	J-transmission (247)	SMG-7-gear
GS7D36SG	Getrag	DKG (436)	DKG-7-gear
GS6-45BZ	ZF	K transmission	Â
GS6-45DZ	ZF	K transmission	Â

Automatic transmission:

BMW designation	Manufacturer	Manufacturer designation	Remarks
A4S 200R	General Motors Powertrain	GM4	Â
A4S 270R	General Motors Powertrain	THM-R1w	Transmission wide-stepped

cardiagn.com

A4S 310R	General Motors Powertrain	THM-R1	Â
A5S 300J	Jatco	Jatco	Â
A5S 310Z	ZF	5HP-18	Â
A5S 325Z	ZF	5HP-19	Â
A5S 440Z	ZF	5HP-24	Â
A5S 560Z	ZF	5HP-30	Â
A5S 360R/390R	GM	GM5	Â
GA6HP19Z	ZF	6HP19	Â
GA6HP26Z	ZF	6HP26	Â
GA6HP32Z	ZF	6HP32	Â
GA6L45R	GM	GM6	Â
GA8HP45Z	ZF	8HP45	Â
GA8HP70Z	ZF	8HP70	Â
GA8P70H	ZF	8P70	Hybrid
GA8HP90Z	ZF	8HP90	Â
GA7AHSCD	Daimler	AHS-C	Hybrid

23... UNIVERSAL BMW TRANSMISSION TAKE-UP

Special tools required:

- 00 2 030
- 23 4 050

NOTE:

- **The universal transmission bracket is introduced for the E60 AWD**
- **Suitable for manual and automatic transmissions**

IMPORTANT: Front and rear supports (1) can be laterally adjusted by means of screws (2). Carrier (3) of rear supports (1) can be longitudinally adjusted by means of screw. Supports must be adapted in length and width to the transmission.

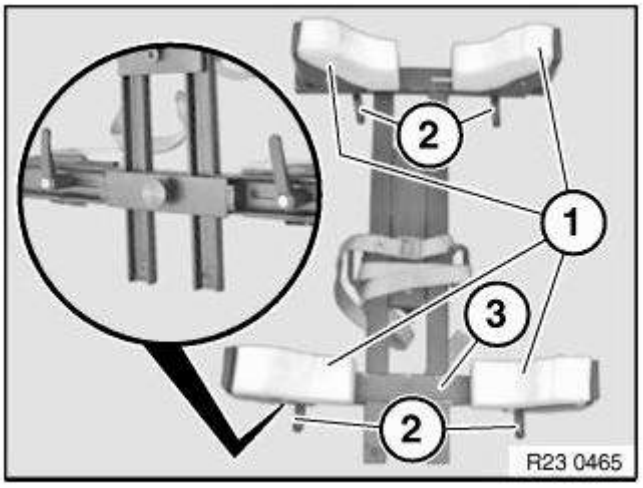

Fig. 61: Identifying Transmission Supports, Carrier And Screw
Courtesy of BMW OF NORTH AMERICA, INC.

Supporting transmission:

Support transmission with special tools 23 4 050 , 00 2 030 .

cardiagn.com

IMPORTANT: Transmission must be secured with tensioning strap (1).

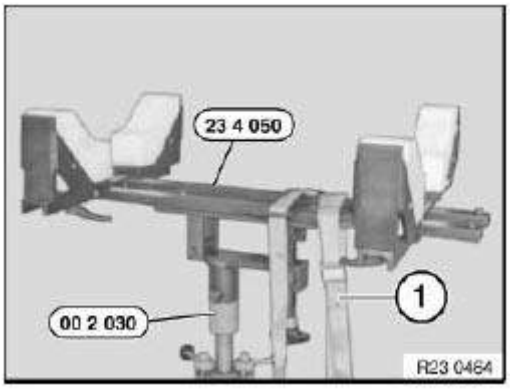

Fig. 62: Supporting Transmission Using Special Tools
Courtesy of BMW OF NORTH AMERICA, INC.

23..... UNIVERSAL TRANSMISSION RETAINING BRIDGE

Special tools required:

- 00 1 450
- 24 0 200

NOTE:

- **The transmission retaining bridge 24 0 200 is suitable for both manual and automatic transmissions**

IMPORTANT: Adapters and spindles must be adapted for positive locking to the transmission. **(Risk of injury)**

Adapt adapters (1) and spindle with thrust piece (3) to transmission.

Adapt length with slide (2).

Screw in spindle (4).

IMPORTANT: Before mounting on assembly stand 00 1 450, check retaining bridge for secure seating.

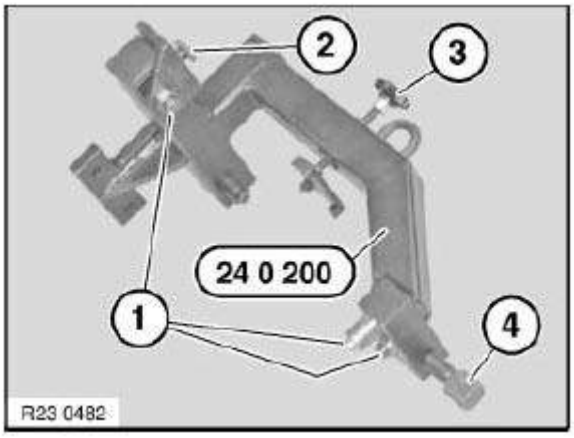

Fig. 63: Identifying Transmission Adapters, Thrust Piece And Spindle
Courtesy of BMW OF NORTH AMERICA, INC.

cardiagn.com

TRANSMISSION CASE, OIL SUMP

24 11 014 REMOVING AND INSTALLING/SEALING OR REPLACING TRANSMISSION OIL SUMP (GA8HP45Z)

IMPORTANT:
- Do not let skin come in contact with transmission oil and do not inhale fuel vapors.
- Wear protective gloves.
- Ensure adequate ventilation.

IMPORTANT: Remove transmission oil sump only after it has cooled down.
After completion of repair work, check **TRANSMISSION OIL LEVEL** .
Use only the approved **TRANSMISSION OIL** .
Failure to comply with this requirement will result in serious damage to the automatic transmission!

Installation note:

The transmission oil sump must be renewed **every** time it is removed.

Necessary preliminary tasks:

- Remove rear **UNDERBODY PROTECTION** .

If applicable, remove retaining plates (2).

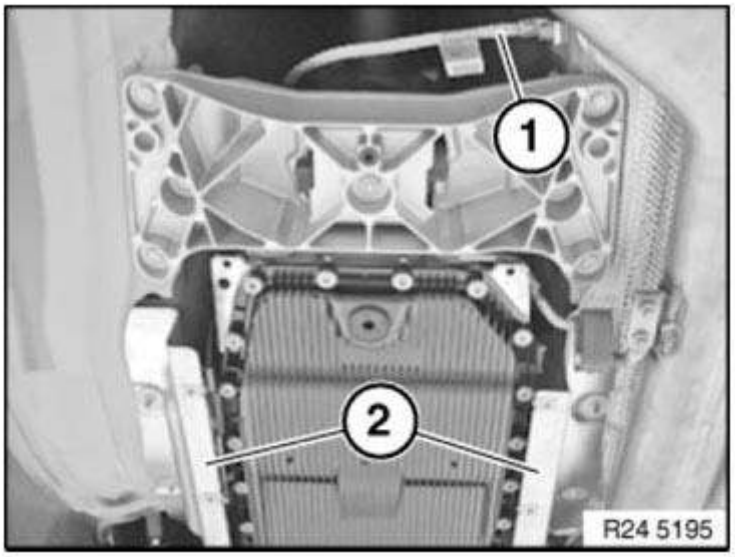

Fig. 64: Identifying Retaining Plates
Courtesy of BMW OF NORTH AMERICA, INC.

Remove oil drain plug (1).

Tightening torque **24 11 2AZ** .

Drain automatic transmission oil.

cardiagn.com

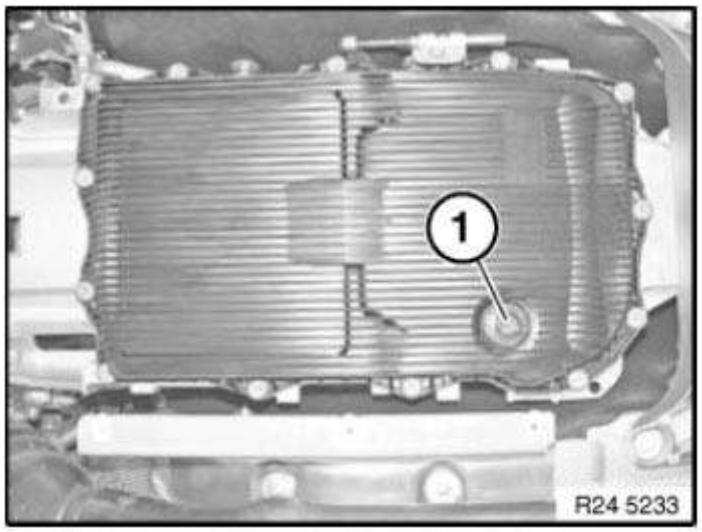

Fig. 65: Identifying Oil Drain Plug
Courtesy of BMW OF NORTH AMERICA, INC.

Recycling:

Catch and dispose of escaping transmission oil.

Observe country-specific waste disposal regulations.

Unscrew all bolts.

Remove and renew transmission oil sump.

Clean the contact surface of the transmission oil sump on the transmission.

Installation note:

Insert new screws until screw heads make contact.

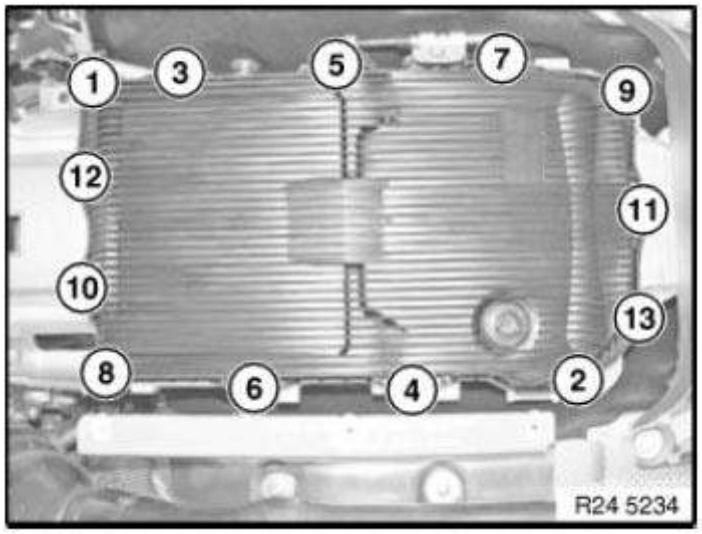

Fig. 66: Transmission Oil Sump Bolts Tightening Sequence
Courtesy of BMW OF NORTH AMERICA, INC.

Tighten down screws in sequence 1...13 to specified torque and angle of rotation.

Tightening torque **24 11 4AZ** .

cardiagn.com

IMPORTANT: Aluminium screws/bolts must be replaced **every** time they are released.
Jointing torque and angle of rotation must be observed without fail **(risk of damage).**

TORQUE CONVERTER BEARING, SEAL

24 31 013 REPLACING TORQUE CONVERTER RADIAL SHAFT SEAL (GA8HP45Z)

Refer to 24 31 013 REPLACING TORQUE CONVERTER RADIAL SHAFT SEAL (GA8HP45Z)

EXTENSION HOUSING, BEARINGS, SEAL

24 13 015 REPLACING OUTPUT FLANGE RADIAL SHAFT SEAL (GA8HP45Z) (AWD)

Special tools required:

- 23 0 490
- 23 3 220

IMPORTANT: After completion of repair work, check TRANSMISSION OIL LEVEL .
Use only the approved TRANSMISSION OIL .
Failure to comply with this requirement will result in serious damage to the automatic transmission!

Necessary preliminary tasks:

- Remove **transfer box** . See 27 10 010 REMOVING AND INSTALLING TRANSFER BOX (ATC 450) or 27 10 010 REMOVING AND INSTALLING TRANSFER BOX (ATC 45L) .

Drive a hole into radial shaft seal (1) using a center punch.

IMPORTANT: Do not use a drill as swarf may result in transmission malfunction.

Thread special tool 23 0 490 into radial shaft seal (1).

Drive out radial shaft seal (1) with impact weight (2).

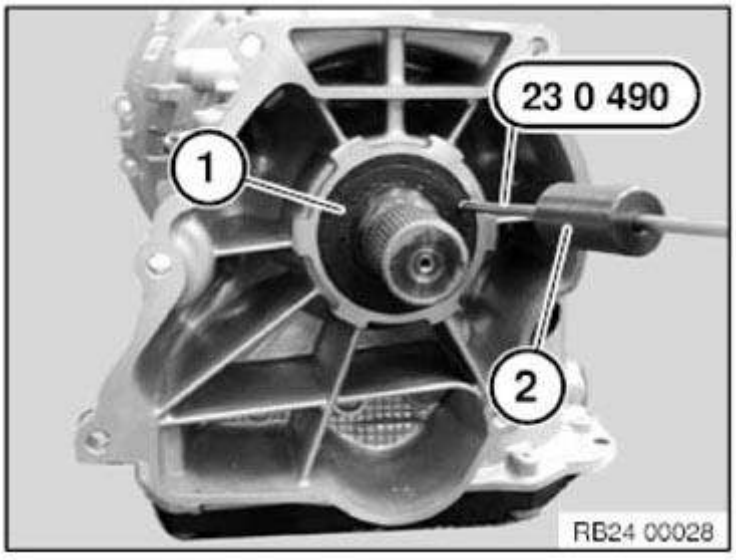

Fig. 67: Drilling Hole Into Radial Shaft Seal Using Center Punch
Courtesy of BMW OF NORTH AMERICA, INC.

Installation note:

cardiagn.com

Coat sealing lips of new radial shaft seal with clean transmission oil.

Radial shaft seal firmly home with special tool 23 3 220 .

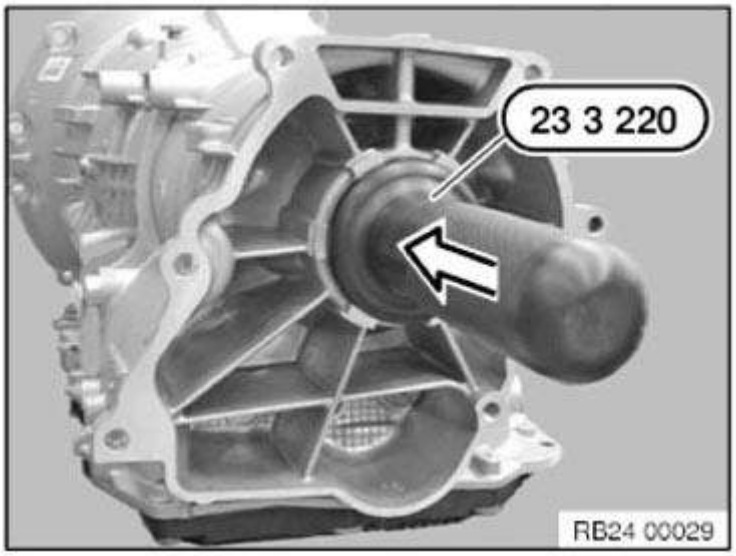

Fig. 68: Pressing Radial Shaft Seal
Courtesy of BMW OF NORTH AMERICA, INC.

MECHANICAL ATTACHMENTS

24 14 004 REPLACING SHAFT SEAL FOR SELECTOR SHAFT (GA8HP45Z)

Special tools required:

- 24 5 362
- 24 5 366
- 24 5 367

IMPORTANT:
- Do not let skin come in contact with transmission oil and do not inhale fuel vapors.
- Wear protective gloves.
- Ensure adequate ventilation.

IMPORTANT: After completion of repair work, check TRANSMISSION OIL LEVEL .
Use only approved GEARBOX OIL .
Failure to comply with this requirement will result in serious damage to the automatic transmission!

Necessary preliminary tasks:

- Remove automatic transmission. See 24 00 033 REMOVING AND INSTALLING AUTOMATIC TRANSMISSION (GA8HP45Z) (N47), 24 00 033 REMOVING AND INSTALLING AUTOMATIC TRANSMISSION (GA8HP45Z) (N55), 24 00 033 REMOVING AND INSTALLING AUTOMATIC TRANSMISSION (GA8HP45Z) (N52) or 24 00 033 REMOVING AND INSTALLING AUTOMATIC TRANSMISSION (GA8HP45Z) (N20)
- Remove MECHATRONICS.

Using a suitable tool, drive clamping sleeve (1) out of selector shaft.

Withdraw selector shaft (2) outwards.

cardiagn.com

NOTE: **Return spring is under tension.**

Installation note:

Replace selector shaft (2).

Replace clamping sleeve (1).

Insert narrower end of clamping sleeve (1) into hole first. Using a suitable tool, drive in clamping sleeve until it is flush with the hole.

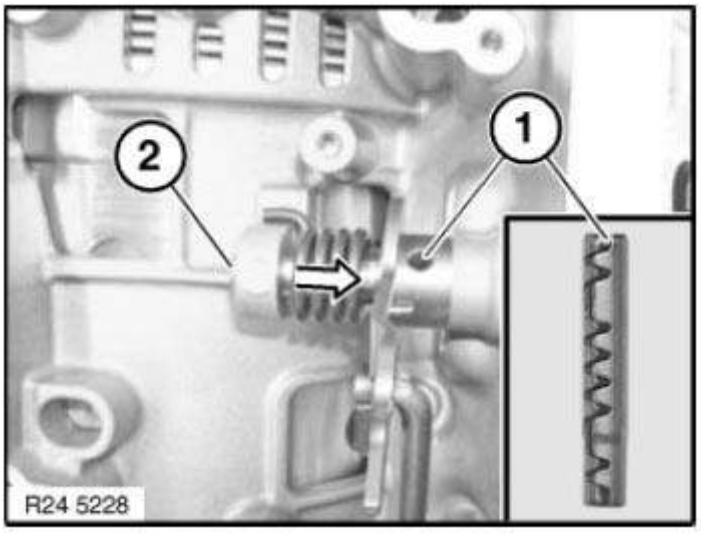

Fig. 69: Driving Clamping Sleeve Out Of Selector Shaft
Courtesy of BMW OF NORTH AMERICA, INC.

Screw in special tool 24 5 367 until it is firmly connected with radial shaft seal.

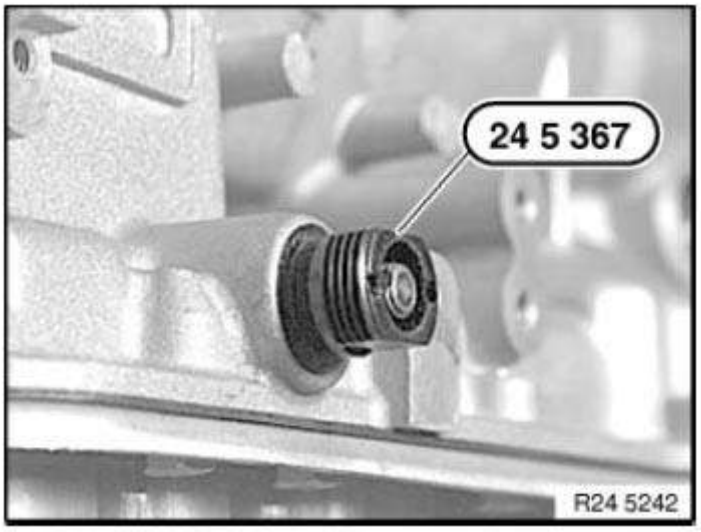

Fig. 70: Screwing Special Tool (24 5 367)
Courtesy of BMW OF NORTH AMERICA, INC.

Screw special tool 24 5 362 onto special tool 24 5 367 and tighten down.

This pulls the shaft seal out of the transmission housing.

cardiagn.com

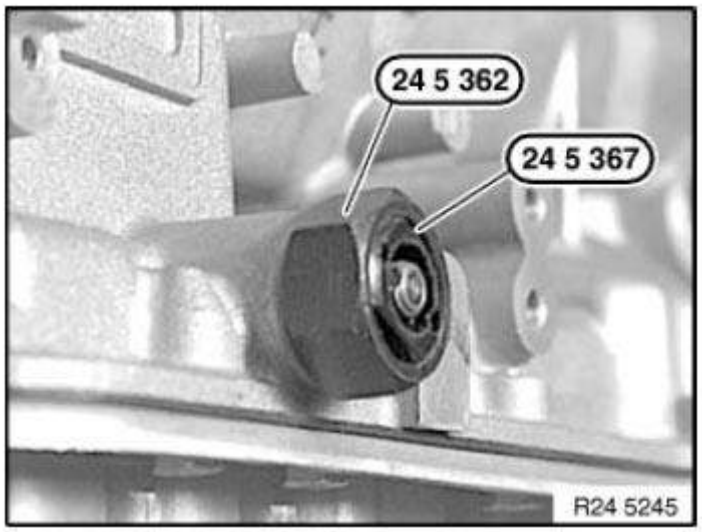

Fig. 71: Identifying Special Tool (24 5 362)
Courtesy of BMW OF NORTH AMERICA, INC.

Oil sealing lip on shaft seal (1).

Drive radial shaft seal (1) fully home using special tool **24 5 366** and plastic hammer.

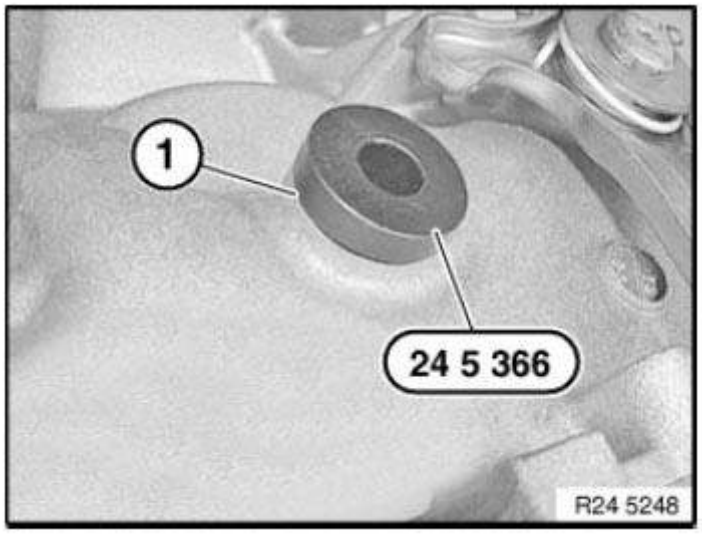

Fig. 72: Driving Radial Shaft Seal
Courtesy of BMW OF NORTH AMERICA, INC.

HYDR/EL CONTROL COMPONENTS/ELEMENTS

24 30 100 REPLACING OIL ACCUMULATOR (GA8HP45Z)

IMPORTANT:
- Do not let skin come in contact with transmission oil and do not inhale fuel vapors.
- Wear protective gloves.
- Ensure adequate ventilation.

Applicable to vehicles from 08/2011
Remove transmission oil sump only after it has cooled down.
After completion of repair work, check **TRANSMISSION OIL LEVEL** .
IMPORTANT: Use only the approved **TRANSMISSION OIL** .

cardiagn.com

Failure to comply with this requirement will result in serious damage to the automatic transmission!

Installation note:

The transmission oil sump must be renewed **every** time it is removed.

Necessary preliminary tasks:

- **REMOVE TRANSMISSION OIL SUMP**.

Recycling:

Catch and dispose of escaping transmission oil.

Observe country-specific waste disposal regulations.

Release screws (1) (M6x20).

Release screw (2) (M6x59).

Tightening torque **24 30 5AZ** .

Carefully unlock connector (3) with screwdriver.

Carefully pull out oil accumulator.

IMPORTANT: Mounting bolts of oil accumulator must be replaced after removal.

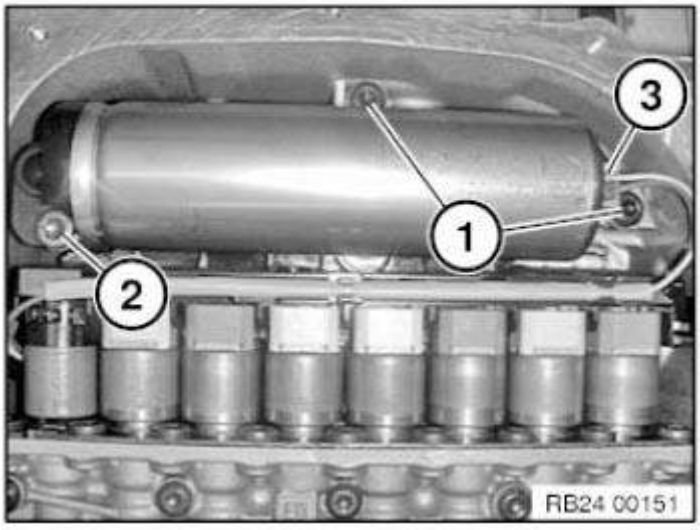

Fig. 73: Identifying Oil Accumulator, Connector And Screw
Courtesy of BMW OF NORTH AMERICA, INC.

24 30 101 REPLACING OIL RESERVOIR (GA8HP70Z)

IMPORTANT:
- Do not let skin come in contact with transmission oil and do not inhale fuel vapors.
- Wear protective gloves.
- Ensure adequate ventilation.

cardiagn.com

Valid for vehicles manufactured from 08/2011 onward!
After completion of repair work, check **TRANSMISSION OIL LEVEL** .
IMPORTANT: Use only the approved **TRANSMISSION OIL** .
Failure to comply with this requirement will result in serious damage to the automatic transmission!

Necessary preliminary tasks:

- Remove transmission oil sump.

Release screws (1) (M6x20).

Release screw (2) (M6x59).

Tightening torque **24 30 5AZ** .

Carefully unlock connector (3) with screwdriver.

Carefully pull out oil accumulator.

IMPORTANT: Mounting bolts of oil accumulator **must** be replaced after removal.

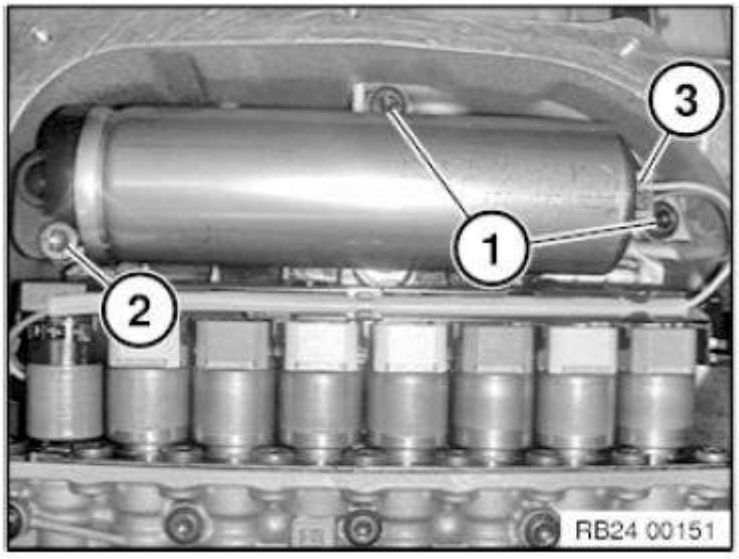

Fig. 74: Identifying Oil Accumulator, Connector And Screw
Courtesy of BMW OF NORTH AMERICA, INC.

OIL PUMP

24 31 013 REPLACING TORQUE CONVERTER RADIAL SHAFT SEAL (GA8HP45Z)

Special tools required:

- 00 1 450
- **13 5 250**
- **24 0 200**
- **24 1 420**
- **24 2 410**
- **24 1 410**

- Do not let skin come in contact with transmission oil and do not inhale transmission oil

cardiagn.com

IMPORTANT: vapors.
- Wear protective gloves.
- Ensure adequate ventilation

IMPORTANT: After completion of work, check **TRANSMISSION OIL LEVEL** .
Use only approved **TRANSMISSION OIL** .

Failure to comply with this instruction will result in serious damage to the transmission.

Necessary preliminary work:

- Remove torque converter. See **24 40 014 REMOVING AND INSTALLING/REPLACING TORQUE CONVERTER (GA8HP45Z) (N20)**, **24 40 014 REMOVING AND INSTALLING/REPLACING TORQUE CONVERTER (GA8HP45Z) (N47)**, **24 40 014 REMOVING AND INSTALLING/REPLACING TORQUE CONVERTER (GA8HP45Z) (N55)** or **24 40 014 REMOVING AND INSTALLING/REPLACING TORQUE CONVERTER (GA8HP45Z) (N52)**

Secure transmission with special tool **24 0 200** on assembly stand 00 1 450.

NOTE: **Read and comply with note on installation of TRANSMISSION RETAINING BRIDGE .**

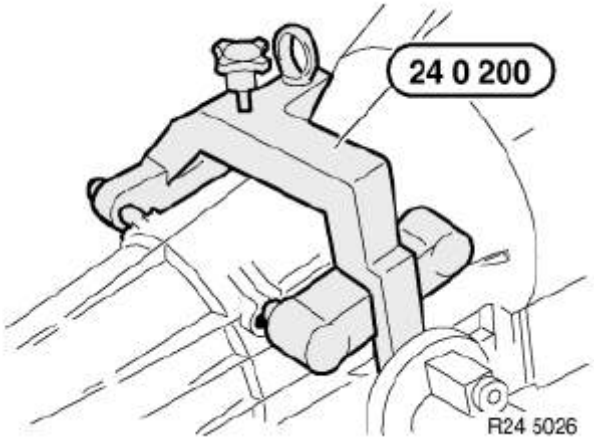

Fig. 75: Securing Transmission Using Special Tool (24 0 200)
Courtesy of BMW OF NORTH AMERICA, INC.

Pull out radial shaft seal (1) with special tools **24 1 420** and **13 5 250** .

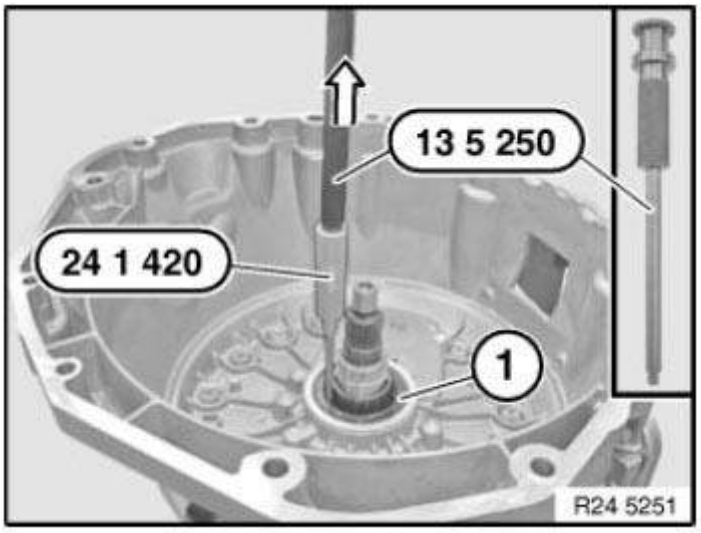

cardiagn.com

Fig. 76: Pulling Radial Shaft Seal
Courtesy of BMW OF NORTH AMERICA, INC.

The 14 aluminum torx screws contained in the drive repair kit are furnished with a sealing ring and must be mandatory replaced as well.

When replacing screws (1) along the dashed line, always change one screw after the other.

Tightening torque **24 30 6AZ** .

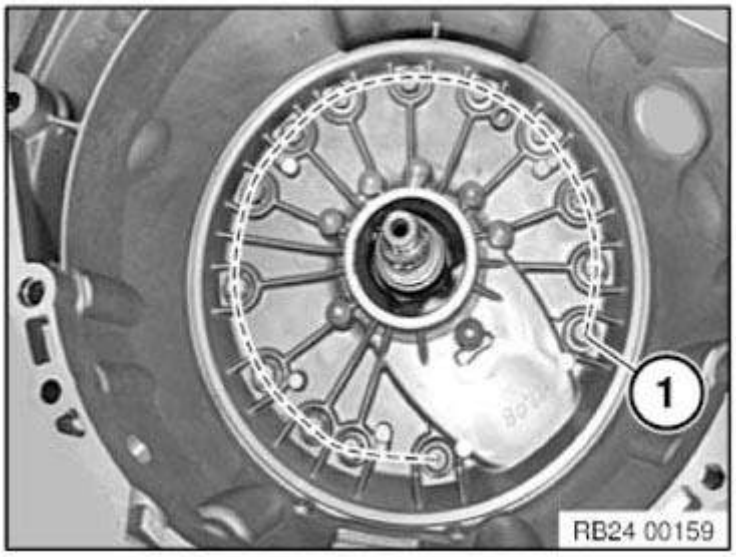

Fig. 77: Identifying Drive Shaft Screw
Courtesy of BMW OF NORTH AMERICA, INC.

Installation note:

1. Install the O-ring on the drive shaft.
2. Oil sealing lip on shaft seal.
3. Drive in radial shaft seal (1) with special tool **24 1 410** as far as it will go.

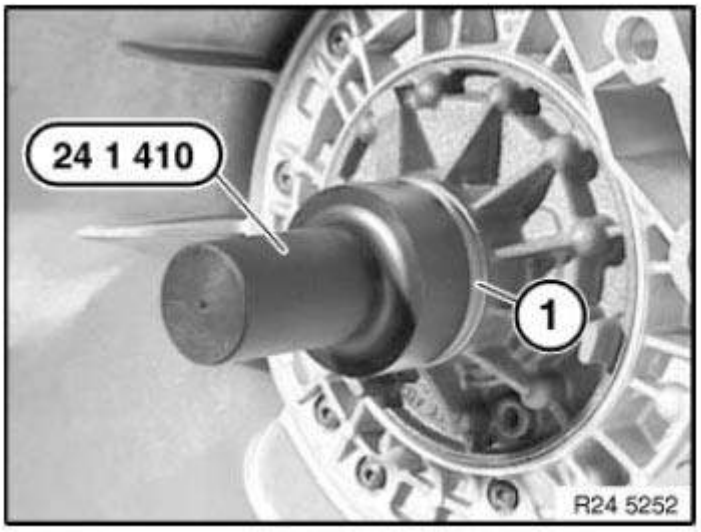

Fig. 78: Installing O-Ring On Drive Shaft
Courtesy of BMW OF NORTH AMERICA, INC.

SHIFT VALVES, PARKING LOCK

cardiagn.com

24 34... MANUALLY RELEASING PARKING LOCK (FROM VEHICLE UNDERBODY) TRANSMISSION GA8HP

For various tasks, it is necessary to unlock and lock the parking lock.

This can be done from inside the passenger compartment or underneath the vehicle.

Before releasing the parking lock, secure the vehicle against rolling away.

In the event of a power supply interruption, e.g. flat battery or electrical fault, the parking lock must be manually released, otherwise the wheels will be locked and the vehicle cannot be moved.

Manual emergency release of parking lock from passenger compartment is not possible with GA8HP transmissions for:

- F01/F02/F03/F04 GA8HP from production date 09/2010
- F07 GA8HP from production date 03/2010
- F10/F11 GA8HP as from production date 06/2010

Before removing the underbody panel, always check inside the vehicle to be certain the parking lock emergency release is not fitted.

From the vehicle underbody:

Raise vehicle.

Manual emergency release of parking lock

- Remove underbody protection
- Screw in screw (1) with hexagon socket (SW5) until parking lock is released by lever (2).
- It is **imperative** that bolt is always replaced.
- Clean thread with screw tap size M6X1, 0.

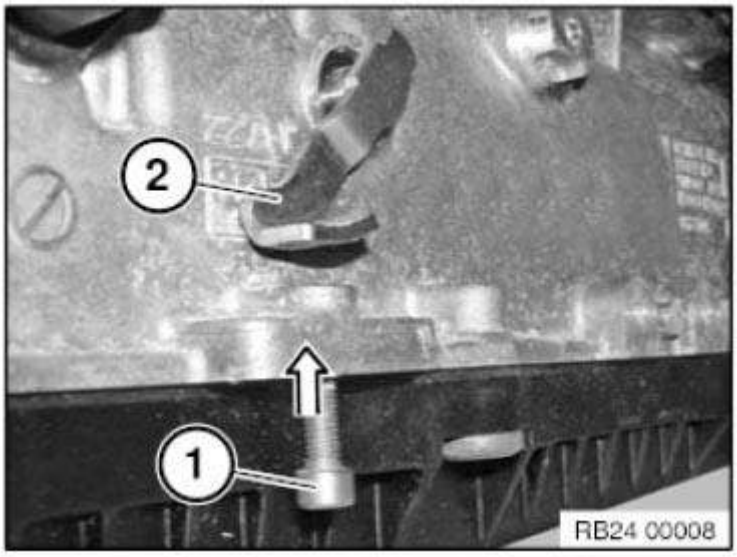

Fig. 79: Removing Underbody Protection Screw
Courtesy of BMW OF NORTH AMERICA, INC.

Screw new microencapsulated screw (1) into thread.

IMPORTANT: Screwing in and adjusting of screw to 1.5 to 2.5 mm above thread lip (A) must occur within 3 minutes.

cardiagn.com

The screw may no longer be turned after 3 minutes (hardening of adhesive), otherwise it must be replaced.

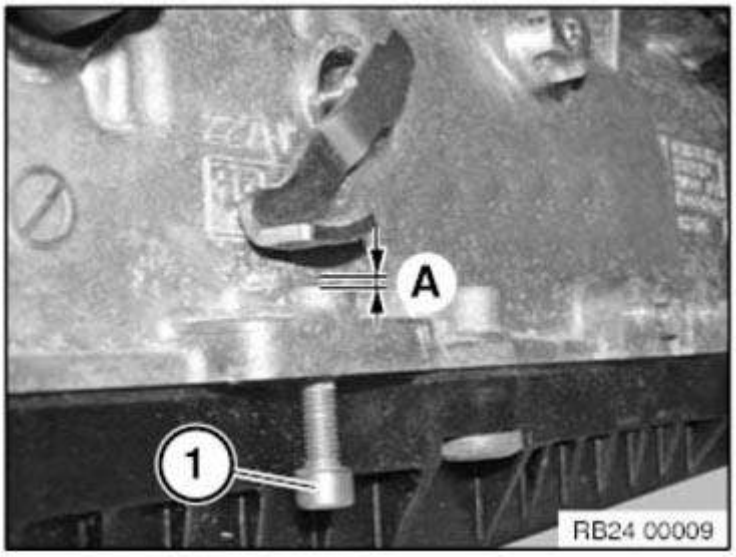

Fig. 80: Identifying Thread Lip Dimension
Courtesy of BMW OF NORTH AMERICA, INC.

From passenger compartment:

- Refer to Manual emergency unlocking of parking lock.

From underneath vehicle with Bowden cable:

- Remove rear underbody protection.
- Press release lever (3) backwards.

If permanent release is desired, fix lever in position (e.g. with cable strap).

Locking:

- Let go of release lever (3) or undo means by which it is secured.

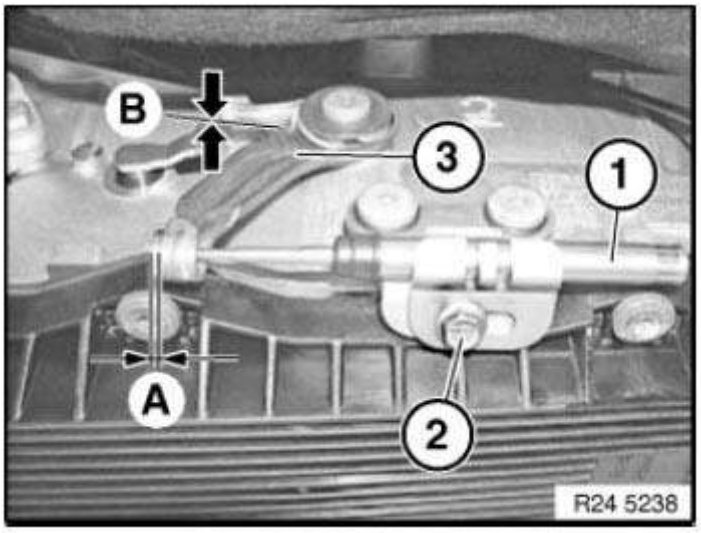

Fig. 81: Identifying Adjusting Gear Lever, Cable And Screw
Courtesy of BMW OF NORTH AMERICA, INC.

24 34... NOTES ON MECHATRONICS (GA8HP45Z, GA8HP70Z, GA8HP90Z)

cardiagn.com

Special tools required:

- 24 2 390

IMPORTANT:
- Do not let skin come in contact with transmission oil and do not inhale fuel vapors.
- Wear protective gloves.
- Ensure adequate ventilation.

After completing work:

IMPORTANT:
- Load specific data status with the BMW diagnosis system
- Check TRANSMISSION OIL LEVEL
- Use only approved TRANSMISSION OIL .

Failure to comply with this requirement will result in serious damage to the automatic transmission!

IMPORTANT: Read and comply with notes on PROTECTION AGAINST ELECTROSTATIC DISCHARGE (ESD PROTECTION) .

Unscrew connector (1) and disconnect.

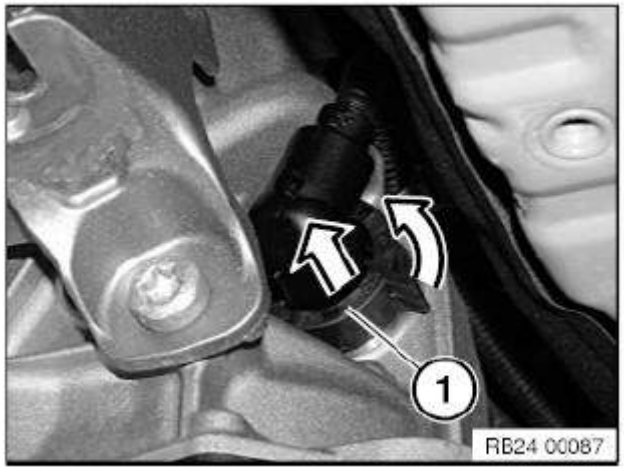

Fig. 82: Disconnecting Connector
Courtesy of BMW OF NORTH AMERICA, INC.

Insert special tool 24 2 390 in sealing sleeve (1).

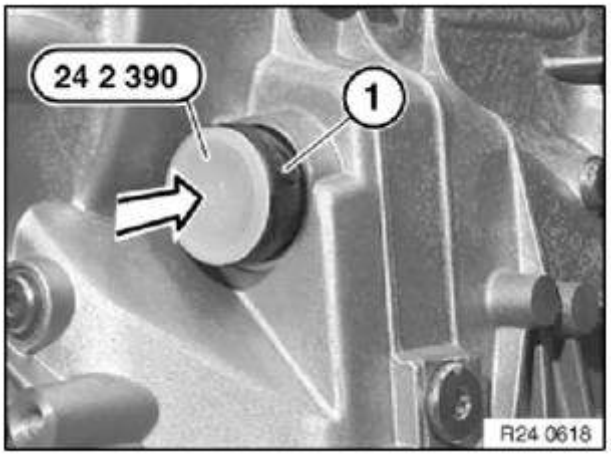

cardiagn.com

Fig. 83: Inserting Special Tool (24 2 390) In Sealing Cup
Courtesy of BMW OF NORTH AMERICA, INC.

24 34 564 REPLACING MECHATRONICS (GA8HP45Z)

Special tools required:

- 24 1 430
- 24 2 390

IMPORTANT:

- Do not let skin come in contact with transmission oil and do not inhale transmission oil vapors.
- Wear protective gloves.
- Ensure adequate ventilation.

NOTE: **After completing repair work:**

- **Load specific data status with the BMW diagnosis system**

IMPORTANT:

On vehicles with automatic start/stop, a hydraulic impulse storage is installed in the mechatronics.

After completion of repair work, check TRANSMISSION OIL LEVEL .

Use only approved GEARBOX OIL .

Failure to comply with this requirement will result in serious damage to the automatic transmission!

IMPORTANT: Read and comply with notes on PROTECTION AGAINST ELECTROSTATIC DISCHARGE (ESD PROTECTION) .

Necessary preliminary tasks:

- Remove REAR UNDERBODY PROTECTION .
- Remove exhaust bracket.

The graphic shows a vehicle with rear-wheel drive.

Remove panels (2).

cardiagn.com

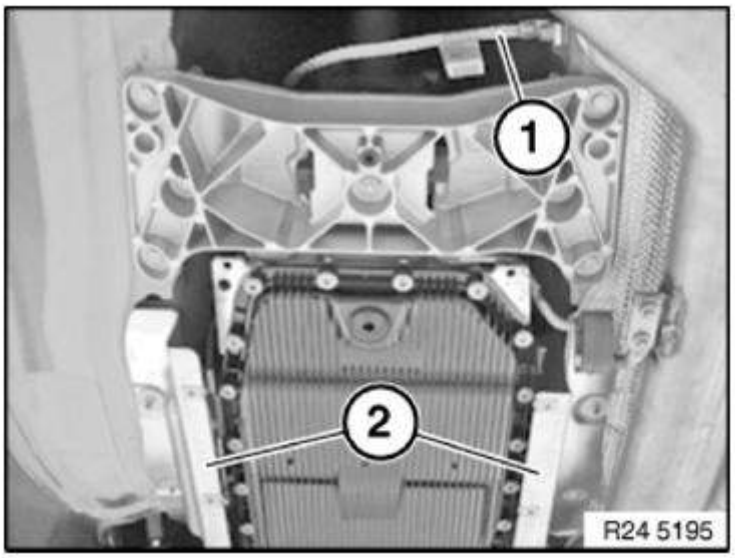

Fig. 84: Identifying Retaining Plate
Courtesy of BMW OF NORTH AMERICA, INC.

IMPORTANT: Cable assembly is discontinued after 04/2010.

Release screw (2).

Disconnect cable (1).

Installation note:

Adjusting cable:

- Release screw (2).
- Bring release lever (3) into contact with selector shaft by pressing slightly. Distance B=0 mm.
- Adjust cable (1) by means of holder until distance A = 1 mm is obtained.
- Tighten down screw (2)

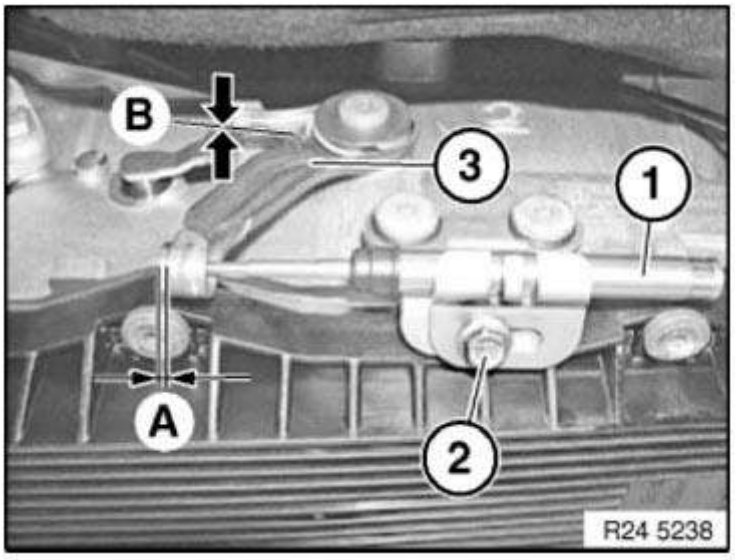

Fig. 85: Identifying Adjusting Gear Lever, Cable And Screw
Courtesy of BMW OF NORTH AMERICA, INC.

IMPORTANT: Mechatronics can be destroyed by static discharges. Therefore the contacts inside the connector must not be touched. Insert special tool immediately after operation.

cardiagn.com

Unscrew connector (1) and disconnect.

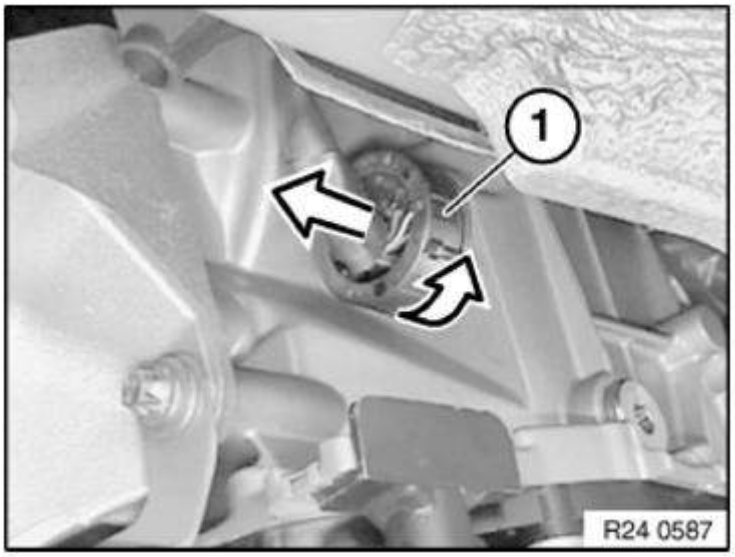

Fig. 86: Disconnecting Connector
Courtesy of BMW OF NORTH AMERICA, INC.

Insert special tool **24 2 390** in sealing cup (1).

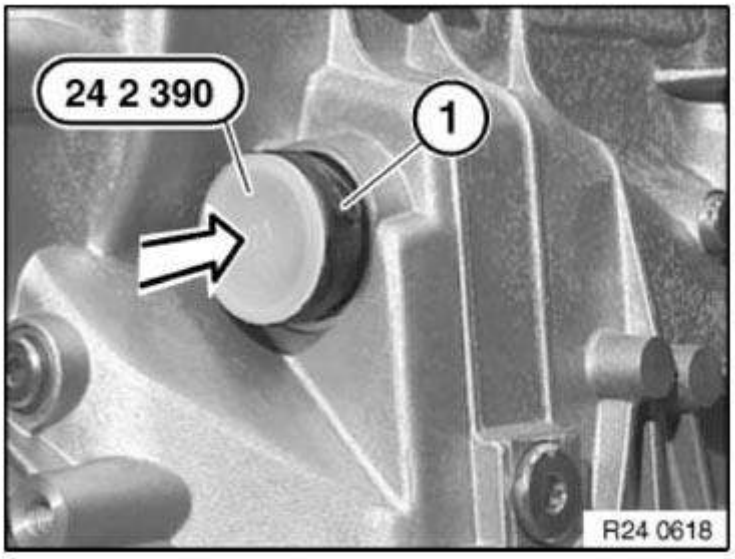

Fig. 87: Inserting Special Tool (24 2 390) In Sealing Cup
Courtesy of BMW OF NORTH AMERICA, INC.

Remove **TRANSMISSION OIL SUMP**.

Remove **OIL RESERVOIR**.

Release screw (1) and unlock sealing cup with slide (2).

Tightening torque **24 30 4AZ** .

cardiagn.com

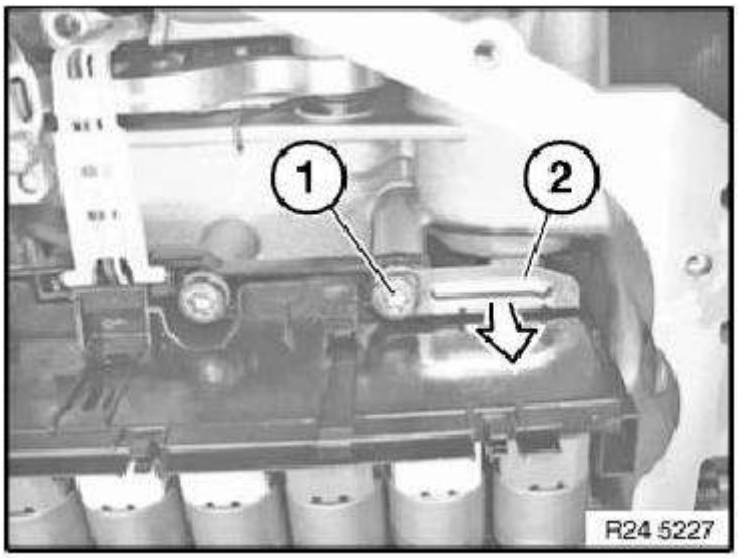

Fig. 88: Sliding Sealing Cup
Courtesy of BMW OF NORTH AMERICA, INC.

Note position of sealing cup.

Pull out sealing cup (1).

Installation note:

Replace sealing cup (1).

Fit sealing cup in position (lug on inside). Turn until lug engages in groove of transmission. Slide in sealing cup.

Lug on sealing cup must not be damaged!

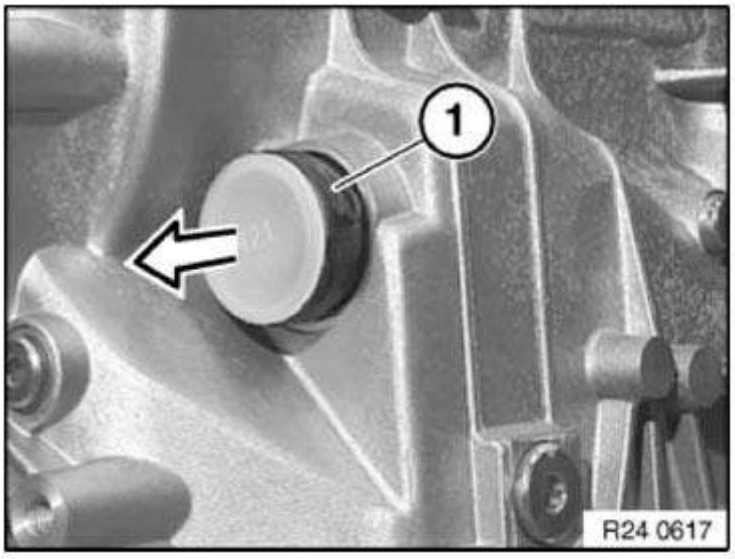

Fig. 89: Pulling Out Sealing Cup
Courtesy of BMW OF NORTH AMERICA, INC.

IMPORTANT: **Only for vehicles without oil reservoir.**

Release all screws (1 and 2).

- 1 = M6 x 59 mm

cardiagn.com

- 2 = M6 x 20 mm

Carefully remove mechatronics.

Installation note:

Replace all screws (1 and 2).

Replace O-rings for oil ducts on the mechatronics unit and wet with automatic transmission fluid.

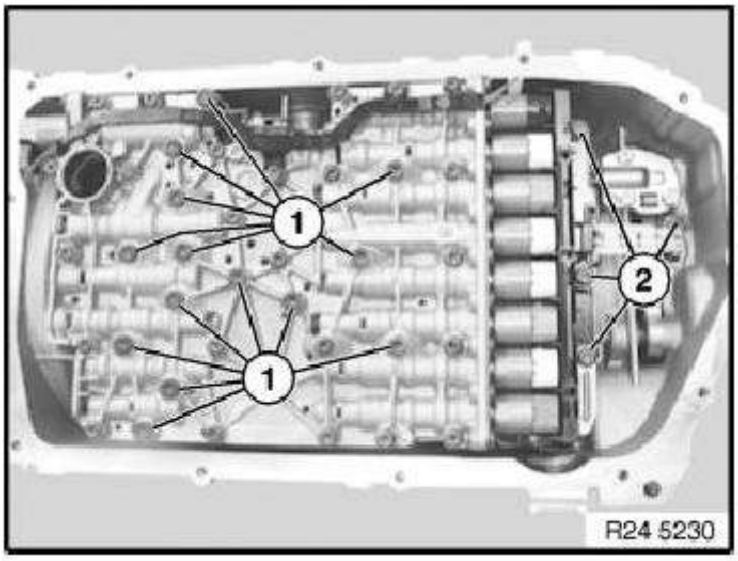

Fig. 90: Identifying Mechatronics Unit Mounting Screws (For Vehicles Without Oil Reservoir)
Courtesy of BMW OF NORTH AMERICA, INC.

IMPORTANT: **Only for vehicles with oil reservoir.**

Release all screws (1 and 2).

- 1 = M6 x 59 mm
- 2 = M6 x 20 mm

Carefully remove mechatronics.

Installation note:

Replace all screws (1 and 2).

Replace O-rings for oil ducts on the mechatronics unit and wet with automatic transmission fluid.

cardiagn.com

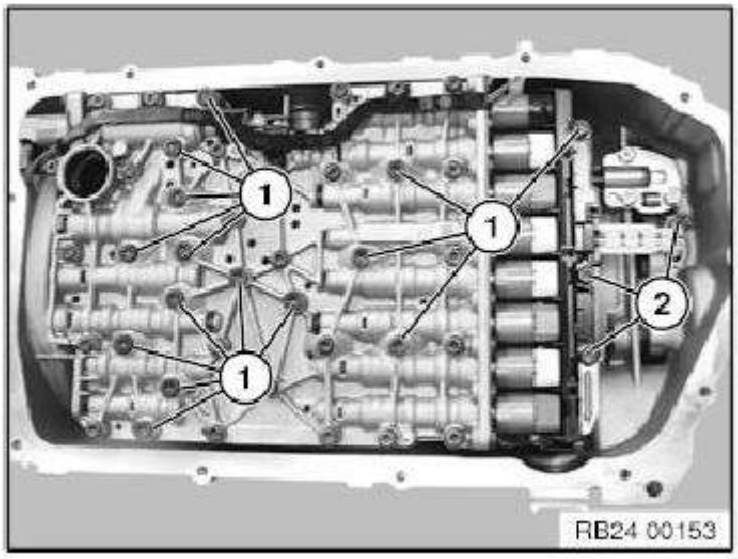

Fig. 91: Identifying Mechatronics Unit Mounting Screws (For Vehicles With Oil Reservoir)
Courtesy of BMW OF NORTH AMERICA, INC.

Installation note:

Replace gasket (1).

Coat new gasket with automatic transmission fluid and install.

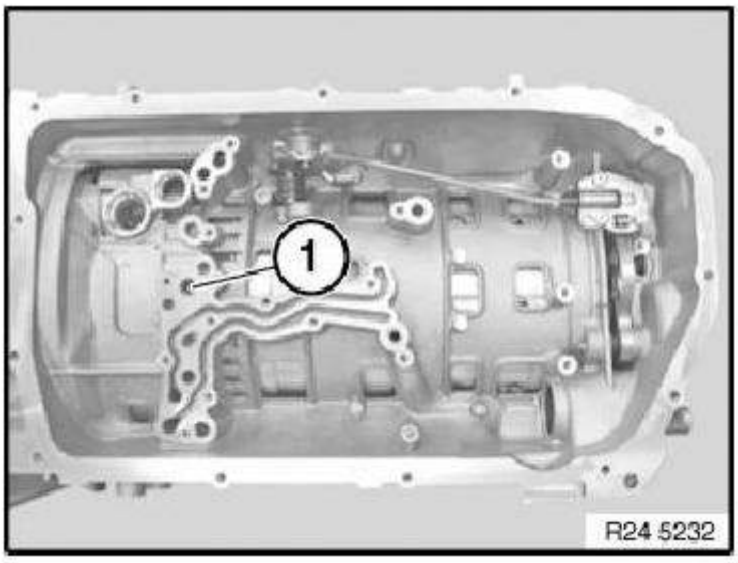

Fig. 92: Identifying Gasket
Courtesy of BMW OF NORTH AMERICA, INC.

Screw in guide pins **24 1 430** at screw position 4 and 9.

cardiagn.com

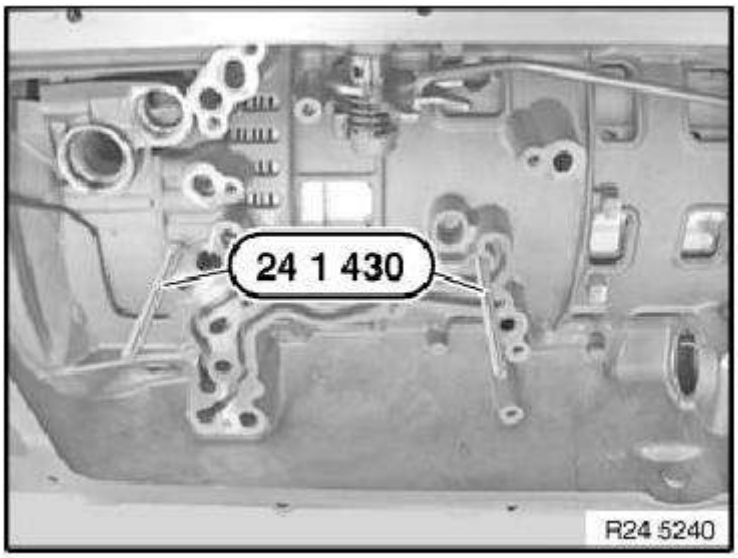

Fig. 93: Screwing Guide Pins (24 1 430)
Courtesy of BMW OF NORTH AMERICA, INC.

Fit mechatronics unit.

Fit shift claw (2) in gearshift shaft (3) by pressing release lever (1).

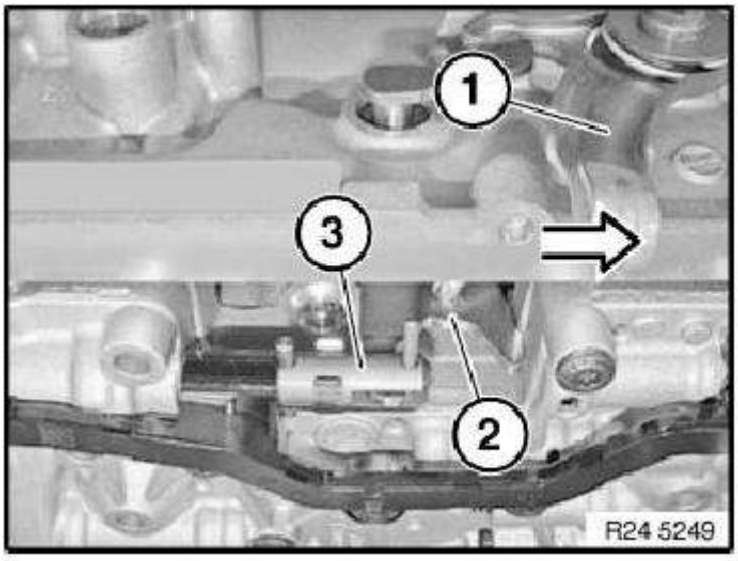

Fig. 94: Pressing Release Lever
Courtesy of BMW OF NORTH AMERICA, INC.

Screw down wing nuts as far as they will go on to the mechatronics unit.

cardiagn.com

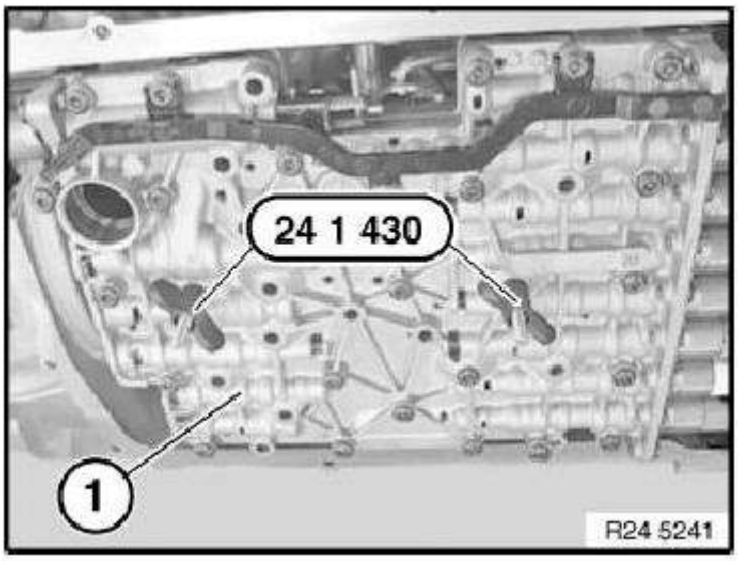

Fig. 95: Screwing Down Wing Nuts On Mechatronics Unit
Courtesy of BMW OF NORTH AMERICA, INC.

Observe different screw lengths.

Failure to comply with this requirement will result in serious damage to the automatic transmission!

Installation note:

Insert screws 8 and 14 until screw heads make contact.

Remove guide pins and fit remaining screws.

Tighten down screws in order 1...18.

Tightening torque **24 30 4AZ** .

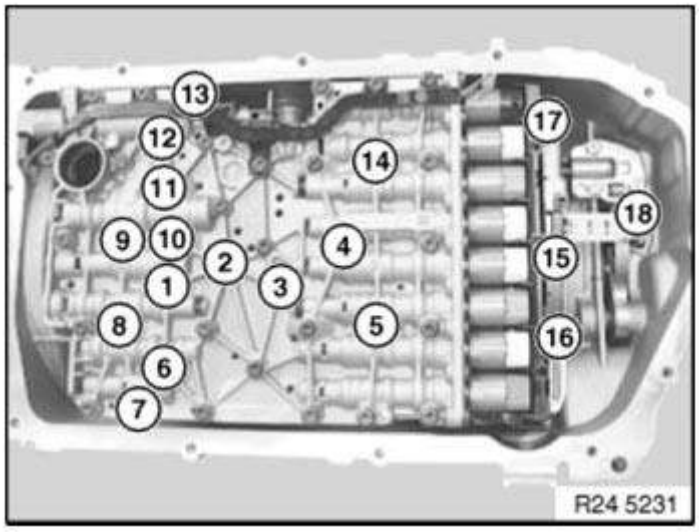

Fig. 96: Identifying Tightening Sequence Of Mechatronics Screws
Courtesy of BMW OF NORTH AMERICA, INC.

IMPORTANT: **In vehicles with an oil reservoir, the screw 17 (M6 x 59 mm) must be secured with the oil reservoir.**

Tighten in the order of 1...16 and 18.

cardiagn.com

Tightening torque **24 30 4AZ** .

Installation note:

Install **OIL RESERVOIR** if necessary.

24 30 100 REPLACING OIL ACCUMULATOR (GA8HP45Z)

Refer to **24 30 100 REPLACING OIL ACCUMULATOR (GA8HP45Z)**

24 30 101 REPLACING OIL RESERVOIR (GA8HP70Z)

Refer to **24 30 101 REPLACING OIL RESERVOIR (GA8HP70Z)**

24 34 022 REPLACING SEALING CUP FOR TRANSMISSION HOUSING (GA8HP45Z)

Special tools required:

- **24 2 390**

IMPORTANT:
- Do not let skin come in contact with transmission oil and do not inhale fuel vapors.
- Wear protective gloves.
- Ensure adequate ventilation.

IMPORTANT: After completion of repair work, check **TRANSMISSION OIL LEVEL** .
Use only approved **TRANSMISSION OIL** .
Failure to comply with this requirement will result in serious damage to the automatic transmission!

Necessary preliminary tasks:

- Remove **TRANSMISSION OIL SUMP**.
- **IF REQUIRED, REMOVE OIL ACCUMULATOR**.
- Remove **CROSS MEMBER** .

IMPORTANT: Support transmission with workshop jack.

Unlock and disconnect connector (1) by turning.

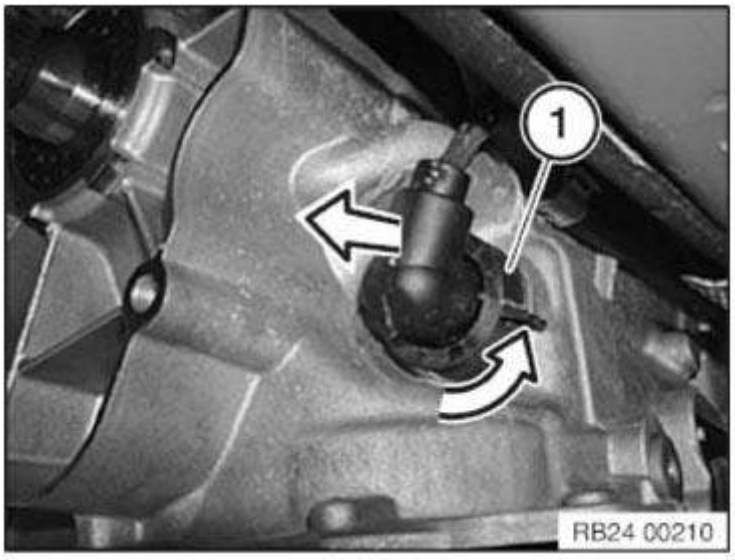

cardiagn.com

Fig. 97: Disconnecting Connector
Courtesy of BMW OF NORTH AMERICA, INC.

Insert special tool **24 2 390** in sealing sleeve (1).

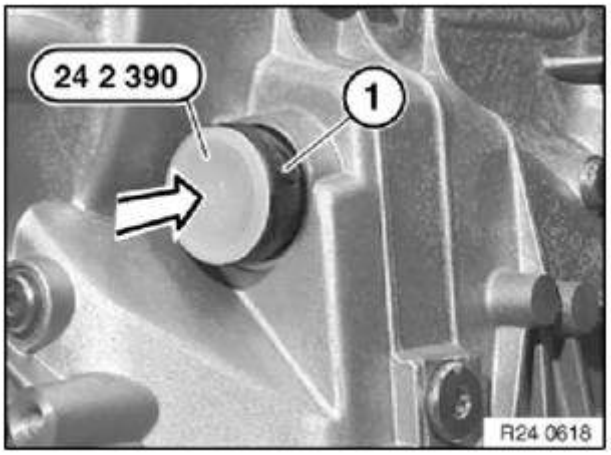

Fig. 98: Inserting Special Tool (24 2 390) In Sealing Cup
Courtesy of BMW OF NORTH AMERICA, INC.

Release screw (1) and unlock sealing cup with slide (2).

Tightening torque **24 30 4AZ** .

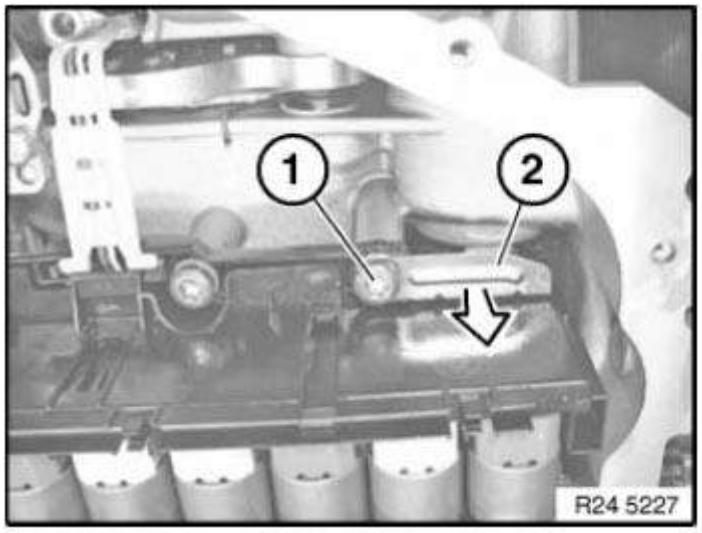

Fig. 99: Sliding Sealing Cup
Courtesy of BMW OF NORTH AMERICA, INC.

NOTE: **Make a note of installation position of sealing sleeve.**

Pull out sealing cup (1).

Installation note:

Fit sealing sleeve in position (lug on inner surface). Turn until lug engages in groove of transmission. Slide in sealing cup.

Lug on sealing cup must not be damaged!

cardiagn.com

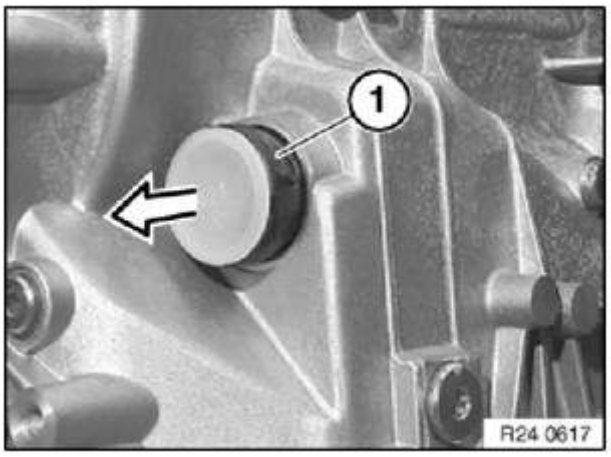

Fig. 100: Pulling Out Sealing Cup
Courtesy of BMW OF NORTH AMERICA, INC.

24 34... UNLOCK TRANSMISSION LOCK ELECTRONICALLY

For various tasks, it is necessary to unlock and lock the parking lock.

Before releasing the parking lock, secure the vehicle against rolling away.

- The emergency release is only possible if the engine does not start and the starter is turning.
- If the emergency release must be activated although the engine starts, the fuse for the electrical fuel pump may be pulled.
- The emergency release is active for 15 minutes.
- As soon as a wheel speed signal is recorded, this period will be extended by another 15 minutes.
- After this period of time, the transmission lock will be engaged without a message.
- The chronological information depends on the battery capacity.
- Only specially trained Service personnel are permitted to operate both the **MECHANICAL** as well as the electronic emergency transmission release system.
- The vehicle must be raised and the underbody panelling removed in order to operate the **MECHANICAL** emergency transmission release system.

IMPORTANT: To operate the electronic emergency transmission release system the vehicle must **not** be towed but rather only pushed.
In the case of misuse, a corresponding fault is entered in the fault memory.

Unlock transmission lock electronically

- Switch the ignition on.
- Apply the brake pedal and hold it down during the entire procedure.
- Press start/stop button.
- The starting operation may last for some seconds in low ambient temperatures and for diesel engines.
- As soon as the starter motor can be heard to operate
- Press and hold down the release button (1)

cardiagn.com

Fig. 101: Identifying Release Button
Courtesy of BMW OF NORTH AMERICA, INC.

1. The specified time must necessarily be complied with!
2. Push selector lever (2) forward up to point of resistance and hold for 2 seconds.
3. Release the selector lever and quickly move it forward by another level again.

Fig. 102: Pushing Selector Lever
Courtesy of BMW OF NORTH AMERICA, INC.

- The selector lever position N is displayed in the instrument cluster.
- The transmission lock is now electronically unlocked.
- Release the brake pedal after the transmission lock has been successfully unlocked.
- Leave the ignition switched on in order to subsequently move the vehicle.
- The transmission automatically shifts into P when the ignition is turned off.

cardiagn.com

Fig. 103: Identifying Gear Position N On Instrument Panel
Courtesy of BMW OF NORTH AMERICA, INC.

The transmission lock is reactivated without a message when the start/stop button is pressed again.

IMPORTANT: If the gearbox cannot be released, turn the ignition off and on again and repeat the previous steps.
Allow the starter to cool down for approx. 10 minutes after unsuccessful attempts.

TORQUE CONVERTER

24 40 014 REMOVING AND INSTALLING/REPLACING TORQUE CONVERTER (GA8HP45Z) (N20)

Special tools required:

- 00 2 550
- 24 4 000
- 24 1 440

IMPORTANT:
- Do not let skin come in contact with transmission oil and do not inhale fuel vapors.
- Wear protective gloves.
- Ensure adequate ventilation.

After completion of repair work, check TRANSMISSION OIL LEVEL .

IMPORTANT: Use only approved TRANSMISSION OIL .
Failure to comply with this instruction will result in serious damage to the transmission.

Necessary preliminary tasks:

- Remove AUTOMATIC TRANSMISSION.

Fit special tool 24 1 440 in torque converter.

Remove torque converter.

NOTE: **When torque converter is removed, transmission oil flows out.**

cardiagn.com

Place torque converter vertically.

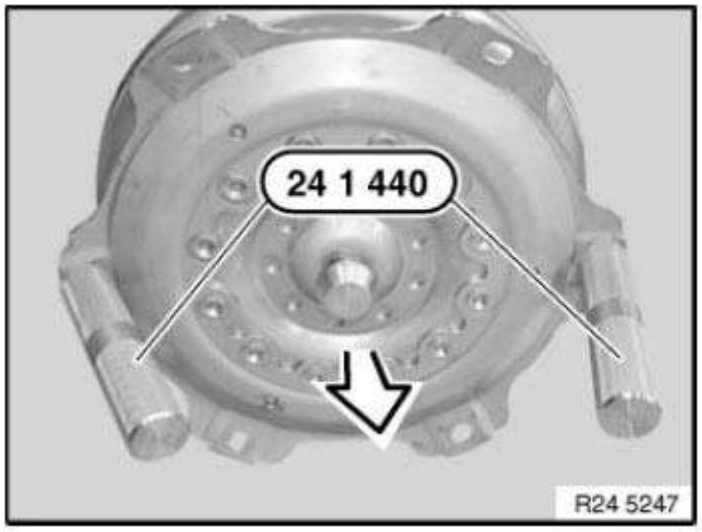

Fig. 104: Removing Torque Converter
Courtesy of BMW OF NORTH AMERICA, INC.

Installation note:

When installing, do not damage radial shaft seal and bearing.

If the torque converter is not correctly installed, the driver of the pump impeller may be damaged when the transmission is flanged to the engine.

Installation note:

O-ring on drive shaft, must be replaced when exchanging the torque converter.

Push torque converter through radial shaft seal onto transmission shaft to the limit position.

Press torque converter by hand into converter housing and turn in the process. Converter hub recess must snap into place in driver of pump impeller. Torque converter must be felt to slip inwards.

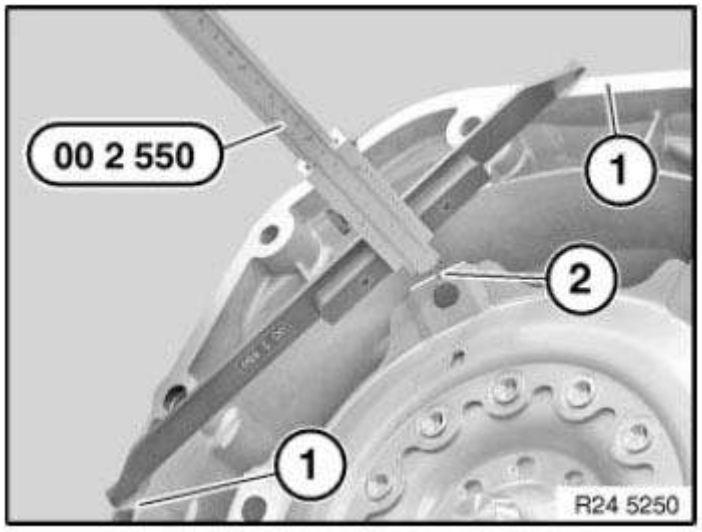

Fig. 105: Installing O-Ring On Drive Shaft
Courtesy of BMW OF NORTH AMERICA, INC.

Determine distance between contact surface (1) and outer edge (2) of hole in torque converter with special tool **00 2 550** .

cardiagn.com

NOTE: **The measured value must be ≥ 25 mm.**

24 40 014 REMOVING AND INSTALLING/REPLACING TORQUE CONVERTER (GA8HP45Z) (N47)

Special tools required:

- 00 2 550
- 24 4 000

IMPORTANT:

- Do not let skin come in contact with transmission oil and do not inhale transmission oil vapors.
- Wear protective gloves.
- Ensure adequate ventilation

IMPORTANT: After completion of repair work, check TRANSMISSION OIL LEVEL .
Use only approved TRANSMISSION OIL .
Failure to comply with this instruction will result in serious damage to the transmission.

Necessary preliminary tasks:

- Remove AUTOMATIC TRANSMISSION.

Screw special tool 24 4 000 into torque converter.

Remove torque converter and set down vertically.

NOTE: **When torque converter is removed, transmission oil flows out.**

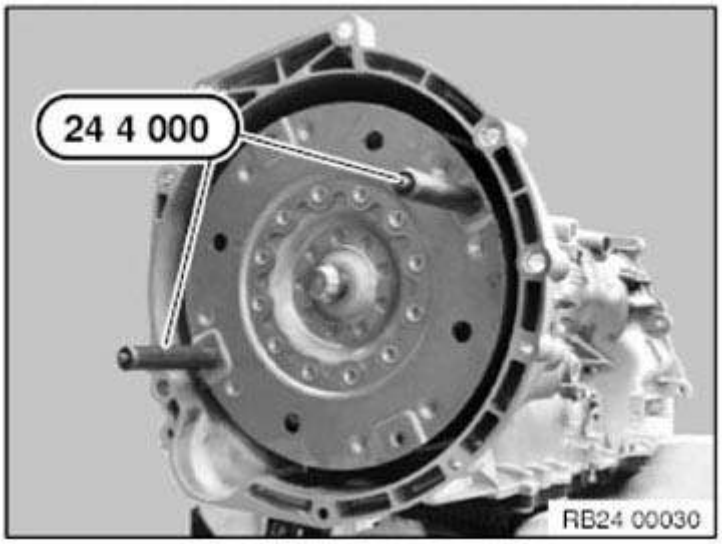

Fig. 106: Screwing Special Tool 24 4 000 Into Torque Converter
Courtesy of BMW OF NORTH AMERICA, INC.

Installation note:

When installing, do not damage radial shaft seal and bearing.

If the torque converter is not correctly installed, the driver of the pump impeller may be damaged when the transmission is flanged to the engine.

cardiagn.com

Installation note:

O-ring on drive shaft, must be replaced when exchanging the torque converter.

Push torque converter through radial shaft seal onto transmission shaft to the limit position.

Press torque converter by hand into converter housing and turn in the process. Converter hub recess must snap into place in driver of pump impeller. Torque converter must be felt to slip inwards.

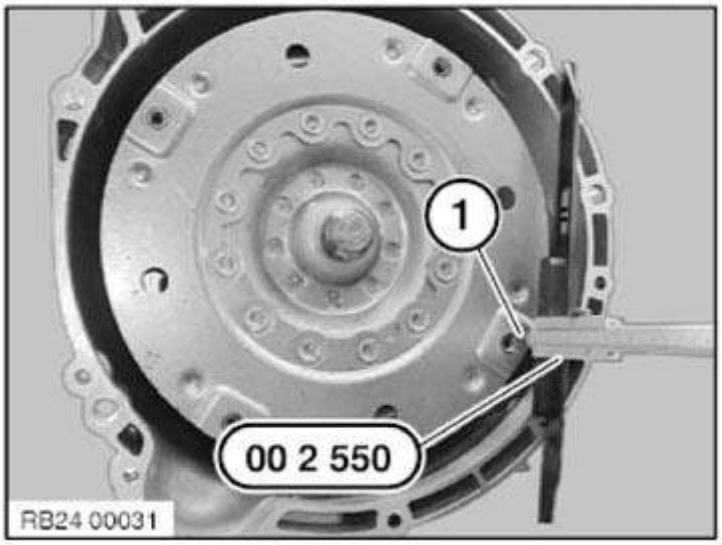

Fig. 107: Checking Distance Between Contact Surface And Threaded Hole Surface In Torque Converter
Courtesy of BMW OF NORTH AMERICA, INC.

Determine distance between contact surface and surface (1) of threaded hole in torque converter with special tool **00 2 550** .

NOTE: **Measured value must be greater than 15 mm.**

24 40 014 REMOVING AND INSTALLING/REPLACING TORQUE CONVERTER (GA8HP45Z) (N55)

Special tools required:

- **00 2 550**
- **24 4 000**

IMPORTANT:
- Do not let skin come in contact with transmission oil and do not inhale fuel vapors.
- Wear protective gloves.
- Ensure adequate ventilation.

IMPORTANT: After completion of repair work, check **TRANSMISSION OIL LEVEL** .
Use only approved **TRANSMISSION OIL** .
Failure to comply with this instruction will result in serious damage to the transmission.

Necessary preliminary tasks:

- Remove **AUTOMATIC TRANSMISSION**.

Screw special tool **24 4 000** into torque converter.

cardiagn.com

Remove torque converter.

NOTE: **When torque converter is removed, transmission oil flows out.**

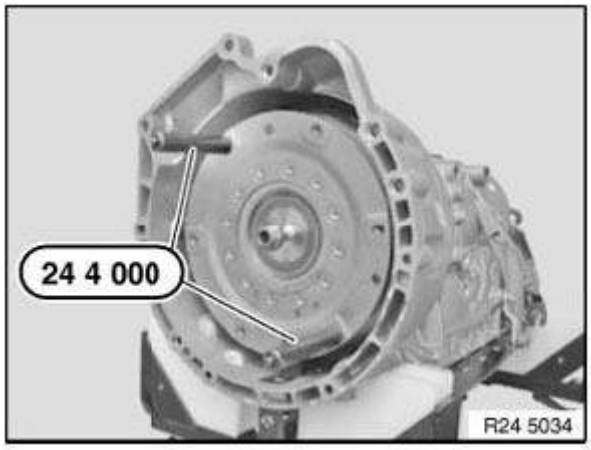

Fig. 108: Screwing Special Tool 24 4 000 Into Torque Converter
Courtesy of BMW OF NORTH AMERICA, INC.

Installation note:

When installing, do not damage radial shaft seal and bearing.

If the torque converter is not correctly installed, the driver of the pump impeller may be damaged when the transmission is flanged to the engine.

Remove torque converter and set down vertically.

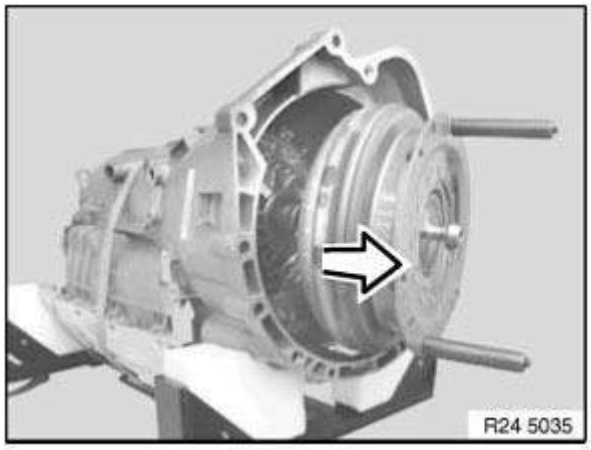

Fig. 109: Removing Torque Converter
Courtesy of BMW OF NORTH AMERICA, INC.

Installation note:

O-ring on drive shaft, must be replaced when exchanging the torque converter.

Push torque converter through radial shaft seal onto transmission shaft to the limit position.

Press torque converter by hand into converter housing and turn in the process. Converter hub recess must snap into place in driver of pump impeller. Torque converter must be felt to slip inwards.

Determine distance between contact surface and surface (1) of threaded hole in torque converter with special tool **00 2 550** .

cardiagn.com

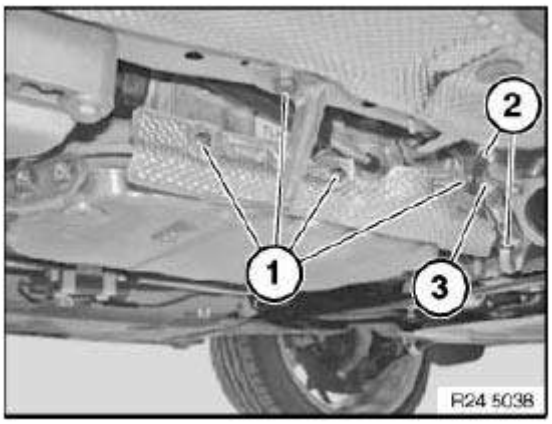

Fig. 110: Measuring Distance Between Contact Surface And Threaded Hole Surface In Torque Converter
Courtesy of BMW OF NORTH AMERICA, INC.

NOTE: **Measured value must be greater than 15 mm.**

24 40 014 REMOVING AND INSTALLING/REPLACING TORQUE CONVERTER (GA8HP45Z) (N52)

Special tools required:

- 00 2 550
- 24 4 000

IMPORTANT:
- Do not let skin come in contact with transmission oil and do not inhale transmission oil vapors.
- Wear protective gloves.
- Ensure adequate ventilation

IMPORTANT: After completion of repair work, check TRANSMISSION OIL LEVEL .
Use only TRANSMISSION OIL .
Failure to comply with this instruction will result in serious damage to the transmission.

Necessary preliminary tasks:

- Remove AUTOMATIC TRANSMISSION.

Screw special tool 24 4 000 into torque converter.

Remove torque converter.

Figure: 6HP Gearbox

NOTE: **When torque converter is removed, transmission oil flows out.**

cardiagn.com

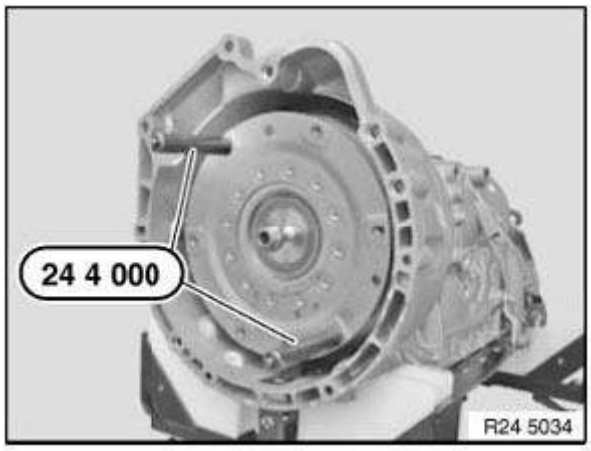

Fig. 111: Screwing Special Tool 24 4 000 Into Torque Converter
Courtesy of BMW OF NORTH AMERICA, INC.

Installation note:

When installing, do not damage radial shaft seal and bearing.

If the torque converter is not correctly installed, the driver of the pump impeller may be damaged when the transmission is flanged to the engine.

Remove torque converter and set down vertically.

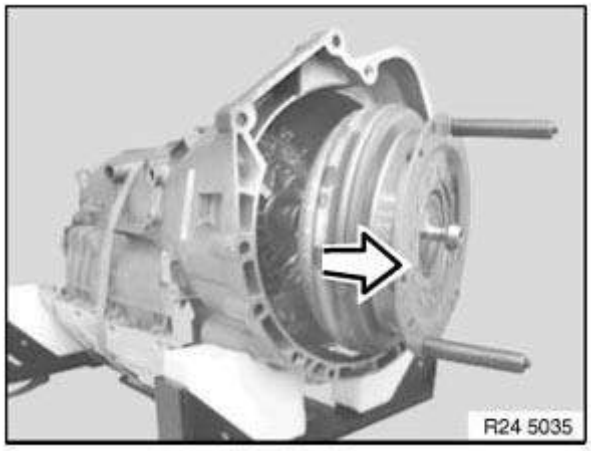

Fig. 112: Removing Torque Converter
Courtesy of BMW OF NORTH AMERICA, INC.

Installation note:

O-ring on drive shaft, must be replace: when exchanging the torque converter.

Push torque converter through radial shaft seal onto transmission shaft to the limit position.

Press torque converter by hand into converter housing and turn in the process. Converter hub recess must snap into place in driver of pump impeller. Torque converter must be felt to slip inwards.

Determine distance between contact surface and surface (1) of threaded hole in torque converter with special tool **00 2 550** .

cardiagn.com

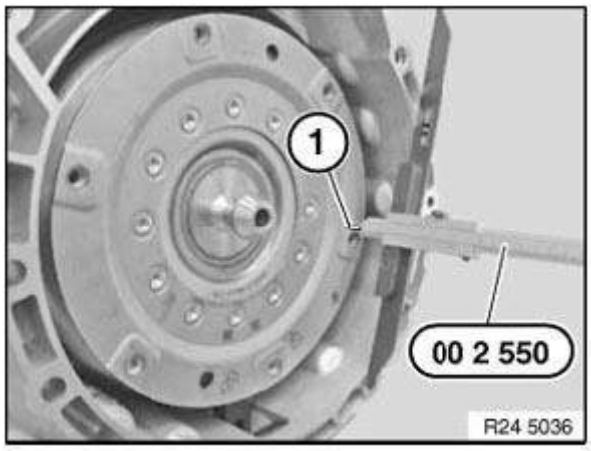

Fig. 113: Measuring Distance Between Contact Surface And Threaded Hole Surface In Torque Converter
Courtesy of BMW OF NORTH AMERICA, INC.

NOTE: **Measured value must be greater than 33 mm.**

Copyright 2016 Mitchell Repair Information Company, LLC. All Rights Reserved.

Article GUID: A00702203

cardiagn.com

AUTOMATIC TRANSMISSION

0496482 ADAPTER

0496482 242410 Adapter Minimum set: Mechanical tools Mechanical tool

NOTE: **(Adapter ring) For driving in radial shaft seal on output shaft.**

Storage Location

B25

SI number

01 18 08 (482)

Fig. 1: Identifying Adapter (0496482)
Courtesy of BMW OF NORTH AMERICA, INC.

0495439 ADAPTER

0495439 240185 Adapter AM

Replaced by: 83300495492

NOTE: **Replaced by 24 0 205 (0 495 492)**

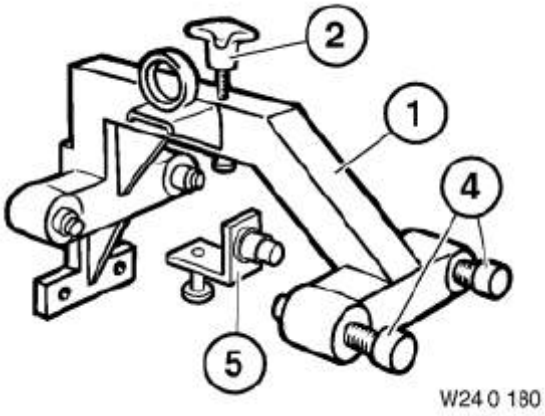

Fig. 2: Identifying Adapter (0495439)
Courtesy of BMW OF NORTH AMERICA, INC.

cardiagn.com

0494143 ADAPTER

0494143 241352 Adapter AM

Storage Location

C42

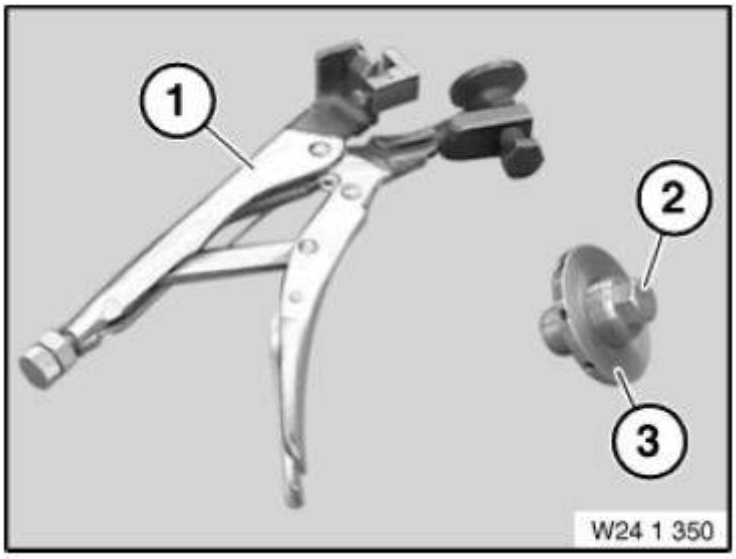

Fig. 3: Identifying Adapter (0494143)
Courtesy of BMW OF NORTH AMERICA, INC.

0495494 ADAPTER

0495494 240207 Adapter AM

NOTE: **(Adapter (short)) Deletion, only available via tool set**

SI number

01 27 06 (328)

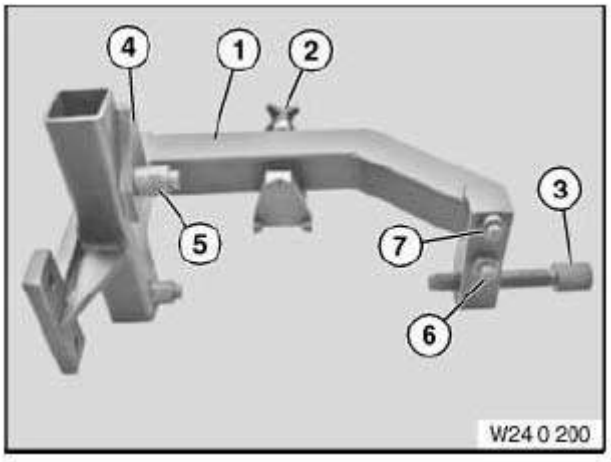

Fig. 4: Identifying Adapter (0495494)
Courtesy of BMW OF NORTH AMERICA, INC.

0491635 ADAPTER

0491635 240070 Adapter Mechanical tool

cardiagn.com

NOTE: **For testing the pump pressure**

Storage Location

A4

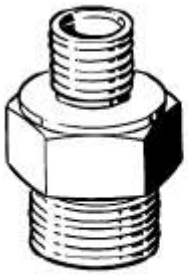

W24 0 070

Fig. 5: Identifying Adapter (0491635)
Courtesy of BMW OF NORTH AMERICA, INC.

0491767 ADAPTER

0491767 245190 Adapter Mechanical tool

NOTE: **For pressure gauge 13 3 061 for checking oil pressure in transmission**

Storage Location

A4

SI number

01 03 90 (184)

W24 5 190

Fig. 6: Identifying Adapter (0491767)
Courtesy of BMW OF NORTH AMERICA, INC.

0495492 ADAPTER

0495492 240205 Adapter AM

NOTE: **(Adapter (long)) Deletion, only available via tool set**

SI number

01 27 06 (328)

cardiagn.com

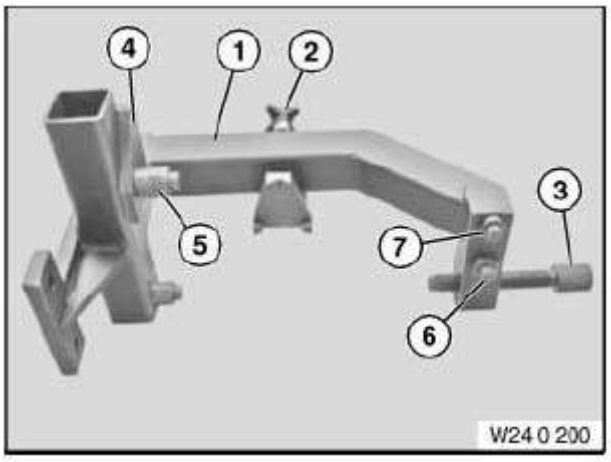

Fig. 7: Identifying Adapter (0495492)
Courtesy of BMW OF NORTH AMERICA, INC.

0495493 ADAPTER

0495493 240206 Adapter AM

NOTE: **(Adapter (medium)) Deletion, only available via tool set**

SI number

01 27 06 (328)

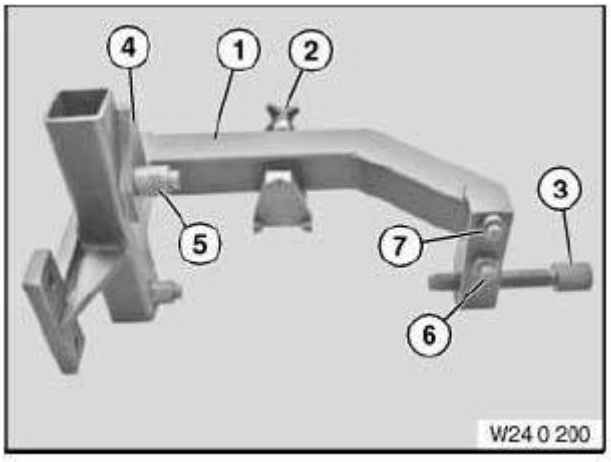

Fig. 8: Identifying Adapter (0495493)
Courtesy of BMW OF NORTH AMERICA, INC.

0491628 ADAPTER

0491628 240030 Adapter Mechanical tool

NOTE: **For pressure gauge 13 3 061/For checking the converter pressure**

Storage Location

A4

cardiagn.com

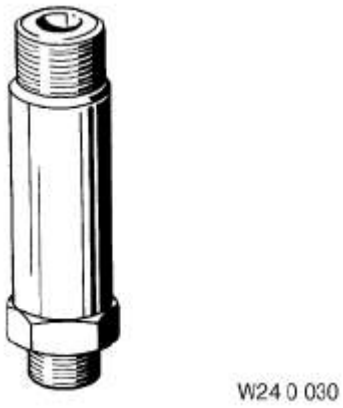

Fig. 9: Identifying Adapter (0491628)
Courtesy of BMW OF NORTH AMERICA, INC.

0491627 ADAPTER

0491627 240029 Adapter Minimum set: Mechanical tools AM

NOTE: For closing the feed and return lines when checking the main pressure/transmission: 3 HP 22 Deletion, only available via tool set

Storage Location

C3

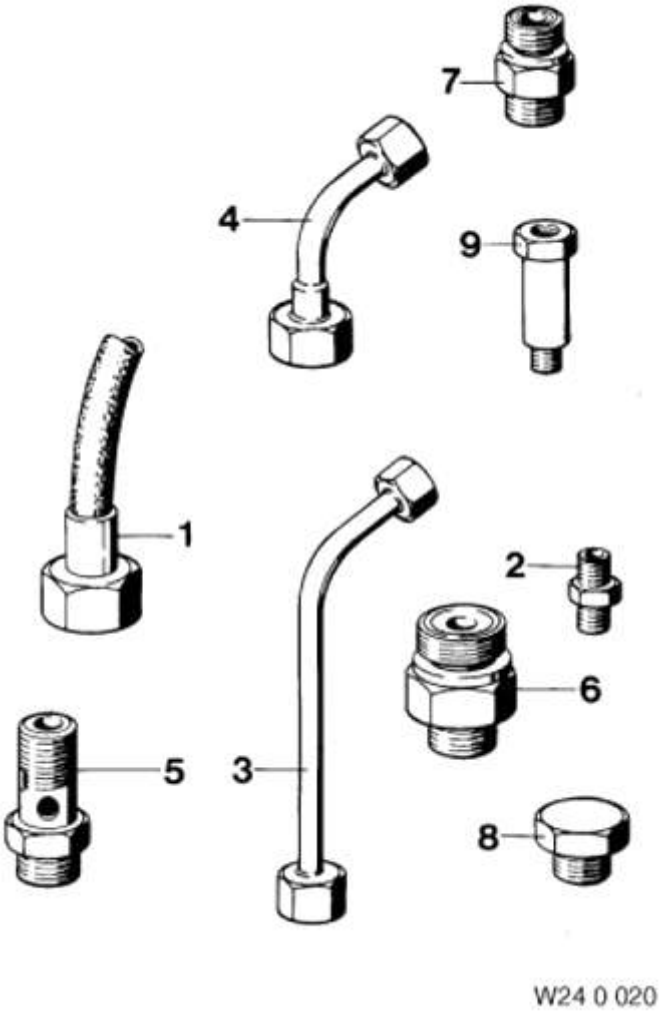

Fig. 10: Identifying Adapter (0491627)
Courtesy of BMW OF NORTH AMERICA, INC.

cardiagn.com

0491674 ANGLE

0491674 241210 Angle Mechanical tool

NOTE: **(Sheet metal part) Retaining plate for disc package. Not needed as of transmission number 11 2 300**

Storage Location

Z4

SI number

01 09 90 (282)

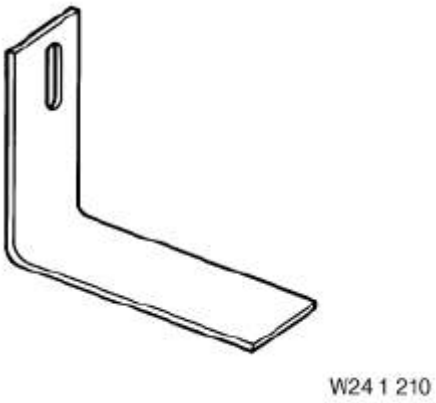

Fig. 11: Identifying Angle (0491674)
Courtesy of BMW OF NORTH AMERICA, INC.

0494694 BASIC BODY

0494694 241312 Basic body AM

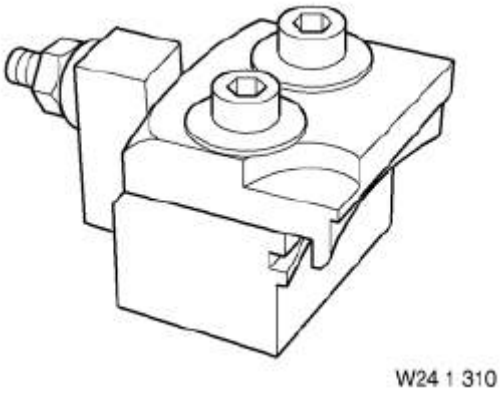

Fig. 12: Identifying Basic Body (0494694)
Courtesy of BMW OF NORTH AMERICA, INC.

0494478 BASIC BODY

0494478 244161 Basic body Minimum set: Mechanical tools AM

Storage Location

C46

cardiagn.com

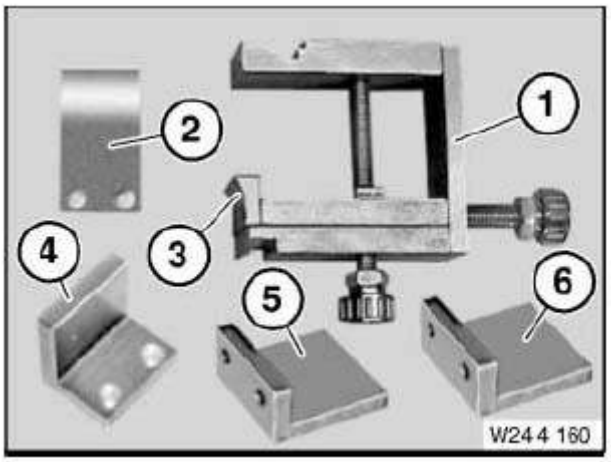

Fig. 13: Identifying Basic Body (0494478)
Courtesy of BMW OF NORTH AMERICA, INC.

0491732 BASIC BODY

0491732 244131 Basic body Minimum set: Mechanical tools AM

NOTE: (Basic body)

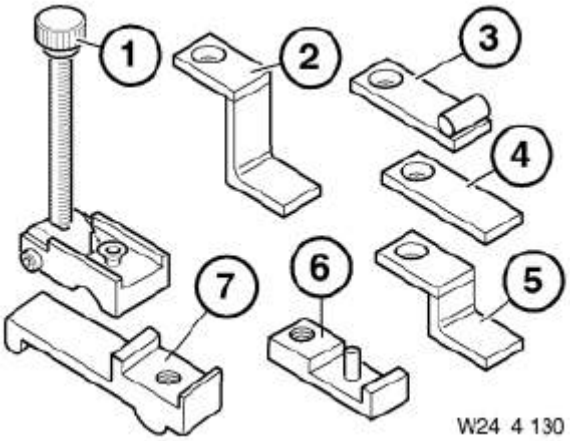

Fig. 14: Identifying Basic Body (0491732)
Courtesy of BMW OF NORTH AMERICA, INC.

0496113 BASIC BODY

0496113 244361 Basic body Minimum set: Mechanical tools AM

NOTE: Discontinued, can only be ordered using complete tool

SI number

01 02 07 (334)

cardiagn.com

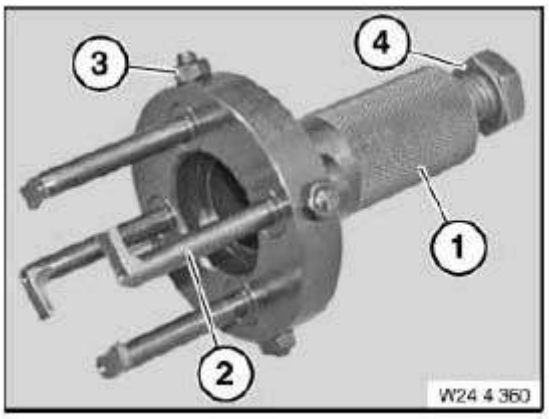

Fig. 15: Identifying Basic Body (0496113)
Courtesy of BMW OF NORTH AMERICA, INC.

0491717 BASIC BODY

0491717 244041 Basic body AM

NOTE: **(Basic body) transmission: 3 HP 12, 4 HP 24**

Storage Location

X6

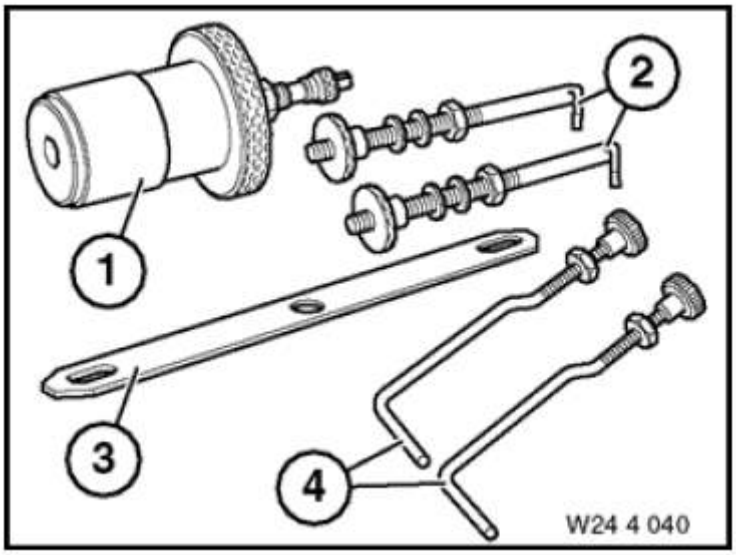

Fig. 16: Identifying Basic Body (0491717)
Courtesy of BMW OF NORTH AMERICA, INC.

0495488 BASIC BODY

0495488 240201 Basic body AM

NOTE: **Discontinued, can only be ordered using complete tool**

SI number

01 27 06 (328)

cardiagn.com

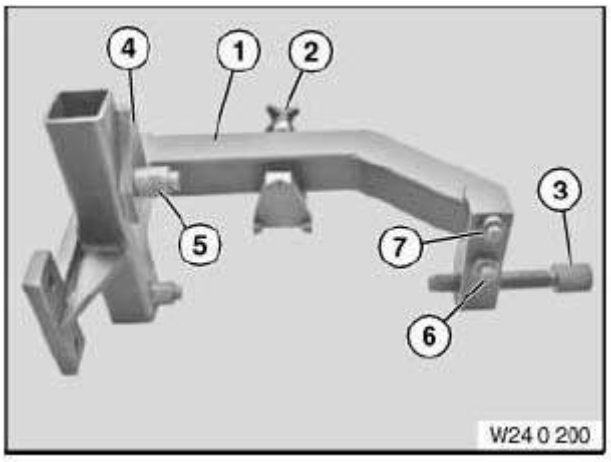

Fig. 17: Identifying Basic Body (0495488)
Courtesy of BMW OF NORTH AMERICA, INC.

0491723 BASIC BODY

0491723 244061 Basic body AM

NOTE: **(Basic body)**

Storage Location

Individual

0495569 BASIC BODY

0495569 244321 Basic body AM

Storage Location

C23

SI number

01 02 07 (334)

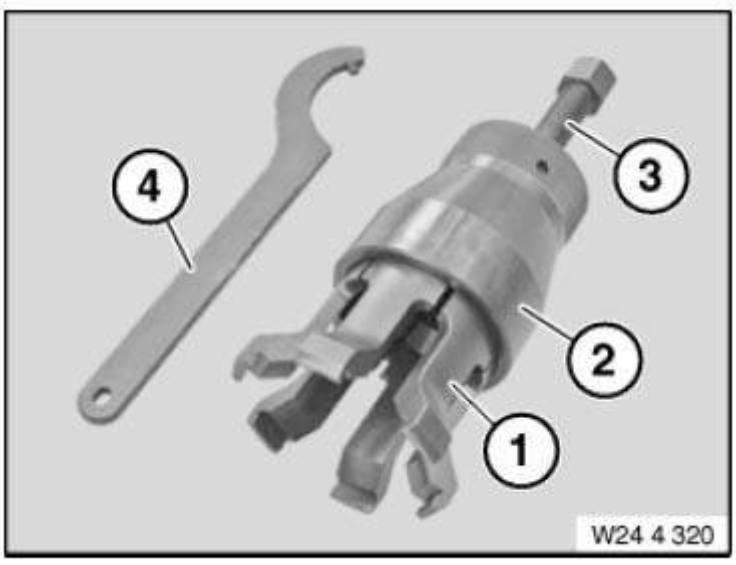

Fig. 18: Identifying Basic Body (0491723)
Courtesy of BMW OF NORTH AMERICA, INC.

cardiagn.com

2209493 BLADE

2209493 241421 Blade Minimum set: Mechanical tools AM

NOTE: **Replacement blades for 24 1 420 Only available as part of complete tool set 24 1 420 (83 30 0 496 716).**

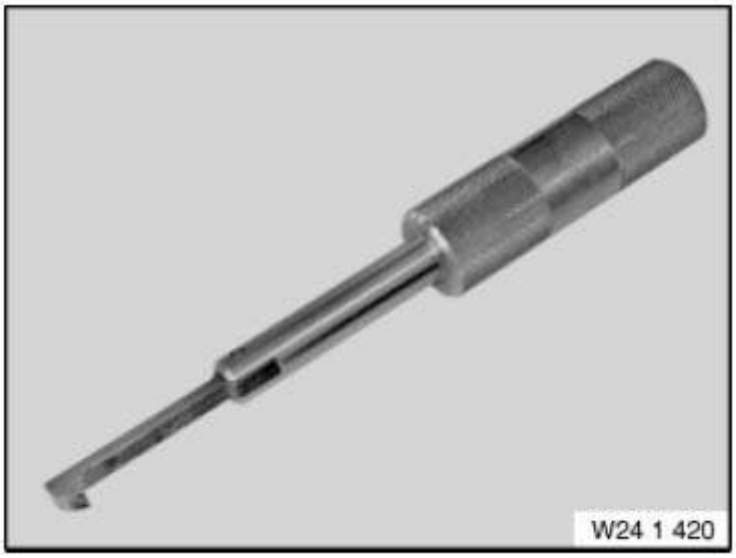

Fig. 19: Identifying Blade (2209493)
Courtesy of BMW OF NORTH AMERICA, INC.

0496742 BLADE

0496742 244138 Blade Minimum set: Mechanical tools AM

In conjunction with: **24 4 131 = 0491732**

NOTE: **For securing converter during removal and installation of transmission. Discontinued, can only be ordered using complete tool**

SI number

01 17 09 (577)

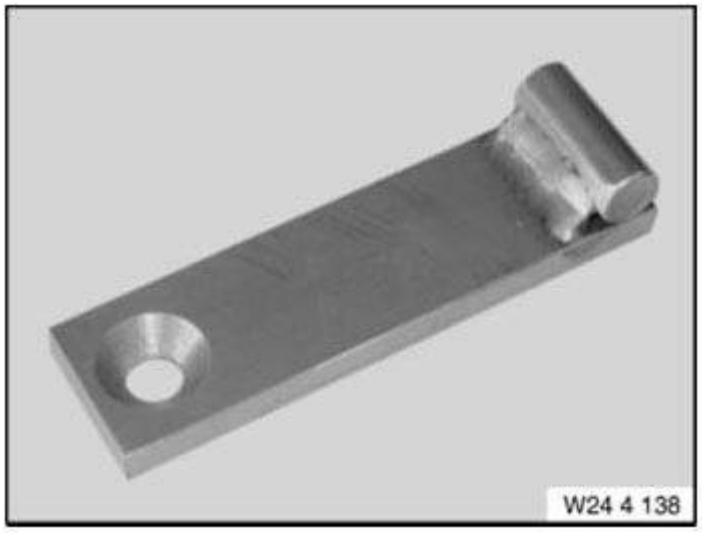

Fig. 20: Identifying Blade (0496742)
Courtesy of BMW OF NORTH AMERICA, INC.

cardiagn.com

0491736 BLADE

0491736 244135 Blade Minimum set: Mechanical tools AM

NOTE: **Transmission: A5S 560Z, GA6 HP26Z (M67), GA6 HP32Z (N73) Deletion, only available via tool set**

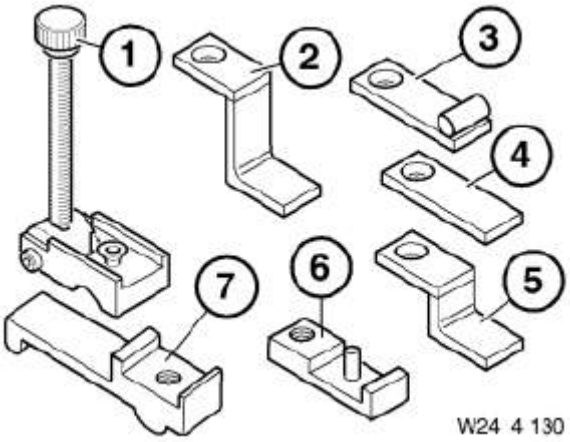

Fig. 21: Identifying Blade (0491736)
Courtesy of BMW OF NORTH AMERICA, INC.

0491733 BLADE

0491733 244132 Blade Minimum set: Mechanical tools AM

NOTE: **Transmission: A5S 440Z, GA6HP26Z (N62) discontinued, available as part of set of special tools only**

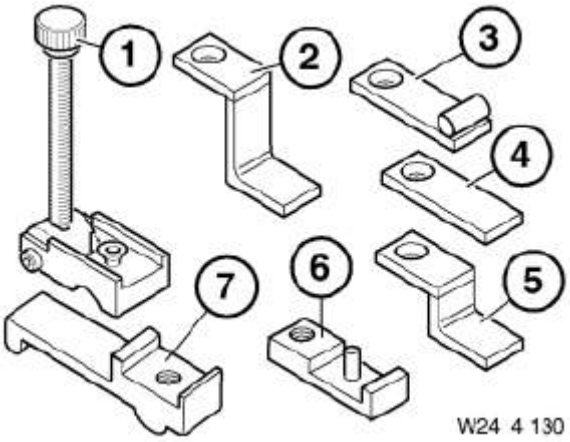

Fig. 22: Identifying Blade (0491733)
Courtesy of BMW OF NORTH AMERICA, INC.

0491734 BLADE

0491734 244133 Blade Minimum set: Mechanical tools AM

NOTE: **(Blade) Gearbox: A4S 310R and A5S 390G Deletion, only available via tool set**

cardiagn.com

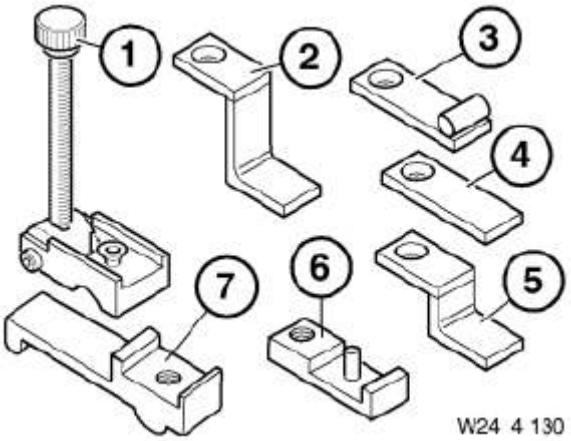

Fig. 23: Identifying Blade (0491734)
Courtesy of BMW OF NORTH AMERICA, INC.

0491735 BLADE

0491735 244134 Blade Minimum set: Mechanical tools AM

NOTE: **Transmission: A5S 310Z, A5S 560Z, A5S 300J and A5S 325Z Deletion, only available via tool set**

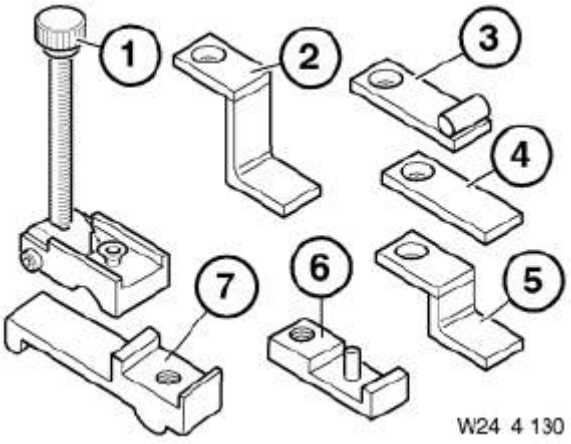

Fig. 24: Identifying Blade (0491735)
Courtesy of BMW OF NORTH AMERICA, INC.

0493804 BLADE

0493804 244137 Blade Minimum set: Mechanical tools AM

NOTE: **Transmission: A5S 360R discontinued, available as part of set of special tools only**

cardiagn.com

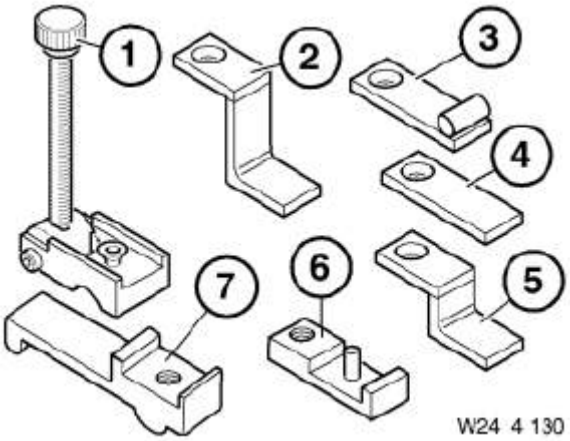

Fig. 25: Identifying Blade (0493804)
Courtesy of BMW OF NORTH AMERICA, INC.

0491648 BOLT

0491648 240154 Bolt AM

NOTE: **(Mounting bolts)**

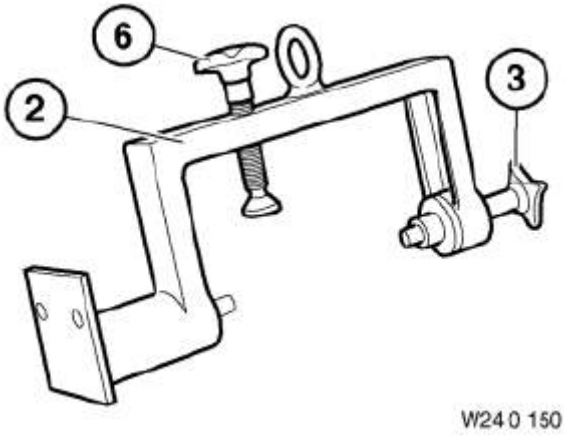

Fig. 26: Identifying Bolt (0491648)
Courtesy of BMW OF NORTH AMERICA, INC.

2297313 BRACE

2297313 Brace Minimum set: Mechanical tools Mechanical tool

NOTE: **For removing and installing the torsion damper.**

SI number

01 26 11 (763)

cardiagn.com

Fig. 27: Identifying Brace (2297313)
Courtesy of BMW OF NORTH AMERICA, INC.

2222742 BRACE

2222742 Brace Minimum set: Mechanical tools Mechanical tool

NOTE: **To secure the crankshaft (transmission installed)**

Storage Location

B30

SI number

01 27 11 (764)

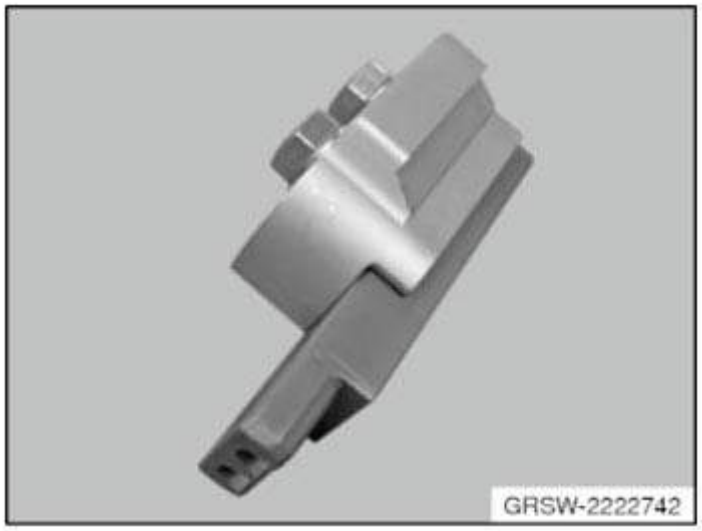

Fig. 28: Identifying Brace (2222742)
Courtesy of BMW OF NORTH AMERICA, INC.

0491657 BRACE

0491657 240190 Brace Minimum set: Mechanical tools Mechanical tool

NOTE: **(Steady device) For the output flange of the propeller shaft while releasing and tightening the slotted nut**

cardiagn.com

SI number

01 06 92 (509)

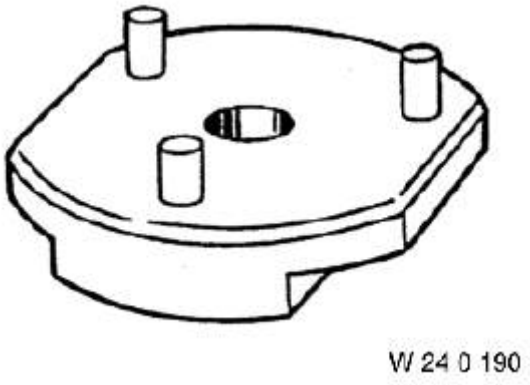

Fig. 29: Identifying Brace (0491657)
Courtesy of BMW OF NORTH AMERICA, INC.

0491784 BUSH

0491784 245363 Bush Minimum set: Mechanical tools AM

NOTE: **For transmission without positioning switch Transmission: A4S 310R Deletion, only available via tool set**

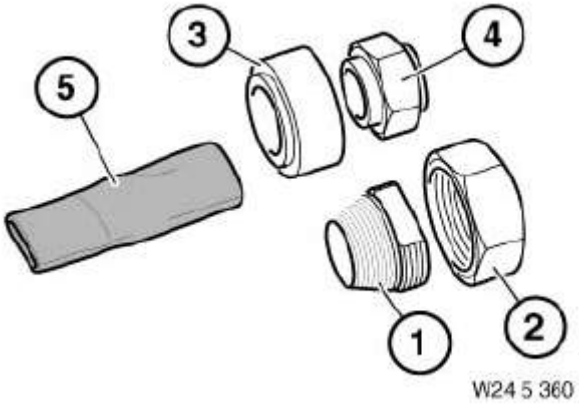

Fig. 30: Identifying Bush (0491784)
Courtesy of BMW OF NORTH AMERICA, INC.

0491782 BUSH

0491782 245361 Bush Minimum set: Mechanical tools AM

NOTE: **(Threaded bush)**

cardiagn.com

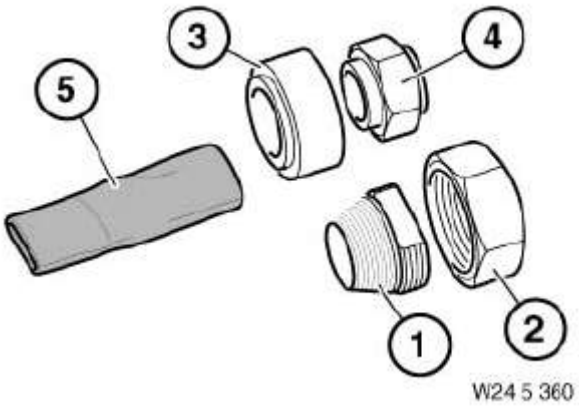

Fig. 31: Identifying Bush (0491782)
Courtesy of BMW OF NORTH AMERICA, INC.

0491768 BUSH

0491768 245200 Bush Mechanical tool

Replaced by: 83300491781

NOTE: **(Impact bush) For fitting the radial sealing ring of the selector lever shaft/Replaced by 24 5 360 (0 491 781)**

SI number

01 03 90 (184)

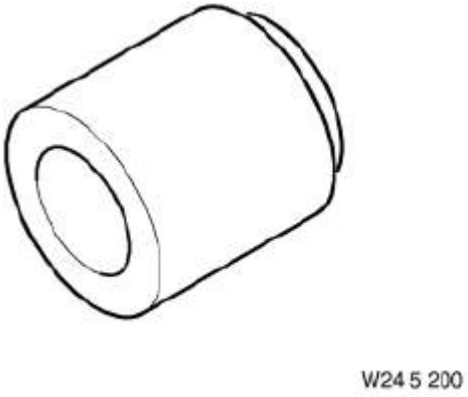

Fig. 32: Identifying Bush (0491768)
Courtesy of BMW OF NORTH AMERICA, INC.

0494208 BUSH

0494208 245366 Bush Minimum set: Mechanical tools AM

NOTE: **For fitting the radial shaft seal on the selector shaft (emergency release) Transmission: GA6 HP26Z Deletion, only available via tool set**

Storage Location

A46

cardiagn.com

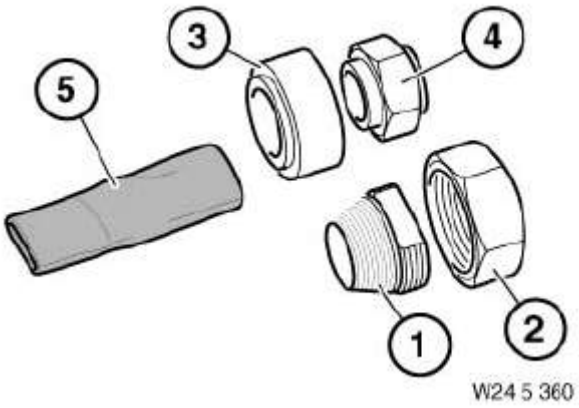

Fig. 33: Identifying Bush (0494208)
Courtesy of BMW OF NORTH AMERICA, INC.

0491759 BUSH

0491759 245121 Bush AM

NOTE: **(Centring bush) Discontinued, can only be ordered as part of complete tool 11 4 200 = 0491020.**

Storage Location

X6

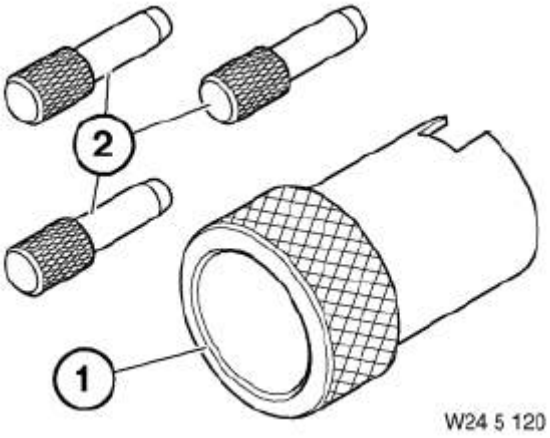

Fig. 34: Identifying Bush (0491759)
Courtesy of BMW OF NORTH AMERICA, INC.

0493254 BUSH

0493254 241080 Bush Minimum set: Mechanical tools Mechanical tool

NOTE: **(bushing (aluminium)) For placing on the drive shaft during removal of the shaft seal from the oil pump housing**

Storage Location

C4

SI number

01 03 98 (303)

cardiagn.com

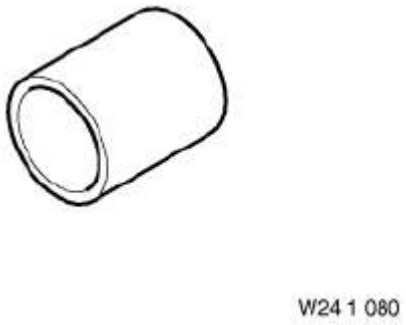

Fig. 35: Identifying Bush (0493254)
Courtesy of BMW OF NORTH AMERICA, INC.

0491663 BUSH

0491663 241040 Bush Mechanical tool

NOTE: **(impact bush) For fitting the radial sealing ring for the torque converter in the oil pump housing. And for driving the sealing ring into the spark plug slot in the MINI**

Storage Location

B17

C17

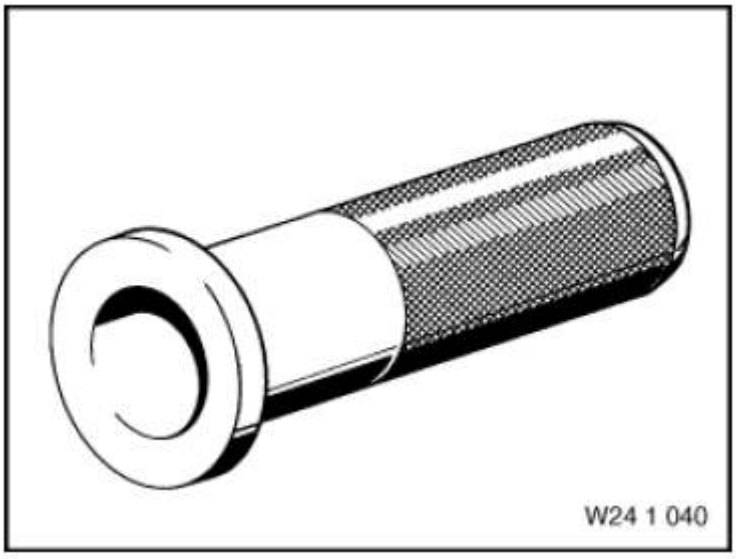

Fig. 36: Identifying Bush (0491663)
Courtesy of BMW OF NORTH AMERICA, INC.

0491649 BUSH

0491649 240155 Bush AM

NOTE: **(Spacer bush for spindle) Transmissions: A4S 310R**

cardiagn.com

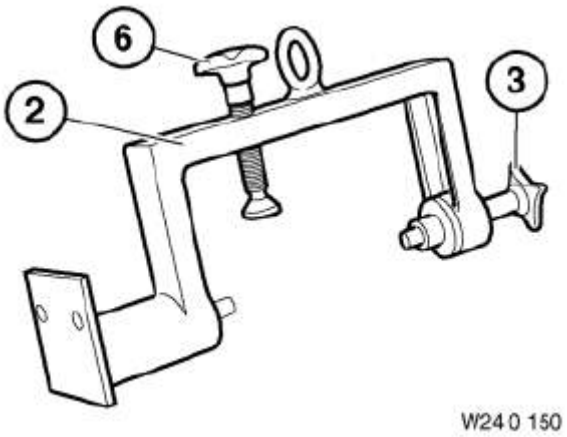

Fig. 37: Identifying Bush (0491649)
Courtesy of BMW OF NORTH AMERICA, INC.

0491682 BUSH

0491682 241263 Bush AM

NOTE: **(Centring bush) Discontinued, can only be ordered as part of complete tool 11 4 200 = 0491020.**

Storage Location

Y5

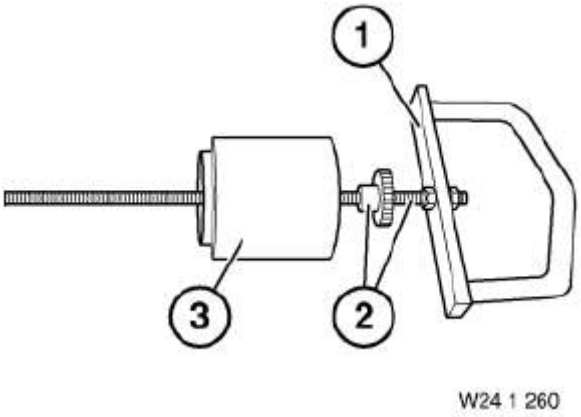

Fig. 38: Identifying Bush (0491682)
Courtesy of BMW OF NORTH AMERICA, INC.

0495601 BUSH

0495601 244380 Bush AM

NOTE: **(Bush with nut) For inserting radial shaft seal of selector shaft.**

Storage Location

A24

SI number

01 02 07 (334)

Consisting of:

cardiagn.com

1. 0495788 Bush

NOTE: **Can no longer be ordered separately. Only available as part of set 24 4 380 = 83 30 0 495 601.**

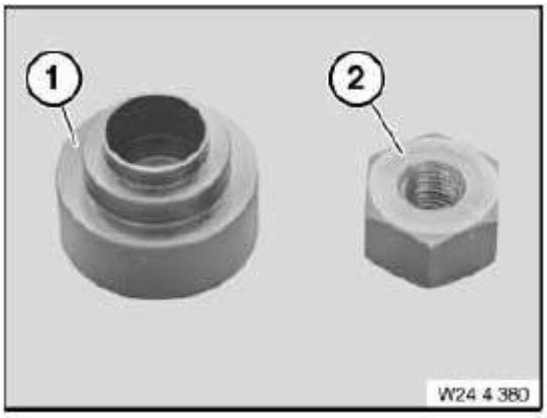

Fig. 39: Identifying Bush (0495601)
Courtesy of BMW OF NORTH AMERICA, INC.

2. 0495789 Nut

NOTE: **(Nut M8x1) Can no longer be ordered separately. Only available as part of set 24 4 380 = 83 30 0 495 601.**

0493160 BUSH

0493160 242314 Bush AM

NOTE: **(Slip bush) For installing the piston in the cylinder of the intermediate plate**

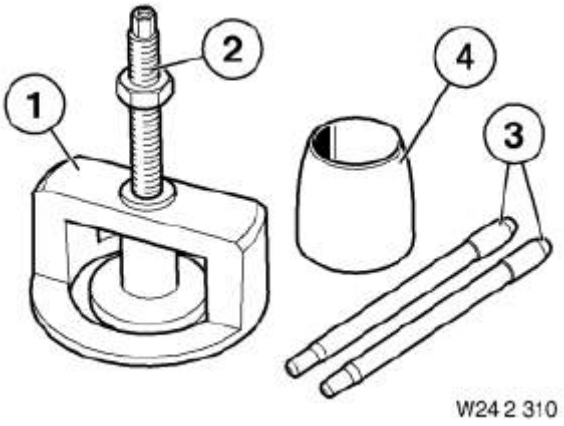

Fig. 40: Identifying Bush (0493160)
Courtesy of BMW OF NORTH AMERICA, INC.

0491775 BUSH

0491775 245270 Bush Minimum set: Mechanical tools Mechanical tool

NOTE: **For pressing in the radial seal ring of the selector shaft**

Storage Location

B3

cardiagn.com

SI number

01 08 96 (080)

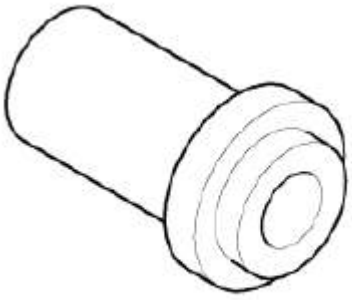

Fig. 41: Identifying Bush (0491775)
Courtesy of BMW OF NORTH AMERICA, INC.

0491710 BUSH

0491710 243150 Bush Mechanical tool

NOTE: **(Driver bush) for checking the oil pump for ease of movement**

Storage Location

X5

Fig. 42: Identifying Bush (0491710)
Courtesy of BMW OF NORTH AMERICA, INC.

0491701 BUSH

0491701 242190 Bush AM

NOTE: **(Slip bush)**

0494593 BUSH

0494593 245262 Bush Minimum set: Mechanical tools AM

cardiagn.com

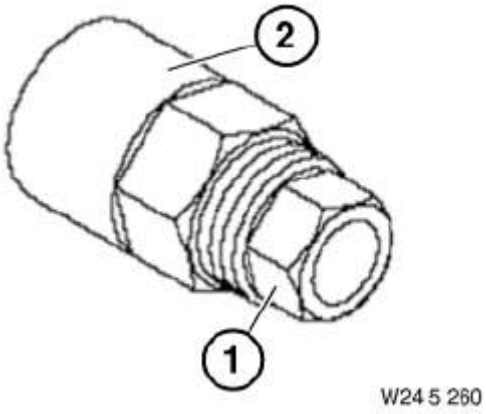

Fig. 43: Identifying Bush (0491701)
Courtesy of BMW OF NORTH AMERICA, INC.

0491700 BUSH

0491700 242180 Bush AM

NOTE: (Slip bush)

0491773 BUSH

0491773 245250 Bush Minimum set: Mechanical tools Mechanical tool

NOTE: For pressing in the radial seal ring of the selector shaft

Storage Location

B3

SI number

01 02 95 (896)

Fig. 44: Identifying Bush (0491700)
Courtesy of BMW OF NORTH AMERICA, INC.

0491665 BUSH

0491665 241060 Bush Mechanical tool

NOTE: (Impact bush) For driving in the radial seal ring for the torque converter in the oil pump housing and at the output flange

Storage Location

cardiagn.com

Y7

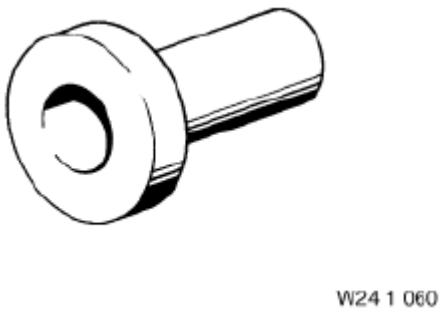

Fig. 45: Identifying Bush (0491665)
Courtesy of BMW OF NORTH AMERICA, INC.

0491709 BUSH

0491709 243140 Bush Mechanical tool

NOTE: **(Driver bush) For checking the oil pump for ease of movement**

Storage Location

A10

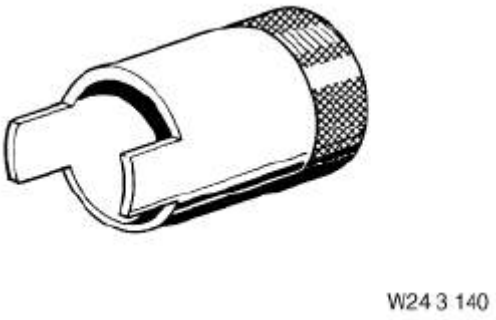

Fig. 46: Identifying Bush (0491709)
Courtesy of BMW OF NORTH AMERICA, INC.

0495788 BUSH

0495788 244381 Bush AM

NOTE: **Can no longer be ordered separately. Only available as part of set 24 4 380 = 83 30 0 495 601.**

SI number

01 02 07 (334)

cardiagn.com

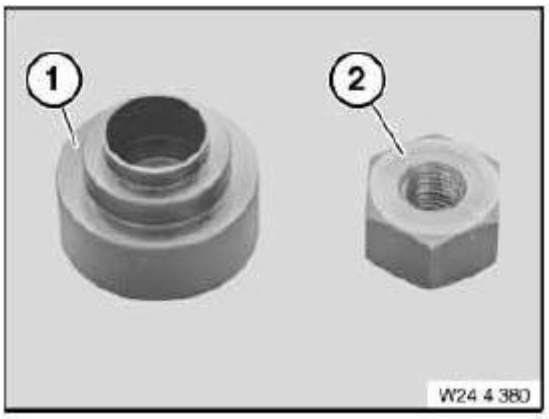

Fig. 47: Identifying Bush (0495788)
Courtesy of BMW OF NORTH AMERICA, INC.

0493253 BUSH

0493253 241070 Bush Minimum set: Mechanical tools Mechanical tool

NOTE: **(Impact bush) For fitting radial shaft seal into oil pump housing**

Storage Location

C17

SI number

01 03 98 (303)

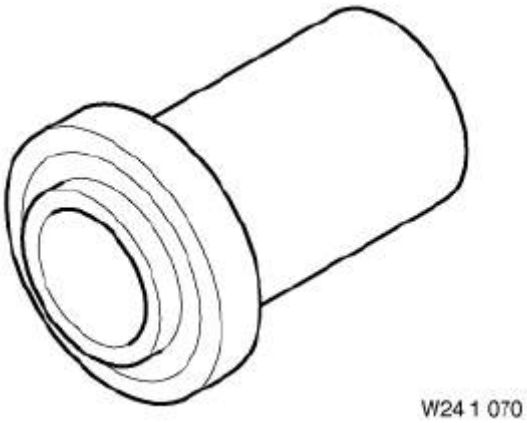

Fig. 48: Identifying Bush (0493253)
Courtesy of BMW OF NORTH AMERICA, INC.

0491788 BUSH

0491788 245370 Bush Mechanical tool

NOTE: **For installing the radial shaft seal of the gearshift shaft/Only with selector lever position switch. Other: USA only**

SI number

01 14 96 (105)

cardiagn.com

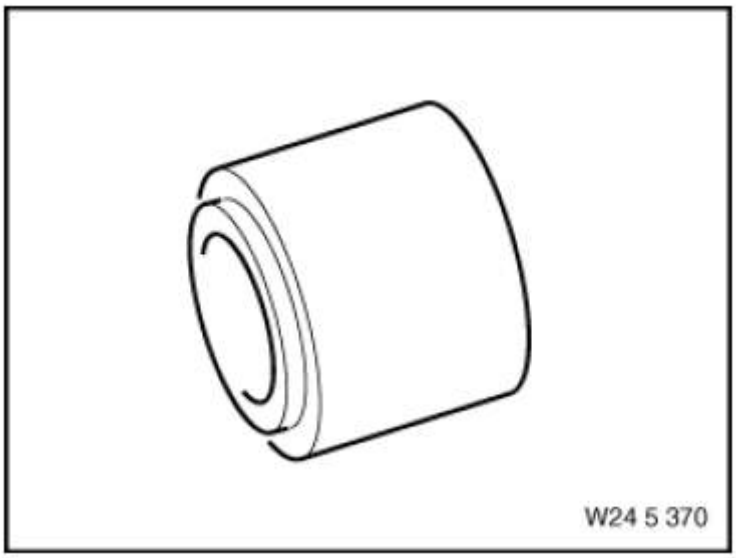

Fig. 49: Identifying Bush (0491788)
Courtesy of BMW OF NORTH AMERICA, INC.

0493335 BUSH

0493335 241090 Bush Mechanical tool

NOTE: **(Impact bush) For driving in the radial shaft seal on the output flange.**

SI number

01 08 98 (333)

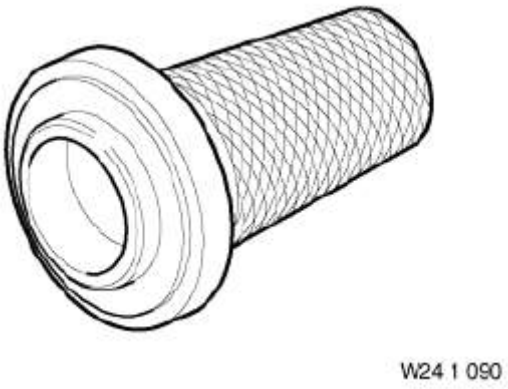

Fig. 50: Identifying Bush (0493335)
Courtesy of BMW OF NORTH AMERICA, INC.

0491664 BUSH

0491664 241050 Bush Mechanical tool

NOTE: **(Impact bush) For fitting radial shaft seal for torque converter in oil pump housing**

Storage Location

Y7

cardiagn.com

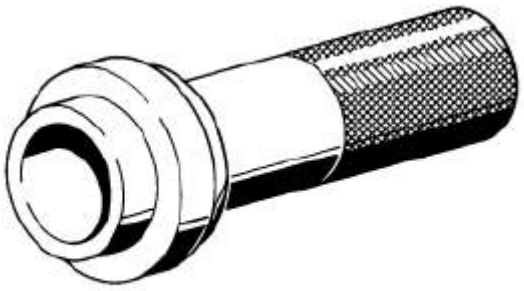

Fig. 51: Identifying Bush (0491664)
Courtesy of BMW OF NORTH AMERICA, INC.

0491711 BUSH

0491711 243160 Bush Mechanical tool

NOTE: (Driver bush)

0491666 BUSH

0491666 241100 Bush Mechanical tool

NOTE: (Impact bush) For driving in the radial seal ring for the output flange into the transmission extension

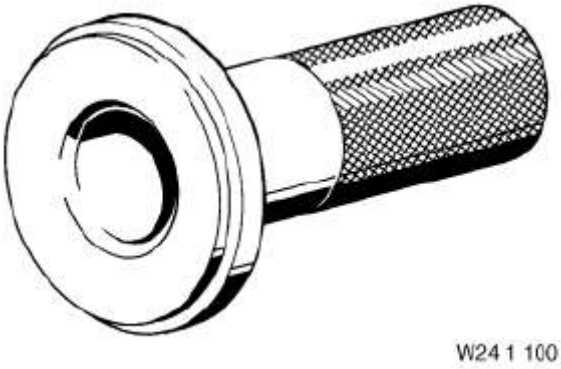

Fig. 52: Identifying Bush (0491711)
Courtesy of BMW OF NORTH AMERICA, INC.

0494213 CAP

0494213 242390 Cap Minimum set: Mechanical tools Mechanical tool

NOTE: (protective cap) For sealing off the guide sleeve of the transmission connector

Storage Location

C49

SI number

01 14 01 (766)

cardiagn.com

Fig. 53: Identifying Cap (0494213)
Courtesy of BMW OF NORTH AMERICA, INC.

0491704 CLAMP

0491704 242270 Clamp Mechanical tool

NOTE: (Retaining clip)

0496114 CLAW

0496114 244362 Claw Minimum set: Mechanical tools AM

NOTE: (Claw (4 units)) discontinued, available as part of set of special tools only

SI number

01 02 07 (334)

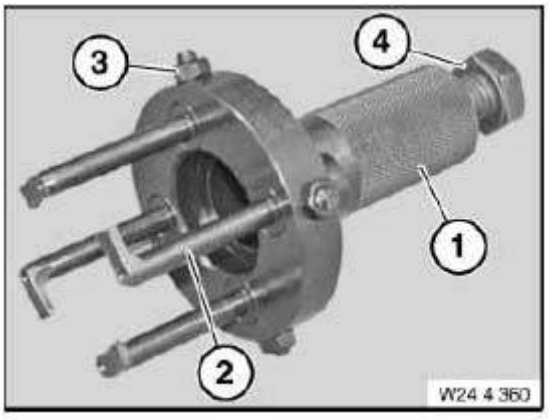

Fig. 54: Identifying Clamp (0491704)
Courtesy of BMW OF NORTH AMERICA, INC.

0491719 CLIP

0491719 244043 Clip AM

NOTE: (Retaining clip) transmission: 3 HP 12, 4 HP 24, A4S 270R, A4S 310R

Storage Location

X6

cardiagn.com

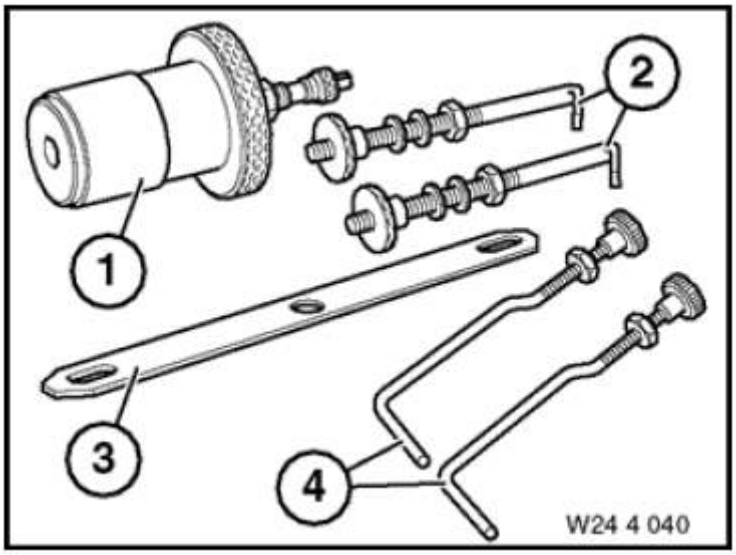

Fig. 55: Identifying Clip (0491719)
Courtesy of BMW OF NORTH AMERICA, INC.

0491644 CLIP

0491644 240150 Clip AM

NOTE: **(Mounting bracket) For mounting the transmission on the assembly stand**

Consisting of:

6 = 0493913 Spindle

NOTE: **With synchronising key, transmission: All**

3 = 0491645 Shaped part

NOTE: **(Shaped part) For mounting the transmission/transmissions: A5S 310Z**

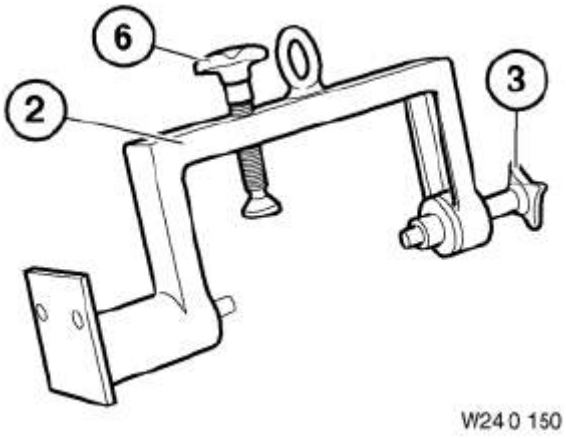

Fig. 56: Identifying Clip (0491644)
Courtesy of BMW OF NORTH AMERICA, INC.

2 = 0491646 Frame

NOTE: **(Main frame)**

cardiagn.com

3 = 0491647 Spindle

NOTE: **(Spindle with rotary handle)**

3 = 0491648 Bolt

NOTE: **(Mounting bolts)**

3 = 0491649 Bush

NOTE: **(Spacer bush for spindle) Transmissions: A4S 310R**

0491625 CONNECTION

0491625 240027 Connection Minimum set: Mechanical tools AM

NOTE: **(Connection) Reducer M20x1.5 - M18x1.5/For checking the main pressure (3 HP 12) an converter pressure (3 HP 20)/Transmission: 3 HP 12, 3 HP 20 discontinued, available as part of set of special tools only**

Storage Location

C3

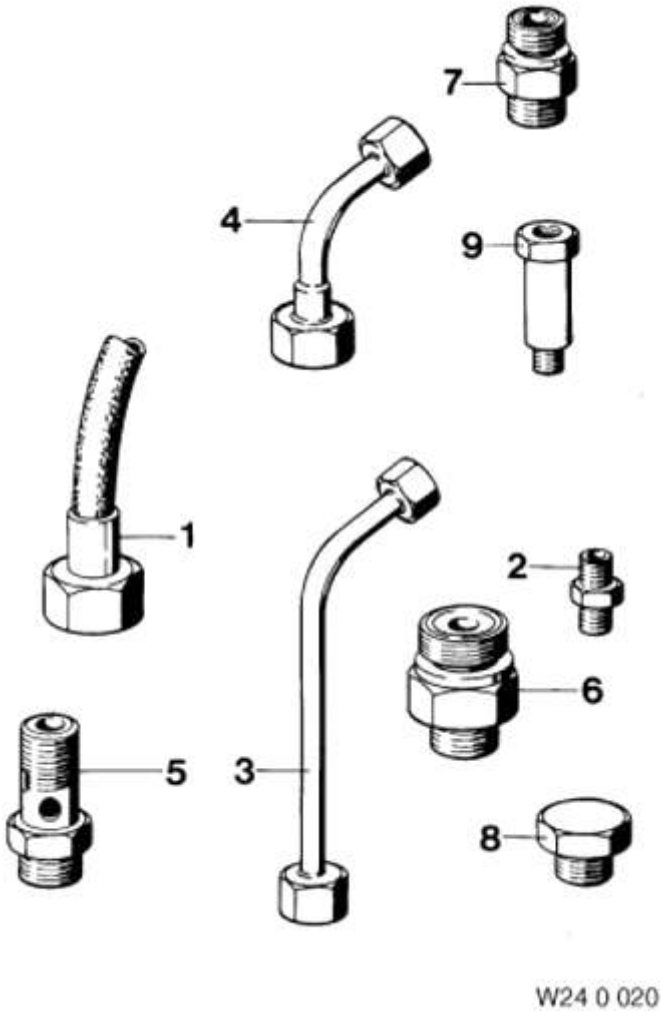

Fig. 57: Identifying Connection (0491625)
Courtesy of BMW OF NORTH AMERICA, INC.

0491621 CONNECTION

cardiagn.com

0491621 240023 Connection Minimum set: Mechanical tools AM

NOTE: **(Connection) Pipe bend, 145 mm, stretched length 145 mm/transmission: 4 HP 22, 4 HP 24 Deletion, only available via tool set**

Storage Location

C3

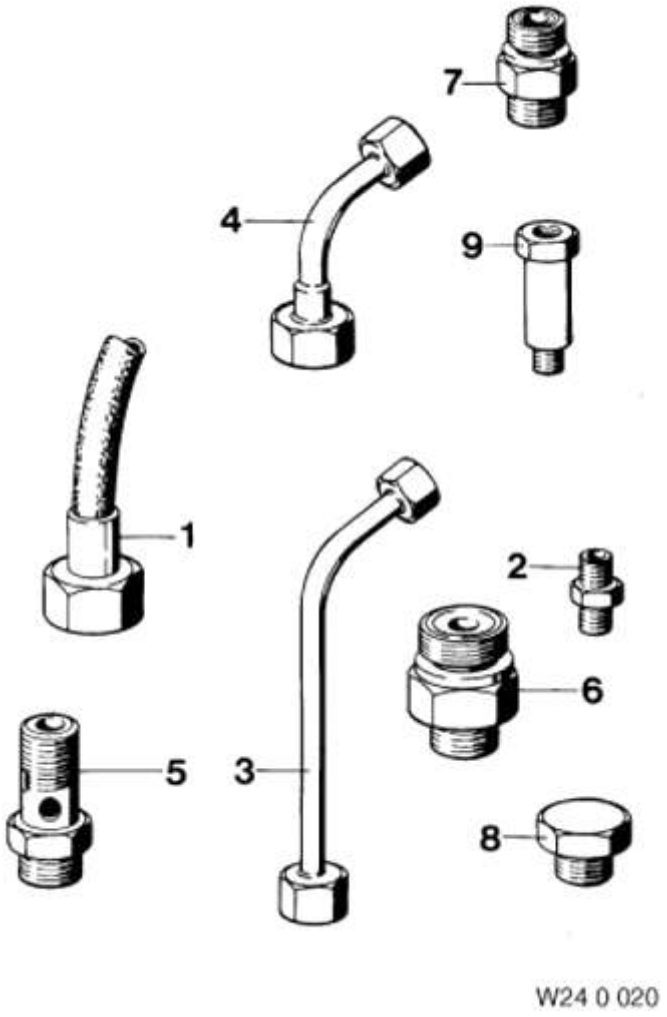

Fig. 58: Identifying Connection (0491621)
Courtesy of BMW OF NORTH AMERICA, INC.

0491618 CONNECTION

0491618 240020 Connection Minimum set: Mechanical tools AM

NOTE: **(Connections) Oil pressure testing accessory for pressure gauge 13 3 061 or BMW DIS for checking the oil pressure.**

Storage Location

C3

Consisting of:

1. 0491619 Hose

NOTE: **(Line) Pressure hose 1.7 m, connection M12x1.5 - M14x1.5 outer thread/For checking the different converter pressures/transmission: A4S**

cardiagn.com

310R, A4S 270R discontinued, available as part of set of special tools only

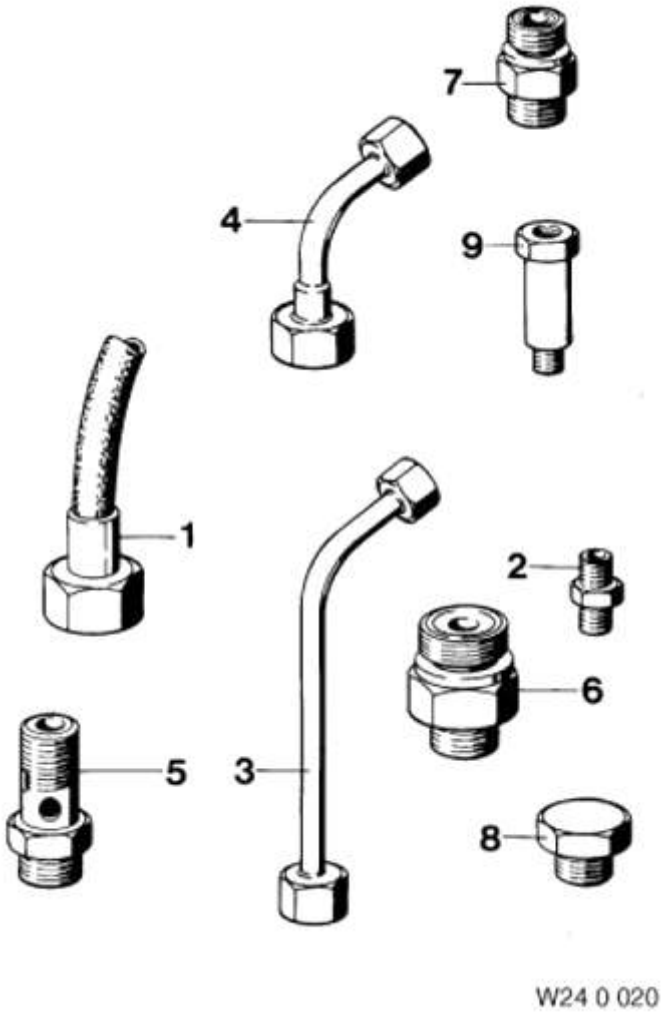

Fig. 59: Identifying Connection (0491618)
Courtesy of BMW OF NORTH AMERICA, INC.

2. **0491620** Connection

NOTE: **(Connection) For checking the main pressure (3 HP 22, A5S 310Z) and clutch A (ZF transmission)/transmission: 3 HP 22, A5S 310Z, A5S 560Z and all ZF transmissions Deletion, only available via tool set**

3. **0491621** Connection

NOTE: **(Connection) Pipe bend, 145 mm, stretched length 145 mm/transmission: 4 HP 22, 4 HP 24 Deletion, only available via tool set**

4. **0491622** Connection

NOTE: **(Connection) Exhaust manifold, 90 mm Straightened length 90 mm Deletion, only available via tool set**

5. **0491623** Screw

NOTE: **(Connection) Banjo bolt M20x1.5 - M18x1.5/For checking the converter pressure/transmission: 3 HP 12 Deletion, only available via tool set**

6. **0491624** Connection

cardiagn.com

NOTE: **(Connection) Reducer M24x1.5 - 20x1.5/For checking the main pressure/transmission: 3 HP 20 Deletion, only available via tool set**

7. **0491625** Connection

NOTE: **(Connection) Reducer M20x1.5 - M18x1.5/For checking the main pressure (3 HP 12) an converter pressure (3 HP 20)/Transmission: 3 HP 12, 3 HP 20 discontinued, available as part of set of special tools only**

8. **0491626** Screw

NOTE: **(Screw) M18x1.5/For closing the engine oil feed pipe when checking the converter pressure/transmission: 3 HP 20 Deletion, only available via tool set**

9. **0491627** Adapter

NOTE: **For closing the feed and return lines when checking the main pressure/transmission: 3 HP 22 Deletion, only available via tool set**

0491620 CONNECTION

0491620 240022 Connection Minimum set: Mechanical tools AM

NOTE: **(Connection) For checking the main pressure (3 HP 22, A5S 310Z) and clutch A (ZF transmission)/transmission: 3 HP 22, A5S 310Z, A5S 560Z and all ZF transmissions Deletion, only available via tool set**

Storage Location

C3

cardiagn.com

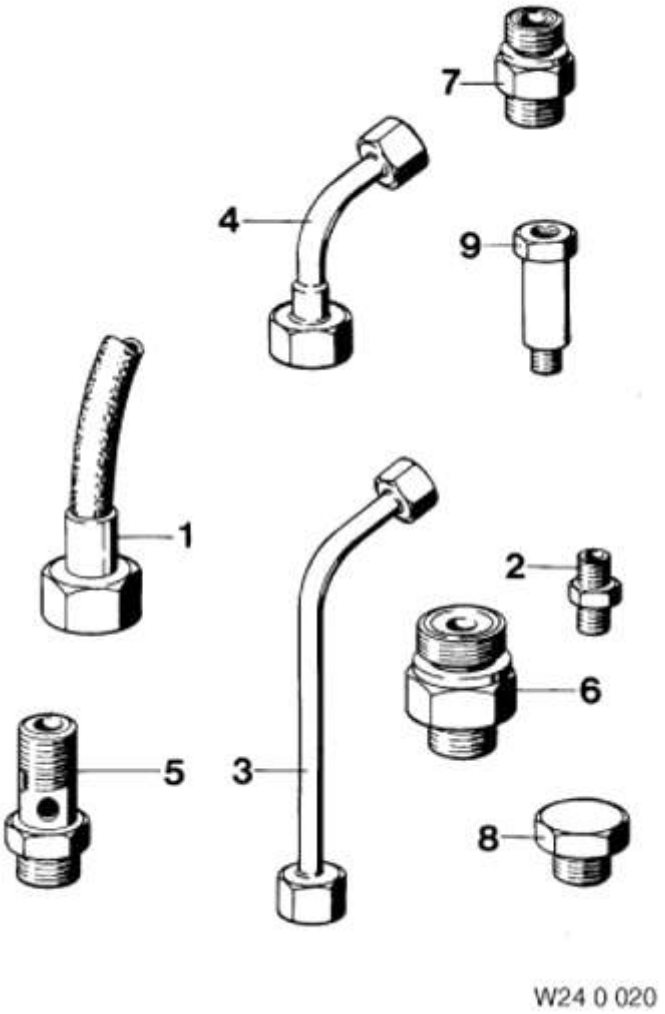

Fig. 60: Identifying Connection (0491620)
Courtesy of BMW OF NORTH AMERICA, INC.

0491643 CONNECTION

0491643 240140 Connection Minimum set: Mechanical tools Mechanical tool

Replaced by: 83300495498

NOTE: **(Connection) For pressure gauge 13 3 061 and BMW diagnosis and information system for measuring the oil pressure in the transmission Replaced by 23 4 050 (0 495 498)**

Storage Location

A4

SI number

01 01 92 (469)

cardiagn.com

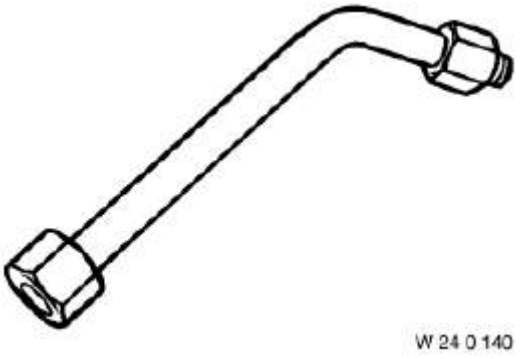

Fig. 61: Identifying Connection (0491643)
Courtesy of BMW OF NORTH AMERICA, INC.

0491624 CONNECTION

0491624 240026 Connection Minimum set: Mechanical tools AM

NOTE: **(Connection) Reducer M24x1.5 - 20x1.5/For checking the main pressure/transmission: 3 HP 20 Deletion, only available via tool set**

Storage Location

C3

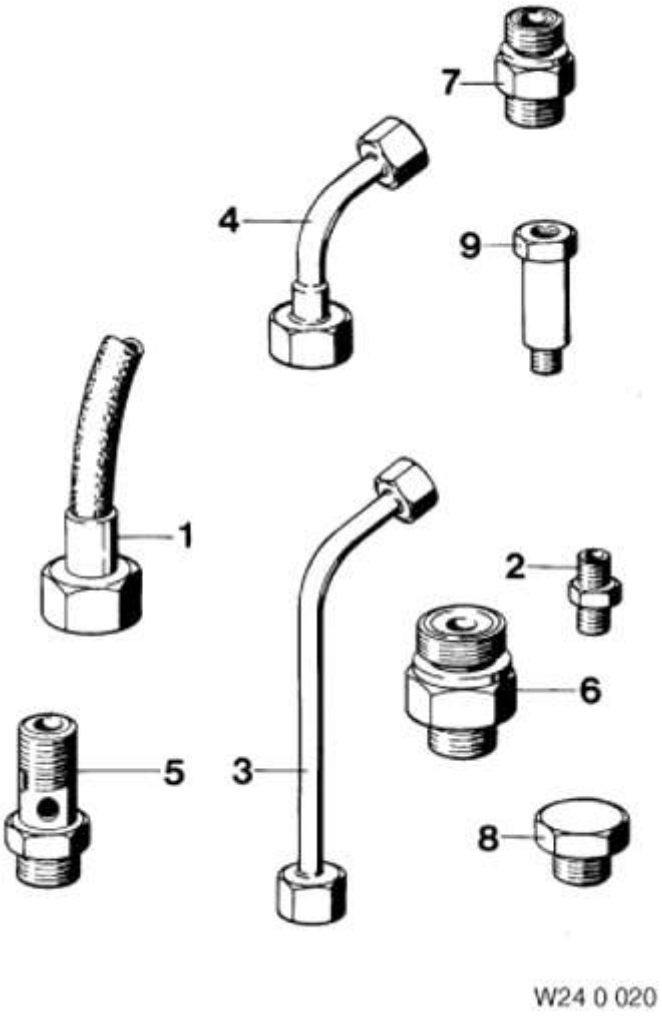

Fig. 62: Identifying Connection (0491624)
Courtesy of BMW OF NORTH AMERICA, INC.

cardiagn.com

0491622 CONNECTION

0491622 240024 Connection Minimum set: Mechanical tools AM

NOTE: **(Connection) Exhaust manifold, 90 mm Straightened length 90 mm Deletion, only available via tool set**

Storage Location

C3

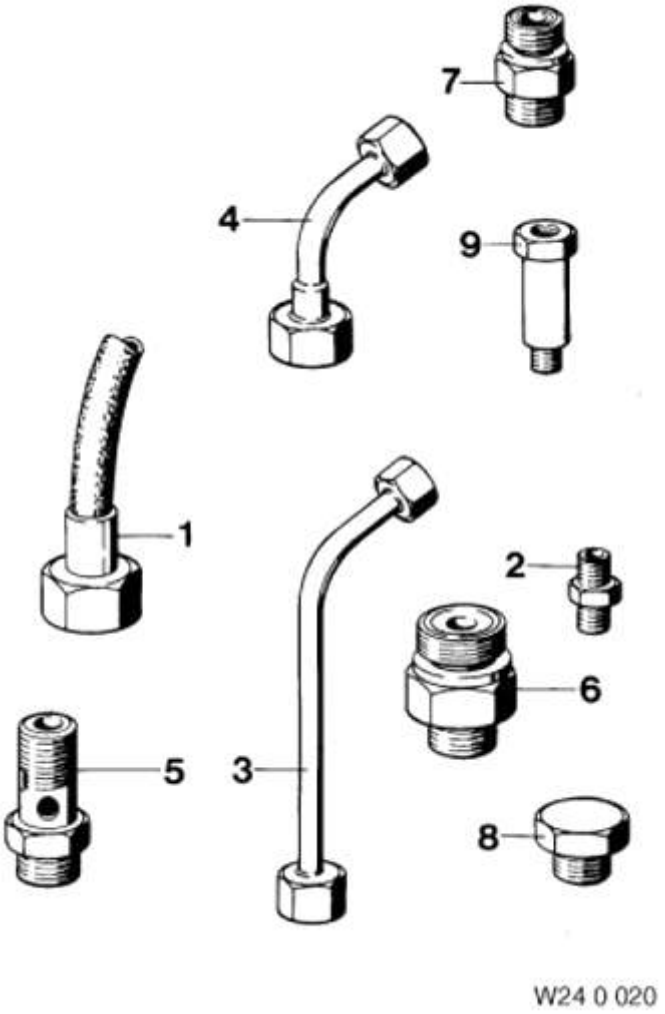

Fig. 63: Identifying Connection (0491622)
Courtesy of BMW OF NORTH AMERICA, INC.

0491636 DEVICE

0491636 240080 Device Minimum set: Mechanical tools Mechanical tool

NOTE: **(funnel) For filling the transmission with transmission oil**

cardiagn.com

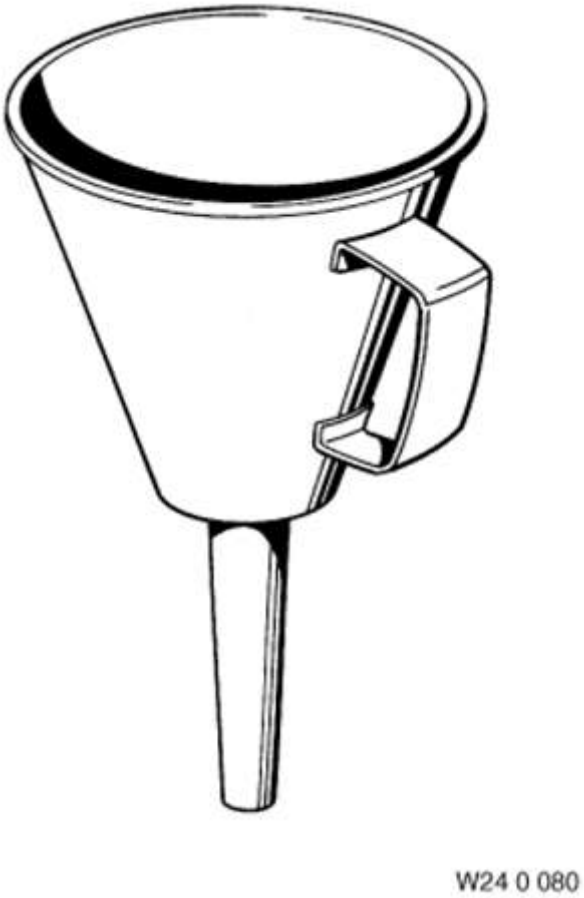

Fig. 64: Identifying Device (0491636)
Courtesy of BMW OF NORTH AMERICA, INC.

0491698 DEVICE

0491698 242140 Device Mechanical tool

NOTE: (Tensioning device) For removal and installation of the snap ring before the centring plate on ZF transmissions

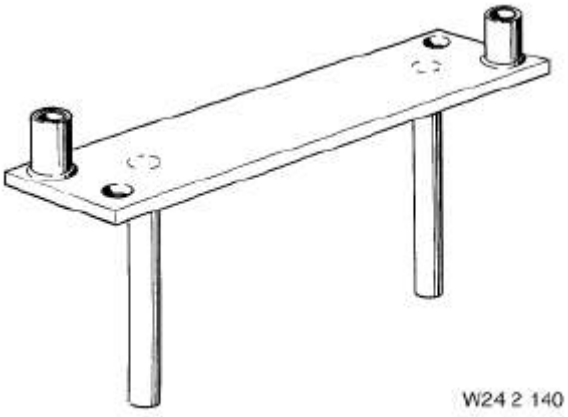

Fig. 65: Identifying Device (0491698)
Courtesy of BMW OF NORTH AMERICA, INC.

0491677 DEVICE

0491677 241240 Device Mechanical tool

NOTE: (device) For determining the shims on the brake C

cardiagn.com

Storage Location

Y6

SI number

01 14 93 (718)

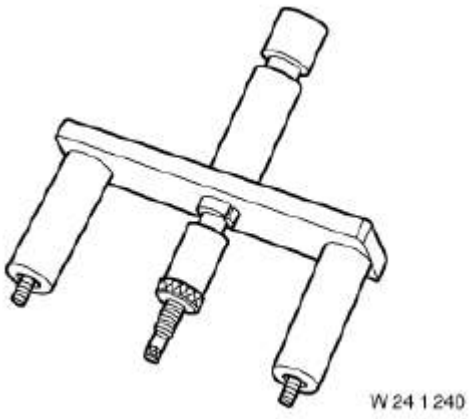

Fig. 66: Identifying Device (0491677)
Courtesy of BMW OF NORTH AMERICA, INC.

0491693 DEVICE

0491693 242000 Device Mechanical tool

NOTE: **For multidisc clutches A and B with sheet metal housing**

0491774 DEVICE

0491774 245260 Device Minimum set: Mechanical tools AM

NOTE: **(Pulling device) For pulling off the radial seal of the selector shaft/transmission with positioning switch**

Storage Location

B3

SI number

01 02 95 (896)

Consisting of:

1. 0494592 Use
2. 0494593 Bush

cardiagn.com

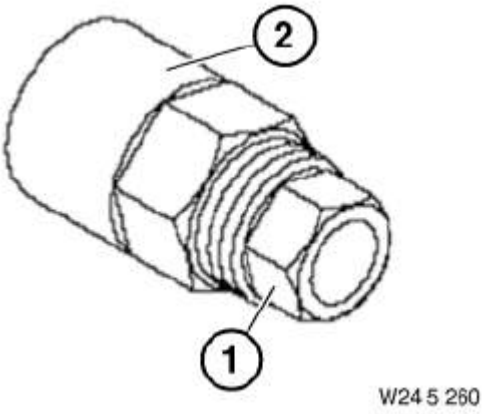

Fig. 67: Identifying Device (0491693)
Courtesy of BMW OF NORTH AMERICA, INC.

0491716 DEVICE

0491716 244040 Device AM

NOTE: **For leak-testing the torque converter**

Storage Location

X6

Consisting of:

1. 0491717 Basic body

   NOTE: **(Basic body) transmission: 3 HP 12, 4 HP 24**

2. 0491718 Screw

   NOTE: **(Retaining screws (2 x)) Transmission: 3 HP 12**

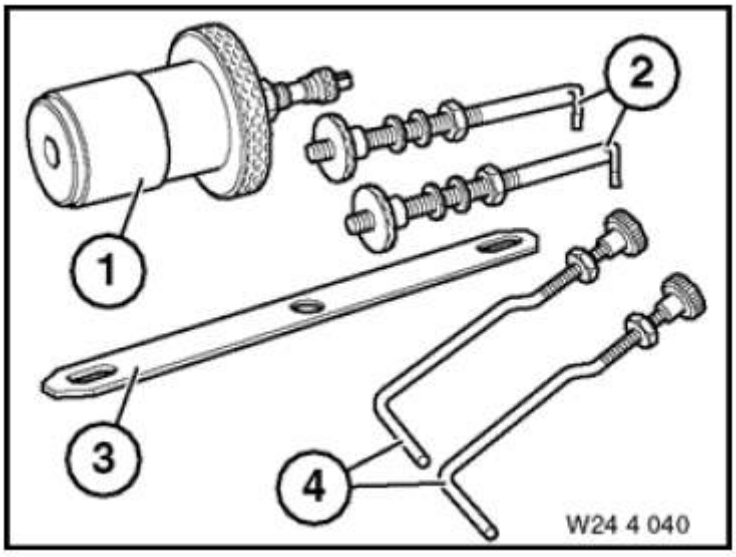

Fig. 68: Identifying Device (0491716)
Courtesy of BMW OF NORTH AMERICA, INC.

3. 0491719 Clip

cardiagn.com

NOTE: **(Retaining clip) transmission: 3 HP 12, 4 HP 24, A4S 270R, A4S 310R**

4. 0491720 Screw

NOTE: **(Retaining screws (2 x)) for torque converter/transmission: 4 HP 24, A4S 270R, A4S 310R**

0491679 DEVICE

0491679 241260 Device AM

NOTE: **(Dismantling and mounting device) For removing and installing the D/E cylinder with planetary gear set. Discontinued as of 10/2010.**

Storage Location

Y5

Y6

SI number

01 01 95 (892)

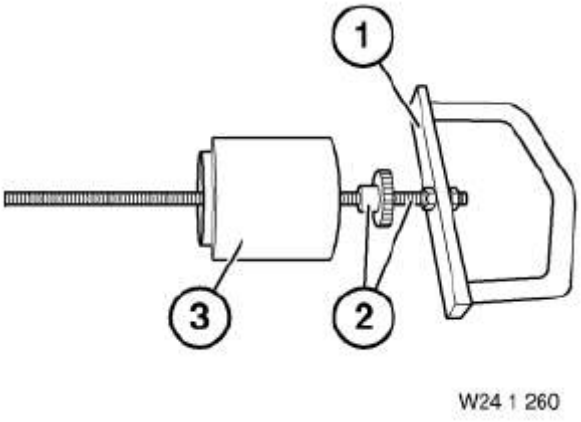

Fig. 69: Identifying Device (0491679)
Courtesy of BMW OF NORTH AMERICA, INC.

Consisting of:

1. 0491680 Handle

NOTE: **Discontinued as of 10/2010**

2. 0491681 Spindle

NOTE: **(Spindle with knurled nut) Discontinued as of 10/2010**

3. 0491682 Bush

NOTE: **(Centring bush) Discontinued, can only be ordered as part of complete tool 11 4 200 = 0491020.**

0495486 DEVICE

0495486 241370 Device Minimum set: Mechanical tools Mechanical tool

cardiagn.com

NOTE: **(locating fixture) For securing converter during removal and installation of transmission.**

Storage Location

A20

B20

SI number

01 23 05 (224)

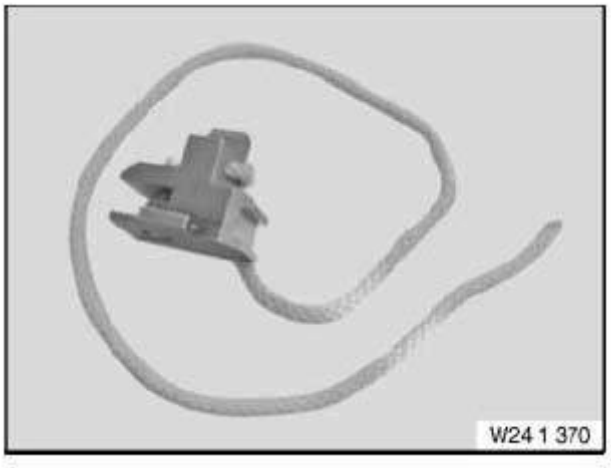

Fig. 70: Identifying Device (0495486)
Courtesy of BMW OF NORTH AMERICA, INC.

0491629 DEVICE

0491629 240040 Device AM

NOTE: **(Retainer) for removing and installing the disc set**

Storage Location

Z7

Consisting of:

1. **0491630** Washer
2. **0491631** Ring
3. **0491632** Shell

NOTE: **(Bearing shell) 2 pieces**

cardiagn.com

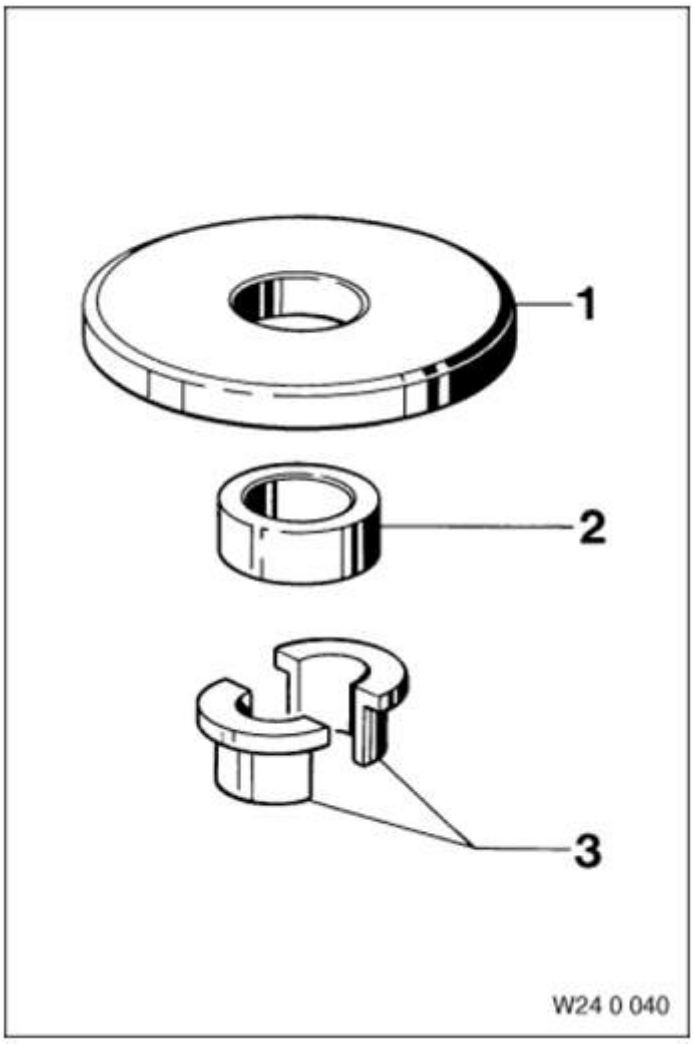

Fig. 71: Identifying Device (0491629)
Courtesy of BMW OF NORTH AMERICA, INC.

0491781 DEVICE

0491781 245360 Device Minimum set: Mechanical tools AM

NOTE: **For removing and installing the radial shaft seal of the gearshift shaft 24 5 361, 24 5 362, 24 5 364 and 24 5 366 for E90**

Storage Location

C4

SI number

01 14 96 (105)

Consisting of:

6 = 0494208 Bush

NOTE: **For fitting the radial shaft seal on the selector shaft (emergency release) Transmission: GA6 HP26Z Deletion, only available via tool set**

cardiagn.com

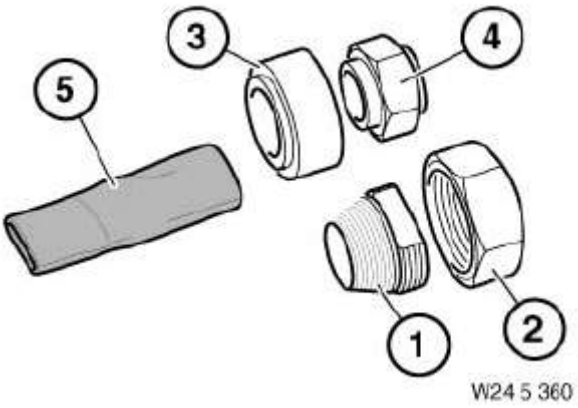

Fig. 72: Identifying Device (0491781)
Courtesy of BMW OF NORTH AMERICA, INC.

1 = 0491782 Bush

NOTE: **(Threaded bush)**

2 = 0491783 Nut

NOTE: **(Union nut) Deletion, only available via tool set**

3 = 0491784 Bush

NOTE: **For transmission without positioning switch Transmission: A4S 310R Deletion, only available via tool set**

4 = 0491785 Nut
5 = 0491786 Holding sleeve

NOTE: **(Sliding sleeve (5 pieces)) Transmission: A4S 310R Deletion, only available via tool set**

0491699 DEVICE

0491699 242160 Device Mechanical tool

NOTE: **(Pressure device)**

0491714 DEVICE

0491714 243460 Device Mechanical tool

NOTE: **(Mounting device). Beginning from 10/2010 only available as tool set 11 3 260 (0490959).**

0491721 DEVICE

0491721 244050 Device Mechanical tool

NOTE: **(Device) For leakage test of torque converter**

Storage Location

X6

cardiagn.com

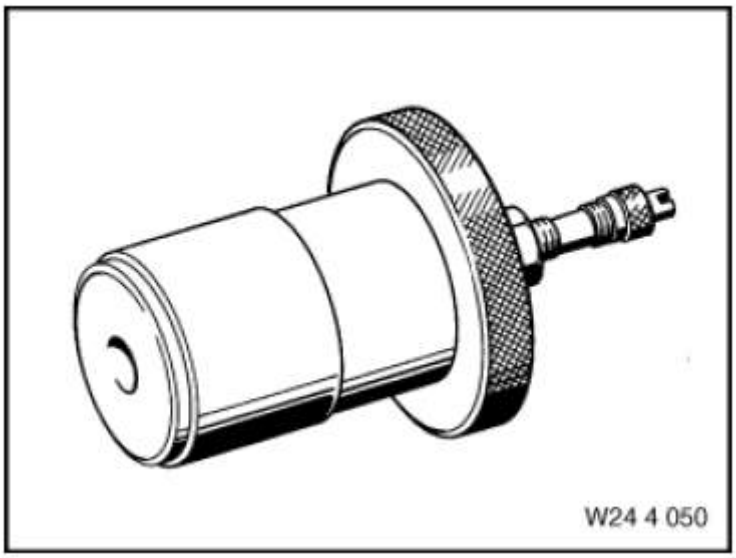

Fig. 73: Identifying Device (0491699)
Courtesy of BMW OF NORTH AMERICA, INC.

0491683 DEVICE

0491683 241270 Device AM

NOTE: **Removal and mounting device) For removing and installing the drive clutch A/B/C**

Storage Location

Y2

Z2

SI number

01 01 95 (892)

Consisting of:

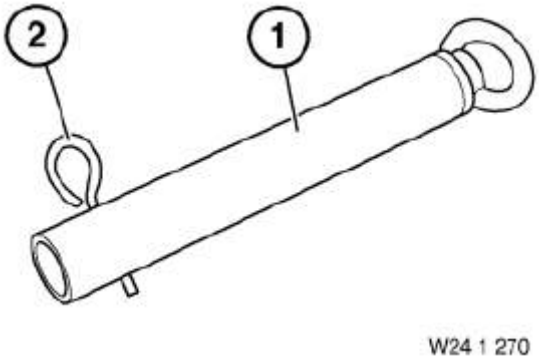

Fig. 74: Identifying Device (0491683)
Courtesy of BMW OF NORTH AMERICA, INC.

1. **0491684** Pipe

   NOTE: **(Jack tube with ring bolt)**

2. **0491685** Pin

cardiagn.com

NOTE: **(Locking pin)**

0491722 DEVICE

0491722 244060 Device AM

NOTE: **(Device)**

Storage Location

A23

Individual

Consisting of:

1. 0491723 Basic body

   NOTE: **(Basic body)**

2. 0491724 Screw

   NOTE: **(Mounting bolt (2 pieces))**

0491634 DEVICE

0491634 240060 Device Mechanical tool

NOTE: **(Connection device)**

0491678 DEVICE

0491678 241250 Device AM

NOTE: **(Lifting gear) For removing and installing the brake clutch unit D/G incl. the parking lock gear**

Storage Location

Y3

Z3

SI number

01 14 93 (718)

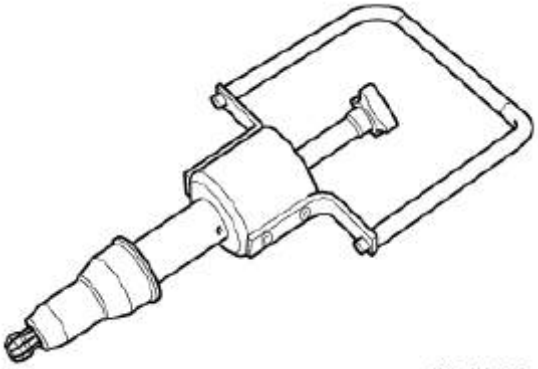

cardiagn.com

Fig. 75: Identifying Device (0491722)
Courtesy of BMW OF NORTH AMERICA, INC.

0494141 DEVICE

0494141 241350 Device AM

NOTE: **For removing the sealing cap for working piston, clutch 4**

Storage Location

C42

SI number

01 04 02 (835)

Consisting of:

1. 0494142 Pliers
2. 0494143 Adapter
3. 0494144 Washer

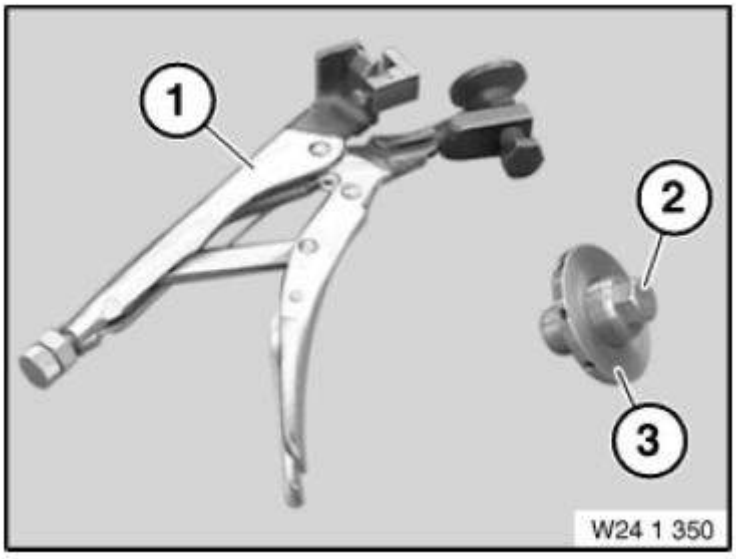

Fig. 76: Identifying Device (0494141)
Courtesy of BMW OF NORTH AMERICA, INC.

2210965 DEVICE

2210965 240360 Device Minimum set: Mechanical tools Mechanical tool

NOTE: **For E72 hybrid. For removing and installing the ORC clutch.**

SI number

01 18 10 (660)

cardiagn.com

Fig. 77: Identifying Device (2210965)
Courtesy of BMW OF NORTH AMERICA, INC.

0491725 DEVICE

0491725 244070 Device Mechanical tool

NOTE: For leak-testing the torque converter

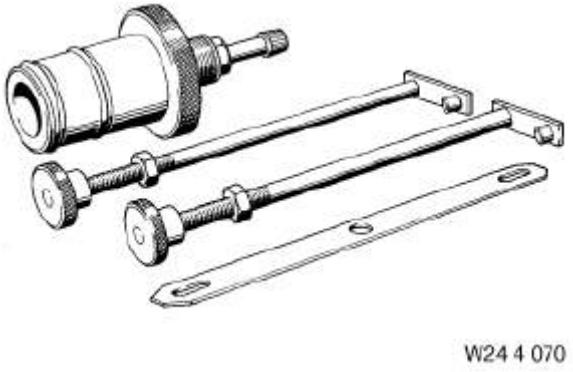

Fig. 78: Identifying Device (0491725)
Courtesy of BMW OF NORTH AMERICA, INC.

0491676 DEVICE

0491676 241230 Device Mechanical tool

NOTE: (Pressing device) For removing and installing the piston (cover) at brake C

Storage Location

Y6

SI number

01 14 93 (718)

cardiagn.com

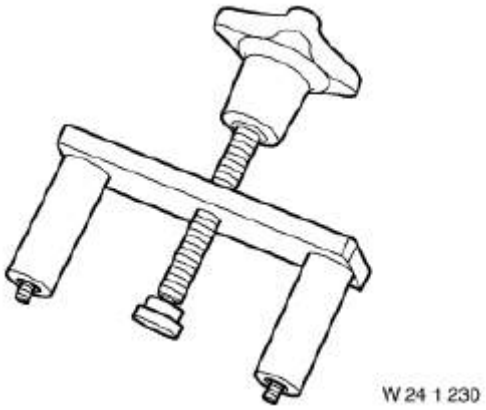

Fig. 79: Identifying Device (0491676)
Courtesy of BMW OF NORTH AMERICA, INC.

0493156 DEVICE

0493156 242310 Device AM

NOTE: **(Device) Tool set for dismantling and fitting the R gear piston. For dismantling and assembling the transmission for "Sealing the intermediate plate".**

SI number

01 22 97 (239)

Consisting of:

1. 0493157 Plate

   NOTE: **(Pressure plate) For removing and installing the spring cup**

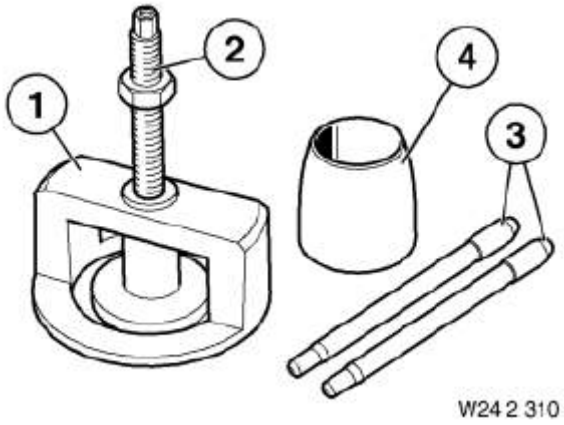

Fig. 80: Identifying Device (0493156)
Courtesy of BMW OF NORTH AMERICA, INC.

2. 0493158 Spindle

   NOTE: **(Spindle with pressure plate) Spindle M14x1.5, nut M14, pressure plate and washer/For removing and installing the spring cup**

3. 0493159 Pin

   NOTE: **(Guide pin (2 pieces)) For fixing the gaskets and the intermediate plate on the intermediate case**

cardiagn.com

4. 0493160 Bush

NOTE: **(Slip bush) For installing the piston in the cylinder of the intermediate plate**

0491726 DEVICE

0491726 244080 Device Mechanical tool

NOTE: **For fixing torque converter in position while removing and installing transmission.**

Storage Location

Individual

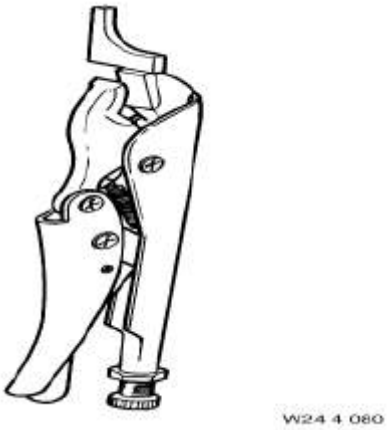

Fig. 81: Identifying Device (0491726)
Courtesy of BMW OF NORTH AMERICA, INC.

0491615 DEVICE

0491615 240010 Device AM

NOTE: **For checking the side clearance of the drive shaft**

Storage Location

Y3

Consisting of:

1. 0491616 Holder

NOTE: **(Dial gauge holder)**

2. 0491617 Terminal

NOTE: **(Terminal)**

cardiagn.com

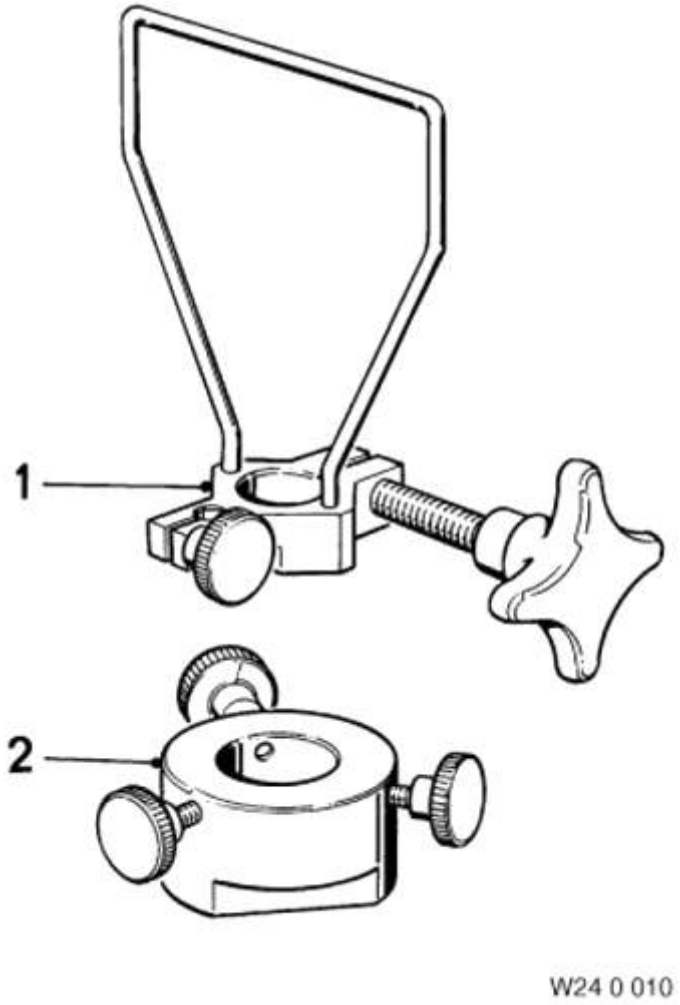

Fig. 82: Identifying Device (0491615)
Courtesy of BMW OF NORTH AMERICA, INC.

0491671 DEVICE

0491671 241180 Device AM

NOTE: **For removing and installing oil pump**

Storage Location

Z1

Z2

SI number

01 09 90 (282)

Consisting of:

1. 0494586 Pipe

NOTE: **(Holding tube) discontinued, available as part of set of special tools only**

cardiagn.com

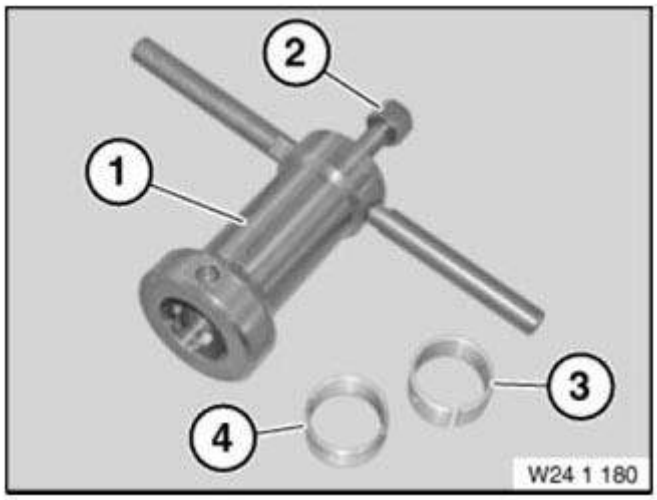

Fig. 83: Identifying Device (0491671)
Courtesy of BMW OF NORTH AMERICA, INC.

2. 0494588 Spindle

NOTE: **(Threaded spindle) Deletion, only available via tool set**

3. 0494589 Ring

NOTE: **(Clamping ring) discontinued, available as part of set of special tools only**

4. 0496375 Ring

NOTE: **(Clamping ring) Gearbox: GA6HP19Z, GA6HP26Z Deletion, only available via tool set**

0491686 DEVICE

0491686 241280 Device AM

NOTE: **(Assembly and disassembly tool) For removing and installing brake clutch F**

Storage Location

Z3

Z4

SI number

01 01 95 (892)

Consisting of:

1. 0491687 Handle

NOTE: **(Handle)**

cardiagn.com

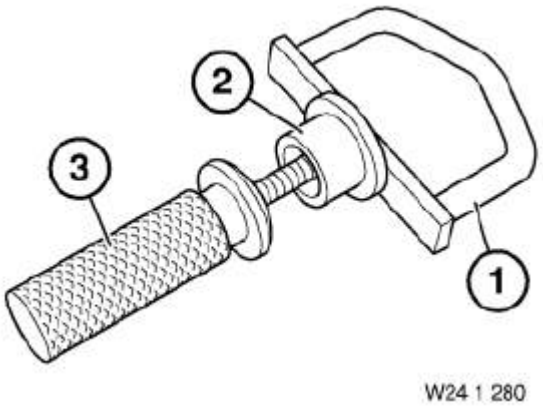

Fig. 84: Identifying Device (0491686)
Courtesy of BMW OF NORTH AMERICA, INC.

2. 0491688 Nut

NOTE: **(Knurled nut) Replaced by 00 9 120 (0 490 504)**

3. 0491689 Handle

NOTE: **(Centring handle)**

2222741 DEVICE

2222741 Device Minimum set: Mechanical tools Mechanical tool

NOTE: **To secure the converter when removing and installing the transmission.**

Storage Location

B30

SI number

01 27 11 (764)

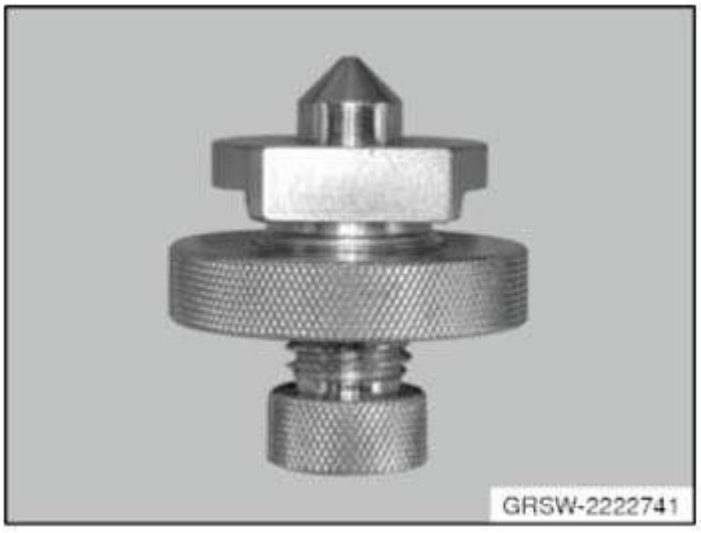

Fig. 85: Identifying Device (2222741)
Courtesy of BMW OF NORTH AMERICA, INC.

0491730 DEVICE

cardiagn.com

0491730 244120 Device Mechanical tool

Replaced by: 83300491731

NOTE: **For firmly holding torque converter in position while removing and fitting the transmission. Replaced by 24 4 130 (0 491 731)**

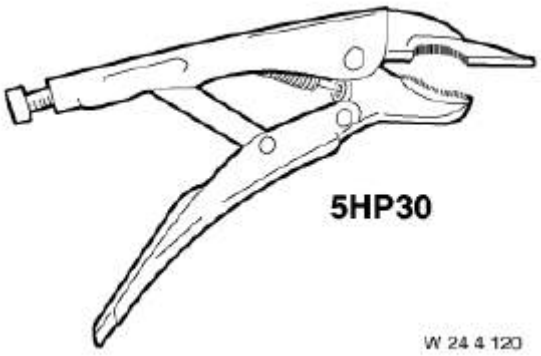

Fig. 86: Identifying Device (0491730)
Courtesy of BMW OF NORTH AMERICA, INC.

0491661 FIXTURE

0491661 240250 Fixture Mechanical tool

Replaced by: 83300495498

NOTE: **(Fixture for transmission) For removing and installing the transmission. Replaced by 23 4 050 (0 495 498)**

SI number

01 08 96 (080)

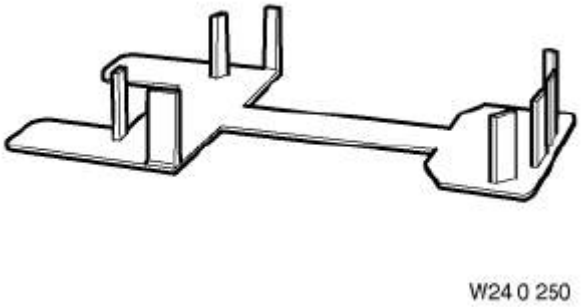

Fig. 87: Identifying Fixture (0491661)
Courtesy of BMW OF NORTH AMERICA, INC.

0495446 FIXTURE

0495446 240200 Fixture AM

NOTE: **For mounting gearbox on assembly stand.**

SI number

01 27 06 (328)

Consisting of:

cardiagn.com

1. 0495488 Basic body

NOTE: **Discontinued, can only be ordered using complete tool**

2. 0495489 Spindle

NOTE: **(Spindle with thrust piece) Discontinued, only available via tool set**

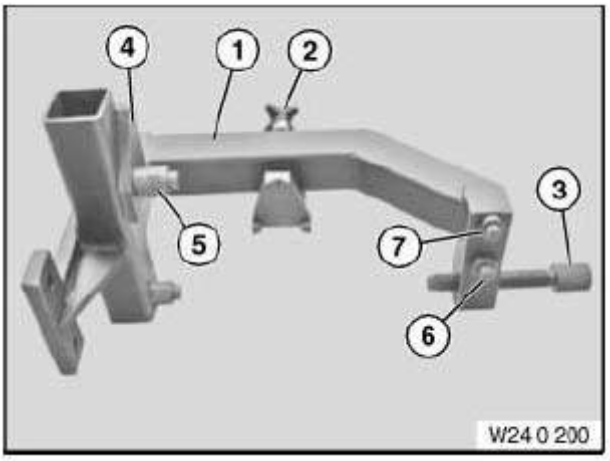

Fig. 88: Identifying Fixture (0495446)
Courtesy of BMW OF NORTH AMERICA, INC.

3. 0495490 Spindle

NOTE: **(Spindle with screw) Deletion, only available via tool set**

4. 0495491 Shaped part

NOTE: **(Shaped part)**

5. 0495492 Adapter

NOTE: **(Adapter (long)) Deletion, only available via tool set**

6. 0495493 Adapter

NOTE: **(Adapter (medium)) Deletion, only available via tool set**

7. 0495494 Adapter

NOTE: **(Adapter (short)) Deletion, only available via tool set**

0491675 FIXTURE

0491675 241220 Fixture Mechanical tool

NOTE: **(Fixture for drive flange) When undoing the slotted nut**

SI number

01 09 90 (282)

cardiagn.com

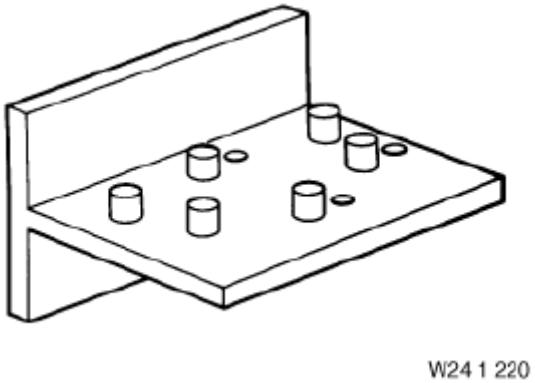

Fig. 89: Identifying Fixture (0491675)
Courtesy of BMW OF NORTH AMERICA, INC.

0491652 FIXTURE

0491652 240180 Fixture AM

Replaced by: 83300495446

NOTE: **For mounting gearbox on assembly stand. Replaced by 24 0 200 (0 495 446)**

SI number

01 06 92 (509)

Consisting of:

5 = 0495439 Adapter

NOTE: **Replaced by 24 0 205 (0 495 492)**

1 = 0491653 Frame

NOTE: **(Main frame)**

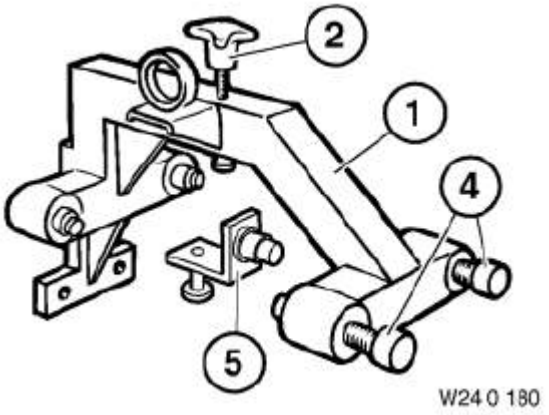

Fig. 90: Identifying Fixture (0491652)
Courtesy of BMW OF NORTH AMERICA, INC.

2 = 0491654 Spindle

NOTE: **(Pressure spindle with star handle)**

3 = 0491655 Spindle

cardiagn.com

NOTE: **Replaced by 24 0 184 (0 491 656)**

4 = **0491656** Spindle

NOTE: **(spindle, long (2 pieces))**

0491651 FIXTURE

0491651 240170 Fixture AM

Replaced by: 83300495498

NOTE: **For removing and installing transmission. Replaced by 23 4 050 (0 495 498)**

SI number

01 06 92 (509)

Consisting of:

3 = **0493258** Screw

NOTE: **(Adjusting screw) Discontinuation and replaced by 23 4 050 (0 495 498)**

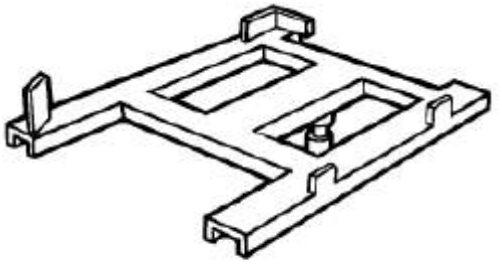

Fig. 91: Identifying Fixture (0491651)
Courtesy of BMW OF NORTH AMERICA, INC.

0491638 FIXTURE

0491638 240100 Fixture Mechanical tool

NOTE: **(Fixture) attachment B.W. transmission, until January of 84**

0491780 FIXTURE

0491780 245350 Fixture Mechanical tool

NOTE: **(Support for automatic transmission) Other: Only Japan and South Africa**

cardiagn.com

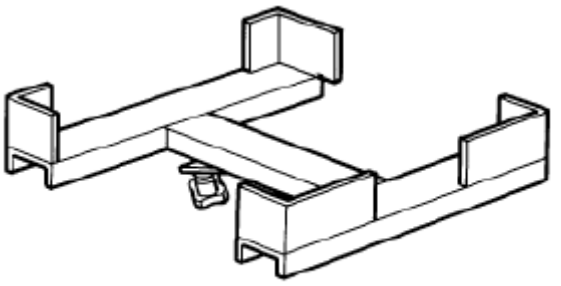

W24 5 350

Fig. 92: Identifying Fixture (0491638)
Courtesy of BMW OF NORTH AMERICA, INC.

0491641 FIXTURE

0491641 240120 Fixture Mechanical tool

Replaced by: 83300491642

NOTE: **(support) For removing and fitting the transmission. Replaced by 24 0 130 in March 87**

0491642 FIXTURE

0491642 240130 Fixture Mechanical tool

Replaced by: 83300495498

NOTE: **(Fixture for transmission) For removal and installation Replaced by 23 4 050 (0 495 498)**

SI number

01 02 87 (721)

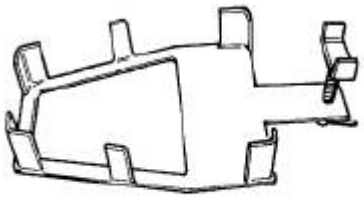

W24 0 130

Fig. 93: Identifying Fixture (0491641)
Courtesy of BMW OF NORTH AMERICA, INC.

0496729 FIXTURE

0496729 240300 Fixture AM

In conjunction with: 00 2 300 ASSEMBLY STAND 0495187

NOTE: **For mounting transmission on assembly stand 00 2 300 and for transport.**

SI number

cardiagn.com

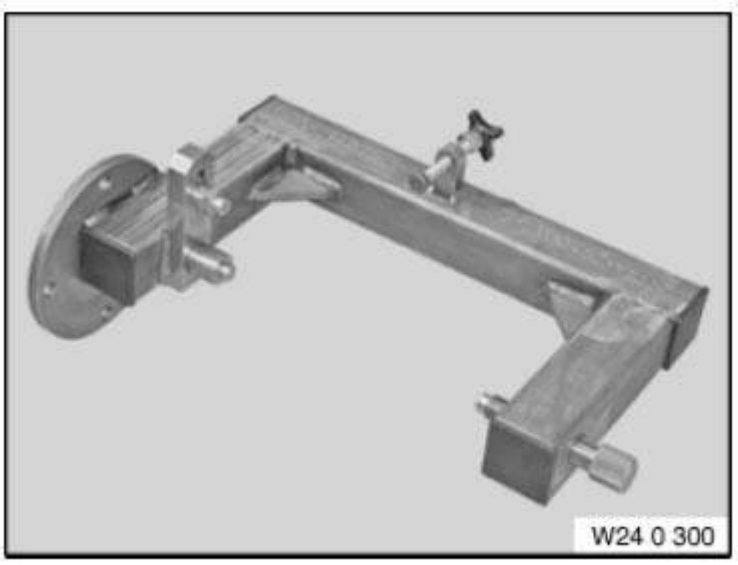

Fig. 94: Identifying Fixture (0496729)
Courtesy of BMW OF NORTH AMERICA, INC.

0491646 FRAME

0491646 240152 Frame AM

NOTE: **(Main frame)**

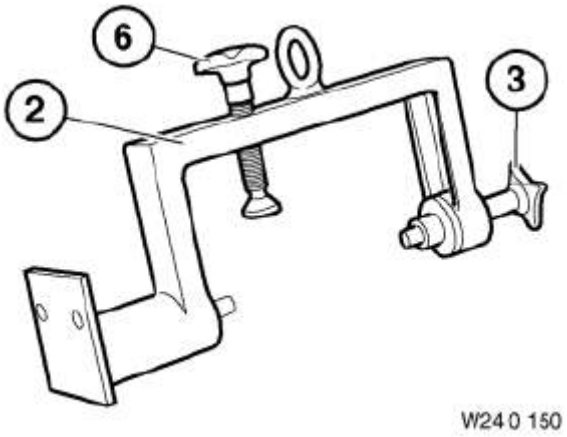

Fig. 95: Identifying Frame (0491646)
Courtesy of BMW OF NORTH AMERICA, INC.

0491653 FRAME

0491653 240181 Frame AM

NOTE: **(Main frame)**

cardiagn.com

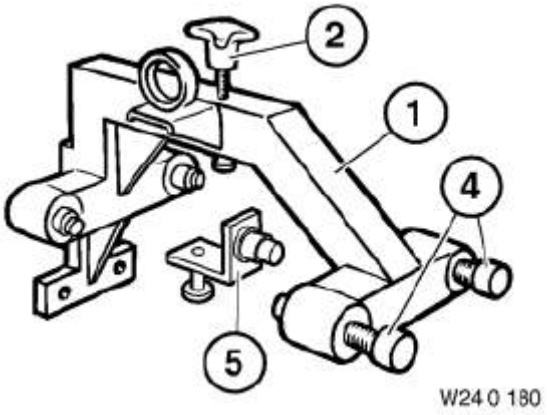

Fig. 96: Identifying Frame (0491653)
Courtesy of BMW OF NORTH AMERICA, INC.

0491706 GAUGE

0491706 243040 Gauge Mechanical tool

NOTE: **To adjust throttle pressure piston when attaching shift unit**

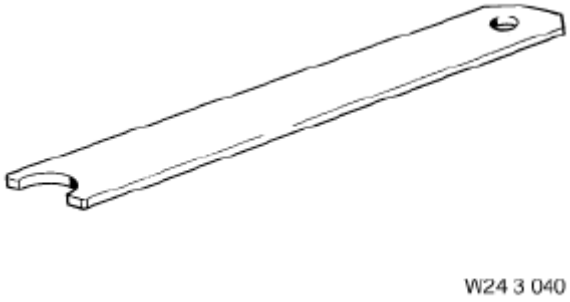

Fig. 97: Identifying Gauge (0491706)
Courtesy of BMW OF NORTH AMERICA, INC.

0491668 GAUGE

0491668 241120 Gauge Mechanical tool

NOTE: **For setting the position switch to "P position" during installation/model year: from 03/96**

SI number

01 07 96 (068)

cardiagn.com

Fig. 98: Identifying Gauge (0491668)
Courtesy of BMW OF NORTH AMERICA, INC.

0491713 GAUGE

0491713 243450 Gauge Mechanical tool

NOTE: **(Adjustment gauge) Deletion, only available via tool set**

0491707 GAUGE

0491707 243050 Gauge Mechanical tool

NOTE: **To align the hydraulic shift unit in the transmission**

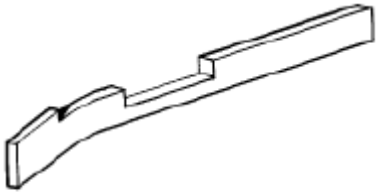

W24 3 050

Fig. 99: Identifying Gauge (0491713)
Courtesy of BMW OF NORTH AMERICA, INC.

0491697 HANDLE

0491697 242050 Handle Mechanical tool

Replaced by: 83300491633

NOTE: **(Pulling handle) For sealing plug in the lower section of the transmission housing/Replaced by 24 0 050 (0 491 633)**

0491715 HANDLE

0491715 244000 Handle Minimum set: Mechanical tools Mechanical tool

NOTE: **(Assembly handle (2 x)) For removing and installing the torque converter**

Storage Location

B5

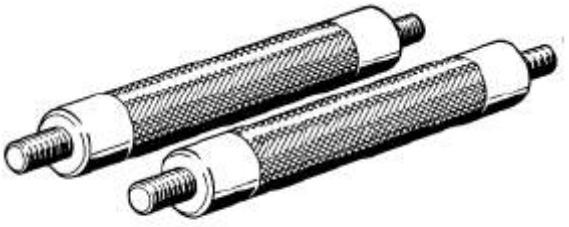

W24 4 000

Fig. 100: Identifying Handle (0491697)
Courtesy of BMW OF NORTH AMERICA, INC.

cardiagn.com

0491680 HANDLE

0491680 241261 Handle AM

NOTE: **Discontinued as of 10/2010**

Storage Location

Y5

Y6

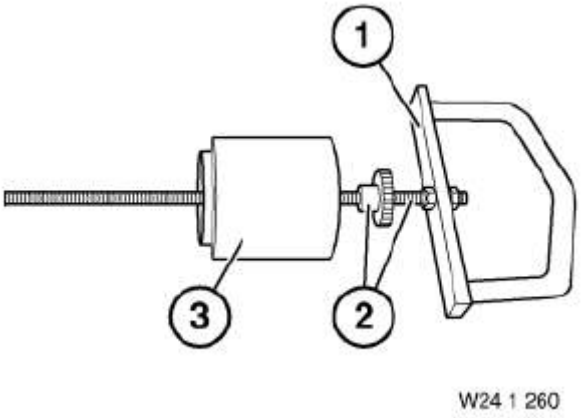

Fig. 101: Identifying Handle (0491680)
Courtesy of BMW OF NORTH AMERICA, INC.

0491689 HANDLE

0491689 241283 Handle AM

NOTE: **(Centring handle)**

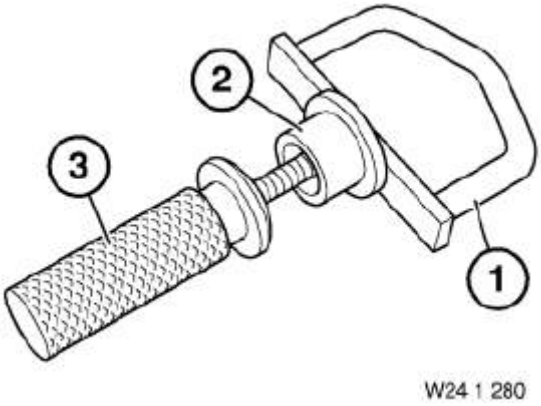

Fig. 102: Identifying Handle (0491689)
Courtesy of BMW OF NORTH AMERICA, INC.

0491687 HANDLE

0491687 241281 Handle AM

NOTE: **(Handle)**

cardiagn.com

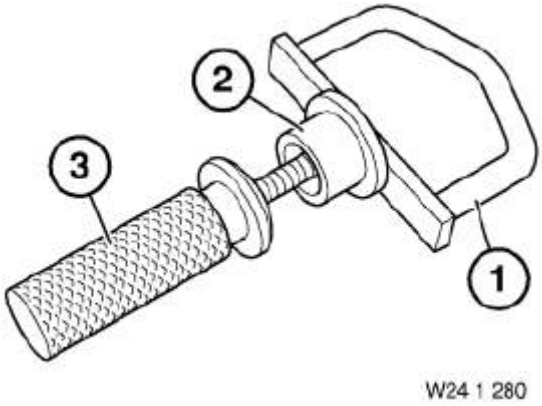

Fig. 103: Identifying Handle (0491687)
Courtesy of BMW OF NORTH AMERICA, INC.

0496717 HANDLE

0496717 241440 Handle Mechanical tool

NOTE: For installing and removing the torque converter. 8HPxx

Storage Location

B54

SI number

01 17 09 (577)

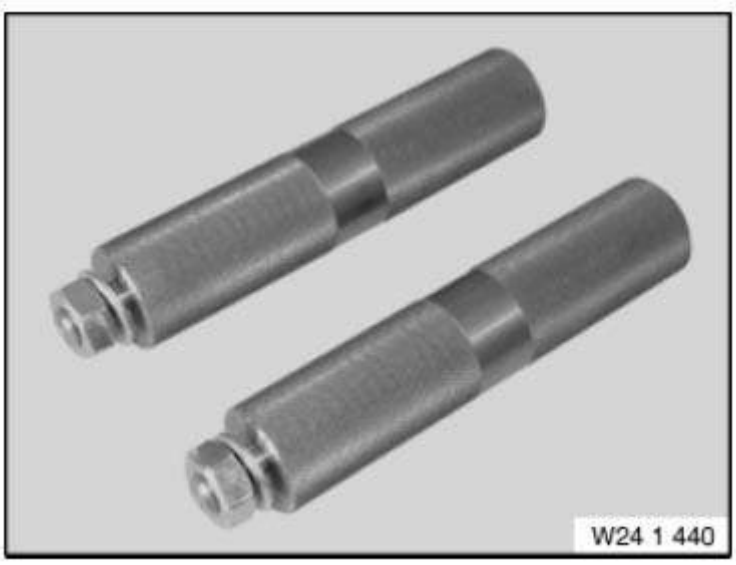

Fig. 104: Identifying Handle (0496717)
Courtesy of BMW OF NORTH AMERICA, INC.

0491633 HANDLE

0491633 240050 Handle Mechanical tool

NOTE: (extractor handle) For sealing plug in the lower section of transmission housing

Storage Location

Y5

cardiagn.com

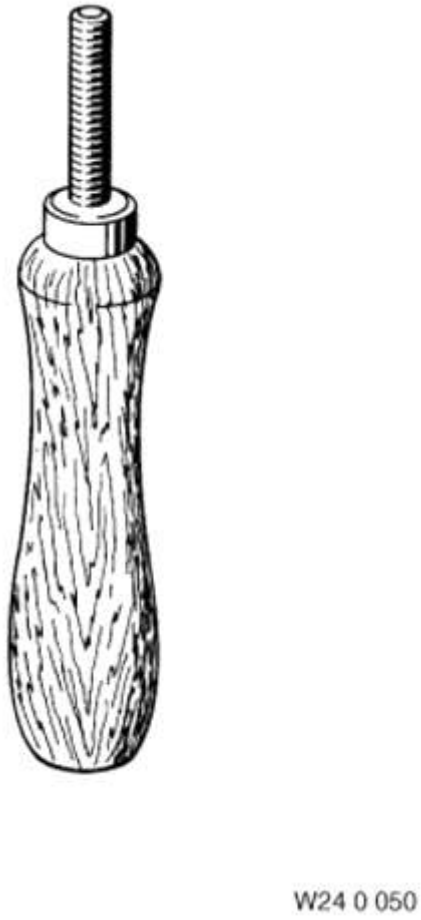

Fig. 105: Identifying Handle (0491633)
Courtesy of BMW OF NORTH AMERICA, INC.

0491772 HOLDER

0491772 245240 Holder Mechanical tool

NOTE: **(Counter support) For releasing and tightening the gear selector cable/transmission with position switch**

Storage Location

A4

SI number

01 06 92 (509)

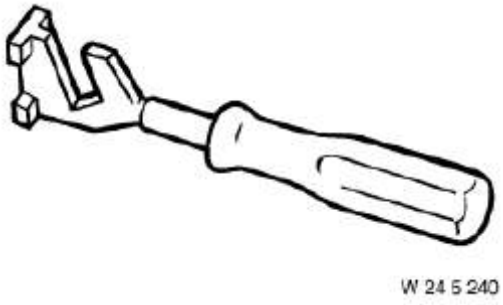

Fig. 106: Identifying Holder (0491772)
Courtesy of BMW OF NORTH AMERICA, INC.

0494451 HOLDER

cardiagn.com

0494451 244160 Holder Minimum set: Mechanical tools AM

NOTE: **For securing converter during removal and installation of transmission**

Storage Location

C46

SI number

01 11 02 (908)

Consisting of:

3 = 0494477 Shaped element

NOTE: **For converter variant M57TU Deletion, only available via tool set**

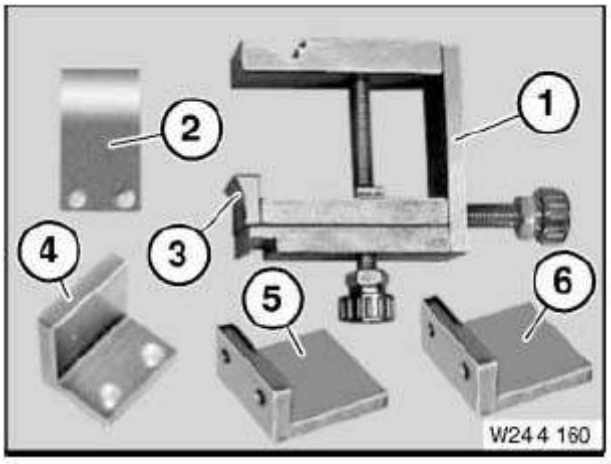

Fig. 107: Identifying Holder (0494451)
Courtesy of BMW OF NORTH AMERICA, INC.

1 = 0494478 Basic body
2 = 0494479 Shaped element

NOTE: **For converter version N73 discontinued, available as part of set of special tools only**

4 = 0494622 Shaped element

NOTE: **For converter variant M54 Deletion, only available via tool set**

5 = 0494965 Shaped element

NOTE: **Transmission: GA6 HP19 in E87, E90 Deletion, only available via tool set**

6 = 0496061 Shaped element

NOTE: **Transmission: GA6L45R (GM6) in E83/N52K Deletion, only available via tool set**

0491616 HOLDER

0491616 240011 Holder AM

NOTE: **(Dial gauge holder)**

cardiagn.com

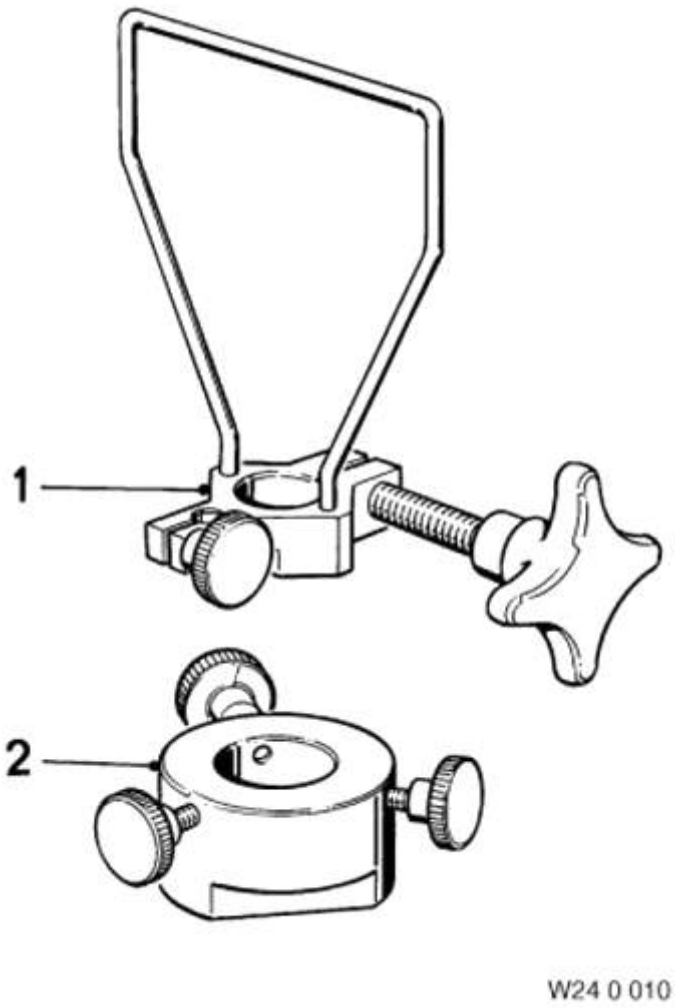

Fig. 108: Identifying Holder (0491616)
Courtesy of BMW OF NORTH AMERICA, INC.

0491769 HOLDER

0491769 245210 Holder Mechanical tool

NOTE: **(Counter support) For slackening and tightening the gear selector cable**

Storage Location

A4

SI number

01 04 91 (372)

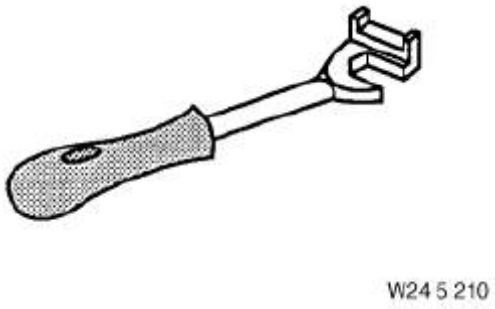

Fig. 109: Identifying Holder (0491769)

cardiagn.com

Courtesy of BMW OF NORTH AMERICA, INC.

0491770 HOLDER

0491770 245220 Holder Mechanical tool

NOTE: **(Counter support) For slackening and tightening the gear selector cable**

Storage Location

A4

SI number

01 04 91 (372)

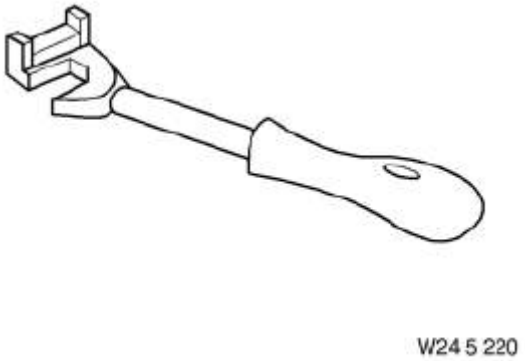

Fig. 110: Identifying Holder (0491770)
Courtesy of BMW OF NORTH AMERICA, INC.

0491786 HOLDING SLEEVE

0491786 245365 Holding sleeve Minimum set: Mechanical tools AM

NOTE: **(Sliding sleeve (5 pieces)) Transmission: A4S 310R Deletion, only available via tool set**

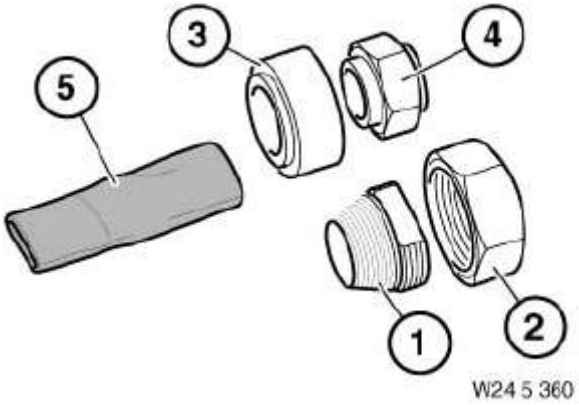

Fig. 111: Identifying Holding Sleeve (0491786)
Courtesy of BMW OF NORTH AMERICA, INC.

0491662 HOLDING SLEEVE

0491662 241010 Holding sleeve Mechanical tool

NOTE: **(Assembly sleeve) For removing the disc set (4-gear) and for pressing in the needle bearing in the oil pump housing (A5S 560Z)**

cardiagn.com

Storage Location

X5

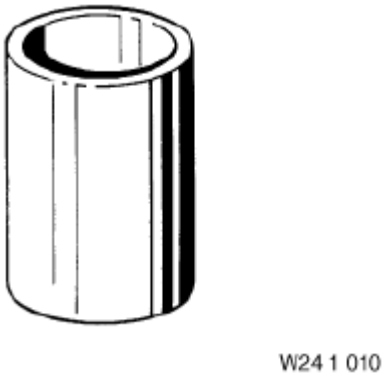

Fig. 112: Identifying Holding Sleeve (0491662)
Courtesy of BMW OF NORTH AMERICA, INC.

0491673 HOLDING SLEEVE

0491673 241200 Holding sleeve Minimum set: Mechanical tools Mechanical tool

NOTE: **(Assembly sleeve) For preventing damage to radial shaft seal when fitting it onto selector shaft**

Storage Location

B3

SI number

01 09 90 (282)

cardiagn.com

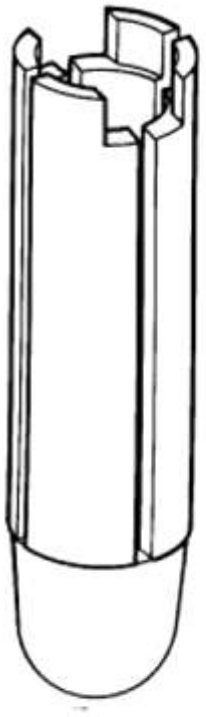

Fig. 113: Identifying Holding Sleeve (0491673)
Courtesy of BMW OF NORTH AMERICA, INC.

0491789 HOLDING SLEEVE

0491789 245490 Holding sleeve Mechanical tool

NOTE: **(sliding sleeve (5 x)) For prevention of damage to the radial sealing ring while fitting on the gearshift shaft**

SI number

01 02 95 (896)

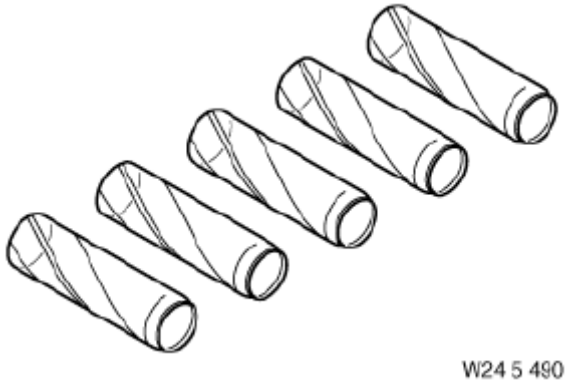

Fig. 114: Identifying Holding Sleeve (0491789)
Courtesy of BMW OF NORTH AMERICA, INC.

0495572 HOOK WRENCH

0495572 244324 Hook wrench AM

cardiagn.com

Storage Location

C23

SI number

01 02 07 (334)

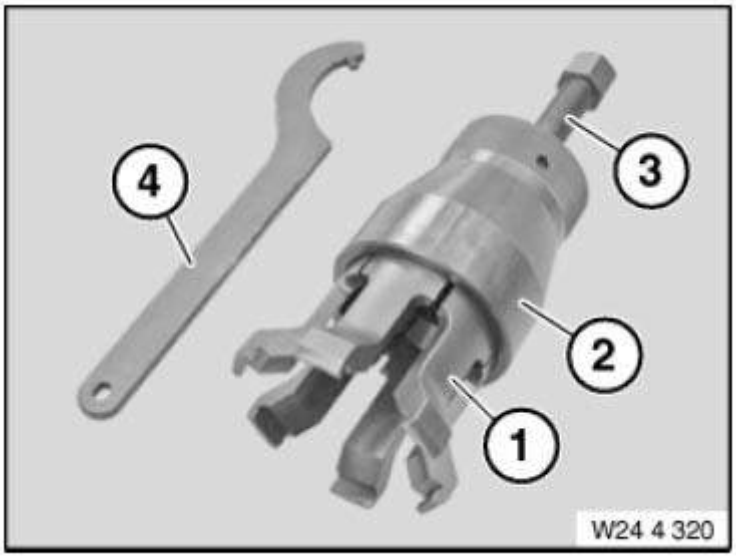

Fig. 115: Identifying Hook Wrench (0495572)
Courtesy of BMW OF NORTH AMERICA, INC.

0491619 HOSE

0491619 240021 Hose Minimum set: Mechanical tools AM

NOTE: **(Line) Pressure hose 1.7 m, connection M12x1.5 - M14x1.5 outer thread/For checking the different converter pressures/transmission: A4S 310R, A4S 270R discontinued, available as part of set of special tools only**

Storage Location

Individual

cardiagn.com

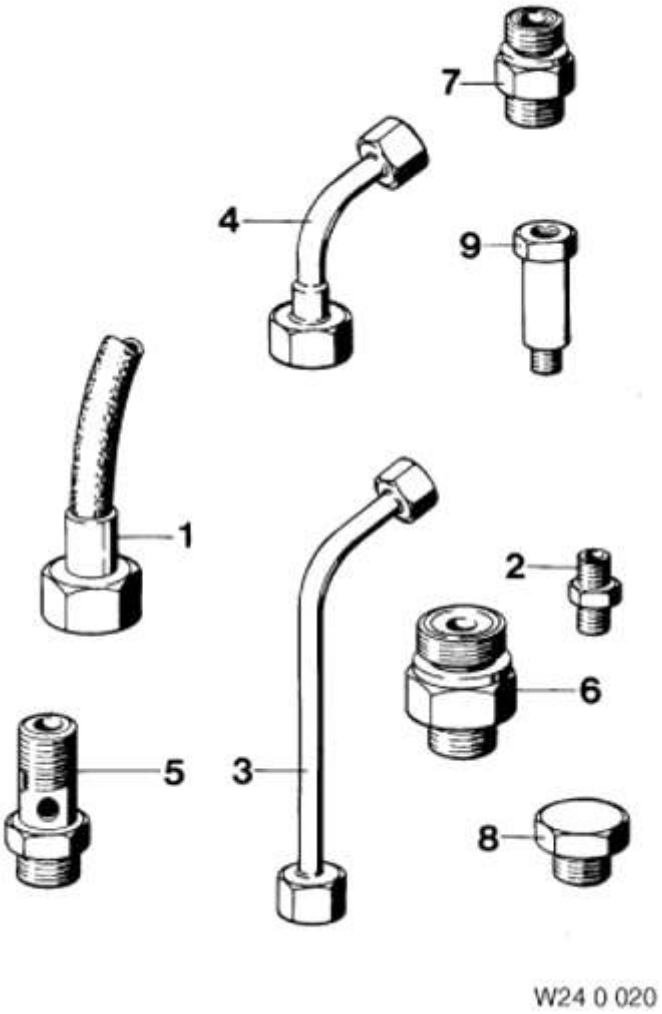

Fig. 116: Identifying Hose (0491619)
Courtesy of BMW OF NORTH AMERICA, INC.

0496312 LEVER

0496312 244340 Lever Mechanical tool

NOTE: **For removing and installing oil filler cap.**

Storage Location

B22

SI number

01 19 07 (397)

cardiagn.com

Fig. 117: Identifying Lever (0496312)
Courtesy of BMW OF NORTH AMERICA, INC.

0491639 MANDREL

0491639 240110 Mandrel AM

NOTE: **(drift) For driving in the radial sealing ring in the front section of the transmission housing/Model year: from 90 and for the output flange of the transmissions S5D 200G and S5D 250G**

Storage Location

B17

SI number

01 03 90 (184)

Consisting of:

3 = 0491640 Washer

NOTE: **(ring washer 1 mm) Transmissions: 4 HP 24 - no. 0 029 160, 4 HP 22 - no. 1 113 936**

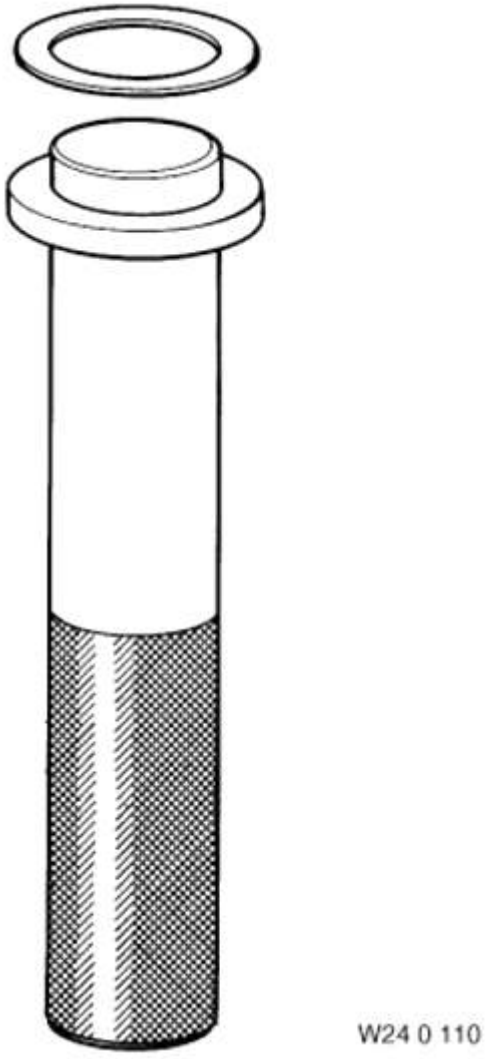

Fig. 118: Identifying Mandrel (0491639)
Courtesy of BMW OF NORTH AMERICA, INC.

cardiagn.com

0491672 MANDREL

0491672 241190 Mandrel Minimum set: Mechanical tools Mechanical tool

NOTE: **(drift) For driving in the radial sealing ring in the front section of the transmission housing**

Storage Location

A15

SI number

01 09 90 (282)

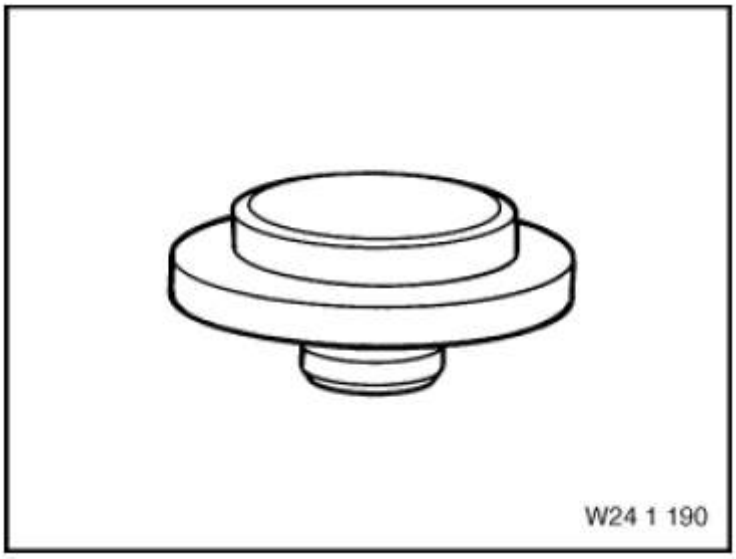

Fig. 119: Identifying Mandrel (0491672)
Courtesy of BMW OF NORTH AMERICA, INC.

0491727 MANDREL

0491727 244090 Mandrel Minimum set: Mechanical tools Mechanical tool

NOTE: **(drift) For fitting the radial sealing ring to the output end**

Storage Location

A15

SI number

01 06 92 (509)

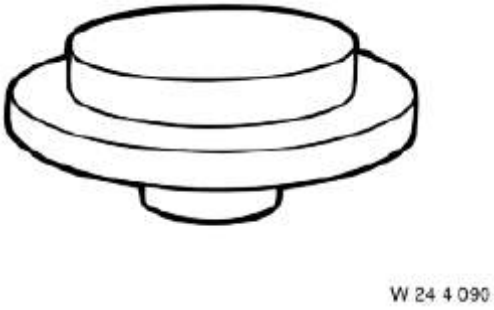

cardiagn.com

Fig. 120: Identifying Mandrel (0491727)
Courtesy of BMW OF NORTH AMERICA, INC.

0491705 MANDREL

0491705 242300 Mandrel Minimum set: Mechanical tools Mechanical tool

NOTE: **(Guide mandrel) For installing the automatic transmission with the sheet metal flywheel already installed**

Storage Location

B16

SI number

01 07 91 (406)

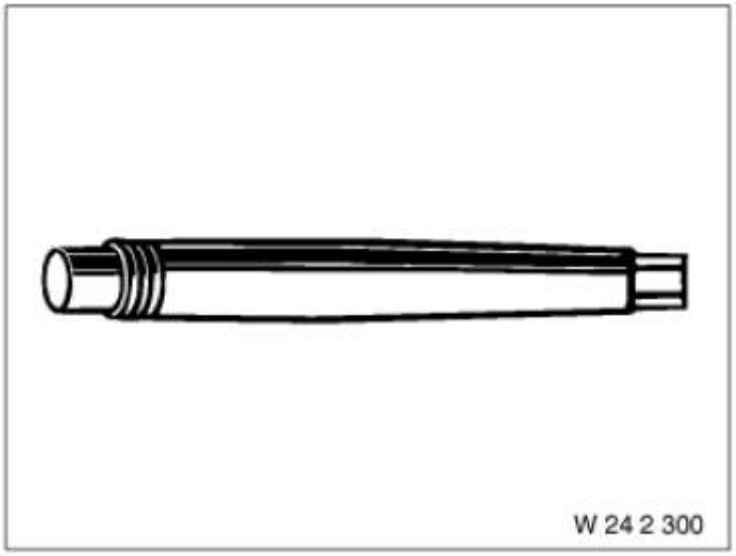

Fig. 121: Identifying Mandrel (0491705)
Courtesy of BMW OF NORTH AMERICA, INC.

0494199 MANDREL

0494199 242370 Mandrel Minimum set: Mechanical tools Mechanical tool

NOTE: **(Drift) For inserting the radial shaft seal on the output flange**

Storage Location

A46

B46

SI number

01 14 01 (766)

cardiagn.com

Fig. 122: Identifying Mandrel (0494199)
Courtesy of BMW OF NORTH AMERICA, INC.

0491637 MANDREL

0491637 240090 Mandrel Mechanical tool

Replaced by: 83300491639

NOTE: **(Drift) For punching the radial sealing ring in the front section of the transmission housing/Replaced by 24 0 110 (0 491 639) November 96**

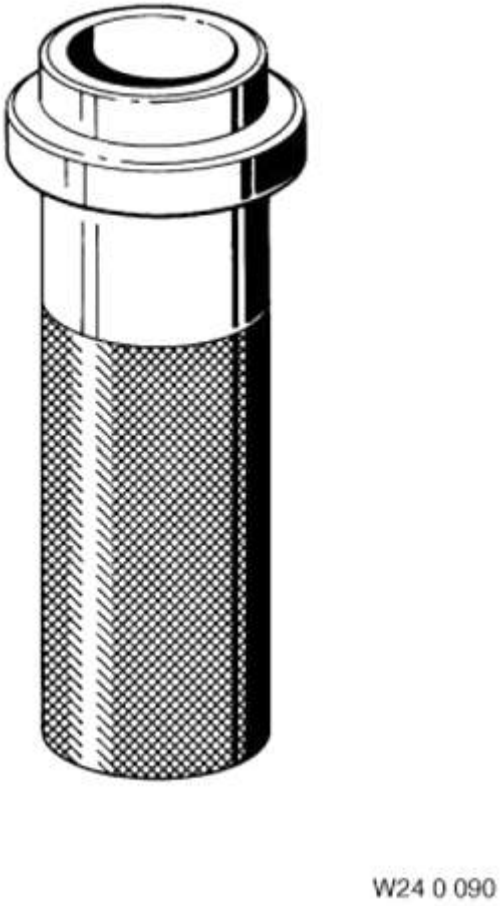

Fig. 123: Identifying Mandrel (0491637)
Courtesy of BMW OF NORTH AMERICA, INC.

0495497 MANDREL

cardiagn.com

0495497 244330 Mandrel Mechanical tool

NOTE: **(Drift) For driving in radial shaft seal of output shaft (all-wheel drive).**

Storage Location

A23

SI number

01 02 07 (334)

Fig. 124: Identifying Mandrel (0495497)
Courtesy of BMW OF NORTH AMERICA, INC.

0491728 MANDREL

0491728 244100 Mandrel Minimum set: Mechanical tools Mechanical tool

NOTE: **(Drift) For driving in the radial seal ring on the drive side (behind converter)**

Storage Location

A17

SI number

01 06 92 (509)

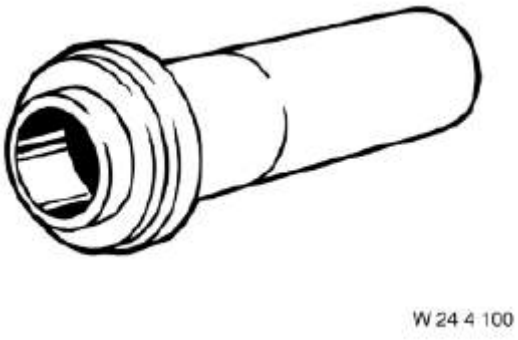

Fig. 125: Identifying Mandrel (0491728)
Courtesy of BMW OF NORTH AMERICA, INC.

cardiagn.com

2405249 MANDREL

2405249 Mandrel Minimum set: Mechanical tools AM

NOTE: **To install the left rear-wheel drive output shaft. Silhouette foil is included in the delivery specification.**

Storage Location

C75

Fig. 126: Identifying Mandrel (2405249)
Courtesy of BMW OF NORTH AMERICA, INC.

0495603 MANDREL

0495603 244400 Mandrel Minimum set: Mechanical tools Mechanical tool

NOTE: **(Drift) For driving in oil filter sealing ring.**

Storage Location

A24

SI number

01 02 07 (334)

Fig. 127: Identifying Mandrel (0495603)

cardiagn.com

Courtesy of BMW OF NORTH AMERICA, INC.

2208426 MANDREL

2208426 240340 Mandrel Mechanical tool

NOTE: **For driving in the radial shaft seal on the output end.**

Storage Location

A28

SI number

01 09 10 (639)

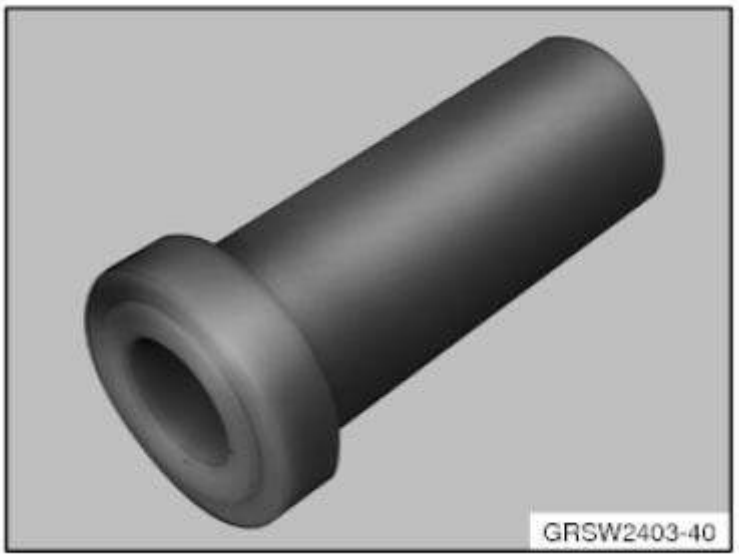

Fig. 128: Identifying Mandrel (2208426)
Courtesy of BMW OF NORTH AMERICA, INC.

0496719 MANDREL

0496719 241410 Mandrel Minimum set: Mechanical tools Mechanical tool

NOTE: **For driving in shaft seal on drive shaft.**

Storage Location

B54

SI number

01 17 09 (577)

cardiagn.com

Fig. 129: Identifying Mandrel (0496719)
Courtesy of BMW OF NORTH AMERICA, INC.

0491669 MANDREL

0491669 241160 Mandrel Mechanical tool

NOTE: **(Drift) to press out the radial shaft seal for the speedometer pinion from the plug-in sleeve**

0496860 MANDREL

0496860 240330 Mandrel Mechanical tool

NOTE: **For driving in the radial shaft seal on the drive end.**

Storage Location

A28

SI number

01 09 10 (639)

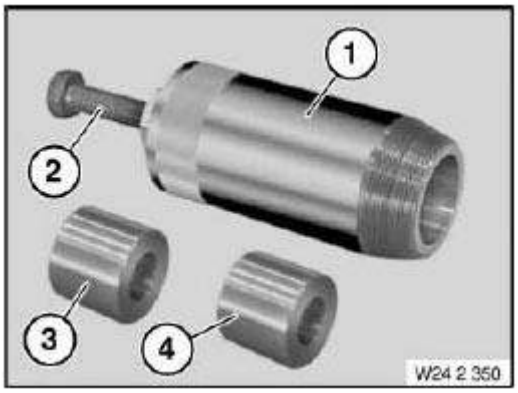

Fig. 130: Identifying Mandrel (0491669)
Courtesy of BMW OF NORTH AMERICA, INC.

0495600 MANDREL

0495600 244370 Mandrel Minimum set: Mechanical tools Mechanical tool

cardiagn.com

NOTE: **(Drift) For driving in radial shaft seal of output shaft (4x2).**

Storage Location

A24

SI number

01 02 07 (334)

Fig. 131: Identifying Mandrel (0495600)
Courtesy of BMW OF NORTH AMERICA, INC.

2208427 MANDREL

2208427 240350 Mandrel Mechanical tool

NOTE: **For driving in shaft seal on selector shaft.**

Storage Location

A28

SI number

01 09 10 (639)

Fig. 132: Identifying Mandrel (2208427)

cardiagn.com

Courtesy of BMW OF NORTH AMERICA, INC.

0494200 MANDREL

0494200 242360 Mandrel Minimum set: Mechanical tools Mechanical tool

Replaced by: 83300494506

NOTE: **(Drift) For installing the radial shaft seal on the torque converter Replaced by 24 2 400 (0 494 506)**

Storage Location

B46

SI number

01 14 01 (766)

Fig. 133: Identifying Mandrel (0494200)
Courtesy of BMW OF NORTH AMERICA, INC.

0491783 NUT

0491783 245362 Nut Minimum set: Mechanical tools AM

NOTE: **(Union nut) Deletion, only available via tool set**

0495789 NUT

0495789 244382 Nut AM

NOTE: **(Nut M8x1) Can no longer be ordered separately. Only available as part of set 24 4 380 = 83 30 0 495 601.**

SI number

01 02 07 (334)

cardiagn.com

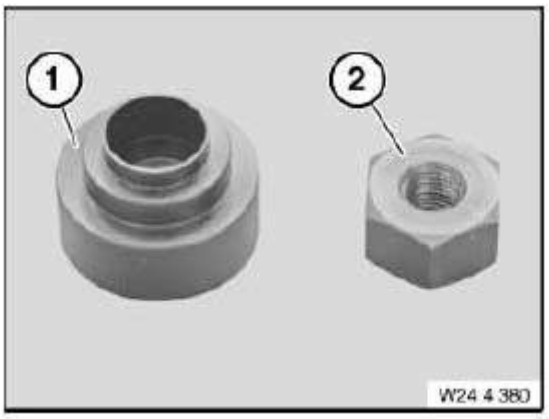

Fig. 134: Identifying Nut (0491783)
Courtesy of BMW OF NORTH AMERICA, INC.

0491688 NUT

0491688 241282 Nut AM

NOTE: **(Knurled nut) Replaced by 00 9 120 (0 490 504)**

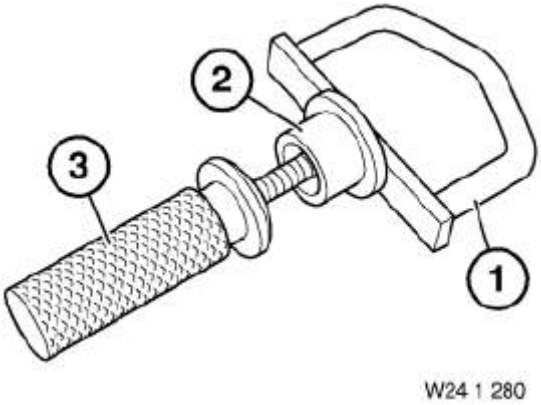

Fig. 135: Identifying Nut (0491688)
Courtesy of BMW OF NORTH AMERICA, INC.

0491785 NUT

0491785 245364 Nut Minimum set: Mechanical tools AM

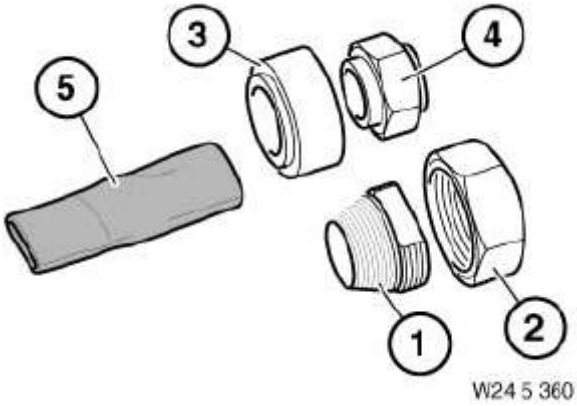

Fig. 136: Identifying Nut (0491785)
Courtesy of BMW OF NORTH AMERICA, INC.

0493115 OPEN-END WRENCH

cardiagn.com

0493115 242330 Open-end wrench Mechanical tool

NOTE: **(Open-end wrench) Open-end wrench 1/2" for adjusting the brake band**

SI number

01 24 97 (257)

Fig. 137: Identifying Open-End Wrench (0493115)
Courtesy of BMW OF NORTH AMERICA, INC.

0491793 OPERATING INSTRUCTIONS

0491793 246029 Operating instructions AM

0496728 PIN

0496728 240320 Pin Mechanical tool

NOTE: **For securing transmission when installing in engine.**

Storage Location

B28

SI number

01 29 09 (601)

cardiagn.com

Fig. 138: Identifying Operating Instructions (0491793)
Courtesy of BMW OF NORTH AMERICA, INC.

0493159 PIN

0493159 242313 Pin AM

NOTE: (Guide pin (2 pieces)) For fixing the gaskets and the intermediate plate on the intermediate case

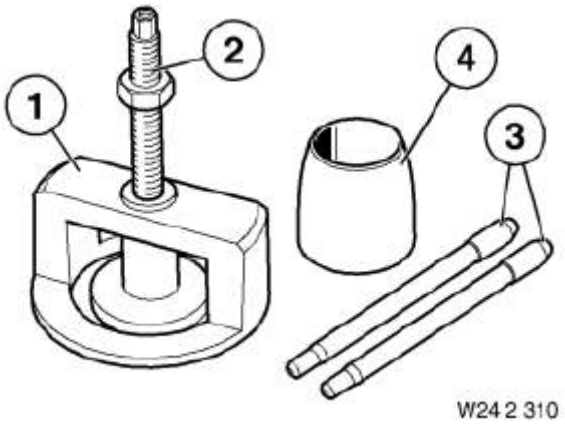

Fig. 139: Identifying Pin (0493159)
Courtesy of BMW OF NORTH AMERICA, INC.

0491685 PIN

0491685 241272 Pin AM

NOTE: (Locking pin)

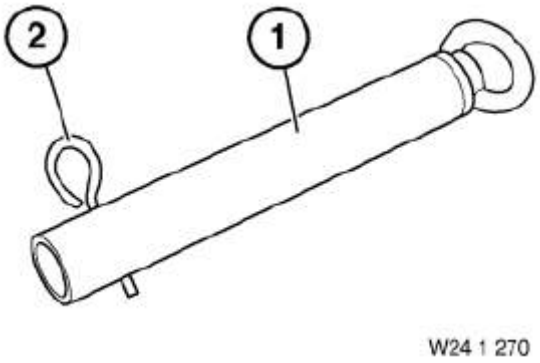

Fig. 140: Identifying Pin (0491685)
Courtesy of BMW OF NORTH AMERICA, INC.

0491763 PIN

0491763 245150 Pin Mechanical tool

NOTE: (centring pin with thread (2 pieces)) For centring the shifting device in the transmission when installing

Storage Location

Y3

SI number

cardiagn.com

01 03 90 (184)

Fig. 141: Identifying Pin (0491763)
Courtesy of BMW OF NORTH AMERICA, INC.

0496715 PIN

0496715 241430 Pin Mechanical tool

NOTE: **For fixing the mechatronics in position during installation.**

Storage Location

B54

SI number

01 17 09 (577)

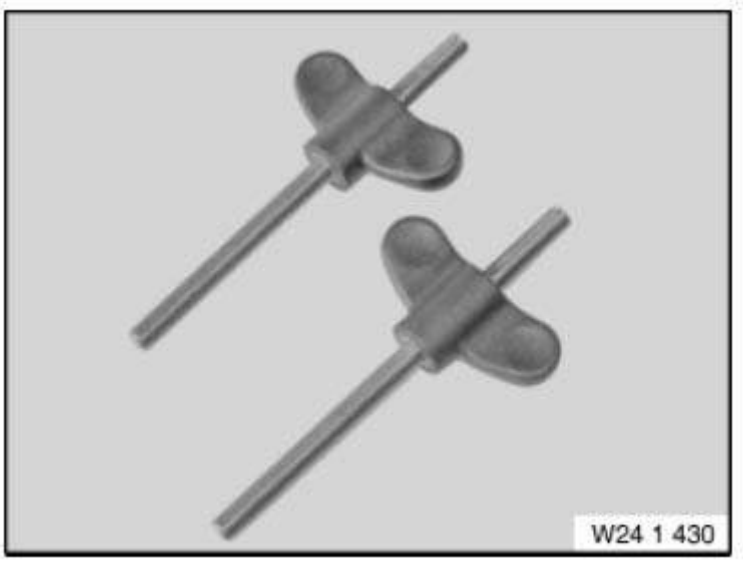

Fig. 142: Identifying Pin (0496715)
Courtesy of BMW OF NORTH AMERICA, INC.

0491764 PIN

0491764 245160 Pin Mechanical tool

NOTE: **(centring pin) For centring the main housing to the intermediate and converter housing (2 x)**

cardiagn.com

Storage Location

Y3

SI number

01 03 93 (663)

Fig. 143: Identifying Pin (0491764)
Courtesy of BMW OF NORTH AMERICA, INC.

0491760 PIN

0491760 245122 Pin AM

NOTE: **(Centring pin (3 pieces))**

Storage Location

X6

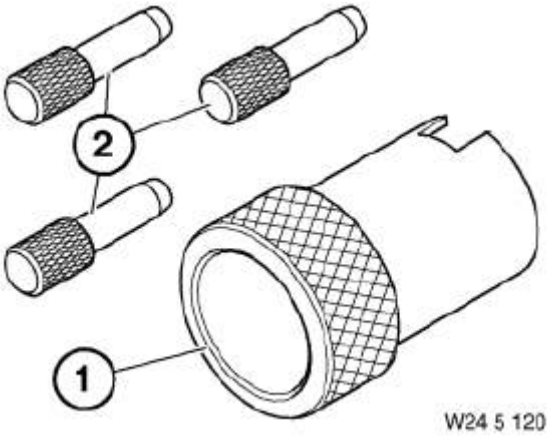

Fig. 144: Identifying Pin (0491760)
Courtesy of BMW OF NORTH AMERICA, INC.

0491670 PIN WRENCH

0491670 241170 Pin wrench Minimum set: Mechanical tools Mechanical tool

NOTE: **For loosening and tightening the slotted nut on the output flange**

Storage Location

A13

SI number

cardiagn.com

W24 1 170

Fig. 145: Identifying Pin Wrench (0491670)
Courtesy of BMW OF NORTH AMERICA, INC.

0494586 PIPE

0494586 241181 Pipe AM

NOTE: (Holding tube) discontinued, available as part of set of special tools only

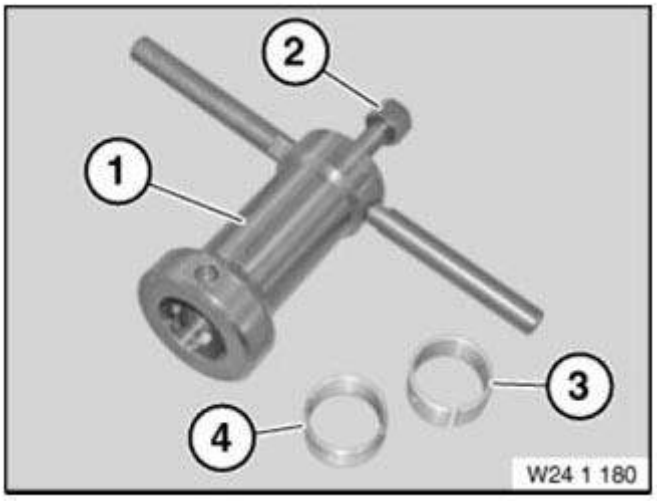

Fig. 146: Identifying Pipe (0494586)
Courtesy of BMW OF NORTH AMERICA, INC.

0491684 PIPE

0491684 241271 Pipe AM

NOTE: (Jack tube with ring bolt)

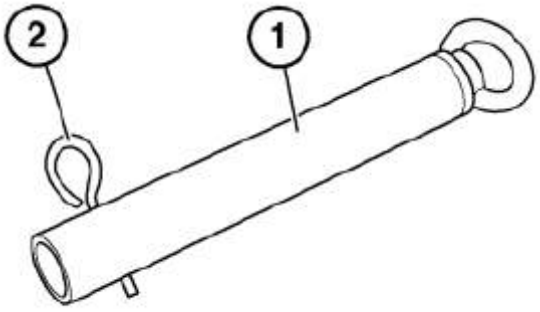

W24 1 270

Fig. 147: Identifying Pipe (0491684)

cardiagn.com

Courtesy of BMW OF NORTH AMERICA, INC.

0491650 PLATE

0491650 240160 Plate Mechanical tool

NOTE: (Engine fixture for BW 65) until January 84

0493180 PLATE

0493180 244136 Plate Minimum set: Mechanical tools AM

NOTE: (Counter-support plate) Can only be ordered as part of complete tool 41 1 180 = 0495959.

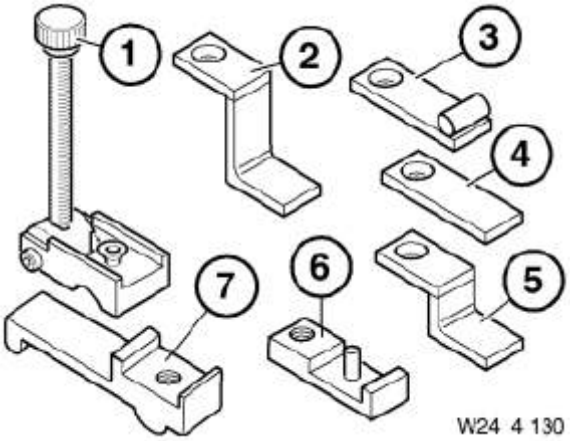

Fig. 148: Identifying Plate (0491650)
Courtesy of BMW OF NORTH AMERICA, INC.

0493157 PLATE

0493157 242311 Plate AM

NOTE: (Pressure plate) For removing and installing the spring cup

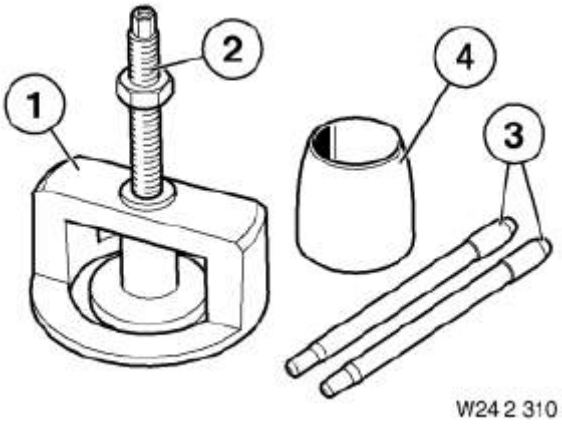

Fig. 149: Identifying Plate (0493157)
Courtesy of BMW OF NORTH AMERICA, INC.

0494142 PLIERS

0494142 241351 Pliers AM

Storage Location

cardiagn.com

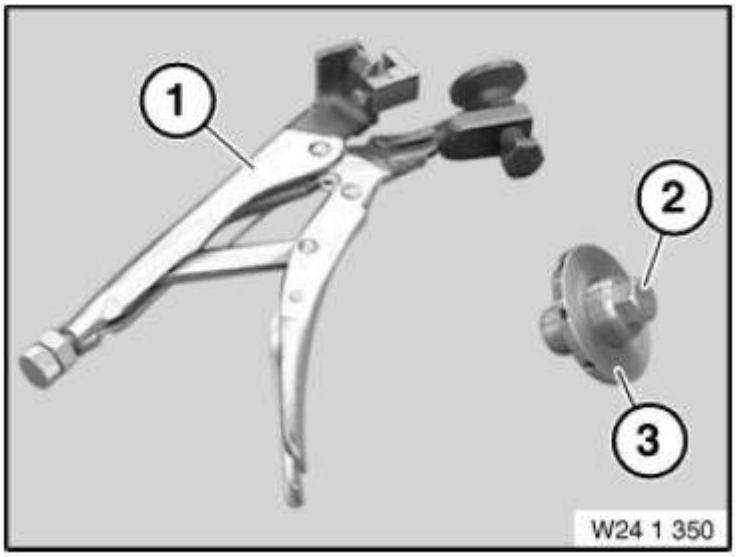

Fig. 150: Identifying Pliers (0494142)
Courtesy of BMW OF NORTH AMERICA, INC.

0496718 PULLER

0496718 245367 Puller Minimum set: Mechanical tools AM

In conjunction with: 24 5 362 = 0491783

NOTE: **For removing the radial shaft seal of the gearshift shaft from the gearbox housing.**

SI number

01 17 09 (577)

Fig. 151: Identifying Puller (0496718)
Courtesy of BMW OF NORTH AMERICA, INC.

0496716 PULLER

0496716 241420 Puller Minimum set: Mechanical tools AM

cardiagn.com

In conjunction with: 13 5 250 = 0493321

NOTE: **Removing radial shaft seal from torque converter.**

Storage Location

B54

SI number

01 17 09 (577)

Consisting of:

1. 2209493 Blade

NOTE: **Replacement blades for 24 1 420 Only available as part of complete tool set 24 1 420 (83 30 0 496 716).**

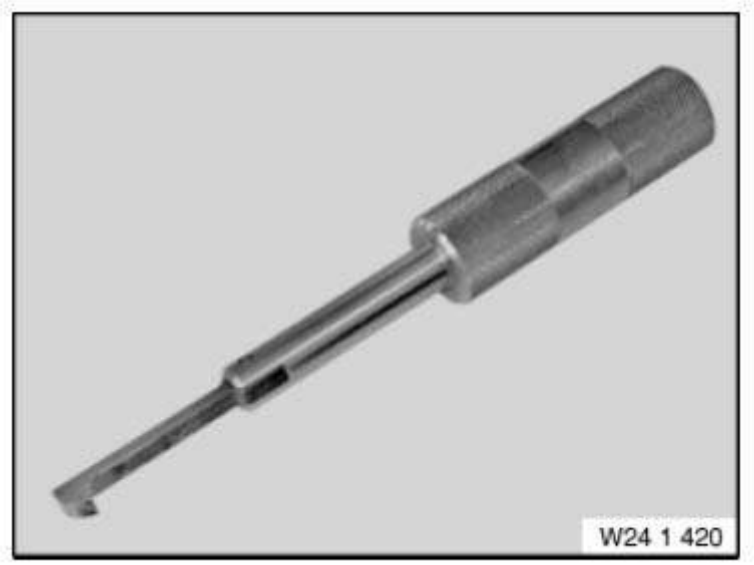

Fig. 152: Identifying Puller (0496716)
Courtesy of BMW OF NORTH AMERICA, INC.

0495602 PULLER

0495602 244390 Puller Minimum set: Mechanical tools Mechanical tool

NOTE: **For removing oil filter sealing ring.**

Storage Location

A23

SI number

01 02 07 (334)

cardiagn.com

Fig. 153: Identifying Puller (0495602)
Courtesy of BMW OF NORTH AMERICA, INC.

0491708 PULLER

0491708 243060 Puller Mechanical tool

0495496 PULLER

0495496 244320 Puller AM

NOTE: **For withdrawing output shaft seal (four-wheel drive).**

Storage Location

C23

SI number

01 02 07 (334)

Consisting of:

1. **0495569** Basic body

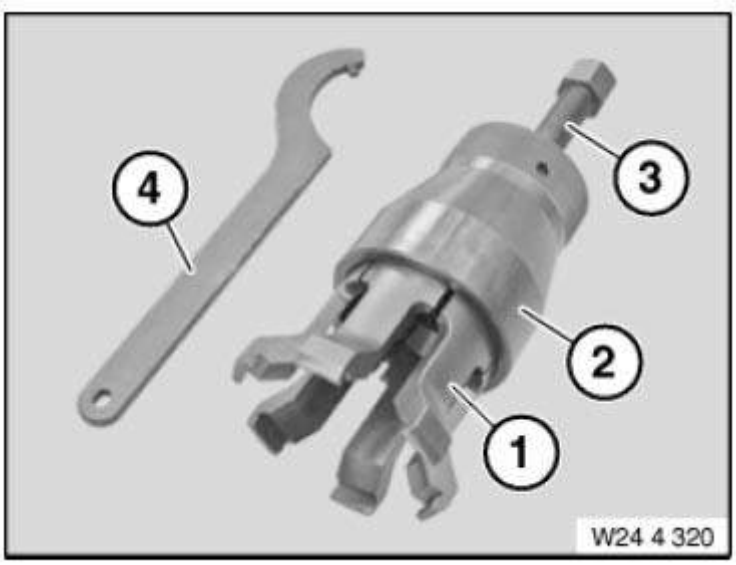

Fig. 154: Identifying Puller (0491708)
Courtesy of BMW OF NORTH AMERICA, INC.

2. **0495570** Ring

cardiagn.com

NOTE: **(Retaining ring)**

3. 0495571 Spindle
4. 0495572 Hook wrench

0495599 PULLER

0495599 244360 Puller Minimum set: Mechanical tools AM

NOTE: **For withdrawing output shaft seal (4x2).**

Storage Location

A24

SI number

01 02 07 (334)

Consisting of:

1. 0496113 Basic body

NOTE: **Discontinued, can only be ordered using complete tool**

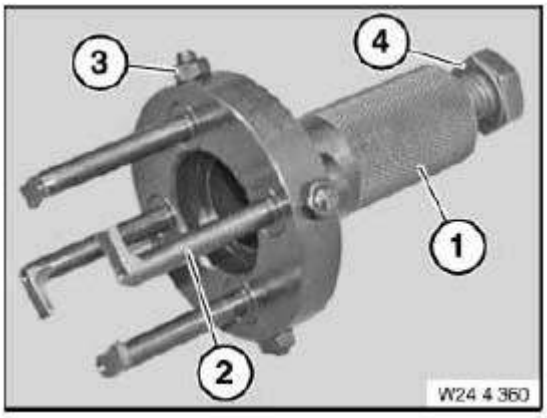

Fig. 155: Identifying Puller (0495599)
Courtesy of BMW OF NORTH AMERICA, INC.

2. 0496114 Claw

NOTE: **(Claw (4 units)) discontinued, available as part of set of special tools only**

3. 0496115 Screw

NOTE: **Discontinued, can only be ordered using complete tool**

4. 0496116 Spindle

0494202 PULLER

0494202 242351 Puller Minimum set: Mechanical tools AM

Storage Location

A46

cardiagn.com

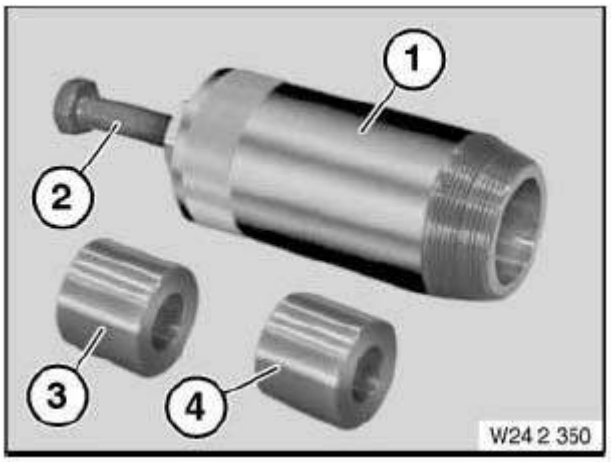

Fig. 156: Identifying Puller (0494202)
Courtesy of BMW OF NORTH AMERICA, INC.

0494201 PULLER

0494201 242350 Puller Minimum set: Mechanical tools AM

NOTE: **For extracting radial shaft seal on torque converter and on output flange**

Storage Location

A46

SI number

01 14 01 (766)

Consisting of:

1. 0494202 Puller
2. 0494203 Spindle

NOTE: **(Spindle M12 x 65 with ball head) discontinued, available as part of set of special tools only**

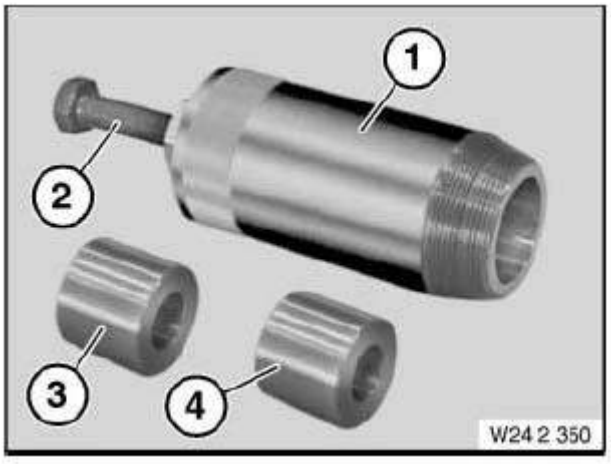

Fig. 157: Identifying Puller (0494201)
Courtesy of BMW OF NORTH AMERICA, INC.

3. 0494204 Synchronising key

cardiagn.com

4. 0495597 Synchronising key

NOTE: **Transmission: GA6L45R (GM6) Liquidation of existing inventory and then available only as a complete tool set 24 2 350 (83 30 0 494 201) - as of 06.06.2012.**

2355850 RELEASE TOOL

2355850 Release tool AM

NOTE: **For parking lock emergency release. Contour-graphic silhouette foil is included in delivery specification.**

Storage Location

A73

B73

SI number

01 54 13 (058)

Fig. 158: Identifying Release Tool (2355850)
Courtesy of BMW OF NORTH AMERICA, INC.

0491692 RELEASE TOOL

0491692 241310 Release tool AM

NOTE: **(release tool) For releasing the retaining tabs on the disc carrier C**

Storage Location

Y6

SI number

01 01 95 (892)

Consisting of:

1. 0494693 Shaped part

cardiagn.com

NOTE: **(Shaped part)**

2. **0494694** Basic body

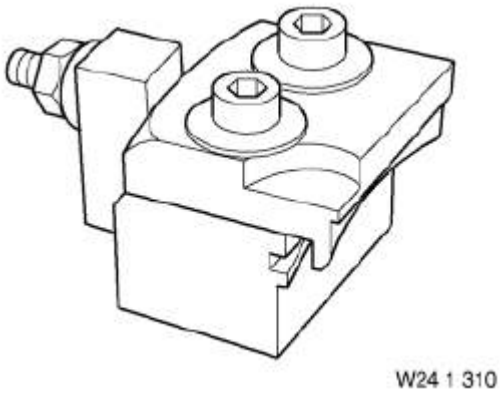

Fig. 159: Identifying Release Tool (0491692)
Courtesy of BMW OF NORTH AMERICA, INC.

0491771 RING

0491771 245230 Ring Minimum set: Mechanical tools Mechanical tool

NOTE: **(Assembly ring) For pressing in the radial seal of the gearshift shaft**

Storage Location

B3

SI number

01 04 91 (372)

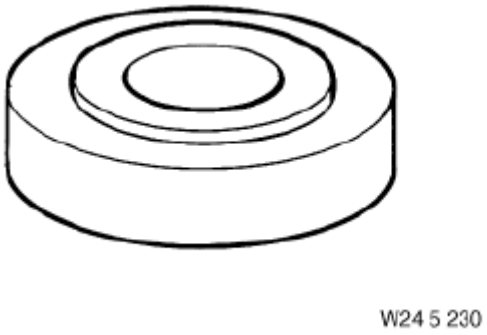

Fig. 160: Identifying Ring (0491771)
Courtesy of BMW OF NORTH AMERICA, INC.

0491631 RING

0491631 240042 Ring AM

cardiagn.com

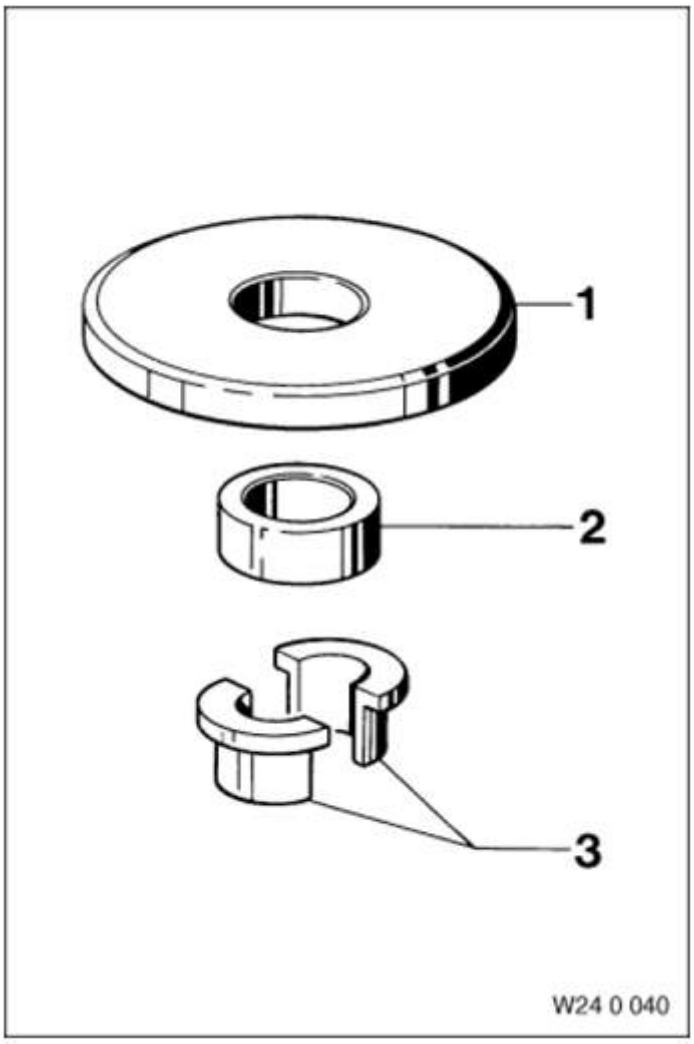

Fig. 161: Identifying Ring (0491631)
Courtesy of BMW OF NORTH AMERICA, INC.

0495570 RING

0495570 244322 Ring AM

NOTE: **(Retaining ring)**

Storage Location

C23

SI number

01 02 07 (334)

cardiagn.com

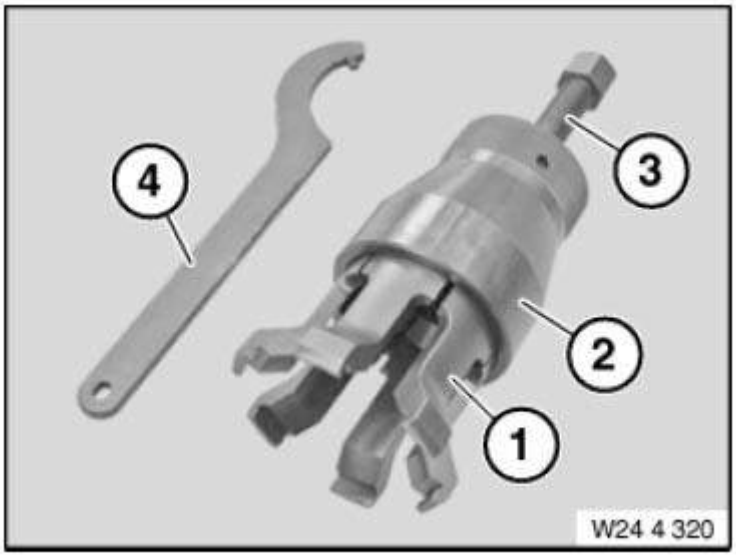

Fig. 162: Identifying Ring (0495570)
Courtesy of BMW OF NORTH AMERICA, INC.

0494589 RING

0494589 241183 Ring AM

NOTE: (Clamping ring) discontinued, available as part of set of special tools only

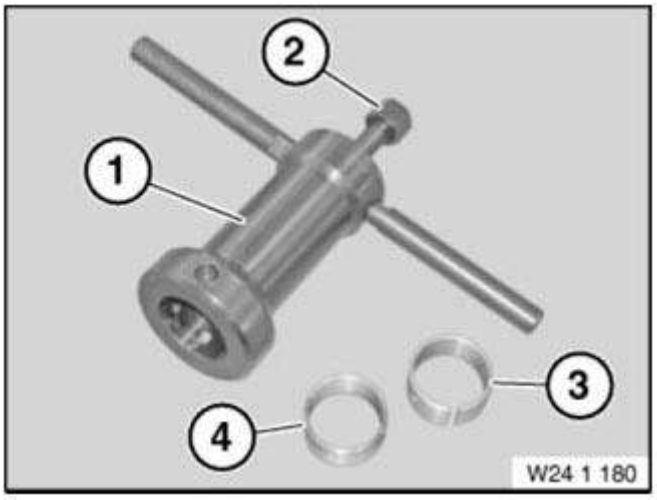

Fig. 163: Identifying Ring (0494589)
Courtesy of BMW OF NORTH AMERICA, INC.

0496375 RING

0496375 241184 Ring AM

NOTE: (Clamping ring) Gearbox: GA6HP19Z, GA6HP26Z Deletion, only available via tool set

Storage Location

C49

SI number

01 01 08 (421)

cardiagn.com

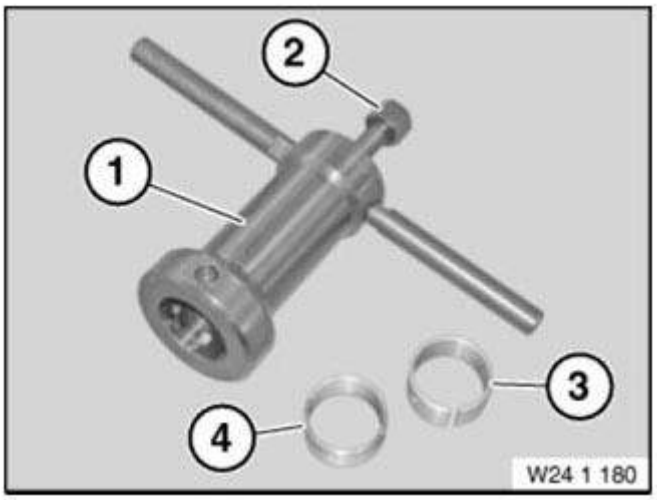

Fig. 164: Identifying Ring (0496375)
Courtesy of BMW OF NORTH AMERICA, INC.

0491702 RING SPANNER

0491702 242250 Ring spanner Mechanical tool

2297311 SCREW

2297311 Screw Minimum set: Mechanical tools Mechanical tool

NOTE: **Ring bolt for removing and installing the E-machine from the transmission bell housing.**

SI number

01 26 11 (763)

Fig. 165: Identifying Ring Spanner (0491702)
Courtesy of BMW OF NORTH AMERICA, INC.

0491623 SCREW

0491623 240025 Screw Minimum set: Mechanical tools AM

NOTE: **(Connection) Banjo bolt M20x1.5 - M18x1.5/For checking the converter pressure/transmission: 3 HP 12 Deletion, only available via tool set**

cardiagn.com

Storage Location

C3

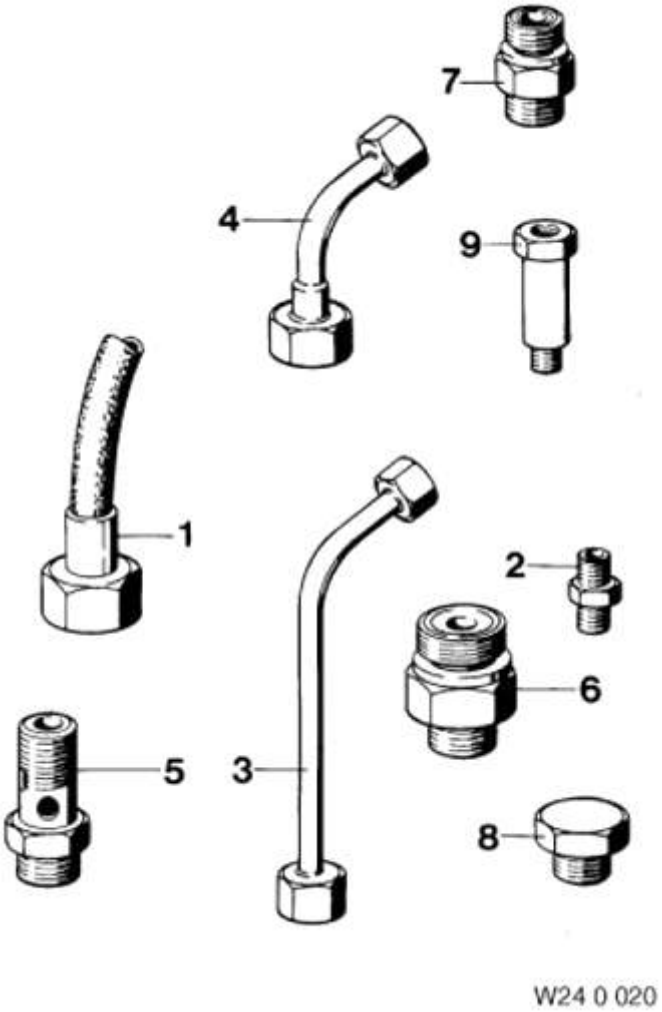

Fig. 166: Identifying Screw (0491623)
Courtesy of BMW OF NORTH AMERICA, INC.

0491718 SCREW

0491718 244042 Screw AM

NOTE: **(Retaining screws (2 x)) Transmission: 3 HP 12**

Storage Location

X6

cardiagn.com

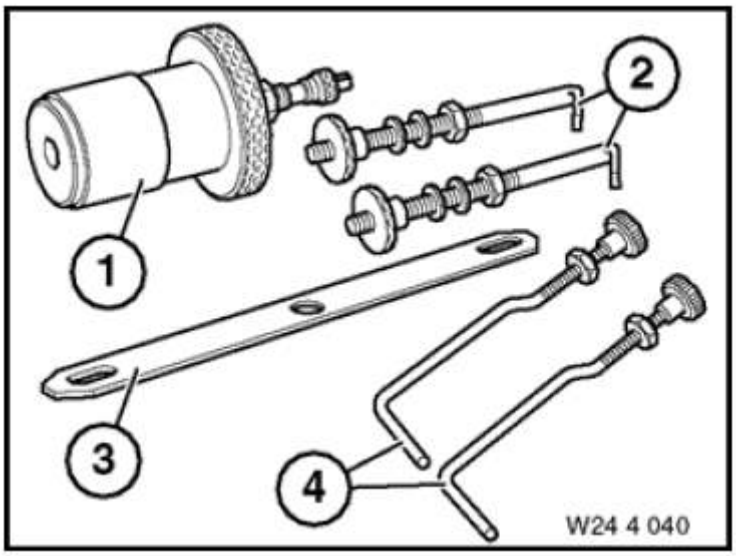

Fig. 167: Identifying Screw (0491718)
Courtesy of BMW OF NORTH AMERICA, INC.

0491720 SCREW

0491720 244044 Screw AM

NOTE: **(Retaining screws (2 x)) for torque converter/transmission: 4 HP 24, A4S 270R, A4S 310R**

Storage Location

X6

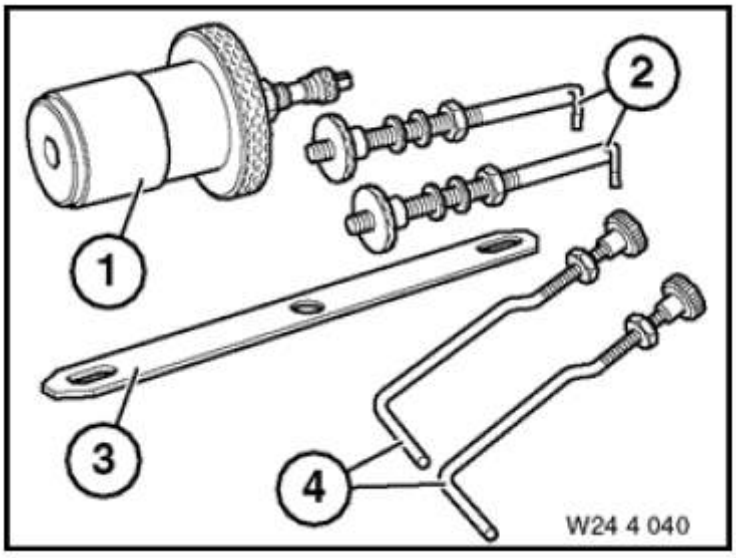

Fig. 168: Identifying Screw (0491720)
Courtesy of BMW OF NORTH AMERICA, INC.

0493258 SCREW

0493258 240171 Screw AM

Replaced by: 83300495498

NOTE: **(Adjusting screw) Discontinuation and replaced by 23 4 050 (0 495 498)**

cardiagn.com

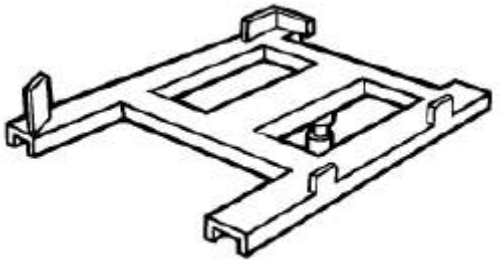

W 24 0 170

Fig. 169: Identifying Screw (0493258)
Courtesy of BMW OF NORTH AMERICA, INC.

0491724 SCREW

0491724 244062 Screw AM

NOTE: **(Mounting bolt (2 pieces))**

Storage Location

X6

0491626 SCREW

0491626 240028 Screw Minimum set: Mechanical tools AM

NOTE: **(Screw) M18x1.5/For closing the engine oil feed pipe when checking the converter pressure/transmission: 3 HP 20 Deletion, only available via tool set**

Storage Location

C3

cardiagn.com

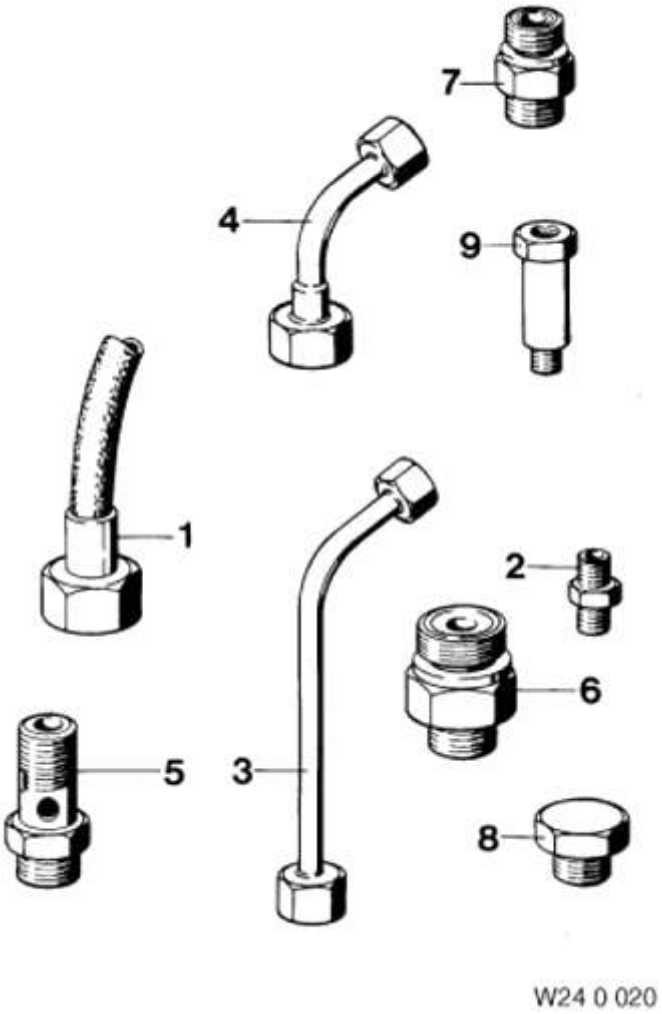

Fig. 170: Identifying Screw (0491724)
Courtesy of BMW OF NORTH AMERICA, INC.

0496115 SCREW

0496115 244363 Screw Minimum set: Mechanical tools AM

NOTE: **Discontinued, can only be ordered using complete tool**

SI number

01 02 07 (334)

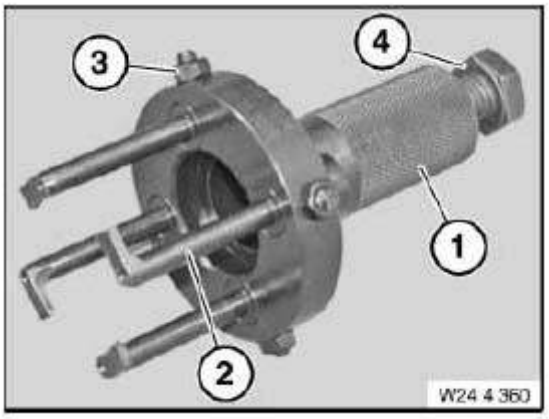

Fig. 171: Identifying Screw (0496115)
Courtesy of BMW OF NORTH AMERICA, INC.

cardiagn.com

0494622 SHAPED ELEMENT

0494622 244164 Shaped element Minimum set: Mechanical tools AM

NOTE: **For converter variant M54 Deletion, only available via tool set**

Storage Location

C46

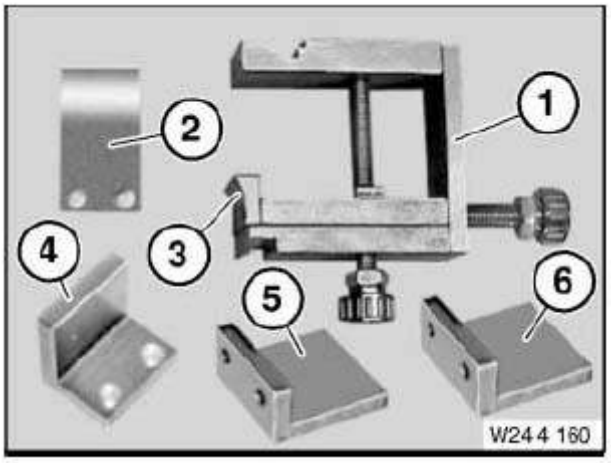

Fig. 172: Identifying Shaped Element (0494622)
Courtesy of BMW OF NORTH AMERICA, INC.

0496061 SHAPED ELEMENT

0496061 244166 Shaped element Minimum set: Mechanical tools AM

NOTE: **Transmission: GA6L45R (GM6) in E83/N52K Deletion, only available via tool set**

Storage Location

C46

SI number

01 02 07 (334)

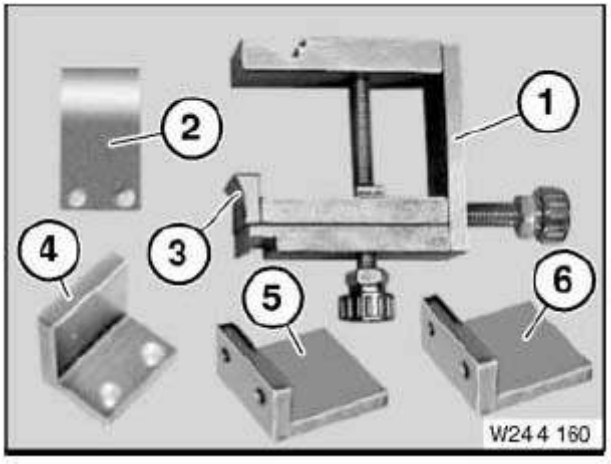

Fig. 173: Identifying Shaped Element (0496061)
Courtesy of BMW OF NORTH AMERICA, INC.

0494477 SHAPED ELEMENT

cardiagn.com

0494477 244163 Shaped element Minimum set: Mechanical tools AM

NOTE: **For converter variant M57TU Deletion, only available via tool set**

Storage Location

C46

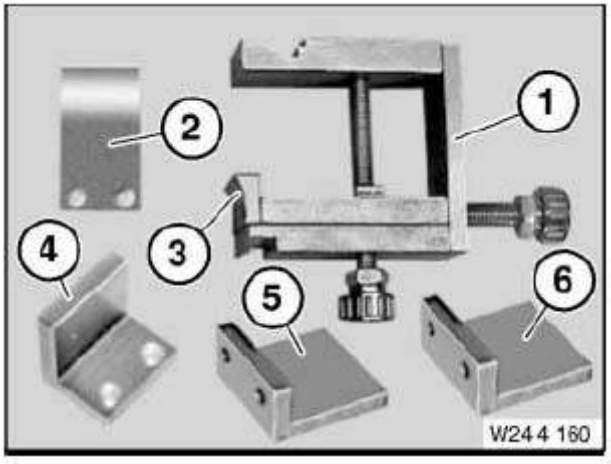

Fig. 174: Identifying Shaped Element (0494477)
Courtesy of BMW OF NORTH AMERICA, INC.

0494479 SHAPED ELEMENT

0494479 244162 Shaped element Minimum set: Mechanical tools AM

NOTE: **For converter version N73 discontinued, available as part of set of special tools only**

Storage Location

C46

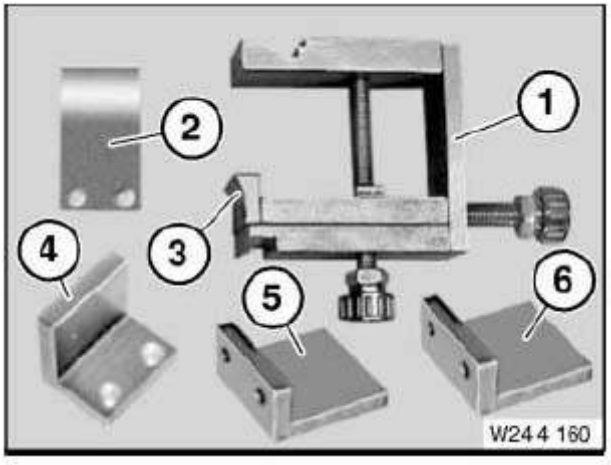

Fig. 175: Identifying Shaped Element (0494479)
Courtesy of BMW OF NORTH AMERICA, INC.

0494965 SHAPED ELEMENT

0494965 244165 Shaped element Minimum set: Mechanical tools AM

NOTE: **Transmission: GA6 HP19 in E87, E90 Deletion, only available via tool set**

cardiagn.com

Storage Location

C46

SI number

01 15 04 (117)

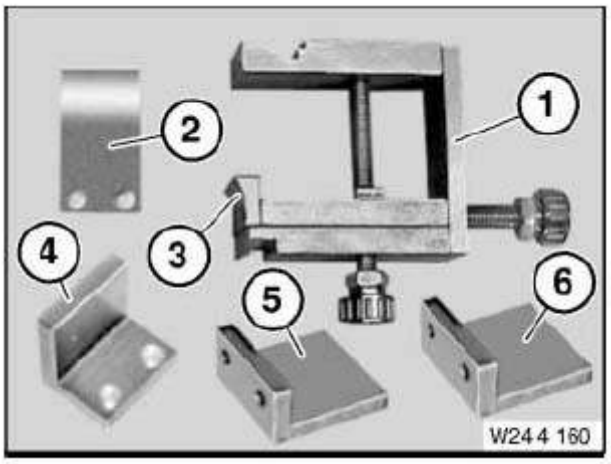

Fig. 176: Identifying Shaped Element (0494965)
Courtesy of BMW OF NORTH AMERICA, INC.

0491645 SHAPED PART

0491645 240151 Shaped part AM

NOTE: **(Shaped part) For mounting the transmission/transmissions: A5S 310Z**

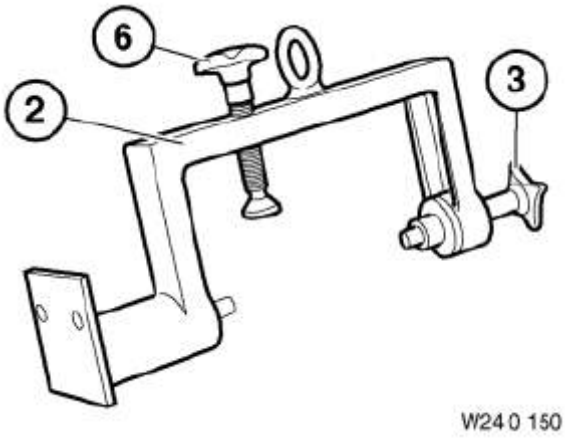

Fig. 177: Identifying Shaped Part (0491645)
Courtesy of BMW OF NORTH AMERICA, INC.

0494693 SHAPED PART

0494693 241311 Shaped part AM

NOTE: **(Shaped part)**

cardiagn.com

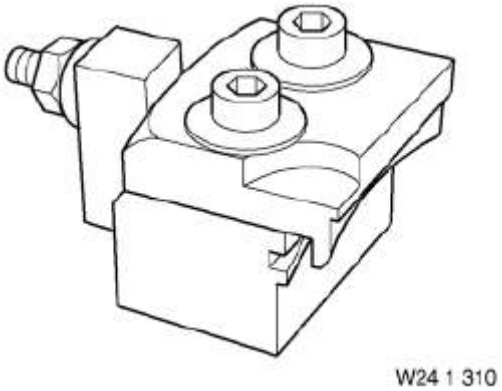

Fig. 178: Identifying Shaped Part (0494693)
Courtesy of BMW OF NORTH AMERICA, INC.

0495491 SHAPED PART

0495491 240204 Shaped part AM

NOTE: **(Shaped part)**

SI number

01 27 06 (328)

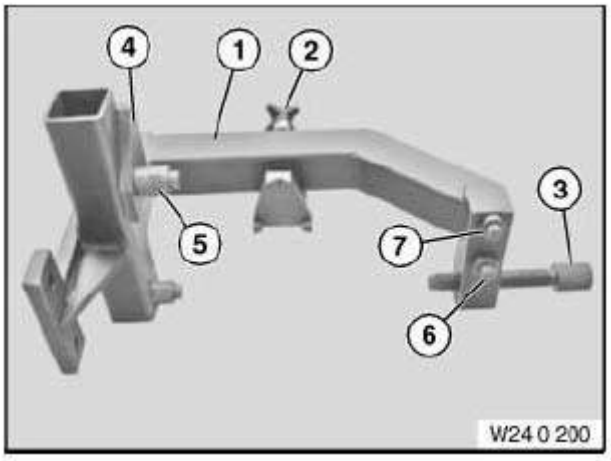

Fig. 179: Identifying Shaped Part (0495491)
Courtesy of BMW OF NORTH AMERICA, INC.

0491632 SHELL

0491632 240043 Shell AM

NOTE: **(Bearing shell) 2 pieces**

cardiagn.com

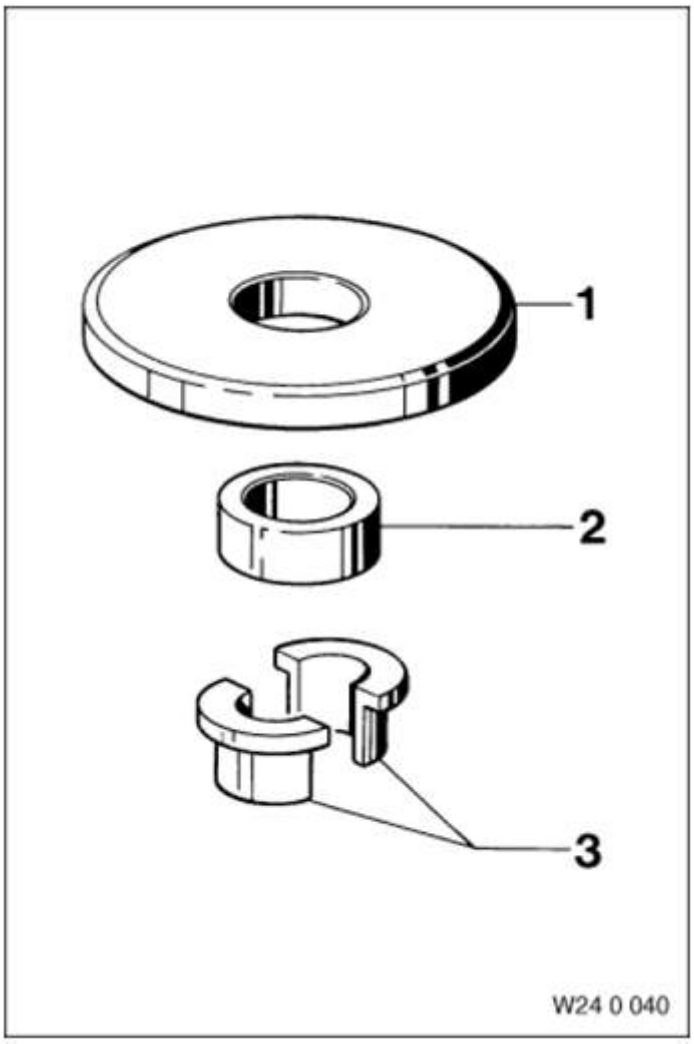

Fig. 180: Identifying Shell (0491632)
Courtesy of BMW OF NORTH AMERICA, INC.

0494212 SOCKET WAF 46

0494212 242380 Socket WAF 46 Minimum set: Mechanical tools Mechanical tool

NOTE: **(Socket AF 34) Double hex head for releasing and tightening the nuts on the output flange.**

Storage Location

B44

SI number

01 14 01 (766)

cardiagn.com

Fig. 181: Identifying Socket WAF 46 (0494212)
Courtesy of BMW OF NORTH AMERICA, INC.

0495598 SOCKET WAF 46

0495598 244350 Socket WAF 46 Minimum set: Mechanical tools Mechanical tool

NOTE: **(Socket with special Torx profile) For releasing and tightening down screw connection of Mechatronic.**

Storage Location

A23

SI number

01 02 07 (334)

Fig. 182: Identifying Socket WAF 46 (0495598)
Courtesy of BMW OF NORTH AMERICA, INC.

0493114 SOCKET WRENCH

0493114 242320 Socket wrench Mechanical tool

NOTE: **For hexagon socket screw 3/16" with 1/4" drive for adjusting the brake band**

SI number

01 24 97 (257)

cardiagn.com

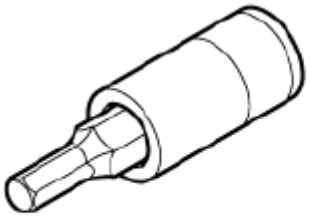

W24 2 320

Fig. 183: Identifying Socket Wrench (0493114)
Courtesy of BMW OF NORTH AMERICA, INC.

0491712 SOCKET WRENCH INSERT

0491712 243260 Socket wrench insert Mechanical tool

0491667 SOCKET WRENCH INSERT

0491667 241110 Socket wrench insert Minimum set: Mechanical tools Mechanical tool

NOTE: **Loosening and fastening the converter fastener**

Storage Location

A11

SI number

01 04 86 (566)

W24 1 110

Fig. 184: Identifying Socket Wrench Insert (0491712)
Courtesy of BMW OF NORTH AMERICA, INC.

0491703 SOCKET WRENCH INSERT

0491703 242260 Socket wrench insert Mechanical tool

0495571 SPINDLE

0495571 244323 Spindle AM

Storage Location

C23

SI number

01 02 07 (334)

cardiagn.com

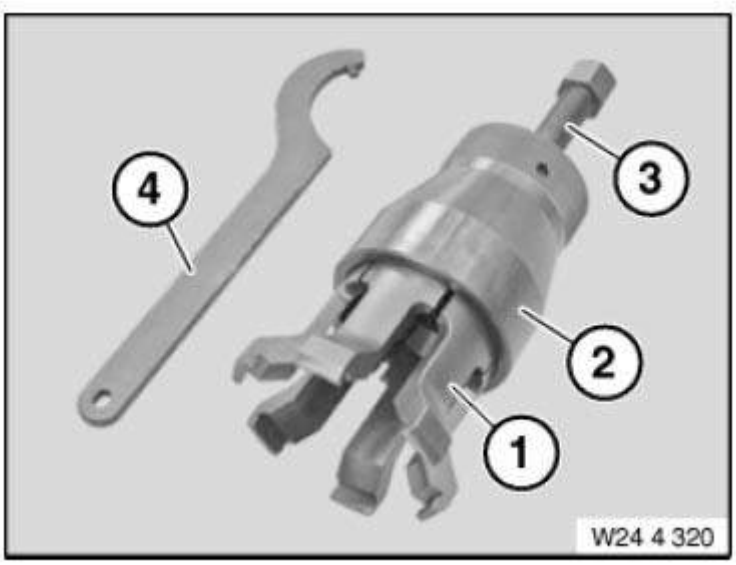

Fig. 185: Identifying Socket Wrench Insert (0491703)
Courtesy of BMW OF NORTH AMERICA, INC.

0491655 SPINDLE

0491655 240183 Spindle AM

Replaced by: 83300491656

NOTE: **Replaced by 24 0 184 (0 491 656)**

0493913 SPINDLE

0493913 240156 Spindle AM

NOTE: **With synchronising key, transmission: All**

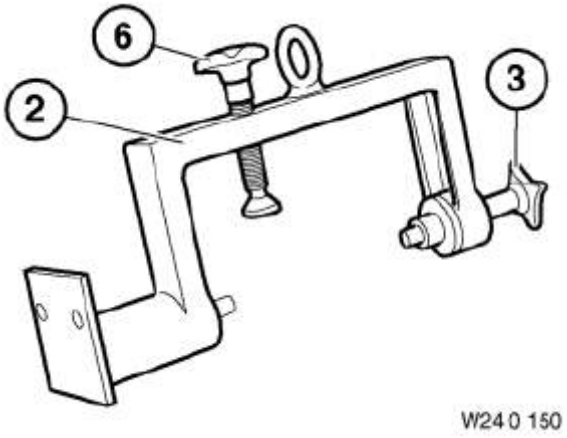

Fig. 186: Identifying Spindle (0491655)
Courtesy of BMW OF NORTH AMERICA, INC.

0491681 SPINDLE

0491681 241262 Spindle AM

NOTE: **(Spindle with knurled nut) Discontinued as of 10/2010**

Storage Location

cardiagn.com

Y5

Y6

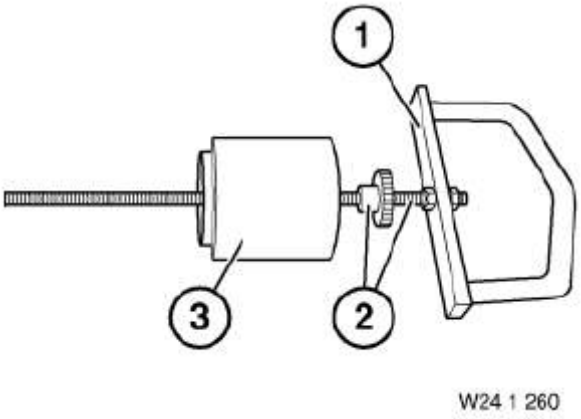

Fig. 187: Identifying Spindle (0491681)
Courtesy of BMW OF NORTH AMERICA, INC.

0495489 SPINDLE

0495489 240202 Spindle AM

NOTE: **(Spindle with thrust piece) Discontinued, only available via tool set**

SI number

01 27 06 (328)

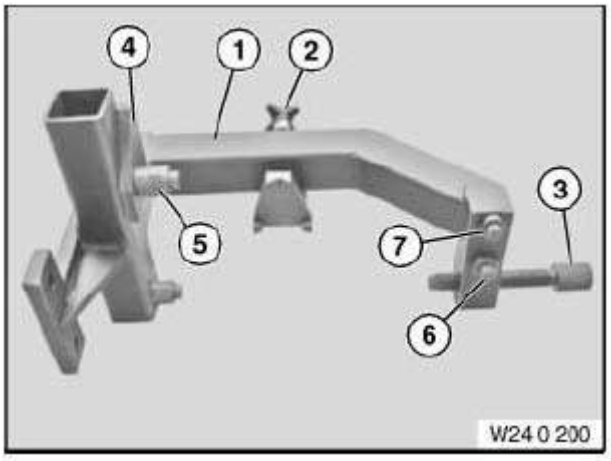

Fig. 188: Identifying Spindle (0495489)
Courtesy of BMW OF NORTH AMERICA, INC.

0494588 SPINDLE

0494588 241182 Spindle AM

NOTE: **(Threaded spindle) Deletion, only available via tool set**

cardiagn.com

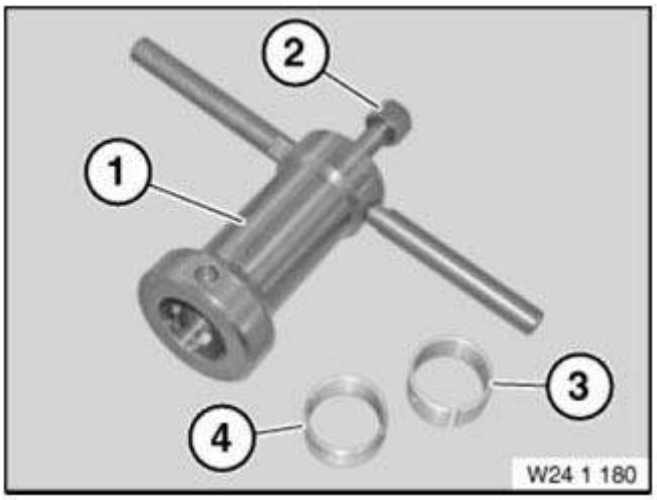

Fig. 189: Identifying Spindle (0494588)
Courtesy of BMW OF NORTH AMERICA, INC.

0493158 SPINDLE

0493158 242312 Spindle AM

NOTE: (Spindle with pressure plate) Spindle M14x1.5, nut M14, pressure plate and washer/For removing and installing the spring cup

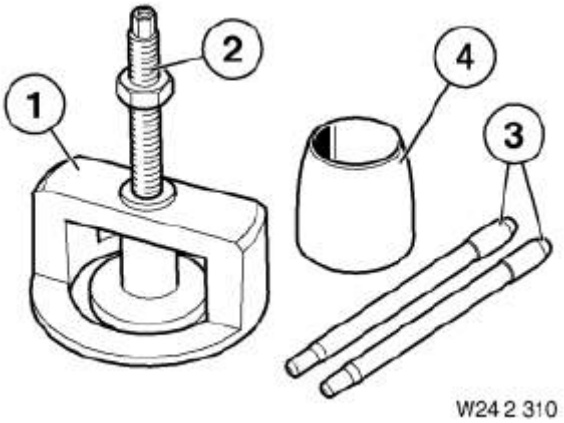

Fig. 190: Identifying Spindle (0493158)
Courtesy of BMW OF NORTH AMERICA, INC.

0491647 SPINDLE

0491647 240153 Spindle AM

NOTE: (Spindle with rotary handle)

cardiagn.com

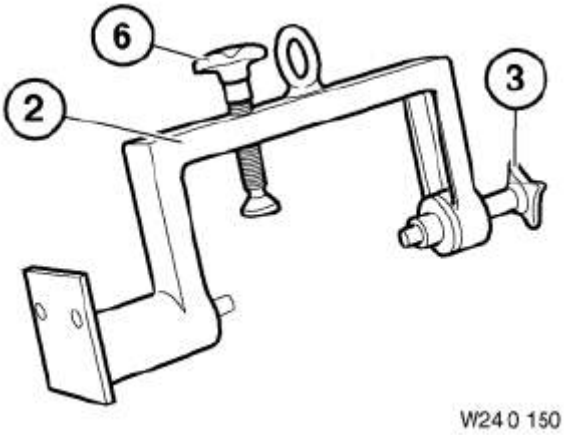

Fig. 191: Identifying Spindle (0491647)
Courtesy of BMW OF NORTH AMERICA, INC.

0495490 SPINDLE

0495490 240203 Spindle AM

NOTE: **(Spindle with screw) Deletion, only available via tool set**

SI number

01 27 06 (328)

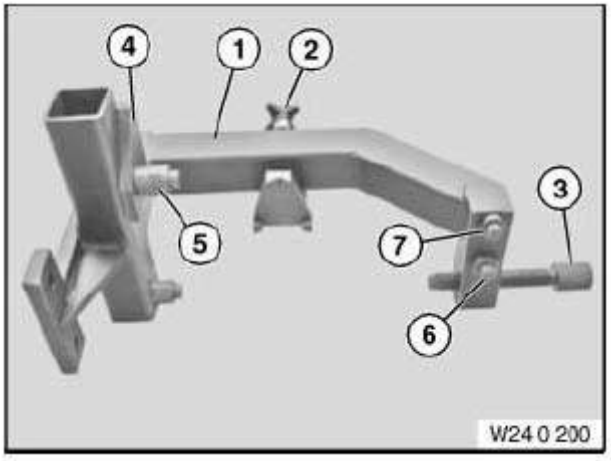

Fig. 192: Identifying Spindle (0495490)
Courtesy of BMW OF NORTH AMERICA, INC.

0491656 SPINDLE

0491656 240184 Spindle AM

NOTE: **(spindle, long (2 pieces))**

cardiagn.com

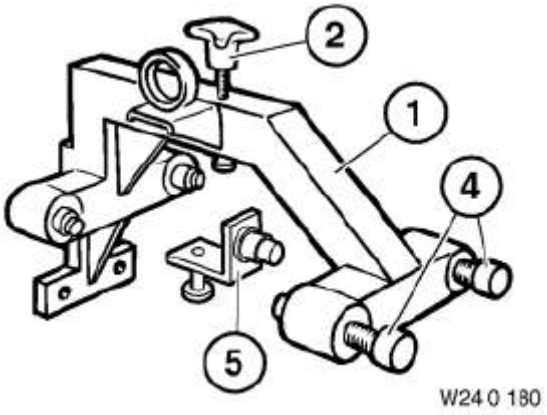

Fig. 193: Identifying Spindle (0491656)
Courtesy of BMW OF NORTH AMERICA, INC.

0496116 SPINDLE

0496116 244364 Spindle Minimum set: Mechanical tools AM

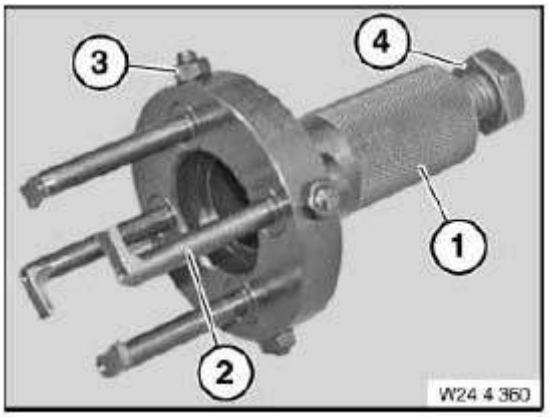

Fig. 194: Identifying Spindle (0496116)
Courtesy of BMW OF NORTH AMERICA, INC.

0491654 SPINDLE

0491654 240182 Spindle AM

NOTE: (Pressure spindle with star handle)

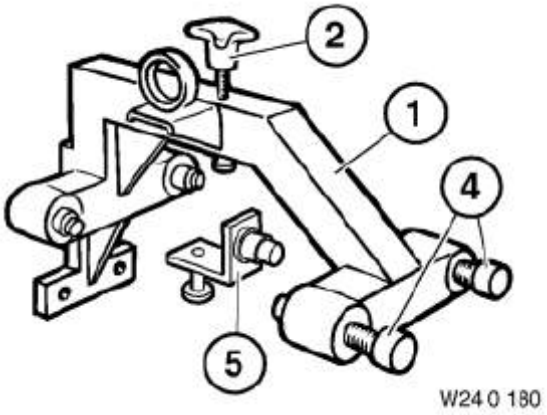

Fig. 195: Identifying Spindle (0491654)
Courtesy of BMW OF NORTH AMERICA, INC.

cardiagn.com

0494203 SPINDLE

0494203 242352 Spindle Minimum set: Mechanical tools AM

NOTE: **(Spindle M12 x 65 with ball head) discontinued, available as part of set of special tools only**

Storage Location

A46

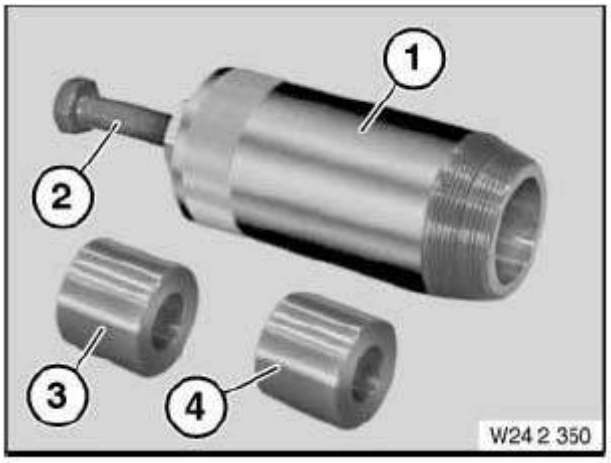

Fig. 196: Identifying Spindle (0494203)
Courtesy of BMW OF NORTH AMERICA, INC.

0494204 SYNCHRONISING KEY

0494204 242353 Synchronising key Minimum set: Mechanical tools AM

Storage Location

A46

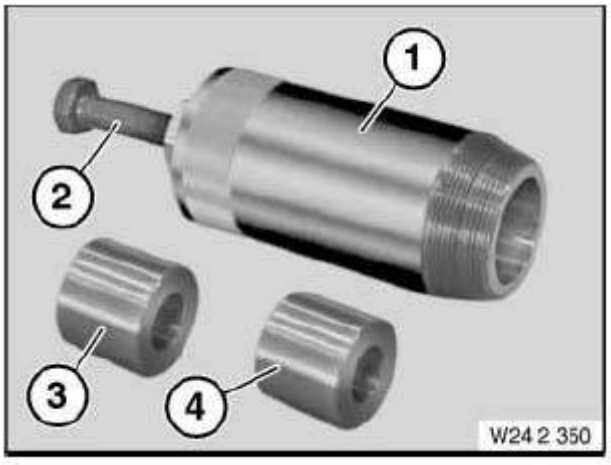

Fig. 197: Identifying Synchronising Key (0494204)
Courtesy of BMW OF NORTH AMERICA, INC.

0495597 SYNCHRONISING KEY

0495597 242354 Synchronising key Minimum set: Mechanical tools AM

NOTE: **Transmission: GA6L45R (GM6) Liquidation of existing inventory and then available only as a complete tool set 24 2 350 (83 30 0 494 201) - as of**

cardiagn.com

06.06.2012.

Storage Location

A46

SI number

01 02 07 (334)

Fig. 198: Identifying Synchronising Key (0495597)
Courtesy of BMW OF NORTH AMERICA, INC.

0491617 TERMINAL

0491617 240012 Terminal AM

NOTE: **(Terminal)**

cardiagn.com

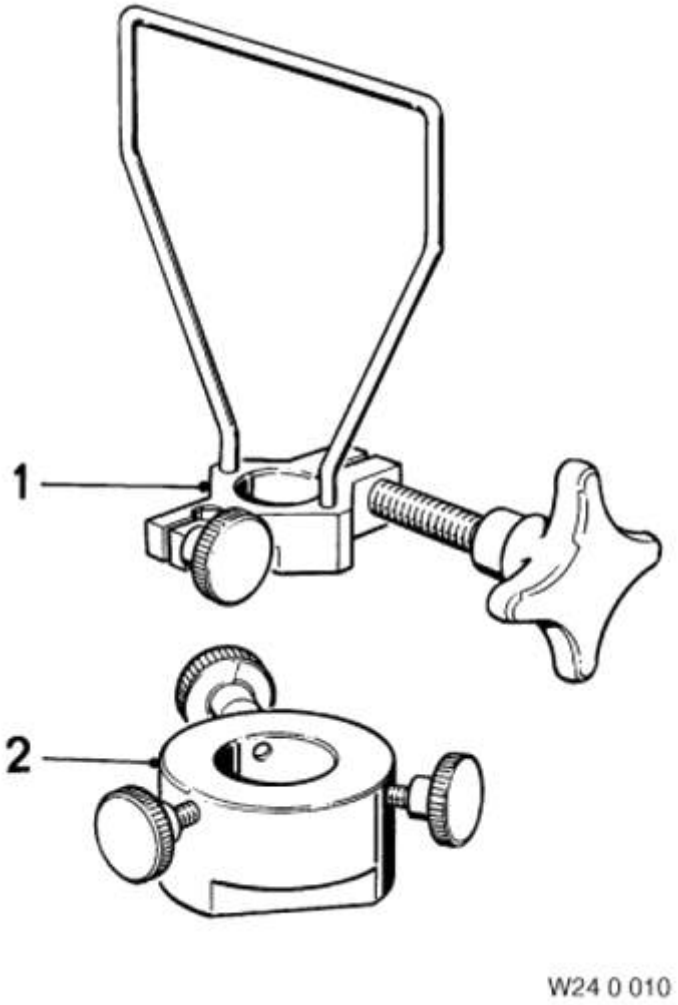

Fig. 199: Identifying Terminal (0491617)
Courtesy of BMW OF NORTH AMERICA, INC.

0491796 TEST CABLE

0491796 246050 Test cable Mechanical tool

NOTE: **(Test cable, 10-pin) For Jatco gearbox (AMP plug connection)**

Storage Location

Y1

SI number

02 01 93 (649)

0491795 TEST CABLE

0491795 246040 Test cable Mechanical tool

NOTE: **(Test cable 48-pin) For Jatco transmission (German plug connection)**

Storage Location

W 2..

0491790 TEST CABLE

0491790 246000 Test cable Mechanical tool

cardiagn.com

NOTE: **(Test cable, 8-pin) For automatic transmission (EH gearbox)**

Storage Location

Y1

SI number

02 03 91 (313)

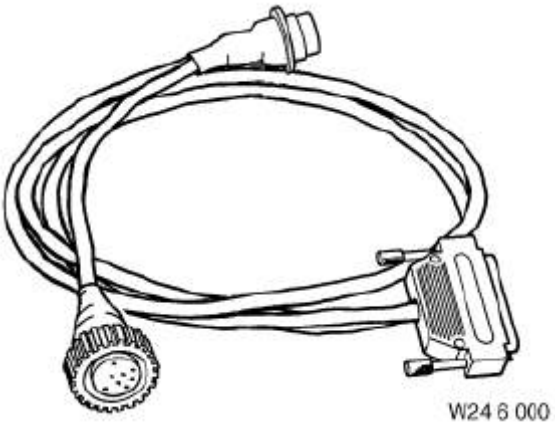

Fig. 200: Identifying Test Cable (0491796)
Courtesy of BMW OF NORTH AMERICA, INC.

0493654 TEST CABLE

0493654 246070 Test cable Mechanical tool

NOTE: **(Test cable, 20-pin) For automatic transmission GM5**

Storage Location

Y1

SI number

02 01 99 (468)

0491791 TEST CABLE

0491791 246010 Test cable Mechanical tool

NOTE: **(Test cable, 9-pin) For automatic transmission (EH gearbox)**

Storage Location

Y1

SI number

02 03 91 (313)

cardiagn.com

Fig. 201: Identifying Test Cable (0493654)
Courtesy of BMW OF NORTH AMERICA, INC.

0491797 TEST CABLE

0491797 246060 Test cable Mechanical tool

NOTE: **(Test cable, 16-pin) For automatic transmission (EH gearbox)**

Storage Location

Y1

SI number

02 02 93 (650)

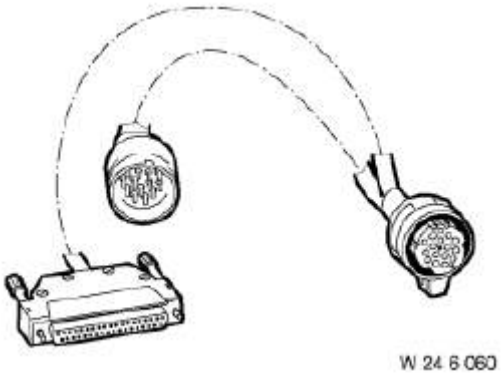

Fig. 202: Identifying Test Cable (0491797)
Courtesy of BMW OF NORTH AMERICA, INC.

0494137 TEST CABLE

0494137 246080 Test cable MP

NOTE: **(test cable 16-pin)**

Storage Location

L202

SI number

02 06 01 (763)

cardiagn.com

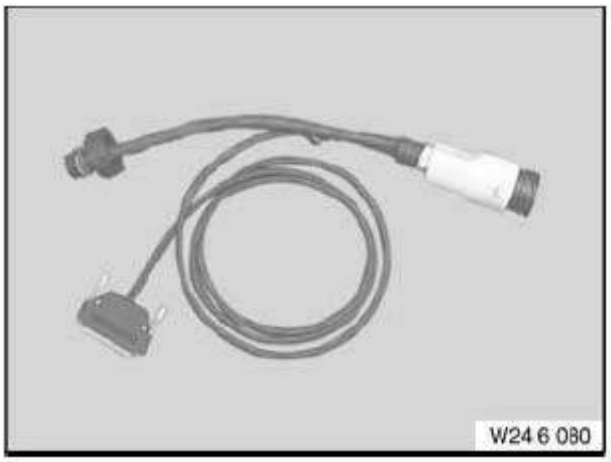

Fig. 203: Identifying Test Cable (0494137)
Courtesy of BMW OF NORTH AMERICA, INC.

0491794 TEST CABLE

0491794 246030 Test cable Mechanical tool

NOTE: **(Test cable, 10-pin) for Jatco transmission (German plug connection)**

0491792 TEST CABLE

0491792 246020 Test cable AM

NOTE: **(Test cable, 14-pin) For automatic transmission (EH gearbox)**

Storage Location

Y1

SI number

00 02 99 (399)

Consisting of:

5 = **0491793** Operating instructions

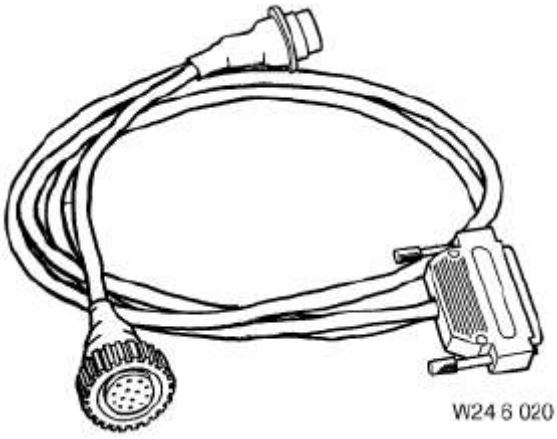

Fig. 204: Identifying Test Cable (0491794)
Courtesy of BMW OF NORTH AMERICA, INC.

0491691 TOOL

cardiagn.com

0491691 241300 Tool Mechanical tool

NOTE: **(Striking tool) For securing the retaining tabs on disc carrier C**

Storage Location

X5

SI number

01 01 95 (892)

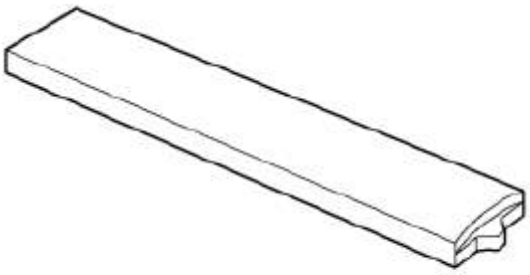

Fig. 205: Identifying Tool (0491691)
Courtesy of BMW OF NORTH AMERICA, INC.

0491694 TOOL

0491694 242020 Tool Mechanical tool

NOTE: **For squeezing the disc spring**

Storage Location

X5

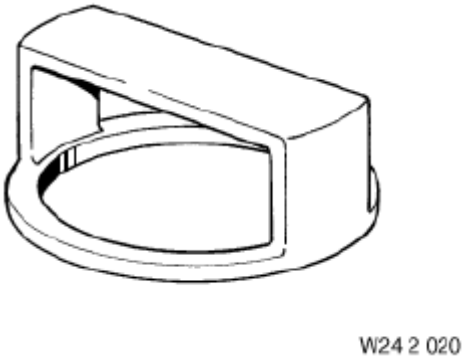

Fig. 206: Identifying Tool (0491694)
Courtesy of BMW OF NORTH AMERICA, INC.

0491758 TOOL

0491758 245120 Tool AM

NOTE: **For centring the converter housing relative to the oil pump when mounting**

Storage Location

X6

cardiagn.com

SI number

01 04 95 (906)

Consisting of:

1. 0491759 Bush

   NOTE: **(Centring bush) Discontinued, can only be ordered as part of complete tool 11 4 200 = 0491020.**

2. 0491760 Pin

   NOTE: **(Centring pin (3 pieces))**

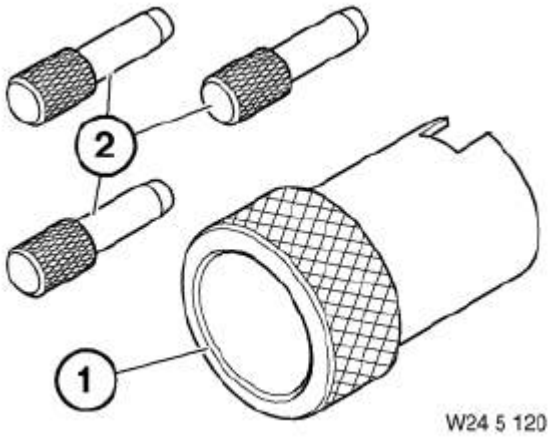

Fig. 207: Identifying Tool (0491758)
Courtesy of BMW OF NORTH AMERICA, INC.

0491696 TOOL

0491696 242040 Tool Mechanical tool

NOTE: **For squeezing the disc spring**

Storage Location

X6

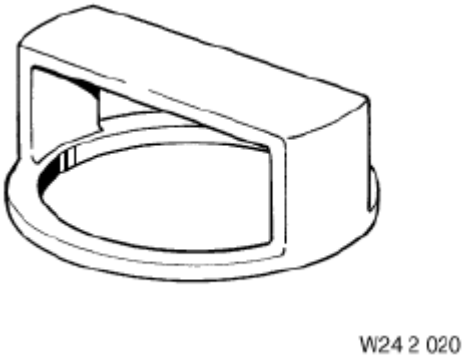

Fig. 208: Identifying Tool (0491696)
Courtesy of BMW OF NORTH AMERICA, INC.

0491695 TOOL

0491695 242030 Tool Mechanical tool

cardiagn.com

NOTE: **For squeezing the disc spring**

Storage Location

X5

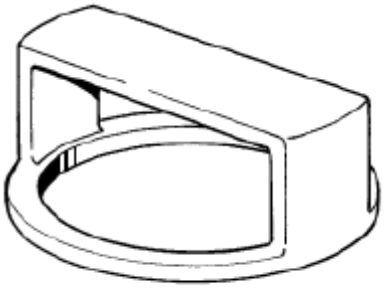

Fig. 209: Identifying Tool (0491695)
Courtesy of BMW OF NORTH AMERICA, INC.

0491731 TOOL

0491731 244130 Tool Minimum set: Mechanical tools AM

NOTE: **(Locating tool) For firmly holding torque converter during removal and installation of gearbox**

Storage Location

C6

SI number

01 05 97 (181)

Consisting of:

7 = 0493804 Blade

NOTE: **Transmission: A5S 360R discontinued, available as part of set of special tools only**

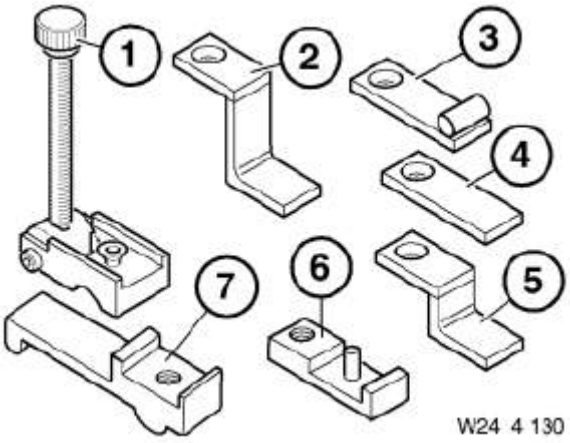

Fig. 210: Identifying Tool (0491731)
Courtesy of BMW OF NORTH AMERICA, INC.

cardiagn.com

1 = 0491732 Basic body

NOTE: **(Basic body)**

2 = 0491733 Blade

NOTE: **Transmission: A5S 440Z, GA6HP26Z (N62) discontinued, available as part of set of special tools only**

3 = 0491734 Blade

NOTE: **(Blade) Gearbox: A4S 310R and A5S 390G Deletion, only available via tool set**

4 = 0491735 Blade

NOTE: **Transmission: A5S 310Z, A5S 560Z, A5S 300J and A5S 325Z Deletion, only available via tool set**

5 = 0491736 Blade

NOTE: **Transmission: A5S 560Z, GA6 HP26Z (M67), GA6 HP32Z (N73) Deletion, only available via tool set**

6 = 0493180 Plate

NOTE: **(Counter-support plate) Can only be ordered as part of complete tool 41 1 180 = 0495959.**

8 = 0496742 Blade

NOTE: **For securing converter during removal and installation of transmission. Discontinued, can only be ordered using complete tool**
In conjunction with: 24 4 131 = 0491732

0494592 USE

0494592 245261 Use Minimum set: Mechanical tools AM

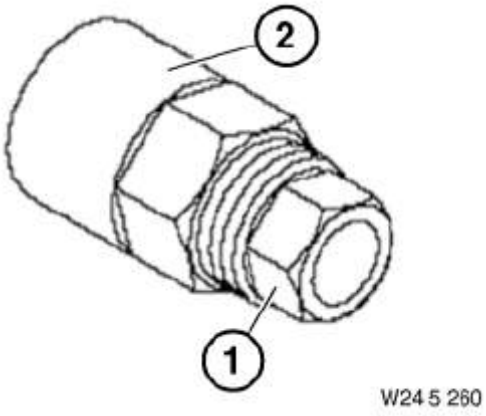

Fig. 211: Identifying Use (0494592)
Courtesy of BMW OF NORTH AMERICA, INC.

0491630 WASHER

0491630 240041 Washer AM

cardiagn.com

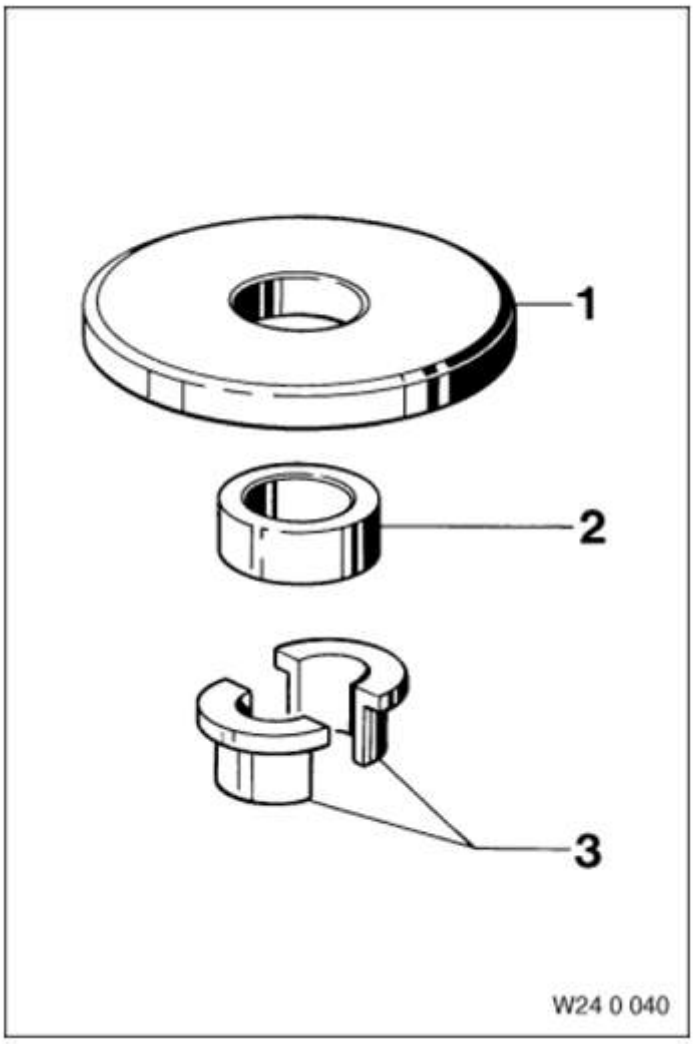

Fig. 212: Identifying Washer (0491630)
Courtesy of BMW OF NORTH AMERICA, INC.

0491640 WASHER

0491640 240111 Washer AM

NOTE: **(ring washer 1 mm) Transmissions: 4 HP 24 - no. 0 029 160, 4 HP 22 - no. 1 113 936**

cardiagn.com

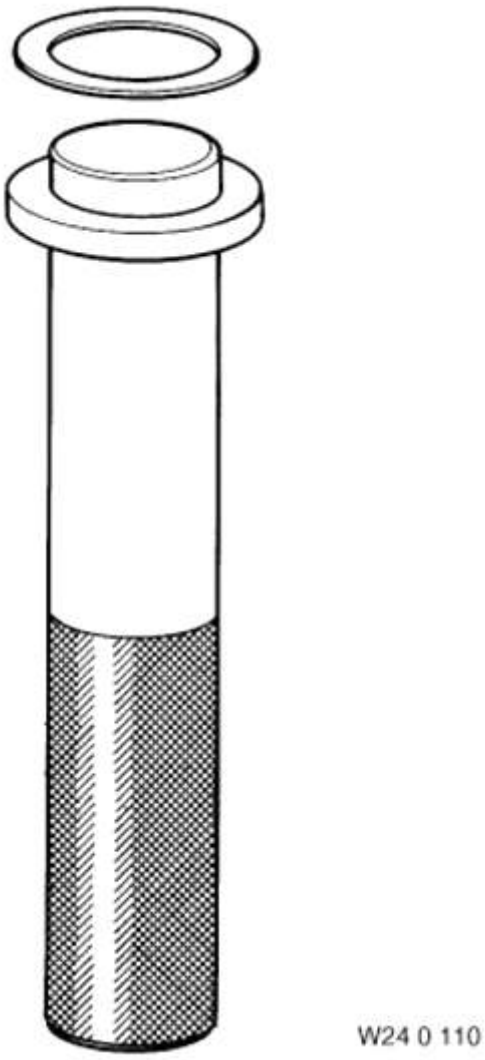

Fig. 213: Identifying Washer (0491640)
Courtesy of BMW OF NORTH AMERICA, INC.

0494144 WASHER

0494144 241353 Washer AM

Storage Location

C42

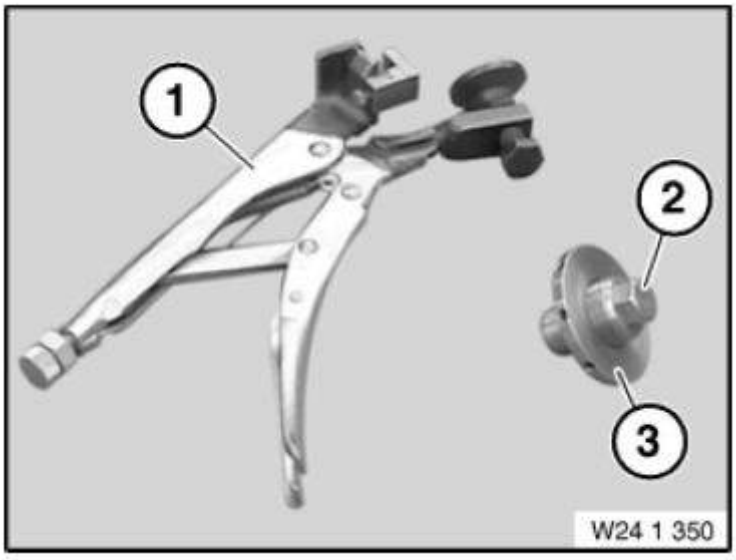

cardiagn.com

Fig. 214: Identifying Washer (0494144)
Courtesy of BMW OF NORTH AMERICA, INC.

0491690 WEDGE

0491690 241290 Wedge Mechanical tool

NOTE: **(Wedges) For fixing the disc carrier C when securing the retaining tabs**

Storage Location

X5

SI number

01 01 95 (892)

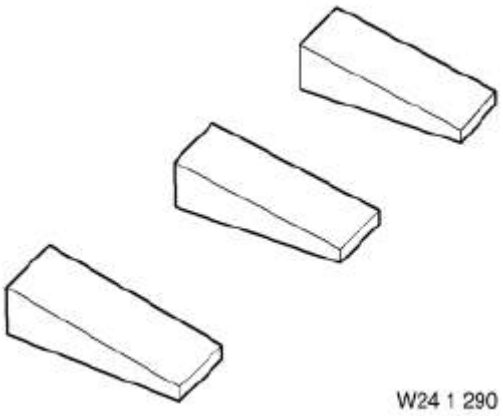

Fig. 215: Identifying Wedge (0491690)
Courtesy of BMW OF NORTH AMERICA, INC.

0491729 WRENCH

0491729 244110 Wrench Minimum set: Mechanical tools Mechanical tool

NOTE: **For releasing and tightening the slotted nut of the output flange**

Storage Location

A10

SI number

01 06 92 (509)

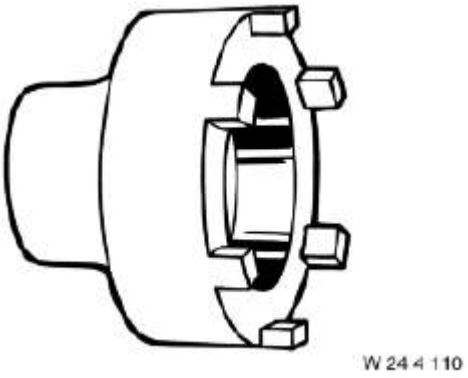

cardiagn.com

Fig. 216: Identifying Wrench (0491729)
Courtesy of BMW OF NORTH AMERICA, INC.

2297312 ODDMENTS TRAY

2297312 oddments tray Minimum set: Mechanical tools Mechanical tool

NOTE: **For setting down the removed E-machine (risk of damage).**

SI number

01 26 11 (763)

Fig. 217: Identifying Oddments Tray (2297312)
Courtesy of BMW OF NORTH AMERICA, INC.

Copyright 2016 Mitchell Repair Information Company, LLC. All Rights Reserved.

Article GUID: A00702119

cardiagn.com

Back To Article

TRANSMISSION FILLING CAPACITIES (GA8HP45Z, GA8HP70Z)

24 00 TRANSMISSION FILLING CAPACITIES (GA8HP45Z GA8HP70Z)

TRANSMISSION FILLING CAPACITIES SPECIFICATION

Code letters/code on type plate or label: Refer to Electronic Parts Catalogue.	Â	Â
Total oil volume (transmission and torque converter drained)	approx. ltr.	8.5

Copyright 2016 Mitchell Repair Information Company, LLC. All Rights Reserved.

Article GUID: A00702145

cardiagn.com

Back To Article

EXTERNAL SHIFT LINKAGE

24 51 EXTERNAL SHIFT LINKAGE

TIGHTENING TORQUE SPECIFICATION - EXTERNAL SHIFT LINKAGE

Â	Type	Thread	Tightening specifications	Dimension
1AZ Selector lever to transmission	GA6HP19Z/GA6HP26Z/GA6 HP32Z	M8x1	Â	10 Nm
2AZ Nut to pipe clamp	GA6HP19Z/GA6HP26Z/GA6HP32Z/GA8HP45Z/GA8HP70Z/GA8HP90Z	Â	Â	5 Nm
3AZ Release lever to transmission	GA8HP45Z/GA8HP70Z/GA8HP90Z	M6	Â	6.5 Nm
4AZ Retaining bracket to transmission	GA8HP45Z/GA8HP70Z/GA8HP90Z	M6	Â	6.5 Nm

HYDRAULIC/ELECTRIC CONTROL PARTS AND CONTROLLING ELEMENTS

24 30 HYDRAULIC/ELECTRIC CONTROL PARTS AND CONTROLLING ELEMENTS

TIGHTENING TORQUE SPECIFICATION - HYDRAULIC/ELECTRIC CONTROL PARTS AND CONTROLLING ELEMENTS

Â	Type	Thread	Tightening specifications	Dimension
1AZ Valve body to transmission	GA6HP19TU/GA6HP26TU	M6	Â	8 Nm
2AZ Valve housing to valve body	GA6HP19Z/GA6HP26Z/GA6HP32Z	M6	Â	5 Nm
3AZ Input- and output speed sensors to mechatronics	Â	M6	Â	12 Nm
4AZ Mechatronics to transmission	GA8HP45Z/GA8HP50/GA8HP70Z/GA8HP90Z/GA8P70H	M6x59, M6x20	Â	8 Nm
5AZ Oil volume accumulator to transmission	GA8HP45Z/GA8HP50/GA8HP70Z	M6x59, M6x20	Â	8 Nm
6AZ Centering plate to transmission bell housing	GA8HP45Z/GA8HP50/GA8HP70Z/GA8HP90Z	M8X74	Jointing torque Torque	10 Nm 90 Â°

TORQUE CONVERTER

24 40 TORQUE CONVERTER

TIGHTENING TORQUE SPECIFICATION - TORQUE CONVERTER

Â	Type	Thread	Tightening specifications	Dimension
1AZ Torque converter to flywheel	GA6HP19Z/GA6HP26Z/GA6HP32Z/GA8HP45Z/GA8HP50/GA8HP70Z	M10 10.9	Replace converter screws. (Remove adhesive residue from thread, if applicable)	56 Nm
	GA8HP90Z/GA6HP26Z (AWD)	M10 10.9	Replace converter screws. (Remove adhesive residue from thread, if applicable)	60 Nm
	F30/F31/F32/F33/F35 N20 GA8HP45Z	M10 10.9	Replace converter screws. (Remove adhesive residue from thread, if applicable)	60 Nm
2AZ Electrical machine to flywheel	GA8P70H	M10	Replace hexagon nuts. (Remove adhesive residue from thread, if applicable)	56 Nm

TRANSMISSION EXTENSION, BEARINGS, SEALING RING

24 13 TRANSMISSION EXTENSION, BEARINGS, SEALING RING

TIGHTENING TORQUE SPECIFICATION - TRANSMISSION EXTENSION, BEARINGS, SEALING RING

Â	Type	Thread	Tightening specifications	Dimension
1AZ Double hexagon nut/output flange	GA6HP19Z/GA6HP26Z/GA8HP45Z/GA8HP50/GA8HP70Z/GA8HP90Z/GA8P70H/GA8P75H	Â	with sealing ring in output flange	60 Nm

TRANSMISSION HOUSING, TRANSMISSION OIL SUMP

24 11 TRANSMISSION HOUSING, TRANSMISSION OIL SUMP

TIGHTENING TORQUE SPECIFICATION - TRANSMISSION HOUSING, TRANSMISSION OIL SUMP

Â	Type	Thread	Tightening specifications	Dimension
1AZ Transmission oil sump	GA6HP19Z/GA6HP26Z/GA6HP32Z	M6	Â	10 Nm
2AZ Oil drain plug	GA6HP19Z/GA6HP26Z/GA6HP32Z/GA8HP45Z/GA8HP50/GA8HP70Z/GA8P70H/GA8P75H	M16x1.5 M24x1 M18x1	Plastic oil sump	8 Nm
3AZ Oil filler plug	GA6HP26Z/GA6HP32Z	M30x1.5	Â	80 Nm
	GA6HP19Z/GA6HP26Z/GA6HP32Z/GA8HP45Z/GA8HP50/GA8HP70Z/GA8P70H/GA8HP90Z/GA8P75H	M18x1.5	Â	35 Nm
			Replace	

cardiagn.com

4AZ	Transmission oil sump	GA8HP45Z/GA8HP50/GA8HP70Z/GA8P70H/GA8HP90Z/GA8P75H	M6	aluminum screws; jointing torque and angle of rotation must be observed without fail. 1. Jointing torque 2. Angle of rotation	Â 4 Nm 45 Â°
		Â	Â	Steel screws	10 Nm
5AZ	Oil drain plug	GA8HP90Z	M10	Â	12 Nm
6AZ	Heat shield on gearbox	GA8HP45Z/GA8P70Z/GA8P75H	M8	Â	19 Nm
		GA8HP45Z	M6	Â	8 Nm
7AZ	Ground strap to body and transmission	GA8HP45Z/GA8HP50/GA8HP70Z/GA8P70H/GA8P75H	M8	Â	19 Nm

TRANSMISSION IN GENERAL

24 00 TRANSMISSION IN GENERAL

TIGHTENING TORQUE SPECIFICATION - TRANSMISSION IN GENERAL

Â	Type	Thread	Tightening specifications	Dimension
1AZ Transmission to engine	Â	Â	Â	Â
Torx bolts	GA6HP19Z/GA6HP26Z/GA8HP45Z/GA8HP70Z/GA8HP90Z	M6	Â	9 Nm
Torx bolts	GA6HP19Z/GA6HP26Z/GA8HP45Z/GA8HP70Z/GA8HP90Z	M10	Â	38 Nm
	GA8HP45Z/GA8P75H	M10x10.9	Â	56 Nm
Steel Torx screws	GA6HP19Z/GA6HP26Z/GA8HP45Z/GA8HP50/GA8HP70Z/GA8HP90Z/GA8P70H	M8	Â	19 Nm
	GA8HP70Z (N63)	M8	Â	21 Nm
Steel Torx screws	GA6HP19Z/GA6HP26Z/GA8HP45Z/GA8HP50/GA8HP70Z/GA8HP90Z/GA8P70H	M12	Â	66 Nm
2AZ Transmission to engine N52/N53/N54/N55 Aluminum screws/bolts are not magnetic	GA6HP19Z/GA6HP26Z/GA8HP45Z	Â	Replace screws Jointing torque and angle of rotation must be observed without fail	Â
	GA6HP19Z	M10x30	Jointing torque Angle of rotation	20 Nm 90-110 Â°
	GA6HP19Z	10x85	Jointing torque Angle of rotation	20 Nm 180-200 Â °
	GA6HP19Z/GA8HP45Z	M12	Jointing torque Angle of rotation	25 Nm 130 Â°
3AZ Cover plate for transmission	GA6HP19Z/GA8HP45Z	M6	Â	9 Nm

Copyright 2016 Mitchell Repair Information Company, LLC. All Rights Reserved.

Article GUID: A00702169

cardiagn.com

14.0 AUTOMATIC TRANSMISSION FLUID FOR ZF-TRANSMISSION GA8HP45Z / GA8HP50Z / GA8HP70Z / GA8HP90Z / GA8P70H / GA8P75H / GA8HP75Z

NOTE: **The automatic transmissions have a life-time oil filling. These transmissions require no oil change for their entire service life.**

The approved lifetime fluid must be used after repairs on the transmission or transmission oil cooler.

Attention!

The lifetime oil must not be mixed with or replaced by other types of automatic transmission fluid as this will cause transmission failure.

Exception: Shell ATF oil L12108 may be mixed with ATF-3.

Trade name	BMW part number	Container size
ATF oil Shell L12108*	83 22 2 152 426	20 liters

***Can be substituted by the lifetime oil specified below.**

Trade name	BMW part number	Container size
ATF-3+	83 22 2 289 720	1 liter

The lifetime fluids ATF-3 and ATF-3+ can be mixed with each other.

Date: 07/2015

1.0 GENERAL INFORMATION ON AUTOMATIC TRANSMISSION FLUIDS

Automatic Transmission Fluid was developed especially for automatic transmissions. It requires additives which are carefully matched with each other, a high viscosity index and a solidification point below -40Â °F/-40Â°C.

Friction behavior of Automatic Transmission Fluid in plate-type clutches under very different operating conditions is extremely important. Other important factors are:

- Wear protection
- Oil film shear resistance
- Adhesive property
- Oxidation resistance
- Corrosion inhibition
- Sludge prevention
- Temperature-dependent viscosity changes
- Compatibility with sealing materials.

2.0 OIL ADDITIVES

Automatic transmissions are designed so that oil additives are not necessary. BMW disapproves the use of any oil additives and cannot accept the liability for any consequential damage which results from using oil

cardiagn.com

additives.

3.0 APPROVED AUTOMATIC TRANSMISSION FLUIDS FOR INITIAL FILLINGS AND CORRECTING FLUID LEVELS

3.1 GM TRANSMISSIONS

USE OF ANY OTHER OIL WILL CAUSE A NON WARRANTABLE TRANSMISSION FAILURE

***Transmission identification plate can be utilized to determine proper transmission fitted in vehicle**

DexronÂ® Fluid Compatibility

DexronÂ® III and DexronÂ® VI are fully compatible. Any transmission that requires a DexronÂ® III fluid can also use the DexronÂ® VI fluid. However a vehicle that uses the DexronÂ® VI fluid exclusively should not have DexronÂ® III installed.

BMW Part No. 83 22 2 163 514 - Automatic Transmission Fluid Dexron VI (1 L 6 Pack)

BMW Part No. 83 22 0 397 114 - Automatic Transmission Fluid Dexron VI (4 L 4 Pack)

*Or all reputable brand name Automatic Transmission Fluids of the DexronÂ® III or VI formulation

A4S 270R (THM-R1W)

E36

318i/is/iC/ti from 1996 to 1999 production

323i/is/iC from 1998 to 1999 production

328i/is/iC from 1996 to 1998 production

Z3 1.9 from 1996 to 1999 production

Z3 2.3/2.8 from 1997 to 2000 production

BMW Part No. 83 22 2 163 514 - Automatic Transmission Fluid Dexron VI (1 L 6 Pack)

BMW Part No. 83 22 0 397 114 - Automatic Transmission Fluid Dexron VI (4 L 4 Pack)

*Or all reputable brand name Automatic Transmission Fluids of the DexronÂ® III or VI formulation

E39

528i/iT from 1997-1999 production

BMW Part No. 83 22 2 163 514 - Automatic Transmission Fluid Dexron VI (1 L 6 Pack)

BMW Part No. 83 22 0 397 114 - Automatic Transmission Fluid Dexron VI (4 L 4 Pack)

*Or all reputable brand name Automatic Transmission Fluids of the DexronÂ® III or VI formulation

A4S 310R (THM-R1)

E34

525i from 1990 to 1995 production

BMW Part No. 83 22 2 163 514 - Automatic Transmission Fluid Dexron VI (1 L 6 Pack)

cardiagn.com

BMW Part No. 83 22 0 397 114 - Automatic Transmission Fluid Dexron VI (4 L 4 Pack)

*Or all reputable brand name Automatic Transmission Fluids of the DexronÂ® III or VI formulation

E36

318i/is/iC/ti from 1992 to 1995 production

325i/is/iC from 1992 to 1995 production

BMW Part No. 83 22 2 163 514 - Automatic Transmission Fluid Dexron VI (1 L 6 Pack)

BMW Part No. 83 22 0 397 114 - Automatic Transmission Fluid Dexron VI (4 L 4 Pack)

*Or all reputable brand name Automatic Transmission Fluids of the DexronÂ® III or VI formulation

A5S 360R (GM5)

E46

323i/Ci/Cic from 6/98 to 3/00 production

323iT from 1//00 to 3/01 to production

328i/Ci/Cic from 6/98 to 3/01 production

The transmission oil pan will be labeled with either Texaco ETL - 7045 or DexronÂ® III; fill or top off with the proper fluid only. Do not mix Texaco ETL - 7045 and DexronÂ® III fluids.

A5S 390R (GM5)

E46

330xi from 6/00 production to present

325xiT from 9/00 production to present

E53

X5 3.0 from 8/03 production to present

E83

X3 2.5, 3.0 from 8/03 production to present

The transmission oil pan will be labeled with either Texaco ETL - 7045 or DexronÂ® III; fill or top off with the proper fluid only. Do not mix Texaco ETL - 7045 and DexronÂ® III fluids.

GA6L45R (GM6)

E82

128i from 12/07 production to present

E83

X3 LCI from 9/06 production to present

E88

128i from 12/07 production to present

E90

cardiagn.com

328Xi from 9/06 production to present

E91

328Xi from 9/06 production to present

No subsequent transmission fluid changes are necessary.

Utilizes a long life filling of Automatic Transmission Fluid

BMW Part No. 83 22 2 163 514 - Automatic Transmission Fluid Dexron VI (1 L 6 Pack)

BMW Part No. 83 22 0 397 114 - Automatic Transmission Fluid Dexron VI (4 L 4 Pack)

*Or all reputable brand name Automatic Transmission Fluids of the DexronÂ® VI formulation

GA7AHSCD (Active Hybrid Transmission)

E72

Active Hybrid X6, produced from 10/2009 to 03/2010

Utilizes a long life filling of Automatic Transmission Fluid

BMW Part No. 83 22 2 163 514 - Automatic Transmission Fluid Dexron VI (1 L 6 Pack)

BMW Part No. 83 22 0 397 114 - Automatic Transmission Fluid Dexron VI (4 L 4 Pack)

*Or all reputable brand name Automatic Transmission Fluids of the DexronÂ® VI formulation

3.2 ZF TRANSMISSIONS

USE OF ANY OTHER OIL WILL CAUSE A NON WARRANTABLE TRANSMISSION FAILURE

***Transmission identification plate can be utilized to determine proper transmission fitted in vehicle**

ZF 3HP22, 4HP22, 4HP24

Utilizes Castrol TQ or Texaco Havoline Automatic Transmission Fluids of the DexronÂ® III formulation. Never mix any other oil with this transmission fluid when doing repairs or topping up.

A5S 310Z (5HP18)

E36

M3 from 1995 to 1999 production

Utilizes a long life filling of synthetic transmission fluid, ESSO LT 71141, no subsequent transmission fluid changes are necessary. Never mix any other oil with this transmission fluid when doing repairs or topping up.

ESSO LT 71141, BMW Part No. 83 22 9 407 807.

E34

530i/iT from 1993 through 1995 production

Utilizes Castrol TQ or Texaco Havoline Automatic Transmission Fluids of the DexronÂ® III formulation. Never mix any other oil with this transmission fluid when doing repairs or topping up.

A5S325Z (5HP19)

E46

cardiagn.com

323i/Ci/Cic from 3/00 to 8/00 production

325iT from 4/01 production to present

330i/Ci/Cic from 6/00 production to present

325i/Ci/Cic from 9/00 production to present

No subsequent transmission fluid changes are necessary. Never mix any other oil with this transmission fluid when doing repairs or topping up.

ESSO LT 71141, BMW Part No. 83 22 9 407 807.

E39

525i/iT from 3/01 production to present

530i from 3/01 production to present

No subsequent transmission fluid changes are necessary. Never mix any other oil with this transmission fluid when doing repairs or topping up.

ESSO LT 71141, BMW Part No. 83 22 9 407 807.

E85

Z4 3.0 M54 from 9/02 production to present

Z4 2.5 M54 from 9/02 production to present

No subsequent transmission fluid changes are necessary. Never mix any other oil with this transmission fluid when doing repairs or topping up.

ESSO LT 71141, BMW Part No. 83 22 9 407 807.

A5S 440Z (5HP24)

E31

840Ci from 9/96 to the present

No subsequent transmission fluid changes are necessary. Never mix any other oil with this transmission fluid when doing repairs or topping up.

ESSO LT 71141, BMW Part No. 83 22 9 407 807.

E38

740i/iL from 1/97 production to present

No subsequent transmission fluid changes are necessary. Never mix any other oil with this transmission fluid when doing repairs or topping up.

ESSO LT 71141, BMW Part No. 83 22 9 407 807.

E39

540i/iT from 1/97 production to present

No subsequent transmission fluid changes are necessary. Never mix any other oil with this transmission fluid when doing repairs or topping up.

cardiagn.com

ESSO LT 711 41, BMW Part No. 83 22 9 407 807.

E53

X5 4.4i from 9/99 production to present

X5 4.6i from 9/01 production to present

No subsequent transmission fluid changes are necessary. Never mix any other oil with this transmission fluid when doing repairs or topping up.

ESSO LT 711 41, BMW Part No. 83 22 9 407 807.

A5S 560Z (5HP30)

E31

840Ci equipped with M60 engine

Utilizes a lifetime fill of transmission fluid, no subsequent oil changes are necessary on this transmission. If transmission fluid is required for repair purposes, use only the oil approved for this transmission. It is not permitted to mix this oil with other grades of transmission fluid.

Shell LA 2634, BMW Part No. 83 22 9 407 765.

E31

840Ci equipped with M62 engine

850Ci equipped with M73 Engine

Utilizes lifetime fill of transmission fluid, no subsequent transmission fluid changes are necessary.

Never mix any other oil with this transmission fluid when doing repairs or topping up.

ESSO LT 711 41, BMW Part No. 83 22 9 407 807.

E32

740i/iL from 1993 through 1994 production

Utilizes a lifetime fill of transmission fluid, no subsequent oil changes are necessary on this transmission. If transmission fluid is required for repair purposes, use only the oil approved for this transmission. It is not permitted to mix this oil with other grades of transmission fluid.

Shell LA 2634, BMW Part No. 83 22 9 407 765.

E34

540i/iT from 1993 through 1995 production

Utilizes a lifetime fill of transmission fluid, no subsequent oil changes are necessary on this transmission. If transmission fluid is required for repair purposes, use only the oil approved for this transmission. It is not permitted to mix this oil with other grades of transmission fluid.

Shell LA 2634, BMW Part No. 83 22 9 407 765.

Effective with model year 1995 and later:

E31

850Ci from 10/94 to 6/97 production

cardiagn.com

840Ci from 12/95 to 8/96 production

Utilizes lifetime fill of transmission fluid, no subsequent transmission fluid changes are necessary.

Never mix any other oil with this transmission fluid when doing repairs or topping up.

ESSO LT 711 41, BMW Part No. 83 22 9 407 807.

E38

750iL from 1/95 production to present

740i/iL from 7/94 to 12/96 production

Utilizes lifetime fill of transmission fluid, no subsequent transmission fluid changes are necessary.

Never mix any other oil with this transmission fluid when doing repairs or topping up.

ESSO LT 711 41, BMW Part No. 83 22 9 407 807.

E39

540i/iT from 3/96 to 12/96 production

Utilizes lifetime fill of transmission fluid, no subsequent transmission fluid changes are necessary.

Never mix any other oil with this transmission fluid when doing repairs or topping up.

ESSO LT 711 41, BMW Part No. 83 22 9 407 807.

GA6HP19Z

E60/61

525i, 530i from 8/03 production to present

The transmission fluid has a Condition Based Service interval of approximately 100, 000 miles; refer to **S.I. B00 07 02** for further information. Never mix any other oil with this transmission fluid when doing repairs or topping up.

Shell M-1375.4, BMW Part No. 83 22 0 142 516.

E82/E88

135i All

The transmission fluid has a Condition Based Service interval of approximately 100, 000 miles; refer to **S.I. B00 07 02** for further information. Never mix any other oil with this transmission fluid when doing repairs or topping up.

Shell M-1375.4, BMW Part No. 83 22 0 142 516.

E84

All with 3.5i

The transmission fluid has a Condition Based Service interval of approximately 100, 000 miles; refer to **S.I. B00 07 02** for further information. Never mix any other oil with this transmission fluid when doing repairs or topping up.

Shell M-1375.4, BMW Part No. 83 22 0 142 516.

cardiagn.com

E85/E86

Z4 with N52K All

The transmission fluid has a Condition Based Service interval of approximately 100, 000 miles; refer to **S.I. B00 07 02** for further information. Never mix any other oil with this transmission fluid when doing repairs or topping up.

Shell M-1375.4, BMW Part No. 83 22 0 142 516.

E89

All with 3.0i

The transmission fluid has a Condition Based Service interval of approximately 100, 000 miles; refer to **S.I. B00 07 02** for further information. Never mix any other oil with this transmission fluid when doing repairs or topping up.

Shell M-1375.4, BMW Part No. 83 22 0 142 516.

E90/91/92

325i, 328i, 330i, 335i, All

The transmission fluid has a Condition Based Service interval of approximately 100, 000 miles; refer to **S.I. B00 07 02** for further information. Never mix any other oil with this transmission fluid when doing repairs or topping up.

Shell M-1375.4, BMW Part No. 83 22 0 142 516.

GA6HP19ZTU

E70

3.0i from start production to present

The transmission fluid has a Condition Based Service interval of approximately 100, 000 miles; refer to **S.I. B00 07 02** for further information. Never mix any other oil with this transmission fluid when doing repairs or topping up.

Shell M-1375.4, BMW Part No. 83 22 0 142 516.

E71

X6 xDrive35i

The transmission fluid has a Condition Based Service interval of approximately 100, 000 miles; refer to **S.I. B00 07 02** for further information. Never mix any other oil with this transmission fluid when doing repairs or topping up.

Shell M-1375.4, BMW Part No. 83 22 0 142 516.

GA6HP26Z

E60

545i from 8/03 production to present

550i All

The transmission fluid has a Condition Based Service interval of approximately 100, 000 miles; refer to **S.I. B00 07 02** for further information. Never mix any other oil with this transmission fluid when doing repairs or

cardiagn.com

topping up.

Shell M-1375.4, BMW Part No. 83 22 0 142 516.

E63, E64

645Ci, 645CiC from start of production to present

650Ci, 650CiC All

The transmission fluid has a Condition Based Service interval of approximately 100, 000 miles; refer to **S.I. B00 07 02** for further information. Never mix any other oil with this transmission fluid when doing repairs or topping up.

Shell M-1375.4, BMW Part No. 83 22 0 142 516.

E65

745i from 11/2001 production to present

750i All

The transmission fluid has a Condition Based Service interval of approximately 100, 000 miles; refer to **S.I. B00 07 02** for further information. Never mix any other oil with this transmission fluid when doing repairs or topping up.

Shell M-1375.4, BMW Part No. 83 22 0 142 516.

E66

745Li from 3/2002 production to present

750Li All

760Li from 9/2002 production to present

The transmission fluid has a Condition Based Service interval of approximately 100, 000 miles; refer to **S.I. B00 07 02** for further information. Never mix any other oil with this transmission fluid when doing repairs or topping up.

Shell M-1375.4, BMW Part No. 83 22 0 142 516.

E70

X5 4.8i from start production to present

X5 3.5D from start of production to present

X5M from start of production to present

E71

X6 xDrive50i from start production to present

X6M from start of production to present

The transmission fluid has a Condition Based Service interval of approximately 100, 000 miles; refer to **S.I. B00 07 02** for further information. Never mix any other oil with this transmission fluid when doing repairs or topping up.

Shell M-1375.4, BMW Part No. 83 22 0 142 516.

cardiagn.com

F01, F02 with N63 Engine

750i, 750Li, 760i, 760Li from start production to present

The transmission fluid has a Condition Based Service interval of approximately 100, 000 miles; refer to **S.I. B00 07 02** for further information. Never mix any other oil with this transmission fluid when doing repairs or topping up.

Shell M-1375.4, BMW Part No. 83 22 0 142 516.

GA8HP45Z

E84 with N20 engine

The transmission fluid has a Condition Based Service interval of approximately 100, 000 miles; refer to **S.I. B00 07 02** for further information. Never mix any other oil with this transmission fluid when doing repairs or topping up.

Shell M-L12108, BMW Part No. 83 22 2 152 426

E89 with N55 engine

The transmission fluid has a Condition Based Service interval of approximately 100, 000 miles; refer to **S.I. B00 07 02** for further information. Never mix any other oil with this transmission fluid when doing repairs or topping up.

Shell M-L12108, BMW Part No. 83 22 2 152 426

F06, F12 and F13 with N55 engine

The transmission fluid has a Condition Based Service interval of approximately 100, 000 miles; refer to **S.I. B00 07 02** for further information. Never mix any other oil with this transmission fluid when doing repairs or topping up. Shell M-L12108, BMW Part No. 83 22 2 152 426

F10 with N20, N52T and N55 engines

528i and 535i from start of production to present

The transmission fluid has a Condition Based Service interval of approximately 100, 000 miles; refer to **S.I. B00 07 02** for further information. Never mix any other oil with this transmission fluid when doing repairs or topping up.

Shell M-L12108, BMW Part No. 83 22 2 152 426

F25 with N52T and N55 engines

2.8iX and 3.5iX from start of production to present

The transmission fluid has a Condition Based Service interval of approximately 100, 000 miles; refer to **S.I. B00 07 02** for further information. Never mix any other oil with this transmission fluid when doing repairs or topping up.

Shell M-L12108, BMW Part No. 83 22 2 152 426

F30 and F31 with N20, N26, N52T and N55 engines

328i and 335i from start of production

The transmission fluid has a Condition Based Service interval of approximately 100, 000 miles; refer to **S.I. B00 07 02** for further information. Never mix any other oil with this transmission fluid when doing repairs or topping up.

cardiagn.com

Shell M-L12108, BMW Part No. 83 22 2 152 426

GA8HP70Z

F01, F02 with N63TU engine

The transmission fluid has a Condition Based Service interval of approximately 100, 000 miles; refer to **S.I. B00 07 02** for further information. Never mix any other oil with this transmission fluid when doing repairs or topping up.

Shell M-L12108, BMW Part No. 83 22 2 152 426

E70

X5 xDrive50i from start of production

The transmission fluid has a Condition Based Service interval of approximately 100, 000 miles; refer to **S.I. B00 07 02** for further information. Never mix any other oil with this transmission fluid when doing repairs or topping up.

Shell M-L12108, BMW Part No. 83 22 2 152 426

E71

X6 xDrive50i from start of production

The transmission fluid has a Condition Based Service interval of approximately 100, 000 miles; refer to **S.I. B00 07 02** for further information. Never mix any other oil with this transmission fluid when doing repairs or topping up.

Shell M-L12108, BMW Part No. 83 22 2 152 426

F04

Hybrid 7 from start of production to present

The transmission fluid has a Condition Based Service interval of approximately 100, 000 miles; refer to **S.I. B00 07 02** for further information. Never mix any other oil with this transmission fluid when doing repairs or topping up.

Shell M-L12108, BMW Part No. 83 22 2 152 426

F07

550i Gran Turismo from start production to present

The transmission fluid has a Condition Based Service interval of approximately 100, 000 miles; refer to **S.I. B00 07 02** for further information. Never mix any other oil with this transmission fluid when doing repairs or topping up.

Shell M-L12108, BMW Part No. 83 22 2 152 426

F06, F10, F12 and F13 with N63TU engine

550i from start of production to present

The transmission fluid has a Condition Based Service interval of approximately 100, 000 miles; refer to **S.I. B00 07 02** for further information. Never mix any other oil with this transmission fluid when doing repairs or topping up.

Shell M-L12108, BMW Part No. 83 22 2 152 426

cardiagn.com

4.0 CHECKING TRANSMISSION FLUID LEVEL

Due to the substantial expansion of transmission fluid when heated it is only possible to measure the oil level correctly at specified oil temperatures (after driving a distance of about 12 mi./20 km).

ZF 3HP AND 4HP

Due to the substantial expansion of transmission fluid when heated it is only possible to measure the oil level correctly at specified oil temperatures (after driving a distance of about 12 mi./20 km).

A5S 560Z, A5S440Z, GA6HP19Z, GA6HP26Z, GA6HP26Z, GA8HP70Z A5S325Z, A5S 310Z

All 5, 6 and 8 speed transmissions require the fluid to be checked when fluid temperature is between 30-50Â° Celsius using DIS Plus or GT1. Do not check fluid level after temperature has exceeded 50Â° Celsius.

A4S 270R, A4S 310R, A5S 360R, GA6L45R

Fluid Level Checking Procedure for all Transmissions without a Dipstick:

1. The transmission temperature must be between 30Â°C and 50Â°C before checking can begin. Use the DIS or the MODIC to determine the transmission temperature.
2. The vehicle must be level and without load. With the engine running, switch on the air conditioning. This will increase the idle speed and ensure that all oil passages in the transmission are filled with oil.
3. Step on the brake firmly, apply parking brake fully and move the selector lever through each gear position, pausing briefly in each gear.
4. With the engine running and the selector lever in Park position, remove the filler plug located on the transmission (see illustration for location). If a small stream of oil runs out, the fluid level is correct.
5. If no oil runs out when the filler plug is removed, the fluid level is too low. Add oil until it starts to overflow.
6. With the engine running, reinstall the oil filler plug and tighten.

8HP TRANSMISSION: FLUID LOSS FROM COOLER LINE CONNECTIONS - FROM SERVICE BULLETIN SI B24 02 15 (6/2015)

Applies to the following models with N20, N26, or N55 engine and 8HP transmission:

- E84 (X1)

- E89 (Z4)

- F22 (2 Series Coupe)

- F23 (2 Series Convertible)

- F30 (3 Series Sedan)

- F31 (3 Series Sports Wagon)

- F32 (4 Series Coupe)

- F33 (4 Series Convertible)

- F34 (3 Series Gran Turismo)

- F36 (4 Series Gran Coupe)

Situation:

cardiagn.com

There is a transmission fluid leak in the area around the oil cooler lines (on the transmission side).

Cause:

Damaged o-rings due to unfavorable cooling line connection tolerances.

Procedure:

Verify that the transmission fluid leak originates from the cooling lines area.

If so, replace the o-rings and the cooling lines.

Only replacing the o-rings may cause a repeat failure.

E70, E71, F25: OIL LEAK FROM TRANSFER CASE - FROM SERVICE BULLETIN SI B24 01 13 (3/2013)

Applies to the following models:

- E70

- E71

- F25

Situation:

Oil is leaking from the transmission area, or oil seepage is noticed from the transmission/transfer case area during a service.

Cause:

The leak can be misdiagnosed as a transmission fluid leak from either the mechatronics sleeve or transmission oil pan. The leak is actually coming from the transfer case (input or output shaft seal).

Procedure:

Before attempting to perform any repairs, check the fluid level in both the transmission and transfer case.

If the level is low in the transfer case, repair as necessary.

5.0 TRANSMISSION FLUID CHANGE INTERVALS (IF APPLICABLE)

Refer to applicable Service and Maintenance Checklist for each vehicle.

CONDITION BASED SERVICE (APPLIES TO CERTAIN VEHICLES ONLY) - SERVICE BULLETIN SI B 00 07 02 (2/2009)

NOTE: **This Service Information bulletin supersedes SI B00 07 02 dated November 2007.**

SUBJECT

Condition Based Service

MODEL

All models with Condition Based Service

SITUATION

cardiagn.com

This information is intended to provide a general system overview of Condition Based Service (CBS), which is an advanced development of the previous Service Interval Indicator systems.

CBS measures, monitors and determines the required maintenance of several service items independently of each other. This technology prompts the customer to bring the vehicle in for service whenever one of the CBS items requires maintenance or replacement. CBS strikes a compromise between too frequent maintenance intervals and too rigid service intervals that call for the replacement of service items that may still have substantial remaining useful life. CBS also details the recommended, due, and overdue required maintenance during and after the BMW Vehicle Maintenance Program Agreement.

For details of CBS service items and maintenance intervals, refer to the relevant vehicle Owner's Manual.

SERVICE RECOGNITION

The vehicle recognizes when a service is required using the following three methods:

A. **Adaptive,** using sensor technology and algorithms to determine the required maintenance of a service item depending upon the individual customer driving style. For example:

   Oil change is determined from the engine oil condition sensor which monitors the oil condition, oil level, and oil temperature, and from additional algorithms using these parameters: engine load, fuel consumption, time and distance since the last oil change.

   Microfilter replacement (dependent on vehicle model and CBS version).

   Replacements of front and rear brake pads are determined from 2-stage brake lining wear sensors located on the left front and right rear brake pads, and from residual wear algorithms using these input parameters: travel distance, wheel speed, braking pressure, braking time, and braking frequency.

B. **Fixed Time** (months) to determine the required maintenance of a service item. For example:

   Brake Fluid and Engine Coolant changes.

   State Safety and Emissions Inspections.

C. **Fixed Distance** (miles) to determine the required maintenance of a service item. For example:

   Vehicle Check.

   Spark plug replacement (dependent on vehicle model and CBS version)

   State Safety and Emissions inspections

D. **Connected to Oil Service** , based on which oil service being performed. For example:

   Spark plug replacement (dependent on vehicle model and CBS version)

   Air filter

   Automatic transmission fluid

   Microfilter replacement (dependent on vehicle model and CBS version)

SERVICE INDICATION (EXCEPT E65 AND E66)

The service indicators are displayed in two possible locations inside the vehicle:

1. **Instrument Cluster**

   The Instrument Cluster CBS display uses two separate displays:

   - A colored symbol in the **center upper display:**
     - Orange for normal
     - Yellow for service due
     - Red for service overdue
   - The remaining distance display is in the center lower display.

   Fig. 1 shows the CBS Display in the Instrument Cluster.

cardiagn.com

1. (1) The CBS symbol in center upper display
2. (2) The remaining distance display in the center lower display
3. (3) The Next Service Due date information in the center lower display

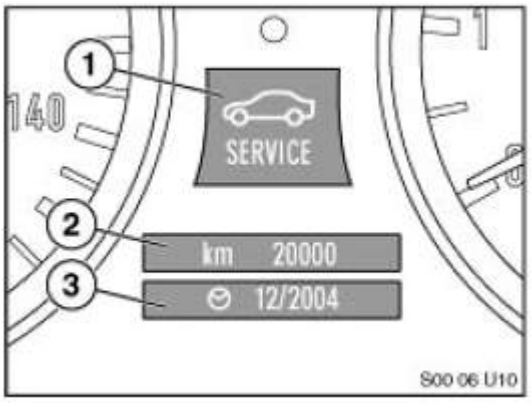

Fig. 1: CBS Display In Instrument Cluster
Courtesy of BMW OF NORTH AMERICA, INC.

2. **Central Information Display (CID)**

For vehicles with a CID, the CID can display all information on the individual service operations. The CBS functions are stored in the "Settings" menu item and can be used exclusively for individual user settings.

Press the controller down in the main menu and the "Settings" menu will appear.

Turn the controller until "Service" is highlighted, then press to activate the CBS menu.

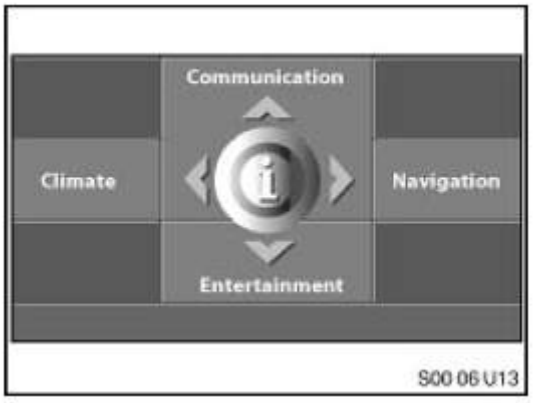

Fig. 2: Central Information Display - Settings Menu
Courtesy of BMW OF NORTH AMERICA, INC.

The CBS menu window will appear and is divided into the following control and display fields:

- Status bar
- First menu bar
- Second menu bar
- Display field for CBS symbol
- Display field for service operation.

cardiagn.com

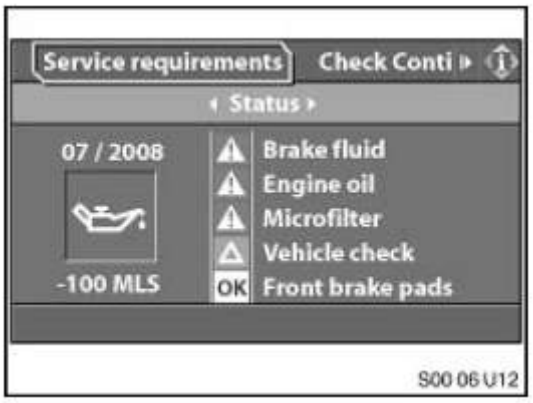

Fig. 3: Central Information Display - CBS Menu
Courtesy of BMW OF NORTH AMERICA, INC.

For vehicles with a CIC (Car Information Computer): from the start screen, select Vehicle Info / Vehicle status / Service required.

Fig. 4: Central Information Display - Select Vehicle Info
Courtesy of BMW OF NORTH AMERICA, INC.

The Service required screen displays all the maintenance items and their current status.

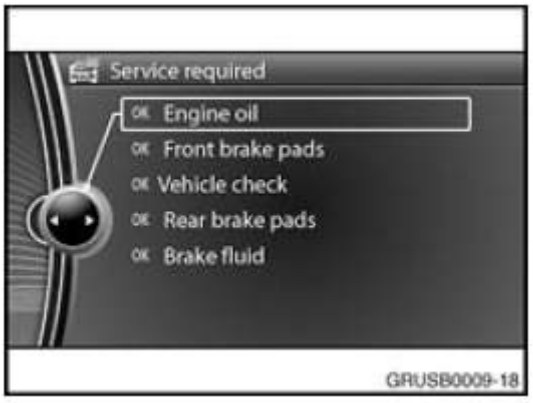

Fig. 5: Central Information Display - Service Required Screen
Courtesy of BMW OF NORTH AMERICA, INC.

PROCEDURE TO VIEW OR RESET SERVICE ITEMS IN THE INSTRUMENT CLUSTER (EXCEPT THE E65 AND E66

1. Turn ignition to Terminal 15.
2. Press and hold the Instrument Cluster Set/Reset button for 10 seconds.
3. The upper display in the Instrument Cluster will be illuminated with a Service Item (example: An oil can

cardiagn.com

is the designation for Oil Service). The lower display in the Instrument Cluster will indicate the remaining time or mileage left for that Service Item (example: 14000). Pressing the button repeatedly will allow the display to scroll through all of the Condition Based Service Items.

4. Press and hold the Instrument Cluster Set/Reset button again and the lower display screen will indicate "OK" or "DUE".
5. Pressing the Instrument Cluster Set/Reset button again will allow the "RESET" to appear in the lower window for that service. Releasing and reapplying the button one more time will reset the service displayed in the upper window only. Repeat the procedure for any additional service reset needs.

NOTE: **The CBS service items for both State Vehicle Safety Inspection and State Emissions Inspection cannot be viewed in the Instrument Cluster. These State Inspections can be viewed on the CBS Menu in the Control Display or by DISplus / GT1.**

PROCEDURE TO RESET THE CBS DISPLAY BMW GROUP DIAGNOSTIC SYSTEM (EXCEPT THE E65 AND E66)

Using the BMW diagnostic system, the CBS Reset sets the selected service item to 100% (full service interval) and displays a service counter indicating how many times the service item has been reset.

The **CBS reset procedure is found under: Diagnosis - Function Selection - Service Functions - Maintenance - CBS Reset - Test Plan.** Then highlight the listed procedure and press the bottom right corner green arrow to the right.

NOTE: **The original value of the individual CBS service item will be deleted during the reset procedure.**

The next screen offers 3 selection menus:

SELECTION MENUS

Selection 1: CBS reset	Selection 2: CBS reset	Selection 3: End
1. Engine oil	1. Spark plugs	Â
2. Microfilter	2. Brake fluid	Â
3. Front brakes	3. Coolant	Â
4. Rear brakes	4. State Safety inspection	Â
5. Vehicle check	5. Emissions inspection	Â

The **CBS vehicle data correction** allows "quick access" to correct or change the basic data stored in the vehicle after the CBS reset. This procedure is found under: **Diagnosis - Function Selection - Service Functions - Maintenance - CBS Correction, Vehicle Data - Test Plan.** Then highlight the listed procedure and press the bottom right corner **green arrow** to the right.

The next screen offers 4 selection menus:

SELECTION MENUS

Selection 1: Correction	Selection 2: Correction	Selection 3: Correction	Selection 4: End
1. Engine oil	1. Spark plugs	1. Telephone numbers	Â
2. Microfilter	2. Brake fluid	2. Date of first registration	Â
3. Front brakes	3. State Safety inspection	3. Reset annual kilometer setting.	Â
4. Rear brakes	4. Emissions inspection	Â	Â
5. Vehicle check	Â	Â	Â

RESET ANNUAL KILOMETER SETTING

cardiagn.com

This setting is designed to compare the mileage of the vehicle to time. This reset should only be performed one time for each customer, and not reset annually. This replaces the date and time of day automatically downloaded in the vehicle as seen previously in the E65 and E66 vehicles. This is an enhancement to further refine the service intervals to properly match the customer's driving habits.

The reset of the Annual Kilometer Setting should be performed when the vehicle is delivered to the customer. If the vehicle is sold as a used vehicle in the future, the reset should again be performed for each subsequent owner.

E65 AND E65 SERVICE INDICATION

The service indicators can be displayed in three different locations inside the vehicle:

A. The **Service Need Display (SBA)** , located in the Instrument Cluster under the Speedometer, is the evolution of the SIA4 Service Interval Display. When the ignition (KL15 Terminal) is on, the SBA appears briefly. The first line specifies the mileage range before the next service is due. The second line, displayed by a clock symbol, specifies the time range before the next service is due. If service is overdue, a minus sign ("-") will appear with the overdue mileage or time.

   For example: The next mileage-dependent service item is due in 350 miles and the next time-dependent service item is due in 14 months.

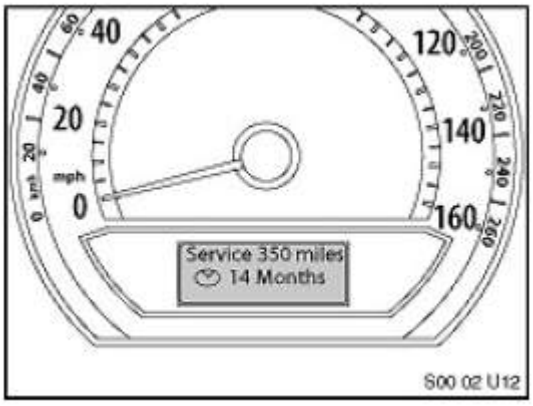

   Fig. 6: Service Need Display Located Instrument Cluster
   Courtesy of BMW OF NORTH AMERICA, INC.

B. **The Check Control Display** located in the Instrument Cluster under the Tachometer.

   For example: If either the front or rear brake linings are worn, the following is displayed:

   - "Service, see Vehicle menu" is displayed in the Check Control Display. For more detailed information, the user can access the CBS Menu in the Control Display.
   - The general brake warning lamp and the variable control lamp illuminate in the Instrument Cluster.
   - The variable control lamp shows the symbol of a car on a lifting platform in the bottom center of the Instrument Cluster.

cardiagn.com

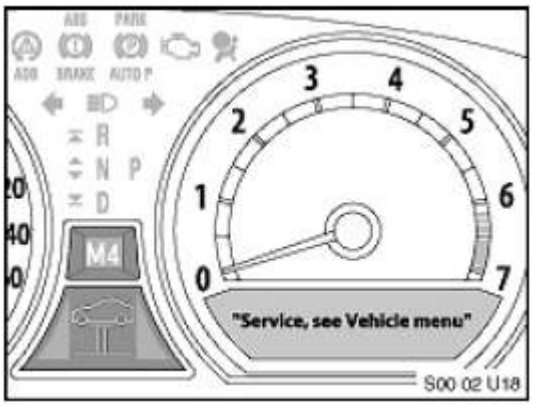

Fig. 7: Check Control Display Located Instrument Cluster
Courtesy of BMW OF NORTH AMERICA, INC.

C. The **CBS Menu** in the Control Display provides additional information on any required service. The CBS Menu can be accessed by doing the following:

- Select the "Car Data" menu using the controller.

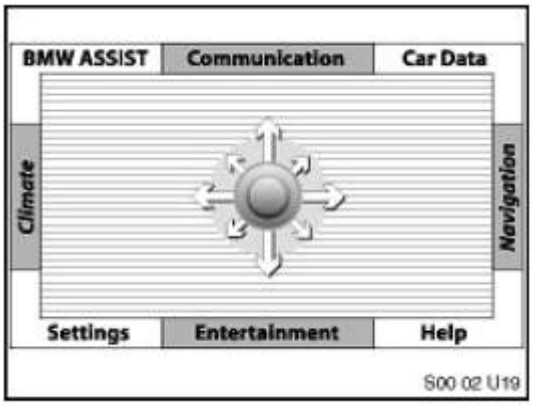

Fig. 8: CBS Menu In Control Display
Courtesy of BMW OF NORTH AMERICA, INC.

- After releasing the controller or returning to the central position, the "On-board Data" menu appears.
- Turn the controller until the Vehicle Symbol (bottom left) is highlighted.
- Confirm the selection by pressing the controller.

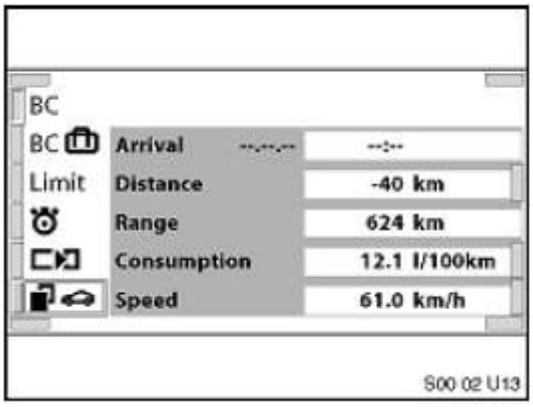

Fig. 9: On-Board Data Menu
Courtesy of BMW OF NORTH AMERICA, INC.

- Turn the controller until Service (top left) is highlighted.

cardiagn.com

- Confirm the selection by pressing the controller.
- The CBS menu appears with the service items.

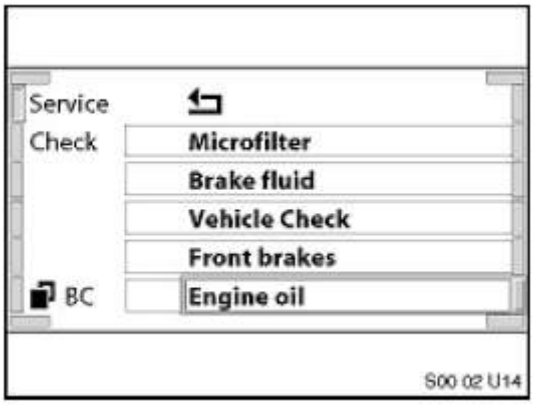

Fig. 10: CBS Menu With Service Items
Courtesy of BMW OF NORTH AMERICA, INC.

The service items are displayed in three different colors:

1. Green - No service is currently required.
2. Yellow - Service deadline is approaching (please see the above table: "Yellow" Interval Before Service Is Due).
3. Red - Service deadline has already passed (overdue).

To display the information of a service item, turn the controller to select the item and confirm the selection by pressing the controller.

E65 AND E66 PROCEDURE TO RESET THE CBS DISPLAY USING THE INSTRUMENT CLUSTER

The CBS Reset procedure enables resetting of the individual service item. After a service has been performed, the service item must be reset to 100% (full service interval). To reset a service item:

1. Insert the Remote Control into the Ignition Lock.

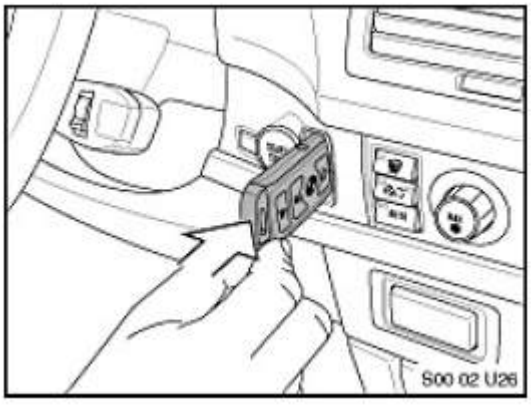

Fig. 11: Inserting Remote Control Into Ignition Lock
Courtesy of BMW OF NORTH AMERICA, INC.

2. Press the Start/Stop Button once (KL15 is "On") with foot off the Brake Pedal.

cardiagn.com

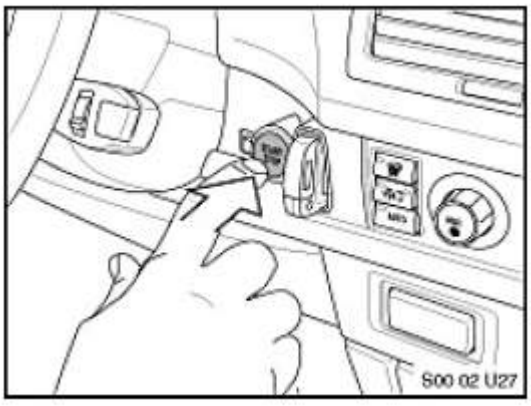

Fig. 12: Pressing Start/Stop Button
Courtesy of BMW OF NORTH AMERICA, INC.

3. Press and hold the Reset Button located on the upper left side of the Instrument Cluster for about 5 seconds.
4. Release the Reset Button when a 4-line menu appears inside the Speedometer display. At the top line is the "Back" function, followed by the first 3 service items. The menu will list the service items sorted by priority of the service due.

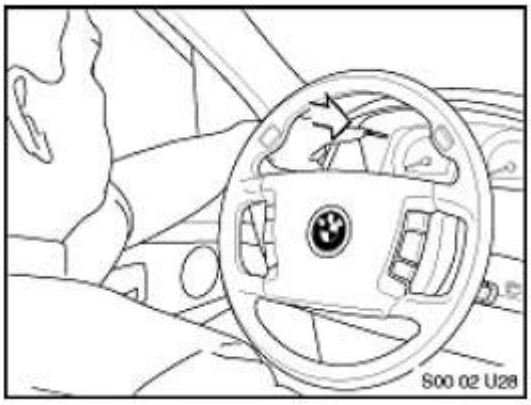

Fig. 13: Pressing Reset Button Located On Upper Left Side Of Instrument Cluster
Courtesy of BMW OF NORTH AMERICA, INC.

NOTE: **If the Reset Button is held too long and not released when the above 4-line menu appears, the system will go into Instrument Cluster Test Functions:**

01 Identification

02 System test

03 Not used

04 Consumption

To exit Test Functions, remove the Remote Control from the Ignition Lock and repeat steps 1 through 4 above.

5. Tap the Reset Button or the lower FAS Button located in the side of the Turn Signal/High Beam Stalk to view the next service items in the menu.
6. Select the Service Item with "!" or "-" by tapping the Reset Button or the lower FAS Button.

cardiagn.com

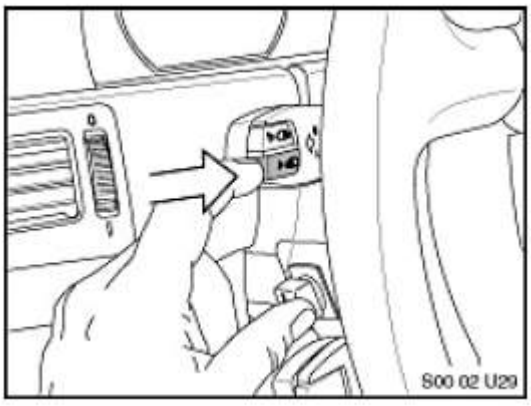

Fig. 14: Tapping Reset Button Or Lower FAS Button Located In Side Of Turn Signal/High Beam Stalk
Courtesy of BMW OF NORTH AMERICA, INC.

7. Press and hold the Reset Button for a few seconds to display a 2-line menu in the Tachometer. The third menu line will appear to confirm if the reset is successful. The nominal interval for the service item will also be highlighted in the Service Need Display (SBA), located under the Speedometer in the Instrument Cluster.

E65 AND E66 PROCEDURE TO RESET THE CBS DISPLAY USING BMW DIAGNOSTIC TESTER

Using the BMW diagnostic tester, the CBS Reset sets the selected service item to 100% (full service interval) and displays a service counter indicating how many times the service item has been reset.

The CBS reset procedure is found under: Diagnosis - Function Selection - **Service Functions - Maintenance - CBS Reset - Test Plan.** Then highlight the listed procedure and press the bottom right corner green arrow to the right. The original value of the individual CBS service item will be deleted during the reset procedure.

The first vital step of the reset procedure is to verify the DISplus or GT1 correct date and time: "Are the current date and time correct?" This is important for time and distance-based service items that are managed by the Instrument Cluster, because the internal vehicle trip odometer and vehicle data will be synchronized with the internal Tester data. Confirm by either pressing **Yes** or **No** (if required, correct date and time in Main Menu - Administration - **DIS - Date/Time**). Then select the bottom right corner **green arrow to** the right.

The next screen offers 3 selection menus:

SELECTION MENUS

Selection 1: CBS reset	Selection 2: CBS reset	Selection 3: End
1. Engine oil	1. Spark plugs	Â
2. Microfilter	2. Brake fluid	Â
3. Front brakes	3. Coolant	Â
4. Rear brakes	4. State Safety inspection	Â
5. Vehicle check	5. Emissions inspection	Â

To properly complete the CBS reset, the date and time of service/maintenance will be transferred to the vehicle. This includes setting the day counter and the date. The transfer completion is confirmed by: **OKAY** in the setting status.

The CBS vehicle data correction allows "quick access" to correct or change the basic data stored in the vehicle after the CBS reset. This procedure is found under: Diagnosis - Function Selection - **Service Functions - Maintenance - CBS Correction, Vehicle Data - Test Plan.** Then highlight the listed procedure and press the bottom right corner **green arrow** to the right. Please verify the correct date and time of the DISplus or GT1 before proceeding.

The next screen offers 4 selection menus:

cardiagn.com

SELECTION MENUS

Selection 1: Correction	Selection 2: Correction	Selection 3: Correction	Selection 4: End
1. Engine oil	1. Spark plugs	1. Telephone numbers	Â
2. Microfilter	2. Brake fluid	2. Date of first registration	Â
3. Front brakes	3. Coolant	Â	Â
4. Rear brakes	4. State Safety inspection	Â	Â
5. Vehicle check	5. Emissions inspection	Â	Â

NOTE: **CBS reset and correction may be required if a control module has been replaced or reprogrammed.**

FLUID MAINTENANCE SERVICE INTERVAL FOR HYBRID F30, F10, F02 - SERVICE BULLETIN SI B24 07 12 (8/2015)

Applies to the following models:

- F30 (ActiveHybrid 3)

- F10 (ActiveHybrid 5)

- F02 (ActiveHybrid 7)

The automatic transmission fluid is required to be changed at every second or third engine oil service depending on the production date of the vehicle ("connected" maintenance service to the engine oil service at Service Counter numbers: 2, 4, 6, or 3, 6, 9 etc.).

On vehicles with option code 8KC (CBS oil service interval of 15k miles/24 months) produced up to 07/2013: Transmission fluid service is scheduled on every second oil service.

On vehicles with option code 8KL (CBS oil service interval of 10k miles/12 months) produced from 07/2013: Transmission fluid service is scheduled on every third oil service.

IMPORTANT: Only properly trained personnel, who have passed all applicable technical training courses, should perform any maintenance or repairs on any Hybrid or Electric Vehicle. Work performed by unqualified persons may result in severe injury or damage to the vehicle. Additional information may be found in REP 61 00 Observe safety instructions when handling electric vehicles.

This requirement is due to the hybrid-specific components that are contained in the transmission.

Automatic transmission fluid L 12108 (20 Liters bulk)

BMW part number: 83 22 2 220 439

Copyright 2016 Mitchell Repair Information Company, LLC. All Rights Reserved.

Article GUID: A00395996

cardiagn.com

TRANSFER CASE, GENERAL

27 00 270 CHANGE TRANSFER BOX OIL (ATC 45L)

Special tools required:

- 00 2 080

IMPORTANT: Use only the approved TRANSMISSION OIL in the transfer box. Failure to comply with this requirement will result in serious Information damage to the transfer box!

NOTE: Only change oil when transfer box is at normal operating temperature.

Necessary preliminary task:

- Remove **transmission cross-member** . See 22 32 050 REPLACING CROSS MEMBER FOR TRANSMISSION MOUNTING .

Undo oil filler plug (1).

Tightening torque 27 00 11AZ .

Installation note:

Renew oil filler plug with O-ring.

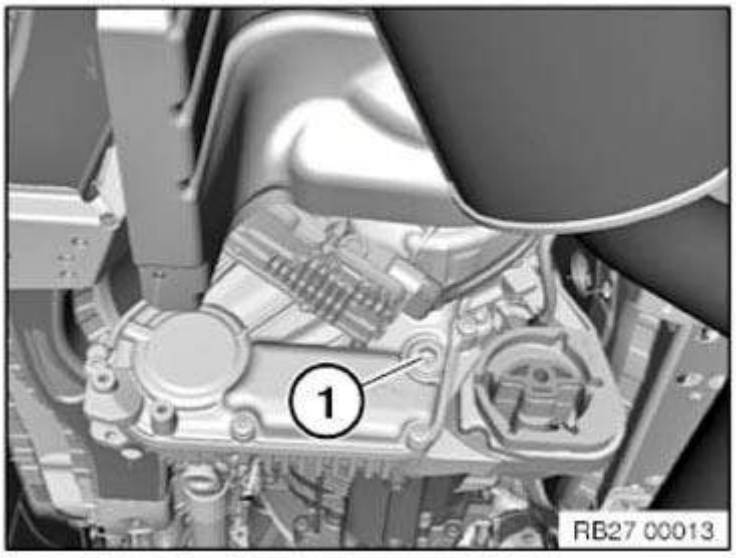

Fig. 1: Identifying Oil Filler Plug
Courtesy of BMW OF NORTH AMERICA, INC.

Place oil collecting apparatus underneath.

Use special tool 00 2 080 to draw off and dispose of transmission oil.

- Drawn off oil volume ≥ 500 ml.
- Observe country-specific waste disposal regulations

cardiagn.com

Fig. 2: Identifying Special Tool (00 2 080)
Courtesy of BMW OF NORTH AMERICA, INC.

Use special tool **00 2 080** to top the transmission oil up to the lower edge of the filler screw opening.

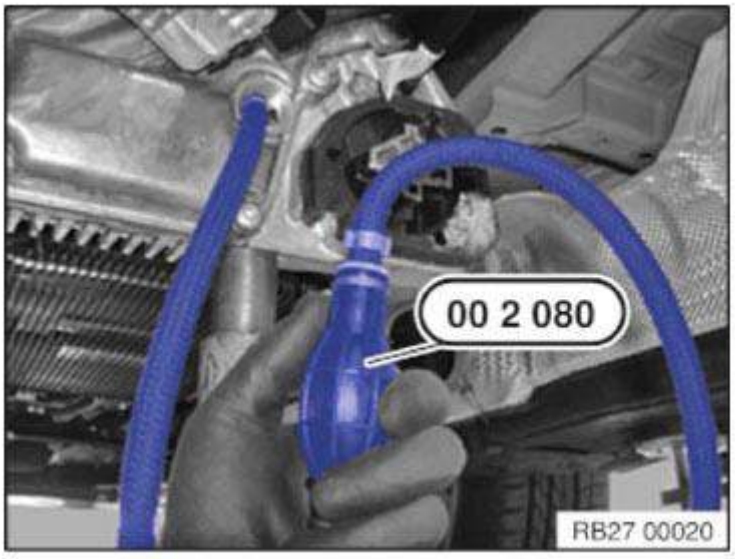

Fig. 3: Identifying Special Tool (00 2 080)
Courtesy of BMW OF NORTH AMERICA, INC.

00 DANGER OF POISONING IF OIL IS INGESTED/ABSORBED THROUGH THE SKIN

Danger of poisoning!

Ingesting oil or absorbing through the skin may cause poisoning!

Possible symptoms are:

- Headaches
- Dizziness
- Stomach aches
- Vomiting
- Diarrhoea
- Cramps/fits
- Unconsciousness

cardiagn.com

Protective measures/rules of conduct:

- Pour oil only into appropriately marked containers
- Do **not** pour oil into drinking vessels (drinks bottles, glasses, cups or mugs)
- Observe country-specific safety regulations

First aid measures:

- Do not induce vomiting.

  If the person affected is still conscious, he/she must rinse out their mouth with water, drink plenty of water and consult a doctor immediately.

  If the person affected is unconscious, do not administer anything by mouth, place the person in the recovery position and seek immediate medical attention.

27 00... REPLENISHING/CHANGING TRANSFER BOX OIL (ATC 450)

IMPORTANT: Use only the approved **TRANSMISSION OIL** in the transfer box.
Failure to comply with this requirement will result in serious damage to the transfer box!

NOTE: **Only change oil when transfer box is at normal operating temperature.**

Necessary preliminary tasks:

- Remove **TRANSMISSION CROSS MEMBER** .

Check transfer case oil level, correct:

Undo oil filler plug (1).

Check transfer box oil level.

If necessary, pour in transmission oil up to lower edge of opening for oil filler plug (1).

Installation note:

Replace oil filler plug (1).

Tightening torque **27 10 2AZ** .

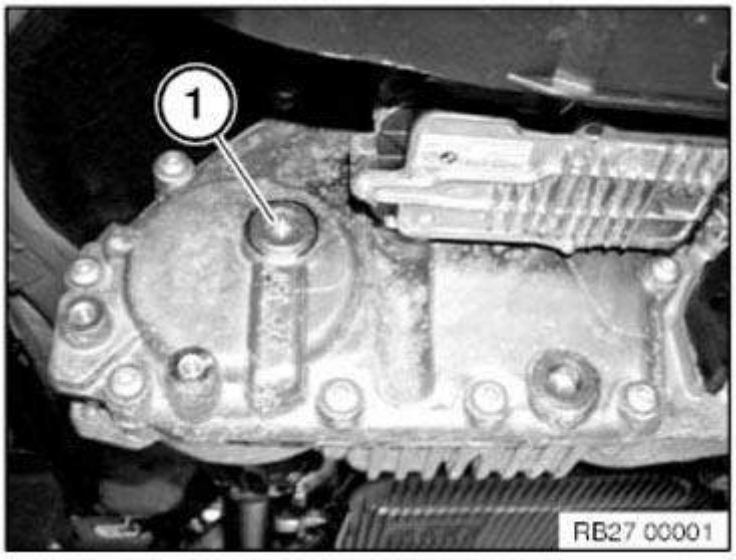

cardiagn.com

Fig. 4: Identifying Oil Filler Plug
Courtesy of BMW OF NORTH AMERICA, INC.

Changing transfer case oil:

Place oil collecting apparatus underneath.

Remove oil drain plug (1).

Drain and dispose of transmission oil.

NOTE: **Observe country-specific waste disposal regulations**

Installation note:

Replace oil drain plug (1).

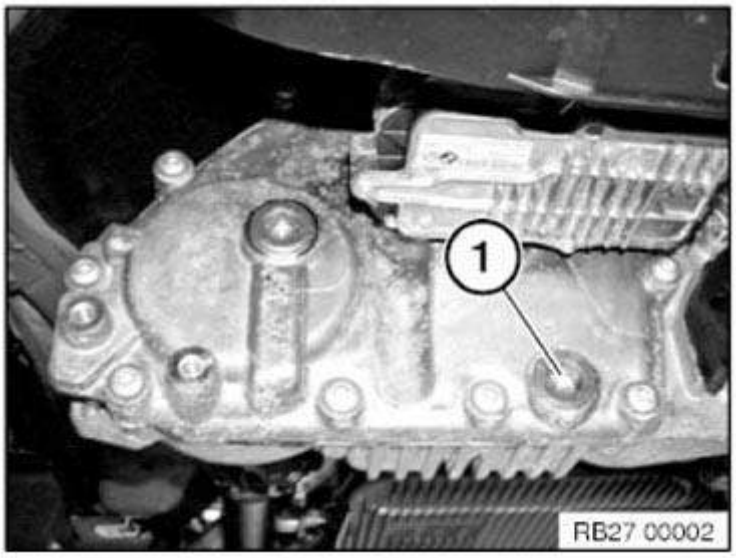

Fig. 5: Identifying Oil Drain Plug
Courtesy of BMW OF NORTH AMERICA, INC.

Tightening torque **27 10 2AZ** .

Undo oil filler plug (1).

Pour in transmission oil up to lower edge of opening for oil filler plug (1).

Installation note:

Replace oil filler plug (1).

Tightening torque **27 10 2AZ** .

cardiagn.com

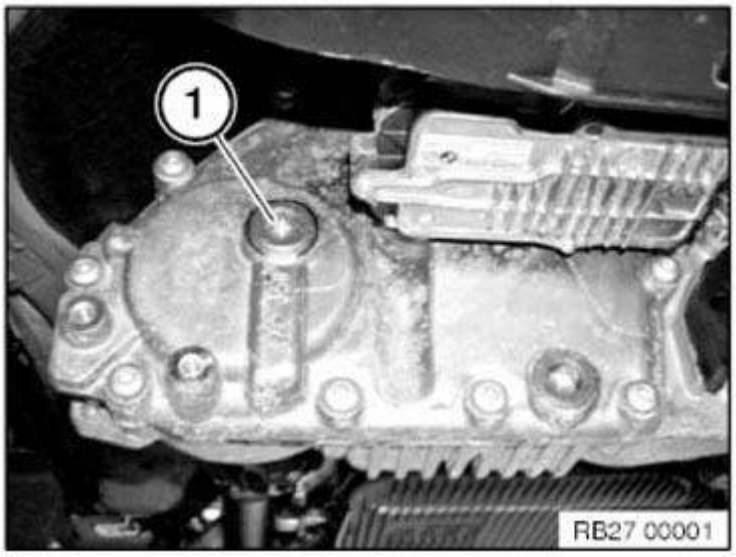

Fig. 6: Identifying Oil Filler Plug
Courtesy of BMW OF NORTH AMERICA, INC.

00 RISK OF INJURY IF OIL COMES INTO CONTACT WITH EYES AND SKIN

Danger of injury!

Contact with eyes or skin may result in injury!

Possible symptoms are:

- Impaired sight
- Irritation of the eyes
- Reddening of the skin
- Rough and cracked skin

Protective measures/rules of conduct:

- Wear safety goggles
- Wear oil-resistant protective gloves
- Observe country-specific safety regulations

First aid measures:

- **Eye contact:** Rinse eyes immediately with plenty of water for at least 15 minutes; if available, use an eye-rinsing bottle. If irritation of the eyes persists, consult a doctor.
- **Skin contact:** Wash off with soap and water immediately. If irritation persists, consult a doctor.

NOTE: **Do not use solvents/thinners.**

00 SAFETY INSTRUCTIONS FOR HANDLING OIL

WARNING: **DANGER OF POISONING if oil is ingested/absorbed through the skin!**
RISK OF INJURY if oil comes into contact with eyes and skin!

Recycling:

Observe country-specific waste disposal regulations.

Measures if oil is unintentionally released:

cardiagn.com

- **Personal precautionary measures:** Danger of slipping! Keep noninvolved persons away from the work area. Wear personal protective clothing/equipment.
- **Environmental protection measures:** Prevent oil from draining into drain channels, sewerage systems, pits, cellars, water and the ground.
- **Limiting spread:** Use oil blocks to prevent the surface spread of oil.
- **Cleaning procedure:** Bind and dispose of escaped oil with nonflammable absorbents.

NOTE: **Do not flush oil away with water or aqueous cleaning agents.**

27 00... TOPPING UP TRANSFER BOX OIL (ATC 45L)

IMPORTANT: Use only the approved **TRANSMISSION OIL** in the transfer box.
Failure to comply with this requirement will result in serious damage to the transfer box!

NOTE: **Only change oil when transfer box is at normal operating temperature.**

Necessary preliminary tasks:

- Remove **cross member** . See **22 32 050 REPLACING CROSS MEMBER FOR TRANSMISSION MOUNTING** .

Check transfer box oil level, correct:

Undo oil filler plug (1).

Check transfer case oil level.

If necessary pour in transmission oil up to the lower edge of the oil filler plug opening (1).

Installation note:

Replace oil filler plug (1).

Tightening torque **27 10 2AZ** .

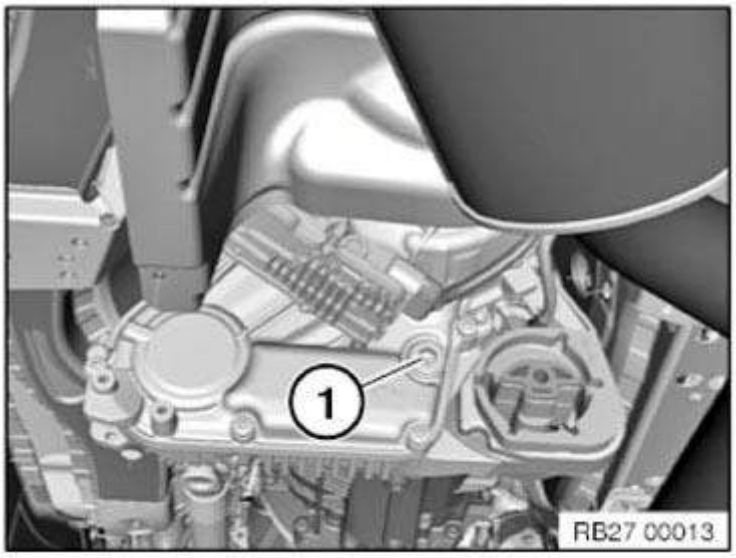

Fig. 7: Identifying Oil Filler Plug
Courtesy of BMW OF NORTH AMERICA, INC.

TRANSFER BOX

cardiagn.com

27 10 020 INSTALLING DISTRIBUTOR EXCHANGE TRANSMISSION (ATC 450)

IMPORTANT: Before and after replacement, execute the "Repair" service function with the BMW diagnosis system.

Recycling:

Catch and dispose of escaping transmission oil. Observe country-specific waste disposal regulations

Necessary preliminary tasks:

- Drain transmission oil at oil drain plug

  Tightening torque **27 10 2AZ**

- Remove **TRANSFER BOX**

Modify following parts:

- Covers and protective caps
- Drive shaft transportation retainer
- Vent hose of transfer box
- If required, replace **rubber mount** . See **22 32 001 REPLACING RUBBER MOUNT FOR TRANSMISSION MOUNTING (ATC 450)** or 22 31 001 REPLACING RUBBER MOUNT FOR TRANSMISSION MOUNTING for transmission mounting

IMPORTANT: After completing work, check transmission oil level and top up if necessary.
Release filler plug (1).
Check oil level.
Tightening torque **27 10 2AZ** .
Pour in transmission oil up to lower edge of opening for filler plug (1).
Use only the approved **TRANSMISSION OIL** .

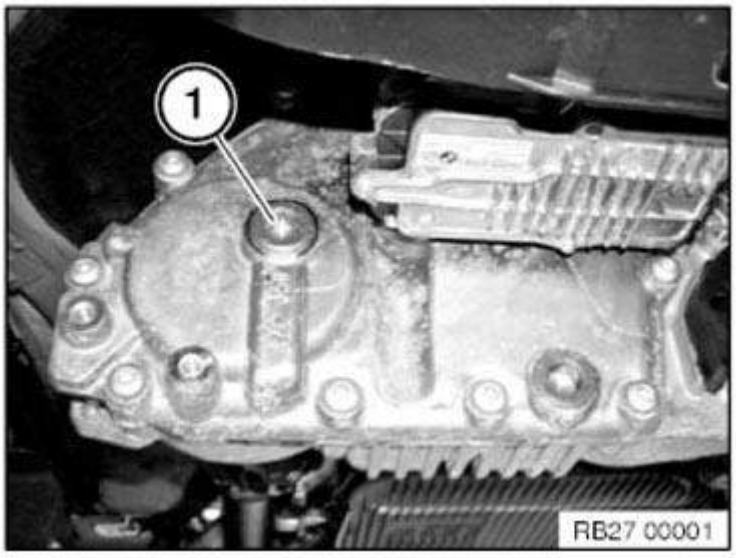

Fig. 8: Identifying Filler Plug
Courtesy of BMW OF NORTH AMERICA, INC.

Failure to comply with this requirement will result in serious damage to the transfer box!

27 10 020 INSTALLING EXCHANGE TRANSFER BOX (ATC 45L)

cardiagn.com

IMPORTANT: Before and after replacement, execute the "Repair" service function with the BMW diagnosis system.

Recycling:

Catch and dispose of escaping transmission oil. Observe country-specific waste disposal regulations

Necessary preliminary tasks:

- Drain **GEAR OIL** at oil drain plug.

  Tightening torque **27 10 2AZ** .

- Remove **TRANSFER BOX**.

Remount the following parts:

- Covers and protective caps
- Drive shaft transportation retainer
- Vent hose of transfer box.
- **REPLACE RUBBER MOUNT FOR TRANSFER BOX MOUNTING IF REQUIRED** .

IMPORTANT: After completing work, check gear oil level and top up if necessary.
Undo oil filler plug (1).
Check oil level.
Tightening torque **27 10 2AZ** .
Top up transmission oil up to lower edge of opening for oil filler plugs (1).
Use only approved **GEARBOX OIL** .

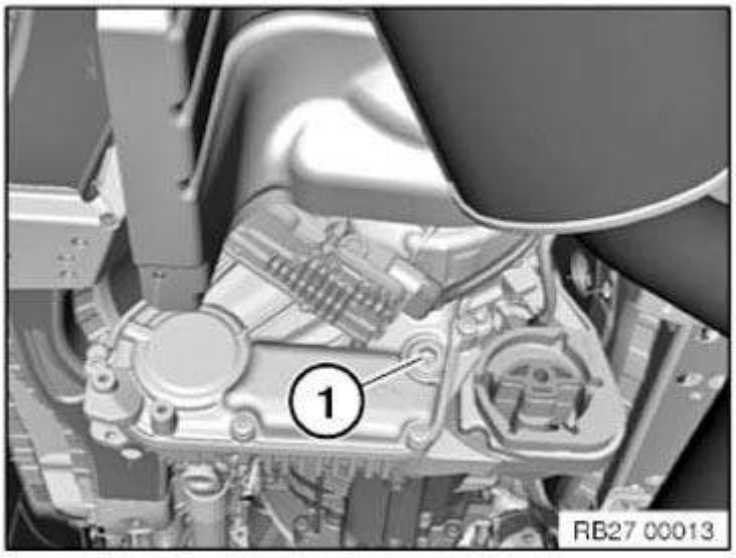

Fig. 9: Identifying Oil Filler Plug
Courtesy of BMW OF NORTH AMERICA, INC.

Failure to comply with this requirement will result in serious damage to the transfer box.

After replacement:

Repair service function **CARRY OUT PROGRAMMING/ENCODING** .

27 10 010 REMOVING AND INSTALLING TRANSFER BOX (ATC 450)

Special tools required:

cardiagn.com

- 00 2 030
- 23 4 050

IMPORTANT: Before and after replacement, execute the "Repair" service function with the BMW diagnosis system.

IMPORTANT: After completion of work, CHECK TRANSMISSION OIL LEVEL and top up if necessary. Failure to comply with this requirement will result in serious damage to the transfer box!

Necessary preliminary work:

- Disconnect BATTERY EARTH LEAD
- Remove PROPELLER SHAFT
- Remove FRONT PROPELLER SHAFT

NOTE: Support transmission with special tools 00 2 030 , 23 4 050 .

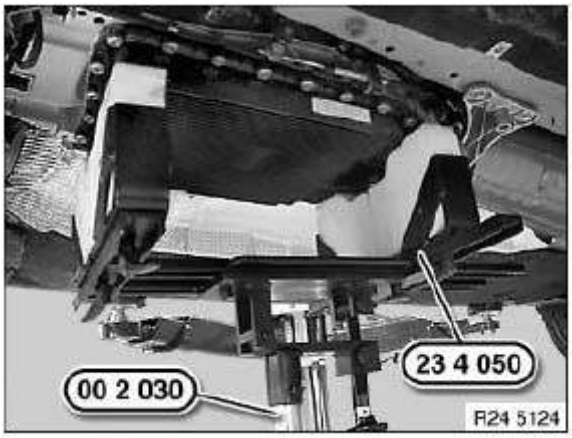

Fig. 10: Supporting Transmission Using Special Tools (00 2 030 And 23 4 050)
Courtesy of BMW OF NORTH AMERICA, INC.

Release screws.

Remove transmission cross member.

Tightening torque 22 32 3/6AZ .

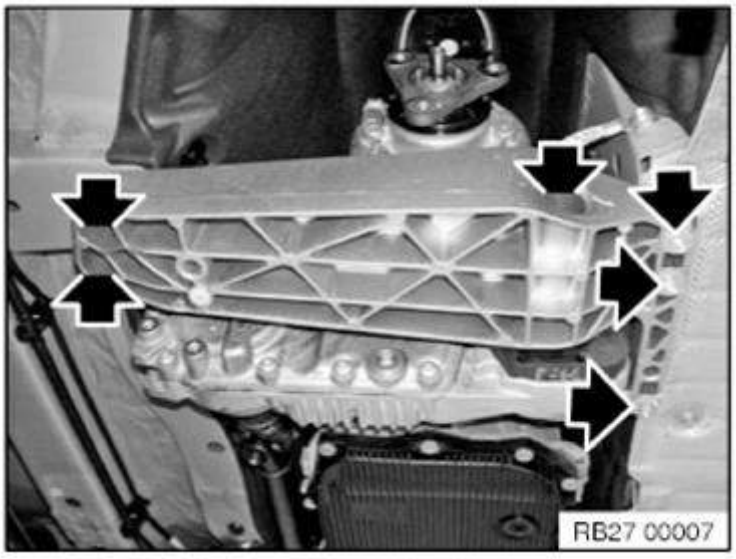

cardiagn.com

Fig. 11: Locating Screws Of Transmission Cross Member
Courtesy of BMW OF NORTH AMERICA, INC.

Release screw (1), detach earth strap.

Tightening torque: **27 10 4AZ**

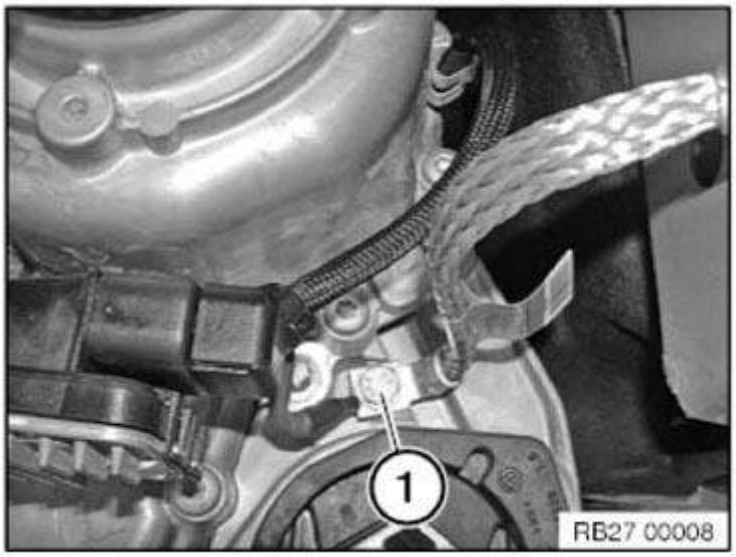

Fig. 12: Identifying Screw Of Earth Strap
Courtesy of BMW OF NORTH AMERICA, INC.

Unplug connector (1) from VTG control unit (linear force module) (3).

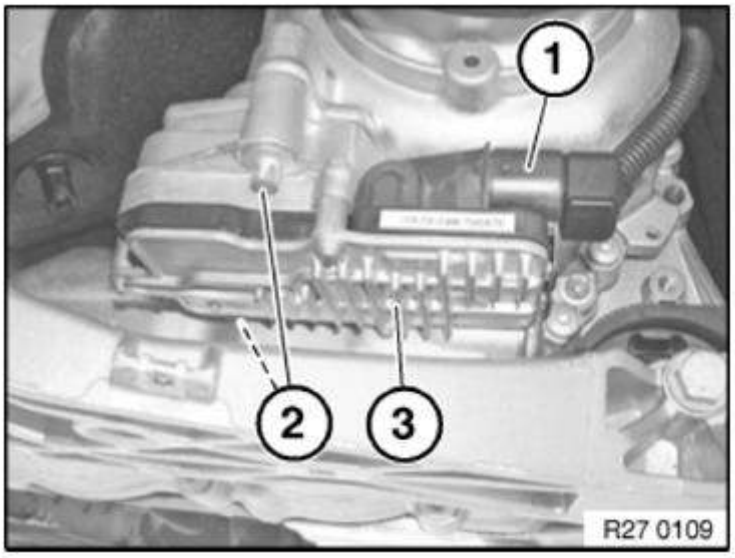

Fig. 13: Identifying VTG Control Unit, Connector And Screws
Courtesy of BMW OF NORTH AMERICA, INC.

Release screw connection (1) of transfer box.

Tightening torque **27 10 1AZ** .

Take off transfer box (2).

cardiagn.com

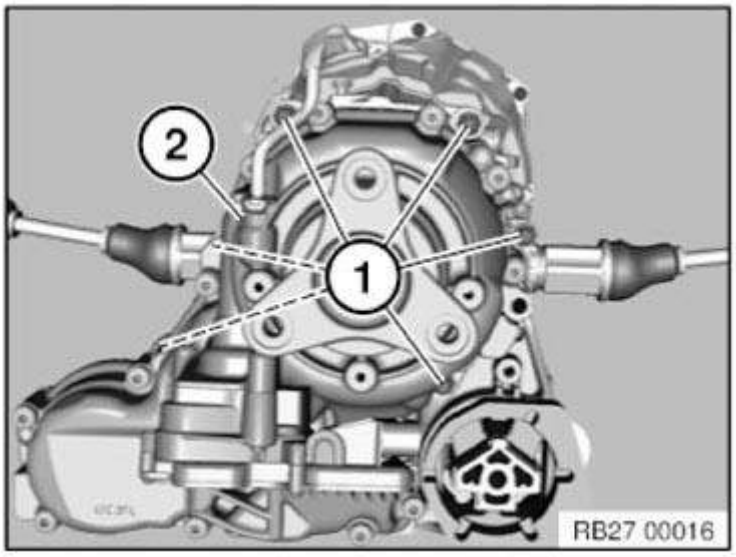

Fig. 14: Identifying Transfer Box Screw Connection And Screw
Courtesy of BMW OF NORTH AMERICA, INC.

Installation note:

Pay attention to dowel pin (1).

Grease dowel pin (1).

Apply a thin coat of grease to gearing.

Grease: WEICON ANTI-SEIZE.

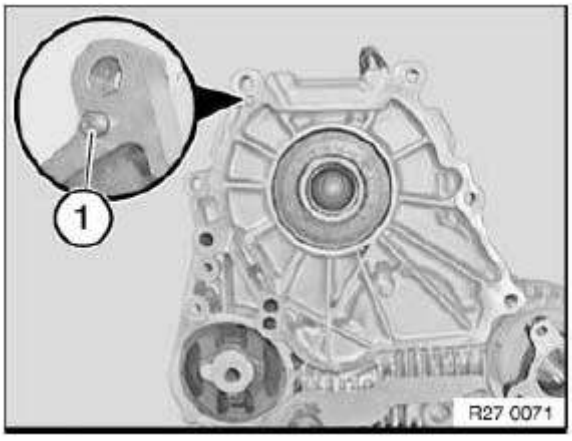

Fig. 15: Identifying Dowel Pin
Courtesy of BMW OF NORTH AMERICA, INC.

27 10 010 REMOVING AND INSTALLING TRANSFER BOX (ATC 45L)

Special tools required:

- 00 2 030
- 23 4 050

IMPORTANT: Before and after replacement, execute the "Repair" service function with the BMW diagnosis system.

IMPORTANT: After completion of work, CHECK TRANSMISSION OIL LEVEL and top up if necessary.

cardiagn.com

Failure to comply with this requirement will result in serious damage to the transfer box!

Necessary preliminary tasks:

- Disconnect **NEGATIVE BATTERY CABLE** .
- Remove **PROPELLER SHAFT** .
- Remove **FRONT PROPELLER SHAFT** .

NOTE: **Support transmission with special tools 00 2 030 , 23 4 050 .**

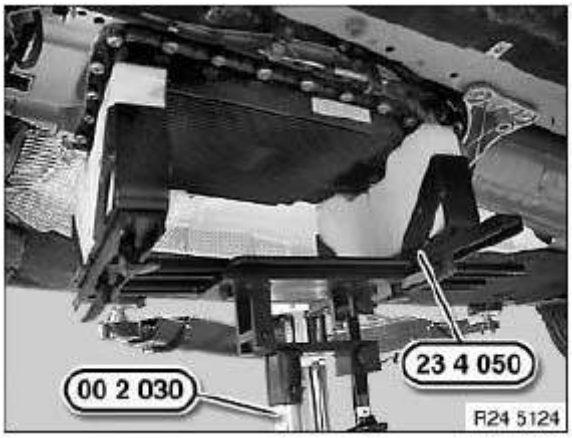

Fig. 16: Supporting Transmission Using Special Tools (00 2 030 And 23 4 050)
Courtesy of BMW OF NORTH AMERICA, INC.

Release screws.

Remove transmission cross member.

Tightening torque **22 32 3/6AZ** .

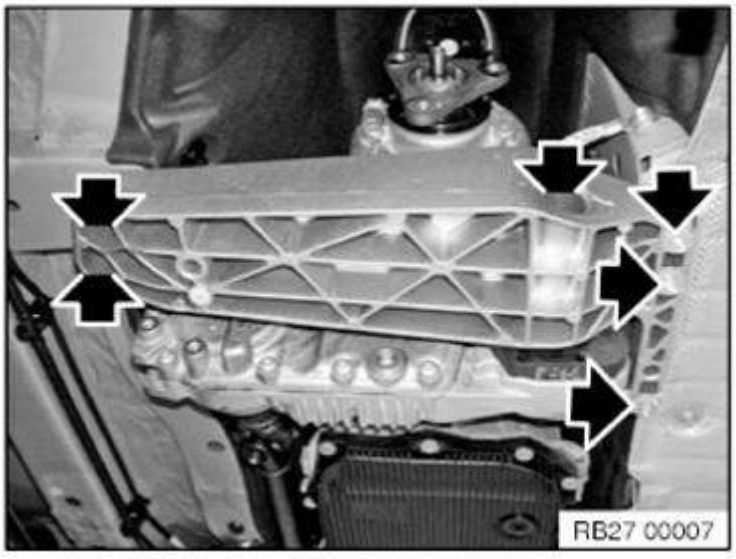

Fig. 17: Locating Screws Of Transmission Cross Member
Courtesy of BMW OF NORTH AMERICA, INC.

Release screw (1), detach earth strap.

Tightening torque: **27 10 4AZ**

cardiagn.com

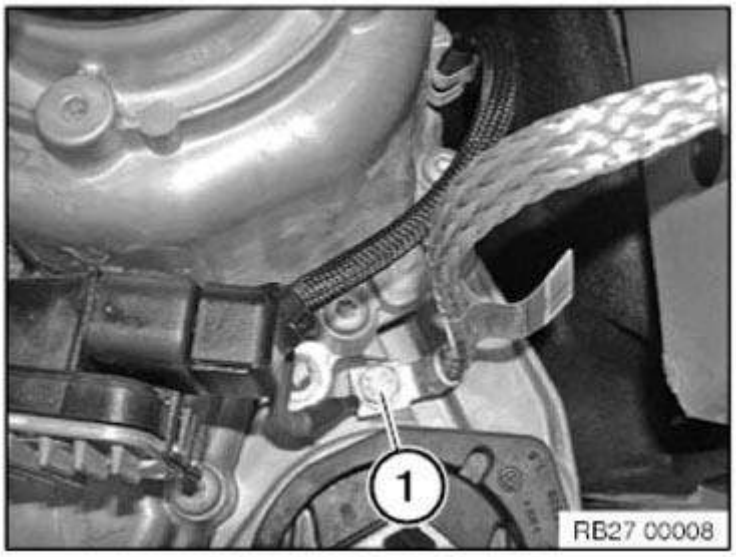

Fig. 18: Identifying Screw Of Earth Strap
Courtesy of BMW OF NORTH AMERICA, INC.

Unplug connector (1) from VTG control unit (linear force module) (3).

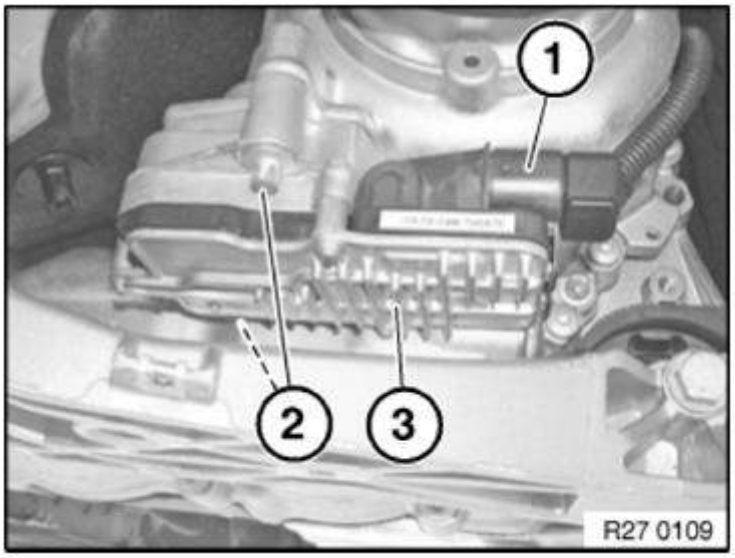

Fig. 19: Identifying VTG Control Unit, Connector And Screws
Courtesy of BMW OF NORTH AMERICA, INC.

Release screw connection of transfer box.

Tightening torque **27 10 1AZ** .

Remove transfer box.

Installation note:

Pay attention to dowel pin (1).

Grease dowel pin (1).

Apply a thin coat of grease to gearing.

Grease: WEICON ANTI-SEIZE.

cardiagn.com

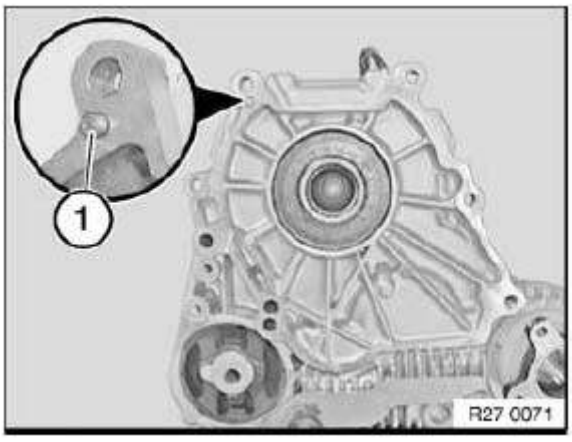

Fig. 20: Identifying Dowel Pin
Courtesy of BMW OF NORTH AMERICA, INC.

27 10 050 REPLACING OUTPUT FLANGE FOR FRONT AXLE OUTPUT (ATC 450)

IMPORTANT:
Do not move vehicle with drive power once propeller shaft has been removed.
Replace output flange **only** together with a new radial shaft seal.
After completion of work, check gearbox oil level.
Use only the approved **TRANSMISSION OIL** .
Failure to comply with this requirement will result in serious damage to the transfer box!

Operation is identical to **REPLACING RADIAL SHAFT SEAL FOR FRONT AXLE OUTPUT**.

27 10 050 REPLACING OUTPUT FLANGE FOR OUTPUT TO THE FRONT AXLE (ATC 45L)

IMPORTANT:
Do not move vehicle with drive power once propeller shaft has been removed.
Replace output flange **only** together with a new radial shaft seal.
After completion of work, check **GEARBOX OIL LEVEL**.
Use only the approved **TRANSMISSION OIL** .
Failure to comply with this requirement will result in serious damage to the transfer box!

Operation is identical to **REPLACING RADIAL SHAFT SEAL FOR FRONT AXLE OUTPUT**.

27 10 070 REPLACING OUTPUT FLANGE ON REAR TRANSFER BOX (ATC 45L)

IMPORTANT:
After completing work, check **TRANSMISSION OIL LEVEL** and top up if necessary.
Use only the approved **TRANSMISSION OIL** .

NOTE:

- **Replace output flange only together with a new radial shaft seal.**
- **Procedure for removing output flange is identical to replacing RADIAL SHAFT SEAL.**

Installation note:

- Thickness of new shim must be determined before output flange is installed.

Determine and note down dimension A of output flange (old and new).

cardiagn.com

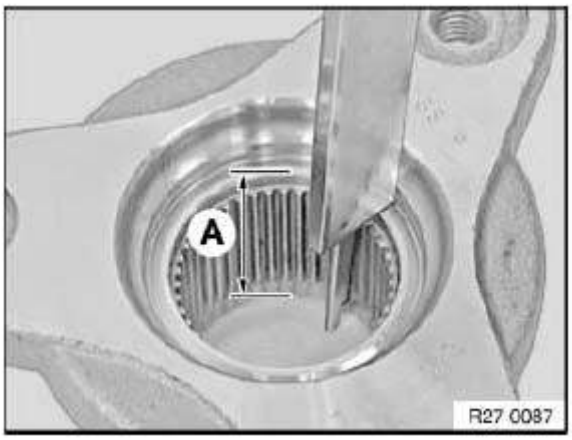

Fig. 21: Checking Output Flange Dimension A
Courtesy of BMW OF NORTH AMERICA, INC.

Determine and note down dimension B of output flange (old and new).

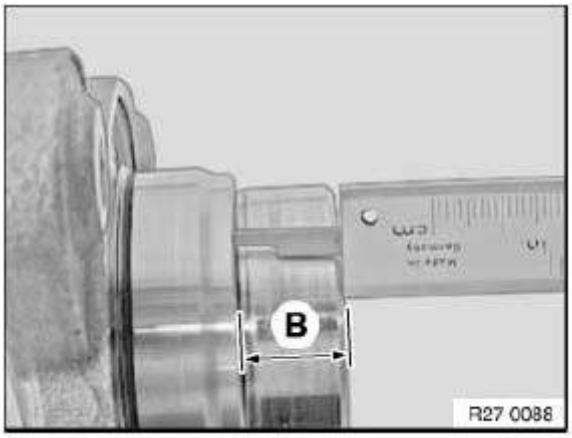

Fig. 22: Checking Output Flange Dimension B
Courtesy of BMW OF NORTH AMERICA, INC.

Determine old dimension C, thickness of shim.

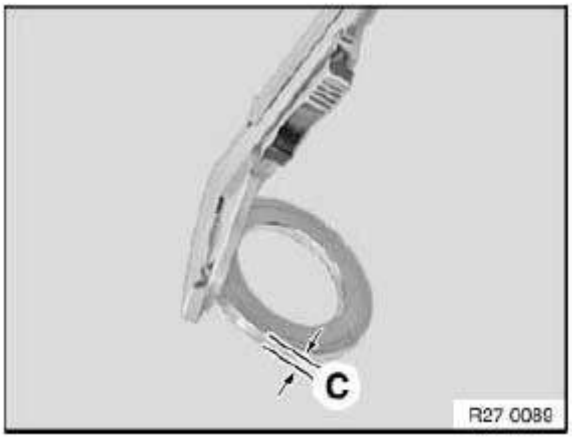

Fig. 23: Measuring Shim Thickness
Courtesy of BMW OF NORTH AMERICA, INC.

Installation note:

Calculate thickness of new shim:

cardiagn.com

1. Add old dimension A of output flange (previous) and old dimension C of shim Then subtract old dimension B from old result A+C
2. Subtract dimension B from dimension A of output flange (new)
3. Then subtract result of step 2 from result of step 1.

27 10 070 REPLACING OUTPUT FLANGE ON TRANSFER BOX AT REAR (ATC450)

IMPORTANT: After completing work, check transmission oil level and top up if necessary.
Use only the approved **TRANSMISSION OIL** .

NOTE:

- **Replace output flange only together with a new radial shaft seal.**
- **Operations for removing output flange are identical to replacing RADIAL SHAFT SEAL**

Installation note:

- Thickness of new shim must be determined before output flange is installed

Determine and note down dimension A of output flange (old and new).

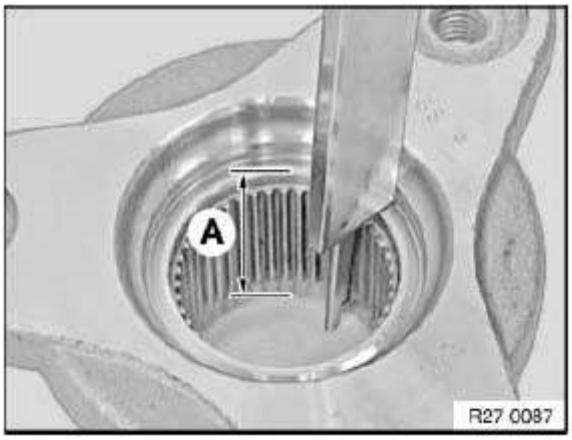

Fig. 24: Checking Output Flange Dimension A
Courtesy of BMW OF NORTH AMERICA, INC.

Determine and note down dimension B of output flange (old and new).

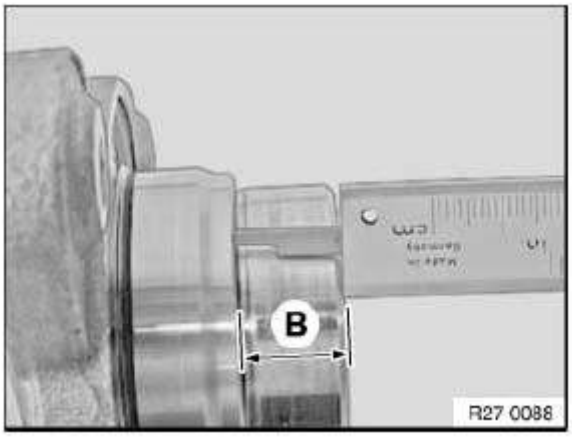

Fig. 25: Checking Output Flange Dimension B
Courtesy of BMW OF NORTH AMERICA, INC.

cardiagn.com

Determine old dimension C, thickness of shim.

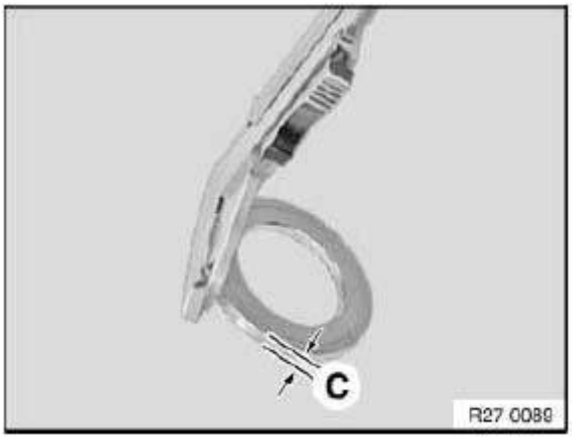

Fig. 26: Measuring Shim Thickness
Courtesy of BMW OF NORTH AMERICA, INC.

Installation note:

Calculate thickness of new shim:

1. Add old dimension A of output flange (previous) and old dimension C of shim Then subtract old dimension B from old result A+C
2. Subtract dimension B from dimension A of output flange (new)
3. Then subtract result of step 2 from result of step 1.

27 21 040 REPLACING RADIAL SHAFT SEAL FOR ACTUATOR SHAFT (ATC 450)

Special tools required:

- **11 1 200**
- **11 1 380**
- **23 0 490**

IMPORTANT: Read and comply with notes on protection against electrostatic discharge (ESD protection).
After completion of the repair work, **CHECK TRANSMISSION OIL LEVEL** and top up if necessary.
Use only the approved **TRANSMISSION OIL** .

Necessary preliminary tasks:

- Disconnect **NEGATIVE BATTERY CABLE**
- Remove **CROSS MEMBER** .

Disconnect connector (1).

Release screws (2) and remove transfer box from control unit (longitudinal torque module) (3).

Tightening torque **27 10 3AZ** .

cardiagn.com

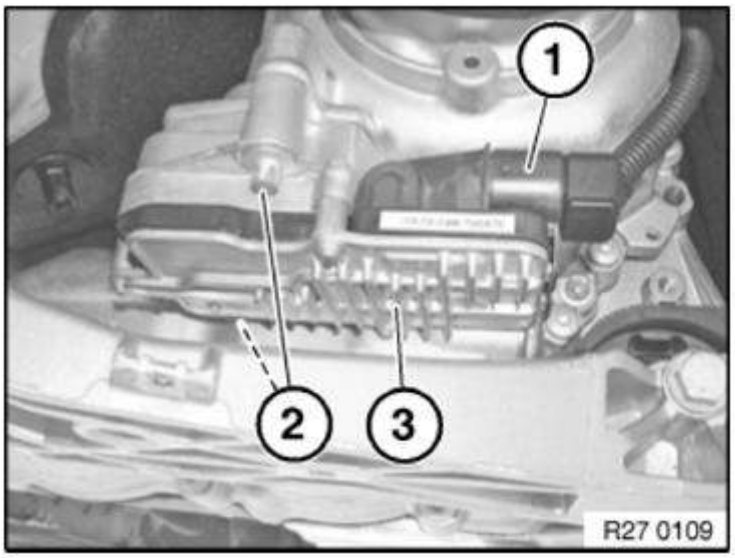

Fig. 27: Identifying VTG Control Unit, Connector And Screws
Courtesy of BMW OF NORTH AMERICA, INC.

Screw special tool **23 0 490** into radial shaft seal.

Drive out radial shaft seal (1) with impact weight (2).

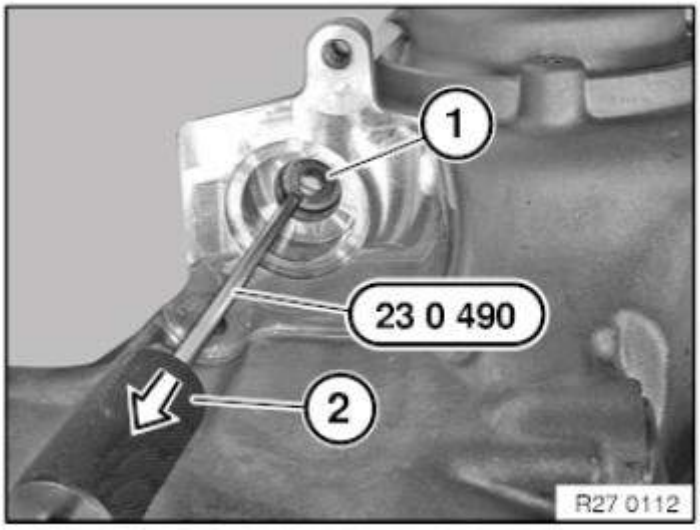

Fig. 28: Removing Radial Shaft Seal
Courtesy of BMW OF NORTH AMERICA, INC.

Push the assembly sleeve **11 1 380** over the actuator shaft.

IMPORTANT: Nonobservance involves a risk of damage to the radial shaft seal.

cardiagn.com

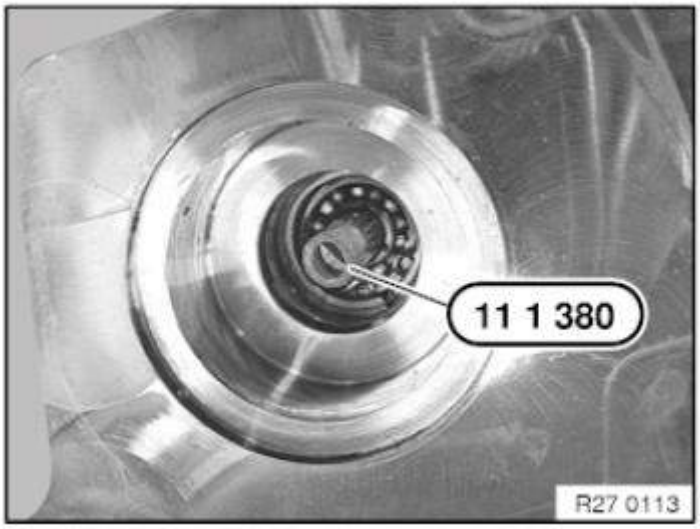

Fig. 29: Identifying Special Tool (11 1 380)
Courtesy of BMW OF NORTH AMERICA, INC.

Slide the new radial shaft seal (1) over the assembly sleeve (2) onto the actuator shaft.

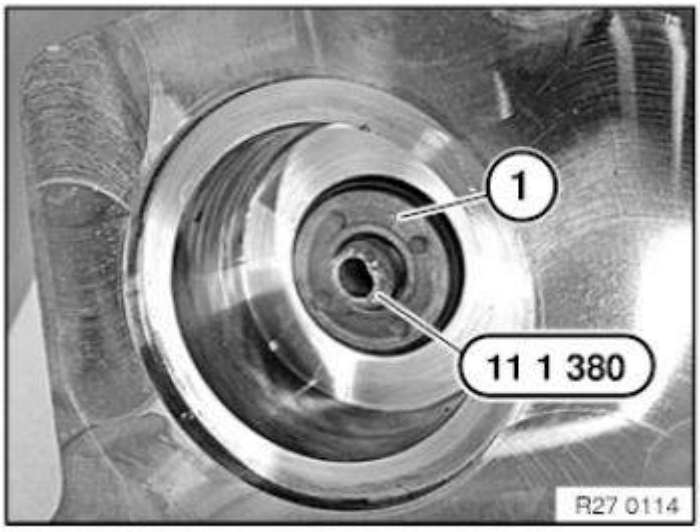

Fig. 30: Sliding Radial Shaft Seal Over Assembly Sleeve Onto Actuator Shaft
Courtesy of BMW OF NORTH AMERICA, INC.

Drive radial shaft seal fully home using special tool **11 1 200** and plastic hammer.

Remove the assembly sleeve.

cardiagn.com

Fig. 31: Installing Radial Shaft Seal
Courtesy of BMW OF NORTH AMERICA, INC.

27 21 040 REPLACING RADIAL SHAFT SEAL FOR ACTUATOR SHAFT (ATC 45L)

Special tools required:

- **11 1 200**
- **11 1 380**
- **23 0 490**

IMPORTANT:	Read and comply with notes on protection against electrostatic discharge (ESD protection). After completion of the repair work, **CHECK TRANSMISSION OIL LEVEL** and top up if necessary. Use only the approved **TRANSMISSION OIL** .

Necessary preliminary tasks:

- Disconnect **BATTERY EARTH LEAD** .
- Remove **CROSS MEMBER** .

Disconnect connector (1).

Release screws (2) and remove transfer box from control unit (longitudinal torque module) (3).

Tightening torque **27 10 3AZ** .

cardiagn.com

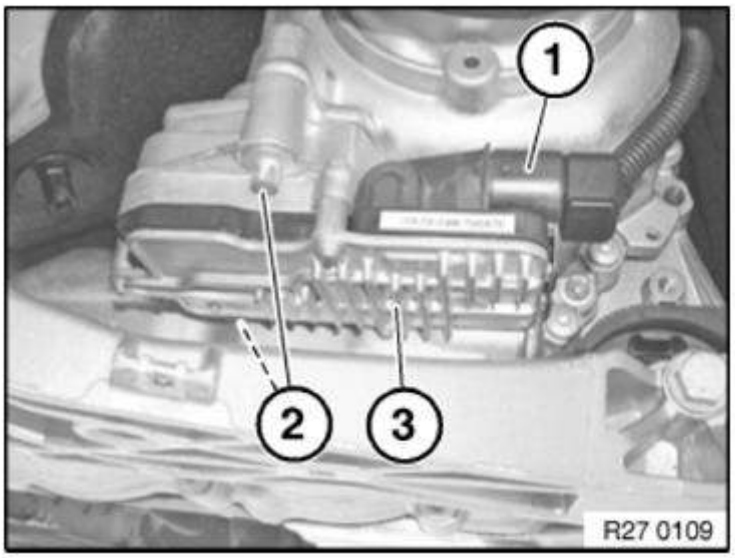

Fig. 32: Identifying VTG Control Unit, Connector And Screws
Courtesy of BMW OF NORTH AMERICA, INC.

Screw special tool **23 0 490** into radial shaft seal.

Drive out radial shaft seal (1) with impact weight (2).

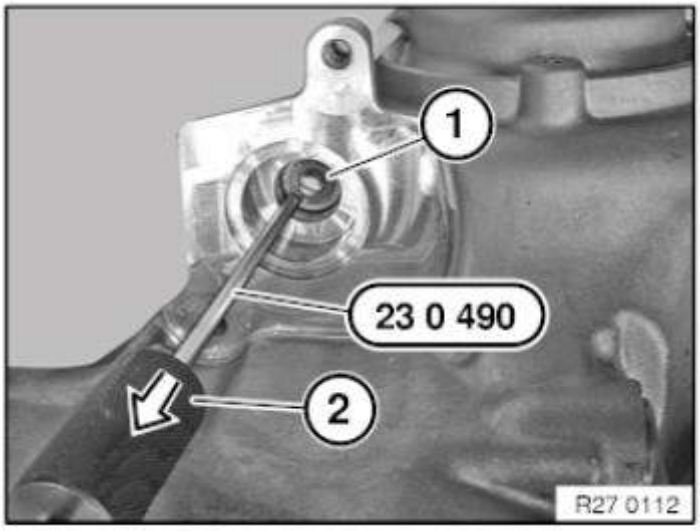

Fig. 33: Removing Radial Shaft Seal
Courtesy of BMW OF NORTH AMERICA, INC.

Push the assembly sleeve **11 1 380** over the actuator shaft.

IMPORTANT: Nonobservance involves a risk of damage to the radial shaft seal.

cardiagn.com

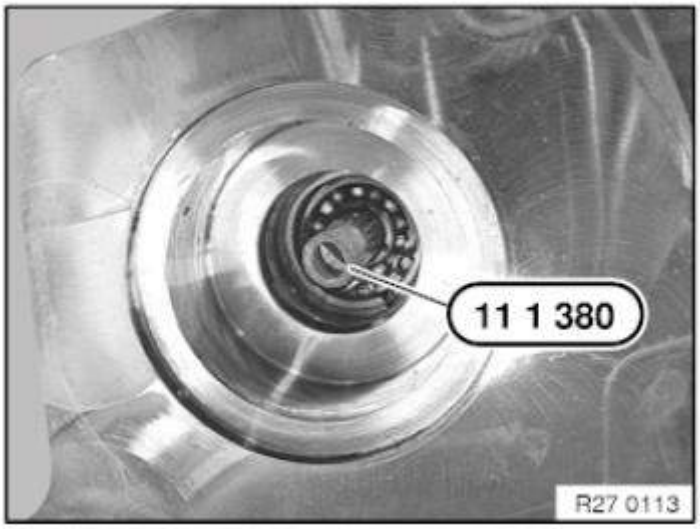

Fig. 34: Identifying Special Tool (11 1 380)
Courtesy of BMW OF NORTH AMERICA, INC.

Slide the new radial shaft seal (1) over the assembly sleeve (2) onto the actuator shaft.

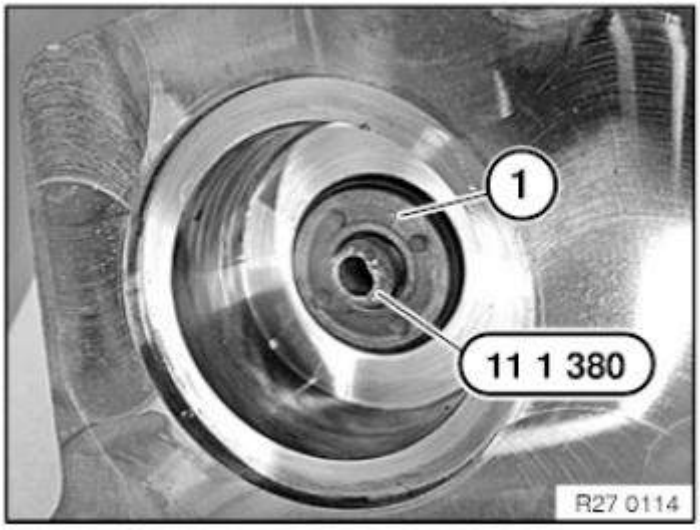

Fig. 35: Sliding Radial Shaft Seal Over Assembly Sleeve Onto Actuator Shaft
Courtesy of BMW OF NORTH AMERICA, INC.

Drive radial shaft seal fully home using special tool **11 1 200** and plastic hammer.

Remove the assembly sleeve.

cardiagn.com

Fig. 36: Installing Radial Shaft Seal
Courtesy of BMW OF NORTH AMERICA, INC.

27 10 730 REPLACING TRANSFER BOX CONTROL UNIT (LONGITUDINAL TORQUE MODULE) (ATC 450)

Special tools required:

- 11 1 200
- 11 1 380
- 23 0 490

IMPORTANT: Before and after replacement, execute the "Repair" service function with the BMW diagnosis system.
READ AND COMPLY WITH NOTES ON PROTECTION AGAINST ELECTROSTATIC DISCHARGE (ESD PROTECTION) .

Necessary preliminary tasks:

- Disconnect NEGATIVE BATTERY CABLE
- Remove CROSS MEMBER .

Disconnect connector (1).

Release screws (2) and remove transfer box from control unit (longitudinal torque module) (3).

Tightening torque 27 10 3AZ .

NOTE: **Radial shaft seal of actuator shaft must be replaced as well.**

cardiagn.com

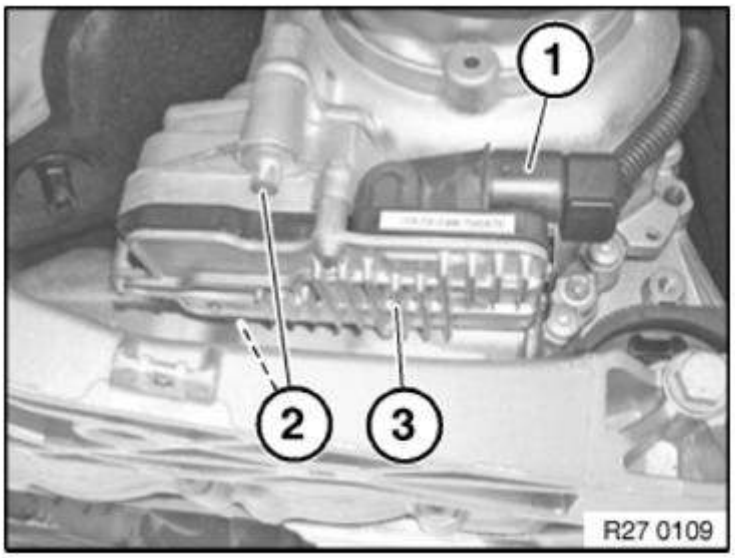

Fig. 37: Identifying VTG Control Unit, Connector And Screws
Courtesy of BMW OF NORTH AMERICA, INC.

Thread special tool **23 0 490** into radial shaft seal (1).

Drive out radial shaft seal (1) with impact weight (2).

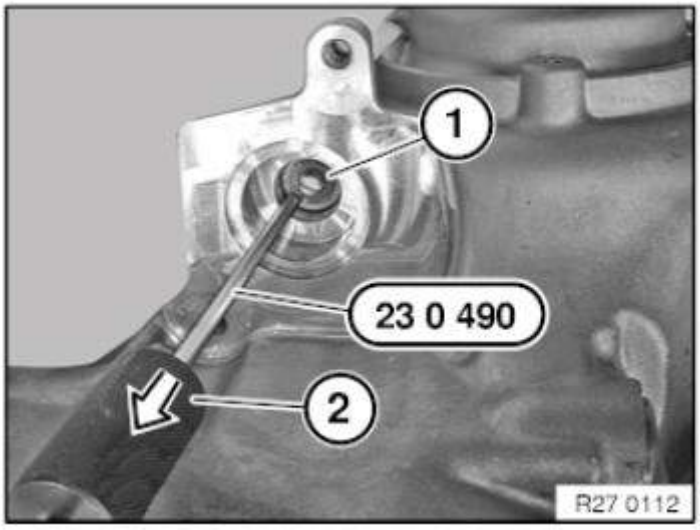

Fig. 38: Removing Radial Shaft Seal
Courtesy of BMW OF NORTH AMERICA, INC.

Push the assembly sleeve **11 1 380** over the actuator shaft.

IMPORTANT: Nonobservance involves a risk of damage to the radial shaft seal.

cardiagn.com

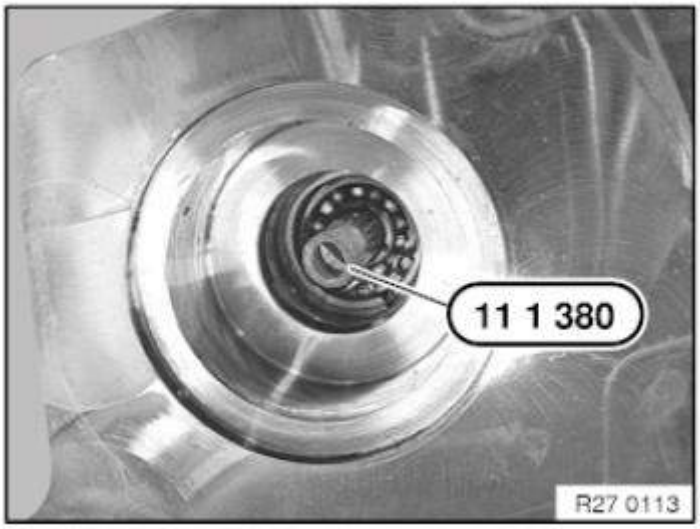

Fig. 39: Identifying Special Tool (11 1 380)
Courtesy of BMW OF NORTH AMERICA, INC.

Slide the new radial shaft seal (1) over the assembly sleeve (2) onto the actuator shaft.

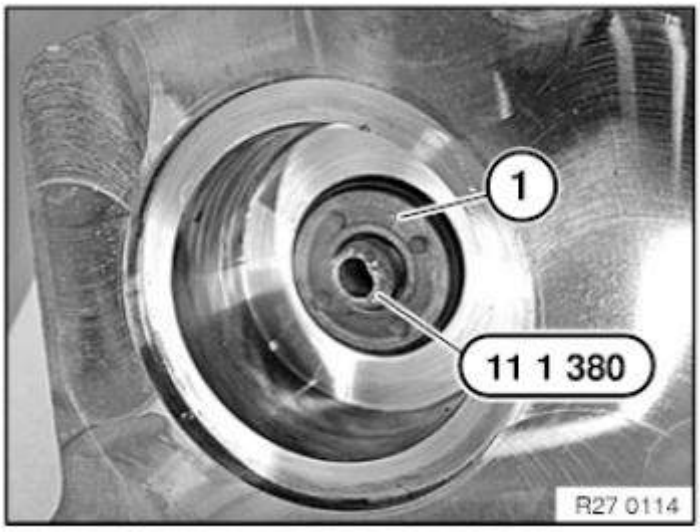

Fig. 40: Sliding Radial Shaft Seal Over Assembly Sleeve Onto Actuator Shaft
Courtesy of BMW OF NORTH AMERICA, INC.

Drive radial shaft seal fully home using special tool **11 1 200** and plastic hammer.

Remove the assembly sleeve.

cardiagn.com

Fig. 41: Installing Radial Shaft Seal
Courtesy of BMW OF NORTH AMERICA, INC.

After replacement:

CARRY out programming/encoding.

27 10 730 REPLACING TRANSFER BOX CONTROL UNIT (LONGITUDINAL TORQUE MODULE) (ATC 45L)

Special tools required:

- **11 1 200**
- **11 1 380**
- **23 0 490**

IMPORTANT: Before and after replacement, execute the "Repair" service function with the BMW diagnosis system.
READ AND COMPLY WITH NOTES ON PROTECTION AGAINST ELECTROSTATIC DISCHARGE (ESD PROTECTION) .

Necessary preliminary tasks:

- Disconnect **BATTERY NEGATIVE LEAD** .
- Remove **transmission cross member** . See **22 32 050 REPLACING CROSS MEMBER FOR TRANSMISSION MOUNTING** .

Disconnect connector (1).

Release screws (2) and remove transfer box from control unit (longitudinal torque module) (3).

Tightening torque **27 10 3AZ** .

NOTE: **Radial shaft seal of actuator shaft must be replaced as well.**

cardiagn.com

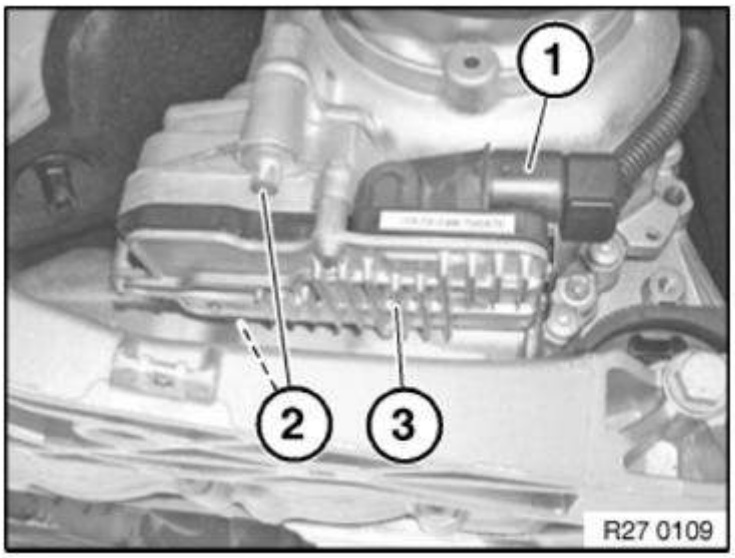

Fig. 42: Identifying VTG Control Unit, Connector And Screws
Courtesy of BMW OF NORTH AMERICA, INC.

Thread special tool **23 0 490** into radial shaft seal (1).

Drive out radial shaft seal (1) with impact weight (2).

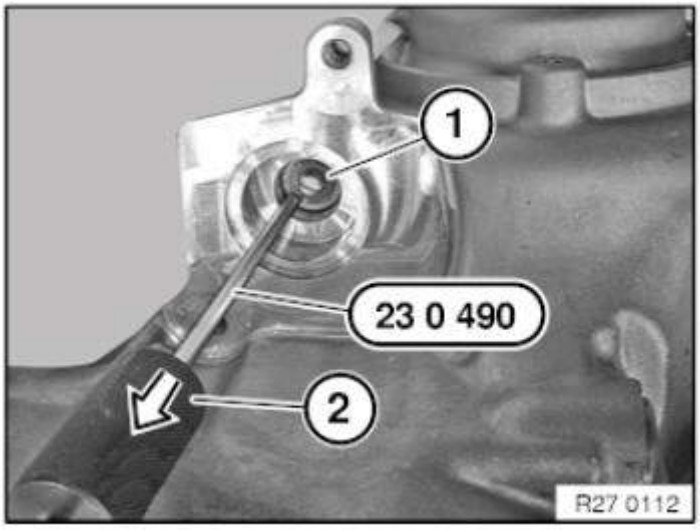

Fig. 43: Removing Radial Shaft Seal
Courtesy of BMW OF NORTH AMERICA, INC.

Push the assembly sleeve **11 1 380** over the actuator shaft.

IMPORTANT: Nonobservance involves a risk of damage to the radial shaft seal.

cardiagn.com

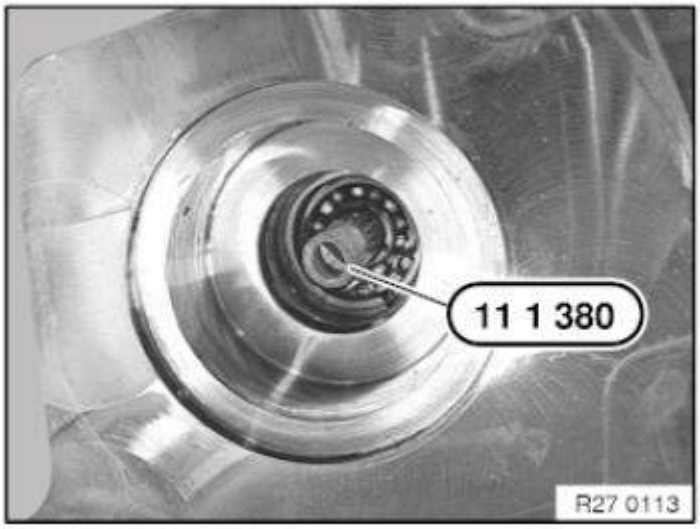

Fig. 44: Identifying Special Tool (11 1 380)
Courtesy of BMW OF NORTH AMERICA, INC.

Slide the new radial shaft seal (1) over the assembly sleeve (2) onto the actuator shaft.

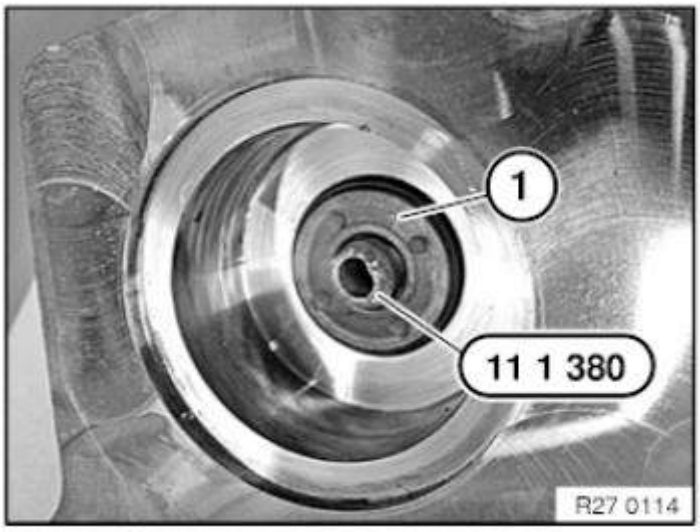

Fig. 45: Sliding Radial Shaft Seal Over Assembly Sleeve Onto Actuator Shaft
Courtesy of BMW OF NORTH AMERICA, INC.

Drive radial shaft seal fully home using special tool **11 1 200** and plastic hammer.

Remove the assembly sleeve.

cardiagn.com

Fig. 46: Installing Radial Shaft Seal
Courtesy of BMW OF NORTH AMERICA, INC.

After replacement:

CARRY out programming/encoding.

TRANSMISSION SHAFTS

27 21 010 RENEWING RADIAL SHAFT SEAL FOR DRIVE FLANGE (ATC 45L)

Special tools required:

- 23 0 490
- 27 1 430

IMPORTANT: After completion of work, CHECK TRANSMISSION OIL LEVEL and top up if necessary. For this transfer box, use approved TRANSMISSION OIL only.

Necessary preliminary tasks:

- Remove TRANSFER BOX.

Drive a hole into radial shaft seal (1) using a center punch (2).

IMPORTANT: Do not use a drill as swarf may result in transmission failure.

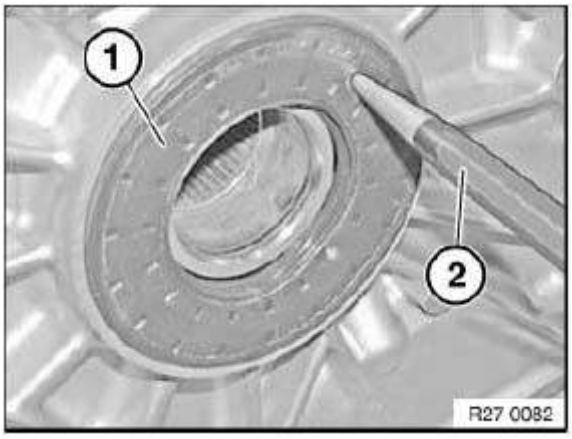

Fig. 47: Drilling Hole Into Radial Shaft Seal

cardiagn.com

Courtesy of BMW OF NORTH AMERICA, INC.

Screw special tool **23 0 490** into radial shaft seal.

Drive out radial shaft seal (1) with impact weight (2).

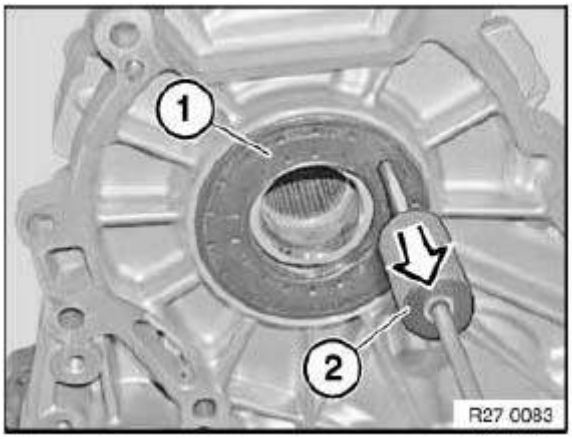

Fig. 48: Pulling Out Radial Shaft Seal
Courtesy of BMW OF NORTH AMERICA, INC.

Installation note:

Coat sealing lips of new radial shaft seal with clean transmission oil.

Drive in radial shaft seal with special tool **27 1 430** .

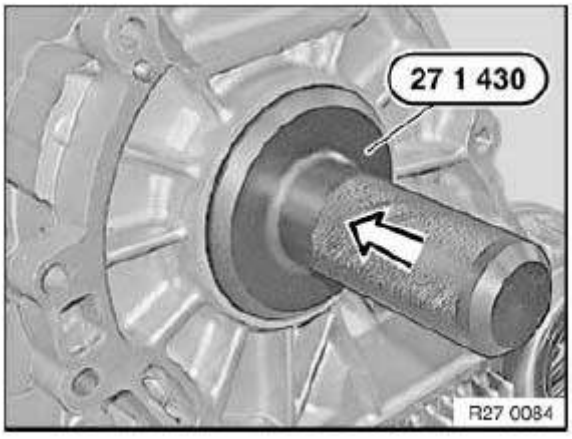

Fig. 49: Installing Radial Shaft Seal With Special Tool (27 1 430)
Courtesy of BMW OF NORTH AMERICA, INC.

Reassemble the vehicle.

Check oil level.

Check transmission for leaks.

27 10 070 REPLACING OUTPUT FLANGE ON REAR TRANSFER BOX (ATC 45L)

IMPORTANT: After completing work, check **TRANSMISSION OIL LEVEL** and top up if necessary. Use only the approved **TRANSMISSION OIL** .

NOTE:

- **Replace output flange only together with a new radial shaft seal.**

cardiagn.com

- **Procedure for removing output flange is identical to replacing RADIAL SHAFT SEAL.**

Installation note:

- Thickness of new shim must be determined before output flange is installed.

Determine and note down dimension A of output flange (old and new).

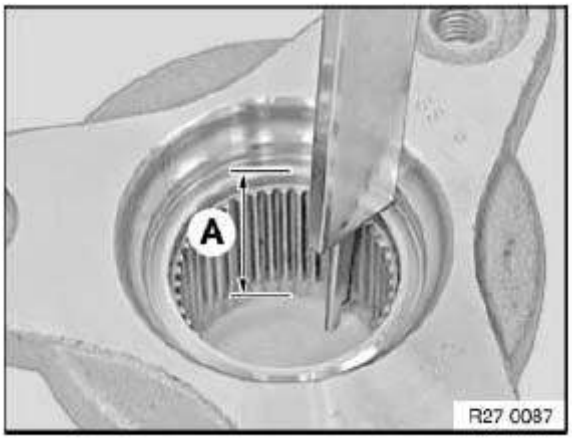

Fig. 50: Checking Output Flange Dimension A
Courtesy of BMW OF NORTH AMERICA, INC.

Determine and note down dimension B of output flange (old and new).

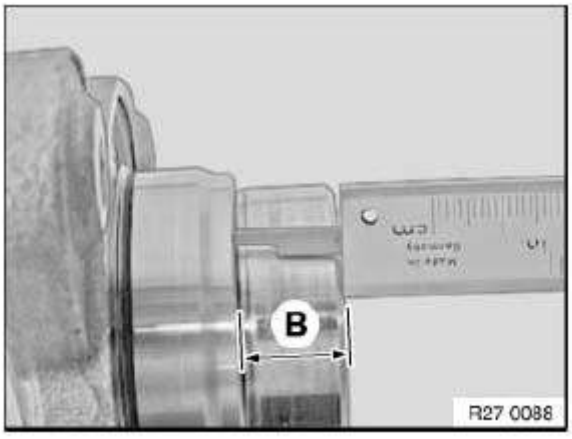

Fig. 51: Checking Output Flange Dimension B
Courtesy of BMW OF NORTH AMERICA, INC.

Determine old dimension C, thickness of shim.

cardiagn.com

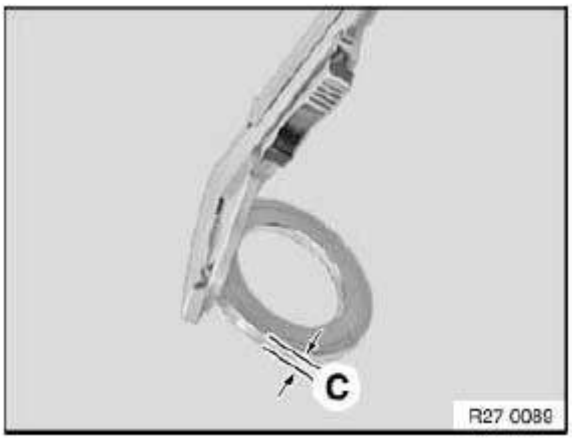

Fig. 52: Measuring Shim Thickness
Courtesy of BMW OF NORTH AMERICA, INC.

Installation note:

Calculate thickness of new shim:

1. Add old dimension A of output flange (previous) and old dimension C of shim Then subtract old dimension B from old result A+C
2. Subtract dimension B from dimension A of output flange (new)
3. Then subtract result of step 2 from result of step 1.

27 10 070 REPLACING OUTPUT FLANGE ON TRANSFER BOX AT REAR (ATC450)

IMPORTANT: After completing work, check transmission oil level and top up if necessary.
Use only the approved **TRANSMISSION OIL** .

NOTE:

- **Replace output flange only together with a new radial shaft seal.**
- **Operations for removing output flange are identical to replacing RADIAL SHAFT SEAL**

Installation note:

- Thickness of new shim must be determined before output flange is installed

Determine and note down dimension A of output flange (old and new).

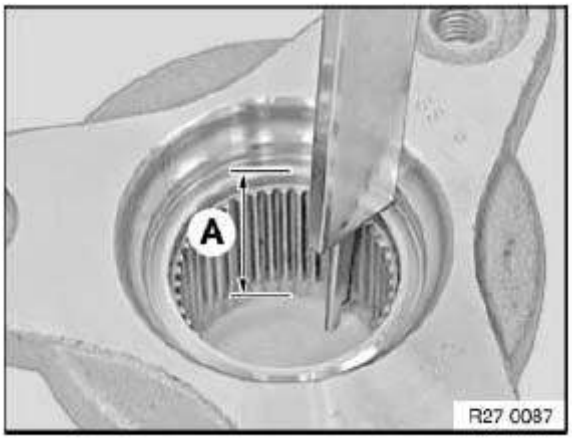

Fig. 53: Checking Output Flange Dimension A

cardiagn.com

Courtesy of BMW OF NORTH AMERICA, INC.

Determine and note down dimension B of output flange (old and new).

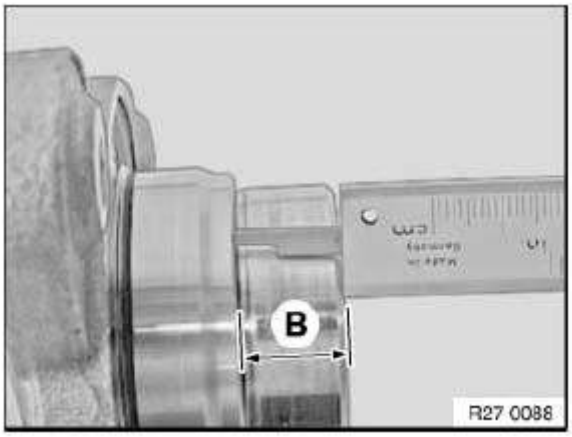

Fig. 54: Checking Output Flange Dimension B
Courtesy of BMW OF NORTH AMERICA, INC.

Determine old dimension C, thickness of shim.

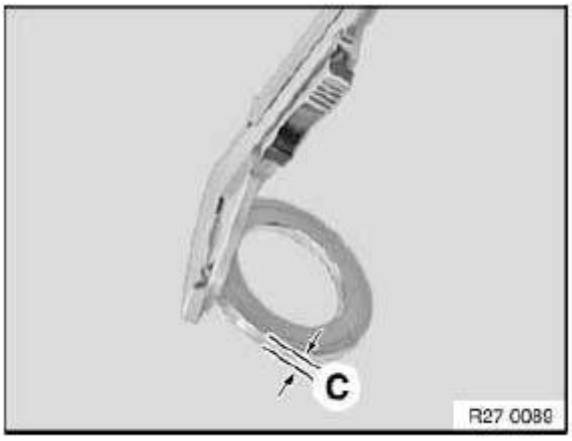

Fig. 55: Measuring Shim Thickness
Courtesy of BMW OF NORTH AMERICA, INC.

Installation note:

Calculate thickness of new shim:

1. Add old dimension A of output flange (previous) and old dimension C of shim Then subtract old dimension B from old result A+C
2. Subtract dimension B from dimension A of output flange (new)
3. Then subtract result of step 2 from result of step 1.

27 21 040 REPLACING RADIAL SHAFT SEAL FOR ACTUATOR SHAFT (ATC 450)

Special tools required:

- **11 1 200**
- **11 1 380**
- **23 0 490**

Read and comply with notes on protection against electrostatic discharge (ESD protection).

cardiagn.com

IMPORTANT: After completion of the repair work, **CHECK TRANSMISSION OIL LEVEL** and top up if necessary.
Use only the approved **TRANSMISSION OIL** .

Necessary preliminary tasks:

- Disconnect **NEGATIVE BATTERY CABLE**
- Remove **CROSS MEMBER** .

Disconnect connector (1).

Release screws (2) and remove transfer box from control unit (longitudinal torque module) (3).

Tightening torque **27 10 3AZ** .

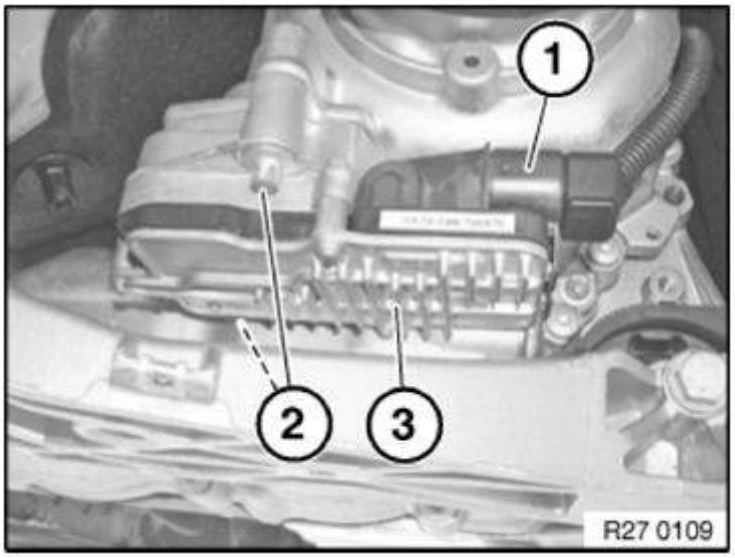

Fig. 56: Identifying VTG Control Unit, Connector And Screws
Courtesy of BMW OF NORTH AMERICA, INC.

Screw special tool **23 0 490** into radial shaft seal.

Drive out radial shaft seal (1) with impact weight (2).

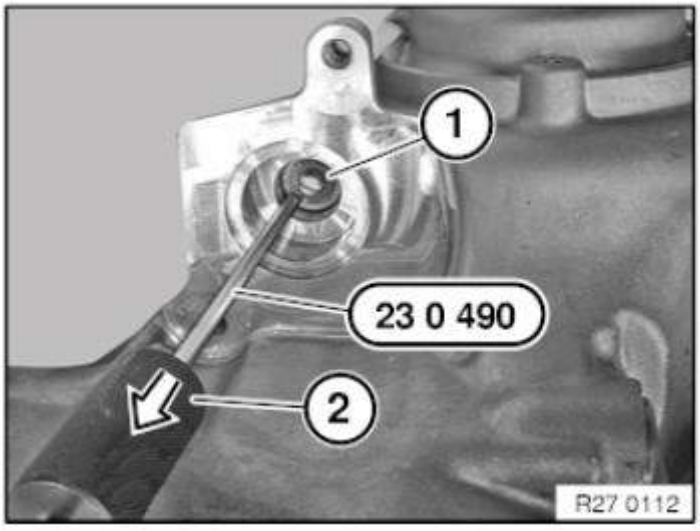

Fig. 57: Removing Radial Shaft Seal
Courtesy of BMW OF NORTH AMERICA, INC.

cardiagn.com

Push the assembly sleeve **11 1 380** over the actuator shaft.

IMPORTANT: Nonobservance involves a risk of damage to the radial shaft seal.

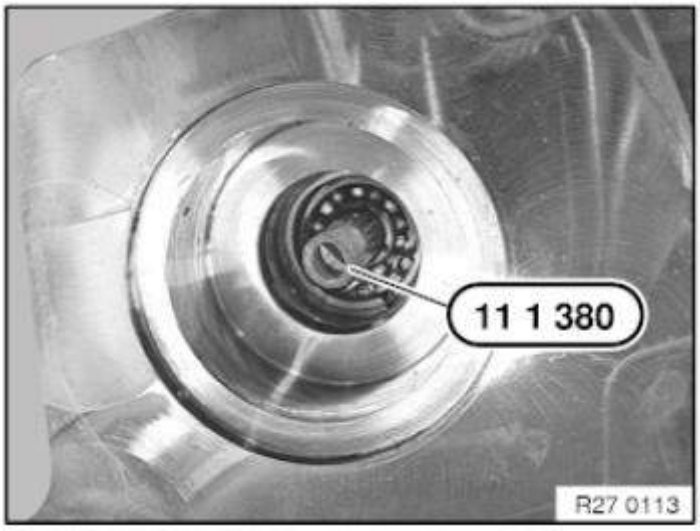

Fig. 58: Identifying Special Tool (11 1 380)
Courtesy of BMW OF NORTH AMERICA, INC.

Slide the new radial shaft seal (1) over the assembly sleeve (2) onto the actuator shaft.

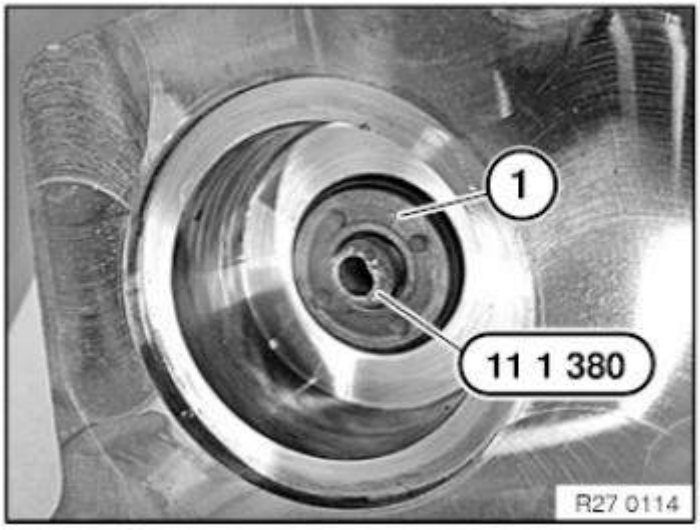

Fig. 59: Sliding Radial Shaft Seal Over Assembly Sleeve Onto Actuator Shaft
Courtesy of BMW OF NORTH AMERICA, INC.

Drive radial shaft seal fully home using special tool **11 1 200** and plastic hammer.

Remove the assembly sleeve.

cardiagn.com

Fig. 60: Installing Radial Shaft Seal
Courtesy of BMW OF NORTH AMERICA, INC.

27 21 040 REPLACING RADIAL SHAFT SEAL FOR ACTUATOR SHAFT (ATC 45L)

Special tools required:

- **11 1 200**
- **11 1 380**
- **23 0 490**

IMPORTANT:	Read and comply with notes on protection against electrostatic discharge (ESD protection). After completion of the repair work, **CHECK TRANSMISSION OIL LEVEL** and top up if necessary. Use only the approved **TRANSMISSION OIL** .

Necessary preliminary tasks:

- Disconnect **BATTERY EARTH LEAD**
- Remove **CROSS MEMBER** .

Disconnect connector (1).

Release screws (2) and remove transfer box from control unit (longitudinal torque module) (3).

Tightening torque **27 10 3AZ** .

cardiagn.com

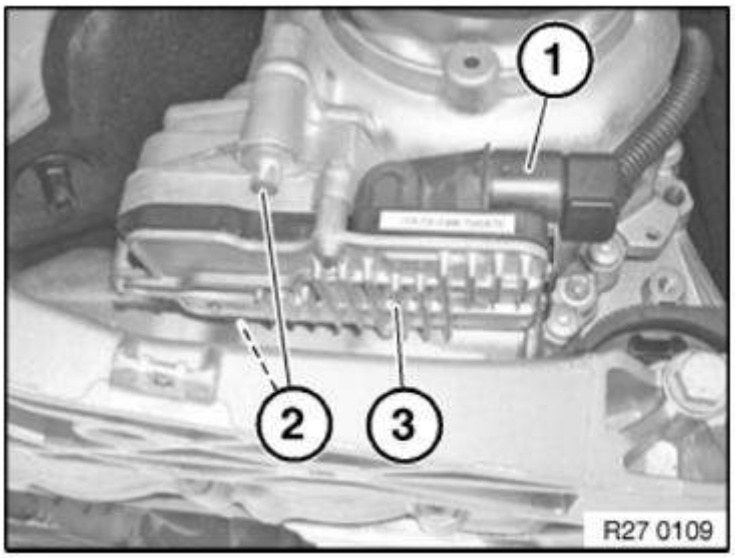

Fig. 61: Identifying VTG Control Unit, Connector And Screws
Courtesy of BMW OF NORTH AMERICA, INC.

Screw special tool **23 0 490** into radial shaft seal.

Drive out radial shaft seal (1) with impact weight (2).

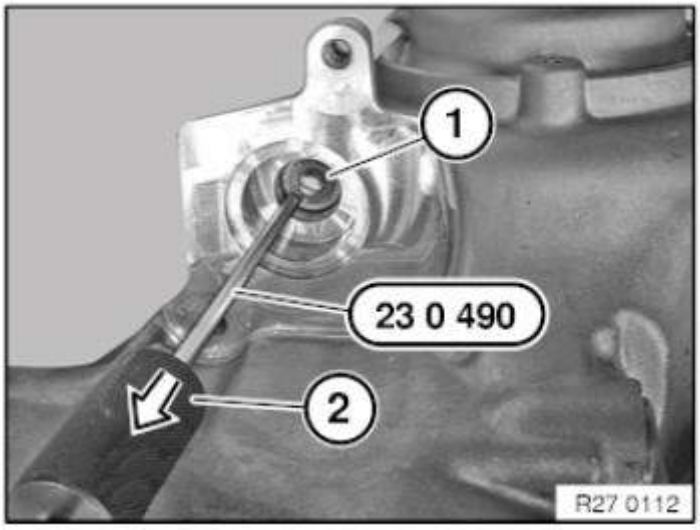

Fig. 62: Removing Radial Shaft Seal
Courtesy of BMW OF NORTH AMERICA, INC.

Push the assembly sleeve **11 1 380** over the actuator shaft.

IMPORTANT: Nonobservance involves a risk of damage to the radial shaft seal.

cardiagn.com

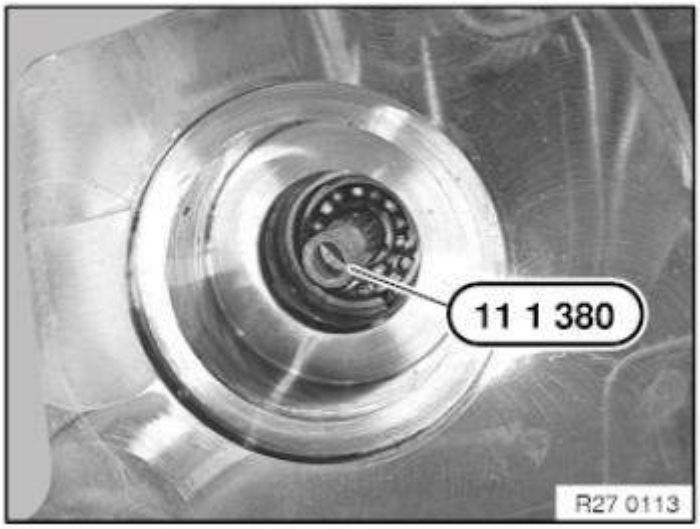

Fig. 63: Identifying Special Tool (11 1 380)
Courtesy of BMW OF NORTH AMERICA, INC.

Slide the new radial shaft seal (1) over the assembly sleeve (2) onto the actuator shaft.

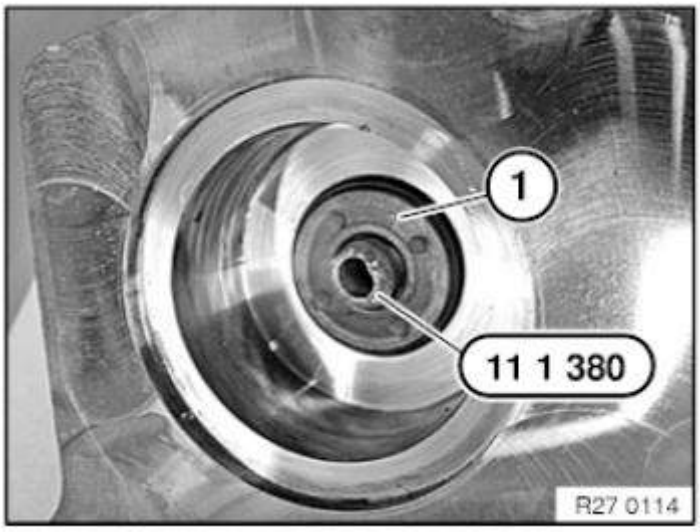

Fig. 64: Sliding Radial Shaft Seal Over Assembly Sleeve Onto Actuator Shaft
Courtesy of BMW OF NORTH AMERICA, INC.

Drive radial shaft seal fully home using special tool **11 1 200** and plastic hammer.

Remove the assembly sleeve.

cardiagn.com

Fig. 65: Installing Radial Shaft Seal
Courtesy of BMW OF NORTH AMERICA, INC.

27 21 010 REPLACING RADIAL SHAFT SEAL FOR DRIVE FLANGE (ATC 450)

Special tools required:

- **23 0 490**
- **27 1 430**

IMPORTANT: After completion of work, **CHECK TRANSMISSION OIL LEVEL** and top up if necessary. For this transfer box, use approved **TRANSMISSION OIL** only.

Necessary preliminary tasks:

- Remove **TRANSFER BOX**.

Drive a hole into radial shaft seal (1) using a center punch (2).

IMPORTANT: Do not use a drill as drillings may result in transmission malfunction.

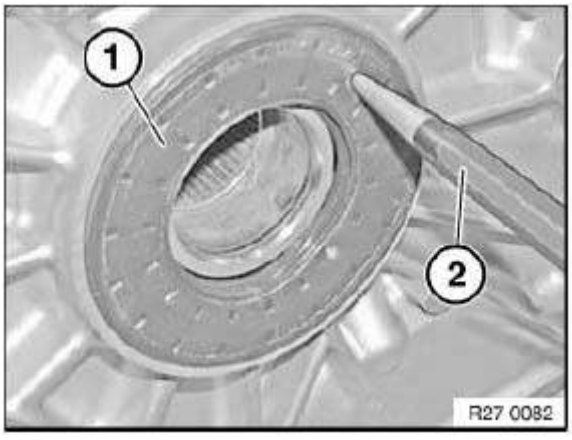

Fig. 66: Drilling Hole Into Radial Shaft Seal
Courtesy of BMW OF NORTH AMERICA, INC.

Screw special tool **23 0 490** into radial shaft seal.

Drive out radial shaft seal (1) with impact weight (2).

cardiagn.com

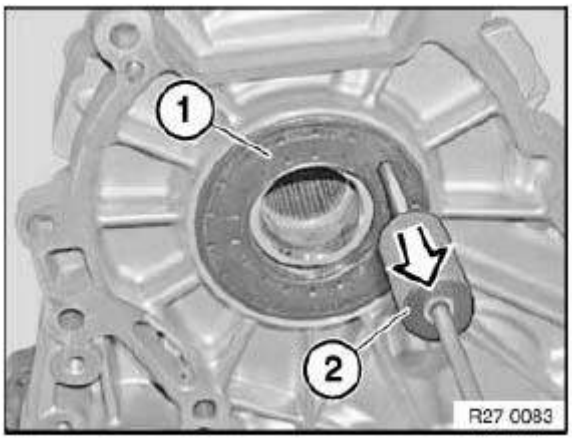

Fig. 67: Pulling Out Radial Shaft Seal
Courtesy of BMW OF NORTH AMERICA, INC.

Installation note:

Coat sealing lips of new radial shaft seal with clean transmission oil.

Drive in radial shaft seal with special tool **27 1 430** .

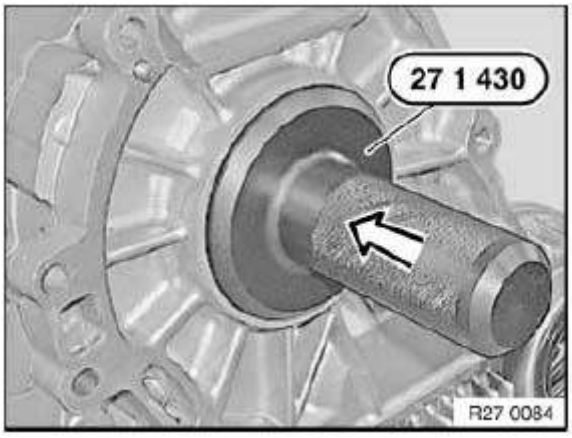

Fig. 68: Installing Radial Shaft Seal With Special Tool (27 1 430)
Courtesy of BMW OF NORTH AMERICA, INC.

Reassemble the vehicle.

Check oil level.

Check transmission for leaks.

27 21 020 REPLACING RADIAL SHAFT SEAL FOR OUTPUT FLANGE (ATC 450)

Special tools required:

- **27 1 440**

IMPORTANT: After completing repair work, check transmission oil level and top up if necessary. For this transfer box, use approved **TRANSMISSION OIL** only.

Necessary preliminary tasks:

- Remove **PROPELLER SHAFT**

cardiagn.com

Release circlip (1).

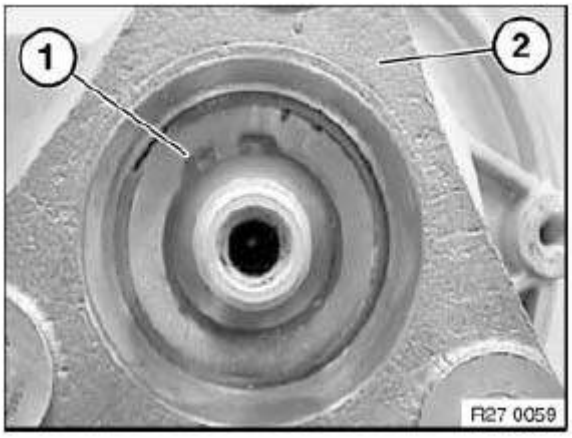

Fig. 69: Identifying Retaining Ring
Courtesy of BMW OF NORTH AMERICA, INC.

Release output flange with three-claw extractor tool.

Lever radial shaft seal out of housing with a suitable tool.

IMPORTANT: Do not damage housing.

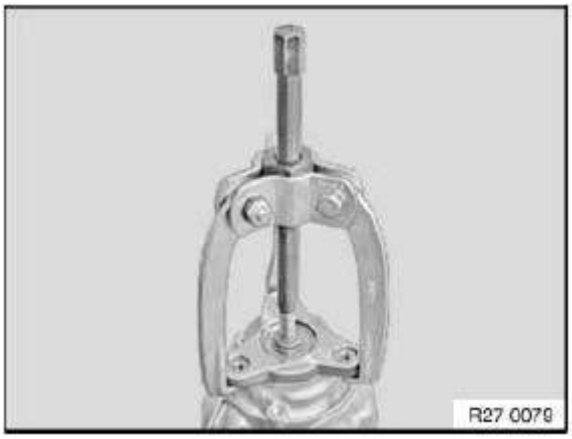

Fig. 70: Identifying Three-Claw Extractor Tool
Courtesy of BMW OF NORTH AMERICA, INC.

Installation note:

Replace O-ring in output flange.

Check that O-ring is in correct position.

cardiagn.com

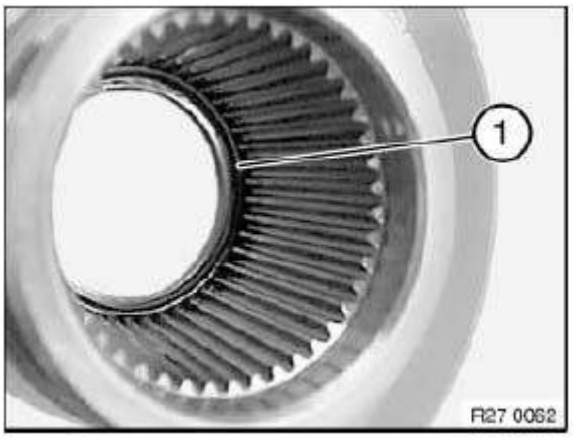

Fig. 71: Identifying O-Ring
Courtesy of BMW OF NORTH AMERICA, INC.

Installation note:

Coat sealing lips of new radial shaft seal with clean transmission oil.

Drive in radial shaft seal with special tool **27 1 440** .

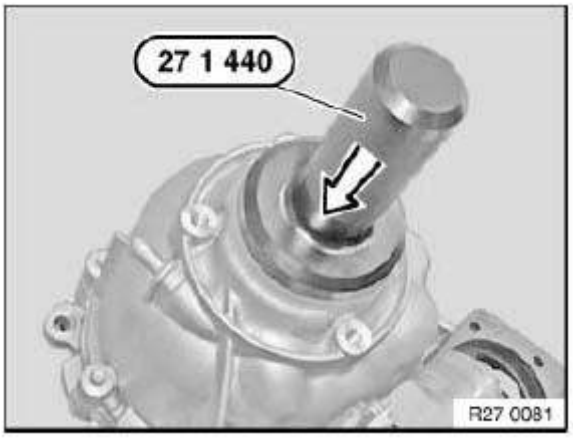

Fig. 72: Installing Radial Shaft Seal
Courtesy of BMW OF NORTH AMERICA, INC.

Installation note:

- Push on output flange
- Press down output flange using 2 screwdrivers
- Shim
- Continue pressing output flange down until retaining groove is completely visible
- Fit circlip

cardiagn.com

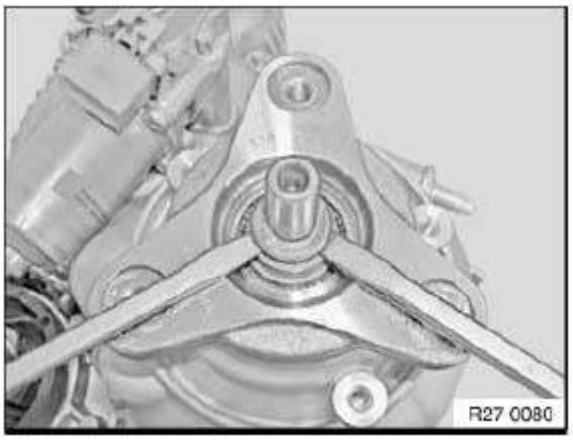

Fig. 73: Pressing Down Output Flange Using Screwdrivers
Courtesy of BMW OF NORTH AMERICA, INC.

27 21 020 REPLACING RADIAL SHAFT SEAL FOR OUTPUT FLANGE (ATC 45L)

Special tools required:

- **27 1 440**

IMPORTANT: After completing repair work, check **TRANSMISSION OIL LEVEL** and top up if necessary. For this transfer box, use approved **TRANSMISSION OIL** only.

Necessary preliminary tasks:

- Remove **PROPELLER SHAFT** .

Release circlip (1).

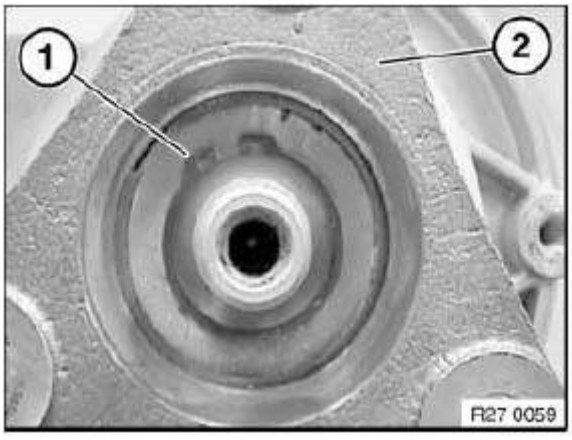

Fig. 74: Identifying Retaining Ring
Courtesy of BMW OF NORTH AMERICA, INC.

Release output flange with three-claw extractor tool.

Lever radial shaft seal out of housing with a suitable tool.

IMPORTANT: Do not damage housing.

cardiagn.com

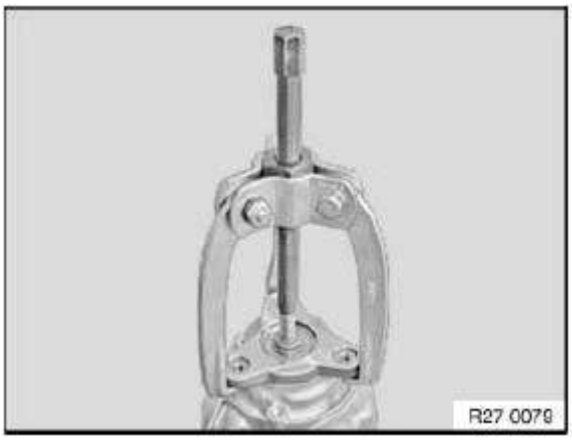

Fig. 75: Identifying Three-Claw Extractor Tool
Courtesy of BMW OF NORTH AMERICA, INC.

Installation note:

Replace O-ring in output flange.

Check that O-ring is in correct position.

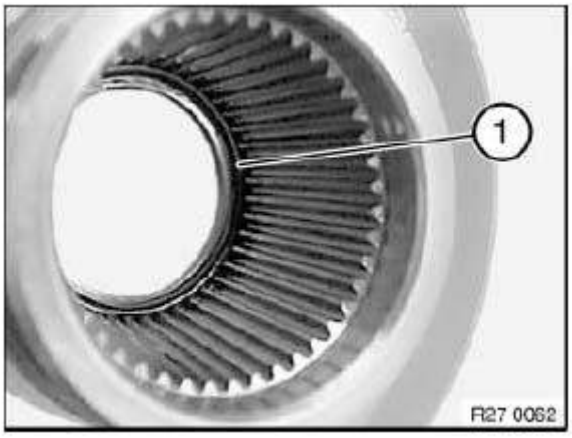

Fig. 76: Identifying O-Ring
Courtesy of BMW OF NORTH AMERICA, INC.

Installation note:

Coat sealing lips of new radial shaft seal with clean transmission oil.

Drive in radial shaft seal with special tool **27 1 440** .

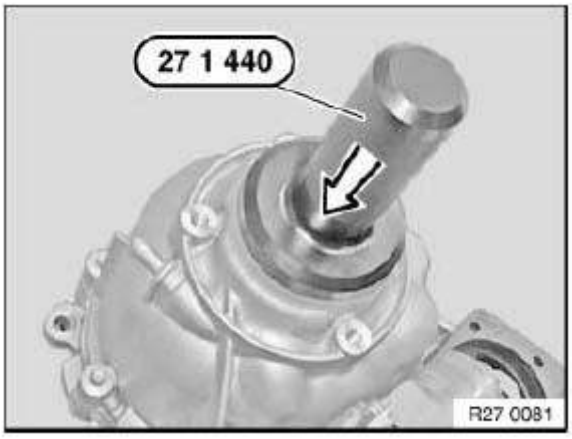

cardiagn.com

Fig. 77: Installing Radial Shaft Seal
Courtesy of BMW OF NORTH AMERICA, INC.

Installation note:

- Push on output flange
- Press down output flange using 2 screwdrivers
- Shim
- Continue pressing output flange down until retaining groove is completely visible
- Fit circlip

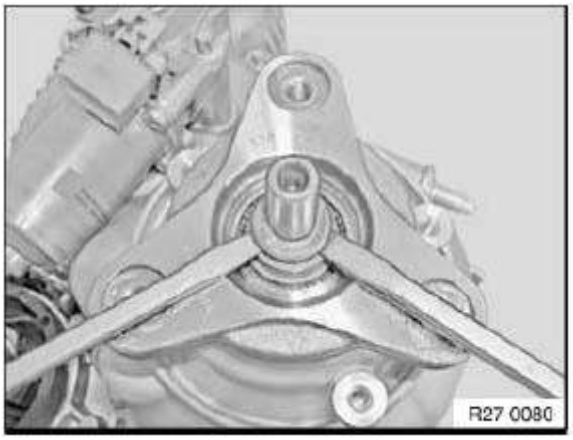

Fig. 78: Pressing Down Output Flange Using Screwdrivers
Courtesy of BMW OF NORTH AMERICA, INC.

27 21 030 REPLACING RADIAL SHAFT SEAL FOR OUTPUT TO THE FRONT AXLE (ATC 450)

Special tools required:

- **23 0 490**
- **27 1 470**
- 83 30 2 318 114

IMPORTANT: After completion of the repair work, check gearbox oil level.
For these transfer boxes, use approved **TRANSMISSION OIL** only.

Necessary preliminary tasks:

- Remove front **PROPELLER SHAFT** .

Remove protective cap (1) with a screwdriver.

cardiagn.com

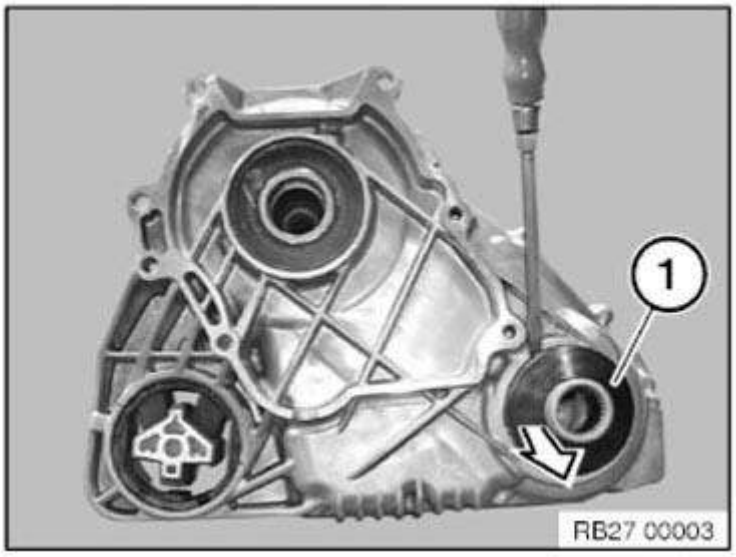

Fig. 79: Removing Protective Cap
Courtesy of BMW OF NORTH AMERICA, INC.

Drive a hole into radial shaft seal (1) using a center punch (2).

IMPORTANT: Do not use a drill as swarf may result in transmission malfunction.

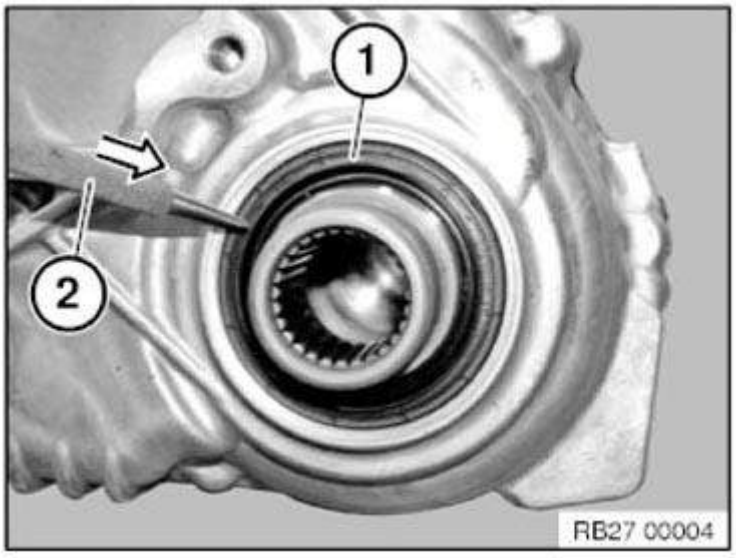

Fig. 80: Removing Radial Shaft Seal
Courtesy of BMW OF NORTH AMERICA, INC.

Screw in special tool **23 0 490** .

Drive out radial shaft seal (1) with impact weight (2).

cardiagn.com

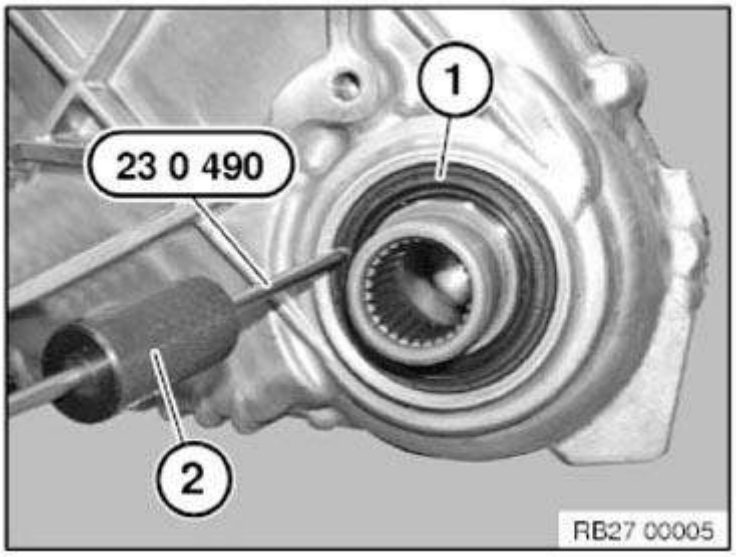

Fig. 81: Identifying Special Tool (23 0 490)
Courtesy of BMW OF NORTH AMERICA, INC.

Drive in radial shaft seal with special tool 27 1 470 or 83 30 2 318 114. (Observe diameter of radial shaft seal)

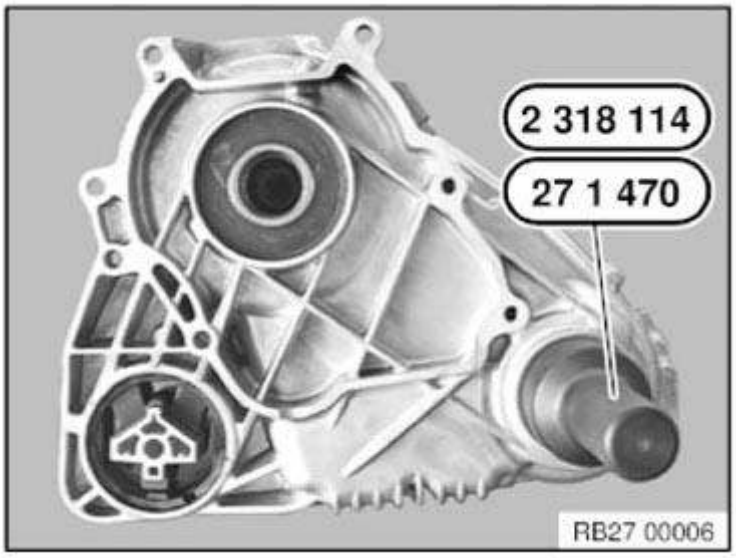

Fig. 82: Identifying Special Tool (27 1 470)
Courtesy of BMW OF NORTH AMERICA, INC.

Reassemble the vehicle.

Check oil level.

Check gearbox for leaks

27 21 030 REPLACING RADIAL SHAFT SEAL FOR OUTPUT TO THE FRONT AXLE (ATC 45L)

Special tools required:

- 23 0 490
- 27 1 470
- 2 318 114

IMPORTANT: After completion of the repair work, CHECK GEARBOX OIL LEVEL.
For these transfer boxes, use approved TRANSMISSION OIL only.

cardiagn.com

Necessary preliminary tasks:

- Remove front **PROPELLER SHAFT** .

Remove protective cap (1) with a screwdriver.

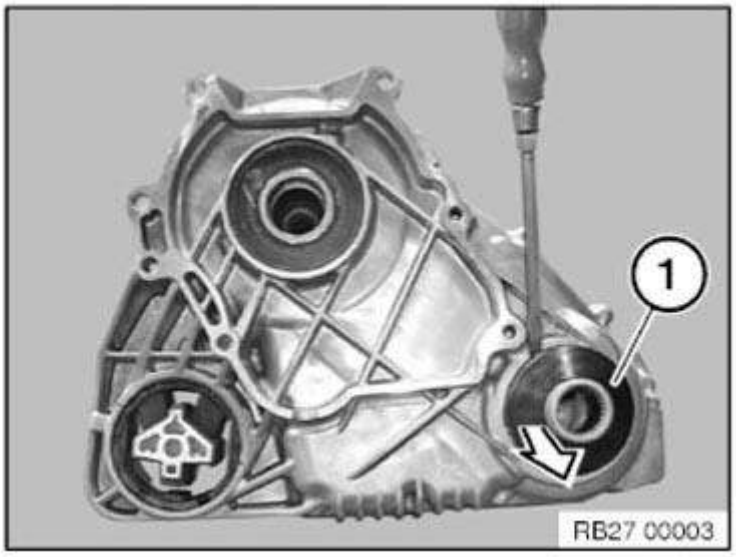

Fig. 83: Removing Protective Cap
Courtesy of BMW OF NORTH AMERICA, INC.

Drive a hole into radial shaft seal (1) using a center punch (2).

IMPORTANT: Do not use a drill as drillings may result in transmission malfunction.

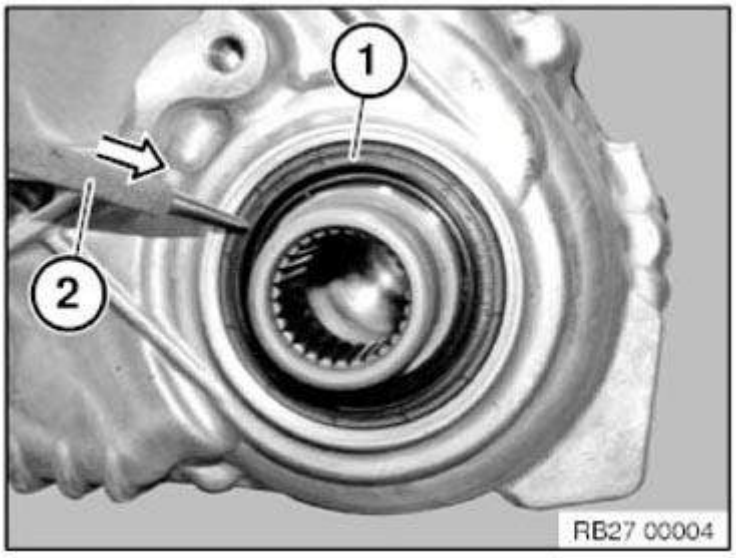

Fig. 84: Removing Radial Shaft Seal
Courtesy of BMW OF NORTH AMERICA, INC.

Screw in special tool **23 0 490** .

Drive out radial shaft seal (1) with impact weight (2).

cardiagn.com

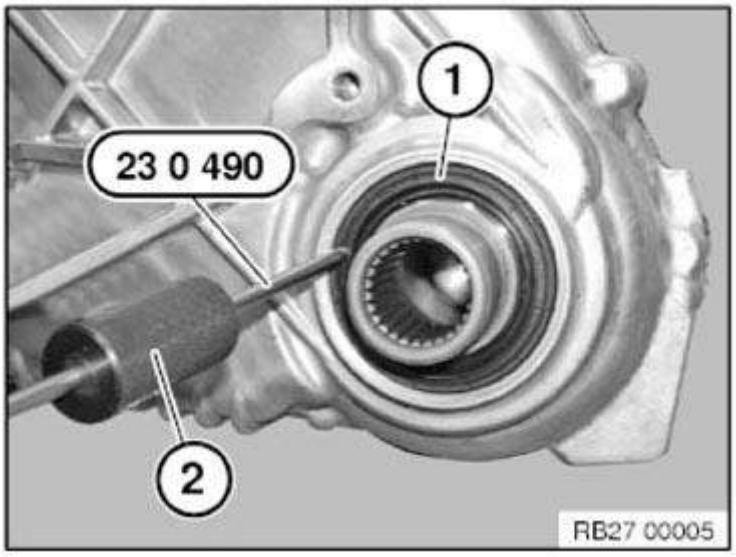

Fig. 85: Identifying Special Tool (23 0 490)
Courtesy of BMW OF NORTH AMERICA, INC.

Drive in radial shaft seal with special tool **2 318 114** .

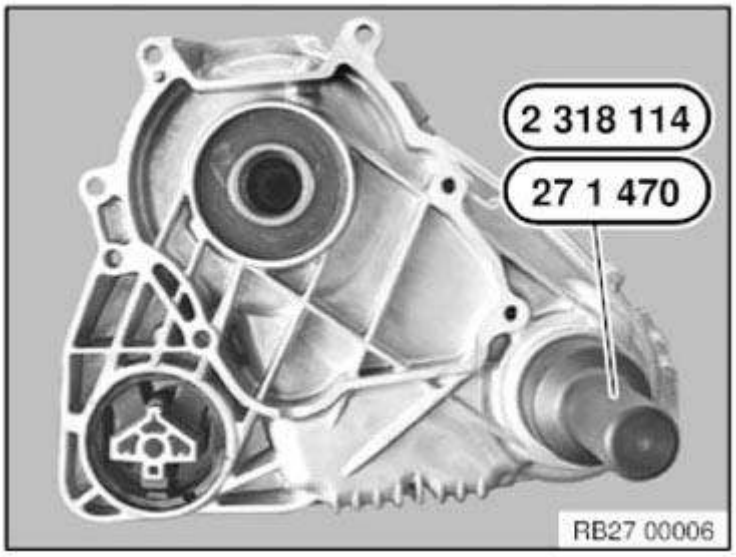

Fig. 86: Identifying Special Tool (27 1 470)
Courtesy of BMW OF NORTH AMERICA, INC.

Reassemble the vehicle.

Check oil level.

Check transmission for leaks.

cardiagn.com

Copyright 2016 Mitchell Repair Information Company, LLC. All Rights Reserved.

Article GUID: A00702211

TRANSFER BOX

0491822 ADAPTER

0491822 271032 Adapter AM

NOTE: (Adapter) Transmission: S5D 310Z

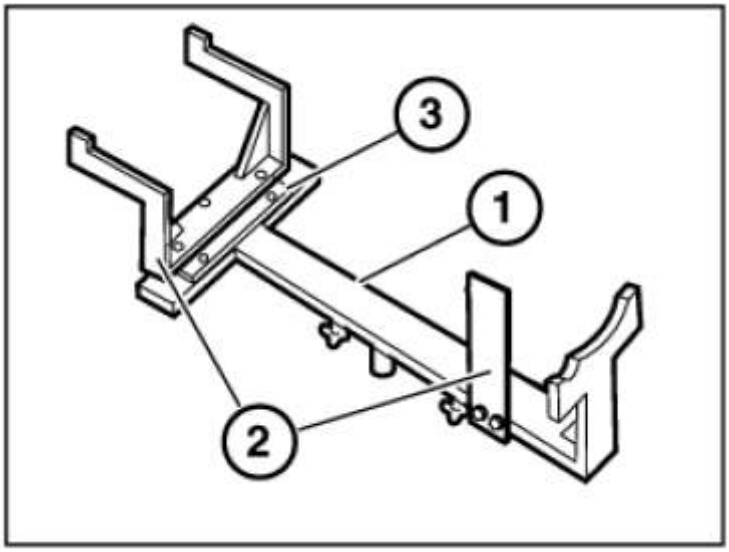

Fig. 1: Identifying Adapter (0491822)
Courtesy of BMW OF NORTH AMERICA, INC.

0491823 ADAPTER

0491823 271033 Adapter AM

NOTE: (Adapter) Transmission: A5S 310Z

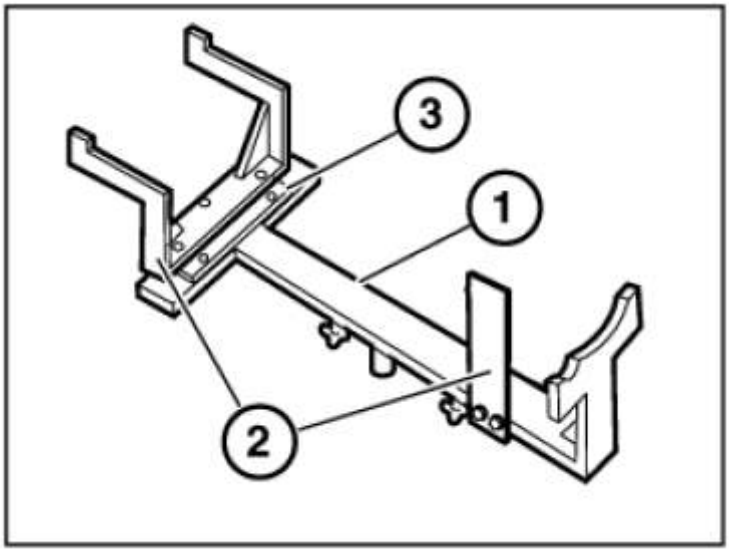

Fig. 2: Identifying Adapter (0491823)
Courtesy of BMW OF NORTH AMERICA, INC.

cardiagn.com

0491835 BUSH

0491835 271261 Bush AM

NOTE: **(Pull-out bush)**

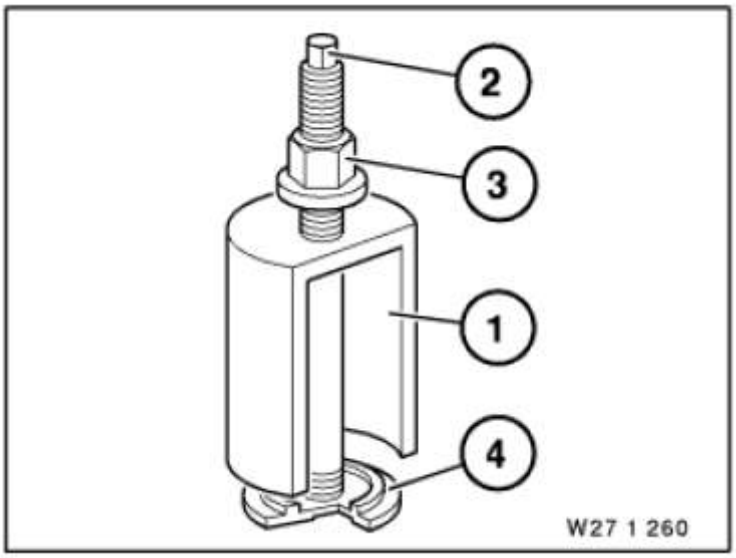

Fig. 3: Identifying Bush (0491835)
Courtesy of BMW OF NORTH AMERICA, INC.

0491845 BUSH

0491845 271310 Bush AM

NOTE: **(slip bush with drift) For fitting the radial sealing ring into the transfer box on the output shaft to the front axle differential**

Storage Location

Y8

SI number

01 04 92 (487)

Consisting of:

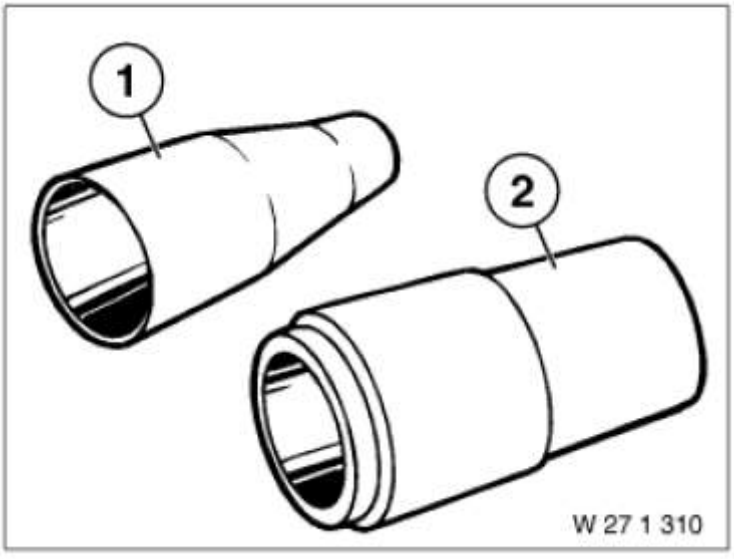

cardiagn.com

Fig. 4: Identifying Bush (0491845)
Courtesy of BMW OF NORTH AMERICA, INC.

1. **0491846** Bush

   NOTE: **(Slip bush)**

2. **0491847** Mandrel

   NOTE: **(Drift)**

0491846 BUSH

0491846 271311 Bush AM

NOTE: **(Slip bush)**

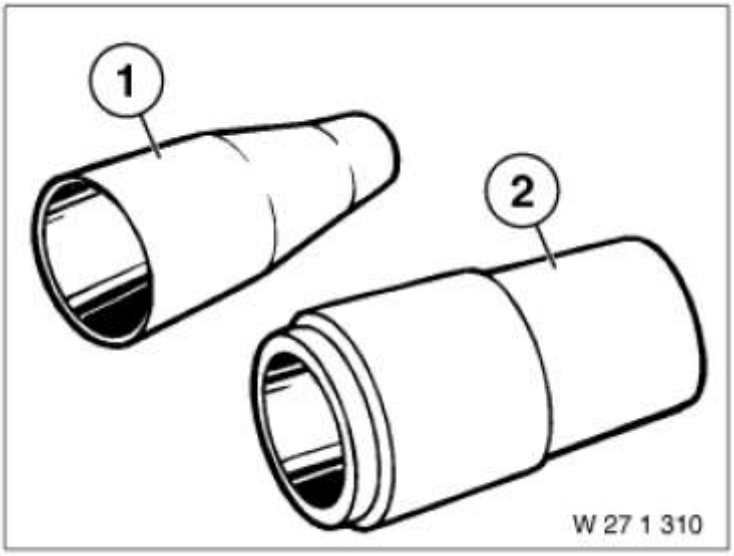

Fig. 5: Identifying Bush (0491846)
Courtesy of BMW OF NORTH AMERICA, INC.

0491826 BUSH

0491826 271081 Bush AM

NOTE: **(Slip bush)**

cardiagn.com

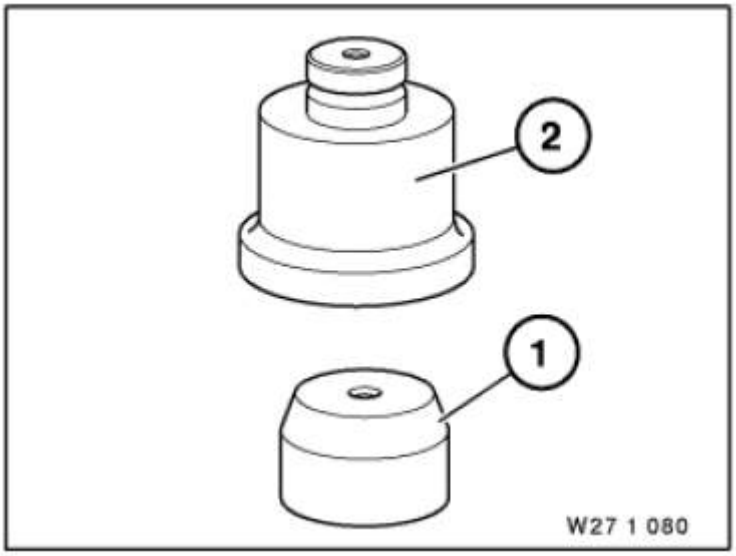

Fig. 6: Identifying Bush (0491826)
Courtesy of BMW OF NORTH AMERICA, INC.

0493552 BUSH

0493552 271341 Bush AM

NOTE: (Impact bush)

Storage Location

A48

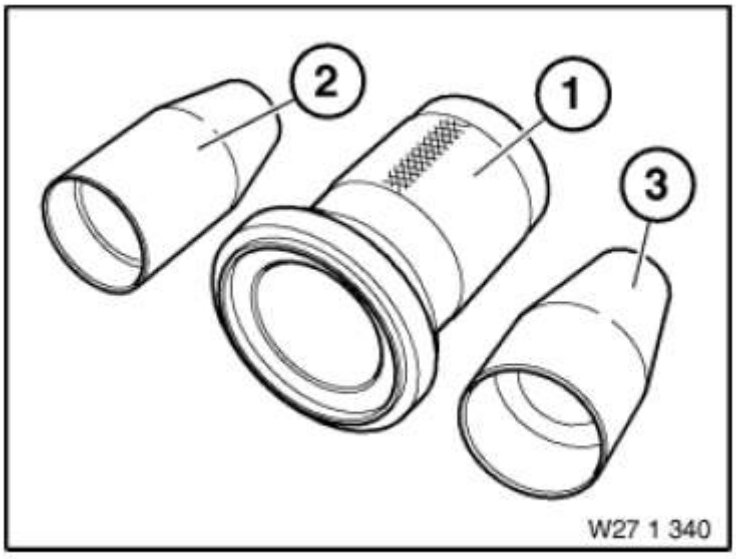

Fig. 7: Identifying Bush (0493552)
Courtesy of BMW OF NORTH AMERICA, INC.

0491819 CLIP

0491819 271000 Clip Mechanical tool

NOTE: (Retaining bracket) For transfer box

cardiagn.com

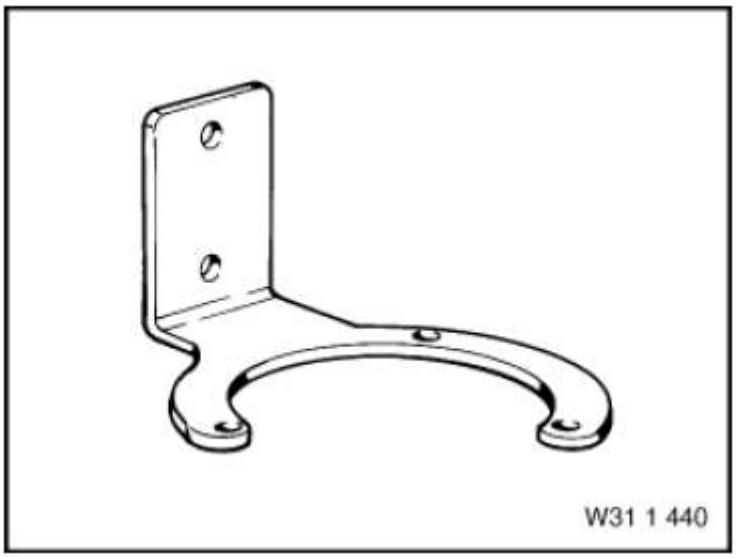

Fig. 8: Identifying Clip (0491819)
Courtesy of BMW OF NORTH AMERICA, INC.

0491825 DEVICE

0491825 271080 Device AM

NOTE: **For driving in the radial shaft seal in the transfer box on the output shaft at the front**

Consisting of:

1. **0491826** Bush

   NOTE: **(Slip bush)**

2. **0491827** Mandrel

   NOTE: **(Drift)**

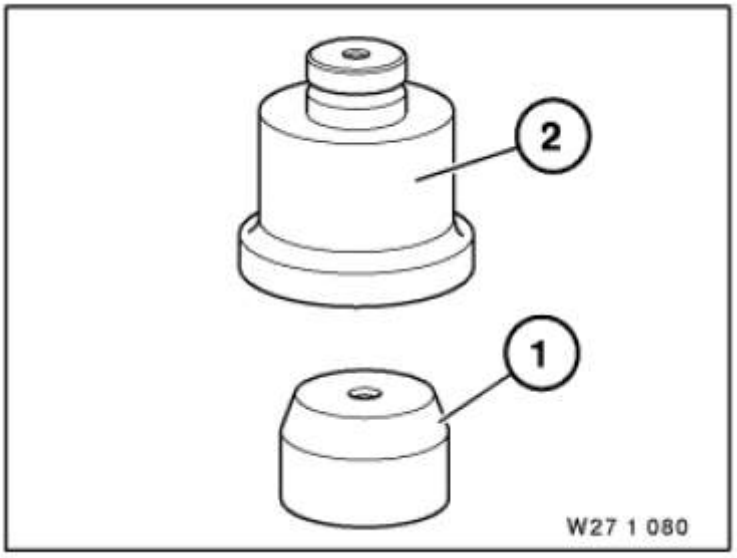

Fig. 9: Identifying Device (0491825)
Courtesy of BMW OF NORTH AMERICA, INC.

0491820 DEVICE

cardiagn.com

0491820 271030 Device AM

NOTE: **For removing and installing the transfer box**

SI number

01 08 93 (679)

Consisting of:

1. 0491821 Frame

   NOTE: **(Main frame with spindle)**

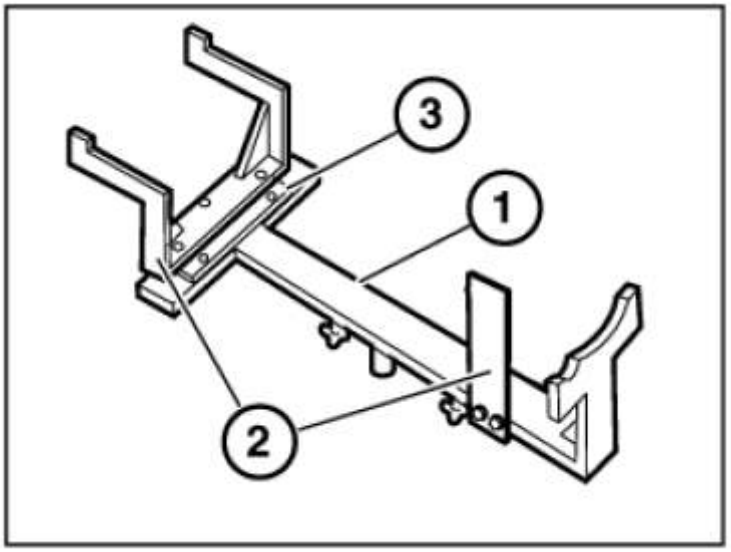

Fig. 10: Identifying Device (0491820)
Courtesy of BMW OF NORTH AMERICA, INC.

2. 0491822 Adapter

   NOTE: **(Adapter) Transmission: S5D 310Z**

3. 0491823 Adapter

   NOTE: **(Adapter) Transmission: A5S 310Z**

0491831 DEVICE

0491831 271190 Device Mechanical tool

NOTE: **For installing the rubber mount in the transfer box**

cardiagn.com

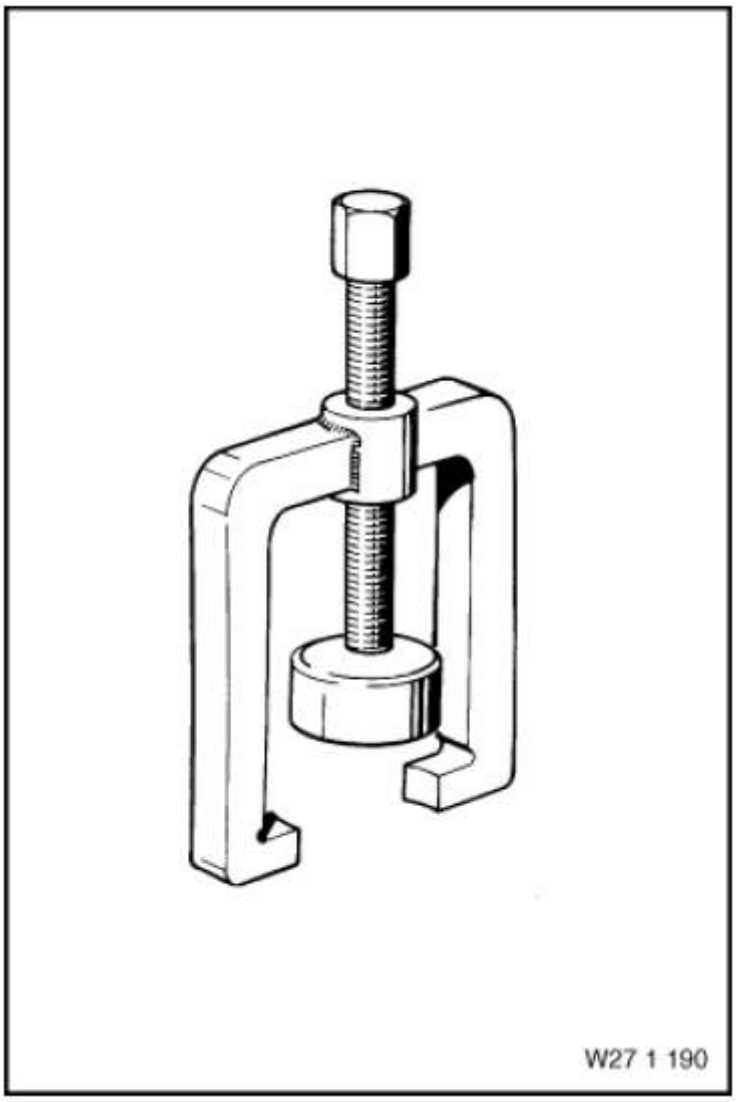

Fig. 11: Identifying Device (0491831)
Courtesy of BMW OF NORTH AMERICA, INC.

0493684 EXTENSION

0493684 271102 Extension AM

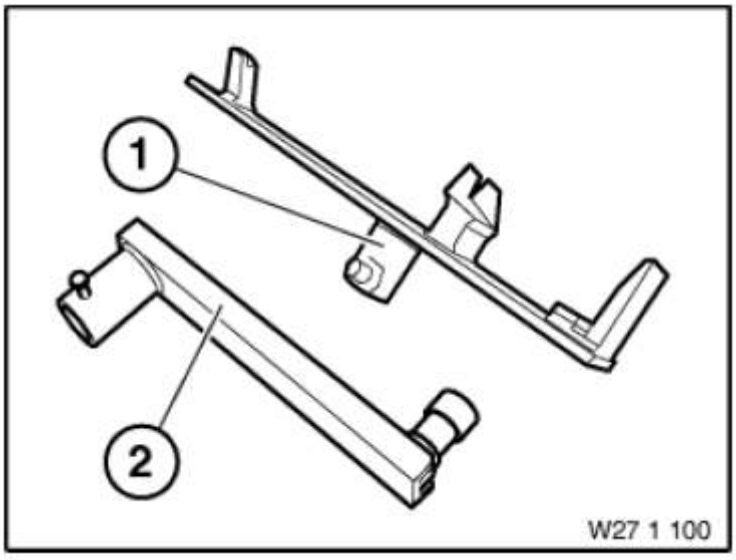

Fig. 12: Identifying Extension (0493684)
Courtesy of BMW OF NORTH AMERICA, INC.

cardiagn.com

0493682 FIXTURE

0493682 271100 Fixture AM

NOTE: **(support and extension) For removing and fitting the transfer box**

SI number

01 15 99 (483)

Consisting of:

1. 0493683 Fixture
2. 0493684 Extension

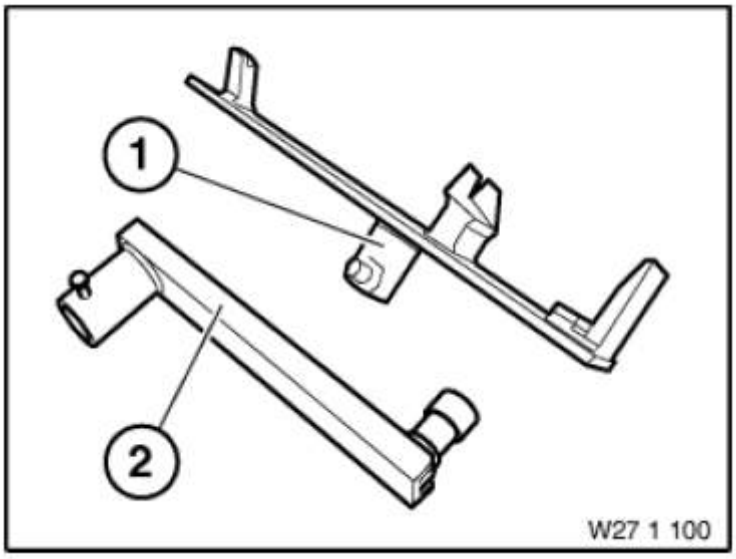

Fig. 13: Identifying Fixture (0493682)
Courtesy of BMW OF NORTH AMERICA, INC.

0493683 FIXTURE

0493683 271101 Fixture AM

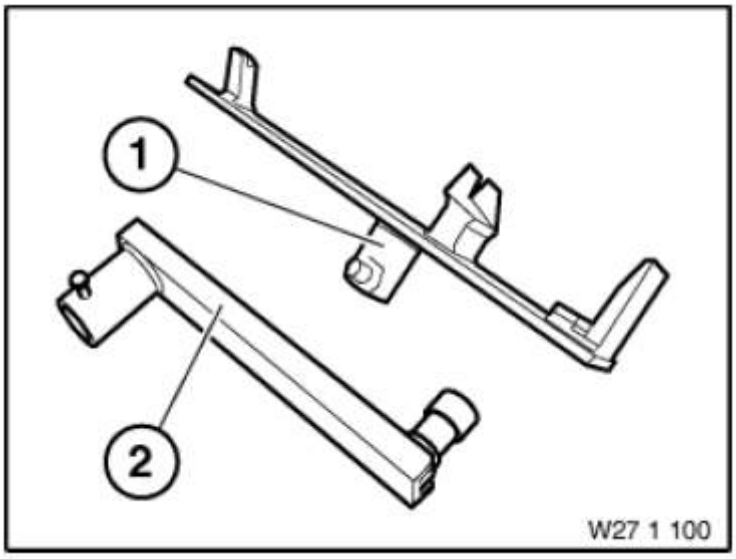

Fig. 14: Identifying Fixture (0493683)
Courtesy of BMW OF NORTH AMERICA, INC.

cardiagn.com

0491821 FRAME

0491821 271031 Frame AM

NOTE: (Main frame with spindle)

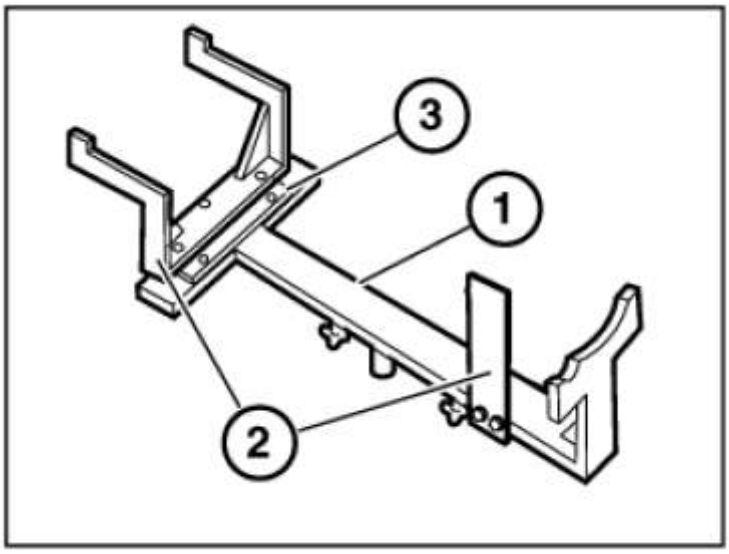

Fig. 15: Identifying Frame (0491821)
Courtesy of BMW OF NORTH AMERICA, INC.

0493553 HOLDING SLEEVE

0493553 271342 Holding sleeve AM

NOTE: (Sliding sleeve) For output to front axle differential

Storage Location

A48

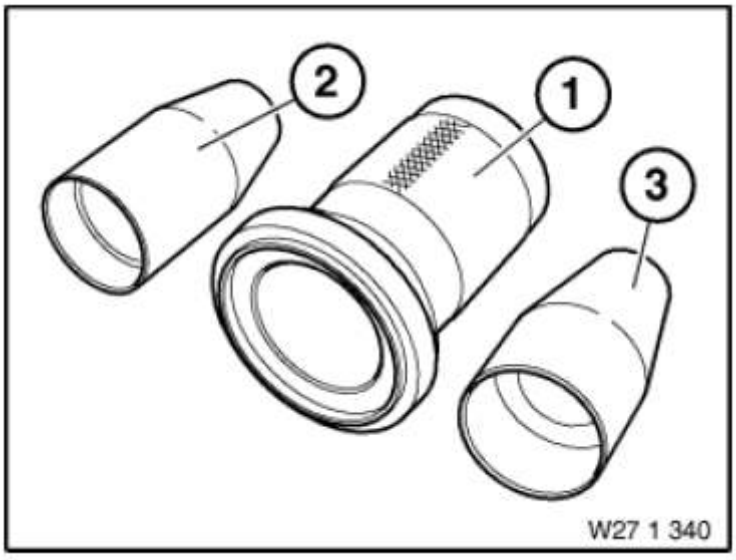

Fig. 16: Identifying Holding Sleeve (0493553)
Courtesy of BMW OF NORTH AMERICA, INC.

0493554 HOLDING SLEEVE

0493554 271343 Holding sleeve AM

cardiagn.com

NOTE: **(Sliding sleeve) For output to rear axle differential**

Storage Location

A48

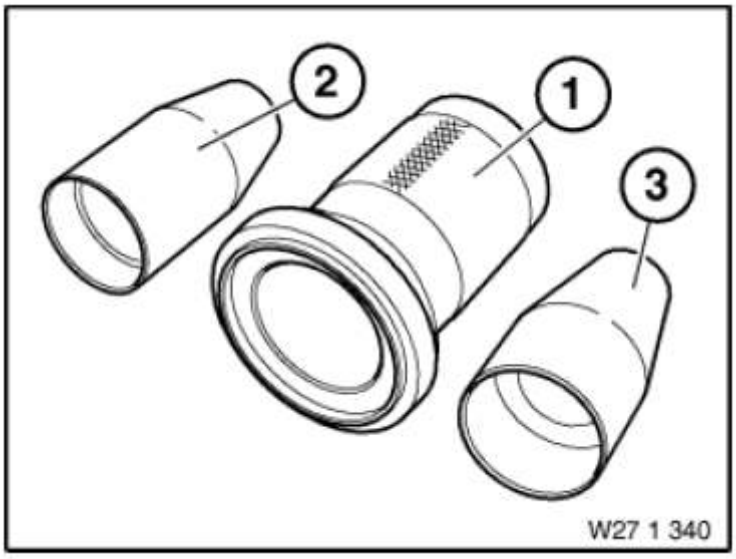

Fig. 17: Identifying Holding Sleeve (0493554)
Courtesy of BMW OF NORTH AMERICA, INC.

0491833 MANDREL

0491833 271250 Mandrel Mechanical tool

NOTE: **(Drift) For driving the main shaft out of the transfer box**

cardiagn.com

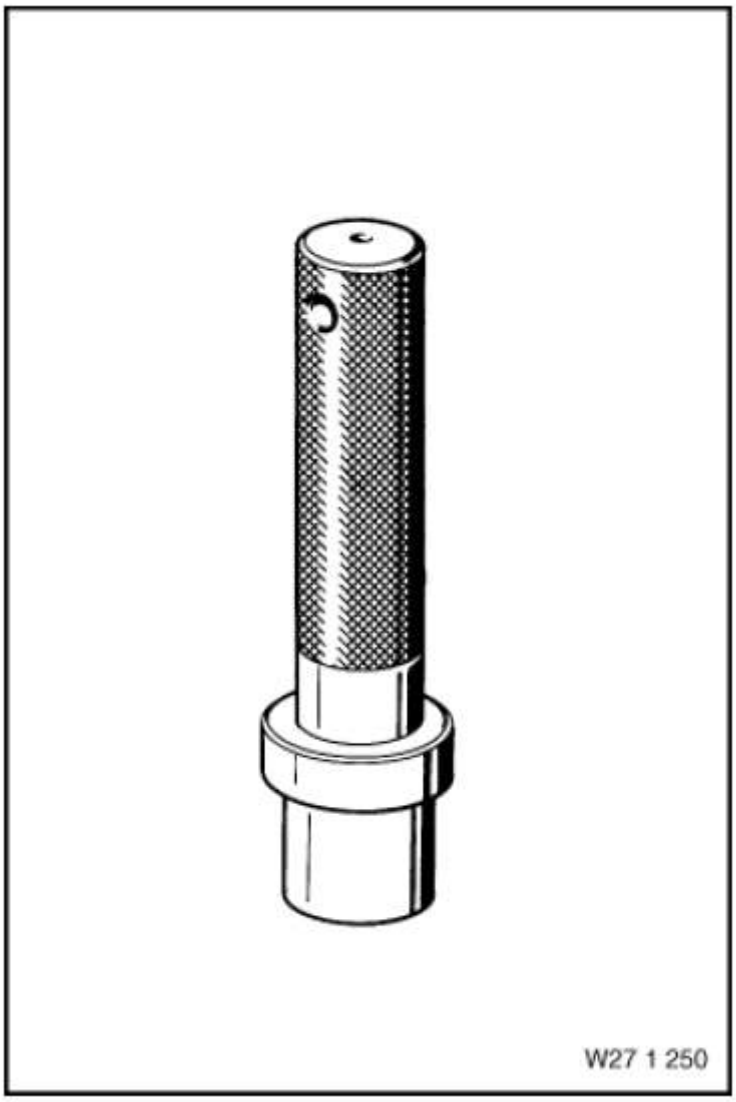

Fig. 18: Identifying Mandrel (0491833)
Courtesy of BMW OF NORTH AMERICA, INC.

0495764 MANDREL

0495764 271470 Mandrel Minimum set: Mechanical tools Mechanical tool

NOTE: **(Drift) For driving radial shaft seal of output shaft to front axle differential. Transfer box: ATC 700**

Storage Location

A21

SI number

01 22 06 (307)

cardiagn.com

Fig. 19: Identifying Mandrel (0495764)
Courtesy of BMW OF NORTH AMERICA, INC.

0495241 MANDREL

0495241 271430 Mandrel Minimum set: Mechanical tools Mechanical tool

NOTE: **(drift) For driving in drive shaft seal. Transfer box: ATC300**

Storage Location

B50

C50

SI number

01 04 05 (175)

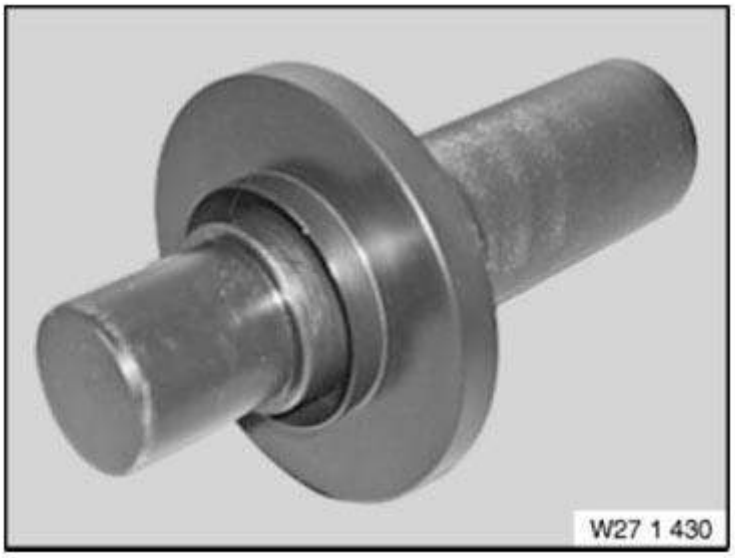

Fig. 20: Identifying Mandrel (0495241)
Courtesy of BMW OF NORTH AMERICA, INC.

0491844 MANDREL

0491844 271300 Mandrel Mechanical tool

NOTE: **(drift) For driving the roller bearing into the transfer box on the drive shaft**

Storage Location

cardiagn.com

X7

SI number

01 04 92 (487)

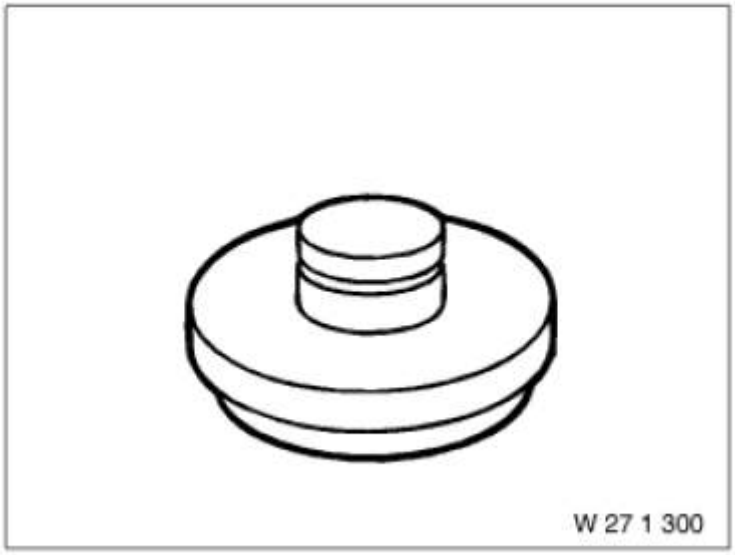

Fig. 21: Identifying Mandrel (0491844)
Courtesy of BMW OF NORTH AMERICA, INC.

0491848 MANDREL

0491848 271320 Mandrel Mechanical tool

NOTE: **(drift) For driving the radial sealing ring into the transfer box on the output shaft to the rear axle final drive**

Storage Location

X7

SI number

01 04 92 (487)

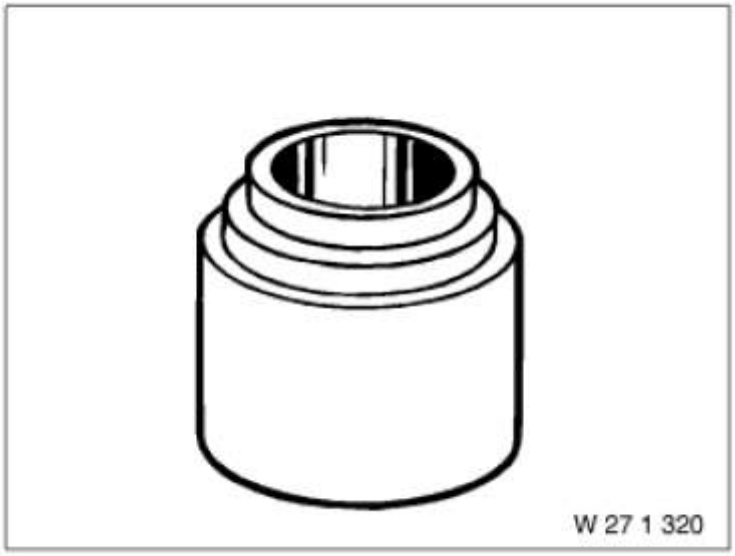

Fig. 22: Identifying Mandrel (0491848)

cardiagn.com

Courtesy of BMW OF NORTH AMERICA, INC.

0493551 MANDREL

0493551 271340 Mandrel AM

NOTE: **(Drift with slip bushes) For fitting radial shaft seals to rear and front axle differentials Transfer box: NV-124/125 on E46/16**

Storage Location

A48

SI number

01 01 03 (946)

Consisting of:

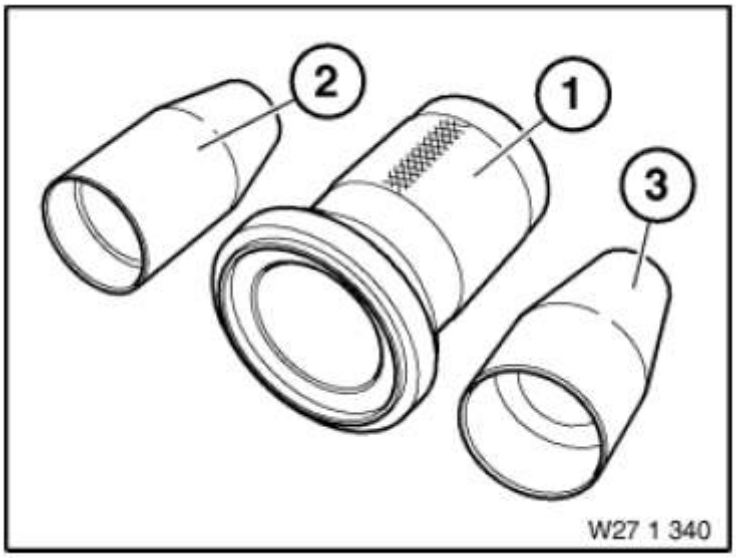

Fig. 23: Identifying Mandrel (0493551)
Courtesy of BMW OF NORTH AMERICA, INC.

1. 0493552 Bush

   NOTE: **(Impact bush)**

2. 0493553 Holding sleeve

   NOTE: **(Sliding sleeve) For output to front axle differential**

3. 0493554 Holding sleeve

   NOTE: **(Sliding sleeve) For output to rear axle differential**

0491832 MANDREL

0491832 271200 Mandrel Mechanical tool

NOTE: **(Drift) For fitting rotary shaft seal in transfer box on main shaft**

cardiagn.com

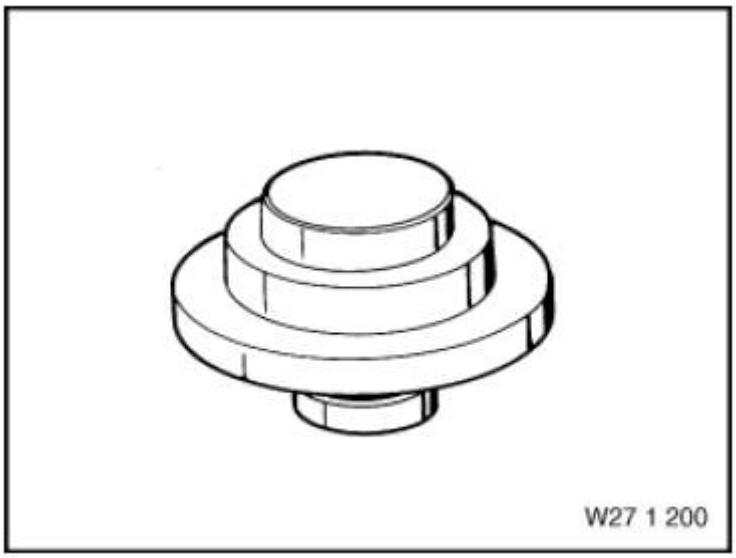

Fig. 24: Identifying Mandrel (0491832)
Courtesy of BMW OF NORTH AMERICA, INC.

0491830 MANDREL

0491830 271160 Mandrel Mechanical tool

NOTE: **(drift) For the bearing bush of the drive shaft in the transfer box**

cardiagn.com

Fig. 25: Identifying Mandrel (0491830)
Courtesy of BMW OF NORTH AMERICA, INC.

0495242 MANDREL

0495242 271440 Mandrel Minimum set: Mechanical tools Mechanical tool

NOTE: **(Drift) For driving in the radial shaft seal of output shaft. Transfer box: ATC300**

Storage Location

C50

SI number

01 04 05 (175)

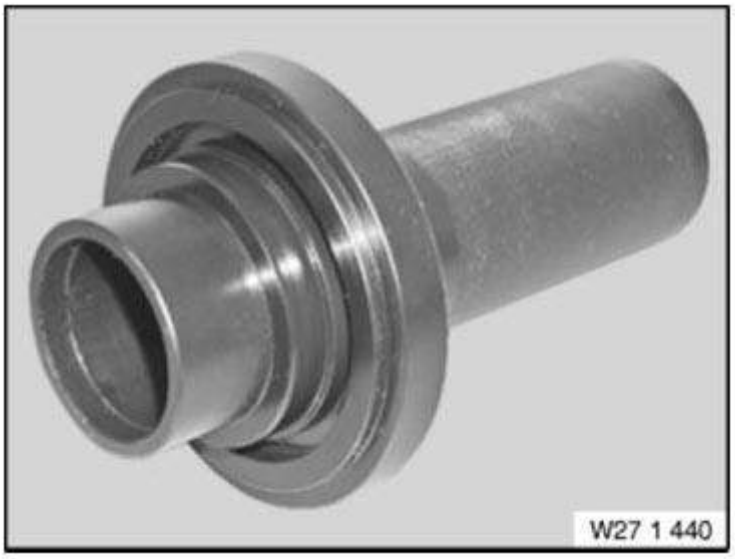

Fig. 26: Identifying Mandrel (0495242)
Courtesy of BMW OF NORTH AMERICA, INC.

0491843 MANDREL

0491843 271290 Mandrel Mechanical tool

NOTE: **(Drift) For driving the radial seal into the transfer box on the drive shaft**

Storage Location

X7

SI number

01 04 92 (487)

cardiagn.com

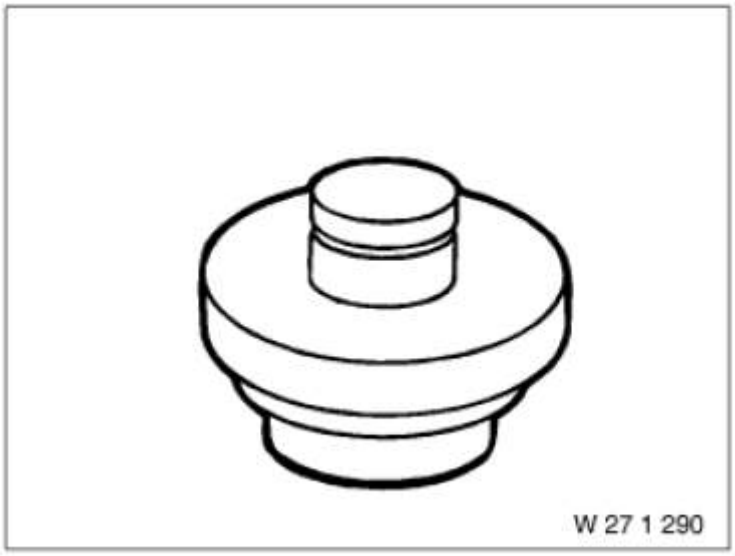

Fig. 27: Identifying Mandrel (0491843)
Courtesy of BMW OF NORTH AMERICA, INC.

0491847 MANDREL

0491847 271312 Mandrel AM

NOTE: (Drift)

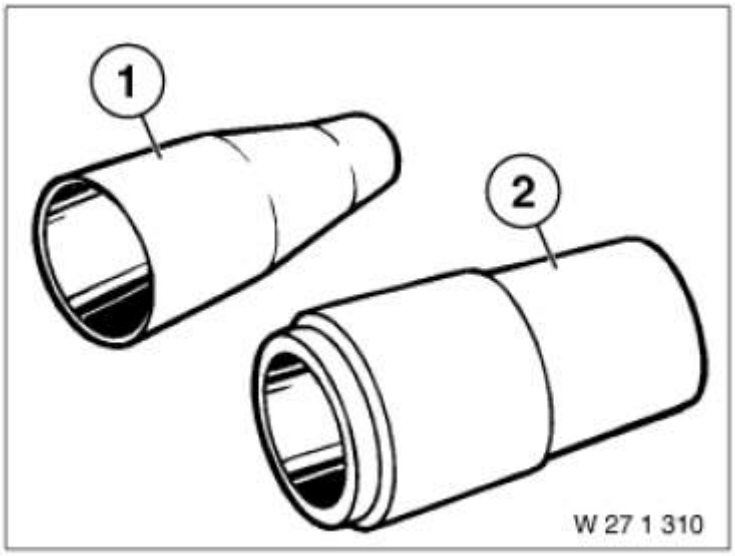

Fig. 28: Identifying Mandrel (0491847)
Courtesy of BMW OF NORTH AMERICA, INC.

2318114 MANDREL

2318114 Mandrel Minimum set: Mechanical tools Mechanical tool

NOTE: Mandrel for installing the radial shaft seal (output of transfer box ATC45L).

SI number

01 04 12 (798)

cardiagn.com

Fig. 29: Identifying Mandrel (2318114)
Courtesy of BMW OF NORTH AMERICA, INC.

0491839 MANDREL

0491839 271270 Mandrel AM

NOTE: **(Drift) For driving the radial seal into the transfer box on the drive shaft**

Consisting of:

1. 0491840 Ring

   NOTE: **(Spacer ring)**

2. 0491841 Mandrel

   NOTE: **(Drift)**

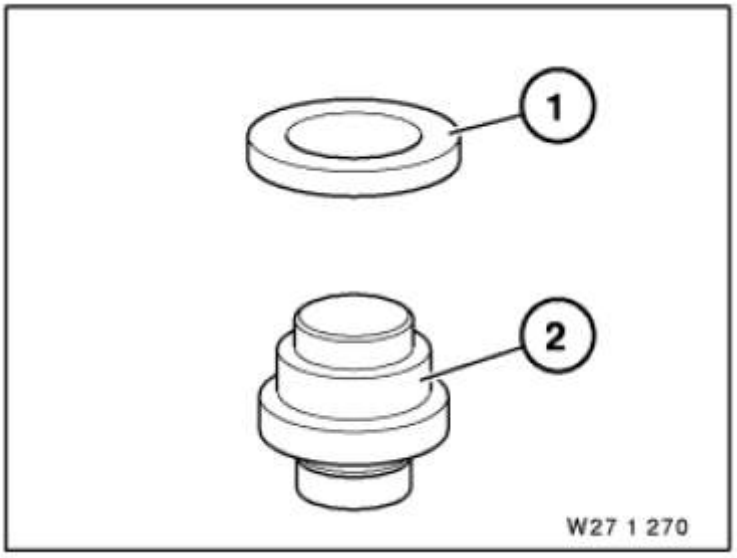

Fig. 30: Identifying Mandrel (0491839)
Courtesy of BMW OF NORTH AMERICA, INC.

0494640 MANDREL

cardiagn.com

0494640 271370 Mandrel Mechanical tool

NOTE: **(Drift) For fitting radial shaft seal of drive shaft Transfer box: LWX-500**

Storage Location

A47

SI number

01 01 03 (946)

Fig. 31: Identifying Mandrel (0494640)
Courtesy of BMW OF NORTH AMERICA, INC.

0491828 MANDREL

0491828 271090 Mandrel Mechanical tool

NOTE: **(Drift) For the radial seal in the transfer box on the output shaft at the rear**

cardiagn.com

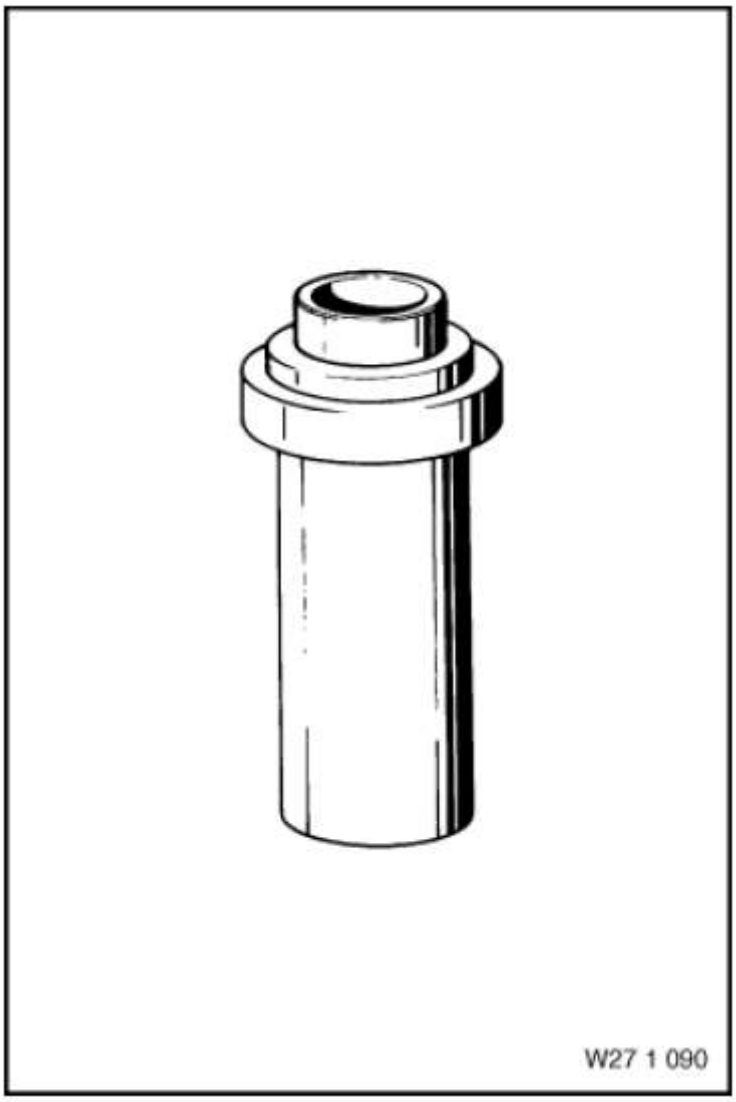

Fig. 32: Identifying Mandrel (0491828)
Courtesy of BMW OF NORTH AMERICA, INC.

0491827 MANDREL

0491827 271082 Mandrel AM

NOTE: **(Drift)**

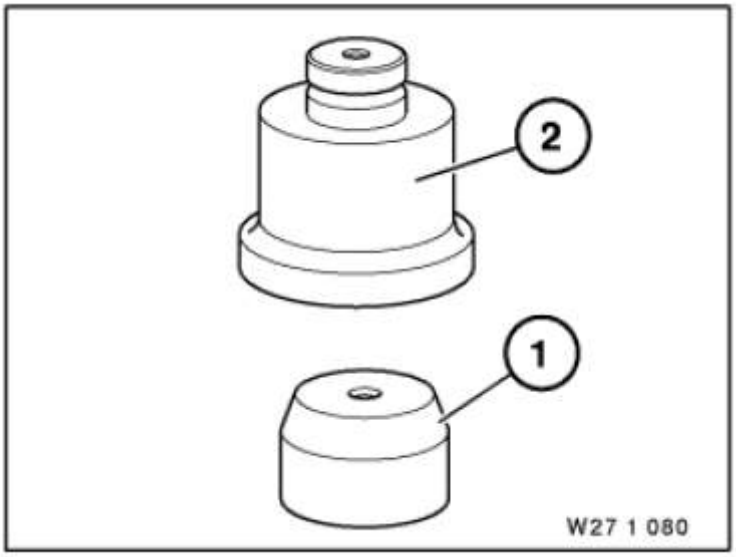

cardiagn.com

Fig. 33: Identifying Mandrel (0491827)
Courtesy of BMW OF NORTH AMERICA, INC.

0491842 MANDREL

0491842 271280 Mandrel Mechanical tool

NOTE: **(Drift) For driving the radial seal into the transfer box on the drive shaft**

Storage Location

X7

SI number

01 04 92 (487)

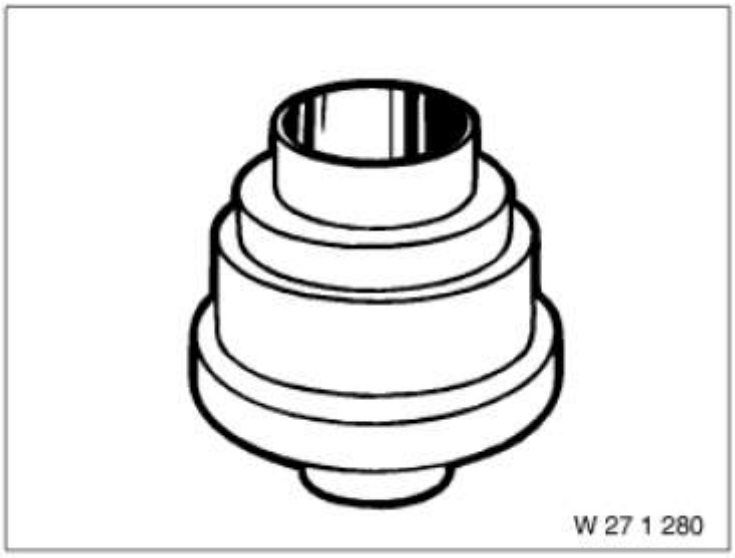

Fig. 34: Identifying Mandrel (0491842)
Courtesy of BMW OF NORTH AMERICA, INC.

0494823 MANDREL

0494823 271420 Mandrel Minimum set: Mechanical tools Mechanical tool

NOTE: **(Drift) For driving radial shaft seal of output shaft to front axle differential. Transfer box: ATC500**

Storage Location

C48

SI number

01 23 03 (032)

cardiagn.com

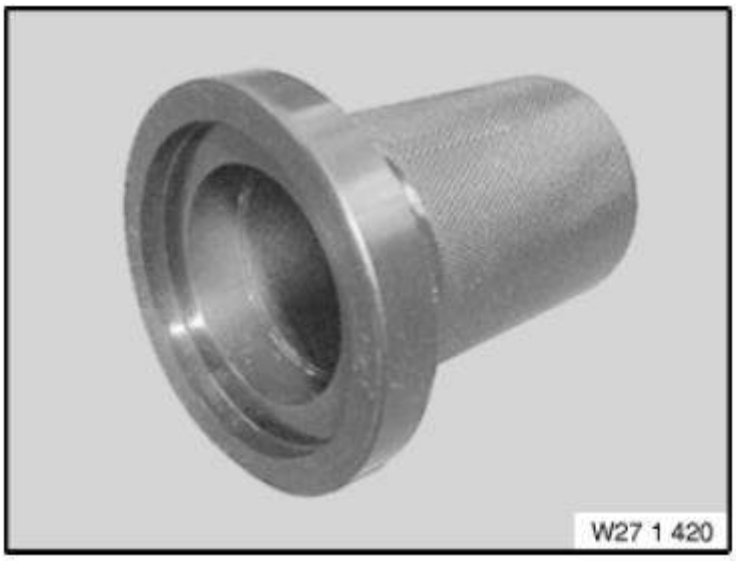

Fig. 35: Identifying Mandrel (0494823)
Courtesy of BMW OF NORTH AMERICA, INC.

0491841 MANDREL

0491841 271272 Mandrel AM

NOTE: (Drift)

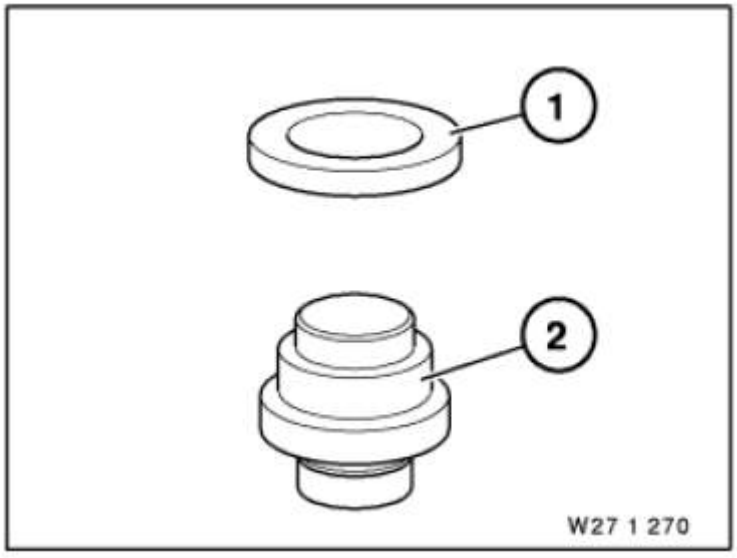

Fig. 36: Identifying Mandrel (0491841)
Courtesy of BMW OF NORTH AMERICA, INC.

0493549 MANDREL

0493549 271360 Mandrel Mechanical tool

NOTE: (Drift) For fitting radial shaft seal of drive shaft Transfer box: NV-124/125 --> E46/16

Storage Location

B47

SI number

cardiagn.com

01 01 03 (946)

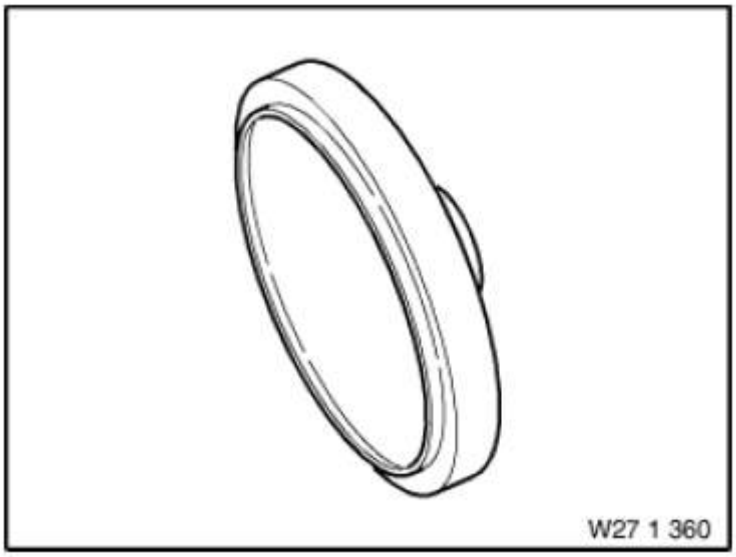

Fig. 37: Identifying Mandrel (0493549)
Courtesy of BMW OF NORTH AMERICA, INC.

0494641 MANDREL

0494641 271380 Mandrel Mechanical tool

NOTE: **(Drift) For fitting output shaft to rear axle final drive. Transfer box: LWX-500**

Storage Location

A47

SI number

01 01 03 (946)

Fig. 38: Identifying Mandrel (0494641)
Courtesy of BMW OF NORTH AMERICA, INC.

0491837 NUT

0491837 271263 Nut AM

cardiagn.com

NOTE: **(Thrust nut with bearing)**

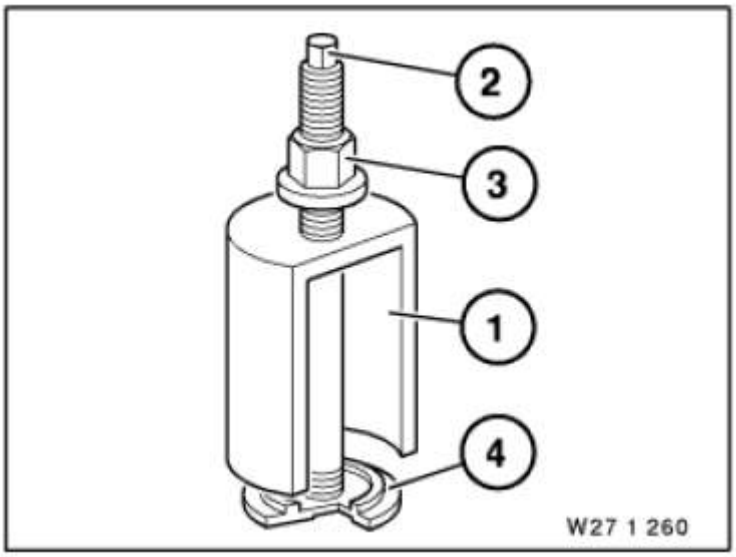

Fig. 39: Identifying Nut (0491837)
Courtesy of BMW OF NORTH AMERICA, INC.

0491824 PULLER

0491824 271050 Puller Mechanical tool

NOTE: **For withdrawing the radial shaft seals in the transfer box on the output shaft at the front**

cardiagn.com

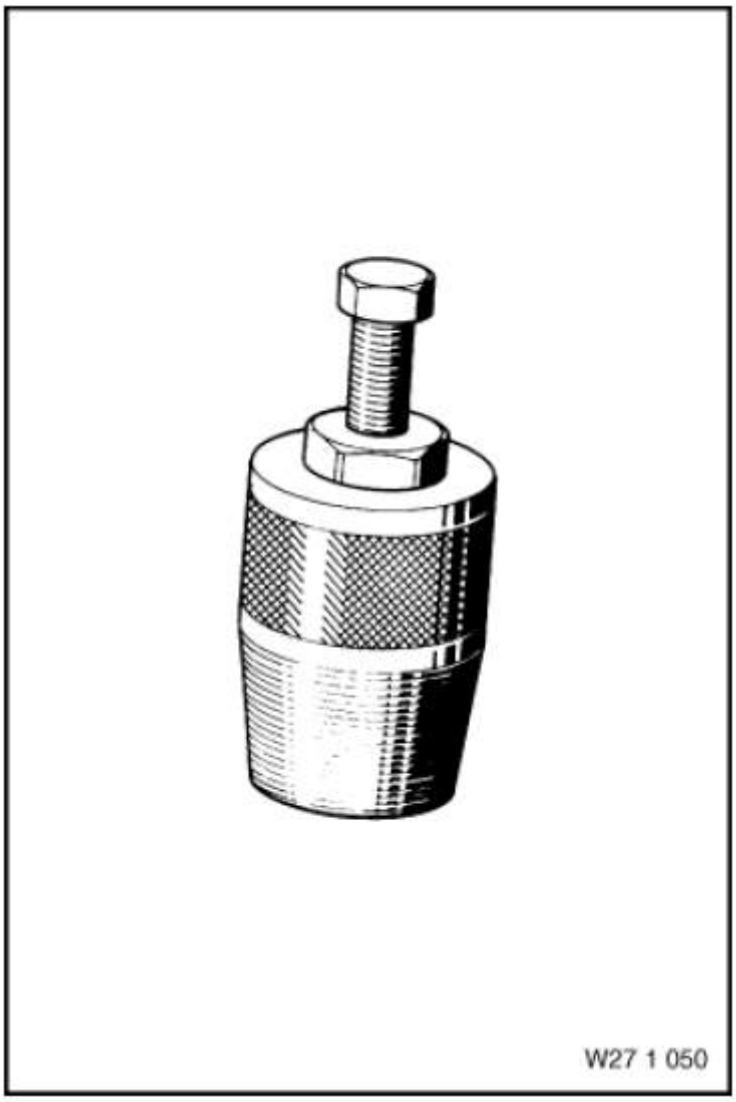

Fig. 40: Identifying Puller (0491824)
Courtesy of BMW OF NORTH AMERICA, INC.

0491834 PULLER

0491834 271260 Puller AM

NOTE: **For pulling out the transfer box rubber mount**

Consisting of:

1. **0491835** Bush

   NOTE: **(Pull-out bush)**

2. **0491836** Spindle
3. **0491837** Nut

   NOTE: **(Thrust nut with bearing)**

cardiagn.com

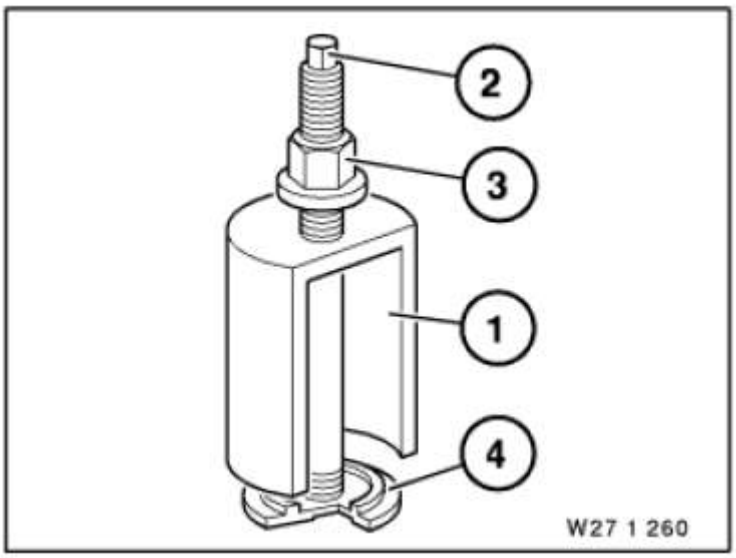

Fig. 41: Identifying Puller (0491834)
Courtesy of BMW OF NORTH AMERICA, INC.

4. **0491838** Washer

NOTE: **(pull-out disc)**

0491849 PULLER

0491849 271330 Puller Mechanical tool

NOTE: **For pulling out the roller bearing in the transfer box on the drive side**

Storage Location

Y6

SI number

01 04 92 (487)

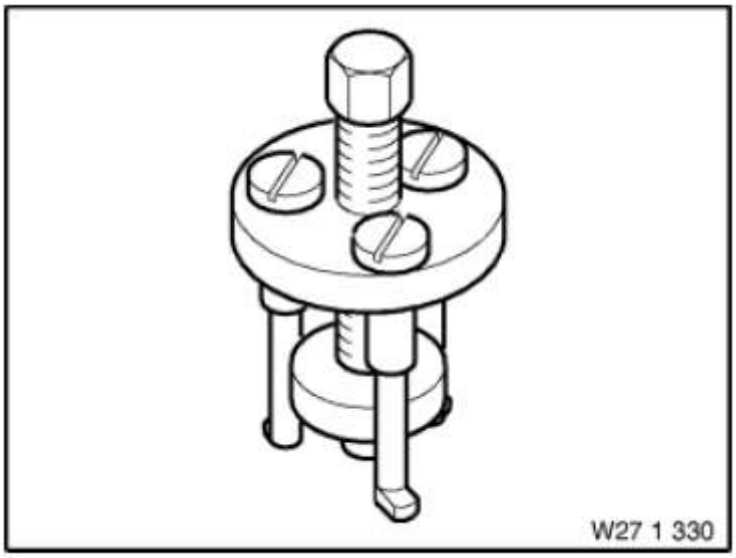

Fig. 42: Identifying Puller (0491849)
Courtesy of BMW OF NORTH AMERICA, INC.

cardiagn.com

0491840 RING

0491840 271271 Ring AM

NOTE: (Spacer ring)

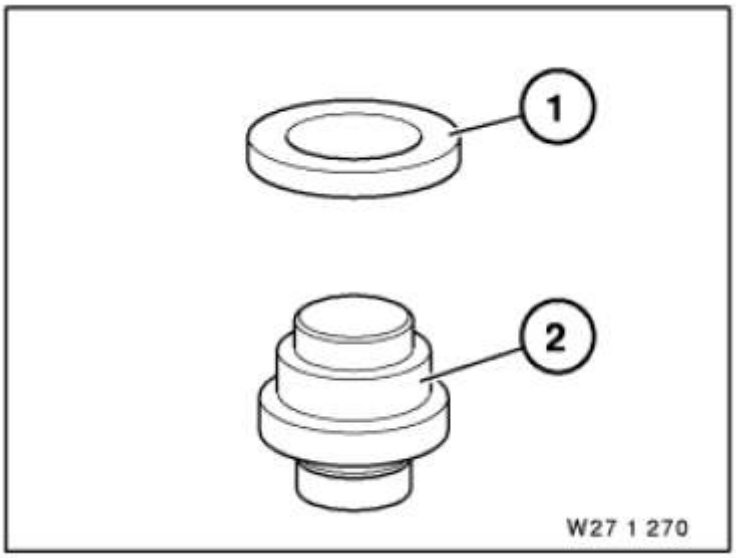

Fig. 43: Identifying Ring (0491840)
Courtesy of BMW OF NORTH AMERICA, INC.

0491836 SPINDLE

0491836 271262 Spindle AM

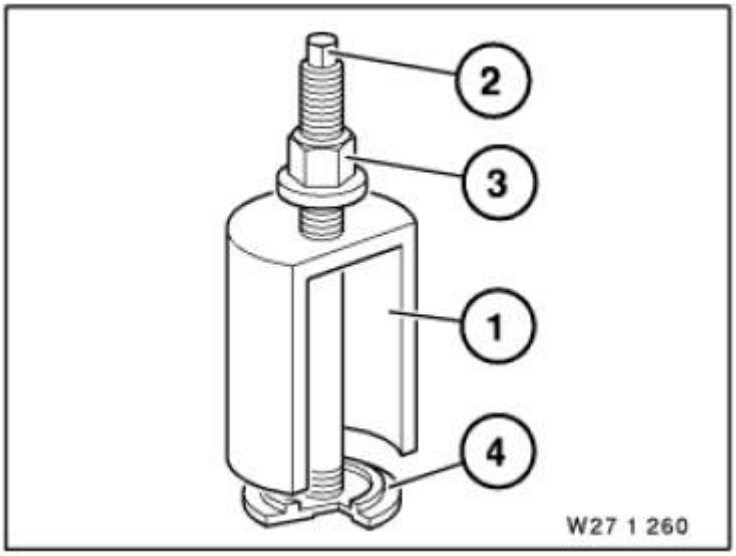

Fig. 44: Identifying Spindle (0491836)
Courtesy of BMW OF NORTH AMERICA, INC.

0491829 SYNCHRONIZING KEY

0491829 271120 Synchronizing key Mechanical tool

NOTE: For installing the output shaft in the transfer box rear section

cardiagn.com

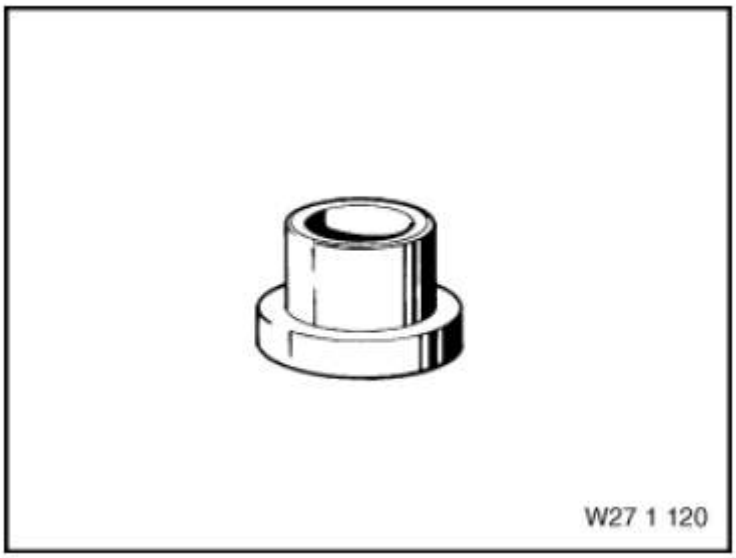

Fig. 45: Identifying Synchronizing Key (0491829)
Courtesy of BMW OF NORTH AMERICA, INC.

0491838 WASHER

0491838 271264 Washer AM

NOTE: (pull-out disc)

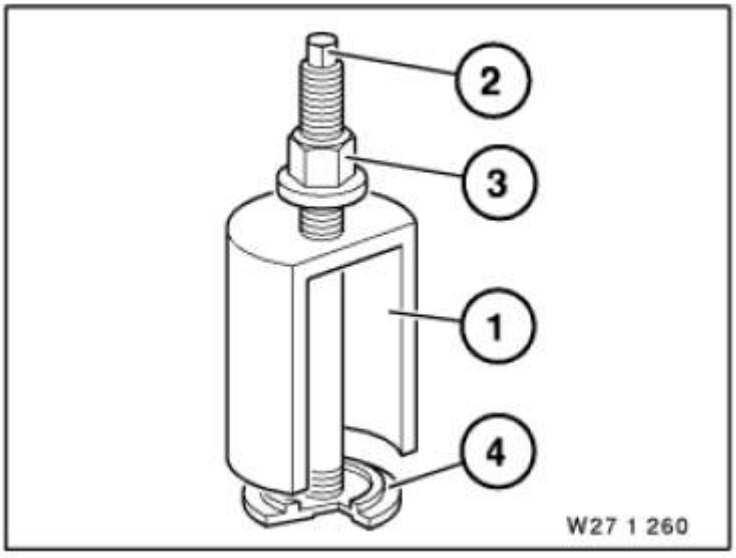

Fig. 46: Identifying Washer (0491838)
Courtesy of BMW OF NORTH AMERICA, INC.

Copyright 2016 Mitchell Repair Information Company, LLC. All Rights Reserved.

Article GUID: A00702122

cardiagn.com

TRANSFER BOX IN GENERAL (ATC 45L)

27 00 TRANSFER BOX IN GENERAL

TRANSFER BOX IN GENERAL SPECIFICATION

Designation/Type	(X-Drive)	ATC 45L (X-Drive)
Oil grade: see **OPERATING FLUIDS**	Â	Â
Oil change quantity	litre	0, 6
New oil quantity	litre	0, 7

TRANSFER BOX IN GENERAL (ATC 450)

27 00 TRANSFER BOX IN GENERAL

TRANSFER BOX IN GENERAL SPECIFICATION

Designation/Type	(X-Drive)	ATC 450 (X-Drive)
Oil grade: see **OPERATING FLUIDS**	Â	Â
Oil change quantity	litre	0.6
Refilling oil quantity	litre	0.7

Copyright 2016 Mitchell Repair Information Company, LLC. All Rights Reserved.

Article GUID: A00702146

cardiagn.com

Back To Article

TRANSFER BOX IN GENERAL

27-1 00 TRANSFER BOX IN GENERAL

TIGHTENING TORQUE SPECIFICATION - TRANSFER BOX IN GENERAL

Â	Type	Thread	Tightening specification	Measure
7AZ Plug	E30/E34	M24 x 1.5	Â	33 Nm
	E30/E34	M14 x 1.5	Â	33 Nm
	E30/E34	M18 x 1.5	Â	23 Nm
8AZ Transmission cross member to rubber mounts	E30/E34	M12	Â	80 Nm
Transmission cross member to body	E30/E34	M8	Â	24 Nm
9AZ Transfer box to transmission	E46/E53/E60/E61/E70/E71/E72/E83/E84/E90/E91/E92	M10	Â	43 Nm
10AZ Transmission cross member to rubber mounts	E46/E53/E83	M12	Â	74 Nm
Transmission cross member to rubber mounts	E60/E61/E90/E91/E92/E84	M12	Â	68 Nm
Transmission cross-member to body	E53	M10	Â	41 Nm
Transmission cross-member to body	E46/E83	M8	Â	21 Nm
Transmission cross-member to body	E60/E61/E90/E91/E92/E84	M8	Â	19 Nm
11AZ Plug	E53/E46/E83	M18	Â	33 Nm
Oil filler and drain plugs	E60/E61/E90/E91/E92/E70/E71/E72/E84	M22	Â	60 Nm
12AZ Vibration absorber to transfer box	E53	M8	Â	23 Nm
Vibration absorber to transfer box	E83	M8	Â	20.5 Nm
13AZ Servomotor to transfer	E53/E83/E60/E61/E90/E91/E92/E70/E71/E72/E84	M8	Â	22 Nm

cardiagn.com

	box				
14AZ	Resistor to servomotor	E53/E83/E60/E61/E90/E91/E92/E70/E71/E72	M5	Â	5 Nm
15AZ	Control unit holder to vehicle floor	E60/E61/E90/E91/E92	M6	Â	8 Nm

TRANSFER CASE (ATC450)

27 10 TRANSFER CASE ATC450

TIGHTENING TORQUE SPECIFICATION - TRANSFER CASE ATC450

Â		Type	Thread	Tightening specifications	Dimension
1AZ	Transfer box to automatic transmission	F25	M10	Â	43 Nm
2AZ	Oil filler and oil drain plugs	F25	M22	Â	60 Nm
3AZ	Transfer box control unit (longitudinal moment module) to transfer box	F25	M8	Â	19 Nm
4AZ	Earth strap to transfer case or body	F25	M8	Â	19 Nm

TRANSFER CASE (ATC45L)

27 10 TRANSFER CASE ATC45L

TIGHTENING TORQUE SPECIFICATION - TRANSFER CASE ATC45L

Â		Type	Thread	Tightening specifications	Dimension
1AZ	Transfer box to automatic transmission	F15/F16/F25/F26/E70/E71	M10	Â	43 Nm
2AZ	Oil filler and oil drain plugs	F15/F16/F25/F26/E70/E71	M22	Â	60 Nm
3AZ	Transfer box control unit (longitudinal moment module) to transfer box	F15/F16/F25/F26/E70/E71	M8	Â	19 Nm
4AZ	Earth strap to transfer case or body	F15/F16/F25/F26/E70/E71	M8	Â	19 Nm

cardiagn.com

Copyright 2016 Mitchell Repair Information Company, LLC. All Rights Reserved.

Article GUID: A00702171

Back To Article

AS OF 07/2015 TRANSFER CASE OPERATING FLUIDS

1.0 TRANSMISSION OIL FOR TRANSFER BOX

E30/325iX and E34 /525iX

Trade name	BMW part number	Container size
BMW ATF D2	81 22 9 400 272	12x1 litre

E53/X5 without X-drive

Trade name	BMW part number	Container size
Automatic transmission fluid Dexron III	83 22 9 407 858	1-litre can
Automatic transmission fluid Dexron III	83 22 9 407 859	60-litre barrel
Names of approved automatic transmission fluids with the specification Dexron III.		

NOTE: **Before opening the container, "mix" the transmission oil to distribute the additives evenly through the oil.**

Transfer box ATC 300/350/400/450/500/700/35L/45L

Trade name	Model Year	BMW part number	Container size
	Transfer box oil TF0870*	83 22 0 397 244	1-litre can
NOTE: *** To be deleted and replaced by BMW DTF1 .**			

Trade name	Model Year	BMW part number	Container size
	BMWDTF1	83 22 2 409 710	1-litre can

NOTE: **Before opening the container, "mix" the transmission oil to distribute the additives evenly through the oil.**

MINI R60 (transfer case)

Trade name	BMW part number	Container size
BMW Synthetics OSP	33 11 7 695 240	1-litre can
BMW Synthetics OSP	83 22 9 407 768	60-litre barrel

NOTE: **Before opening the container, "mix" the transmission oil to distribute the additives evenly through the oil.**

2.0 GEAR OIL FOR TRANSFER BOX E46/16

E46/16

Trade name	BMW part number	Container size
Manual transmission gear oil	83 22 9 408 942	5-litre canister

cardiagn.com

MTF-LT-1		

NOTE: **Before opening the container, "mix" the gear oil to distribute the additives evenly through the oil.**

TRANSMISSION OIL FOR E-TRANSMISSIONS (I01, I01 REX, I12 M12, E82 E)

TRANSFER CASE OPERATING FLUIDS

TRANSFER CASE OPERATING FLUIDS REFERENCE CHART

Model:	Fluid:	BMW Part Number:
E30 325iX	ATF DexronÂ® III formulation	Â
E46/16 325xi/xiT, 330xi	MTF-LT-1	83 22 9 408 942 (MTF-LT-2 = 5 Liters)
E53 All models with NV125 transfer case	ATF DexronÂ® III formulation	Â
E53 All models with X-Drive transfer case	TF0870	83 22 0 397 244 (1 Liter)
E60 All models	TF0870	83 22 0 397 244 (1 Liter)
E61 All models	TF0870	83 22 0 397 244 (1 Liter)
E70 All models	TF0870	83 22 0 397 244 (1 Liter)
E71 All models	TF0870	83 22 0 397 244 (1 Liter)
E72 All models	TF0870	83 22 0 397 244 (1 Liter)
E83 All models with X-Drive transfer case	TF0870	83 22 0 397 244 (1 Liter)
E90, E91 and E92 All models	TF0870	83 22 0 397 244 (1 Liter)
F01 and F02 All models	TF0870	83 22 0 397 244 (1 Liter)
F07 All models	TF0870	83 22 0 397 244 (1 Liter)
F10 All models	TF0870	83 22 0 397 244 (1 Liter)
F12 and F13	TF0870	83 22 0 397 244 (1 Liter)
F25 All models	TF0870	83 22 0 397 244 (1 Liter)

NOTE: **Before opening the container, shake the container to evenly mix the additives with the oil.**

cardiagn.com

Copyright 2016 Mitchell Repair Information Company, LLC. All Rights Reserved.

Article GUID: A00395999

TRANSMISSION IN GENERAL

00 DANGER OF POISONING IF OIL IS INGESTED/ABSORBED THROUGH THE SKIN

Danger of poisoning!

Ingesting oil or absorbing through the skin may cause poisoning!

Possible symptoms are:

- Headaches
- Dizziness
- Stomach aches
- Vomiting
- Diarrhoea
- Cramps/fits
- Unconsciousness

Protective measures/rules of conduct:

- Pour oil only into appropriately marked containers
- Do **not** pour oil into drinking vessels (drinks bottles, glasses, cups or mugs)
- Observe country-specific safety regulations

First aid measures:

- Do not induce vomiting.

  If the person affected is still conscious, he/she must rinse out their mouth with water, drink plenty of water and consult a doctor immediately.

  If the person affected is unconscious, do not administer anything by mouth, place the person in the recovery position and seek immediate medical attention.

00 RISK OF INJURY IF OIL COMES INTO CONTACT WITH EYES AND SKIN

Danger of injury!

Contact with eyes or skin may result in injury!

Possible symptoms are:

- Impaired sight
- Irritation of the eyes
- Reddening of the skin
- Rough and cracked skin

Protective measures/rules of conduct:

- Wear safety goggles
- Wear oil-resistant protective gloves

cardiagn.com

- Observe country-specific safety regulations

First aid measures:

- **Eye contact:** Rinse eyes immediately with plenty of water for at least 15 minutes; if available, use an eye-rinsing bottle. If irritation of the eyes persists, consult a doctor.
- **Skin contact:** Wash off with soap and water immediately. If irritation persists, consult a doctor.

NOTE: **Do not use solvents/thinners.**

00 SAFETY INSTRUCTIONS FOR HANDLING OIL

WARNING: **DANGER OF POISONING if oil is ingested/absorbed through the skin!**
RISK OF INJURY if oil comes into contact with eyes and skin!

Recycling:

Observe country-specific waste disposal regulations.

Measures if oil is unintentionally released:

- **Personal precautionary measures:** Danger of slipping! Keep noninvolved persons away from the work area. Wear personal protective clothing/equipment.
- **Environmental protection measures:** Prevent oil from draining into drain channels, sewerage systems, pits, cellars, water and the ground.
- **Limiting spread:** Use oil blocks to prevent the surface spread of oil.
- **Cleaning procedure:** Bind and dispose of escaped oil with nonflammable absorbents.

NOTE: **Do not flush oil away with water or aqueous cleaning agents.**

23 TRANSMISSION DESIGNATIONS

Breakdown of BMW designation:

A5S 300J (former designation)		
A	Transmission type	• S = Manual gearbox • A = Automatic transmission
5	Number of forward gears	Â
S	Type of top gear	• D = Direct gear • S = Overdrive gear
300	Max. input torque (Nm)	Â
J	Code letter of transmission manufacturer	• G = Getrag • J = Jatco • R = GMPT (General Motors Powertrain) • Z = ZF (Zahnradfabrik Friedrichshafen)
SMG	Notes	SMG = Sequential M gearbox/transmission

GS6-37BZ (new designation according to BMW Group Standard GS 90007)		
G	Transmission	Â

cardiagn.com

S	Transmission type	• S = Manual gearbox • A = Automatic transmission
6	Number of forward gears	Â
-	Â	• - = Standard with manual gearshift • HP = Hydraulic planetary gear • DKG= twin-clutch gearbox
37	Transmission type	• 26 = D-transmission • 31 = C-transmission • 39 = F-transmission • 37 = H-transmission • 53 = G-transmission • 17 = I-transmission • 47 = J transmission SMG -7-speed • 45 = K transmission • 36 = Transmission DKG
B	Gear set	• B = Petrol gear ratio • D = Diesel gear ratio • S = Sport gear ratio
Z	Code letter of transmission manufacturer	• G = Getrag • Z = ZF (Zahnradfabrik Friedrichshafen)

Automatic transmission:

BMW designation	Manufacturer	Manufacturer designation	Remarks
A4S 200R	General Motors Powertrain	GM4	Â
A4S 270R	General Motors Powertrain	THM-R1w	Transmission wide-stepped
A4S 310R	General Motors Powertrain	THM-R1	Â
A5S 300J	Jatco	Jatco	Â
A5S 310Z	ZF	5HP-18	Â
A5S 325Z	ZF	5HP-19	Â
A5S 440Z	ZF	5HP-24	Â
A5S 560Z	ZF	5HP-30	Â
A5S 360R/390R	GM	GM5	Â
GA6HP19Z	ZF	6HP19	Â
GA6HP26Z	ZF	6HP26	Â
GA6HP32Z	ZF	6HP32	Â
GA6L45R	GM	GM6	Â
GA8HP45Z	ZF	8HP45	Â
GA8HP70Z	ZF	8HP70	Â
GA8P70H	ZF	8P70	Hybrid
GA8HP90Z	ZF	8HP90	Â

cardiagn.com

23... UNIVERSAL BMW TRANSMISSION TAKE-UP

Special tools required:

- 00 2 030
- 23 4 050

NOTE:

- **The universal transmission bracket is introduced for the E60 AWD**
- **Suitable for automatic transmissions**

IMPORTANT: Front and rear supports (1) can be laterally adjusted by means of screws (2). Carrier (3) of rear supports (1) can be longitudinally adjusted by means of screw. Supports must be adapted in length and width to the transmission.

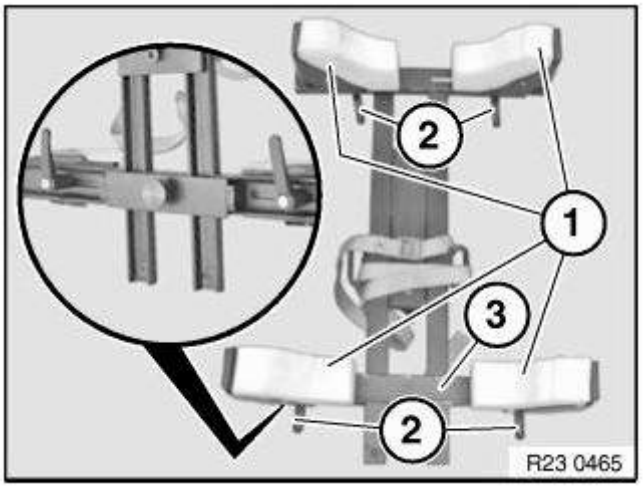

Fig. 1: Identifying Transmissions Supports And Carrier
Courtesy of BMW OF NORTH AMERICA, INC.

Supporting transmission:

Support transmission with special tools 23 4 050 , 00 2 030 .

IMPORTANT: Transmission must be secured with tensioning strap (1).

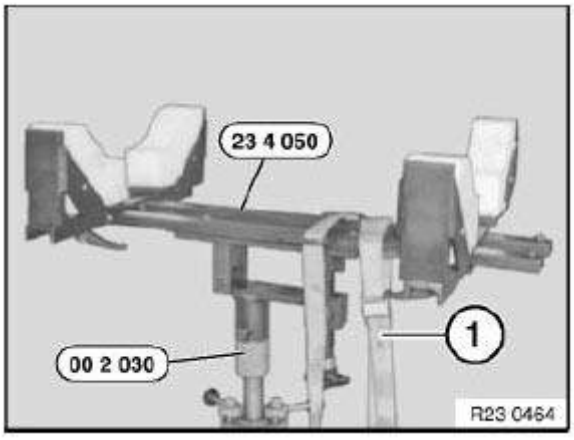

Fig. 2: Supporting Transmission Using Special Tools (23 4 050)

cardiagn.com

Courtesy of BMW OF NORTH AMERICA, INC.

23..... UNIVERSAL TRANSMISSION RETAINING BRIDGE

Special tools required:

- 00 1 450
- 24 0 200

NOTE:

- **The transmission retaining bridge 24 0 200 is suitable for automatic transmissions**

IMPORTANT: Adapters and spindles must be adapted for positive locking to the transmission. **(Risk of injury)**

Adapt adapters (1) and spindle with thrust piece (3) to transmission.

Adapt length with slide (2).

Screw in spindle (4).

IMPORTANT: Before mounting on assembly stand 00 1 450, check retaining bridge for secure seating.

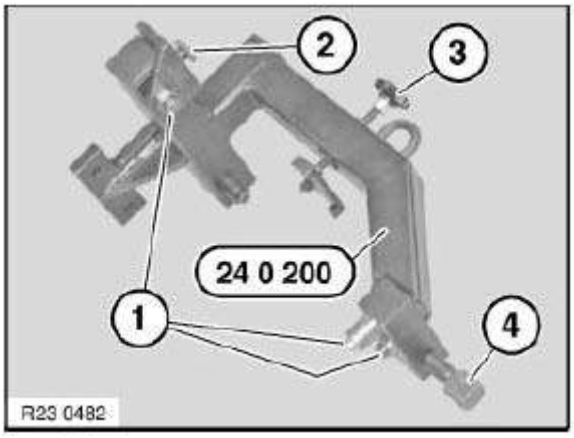

Fig. 3: Identifying Assembly Stand
Courtesy of BMW OF NORTH AMERICA, INC.

BEARING IN HOUSING, SEALING RING

23 12 061 REPLACING RADIAL SHAFT SEAL FOR OUTPUT FLANGE (GS6X45BZ) - ALL-WHEEL DRIVE VEHICLES

Special tools required:

- 23 0 490
- 24 0 110
- 11 8 180
- 2 286 572
- 23 3 211
- 23 3 210
- 23 3 230

cardiagn.com

After completion of work, check transmission oil level.
IMPORTANT: Use only approved **TRANSMISSION OIL** .
Failure to comply with this instruction will result in serious damage to the transmission.

Necessary preliminary tasks:

- Remove **transfer box** . See **27 10 010 REMOVING AND INSTALLING TRANSFER BOX (ATC 450)** or **27 10 010 REMOVING AND INSTALLING TRANSFER BOX (ATC 45L)** .
- Engage gear.

Removal:

Block crankshaft with special tool **11 8 180** .

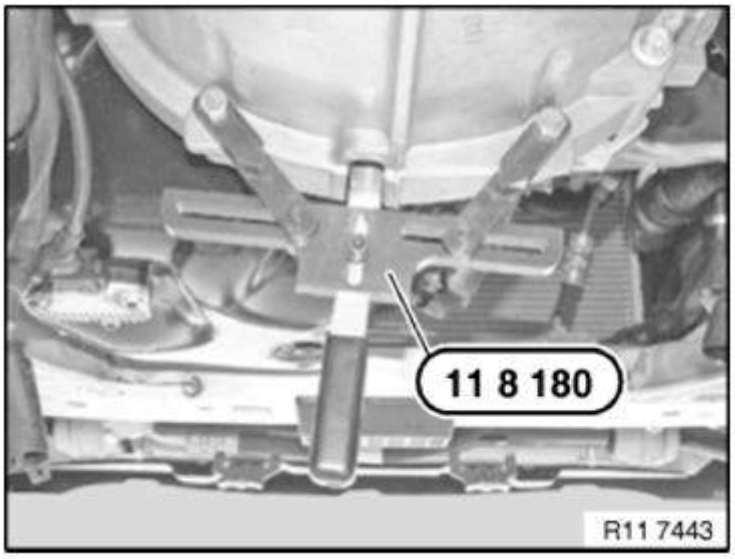

Fig. 4: Identifying Special Tool (11 8 180)
Courtesy of BMW OF NORTH AMERICA, INC.

Loosen and screw out screw (1) from the adapter shaft of the transmission (2).

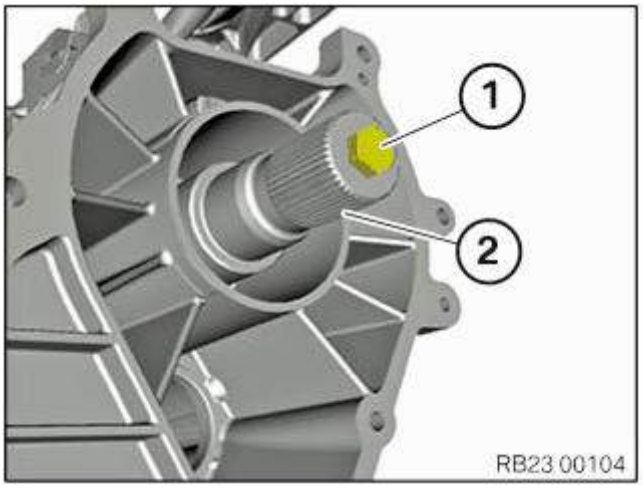

Fig. 5: Identifying Transmission Shaft And Screw
Courtesy of BMW OF NORTH AMERICA, INC.

Mount special tool **2 286 572** **C** and **2 286 572** **D** on the adapter shaft.

cardiagn.com

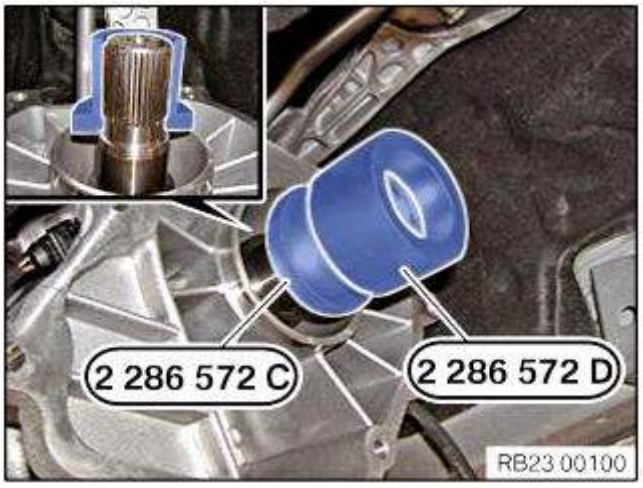

Fig. 6: Identifying Special Tool (2 286 572)
Courtesy of BMW OF NORTH AMERICA, INC.

Screw in special tool 2 286 572 **B** in adapter shaft (1).

Pull out adapter shaft (1) using a two or three-claw extractor tool (2).

Fig. 7: Pulling Adapter Shaft
Courtesy of BMW OF NORTH AMERICA, INC.

Mount screw 2 286 572 A on special tool 23 3 211.

NOTE:

- **Special tool 23 3 211 is an element of special tool 23 3 210 .**

Unscrew screw 2 286 572 A as far as possible out of special tool 23 3 211.

Screw special tool 23 3 211 tightly into radial shaft seal.

cardiagn.com

Fig. 8: Identifying Special Tool (23 3 211)
Courtesy of BMW OF NORTH AMERICA, INC.

Screw in screw 2 286 572 **A** into special tool 23 3 211 again until the radial shaft seal is drawn out of the transmission housing.

- If necessary, repeat procedure.

Installation:

Coat sealing lips of new radial shaft seal with transmission oil.

Drive in radial shaft seal with special tool 23 3 230 until flush.

Fig. 9: Identifying Special Tool (23 3 230)
Courtesy of BMW OF NORTH AMERICA, INC.

Heat up adapter shaft (1) using a hot air blower (2).

NOTE: **Maximum temperature of the adapter shaft: 120Â°C.**

cardiagn.com

Fig. 10: Identifying Adapter Shaft Heating Area
Courtesy of BMW OF NORTH AMERICA, INC.

IMPORTANT: Risk of burning!
Wear protective gloves.

Insert the heated adapter shaft (2) on the output.

- If necessary, carefully hammer in the adapter shaft using a plastic hammer.

Part: Replace screw (1).

Tighten screw (1).

Tightening torque **23 21 3AZ** .

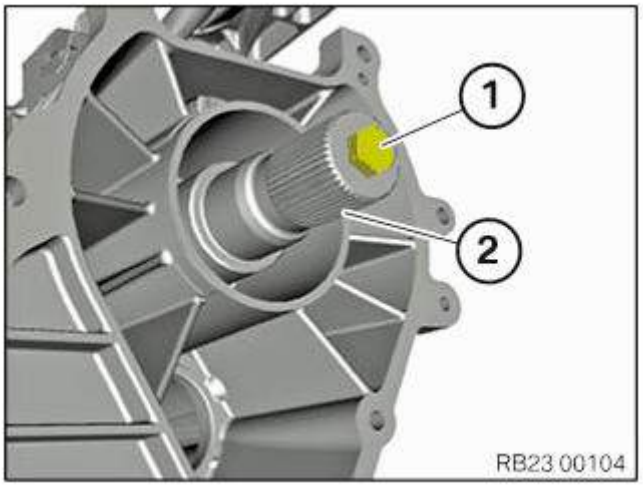

Fig. 11: Identifying Transmission Shaft And Screw
Courtesy of BMW OF NORTH AMERICA, INC.

Remove special tool **11 8 180** .

cardiagn.com

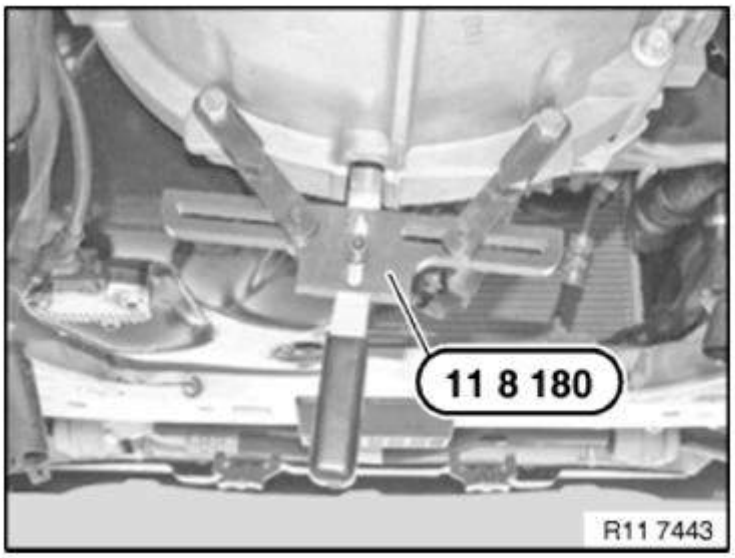

Fig. 12: Identifying Special Tool (11 8 180)
Courtesy of BMW OF NORTH AMERICA, INC.

Required follow-up work:

- Install **transfer box** . See **27 10 010 REMOVING AND INSTALLING TRANSFER BOX (ATC 450)** or **27 10 010 REMOVING AND INSTALLING TRANSFER BOX (ATC 45L)** .
- Check transmission oil level.

Copyright 2016 Mitchell Repair Information Company, LLC. All Rights Reserved.

Article GUID: A00702168

cardiagn.com