OPEL COMBO

Owner's Manual

Wir leben Autos.

Contents

Introduction 2
In brief 6
Keys, doors and windows 20
Seats, restraints 33
Storage 54
Instruments and controls 62
Lighting 88
Climate control 95
Driving and operating 101
Vehicle care 125
Service and maintenance 158
Technical data 161
Customer information 177
Index 180

Introduction

Fuel	Designation			
Engine oil	Grade			
	Viscosity			
Tyre pressure		Tyre size	Front	Rear
	Summer tyres			
	Winter tyres			
Weights				
	Gross vehicle weight rating			
	- Kerb weight, basic model			
	= Loading			

Vehicle specific data

Please enter your vehicle's data on the previous page to keep it easily accessible. This information is available in the sections "Service and maintenance" and "Technical data" as well as on the identification plate.

Introduction

Your vehicle is a designed combination of advanced technology, safety, environmental friendliness and economy.

This Owner's Manual provides you with all the necessary information to enable you to drive your vehicle safely and efficiently.

Make sure your passengers are aware of the possible risk of accident and injury which may result from improper use of the vehicle.

You must always comply with the specific laws and regulations of the country that you are in. These laws may differ from the information in this Owner's Manual.

When this Owner's Manual refers to a workshop visit, we recommend your Opel Service Partner.

All Opel Service Partners provide first-class service at reasonable prices. Experienced mechanics trained by Opel work according to specific Opel instructions.

The customer literature pack should always be kept ready to hand in the vehicle.

Using this manual

- This manual describes all options and features available for this model. **Certain descriptions, including those for display and menu functions, may not apply to your vehicle due to model variant, country specifications, special equipment or accessories.**
- The "In brief" section will give you an initial overview.
- The table of contents at the beginning of this manual and within each section shows where the information is located.
- The index will enable you to search for specific information.
- This Owner's Manual depicts left-hand drive vehicles. Operation is similar for right-hand drive vehicles.
- The Owner's Manual uses the factory engine designations. The corresponding sales designations can be found in the section "Technical data".
- Directional data, e.g. left or right, or front or back, always relate to the direction of travel.
- The vehicle display screens may not support your specific language.
- Display messages and interior labelling are written in **bold** letters.

Danger, Warnings and Cautions

⚠ Danger
Text marked ⚠ **Danger** provides information on risk of fatal injury. Disregarding this information may endanger life.

⚠Warning
Text marked ⚠**Warning** provides information on risk of accident or injury. Disregarding this information may lead to injury.

Caution
Text marked **Caution** provides information on possible damage to the vehicle. Disregarding this information may lead to vehicle damage.

Symbols

Page references are indicated with ⇨.
⇨ means "see page".

We wish you many hours of pleasurable driving.

Adam Opel AG

In brief

Initial drive information

Vehicle unlocking

Unlocking with key

Turn the key in the driver's door lock towards the front of the vehicle.

Unlocking with radio remote control

Press button to unlock the vehicle.

Press button to unlock the load compartment only.

Open the doors by pulling the handles. To open the tailgate, press the button under the tailgate handle.

Radio remote control ⇨ 20, Central locking system ⇨ 21, Load compartment ⇨ 25, Power windows ⇨ 29.

Seat adjustment

Seat positioning

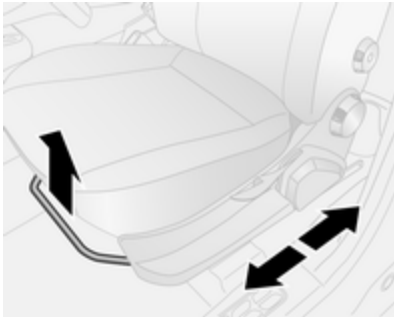

Pull handle, slide seat, release handle.

Seat position ⇨ 34, Seat adjustment ⇨ 34.

⚠ Danger

Do not sit nearer than 25 cm from the steering wheel, to permit safe airbag deployment.

Seat backrests

Turn handwheel. Do not lean on backrest when adjusting.

Seat position ⇨ 34, Seat adjustment ⇨ 34.

Seat height

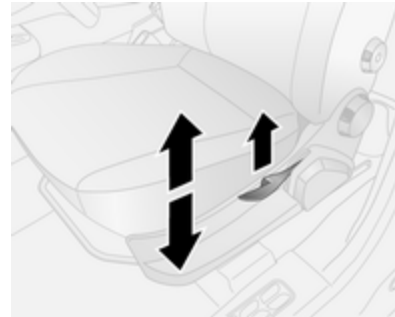

Lever pumping motion

up = higher
down = lower

Operate lever and adjust body weight on seat to raise or lower it.

Seat position ⇨ 34, Seat adjustment ⇨ 34.

Head restraint adjustment

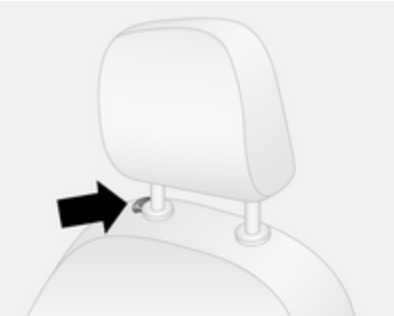

Press release catch, adjust height, engage.

Head restraints ⇨ 33.

Seat belt

Pull out the seat belt and engage in belt buckle. The seat belt must not be twisted and must fit close against the body. The backrest must not be tilted back too far (maximum approx. 25 °).

To release belt, press red button on belt buckle.

Seat position ⇨ 34, Seat belts ⇨ 39, Airbag system ⇨ 42.

Mirror adjustment

Interior mirror

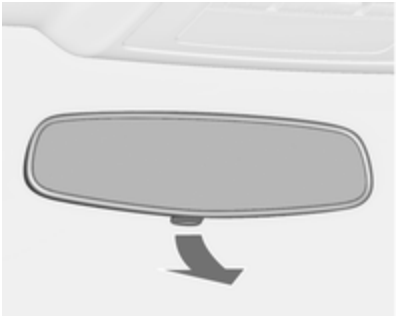

Adjust the lever on the underside to reduce dazzle.

Interior mirror ⇨ 29.

Exterior mirrors

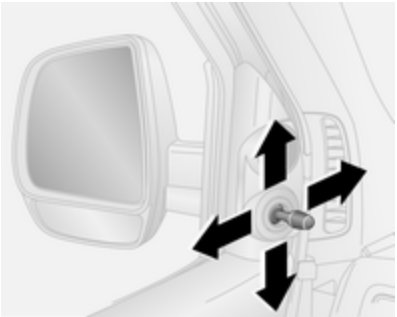

Swivel lever in required direction.

Select the relevant exterior mirror by turning the control to left ◄ or right ►. Then swivel the control to adjust the mirror.

In position ● no mirror is selected.

Convex exterior mirrors ⇨ 28, Electric adjustment ⇨ 28, Folding exterior mirrors ⇨ 28, Heated exterior mirrors ⇨ 29.

Steering wheel adjustment

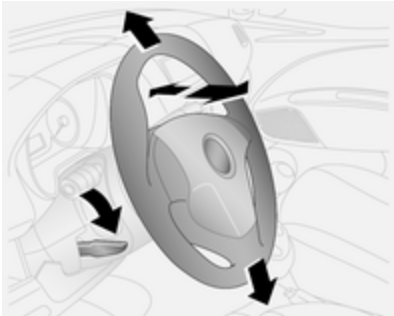

Unlock the lever, adjust the steering wheel, then engage lever and ensure it is fully locked.

Do not adjust steering wheel unless vehicle is stationary and the steering wheel lock has been released.

Airbag system ⇨ 42, Ignition positions ⇨ 102.

Instrument panel overview

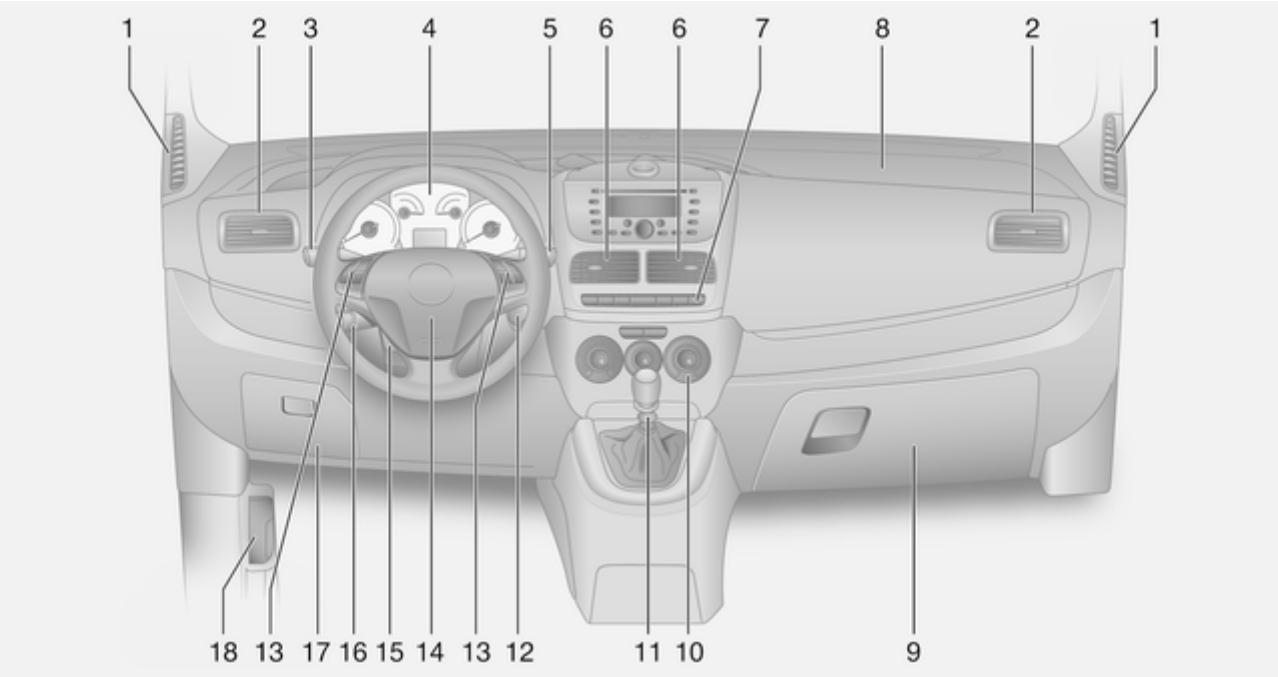

1 Fixed air vents 100
2 Side air vents 99
3 Light switch 88
Turn and lane-change signals, headlight flash, low beam and high beam 90
4 Instruments 68
Driver Information Centre 79
5 Windscreen wiper, windscreen washer system, rear window wiper/washer 63
Trip odometer reset 68
6 Centre air vents 99
7 Headlight range adjustment 89
Driver Information Centre controls 79
Trip computer 86
Instrument illumination 91
Hazard warning flashers 90
Front fog lights 90
Rear fog light 91
Heated rear window 32
Heated exterior mirrors 29
8 Front passenger airbag 45
9 Glovebox 55
10 Climate control system 95
Electronic climate control system 97
11 Selector lever, manual transmission 107
Manual transmission automated 108
12 Ignition switch with steering wheel lock 102
13 Steering wheel controls 62
14 Horn 63
Driver airbag 45
15 Steering wheel adjustment . . 62
16 Cruise control 115
17 Fuse box 140
18 Bonnet release lever 127

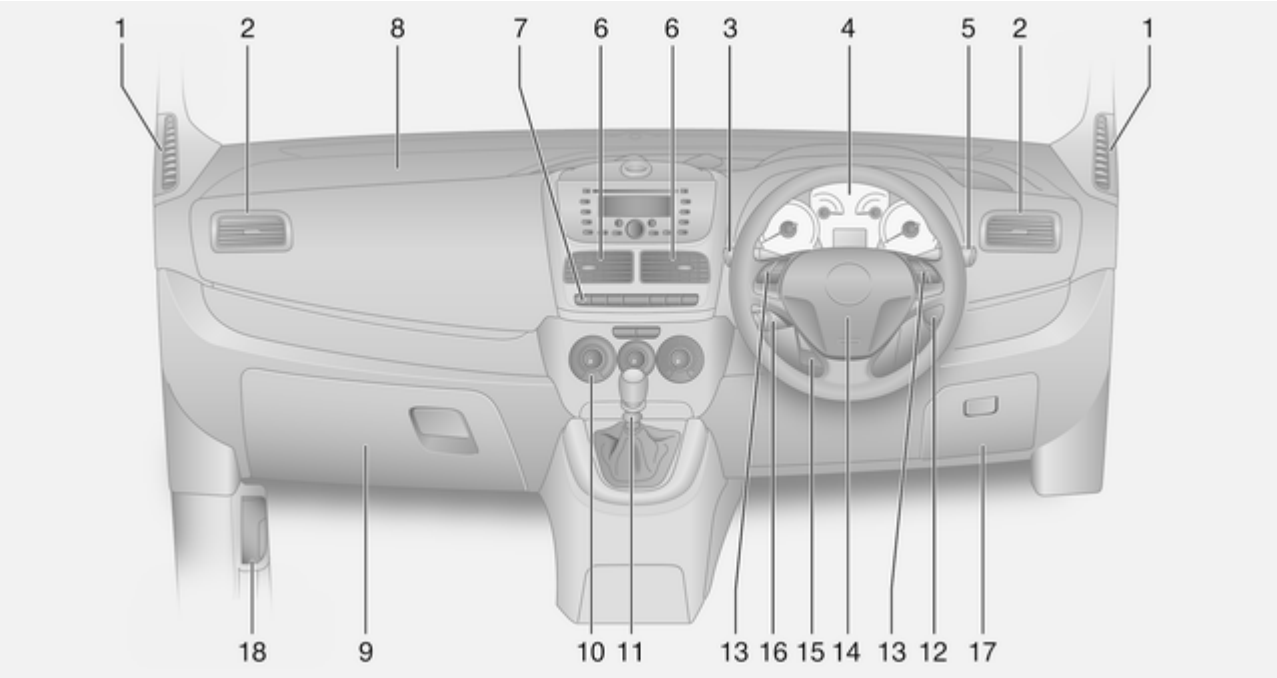
1
2
8
7
6
6
3
4
5
2
1
18
9
10
11
13
16
15
14
13
12
17

Exterior lighting

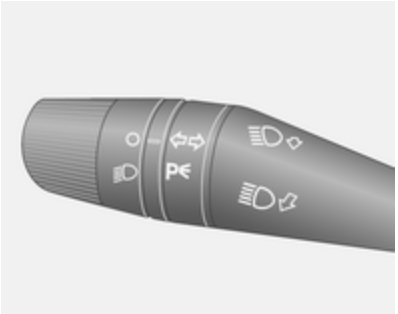

Turn light switch:

O = off / daytime running lights
≡D = sidelights / headlights

Lighting ⇨ 88, Daytime running lights ⇨ 89.

Fog lights

Press light switch:

≠D = front fog lights
D≠ = rear fog light

Headlight flash, high beam and low beam

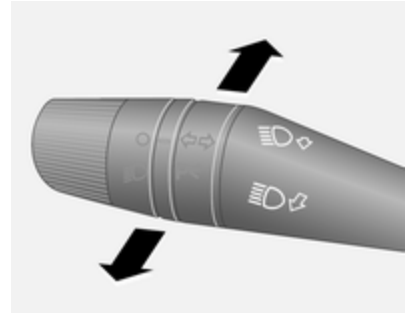

headlight flash	=	pull lever
high beam	=	push lever
low beam	=	pull lever

High beam ⇨ 88, Headlight flash ⇨ 88.

Turn and lane-change signals

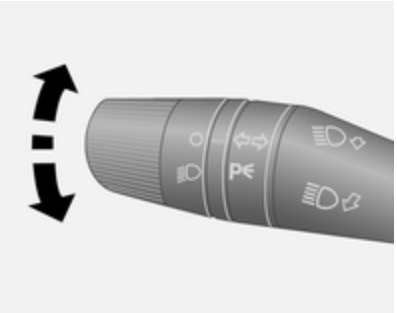

lever up = right turn signal
lever down = left turn signal

Turn and lane-change signals
⇨ 90.

Hazard warning flashers

Operated with the button.

Hazard warning flashers ⇨ 90.

Horn

Press .

Washer and wiper systems

Windscreen wiper

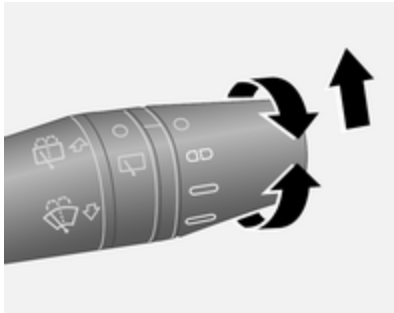

Twist lever:

- = off
- = intermittent wiping
- = slow
- = fast

For a single wipe when the windscreen wiper is off, move the lever up.

Windscreen wiper ⇨ 63, Wiper blade replacement ⇨ 131.

Windscreen and headlight washer systems

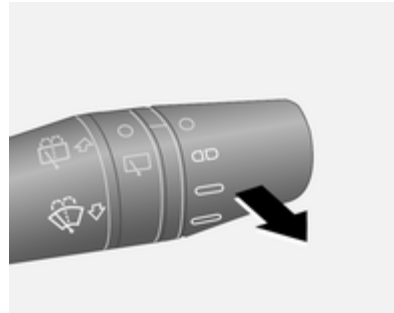

Pull lever.

Windscreen and headlight washer system ⇨ 63, Washer fluid ⇨ 129.

Rear window wiper and washer systems

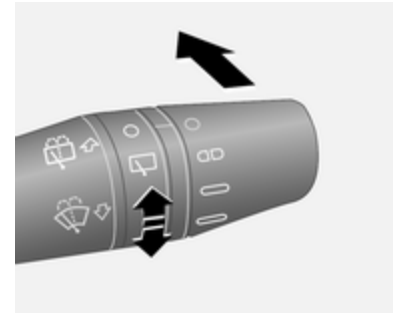

Twist band to activate the rear window wiper.

The rear window wiper comes on automatically when the windscreen wiper is switched on and reverse gear is engaged.

Push lever: Washer fluid is sprayed on the rear window and the wiper wipes a few times.

Rear window wiper/washer ⇨ 64.

Climate control

Heated rear window, heated exterior mirrors

The heating is operated by pressing the button.

Heated rear window ⇨ 32.

Demisting and defrosting the windows

Air conditioning system

Set the temperature control to warmest level.

Set fan speed to highest level.

Set air distribution control to .

Cooling on.

Heated rear window on.

Electronic climate control system

Press button .

Temperature and air distribution are set automatically and the fan runs at a high speed.

To return to automatic mode: press button or **AUTO**.

Climate control system ⇨ 95, Electronic climate control system ⇨ 97.

Transmission

Manual transmission

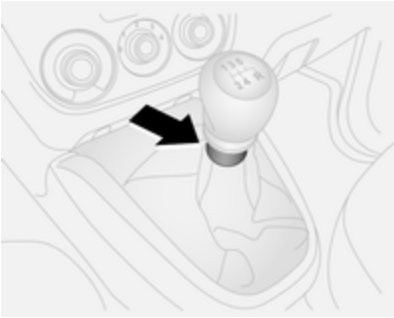

Reverse: with the vehicle stationary, wait 3 seconds after depressing the clutch pedal, pull up the collar on the selector lever and engage the gear.

If the gear does not engage, set the lever to neutral, release the clutch pedal and depress again; then repeat gear selection.

Manual transmission ⇨ 107.

Manual transmission automated

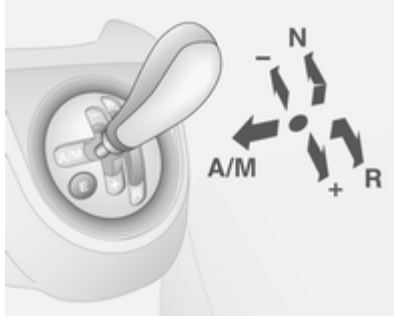

N	=	neutral position
●	=	drive position
+	=	higher gear
-	=	lower gear
A/M	=	switch between automatic and manual mode
R	=	reverse gear (with selector lever lock)

Manual transmission automated ⇨ 108.

Starting off

Check before starting-off

- Tyre pressure and condition ⇨ 143, ⇨ 174.
- Engine oil level and fluid levels ⇨ 127.
- All windows, mirrors, exterior lighting and number plates are free from dirt, snow and ice and are operational.
- Proper position of mirrors, seats, and seat belts ⇨ 28, ⇨ 34, ⇨ 40.
- Brake function at low speed, particularly if the brakes are wet.

Starting the engine

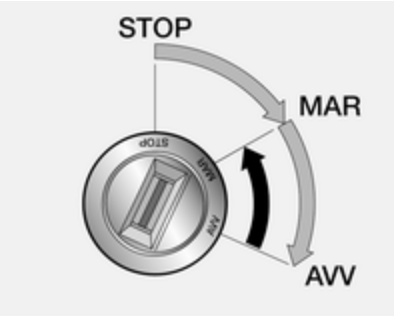

- Turn key to position **MAR**
- move the steering wheel slightly to release the steering wheel lock
- operate clutch and brake
- manual transmission automated: operate brake, the transmission automatically shifts to **N** (neutral)
- do not operate accelerator pedal
- diesel engines: turn the key to position **MAR** for preheating and wait until control indicator goes out
- turn key to position **AVV** and release

Starting the engine ⇨ 102.

Stop-start system

If the vehicle is at a low speed or at a standstill and certain conditions are fulfilled, activate an Autostop as follows:

- Depress the clutch pedal
- set the lever in neutral
- release the clutch pedal

An Autostop is indicated when is displayed in the Driver Information Centre ⇨ 79.

To restart the engine, depress the clutch pedal again.

Stop-start system ⇨ 103.

Parking

- Always apply the parking brake. Activate the manual parking brake without pressing the release button. Apply as firmly as possible on a downhill slope or uphill slope. Depress foot brake at the same time to reduce operating force.
- Switch off the engine. Turn the ignition key to position **STOP** and remove it. Turn the steering wheel until the steering wheel lock is felt to engage.
- If the vehicle is on a level surface or uphill slope, engage first gear before switching off the ignition. On an uphill slope, turn the front wheels away from the kerb.

  If the vehicle is on a downhill slope, engage reverse gear before switching off the ignition. Turn the front wheels towards the kerb.
- Lock the vehicle with button on the radio remote control.
- Do not park the vehicle on an easily ignitable surface. The high temperature of the exhaust system could ignite the surface.
- Close the windows.
- The engine cooling fans may run after the engine has been switched off ⇨ 126.
- After running at high engine speeds or with high engine loads, operate the engine briefly at a low load or run in neutral for approx. 30 seconds before switching off, in order to protect the turbocharger.

Keys, locks ⇨ 20, Laying the vehicle up for a long period of time ⇨ 125.

Keys, doors and windows

Keys, locks 20
Doors 23
Vehicle security 27
Exterior mirrors 28
Interior mirrors 29
Windows 29

Keys, locks

Keys

Replacement keys

The key number is specified in the Car Pass or on a detachable tag.

The key number must be quoted when ordering replacement keys as it is a component of the immobiliser system.

Locks ⇨ 155.

Key with foldaway key section

Press button to extend. To fold the key, first press the button.

Car Pass

The Car Pass contains security related vehicle data and should therefore be kept in a safe place.

When the vehicle is taken to a workshop, this vehicle data is needed in order to perform certain operations.

Radio remote control

Used to operate:

- Central locking system ⇨ 21
- Anti-theft locking system ⇨ 27
- Power windows ⇨ 29

The radio remote control has a range of up to 5 metres. It can be restricted by external influences. The hazard warning flashers confirm operation.

Handle with care, protect from moisture and high temperatures and avoid unnecessary operation.

Fault

If the central locking system cannot be operated with the radio remote control, it may be due to the following:

- Range exceeded
- Battery voltage too low
- Frequent, repeated operation of the radio remote control while not in range
- Overload of the central locking system by operating at frequent intervals, the power supply is interrupted for a short time
- Interference from higher-power radio waves from other sources

Unlocking ⇨ 21.

Radio remote control battery replacement

Replace the battery as soon as the range reduces.

Batteries do not belong in household waste. They must be disposed of at an appropriate recycling collection point.

Key with foldaway key section

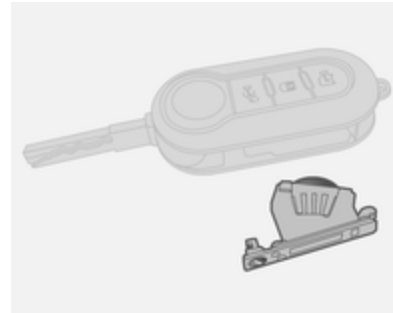

Extend the key and remove the battery holder by undoing the screw with a suitable screwdriver. Remove the battery holder from the key and replace the battery (type CR 2032), paying attention to the installation position.

Refit the battery holder in the key and secure the screw.

Central locking system

Unlocks and locks the front doors, sliding side doors and load compartment.

A pull on an interior door handle unlocks and opens the respective door.

For safety reasons, the vehicle cannot be locked if the key is in the ignition switch.

Unlocking

Note
In the event of an accident of a certain severity, the vehicle unlocks automatically.

Fuel cut-off system ⇨ 85.

Van

Press button : Front doors are unlocked.

Press button : Rear doors / tailgate and sliding side doors are unlocked.

Combi, Combo Tour

Press button : All doors, including rear doors / tailgate and sliding side doors are unlocked.

Press button : Rear doors / tailgate only are unlocked.

Note
If engaged, the anti-theft security lock on the sliding side door remains engaged even after unlocking the vehicle with the remote control.

Anti-theft security lock ⇨ 23.

Locking

Close all doors. If the doors are not closed properly, the central locking system will not work.

Press button . All doors, including rear doors / tailgate and sliding side doors are locked.

Automatic locking
The vehicle can be configured to automatically lock the doors when vehicle speed exceeds 20 km/h.

Driver Information Centre ⇨ 79.

Unlocking the load compartment from inside the vehicle

Press button : The load compartment (rear doors / tailgate and sliding side doors) are unlocked.

When the load compartment is locked, the LED in the button is illuminated.

Child locks

⚠Warning

Use the child locks whenever children are occupying the rear seats.

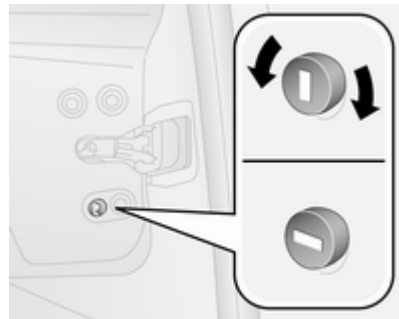

Using a suitable tool, turn child lock switch on sliding side door towards the horizontal position. The door cannot be opened from inside.

To deactivate, turn the child lock switch to the vertical position.

Doors

Sliding door

Pull lever on interior handle and slide door.

Caution

Ensure the side door is fully closed and secure before driving the vehicle.

Central locking system ⇨ 21.

Caution
To avoid damage, do not attempt to operate the sliding side door when the fuel filler flap is open.

Refuelling ⇨ 120.

Anti-theft security lock

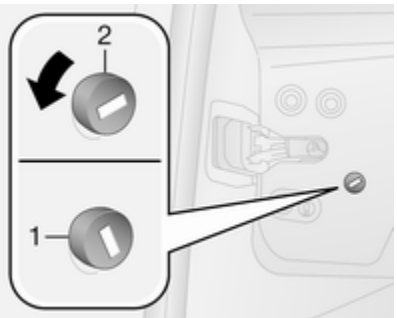

To prevent the sliding side door from being opened from the outside, open the door and engage the anti-theft security lock.

Using a suitable tool, turn the lock switch on the sliding side door to locked position **1**. The door cannot be opened from outside.

The anti-theft security lock remains engaged even after unlocking the vehicle with the remote control.

To disengage, turn the switch to unlocked position **2**.

Rear doors

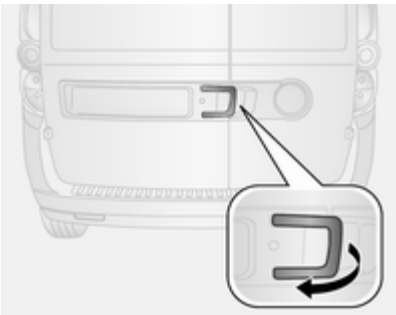

To open the left hand rear door pull the outside handle.

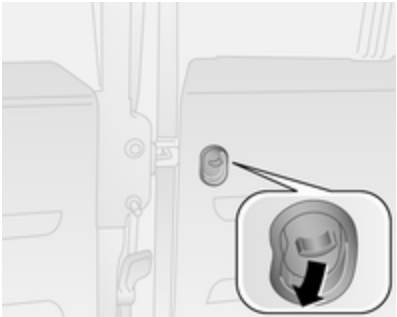

The door is opened from inside the vehicle by pressing down the interior handle.

The right hand rear door is released using the lever.

⚠ Warning

The rear lights may be obscured if the rear doors are open and the vehicle is parked on the roadside.

Make other road users aware of the vehicle, by using a warning triangle or other equipment specified in the road traffic regulations.

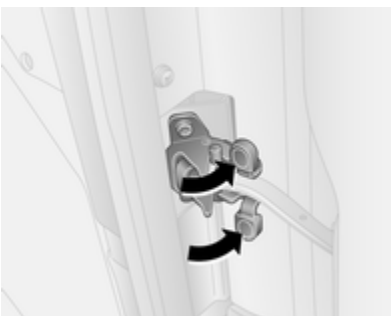

The doors are retained in the 90º position by locking stays. To open the doors to 180º, push the latch and swing open to the desired position.

⚠ Warning

Ensure extended opening doors are secured when fully opened.

Opened doors may slam closed due to the force of the wind!

Always close the right hand door before the left hand door.

Central locking system ⇨ 21.

Load compartment

Tailgate

Opening

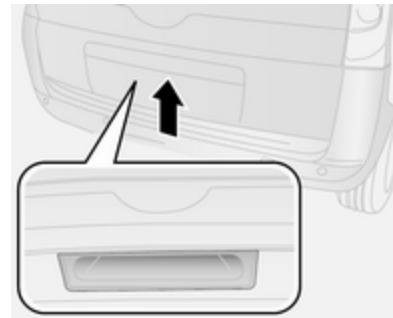

Press the button underneath the moulding.

⚠ Danger

Do not drive with the tailgate open or ajar, e.g. when transporting bulky objects, since toxic exhaust gases, which can not be seen or

smelled, could enter the vehicle. This can cause unconsciousness and even death.

Caution

Before opening the tailgate check overhead obstructions, such as a garage door, to avoid damage to the tailgate. Always check the moving area above and behind the tailgate.

Note
The installation of certain heavy accessories onto the tailgate may affect its ability to remain open.

Closing

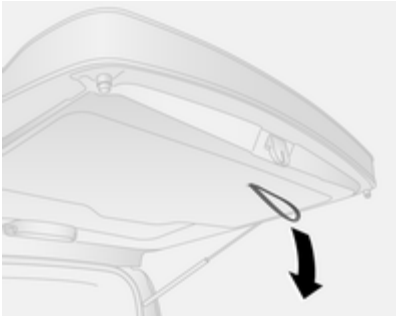

Use the interior handle.

Ensure tailgate is fully closed before driving.

Central locking system ⇨ 21.

Emergency tailgate opening from inside the vehicle

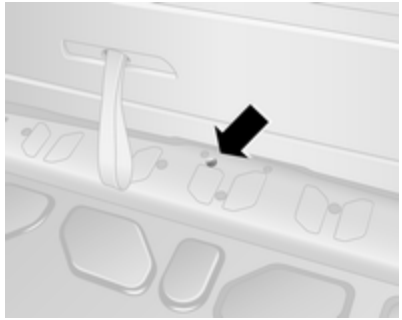

An access hole (arrowed) enables the tailgate latch to be released using a suitable tool. Push lever to the right to unlock and open the tailgate.

Vehicle security

Anti-theft locking system

⚠ Warning

Do not use the system if there are people in the vehicle! The doors cannot be unlocked from the inside.

The system deadlocks all the doors. All doors must be closed otherwise the system cannot be activated.

The system is disabled automatically on every door when:

- unlocking the doors
- turning the ignition switch to **MAR**

Activating

Press 🔒 on the radio remote control twice.

Immobiliser

The system is part of the ignition switch and checks whether the vehicle is allowed to be started with the key being used.

The immobiliser is activated automatically after the key has been removed from the ignition switch.

If the control indicator illuminates when starting, there is a fault in the system; the engine cannot be started. Switch off the ignition and repeat the start attempt.

If remains illuminated, attempt to start the engine using the spare key and seek the assistance of a workshop.

Note
The immobiliser does not lock the doors. Always lock the vehicle after leaving it ⇨ 21.

Control indicator ⇨ 78.

Exterior mirrors

Convex shape

The convex exterior mirror contains an aspherical area and reduces blind spots. The shape of the mirror makes objects appear smaller, which will affect the ability to estimate distances.

Manual adjustment

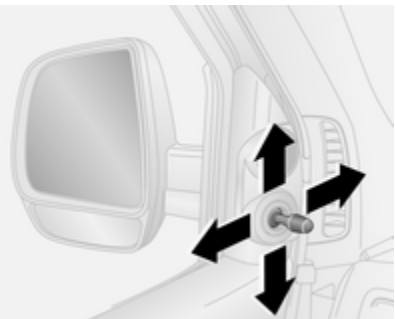

Adjust mirrors by swivelling lever in required direction.

The lower mirrors are not adjustable.

Electric adjustment

Select the relevant exterior mirror by turning the control to left ◄ or right ►. Then swivel the control to adjust the mirror.

In position ● no mirror is selected.

Folding

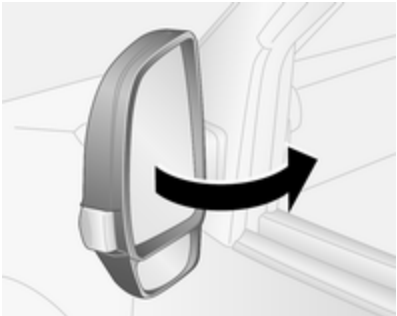

For pedestrian safety, the exterior mirrors will swing out of their normal mounting position if they are struck with sufficient force. Reposition the mirror by applying slight pressure to the mirror housing.

Parking position

The exterior mirrors can be folded in by pressing gently on the outer edge of the housing, e.g. when in a confined parking situation.

Heated mirrors

Operated by pressing the button.

Heating works with the engine running and is switched off automatically after a short time.

Interior mirrors

Manual anti-dazzle

To reduce dazzle, adjust the lever on the underside of the mirror housing.

Windows

Windscreen

Windscreen stickers

Do not attach stickers such as toll road stickers or similar on the windscreen in the area of the interior mirror.

Manual windows

The door windows can be opened or closed with the window winders.

Power windows

⚠ Warning

Take care when operating the power windows. Risk of injury, particularly to children.

If there are children on the rear seats, switch on the child safety system for the power windows.

Keep a close watch on the windows when closing them. Ensure that nothing becomes trapped in them as they move.

Switch on ignition to operate power windows.

Operate the switch for the respective window by pushing to open or pulling to close.

Pushing or pulling briefly: window moves up or down in stages if the switch is held.

Pushing or pulling firmly and then releasing: window moves up or down fully with safety function enabled. To stop movement, operate the switch once more in the same direction.

With the ignition key removed or in the **STOP** position, the windows can be operated for approx. 2 minutes and are deactivated as soon as a door is opened.

Safety function

If the window glass encounters resistance during automatic closing, it is immediately stopped and opened again.

If the safety function is activated five times in less than a minute, the safety function is deactivated. The windows will only close in stages and not automatically.

Activate the window electronics by opening the windows. The safety function is restored and the windows will operate normally.

Overload

If the windows are repeatedly operated within short intervals, the window operation is disabled for some time.

Initialising the power windows

If the windows cannot be closed automatically (e.g. after disconnecting the vehicle battery), activate the window electronics as follows:

1. Close doors.
2. Switch on ignition.
3. Pull switch until the window is closed and keep pulling for an additional 5 seconds.
4. Repeat for each window.

Child safety system for rear windows

Press switch to deactivate rear door power windows.

To activate, press again.

Operating windows from outside

The windows can be operated remotely from outside the vehicle when locking or unlocking the vehicle.

Central locking system ⇨ 21.

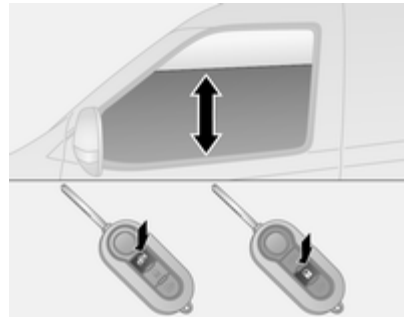

Press and hold the button to open windows.

Press and hold the button to close windows.

Release button to stop window movement.

Rear windows

Opening rear windows

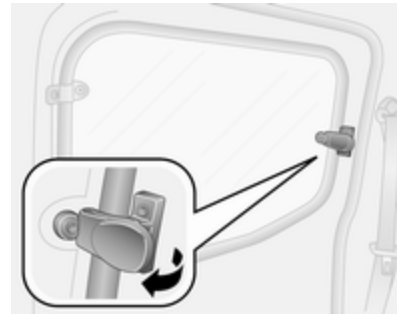

To open, move lever outwards until the window is fully open.

To close, pull lever then push until window is fully closed.

Heated rear window

Operated by pressing the button.

Heating works with the engine running and is switched off automatically after a short time.

Sun visors

The sun visors can be folded down or swivelled to the side to prevent dazzling.

If the sun visors have integral mirrors, the mirror covers should be closed when driving.

A ticket holder is located on the backside of the sun visor.

Seats, restraints

Head restraints 33
Front seats 34
Rear seats 37
Seat belts 39
Airbag system 42
Child restraints 48

Head restraints

Position

⚠Warning

Only drive with the head restraint set to the proper position.

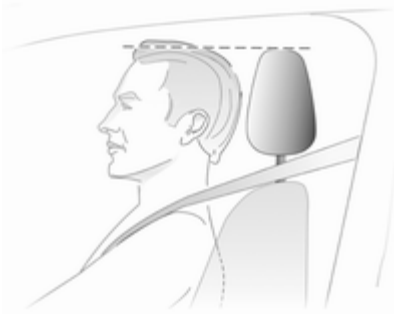

The upper edge of the head restraint should be at upper head level. If this is not possible for extremely tall people, set to highest position, and set to lowest position for small people.

Adjustment

Front head restraints, height adjustment

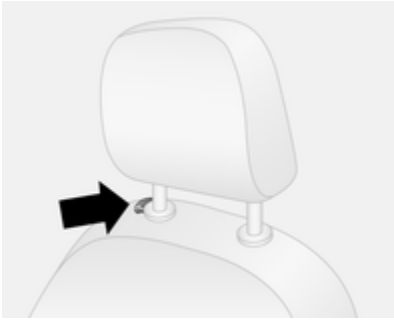

Press the button, adjust height and engage.

Rear head restraints, height adjustment

Pull the head restraint upwards or press the catch to release and push the head restraint downwards.

Removal

Rear head restraints, removal

Press both catches, pull the head restraint upwards and remove.

Secure the removed head restraint in the load compartment.

Note

Approved accessories may only be attached if the seat is not in use.

Front seats

Seat position

⚠ Warning

Only drive with the seat correctly adjusted.

- Sit with buttocks as far back against the backrest as possible. Adjust the distance between the seat and the pedals so that legs are slightly angled when pressing the pedals. Slide the front passenger seat as far back as possible.
- Sit with shoulders as far back against the backrest as possible. Set the backrest to an angle so that it is possible to reach the steering wheel with arms slightly bent. Maintain contact between shoulders and the backrest when turning the steering wheel. Do not tilt the backrest too far back. We recommend a maximum angle of approx. 25°.
- Adjust the steering wheel ⇨ 62.
- Set the seat high enough to have a clear field of vision on all sides and on all display instruments. There should be at least one hand of clearance between head and the roof frame. Thighs should rest lightly on the seat without pressing into it.
- Adjust the head restraint ⇨ 33.
- Adjust the height of the seat belt ⇨ 40.

Seat adjustment

Drive only with seats and backrests properly engaged.

⚠ Danger

Do not sit nearer than 25 cm from the steering wheel, to permit safe airbag deployment.

⚠ Warning

Never adjust seats while driving as they could move uncontrollably.

⚠ Warning

Never store any objects under the seats except in the underseat storage compartment ⇨ 55.

Seat positioning

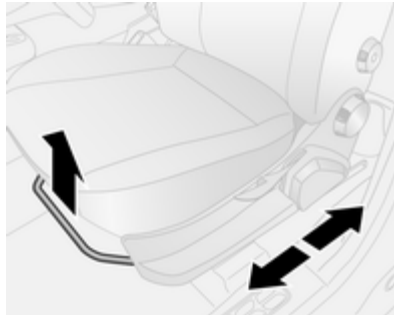

Pull handle, slide seat, release handle.

Seat backrests

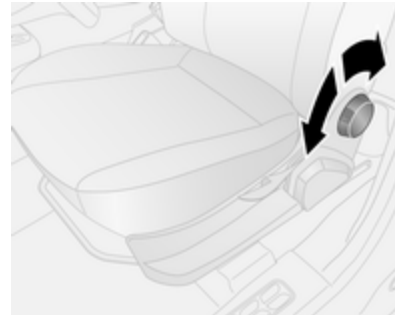

Turn handwheel. Do not lean on backrest when adjusting.

Seat height

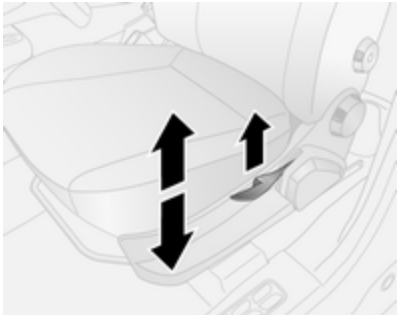

Lever pumping motion

up = higher
down = lower

Operate lever and adjust body weight on seat to raise or lower it.

Armrest

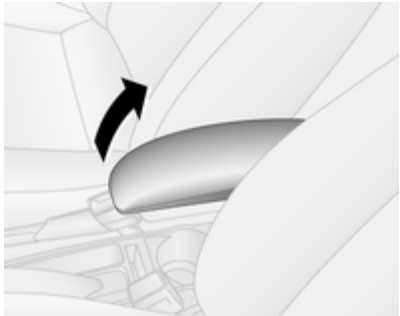

Raise or lower the armrest as required.

Heating

Activate seat heating by pressing button for the respective front seat with the ignition on.

Activation is indicated by the LED in the button.

Pressing button once more deactivates seat heating.

Prolonged use for people with sensitive skin is not recommended.

Rear seats

⚠Warning

Never adjust seats while driving as they could move uncontrollably.

Folding the seats

The load compartment area can be increased by folding up the rear seats.

⚠Warning

When folding the seat use caution - beware of moving parts. Ensure the seat is secure when completely folded.

- Lower the head restraint and move the seat belt to one side.
- Remove the load compartment cover if necessary ⇨ 56.

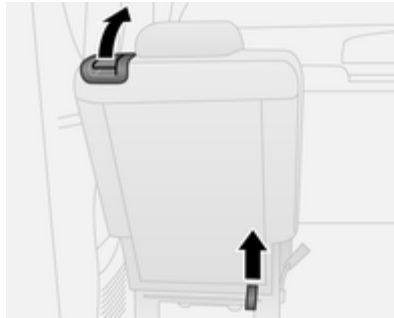

- Pull the release lever and fold down the backrest onto the seat cushion.
- Pull the lower strap and fold the seat assembly forwards.

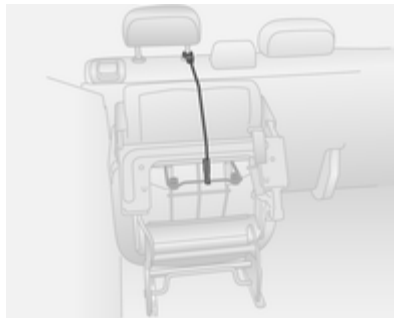

- Secure the folded seat in the upright position by attaching the flexible cord located on the seat frame, to the rear seat head restraint.

Unfolding the seats

- To lower the rear seat, remove the flexible cord and lower the seat assembly to the floor, ensuring the rear support is located on the anchor point and securely latched.
- Raise the backrest and adjust the head restraint.
- The backrest is properly engaged when the red mark on the release lever is no longer visible.

Removing the seats

- Remove the seat head restraint ⇨ 33 and remove load compartment cover if necessary ⇨ 56.

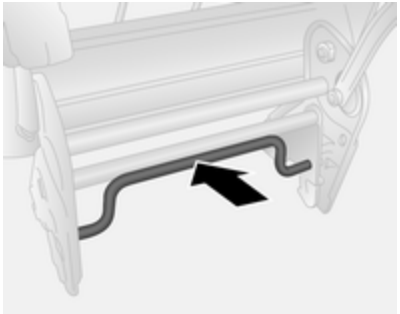

- With the seat folded in the upright position, push the release lever and remove the seat assembly.
- Store the head restraint on the rear of the seat frame.

Installing the seats

- Attach the seat assembly front supports on the anchor points.
- Push the release lever to ensure the seat is securely latched.
- Remove the head restraint from the rear of the seat frame.
- Lower the seat assembly to the floor, ensuring the rear support is located on the anchor point and securely latched.
- Raise the backrest and replace the head restraint.
- The backrest is properly engaged when the red mark on the release lever is no longer visible.

⚠ Warning

When installing the seat, ensure that the seat is properly located on the anchor points, the locking catches are fully engaged, and the backrest is returned to the correct position.

Seat belts

The seat belts are locked during heavy acceleration or deceleration of the vehicle holding the occupants in the sitting position. Therefore the risk of injury is considerably reduced.

⚠Warning

Fasten seat belt before each trip.

In the event of an accident, people not wearing seat belts endanger their fellow occupants and themselves.

Seat belts are designed to be used by only one person at a time. Child restraint system ⇨ 48.

Periodically check all parts of the belt system for damage, pollution and proper functionality.

Have damaged components replaced. After an accident, have the belts and triggered belt pretensioners replaced by a workshop.

Note
Make sure that the belts are not damaged by shoes or sharp-edged objects or trapped. Prevent dirt from getting into the belt retractors.

Seat belt reminder ⇨ 73.

Belt force limiters

On the front seats, stress on the body is reduced by the gradual release of the belt during a collision.

Belt pretensioners

In the event of a head-on or rear-end collision of a certain severity, the front seat belts are tightened.

⚠Warning

Incorrect handling (e.g. removal or fitting of belts) can trigger the belt pretensioners.

Deployment of the belt pretensioners is indicated by continuous illumination of control indicator ⇨ 73.

Triggered belt pretensioners must be replaced by a workshop. Belt pretensioners can only be triggered once.

Note
Do not affix or install accessories or other objects that may interfere with the operation of the belt pretensioners. Do not make any modifications to belt pretensioner components as this will invalidate the approval of your vehicle.

Three-point seat belt

Fastening

Withdraw the belt from the retractor, guide it untwisted across the body and insert the latch plate into the buckle. Tighten the lap belt regularly whilst driving by pulling the shoulder belt.

Seat belt reminder ⇨ 73.

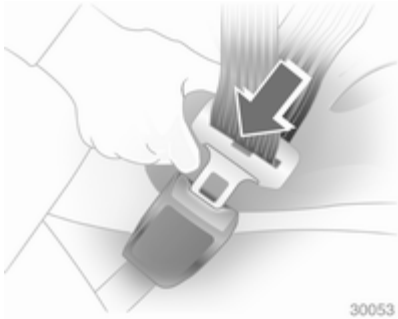

Loose or bulky clothing prevents the belt from fitting snugly. Do not place objects such as handbags or mobile phones between the belt and your body.

⚠ Warning

The belt must not rest against hard or fragile objects in the pockets of your clothing.

Height adjustment

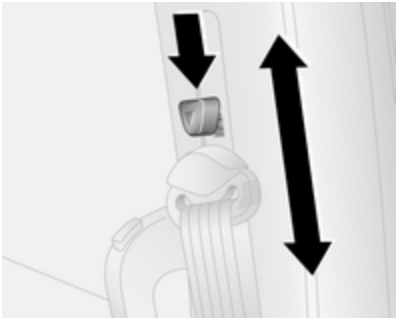

1. Pull belt out slightly.
2. Press button down.
3. Adjust height and engage.

Adjust the height so that the belt lies across the shoulder. It must not lie across the throat or upper arm.

Do not adjust while driving.

Removing

To release belt, press red button on belt buckle.

Seat belts on the rear seats

The seat belt for the rear centre seat can only be withdrawn from the retractor if the backrest is in the rear position.

Using the seat belt while pregnant

⚠ Warning

The lap belt must be positioned as low as possible across the pelvis to prevent pressure on the abdomen.

Airbag system

The airbag system consists of a number of individual systems depending on the scope of equipment.

When triggered, the airbags inflate within milliseconds. They also deflate so quickly that it is often unnoticeable during the collision.

Note
Depending on the severity of a collision, the fuel system may also be cut-off and the engine switched off automatically, for safety reasons. Resetting the fuel cut-off system; refer to "Fuel system messages" ⇨ 85.

Note
Expiry dates for replacing the airbag system components may be found on the label inside the glovebox. Contact a workshop to have the airbag system components replaced.

⚠ Warning

If handled improperly the airbag systems can be triggered in an explosive manner.

Note
The airbag systems and belt pretensioner control electronics are located in the centre console area. Do not put any magnetic objects in this area.

Do not fix any objects onto the airbag covers and do not cover them with other materials.

Each airbag is triggered only once. Have deployed airbags replaced by a workshop. Furthermore, it might be necessary to have the steering wheel, the instrument panel, parts of the panelling, the door seals, handles and the seats replaced.

Do not make any modifications to the airbag system as this will invalidate the vehicle type approval.

⚠ Warning

When the airbags inflate, escaping hot gases may cause burns.

Control indicator for airbag systems ⇨ 73.

Fault

If there is a fault in the airbag and belt tensioner system, the control indicator illuminates in the instrument cluster. The system is not operational.

Have the cause of the fault remedied by a workshop.

Control indicator ⇨ 73.

Child restraint systems on front passenger seat with airbag systems

Warning according to ECE R94.02:

EN: NEVER use a rear-facing child restraint system on a seat protected by an ACTIVE AIRBAG in front of it, DEATH or SERIOUS INJURY to the CHILD can occur.

DE: Nach hinten gerichtete Kindersitze NIEMALS auf einem Sitz verwenden, der durch einen davor befindlichen AKTIVEN AIRBAG geschützt ist, da dies den TOD oder SCHWERE VERLETZUNGEN DES KINDES zur Folge haben kann.

FR: NE JAMAIS utiliser un siège d'enfant orienté vers l'arrière sur un siège protégé par un COUSSIN GONFLABLE ACTIF placé devant lui, sous peine d'infliger des BLESSURES GRAVES, voire MORTELLES à l'ENFANT.

ES: NUNCA utilice un sistema de retención infantil orientado hacia atrás en un asiento protegido por un AIRBAG FRONTAL ACTIVO. Peligro de MUERTE o LESIONES GRAVES para el NIÑO.

RU: ЗАПРЕЩАЕТСЯ устанавливать детское удерживающее устройство лицом назад на сиденье автомобиля, оборудованном фронтальной подушкой безопасности, если ПОДУШКА НЕ ОТКЛЮЧЕНА! Это может привести к СМЕРТИ или СЕРЬЕЗНЫМ ТРАВМАМ РЕБЕНКА.

NL: Gebruik NOOIT een achterwaarts gericht kinderzitje op een stoel met een ACTIEVE AIRBAG ervoor, om DODELIJK of ERNSTIG LETSEL van het KIND te voorkomen.

DA: Brug ALDRIG en bagudvendt autostol på et forsæde med AKTIV AIRBAG, BARNET kan komme i LIVSFARE eller komme ALVORLIGT TIL SKADE.

SV: Använd ALDRIG en bakåtvänd barnstol på ett säte som skyddas med en framförvarande AKTIV AIRBAG. DÖDSFALL eller ALLVARLIGA SKADOR kan drabba BARNET.

FI: ÄLÄ KOSKAAN sijoita taaksepäin suunnattua lasten turvaistuinta istuimelle, jonka edessä on AKTIIVINEN TURVATYYNY, LAPSI VOI KUOLLA tai VAMMAUTUA VAKAVASTI.

NO: Bakovervendt barnesikringsutstyr må ALDRI brukes på et sete med AKTIV KOLLISJONSPUTE foran, da det kan føre til at BARNET utsettes for LIVSFARE og fare for ALVORLIGE SKADER.

PT: NUNCA use um sistema de retenção para crianças voltado para trás num banco protegido com um AIRBAG ACTIVO na frente do

mesmo, poderá ocorrer a PERDA DE VIDA ou FERIMENTOS GRAVES na CRIANÇA.

IT: Non usare mai un sistema di sicurezza per bambini rivolto all'indietro su un sedile protetto da AIRBAG ATTIVO di fronte ad esso: pericolo di MORTE o LESIONI GRAVI per il BAMBINO!

EL: ΠΟΤΕ μη χρησιμοποιείτε παιδικό κάθισμα ασφαλείας με φορά προς τα πίσω σε κάθισμα που προστατεύεται από μετωπικό ΕΝΕΡΓΟ ΑΕΡΟΣΑΚΟ, διότι το παιδί μπορεί να υποστεί ΘΑΝΑΣΙΜΟ ή ΣΟΒΑΡΟ ΤΡΑΥΜΑΤΙΣΜΟ.

PL: NIE WOLNO montować fotelika dziecięcego zwróconego tyłem do kierunku jazdy na fotelu, przed którym znajduje się WŁĄCZONA PODUSZKA POWIETRZNA. Niezastosowanie się do tego zalecenia może być przyczyną ŚMIERCI lub POWAŻNYCH OBRAŻEŃ u DZIECKA.

TR: Arkaya bakan bir çocuk emniyet sistemini KESİNLİKLE önünde bir AKTİF HAVA YASTIĞI ile korunmakta olan bir koltukta kullanmayınız. ÇOCUK ÖLEBİLİR veya AĞIR ŞEKİLDE YARALANABİLİR.

UK: НІКОЛИ не використовуйте систему безпеки для дітей, що встановлюється обличчям назад, на сидінні з УВІМКНЕНОЮ ПОДУШКОЮ БЕЗПЕКИ, інакше це може призвести до СМЕРТІ чи СЕРЙОЗНОГО ТРАВМУВАННЯ ДИТИНИ.

HU: SOHA ne használjon hátrafelé néző biztonsági gyerekülést előlről AKTÍV LÉGZSÁKKAL védett ülésen, mert a GYERMEK HALÁLÁT vagy KOMOLY SÉRÜLÉSÉT okozhatja.

HR: NIKADA nemojte koristiti sustav zadržavanja za djecu okrenut prema natrag na sjedalu s AKTIVNIM ZRAČNIM JASTUKOM ispred njega, to bi moglo dovesti do SMRTI ili OZBILJNJIH OZLJEDA za DIJETE.

SL: NIKOLI ne nameščajte otroškega varnostnega sedeža, obrnjenega v nasprotni smeri vožnje, na sedež z AKTIVNO ČELNO ZRAČNO BLAZINO, saj pri tem obstaja nevarnost RESNIH ali SMRTNIH POŠKODB za OTROKA.

SR: NIKADA ne koristiti bezbednosni sistem za decu u kome su deca okrenuta unazad na sedištu sa AKTIVNIM VAZDUŠNIM JASTUKOM ispred sedišta zato što DETE može da NASTRADA ili da se TEŠKO POVREDI.

MK: НИКОГАШ не користете детско седиште свртено наназад на седиште заштитено со АКТИВНО ВОЗДУШНО ПЕРНИЧЕ пред него, затоа што детето може ДА ЗАГИНЕ или да биде ТЕШКО ПОВРЕДЕНО.

BG: НИКОГА не използвайте детска седалка, гледаща назад, върху седалка, която е защитена чрез АКТИВНА ВЪЗДУШНА ВЪЗГЛАВНИЦА пред нея - може да се стигне до СМЪРТ или СЕРИОЗНО НАРАНЯВАНЕ на ДЕТЕТО.

RO: Nu utilizați NICIODATĂ un scaun pentru copil îndreptat spre partea din spate a mașinii pe un scaun protejat de un AIRBAG ACTIV în fața sa;

acest lucru poate duce la DECESUL sau VĂTĂMAREA GRAVĂ a COPILULUI.

CS: NIKDY nepoužívejte dětský zádržný systém instalovaný proti směru jízdy na sedadle, které je chráněno před sedadlem AKTIVNÍM AIRBAGEM. Mohlo by dojít k VÁŽNÉMU PORANĚNÍ nebo ÚMRTÍ DÍTĚTE.

SK: NIKDY nepoužívajte detskú sedačku otočenú vzad na sedadle chránenom AKTÍVNYM AIRBAGOM, pretože môže dôjsť k SMRTI alebo VÁŽNYM ZRANENIAM DIEŤAŤA.

LT: JOKIU BŪDU nemontuokite atgal atgręžtos vaiko tvirtinimo sistemos sėdynėje, prieš kurią įrengta AKTYVI ORO PAGALVĖ, nes VAIKAS GALI ŽŪTI arba RIMTAI SUSIŽALOTI.

LV: NEKĀDĀ GADĪJUMĀ neizmantojiet uz aizmuguri vērstu bērnu sēdeklīti sēdvietā, kas tiek aizsargāta ar tās priekšā uzstādītu AKTĪVU DROŠĪBAS SPILVENU, jo pretējā gadījumā BĒRNS var gūt SMAGAS TRAUMAS vai IET BOJĀ.

ET: ÄRGE kasutage tahapoole suunatud lapseturvaistet istmel, mille ees on AKTIIVSE TURVAPADJAGA kaitstud iste, sest see võib põhjustada LAPSE SURMA või TÕSISE VIGASTUSE.

Beyond the warning required by ECE R94.02, for safety reasons never use a forward-facing child restraint system on the front passenger seat with active front airbag.

⚠ Danger

Do not use a child restraint system on the passenger seat with active front airbag.

Airbag deactivation ⇨ 46.

Front airbag system

The front airbag system consists of one airbag in the steering wheel and one in the instrument panel on the front passenger side. These can be identified by the word **AIRBAG**.

Additionally there is a warning label on the passenger's sun visor.

Child restraint systems ⇨ 48.

Airbag deactivation ⇨ 46.

The front airbag system is triggered in the event of a front-end impact of a certain severity. The ignition must be switched on.

The inflated airbags cushion the impact, thereby reducing the risk of injury to the upper body and head of the front seat occupants considerably.

⚠Warning

Optimum protection is only provided when the seat is in the proper position ⇨ 34.

Keep the area in which the airbag inflates clear of obstructions.

Fit the seat belt correctly and engage securely. Only then the airbag is able to protect.

Side airbag system

The side airbag system consists of an airbag in each front seat backrest. This can be identified by the word **AIRBAG**.

The side airbag system is triggered in the event of a side impact of a certain severity. The ignition must be switched on.

The inflated airbags cushion the impact, thereby reducing the risk of injury to the upper body and pelvis in the event of a side-on collision considerably.

⚠Warning

Keep the area in which the airbag inflates clear of obstructions.

Note
Only use protective seat covers that have been approved for the vehicle. Be careful not to cover the airbags.

Airbag deactivation

The front passenger airbag system must be deactivated if a child restraint system is to be fitted on this seat.

The side airbag systems, the belt pretensioners and all driver airbag systems will remain active.

The front passenger airbag system can be deactivated via the settings menu in the Driver Information Centre ⇨ 79.

Deactivate the front passenger airbag system as follows:

1. Press the **SET** button once to access the settings menu.
2. Press **SET** again (repeatedly) to cycle through the menu functions until menu option **Pass bag** (in Standard version)

   - or -

   Passenger bag (in Multifunction version)

   is displayed.
3. Press the ▲ or ▼ button to switch from **Pass bag On** to **Pass bag off** (Standard version)

   - or -

   from **Passenger bag On** to **Passenger bag Off** (Multifunction version)
4. Press **SET** to confirm selection; A confirmation message appears in the display.
5. Press the ▲ or ▼ button to select **Yes**.
6. Press **SET** briefly to confirm deactivation and automatically return to the previous display screen.

Front passenger seat airbags are deactivated and will not inflate in the event of a collision. Control indicator illuminates continuously in the instrument cluster. A child restraint system can be installed in accordance with the chart **Child restraint installation locations** ⇨ 50.

⚠ Danger

Risk of fatal injury for a child using a child restraint system on a seat with activated front passenger airbag.

Risk of fatal injury for an adult person on a seat with deactivated front passenger airbag.

As long as the control indicator is not illuminated, the front passenger airbag system will inflate in the event of a collision.

If control indicators and are illuminated at the same time, there is a system failure. The status of the system is not discernible, therefore no person is allowed to occupy the front passenger seat. Contact a workshop immediately.

Change status only when the vehicle is stationary with the ignition off. The status remains until the next change.

Control indicator for airbag deactivation ⇨ 74.

Reactivating front passenger airbag system - see Driver Information Centre ⇨ 79.

Child restraints

Child restraint systems

We recommend the Opel child restraint system which is tailored specifically to the vehicle.

When a child restraint system is being used, pay attention to the following usage and installation instructions and also those supplied with the child restraint system.

Always comply with local or national regulations. In some countries, the use of child restraint systems is forbidden on certain seats.

⚠ Warning

When using a child restraint system on the front passenger seat, the airbag systems for the front passenger seat must be deactivated; if not, the triggering of the airbags poses a risk of fatal injury to the child.

This is especially the case if rear-facing child restraint systems are used on the front passenger seat.

Selecting the right system

The rear seats are the most convenient location to fasten a child restraint system.

Children should travel facing rearwards in the vehicle as long as possible. This makes sure that the child's backbone, which is still very weak, is under less strain in the event of an accident.

Suitable restraint systems comply with ECE 44-03 or ECE 44-04. Check local laws and regulations for mandatory use of child restraint systems.

Ensure that the child restraint system to be installed is compatible with the vehicle type.

Ensure that the mounting location of the child restraint system within the vehicle is correct.

Allow children to enter and exit the vehicle only on the side facing away from the traffic.

When the child restraint system is not in use, secure the seat with a seat belt or remove it from the vehicle.

Note

Do not stick anything on the child restraint systems and do not cover them with any other materials.

A child restraint system which has been subjected to stress in an accident must be replaced.

Child restraint installation locations

Permissible options for fitting a child restraint system

Weight and age class	Front passenger seat activated airbag	Front passenger seat deactivated airbag	Second row outboard seat	Second row centre seat	Third row
Group 0: up to 10 kg or approx. 10 months	X	U[1]	U, +	U	X
Group 0+: up to 13 kg or approx. 2 years	X	U[1]	U, +	U	X
Group I: 9 to 18 kg or approx. 8 months to 4 years	X	U[1]	U, +	U	X
Group II: 15 to 25 kg or approx. 3 to 7 years	X	X	U	U	X
Group III: 22 to 36 kg or approx. 6 to 12 years	X	X	U	U	X

[1] = Only if front airbag system is deactivated. When securing with a three-point seat belt, move seat height adjustment to uppermost position and ensure that the seat belt runs forwards from the upper anchorage point. Adjust seat backrest inclination as far as necessary to a vertical position to ensure that the belt is tight on the buckle side.

+ = Vehicle seat available with ISOFIX attachments. When attaching using ISOFIX, only the ISOFIX child restraint systems permitted for the vehicle may be used.

U = Universal suitability in conjunction with three-point seat belt.

X = No child restraint system permitted in this weight class.

Permissible options for fitting an ISOFIX child restraint system

Weight class	Size class	Fixture	On front passenger seat	On outboard seats in the second row	On centre seat in the second row	On the seats in the third row
Group 0: up to 10 kg	E	ISO/R1	X	IL	X	X
Group 0+: up to 13 kg	E	ISO/R1	X	IL	X	X
	D	ISO/R2	X	IL	X	X
	C	ISO/R3	X	IL[1)]	X	X
Group I: 9 to 18 kg	D	ISO/R2	X	IL	X	X
	C	ISO/R3	X	IL[1)]	X	X
	B	ISO/F2	X	IUF	X	X
	B1	ISO/F2X	X	IUF	X	X
	A	ISO/F3	X	IUF	X	X

IL = Suitable for particular ISOFIX restraint systems of the 'specific-vehicle', 'restricted' or 'semi-universal' categories. The ISOFIX restraint system must be approved for the specific vehicle type.
IUF = Suitable for ISOFIX forward-facing child restraint systems of universal category approved for use in this weight class.
X = No ISOFIX child restraint system approved in this weight class.

[1)] The Isofix child seat can be installed by lifting the head restraint all the way up.

ISOFIX size class and seat device

A – ISO/F3	=	Forward-facing child restraint system for children of maximum size in the weight class 9 to 18 kg.
B – ISO/F2	=	Forward-facing child restraint system for smaller children in the weight class 9 to 18 kg.
B1 – ISO/F2X	=	Forward-facing child restraint system for smaller children in the weight class 9 to 18 kg.
C – ISO/R3	=	Rear-facing child restraint system for children of maximum size in the weight class up to 18 kg.
D – ISO/R2	=	Rear-facing child restraint system for smaller children in the weight class up to 18 kg.
E – ISO/R1	=	Rear-facing child restraint system for young children in the weight class up to 13 kg.

ISOFIX child restraint systems

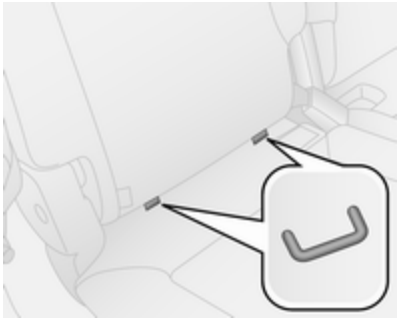

Fasten vehicle-approved ISOFIX child restraint systems to the ISOFIX mounting brackets. Specific vehicle ISOFIX child restraint system positions are marked in the table by IL.

ISOFIX mounting brackets are indicated by a label on the backrest.

Before fastening a child seat adjust the head restraint to use position ⇨ 33.

Top-tether fastening eyes

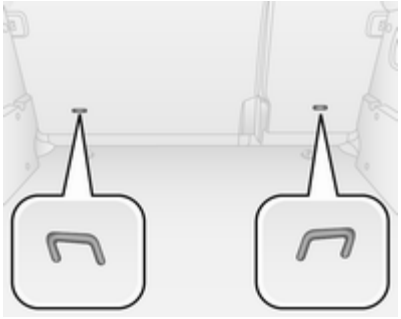

In addition to the ISOFIX mounting, fasten the Top-Tether strap to the Top-Tether fastening eyes. The strap must run between the two guide rods of the head restraint.

ISOFIX child restraint systems of universal category positions are marked in the table by IUF.

Storage

Storage compartments 54
Load compartment 56
Roof rack system 59
Loading information 60

Storage compartments

⚠ Warning

Do not store heavy or sharp objects in the storage compartments. Otherwise vehicle occupants could be injured by objects being thrown around in the event of hard braking, a sudden change in direction or an accident.

Instrument panel storage

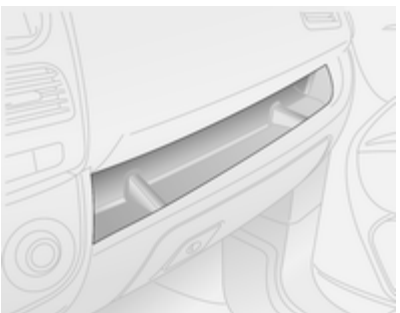

Storage compartments are located in the instrument panel.

Document holder

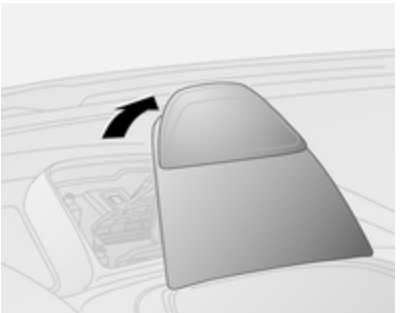

Pull the rear of the document holder upwards from the instrument panel and rest in tilted position.

To fold away, lower the document holder back into the instrument panel, pressing down until it engages audibly.

Glovebox

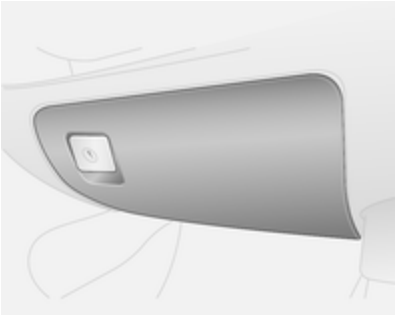

Pull lever to open the glovebox cover.

Depending on version, the glovebox may be lockable.

The glovebox should be closed whilst driving.

Cupholders

Cupholders are located in the console between the front seats.

The cupholders can also be used to hold the portable ashtray unit ⇨ 68.

Overhead console

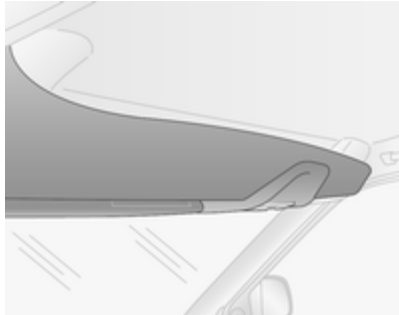

Store only lightweight items such as paperwork or maps in the overhead console.

Underseat storage

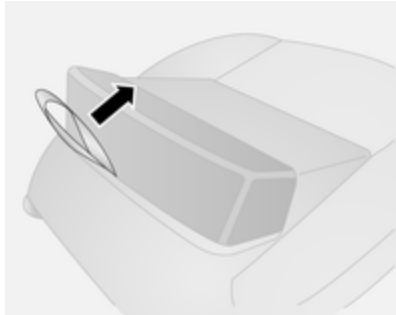

Pull the loop on the seat cushion to gain access to the storage area.

Load compartment

Folding down rear seat backrests

The rear seat backrest is divided into two parts. Both parts can be folded down.

Remove the load compartment cover if necessary.

Press and hold the catch, then push the head restraints down.

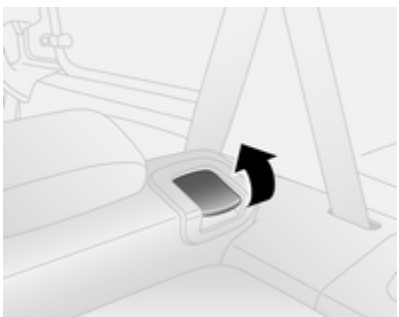

Pull the release lever on one or both sides and fold down the backrests onto the seat cushion.

Pull lever to release, the seat base is tensioned and will start to rise automatically.

Fold the seat forward completely.

To fold up, lower seats to the floor until they engage audibly. Raise backrests and guide them into an upright position until they engage audibly.

The backrests are properly engaged when both red marks on the release levers are no longer visible.

Ensure that the seat belts are positioned correctly before returning the seats to the upright position.

⚠ Warning

Only drive the vehicle if the backrests are securely locked into position. Otherwise there is a risk of personal injury or damage to the load or vehicle in the event of heavy braking or a collision.

Load compartment cover

Extendable load compartment cover

Do not place any heavy or sharp-edged objects on the extendable load compartment cover.

Closing

Pull the cover towards the rear using the handle and engage it in the retainers at the sides.

Opening

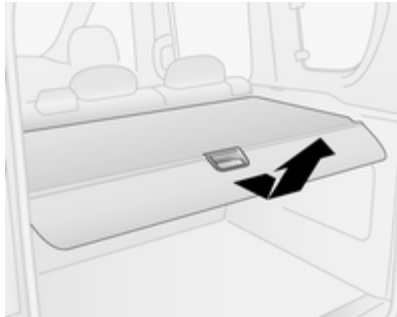

Remove load compartment cover from the retainers at the sides. Hold the cover and guide it until it is fully rolled up.

Removing

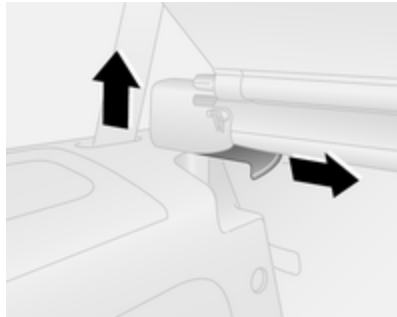

Open the load compartment cover.

Pull the release lever and lift cover from retainers.

Installing

Insert either side of the load compartment cover in the recess, pull the release lever. Insert the load compartment cover and engage.

Rear parcel shelf

The rear parcel shelf consists of two parts - a front part and rear part. The front part can be opened or closed, allowing for greater flexibility in the load compartment.

Do not place any excessively heavy or sharp-edged objects on the rear parcel shelf.

⚠Warning

Always make sure that the load in the vehicle is securely stowed. Otherwise objects can be thrown around inside the vehicle and cause personal injury or damage to the load or car.

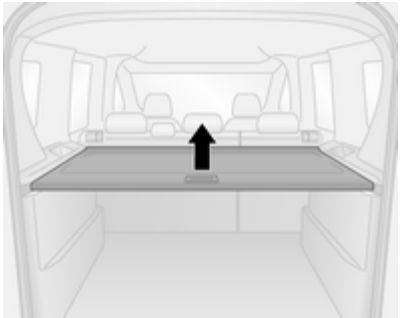

The rear parcel shelf can be installed in 2 positions, i.e. the upper position

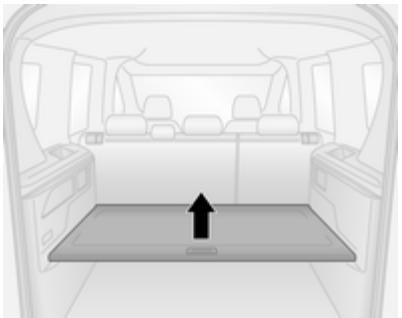

or the lower position. In the lower position, the maximum load permissible is 70 kg.

Removing

If the rear seats are in the folded position, remove the parcel shelf and store it horizontally between the back of the front seats and the folded rear seats.

Caution

For safety reasons, do not place loads on the folded rear seats.

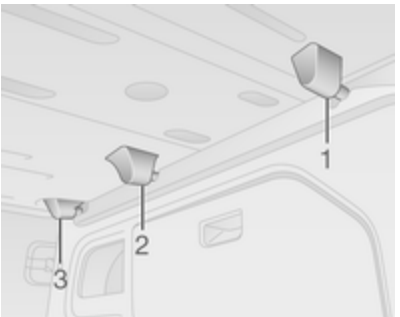

To remove, lift the front part of the parcel shelf by releasing it from the front retainers (**1**) on both sides.

Lift the rear part of the parcel shelf by releasing it from the rear retainers (**2** and **3**) on both sides.

Installing

Refit the parcel shelf by engaging in front and rear retainers on both sides.

Lashing eyes

Van

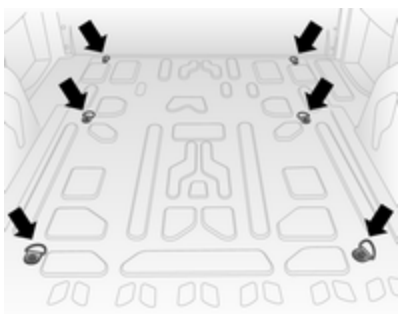

The lashing eyes are designed to secure items against slippage, e.g. using lashing straps or a luggage net.

Combo Tour

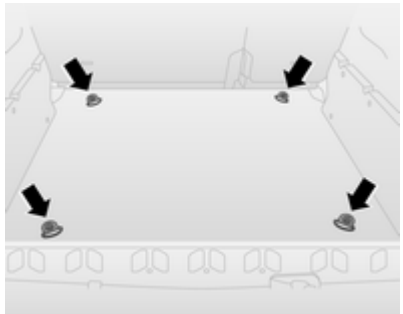

Roof rack system

Roof rack

For safety reasons and to avoid damage to the roof, the vehicle approved roof rack system is recommended. Contact a workshop for further information.

Follow the installation instructions and remove the roof rack when not in use.

Mounting roof rack

To fasten a roof rack, insert the mounting bolts in the holes indicated in the illustration.

Loading information

- Heavy objects in the load compartment should be evenly distributed and placed as far forward as possible. If objects can be stacked, the heavier objects should be placed at the bottom.
- Secure objects with lashing straps attached to lashing eyes ⇨ 59.
- Secure loose objects in load compartment to prevent them from sliding.
- When transporting objects in the load compartment, the backrests of the rear seats must not be tilted forwards or folded down.
- Do not allow the load to protrude above the upper edge of the backrests.
- Do not place any objects on the extendable load compartment cover ⇨ 56 or the instrument panel, and do not cover the sensor on top of the instrument panel ⇨ 97.
- The load must not obstruct the operation of the pedals, parking brake and gear selector, or hinder the freedom of movement of the driver. Do not place any unsecured objects in the interior.
- Do not drive with an open load compartment.

⚠ Warning

Always make sure that the load in the vehicle is securely stowed. Otherwise objects can be thrown around inside the vehicle and cause personal injury or damage to the load or car.

- The payload is the difference between the permitted gross vehicle weight (see identification plate ⇨ 161) and the EC kerb weight.

  To calculate the payload, enter the data for your vehicle in the Weights table at the front of this manual.

  The EC kerb weight includes weights for the driver (68 kg),

luggage (7 kg) and all fluids (tank 90 % full).

Optional equipment and accessories increase the kerb weight.

- Driving with a roof load increases the sensitivity of the vehicle to cross-winds and has a detrimental effect on vehicle handling due to the vehicle's higher centre of gravity. Distribute the load evenly and secure it properly with retaining straps. Adjust the tyre pressure and vehicle speed according to the load conditions. Check and retighten the straps frequently.

  Do not drive faster than 120 km/h.

  The permissible roof load (which includes the weight of the roof rack) is 100 kg. The roof load is the combined weight of the roof rack and the load.

Instruments and controls

Controls 62
Warning lights, gauges and indicators 68
Information displays 79
Vehicle messages 85
Trip computer 86

Controls

Steering wheel adjustment

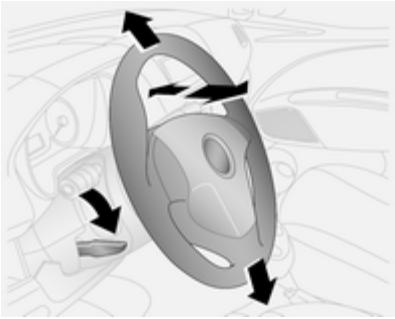

Unlock lever, adjust steering wheel, then engage lever and ensure it is fully locked.

Do not adjust steering wheel unless vehicle is stationary and steering wheel lock has been released.

Steering wheel controls

The Infotainment system and a connected mobile phone can be operated via the controls on the steering wheel.

Further information is available in the Infotainment system manual.

Horn

Press .

Windscreen wiper/washer

Windscreen wiper

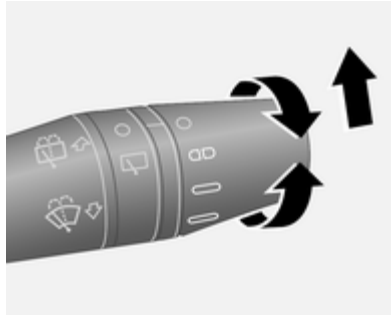

Twist lever:

- = off
- = intermittent wiping
- = slow
- = fast

For a single wipe when the windscreen wiper is off, move the lever up.

Do not use if the windscreen is frozen.

Switch off in car washes.

Adjustable wiper interval

Wiper lever in position .

The windscreen wiper will automatically adapt to the speed of the vehicle.

Windscreen washer

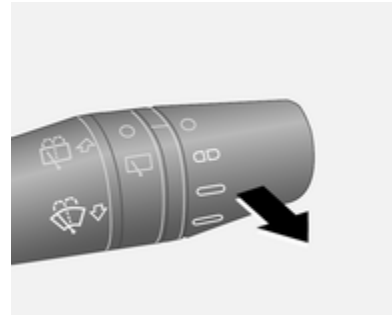

Pull lever briefly, washer fluid is sprayed onto the windscreen and the wiper wipes a few times.

Pull lever and hold, washer fluid is sprayed onto the windscreen and wiper wipes until the lever is released.

Washer fluid ⇨ 129, Wiper blade replacement ⇨ 131.

Rear window wiper/washer

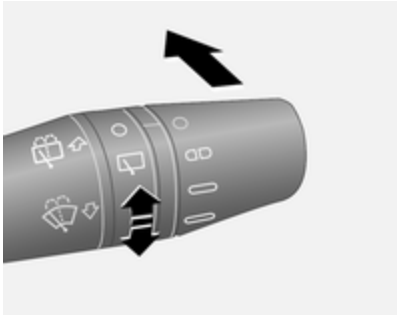

Twist to activate the rear window wiper.

Push lever. Washer fluid is sprayed onto the rear window and the wiper wipes a few times.

Do not use if the rear window is frozen.

Switch off in car washes.

The rear window wiper comes on automatically when the windscreen wiper is switched on and reverse gear is engaged.

Outside temperature

Outside temperature is shown in the Driver Information Centre ⇨ 79.

⚠ Warning

The road surface may already be icy even though the display indicates a few degrees above 0 °C.

Clock

Depending on model variant, the current time and/or date may appear in the Driver Information Centre ⇨ 79.

Values can be adjusted via the **SET**⮌, ▲ and ▼ buttons on the instrument panel.

Set time in Driver Information Centre - Standard version

1. Press the **SET** button once to access the settings menu.
2. Scroll through the menu options using the ▲ or ▼ buttons until **HOUR** is displayed.
3. Press **SET** to access this menu option; the hours will flash in the display.
4. Press ▲ or ▼ to increase or decrease the displayed value.
5. Press **SET** to confirm changes; the minutes will flash in the display.
6. Press ▲ or ▼ to increase or decrease the displayed value.
7. Press **SET** briefly to confirm changes and automatically return to the previous display screen.

Set time and date in Driver Information Centre - Multifunction version

Setting the time

After accessing this menu option, it is possible to either set the time or change the clock mode between 12 hour and 24 hour clock.

Press the **SET** button once to access the settings menu.

Scroll through the menu options using the ▲ or ▼ buttons until **Set time** is displayed.

Press **SET** to access this menu option; **Time** and **Mode** are displayed.

To set the time:

1. Press ▲ or ▼ to select **Time** and press **SET** to access this submenu option; the hours will flash in the display
2. Press ▲ or ▼ to increase or decrease the displayed value.
3. Press **SET** to confirm changes; the minutes will flash in the display.

4. Press ▲ or ▼ to increase or decrease the displayed value.
5. Press **SET**⮌ briefly to confirm changes and automatically return to the previous display screen.

To change the clock mode between 12 hour and 24 hour clock:

1. Press ▲ or ▼ to select **Mode** and press **SET**⮌ to access this submenu option; the display will flash.
2. Press ▲ or ▼ to change clock mode between 12h and 24h.
3. Press **SET**⮌ briefly to confirm changes and automatically return to the previous display screen.

Setting the date

1. Press the **SET**⮌ button once to access the settings menu.
2. Scroll through the menu options using the ▲ or ▼ buttons until **Set date** is displayed.
3. Press **SET**⮌ to access this menu option; the year will flash in the display.
4. Press ▲ or ▼ to increase or decrease the displayed value.
5. Press **SET**⮌ to confirm changes; the month will flash in the display.
6. Press ▲ or ▼ to increase or decrease the displayed value.
7. Press **SET**⮌ to confirm changes; the day will flash in the display.
8. Press ▲ or ▼ to increase or decrease the displayed value.
9. Press **SET**⮌ briefly to confirm changes and automatically return to the previous display screen.

Power outlets

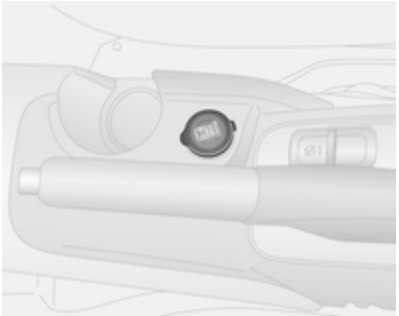

A 12 Volt power outlet is located in the centre console.

Rear power outlets

Depending on model variant,12 Volt power outlets are located at the sidewall in the load compartment.

Short wheelbase van

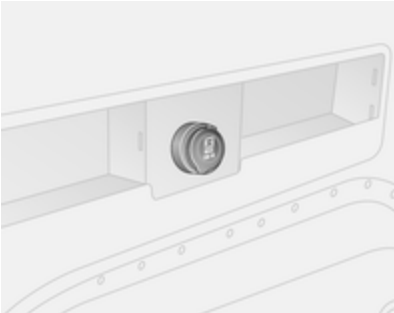

Long wheelbase van

Combo Tour

Do not exceed the maximum power consumption of 180 watts.

With ignition off, the power outlets are deactivated. Additionally the power outlets are deactivated in the event of low battery voltage.

Electrical accessories that are connected must comply with the electromagnetic compatibility requirements laid down in DIN VDE 40 839.

Do not connect any current-delivering accessories, e.g. electrical charging devices or batteries.

Do not damage the power outlets by using unsuitable plugs.

If the tyre repair kit is in operation, switch off all electrical consumers. Tyre repair kit ⇨ 145.

Cigarette lighter

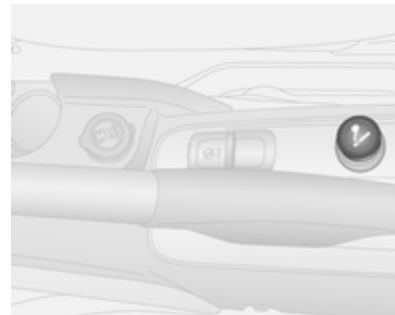

The cigarette lighter is located in the centre console.

Press in cigarette lighter. It switches off automatically once the element is glowing. Pull out lighter.

Ashtrays

Caution
To be used only for ash and not for combustible rubbish.

The portable ashtray should be placed in the cupholders in the centre console.

Warning lights, gauges and indicators

Instrument cluster

The needles of the instruments briefly rotate to the end position when the ignition is switched on.

Speedometer

Indicates vehicle speed.

Odometer

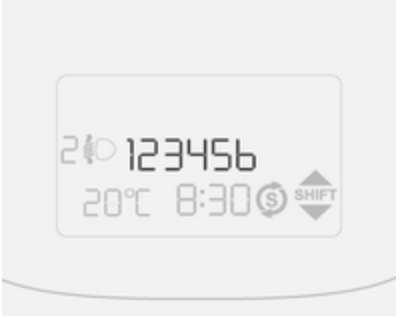

Displays the recorded distance in km.

H may appear in the display until the vehicle has travelled 100 km.

Trip odometer

Displays the recorded distance since the last reset.

Depending on model variant, there are two independent trip odometers A or B which indicate how far the vehicle has been driven since the last reset.

To reset the trip odometer, press and hold the **TRIP** button for a few seconds while the relevant trip odometer is displayed.

Tachometer

Displays the engine speed.

Drive in a low engine speed range for each gear as much as possible.

Caution

If the needle is in the red warning zone, the maximum permitted engine speed is exceeded. Engine at risk.

Fuel gauge

Displays the fuel level or gas level in the tank depending on the operation mode.

During natural gas operation, the system automatically switches over to petrol operation when the gas tanks are empty ⇨ 70. Fuel selector ⇨ 119.

Control indicator ○ illuminates if the level in the tank is low.

Never run the tank dry.

Because of the fuel remaining in the tank, the top-up quantity may be less than the specified tank capacity.

The needle will point to **0** and control indicator ○ will flash to indicate a fault in the system. Seek the assistance of a workshop.

Low fuel control indicator ○ ⇨ 78.

CNG fuel gauge

In natural gas operation mode, the four vertical bars next to **CNG** correspond to the methane level in the cylinders. As the fuel level diminishes, the bars in the CNG fuel gauge disappear.

CNG and the one remaining bar will flash if the methane level in the cylinders is low.

Refuelling ⇨ 120.

Fuel selector

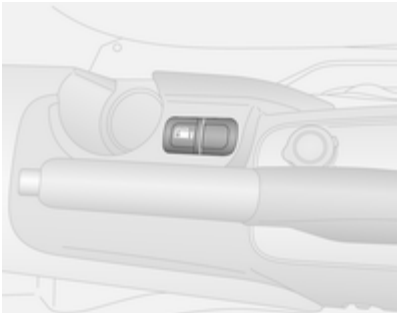

Pressing button ⛽ in the centre console switches between petrol and natural gas operation. The LED ▬ status shows the current operating mode.

▬ off	=	natural gas operation.
▬ illuminates	=	petrol operation.

During natural gas operation, if control indicator ⛽ illuminates in the Driver Information Centre (DIC) ⇨ 79, the natural gas tanks are empty and petrol operation is automatically engaged.

Fuel for natural gas operation ⇨ 119, Refuelling ⇨ 120.

Engine coolant temperature gauge

Displays the coolant temperature.

C	=	engine operating temperature not yet reached
central area	=	normal operating temperature
H	=	temperature too high

If control indicator ○ illuminates in conjunction with a message in the Driver Information Centre ⇨ 79 the coolant temperature is too high. Seek the assistance of a workshop.

Caution
If engine coolant temperature is too high, stop vehicle, switch off engine. Danger to engine. Check coolant level.

Service display

Service display is available in vehicles with Multifunction version of the Driver Information Centre ⇨ 79.

When the ignition is switched on, the remaining distance before the next service is due is shown briefly. Based on driving conditions, the interval at which a service will be indicated can vary considerably.

When the remaining distance before the next service is less than 2,000 km, **Serv.** appears in the Driver Information Centre. The service reminder is repeated after every additional 200 km and becomes more frequent when the remaining distance is below 200 km.

The vehicle needs a service. Seek the assistance of a workshop.

The remaining distance to the next service may also be viewed in the Driver Information Centre by selecting **SERVICE** from the settings menu options ⇨ 79.

Resetting the service display

After a service, the service display must be reset by a workshop.

Control indicators

The control indicators described are not present in all vehicles. The description applies to all instrument versions. Depending on the equipment, the position of the control indicators may vary.

When the ignition is switched on, most control indicators will illuminate briefly as a functionality test.

The control indicator colours mean:

red	=	danger, important reminder
yellow	=	warning, information, fault
green	=	confirmation of activation
blue	=	confirmation of activation

Control indicators in the instrument cluster

Generic warning

⚠ illuminates yellow.

Depending on model variant, control indicator ⚠ may illuminate independently or in conjunction with ⏻, ☼, ⊛ or P⚠.

If ⚠ illuminates together with ⛽; stop engine immediately and seek the assistance of a workshop.

Simultaneously a warning message may be displayed in the Driver Information Centre ⇨ 79.

⚠ also illuminates if the fuel cut-off switch is triggered, or if a fault is detected in the engine oil pressure sensor. Consult a workshop.

Fuel cut-off system ⇨ 85.

Turn signal

⇦ or ⇨ flashes green.

Flashes

A turn signal or the hazard warning flashers are activated.

Rapid flashing: failure of a turn signal light or associated fuse, failure of turn signal light on trailer.

Bulb replacement ⇨ 132, Fuses ⇨ 138.

Turn signals ⇨ 90.

Seat belt reminder

Seat belt reminder for front seats

for driver's seat and/or front passenger seat illuminates or flashes red.

Illuminates

When the ignition has been switched on, control indicator illuminates briefly if driver's seat belt and/or front passenger seat belt is not engaged. A warning chime also sounds for a few seconds.

Flashes

During driving will flash and a warning chime will sound for 90 seconds until the front seat belts are fastened.

Fastening the seat belt ⇨ 40.

⚠ Warning

Fasten seat belt before each trip.

In the event of an accident, people not wearing seat belts endanger their fellow occupants and themselves.

To deactivate the seat belt reminder, consult a workshop. Reactivation of the warning chime for seat belt reminder can be done via the Driver Information Centre ⇨ 79.

Note
The volume of the warning chime can also be adjusted via the Driver Information Centre ⇨ 79.

Airbag and belt tensioners

illuminates red.

When the ignition is switched on, the control indicator illuminates for approx. 4 seconds. If it does not illuminate, does not go out after 4 seconds or illuminates whilst driving, there is a fault in the airbag

system. Seek the assistance of a workshop. The airbags and belt pretensioners may fail to trigger in the event of an accident.

Deployment of the belt pretensioners or airbags is indicated by continuous illumination of .

⚠ Warning

Have the cause of the fault remedied immediately by a workshop.

Belt pretensioners, airbag system ⇨ 39, ⇨ 42.

Airbag deactivation

illuminates yellow.

With the front passenger airbag activated:

When the ignition is switched on, illuminates for approx. 4 seconds, flashes for another 4 seconds and then extinguishes.

With the front passenger airbag deactivated:

permanently illuminates yellow.

Airbag deactivation ⇨ 46.

⚠ Danger

Risk of fatal injury for a child using a child restraint system together with activated front passenger airbag.

Risk of fatal injury for an adult person with deactivated front passenger airbag.

Charging system

illuminates red.

Illuminates when the ignition is switched on and extinguishes shortly after the engine starts.

Illuminates when the engine is running

Stop, switch off engine. Battery is not charging. Engine cooling may be interrupted. The brake servo unit may cease to be effective. Seek the assistance of a workshop.

Malfunction indicator light

illuminates or flashes yellow.

Illuminates when the ignition is switched on and extinguishes shortly after the engine starts.

Illuminates when the engine is running

Fault in the emission control system. The permitted emission limits may be exceeded. Seek the assistance of a workshop immediately.

Flashes when the engine is running

Fault that could lead to catalytic converter damage. Ease up on the accelerator until the flashing stops. Seek the assistance of a workshop immediately.

Brake system

illuminates red.

Illuminates when the parking brake is released if the brake fluid level is too low ⇨ 130.

⚠ Warning

Stop. Do not continue your journey. Consult a workshop.

Illuminates if the brake vacuum servo fails; the brake pedal becomes stiff when pressed. The brake system remains operational however, assistance will be reduced. The steering may also require considerably more effort when turning.

Illuminates after the ignition is switched on if the parking brake is applied ⇨ 112.

Brake pad wear

illuminates yellow.

The front brake pads are worn, seek the assistance of a workshop immediately.

Antilock brake system (ABS)

(ABS) illuminates yellow.

Illuminates for a few seconds after the ignition is switched on. The system is ready for operation when the control indicator extinguishes.

If the control indicator does not extinguish after a few seconds, or if it illuminates while driving, there is a fault in the ABS. The brake system remains operational but without ABS regulation.

Antilock brake system ⇨ 112.

Upshift

SHIFT or SHIFT illuminates in the Driver Information Centre ⇨ 79 when gearshifting is recommended to improve fuel economy.

Hill start assist

illuminates yellow.

Illuminates when the ignition is switched on and extinguishes shortly after the engine starts.

If the control indicator does not extinguish after a few seconds, or if it illuminates while driving, there is a fault in the Hill start assist. Seek the assistance of a workshop to have the fault remedied.

The Electronic Stability Program (ESP) control indicator may also illuminate ⇨ 76 in conjunction with .

Depending on model variant, ⚠ will illuminate as an alternative if control indicator is not present. A warning message may also be displayed in the Driver Information Centre ⇨ 79.

Generic warning ⚠ ⇨ 73.

Hill start assist ⇨ 113.

Ultrasonic parking assist

P illuminates yellow.

Fault in system

or

Fault due to sensors that are dirty or covered by ice or snow

or

Interference due to external sources of ultrasound. Once the source of interference is removed, the system will operate normally.

Have the cause of the fault in the system remedied by a workshop.

Depending on version, ⚠ will illuminate as an alternative if control indicator P⚠ is not present. A warning message may also be displayed in the Driver Information Centre ⇨ 79.

Generic warning ⚠ ⇨ 73.

Ultrasonic parking assist ⇨ 116.

Electronic Stability Program

illuminates or flashes yellow.

Flashes

The system is actively engaged. Engine output may be reduced and the vehicle may be braked automatically to a small degree.

Illuminates

A fault in the system is present. Continued driving is possible. Driving stability, however, may deteriorate depending on road surface conditions.

Have the cause of the fault remedied by a workshop.

Electronic Stability Program (ESP) ⇨ 114, Traction control system/Anti-Slip Regulator (ASR) ⇨ 113.

Engine coolant temperature

○ illuminates red.

Illuminates for a few seconds after the ignition is switched on.

If control indicator ○ illuminates in conjunction with a message in the Driver Information Centre, the coolant temperature is too high. Seek the assistance of a workshop.

Driver Information Centre ⇨ 79.

Caution

If engine coolant temperature is too high, stop vehicle, switch off the ignition. Danger to engine. Check coolant level.

If the control indicator remains on, seek the assistance of your workshop.

Engine coolant temperature gauge ⇨ 70.

Preheating

illuminates yellow.

Preheating is activated. Only activates when outside temperature is low.

Diesel particle filter

illuminates yellow.

The diesel particle filter requires cleaning.

Continue driving until extinguishes. If possible, do not allow engine speed to drop below 2000 rpm.

Illuminates

The diesel particle filter is full. Start cleaning process as soon as possible.

Diesel particle filter ⇨ 106, Stop-start system ⇨ 103.

Engine oil pressure

illuminates red.

Illuminates when the ignition is switched on and extinguishes shortly after the engine starts.

Illuminates when the engine is running

Caution

Engine lubrication may be interrupted. This may result in damage to the engine and/or locking of the drive wheels.

1. Depress clutch.
2. Select neutral gear (or move selector lever to **N**).
3. Move out of the flow of traffic as quickly as possible without impeding other vehicles.
4. Switch off ignition.

⚠ Warning

When the engine is off, considerably more force is needed to brake and steer. During an Autostop the brake servo unit will still be operational.

Do not remove key until vehicle is stationary, otherwise the steering wheel lock could engage unexpectedly.

Check oil level before seeking the assistance of a workshop ⇨ 127.

Change engine oil

Diesel engines with diesel particle filter

flashes red.

Illuminates when the ignition is switched on and extinguishes shortly after the engine starts.

The engine oil life monitor lets you know when to change the oil. Control indicator will flash, together with a message in the Driver Information Centre, to indicate that engine oil life has been diminished and the oil needs changing.

Based on driving conditions, the interval at which an oil change will be indicated can vary considerably.

Depending on model variant, may flash in the following ways:

- for 1 minute every 2 hours, or
- for 3 minute cycles with off for intervals of 5 seconds.

The warning will be repeated every time the engine is started, until the engine oil is changed and the service display is reset. Seek the assistance of a workshop.

Service display ⇨ 71.

Low engine oil level

illuminates red.

Illuminates when the ignition is switched on and extinguishes shortly after the engine starts.

If the control indicator does not extinguish after a few seconds, or if it illuminates while driving, the engine oil level is insufficient.

Check oil level before seeking the assistance of a workshop ⇨ 127.

Low fuel

○ illuminates or flashes yellow.

Illuminates for a few seconds after the ignition is switched on.

Illuminates

Level in fuel tank is too low. Refuel immediately ⇨ 120.

Never run the tank dry.

Catalytic converter ⇨ 107.

Flashes

Fault in fuel system.

Have the cause of the fault remedied by a workshop.

Fuel gauge ⇨ 69.

Drain fuel filter

illuminates yellow.

Illuminates when the ignition is switched on and goes out shortly after the engine starts.

Illuminates when the engine is running

Indicates the presence of water in the diesel. Seek the assistance of a workshop immediately.

Immobiliser

illuminates yellow.

Fault in the immobiliser system. The engine cannot be started.

Stop-start system

illuminates yellow.

A fault is present in the system.

Have the cause of the fault remedied by a workshop.

Depending on version, ⚠ will illuminate as an alternative if control indicator is not present. A warning message may also be displayed in the Driver Information Centre ⇨ 79.

Generic warning ⚠ ⇨ 73.

Stop-start system ⇨ 103.

Exterior light

illuminates green.

The exterior lights are on ⇨ 88.

Exterior light failure

illuminates yellow.

One or more of the exterior lights is faulty ⇨ 132.

Depending on version, ⚠ will illuminate as an alternative if control indicator ☼ is not present. A warning message may also be displayed in the Driver Information Centre ⇨ 79.

Generic warning ⚠ ⇨ 73.

High beam

≣D illuminates blue.

Illuminated when high beam is on and during headlight flash ⇨ 88.

Fog light

≠D illuminates green.

The front fog lights are on ⇨ 90.

Rear fog light

D≠ illuminates yellow.

The rear fog light is on ⇨ 91.

Cruise control

illuminates green.

The system is on.

Cruise control ⇨ 115.

Door open

illuminates red.

A door or the tailgate is open.

Information displays

Driver Information Centre

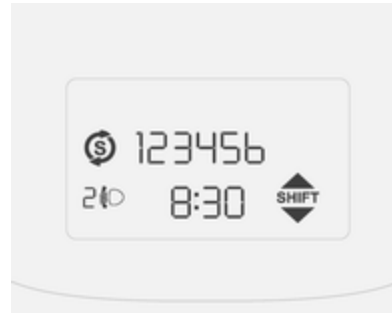

The Driver Information Centre is located in the instrument cluster between the speedometer and tachometer. Two versions are available; a Standard version

and a Multifunction version with further adjustable settings.

Some of the displayed functions differ when the vehicle is being driven or at a standstill. Some options are only available when the vehicle is being driven.

Depending on variant, the following items appear in the display:

- Odometer, trip odometer ⇨ 68
- Clock ⇨ 64
- Outside temperature ⇨ 64
- Headlight range adjustment ⇨ 89
- Transmission display ⇨ 108
- Stop-start system indicator ⇨ 103
- Vehicle messages ⇨ 85
- Trip computer ⇨ 86

Selecting menus and options

The menus and options can be selected via the buttons on the instrument panel.

Press the **SET** button:

- once to access the settings menu
- press again to access a menu option and submenu options
- after changes have been made, briefly press again to confirm a value and automatically return to the previous display screen

Alternatively, press and hold the **SET** button to return to the previous display screen without saving changes to the current menu option.

Note
The settings menu is exited automatically after a delay. Only changes already confirmed by briefly pressing the **SET** button are stored.

Press the ▲ button to scroll up the screen and the menu options or to increase the displayed value. Press and hold to increase value rapidly (press again to stop on the required value).

Press the ▼ button to scroll down the screen and the menu options or to decrease the displayed value. Press and hold to decrease value rapidly (press again to stop on the required value).

Settings menu options - Standard version

The settings menu contains the following options:

- ILLU
- SPEEd
- HOUR
- UNIT
- bUZZ
- BAG P
- DRL

ILLU (Brightness of interior lighting)

When driving at night with the low beam on, adjust the brightness of the vehicle's interior lighting (e.g. instrument panel, climate control display).

SPEEd (Speed limit warning chime)

Activate or deactivate the speed limit warning chime or change the speed limit. Speeds between 30 and 200 km/h can be stored.

When activated, the driver is alerted with a warning chime when the set speed limit is exceeded.

After accessing this menu option, activate or deactivate the function (set to **On** or **Off**) and confirm.

Press the **SET⮌** button when activated (**On**) to access the current set speed. Adjust as required and confirm.

Warning chimes ⇨ 85.

HOUR (Setting the clock)

Adjust the hours setting (flashing value) and confirm. Adjust minutes setting (flashing value) and confirm.

Clock ⇨ 64.

UNIT (Unit of measurement)

Set the unit of measurement to **km** or **miles**.

bUZZ (Warning chime volume)

Adjust the volume of warning chimes and confirm. 8 volume levels are available.

A chime is also sounded every time the **SET⮌**, ▲ or ▼ button is pressed.

Warning chimes ⇨ 85.

BAG P (Passenger front and side airbags activation/deactivation)
Activate the front passenger airbags if an adult is occupying the front passenger seat. Deactivate airbags when a child restraint system is installed on this seat.

> **⚠ Danger**
>
> Risk of fatal injury for a child using a child restraint system on a seat with activated front passenger airbag.
>
> Risk of fatal injury for an adult person on a seat with deactivated front passenger airbag.

After accessing this menu option, activate or deactivate the airbags (**BAG P On** or **BAG P Off**) and confirm; a confirmation message appears in the display. Select **YES** (to confirm changes) or **No** (to cancel changes).

Airbag deactivation ⇨ 46.

DRL (Daytime running lights)
Activate the daytime running lights to increase visibility of the vehicle during daylight (set to **On**). Deactivate when not required (set to **Off**).

Daytime running lights ⇨ 89.

Settings menu options - Multifunction version

The settings menu contains the following options:

- **Lighting**
- **Speed beep**
- **Trip B data**
- **Set time**
- **Set date**
- **Radio info**
- **Autoclose**
- **Unit of measurement**
- **Language**
- **Warning volume**
- **Button volume**
- **Seat belt buzzer**
- **Service**
- **Passenger airbag**
- **Daytime running lights**
- **Exit menu**

LIGHTING (Brightness of interior lighting)
When driving at night with the low beam on, adjust the brightness of the vehicle's interior lighting (e.g. instrument panel, climate control display).

It is also possible to adjust the brightness using the ▲ or ▼ buttons without accessing the settings menu.

SPEED BEEP (Speed limit warning chime)
Activate or deactivate the speed limit warning chime or change the speed limit. Speeds between 30 and 200 km/h can be stored.

When activated, the driver is alerted with a warning chime when the set speed limit is exceeded.

After accessing this menu option, activate or deactivate the function (set to **On** or **Off**) and confirm.

Press the **SET⮌** button when activated (**On**) to access the current set speed. Adjust as required and confirm.

Warning chimes ⇨ 85.

TRIP B DATA
Activate or deactivate the second trip computer (set to **On** or **Off**).

Trip B records average consumption, distance travelled, average speed and travel time (driving time). The measurement can be restarted at any time. Trip computer ⇨ 86.

SET TIME (Setting the clock and clock mode)
After accessing this menu option, it is possible to either set the time or change the clock mode between 12 hour and 24 hour clock.

Select **Time** and confirm. Adjust the hours setting (flashing value) and confirm. Adjust minutes setting (flashing value) and confirm.

Select **Mode** and confirm. Select 12h or 24h and confirm.

Clock ⇨ 64.

SET DATE
Adjust the year setting (flashing value) and confirm. Adjust month setting (flashing value) and confirm. Adjust the day setting (flashing value) and confirm.

RADIO INFO (Display audio and radio information)
Activate radio info (set to **On**) to display audio and radio information (e.g. station frequency, RDS messages, track number). Deactivate when not required (set to **Off**).

AUTOCLOSE (Automatic central locking when driving)
Activate the autoclose feature (set to **On**) to automatically lock the doors when vehicle speed exceeds 20 km/h. Deactivate when not required (set to **Off**).

UNIT OF MEASUREMENT (for Distance, Fuel consumption and Temperature)
After accessing this menu option, it is possible to set the unit of measurement for distance, fuel consumption and temperature.

Select **Distance** and confirm. Set the unit of measurement to **km** or **mi** (miles) and confirm.

Select **Consumption** and confirm. When the **Distance** unit is set to **km**, it is possible to set the unit of measurement for fuel consumption to either **l/100km** or **km/l**. When the **Distance** unit is set to **mi** (miles), fuel consumption is shown in **mpg**.

Select **Temperature** and confirm. Set the unit of measurement to **°C** or **°F** and confirm.

LANGUAGE (for Display messages)
Display messages can be shown in different languages, including: English, German, French, Italian, Portuguese, Spanish, Dutch, Polish and Turkish. Select desired language and confirm.

WARNING VOLUME (Warning chime volume)
Adjust the volume of warning chimes and confirm. 8 volume levels are available.

Warning chimes ⇨ 85.

BUTTON VOLUME
A chime is sounded every time the **SET**⮌, ▲ or ▼ button is pressed.

Adjust the volume of these chimes and confirm. 8 volume levels are available.

Warning chimes ⇨ 85.

SEAT BELT BUZZER (Reactivate warning chime for driver and/or front passenger seat belt reminder)
This menu option is available only when the seat belt reminder has already been deactivated by a workshop.

When reactivated, the driver and/or front passenger are alerted with a warning chime when the corresponding seat belt is not fastened.

Seat belt reminder ⇨ 73.

SERVICE (Distance to next service)
Access this menu option to view the remaining distance to the next service.

The distance to next service is also displayed automatically when the distance reaches 2,000 km and is repeated after every additional 200 km.

Service display ⇨ 71.

PASSENGER AIRBAG (Passenger front and side airbags activation/ deactivation)
Activate the front passenger airbags if an adult is occupying the front passenger seat. Deactivate airbags when a child restraint system is installed on this seat.

⚠ Danger

Risk of fatal injury for a child using a child restraint system on a seat with activated front passenger airbag.

Risk of fatal injury for an adult person on a seat with deactivated front passenger airbag.

After accessing this menu option, activate or deactivate the airbags (**Bag Pass On** or **Bag Pass Off**) and confirm; a confirmation message appears in the display. Select **YES** (to confirm changes) or **No** (to cancel changes).

Airbag deactivation ⇨ 46.

DAYTIME RUNNING LIGHTS
Activate the daytime running lights to increase visibility of the vehicle during daylight (set to **On**). Deactivate when not required (set to **Off**).

Daytime running lights ⇨ 89.

EXIT MENU
Select this menu option to exit the settings menu.

Vehicle messages

Warning chimes

Only one warning chime will sound at a time.

The warning chime regarding unfastened seat belts has priority over any other warning chime.

When starting the engine or whilst driving

- If seat belt is not fastened.
- If a certain speed is exceeded with the parking brake applied.
- If the parking assist detects an object.
- If a fault is detected in the parking assist.
- If a door or the tailgate is not fully closed when starting-off.
- If the vehicle speed briefly exceeds a set limit.
- Vehicles with manual transmission automated; neutral is not selected or the foot brake has not been depressed.
- If a transmission fault is detected in vehicles with manual transmission automated.
- If a warning message appears in the Driver Information Centre.

When the vehicle is parked and/or the driver's door is opened

- When the key is in the ignition switch.
- Vehicles with manual transmission automated; neutral is not selected, the parking brake is not applied, or the foot brake and/or the accelerator pedal has not been depressed.

Fuel system messages

Fuel cut-off system

In the event of a collision of a certain severity, the fuel system is cut-off and the engine is switched off automatically, for safety reasons. A corresponding warning message may also appear in the Driver Information Centre ⇨ 79.

To reset the fuel cut-off system and enable the vehicle to be driven, refer to "**Vehicle shutdown**" ⇨ 103.

Trip computer

The trip computer provides information on driving data, which is continually recorded and evaluated electronically.

The following functions can be selected by pressing the **TRIP** button repeatedly on the end of the wiper lever:

Standard version

- Average consumption
- Instantaneous consumption
- Range
- Distance travelled
- Average speed
- Travel time (driving time)

Multifunction version

Two trip odometers, Trip A and Trip B, are available for selection and are recorded separately.

The information of the two trip computers can be reset separately, making it possible to display different trip distances.

Trip A

- Average consumption
- Instantaneous consumption
- Range
- Distance travelled
- Average speed
- Travel time (driving time)

Trip B

- Average consumption
- Distance travelled
- Average speed
- Travel time (driving time)

Trip B can be deactivated via the Driver Information Centre ⇨ 79.

Reset trip computer information

To reset the trip computer, select one of its functions, then press and hold the **TRIP** button for a few seconds.

The following trip computer information will be reset:

- Average consumption
- Distance travelled
- Average speed
- Travel time (driving time)

The trip computer will reset automatically when the maximum value of any of the parameters is exceeded.

Average consumption

Average consumption is displayed, taking into consideration the distance travelled and the fuel used since the last reset.

The measurement can be restarted at any time.

Instantaneous consumption

Display of the instantaneous fuel consumption.

_ _ _ _ will appear in the display if the vehicle is left parked with the engine running for a long time.

Range

The range is calculated from the current contents of the fuel tank and the average consumption since the last reset.

When the range is less than 50 km, _ _ _ _ will appear in the display.

After refuelling, the range is updated automatically after a brief delay.

The measurement can be restarted at any time.

Note
The range will not be displayed if the vehicle is left parked with the engine running for a long time.

Distance travelled

Displays the distance driven since the last reset.

The measurement can be restarted at any time.

Average speed

The average speed since the last reset is displayed.

The measurement can be restarted at any time.

Interruptions in the journey with the ignition off are not included in the calculations.

Travel time (driving time)

The time elapsed since the since the last reset is displayed.

The measurement can be restarted at any time.

Exit trip computer

To exit the trip computer, press and hold the SET button for more than 2 seconds.

Driver Information Centre ⇨ 79.

Interruption of power supply

If the power supply has been interrupted or if the battery voltage has dropped too low, the values stored in the trip computer will be lost.

Lighting

Exterior lighting 88
Interior lighting 91
Lighting features 94

Exterior lighting

Light switch

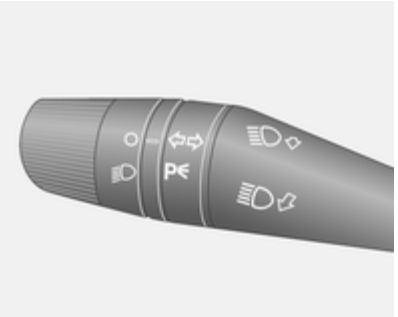

Turn light switch:

O = off / daytime running lights
D = sidelights / headlights

Control indicator ⇨ 78.

Tail lights

Tail lights are illuminated together with headlights and sidelights.

High beam

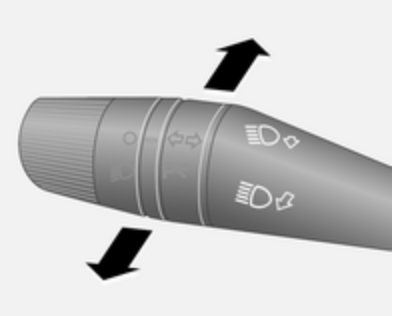

To switch from low to high beam, push lever.

To switch to low beam, pull lever.

Headlight flash

To activate the headlight flash, pull lever.

Headlight range adjustment

Manual headlight range adjustment

To adapt headlight range to the vehicle load to prevent dazzling of other road users: Press ⇶ or ⇶ buttons until the required setting is displayed in the Driver Information Centre ⇨ 79.

0 = Front seats occupied
1 = All seats occupied
2 = All seats occupied and load compartment laden
3 = Driver's seat occupied and load compartment laden

Headlights when driving abroad

The asymmetrical headlight beam extends visibility at the edge of the road at the passenger side.

However, when driving in countries where traffic drives on the opposite side of the road, adjust the headlights to prevent dazzling of oncoming traffic.

Have the headlights adjusted by a workshop.

Daytime running lights

Daytime running lights increase visibility of the vehicle during daylight.

When the function is activated and the ignition is switched on, the headlights come on automatically and instrument illumination is subdued.

The light switch must be in position O. The daytime running lights switch off when the ignition is switched off.

Note
The driver remains responsible for switching on the low beam when required, e.g. when driving through a tunnel or at night.

When the function is deactivated, the headlights do not come on automatically when the ignition is switched on and the light switch is in position O.

The daytime running lights function is activated/deactivated via a menu in the Driver Information Centre ⇨ 79.

Hazard warning flashers

Operated with the ⚠ button.

Turn and lane-change signals

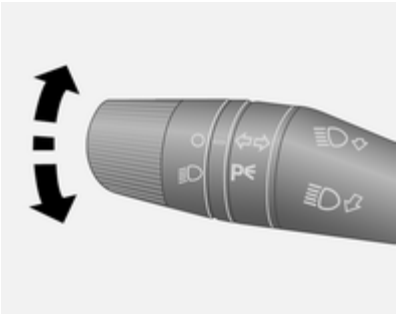

Lever up = right turn signal
Lever down = left turn signal

If the lever is moved past the resistance point, the turn signal is switched on constantly. When the steering wheel moves back, the turn signal is automatically deactivated.

For five flashes, e.g. when changing lanes, press the lever until resistance is felt and then release.

Move the lever to the resistance point and hold for longer indication.

Switch the indicator off manually by moving the lever to its original position.

Front fog lights

Operated by pressing the button.

Switching on front fog lights will switch sidelights on automatically.

Press the button again to turn the front fog lights off.

Rear fog lights

Operated by pressing the button.

The rear fog light can only be switched on when both the ignition and headlights or sidelights (with front fog lights) are on.

Press the button again to turn the rear fog light off, or turn off the headlights and/or the front fog lights.

Reversing lights

The reversing lights come on when the ignition is on and reverse gear is selected.

Misted light covers

The inside of the light covers may mist up briefly in poor, wet and cold weather conditions, in heavy rain or after washing. The mist disappears quickly by itself; to help, switch on the headlights.

Interior lighting

Instrument panel illumination control

When driving at night with the headlights on, adjust the brightness of the vehicle's interior lighting (including instrument panel, climate control display etc.) via the settings menu of the Driver Information Centre ⇨ 79.

To adjust brightness:

Standard version of Driver Information Centre

1. Press the **SET** button once to access the settings menu.
2. Scroll through the menu options using the ▲ or ▼ buttons until menu option **ILLU** appears in the display.

3. Press the ▲ or ▼ button to increase or decrease the displayed value.
4. Press **SET** ⮌ briefly to confirm changes and automatically return to the previous display screen.

Multifunction version of Driver Information Centre

1. Press the **SET** ⮌ button to access the settings menu.
2. Scroll through the menu options using the ▲ or ▼ buttons until menu option **LIGHTING** appears in the display.
3. Press the ▲ or ▼ button to increase or decrease the displayed value.
4. Press **SET** ⮌ briefly to confirm changes and automatically return to the previous display screen.

It is also possible to adjust the brightness using the ▲ or ▼ buttons without accessing the settings menu.

Driver Information Centre ⇨ 79.

Interior lights

Depending on model variant, during entry and exit of the vehicle the front and rear courtesy lights come on automatically and then switch off after a delay.

Note
In the event of an accident of a certain severity, the interior lights come on automatically. Fuel cut-off system ⇨ 85.

Front courtesy light

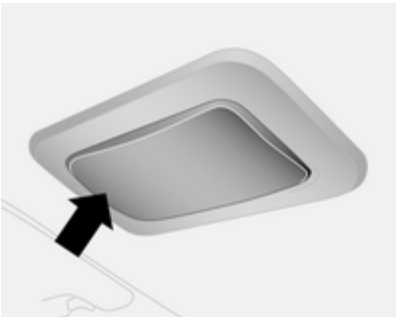

Centre switch position: automatic interior light.

To operate manually when the doors are closed, press the lens on either side.

Front courtesy light with reading lights

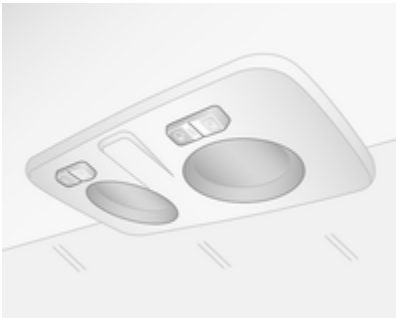

Centre switch position: automatic interior light.

Can be operated individually or together with the ≣D switch when the doors are closed.

Press rocker switch ≣D left or right to operate respective reading light.

Rear courtesy lights

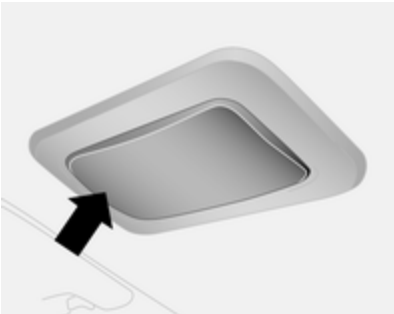

Centre switch position: automatic interior light.

To operate manually when the doors are closed, press the lens on either side.

Load compartment lighting

Depending on model variant, load compartment lighting switches on when the rear doors / tailgate or sliding side door is opened.

Removable rear courtesy light

Depending on model variant, the removable rear courtesy light may illuminate when the rear doors / tailgate or sliding side doors are opened and the central switch is in the middle position.

Switch the light on permanently by pressing the top part of the central switch ☼.

Switch the light off permanently by pressing the bottom part of the central switch (**AUTO OFF**).

To use as a handheld torch, press the button at the top of the lamp assembly (see illustration) to release it and pull torch down gently to remove. Press the switch on the end of the torch to turn the light on/off.

Replace the torch in its original position to recharge the battery after use.

Lighting features

Battery discharge protection

To ensure reliable engine restarts, several battery discharge protection features are implemented as part of the stop-start system.

Stop-start system ⇨ 103.

Climate control

Climate control systems 95
Air vents 99
Maintenance 100

Climate control systems

Heating and ventilation system

Controls for:

- Temperature
- Fan speed
- Air distribution

Heated rear window ⇨ 32.

Temperature

red = warm
blue = cold

Heating will not be fully effective until the engine has reached normal operating temperature.

Fan speed

Adjust the air flow by switching the fan to the desired speed.

Air distribution

= to head area
= to head area and foot well
= to foot well
= to windscreen, front door windows and foot well
= to windscreen and front door windows

Intermediate settings are possible.

Demisting and defrosting the windows

- Set temperature control to warmest level.
- Set fan speed to highest level.
- Set air distribution control to .
- Switch on heated rear window .

- Open side air vents as required and direct them towards door windows.
- For simultaneous warming of the foot well, set air distribution control to .

Air conditioning system

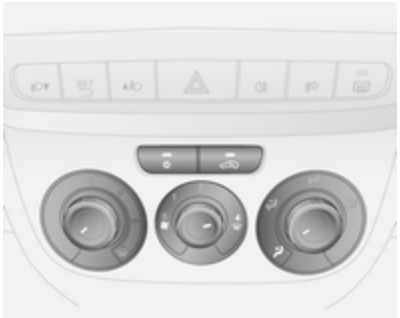

Additional to the heating and ventilation system, the air conditioning system has controls for:

= cooling
= air recirculation

Heated front seats ⇨ 36.

Cooling

Press button to switch on cooling. Activation is indicated by the LED in the button. Cooling is only functional when the engine is running and climate control fan is switched on.

Press button again to switch off cooling.

The air conditioning system cools and dehumidifies (dries) the air when outside temperature is above a specific level. Therefore condensation may form and drip from under the vehicle.

If no cooling or drying is required, switch the cooling system off to save fuel.

Air recirculation system

Press button to activate air recirculation mode. Activation is indicated by the LED in the button.

Press button again to deactivate air recirculation mode.

⚠ Warning

The exchange of fresh air is reduced in air recirculation mode. In operation without cooling the air humidity increases, so the windows may mist up. The quality of the passenger compartment air deteriorates, which may cause the vehicle occupants to feel drowsy.

In warm and very humid ambient air conditions, the windscreen may mist up from outside, when cold air is directed towards it. If windscreen mists up from outside, activate windscreen wiper and deactivate .

Maximum cooling

Briefly open the windows so that hot air can disperse quickly.

- Cooling on.
- Air recirculation system on.
- Set air distribution control to .
- Set temperature control to coldest level.

- Set fan speed to highest level.
- Open all air vents.

Demisting and defrosting the windows

- Set temperature control to warmest level.
- Set fan speed to highest level.
- Set air distribution control to .
- Switch cooling on.
- Switch on heated rear window .
- Open side air vents as required and direct them towards door windows.
- For simultaneous warming of the foot well, set air distribution control to .

Electronic climate control system

Controls for:

- Temperature
- Air distribution and menu selection
- Fan speed

AUTO = Automatic mode
= air recirculation
MAX = demisting and defrosting
OFF = switch on/off

Heated rear window ⇨ 32.

The preselected temperature is automatically regulated. In the automatic mode the fan speed and air distribution automatically regulate the air flow.

The system can be manually adapted by use of air distribution and air flow controls.

The electronic climate control system is only fully operational when the engine is running.

For correct operation do not cover the sensor on the instrument panel.

Automatic mode

Basic setting for maximum comfort:

- Press **AUTO** button.
- Open all air vents.
- on.
- Set desired temperature.

Temperature preselection

Temperatures can be set to the desired value.

For reasons of comfort, change temperature only in small increments. Turn **AUTO** knob to adjust.

clockwise = warm
anticlockwise = cold

Heating will not be fully effective until the engine has reached normal operating temperature.

When the minimum temperature is set below 16 °C, the electronic climate control system runs at maximum cooling. LO appears in the display.

If the maximum temperature is set above 32 °C, the electronic climate control system runs at maximum heating. HI appears in the display.

Fan speed

The selected fan speed is indicated with bars in the display.

Press − or + to increase or decrease the fan speed.

maximum fan speed = all bars displayed
minimum fan speed = one bar displayed

Press button to deactivate fan.

To return to automatic fan speed: Press **AUTO** button.

Demisting and defrosting the windows

Press the button.

Temperature and air distribution are set automatically and the fan runs at a high speed.

When the vehicle reaches normal operating temperature the function remains active for approx. 3 minutes.

To return to automatic mode: press button or **AUTO**.

Air distribution

Press ▲, ▼ and ► buttons.

LED in buttons illuminate.

Arrows shown in the display indicate the distribution settings.

Cooling

Press button to switch on cooling. Activation is indicated by the LED in the button. Cooling is only functional when the engine is running and climate control fan is switched on.

Press button again to switch off cooling.

The air conditioning system cools and dehumidifies (dries) when outside temperature is above a specific level. Therefore condensation may form and drip from under the vehicle.

If no cooling or drying is required press again to switch the cooling system off, thus saving fuel.

Manual air recirculation mode

Operated with the button.

recirculation on = LED in button illuminated; appears in the display
recirculation off = LED in button extinguishes; appears in the display

⚠Warning

The exchange of fresh air is reduced in air recirculation mode. In operation without cooling the air humidity increases, so the windows may mist up. The quality

of the passenger compartment air deteriorates, which may cause the vehicle occupants to feel drowsy.

In warm and very humid ambient air conditions, the windscreen may mist up from outside, when cold air is directed towards it. If windscreen mists up from outside, activate windscreen wiper and deactivate .

Air vents

Adjustable air vents

At least one air vent must be open while cooling is on in order to prevent the evaporator from icing up due to lack of air movement.

⚠ Warning

Do not attach any objects to the slats of the air vents. Risk of damage and injury in case of an accident.

Centre air vents

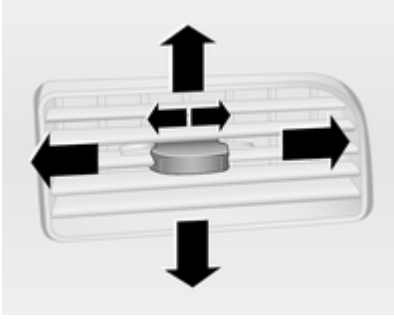

Slide knob to the left to open vent.

Direct the flow of air by swivelling the vent.

Slide knob to the right to close vent.

Side air vents

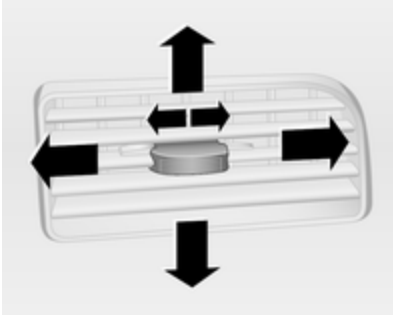

Slide knob to the left to open vent.

Direct the flow of air by swivelling the vent.

Slide knob to the right to close vent.

Fixed air vents

Additional air vents are located beneath the windscreen and door windows and in the foot wells.

Maintenance

Air intake

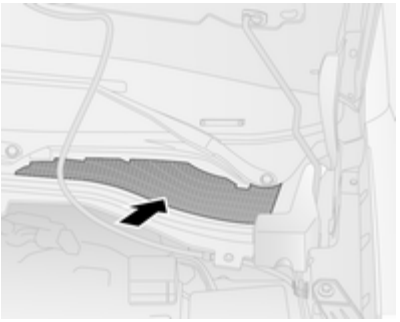

The air intake in front of the windscreen in the engine compartment must be kept clear to allow air intake. Remove any leaves, dirt or snow.

Pollen filter

The pollen filter cleans dust, soot, pollen and spores from the air entering the vehicle through the air intake.

Air conditioning regular operation

In order to ensure continuously efficient performance, cooling must be operated for a few minutes once a month, irrespective of the weather and time of year. Operation with cooling is not possible when outside temperature is too low.

Service

For optimal cooling performance, it is recommended that the climate control system be checked annually, starting three years after initial vehicle registration, including:

- Functionality and pressure test
- Heating functionality
- Leakage check
- Check of drive belts
- Cleaning of condenser and evaporator drainage
- Performance check

Driving and operating

Driving hints 101
Starting and operating 101
Engine exhaust 106
Manual transmission 107
Manual transmission automa-
ted 108
Brakes 112
Ride control systems 113
Cruise control 115
Object detection systems 116
Fuel 118
Towing 123

Driving hints

Control of the vehicle

Never coast with engine not running (except during Autostop)

Many systems will not function in this situation (e.g. brake servo unit, power steering). Driving in this manner is a danger to yourself and others. All systems function during an Autostop, but there will be a controlled reduction in power steering assist and vehicle speed is reduced.

Stop-start system ⇨ 103.

Pedals

To ensure the pedal travel is uninhibited, there must be no mats in the area of the pedals.

Starting and operating

New vehicle running-in

Do not brake unnecessarily hard for the first few journeys.

During the first drive, smoke may occur because of wax and oil evaporating off the exhaust system. Park the vehicle in the open for a while after the first drive and avoid inhaling the fumes.

During the running-in period fuel and engine oil consumption may be higher and the cleaning process of the diesel particle filter may take place more often. Autostop may be inhibited to allow for charging the battery.

Diesel particle filter ⇨ 106.

Ignition switch positions

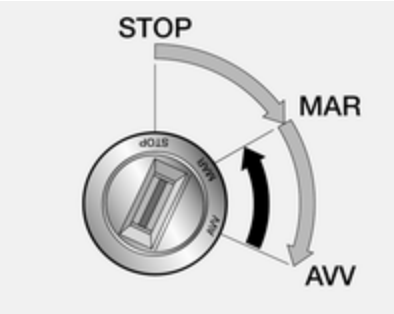

STOP = Steering wheel lock released, ignition off

MAR = Ignition on, for diesel engine: preheating

AVV = Starting

Starting the engine

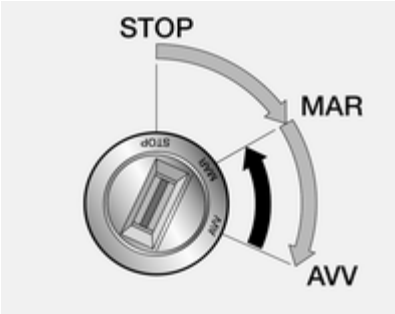

Manual transmission: operate clutch and brake.

Manual transmission automated: operate brake, the transmission automatically shifts to **N** (neutral)

Do not operate the accelerator pedal.

Diesel engine: turn the key to position **MAR** for preheating until control indicator ⌇ extinguishes.

Turn the key briefly to position **AVV** and release.

Before restarting or to switch off the engine, turn the key back to position **STOP**.

Autostop

During an Autostop, the engine is restarted automatically by depressing the clutch pedal. Vehicles with manual transmission automated (MTA): shift to a forward gear, release brake pedal or move lever to **+**, **–** or **R** to enable an automatic restart.

Stop-start system ⇨ 103.

Starting the vehicle at low temperatures

The start of the engine without additional heaters is possible down to -25 °C for diesel engines and -30 °C for petrol engines. Required is an engine oil with the correct viscosity, the correct fuel, performed services and a sufficiently charged battery.

Turbo engine warm-up

Upon start-up, engine available torque may be limited for a short time, especially when the engine temperature is cold. The limitation is to allow the lubrication system to fully protect the engine.

Vehicle shutdown

Fuel cut-off system

In the event of a collision of a certain severity, the fuel system is cut-off and the engine is switched off automatically, for safety reasons. A corresponding warning message may also appear in the Driver Information Centre ⇨ 79.

Note
In addition, the vehicle is automatically unlocked and the interior lights are illuminated.

Turn the ignition key to position **STOP** to prevent battery discharge and seek the assistance of a workshop immediately. Have the vehicle checked for fuel leaks in the engine compartment, beneath the vehicle and near the fuel tank.

To reset the fuel cut-off system and enable the vehicle to be driven:

1. Turn the ignition key to position **MAR** ⇨ 102
2. Fully actuate the right turn signal light ⇨ 90
3. Deactivate the right turn signal light
4. Fully actuate the left turn signal light
5. Deactivate the left turn signal light
6. Repeat steps 2, 3, 4 and 5.
7. Turn the ignition key to position **STOP**.

⚠ Danger

If you can smell fuel in the vehicle, or a fuel leak is present, have the cause of this remedied immediately by a workshop. Do not reset the fuel cut-off system, to avoid the risk of fire.

Fuel system messages ⇨ 85.

Overrun cut-off

The fuel supply is automatically cut-off during overrun, i.e. when the vehicle is driven with a gear engaged but accelerator is released.

Stop-start system

The stop-start system helps to save fuel and to reduce exhaust emissions. When conditions allow, it switches off the engine as soon as the vehicle is at a low speed or at a standstill, e.g. at a traffic light or in a traffic jam. It starts the engine automatically as soon as the clutch is depressed.

A battery sensor ensures that an Autostop is only performed if the battery is sufficiently charged for a restart.

Activation

The stop-start system is available as soon as the engine is started, the vehicle starts-off and the conditions as stated below in this section are fulfilled.

Deactivation

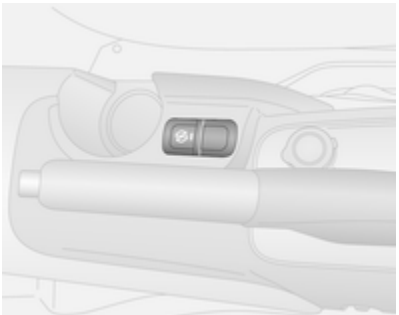

Deactivate the stop-start system manually by pressing the button in the centre console. LED in the button illuminates to confirm deactivation.

Autostop

If the vehicle is at a low speed or at a standstill, activate an Autostop as follows:

- Depress the clutch pedal
- set the lever to neutral
- release the clutch pedal

The engine will be switched off while the ignition stays on.

An Autostop is indicated when control indicator flashes in the Driver Information Centre ⇨ 79.

During an Autostop, the heating and brake performance will be maintained.

Caution
The steering assist can be reduced during an Autostop.

Conditions for an Autostop

The stop-start system checks if each of the following conditions is fulfilled. Otherwise an Autostop will be inhibited.

- The stop-start system is not manually deactivated
- the bonnet is fully closed
- the driver's door is closed and the driver's seat belt is fastened
- the battery is sufficiently charged and in good condition
- the engine is warmed up
- the engine coolant temperature is not too high
- the engine exhaust temperature is not too high, e.g. after driving with high engine load

- the ambient temperature is not too low
- the climate control system allows an Autostop
- the self-cleaning function of the diesel particle filter is not active
- the vehicle has moved since the last Autostop
- the brake vacuum is sufficient
- the windscreen wipers are not operating at fast speed
- reverse gear is not selected
- heated rear window is not operating

Ambient temperature near to the freezing point can inhibit an Autostop.

For manual transmission automated vehicles, an Autostop may be inhibited until a speed of approx. 10 km/h is reached.

New vehicle running-in ⇨ 101.

Battery discharge protection

To ensure reliable engine restarts, several battery discharge protection features are implemented as part of the stop-start system.

Restart the engine

Manual transmission

The selector lever must be in neutral to enable an automatic restart.

Depress the clutch pedal to restart the engine.

Manual transmission automated

If the lever is in position **N**, select another gear, otherwise release the brake pedal or move the lever to **+**, **–** or **R** to enable an automatic restart.

When one of the following conditions occurs during an Autostop, the engine will need to be restarted manually using the key.

- the driver's seat belt is unfastened and the driver's door is opened
- three minutes have elapsed since the engine was switched off

If an electrical accessory, e.g. a portable CD player, is connected to the power outlet, a brief power drop during the restart may be noticeable.

Parking

- Do not park the vehicle on an easily ignitable surface. The high temperature of the exhaust system could ignite the surface.
- Always apply parking brake. Apply manual parking brake without pressing release button. Apply as firmly as possible on downhill or uphill slopes. Depress the foot brake at the same time to reduce operating force.
- Switch off the engine and ignition. Turn the steering wheel until the steering wheel lock engages.
- If the vehicle is on a level surface or uphill slope, engage first gear. On an uphill slope, turn the front wheels away from the kerb.

  If the vehicle is on a downhill slope, engage reverse gear. Turn the front wheels towards the kerb.
- Lock the vehicle.

Note
In the event of an accident with airbag deployment, the engine is turned off automatically if the vehicle comes to a standstill within a certain time.

Engine exhaust

⚠ Danger

Engine exhaust gases contain poisonous carbon monoxide, which is colourless and odourless and could be fatal if inhaled.

If exhaust gases enter the interior of the vehicle, open the windows. Have the cause of the fault rectified by a workshop.

Avoid driving with an open load compartment, otherwise exhaust gases could enter the vehicle.

Diesel particle filter

The diesel particle filter system filters harmful soot particles out of the exhaust gases. The system includes a self-cleaning function that runs automatically during driving without any notification. The filter is cleaned by periodically burning off the soot particles at high temperature. This process takes place automatically under set driving conditions and may take up to 25 minutes. Typically it needs 15 minutes. Autostop is not available and fuel consumption may be higher during this period. The emission of smells and smoke during this process is normal.

Under certain driving conditions, e.g. short distances, the system cannot clean itself automatically.

If the cleaning of the filter is required and if previous driving conditions did not enable automatic cleaning, it will be indicated by control indicator . Simultaneously a message may appear in the Driver Information Centre ⇨ 79.

Control indicator illuminates when diesel particle filter is full. Start cleaning process as soon as possible to avoid damage to the engine.

Cleaning process

To activate cleaning process, continue driving, keep engine speed above 2000 rpm. Shift down if necessary. Diesel particle filter cleaning is then started.

Caution

If the cleaning process is interrupted, there is a risk of provoking severe engine damage.

Cleaning takes place quickest at high engine speeds and loads.

Control indicator extinguishes as soon as the self-cleaning operation is complete.

Catalytic converter

The catalytic converter reduces the amount of harmful substances in the exhaust gases.

Caution

Fuel grades other than those listed on pages ⇨ 118, ⇨ 164 could damage the catalytic converter or electronic components.

Unburnt petrol will overheat and damage the catalytic converter. Therefore avoid excessive use of the starter, running the fuel tank dry and starting the engine by pushing or towing.

In the event of misfiring, uneven engine running, a reduction in engine performance or other unusual problems, have the cause of the fault rectified by a workshop as soon as possible. In an emergency, driving can be continued for a short period, keeping vehicle speed and engine speed low.

Manual transmission

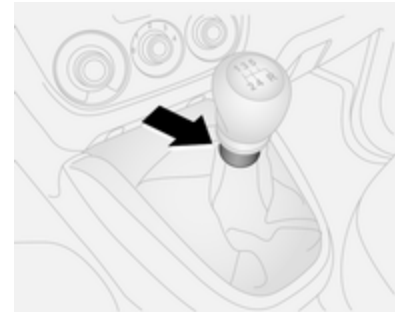

To engage reverse, with the vehicle stationary, wait 3 seconds after depressing the clutch pedal, pull up the collar on the selector lever and engage the gear.

If the gear does not engage, set the lever to neutral, release the clutch pedal and depress again; then repeat gear selection.

Do not grind the clutch unnecessarily.

When operating, depress the clutch pedal completely. Do not use the pedal as a foot rest.

Caution
It is not advisable to drive with the hand resting on the selector lever.

When gearshifting is recommended to improve fuel economy, control indicator ⬆ or ⬇ illuminates in the Driver Information Centre ⇨ 75.

Manual transmission automated

The manual transmission automated (MTA) permits manual (manual mode) or automatic gear shifting (automatic mode), both with automatic clutch control.

Transmission display

Shows the mode and current gear.

Starting the engine

Depress the foot brake when starting the engine.

If the foot brake is not depressed, a warning message appears in the Driver Information Centre in conjuction with a warning chime ⇨ 85 and the engine cannot be started.

Note
The volume of the warning chime can also be adjusted via the Driver Information Centre ⇨ 79.

When the foot brake is depressed, the transmission automatically shifts to **N** (neutral) and the engine can be started. There may be a slight delay.

Autostop

During an Autostop, if the gearshift lever is in position **N**, select another gear, otherwise release the brake pedal or move the lever to **+**, **–** or **R** to enable an automatic restart of the engine.

Stop-start system ⇨ 103.

Selector lever

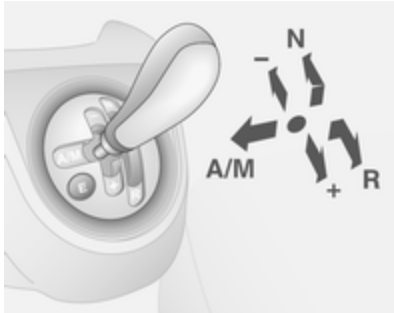

Always move the selector lever in the appropriate direction as far as it will go.

After selecting **A/M**, **+** or **-** and releasing the selector lever, the lever automatically returns to the centre position.

N = Neutral.
● = Drive position.
A/M = Switch between automatic and manual mode.

The transmission display shows **AUTO** when in automatic mode.

R = Reverse gear.

Engage only when vehicle is stationary. The transmission display shows "R" when reverse gear is engaged.

+ = Shift to a higher gear.
- = Shift to a lower gear.

Starting-off

When the engine is started, depress the foot brake and move the selector lever towards **+** to engage first gear. Shift to a higher or lower gear by moving selector lever to **+** or **-**.

Gears can be skipped by moving the selector lever repeatedly at short intervals.

The driver will be alerted to an incorrect gear selection by an audible warning chime in conjunction with a message in the Driver Information Centre ⇨ 79. The system will downshift, selecting the most appropriate gear automatically.

If **R** is selected, reverse gear is engaged. The vehicle starts to move when the foot brake is released. To start off quickly, release the foot brake and accelerate immediately after engaging a gear.

Move the selector lever towards **A/M** to engage automatic mode; the transmission shifts to other gears automatically, dependent on driving conditions.

To engage manual mode, move the selector lever towards **A/M**. The current gear will appear in the transmission display.

Stopping the vehicle

In automatic or manual mode, first gear is engaged and the clutch is released when the vehicle is stopped. In **R**, reverse gear remains engaged.

When stopping on gradients, engage parking brake or depress the foot brake. To prevent overheating of the clutch, an intermittent audible warning chime may sound as a signal to depress the foot brake or apply the parking brake.

Switch off engine if stopping for a lengthy period, e.g. in traffic jams.

When the vehicle is parked and the driver's door is opened, a warning chime will sound if neutral is not selected or the foot brake has not been depressed.

Engine braking

Automatic mode

When driving downhill, the manual transmission automated does not shift into higher gears until a fairly high engine speed has been reached. It shifts down in good time when braking.

Manual mode

To utilise the engine braking effect, select a lower gear in good time when driving downhill.

Rocking the vehicle

Rocking the vehicle is only permissible if the vehicle is stuck in sand, mud, snow or a hole. Move the selector lever between **R** and **A/M** (or between **+** and **-**) in a repeat pattern, while applying light pressure to the accelerator pedal. Do not race the engine and avoid sudden acceleration.

Parking

Apply the parking brake. The most recently engaged gear (see transmission display) remains engaged. With **N**, no gear is engaged.

When the ignition is switched off, the transmission no longer responds to movement of the selector lever.

If the ignition is not switched off, or the parking brake has not been applied, a warning chime will sound upon opening the driver's door.

Manual mode

If engine speed is too low, the transmission automatically shifts to a lower gear.

In manual mode, no automatic shifting to a higher gear takes place at high engine revolutions. If engine speed is too high, the transmission only switches to a higher gear via kickdown.

Kickdown ⇨ 111.

Electronic driving programmes

Eco mode E

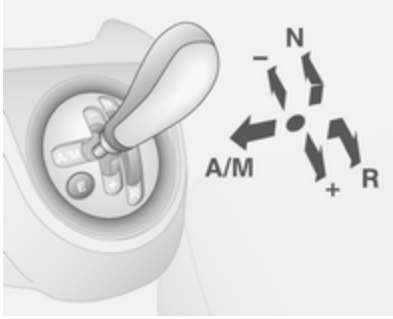

When automatic mode is engaged, the Eco mode can be selected to reduce fuel consumption.

Eco mode selects the most suitable gear depending on the speed of the vehicle, the engine speed and the intensity with which the accelerator is pressed.

Activation

Press the **E** button on the selector lever housing. Control indicator **E** is shown in the transmission display to indicate activation.

Deactivation

Eco mode is switched off by:

- pressing the **E** button again,
- switching to manual mode.

In order to protect the transmission at extremely high clutch temperatures, an intermittent audible warning chime may sound. In such cases, depress the foot brake, select **N** and apply the parking brake to allow the clutch to cool down.

Kickdown

If the accelerator pedal is pressed past the pressure point, the transmission shifts to a lower gear depending on engine speed. Full engine power is available for acceleration.

If engine speed is too high the transmission switches to a higher gear, even in manual mode. Without kickdown this automatic shift is not effected in manual mode.

Fault

In the event of a fault, control indicator is shown in the transmission display.

Continued driving is possible, provided the vehicle is driven with care and anticipation. A warning message may appear in the Driver Information Centre in conjunction with a warning chime ⇨ 85.

Note
The volume of the warning chime can also be adjusted via the Driver Information Centre ⇨ 79.

Have the cause of the fault remedied by a workshop.

Brakes

The brake system comprises two independent brake circuits.

If a brake circuit fails, the vehicle can still be braked using the other brake circuit. However, braking effect is achieved only when the brake pedal is depressed firmly. Considerably more force is needed for this. The braking distance is extended. Seek the assistance of a workshop before continuing your journey.

When the engine is not running, the support of the brake servo unit disappears once the brake pedal has been depressed once or twice. Braking effect is not reduced, but braking requires significantly greater force. It is especially important to bear this in mind when being towed.

Control indicator ⓘ ⇨ 74.

Antilock brake system

Antilock brake system (ABS) prevents the wheels from locking.

ABS starts to regulate brake pressure as soon as a wheel shows a tendency to lock. The vehicle remains steerable, even during hard braking.

ABS control is made apparent through a pulse in the brake pedal and the noise of the regulation process.

For optimum braking, keep the brake pedal fully depressed throughout the braking process, despite the fact that the pedal is pulsating. Do not reduce the pressure on the pedal.

After starting off the system performs a self-test which may be audible.

Control indicator (ABS) ⇨ 75.

Fault

⚠ Warning

If there is a fault in the ABS, the wheels may be liable to lock due to braking that is heavier than normal. The advantages of ABS are no longer available. During hard braking, the vehicle can no longer be steered and may swerve.

Have the cause of the fault remedied by a workshop.

Parking brake

Manual parking brake

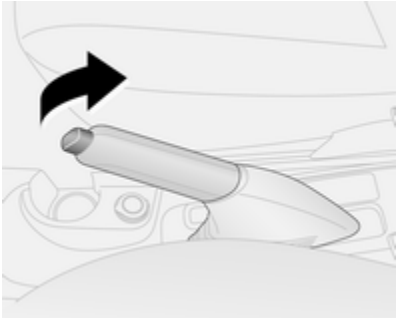

Always apply parking brake firmly without operating the release button, and apply as firmly as possible on a downhill or uphill slope.

To release the parking brake, pull the lever up slightly, press the release button and fully lower the lever.

To reduce the operating forces of the parking brake, depress the foot brake at the same time.

A warning chime will sound if a certain speed is exceeded with the parking brake applied.

Note
The volume of the warning chime can also be adjusted via the Driver Information Centre ⇨ 79.

Control indicator ⓘ ⇨ 74.

Brake assist

If the brake pedal is depressed quickly and forcefully, maximum brake force is automatically applied (full braking).

Maintain steady pressure on the brake pedal for as long as full braking is required. Maximum brake force is automatically reduced when the brake pedal is released.

Hill start assist

The system helps prevent unintended movement when driving away on inclines.

When releasing the foot brake after stopping on an incline, the brakes remain on for a further two seconds. The brakes release automatically as soon as the vehicle begins to accelerate.

If control indicator illuminates while driving, there is a fault in the Hill start assist ⇨ 75. Seek the assistance of a workshop to have the fault remedied.

The Hill start assist is not active during an Autostop.

Stop-start system ⇨ 103.

Ride control systems

Traction Control system

The Anti-Slip Regulator (ASR) is a component of the Electronic Stability Program (ESP).

ASR improves driving stability when necessary, regardless of the type of road surface or tyre grip, by preventing the drive wheels from spinning.

As soon as the drive wheels starts to spin, engine output is reduced and the wheel spinning the most is braked individually. This considerably improves the driving stability of the vehicle on slippery road surfaces.

ASR is operational as soon as the control indicator extinguishes.

When ASR is active, control indicator flashes.

⚠Warning

Do not let this special safety feature tempt you into taking risks when driving.

Adapt speed to the road conditions.

Deactivation

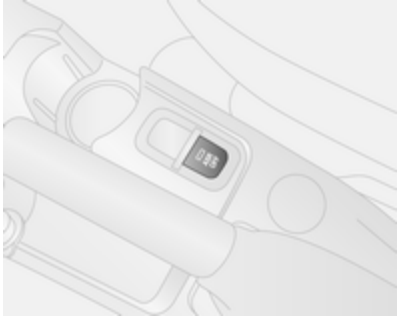

ASR can be switched off when spinning of drive wheels is required: press button **ASR OFF** briefly.

LED in button illuminates and a message appears in the Driver Information Centre.

ASR is reactivated by pressing the **ASR OFF** button again.

ASR is also reactivated the next time the ignition is switched on.

Fault

ASR will switch off automatically in the event of a fault. Control indicator ⚠ will illuminate in the instrument cluster in conjunction with a message in the Driver Information Centre ⇨ 79.

Have the cause of the fault remedied by a workshop.

Control indicator ⚠ ⇨ 76.

Electronic stability program

Electronic Stability Program (ESP) improves driving stability when necessary, regardless of the type of road surface or tyre grip. It also prevents the drive wheels from spinning.

As soon as the vehicle starts to swerve (understeer/oversteer), engine output is reduced and the wheels are braked individually. This considerably improves the driving stability of the vehicle on slippery road surfaces.

ESP is operational as soon as control indicator ⚠ extinguishes.

When ESP comes into action, control indicator ⚠ flashes.

The ESP system is automatically activated when the vehicle is started and cannot be deactivated

⚠Warning

Do not let this special safety feature tempt you into taking risks when driving.

Adapt speed to the road conditions.

Fault

In the event of a fault, ESP will be automatically switched off and control indicator ⚠ will illuminate in the instrument cluster in conjunction with a message in the Driver Information Centre ⇨ 79. The LED in the **ASR OFF** button will also illuminate.

Have the cause of the fault remedied by a workshop.

Control indicator ⚠ ⇨ 76.

Cruise control

The cruise control can store and maintain speeds above approx. 30 km/h. Deviations from the stored speeds may occur when driving uphill or downhill.

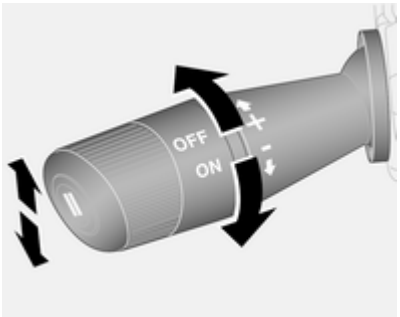

Do not use the cruise control if it is not advisable to maintain a constant speed.

Control indicator ⏲ ⇨ 79.

Switching on

Turn end of lever to the **ON** position; control indicator ⏲ illuminates in the instrument cluster in conjunction with a message in the Driver Information Centre.

Activation

Accelerate to the desired speed and push lever upwards (**+**); the current speed is stored and maintained. Accelerator pedal can be released.

Vehicle speed can be increased by depressing the accelerator pedal. When the accelerator pedal is released, the previously stored speed is resumed.

Cruise control remains activated while gearshifting.

Increase speed

With cruise control active, push lever upwards (**+**) or briefly push lever upwards (**+**) repeatedly: speed increases continuously or in small increments.

Alternatively accelerate to the desired speed and store by pushing lever upwards (**+**).

Reduce speed

With cruise control active, push lever downwards (**-**) or briefly push lever downwards (**-**) repeatedly; speed decreases continuously or in small increments.

Deactivation

Automatic deactivation:

- vehicle speed below approx. 30 km/h,
- the brake pedal is depressed,
- the clutch pedal is depressed,
- the traction control system/Anti-Slip Regulator (ASR) or Electronic Stability Program (ESP) is operating.

Resume stored speed

Press button **II** at a speed above 30 km/h. The stored speed will be obtained.

Switching off

Turn end of lever to the **OFF** position; control indicator extinguishes. The stored speed is deleted. Switching off the ignition also deletes the stored speed.

Object detection systems

Parking assist

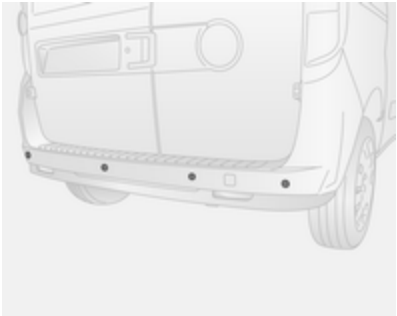

The parking assist makes parking easier by measuring the distance between the vehicle and obstacles, and giving acoustic signals. It is the driver, however, who bears full responsibility for the parking manoeuvre.

The system consists of four ultrasonic parking sensors in the rear bumper.

Control indicator **P** ⇨ 75.

System operation

The parking assist is turned on automatically when reverse gear is engaged.

The intervals between the beeps become shorter as the vehicle gets closer to the obstacle. When the distance is less than 30 cm, the beeping is a continuous tone which stops immediately when the distance is increased.

Fault

In the event of a fault in the system, P illuminates and a message is displayed in the Driver Information Centre ⇨ 79.

The following conditions could affect the system's performance:

- The ultrasonic sensors are not clean. Keep the bumper free of mud, dirt, snow, ice and slush.
- The sensors are covered by frost or ice.
- The rear doors / tailgate are open.
- An object was hanging out of the rear doors / tailgate during the last drive cycle. Once the object has been removed, the parking assist will return to normal operation.
- An object or cover is attached to the rear of the vehicle.
- The bumper is damaged. Take the vehicle to a workshop to repair the system.
- Other conditions, such as vibrations from a jackhammer, are affecting system performance.

In the event the system still does not work properly, seek the assistance of a workshop.

A warning chime is also sounded briefly if a fault is present when reverse gear is engaged ⇨ 85.

Note
The volume of the warning chime can also be adjusted via the Driver Information Centre ⇨ 79.

Important hints for using the parking assist systems

⚠ Warning

Under certain circumstances, various reflective surfaces on objects or clothing as well as external noise sources may cause the system to fail to detect obstacles.

Special attention has to be paid to low obstacles which can damage the lower part of the bumper. If such obstacles leave the detection area of the sensors during approach of the vehicle, a continuous warning tone will sound.

Caution

Performance of the sensor can be reduced when sensors are covered, e.g. by ice or snow.

Performance of the parking assist systems can be reduced due to heavy loading.

Special conditions apply if there are taller vehicles involved (e.g. off-road vehicles, mini vans, vans). Object identification in the upper part of these vehicles cannot be guaranteed.

Objects with a very small reflection cross section, like objects of narrow size or soft materials, may not be detected by the system.

Parking assist will not avoid a collision with objects which are out of the detection range of the sensors.

Note

The parking assist system automatically detects factory-fitted towing equipment. It is deactivated when the connector is plugged in.

The sensor may detect a non-existent object (echo disturbance) caused by external acoustic or mechanical disturbances.

Fuel

Fuel for petrol engines

Only use unleaded fuel that complies with European standard EN 228 or E DIN 51626-1 or equivalent.

Your engine is capable of running with E10 fuel that fulfills these standards. E10 fuel contains up to 10 % bioethanol.

Use fuel with the recommended octane rating ⇨ 164. Use of fuel with too low an octane rating can reduce engine power and torque and slightly increases fuel consumption.

Caution

Do not use fuel or fuel additives that contain metallic compounds such as manganese-based additives. This may cause engine damage.

Caution

Use of fuel that does not comply to EN 228 or E DIN 51626-1 or equivalent can lead to deposits or engine damage and may affect your warranty.

Caution

Use of fuel with too low an octane rating could lead to uncontrolled combustion and engine damage.

Fuel for diesel engines

Only use diesel fuel that complies with EN 590.

In countries outside the European Union use Euro-Diesel fuel with a sulphur concentration below 50 ppm.

Caution

Use of fuel that does not comply to EN 590 or similar can lead to engine powerloss, increased wear or engine damage and may affect your warranty.

Do not use marine diesel oils, heating oils, Aquazole and similar diesel-water emulsions. Diesel fuels must not be diluted with fuels for petrol engines.

Fuel for natural gas operation

Use natural gas with a methane content of approx. 78 - 99 %. L-gas (low) has approx. 78 - 87 % and H-gas (high) has approx. 87 - 99 %. Biogas with the same methane content can also be used if it has been chemically prepared and desulphurised.

Only use natural gas or biogas that complies with DIN 51624.

Liquid gas or LPG must not be used.

Fuel selector

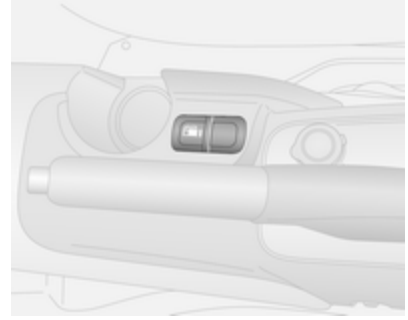

Pressing button ⛽ in the centre console switches between petrol and natural gas operation. The LED ▬ status shows the current operating mode.

▬ off = natural gas operation.
▬ illuminates = petrol operation.

As soon as the natural gas tanks are empty, petrol operation is automatically engaged. Control indicator ⛽ illuminates in the Driver Information Centre ⇨ 79 until the ignition is switched off.

A slight loss of power and torque can be expected in petrol operation. You must therefore adapt your driving style (e.g. during overtaking manoeuvres) and vehicle loads (e.g. towing loads) accordingly.

Every six months run the petrol tank down until control indicator ○ illuminates and then refuel. This is necessary to maintain fuel quality as well as system function necessary for petrol operation.

Fill the tank completely at regular intervals to prevent corrosion in the tank.

Refuelling

Fuel filler flap is located at left rear side of vehicle.

⚠ Danger

Before refuelling, switch off engine and any external heaters with combustion chambers. Switch off any mobile phones.

Follow the operating and safety instructions of the filling station when refuelling.

⚠ Danger

Fuel is flammable and explosive. No smoking. No naked flames or sparks.

If you can smell fuel in your vehicle, have the cause of this remedied immediately by a workshop.

Caution

In case of misfuelling, do not switch on ignition.

Release the fuel filler flap by pulling the flap by hand.

Insert key into fuel filler cap and turn anticlockwise to unlock.

To remove fuel filler cap, rotate anticlockwise.

Caution

To avoid damage, do not attempt to operate the sliding side door when the fuel filler flap is open.

Note
Depending on model, the sliding side door may be fitted with a safety system that prevents the door from being opened fully when the fuel filler flap is open.

Sliding side door ⇨ 23.

The fuel filler cap can be retained in the bracket on the fuel filler flap.

To refuel, fully insert the pump nozzle and switch it on.

After the automatic cut-off, the fuel tank can be topped up with a maximum of two doses of fuel.

Caution
Wipe off any overflowing fuel immediately.

To close, replace fuel filler cap and turn clockwise.

Insert key into fuel filler cap and turn clockwise to lock, then remove key.

Close the fuel filler flap.

Natural gas refuelling

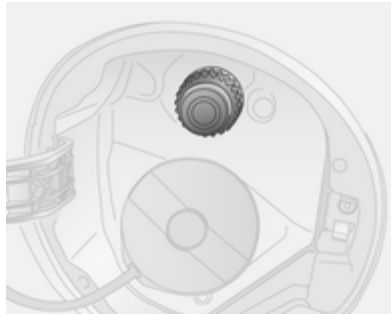

Open the fuel filler flap.

⚠Warning
Refuel only with a maximum output pressure of 250 bar. Use only temperature compensated filling stations.

The refuelling procedure must be completed, i.e. the filler neck must be vented.

The capacity of the natural gas tank depends on outside temperature, filling pressure and type of refuelling system.

Close the fuel filler flap after refuelling.

Terms for "**natural gas vehicles**" abroad:

German	Erdgasfahrzeuge
English	NGVs = Natural Gas Vehicles
French	Véhicules au gaz naturel – or – Véhicules GNV
Italian	Metano auto

Terms for "**natural gas**" abroad:

German	Erdgas
English	CNG = Compressed Natural Gas
French	GNV = Gaz Naturel (pour) Véhicules - or - CGN = carburantgaz naturel
Italian	Metano (per auto)

Fuel filler cap

Only use genuine fuel filler caps. Diesel-engined vehicles have special fuel filler caps.

Fuel cut-off system

In the event of a collision of a certain severity, the fuel system is cut-off and the engine is switched off automatically, for safety reasons.

Resetting the fuel cut-off system; refer to "Fuel system messages" ⇨ 85.

Fuel consumption - CO_2-Emissions

The fuel consumption (combined) of the Opel Combo is within a range of 7.7 to 4.8 l/100 km.

The CO_2 emission (combined) is within a range of 179 to 126 g/km.

For the values specific to your vehicle, refer to the EEC Certificate of Conformity provided with your vehicle or other national registration documents.

General information

The official fuel consumption and specific CO_2 emission figures quoted relate to the EU base model with standard equipment.

Fuel consumption data and CO_2 emission data are determined according to regulation R (EC) No. 715/2007 (in the applicable version), taking into consideration the vehicle weight in running order, as specified by the regulation.

The figures are provided only for the purpose of comparison between different vehicle variants and must not be taken as a guarantee for the actual fuel consumption of a particular vehicle.

Additional equipment may result in slightly higher results than the stated fuel consumption and CO_2 figures.

Furthermore, fuel consumption is dependent on personal driving style as well as road and traffic conditions.

Natural gas

The fuel consumption information was obtained using reference fuel G20 (methane proportion 99 - 100 mol%) under prescribed driving conditions. When using natural gas with a lower proportion of methane, the fuel consumption can differ from the specified values.

Towing

General information

Only use towing equipment that has been approved for your vehicle. Vehicles with natural gas engine may require special towing equipment.

Entrust retrofitting of towing equipment to a workshop. It may be necessary to make changes that affect the cooling system, heat shields or other equipment.

Fitting of towing equipment could cover the opening of the towing eye. If this is the case use the coupling ball bar for towing. Always keep the coupling ball bar in the vehicle.

Driving characteristics and towing tips

Before attaching a trailer, lubricate the coupling ball. However, do not do so if a stabiliser, which acts on the coupling ball, is being used to reduce snaking movements.

For trailers with low driving stability and caravan trailers with a permitted gross vehicle weight of more than 1300 kg the use of a stabiliser is strongly recommended when driving above 80 km/h.

If the trailer starts snaking, drive more slowly, do not attempt to correct the steering and brake sharply if necessary.

When driving downhill, drive in the same gear as if driving uphill and drive at a similar speed.

Adjust tyre pressure to the value specified for full load ⇨ 174.

Trailer towing

Trailer loads

The permissible trailer loads are vehicle and engine-dependent maximum values which must not be exceeded. The actual trailer load is the difference between the actual gross weight of the trailer and the actual coupling socket load with the trailer coupled.

The permissible trailer loads are specified in the vehicle documents. In general, they are valid for gradients up to max. 12 %.

The permitted trailer load applies up to the specified incline and up to an altitude of 1000 metres above sea level. Since engine power decreases as altitude increases due to the air becoming thinner, therefore reducing climbing ability, the permissible gross train weight also decreases by 10 % for every 1000 metres of additional altitude. The gross train weight does not have to be reduced when driving on roads with slight inclines (less than 8 %, e.g. motorways).

The permissible gross train weight must not be exceeded. This weight is specified on the identification plate ⇨ 161.

Vertical coupling load

The vertical coupling load is the load exerted by the trailer on the coupling ball. It can be varied by changing the weight distribution when loading the trailer.

The maximum permissible vertical coupling load (75 kg) is specified on the towing equipment identification plate and in the vehicle documents. Always aim for the maximum load, especially in the case of heavy trailers. The vertical coupling load should never fall below 25 kg.

Rear axle load

The permissible axle loads (see identification plate or vehicle documents) must not be exceeded.

Vehicle care

General Information 125
Vehicle checks 126
Bulb replacement 132
Electrical system 138
Vehicle tools 142
Wheels and tyres 142
Jump starting 152
Towing 153
Appearance care 155

General Information

Accessories and vehicle modifications

We recommend the use of genuine parts and accessories and factory approved parts specific for your vehicle type. We cannot assess or guarantee reliability of other products - even if they have a regulatory or otherwise granted approval.

Do not make any modifications to the electrical system, e.g. changes of electronic control units (chip tuning).

Caution
When transporting the vehicle on a train or on a recovery vehicle, the mud flaps might be damaged.

Vehicle storage

Storage for a long period of time

If the vehicle is to be stored for several months:

- Wash and wax the vehicle.
- Have the wax in the engine compartment and underbody checked.
- Clean and preserve the rubber seals.
- Fill up fuel tank completely.
- Change the engine oil.
- Drain the washer fluid reservoir.
- Check the coolant antifreeze and corrosion protection.
- Adjust tyre pressure to the value specified for full load.
- Park the vehicle in a dry, well ventilated place. Engage first or reverse gear to prevent the vehicle from rolling.
- Do not apply the parking brake.

- Open the bonnet, close all doors and lock the vehicle.
- Disconnect the clamp from the negative terminal of the vehicle battery. Beware that all systems are not functional, e.g. anti-theft locking system.

Putting back into operation

When the vehicle is to be put back into operation:

- Connect the clamp to the negative terminal of the vehicle battery. Activate the electronics of the power windows.
- Check tyre pressure.
- Fill up the washer fluid reservoir.
- Check the engine oil level.
- Check the coolant level.
- Fit the number plates if necessary.

End-of-life vehicle recovery

Information on end-of-life vehicle recovery centres and the recycling of end-of-life vehicles is available on our website. Only entrust this work to an authorised recycling centre.

Natural gas vehicles must be recycled by a service centre authorised for natural gas vehicles.

Vehicle checks

Performing work

⚠ Warning

Only perform engine compartment checks when the ignition is off.

The cooling fan may start operating even if the ignition is off.

⚠ Danger

The ignition system uses extremely high voltage. Do not touch.

Bonnet

Opening

Pull the release lever and return it to its original position.

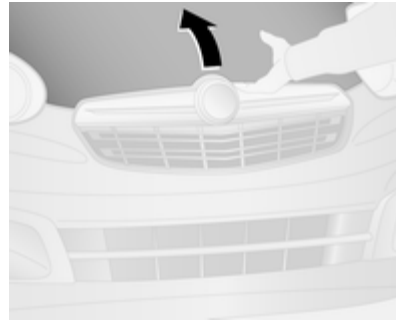

Push the safety catch and open the bonnet.

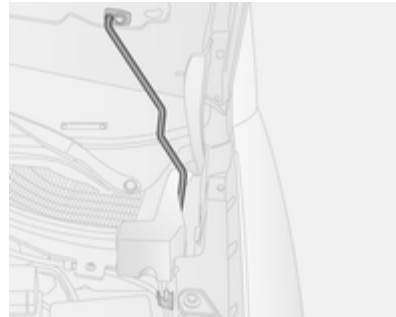

Secure the bonnet support.

If the bonnet is opened during an Autostop, the engine will be restarted automatically for safety reasons.

Stop-start system ⇨ 103.

Closing

Lower the bonnet and allow it to drop into the catch. Check that the bonnet is engaged.

Engine oil

Check the engine oil level manually on a regular basis to prevent damage to the engine. Ensure that the correct specification of oil is used. Recommended fluids and lubricants ⇨ 159.

Check with the vehicle on a level surface. The engine must be at operating temperature and switched off for at least 5 minutes.

Pull out the dipstick, wipe it clean, insert it to the stop on the handle, pull out and read the engine oil level.

Insert dipstick to the stop on the handle and make half a turn.

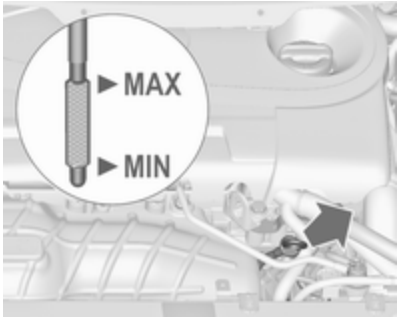

When the engine oil level has dropped to the **MIN** mark, top up engine oil.

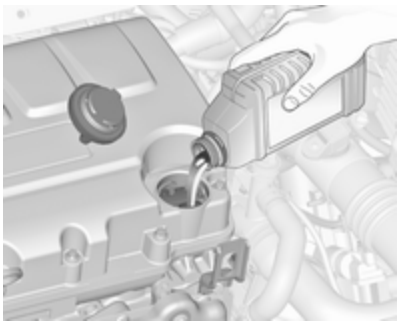

We recommend the use of the same grade of engine oil that was used at last change.

The engine oil level must not exceed the **MAX** mark on the dipstick.

Caution
Overfilled engine oil must be drained or suctioned out.

Capacities ⇨ 173.

Fit the cap on straight and tighten it.

Engine coolant

The coolant provides freeze protection down to approx. -28 °C. In northern countries with very low temperatures, the factory filled coolant provides frost protection down to approx. -37°C.

Caution
Only use approved antifreeze.

Coolant level

Caution
Too low a coolant level can cause engine damage.

If the cooling system is cold, the coolant level should be between the **MIN** and **MAX** mark. Top up if the level is low.

⚠Warning

Allow the engine to cool before opening the cap. Carefully open the cap, relieving the pressure slowly.

To top up use a 1:1 mixture of released coolant concentrate mixed with clean tap water. If no coolant concentrate is available, use clean tap water. Install the cap tightly. Have the coolant concentration checked and have the cause of the coolant loss remedied by a workshop.

Power steering fluid

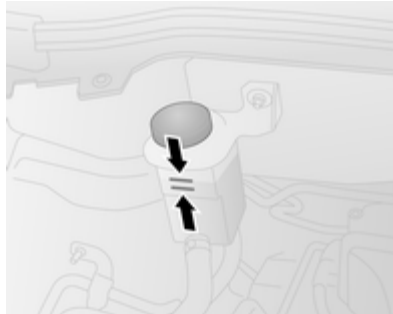

If the fluid level in the reservoir falls below the **MIN** mark consult a workshop.

Washer fluid

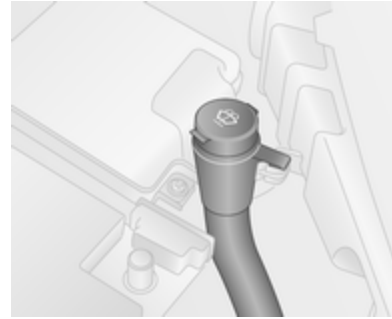

Fill with clean water mixed with a suitable quantity of windscreen washer fluid which contains antifreeze.

Caution

Only washer fluid with a sufficient antifreeze concentration provides protection at low temperatures or a sudden drop in temperature.

Brakes

A squealing noise, or illumination of brake pad wear control indicator ⦿ indicates that the brake lining is at its minimum thickness.

Continued driving is possible but have the brake linings replaced as soon as possible.

Once new brake linings are installed, do not brake unnecessarily hard for the first few journeys.

Brake pad wear indicator ⦿ ⇨ 75.

Brake fluid

⚠Warning

Brake fluid is poisonous and corrosive. Avoid contact with eyes, skin, fabrics and painted surfaces.

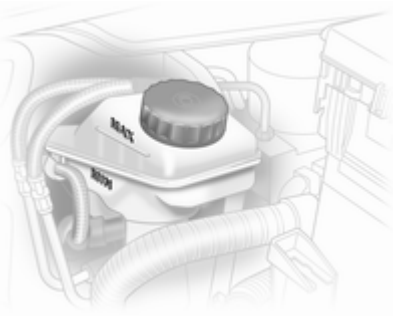

The brake fluid level must be between the **MIN** and **MAX** marks.

When topping up, ensure maximum cleanliness as contamination of the brake fluid can lead to brake system malfunctions. Have the cause of the loss of brake fluid remedied by a workshop.

Only use high-performance brake fluid approved for the vehicle.

Brake and clutch fluid ⇨ 159.

Battery

The vehicle battery is maintenance-free provided that the driving profile allows sufficient charging of the battery. Short-distance-driving and frequent engine starts can discharge the battery. Avoid the use of unnecessary electrical consumers.

Batteries do not belong in household waste. They must be disposed of at an appropriate recycling collection point.

Laying up the vehicle for more than 4 weeks can lead to battery discharge. Disconnect the clamp from the negative terminal of the vehicle battery.

Ensure the ignition is switched off before connecting or disconnecting the vehicle battery.

Replacing the battery

Note
Any deviation from the instructions given in this paragraph may lead to a temporary deactivation of the stop-start system.

In vehicles with stop-start system, ensure the correct battery is used when replacing the battery. We recommend that you have the battery replaced by a workshop.

Stop-start system ⇨ 103.

Charging the battery

⚠ Warning

On vehicles with stop-start system, ensure that the charging potential does not exceed 14.6 volts when using a battery charger. Otherwise the battery might be damaged.

Jump starting ⇨ 152.

Wiper blade replacement

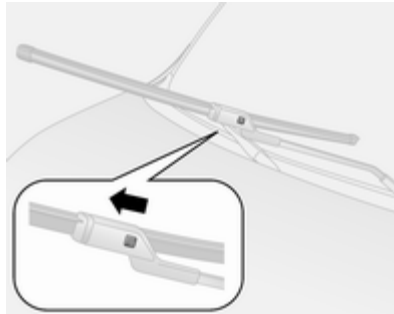

Lift the wiper arm until it stays in the raised position, press button to disengage the wiper blade and remove.

Attach the wiper blade slightly angled to the wiper arm and push until it engages.

Lower wiper arm carefully.

Wiper blade on rear swing door

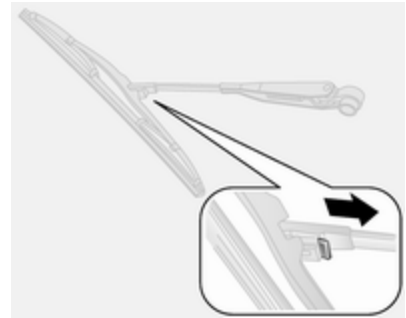

Lift wiper arm, press and hold retaining clip and detach wiper blade.

Attach the wiper blade slightly angled to the wiper arm and push until it engages.

Lower wiper arm carefully.

Wiper blade on tailgate

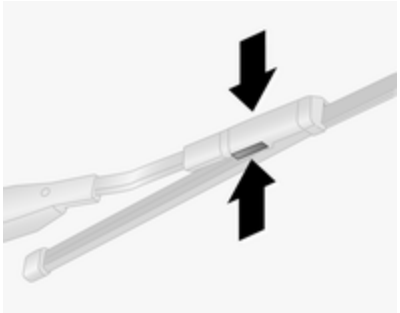

Lift wiper arm, press retaining clips to detach wiper blade.

Attach the wiper blade to the wiper arm and push until it engages.

Lower wiper arm carefully.

Bulb replacement

Switch off the ignition and switch off the relevant switch or close the doors.

Only hold a new bulb at the base! Do not touch the bulb glass with bare hands.

Use only the same bulb type for replacement.

Replace headlight bulbs from within the engine compartment.

Bulb check

After a bulb replacement, switch on the ignition, operate and check the lights.

Halogen headlights

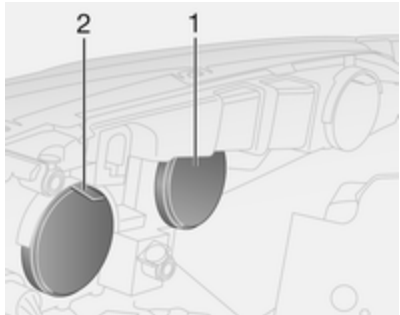

Headlights have separate systems for low beam/sidelight **1** (outer bulb), high beam/daytime running light **2** (inner bulb).

To access bulbs, pull off protective covers.

Low beam

1. Remove protective cover.
2. Detach connector from bulb.
3. Disengage wire clip and remove bulb from reflector.

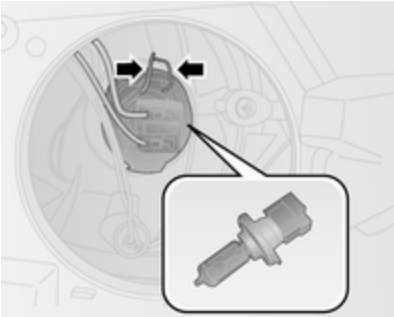

4. Insert new bulb in reflector so that the locating tab of the bulb aligns with the reflector recess.
5. Attach connector to bulb.
6. Engage wire clip.
7. Install protective cover.

High beam

1. Remove protective cover.
2. Detach connector from bulb.
3. Disengage wire clip and remove bulb from reflector.

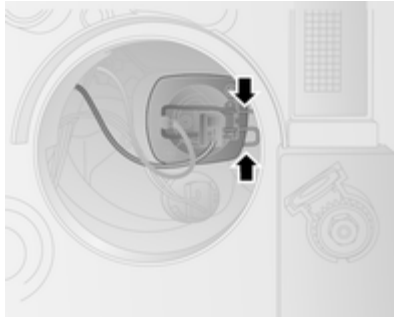

4. Insert new bulb in reflector so that the bulb aligns with the reflector recess.
5. Engage wire clip and attach connector onto bulb.
6. Install protective cover.

Sidelight

1. Remove protective cover.

   Withdraw bulb holder from reflector by turning anticlockwise.

2. Remove bulb from socket, insert new bulb.
3. Insert bulb holder in reflector.
4. Rotate clockwise to engage.
5. Install protective cover.

Daytime running light

1. Remove protective cover.

2. Withdraw bulb holder from reflector by turning anticlockwise.
3. Remove bulb from socket, insert new bulb.
4. Insert bulb holder in reflector.
5. Rotate clockwise to engage.
6. Install protective cover.

Front turn signal light

1. Remove protective cover.

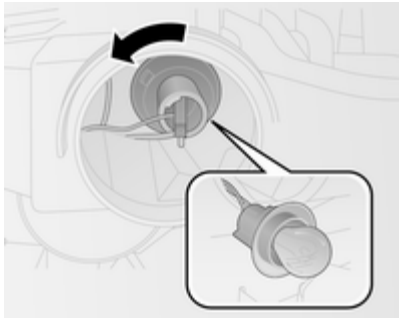

2. Withdraw bulb holder from reflector by turning anticlockwise.
3. Push bulb into holder slightly, rotate anticlockwise, remove and renew bulb.
4. Insert bulb holder in reflector.
5. Rotate clockwise to engage.
6. Install protective cover.

Tail lights

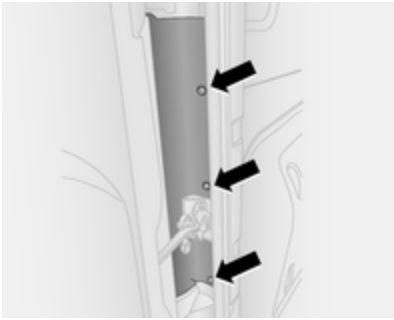

1. Remove the three retaining screws.
2. Remove light housing from vehicle.
3. Disengage connector plug from bulb holder.

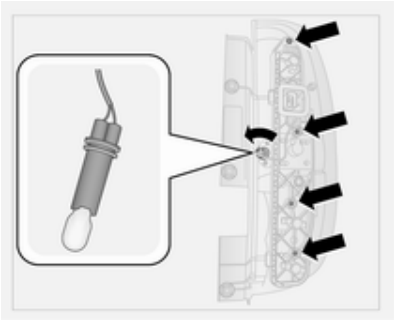

4. Unscrew the four retaining screws using a screwdriver. Turn bulb holder for reverse light anticlockwise and replace bulb.
5. Remove bulb holder and seal from light housing.
6. Push bulb into socket slightly, rotate anticlockwise, remove and renew bulb.

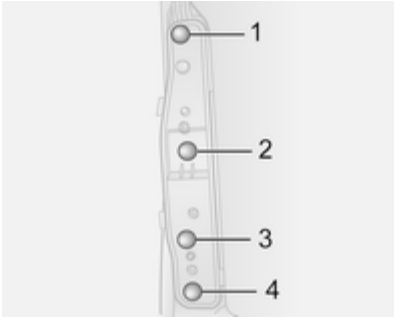

Brake light (**1**)

Turn signal light (**2**)

Tail light (**3**)

Tail light/fog light (**4**)

7. Install seal on bulb holder ensuring it is fitted correctly. Install bulb holder in light housing ensuring that it engages correctly. Tighten the four retaining screws using a screwdriver.
8. Install reverse light bulb holder and turn clockwise to tighten.
9. Engage connector plug.
10. Insert light housing in body, ensuring correct positioning. Tighten the three retaining screws.

Side turn signal lights

Have bulbs replaced by a workshop.

Centre high-mounted brake light

Have bulbs replaced by a workshop.

Number plate light

Tailgate

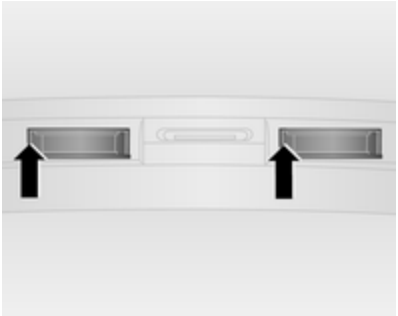

1. Insert screwdriver as indicated by the arrows, press to the side and release the bulb housing.

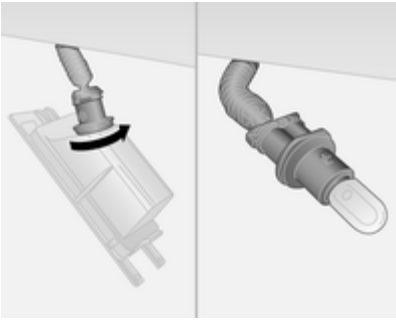

2. Turn the bulb holder anticlockwise to remove from the bulb housing. Remove the bulb by pulling.
3. Replace the bulb.
4. Insert bulb holder in bulb housing and rotate clockwise
5. Install the bulb housing ensuring it engages correctly.

Back doors

1. Insert screwdriver as indicated by the arrows, press to the left and release the bulb housing.
2. Press bulb slightly towards spring clip and remove.
3. Replace the bulb.
4. Install the bulb housing ensuring it engages correctly.

Interior lights

Front and rear courtesy light

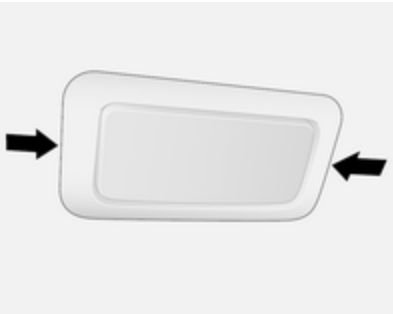

1. Remove lens using a flat blade screwdriver.
2. Open the rear cover.
3. Renew bulb.
4. Close rear cover.
5. Reinstall lens.

Front courtesy light, reading lights

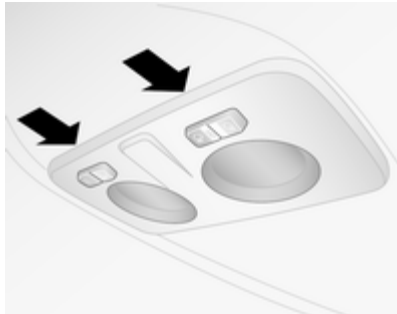

1. Remove lens using a flat blade screwdriver.
2. Open the rear cover.
3. Renew bulbs.
4. Close rear cover.
5. Reinstall lens.

Removable rear courtesy light

1. Press the button at the top of the lamp assembly to release it.

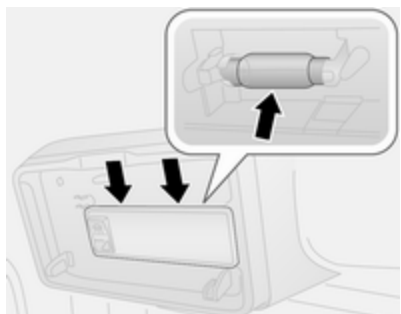

2. Prise the lamp assembly out at the points illustrated.
3. Renew bulb, ensuring it engages correctly.
4. Reinstall lamp assembly.

Instrument panel illumination

Have bulbs replaced by a workshop.

Electrical system

Fuses

Data on the replacement fuse must match the data on the defective fuse.

There are two fuse boxes in the vehicle:

- on the right of the engine compartment, next to the battery
- behind a cover on the lower part of the instrument panel, on the driver's side

Before replacing a fuse, turn off the respective switch and the ignition.

A blown fuse can be recognised by its melted wire. Do not replace the fuse until the cause of the fault has been remedied.

Some functions are protected by several fuses.

Fuses may also be inserted without existence of a function.

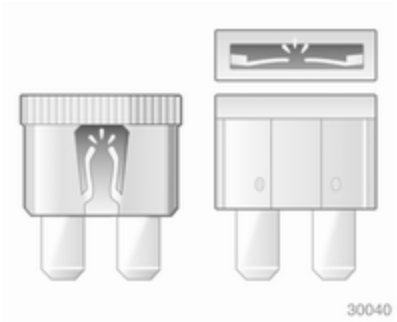

Fuse extractor

Use a fuse extractor to remove fuses.

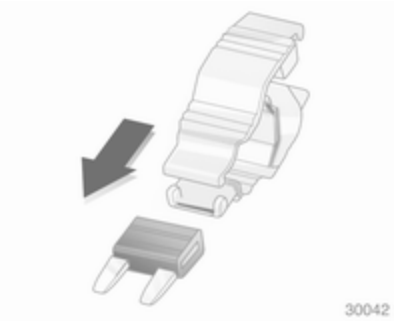

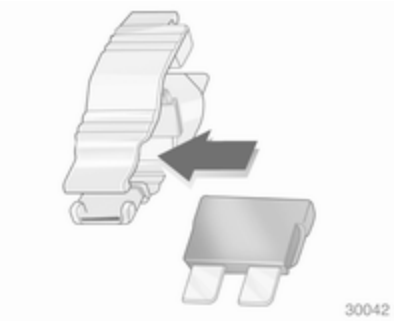

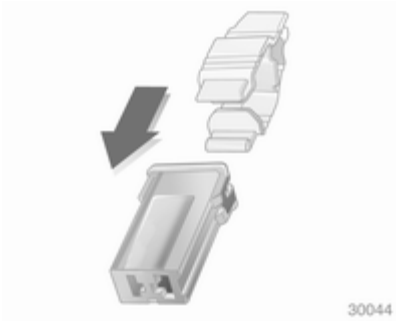

Place the fuse extractor on the various types of fuse from the top or side, and withdraw fuse.

Engine compartment fuse box

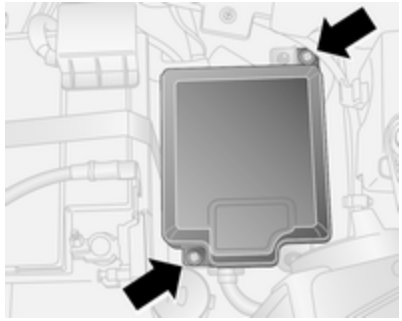

The fuse box is on the right of the engine compartment, next to the battery.

To remove the protective cover and access the fuses, remove the two screws (see illustration).

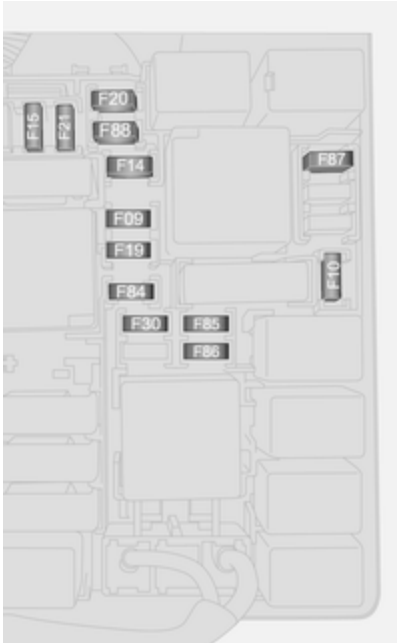

No.	Circuit
F09	Rear door switch
F10	Horn
F14	High beam
F15	PTCI heater
F19	Air conditioning system
F20	Heated rear window
F21	Fuel pump
F30	Fog lights
F84	CNG system
F85	Power outlets
F86	Cigarette lighter, heated seats
F87	Stop-start system
F88	Mirror heating

After having changed defective fuses refit the fuse box cover.

If the fuse box cover is not closed correctly, malfunction may occur.

Instrument panel fuse box

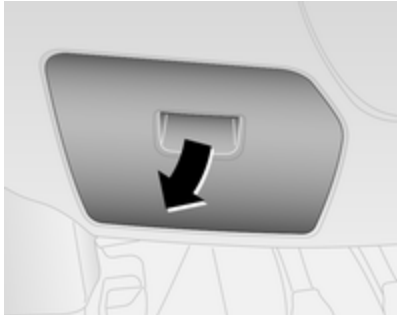

The fuse box is located behind a cover on the lower part of the instrument panel, on the driver's side.

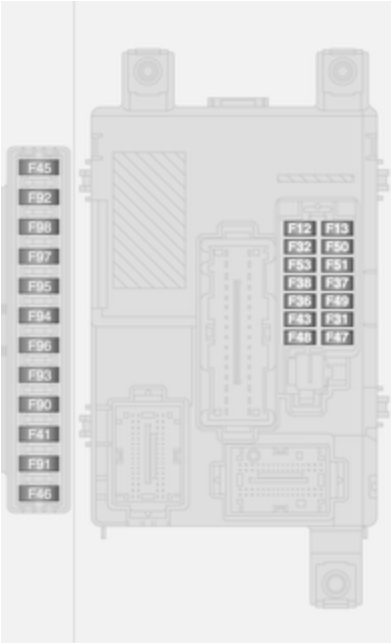

No.	Circuit
F12	Right low beam
F13	Left low beam, headlight range adjustment
F31	Fusebox relays, body control unit relays
F32	Courtesy lights
F36	Diagnostic connector, climate control system, Infotainment system
F37	Instrument panel, braking system
F38	Central locking system
F43	Windscreen washer system
F47	Power windows
F48	Power windows
F49	Exterior mirrors, Infotainment system, parking assist
F51	Infotainment system, braking system, clutch

No.	Circuit
F53	Instrument panel
F94	Power outlet load compartment
F95	Cigarette lighter, power outlet
F96	Cigarette lighter, power outlet
F97	Heated front seat
F98	Heated front seat

Vehicle tools

Tools

Van

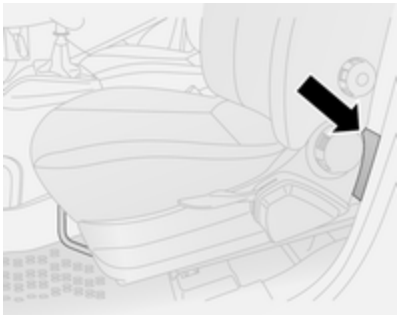

The tools and the vehicle jacking equipment are in the storage area behind the front seat. Pull front handle and slide seat forwards to access ⇨ 34.

Combi, Combo Tour

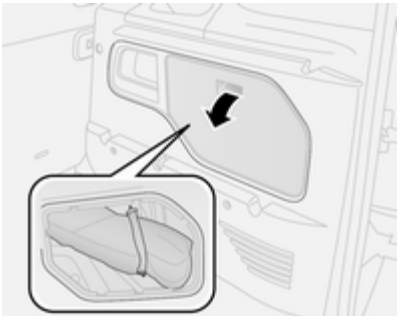

The tools and the vehicle jacking equipment are stored in the load compartment behind a panel on the right-hand side.

Wheel changing ⇨ 147, Spare wheel ⇨ 149.

Wheels and tyres

Tyre condition, wheel condition

Drive over edges slowly and at right angles if possible. Driving over sharp edges can cause tyre and wheel damage. Do not trap tyres on the kerb when parking.

Regularly check the wheels for damage. Seek the assistance of a workshop in the event of damage or unusual wear.

Winter tyres

Winter tyres improve driving safety at temperatures below 7 °C and should therefore be fitted on all wheels.

Tyres of size 185/65 R15, 195/65 R15 and 195/60 R16 C are permitted as winter tyres.

In accordance with country-specific regulations, affix the speed sticker in the driver's field of view.

Tyre designations

E.g. **215/60 R 16 95 H**

215 = Tyre width, mm
60 = Cross-section ratio (tyre height to tyre width), %
R = Belt type: Radial
RF = Type: RunFlat
C = Cargo or commercial use
16 = Wheel diameter, inches
95 = Load index e.g. 95 is equivalent to 690 kg
H = Speed code letter

Speed code letter:

Q = up to 160 km/h
S = up to 180 km/h
T = up to 190 km/h
H = up to 210 km/h
V = up to 240 km/h
W = up to 270 km/h

Tyre pressure

Check the pressure of cold tyres at least every 14 days and before any long journey. Do not forget the spare wheel.

Unscrew the valve cap.

Tyre pressure ⇨ 174.

The tyre pressure data refers to cold tyres. It applies to summer and winter tyres.

Always inflate the spare tyre to the pressure specified for full load.

Incorrect tyre pressures will impair safety, vehicle handling, comfort and fuel economy and will increase tyre wear.

The driver is responsible for correct adjustment of tyre pressures.

⚠Warning

If the pressure is too low, this can result in considerable tyre warm-up and internal damage, leading to tread separation and even to tyre blow-out at high speeds.

Tread depth

Check tread depth at regular intervals.

Tyres should be replaced for safety reasons at a tread depth of 2-3 mm (4 mm for winter tyres).

For safety reasons, it is recommended that the tread depth of the tyres on one axle should not vary by more than 2 mm.

The legally permissible minimum tread depth (1.6 mm) has been reached when the tread has worn down as far as one of the tread wear indicators (TWI). Their position is indicated by markings on the sidewall.

If there is more wear at the front than the rear, swap round front wheels and rear wheels periodically. Ensure that the direction of rotation of the wheels is the same as before.

Tyres age, even if they are not used. We recommend tyre replacement every 6 years.

Changing tyre and wheel size

If tyres of a different size than those fitted at the factory are used, it may be necessary to reprogramme the speedometer as well as the nominal tyre pressure and make other vehicle modifications.

After converting to a different tyre size, have the label with tyre pressures replaced.

⚠ Warning

Use of unsuitable tyres or wheels may lead to accidents and will invalidate the vehicle type approval.

Wheel covers

Wheel covers and tyres that are factory approved for the respective vehicle and comply with all of the relevant wheel and tyre combination requirements must be used.

If the wheel covers and tyres used are not factory approved, the tyres must not have a rim protection ridge.

Wheel covers must not impair brake cooling.

⚠ Warning

Use of unsuitable tyres or wheel covers could lead to sudden pressure loss and thereby accidents.

Tyre chains

Tyre chains are only permitted on the front wheels.

Always use fine mesh chains that add no more than 10 mm to the tyre tread and the inboard sides (including chain lock).

Do not exceed 50 km/h when tyre chains are fitted.

⚠ Warning

Damage may lead to tyre blowout.

Tyre repair kit

Minor damage to the tyre tread can be repaired with the tyre repair kit.

Do not remove foreign bodies from the tyres.

Tyre damage exceeding 4 mm or that is at tyre's sidewall cannot be repaired with the tyre repair kit.

⚠Warning

Do not drive faster than 80 km/h.

Do not use for a lengthy period.

Steering and handling may be affected.

If you have a flat tyre:

Apply the parking brake and engage first or reverse gear.

The tyre repair kit may be located under the front seat, in the glovebox, or on the right side of the load compartment behind a cover.

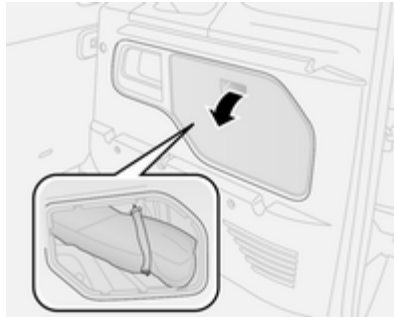

1. Take the tyre repair kit from the vehicle.
2. Remove the compressor.
3. Set the compressor upright near the tyre.
4. Unscrew valve cap from defective tyre.

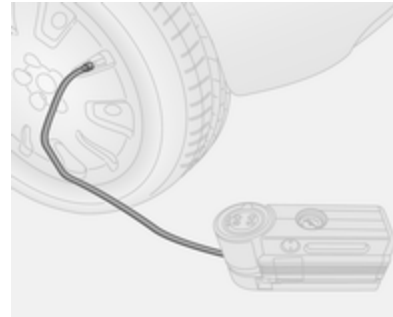

5. Screw the flexible filler hose onto the tyre valve.
6. The switch on the compressor must be set to O.
7. Connect the compressor plug to the power outlet or cigarette lighter socket.

   To avoid discharging the battery, we recommend running the engine.

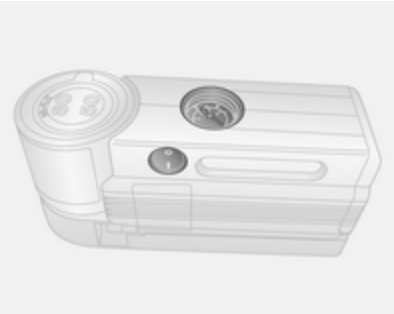

8. Set the rocker switch on the compressor to **I**. The tyre is filled with sealant.
9. All of the sealant is pumped into the tyre. Then the tyre is inflated.

   Tyre pressure ⇨ 174. When the correct pressure is obtained, switch off the compressor.
10. If a pressure of 1.5 bar is not obtained within 5 minutes, remove the tyre repair kit. Move the vehicle one tyre rotation. Reattach the tyre repair kit and continue the filling procedure for 5 minutes. If a pressure of 1.8 bar is still not obtained within 5 minutes, the tyre is too badly damaged. Seek the assistance of a workshop.

    Do not run the compressor longer than 20 minutes.
11. Detach the tyre repair kit.
12. Remove any excess sealant using a cloth.
13. Take the label indicating maximum permitted speed from the sealant bottle and affix in the driver's field of view.
14. Continue driving immediately so that sealant is evenly distributed in the tyre. After driving approx. 10 km (but no more than 10 minutes), stop and check tyre pressure. Screw compressor air hose directly onto tyre valve and compressor when doing this.

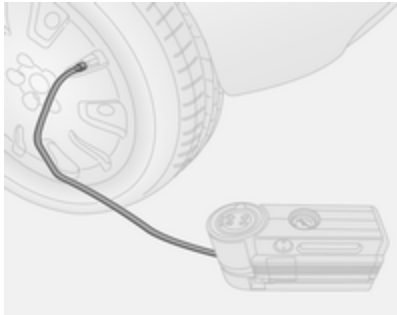

   If tyre pressure is more than 1.8 bar, set it to the correct value. Repeat the procedure until there is no more loss of pressure.

   If the tyre pressure has fallen below 1.8 bar, the vehicle must not be used. Seek the assistance of a workshop.
15. Stow away tyre repair kit in load compartment.

Note
The driving characteristics of the repaired tyre are severely affected, therefore have this tyre replaced.

If unusual noise is heard or the compressor becomes hot, turn compressor off and allow to cool.

Note the expiry date of the kit. After this date its sealing capability is no longer guaranteed. Pay attention to storage information on sealant bottle.

Replace the used sealant bottle. Dispose of the bottle as prescribed by applicable laws.

The compressor and sealant can be used from approx. -20 °C.

Replacing the sealant canister

To replace the sealant canister:

1. Disconnect the compressor air hose.

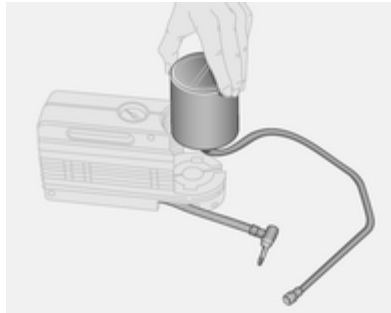

2. Turn the canister anticlockwise to lift it out.
3. Insert the new canister and turn it clockwise.
4. Connect the compressor air hose to the canister and fit the flexible filler tube into its allocated space.

Wheel changing

Some vehicles are equipped with a tyre repair kit instead of a spare wheel ⇨ 145.

Make the following preparations and observe the following information:

- Park the vehicle on a level, firm and non-skid surface. The front wheels must be in the straight-ahead position.
- Apply the parking brake and engage first or reverse gear.
- Remove the spare wheel ⇨ 149.
- Never change more than one wheel at once.
- Use the jack only to change wheels in case of puncture, not for seasonal winter or summer tyre change.
- If the ground on which the vehicle is standing is soft, a solid board (max. 1 cm thick) should be placed under the jack.
- No people or animals may be in the vehicle when it is jacked-up.
- Never crawl under a jacked-up vehicle.

- Do not start the vehicle when it is raised on the jack.
- Clean wheel nuts and thread with a clean cloth before mounting the wheel.

⚠Warning

Do not grease wheel bolt, wheel nut and wheel nut cone.

1. Disengage wheel nut caps with a screwdriver and remove. Pull off the wheel cover using a suitable tool.

2. Attach wheel wrench securely and loosen each wheel nut by half a turn.

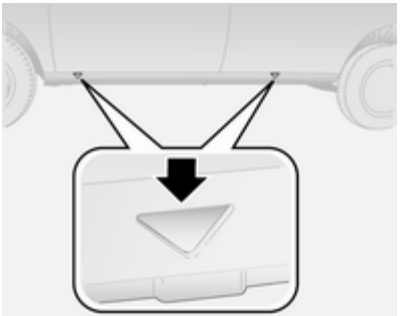

3. Vehicle jacking points are located at the front and rear.

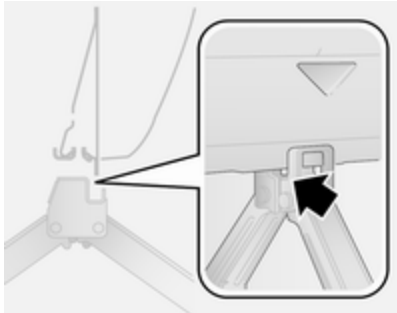

4. Set the jack to the necessary height. Position it directly below the jacking point in a manner that prevents it from slipping.

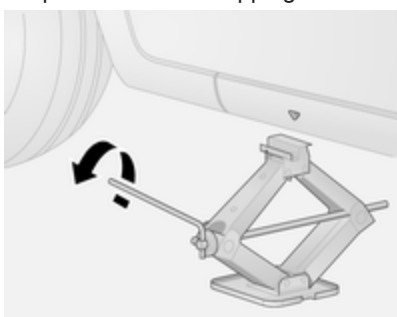

With the jack correctly aligned, rotate until wheel is clear of the ground.

5. Unscrew the wheel nuts.
6. Change the wheel. Spare wheel ⇨ 149.
7. Screw on the wheel nuts.
8. Lower vehicle.
9. Install the wheel wrench ensuring that it locates securely and tighten each nut in a crosswise sequence. Tightening torque is 85 Nm (steel wheel) or 120 Nm (alloy wheel).
10. Align the valve hole in the wheel cover with the tyre valve before installing.

    Install wheel nut caps.
11. Stow the replaced wheel ⇨ 149 and the vehicle tools ⇨ 142.
12. Check the tyre pressure of the installed tyre and the wheel nut torque as soon as possible.

Have the defective tyre renewed or repaired as soon as possible.

Spare wheel

Some vehicles are equipped with a tyre repair kit ⇨ 145 instead of a spare wheel.

The spare wheel can be classified as a temporary spare wheel depending on the size compared to the other mounted wheels and country regulations.

Caution
The use of a spare wheel that is smaller than the other wheels or in combination with winter tyres could affect driveability. Have the defective tyre replaced as soon as possible.

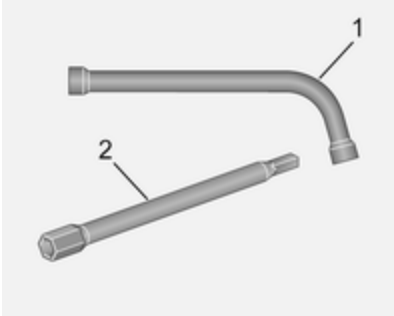

Depending on model variant, the spare wheel is stored beneath the floor or in the load compartment.

1. Attach the extension bar **2** to the wheel wrench **1**. Vehicle tools ⇨ 142.

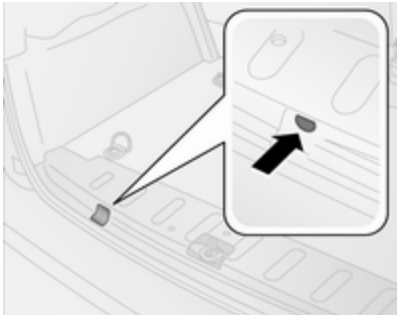

2. Insert the wheel wrench into the aperture in the load compartment floor.
3. Rotate the wheel wrench to lower the spare wheel to the floor.

4. Withdraw spare wheel from beneath the vehicle.

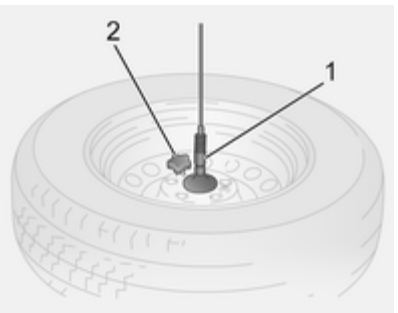

5. Unscrew knob **2** and release cable attachment **1** from spare wheel.
6. Change the wheel.
7. Position the replaced wheel at the rear of the vehicle with the outside of the wheel facing downwards.

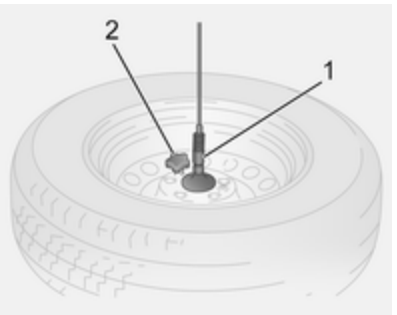

8. Pass the retainer **1** through the hole in the rim, inserting the locating pin into one of the bolt holes and secure with knob **2**.
9. Insert the wheel wrench into the aperture in the load compartment floor and rotate to fully raise the spare wheel.

Have the defective tyre renewed or repaired as soon as possible.

CNG vehicles

Vehicles with CNG; the spare wheel is located in the load compartment.

1. Unscrew two bolts using the wheel wrench and remove spare wheel from bracket. Vehicle tools ⇨ 142.
2. Change the wheel.

3. Position the replaced spare wheel onto the bracket ensuring correct alignment of the locating pin.
4. Secure spare wheel by tightening two bolts using the wheel wrench.

Have the defective tyre renewed or repaired as soon as possible.

Directional tyres

Fit directional tyres such that they roll in the direction of travel. The rolling direction is indicated by a symbol (e.g. an arrow) on the sidewall.

The following applies to tyres fitted opposing the rolling direction:

- Driveability may be affected. Have the defective tyre renewed or repaired as soon as possible.
- Drive particularly carefully on wet and snow-covered road surfaces.

Jump starting

Do not start with quick charger.

A vehicle with a discharged battery can be started using jump leads and the battery of another vehicle.

⚠Warning

Be extremely careful when starting with jump leads. Any deviation from the following instructions can lead to injuries or damage caused by battery explosion or damage to the electrical systems of both vehicles.

⚠Warning

Avoid contact of the battery with eyes, skin, fabrics and painted surfaces. The fluid contains sulphuric acid which can cause injuries and damage in the event of direct contact.

- Never expose the battery to naked flames or sparks.
- A discharged battery can already freeze at a temperature of 0 °C. Defrost the frozen battery before connecting jump leads.
- Wear eye protection and protective clothing when handling a battery.
- Use a booster battery with the same voltage (12 Volts). Its capacity (Ah) must not be much less than that of the discharged battery.
- Use jump leads with insulated terminals and a cross section of at least 16 mm^2 (25 mm^2 for diesel engines).
- Do not disconnect the discharged battery from the vehicle.
- Switch off all unnecessary electrical consumers.
- Do not lean over the battery during jump starting.
- Do not allow the terminals of one lead to touch those of the other lead.
- The vehicles must not come into contact with each other during the jump starting process.
- Apply the parking brake, transmission in neutral.

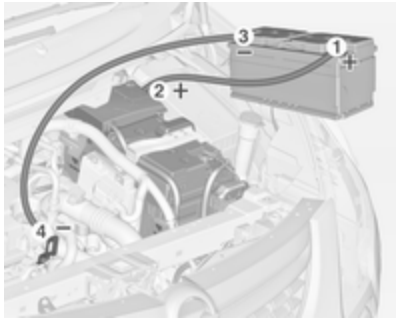

Lead connection order:

1. Connect the red lead to the positive terminal of the booster battery.
2. Connect the other end of the red lead to the positive terminal of the discharged battery.

3. Connect the black lead to the negative terminal of the booster battery.
4. Connect the other end of the black lead to a vehicle grounding point, such as the engine block or an engine mounting bolt. Connect as far away from the discharged battery as possible, however at least 60 cm.

Route the leads so that they cannot catch on rotating parts in the engine compartment.

To start the engine:

1. Start the engine of the vehicle providing the jump.
2. After 5 minutes, start the other engine. Start attempts should be made for no longer than 15 seconds at an interval of 1 minute.
3. Allow both engines to idle for approx. 3 minutes with the leads connected.
4. Switch on electrical consumers (e.g. headlights, heated rear window) of the vehicle receiving the jump start.
5. Reverse above sequence exactly when removing leads.

Towing

Towing the vehicle

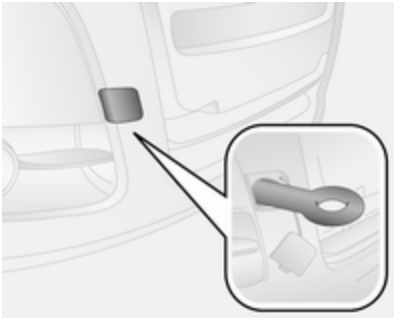

Release the cap by carefully lifting with a screwdriver. To prevent damage, it is recommended to place a cloth between the screwdriver and the frame.

The towing eye is stowed with the vehicle tools ⇨ 142.

Screw in the towing eye as far as it will go until it stops in a horizontal position.

Attach a tow rope – or better still a tow rod – to the towing eye.

Caution

The towing eye must only be used for towing and not for recovering the vehicle.

Switch on ignition to release steering wheel lock and to permit operation of brake lights, horn and windscreen wiper.

Transmission in neutral.

Note
If neutral cannot be selected on vehicles with manual transmission automated (MTA), the vehicle must only be towed with the drive wheels raised off the ground.

Caution

Drive slowly. Do not drive jerkily. Excessive tractive force can damage the vehicle.

When the engine is not running, considerably more force is needed to brake and steer.

To prevent the entry of exhaust gases from the towing vehicle, switch on the air recirculation and close the windows.

Seek the assistance of a workshop.

After towing, unscrew the towing eye and replace the cap.

Towing another vehicle

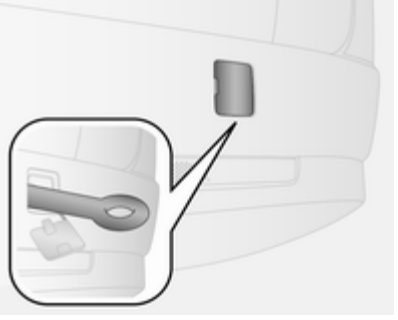

Insert a screwdriver in the slot at the side of the cap. Release the cap by carefully levering the screwdriver. To prevent damage it is recommended to place a cloth between the screwdriver and the frame.

The towing eye is stowed with the vehicle tools ⇨ 142.

Screw in the towing eye as far as it will go until it stops in a horizontal position.

Attach a tow rope – or even better a tow bar – to the towing eye.

The towing eye must only be used for towing and not for recovering a vehicle.

Caution

Drive slowly. Do not drive jerkily. Excessive tractive force can damage the vehicle.

After towing, unscrew the towing eye.

Insert cap.

Appearance care

Exterior care

Locks

The locks are lubricated at the factory using a high quality lock cylinder grease. Use de-icing agent only when absolutely necessary, as this has a degreasing effect and impairs lock function. After using de-icing agent, have the locks regreased by a workshop.

Washing

The paintwork of your vehicle is exposed to environmental influences. Wash and wax your vehicle regularly. When using automatic vehicle washes, select a programme that includes waxing.

Bird droppings, dead insects, resin, pollen and the like should be cleaned off immediately, as they contain aggressive constituents which can cause paint damage.

If using a vehicle wash, comply with the vehicle wash manufacturer's instructions. The windscreen wiper and rear window wiper must be switched off. Remove antenna and external accessories such as roof racks etc.

If you wash your vehicle by hand, make sure that the insides of the wheel housings are also thoroughly rinsed out.

Clean edges and folds on opened doors and the bonnet as well as the areas they cover.

Caution
Always use a cleaning agent with a pH value of 4 to 9. Do not use cleaning agents on hot surfaces.

Have the door hinges of all doors greased by a workshop.

Do not clean the engine compartment with a steam-jet or high-pressure jet cleaner.

Thoroughly rinse and leather-off the vehicle. Rinse leather frequently. Use separate leathers for painted and glass surfaces: remnants of wax on the windows will impair vision.

Do not use hard objects to remove spots of tar. Use tar removal spray on painted surfaces.

Exterior lights

Headlight and other light covers are made of plastic. Do not use any abrasive or caustic agents, do not use an ice scraper, and do not clean them dry.

Polishing and waxing

Wax the vehicle regularly (at the latest when water no longer beads). Otherwise, the paintwork will dry out.

Polishing is necessary only if the paint has become dull or if solid deposits have become attached to it.

Paintwork polish with silicone forms a protective film, making waxing unnecessary.

Plastic body parts must not be treated with wax or polishing agents.

Windows and windscreen wiper blades

Use a soft lint-free cloth or chamois leather together with window cleaner and insect remover.

When cleaning the rear window from inside, always wipe in parallel to the heating element to prevent damage.

For mechanical removal of ice, use a sharp-edged ice scraper. Press the scraper firmly against the glass so that no dirt can get under it and scratch the glass.

Clean smearing wiper blades with a soft cloth and window cleaner.

Glass panel

Never clean with solvents or abrasive agents, fuels, aggressive media (e.g. paint cleaner, acetone-containing solutions etc.), acidic or highly alkaline media or abrasive pads. Do not apply wax or polishing agents to the glass panel.

Wheels and tyres

Do not use high-pressure jet cleaners.

Clean rims with a pH-neutral wheel cleaner.

Rims are painted and can be treated with the same agents as the body.

Paintwork damage

Rectify minor paintwork damage with a touch-up pen before rust forms. Have more extensive damage or rust areas repaired by a workshop.

Underbody

Some areas of the vehicle underbody have a PVC undercoating while other critical areas have a durable protective wax coating.

After the underbody is washed, check the underbody and have it waxed if necessary.

Bitumen/rubber materials could damage the PVC coating. Have underbody work carried out by a workshop.

Before and after winter, wash the underbody and have the protective wax coating checked.

Natural gas system

Do not direct the steam jet or high-pressure jet towards natural gas system components. It is particularly important to protect the natural gas tank and the pressure valves on the vehicle underbody and the bulkhead in the engine compartment.

These components must not be treated using chemical cleaners or preservatives.

Have components of the natural gas system cleaned by a workshop authorised to carry out maintenance of natural gas vehicles.

Towing equipment

Do not clean the coupling ball bar with a steam-jet or high-pressure jet cleaner.

Interior care

Interior and upholstery

Only clean the vehicle interior, including the instrument panel fascia and panelling, with a dry cloth or interior cleaner.

Clean the leather upholstery with clear water and a soft cloth. In case of heavy soiling, use leather care.

The instrument cluster and the displays should only be cleaned using a soft damp cloth. If necessary, use a weak soap solution.

Clean fabric upholstery with a vacuum cleaner and brush. Remove stains with an upholstery cleaner.

Clothing fabrics may not be colourfast. This could cause visible discolourations, especially on light-coloured upholstery. Removable stains and discolourations should be cleaned as soon as possible.

Clean seat belts with lukewarm water or interior cleaner.

Caution

Close Velcro fasteners as open Velcro fasteners on clothing could damage seat upholstery.

The same applies to clothing with sharp-edged objects, like zips or belts or studded jeans.

Plastic and rubber parts

Plastic and rubber parts can be cleaned with the same cleaner as used to clean the body. Use interior cleaner if necessary. Do not use any other agent. Avoid solvents and petrol in particular. Do not use high-pressure jet cleaners.

Service and maintenance

General information 158
Recommended fluids, lubricants and parts 159

General information

Service information

In order to ensure economical and safe vehicle operation and to maintain the value of your vehicle, it is of vital importance that all maintenance work is carried out at the proper intervals as specified.

The detailed, up-to-date service schedule for your vehicle is available at the workshop.

Service display ⇨ 71.

Service intervals - petrol and CNG engines

Maintenance of your vehicle is required every 30,000 km or 1 year, whichever occurs first.

Service intervals - diesel engines

Maintenance of your vehicle is required every 35,000 km or 1 year, whichever occurs first, unless otherwise indicated in the Driver Information Centre.

Confirmations

Confirmation of service is recorded in the Service and Warranty Booklet. The date and mileage is completed with the stamp and signature of the servicing workshop.

Make sure that the Service and Warranty Booklet is completed correctly as continuous proof of service is essential if any warranty or goodwill claims are to be met, and is also a benefit when selling the vehicle.

Service interval with remaining engine oil life duration

The service interval is based on several parameters depending on usage.

When the engine oil requires changing, control indicator will flash in conjunction with a message in the Driver Information Centre ⇨ 77.

Service display ⇨ 71.

Recommended fluids, lubricants and parts

Recommended fluids and lubricants

Only use products that meet the recommended specifications. Damage resulting from the use of products not in line with these specifications will not be covered by the warranty.

⚠ Warning

Operating materials are hazardous and could be poisonous. Handle with care. Pay attention to information given on the containers.

Engine oil

Engine oil is identified by its quality and its viscosity. Quality is more important than viscosity when selecting which engine oil to use. The oil quality ensures e.g. engine cleanliness, wear protection and oil ageing control, whereas viscosity grade gives information on the oil's thickness over a temperature range.

Dexos is the newest engine oil quality that provides optimum protection for petrol and diesel engines. If it is unavailable, engine oils of other listed qualities must be used. Recommendations for petrol engines are also valid for Compressed Natural Gas (CNG) fuelled engines.

Select the appropriate engine oil based on its quality and viscosity ⇨ 162.

Topping up engine oil

Engine oils of different manufacturers and brands can be mixed as long as they comply with the required engine oil quality and viscosity.

Use of engine oil with only ACEA A1/B1 or only A5/B5 quality is prohibited, since it can cause long-term engine damage under certain operating conditions.

Select the appropriate engine oil based on its quality and viscosity ⇨ 162.

Additional engine oil additives

The use of additional engine oil additives could cause damage and invalidate the warranty.

Engine oil viscosity

The SAE viscosity grade gives information on the thickness of the oil.

Multigrade oil is indicated by two figures, e.g. SAE 5W-30. The first figure, followed by a W, indicates the low temperature viscosity and the second figure the high temperature viscosity.

Select the appropriate viscosity grade ⇨ 162.

All of the recommended viscosity grades are suitable for high ambient temperatures.

Coolant and antifreeze

Use only antifreeze approved for the vehicle. Consult a workshop.

The system is factory filled with coolant designed for excellent corrosion protection and frost protection down to approx. -28 °C. In northern countries with very low

temperatures the factory filled coolant provides frost protection down to approx. -37°C. This concentration should be maintained all year round.

The use of additional coolant additives that intend to give additional corrosion protection or seal against minor leaks can cause function problems. Liability for consequences resulting from the use of additional coolant additives will be rejected.

Brake and clutch fluid

Only use high-performance DOT 4+ brake fluid approved for the vehicle. Consult a workshop.

Over time, brake fluid absorbs moisture which will reduce braking effectiveness. The brake fluid should therefore be replaced at the specified interval.

Brake fluid should be stored in a sealed container to avoid water absorption.

Ensure brake fluid does not become contaminated.

Technical data

Vehicle identification 161
Vehicle data 162

Vehicle identification

Vehicle Identification Number

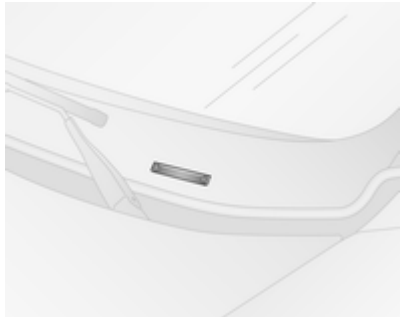

The Vehicle Identification Number is visible through the windscreen

and in the floor on the front passenger side behind a cover.

Identification plate

The identification plate is in the engine compartment.

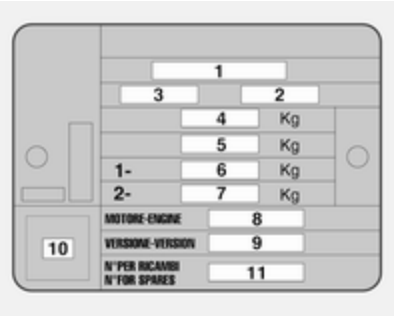

Information on identification label:

1 = Type approval number
2 = Vehicle Identification Number
3 = Vehicle type identification code
4 = Permissible gross vehicle weight rating in kg
5 = Permissible gross train weight in kg
6 = Maximum permissible front axle load in kg
7 = Maximum permissible rear axle load in kg
8 = Engine type
9-11 = Vehicle-specific or country-specific data

The combined total of front and rear axle loads must not exceed the permissible gross vehicle weight. For example, if the front axle is bearing its maximum permissible load, the rear axle can only bear a load that is equal to the gross vehicle weight minus the front axle load.

The technical data is determined in accordance with European Community standards. We reserve the right to make modifications. Specifications in the vehicle documents always have priority over those given in this manual.

Vehicle data

Recommended fluids and lubricants

Required engine oil quality

Engine oil quality	Petrol / CNG engines	Diesel engines
dexos 2	✓	✓

In case dexos quality is unavailable in International countries you may use the oil qualities listed below:

Engine oil quality	Petrol / CNG engines	Diesel engines
GM-LL-A-025	✓	-
GM-LL-B-025	-	✓

Engine oil viscosity grades

Engine oil viscosity grade	Petrol / CNG engines	Diesel engines
SAE 0W-30	-	✓
SAE 0W-40	✓	-

Engine data

Sales designation	**1.4**	**1.4**	**1.4**
Engine identifier code	**1.4i**	**1.4Turbo**	**1.4CNG**
Number of cylinders	4	4	4
Piston displacement [cm^3]	1368	1368	1368
Engine power [kW]	70	88	88
at rpm	6000	5000	5000
Torque [Nm]	127	206	206
at rpm	4500	3000	3000
Fuel type	Petrol	Petrol	Compressed Natural Gas/Petrol
Octane rating RON			
recommended	**95**	**95**	**95**
possible	98	98	98
possible	91	91	91
Gas	–	–	CNG
Oil consumption [l/1000 km]	0.6	0.6	0.6

Sales designation	1.3 Turbo	1.6 Turbo	2.0 Turbo
Engine identifier code	1.3CDTI	1.6CDTI[1)]	2.0CDTI
Number of cylinders	4	4	4
Piston displacement [cm^3]	1248	1598	1956
Engine power [kW]	66	66 / 77	99
at rpm	4000	4000	3500
Torque [Nm]	200	200[2)] / 290	320
at rpm	1500	1500	1500
Fuel type	Diesel	Diesel	Diesel
Oil consumption [l/1000 km]	0.6	0.6	0.6

1) Low / High output.
2) Vehicles with manual transmission automated (MTA).

Performance

The maximum speed indicated is achievable at kerb weight (without driver) plus 200 kg payload. Optional equipment could reduce the specified maximum speed of the vehicle.

Engine	1.4i	1.4Turbo	1.4CNG
Maximum speed [km/h]			
Manual transmission	161	172	172
Manual transmission automated	–	–	–

Engine	1.3CDTI	1.6CDTI[3]	2.0CDTI
Maximum speed [km/h]			
Manual transmission	158 / 153[5]	164 / 158[4] / 153[5]	179
Manual transmission automated	– / –	– / 158[4] / 153[5]	–

[3] Low / High output.
[5] High roof version.
[4] Low roof version.

Vehicle weight

Kerb weight, basic model - Van

Length	Roof height	Engine	Gross vehicle weight	Kerb weight
L1	H1	1.4i	1990 / 2160	1240 / 1260
		1.4Turbo	– / 2325	– / 1400
		1.4Turbo CNG	2430 / –	1450 / –
		1.3CDTI	2020 / 2290	1270 / 1290
		1.6CDTI	2060 / 2330	1310 / 1330
		2.0CDTI	2100 / 2370	1350 / 1370
	H2	1.4i	2010 / 2180	1260 / 1280
		1.4Turbo	– / 2345	– / 1420
		1.4Turbo CNG	2420 / –	1470 / –
		1.6CDTI	2080 / 2350	1330 / 1350
		2.0CDTI	2120 / 2390	1370 / 1390

Length	Roof height	Engine	Gross vehicle weight	Kerb weight
L2	H1	1.4i	2200 / –	1300 / –
		1.4Turbo	2365 / –	1440 / –
		1.4Turbo CNG	2470 / 2450	1490 / 1540
		1.3CDTI	2330 / –	1330 / –
		1.6CDTI	2370 / –	1370 / –
		2.0CDTI	2410 / –	1410 / –
	H2	1.4Turbo	2455	1455
		1.6CDTI	2460	1460
		2.0CDTI	2500	1500

Kerb weight, basic model - Combi

Length	Roof height	Engine	Gross vehicle weight	Kerb weight
L1	H1	1.4i	2060	1350
		1.4Turbo	2225	1500
		1.3CDTI	2090	1380
		1.6CDTI	2130	1420
		2.0CDTI	2170	1460
	H2	1.4i	2160	1360
		1.3CDTI	2190	1390
		1.6CDTI	2230	1430
		2.0CDTI	2270	1470
L2	H1	1.4i	2200	1400
		1.4Turbo	2265	1540
		1.3CDTI	2230	1430
		1.6CDTI	2270	1470
		2.0CDTI	2310	1510
	H2	2.0CDTI	2400	1600

Kerb weight, basic model - Combo Tour

Length	Roof height	Engine	Gross vehicle weight	Kerb weight
L1	H1	1.4i	1940	1340
		1.4Turbo	2030	1490
		1.4Turbo CNG	2110	1540
		1.3CDTI	1970	1370
		1.6CDTI	2010	1410
		2.0CDTI	2050	1450
	H2	1.4i	2210	1430
		1.6CDTI	2400	1500
		2.0CDTI	2440	1540
L2	H1	1.4i	2055	1370
		1.4Turbo	2135	1490
		1.3CDTI	2085	1400
		1.6CDTI	2115	1430
		2.0CDTI	2165	1480
	H2	2.0CDTI	2215	1600

Vehicle dimensions

Type	Van		Combi		Combo Tour	
Wheelbase	Short	Long	Short	Long	Short	Long
Length [mm]	4390	4740	4390	4740	4390	4740
Width without exterior mirrors [mm]	1832	1832	1832	1832	1832	1832
Width with exterior mirrors [mm]	2119	2119	2119	2119	2119	2119
Height (without antenna) [mm] Standard roof	1845 / 1895[6)]	1880 / 1927[7)]	1845 / 1895[6)]	1880 / 1927[6)]	1845 / 1895[6)]	1880 / 1927[6)]
High roof	2100	2125	2100	–	2100	–
Length of load compartment floor [mm]	1820	2170	–	–	–	–
Load compartment width [mm]	1230	1230	1230	1230	1195	1195
Load compartment height [mm] Standard roof	1305	1305	1305	1305	1305	1305
High roof	1550	–	1550	–	1550	–

6) Versions with roof rack.
7) Versions with roof bars.

Type	Van		Combi		Combo Tour	
Wheelbase [mm]	2755	3105	2755	3105	2755	3105
Turning circle kerb to kerb [m]	11.2	12.5	11.2	12.5	11.2	12.5

Capacities

Engine oil

Engine	1.4i	1.4Turbo	1.4CNG	1.3CDTI	1.6CDTI	2.0CDTI
including Filter [l]	2.7	2.9	2.9	3.2	4.9	4.9
between MIN and MAX [l]	1.0	1.0	1.0	1.0	1.0	1.0

Fuel tank

Petrol/diesel, nominal capacity [l]	60
Natural gas CNG, nominal capacity [kg]	16.15 kg[8] / 22.1 kg[9]
Petrol, nominal capacity [l]	22

[8] Short wheelbase version.
[9] Long wheelbase version.

Tyre pressures

Van

Engine	Tyres	Comfort with up to 2 people and 100 kg luggage		With full load	
		front	rear	front	rear
		[kPa/bar] ([psi])	[kPa/bar] ([psi])	[kPa/bar] ([psi])	[kPa/bar] ([psi])
All	185/65 R15 88T	250/2.5 (36)	250/2.5 (36)	290/2.9 (42)	290/2.9 (42)
	185/65 R15 92T	250/2.5 (36)	260/2.6 (38)	290/2.9 (42)	300/3.0 (44)
	195/65 R15 95T	240/2.4 (35)	240/2.4 (35)	260/2.6 (38)	270/2.7 (39)
	195/60 R16 C 99/97T	270/2.7 (39)	270/2.7 (39)	270/2.7 (39)	330/3.3 (48) 360/3.6 (52)[10)11)]

Adjust tyre pressure to the value specified for full load when driving at speeds of 160 km/h.

[10)] Long wheelbase version.
[11)] CNG version.

Combi

Engine	Tyres	Comfort with up to 3 people		With full load	
		front	rear	front	rear
		[kPa/bar] ([psi])	[kPa/bar] ([psi])	[kPa/bar] ([psi])	[kPa/bar] ([psi])
All	185/65 R15 88T	250/2.5 (36)	250/2.5 (36)	290/2.9 (42)	290/2.9 (42)
	185/65 R15 92T	250/2.5 (36)	260/2.6 (38)	290/2.9 (42)	300/3.0 (44)
	195/65 R15 95T	240/2.4 (35)	300/3.0 (44)	260/2.6 (38)	320/3.2 (46)
	195/60 R16 C 99/97T	270/2.7 (39)	270/2.7 (39)	270/2.7 (39)	360/3.6 (52)

Adjust tyre pressure to the value specified for full load when driving at speeds of 160 km/h.

Combo Tour

Engine	Tyres	Comfort with up to 3 people		With full load	
		front	rear	front	rear
		[kPa/bar] ([psi])	[kPa/bar] ([psi])	[kPa/bar] ([psi])	[kPa/bar] ([psi])
All	185/65 R15 88T	250/2.5 (36)	250/2.5 (36)	290/2.9 (42)	290/2.9 (42)
	185/65 R15 92T	250/2.5 (36)	260/2.6 (38)	290/2.9 (42)	300/3.0 (44)
	195/65 R15 95T	240/2.4 (35)	240/2.4 (35)	260/2.6 (38)	260/2.6 (38)
	195/60 R16 C 99/97T	270/2.7 (39)	270/2.7 (39)	270/2.7 (39)	280/2.8 (41) [12] 360/3.6 (52) [13][11]

Adjust tyre pressure to the value specified for full load when driving at speeds of 160 km/h.

[12] Version with 5 seats.
[13] Version with 7 seats.
[11] CNG version.

Customer information

Vehicle data recording and privacy 177

Vehicle data recording and privacy

Event data recorders

Data storage modules in the vehicle

A large number of electronic components of your vehicle contain data storage modules temporarily or permanently storing technical data about the condition of the vehicle, events and errors. In general, this technical information documents the condition of parts, modules, systems or the environment:

- Operating conditions of system components (e.g. filling levels)
- Status messages of the vehicle and its single components (e.g. number of wheel revolutions / rotational speed, deceleration, lateral acceleration)
- Dysfunctions and defects in important system components
- Vehicle reactions in particular driving situations (e.g. inflation of an airbag, activation of the stability regulation system)
- Environmental conditions (e.g. temperature)

This data is exclusively technical and helps identifying and correcting errors as well as optimizing vehicle functions.

Motion profiles indicating travelled routes cannot be created with this data.

If services are used (e.g. repair works, service processes, warranty cases, quality assurance), employees of the service network (manufacturer included) are able to read out this technical information from the event and error data storage modules applying special diagnostic devices. If required, you will receive further information at these workshops. After an error has been corrected, the data is deleted from the error storage module or it is constantly overwritten.

When using the vehicle, situations may occur in which technical data related to other information (accident report, damages on the vehicle, witness statements etc.) may be associated with a specific person - possibly, with the assistance of an expert.

Additional functions contractually agreed upon with the client (e.g. vehicle location in emergency cases) allow the transmission of particular vehicle data from the vehicle.

Radio Frequency Identification (RFID)

RFID technology is used in some vehicles for functions such as ignition system security. It is also used in connection with conveniences such as radio remote controls for door locking/unlocking and starting, and in-vehicle transmitters for garage door openers. RFID technology in Opel vehicles does not use or record personal information or link with any other Opel system containing personal information.

Index

A

Accessories and vehicle modifications 125
Adjustable air vents 99
Airbag activation..... 79
Airbag and belt tensioners 73
Airbag deactivation 46, 74, 79
Airbag system 42
Air conditioning regular operation 100
Air conditioning system 96
Air intake 100
Air vents..... 99
Alert..... 85
Antilock brake system 112
Antilock brake system (ABS) 75
Anti-Slip Regulator (ASR)..... 113
Anti-theft locking system 27
Appearance care..... 155
Armrest..... 36
Ashtrays 68
ASR (Anti-Slip Regulator)..... 113
Audible warning chimes..... 85
Autoclose..... 79
Automatic fuel cut-off..... 85, 103
Automatic locking..... 79

B

Battery 130
Battery discharge protection 94
Belts..... 39
Bonnet 127
Brake and clutch fluid..... 159
Brake assist 113
Brake fluid 130
Brake pad wear..... 75
Brakes 112, 130
Brake system 74
Breakdown..... 153
Bulb replacement 132

C

Capacities 173
Car Pass 20
Catalytic converter 107
Central locking system 21
Centre high-mounted brake light 135
Change engine oil 77
Changing tyre and wheel size ... 144
Charging system 74
Child locks 23
Child restraint installation locations 50
Child restraints..... 48
Child restraint systems 48

Child safety system for rear windows..... 29
Chimes..... 85
Cigarette lighter 67
Climate control 16
Climate control systems..... 95
Clock..... 64, 79
Control indicators..... 71
Control of the vehicle 101
Controls..... 62
Convex shape 28
Coolant and antifreeze..... 159
Cruise control 79, 115
Cupholders 55

D

Danger, Warnings and Cautions . . . 3
Date..... 79
Daytime running lights..... 79, 89
Diesel particle filter..... 76, 106
Distance to next service..... 79
Door open 79
Doors..... 23, 24, 25
Drain fuel filter 78
Driver Information Centre..... 79
Driving characteristics and towing tips 123
Driving hints..... 101

E

Eco mode (E)..... 111
Electric adjustment 28
Electrical system..... 138
Electronic climate control system 97
Electronic driving programmes . . 111
Electronic Stability Program 76, 114
End-of-life vehicle recovery 126
Engine compartment fuse box ... 139
Engine coolant 128
Engine coolant temperature 76
Engine coolant temperature gauge 70
Engine data 164
Engine exhaust 106
Engine oil 127, 159, 162
Engine oil pressure 77
ESP (Electronic Stability Program)..... 114
Event data recorders..... 177
Extendable load compartment cover..... 56, 60
Exterior care 155
Exterior light 78
Exterior lighting 13, 88
Exterior mirrors..... 28

F

Fault 111
Fixed air vents 100
Fog light 79
Folding 28
Folding seats..... 56
Front airbag system 45
Front fog lights 90
Front seats..... 34
Front turn signal light..... 132
Fuel..... 118
Fuel consumption..... 79
Fuel consumption - CO_2-Emissions 122
Fuel cut-off system..... 85, 103
Fuel for diesel engines 119
Fuel for natural gas operation . . . 119
Fuel for petrol engines 118
Fuel gauge 69
Fuel selector 70
Fuel system messages..... 85
Fuses 138

G

Gauges..... 68
General information 123
Generic warning..... 73
Glovebox 55
Gross Vehicle Weight..... 60

H
Halogen headlights 132
Hand brake..... 112
Hazard warning flashers 90
Headlight flash 88
Headlight range adjustment 89
Headlights..... 88
Headlights when driving abroad . . 89
Head restraint adjustment 8
Head restraints 33
Heated mirrors 29
Heated rear window 32
Heating 36
Heating and ventilation system . . . 95
High beam 79, 88
Hill start assist..... 75, 113
Horn 14, 63

I
Identification plate 161
Ignition switch positions 102
Immobiliser 27, 78
Indicators..... 68
Information displays..... 79
Instrument cluster 68
Instrument panel fuse box 140
Instrument panel illumination 138
Instrument panel illumination control 91
Instrument panel overview 10
Instrument panel storage..... 54
Interior care 156
Interior lighting..... 79, 91
Interior lights 92, 137
Interior mirrors..... 29
Introduction 3
ISOFIX child restraint systems 53

J
Jump starting 152

K
Kerb weight..... 60
Keys 20
Keys, locks..... 20

L
Language..... 79
Lashing eyes 59, 60
Light switch 88
Load compartment 25, 56
Load compartment cover 56
Load compartment lighting..... 93
Loading..... 56
Loading information 60
Low engine oil level 78
Low fuel 78

M
Malfunction indicator light 74
Manual adjustment 28
Manual anti-dazzle 29
Manual mode 110
Manual transmission 107
Manual transmission automated 108
Manual windows 29
Mirror adjustment 8
Misted light covers 91
Multifunction display..... 79

N
New vehicle running-in 101
Number plate light 136

O
Object detection systems..... 116
Odometer 68
Oil, engine..... 159, 162
Operating windows from outside. . 29
Outside temperature 64
Overhead console 55
Overrun cut-off 103

P
Parking 19, 105
Parking assist 116
Parking brake 112
Particulate filter..... 106

Payload..... 60
Performance 166
Performing work 126
Pollen filter 100
Power outlets 66
Power steering fluid..... 129
Power windows 29
Preheating 76
Puncture..... 147

R

Radio Frequency Identification (RFID)..... 178
Radio info..... 79
Radio remote control 20
Rear doors 24
Rear fog light 79
Rear fog lights 91
Rear parcel shelf..... 56
Rear seats 37, 56
Rear windows 31
Rear window wiper/washer 64
Recommended fluids and lubricants 159, 162
Refuelling 120
Reversing lights 91
Ride control systems..... 113, 114
Roof load..... 60
Roof rack 59
Roof racks..... 60

S

Safety belts..... 39
Seat adjustment 7, 34
Seat belt 8
Seat belt reminder 73
Seat belt reminder warning chime 79
Seat belts 39
Seat position 34
Selector lever 109
Service 100, 158
Service display 71, 79
Service information 158
Settings menu..... 79
Side airbag system 46
Sidelights..... 88
Side turn signal lights 135
Sliding door 23
Sliding side door..... 23
Spare wheel 149
Speed limit warning chime..... 79
Speedometer 68
Standard display..... 79
Starting and operating..... 101
Starting off 17
Starting the engine 102, 108
Steering wheel adjustment 9, 62
Steering wheel controls 62
Stop-start system..... 78, 103
Storage..... 54
Storage compartments..... 54
Sun visors 32
Symbols 4

T

Tachometer 69
Tailgate..... 25
Tail lights 134
Temperature..... 79
Three-point seat belt 40
Tools 142
Top-tether fastening eyes 53
Towing..... 123, 153
Towing another vehicle 154
Towing the vehicle 153
Traction Control system 113
Trailer coupling..... 123
Trailer towing 123
Transmission 17
Transmission display 108
Tread depth 143
Trip computer..... 79, 86
Trip odometer 68
Turn and lane-change signals 90
Turn signal 73
Tyre chains 144
Tyre designations 143
Tyre pressure 143
Tyre pressures 174
Tyre repair kit 145

U

Ultrasonic parking assist 75, 116
Underseat storage 55
Unit of measurement..... 79
Upholstery..... 156
Upshift..... 75
Using this manual 3

V

Vehicle checks..... 126
Vehicle data..... 162
Vehicle data recording and privacy..... 177
Vehicle dimensions 171
Vehicle Identification Number 161
Vehicle jack..... 142
Vehicle security..... 27
Vehicle shutdown..... 85, 103
Vehicle specific data 3
Vehicle storage..... 125
Vehicle tools..... 142
Vehicle unlocking 6
Vehicle weight 167
Ventilation..... 95
Volume..... 79

W

Warning chime..... 79
Warning chimes 85
Warning lights..... 68
Washer and wiper systems 15
Washer fluid 129
Wheel changing 147
Wheel covers 144
Wheels and tyres 142
Windows..... 29
Windscreen..... 29
Windscreen wiper/washer 63
Winter tyres 142
Wiper blade replacement 131

Copyright by ADAM OPEL AG, Rüsselsheim, Germany.

The information contained in this publication is effective as of the date indicated below. Adam Opel AG reserves the right to make changes to the technical specifications, features and design of the vehicles relative to the information in this publication as well as changes to the publication itself.

Edition: August 2013, ADAM OPEL AG, Rüsselsheim.

Printed on chlorine-free bleached paper.

KTA-2730/2-en

08/2013