CHARGING SYSTEM

PRECAUTION

1. **Check that the battery cables are connected to the correct terminals.**
2. **Disconnect the battery cables when the battery is given a quick charge.**
3. **Never disconnect the battery while the engine is running.**
4. **Check that the charging cable is tightly connected to terminal B of the generator.**

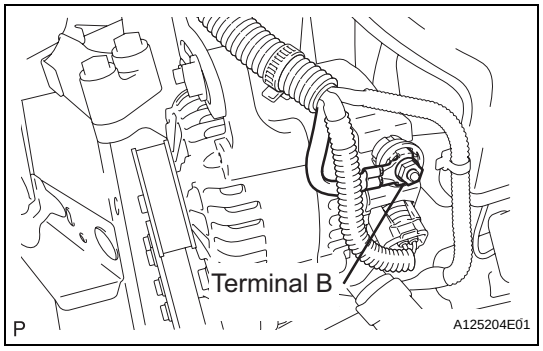

PARTS LOCATION

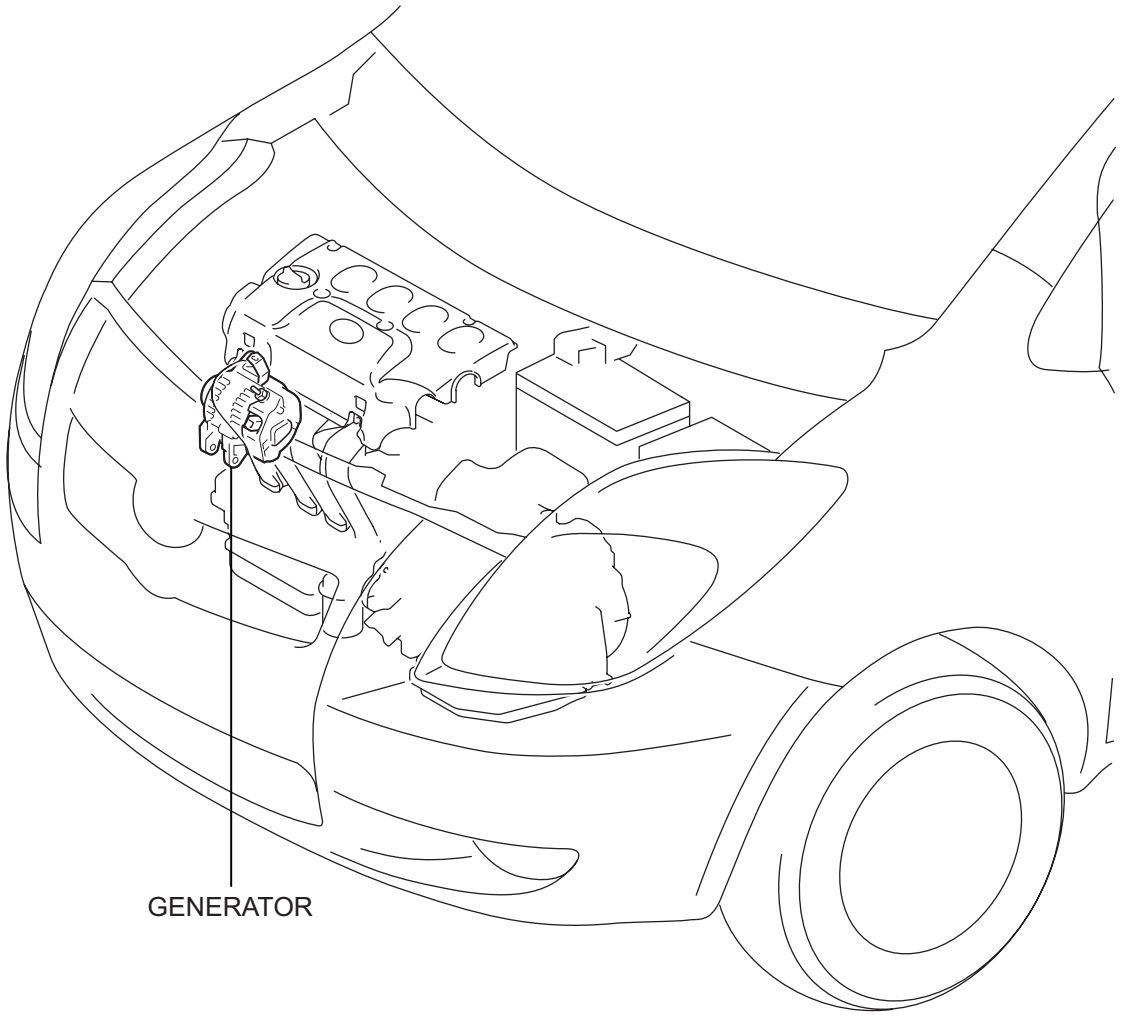

O

A119213E01

SYSTEM DIAGRAM

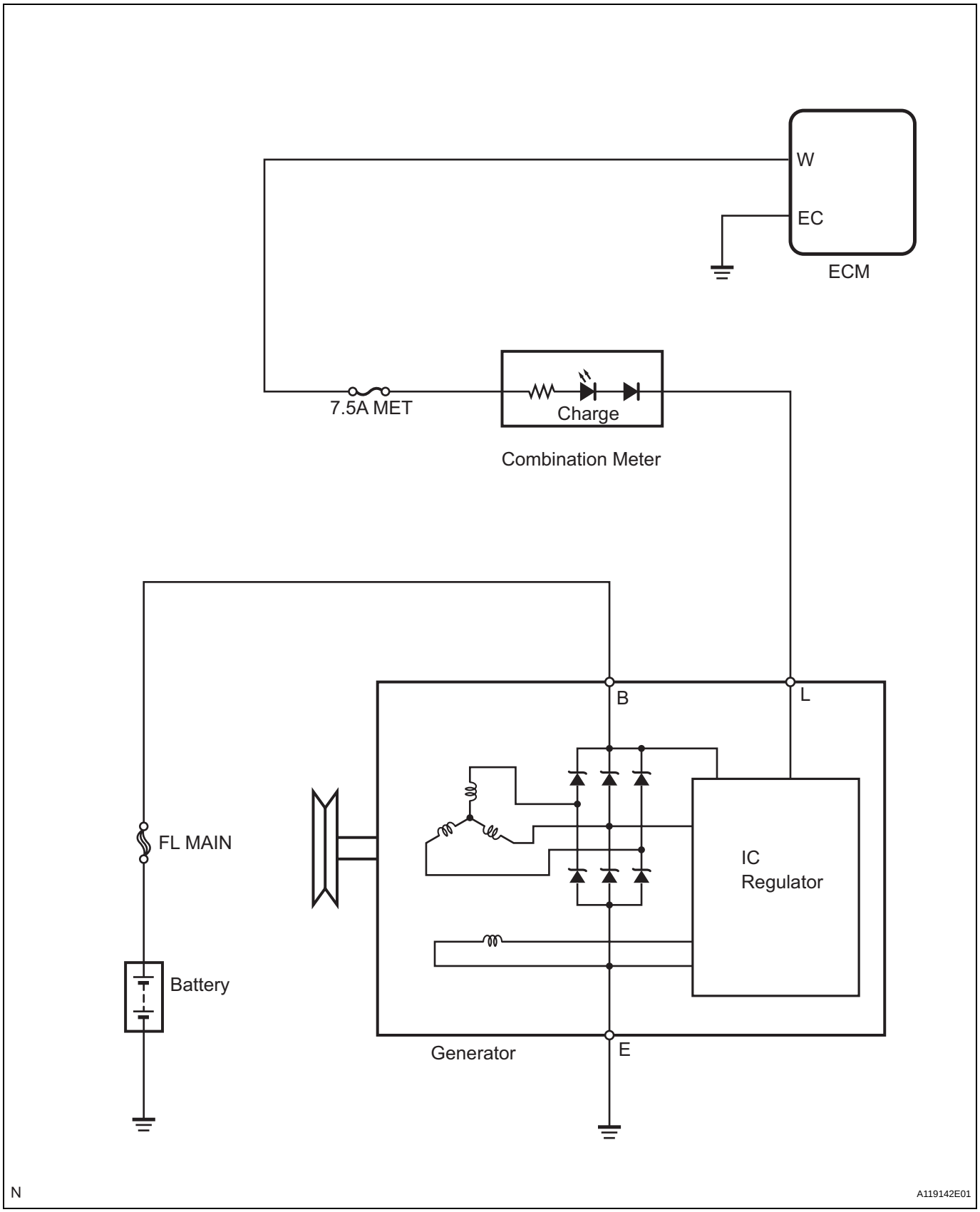

ON-VEHICLE INSPECTION

CAUTION:
If the battery is weak or if the engine is difficult to start, recharge the battery and perform the inspections again before returning the vehicle to the customer.

1. CHECK BATTERY CONDITION

(a) Check the battery for damage and deformation. If severe damage, deformation or leakage is found, replace the battery.

(b) Check the volume of electrolyte in each cell.

(1) For batteries that are maintenance-free:
- If the electrolyte volume is below the lower line, replace the battery.
- If the electrolyte volume is above the lower line, check the battery voltage when cranking the engine.
- If the voltage is less than 9.6 V, recharge or replace the battery.

HINT:
Before checking the battery voltage, turn off all the electrical systems (headlights, blower motor, etc.).

(2) For batteries that are not maintenance-free:
- If the electrolyte volume is below the lower line, add distilled water to each cell. Then, recharge the battery and check the specific gravity of the electrolyte.

Standard specific gravity:
1.25 to 1.29 at 20 °C (68 °F)

If the electrolyte volume is above the lower line, check the battery voltage when cranking the engine. If the voltage is less than 9.6 V, recharge or replace the battery.
HINT:
Before checking the battery voltage, turn off all the electrical systems (headlights, blower motor, rear defogger, etc.).

2. CHECK BATTERY TERMINAL AND FUSE

(a) Check that the battery terminals are not loose or corroded.
If the terminals are corroded, clean the terminals.

(b) Measure the resistance of the H-fuse and fuses.
Standard resistance:
Below 1 Ω
If the results are not as specified, replace the fuses as necessary.

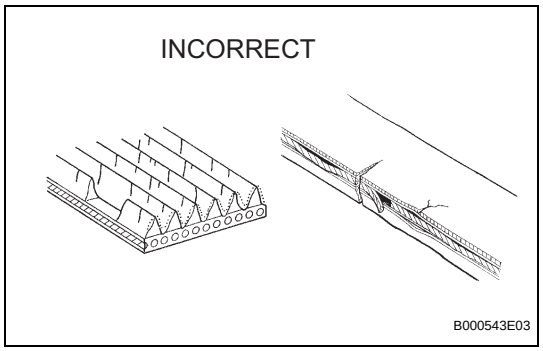

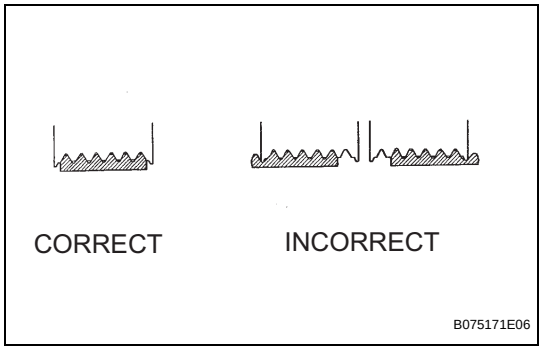

3. CHECK V-RIBBED BELT

(a) Check the belt for wear, cracks and other signs of damage.
If any defects are found, replace the V-ribbed belt.
HINT:
Replace the drive belt if any of the following defects are found:
- The belt is worn out and the wire is exposed.
- The cracks reach the wire in more than one place.
- The belt has pieces missing from the ribs.

(b) Check that the belt fits properly into the ribbed grooves.
HINT:
With your hand, confirm that the belt has not slipped out of the grooves on the bottom of the pulley.

4. VISUALLY CHECK GENERATOR WIRING

(a) Check that the wiring is in good condition.

5. LISTEN FOR ABNORMAL NOISES FROM GENERATOR

(a) Check that the generator does not emit any abnormal noise while the engine is running.

6. CHECK CHARGE WARNING LIGHT CIRCUIT

(a) Turn the ignition switch on (IG). Check that the charge warning light turns on.

(b) Start the engine and check that the light turns off. If the light does not operate as specified, troubleshoot the charge warning light circuit.

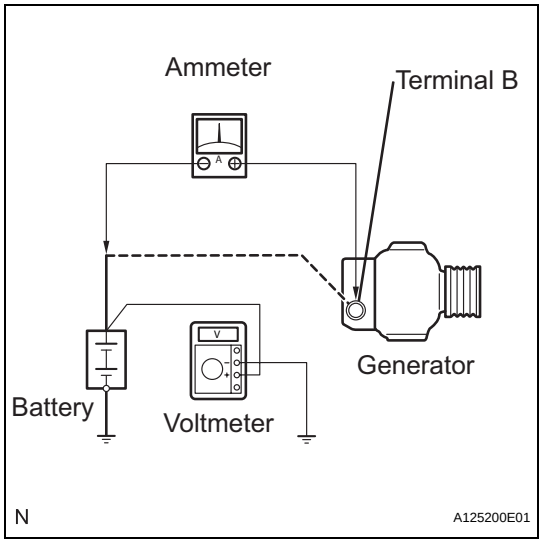

7. CHECK CHARGING CIRCUIT WITHOUT LOAD

(a) Connect a voltmeter and an ammeter to the charging circuit as follows.
HINT:
If a battery/generator tester is available, connect the tester to the charging circuit in accordance with the manufacturer's instructions.
(1) Disconnect the wire from terminal B of the generator and connect it to the negative (-) ammeter lead.
(2) Connect the positive (+) ammeter lead to terminal B of the generator.
(3) Connect the positive (+) voltmeter lead to positive (+) battery terminal.
(4) Ground the negative (-) voltmeter lead.

(b) Check the charging circuit.
(1) Keep the engine speed at 2,000 rpm and check the reading on the ammeter and voltmeter.
Standard current:
10 A or less
Standard voltage:
13.2 to 14.8 V
If the result is not as specified, replace the generator.

HINT:
If the battery is not fully charged, the ammeter reading will sometimes be more than the standard amperage.

8. CHECK CHARGING CIRCUIT WITH LOAD

(a) With the engine running at 2,000 rpm, turn on the high beam headlights and turn the heater blower switch to the HI position.

(b) Check the reading on the ammeter.
Standard current:
30 A or more
If the ammeter reading is less than the standard current, replace the generator.
HINT:
If the battery is fully charged, the ammeter reading will sometimes be less than the standard current. In this case, operate the wiper motor and the window defogger to increase the load and then check the charging circuit again.

GENERATOR

COMPONENTS

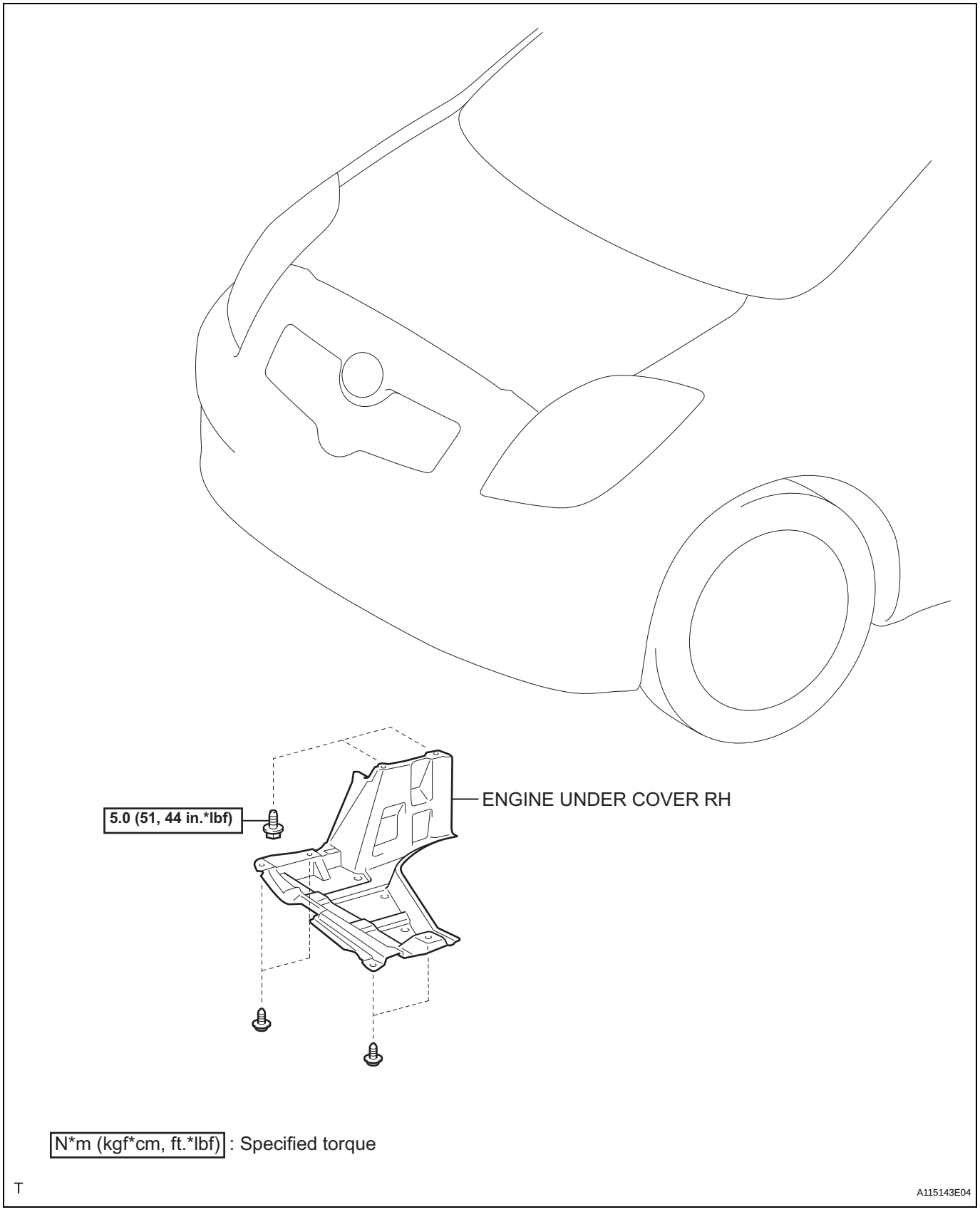

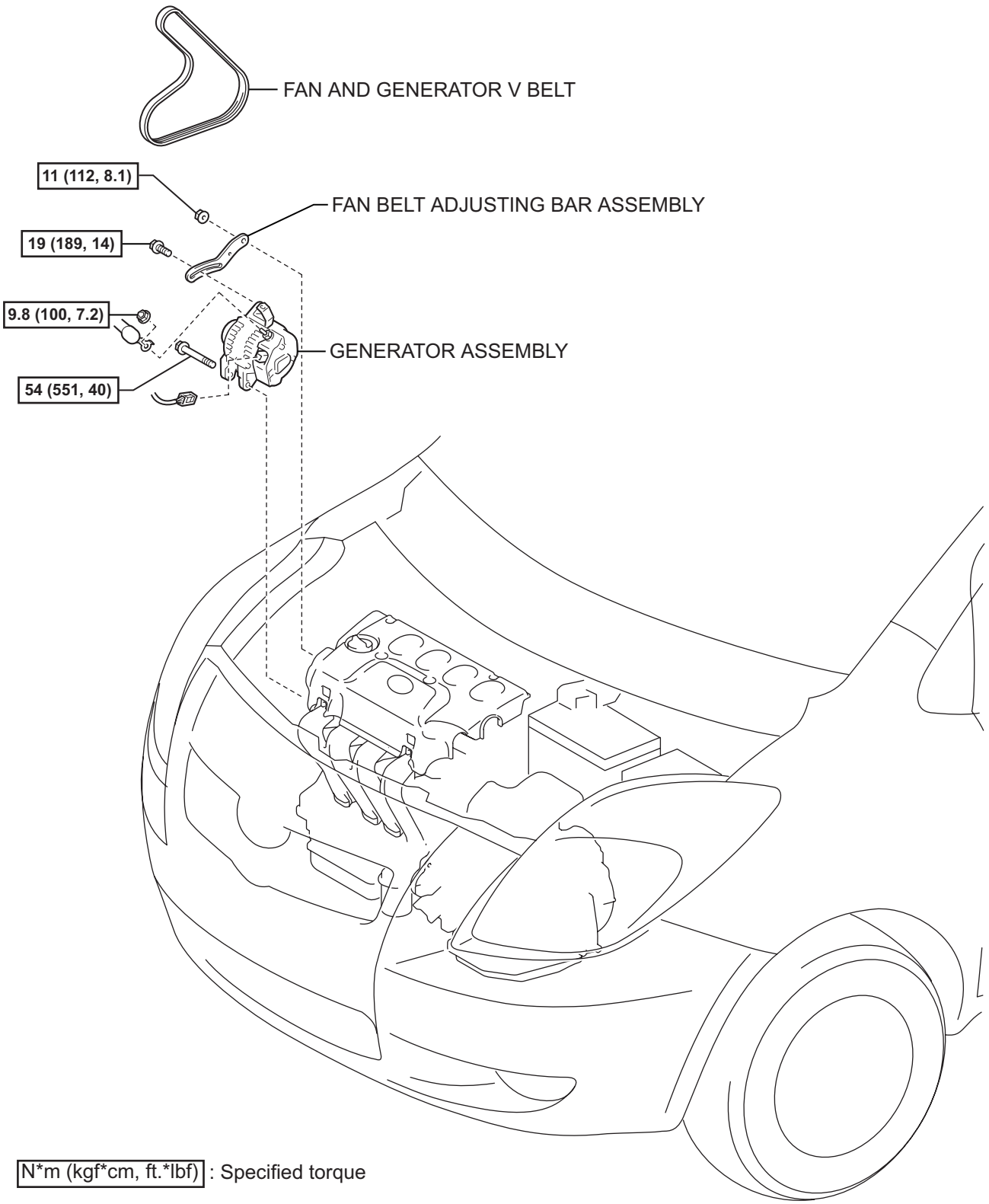
FAN AND GENERATOR V BELT
11 (112, 8.1)
FAN BELT ADJUSTING BAR ASSEMBLY
19 (189, 14)
9.8 (100, 7.2)
GENERATOR ASSEMBLY
54 (551, 40)
N*m (kgf*cm, ft.*lbf) : Specified torque
A104514E03

O

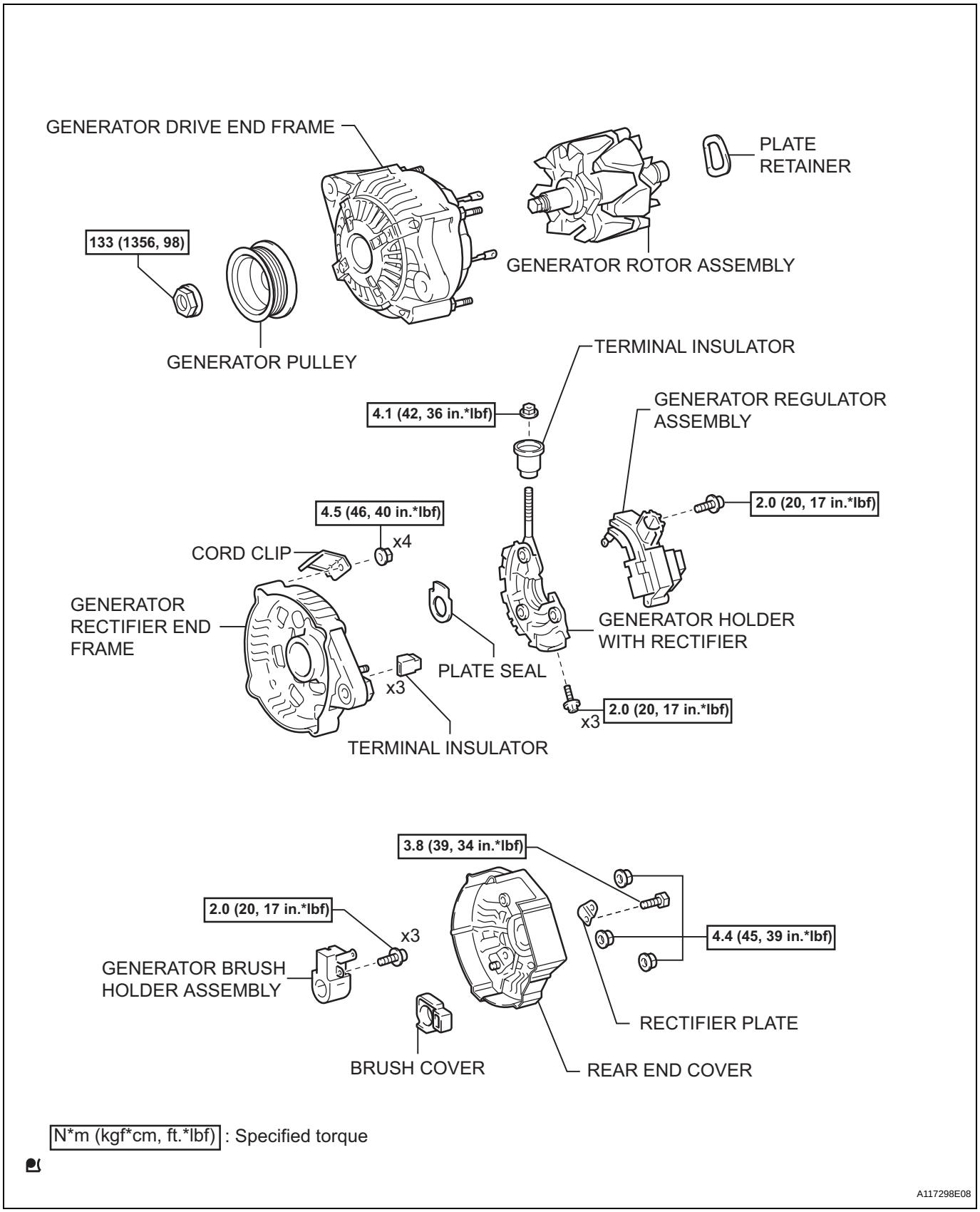
GENERATOR DRIVE END FRAME
PLATE RETAINER
133 (1356, 98)
GENERATOR ROTOR ASSEMBLY
GENERATOR PULLEY
TERMINAL INSULATOR
4.1 (42, 36 in.*lbf)
GENERATOR REGULATOR ASSEMBLY
2.0 (20, 17 in.*lbf)
4.5 (46, 40 in.*lbf)
x4
CORD CLIP
GENERATOR RECTIFIER END FRAME
GENERATOR HOLDER WITH RECTIFIER
PLATE SEAL
x3
2.0 (20, 17 in.*lbf)
x3
TERMINAL INSULATOR
3.8 (39, 34 in.*lbf)
2.0 (20, 17 in.*lbf)
x3
4.4 (45, 39 in.*lbf)
GENERATOR BRUSH HOLDER ASSEMBLY
RECTIFIER PLATE
BRUSH COVER
REAR END COVER
N*m (kgf*cm, ft.*lbf) : Specified torque
A117298E08

CH

REMOVAL

1. **DISCONNECT CABLE FROM NEGATIVE BATTERY TERMINAL**
2. **REMOVE ENGINE UNDER COVER RH**
3. **REMOVE FAN AND GENERATOR V BELT (See page EM-7)**
4. **REMOVE GENERATOR ASSEMBLY**
   (a) Remove the terminal cap.
   (b) Separate the connector and the harness clamp.
   (c) Remove the nut and remove terminal B.

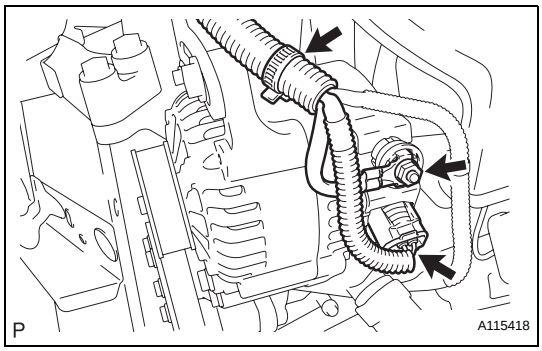

   (d) Remove fan belt adjusting slider fixing bolts A and B and remove the fan belt adjusting slider.

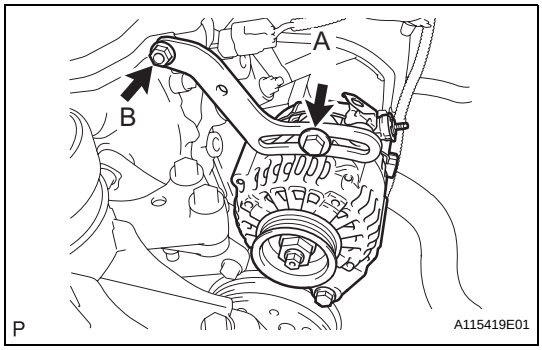

   (e) Remove fixing bolt B and remove the generator.

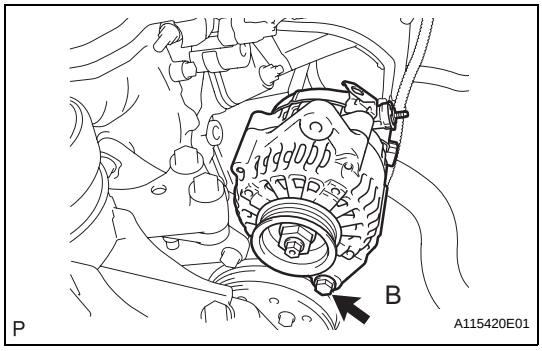

DISASSEMBLY

1. **REMOVE GENERATOR PULLEY**
   SST 09820-63010 (09820-06010, 09820-06020)
   HINT:

SST 1-A and B	09820 - 06010
SST 2	09820 - 06020

   (a) Hold SST 1-A with a torque wrench, and tighten SST 1-B clockwise to the specified torque.
   Torque: 39 N*m (400 kgf*cm, 29 ft.*lbf)
   NOTICE:
   Check that SST is securely fitted onto the generator rotor shaft.

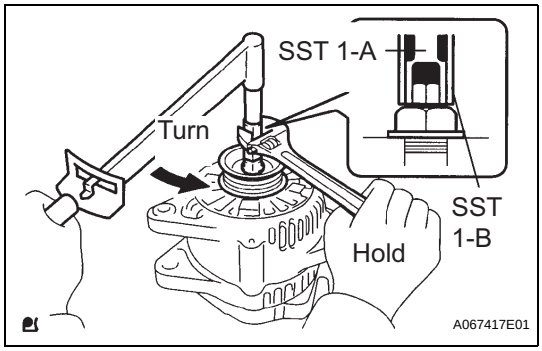

CH

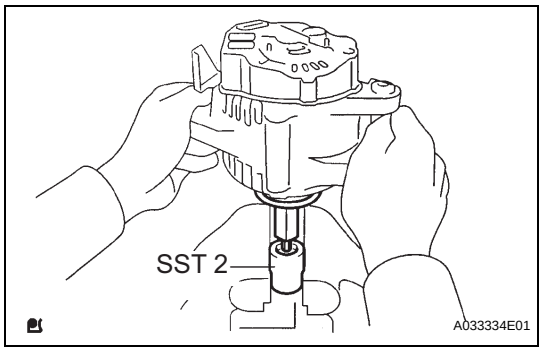

(b) Mount SST 2 in a vise.
(c) Insert SST 1-A and B into SST 2, and attach the generator pulley nut to SST 2.

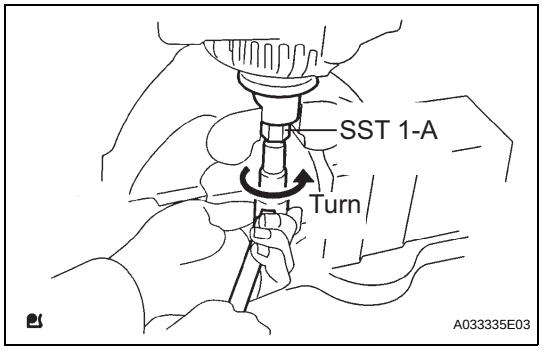

(d) To loosen the generator pulley nut, turn SST 1-A in the direction shown in the illustration.
NOTICE:
To prevent damage to the rotor shaft, do not loosen the generator pulley nut by more than one-half turn.
(e) Remove the generator from SST 2.

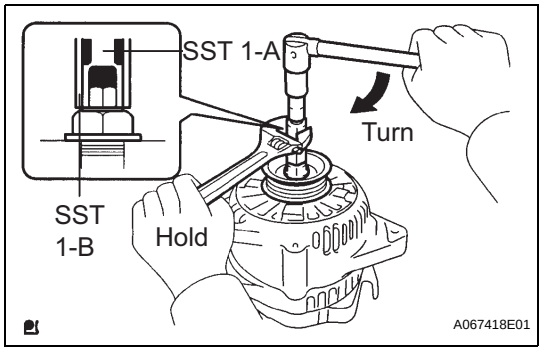

(f) Turn SST 1-B, and remove SST 1-A and B.
(g) Remove the generator pulley nut and generator pulley.

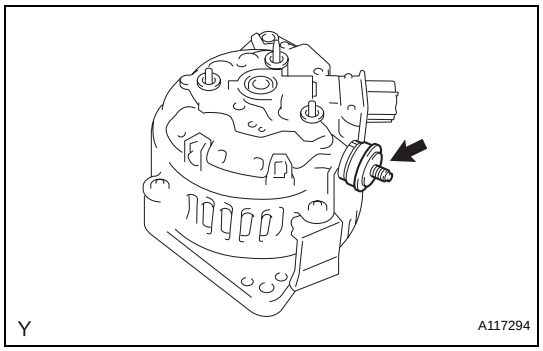

2. REMOVE GENERATOR BRUSH HOLDER ASSEMBLY
(a) Remove the nut and terminal insulator.
(b) Remove the nut, screw and rectifier plate.
(c) Remove the 2 nuts and the rear end cover.

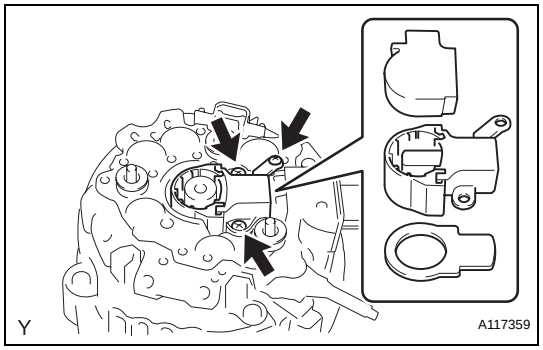

(d) Remove the brush cover from the generator brush holder assembly.
(e) Remove the 3 screws and the generator brush holder assembly.
(f) Remove the plate seal.

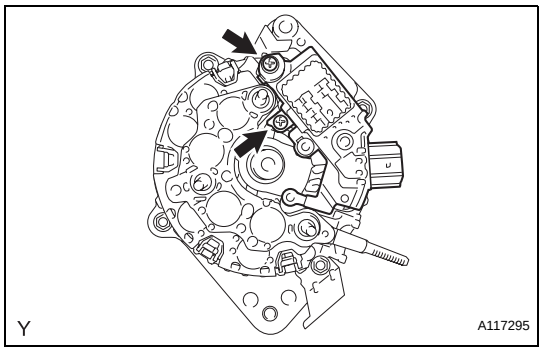

3. REMOVE GENERATOR REGULATOR ASSEMBLY

(a) Remove the 2 screws and the generator regulator assembly.

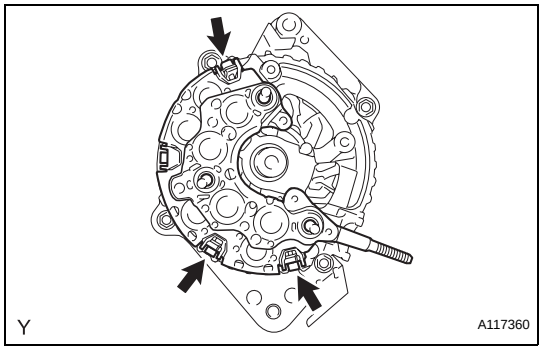

4. REMOVE GENERATOR HOLDER WITH RECTIFIER

(a) Remove the 3 screws and the generator holder with rectifier.

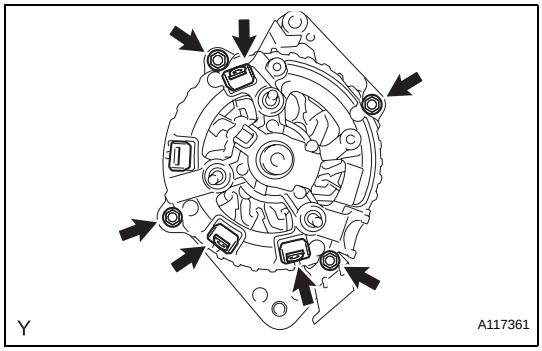

5. REMOVE GENERATOR ROTOR ASSEMBLY

(a) Remove the 3 terminal insulators from the generator rectifier end frame.

(b) Remove the 4 nuts and the cord clip.

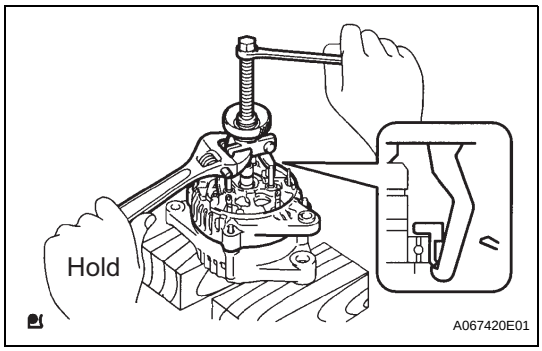

(c) Using SST, remove the generator rectifier end frame.
SST 09286-46011

(d) Remove the plate retainer.

(e) Remove the generator rotor assembly from the generator drive end frame.
NOTICE:
Do not drop the generator rotor assembly.
HINT:
If the generator rotor is engaged too firmly, gently tap the generator rotor shaft to remove it using a plastic hammer.

INSPECTION

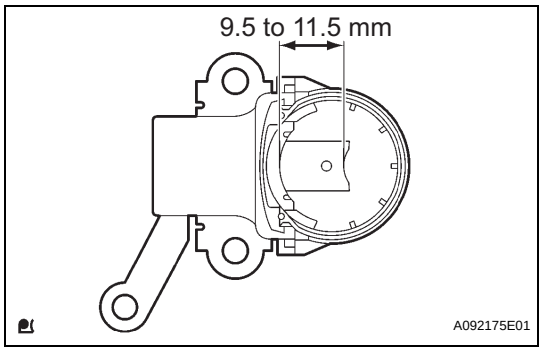

1. INSPECT GENERATOR BRUSH HOLDER ASSEMBLY

(a) Using vernier calipers, measure the exposed brush length.

Standard exposed length:
9.5 to 11.5 mm (0.374 to 0.453 in.)
Minimum exposed length:
1.5 mm (0.059 in.)

If the exposed length is less than the minimum, replace the generator brush holder assembly.

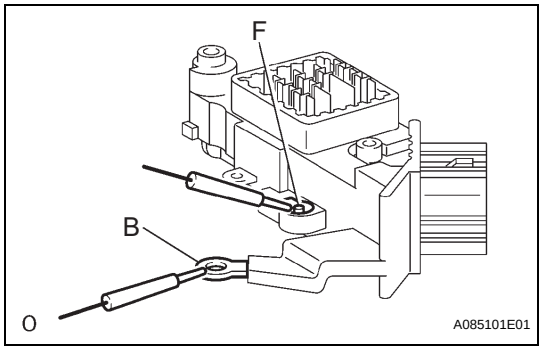

2. INSPECT GENERATOR REGULATOR ASSEMBLY

(a) Using an ohmmeter, check the continuity between terminals F and B.

Standard:
When the positive and negative poles between terminals F and B are exchanged, there is continuity in one direction but no continuity in the other direction.

If the continuity is not as specified, replace the generator regulator assembly.

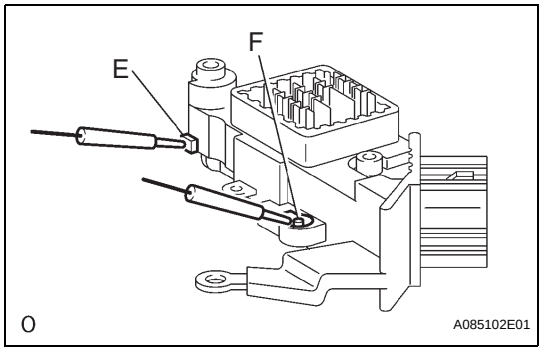

(b) Using an ohmmeter, check the continuity between terminals F and E.

Standard:
When the positive and negative poles between terminals F and E are exchanged, there is continuity in one direction but no continuity in the other direction.

If the continuity is not as specified, replace the generator regulator assembly.

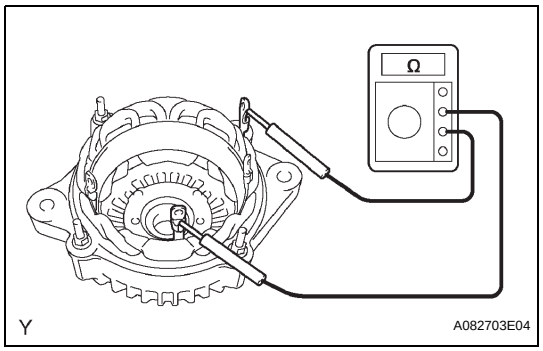

3. INSPECT GENERATOR DRIVE END FRAME

(a) Check the stator coil for open circuits.

(1) Using an ohmmeter, check the resistance between the coil leads.

Standard resistance:
Below 1 Ω

If the result is not as specified, replace the generator assembly.

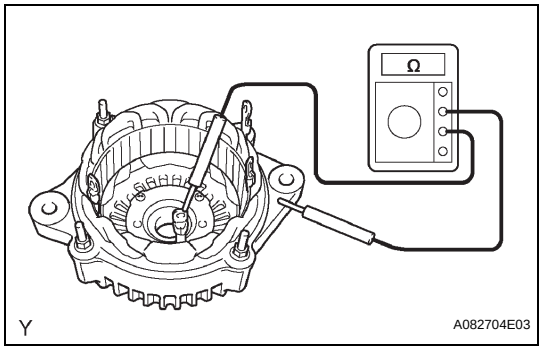

(b) Inspect the stator for ground.

(1) Using an ohmmeter, check the resistance between the coil lead and drive end frame.

Standard resistance:
10 kΩ or higher

If the result is not as specified, replace the generator assembly.

(c) Inspect the bearing.

(1) Make sure that the bearing is not rough or worn.

If necessary, replace the generator assembly.

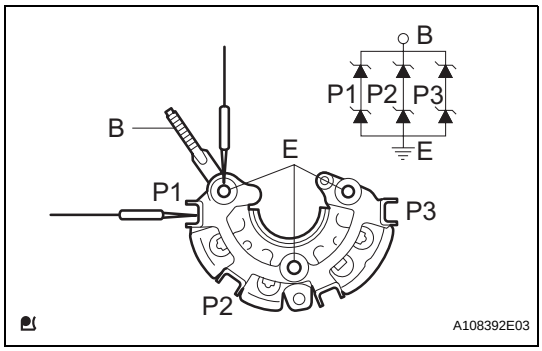

4. INSPECT GENERATOR HOLDER WITH RECTIFIER

(a) Using an ohmmeter, check the continuity among terminals P1, P2, P3 and B, and among P1, P2, P3 and E.

Standard:

When the positive and negative poles among terminals P1, P2, P3 and B are exchanged, there is continuity in one direction but no continuity in the other direction.

When the positive and negative poles among terminals P1, P2, P3 and E are exchanged, there is continuity in one direction but no continuity in the other direction.

If the continuity is not as specified, replace the generator holder with rectifier.

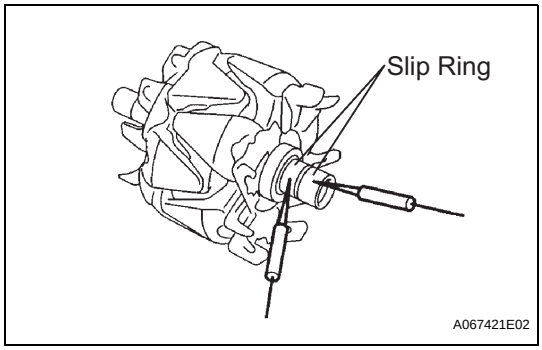

5. INSPECT GENERATOR ROTOR ASSEMBLY

(a) Check the generator rotor for open circuits.

(1) Using an ohmmeter, measure the resistance between the slip rings.

Standard resistance:

1.7 to 2.1 Ω at 20°C (68°F)

If the resistance is not as specified, replace the generator rotor assembly.

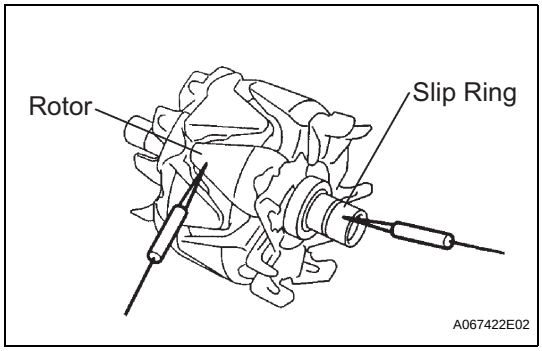

(b) Check the generator rotor for short circuits.

(1) Using an ohmmeter, check the resistance between the slip ring and generator rotor assembly.

Standard resistance:

10 kΩ or higher

If the result is not as specified, replace the generator rotor assembly.

(c) Inspect the slip rings.

(1) Make sure that the slip rings are not rough or scored.

If rough or scored, replace the generator rotor assembly.

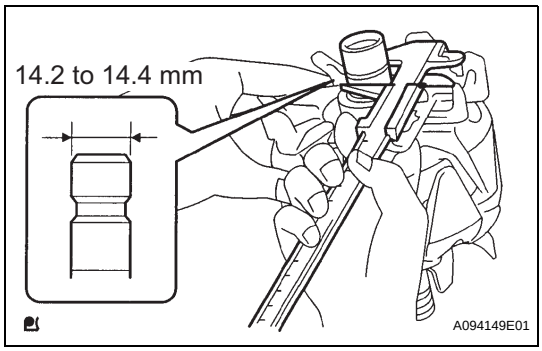

(2) Using vernier calipers, measure the slip ring diameter.

Standard diameter:

14.2 to 14.4 mm (0.559 to 0.567 in.)

Minimum diameter:

12.8 mm (0.504 in.)

If the diameter is less than the minimum, replace the generator rotor assembly.

REASSEMBLY

1. INSTALL GENERATOR ROTOR ASSEMBLY

(a) Place the generator drive end frame on the generator rotor assembly.
NOTICE:
Do not drop the generator rotor assembly.

(b) Install the generator rotor assembly and the plate retainer.

(c) Using a 30 mm socket wrench and press, slowly press in the generator rectifier end frame.

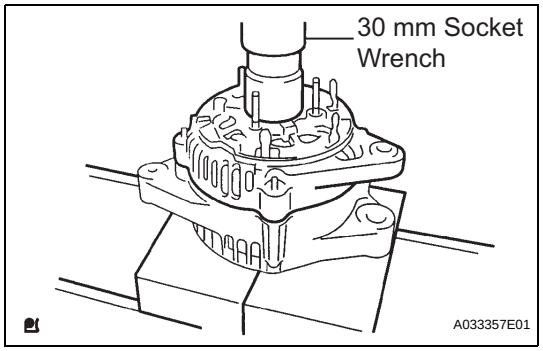

(d) Install the 4 nuts and the cord clip.
Torque: 4.5 N*m (46 kgf*cm, 40 in.*lbf)

(e) Install the 3 terminal insulators onto the generator rectifier end frame.

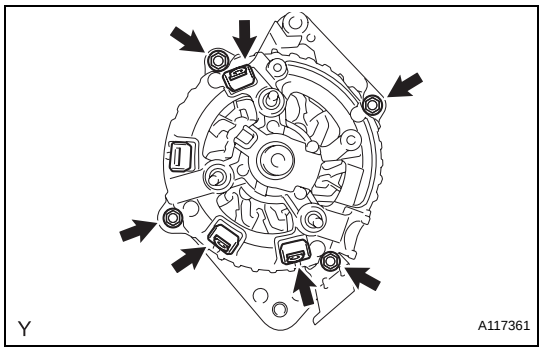

2. INSTALL GENERATOR HOLDER WITH RECTIFIER

(a) Install the generator holder with rectifier with the 3 screws.
Torque: 2.0 N*m (20 kgf*cm, 17 in.*lbf)

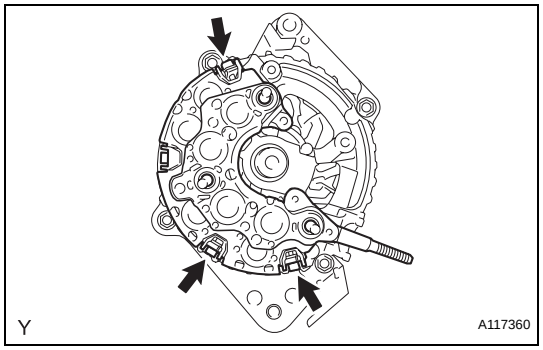

3. INSTALL GENERATOR REGULATOR ASSEMBLY

(a) Install the generator regulator assembly with the 2 screws.
Torque: 2.0 N*m (20 kgf*cm, 17 in.*lbf)

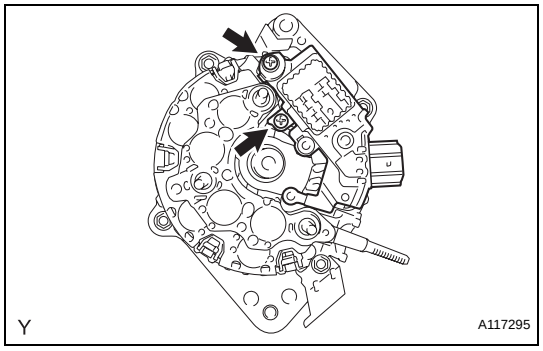

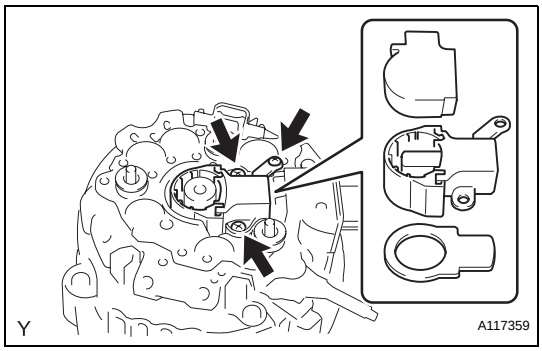

4. INSTALL GENERATOR BRUSH HOLDER ASSEMBLY

(a) Install the plate seal.

(b) Install the generator brush holder assembly with the 3 screws.
Torque: 2.0 N*m (20 kgf*cm, 17 in.*lbf)

(c) Install the brush cover onto the generator brush holder assembly.

(d) Install the rear end cover with the 2 nuts.
Torque: 4.4 N*m (45 kgf*cm, 39 in.*lbf)

(e) Install the rectifier plate with the nut and screw.
Torque: 4.4 N*m (45 kgf*cm, 39 in.*lbf) for nut
Torque: 3.8 N*m (39 kgf*cm, 34 in.*lbf) for bolt

(f) Install the terminal insulator with the nut.
Torque: 4.1 N*m (42 kgf*cm, 36 in.*lbf)

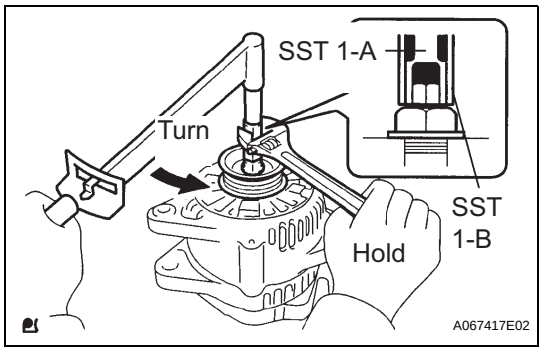

5. INSTALL GENERATOR PULLEY
SST 09820-63010 (09820-06010, 09820-06020)
HINT:

SST 1-A and B	09820 - 06010
SST 2	09820 - 06020

(a) Install the generator pulley onto the generator rotor shaft by tightening the generator pulley nut by hand.

(b) Hold SST 1-A with a torque wrench, and tighten SST 1-B clockwise to the specified torque.
Torque: 39 N*m (398 kgf*cm, 29 ft.*lbf)
NOTICE:
Check that SST is securely fitted onto the generator rotor shaft.

CH

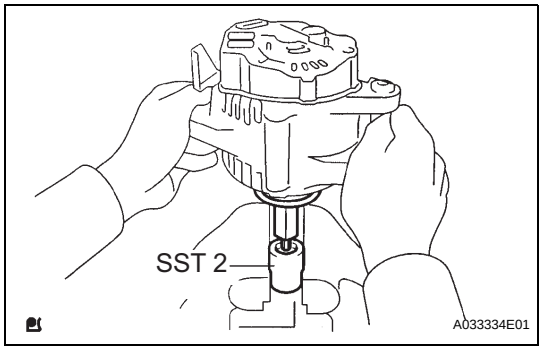

(c) Mount SST 2 in a vise.

(d) Insert SST 1-A and B into SST 2, and attach the generator pulley nut to SST 2.

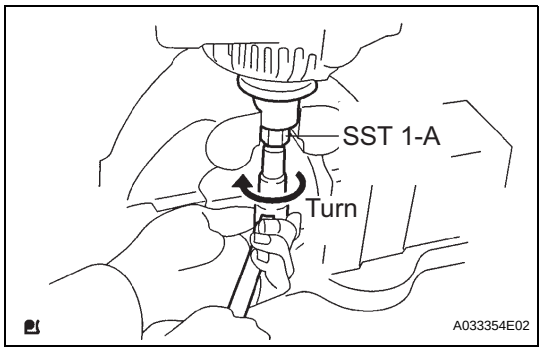

(e) Tighten the generator pulley nut by turning SST 1-A in the direction shown in the illustration.
Torque: 133 N*m (1,356 kgf*cm, 98 ft.*lbf)

(f) Remove the generator from SST 2.

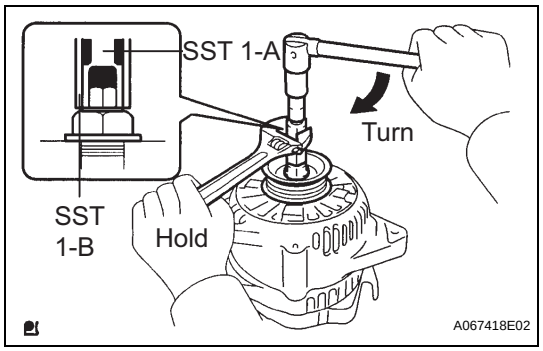

(g) Turn SST 1-B, and remove SST 1-A and B.
(h) Turn the generator pulley, and check that the generator pulley moves smoothly.

INSTALLATION

1. INSTALL GENERATOR ASSEMBLY

(a) Provisionally install the generator with fixing bolt B.

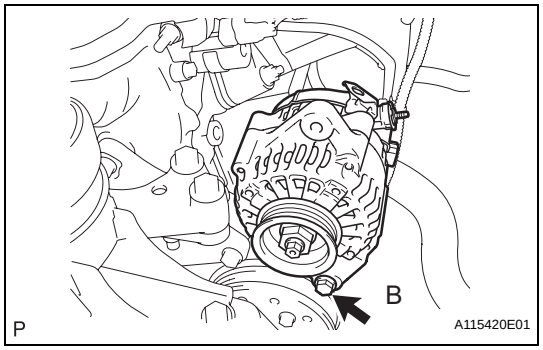

(b) Provisionally install the fan belt adjusting slider with fan belt adjusting slider fixing bolts A and B, then move the generator toward the cylinder block and tighten bolt B.
Torque: 11 N*m (112 kgf*cm, 8.1 ft.*lbf)

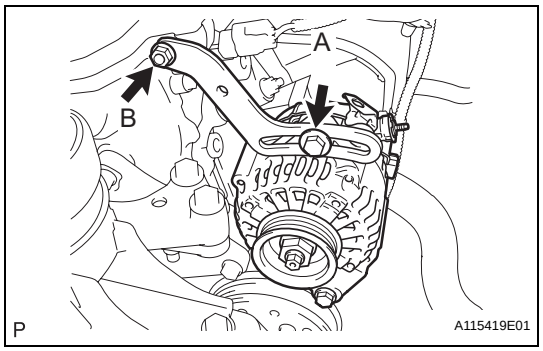

(c) Install the connector and the wire harness clamp.
(d) Install terminal B with the nut.
Torque: 9.8 N*m (100 kgf*cm, 7.2 ft.*lbf)
(e) Install the terminal cap.

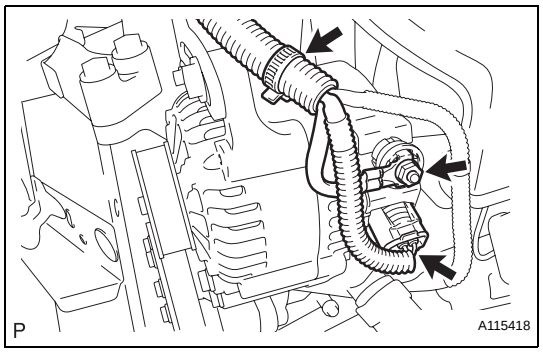

2. INSTALL FAN AND GENERATOR V BELT (See page EM-7)

3. ADJUST FAN AND GENERATOR V BELT (See page EM-7)

4. INSPECT FAN AND GENERATOR V BELT (See page EM-8)

5. INSTALL ENGINE UNDER COVER RH

6. CONNECT CABLE TO NEGATIVE BATTERY TERMINAL
Torque: 5.4 N*m (55 kgf*cm, 48 in.*lbf)