RESTRAINT SYSTEM

SECTION RS

CONTENTS

SEAT BELTS 3
Precautions 3
SUPPLEMENTAL RESTRAINT SYSTEM (SRS) "AIR BAG" AND "SEAT BELT PRE-TENSIONER" 3
PRECAUTION FOR SEAT BELT SERVICE 3
Maintenance 4
Front Seat Belt 5
REMOVAL AND INSTALLATION/4-DOOR SEDAN 5
REMOVAL AND INSTALLATION/5-DOOR HATCHBACK 7
REMOVAL AND INSTALLATION/3-DOOR HATCHBACK 9
Rear Seat Belt 11
REMOVAL AND INSTALLATION/4-DOOR SEDAN WITH 2-POINT TYPE REAR CENTER SEAT BELT 11
REMOVAL AND INSTALLATION/4-DOOR SEDAN WITH 3-POINT TYPE REAR CENTER SEAT BELT 13
REMOVAL AND INSTALLATION/HATCHBACK 15
ISO Fix Child Restraint Anchor 18
REMOVAL AND INSTALLATION 18
Tether Anchor Plate 19
REMOVAL AND INSTALLATION 19
SUPPLEMENTAL RESTRAINT SYSTEM (SRS) 20
Precautions 20
SUPPLEMENTAL RESTRAINT SYSTEM (SRS) "AIR BAG" AND "SEAT BELT PRE-TENSIONER" 20
PRECAUTIONS FOR SRS "AIR BAG" AND "SEAT BELT PRE-TENSIONER" SERVICE 20
WIRING DIAGRAMS AND TROUBLE DIAGNOSIS 20
Preparation 21
SPECIAL SERVICE TOOLS 21
COMMERCIAL SERVICE TOOL 22
SRS Configuration 22
Seat Belt Pre-tensioner with Load Limiter 23
Built-in Type Side Air Bag 23
SRS Component Parts Location 24
Maintenance Items 25
Diagnosis Sensor Unit 26
REMOVAL AND INSTALLATION 26
Front Seat Belt Pre-tensioner 27
REMOVAL AND INSTALLATION 27
Side Air Bag (Satellite) Sensor 27
REMOVAL AND INSTALLATION 27
Driver Air Bag Module and Spiral Cable 29
REMOVAL AND INSTALLATION/WITH 4-SPOKE STEERING WHEEL 29
REMOVAL 29
INSTALLATION 31
REMOVAL AND INSTALLATION/WITH 3-SPOKE STEERING WHEEL 32
REMOVAL 32
INSTALLATION 34
Front Passenger Air Bag Module 35
REMOVAL 35
INSTALLATION 36
Front Side Air Bag Module/4-door Sedan 36
REMOVAL 36
INSTALLATION 37
Front Side Air Bag Module/Hatchback 38
REMOVAL 38
INSTALLATION 39
Disposal of Air Bag Module and Seat Belt Pre-tensioner 40
CHECKING DEPLOYMENT TOOL 40
DEPLOYMENT PROCEDURES FOR AIR BAG MODULE (OUTSIDE OF VEHICLE) 41
DEPLOYMENT PROCEDURES FOR SEAT BELT PRE-TENSIONER (OUTSIDE OF VEHICLE) 45
DEPLOYMENT OF AIR BAG MODULE AND SEAT BELT PRE-TENSIONER WHILE MOUNTED IN VEHICLE 46
DISPOSING OF AIR BAG MODULE AND SEAT BELT PRE-TENSIONER 46
Trouble Diagnoses Introduction 47
DIAGNOSIS FUNCTION 47
DIAGNOSIS MODE FOR CONSULT-II 48
HOW TO CHANGE SELF-DIAGNOSIS MODE WITH CONSULT-II 49
HOW TO CHANGE SELF-DIAGNOSIS MODE WITHOUT CONSULT-II 49
HOW TO ERASE SELF-DIAGNOSIS RESULTS 49

CONTENTS (Cont'd)

How to Perform Trouble Diagnoses for Quick and Accurate Repair 51
INFORMATION FROM CUSTOMER 51
PRELIMINARY CHECK 51
WORK FLOW 52
Wiring Diagram - SRS -/4-door Sedan....53
Wiring Diagram - SRS -/Hatchback....55
TYPE-1 55
TYPE-2 57
SRS Operation Check 59
DIAGNOSTIC PROCEDURE 1 59
Trouble Diagnoses with CONSULT-II....60
DIAGNOSTIC PROCEDURE 2 60
DIAGNOSTIC PROCEDURE 3 66
DIAGNOSTIC PROCEDURE 4 (CONTINUED FROM DIAGNOSTIC PROCEDURE 2) 68
DIAGNOSTIC PROCEDURE 5 68
Trouble Diagnoses without CONSULT-II....74
DIAGNOSTIC PROCEDURE 6 74
DIAGNOSTIC PROCEDURE 7 79
DIAGNOSTIC PROCEDURE 8 (CONTINUED FROM DIAGNOSTIC PROCEDURE 6) 81
Trouble Diagnoses: "AIR BAG" Warning Lamp Does Not Turn Off 82
DIAGNOSTIC PROCEDURE 9 82
Trouble Diagnoses: "AIR BAG" Warning Lamp Does Not Turn On 84
DIAGNOSTIC PROCEDURE 10 84
Collision Diagnosis 85
FOR FRONTAL COLLISION 85
FOR SIDE COLLISION 87

Precautions

SUPPLEMENTAL RESTRAINT SYSTEM (SRS) “AIR BAG” AND “SEAT BELT PRE-TENSIONER”

NJRS0001

The Supplemental Restraint System such as “AIR BAG” and “SEAT BELT PRE-TENSIONER” used along with a seat belt, helps to reduce the risk or severity of injury to the driver and front passenger for certain types of collision. The SRS composition which is available to NISSAN MODEL N16 is as follows (The composition varies according to the destination and optional equipment.):

- For a frontal collision
  The Supplemental Restraint System consists of driver air bag module (located in the center of the steering wheel), front passenger air bag module (located on the instrument panel on passenger side), front seat belt pre-tensioners, a diagnosis sensor unit, warning lamp, wiring harness and spiral cable.
- For a side collision
  The Supplemental Restraint System consists of front side air bag module (located in the outer side of front seat), side air bag (satellite) sensor, diagnosis sensor unit (one of components of air bags for a frontal collision), wiring harness, warning lamp (one of components of air bags for a frontal collision).

WARNING:

- **To avoid rendering the SRS inoperative, which could increase the risk of personal injury or death in the event of a collision which would result in air bag inflation, all maintenance should be performed by an authorized NISSAN dealer.**
- **Improper maintenance, including incorrect removal and installation of the SRS, can lead to personal injury caused by unintentional activation of the system.**
- **Do not use electrical test equipment on any circuit related to the SRS unless instructed to in this Service Manual. SRS wiring harnesses can be identified by yellow harness connector.**

PRECAUTION FOR SEAT BELT SERVICE

NJRS0002

CAUTION:

- **Before removing the seat belt pre-tensioner assembly, turn the ignition switch off, disconnect both battery cables and wait at least 3 minutes.**
- **Do not use electrical test equipment for seat belt pre-tensioner connector.**
- **After replacing or reinstalling seat belt pre-tensioner assembly, or reconnecting seat belt pre-tensioner connector, check the system function. Refer to “SRS Operation Check” for details. (RS-59)**
- **Do not use disassemble buckle or seat belt assembly.**
- **Replace anchor bolts if they are deformed or worn out.**
- **Never oil tongue and buckle.**
- **If any component of seat belt assembly is questionable, do not repair. Replace the whole seat belt assembly.**
- **If webbing is cut, frayed, or damaged, replace seat belt assembly.**
- **When replacing seat belt assembly, use a genuine seat belt assembly.**

After A Collision

NJRS0002S01

WARNING:

Inspect all seat belt assemblies including retractors and attaching hardware after any collision. NISSAN recommends that all seat belt assemblies in use during a collision be replaced unless the collision was minor and the belts show no damage and continue to operate properly. Failure to do so could result in serious personal injury in an accident. Seat belt assemblies not in use during a collision should also be replaced if either damage or improper operation is noted. Seat belt pre-tensioner should be replaced even if the seat belts are not in use during a frontal collision in which the air bags are deployed.

Replace any seat belt assembly (including anchor bolts) if:

- The seat belt was in use at the time of a collision (except for minor collisions and the belts, retractors and buckles show no damage and continue to operate properly).
- The seat belt was damaged in an accident. (i.e. torn webbing, bent retractor or guide, etc.)
- The seat belt attaching point was damaged in an accident. Inspect the seat belt attaching area for damage or distortion and repair as necessary before installing a new seat belt assembly.
- Anchor bolts are deformed or worn out.
- The seat belt pre-tensioner should be replaced even if the seat belts are not in use during the collision in which the air bags are deployed.

Maintenance

NJRS0055

CAUTION:

- **After any collision, inspect all seat belt assemblies, including retractors and other attached hardwares (i.e. anchor bolt, guide rail set). Nissan recommends to replace all seat belt assemblies in use during a collision, unless not damaged and properly operating after minor collision.**
  Also inspect seat belt assemblies not in use during a collision, and replace if damaged or improperly operating.
  Front seat belt pre-tensioner should be replaced even if the seat belt are not in use during a frontal collision where the driver and passenger air bags are deployed.
- **If any component of seat belt assembly is questionable, do not repair. Replace as seat belt assembly.**
- **If webbing is cut, frayed, or damaged, replace belt assembly.**
- **Do not spill drinks, oil etc. on inner lap belt buckle. Never oil tongue and buckle.**
- **Use a NISSAN genuine seat belt assembly.**

Front seat belt

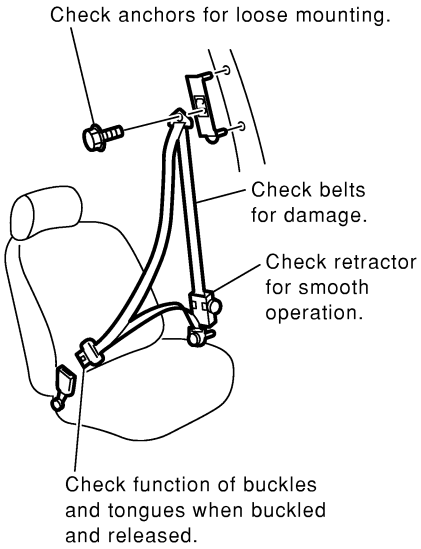

Anchor bolt

43.1 - 54.9 N•m
(4.4 - 5.6 kg-m, 32 - 40 ft-lb)

Rear seat belt

4-door Sedan

3/5-door Hatchback

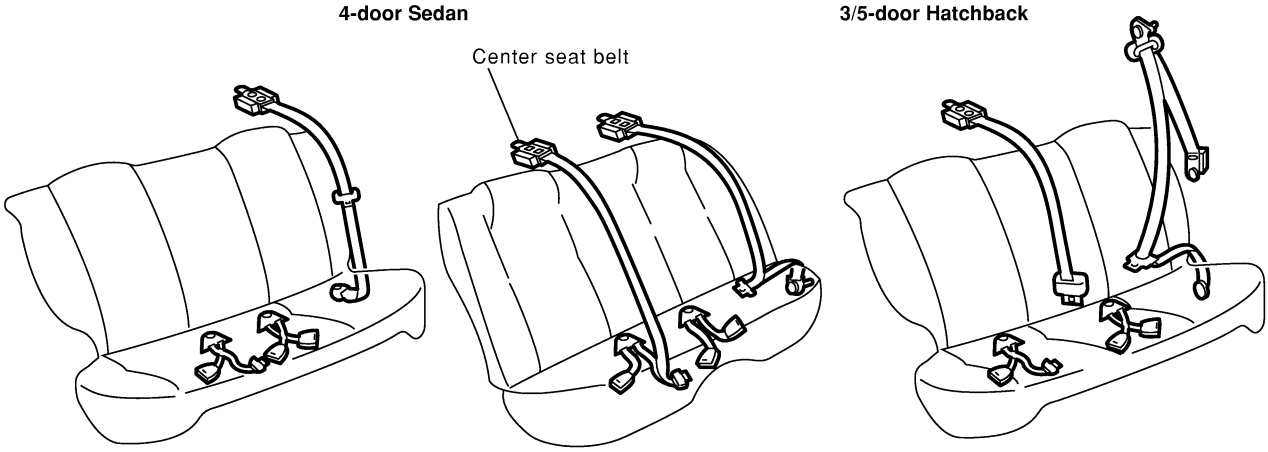

SRS888

Front Seat Belt

REMOVAL AND INSTALLATION/4-DOOR SEDAN

=NJRS0003

1. Slide the seat all the way forward and tilt the seatback toward the front.
2. Remove adjuster cover. A
3. Remove floor anchor bolt. B
4. Remove shoulder anchor bolt. C
5. Remove front and rear kicking plate, then remove center pillar upper and lower garnish. Refer to BT-31, “SIDE AND FLOOR TRIM” for details.
6. Remove second sash guide
7. Disconnect seat belt pre-tensioner connector.
8. Remove the screw securing seat belt pre-tensioner retractor, then remove seat belt and seat belt pre-tensioner retractor.
9. Remove bolts securing seat belt adjuster, then remove seat belt adjuster.

SEC. 796•868

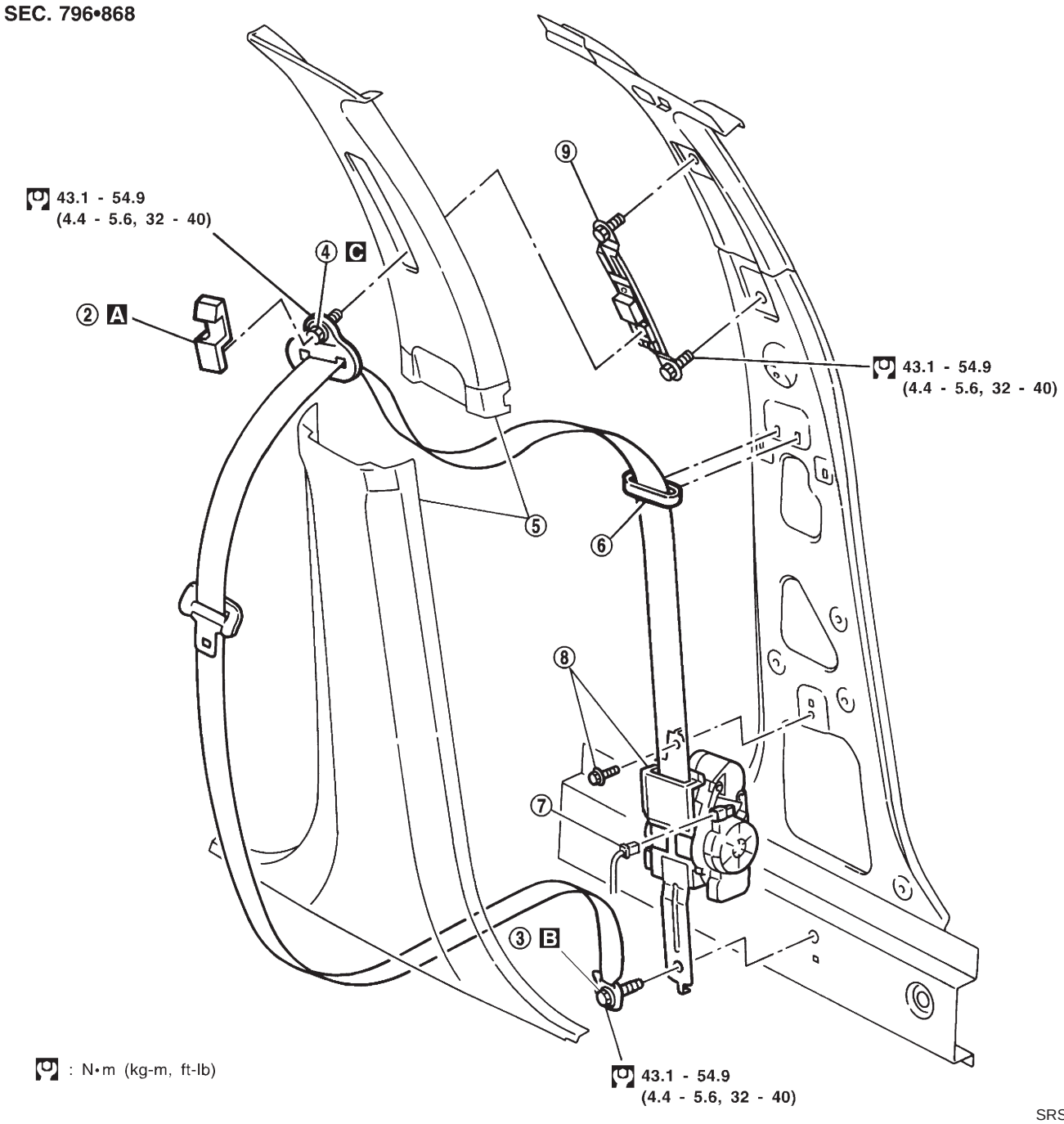

SRS812

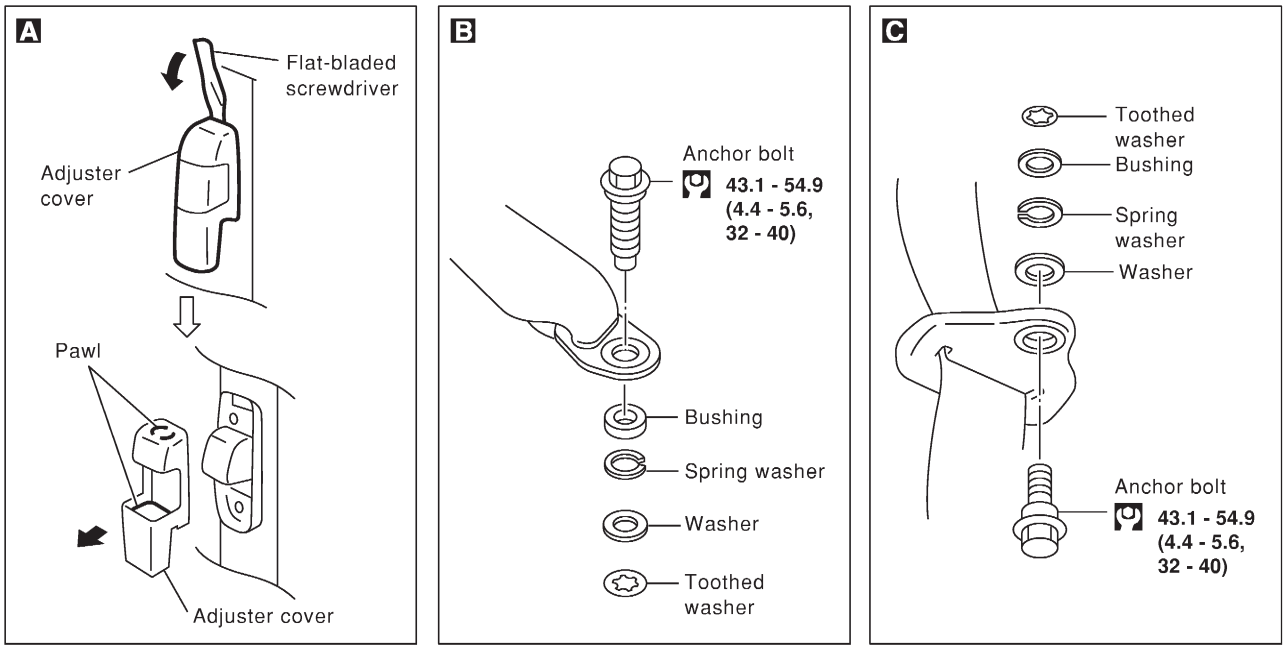

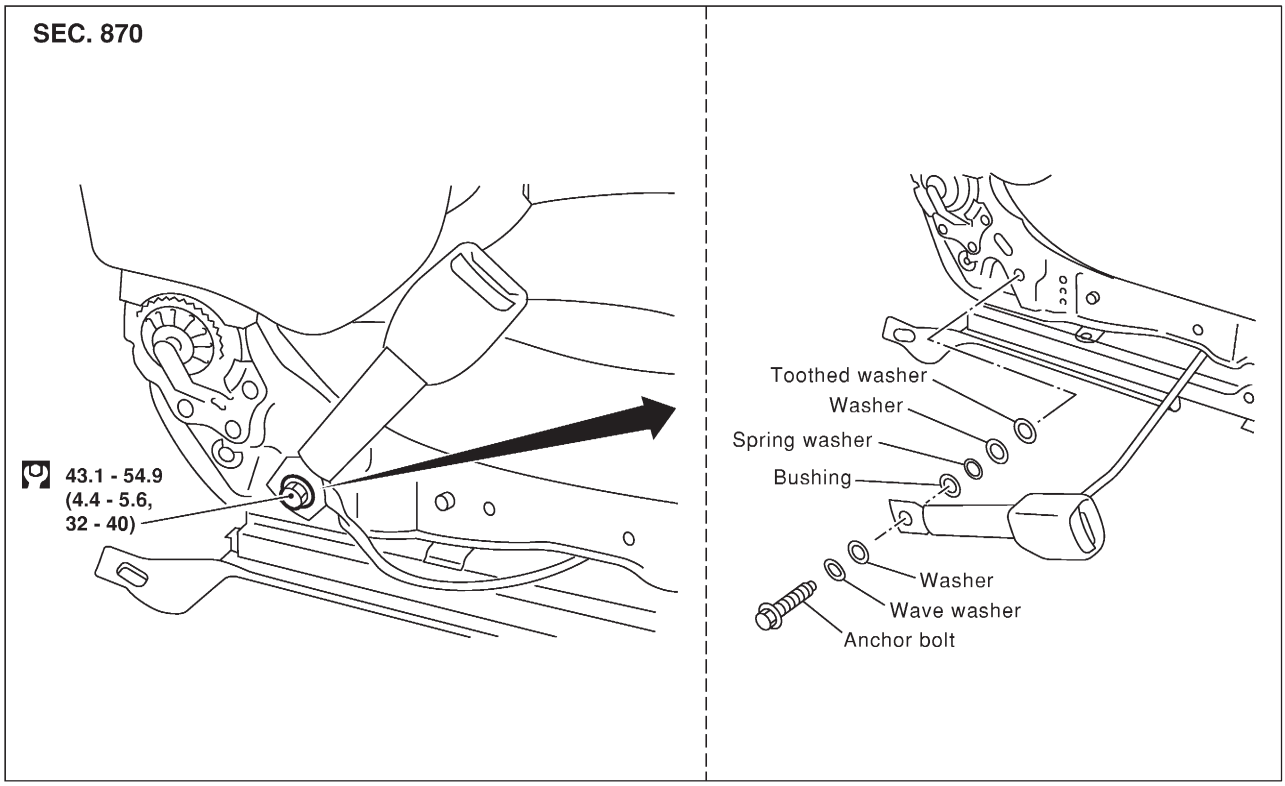

: N•m (kg-m, ft-lb)

SRS813-A

REMOVAL AND INSTALLATION/5-DOOR HATCHBACK

=NJRS0056

1. Slide the seat all the way forward and tilt the seatback toward the front.
2. Remove adjuster cover. A
3. Remove floor anchor bolt. B
4. Remove shoulder anchor bolt. C
5. Remove front and rear kicking plate, then remove center pillar upper and lower garnish. Refer to BT-36, "SIDE AND FLOOR TRIM" for details.
6. Remove second sash guide
7. Disconnect seat belt pre-tensioner connector.
8. Remove the screw securing seat belt pre-tensioner retractor, then remove seat belt and seat belt pre-tensioner retractor.
9. Remove bolts securing seat belt adjuster, then remove seat belt adjuster.

SEC. 796•868

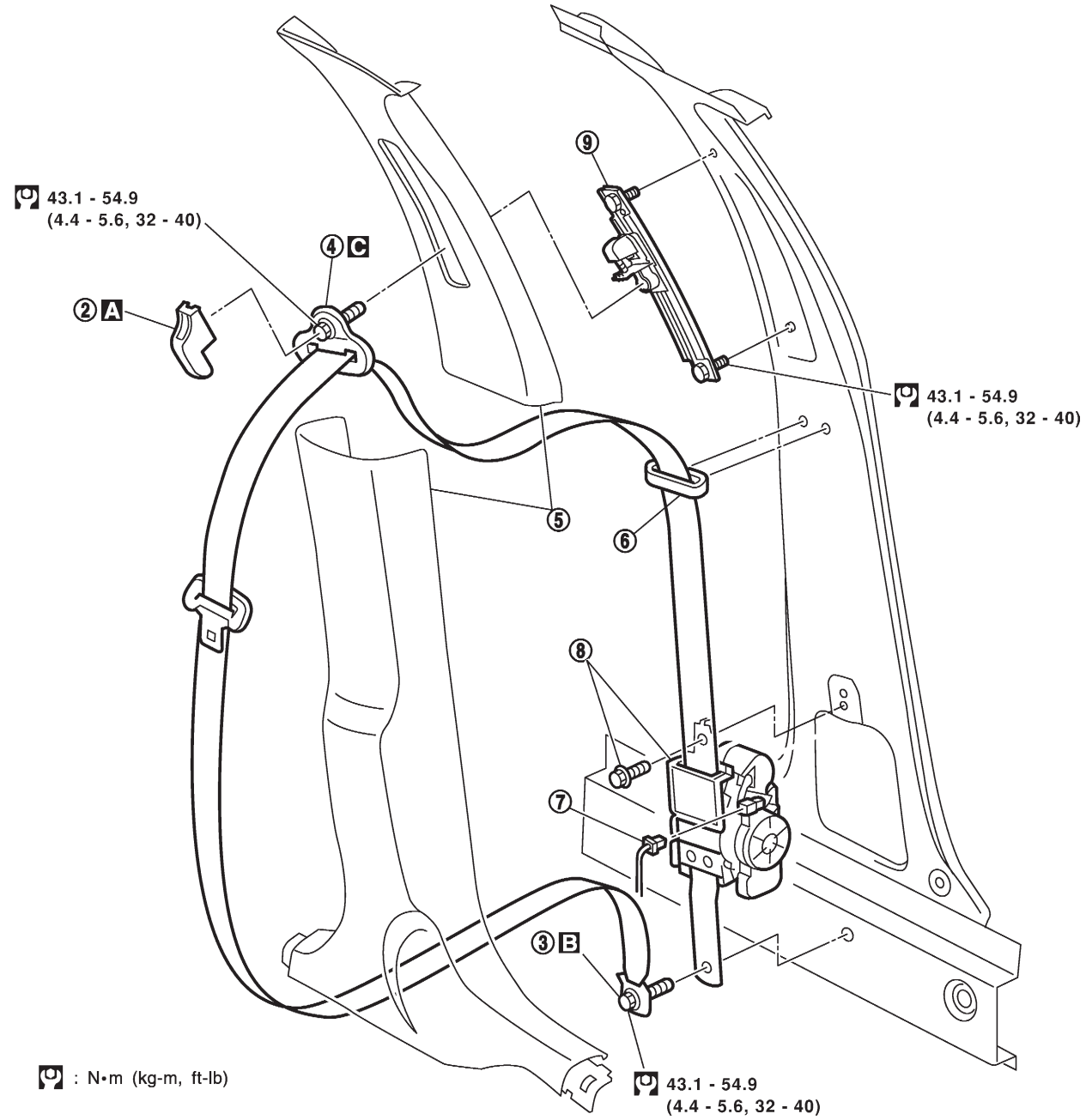

SRS854

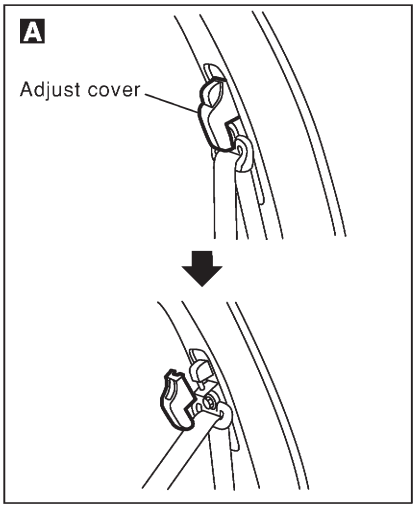

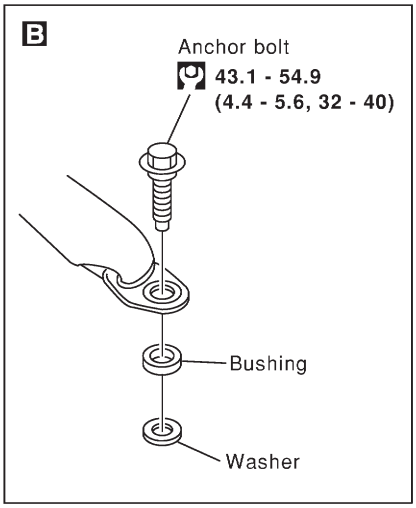

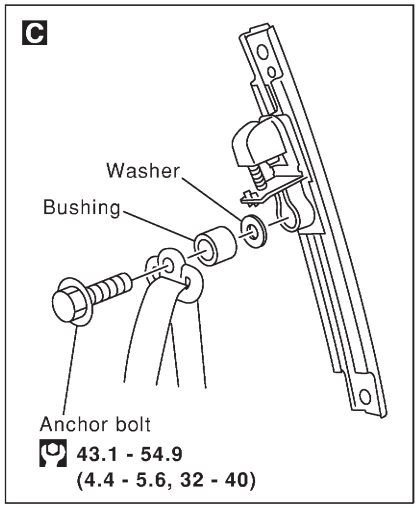

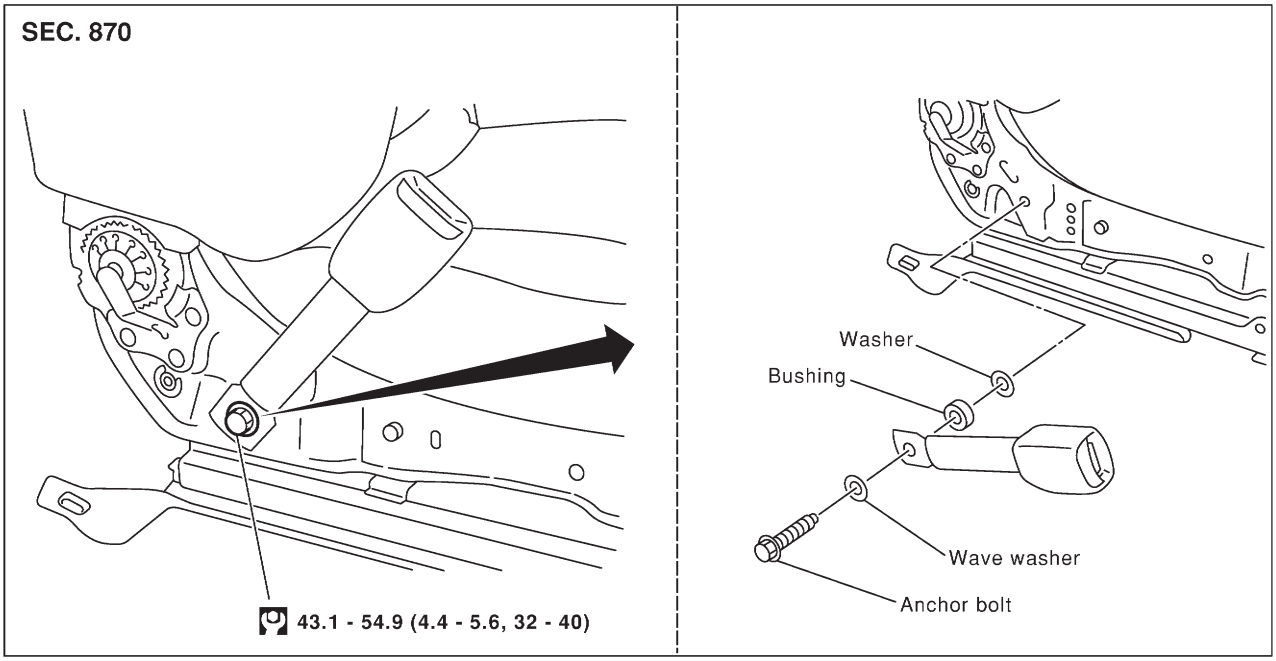

: N•m (kg-m, ft-lb)

SRS855-A

REMOVAL AND INSTALLATION/3-DOOR HATCHBACK

=NJRS0057

1. Slide the seat all the way forward and tilt the seatback toward the front.
2. Remove adjuster cover. A
3. Remove floor anchor bolt. B
4. Remove shoulder anchor bolt. C
5. Remove rear side finisher and rear pillar garnish. Refer to BT-34, "SIDE AND FLOOR TRIM" for details.
6. Disconnect seat belt pre-tensioner connector.
7. Remove the screw securing seat belt pre-tensioner retractor, then remove seat belt and seat belt pre-tensioner retractor.
8. Remove bolts securing seat belt adjuster, then remove seat belt adjuster.

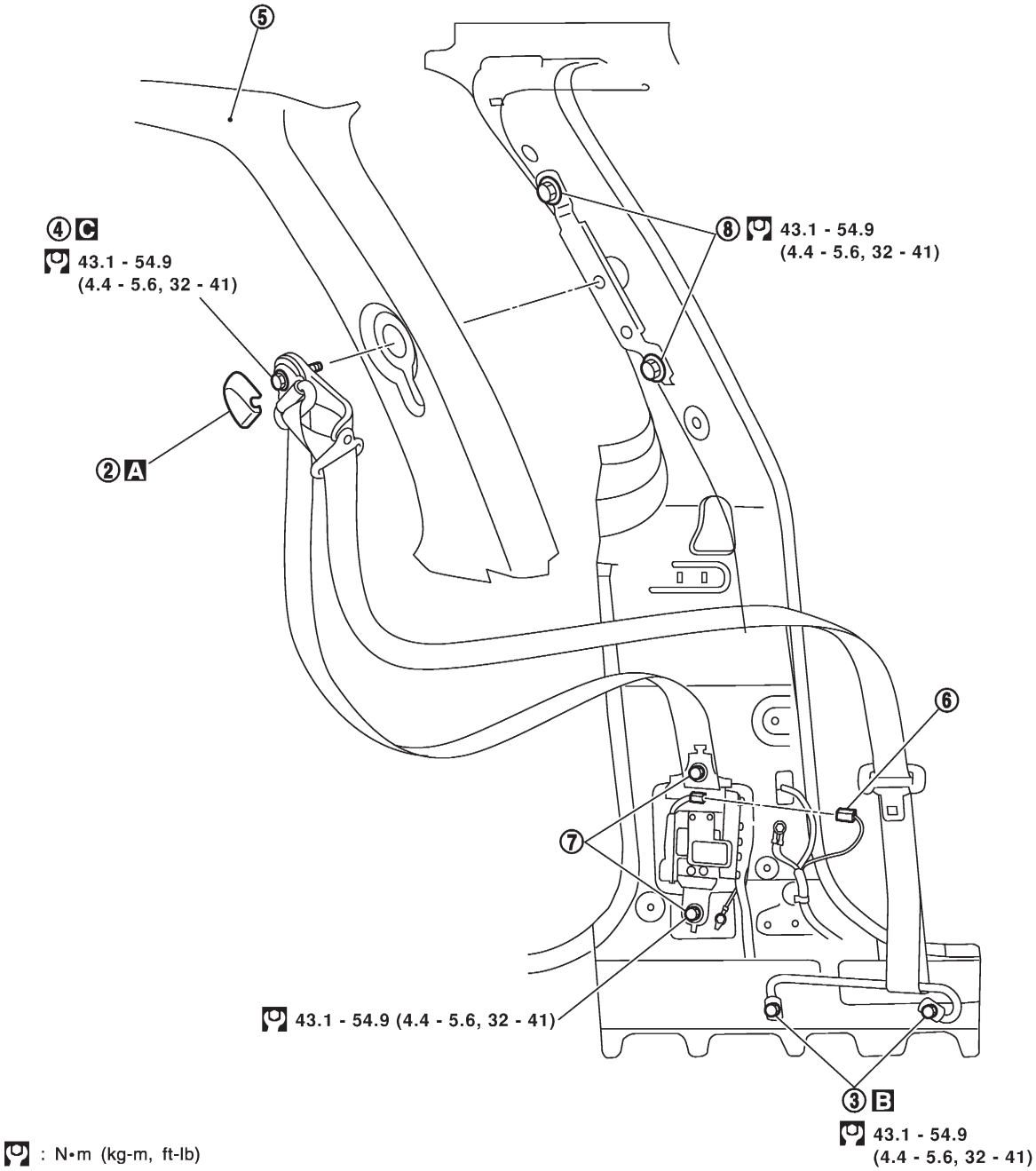

SRS856

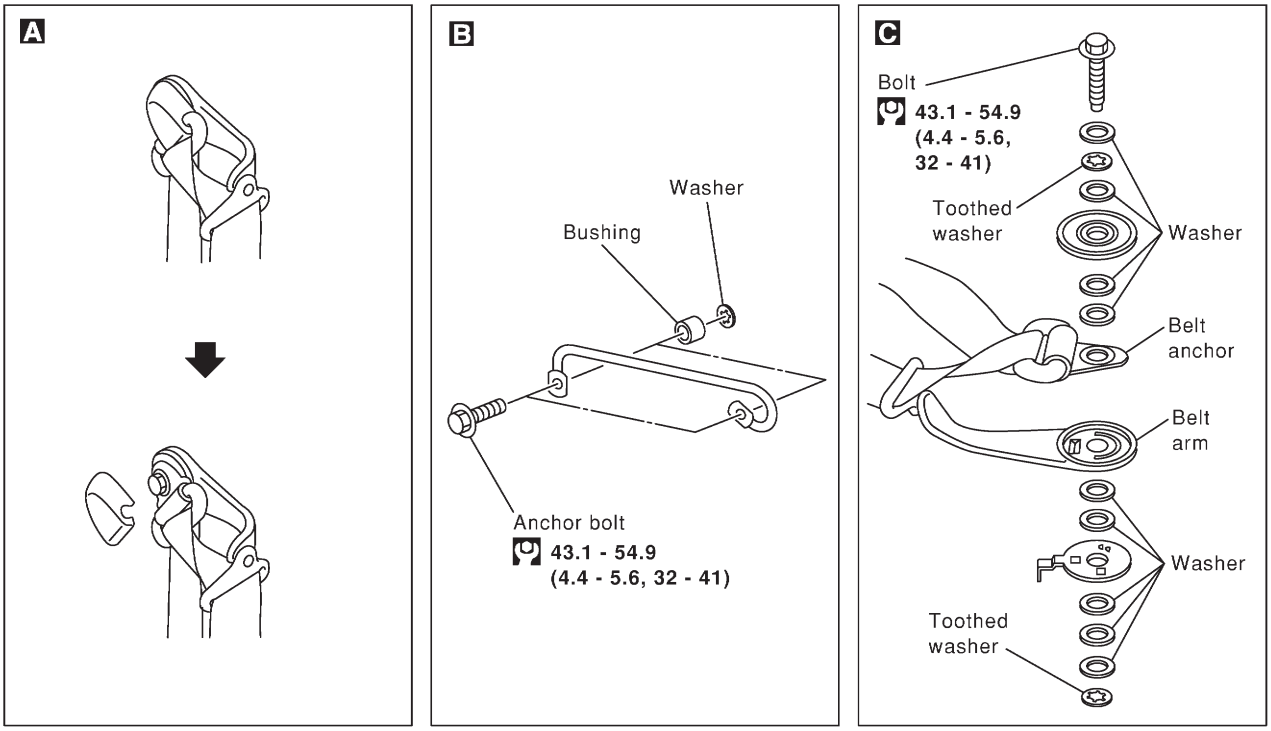

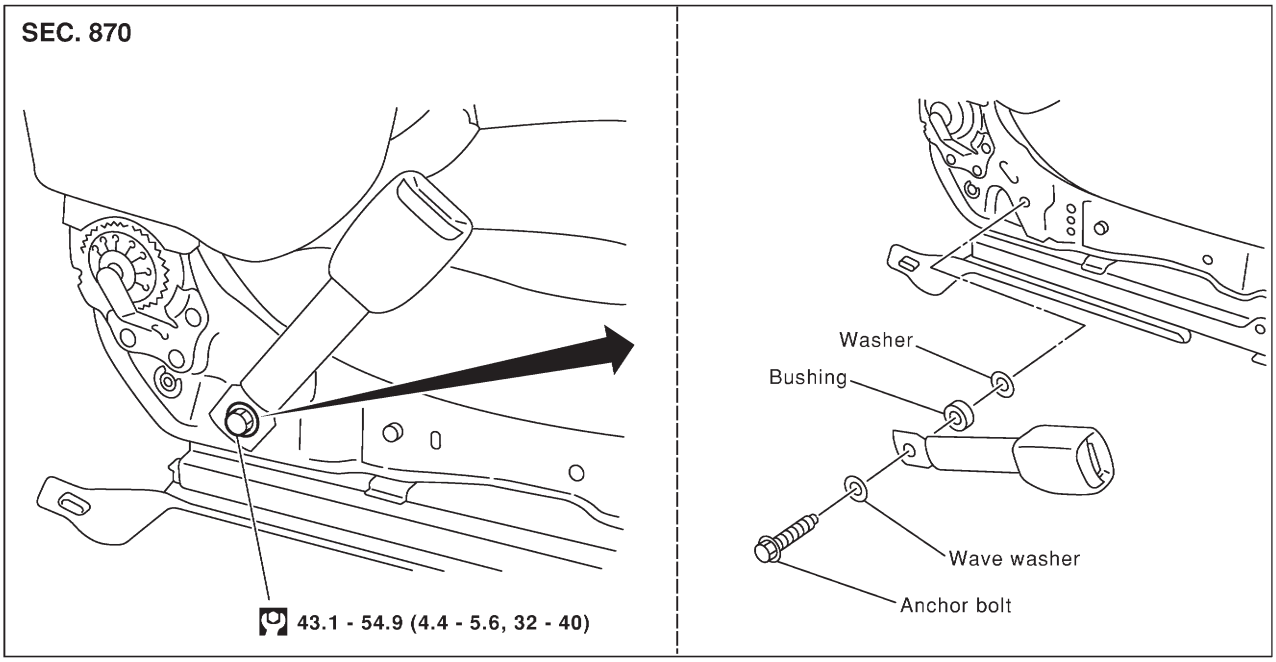

: N•m (kg-m, ft-lb)

SRS857-A

Rear Seat Belt

REMOVAL AND INSTALLATION/4-DOOR SEDAN WITH 2-POINT TYPE REAR CENTER SEAT BELT

=NJRS0042

1. Remove rear seat. Refer to BT-60, “REAR SEAT” for details.
2. Remove outer and floor anchor bolt. A B
3. Remove rear side garnish. Refer to BT-31, “SIDE AND FLOOR TRIM” for details.
4. Remove rear parcel shelf finisher. Refer to BT-31, “SIDE AND FLOOR TRIM” for details.
5. Remove bolts securing rear seat belt retractor, then remove seat belt and seat belt retractor. C

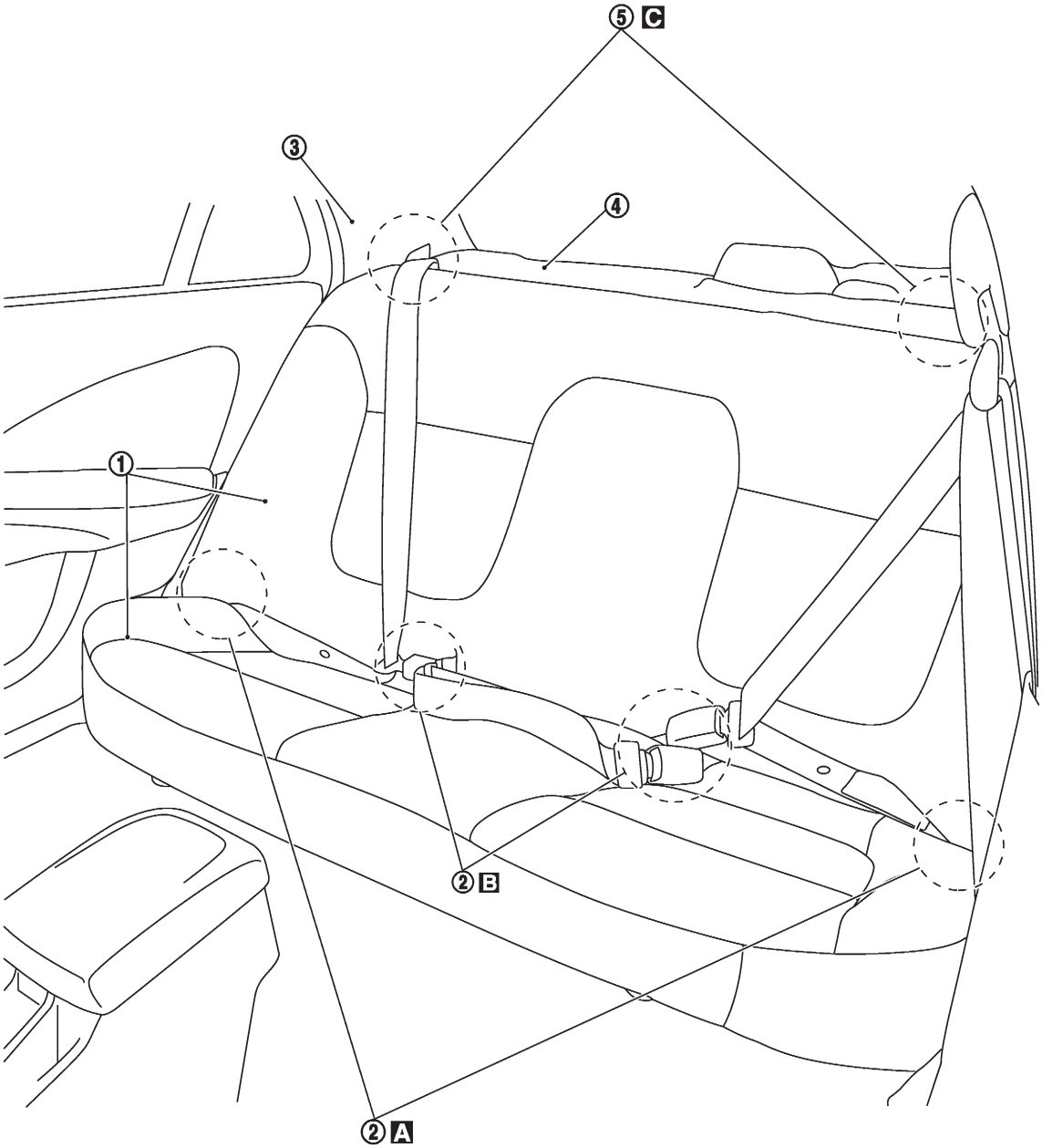

A B C: 43.1 - 54.9 N•m (4.4 - 5.6 kg-m, 32 - 40 ft-lb)

SRS814

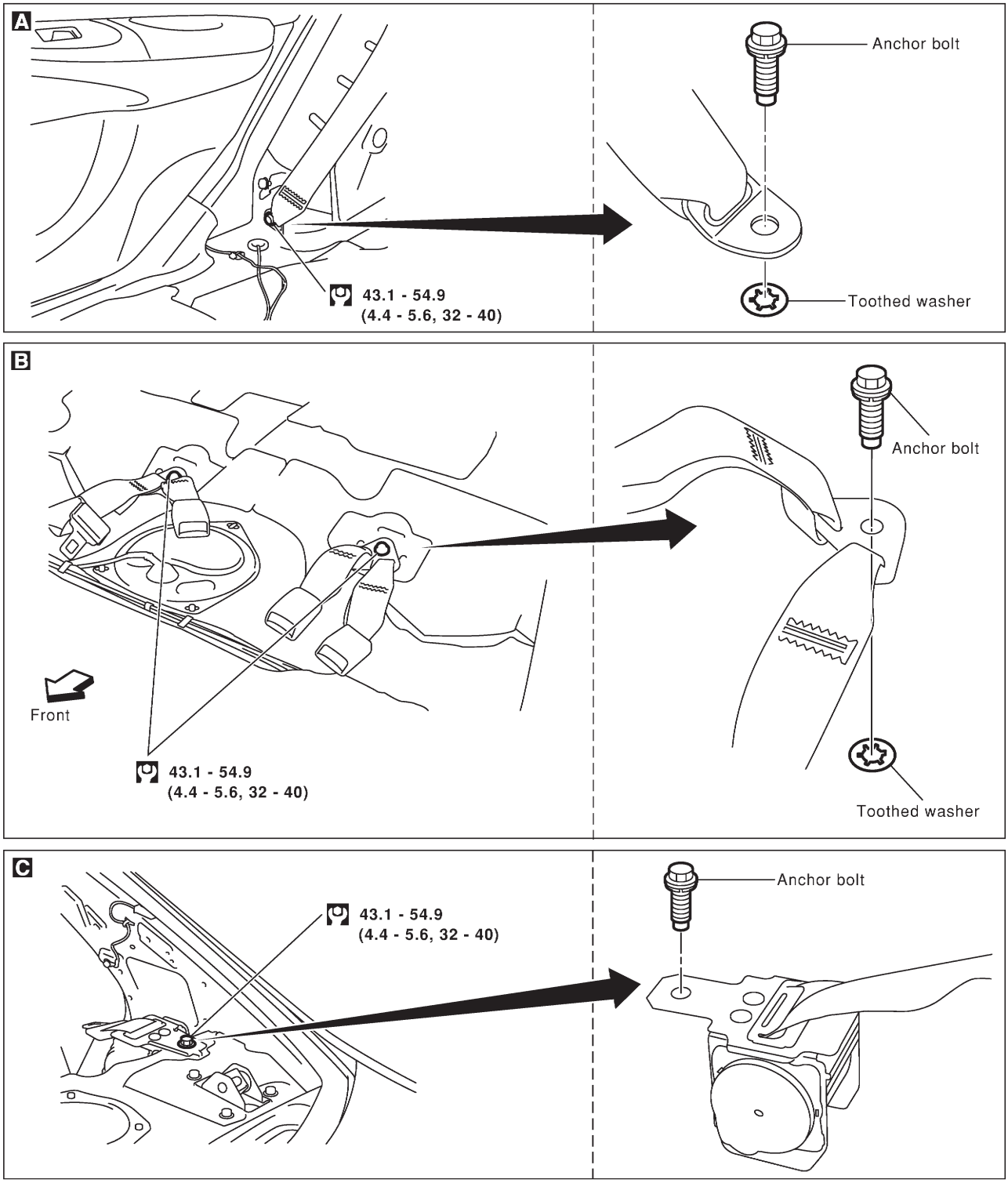

: N•m (kg-m, ft-lb)

SRS815

REMOVAL AND INSTALLATION/4-DOOR SEDAN WITH 3-POINT TYPE REAR CENTER SEAT BELT

=NJRS0063

1. Remove rear seat. Refer to BT-60, "REAR SEAT" for details.
2. Remove outer and floor anchor bolt. A B
3. Remove rear side garnish. Refer to BT-31, "SIDE AND FLOOR TRIM" for details.
4. Remove rear parcel shelf finisher. Refer to BT-31, "SIDE AND FLOOR TRIM" for details.
5. Remove bolts securing rear seat belt retractor, then remove seat belt and seat belt retractor. C D

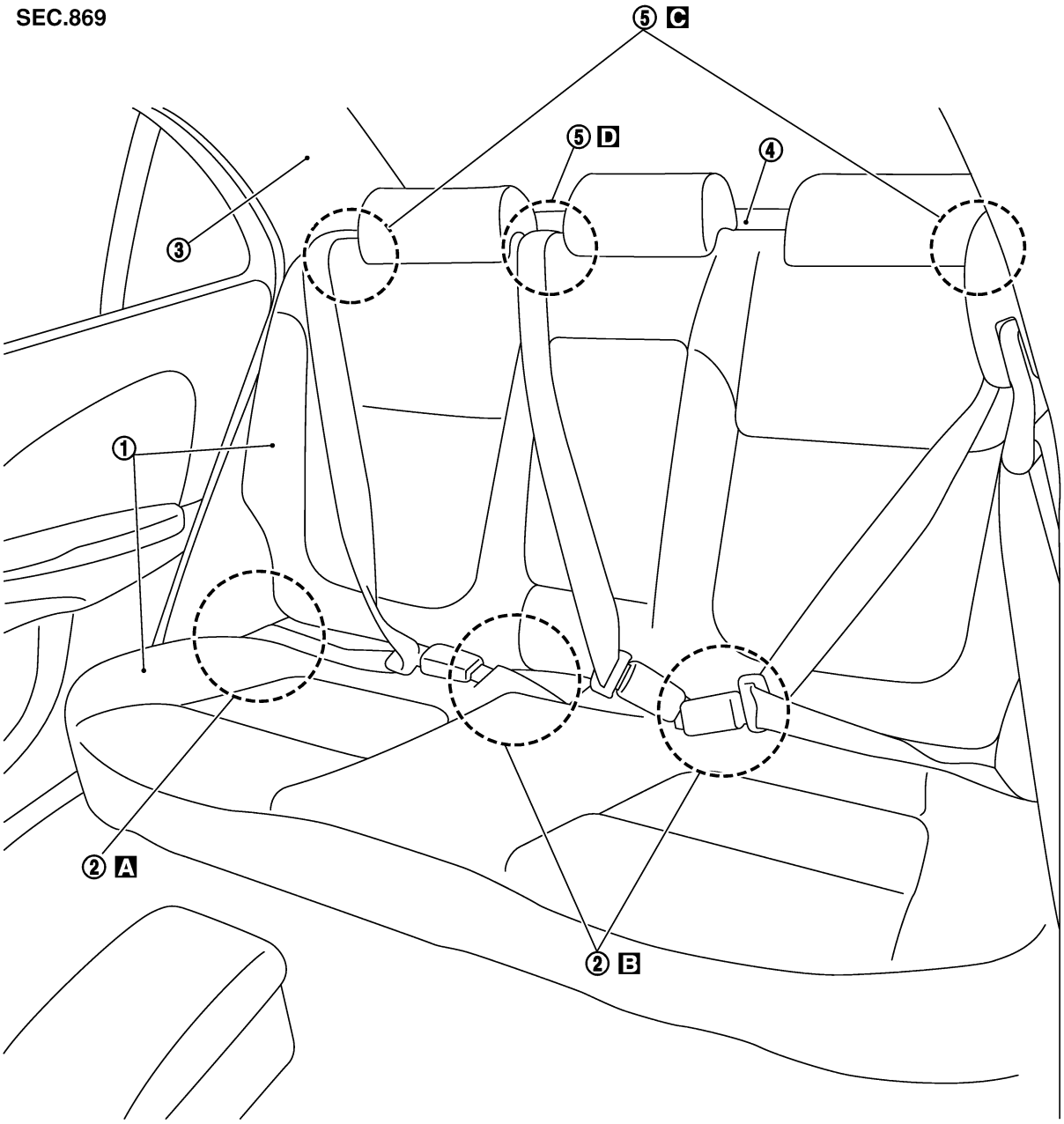

A B C D : 43.1 - 54.9 N•m (4.4 - 5.6 kg-m, 32 - 40 ft-lb)

SRS889

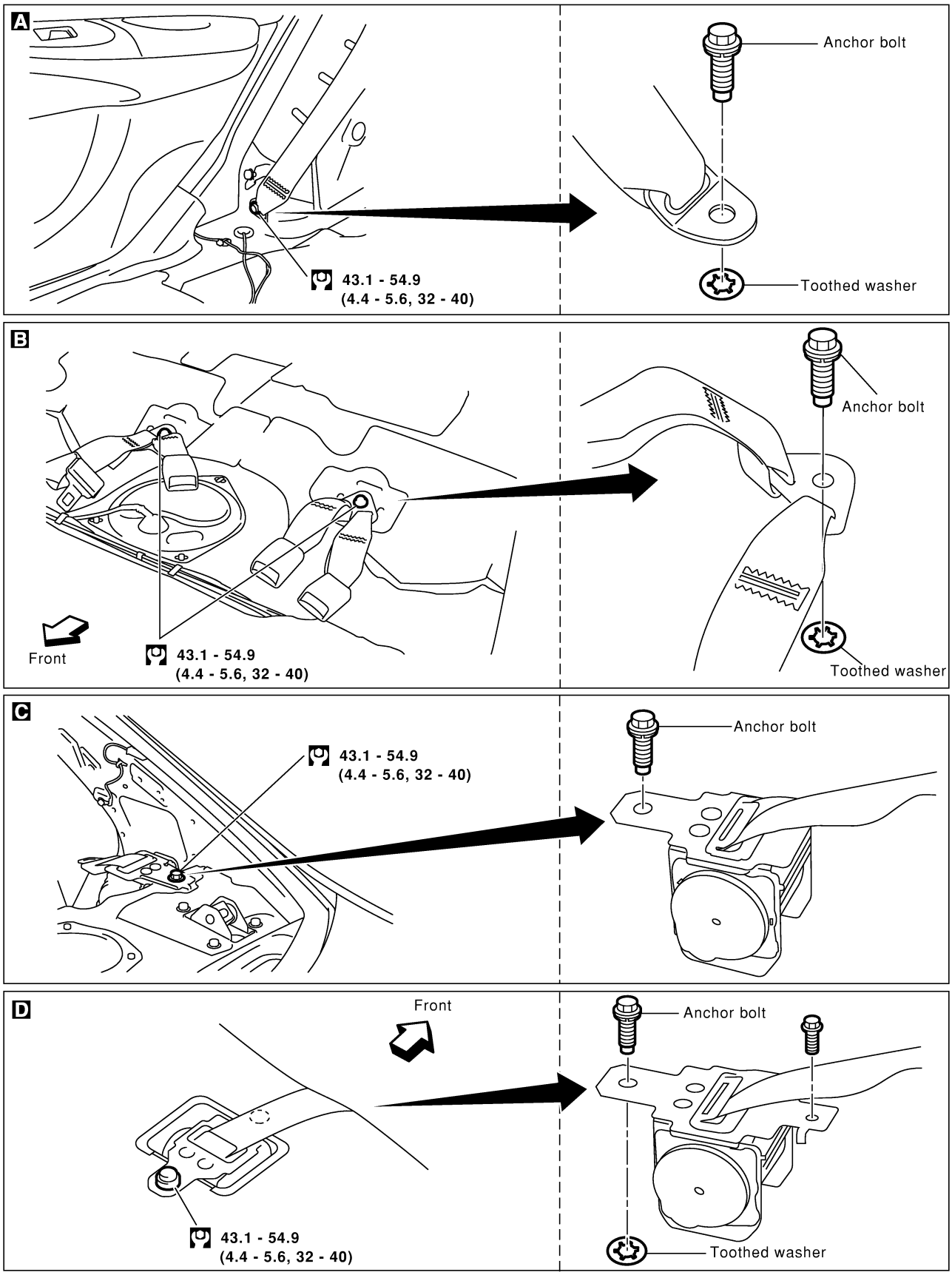

: N•m (kg-m, ft-lb)

SRS890

REMOVAL AND INSTALLATION/HATCHBACK

=NJRS0058

1. Remove rear seat. Refer to BT-60, "REAR SEAT" for details.
2. Remove outer and floor anchor bolt. A B
3. Remove rear parcel shelf finisher. Refer to BT-31, "SIDE AND FLOOR TRIM" for details.
4. Remove rear side garnish. Refer to BT-31, "SIDE AND FLOOR TRIM" for details.
5. Remove bolts securing rear seat belt retractor, then remove seat belt and seat belt retractor. C
6. Remove cover garnish at headlining. Refer to BT-31, "SIDE AND FLOOR TRIM" for details. Then remove seat belt retractor. D

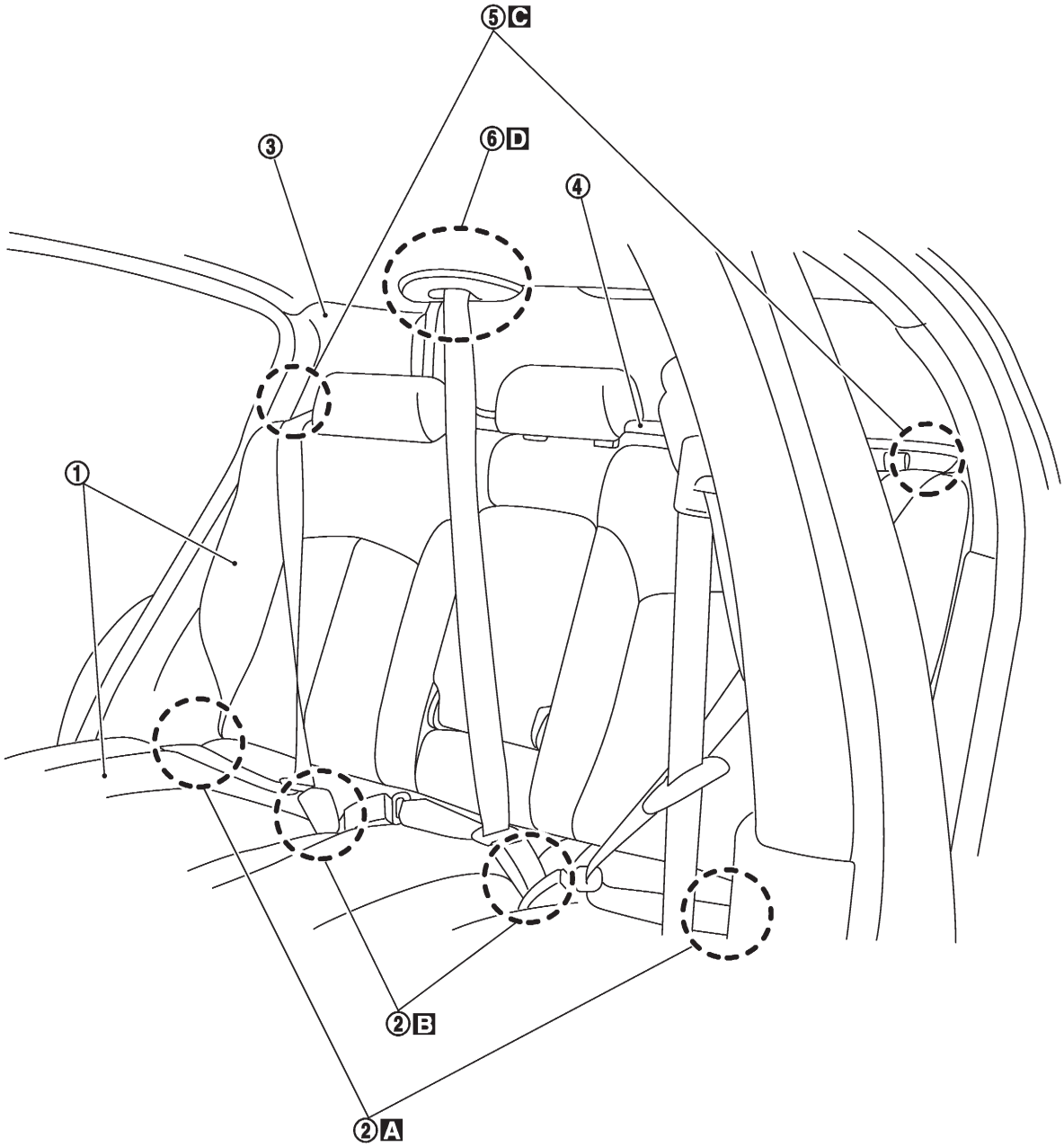

SRS858

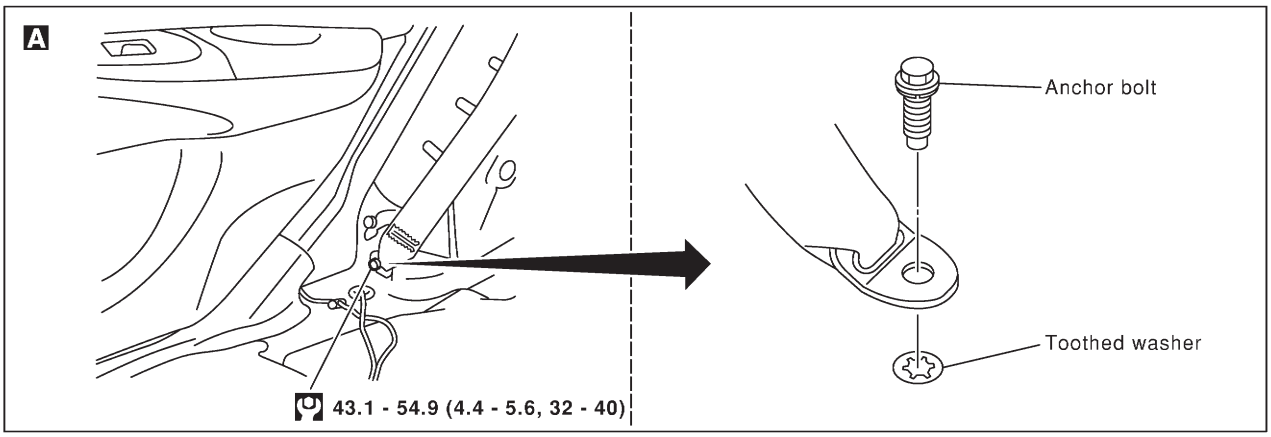

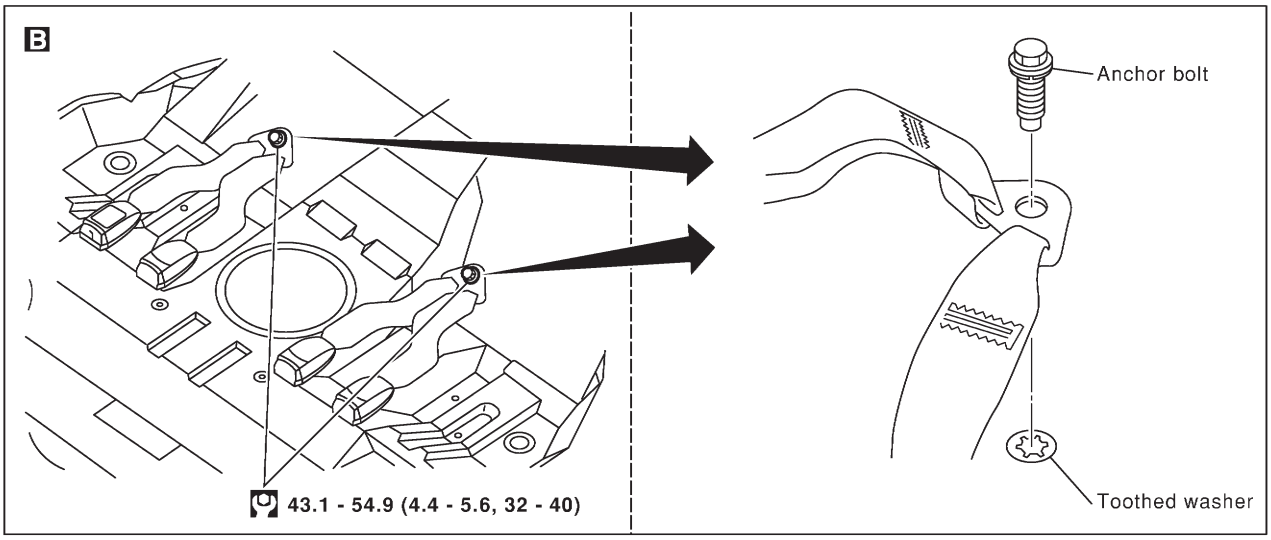

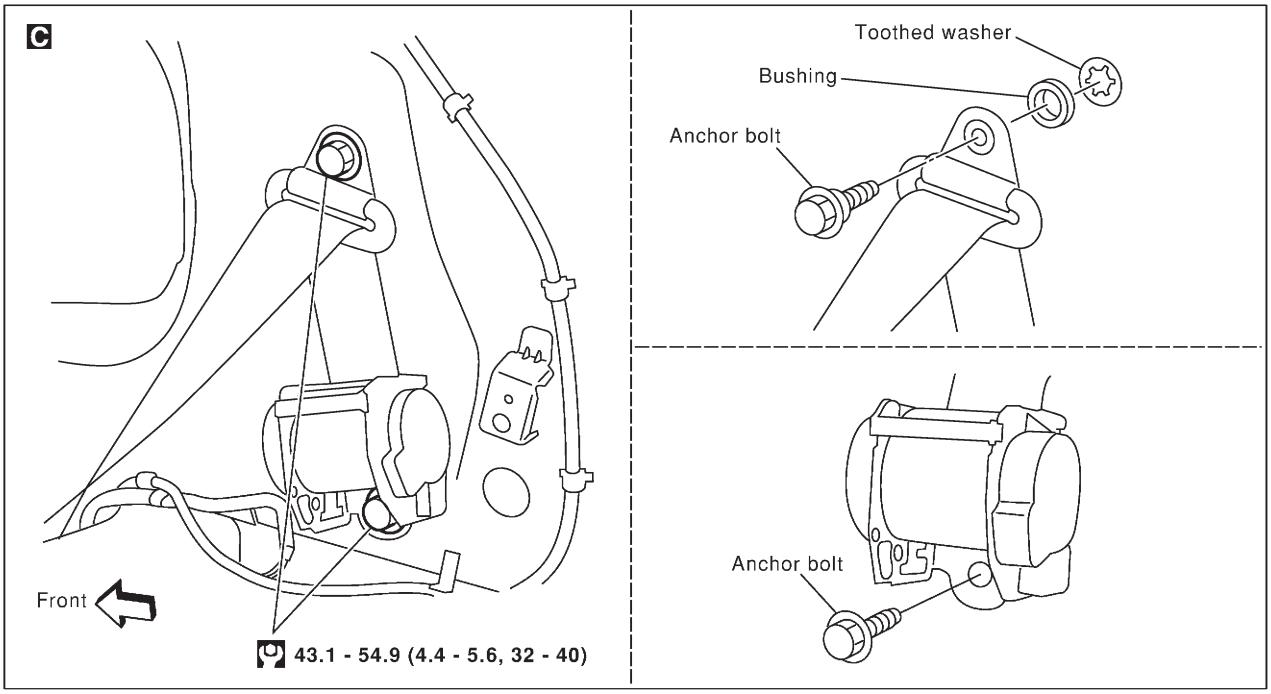

: N•m (kg-m, ft-lb)

SRS877-A

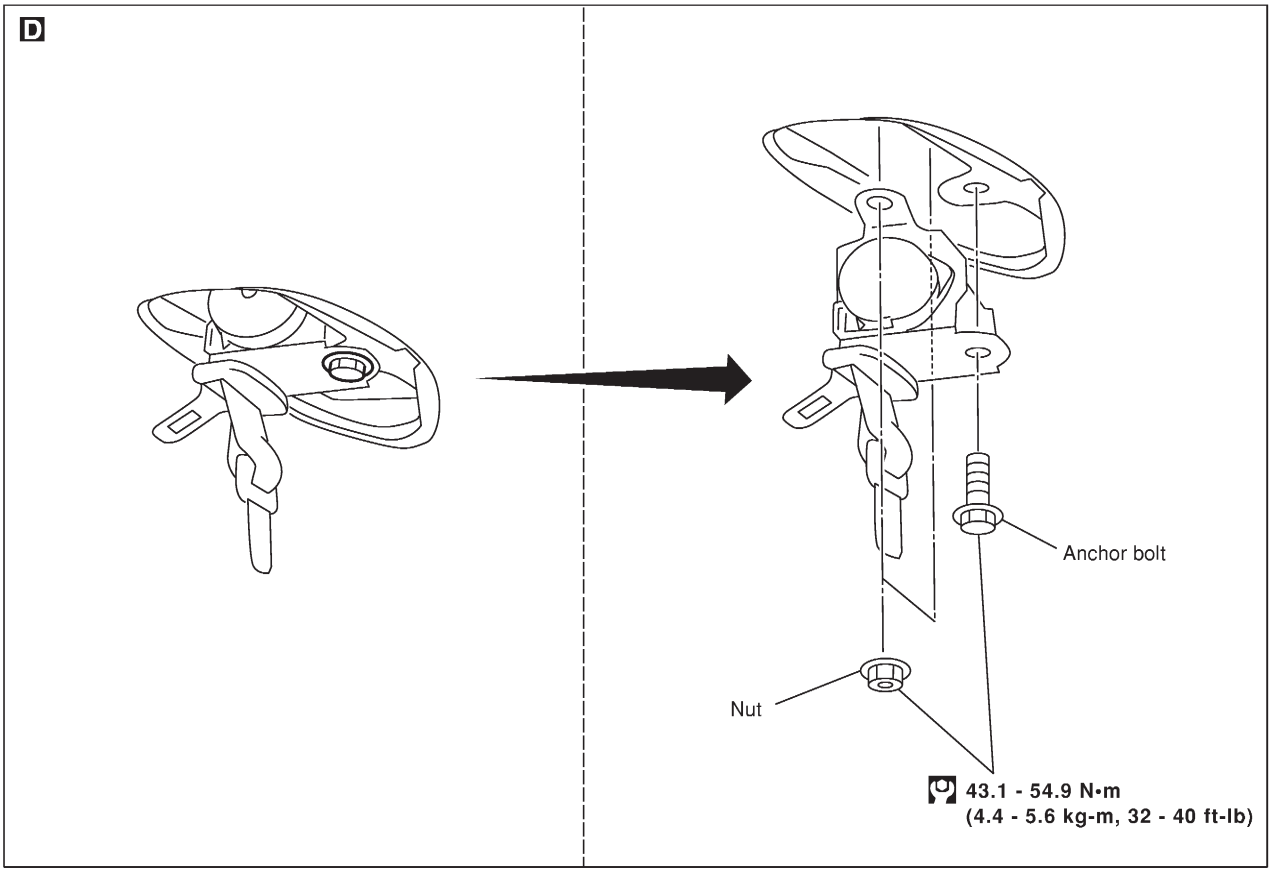

SRS859

ISO Fix Child Restraint Anchor

REMOVAL AND INSTALLATION

=NJRS0039

CAUTION:

Replace anchor bolts if they are deformed or worn out.

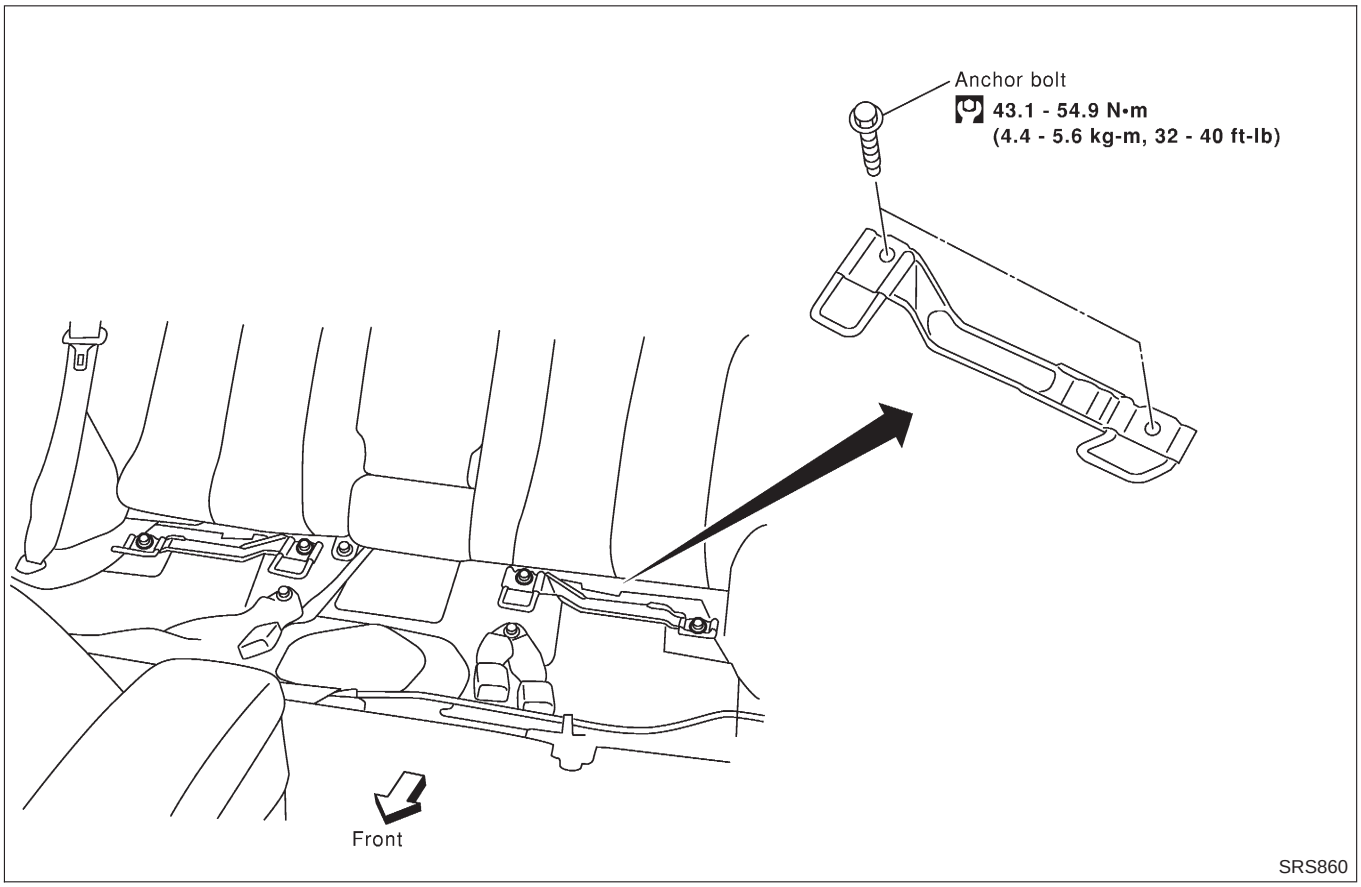

Tether Anchor Plate

REMOVAL AND INSTALLATION

=NJRS0062

CAUTION:

Replace anchor bolts if they are deformed or worn out.

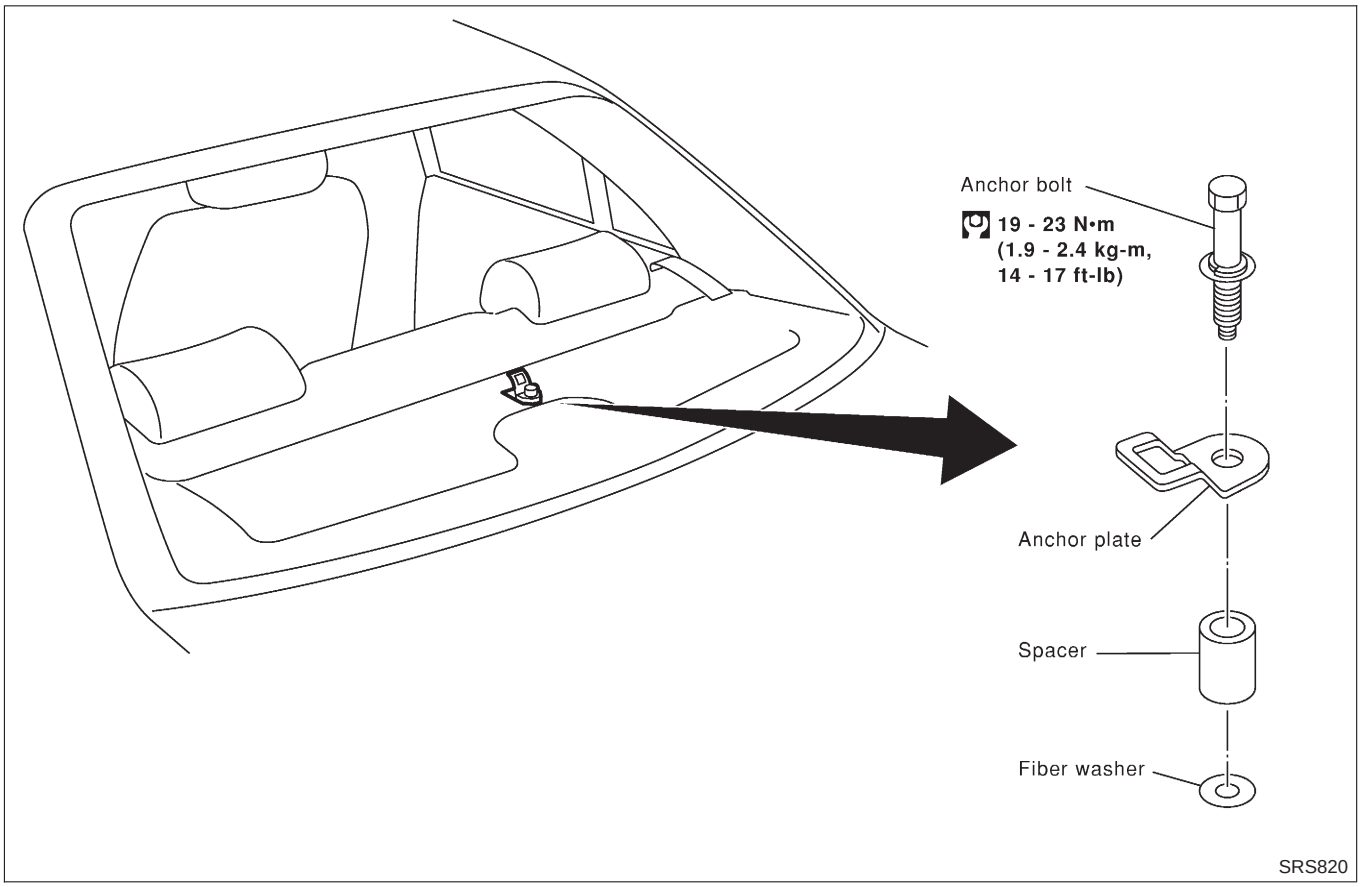

Precautions

SUPPLEMENTAL RESTRAINT SYSTEM (SRS) “AIR BAG” AND “SEAT BELT PRE-TENSIONER”

NJRS0006

The Supplemental Restraint System such as “AIR BAG” and “SEAT BELT PRE-TENSIONER” used along with a seat belt, helps to reduce the risk or severity of injury to the driver and front passenger for certain types of collision. The SRS composition which is available to NISSAN MODEL N16 is as follows (The composition varies according to the destination and optional equipment.):

- For a frontal collision
  The Supplemental Restraint System consists of driver air bag module (located in the center of the steering wheel), front passenger air bag module (located on the instrument panel on passenger side), front seat belt pre-tensioners, a diagnosis sensor unit, warning lamp, wiring harness and spiral cable.
- For a side collision
  The Supplemental Restraint System consists of front side air bag module (located in the outer side of front seat), side air bag (satellite) sensor, diagnosis sensor unit (one of components of air bags for a frontal collision), wiring harness, warning lamp (one of components of air bags for a frontal collision).

WARNING:

- **To avoid rendering the SRS inoperative, which could increase the risk of personal injury or death in the event of a collision which would result in air bag inflation, all maintenance should be performed by an authorized NISSAN dealer.**
- **Improper maintenance, including incorrect removal and installation of the SRS, can lead to personal injury caused by unintentional activation of the system.**
- **Do not use electrical test equipment on any circuit related to the SRS unless instructed to in this Service Manual. SRS wiring harnesses can be identified by yellow harness connector.**

PRECAUTIONS FOR SRS “AIR BAG” AND “SEAT BELT PRE-TENSIONER” SERVICE

NJRS0007

- Do not use electrical test equipment to check SRS circuits unless instructed to in this Service Manual.
- Before servicing the SRS, turn ignition switch “OFF”, disconnect both battery cables and wait at least 3 minutes.
  For approximately 3 minutes after the cables are removed, it is still possible for the air bag and seat belt pre-tensioner to deploy. Therefore, do not work on any SRS connectors or wires until at least 3 minutes have passed.
- Diagnosis sensor unit must always be installed with their arrow marks “⇐” pointing towards the front of the vehicle for proper operation. Also check diagnosis sensor unit for cracks, deformities or rust before installation and replace as required.
- The spiral cable must be aligned with the neutral position since its rotations are limited. Do not attempt to turn steering wheel or column after removal of steering gear.
- Handle air bag module carefully. Always place driver and front passenger air bag modules with the pad side facing upward and place front side air bag module standing with stud bolt side setting bottom.
- Conduct self-diagnosis to check entire SRS for proper function after replacing any components.
- After air bag inflates, the front instrument panel assembly should be replaced if damaged.

WIRING DIAGRAMS AND TROUBLE DIAGNOSIS

NJRS0008

When you read wiring diagrams, refer to the following:

- GI-11, “HOW TO READ WIRING DIAGRAMS”
- EL-10, “POWER SUPPLY ROUTING” for power distribution circuit

When you perform trouble diagnosis, refer to the following:

- GI-32, “HOW TO FOLLOW TEST GROUPS IN TROUBLE DIAGNOSES”
- GI-21, “HOW TO PERFORM EFFICIENT DIAGNOSES FOR AN ELECTRICAL INCIDENT”

Preparation

SPECIAL SERVICE TOOLS

=NJRS0009

Tool number Tool name	Description	
KV99106400 Deployment tool	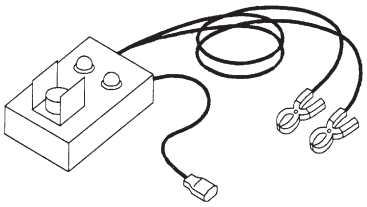 NT357	Disposing of air bag module
KV99105300 Air bag module bracket	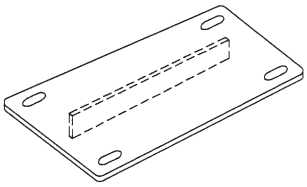 NT354	Anchoring air bag module
HT61961000 and HT62152000 combined *Special torx bit	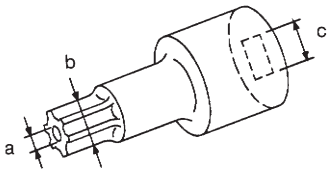 NT361	Use for special bolts [TAMPER RESISTANT TORX (Size T50)] **a: 3.5 (0.138) dia.** **b: 8.5 - 8.6 (0.335 - 0.339) dia.** **c: approx. 10 (0.39) sq.** Unit: mm (in)
KV99108300 Deployment tool adapter for front passenger air bag Deployment tool adapter for front side air bag (For Hatchback)	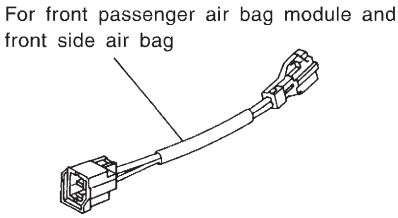 NT823	
KV99108200 Deployment tool adapter for front seat belt pre-tensioner	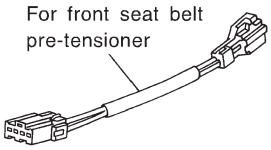 NT796	
KV99109000 Deployment tool adapters for front side air bag (For 4-door Sedan)	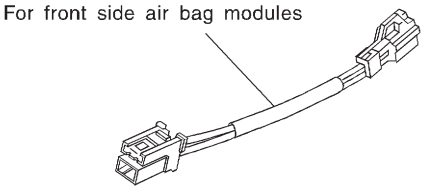 NT797	

*: Special tool or commercial equivalent

COMMERCIAL SERVICE TOOL

NJRS0040

Tool name	Description
Tamper resistant torx socket	Size: T30 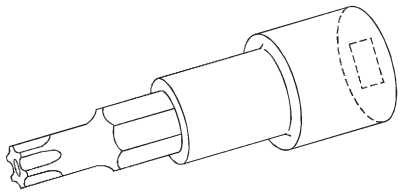 NT757

SRS Configuration

NJRS0010

SRS configurations vary with vehicle depending on the optional equipment and destination.

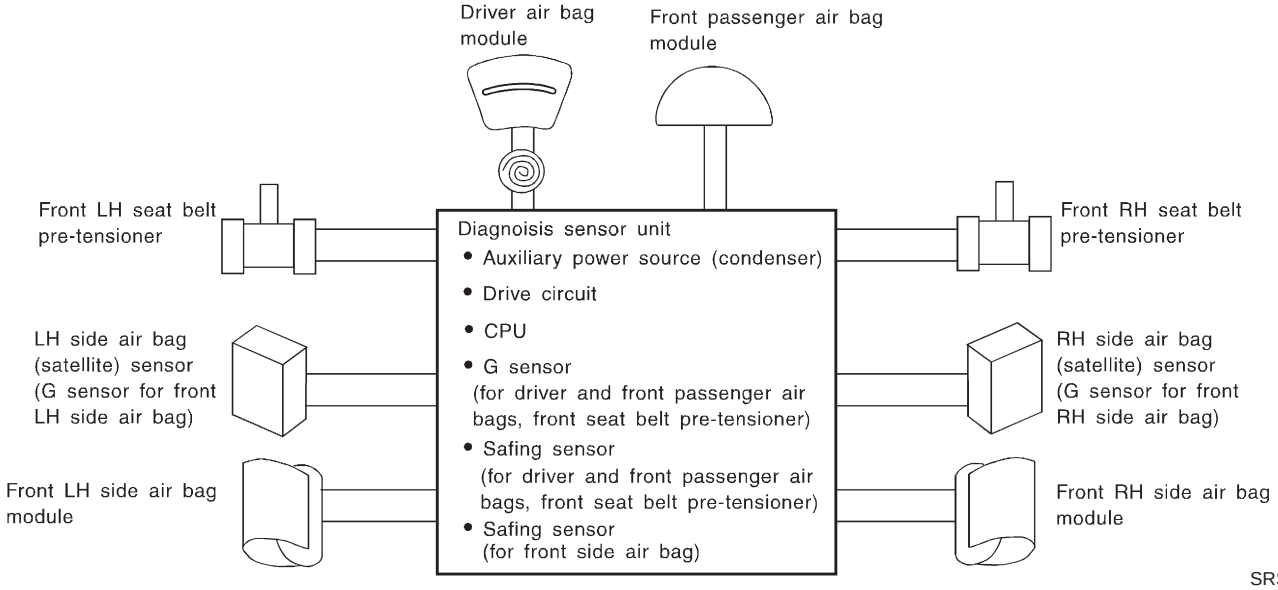

The air bag deploys if the diagnosis sensor unit activates while the ignition switch is in the "ON" or "START" position.
The collision modes for which supplemental restraint systems are activated are different among the SRS systems. For example, the driver air bag module and front passenger air bag module are activated in a frontal collision but not in a side collision.
SRS configurations which are activated for some collision modes are as follows;

SRS configuration	Frontal collision	Left side collision	Right side collision
Driver air bag module	○	—	—
Front passenger air bag module	○	—	—
Front LH seat belt pre-tensioner	○	—	—
Front RH seat belt pre-tensioner	○	—	—
Front LH side air bag module	—	○	—
Front RH side air bag module	—	—	○

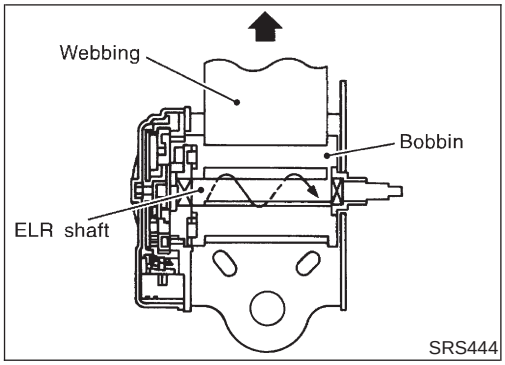

Seat Belt Pre-tensioner with Load Limiter

=NJRS0034

The seat belt pre-tensioner system with load limiter is installed to both the driver's seat and the front passenger's seat. It operates simultaneously with the SRS air bag system in the event of a frontal collision with an impact exceeding a specified level.

When the frontal collision with an impact exceeding a specified level occurs, seat belt slack resulting from clothing or other factors is immediately taken up by the pre-tensioner. Vehicle passengers are securely restrained.

When passengers in a vehicle are thrown forward in a collision and the restraining force of the seat belt exceeds a specified level, the load limiter permits the specified extension of the seat belt by the twisting of the ELR shaft, and a relaxation of the chest-area seat belt web tension while maintaining force.

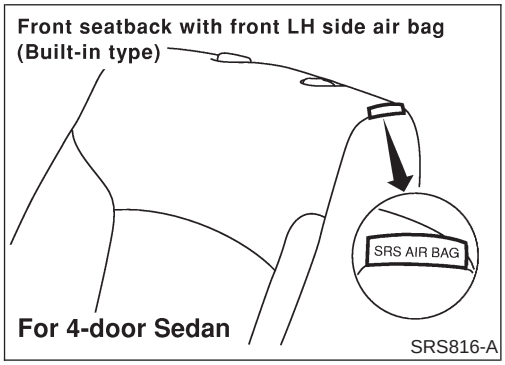

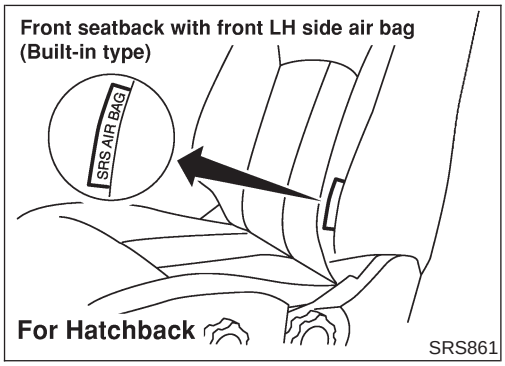

Built-in Type Side Air Bag

NJRS0035

Front side air bag is built-in type.

The front seat backs with built-in type front side air bag have the labels shown in figure at left.

SRS Component Parts Location

NJRS0011

For 4-door Sedan and 5-door Hatchback
SEC. 240•251•253•480•868•870
SRS configurations vary with vehicle depending on the destination and optional equipment.

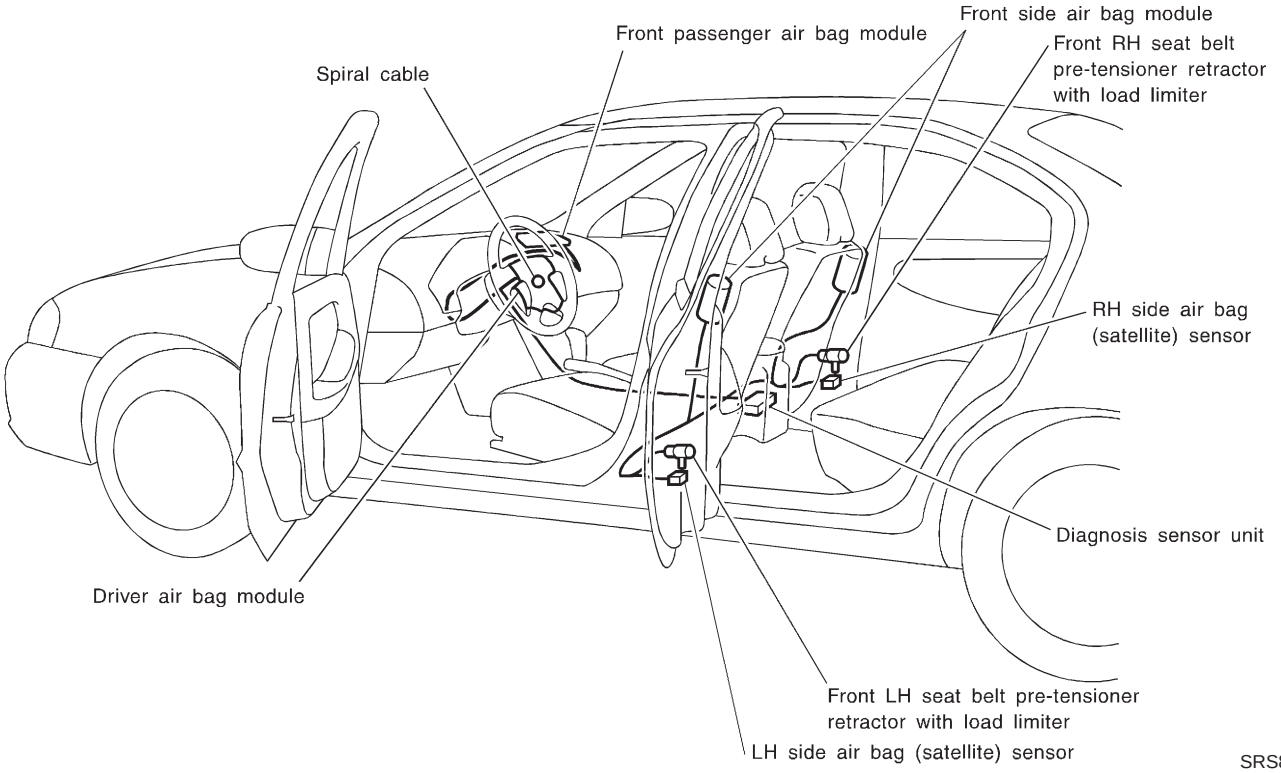

For 3-door Hatchback
SEC. 240•251•253•480•680•868•870
SRS configurations vary with vehicle depending on the optional equipment.

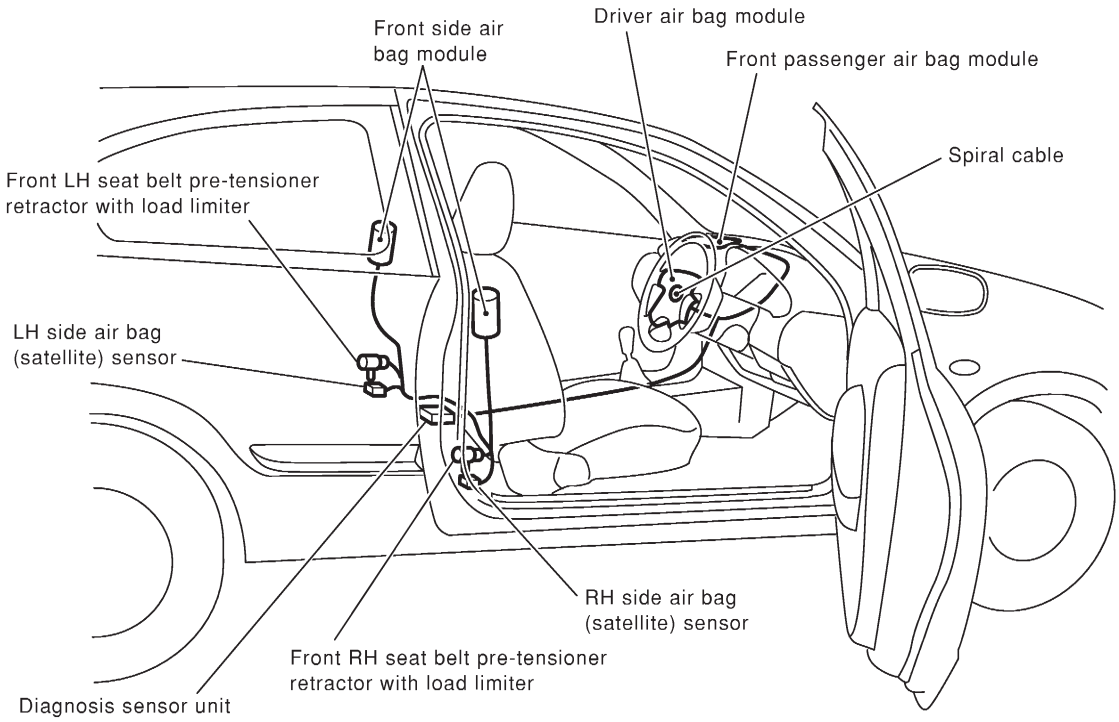

Maintenance Items

NJRS0012

CAUTION:

Do not use electrical test equipment to check SRS circuit.

1. Check operation of “AIR BAG” warning lamp.
   After turning ignition key to “ON” position, “AIR BAG” warning lamp illuminates. The “AIR BAG” warning lamp will go off after about 7 seconds if no malfunction is detected. If any of the following “AIR BAG” warning lamp conditions occur, immediately check the air bag system. Refer to RS-59 for details.

- The “AIR BAG” warning lamp does not illuminate when the ignition switch is turned “ON”.
- The “AIR BAG” warning lamp does not go off about 7 seconds after the ignition switch is turned “ON”.
- The “AIR BAG” warning lamp blinks after about 7 seconds after the ignition switch is turned “ON”.

2. Visually check SRS components.

1) Diagnosis sensor unit

- Check diagnosis sensor unit and bracket for dents, cracks and deformities.
- Check connectors for damage, and terminals for deformities.

2) Air bag module and steering wheel

- Remove air bag module from steering wheel, instrument panel or seatback. Check harness cover and connectors for damage, terminals for deformities, and harness for binding.
- Install driver air bag module to steering wheel to check fit or alignment with the wheel.
- Check steering wheel for excessive free play.
- Install front passenger air bag module to instrument panel to check fit or alignment with the instrument panel.
- Install front side air bag module to seatback to check fit and alignment with the seat.

3) Spiral cable

- Check spiral cable for dents, cracks, or deformities.
- Check connectors and protective tape for damage.
- Check steering wheel for noise, binding or heavy operation.

4) Main harness, body harness, side air bag module sub-harness

- Check connectors for poor connections, damage, and terminals for deformities.
- Check harnesses for binding, chafing or cut.

5) Front seat belt pre-tensioner

- Check harness cover and connectors for damage, terminals for deformities, and harness for binding.
- Check belts for damage and anchors for loose mounting.
- Check retractor for smooth operation.
- Perform self-diagnosis for seat belt pre-tensioner using “AIR BAG” warning lamp or CONSULT-II.
  Refer to “SRS Operation Check” for details. (RS-59)

6) Side air bag (satellite) sensor

- Check side air bag (satellite) sensor (including bracket portion) for dents, cracks or deformities.
- Check connectors for damage, and terminals for deformities.

CAUTION:

Replace previously used special bolts, hex bolts and ground bolt with new ones.

Diagnosis Sensor Unit

REMOVAL AND INSTALLATION

NJRS0013

CAUTION:

- **Before servicing SRS, turn the ignition switch off, disconnect both battery cables and wait at least 3 minutes.**
- **The special bolts are coated with bonding agent while the other bolt is for ground. Do not use old bolts after removal; replace with new ones.**
- **Check diagnosis sensor unit for proper installation.**
- **Check diagnosis sensor unit to ensure it is free of deformities, dents, cracks or rust. If they show any visible signs of damage, replace them with new ones.**
- **Check diagnosis sensor unit brackets to ensure they are free of deformities or rust.**
- **Replace diagnosis sensor unit if it has been dropped or sustained an impact.**
- **After replacement of diagnosis sensor unit, perform self-diagnosis for SRS. Refer to "SRS Operation Check" for details. (RS-59)**

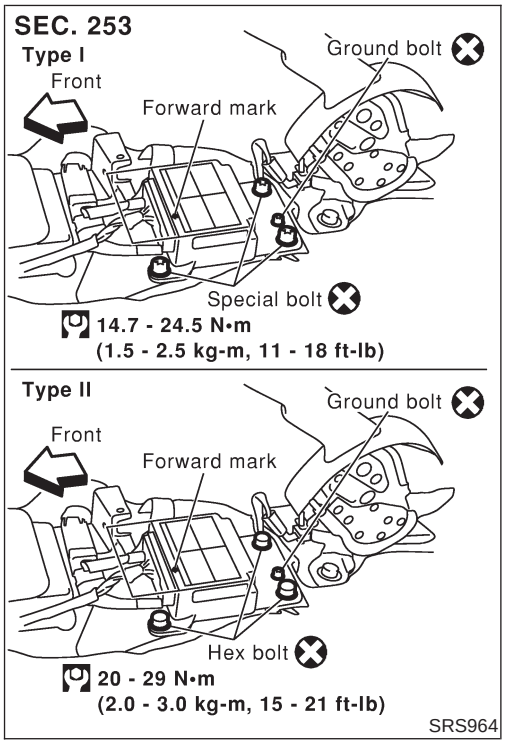

1. Disconnect driver, front passenger and front side air bag module connectors. Also, disconnect front seat belt pre-tensioner connector.
2. Remove console box. Refer to BT-25, "INSTRUMENT PANEL ASSEMBLY".
3. Disconnect diagnosis sensor unit connector.
4. Remove ground bolt and diagnosis sensor unit fixing bolts. Use TAMPER RESISTANT TORX (Size T50) to remove special bolts.

NOTE:

- To install, reverse the removal procedure sequence.

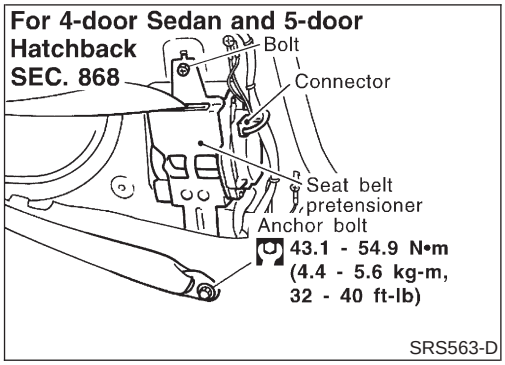

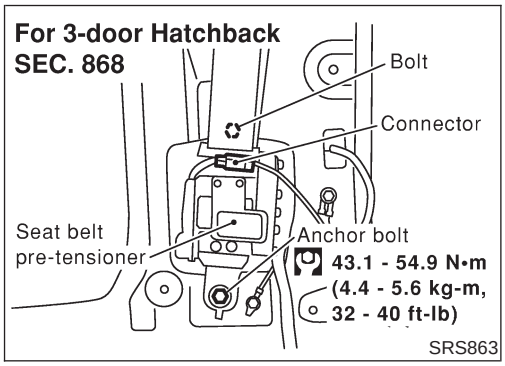

Front Seat Belt Pre-tensioner

REMOVAL AND INSTALLATION

NJRS0036

CAUTION:

- **Before servicing SRS, turn the ignition switch off, disconnect both battery cables and wait at least 3 minutes.**
- **Check front seat front belt pre-tensioner with load limiter for proper installation.**
- **After replacement of front seat belt pre-tensioner, check SRS function and perform self-diagnosis for SRS. Refer to "SRS Operation Check" for details. (RS-59)**
- **Do not attempt to disassemble front seat belt pre-tensioner with load limiter.**
- **Replace front seat belt pre-tensioner if it has been dropped or sustained an impact.**
- **Do not expose front seat belt pre-tensioner to temperatures exceeding 80°C (176°F).**

For removal of front seat belt pre-tensioner, refer to "Front Seat Belt" for details. (RS-5)

NOTE:

- **To install, reverse the removal procedure sequence.**

Side Air Bag (Satellite) Sensor

REMOVAL AND INSTALLATION

NJRS0014

CAUTION:

- **Before servicing SRS, turn the ignition switch off, disconnect both battery cables and wait at least 3 minutes.**
- **Do not use old bolts coated with bonding agent after removal; replace with new ones.**
- **Check side air bag (satellite) sensor for proper installation.**
- **Check side air bag (satellite) sensor to ensure they are free of deformities, dents, cracks or rust. If it shows any visible signs of damage, replace it with new one.**
- **After replacement of side air bag (satellite) sensor, check SRS function and perform self-diagnosis for SRS. Refer to "SRS Operation Check" for details. (RS-59)**
- **Do not attempt to disassemble side air bag (satellite) sensor.**
- **Replace side air bag (satellite) sensor if it has been dropped or sustained an impact.**

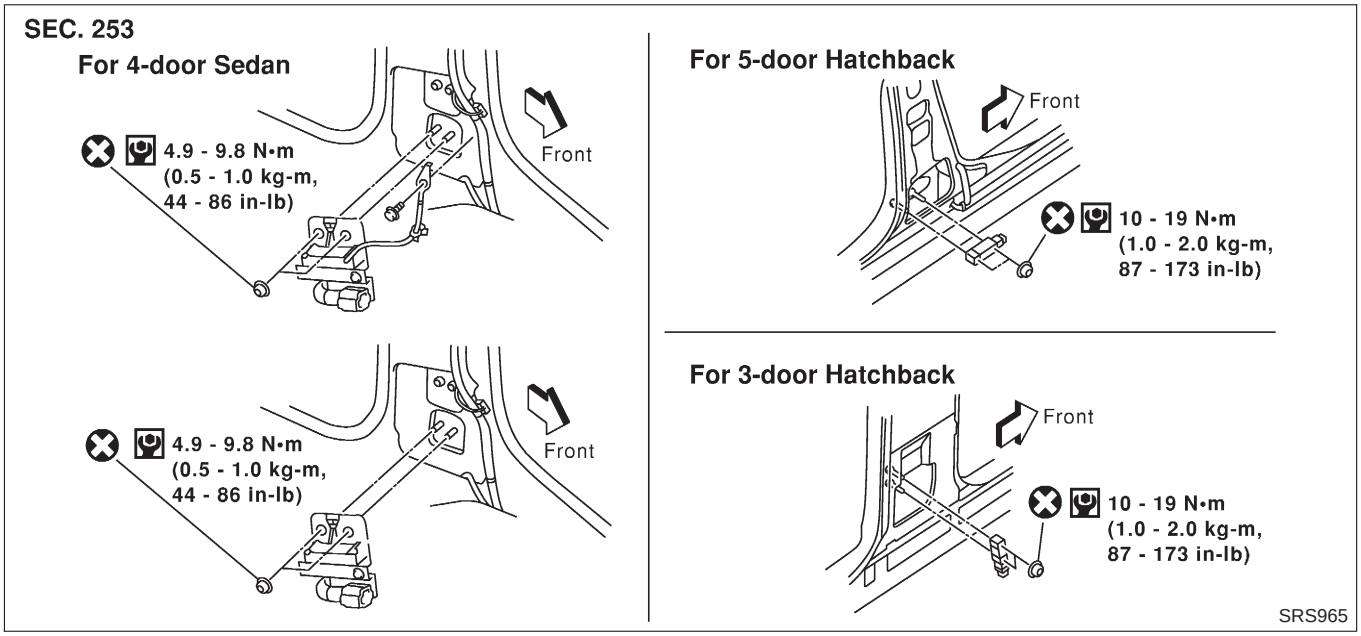

1. Remove front seat belt pre-tensioner. Refer to "Front Seat Belt" for details. (RS-5)
2. Disconnect side air bag (satellite) sensor connector.
3. Remove bolt and nuts from side air bag (satellite) sensor unit. Then remove the (satellite) sensor.

NOTE:

- To install, reverse the removal procedure sequence.

Driver Air Bag Module and Spiral Cable

REMOVAL AND INSTALLATION/WITH 4-SPOKE STEERING WHEEL

NJRS0015

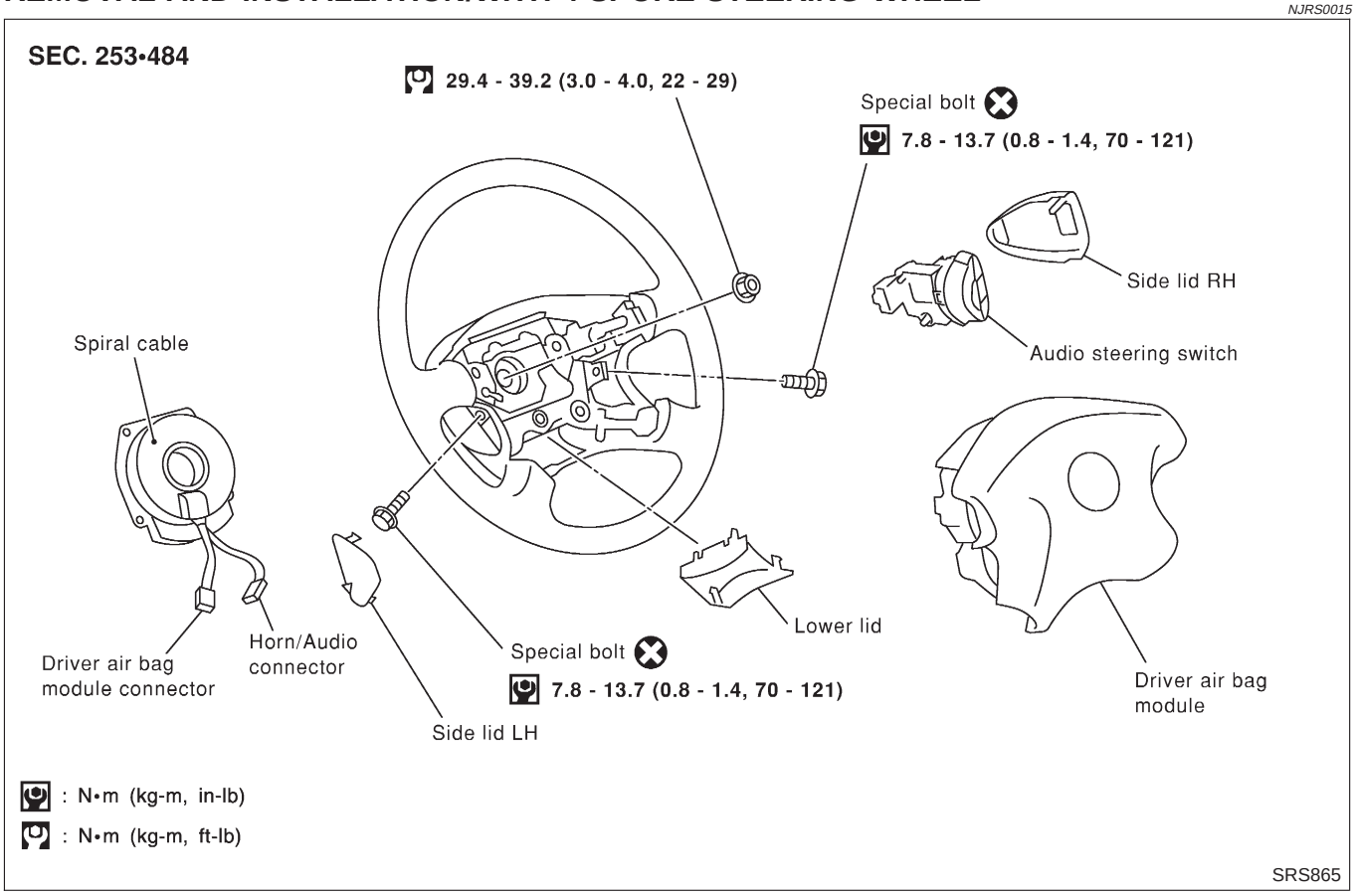

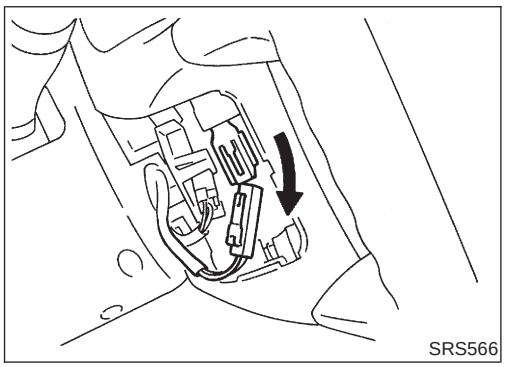

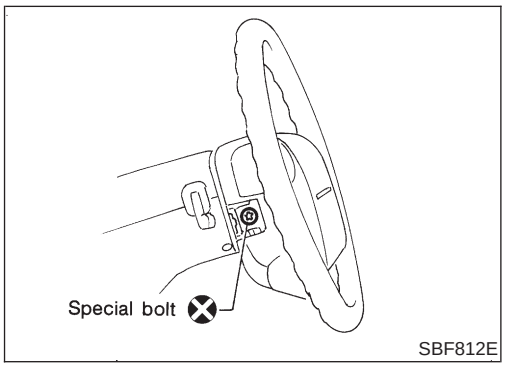

REMOVAL

NJRS0016

CAUTION:

- **Before servicing SRS, turn the ignition switch off, disconnect both battery cables and wait at least 3 minutes.**
- **Always work from the side of driver air bag module.**

1. Remove lower lid from steering wheel, and disconnect driver air bag module connector.

2. Remove side lids and audio steering switch. Using the TAMPER RESISTANT TORX (Size T30), remove left and right special bolts. Driver air bag module can then be removed.

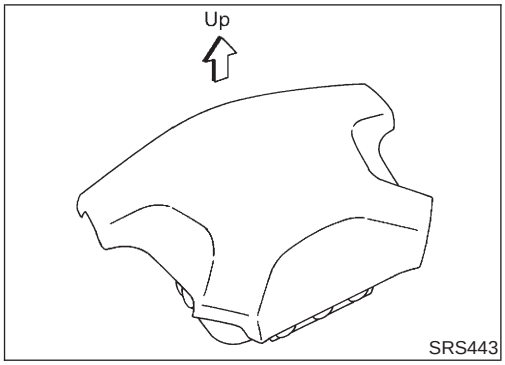

CAUTION:

- **Always place driver air bag module with pad side facing upward.**
- **Do not attempt to disassemble driver air bag module.**
- **The special bolts are coated with bonding agent. Do not use old bolts after removal; replace with new ones.**
- **Do not insert any foreign objects (screwdriver, etc.) into driver air bag module connector.**

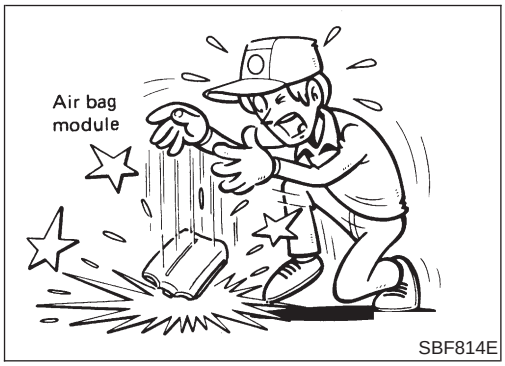

- **Replace driver air bag module if it has been dropped or sustained an impact.**
- **Do not expose the driver air bag module to temperatures exceeding 90°C (194°F).**
- **Do not allow oil, grease or water to come in contact with the driver air bag module.**

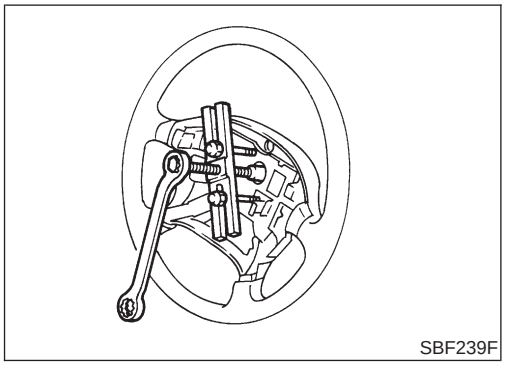

3. Set steering wheel in the neutral position.
4. Disconnect horn/audio connector and remove nut.
5. Using steering wheel puller, remove steering wheel. Be careful not to over-tighten puller bolt on steering wheel.

CAUTION:

- **Do not tap or bump the steering wheel.**

6. Remove steering column cover.

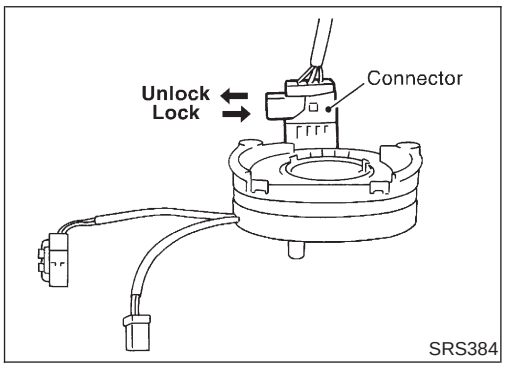

7. Remove four spiral cable securing screws, and extract spiral cable forward. Unlock spiral cable connector, then remove spiral cable.

CAUTION:

- **Do not attempt to disassemble spiral cable.**
- **Do not apply lubricant to the spiral cable.**

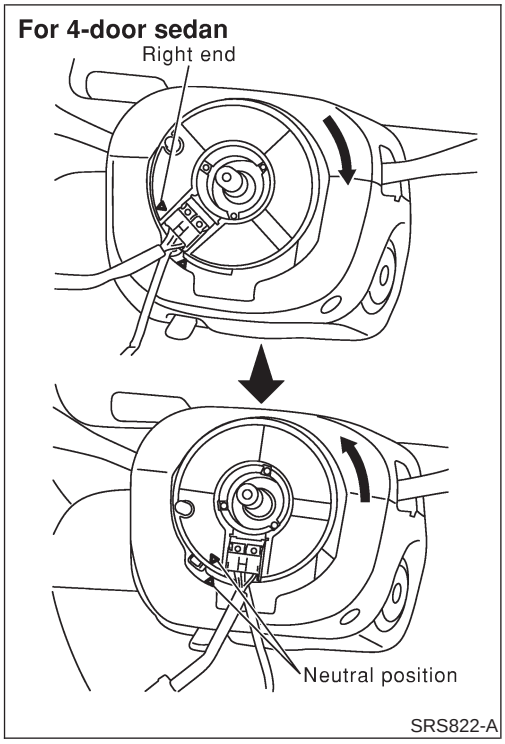

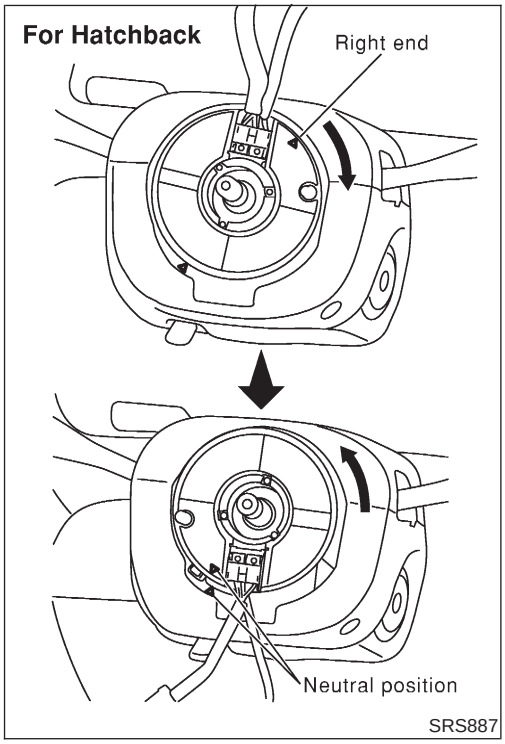

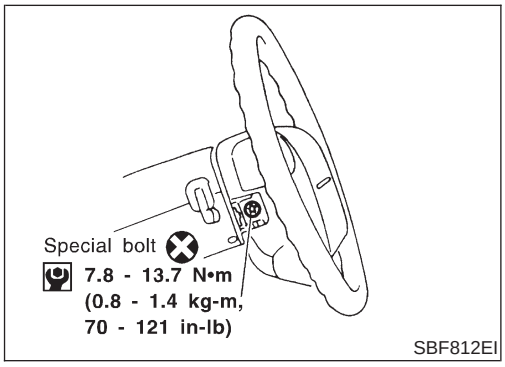

INSTALLATION

NJRS0017

1. Set the front wheels in the straight-ahead position.
2. Make sure that the spiral cable is in the neutral position.
   The neutral position is detected by turning left about 3.5 revolutions from the right end position. Align the two marks (⧗).

CAUTION:

- **The spiral cable may snap due to steering operation if the cable is installed in an improper position.**
- **Also, with the steering linkage disconnected, the cable may snap by turning the steering wheel beyond the limited number of turns. The spiral cable can be turned up to about 3.5 turns from the neutral position to both the right and left.**

3. Connect spiral cable connector and tighten with screws. Install steering column cover.
4. Install steering wheel, aligning with spiral cable pin guides, and pull spiral cable through.
5. Connect horn/audio connector and engage spiral cable with pawls in steering wheel. Move driver air bag module connector away from steering wheel lower lid opening.
6. Tighten nut.
   : 29.4 - 39.2 N·m (3.0 - 4.0 kg-m, 22 - 28 ft-lb)
7. Position driver air bag module and tighten with new special bolts.
8. Connect driver air bag module connector.
9. Install steering switches and lids.
10. Conduct self-diagnosis to ensure entire SRS operates properly. (Use CONSULT-II or warning lamp check.)
    Before performing self-diagnosis, connect both battery cables.
11. Turn steering wheel to the left end and then to the right end fully to make sure that spiral cable is set in the neutral position.
    If "AIR BAG" warning lamp blinks or stays ON (at the user

mode), it shows the spiral cable may be snapped due to its improper position. Perform self-diagnosis again (use CONSULT-II or warning lamp). If a malfunction is detected, replace the spiral cable with a new one.

12. Perform self-diagnosis again to check that no malfunction is detected.

REMOVAL AND INSTALLATION/WITH 3-SPOKE STEERING WHEEL

NJRS0052

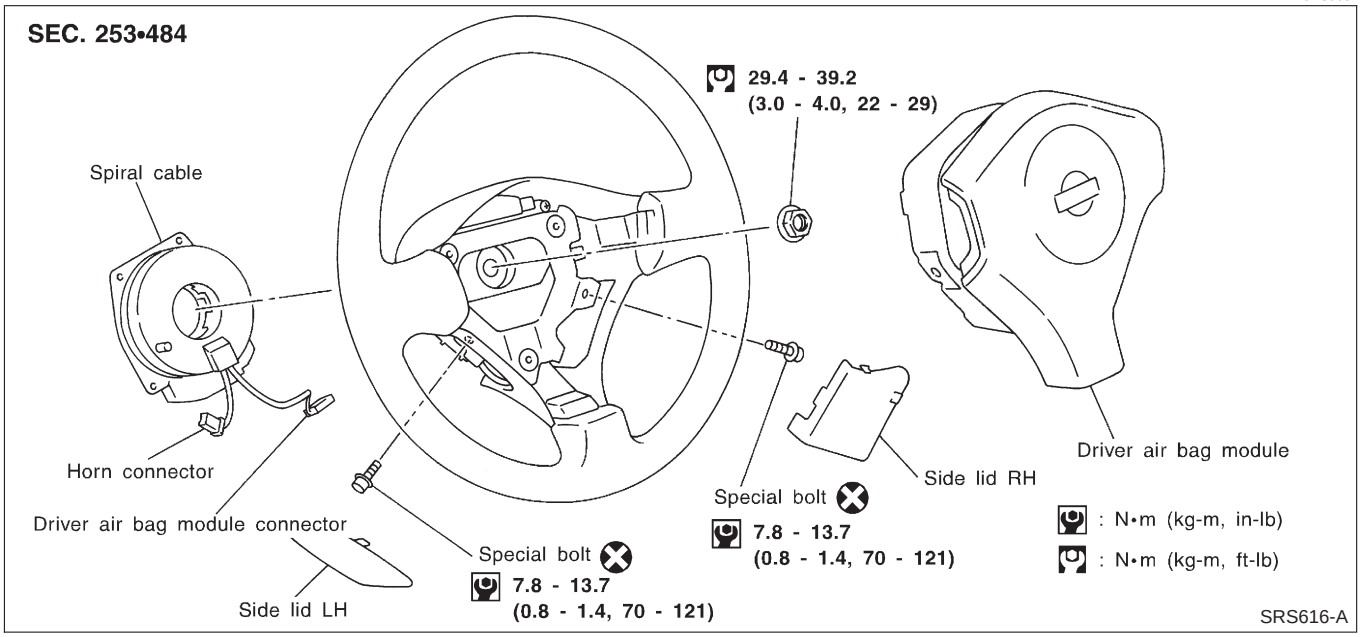

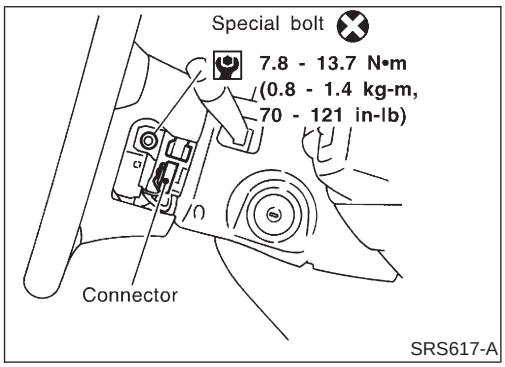

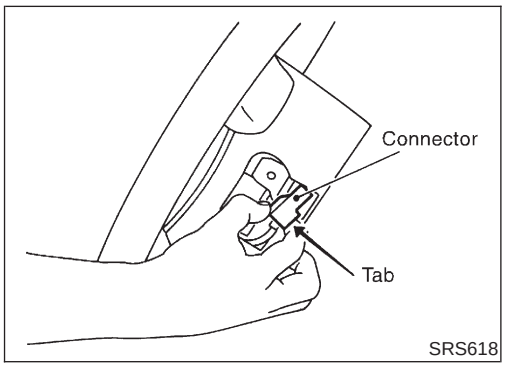

REMOVAL

NJRS0053

CAUTION:

- **Before servicing SRS, turn the ignition switch off, disconnect both battery cables and wait at least 3 minutes.**
- **Always work from the side of driver air bag module.**

1. Remove side lid from steering wheel, and disconnect driver air bag module connector.
2. Using the TAMPER RESISTANT TORX (Size T30), remove left and right special bolts.
3. Remove driver air bag module connector by pushing tab. Driver air bag module can then be removed.

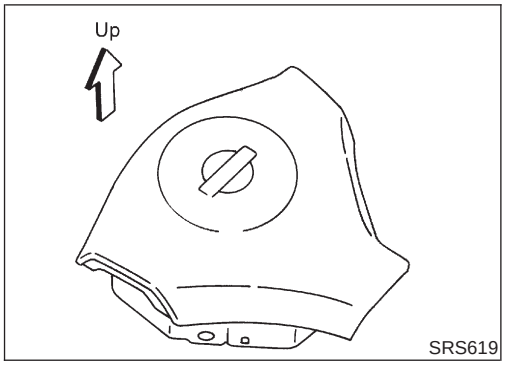

CAUTION:

- **Always place driver air bag module with pad side facing upward.**
- **Do not attempt to disassemble driver air bag module.**
- **The special bolts are coated with bonding agent. Do not use old bolts after removal; replace with new ones.**
- **Do not insert any foreign objects (screwdriver, etc.) into driver air bag module connector.**

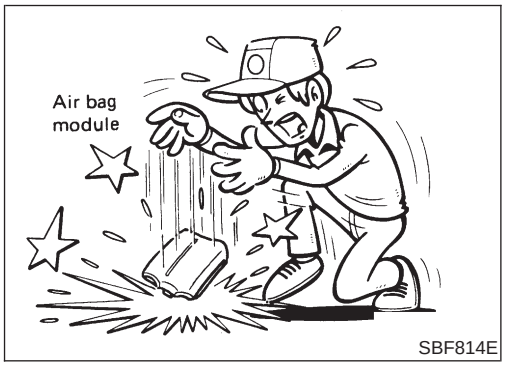

- **Replace driver air bag module if it has been dropped or sustained an impact.**
- **Do not expose the driver air bag module to temperatures exceeding 90°C (194°F).**
- **Do not allow oil, grease or water to come in contact with the air bag module.**

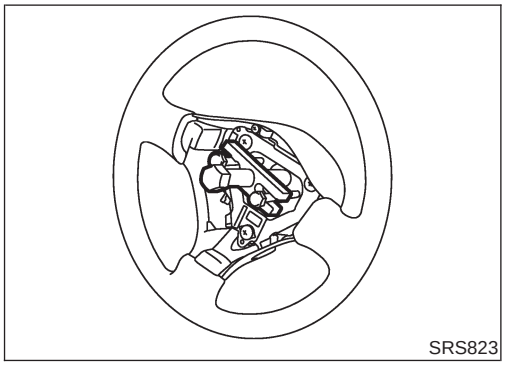

4. Set steering wheel in the neutral position.
5. Disconnect horn connector and remove nuts.
6. Using steering wheel puller, remove steering wheel. Be careful not to over-tighten puller bolt on steering wheel.

CAUTION:

- **Do not tap or bump the steering wheel.**

7. Remove steering column cover.

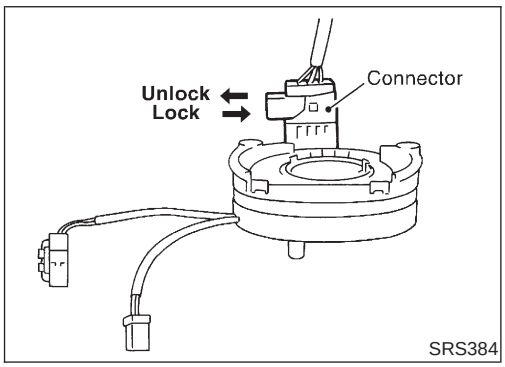

8. Unlock the spiral cable connector. Disconnect connectors and remove the four screws. The spiral cable can then be removed.

CAUTION:

- **Do not attempt to disassemble spiral cable.**
- **Do not apply lubricant to the spiral cable.**

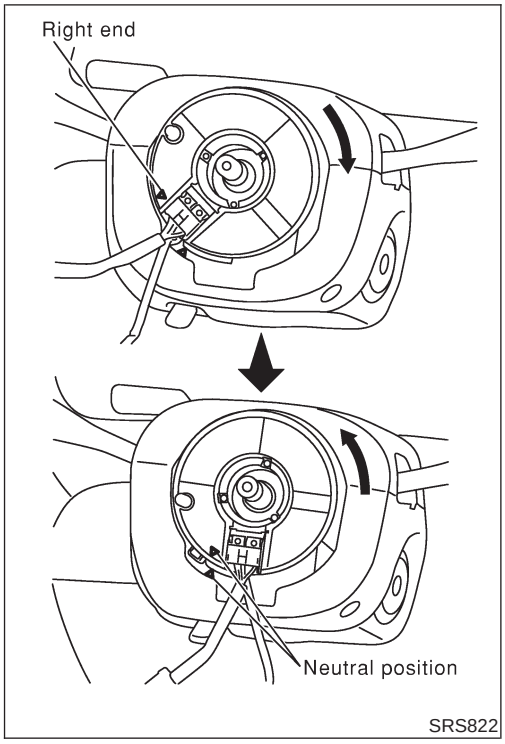

INSTALLATION

NJRS0054

1. Set the front wheels in the straight-ahead position.
2. Make sure that the spiral cable is in the neutral position.
   The neutral position is detected by turning left about 3.5 revolutions from the right end position. Align the two marks (⧗).

CAUTION:

- **The spiral cable may snap due to steering operation if the cable is installed in an improper position.**
- **Also, with the steering linkage disconnected, the cable may snap by turning the steering wheel beyond the limited number of turns. The spiral cable can be turned left about 3.5 turns from the right end position.**

3. Connect and lock spiral cable connector and tighten with screws. Install steering column cover.

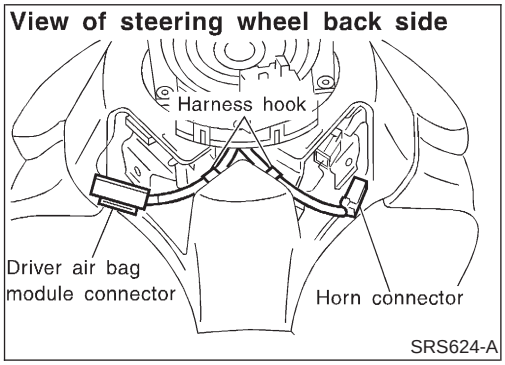

4. Install steering wheel setting spiral cable pin guide, and pull spiral cable through. And set horn connector harness and driver air bag module connector harness to harness hook.
5. Connect horn connector and engage spiral cable with pawls in steering wheel.
6. Tighten nut.
   : 29.4 - 39.2 N·m (3.0 - 4.0 kg-m, 22 - 28 ft-lb)

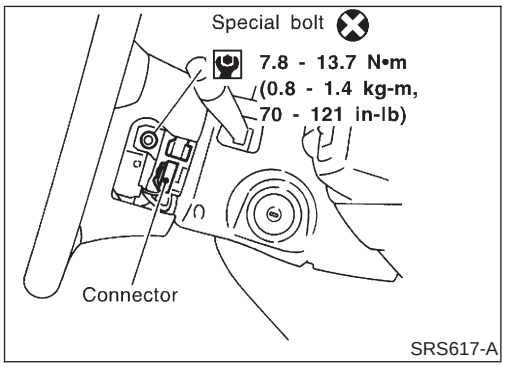

7. Position driver air bag module and install driver air bag module connector, then tighten driver air bag module with new special bolts.
8. Connect driver air bag module connector.
9. Install all lids.
10. Conduct self-diagnosis to ensure entire SRS operates properly. (Use CONSULT-II or warning lamp check.)
    Before performing self-diagnosis, connect both battery cables.
11. Turn steering wheel to the left end and then to the right end fully to make sure that spiral cable is set in the neutral position.
    If "AIR BAG" warning lamp blinks or stays ON (at the user mode), it shows the spiral cable may be snapped due to its improper position. Perform self-diagnosis again (use CONSULT-II or warning lamp). If a malfunction is detected, replace the spiral cable with a new one.
12. Perform self-diagnosis again to make sure that no malfunction is detected.

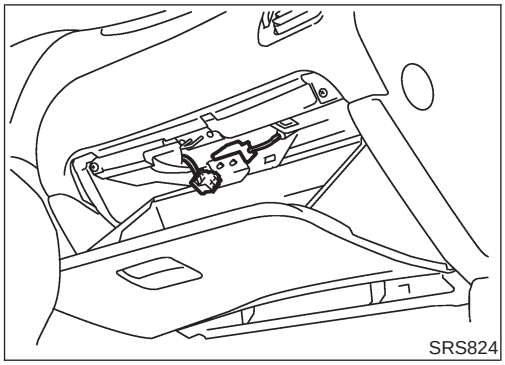
SRS824

Front Passenger Air Bag Module

REMOVAL

NJRS0018

CAUTION:

- **Before servicing SRS, turn the ignition switch off, disconnect both battery cables and wait for at least 3 minutes.**
- **Always work from the side of or under front passenger air bag module.**

1. Open the glove box lid.
2. Open the connector cover.
3. Disconnect front passenger air bag module connector from air bag harness connector.

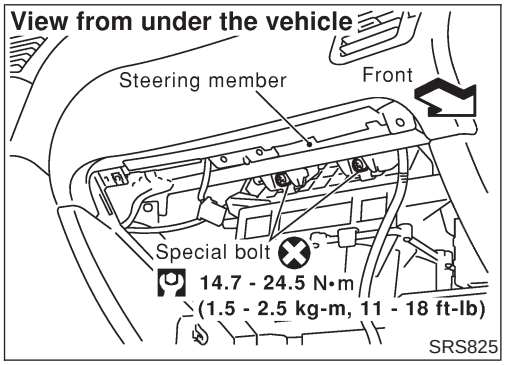

SRS825

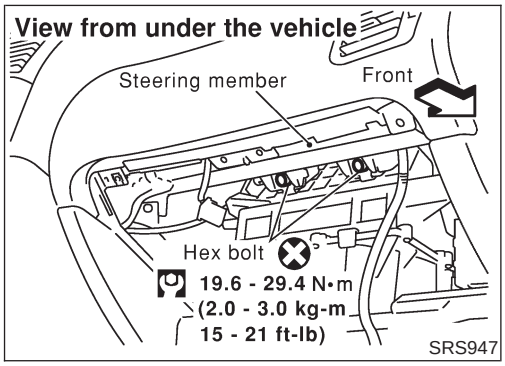

SRS947

4. Remove glove box assembly. Refer to BT-25, “INSTRUMENT PANEL ASSEMBLY” for details.
5. Remove glove box cover.
6. Remove front passenger air bag module fixing bolts.
   Use TAMPER RESISTANT TORX (Size T50) to remove special bolts.
   Take out the front passenger air bag module from the instrument panel.

- The front passenger air bag module is heavy and should be supported using both hands during removal.

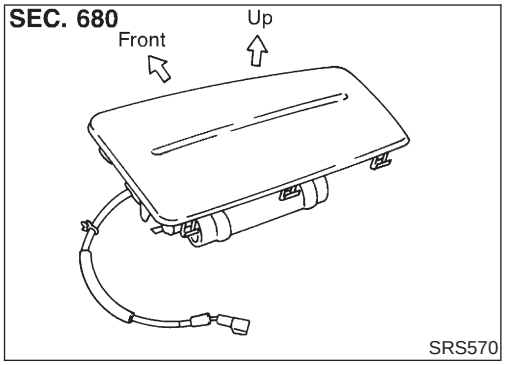

SRS570

CAUTION:

- **Always place front passenger air bag module with pad side facing upward.**
- **Do not attempt to disassemble front passenger air bag module.**
- **Do not use old bolts after removal; replace with new coated bolts.**
- **Do not insert any foreign objects (screwdriver, etc.) into front passenger air bag module connector.**

- **Replace front passenger air bag module if it has been dropped or sustained an impact.**
- **Do not expose the front passenger air bag module to temperatures exceeding 90°C (194°F).**
- **Do not allow oil, grease or water to come in contact with the front passenger air bag module.**
- **After front passenger air bag inflates, the front instrument panel assembly should be replaced if damaged.**

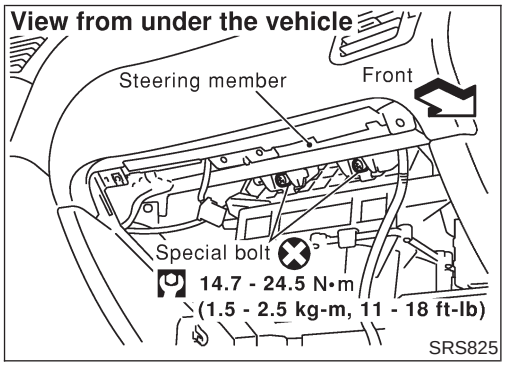

INSTALLATION

NJRS0019

CAUTION:

- **Always work from the side of or under front passenger air bag module.**

1. Install front passenger air bag module on steering member and secure with new special bolts.
   - Ensure harness is not caught between rear of front passenger air bag module and steering member.
2. Install grove box cover.
3. Install glove box assembly. (Glove box is open.)

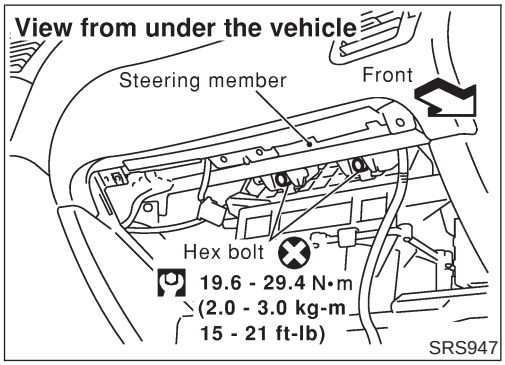

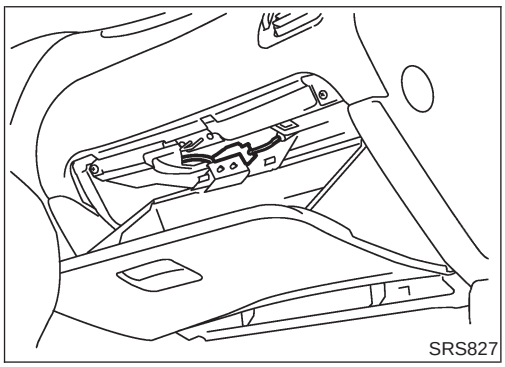

4. Connect front passenger air bag module connector to air bag harness connector.
5. Close the connector cover.
6. Close the glove box.
7. Connect both battery cable.
8. Conduct self-diagnosis to ensure entire SRS operates properly. (Use CONSULT-II or warning lamp check.)

Front Side Air Bag Module/4-door Sedan

REMOVAL

NJRS0020

CAUTION:

- **Before servicing SRS, turn the ignition switch OFF, disconnect both battery cables and wait at least 3 minutes.**
- **Always work from the rear of the front side air bag module.**

1. Remove seatback board.
   - **When using a clip removal tool to remove the seatback board, take care not to damage the harness for air bag.**
2. Disconnect front side air bag module connector by sliding tab.

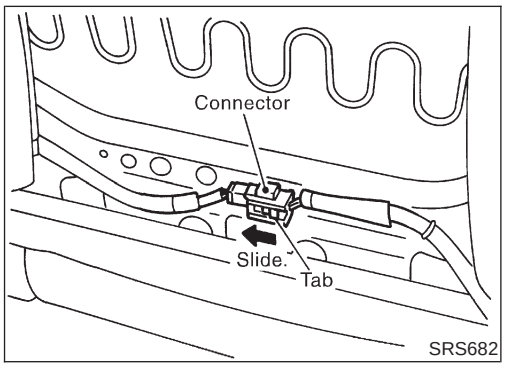

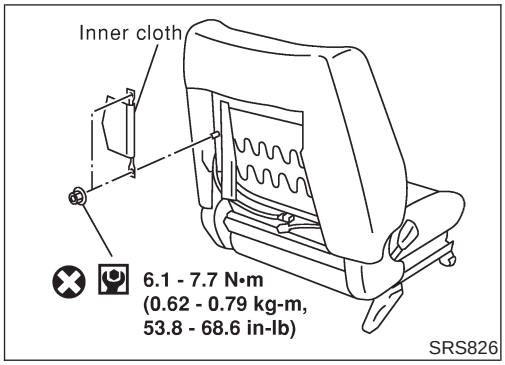

3. Pull up the seatback trim.
4. Remove the nuts securing the inner cloth with seatback frame. Then pull up the inner cloth.
5. Remove the seatback trim. Refer to BT-56, "Front Seat" for detail.

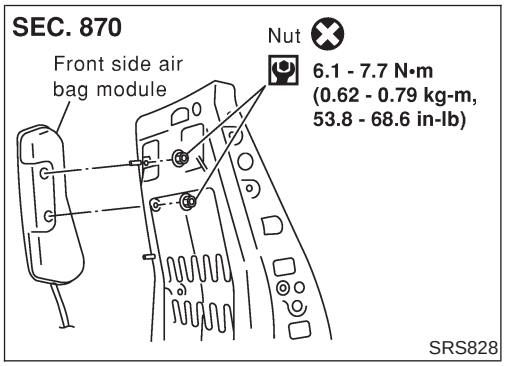

6. Remove the nuts coated with bonding agent from the front side air bag module.
7. Remove front side air bag connector. Front side air bag module can then be removed.

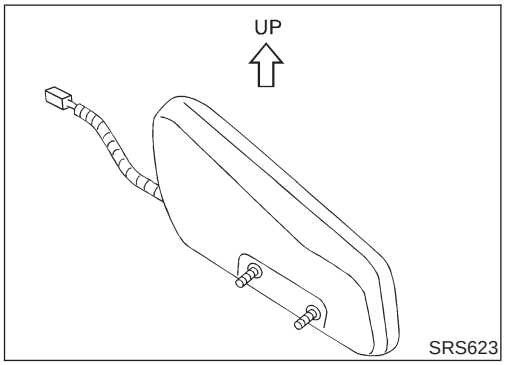

CAUTION:

- **Always place the front side air bag module standing with the stud bolt side setting bottom.**
- **Do not attempt to disassemble front side air bag module.**
- **Do not use old nuts after removal; replace with new nuts.**
- **Do not insert any foreign objects (screwdriver, etc.) into front side air bag module connector.**

- **Replace front side air bag module if it has been dropped or sustained an impact.**
- **Do not expose the front side air bag module to temperatures exceeding 90°C (194°F).**
- **Do not allow oil, grease or water to come in contact with the front side air bag module.**
- **After front side air bag inflates, all parts of front seatback (including front seatback frame) should be replaced.**

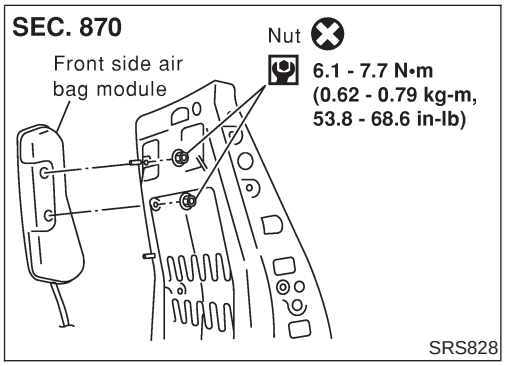

INSTALLATION

NJRS0021

1. Install front side air bag module on seatback frame with new nuts.
2. Install front side air bag connector.

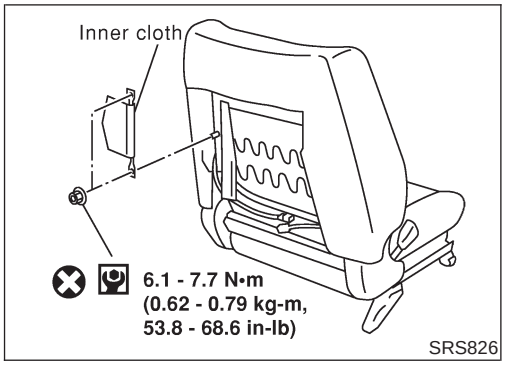

3. Install the seatback trim. Refer to BT-56, "Front Seat".
4. Secure the inner cloth which covers the front side air bag module with nuts.

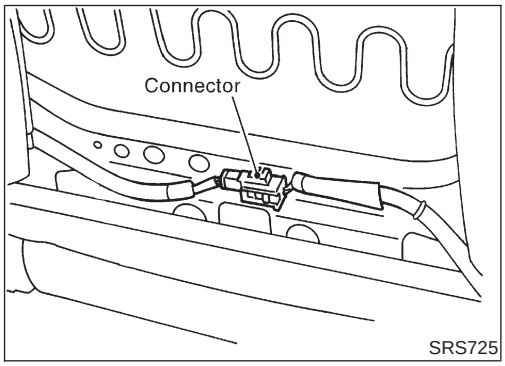

5. Connect front side air bag module connector.
6. Install seat back board with new clips.
7. Connect both battery cables.
8. Go to "SRS Operation Check", RS-59 and perform self-diagnosis to ensure entire SRS operates properly. (Use CONSULT-II or "AIR BAG" warning lamp.)

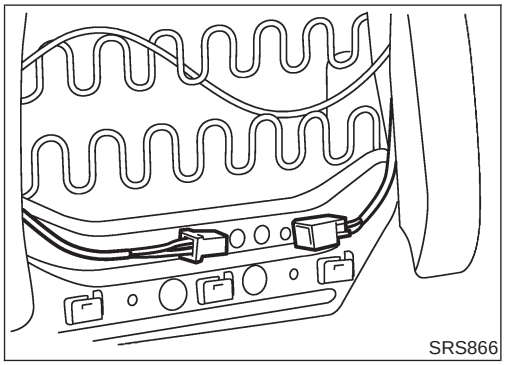

Front Side Air Bag Module/Hatchback

REMOVAL

NJRS0059

CAUTION:

- **Before servicing SRS, turn the ignition switch OFF, disconnect both battery cables and wait at least 3 minutes.**
- **Always work from the rear of the front side air bag module.**

1. Open the seatback zipper.
2. Disconnect front side air bag module connector.

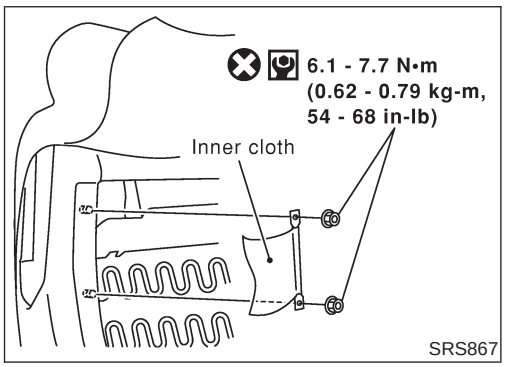

3. Pull up the seatback trim.
4. Remove the nuts coated with bonding agent securing front side air bag and the inner cloth with seatback frame.

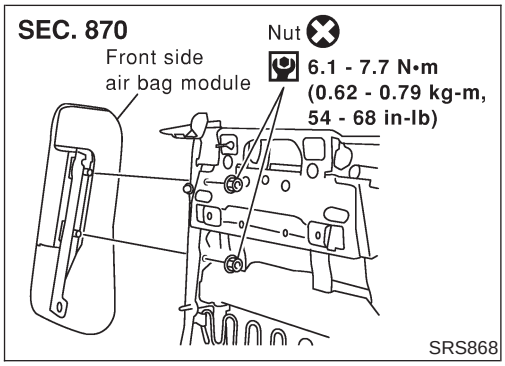

5. Remove inner cloth.
6. Remove front side air bag connector. Front side air bag module can then be removed.

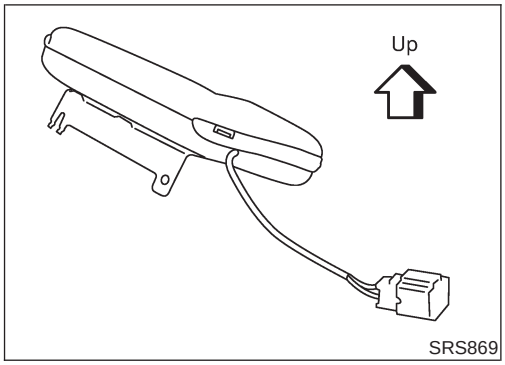

SRS869

CAUTION:

- **Always place the front side air bag module standing with the stud bolt side setting bottom.**
- **Do not attempt to disassemble front side air bag module.**
- **Do not use old nuts after removal; replace with new nuts.**
- **Do not insert any foreign objects (screwdriver, etc.) into front side air bag module connector.**

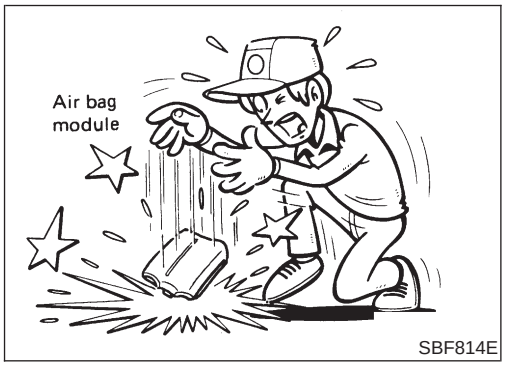

SBF814E

- **Replace front side air bag module if it has been dropped or sustained an impact.**
- **Do not expose the front side air bag module to temperatures exceeding 90°C (194°F).**
- **Do not allow oil, grease or water to come in contact with the front side air bag module.**
- **After front side air bag inflates, all parts of front seatback (including front seatback frame) should be replaced.**

INSTALLATION

NJRS0060

1. Install front side air bag module on seatback frame with new nuts.
2. Install front side air bag connector.

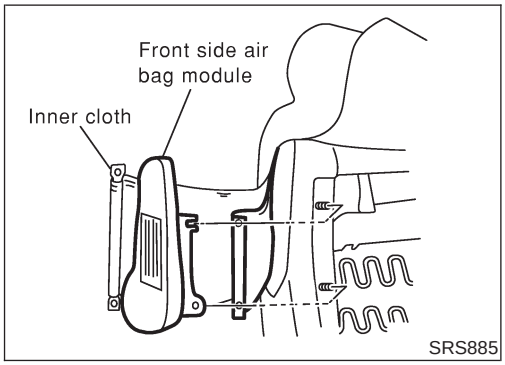

SRS885

3. Install the seatback trim. Refer to BT-56, "Front Seat".
4. Secure the inner cloth which covers the front side air bag module with nuts.

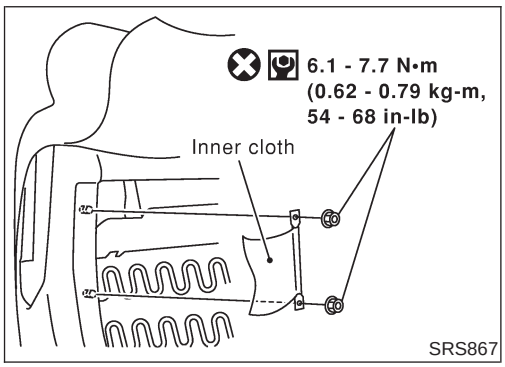

SRS867

5. Connect front side air bag module connector.
6. Close the seatback zipper.
7. Connect both battery cables.
8. Go to "SRS Operation Check", RS-59 and perform self-diagnosis to ensure entire SRS operates properly. (Use CONSULT-II or "AIR BAG" warning lamp.)

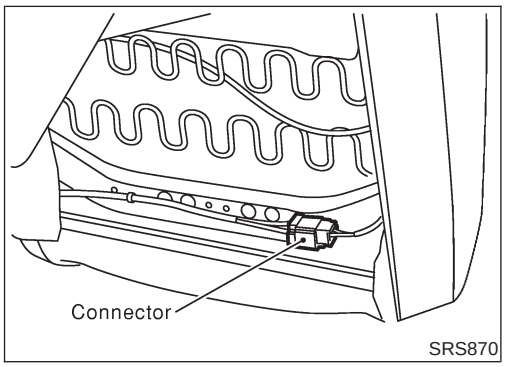

SRS870

Disposal of Air Bag Module and Seat Belt Pre-tensioner

NJRS0022

- Before disposing of air bag module and seat belt pre-tensioner, or vehicles equipped with such systems, deploy the systems. If such systems have already been deployed due to an accident, dispose of them as indicated in “DISPOSING OF AIR BAG MODULE AND SEAT BELT PRE-TENSIONER” (RS-46).
- When deploying the air bag module and seat belt pre-tensioner, always use the Special Service Tool; Deployment tool KV99106400.
- When deploying the air bag module and seat belt pre-tensioner, stand at least 5 m (16 ft) away from the deployment component.
- When deploying air bag module and seat belt pre-tensioner, a fairly loud noise is made, followed by smoke being released. The smoke is not poisonous, however, be careful not to inhale smoke since it irritates the throat and can cause choking.
- Always activate one air bag module at a time.
- Due to heat, leave air bag module unattended for more than 30 minutes after deployment. Also leave seat belt pre-tensioner unattended for move than 10 minutes after deployment.
- Be sure to wear gloves when handling a deployed air bag module and seat belt pre-tensioner.
- Never apply water to the deployed air bag module and seat belt pre-tensioner.
- Wash your hands clean after finishing work.
- Place the vehicle outdoors with an open space of at least 6 m (20 ft) on all sides when deploying air bag module and seat belt pre-tensioner while mounted in vehicle.
- Use a voltmeter to make sure the vehicle battery is fully charged.
- Do not dispose of the air bag module and seat belt pre-tensioner un-deployed.

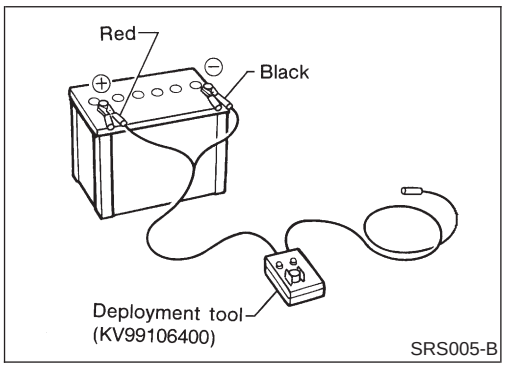

CHECKING DEPLOYMENT TOOL

NJRS0022S01

Connecting to Battery

NJRS0022S0101

CAUTION:

The battery must show voltage of 9.6V or more.

Remove the battery from the vehicle and place it on dry wood blocks approximately 5 m (16 ft) away from the vehicle.

- Wait 3 minutes after the vehicle battery is disconnected before proceeding.
- Connect red clip of deployment tool to battery positive terminal and black clip to negative terminal.

Make sure the polarity is correct. The right side lamp in the tool, marked “deployment tool power”, should glow with a green light. If the right side lamp glows red, reverse the connections to the battery.

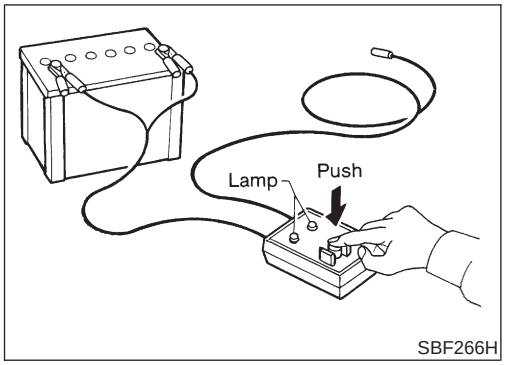

Deployment Tool Check

NJRS0022S0102

Press the deployment tool switch to the "ON" position. The left side lamp in the tool, marked "air bag connector voltage" should illuminate. If it does not illuminate, replace the tool.

Air Bag Deployment Tool Lamp Illumination Chart (Battery connected)

NJRS0022S0103

Switch operation	Left side lamp, green* "AIR BAG CONNECTOR VOLTAGE"	Right side lamp, green* "DEPLOYMENT TOOL POWER"
OFF	OFF	ON
ON	ON	ON

*: If this lamp glows red, the tool is connected to the battery incorrectly. Reverse the connections and make sure the lamp glows green.

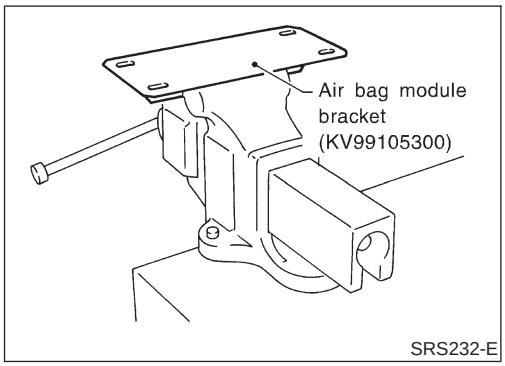

DEPLOYMENT PROCEDURES FOR AIR BAG MODULE (OUTSIDE OF VEHICLE)

NJRS0022S02

Unless the vehicle is being scrapped, deploying the air bag in the vehicle is not recommended. This may cause damage to the vehicle interior.

Anchor air bag module bracket (KV99105300) in a vise secured to a firm foundation during deployment.

Deployment of Driver Air Bag Module (Outside of vehicle)

NJRS0022S0201

1. Using wire, secure driver air bag module to air bag module bracket (SST: KV99105300) at two places.

CAUTION:

Use wire of at least 1 mm (0.04 in) diameter.

2. Firmly secure air bag module bracket (SST: KV99105300) with driver air bag module attached, in a vise.

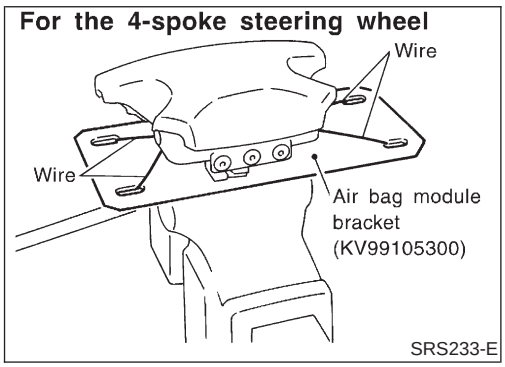

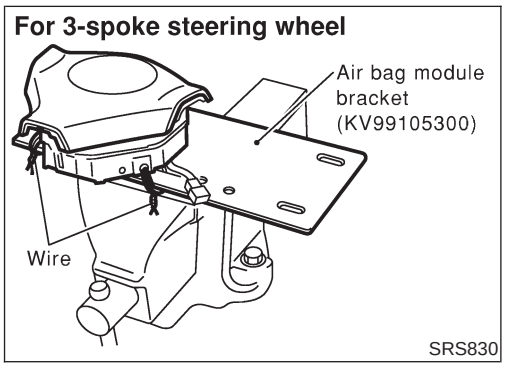

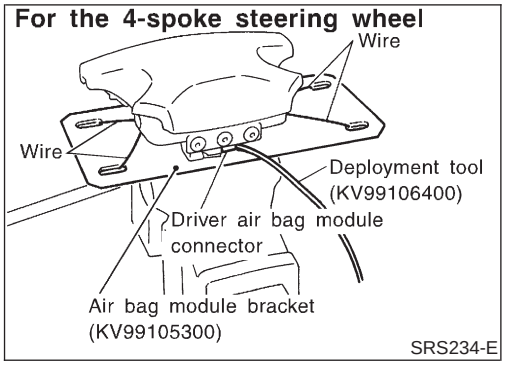

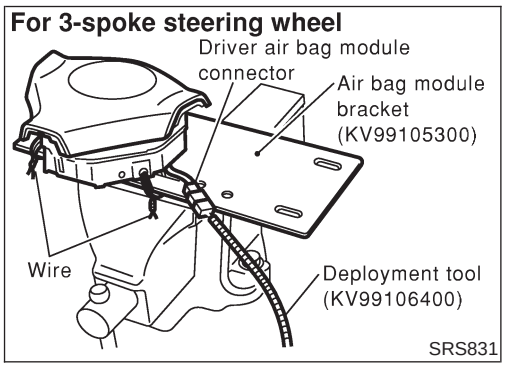

3. Connect deployment tool (SST: KV99106400) to driver air bag module connector.

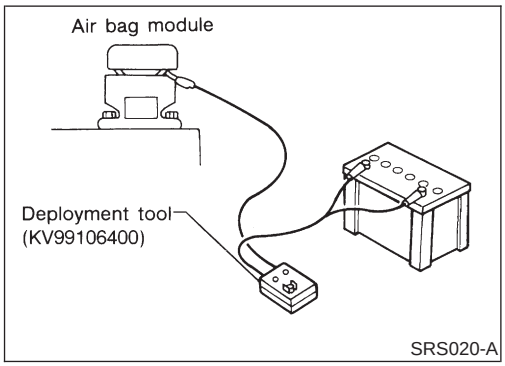

4. Connect red clip of deployment tool to battery positive terminal and black clip to negative terminal.
5. The lamp on the right side of the tool, marked "deployment tool power", should glow green, not red.
6. Press the button on the deployment tool. The left side lamp on the tool, marked "air bag connector voltage", will illuminate and the air bag module will deploy.

CAUTION:
When deploying the driver air bag module, stand at least 5 m (16 ft) away from the driver air bag module.

Deployment of Front Passenger Air Bag Module (Outside of vehicle)

NJRS0022S0202

1. Make an 8.5 mm (0.335 in) diameter hole in air bag module bracket (SST: KV99105300) at the position shown in figure at left.

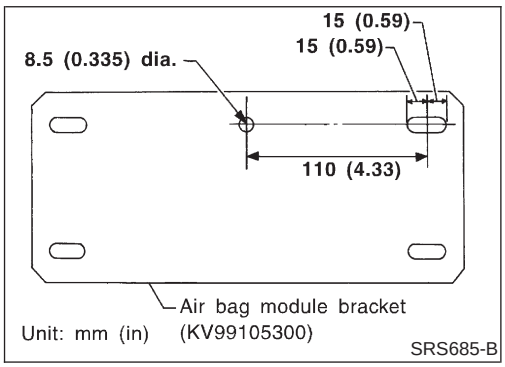

2. Firmly secure air bag module bracket (SST: KV99105300) in a vise.

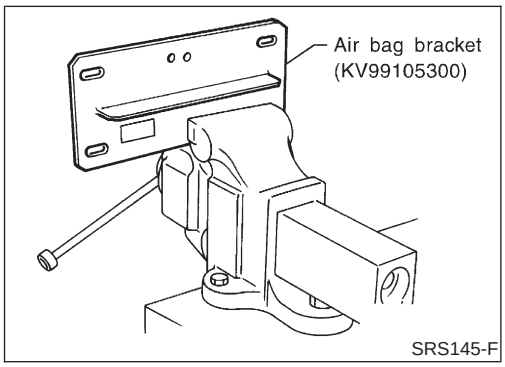

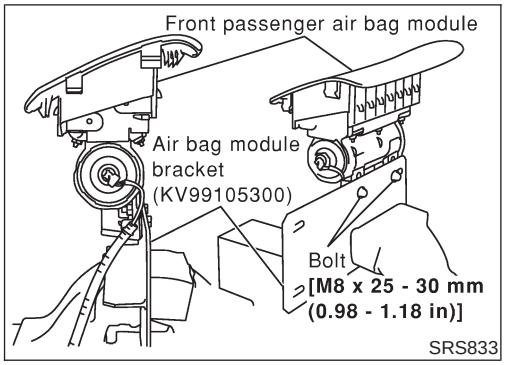

3. Match the two holes in air bag module bracket (held in vise) and front passenger air bag module and fix them with two bolts [M8 × 25 - 30 mm (0.98 - 1.18 in)].

CAUTION:

If a gap exists between front passenger air bag module and air bag module bracket, use a piece of wood inserted in the gap to stabilize the front passenger air bag module.

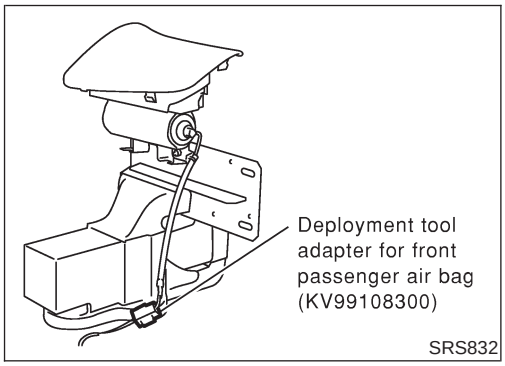

4. Connect deployment tool adapter (SST: KV99108300) to deployment tool (SST: KV99106400) connector and front passenger air bag module connector.
5. Connect red clip of deployment tool to battery positive terminal and black clip to negative terminal.
6. The lamp on the right side of the tool, marked "deployment tool power", should glow green, not red.
7. Press the button on the deployment tool. The left side lamp on the tool, marked "air bag connector voltage", will illuminate and the front passenger air bag module will deploy.

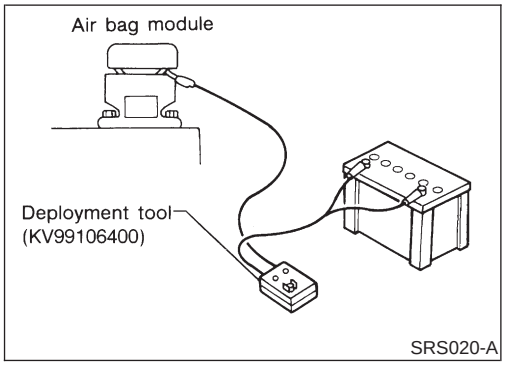

CAUTION:

- **When deploying the front passenger air bag module, do not stand on the deploying side.**
- **Stand at least 5 m (16 ft) away from the front passenger air bag module.**

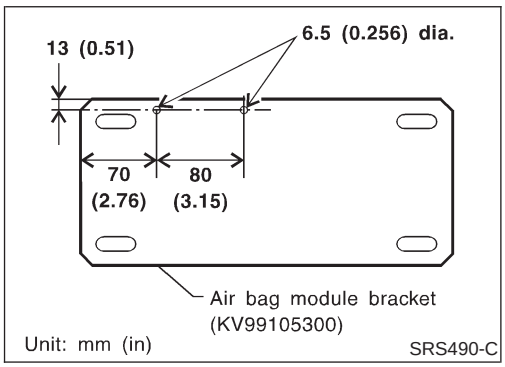

Deployment of Front Side Air Bag Module (Outside of vehicle)/4-door Sedan

NJRS0022S0203

1. Make 6.5 mm (0.256 in) diameter holes in air bag module bracket (SST: KV99105300) at the position shown in figure at left.

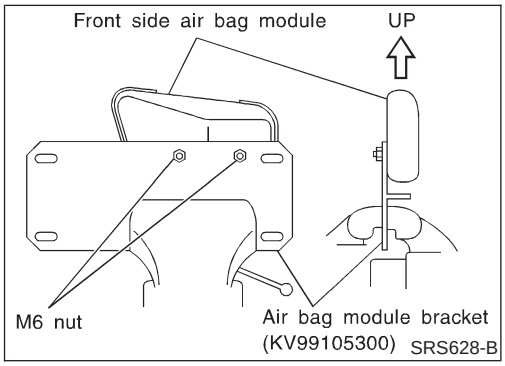

2. Firmly secure air bag module bracket (SST: KV99105300) in a vise.
3. Insert the stud bolts of front side air bag module into the two holes in air bag module bracket (held in vise) and fix them with two M6 nuts.

CAUTION:

Front side air bag module should be secured to air bag module bracket (SST: KV99105300) in a vise with stud bolt side setting bottom.

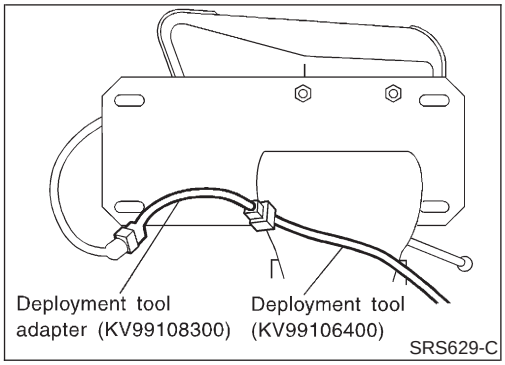

4. Connect deployment tool adapter (SST: KV99109000) to deployment tool (SST: KV99106400) connector and connector on front side air bag module.

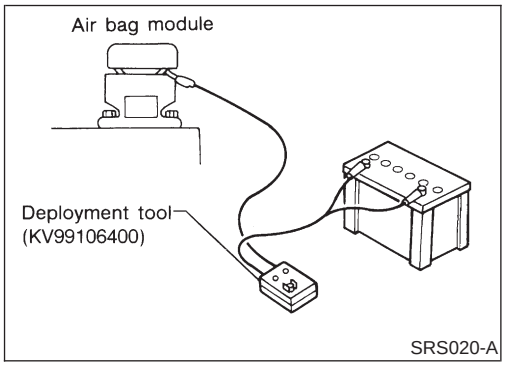

5. Connect red clip of deployment tool to battery positive terminal and black clip to negative terminal.
6. The lamp on the right side of the tool, marked "deployment tool power", should glow green, not red.
7. Press the button on the deployment tool. The left side lamp on the tool, marked "air bag connector voltage", will illuminate and the front side air bag module will deploy.

CAUTION:
When deploying the air bag module, stand at least 5 m (16 ft) away from the front side air bag module.

Deployment of Front Side Air Bag Module (Outside of vehicle)/Hatchback

NJRS0022S0204

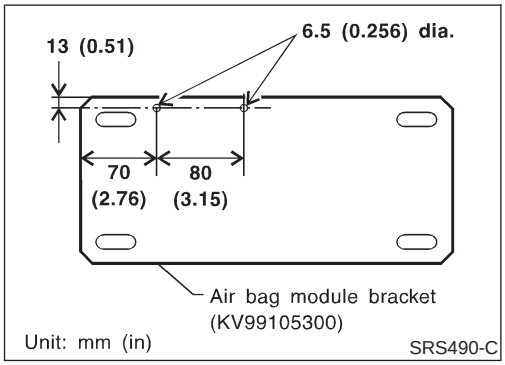

1. Make 6.5 mm (0.256 in) diameter holes in air bag module bracket (SST: KV99105300) at the position shown in figure at left.
2. Firmly secure air bag module bracket (SST: KV99105300) in a vise.

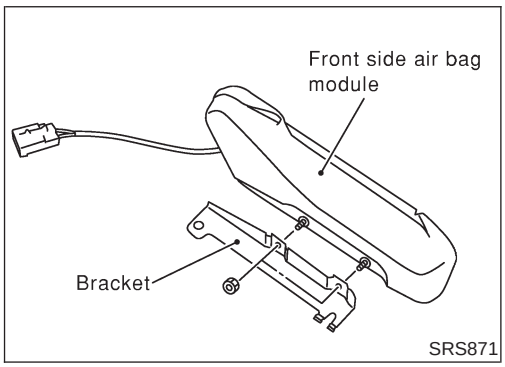

3. Remove nuts then remove the bracket from front side air bag module.

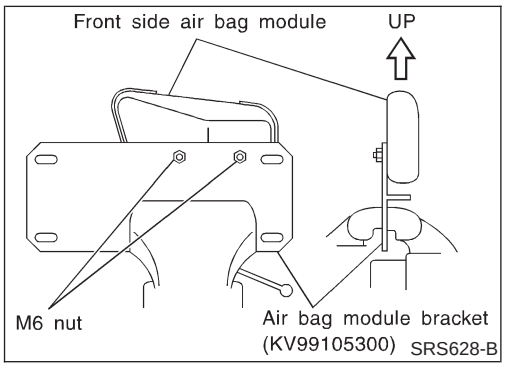

4. Insert the stud bolts of side air bag module into the two holes in air bag module bracket (held in vise) and fix them with two M6 nuts.

CAUTION:
Side air bag module should be secured to air bag module bracket (SST: KV99105300) in a vise with stud bolt side setting bottom.

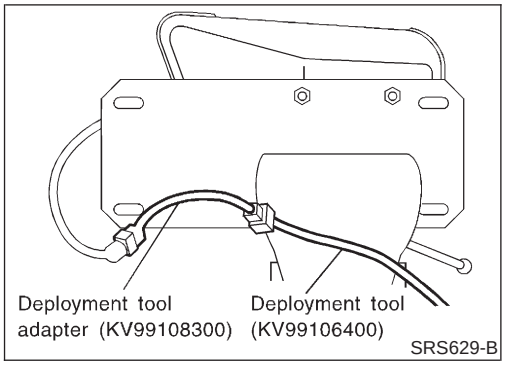

5. Connect deployment tool adapter (SST: KV99108300) to deployment tool (SST: KV99106400) connector and connector on air bag module.

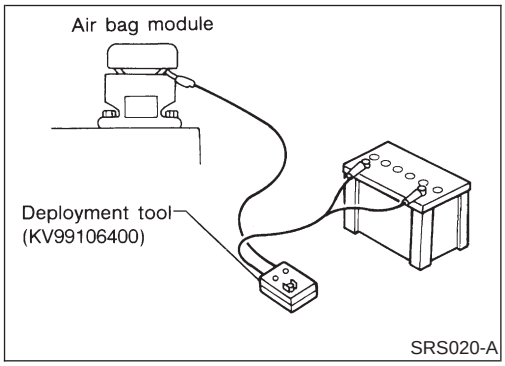

6. Connect red clip of deployment tool to battery positive terminal and black clip to negative terminal.
7. The lamp on the right side of the tool, marked "deployment tool power", should glow green, not red.
8. Press the button on the deployment tool. The left side lamp on the tool, marked "air bag connector voltage", will illuminate and the air bag module will deploy.

CAUTION:
When deploying the air bag module, stand at least 5 m (16 ft) away from the air bag module.

DEPLOYMENT PROCEDURES FOR SEAT BELT PRE-TENSIONER (OUTSIDE OF VEHICLE)

NJRS0022S05

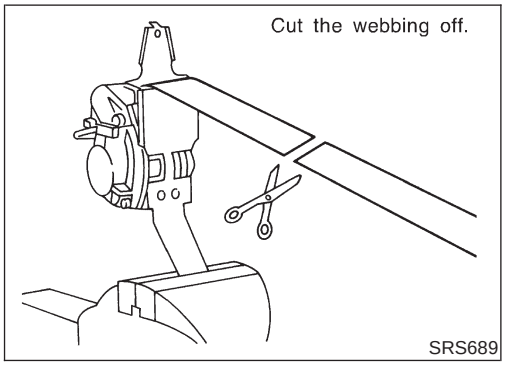

1. Firmly grip front seat belt pre-tensioner in a vise and cut the webbing off.

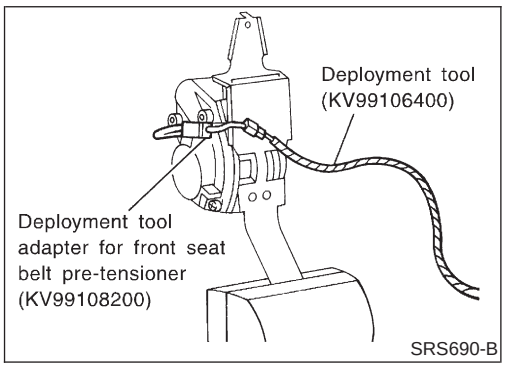

2. Connect deployment tool adapter (SST: KV99108200) to deployment tool (SST: KV99106400) connector and front seat belt pre-tensioner connector.

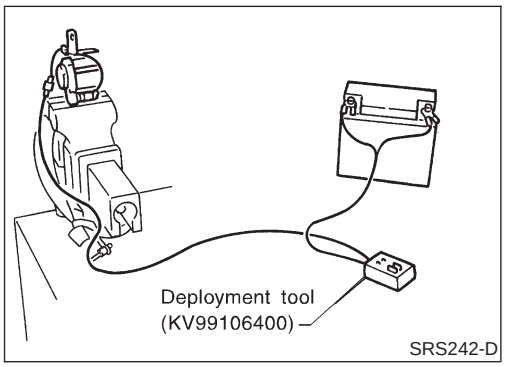

3. Connect red clip of deployment tool to battery positive terminal and black clip to negative terminal.
4. The lamp on the right side of the tool, marked "deployment tool power", should glow green, not red.
5. Press the button on the deployment tool. The left side lamp on the tool, marked "seat belt pre-tensioner connector voltage", will illuminate and the front seat belt pre-tensioner will deploy.

CAUTION:
When deploying the front seat belt pre-tensioner, stand at least 5 m (16 ft) away from the front seat belt pre-tensioner.

DEPLOYMENT OF AIR BAG MODULE AND SEAT BELT PRE-TENSIONER WHILE MOUNTED IN VEHICLE

NJRS0022S03

When disposing of a vehicle, deploy air bag module and seat belt pre-tensioners while they are mounted in vehicle.

CAUTION:

When deploying air bag module or seat belt pre-tensioner, ensure vehicle is empty.

1. Disconnect both the vehicle battery cables and wait 3 minutes.
2. Disconnect air bag module and seat belt pre-tensioner connector.
3. Connect deployment tool (SST: KV99106400) to air bag module or seat belt pre-tensioner.
   For front passenger air bag module, attach deployment tool adapter (SST: KV99108300) to the tool connector. For front side air bag module, attach deployment tool adapter [SST: KV99109000 (For 4-door Sedan) or SST: KV99108300 (For Hatchback)]. For front seat belt pre-tensioner, attach deployment tool adapter (SST: KV99108200) to the tool connector.

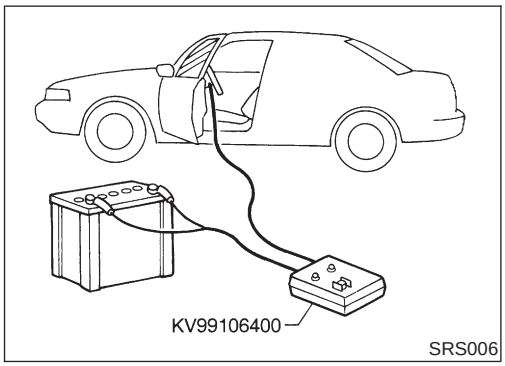

SRS006

4. Connect red clip of deployment tool to battery positive terminal and black clip to negative terminal.
5. The lamp on the right side of the tool, marked "deployment tool power", should glow green, not red.
6. Press the button on the deployment tool. The left side lamp on the tool, marked "air bag connector voltage", will illuminate and the air bag module or seat belt pre-tensioner will deploy.

CAUTION:

Activate only one air bag module or seat belt pre-tensioner at a time.

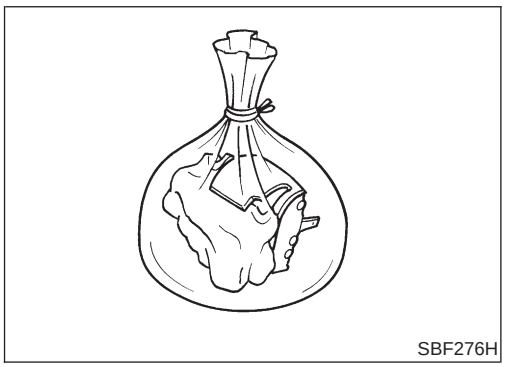
SBF276H

DISPOSING OF AIR BAG MODULE AND SEAT BELT PRE-TENSIONER

NJRS0022S04

Deployed air bag module and seat belt pre-tensioner are very hot. Before disposing of air bag module, and seat belt pre-tensioner wait at least 30 minutes, and 10 minutes, respectively. Seal them in a plastic bag before disposal.

CAUTION:

- **Never apply water to a deployed air bag module and seat belt pre-tensioner.**
- **Be sure to wear gloves when handling a deployed air bag module and seat belt pre-tensioner.**
- **No poisonous gas is produced upon air bag module deployment. However, be careful not to inhale gas since it irritates throat and can cause choking.**
- **Do not attempt to disassemble air bag module and seat belt pre-tensioner.**
- **Air bag module and seat belt pre-tensioner cannot be reused.**
- **Wash your hands clean after finishing work.**

Trouble Diagnoses Introduction

NJRS0043

CAUTION:

- **Do not use electrical test equipment on any circuit related to the SRS unless instructed to in this Service Manual. SRS wiring harnesses can be identified by yellow harness connector.**
- **Do not attempt to repair, splice or modify the SRS wiring harness. If the harness is damaged, replace it with a new one.**
- **Keep ground portion clean.**

DIAGNOSIS FUNCTION

NJRS0043S01

The SRS self-diagnosis results can be read by using “AIR BAG” warning lamp and/or CONSULT-II. The reading of these results is accomplished using one of two modes — “User mode” and “Diagnosis mode”.
The User mode is exclusively prepared for the customer (driver). This mode warns the driver of a system malfunction through the operation of the “AIR BAG” warning lamp.
The Diagnosis mode allows the technician to locate and inspect the malfunctioning part.
The mode applications for the “AIR BAG” warning lamp and CONSULT-II are as follows:

	User mode	Diagnosis mode	Display type
“AIR BAG” warning lamp	X	X	ON-OFF operation
CONSULT-II	—	X	Monitoring

NOTE:
Seat belt pre-tensioner malfunction is indicated by “AIR BAG” warning lamp.

DIAGNOSIS MODE FOR CONSULT-II

=NJRS0043S02

- "SELF-DIAG [CURRENT]"
  A current Self-diagnosis result (also indicated by the number of warning lamp flashes in the Diagnosis mode) is displayed on the CONSULT-II screen in real time. This refers to a malfunctioning part requiring repairs.
- "SELF-DIAG [PAST]"
  Diagnosis results previously stored in the memory are displayed on the CONSULT-II screen. The stored results are not erased until memory erasing is executed.
- "TROUBLE DIAG RECORD"
  With TROUBLE DIAG RECORD, diagnosis results previously erased by a reset operation can be displayed on the CONSULT-II screen.
- "ECU DISCRIMINATED NO."
  The diagnosis sensor unit for each vehicle model is assigned with its own, individual classification number. This number will be displayed on the CONSULT-II screen, as shown below. When replacing the diagnosis sensor unit, refer to the part number for the compatibility. After installation, replacement with a correct unit can be checked by confirming this classification number on the CONSULT-II screen.

For NISSAN MODEL N16, the diagnosis sensor unit classification numbers are as follows:

DESTINATION	MODEL		ECU DISCRIMINATED NO.
Europe	4-DOOR SEDAN	Models with single air bag and seat belt pre-tensioner	A50E
		Models with dual air bags and seat belt pre-tensioner	A50F
		Models with dual air bags, side air bag and seat belt pre-tensioner	A510
	3-DOOR HATCHBACK	Models with single air bag and seat belt pre-tensioner	A917
		Models with dual air bags and seat belt pre-tensioner	A904
		Models with dual air bags, side air bag and seat belt pre-tensioner	A905
	5-DOOR HATCHBACK	Models with single air bag and seat belt pre-tensioner	A917
		Models with dual air bags and seat belt pre-tensioner	A904
		Models with dual air bags, side air bag and seat belt pre-tensioner	A918

HOW TO CHANGE SELF-DIAGNOSIS MODE WITH CONSULT-II

=NJRS0043S03

From User Mode to Diagnosis Mode

NJRS0043S0301

After selecting "AIR BAG" on the "SELECT SYSTEM" screen, User mode automatically changes to Diagnosis mode.

From Diagnosis Mode to User Mode

NJRS0043S0302

To return to User mode from Diagnosis mode, touch "BACK" key of CONSULT-II until "SELECT SYSTEM" appears, Diagnosis mode automatically changes to User mode.

HOW TO CHANGE SELF-DIAGNOSIS MODE WITHOUT CONSULT-II

NJRS0043S04

From User Mode to Diagnosis Mode

NJRS0043S0401

When a malfunction is detected, activate the Diagnosis mode by turning the ignition switch as follows:

1) Turn ignition switch "ON".
2) After "AIR BAG" warning lamp lights for 7 seconds, turn ignition switch "OFF" within 1 second.
3) Wait more than 3 seconds.
4) Repeat steps 1 to 3 three times.
5) Turn ignition switch "ON".

SRS will not enter Diagnosis mode if no malfunction is detected.

From Diagnosis Mode to User Mode

NJRS0043S0402

After a malfunction is repaired, switch the ignition "OFF" for at least one second, then back "ON". Diagnosis mode is returned to User mode.
When a malfunction is detected, switch from Diagnosis mode to User mode by turning the ignition switch as follows:

1) Turn ignition switch "ON".
2) After "AIR BAG" warning lamp lights for 7 seconds, turn ignition switch "OFF" within 1 second.
3) Wait more than 3 seconds.
4) Repeat steps 1 to 3 three times.
5) Turn ignition switch "ON".

HOW TO ERASE SELF-DIAGNOSIS RESULTS

NJRS0043S05

With CONSULT-II

NJRS0043S0501

- "SELF-DIAG [CURRENT]"
  A current Self-diagnosis result is displayed on the CONSULT-II screen in real time.

After the malfunction is repaired completely, no malfunction is detected on "SELF-DIAG [CURRENT]".

- "SELF-DIAG [PAST]"
  Return to the "SELF-DIAG [CURRENT]" CONSULT-II screen by pushing "BACK" key of CONSULT-II and select "SELF-DIAG [CURRENT]" in SELECT DIAG MODE. Touch "ERASE" in "SELF-DIAG [CURRENT]" mode.

NOTE:
If the memory of the malfunction in "SELF-DIAG [PAST]" is not erased, the User mode shows the system malfunction by the operation of the warning lamp even if the malfunction is repaired completely.

SELF-DIAG [CURRENT]	
DTC RESULTS:	
NO DTC IS DETECTED. FURTHER TESTING MAY BE REQUIRED.	

SRS701

- "TROUBLE DIAG RECORD"
  The memory of "TROUBLE DIAG RECORD" cannot be erased.

Without CONSULT-II

NJRS0043S0502

After a malfunction is repaired, switch the ignition "OFF" for at least one second, then back "ON". Diagnosis mode returns to the User mode. At that time, the self-diagnostic result is cleared.

How to Perform Trouble Diagnoses for Quick and Accurate Repair

=NJRS0044

A good understanding of the malfunction conditions can make troubleshooting faster and more accurate. In general, each customer feels differently about a malfunction. It is important to fully understand the symptoms or conditions for a customer complaint.

INFORMATION FROM CUSTOMER

NJRS0044S01

WHAT ..... Vehicle model
WHEN ..... Date, Frequencies
WHERE ..... Road conditions
HOW ..... Operating conditions, Symptoms

PRELIMINARY CHECK

NJRS0044S02

Check that the following parts are in good order.

- Battery [Refer to SC-3, “BATTERY”.]
- Fuse [Refer to EL-38, “Fuse”, “POWER SUPPLY ROUTING”.]
- System component-to-harness connections

WORK FLOW

=NJRS0044S03

NOTE:
Seat belt pre-tensioner malfunction is indicated by "AIR BAG" warning lamp.

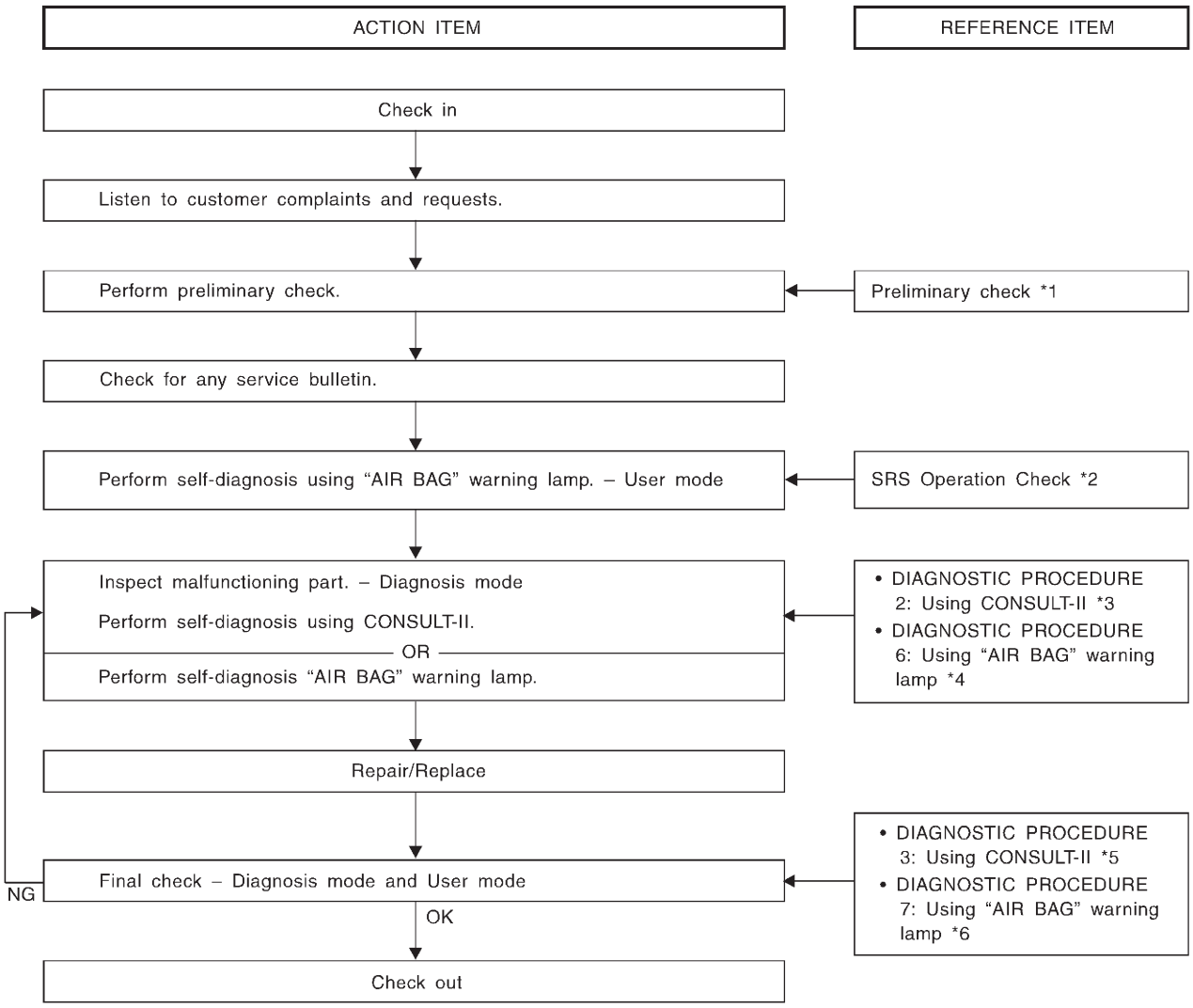

SRS799

*1: RS-51
*2: RS-59
*3: RS-60
*4: RS-74
*5: RS-66
*6: RS-79

Wiring Diagram — SRS —/4-door Sedan

NJRS0046

RS-SRS-01

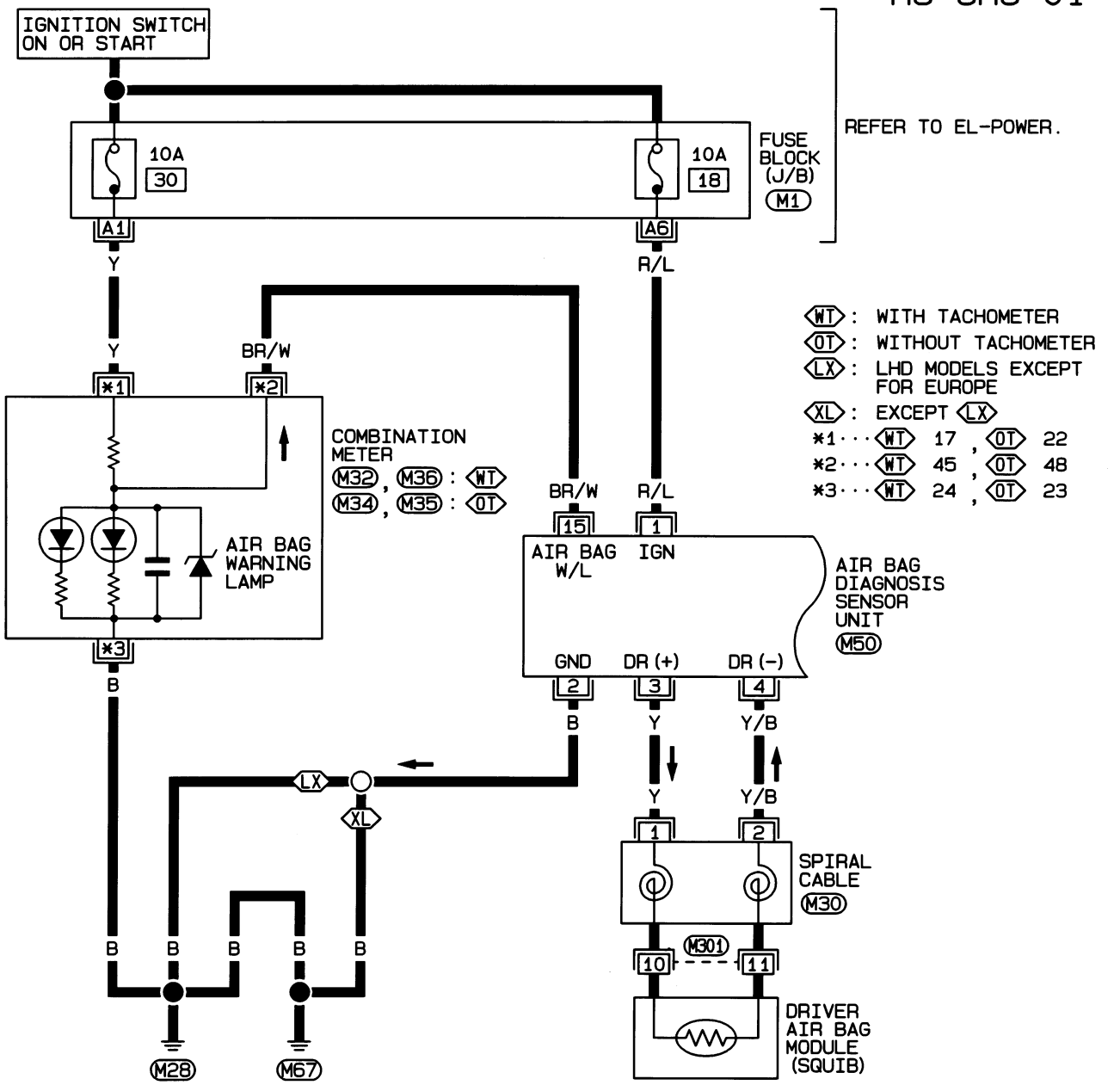

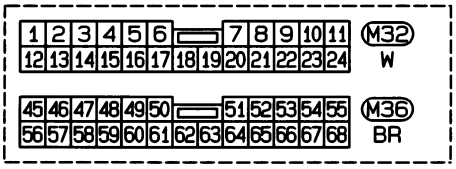

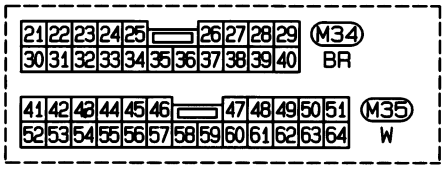

REFER TO THE FOLLOWING.
M1 -FUSE BLOCK-JUNCTION BOX (J/B)

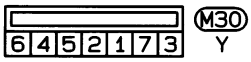

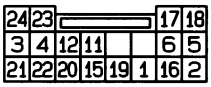

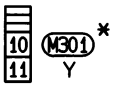

* : THIS CONNECTOR IS NOT SHOWN IN "HARNESS LAYOUT", EL SECTION.

HRS060

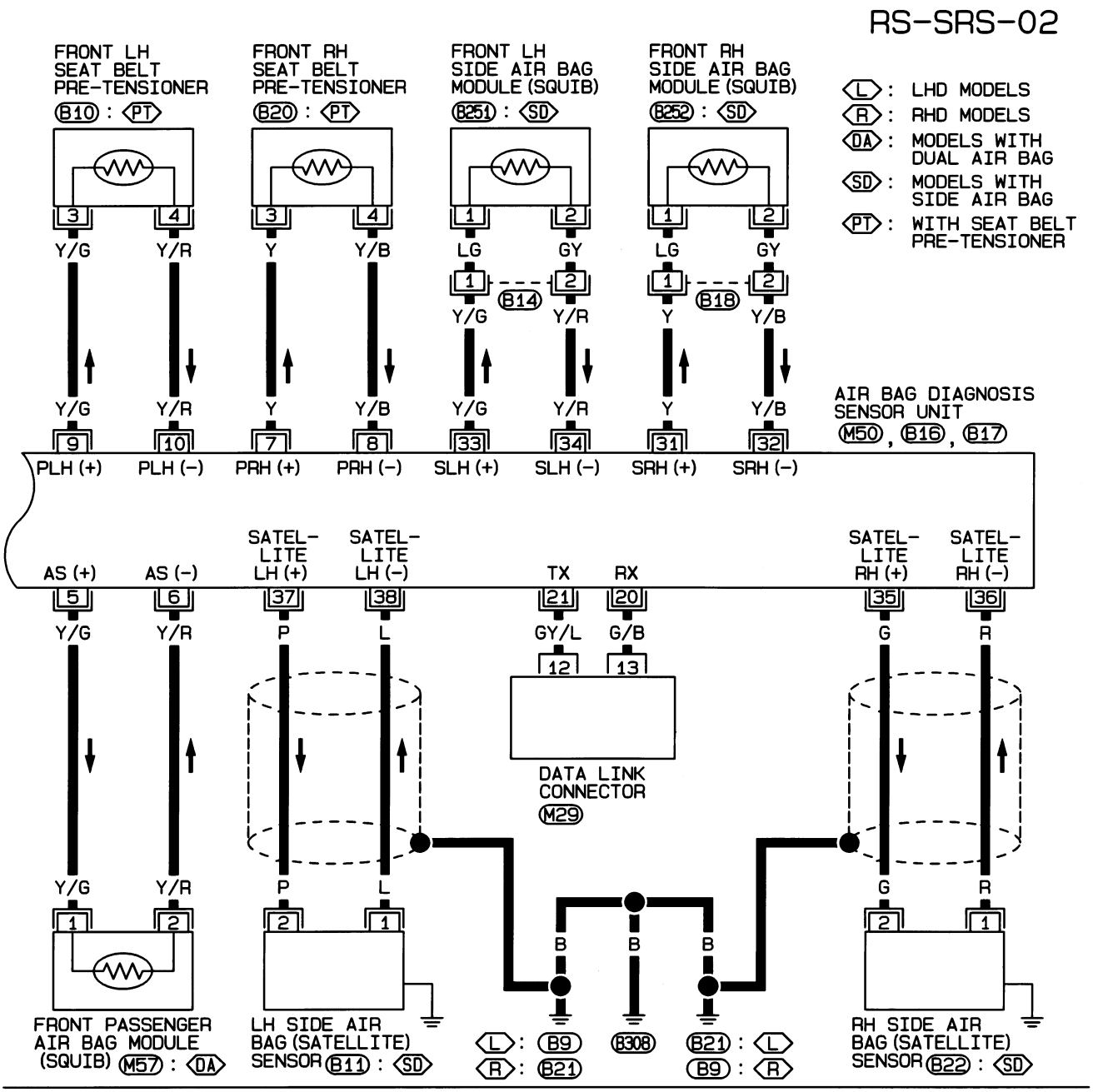

* : THIS CONNECTOR IS NOT SHOWN IN "HARNESS LAYOUT", EL SECTION.

HRS061

Wiring Diagram — SRS —/Hatchback

NJRS0061

TYPE-1

NJRS0061S01

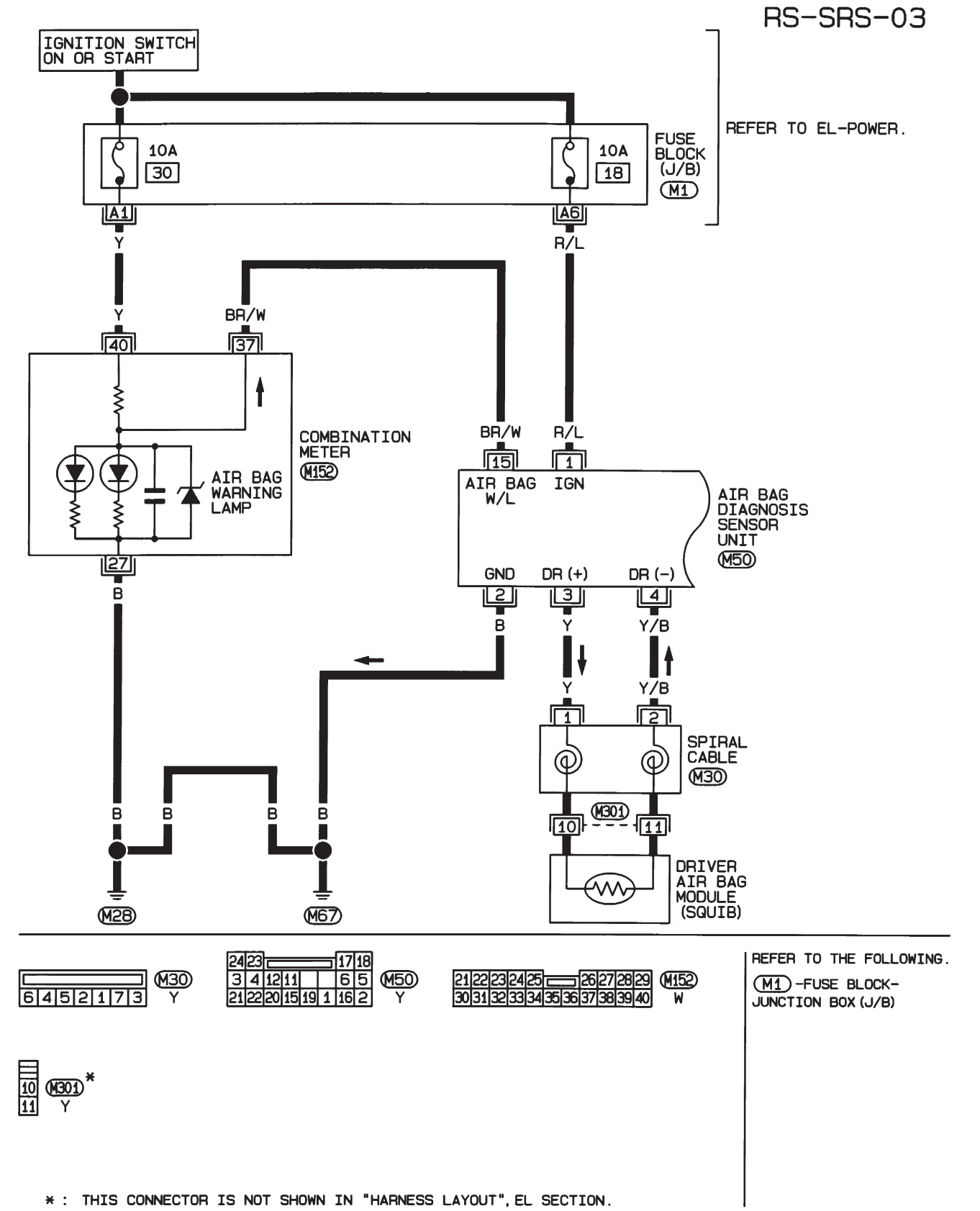

HRS057

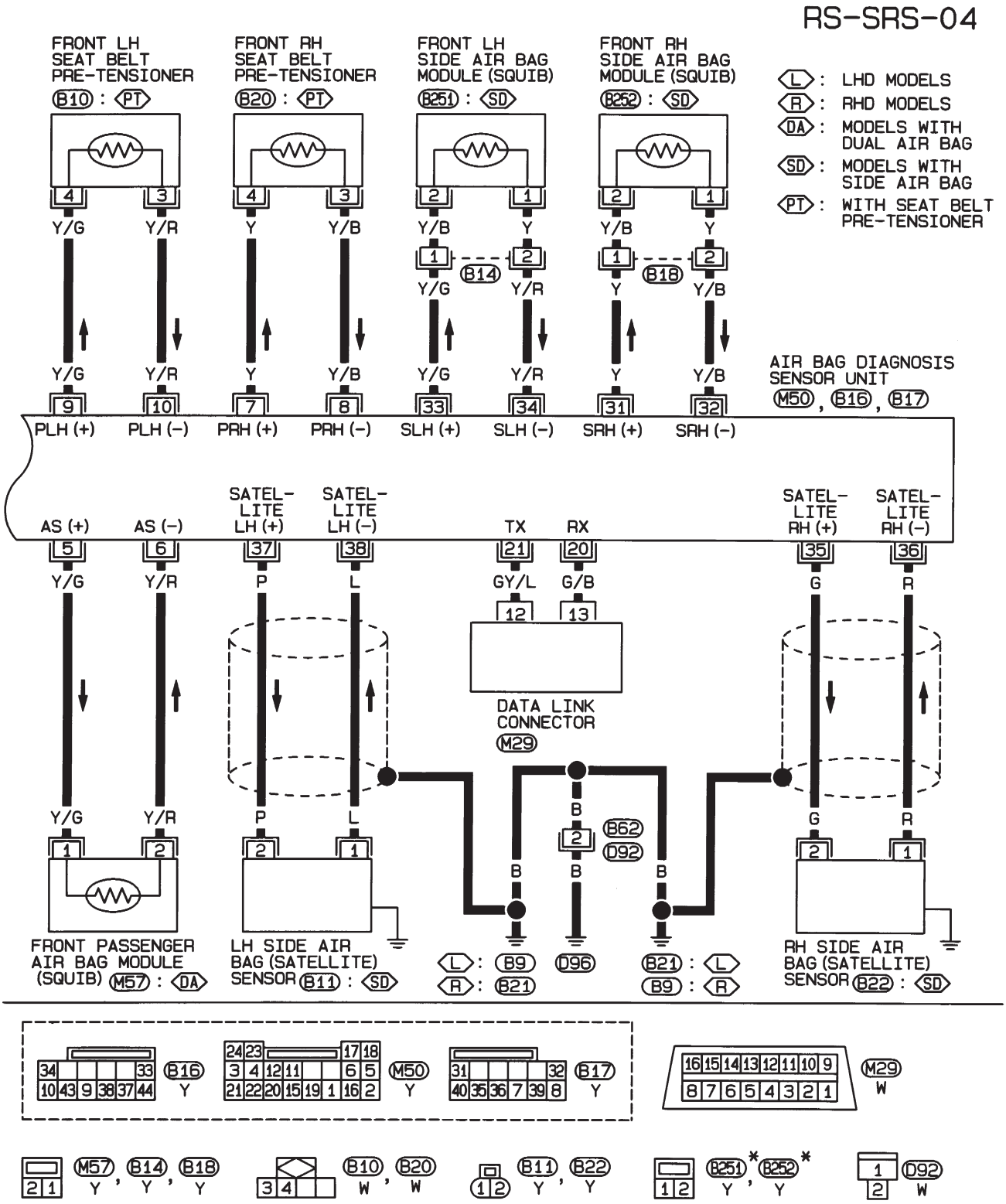

* : THIS CONNECTOR IS NOT SHOWN IN "HARNESS LAYOUT", EL SECTION.

HRS058

TYPE-2

NJRS0061S02

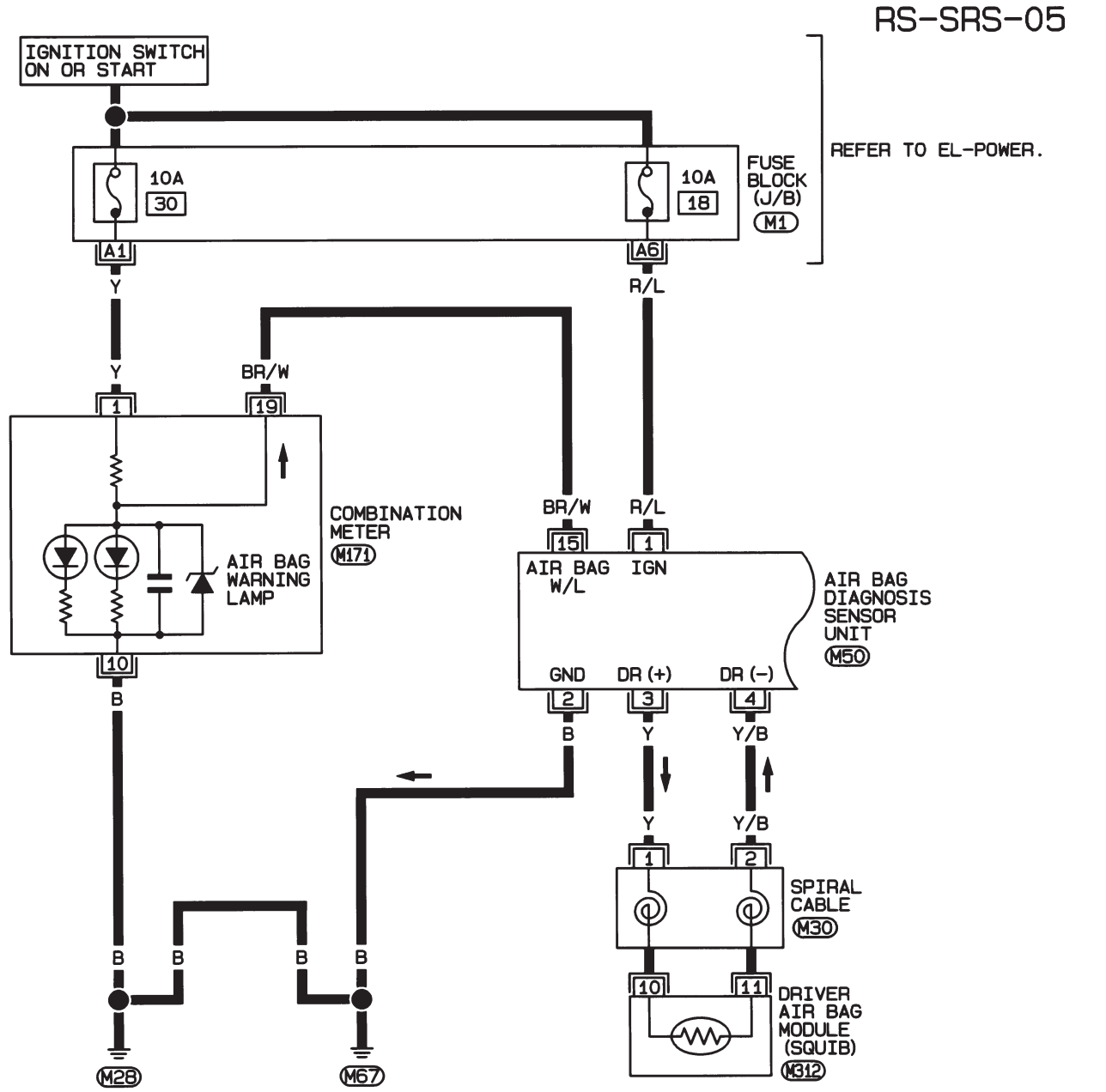

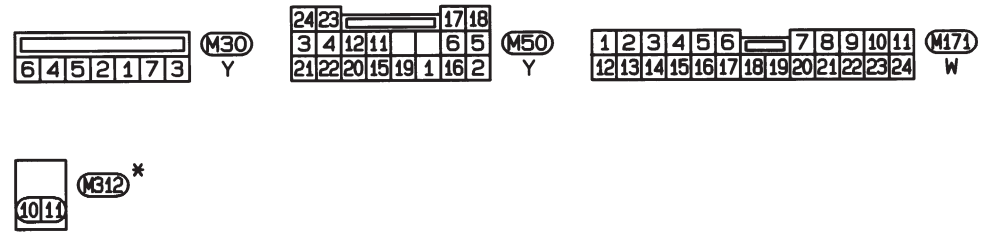

REFER TO THE FOLLOWING.
M1 -FUSE BLOCK-JUNCTION BOX (J/B)

* : THIS CONNECTOR IS NOT SHOWN IN "HARNESS LAYOUT", EL SECTION.

HRS069

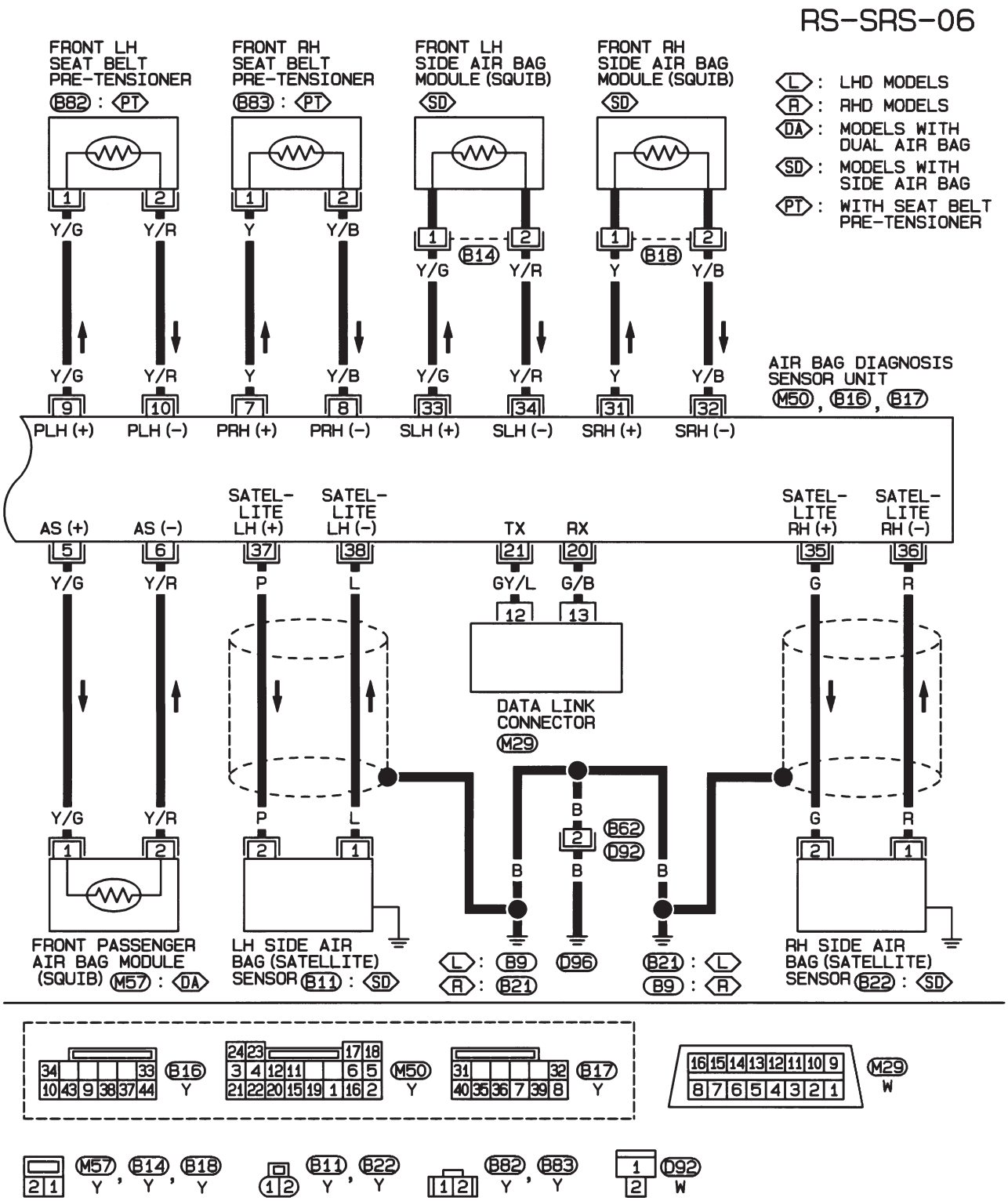
RS-SRS-06
FRONT LH SEAT BELT PRE-TENSIONER
B82 : PT
FRONT RH SEAT BELT PRE-TENSIONER
B83 : PT
FRONT LH SIDE AIR BAG MODULE (SQUIB)
SD
FRONT RH SIDE AIR BAG MODULE (SQUIB)
SD
L : LHD MODELS
R : RHD MODELS
DA : MODELS WITH DUAL AIR BAG
SD : MODELS WITH SIDE AIR BAG
PT : WITH SEAT BELT PRE-TENSIONER
Y/G
Y/R
Y
Y/B
B14
B18
AIR BAG DIAGNOSIS SENSOR UNIT
M50, B16, B17
PLH (+)
PLH (−)
PRH (+)
PRH (−)
SLH (+)
SLH (−)
SRH (+)
SRH (−)
AS (+)
AS (−)
SATEL-LITE LH (+)
SATEL-LITE LH (−)
TX
RX
SATEL-LITE RH (+)
SATEL-LITE RH (−)
P
L
GY/L
G/B
G
R
DATA LINK CONNECTOR
M29
B
B62
D92
FRONT PASSENGER AIR BAG MODULE (SQUIB) M57 : DA
LH SIDE AIR BAG (SATELLITE) SENSOR B11 : SD
L : B9
R : B21
D96
B21 : L
B9 : R
RH SIDE AIR BAG (SATELLITE) SENSOR B22 : SD
B16
Y
M50
Y
B17
Y
M29
W
M57
Y
B14
Y
B18
Y
B11
Y
B22
Y
B82
Y
B83
Y
D92
W

HRS070

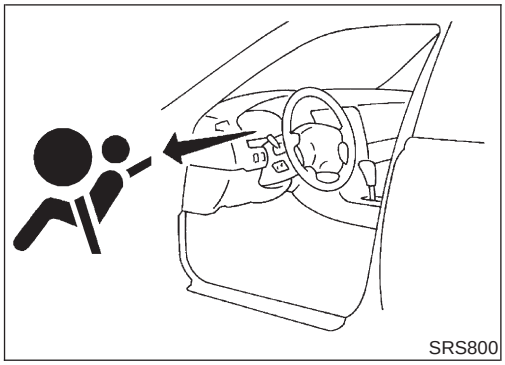

SRS Operation Check

NJRS0047

DIAGNOSTIC PROCEDURE 1

NJRS0047S01

Checking Air Bag Operation by Using “AIR BAG” Warning Lamp — User Mode

NJRS0047S0101

1. After turning ignition switch from “OFF” to “ON”, “AIR BAG” warning lamp operates.
2. Compare “AIR BAG” warning lamp operation to the chart below.

“AIR BAG” warning lamp operation — User mode —	SRS condition	Reference item
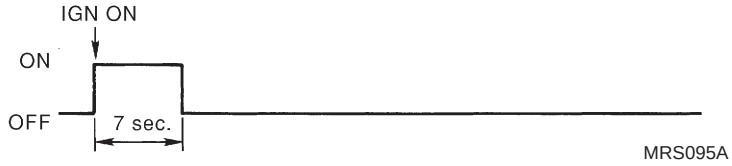	No malfunction is detected. No further action is necessary.	—
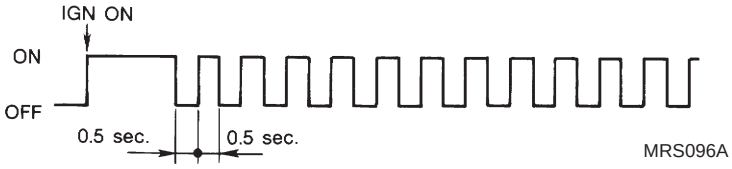	The system is malfunctioning and needs to be repaired as indicated.	Go to DIAGNOSTIC PROCEDURE 2 or 6 (RS-60 or RS-74).
	Air bag or/and seat belt pre-tensioner is deployed.	Go to COLLISION DIAGNOSIS (RS-85).
	Air bag fuse, diagnosis sensor unit or harness is malfunctioning and needs to be repaired.	Go to DIAGNOSTIC PROCEDURE 9 (RS-82).
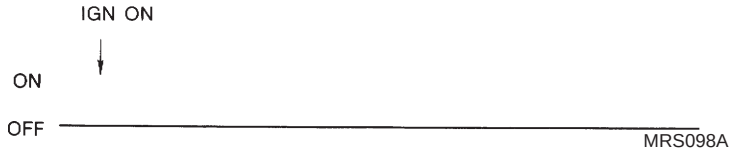	One of the following has occurred and needs to be repaired. ● Meter fuse is blown. ● “AIR BAG” warning lamp circuit has open or short. ● Diagnosis sensor unit is malfunctioning.	Go to DIAGNOSTIC PROCEDURE 10 (RS-84).

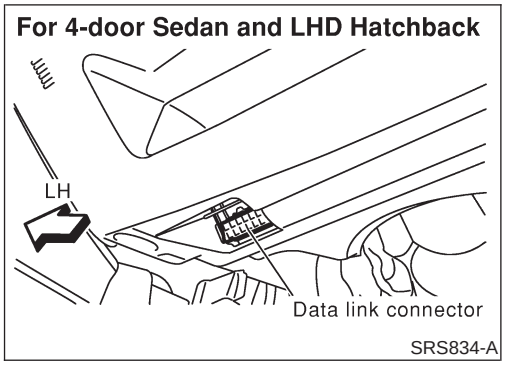

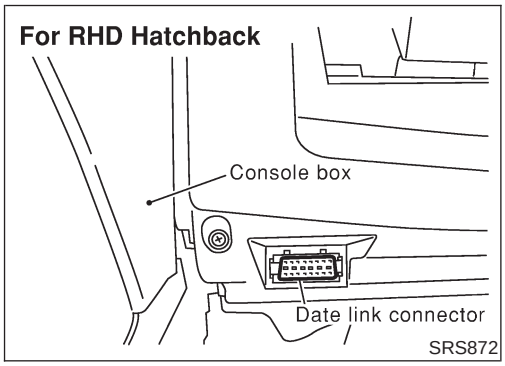

Trouble Diagnoses with CONSULT-II

=NJRS0048

DIAGNOSTIC PROCEDURE 2

NJRS0048S01

Inspecting SRS malfunctioning parts by using CONSULT-II — Diagnosis mode

1. Turn ignition switch “OFF”.
2. Connect CONSULT-II to data link connector.

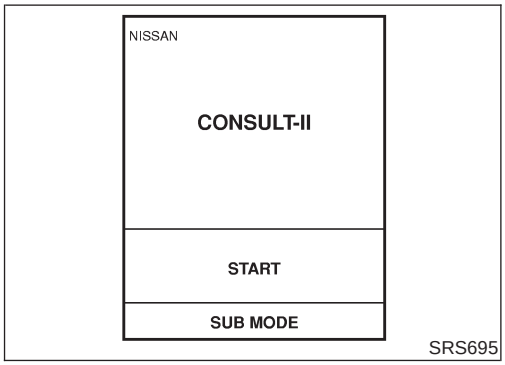

3. Turn ignition switch “ON”.
4. Touch “START”.

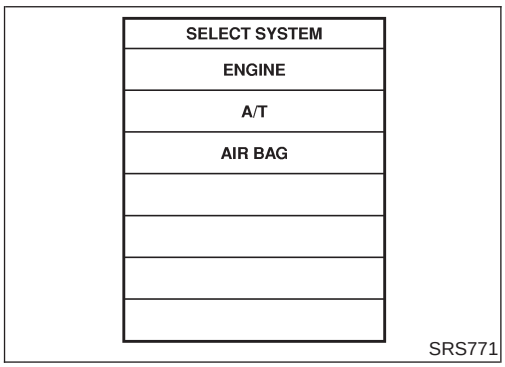

5. Touch “AIR BAG”.

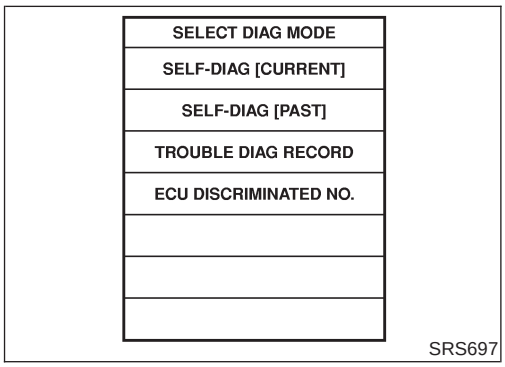

6. Touch “SELF-DIAG [CURRENT]”.

SELF-DIAG [CURRENT]	
DTC RESULTS:	
AIR BAG MODULE [OPEN]	

SRS772

7. Diagnostic codes are displayed on "SELF-DIAG [CURRENT]".

SELF-DIAG [CURRENT]	
DTC RESULTS:	
NO DTC IS DETECTED. FURTHER TESTING MAY BE REQUIRED.	

SRS701

4-door Sedan

If no malfunction is detected on "SELF-DIAG [CURRENT]" even though malfunction is detected in "SRS Operation Check", check the battery voltage.

If the battery voltage is less than 9V, charge the battery. Then go to DIAGNOSTIC PROCEDURE 3, page RS-66.

If the battery voltage is OK, go to DIAGNOSTIC PROCEDURE 4, page RS-68, to diagnose the following cases:

- Self-diagnostic result "SELF-DIAG [PAST]" (previously stored in the memory) might not be erased after repair.
- The SRS system malfunctions intermittently.

Hatchback

If no malfunction is detected on "SELF-DIAG [CURRENT]" but malfunction is indicated by the "AIR BAG" warning lamp, go to DIAGNOSTIC PROCEDURE 4, page RS-68, to diagnose the following situations:

- Self-diagnostic result "SELF-DIAG [PAST]" (previously stored in the memory) might not be erased after repair.
- The SRS system malfunctions intermittently.

8. Touch "PRINT".
9. Compare diagnostic codes to "CONSULT-II Diagnostic Code Chart", page RS-62 (4-door Sedan) or RS-64 (Hatchback).
10. Touch "BACK" key of CONSULT-II until "SELECT SYSTEM" appears in order to return to User mode from Diagnosis mode.
11. Turn ignition switch "OFF", then turn off and disconnect CONSULT-II, and disconnect both battery cables.
12. Repair the system as outlined by the "Repair order" in "CONSULT-II Diagnostic Code Chart", that corresponds to the self-diagnostic result. For replacement procedure of component parts, refer to RS-26.
13. After repairing the system, go to DIAGNOSTIC PROCEDURE 3, page RS-66 for final checking.

CONSULT-II Diagnostic Code Chart ("SELF-DIAG [CURRENT]")/4-door Sedan

NJRS0048S0101

Diagnostic item	Explanation		Repair order **"Recheck SRS at each replacement."**
NO DTC IS DETECTED.	When malfunction is indicated by the "AIR BAG" warning lamp in User mode	● Low battery voltage (Less than 9V)	● Go to DIAGNOSTIC PROCEDURE 3 (RS-66) after charging battery.
		● Self-diagnostic result "SELF-DIAG [PAST]" (previously stored in the memory) might not be erased after repair. ● Intermittent malfunction has been detected in the past.	● Go to DIAGNOSTIC PROCEDURE 4 (RS-68).
	● No malfunction is detected.		● Go to DIAGNOSTIC PROCEDURE 3 (RS-66).
AIRBAG MODULE [OPEN]	● Driver air bag module circuit is open. (including the spiral cable)		1. Visually check the wiring harness connection. 2. Replace the harness if it has visible damage. 3. Replace driver air bag module. (Before disposal, it must be deployed.) 4. Replace the spiral cable. 5. Replace the diagnosis sensor unit. 6. Replace the related harness.
AIRBAG MODULE [VB-SHORT]	● Driver air bag module circuit is shorted to a power supply circuit. (including the spiral cable)		1. Visually check the wiring harness connection. 2. Replace the harness if it has visible damage. 3. Replace the spiral cable. 4. Replace driver air bag module. (Before disposal, it must be deployed.) 5. Replace the diagnosis sensor unit. 6. Replace the related harness.
AIRBAG MODULE [GND-SHORT]	● Driver air bag module circuit is shorted to ground. (including the spiral cable)		
AIRBAG MODULE [SHORT]	● Driver air bag module circuits are shorted to each other.		
ASSIST A/B MODULE [VB-SHORT]	● Front passenger air bag module circuit is shorted to a power supply circuit.		1. Visually check the wiring harness connection. 2. Replace the harness if it has visible damage. 3. Replace front passenger air bag module. (Before disposal, it must be deployed.) 4. Replace the diagnosis sensor unit. 5. Replace the related harness.
ASSIST A/B MODULE [OPEN]	● Front passenger air bag module circuit is open.		
ASSIST A/B MODULE [GND-SHORT]	● Front passenger air bag module circuit is shorted to ground.		
ASSIST A/B MODULE [SHORT]	● Front passenger air bag module circuits are shorted to each other.		
SIDE MODULE LH [OPEN]	● Front LH side air bag module circuit is open.		1. Visually check the wiring harness connection. 2. Replace the harness if it has visible damage. 3. Replace front LH side air bag module. (Before disposal, it must be deployed.) 4. Replace the diagnosis sensor unit. 5. Replace the related harness.
SIDE MODULE LH [VB-SHORT]	● Front LH side air bag module circuit is shorted to a power supply circuit.		
SIDE MODULE LH [GND-SHORT]	● Front LH side air bag module circuit is shorted to ground.		
SIDE MODULE LH [SHORT]	● Front LH side air bag module circuits are shorted to each other.		

Diagnostic item	Explanation	Repair order **"Recheck SRS at each replacement."**
SIDE MODULE RH [OPEN]	● Front RH side air bag module circuit is open.	1. Visually check the wiring harness connection. 2. Replace the harness if it has visible damage. 3. Replace front RH side air bag module. (Before disposal, it must be deployed.) 4. Replace the diagnosis sensor unit. 5. Replace the related harness.
SIDE MODULE RH [VB-SHORT]	● Front RH side air bag module circuit is shorted to a power supply circuit.	
SIDE MODULE RH [GND-SHORT]	● Front RH side air bag module circuit is shorted to ground.	
SIDE MODULE RH [SHORT]	● Front RH side air bag module circuits are shorted to each other.	
SATELLITE SENS LH [UNIT FAIL] SATELLITE SENS LH [COMM FAIL]	● LH side air bag (satellite) sensor	1. Visually check the wiring harness connection. 2. Replace the harness if it has visible damage. 3. Replace the LH side air bag (satellite) sensor. 4. Replace the diagnosis sensor unit. 5. Replace the related harness.
SATELLITE SENS RH [UNIT FAIL] SATELLITE SENS RH [COMM FAIL]	● RH side air bag (satellite) sensor	1. Visually check the wiring harness connection. 2. Replace the harness if it has visible damage. 3. Replace the RH side air bag (satellite) sensor. 4. Replace the diagnosis sensor unit. 5. Replace the related harness.
PRE-TEN FRONT LH [OPEN/VB-SHORT]	● The circuit for front LH seat belt pre-tensioner is open or shorted to a power supply circuit.	1. Visually check the wiring harness connections. 2. Replace the harness if it has visible damage. 3. Replace front LH seat belt. (Before disposal, it must be deactivated.) 4. Replace the diagnosis sensor unit. 5. Replace the related harness.
PRE-TEN FRONT LH [GND-SHORT]	● The circuit for front LH seat belt pre-tensioner is shorted to ground.	
PRE-TEN FRONT RH [OPEN/VB-SHORT]	● The circuit for front RH seat belt pre-tensioner is open or shorted to some power supply circuit.	1. Visually check the wiring harness connections. 2. Replace the harness if it has visible damage. 3. Replace front RH seat belt. (Before disposal, it must be deactivated.) 4. Replace the diagnosis sensor unit. 5. Replace the related harness.
PRE-TEN FRONT RH [GND-SHORT]	● The circuit for front RH seat belt pre-tensioner is shorted to ground.	
CONTROL UNIT	● Diagnosis sensor unit is malfunctioning.	1. Visually check the wiring harness connection. 2. Replace the diagnosis sensor unit.

*** Follow the procedures in numerical order when repairing malfunctioning parts. Confirm whether malfunction is eliminated using the air bag warning lamp or CONSULT-II each time repair is finished. If malfunction is still observed, proceed to the next step. When malfunction is eliminated, further repair work is not required.**

CONSULT-II DIAGNOSTIC CODE CHART ("SELF-DIAG [CURRENT]")/Hatchback

NJRS0048S0102

Diagnostic item	Explanation		Repair order **Recheck SRS at each replacement.**
NO DTC IS DETECTED	When malfunction is indicated by the "AIR BAG" warning lamp in User mode	• Self-diagnostic result "SELF-DIAG [PAST]" (previously stored in the memory) might not be erased after repair. • Intermittent malfunction has been detected in the past.	• Go to DIAGNOSTIC PROCEDURE 3 (RS-66).
	• No malfunction is detected.		• Go to DIAGNOSTIC PROCEDURE 3 (RS-66).
AIRBAG MODULE [OPEN]	• Driver air bag module circuit is open. (including the spiral cable)		1. Visually check the wiring harness connection. 2. Replace the harness if it has visible damage. 3. Replace the spiral cable. 4. Replace driver air bag module. (Before disposal, it must be deployed.) 5. Replace the diagnosis sensor unit. 6. Replace the related harness.
AIRBAG MODULE [VB-SHORT]	• Driver air bag module circuit is shorted to a power supply circuit. (including the spiral cable)		
AIRBAG MODULE [GND-SHORT]	• Driver air bag module circuit is shorted to ground. (including the spiral cable)		
AIRBAG MODULE [SHORT]	• Driver air bag module circuits are shorted to each other.		
ASSIST A/B MODULE [VB-SHORT]	• Front passenger air bag module circuit is shorted to a power supply circuit.		1. Visually check the wiring harness connection. 2. Replace the harness if it has visible damage. 3. Replace front passenger air bag module. (Before disposal, it must be deployed.) 4. Replace the diagnosis sensor unit. 5. Replace the related harness.
ASSIST A/B MODULE [OPEN]	• Front passenger air bag module circuit is open.		
ASSIST A/B MODULE [GND-SHORT]	• Front passenger air bag module circuit is shorted to ground.		
ASSIST A/B MODULE [SHORT]	• Front passenger air bag module circuits are shorted to each other.		
SIDE MODULE LH [OPEN]	• Front LH side air bag module circuit is open.		1. Visually check the wiring harness connection. 2. Replace the harness if it has visible damage. 3. Replace front LH side air bag module. (Before disposal, it must be deployed.) 4. Replace the diagnosis sensor unit. 5. Replace the related harness.
SIDE MODULE LH [VB-SHORT]	• Front LH side air bag module circuit is shorted to a power supply circuit.		
SIDE MODULE LH [GND-SHORT]	• Front LH side air bag module circuit is shorted to ground.		
SIDE MODULE LH [SHORT]	• Front LH side air bag module circuits are shorted to each other.		

Diagnostic item	Explanation	Repair order **Recheck SRS at each replacement.**
SIDE MODULE RH [OPEN]	● Front RH side air bag module circuit is open.	1. Visually check the wiring harness connection. 2. Replace the harness if it has visible damage. 3. Replace front RH side air bag module. (Before disposal, it must be deployed.) 4. Replace the diagnosis sensor unit. 5. Replace the related harness.
SIDE MODULE RH [VB-SHORT]	● Front RH side air bag module circuit is shorted to a power supply circuit.	
SIDE MODULE RH [GND-SHORT]	● Front RH side air bag module circuit is shorted to ground.	
SIDE MODULE RH [SHORT]	● Front RH side air bag module circuits are shorted to each other.	
SATELLITE SENS LH [UNIT FAIL] SATELLITE SENS LH [COMM FAIL]	● LH side air bag (satellite) sensor	1. Visually check the wiring harness connection. 2. Replace the harness if it has visible damage. 3. Replace the LH side air bag (satellite) sensor. 4. Replace the diagnosis sensor unit. 5. Replace the related harness.
SATELLITE SENS RH [UNIT FAIL] SATELLITE SENS RH [COMM FAIL]	● RH side air bag (satellite) sensor	1. Visually check the wiring harness connection. 2. Replace the harness if it has visible damage. 3. Replace the RH side air bag (satellite) sensor. 4. Replace the diagnosis sensor unit. 5. Replace the related harness.
PRE-TEN FRONT LH [OPEN/VB-SHORT]	● The circuit for the front LH pre-tensioner is open or shorted to a power supply circuit.	1. Visually check the wiring harness connections. 2. Replace the harness if it has visible damage. 3. Replace the front LH seat belt. (Before disposal, it must be deactivated.) 4. Replace the diagnosis sensor unit. 5. Replace the related harness.
PRE-TEN FRONT LH [GND-SHORT]	● The circuit for the front LH pre-tensioner is shorted to ground.	
PRE-TEN FRONT RH [OPEN/VB-SHORT]	● The circuit for the front RH pre-tensioner is open or shorted to a power supply circuit.	1. Visually check the wiring harness connections. 2. Replace the harness if it has visible damage. 3. Replace the front RH seat belt. (Before disposal, it must be deactivated.) 4. Replace the diagnosis sensor unit. 5. Replace the related harness.
PRE-TEN FRONT RH [GND-SHORT]	● The circuit for the front RH pre-tensioner is shorted to ground.	

Trouble Diagnoses with CONSULT-II (Cont'd)

Diagnostic item	Explanation	Repair order **Recheck SRS at each replacement.**
CONTROL UNIT	● Low battery voltage (Less than 9V)	● Go to DIAGNOSTIC PROCEDURE 3 (RS-66) after charging battery.
	● Diagnosis sensor unit is malfunctioning.	1. Visually check wiring harness connections. 2. Replace the harness if it has visible damage. 3. Replace diagnosis sensor unit. 4. Replace the related harness.

*** Follow the procedures in numerical order when repairing malfunctioning parts. Confirm whether malfunction is eliminated using the air bag or seat belt warning lamp or CONSULT-II each time repair is finished. If malfunction is still observed, proceed to the next step. When malfunction is eliminated, further repair work is not required.**

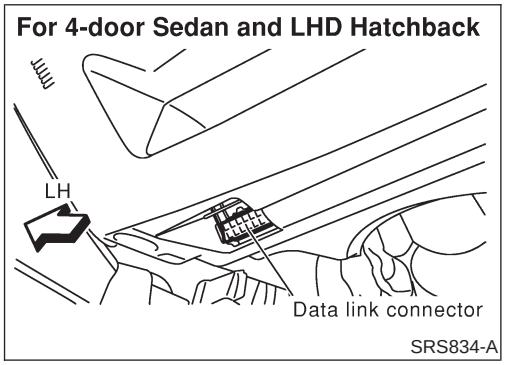

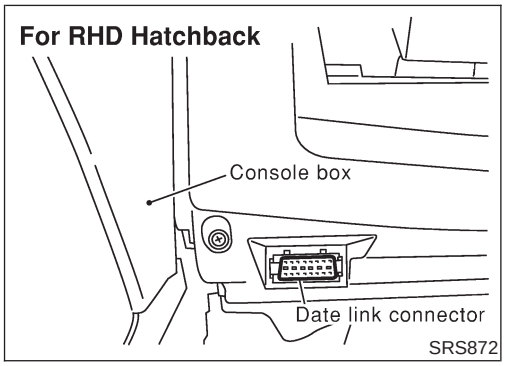

DIAGNOSTIC PROCEDURE 3

NJRS0048S02

Final checking after repairing SRS by using CONSULT-II — Diagnosis mode

1. After repairing SRS, connect both battery cables.
2. Connect CONSULT-II to data link connector.
3. Turn ignition switch from "OFF" to "ON".

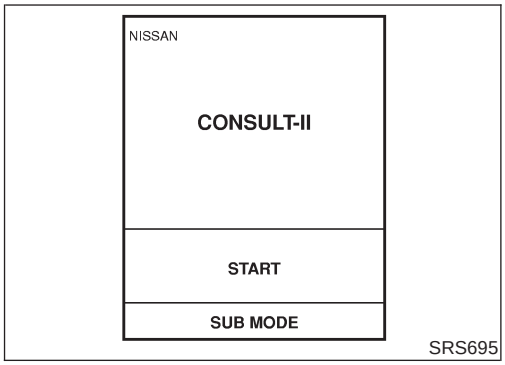

4. Touch "START".

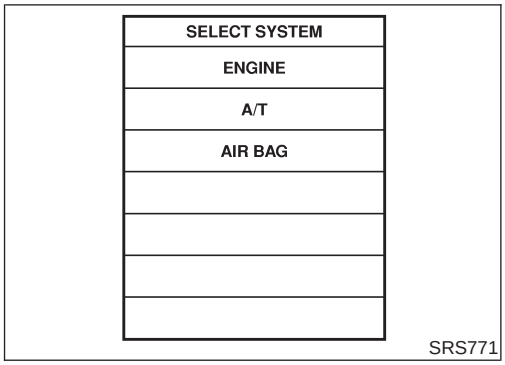

5. Touch "AIR BAG".

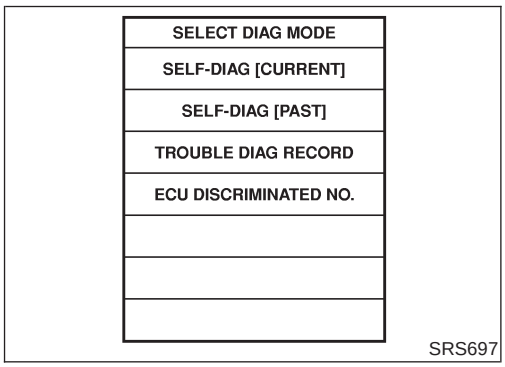

6. Touch "SELF-DIAG [CURRENT]".

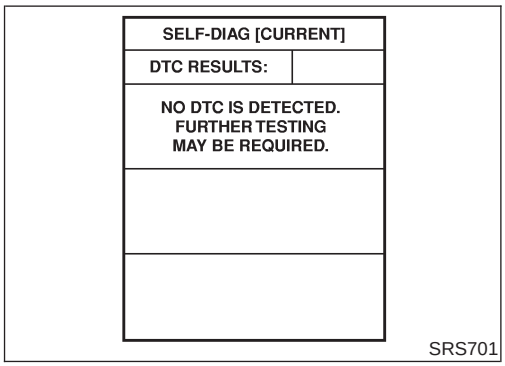

7. If no malfunction is detected on "SELF-DIAG [CURRENT]", repair of SRS is completed. Go to step 8.
   If any malfunction is displayed on "SELF-DIAG [CURRENT]", the malfunctioning part is not repaired completely or another malfunctioning part is detected. Go to DIAGNOSTIC PROCEDURE 2, page RS-60, and repair malfunctioning part completely.

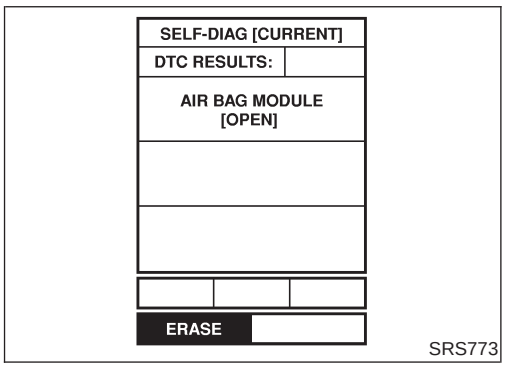

8. Touch "ERASE".

NOTE:
Touch "ERASE" to clear the memory of the malfunction ("SELF-DIAG [PAST]").
If the memory of the malfunction in "SELF-DIAG [PAST]" is not erased, the User mode shows the system malfunction by the operation of the warning lamp even if the malfunction is repaired completely.

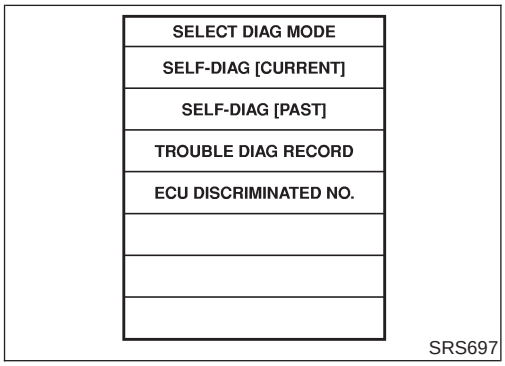

9. Touch "BACK" key of CONSULT-II to "SELECT SYSTEM" screen. Touch "SELF-DIAG [PAST]".

SELF-DIAG [PAST]	
DTC RESULTS:	
NO DTC IS DETECTED. FURTHER TESTING MAY BE REQUIRED.	

SRS702

10. Check that no malfunction is detected on "SELF-DIAG [PAST]".
11. Touch "BACK" key of CONSULT-II until "SELECT SYSTEM" appears in order to return to User mode from Diagnosis mode.
12. Turn ignition switch "OFF", then turn off and disconnect CONSULT-II.
13. Go to "SRS Operation Check", page RS-59 to check SRS operation by using "AIR BAG" warning lamp with User mode.

DIAGNOSTIC PROCEDURE 4 (CONTINUED FROM DIAGNOSTIC PROCEDURE 2)

NJRS0048S03

Inspecting SRS malfunctioning record

1	CONSIDER POSSIBILITY OF NOT ERASING SELF-DIAGNOSTIC RESULT AFTER REPAIRING	
Is it the first time for maintenance of SRS? **Yes or No**		
Yes	▶	Go to DIAGNOSTIC PROCEDURE 5 (RS-68).
No	▶	Self-diagnostic result "SELF-DIAG [PAST]" (previously stored in the memory) might not be erased after repair. Go to DIAGNOSTIC PROCEDURE 3, step 8 (RS-66).

For 4-door Sedan and LHD Hatchback

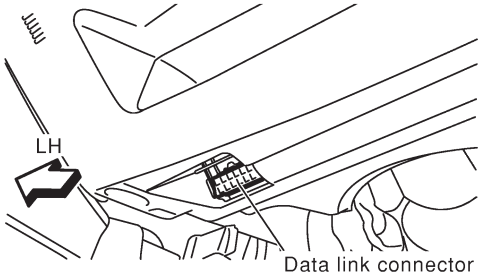

SRS834-A

For RHD Hatchback

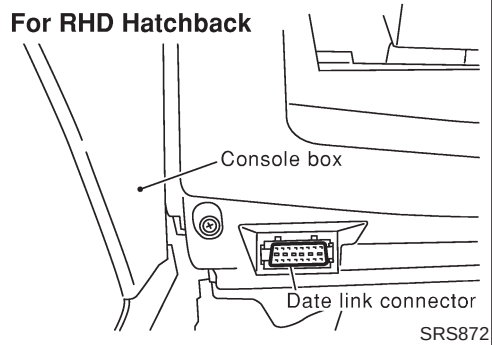

SRS872

DIAGNOSTIC PROCEDURE 5

NJRS0048S04

Inspecting SRS intermittent malfunction by using CONSULT-II — Diagnosis mode

1. Turn ignition switch "OFF".
2. Connect CONSULT-II to data link connector.

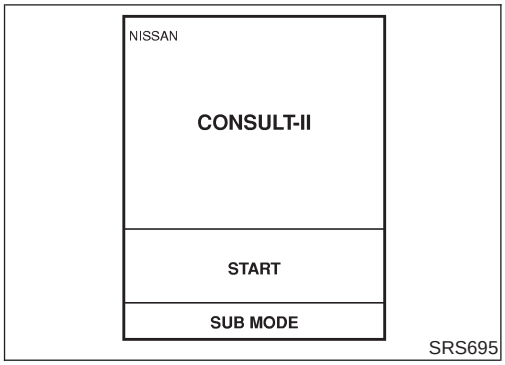

SRS695

3. Turn ignition switch "ON".
4. Touch "START".

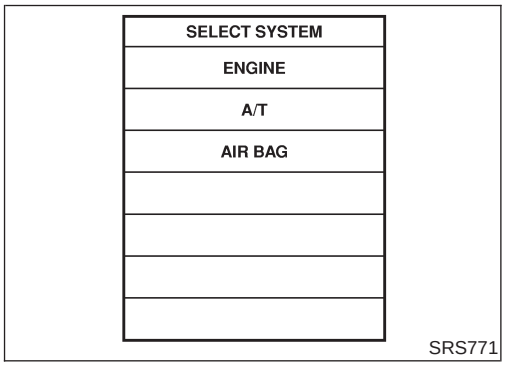

SRS771

5. Touch "AIR BAG".

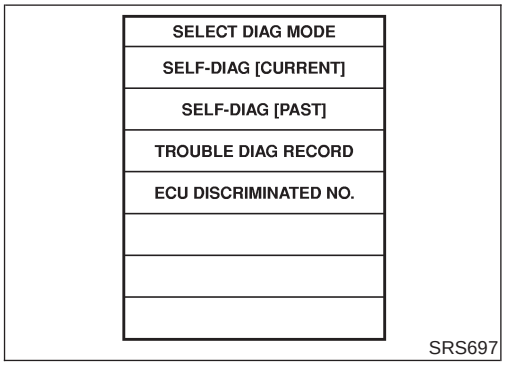

SRS697

6. Touch "SELF-DIAG [PAST]".

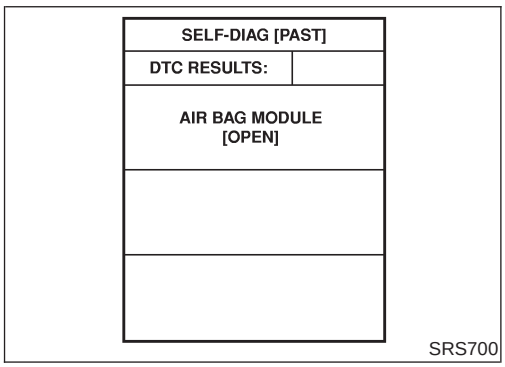

SRS700

7. If diagnostic codes are displayed on "SELF-DIAG [PAST]", go to step 10.

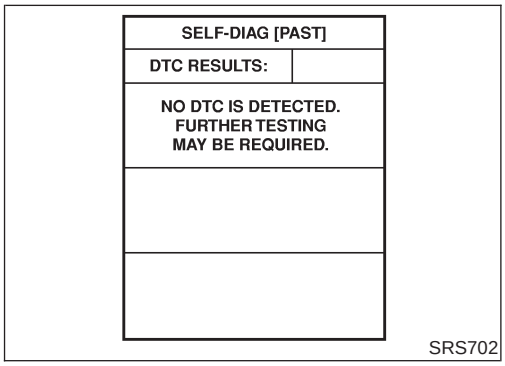

SRS702

If no malfunction is detected on "SELF-DIAG [PAST]", touch "BACK" and go back to "SELECT DIAG MODE".

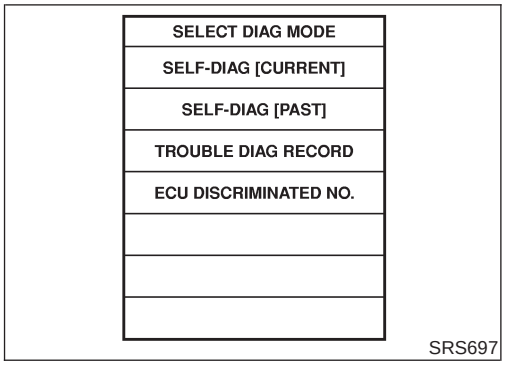

8. Touch "TROUBLE DIAG RECORD".

NOTE:
With "TROUBLE DIAG RECORD", diagnosis results previously erased by a reset operation can be displayed.

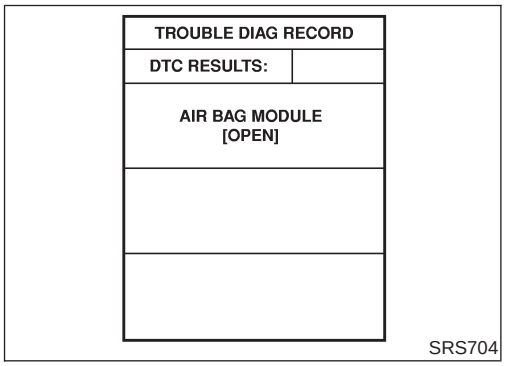

9. Diagnostic code is displayed on "TROUBLE DIAG RECORD".
10. Touch "PRINT".
11. Compare diagnostic codes to "Intermittent Malfunction Diagnostic Code Chart", page RS-70 (4-door Sedan) or RS-72 (Hatchback).
12. Touch "BACK" key of CONSULT-II until "SELECT SYSTEM" appears.
13. Turn ignition switch "OFF", then turn off and disconnect CONSULT-II, and disconnect both battery cables.
14. Repair the system as outlined by the "Repair order" in "Intermittent Malfunction Diagnostic Code Chart", that corresponds to the self-diagnostic result. For replacement procedure of component parts, refer to RS-26.
15. Go to DIAGNOSTIC PROCEDURE 3, page RS-66, for final checking.

Intermittent Malfunction Diagnostic Code Chart ("SELF-DIAG [PAST]" or "TROUBLE DIAG RECORD")/4-door Sedan

NJRS0048S0401

Diagnostic item	Explanation		Repair order
NO DTC IS DETECTED.	When malfunction is indicated by the "AIR BAG" warning lamp in User mode	● Low battery voltage (Less than 9V)	● Go to DIAGNOSTIC PROCEDURE 3 (RS-66) after charging battery.
	● No malfunction is detected.		● Go to DIAGNOSTIC PROCEDURE 3 (RS-66).

Diagnostic item	Explanation	Repair order
AIRBAG MODULE [OPEN]	● Driver air bag module circuit is open. (including the spiral cable)	1. Visually check the wiring harness connection. 2. Replace the harness if it has visible damage. 3. If the harness check result is OK, replace driver air bag module (Before disposal, it must be deployed.), diagnosis sensor unit and spiral cable.
AIRBAG MODULE [VB-SHORT]	● Driver air bag module circuit is shorted to a power supply circuit. (including the spiral cable)	
AIRBAG MODULE [GND-SHORT]	● Driver air bag module circuit is shorted to ground. (including the spiral cable)	
AIRBAG MODULE [SHORT]	● Driver air bag module circuits are shorted to each other.	
ASSIST A/B MODULE [VB-SHORT]	● Front passenger air bag module circuit is shorted to a power supply circuit.	1. Visually check the wiring harness connection. 2. Replace the harness if it has visible damage. 3. If the harness check result is OK, replace front passenger air bag module (Before disposal, it must be deployed.), and diagnosis sensor unit.
ASSIST A/B MODULE [OPEN]	● Front passenger air bag module circuit is open.	
ASSIST A/B MODULE [GND-SHORT]	● Front passenger air bag module circuit is shorted to ground.	
ASSIST A/B MODULE [SHORT]	● Front passenger air bag module circuits are shorted to each other.	
SIDE MODULE LH [OPEN]	● Front LH side air bag module circuit is open.	1. Visually check the wiring harness connection. 2. Replace the harness if it has visible damage. 3. If the harness check is OK, replace the diagnosis sensor unit and front LH side air bag module. (Before disposing of the front LH side air bag module, it must be deployed.)
SIDE MODULE LH [VB-SHORT]	● Front LH side air bag module circuit is shorted to a power supply circuit.	
SIDE MODULE LH [GND-SHORT]	● Front LH side air bag module circuit is shorted to ground.	
SIDE MODULE LH [SHORT]	● Front LH side air bag module circuits are shorted to each other.	
SIDE MODULE RH [OPEN]	● Front RH side air bag module circuit is open.	1. Visually check the wiring harness connection. 2. Replace the harness if it has visible damage. 3. If the harness check is OK, replace the diagnosis sensor unit and front RH side air bag module. (Before disposing of the front RH side air bag module, it must be deployed.)
SIDE MODULE RH [VB-SHORT]	● Front RH side air bag module circuit is shorted to a power supply circuit.	
SIDE MODULE RH [GND-SHORT]	● Front RH side air bag module circuit is shorted to ground.	
SIDE MODULE RH [SHORT]	● Front RH side air bag module circuits are shorted to each other.	
SATELLITE SENS LH [UNIT FAIL] SATELLITE SENS LH [COMM FAIL]	● LH side air bag (satellite) sensor	1. Visually check the wiring harness connection. 2. Replace the harness if it has visible damage. 3. If the harness check is OK, replace the diagnosis sensor unit and LH side air bag (satellite) sensor.
SATELLITE SENS RH [UNIT FAIL] SATELLITE SENS RH [COMM FAIL]	● RH side air bag (satellite) sensor	1. Visually check the wiring harness connection. 2. Replace the harness if it has visible damage. 3. If the harness check is OK, replace the diagnosis sensor unit and RH side air bag (satellite) sensor.

Trouble Diagnoses with CONSULT-II (Cont'd)

Diagnostic item	Explanation	Repair order
PRE-TEN FRONT LH [OPEN/VB-SHORT]	● The circuit for front LH seat belt pre-tensioner is open or shorted to a power supply circuit.	1. Visually check the wiring harness connections. 2. Replace the harness if it has visible damage. 3. If the harness check is OK, replace the diagnosis sensor unit and front LH seat belt. (Before disposing of the front LH seat belt pre-tensioner, if must be deployed.)
PRE-TEN FRONT LH [GND-SHORT]	● The circuit for front LH seat belt pre-tensioner is shorted to ground.	
PRE-TEN FRONT RH [OPEN/VB-SHORT]	● The circuit for front RH seat belt pre-tensioner is open or shorted to a power supply circuit.	1. Visually check the wiring harness connections. 2. Replace the harness if it has visible damage. 3. If the harness check is OK, replace the diagnosis sensor unit and front RH seat belt. (Before disposing of the front RH seat belt pre-tensioner, if must be deployed.)
PRE-TEN FRONT RH [GND-SHORT]	● The circuit for front RH seat belt pre-tensioner is shorted to ground.	
CONTROL UNIT	● Diagnosis sensor unit is malfunctioning.	1. Visually check the wiring harness connection. 2. Replace the harness if it has visible damage. 3. If the harness check is OK, replace the diagnosis sensor unit.

* Follow the procedures in numerical order when repairing malfunctioning parts, then make the final system check.

INTERMITTENT MALFUNCTION DIAGNOSTIC CODE CHART ("SELF-DIAG [PAST] or TROUBLE DIAG RECORD")/Hatchback

NJRS0048S0402

Diagnostic item	Explanation	Repair order
NO DTC IS DETECTED	● No malfunction is detected.	● Go to DIAGNOSTIC PROCEDURE 3 (RS-66).
AIRBAG MODULE [OPEN]	● Driver air bag module circuit is open. (including the spiral cable)	1. Visually check the wiring harness connection. 2. Replace the harness if it has visible damage. 3. If the harness check is OK, replace the spiral cable, diagnosis sensor unit and driver air bag module. (Before disposing of the driver air bag module, it must be deployed.)
AIRBAG MODULE [VB-SHORT]	● Driver air bag module circuit is shorted to a power supply circuit. (including the spiral cable)	
AIRBAG MODULE [GND-SHORT]	● Driver air bag module circuit is shorted to ground. (including the spiral cable)	
AIRBAG MODULE [SHORT]	● Driver air bag module circuits are shorted to each other.	
ASSIST A/B MODULE [VB-SHORT]	● Front passenger air bag module circuit is shorted to some power supply circuit.	1. Visually check the wiring harness connection. 2. Replace the harness if it has visible damage. 3. If the harness check is OK, replace the diagnosis sensor unit and passenger air bag module. (Before disposing of the passenger air bag module, it must be deployed.)
ASSIST A/B MODULE [OPEN]	● Front passenger air bag module circuit is open.	
ASSIST A/B MODULE [GND-SHORT]	● Front passenger air bag module circuit is shorted to ground.	
ASSIST A/B MODULE [SHORT]	● Front passenger air bag module circuits are shorted to each other.	

Diagnostic item	Explanation	Repair order
SIDE MODULE LH [OPEN]	● Front LH side air bag module circuit is open.	1. Visually check the wiring harness connection. 2. Replace the harness if it has visible damage. 3. If the harness check is OK, replace the diagnosis sensor unit and front LH side air bag module. (Before disposing of the front LH side air bag module, it must be deployed.)
SIDE MODULE LH [VB-SHORT]	● Front LH side air bag module circuit is shorted to a power supply circuit.	
SIDE MODULE LH [GND-SHORT]	● Front LH side air bag module circuit is shorted to ground.	
SIDE MODULE LH [SHORT]	● Front LH side air bag module circuits are shorted to each other.	
SIDE MODULE RH [OPEN]	● Front RH side air bag module circuit is open.	1. Visually check the wiring harness connection. 2. Replace the harness if it has visible damage. 3. If the harness check is OK, replace the diagnosis sensor unit and front RH side air bag module. (Before disposing of the front RH side air bag module, it must be deployed.)
SIDE MODULE RH [VB-SHORT]	● Front RH side air bag module circuit is shorted to a power supply circuit.	
SIDE MODULE RH [GND-SHORT]	● Front RH side air bag module circuit is shorted to ground.	
SIDE MODULE RH [SHORT]	● Front RH side air bag module circuits are shorted to each other.	
SATELLITE SENS LH [UNIT FAIL] SATELLITE SENS LH [COMM FAIL]	● LH side air bag (satellite) sensor	1. Visually check the wiring harness connection. 2. Replace the harness if it has visible damage. 3. If the harness check is OK, replace the diagnosis sensor unit and LH side air bag (satellite) sensor.
SATELLITE SENS RH [UNIT FAIL] SATELLITE SENS RH [COMM FAIL]	● RH side air bag (satellite) sensor	1. Visually check the wiring harness connection. 2. Replace the harness if it has visible damage. 3. If the harness check is OK, replace the diagnosis sensor unit and RH side air bag (satellite) sensor.
PRE-TEN FRONT LH [OPEN/VB-SHORT]	● The circuit for front LH seat belt pre-tensioner is open or shorted to a power supply circuit.	1. Visually check the wiring harness connections. 2. Replace the harness if it has visible damage. 3. If the harness check is OK, replace the diagnosis sensor unit and front LH seat belt. (Before disposing of the front LH seat belt pre-tensioner, if must be deployed.)
PRE-TEN FRONT LH [GND-SHORT]	● The circuit for front LH seat belt pre-tensioner is shorted to ground.	
PRE-TEN FRONT RH [OPEN/VB-SHORT]	● The circuit for front RH seat belt pre-tensioner is open or shorted to a power supply circuit.	1. Visually check the wiring harness connections. 2. Replace the harness if it has visible damage. 3. If the harness check is OK, replace the diagnosis sensor unit and front RH seat belt. (Before disposing of the front RH seat belt pre-tensioner, if must be deployed.)
PRE-TEN FRONT RH [GND-SHORT]	● The circuit for front RH seat belt pre-tensioner is shorted to ground.	
CONTROL UNIT	● Diagnosis sensor unit is malfunctioning.	1. Visually check the wiring harness connection. 2. Replace the harness if it has visible damage. 3. If the harness check is OK, replace the diagnosis sensor unit.

* Follow the procedures in numerical order when repairing malfunctioning parts, then make the final system check.

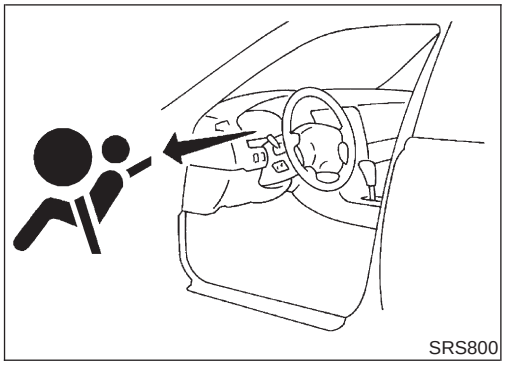

Trouble Diagnoses without CONSULT-II

=NJRS0049

DIAGNOSTIC PROCEDURE 6

NJRS0049S01

Inspecting SRS malfunctioning parts by using "AIR BAG" warning lamp — Diagnosis mode

NOTE:
SRS will not enter Diagnosis mode if no malfunction is detected in User mode.

1. Turn ignition switch "ON".
2. After "AIR BAG" warning lamp lights for 7 seconds, turn ignition switch "OFF" within 1 second.
3. Wait more than 3 seconds.
4. Repeat steps 1 to 3 three times.
5. Turn ignition switch "ON".
   SRS is now in Diagnosis mode.
6. "AIR BAG" warning lamp operates in Diagnosis mode as follows:

NOTE:
If SRS does not enter Diagnosis mode even though malfunction is detected in User mode, check the battery voltage.
If the battery voltage is less than 9V, charge the battery. Then go to DIAGNOSTIC PROCEDURE 7, page RS-79.
If the battery voltage is OK, replace the diagnosis sensor unit.

No.	"AIR BAG" warning lamp flash pattern — Diagnosis mode —		SRS condition
1	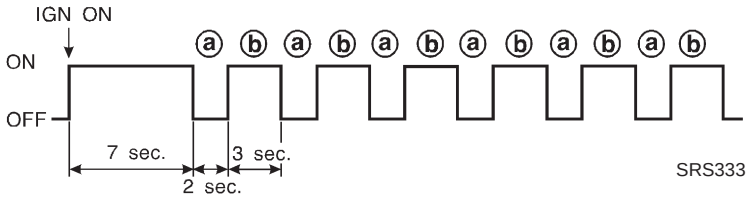	**a** through **b** are repeated.	● Diagnosis results (previously stored in the memory) might not be erased after repair. ● Intermittent malfunction has been detected in the past. Go to DIAGNOSTIC PROCEDURE 8 (RS-81).
2	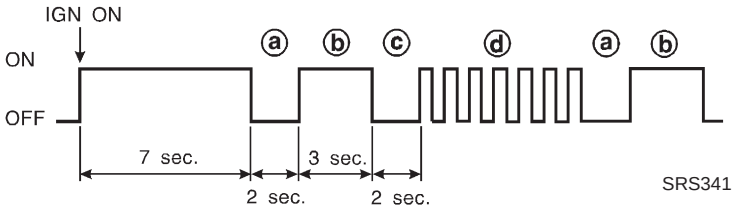	**a** through **d** are repeated. **b** — Driver and front passenger air bag and front seat belt pre-tensioner marker (For identifying driver air bag, front passenger air bag and/or front seat belt pre-tensioners malfunctioning) **d** — Indicates malfunctioning part. The number of flash varies with malfunctioning part (0.5 sec. ON and 0.5 sec. OFF is counted as one flash.)	The system is malfunctioning and needs to be repaired.
3	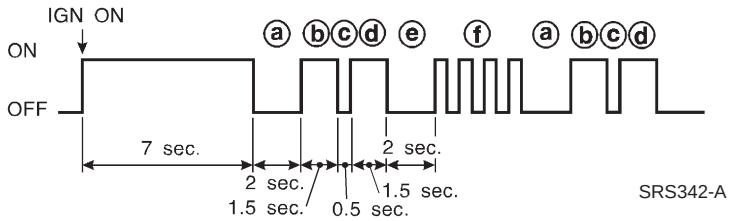	**a** through **f** are repeated. **b**, **c**, **d** — Front side air bag marker (For identifying front side air bag malfunctioning) **f** — Indicates malfunctioning part. The number of flash varies with malfunctioning part (0.5 sec. ON and 0.5 sec. OFF is counted as one flash.)	

7. Malfunctioning part is indicated by the number of flashes (part **d** or **f**). Compare the number of flashes to "Air Bag Warning Lamp Flash Code Chart", page RS-76, and locate malfunctioning part.
8. Turn ignition switch "OFF", and disconnect both battery cables.
9. Repair the system as outlined by the "Repair order" in "Warning Lamp Flash Code Chart" that corresponds to the flash code. For replacement procedure of component parts, refer to RS-26.
10. After repairing the system, go to DIAGNOSTIC PROCEDURE 7, page RS-79.

Air Bag Warning Lamp Flash Code Chart (Diagnosis mode)

NJRS0049S0101

● Diagnosis results (previously stored in the memory) might not be erased after repair. ● Intermittent malfunction has been detected in the past.	Flash pattern	
	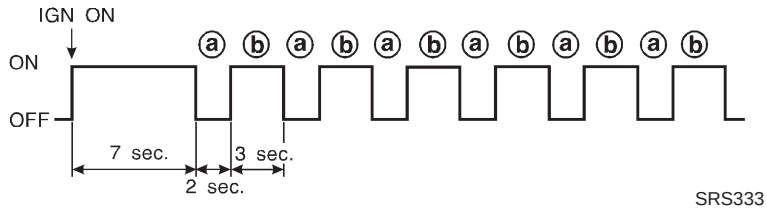	**a** through **b** are repeated.
	Repair order	
	● Go to DIAGNOSTIC PROCEDURE 8 (RS-81).	
The front RH seat belt pre-tensioner circuit is malfunctioning. (**d**: 1 flash)	Flash pattern	
	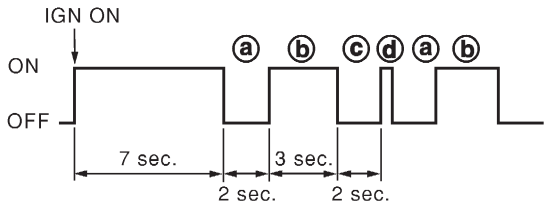	**a** through **d** are repeated. **d** — One flash indicates malfunctioning front RH seat belt pre-tensioner circuit.
	Repair order ("Recheck SRS at each replacement.")	
	1. Visually check the wiring harness connections. 2. Replace the harness if it has visible damage. 3. Replace front RH seat belt pre-tensioner. (Before disposing, it must be deactivated.) 4. Replace the diagnosis sensor unit. 5. Replace the related harness.	
The driver air bag module circuit is malfunctioning. (**d**: 2 flashes)	Flash pattern	
	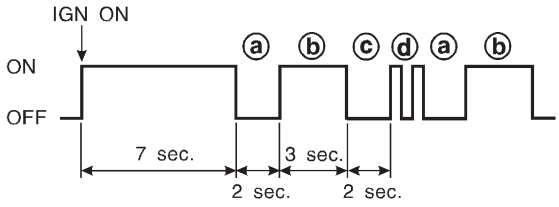	**a** through **d** are repeated. **d** — Two flashes indicate malfunctioning driver air bag module circuit.
	Repair order ("Recheck SRS at each replacement.")	
	1. Visually check the wiring harness connection. 2. Replace the harness if it has visible damage. 3. Replace the spiral cable. 4. Replace driver air bag module. (Before disposal, it must be deployed.) 5. Replace the diagnosis sensor unit. 6. Replace the related harness.	

The front LH seat belt pre-tensioner circuit is malfunctioning. (**d**: 3 flashes)	Flash pattern	
	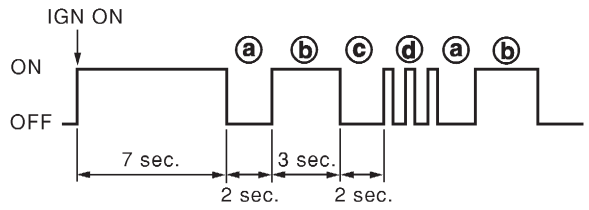 SRS802	**a** through **d** are repeated. **d** — Three flashes indicate malfunctioning front LH seat belt pre-tensioner circuit.
	Repair order ("Recheck SRS at each replacement.")	
	1. Visually check the wiring harness connections. 2. Replace the harness if it has visible damage. 3. Replace front LH seat belt pre-tensioner. (Before disposing, it must be deactivated.) 4. Replace the diagnosis sensor unit. 5. Replace the related harness.	
The diagnosis sensor unit is malfunctioning. (**d**: 7 flashes)	Flash pattern	
	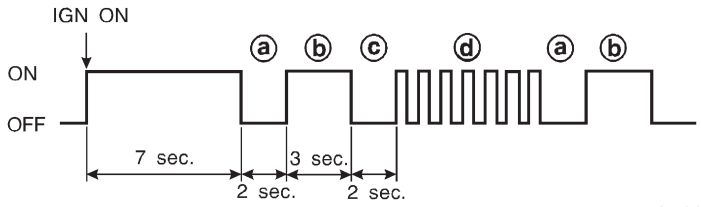 SRS335	**a** through **d** are repeated. **d** — Seven flashes indicate malfunctioning diagnosis sensor unit.
	Repair order ("Recheck SRS at each replacement.")	
	1. Visually check the wiring harness connections. 2. Replace the harness if it has visible damage. 3. Replace the diagnosis sensor unit. 4. Replace the related harness.	
The front passenger air bag module circuit is malfunctioning. (**d**: 8 flashes)	Flash pattern	
	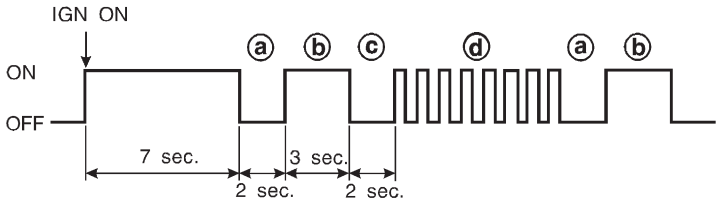 SRS336	**a** through **d** are repeated. **d** — Eight flashes indicate malfunctioning front passenger air bag module circuit.
	Repair order ("Recheck SRS at each replacement.")	
	1. Visually check the wiring harness connection. 2. Replace the harness if it has visible damage. 3. Replace front passenger air bag module. (Before disposal, it must be deployed.) 4. Replace the diagnosis sensor unit. 5. Replace the related harness.	

The front RH side air bag module circuit is malfunctioning. (**f**: 1 flash)	Flash pattern	
	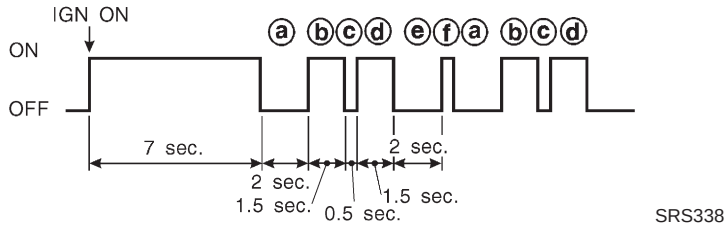	**a** through **f** are repeated. **f** — One flash indicates malfunctioning front RH side air bag module circuit.
	Repair order ("Recheck SRS at each replacement.")	
	1. Visually check the wiring harness connection. 2. Replace the harness if it has visible damage. 3. Replace front RH side air bag module. (Before disposal, it must be deployed.) 4. Replace the diagnosis sensor unit. 5. Replace the related harness.	
The front LH side air bag module circuit is malfunctioning. (**f**: 2 flashes)	Flash pattern	
	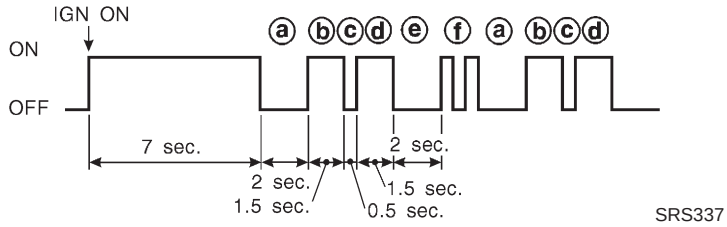	**a** through **f** are repeated. **f** — Two flashes indicate malfunctioning front LH side air bag module circuit.
	Repair order ("Recheck SRS at each replacement.")	
	1. Visually check the wiring harness connection. 2. Replace the harness if it has visible damage. 3. Replace front LH side air bag module. (Before disposal, it must be deployed.) 4. Replace the diagnosis sensor unit. 5. Replace the related harness.	
The RH side air bag (satellite) sensor is malfunctioning. (**f**: 3 flashes)	Flash pattern	
	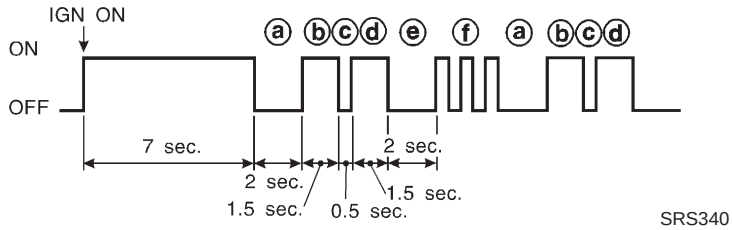	**a** through **f** are repeated. **f** — Three flashes indicate malfunctioning RH side air bag (satellite) sensor circuit.
	Repair order ("Recheck SRS at each replacement.")	
	1. Visually check the wiring harness connection. 2. Replace the harness if it has visible damage. 3. Replace the RH side air bag (satellite) sensor. 4. Replace the diagnosis sensor unit. 5. Replace the related harness.	

The LH side air bag (satellite) sensor is malfunctioning. (**f**: 4 flashes)	Flash pattern	
	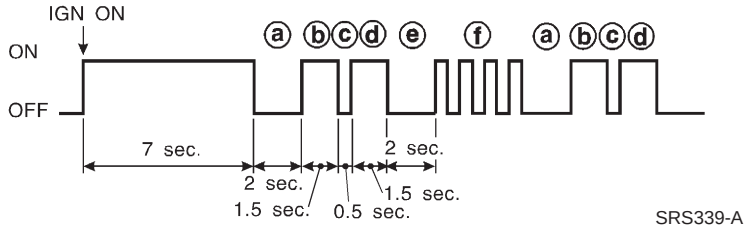	**a** through **f** are repeated. **f** — Four flashes indicate malfunctioning LH side air bag (satellite) sensor circuit.
	Repair order ("Recheck SRS at each replacement.")	
	1. Visually check the wiring harness connection. 2. Replace the harness if it has visible damage. 3. Replace the LH side air bag (satellite) sensor. 4. Replace the diagnosis sensor unit. 5. Replace the related harness.	

*** Follow the procedures in numerical order when repairing malfunctioning parts. Confirm whether malfunction is eliminated using the air bag warning lamp or CONSULT-II each time repair is finished. If malfunction is still observed, proceed to the next step. When malfunction is eliminated, further repair work is not required.**

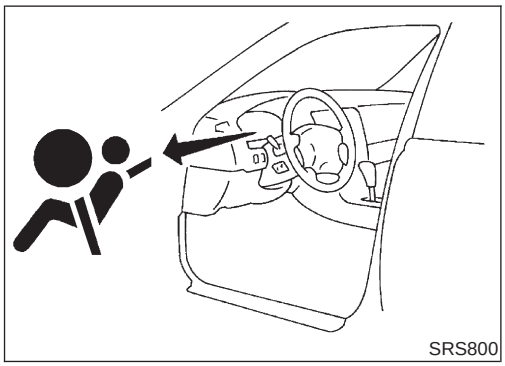

DIAGNOSTIC PROCEDURE 7

NJRS0049S02

Final checking after repairing SRS by using "AIR BAG" warning lamp — Diagnosis mode and User mode

1. After repairing SRS connect both battery cables.
2. Open driver's door.
3. Turn ignition switch from "OFF" to "ON".
4. "AIR BAG" warning lamp operates in Diagnosis mode as follows:

Trouble Diagnoses without CONSULT-II (Cont'd)

No.	"AIR BAG" warning lamp flash pattern — Diagnosis mode —		SRS condition
1	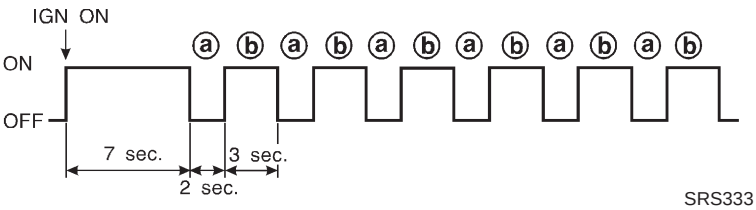	**a** through **b** are repeated.	No malfunction is detected or repair is completed. No further action is necessary.
2	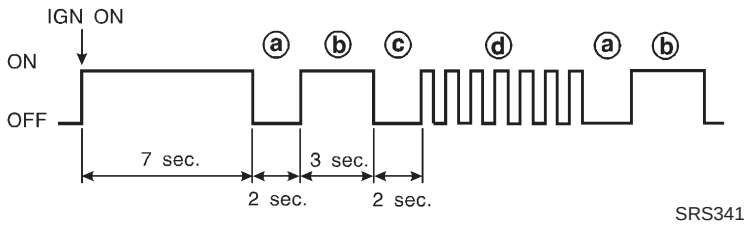	**a** through **d** are repeated. **b** — Driver and front passenger air bag and front seat belt pre-tensioner marker (For identifying driver air bag, front passenger air bag and/or front seat belt pre-tensioners malfunctioning) **d** — Indicates malfunctioning part. The number of flashes varies with malfunctioning part (0.5 sec. ON and 0.5 sec. OFF is counted as one flash.)	The system is malfunctioning and needs to be repaired.
3	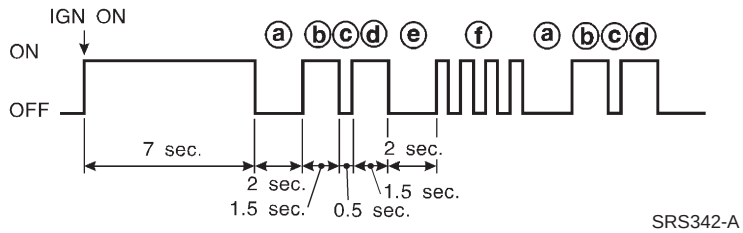	**a** through **f** are repeated. **b**, **c**, **d** — Front side air bag marker (For identifying front side air bag malfunctioning) **f** — Indicates malfunctioning part. The number of flashes varies with malfunctioning part (0.5 sec. ON and 0.5 sec. OFF is counted as one flash.)	

NOTE:
When diagnosis sensor unit is replaced with new one, "AIR BAG" warning lamp will operate in User mode. Checking "AIR BAG" warning lamp operation in Diagnosis mode is not required. Go to step 6.

5. If "AIR BAG" warning lamp operates as shown in No. 1 in chart above, turn ignition switch "OFF" to reset from Diagnosis mode to User mode and to erase the memory of the malfunction. Then go to step 6.
   If "AIR BAG" warning lamp operates as shown in No. 2 or No. 3 in chart above, the malfunctioning part is not repaired completely, or another malfunctioning part is detected. Go to DIAGNOSTIC PROCEDURE 6, page RS-74, and repair malfunctioning part completely.
6. Turn ignition switch "ON". "AIR BAG" warning lamp operates in User mode. Compare "AIR BAG" warning lamp operation to the chart below.

NOTE:
When a malfunction is detected, switch from Diagnosis mode to user mode by turning the ignition switch as follows:

1) Turn ignition switch "ON".
2) After "AIR BAG" warning lamp lights for 7 seconds, turn ignition switch "OFF" within 1 second.
3) Wait more than 3 seconds.
4) Repeat steps 1 to 3 three times.
5) Turn ignition switch "ON".

SRS is now in User mode.

"AIR BAG" warning lamp operation — User mode —	SRS condition	Reference item
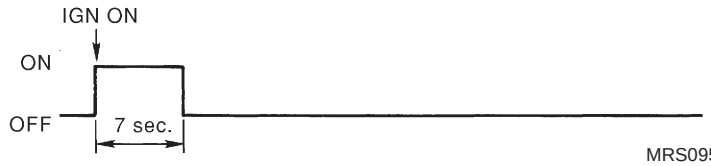	No malfunction is detected. No further action is necessary.	—
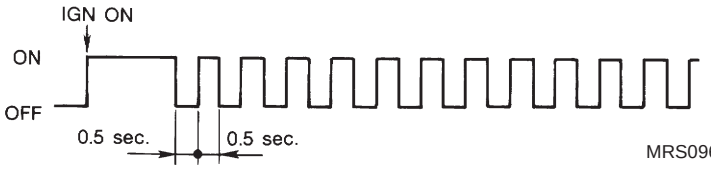	The system is malfunctioning and needs to be repaired as indicated.	Go to DIAGNOSTIC PROCEDURE 6 (RS-74).
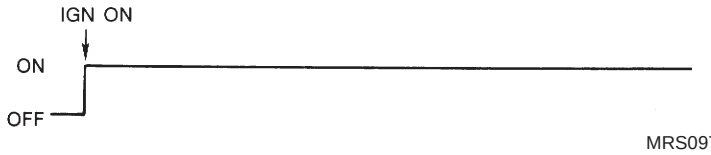	Air bag is deployed. Seat belt pre-tensioner is deployed.	Go to COLLISION DIAGNOSIS (RS-85).
	Air bag fuse, diagnosis sensor unit or harness is malfunctioning and needs to be repaired.	Go to DIAGNOSTIC PROCEDURE 9 (RS-82).
	One of the following has occurred and needs to be repaired. ● Meter fuse is blown. ● "AIR BAG" warning lamp circuit has open or short. ● Diagnosis sensor unit is malfunctioning.	Go to DIAGNOSTIC PROCEDURE 10 (RS-84).

DIAGNOSTIC PROCEDURE 8 (CONTINUED FROM DIAGNOSTIC PROCEDURE 6)

NJRS0049S03

Inspecting SRS malfunctioning record

1	CONSIDER POSSIBILITY OF NOT ERASING SELF-DIAGNOSTIC RESULT AFTER REPAIRING	
Is it the first time for maintenance of SRS? **Yes or No**		
Yes	▶	Go to DIAGNOSTIC PROCEDURE 5 (RS-68). (Further inspection cannot be performed without CONSULT-II.)
No	▶	Diagnosis results (previously stored in the memory) might not be erased after repair. Go to DIAGNOSTIC PROCEDURE 7, step 5 (RS-79).

Trouble Diagnoses: “AIR BAG” Warning Lamp Does Not Turn Off

=NJRS0050

DIAGNOSTIC PROCEDURE 9

NJRS0050S01

1	SEE THE DEPLOYMENT OF AIR BAG MODULE
Is air bag module deployed?	
Yes or No	
Yes ▶	Refer to COLLISION DIAGNOSIS (RS-85).
No ▶	GO TO 2.

2	CHECK AIR BAG FUSE
Is SRS “Air Bag” fuse OK?	

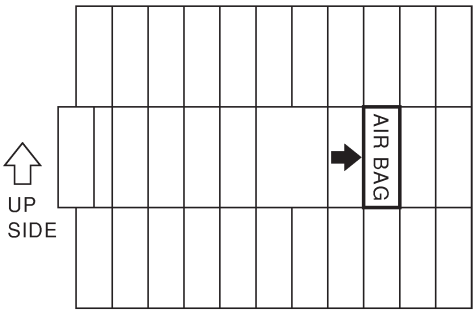

SRS835

OK or NG	
OK ▶	GO TO 4.
NG ▶	GO TO 3.

3	CHECK AIR BAG FUSE AGAIN
Replace “AIR BAG” fuse and turn ignition switch ON.	
Is “AIR BAG” fuse blown again?	
Yes ▶	Repair main harness.
No ▶	**INSPECTION END**

4	CHECK DIAGNOSIS SENSOR UNIT

Connect CONSULT-II and touch "START".

- Is "AIR BAG" displayed on CONSULT-II?

SELECT SYSTEM
ENGINE
A/T
AIR BAG

SRS771

Yes or No

Yes	▶	GO TO 5.
No	▶	Visually check the wiring harness connection of diagnosis sensor unit. If the harness connection check result is OK, replace diagnosis sensor unit.

5	CHECK HARNESS CONNECTION

Is harness connection between warning lamp and diagnosis sensor unit OK?

OK or NG

OK	▶	Replace diagnosis sensor unit.
NG	▶	Connect "AIR BAG" warning lamp and diagnosis sensor unit connector properly. If "AIR BAG" warning lamp still does not go off, replace harness.

Trouble Diagnoses: “AIR BAG” Warning Lamp Does Not Turn On

=NJRS0051

DIAGNOSTIC PROCEDURE 10

NJRS0051S01

1	CHECK “METER” FUSE

Is meter fuse OK?

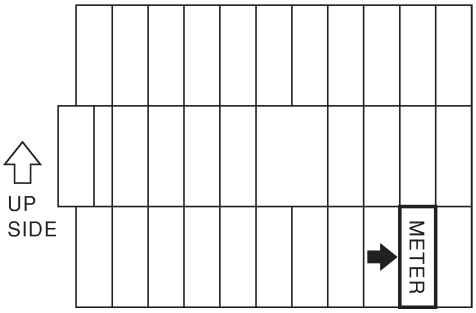

SRS836

OK or NG

OK	▶	GO TO 3.
NG	▶	GO TO 2.

2	CHECK “METER” FUSE AGAIN

Replace meter fuse and turn ignition switch ON.

Is meter fuse blown again?

Yes	▶	Repair main harness.
No	▶	**INSPECTION END**

3	CHECK “AIR BAG” WARNING LAMP LED

Is “AIR BAG” warning lamp LED OK?

OK or NG

OK	▶	GO TO 4.
NG	▶	Replace “AIR BAG” warning lamp LED.

4	CHECK HARNESS CONNECTION BETWEEN DIAGNOSIS SENSOR UNIT AND “AIR BAG” WARNING LAMP

Disconnect diagnosis sensor unit connector and turn ignition switch “ON”.
- Does “AIR BAG” warning lamp turn on?

Yes or No

Yes	▶	Replace diagnosis sensor unit.
No	▶	Check the ground circuit of “AIR BAG” warning lamp.

Collision Diagnosis

=NJRS0033

FOR FRONTAL COLLISION

NJRS0033S07

To repair the SRS, perform the following steps.

When SRS (except the side air bag) is activated in a collision:

1) Replace the diagnosis sensor unit.
2) Remove the air bag modules (except the side air bag module) and front seat belt pre-tensioner assemblies.
3) Check the SRS components using the table shown below:

- Replace any SRS components showing visible signs of damage (dents, cracks and deformation).

4) Install new air bag modules (except the side air bag module) and front seat belt pre-tensioner assemblies.
5) Conduct self-diagnosis using CONSULT-II or “AIR BAG” warning lamp. Refer to “SRS Operation Check” for details (RS-59). Ensure entire SRS operation properly.

When SRS is not activated in a collision:

1) Check the SRS components using the table shown below:

- Replace any SRS components showing visible signs of damage (dents, cracks and deformation).

2) Conduct self-diagnosis using CONSULT-II or “AIR BAG” warning lamp. Refer to “SRS Operation Check” for details (RS-59). Ensure entire SRS operation properly.

SRS Inspection (For frontal collision)

NJRS0033S0701

Part	SRS is activated	SRS is NOT activated
Air bag module (driver and front passenger side)	REPLACE Install with new bolts.	1. Remove air bag module. Check harness cover and connectors for damage, terminals for deformities, and harness for binding. 2. a. Install driver air bag module into the steering wheel to check fit and alignment with the wheel. b. Install front passenger air bag module into the instrument panel to check fit with the instrument panel. 3. No damage found, reinstall with new bolts. 4. If damaged—REPLACE. Install air bag modules with new bolts. Air bag must be deployed before disposing.
Front seat belt pre-tensioner assembly	REPLACE Install seat belt pre-tensioner with new bolts.	1. Remove front seat belt pre-tensioners. Check harness cover and connectors for damage, terminals for deformities, and harness for binding. 2. Check belts for damage and anchors for loose mounting. 3. Check retractor for smooth operation. 4. If no damage is found, reinstall front seat belt pre-tensioner assembly. 5. If damaged—REPLACE. Install the front seat belt pre-tensioners with new bolts coated with bonding agent. Front seat belt pre-tensioners must be deployed before discarding.
Diagnosis sensor unit	REPLACE Install with new bolts coated with bonding agent.	1. Check case for dents, cracks or deformities. 2. Check connectors for damage, and terminals for deformities. 3. If no damage is found, reinstall with new special bolts and ground bolt coated with bonding agent. 4. If damaged—REPLACE. Install diagnosis sensor unit with new special bolts and ground bolt coated with bonding agent.
Steering wheel	1. Visually check steering wheel for deformities. 2. Check harness (built into steering wheel) and connectors for damage, and terminals for deformities. 3. Install driver air bag module to check fit or alignment with steering wheel. 4. Check steering wheel for excessive free play. 5. If no damage is found, reinstall with bolts. 6. If damaged—REPLACE.	
Spiral cable	1. Visually check spiral cable and combination switch for damage. 2. Check connectors and protective tape for damage. 3. Check steering wheel for noise, binding or heavy operation. 4. If no damage is found, reinstall with bolts. 5. If damaged—REPLACE.	

Part	SRS is activated	SRS is NOT activated
Harness and Connectors	1. Check connectors for poor connection, damage, and terminals for deformities. 2. Check harness for binding, chafing, cuts, or deformities. 3. If no damage is found, reinstall the harness and connectors. 4. Damaged—REPLACE damaged section of harness. Do not attempt to repair, splice or modify any SRS harness.	
Instrument panel	1. When passenger air bag inflates, check the following points for bending, deformities or cracks. ● Opening portion for front passenger air bag 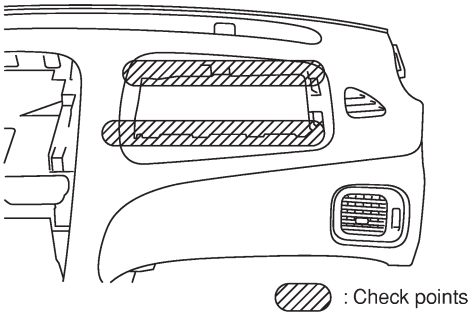 SRS837 ● Front passenger air bag module brackets **Back face of instrumental panel** 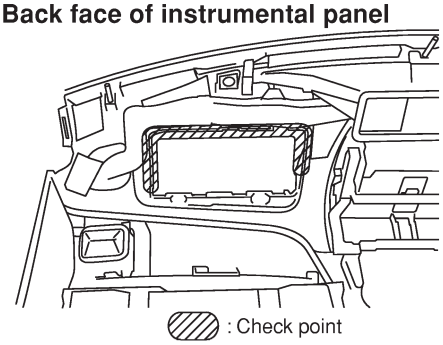 SRS838 ● The portions securing the instrument panel 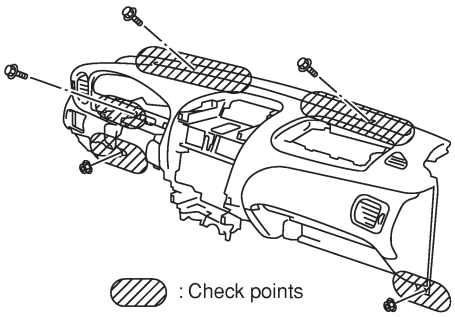 SRS839 2. If no damage is found, reinstall the instrument panel. 3. If damaged—REPLACE the instrument panel with bolts.	

FOR SIDE COLLISION

=NJRS0033S08

To repair the SRS for a side collision, perform the following steps.

When the side air bag is activated in the side collision:

1) Replace the following component:
- All parts of front seatback (including front seatback frame) with side air bag module (on the side on which side air bag is activated)
- Diagnosis sensor unit
- Side air bag (satellite) sensor (on the side on which side air bag is activated)

2) Check the SRS components and the related parts using the table shown below.
- Replace any SRS components and the related parts showing visible signs of damage (dents, cracks, deformation).

3) Conduct self-diagnosis using CONSULT-II or "AIR BAG" warning lamp. Refer to "SRS Operation Check" for details (RS-59). Ensure entire SRS operation properly.

When SRS is not activated in the side collision:

1) Check the SRS components and the related parts using the table shown below.
- Replace any SRS components and the related parts showing visible signs of damage (dents, cracks, deformation).

2) Conduct self-diagnosis using CONSULT-II or "AIR BAG" warning lamp. Refer to "SRS Operation Check" for details (RS-59). Ensure entire SRS operation properly.

SRS Inspection (For side collision)

NJRS0033S0801

Part	Side air bag is activated	SRS is NOT activated
Front (LH or RH) side air bags module	REPLACE all parts of front seatback with deployed front side air bag module.	1. Check for visible signs of damage (dents, tears, deformation) of the seat back on the collision side. 2. If damaged—REPLACE the damaged seat parts with new bolts and remove the front side air bag module. 3. Check for visible signs of damaged (tesrs etc.) of the side air bag module. 4. Check harness and connectors for damage, and terminals for deformities. 5. If no damaged is found, reinstall the front side air bag module with new nuts. 6. If damaged—REPLACE the front side air bag module with new nuts. Air bag must be deployed before disposing.
(LH or RH) side air bag (satellite) sensor	REPLACE the side air bag (satellite) sensor on the collision side with new nuts coated with bonding agent. (Repair the center pillar inner, etc. before installing new one if damaged.)	1. Remove the satellite sensor on the collision side. Check harness connectors for damage, terminals for deformities, and harness for binding. 2. Check for visible signs of damage (dents, cracks, deformation) of the satellite sensor. 3. Install the side air bag (satellite) sensor to check fit. 4. If no damage is found, reinstall the side air bag (satellite) sensor with new nuts. 5. If damaged—REPLACE the side air bag sensor with new nuts coated with bonding agent.
Diagnosis sensor unit	REPLACE the diagnosis sensor unit with the new bolts.	1. Check case and bracket for dents, cracks or deformities. 2. Check connectors for damage, and terminals for deformities. 3. If no damage is found, reinstall the diagnosis sensor unit with new special bolts and ground bolt. 4. If damaged—REPLACE. Install the diagnosis sensor unit with new special bolts and ground bolt.
Front seat belt pre-tensioner assembly	1. Check if the seat belt can be extended smoothly. If the seat belt cannot be extended smoothly. – Check for deformities of the center pillar inner. – If the center pillar inner has no damage, REPLACE the front seat belt pre-tensioner assembly. 2. Remove the front seat belt pre-tensioner assembly on the collision side. Check harness cover and connectors for damage, terminals for deformities, and harness for binding. 3. Check for visible signs of damage (dents, cracks, deformation) of the front seat belt pre-tensioner assembly. 4. If no damage is found, reinstall the front seat belt pre-tensioner assembly. 5. If damaged—REPLACE the front seat belt pre-tensioner assembly with new bolts coated with bonding agent. The front seat belt pre-tensioner assembly must be deployed before disposing of it.	

Collision Diagnosis (Cont'd)

Part	Side air bag is activated	SRS is NOT activated
Seat with built-in side air bag	REPLACE all parts of front seatback (including front seatback frame)	1. Visually check the seat on the collision side. 2. Remove the seat on the collision side and check the following for damage and deformities. ● Harness, connectors and terminals ● Frame and recliner (for front and rear seat), and also adjuster and slides (for front seat) 3. If no damage is found, reinstall the seat. 4. If damaged—REPLACE the damaged seat parts with new bolts.
Center pillar inner	1. Check the center pillar inner on the collision side for damage (dents, cracks, deformation). 2. If damaged—REPAIR the center pillar inner.	
Trim	1. Check for visible signs of damage (dents, cracks, deformation) of the interior trim on the collision side. 2. If damaged—REPLACE the damaged trim parts.	