# Technical training.
## Product information.

# G30 Introduction and Body

cardiagn.com

Edited for the U.S. market by:
**BMW Group University**
Technical Training
ST1604 11/1/2016

**BMW Service**

# General information

### Symbols used

The following symbol is used in this document to facilitate better comprehension or to draw attention to very important information:

⚠

Contains important safety information and information that needs to be observed strictly in order to guarantee the smooth operation of the system.

### Information status and national-market versions

BMW Group vehicles meet the requirements of the highest safety and quality standards. Changes in requirements for environmental protection, customer benefits and design render necessary continuous development of systems and components. Consequently, there may be discrepancies between the contents of this document and the vehicles available in the training course.

This document basically relates to the European version of left hand drive vehicles. Some operating elements or components are arranged differently in right-hand drive vehicles than shown in the graphics in this document. Further differences may arise as the result of the equipment specification in specific markets or countries.

### Additional sources of information

Further information on the individual topics can be found in the following:

- Owner's Handbook
- Integrated Service Technical Application.

Contact: conceptinfo@bmw.de

©2016 BMW AG, Munich

**Reprints of this publication or its parts require the written approval of BMW AG, Munich.**

The information contained in this document forms an integral part of the BMW Group Technical Qualification and is intended for the trainer and participants in the seminar. Refer to the latest relevant information systems of the BMW Group for any changes/additions to the technical data.

Information status: **September 2016**
**Technical training.**

cardiagn.com

# G30 Introduction and Body

## Contents


**1. Introduction** ..... **1**
- 1.1. Overview ..... 1
- 1.2. History ..... 2
- 1.3. Dimensions and silhouette comparison ..... 2
  - 1.3.1. Dimensions G30 ..... 2
  - 1.3.2. Comparison F10/G30 ..... 3
  - 1.3.3. Silhouette comparison ..... 4
- 1.4. Models ..... 4
- 1.5. Exterior equipment ..... 5
  - 1.5.1. Exterior ..... 5
  - 1.5.2. Underbody ..... 6

**2. Bodyshell** ..... **7**
- 2.1. Body overview ..... 7
- 2.2. Body structure ..... 8
  - 2.2.1. Steel ..... 8
  - 2.2.2. Aluminum ..... 9
- 2.3. Screw connections ..... 10
- 2.4. Roof support ..... 11

**3. Body Repair Level 1** ..... **12**
- 3.1. Repair Level 1 ..... 12
- 3.2. Outer body skin materials ..... 12
- 3.3. Front fenders ..... 13
- 3.4. Trunk ..... 14
- 3.5. Rear light ..... 16

**4. Interior Equipment** ..... **18**
- 4.1. Overview ..... 18
- 4.2. Seats ..... 19
  - 4.2.1. Front seats ..... 19
  - 4.2.2. Massage functions ..... 19
  - 4.2.3. Seat heating for driver/front passenger ..... 21
  - 4.2.4. Rear seats ..... 24

**5. Luggage Compartment** ..... **25**
- 5.1. Luggage compartment volume ..... 25


cardiagn.com

cardiagn.com

# G30 Introduction and Body

# 1. Introduction

## 1.1. Overview

In February 2017, the 7th generation of the BMW 5 Series G30 will be launched. The G30 contains a wealth of new technologies and design elements that have been further developed and refined. The closed radiator grill and the precise contours of the hood lend the front of the new BMW 5 Series a sporty character. The elegant lines of the side view are emphasized by the distinctive bead and the accentuated Hofmeister kink.

In terms of technology, the new BMW 5 Series is based on the G12. The topics listed below are described in the G12 Technical Reference Material “ST1501 G12 Complete Vehicle”.

| **Topic** | **“ST1501 G12 Complete Vehicle”** |
|---|---|
| Doors | G12 Complete Vehicle |
| Lightweight support, door | G12 Complete Vehicle |
| Engine hood | G12 Complete Vehicle |
| Front end | G12 Complete Vehicle |
| Trunk | G12 Complete Vehicle |
| Switch, seat adjustment | G12 Complete Vehicle |

BMW G30

cardiagn.com

# G30 Introduction and Body

# 1. Introduction

## 1.2. History

BMW 5 Series models – history

| 1st Generation 0.69 million units produced | 2nd Generation 0.73 million units produced | 3rd Generation 1.33 million units produced | 4th Generation 1.49 million units produced | 5th Generation 1.42 million units produced | 6th Generation 2.39 million units produced | 7th Generation 2.84 million units to be produced |
|---|---|---|---|---|---|---|
| E12 1972-1981 | E28 1981-1987 | E34 1987-1996 | E39 1995-2003 | E60/E61 2003-2010 | F10/F11 2010-2016 | G30 2016-2024 |

## 1.3. Dimensions and silhouette comparison

### 1.3.1. Dimensions G30

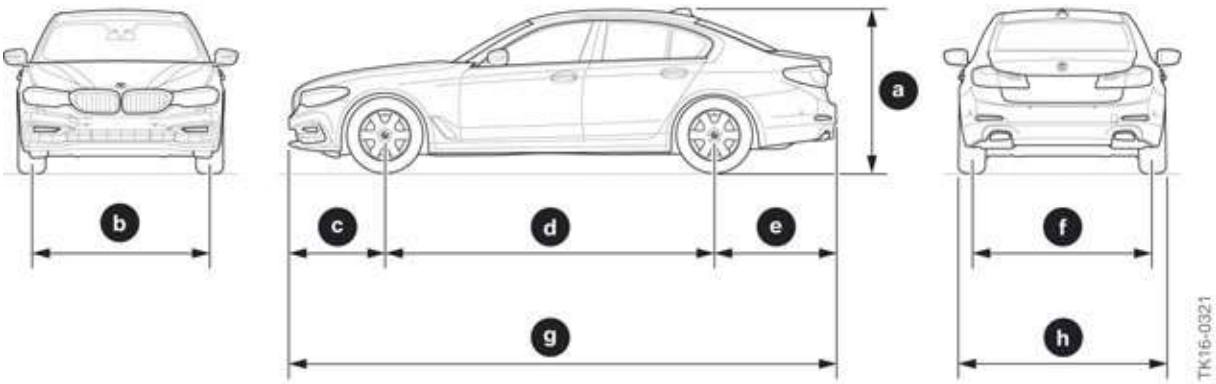


BMW G30 External dimensions

| Index | Explanation | Unit | G30 |
|---|---|---|---|
| a | Vehicle height, empty | [mm] | 1479 |
| b | Front track width, basic wheels | [mm] | 1605 |
| c | Front overhang | [mm] | 869 |
| d | Wheelbase | [mm] | 2975 |
| e | Rear overhang | [mm] | 1099 |

cardiagn.com

| | | | |
|---|---|---|---|
| f | Rear track width, basic wheels | [mm] | 1630 |
| g | Vehicle length | [mm] | 4943 |
| h | Width excluding exterior mirrors | [mm] | 1868 |

### 1.3.2. Comparison F10/G30

| | Unit | F10 | G30 |
|---|---|---|---|
| Vehicle height, empty | [mm] | 1464 | 1479 |
| Front track width | [mm] | 1600 | 1605 |
| Front overhang | [mm] | 832 | 869 |
| Wheelbase | [mm] | 2968 | 2975 |
| Rear overhang | [mm] | 1099 | 1099 |
| Rear track width, basic wheels | [mm] | 1627 | 1630 |
| Vehicle length | [mm] | 4899 | 4943 |
| Width excluding exterior mirrors | [mm] | 1860 | 1868 |
| Overall width including exterior mirrors | [mm] | 2094 | 2126 |
| Shoulder room, front | [mm] | 1480 | 1490 |
| Shoulder room, rear | [mm] | 1427 | 1420 |
| Elbow room, front | [mm] | 1518 | 1523 |
| Elbow room, rear | [mm] | 1485 | 1487 |
| Luggage compartment capacity (without space saver spare wheel) | [l] | 520 | 530 |

cardiagn.com

# G30 Introduction and Body

## 1. Introduction

### 1.3.3. Silhouette comparison

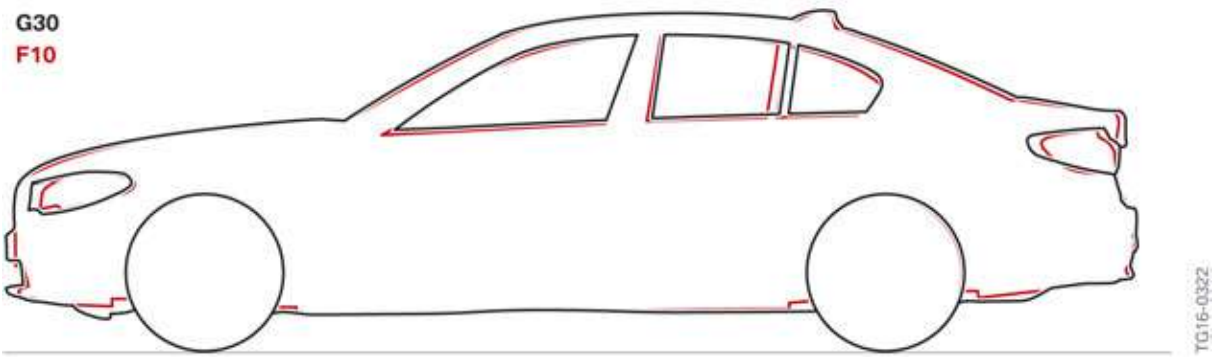


Silhouette comparison of G30/F10

## 1.4. Models

The G30 models will be available in 2017 with the following models.

| Model | Engine | Displacement in cm³ | Power in kW (HP) | Torque in Nm (lb-ft) |
|---|---|---|---|---|
| BMW 530i / 530ix Drive | B46O 4-cylinder gasoline engine | 1998 | 185 (248) | 350 (258) |
| BMW 540i / 540i xDrive | B58M 6-cylinder gasoline engine | 2998 | 250 (335) | 450 (332) |
| BMW M550i xDrive* | N63R 8-cylinder gasoline engine | 4398 | 340 (455) | 650 (480) |

* The BMW M550i xDrive will follow a few months after the launch of the 530i / 530ix Drive and 540i / 540i xDrive.

cardiagn.com

# G30 Introduction and Body

# 1. Introduction

## 1.5. Exterior equipment

### 1.5.1. Exterior

G30 Exterior highlights

| Index | Explanation |
|---|---|
| 1 | Air flaps in the radiator grill |
| 2 | Air Breather |
| 3 | Headlights extend to the radiator grill |
| 4 | Adjustable housing for rear lights |

cardiagn.com

### 1.5.2. Underbody

The almost fully closed vehicle underbody plays an important role in the aerodynamics. The acoustics in the vehicle are also significantly improved as a result. In the front section, the air flow is directed past the front wheels by the displacers (7). In this way, the airflow on the front wheel is reduced. In the rear area, the 2 wind deflectors (3) on the axle and the cover of the rear axle differential (5) contribute to optimized underbody flow together with the rear diffuser (4), which is adapted for each drivetrain design.

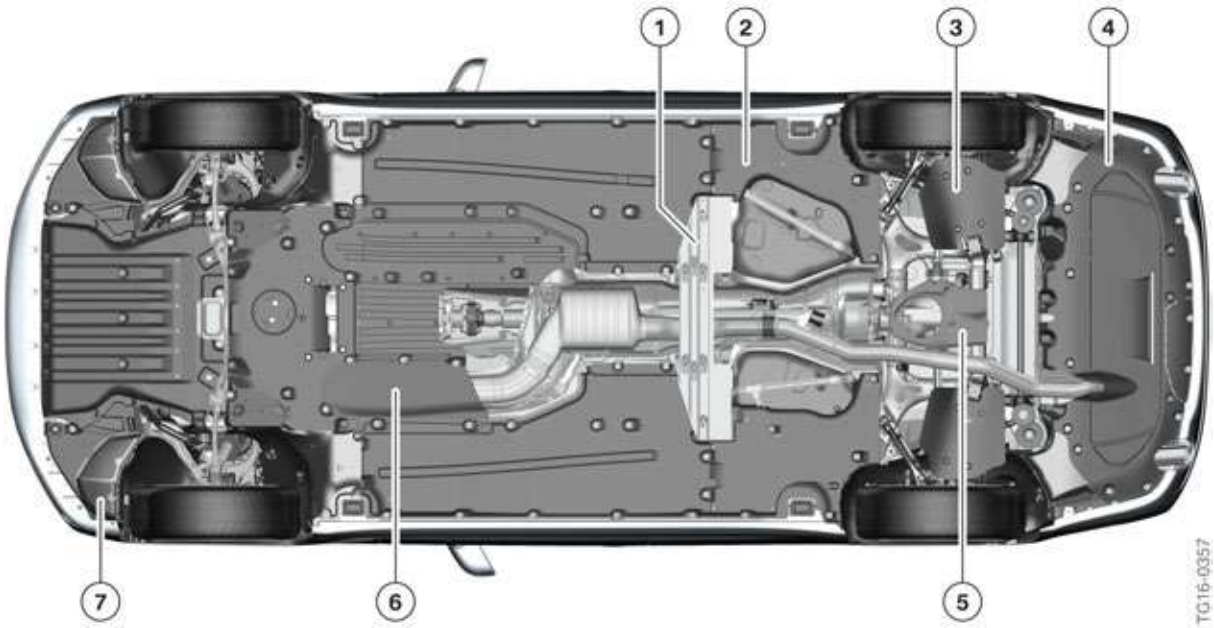


G30 Underbody trim

| Index | Explanation |
|---|---|
| 1 | Cross-member with wind deflector |
| 2 | Tank cover with wind deflector |
| 3 | Wind deflector, rear axle |
| 4 | Rear diffuser |
| 5 | Cover, rear axle differential |
| 6 | Cover, exhaust system |
| 7 | Displacer |

cardiagn.com

# G30 Introduction and Body

## 2. Bodyshell

### 2.1. Body overview

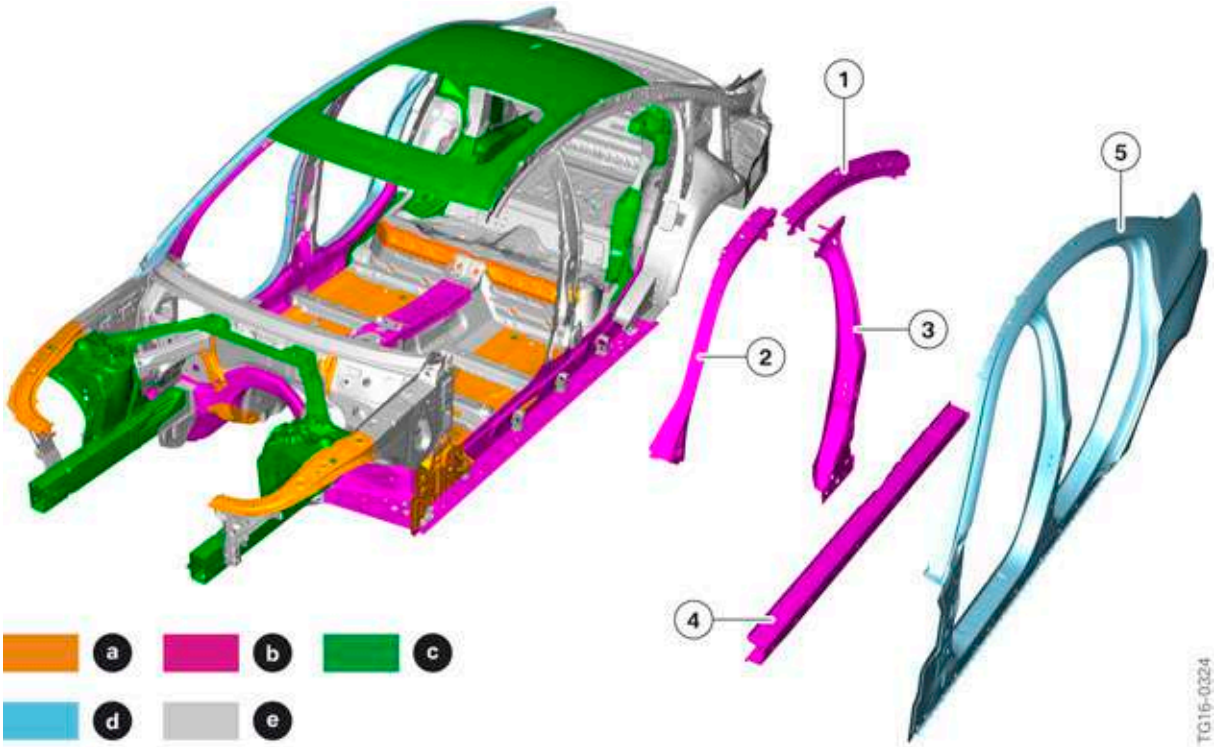


G30 Side frame structure

| Index | Explanation |
|---|---|
| a | Multiphase steel (> 300 N/mm²) |
| b | Ultra-high-strength steel (> 900 N/mm²) |
| c | Aluminum |
| d | Deep-drawing steel (< 300 N/mm²) |
| e | Other steel grades |
| 1 | Inner roof frame |
| 2 | Roof frame reinforcement |
| 3 | B-pillar reinforcement |
| 4 | Side sill reinforcement plate |
| 5 | Outer side frame (deep-drawing steel) |

cardiagn.com

# G30 Introduction and Body

## 2. Bodyshell

### 2.2. Body structure

The lightweight body construction concept of the G30 comprises high-strength steel and Aluminum components. There is no Carbon Core used in the construction of the G30 body like in the G12. The use of die-cast Aluminum components has increased significantly. Thanks to the material mix, the materials are able to contribute their specific strengths to the vehicle in the best possible way. As a result of the strict lightweight construction philosophy, the weight of the body has been reduced by around 46 kg / 101 lbs over the predecessor F10, but crash safety has been further improved.

#### 2.2.1. Steel

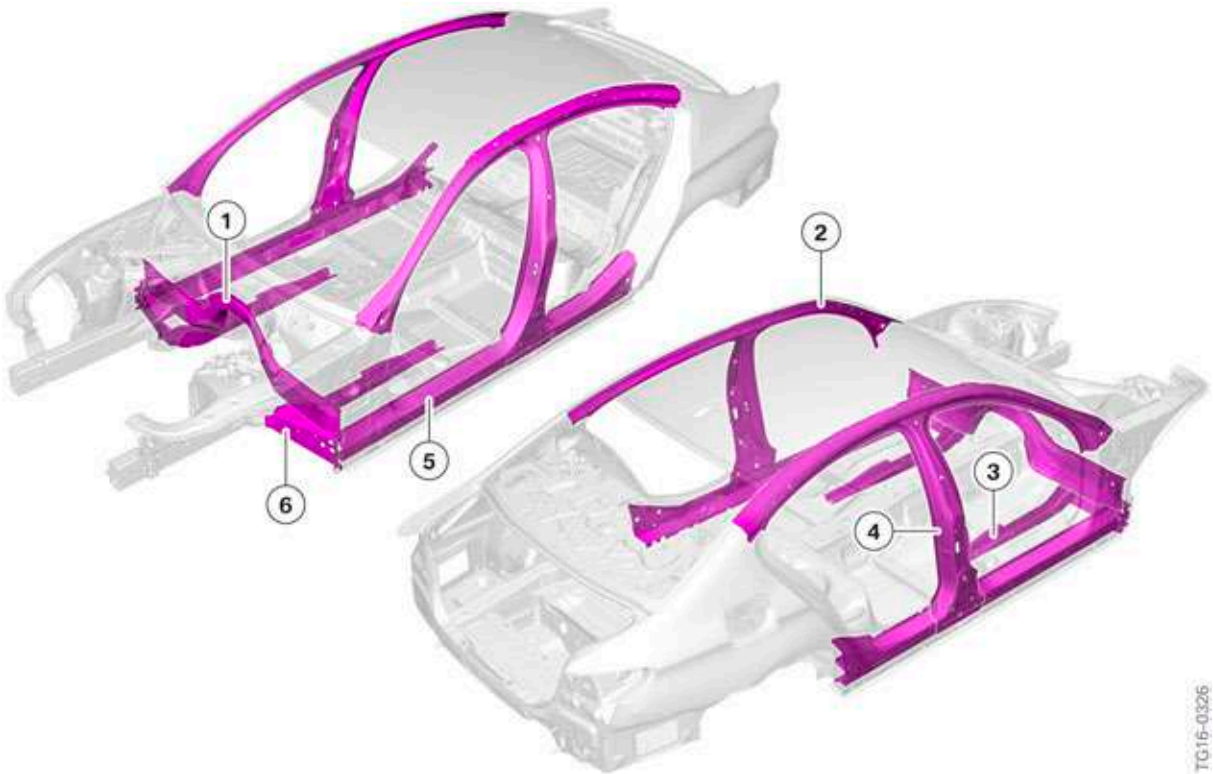


G30 Ultra-high-strength steels in the body structure

| Index | Explanation |
|---|---|
| 1 | Carrier support, bulkhead |
| 2 | Inner side frame |
| 3 | Engine support extension |
| 4 | Reinforcement plate, B-pillar |
| 5 | Side sill reinforcement plate |
| 6 | Outer connecting plate |

cardiagn.com

### 2.2.2. Aluminum

The use of Aluminum extruded profiles and complex die-cast Aluminum parts accounts for a rigid body along with low weight. All requirements relating to passive safety are also met.

The spring strut domes on the front, and for the first time also on the rear, are manufactured using the Aluminum pressure die casting process. As is already familiar from the G12, the side members at the rear are now also made as die-cast Aluminum components. This contributes to excellent weight distribution in the body structure. New Aluminum cast alloys were also developed in order to increase the crash safety of these components.

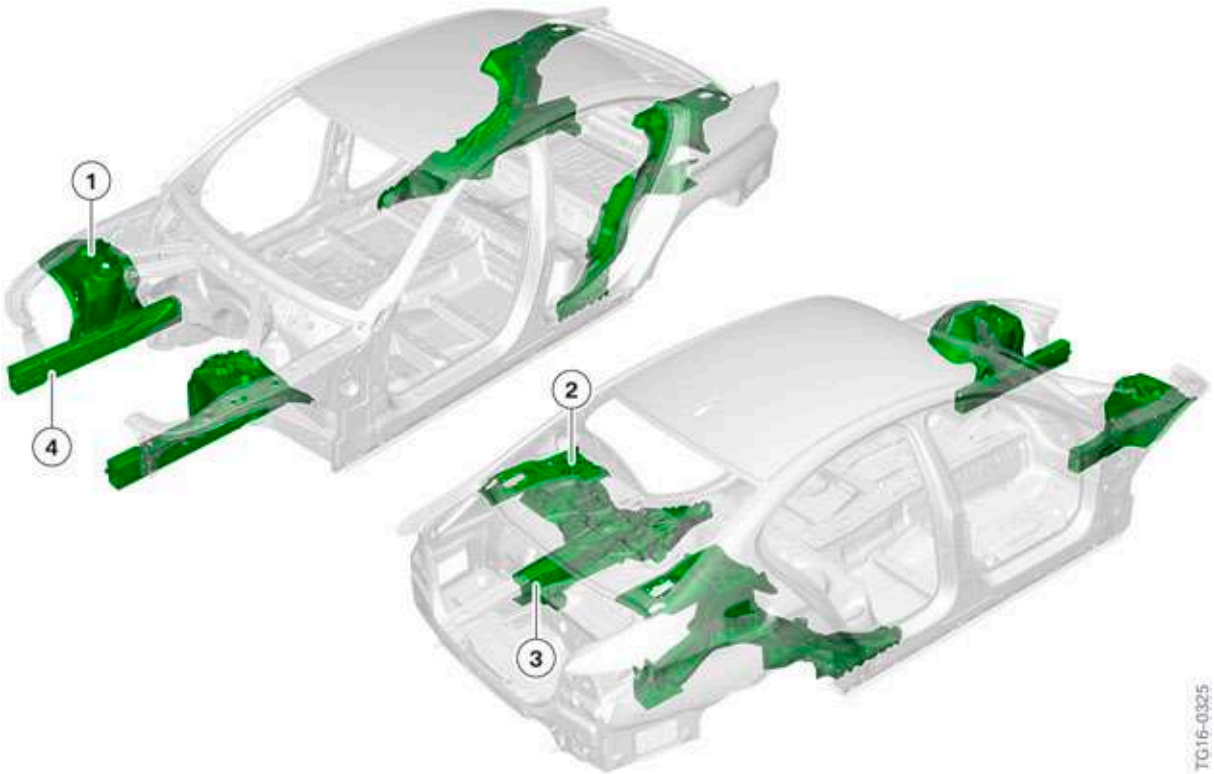


G30 Aluminum in the body structure

| Index | Explanation |
|---|---|
| 1 | Front spring strut dome |
| 2 | Rear spring strut dome |
| 3 | Side member |
| 4 | Engine support |

cardiagn.com

### 2.3. Screw connections

Some of the Aluminum-steel connections in the G30 body structure are produced using a new body joining technique: flow drill screws. These include, for example, the connection between the engine support (Aluminum extruded profile) and the bulkhead carrier support (ultra-high-strength hot-formed steel).

Flow drill screws are driven directly into the body structure. When this happens, the specially shaped tip produces a flow hole and a thread is then cut. This joining technique is used **exclusively** in production.

G30 Screw connection of engine support/bulkhead

| Index | Explanation |
|---|---|
| 1 | Engine support |
| 2 | Engine support connection |
| 3 | Flow drill screw |

⚠

Once a flow drill screw connection has been loosened, it must not be re-joined using flow drill screws. Otherwise this will lead to a considerable reduction in strength.

In the event of a repair according to Body Repair Level 2 and 3, the flow drill screws are replaced by blind rivets.

cardiagn.com

### 2.4. Roof support

The G30 body structure has a hydroformed roof support made of steel. This is welded to the roof side frame in line with the B-pillar. By using a hydroformed section it has been possible to reduce the vehicle weight along with increasing the stiffness of the body. On vehicles with a slide/tilt sunroof or panorama glass roof the reinforcement is incorporated in the relevant roof frame.

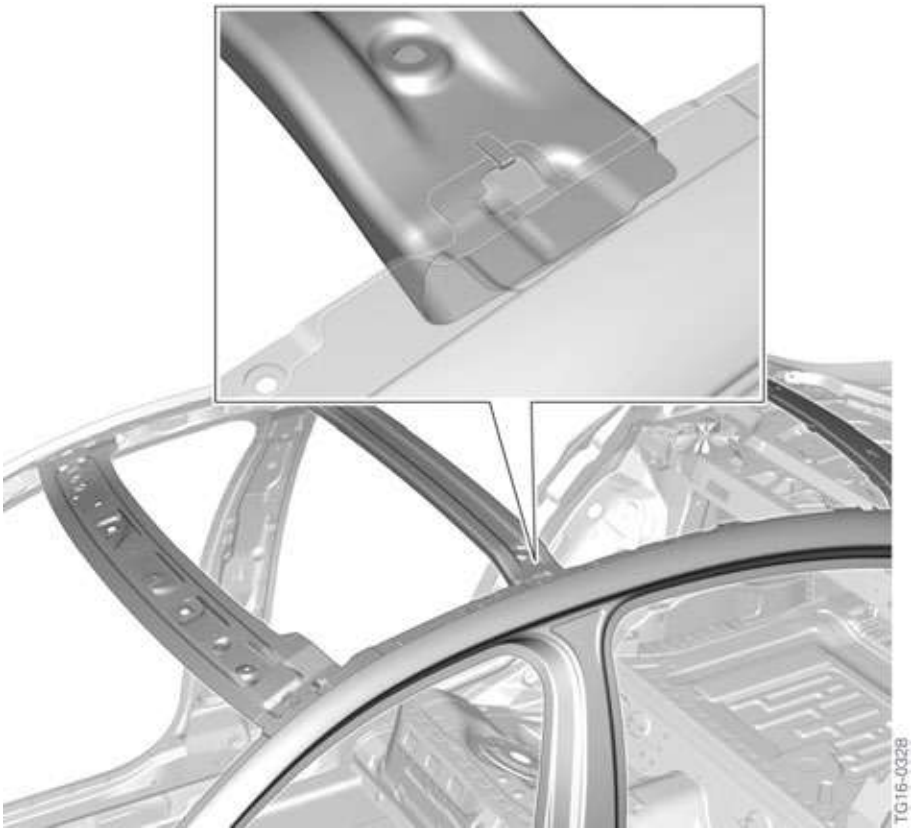


G30 Hydroformed roof bow

cardiagn.com

# G30 Introduction and Body

# 3. Body Repair Level 1

## 3.1. Repair Level 1

Taking into account the repair stages of the BMW workshop information system, the body repair work in the Technical Qualification is divided into 3 repair levels. Each of the 3 Body Repair Levels includes certain prerequisites in terms of the qualifications of the employees and the workshop equipment.

The special characteristics of the add-on body parts and the materials used in the outer body skin are described in this chapter. However, the basic functions of the roof and the outer body skin components made of plastic are the same as on other current BMW models. For this reason, these components will not be described in detail here.

## 3.2. Outer body skin materials

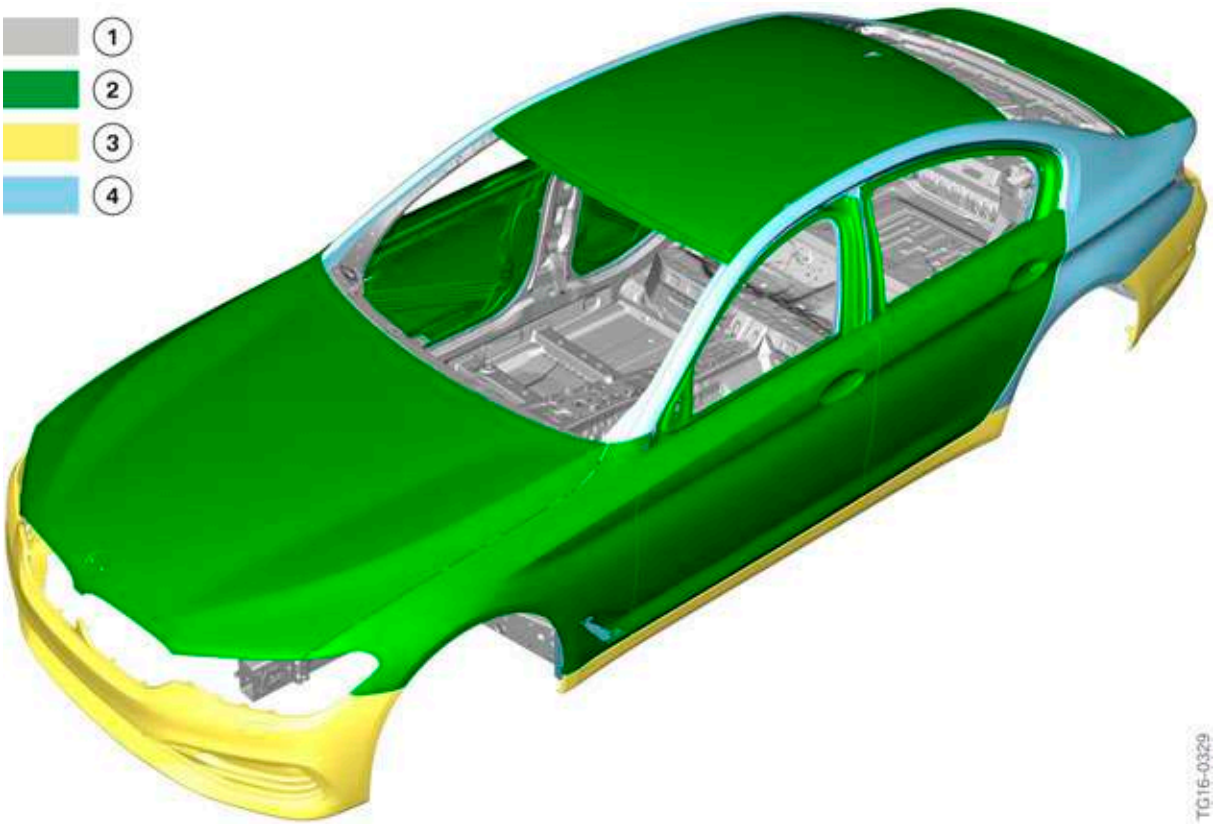


G30 Outer body skin

| Index | Explanation |
|---|---|
| 1 | Other steel grades |
| 2 | Aluminum |
| 3 | Plastic |
| 4 | Deep-drawing steel |

cardiagn.com

# G30 Introduction and Body

## 3. Body Repair Level 1

As was already the case with the F10, the doors, hood and front side panels are made of Aluminum. In addition, the trunk and the roof of the G30 is also made of Aluminum, which contributes to the significant weight reduction.

The bumper panels at front and rear as well as the side sills are made of plastic as before. However, further development of this material made it possible to reduce the density and weight.

### 3.3. Front fenders

Air Breathers are also used on the front fenders of the G30. The Air Breather is an air outlet behind the front wheel, which diverts the air flowing into the rear region of the wheel well in a controlled manner towards the fender in order to reduce turbulences in the wheel well area. As a result, the drag and fuel consumption of the vehicle is reduced, which in turn means a reduction in carbon dioxide emissions.

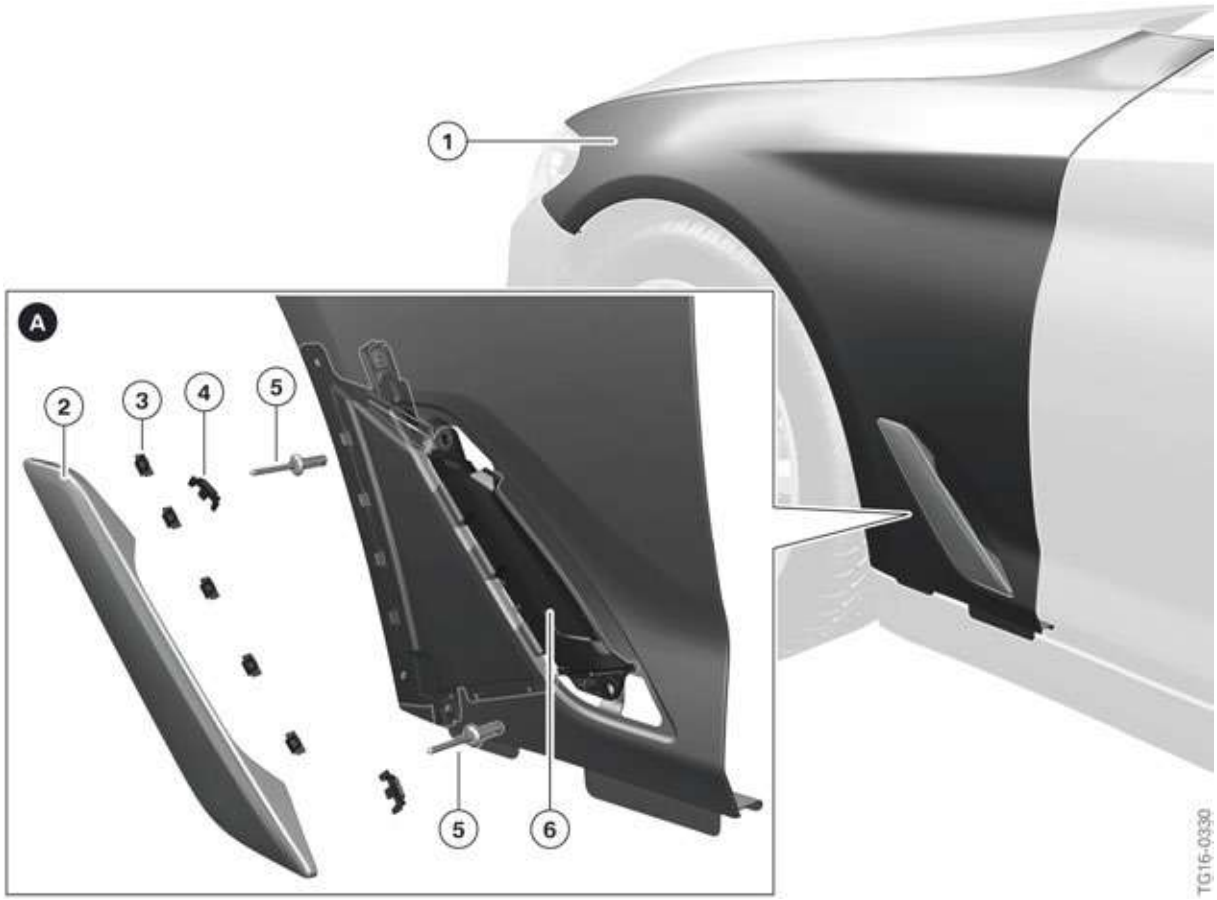


G30 Front side panel

cardiagn.com

| Index | Explanation |
|---|---|
| A | Air Breather mounting |
| 1 | Front left fender |
| 2 | Air Breather trim |
| 3 | Mounting clips |
| 4 | Trim mounting clips |
| 5 | Expanding rivet |
| 6 | Air duct |

## 3.4. Trunk

A trunk made entirely of Aluminum has been used for the first time on the G30. As a result, a weight reduction of 4.2 kg / 9.5 lbs was achieved over the F10. The multi-part layout of the trunk is achieved with the aid of state-of-the-art laser welding techniques.

cardiagn.com

# G30 Introduction and Body

## 3. Body Repair Level 1

G30 Trunk

| Index | Explanation |
|---|---|
| 1 | Trunk outer skin (Aluminum) |
| 2 | End plate |
| 3 | Trunk inner panel |
| 4 | Reinforcement plate with hinge mounting |
| 5 | Reinforcement plate with striker mounting |
| 6 | Side end plate |
| 7 | Outer skin panel with licence plate carrier |
| 8 | Rear light mounting panels |

cardiagn.com

# G30 Introduction and Body

## 3. Body Repair Level 1

### 3.5. Rear light

On the G30, the rear light assembly is attached with 3 screws to the body. Due to the very small gap dimensions to the body, it is necessary to adjust the rear lights to the body. Two adjusting elements (figure B) are provided for this purpose; they can be seen when the trunk is open and the trim panel has been removed. To adjust the gap dimensions, the adjusting element can be screwed in or out in the x direction. The mounting bolt (figure A) serves solely for mounting in the Y direction.

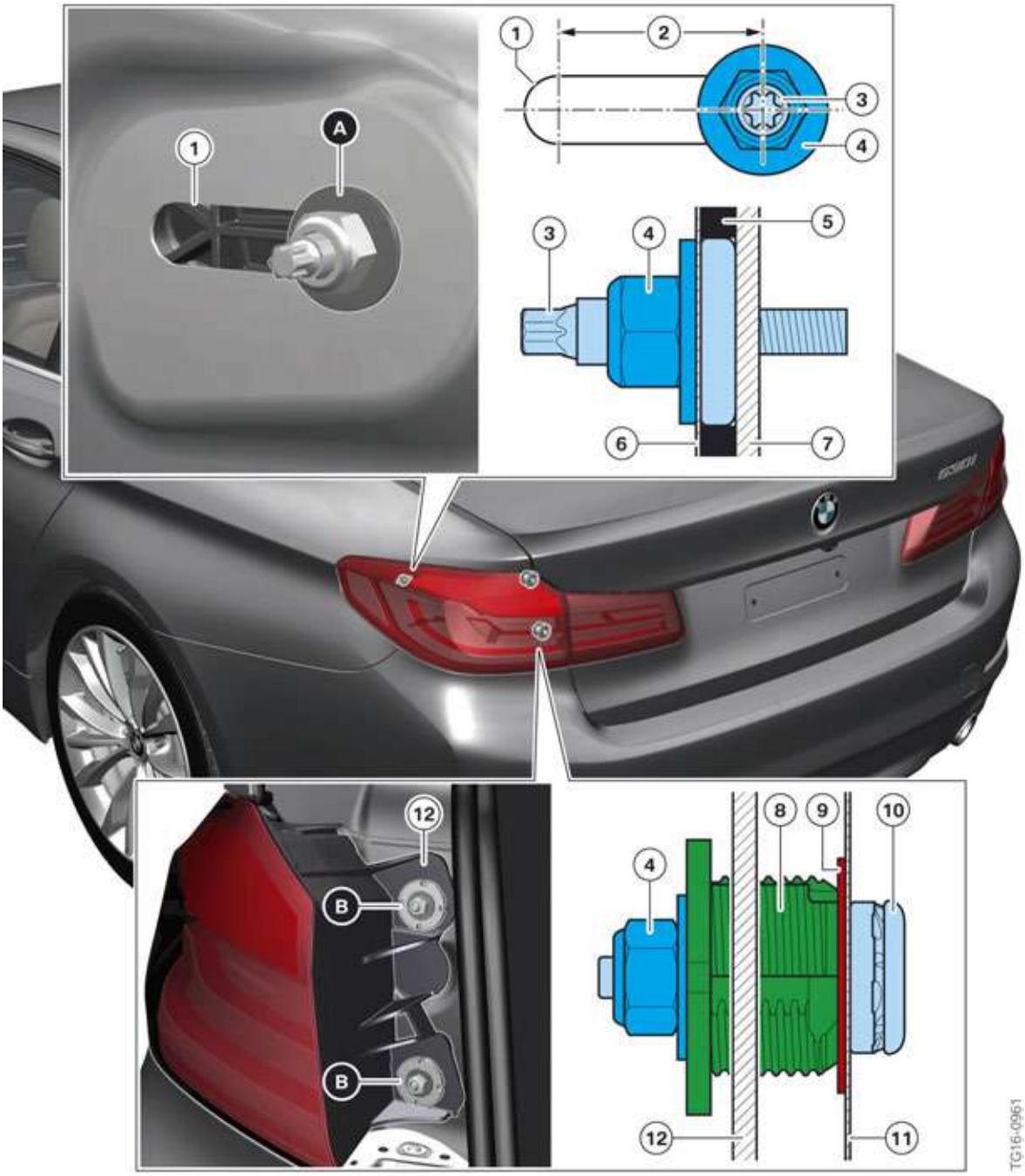


G30 Rear light

cardiagn.com

# G30 Introduction and Body

## 3. Body Repair Level 1

| Index | Explanation |
|---|---|
| A | Mounting bolt behind the luggage compartment trim panel |
| B | Adjusting elements |
| 1 | Elongated hole |
| 2 | Adjustment range in X direction |
| 3 | Mounting bolt on the rear light |
| 4 | Lock nut |
| 5 | Gasket |
| 6 | Body |
| 7 | Rear light |
| 8 | Adjusting element |
| 9 | Sealing washer |
| 10 | Mounting bolt on the body |
| 11 | Body |
| 12 | Rear light |

cardiagn.com

# G30 Introduction and Body

## 4. Interior Equipment

### 4.1. Overview

The vehicle interior shows significant further developments in comparison to the F10. The all-round visibility has been improved. This is further supported by the very flat design of the roof function center. In addition, the headliner, which is equipped with sound insulation, helps to make the interior cabin noticeably quieter than the F10.

G30 Front overview

cardiagn.com

| Index | Explanation |
|---|---|
| 1 | Gesture recognition camera |
| 2 | Roof switch panel |
| 3 | Central Information Display (CID) |
| 4 | Glove box |
| 5 | Hotel position switch |
| 6 | Center console |
| 7 | Cup holder and wireless charging station |
| 8 | Heating and air conditioning controls/audio operating unit with touch operation |
| 9 | Glove box, driver's side |
| 10 | Instrument cluster |

## 4.2. Seats

### 4.2.1. Front seats

As a design element, the seats are an important element of a sporty-luxurious vehicle interior. Special stitching accents are provided in the form of decorative stitches for the Dakota leather trim and for the Saddle leather trim. The following front seat variants are available for the G30:

| | Sports seat | Multi-contour seat |
|---|---|---|
| Seat memory | Standard | Standard |
| Heated seats | Option (OE 494) | Option (OE 494) |
| Lumbar support | Standard | Standard |
| Active seat ventilation | | Option (OE 453) |
| Massage function | | Option (OE 4T7) |

On the multifunction seat, 5 touch-sensitive sensors are integrated in the switches for fore-and-aft seat adjustment. As a result, when the adjustment switch is touched a pop-up is opened in the Central Information Display (CID), which shows the function and adjustment range of the switch that has been touched. Further information on this topic can be found in the Technical Reference Material “ST1501 G12 Complete Vehicle”.

### 4.2.2. Massage functions

A massage programme is offered for the driver and front passenger in conjunction with the multifunction seat. Eight different massage functions in the backrest and seat cushion activate or relax the muscles, thereby helping to relax the back muscles and relieve the strain on the intervertebral discs. Here, the occupants can choose between 3 different intensity levels.

cardiagn.com

G30 Multifunction seat

| Index | Explanation |
|---|---|
| 1 | Air cushion for shoulders (massage) |
| 2 | Air cushion on inner backrest (massage) |
| 3 | Air cushion for lumbar region (massage) |
| 4 | Air cushion for lumbar support |
| 5 | Air cushion for seat surface (massage) |
| 6 | Seat pneumatics module pump |
| 7 | Seat pneumatics module (control unit and valve block) |

The massage functions are controlled by the respective seat pneumatics modules.

cardiagn.com

When working on the pneumatic components, it must be ensured that the lines are routed exactly, otherwise there is a risk of the lines being kinked.

**Mobilization**

With the mobilization program, it is possible to choose between the pelvis, upper body or full body. During the massage, the strain on the spine is relieved by targeted body movements.

**Relaxation**

Three different regions of the body can be selected for the relaxation program. Targeted massage helps to relax the back, shoulder or lumbar muscles.

**Vitalization**

The vitalization program is made up of both mobilization and relaxation. The occupant can choose between the body areas of upper body and full body. The combination of movement and massage ensures optimum relaxation and recuperation particularly on long journeys.

### 4.2.3. Seat heating for driver/front passenger

For the first time on a BMW vehicle it is now possible to pre-set the seat heating. It is possible to select between the driver and front passenger and to choose the heating stage. If the ambient temperature drops below the pre-set value, set by the driver and the relevant seat belt buckle is latched, then the seat heating is automatically activated as soon as the vehicle drives off. The integrated automatic heating/air conditioning system (IHKA) main menu is opened via the IHKA menu button.

First the seat and steering wheel heating needs to be selected.

G30 Seat heating for driver/front passenger

In the next step a selection needs to be made between driver or front passenger.

cardiagn.com

G30 Seat heating for driver/front passenger

In the next step the automatic seat heating needs to be selected with a check mark.

G30 Seat heating for driver/front passenger

In this step the ambient temperature can be set selected by the driver and passenger. If the ambient temperature drops below the selected value, the seat heating is automatically activated.

G30 Seat heating for driver/front passenger

cardiagn.com

In this step one of three heating stages of the seat heating is set.

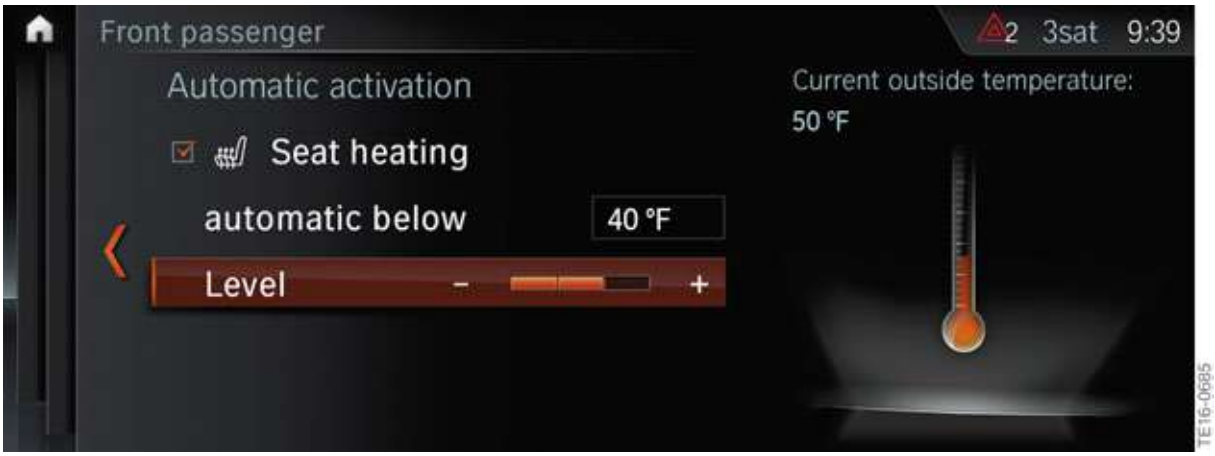


G30 Seat heating for driver/front passenger

This function is also offered for the active seat ventilation and for the steering wheel heating.

G30 Steering wheel heating

cardiagn.com

### 4.2.4. Rear seats

The decorative stitches and contrast colors already familiar from the first row of seats are also carried over into the second row of seats, where they help create a harmonious overall impression. Functionality is underlined thanks to the easily accessible Isofix attachments and the cup holders in the center armrest. The 40:20:40 folding backrest can only be released by the levers from inside the luggage compartment. Rear seat heating is available as optional equipment (OE 4HA).

G30 Rear seats

| Index | Explanation |
|---|---|
| 1 | Cupholder |

cardiagn.com

# G30 Introduction and Body

## 5. Luggage Compartment

### 5.1. Luggage compartment volume

The luggage compartment capacity of the new BMW 5 Series has been increased by 10 liters in comparison to its predecessor, the F10, to 530 liters / 14 ft³. By adding a compact spare wheel as optional equipment, the luggage compartment capacity is reduced accordingly. On vehicles with the (OE 300) space saver spare wheel, the luggage compartment capacity can be restored by the customer back up to the full luggage compartment capacity of 530 liters by taking out the insert with the space saver spare wheel. The same removable panel can be used for this purpose.

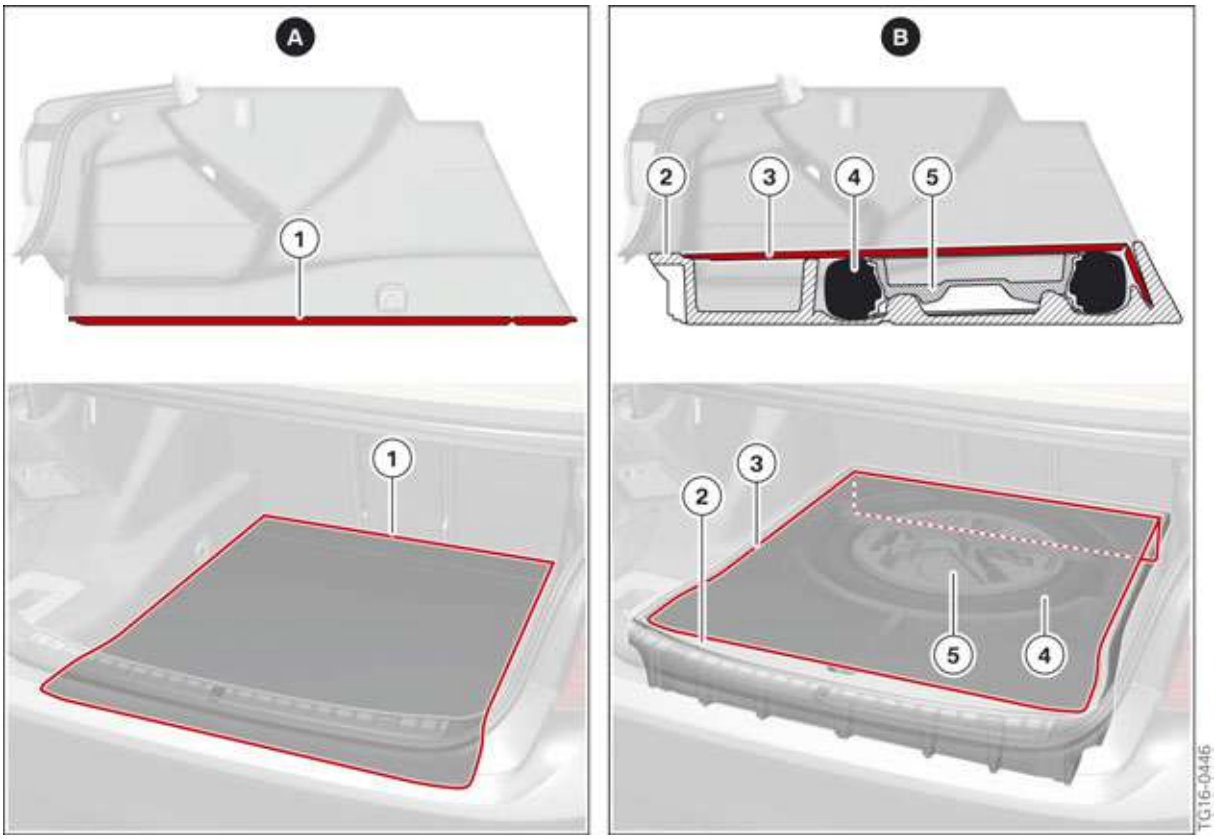


G30 Luggage compartment

| Index | Explanation |
|---|---|
| A | Luggage compartment without space saver spare wheel |
| 1 | Luggage compartment removable panel |
| B | Luggage compartment with space saver spare wheel |
| 2 | Insert for space saver spare wheel |
| 3 | Luggage compartment removable panel |
| 4 | Space saver spare wheel (OE 300) |
| 5 | Insert for jack/tools |

cardiagn.com

# G30 Introduction and Body

## 5. Luggage Compartment

By using the cavities behind the luggage compartment trim panel, it has been possible to house the first aid kit in a separate storage compartment next to the tailgate hinge. The storage compartment with a lid offers further storage options on the left-hand side. On the right-hand side of the luggage compartment customers have access to a storage compartment without a lid. The luggage compartment power distribution box with corresponding fuses is located on the side behind the luggage compartment trim panel.

G30 Luggage compartment storage compartments

| Index | Explanation |
|---|---|
| 1 | Left/right lashing points |
| 2 | Rear power distribution box with fuses |
| 3 | Storage compartment without lid |
| 4 | Multifunction hook |
| 5 | First aid kit compartment |
| 6 | Storage net |
| 7 | Toolkit storage compartment with lid |

cardiagn.com

cardiagn.com

cardiagn.com

Bayerische Motorenwerke Aktiengesellschaft
Händlerqualifizierung und Training
Röntgenstraße 7
85716 Unterschleißheim, Germany