Repair Manual

Golf 2015 ➤
Golf Variant 2015 ➤

Body Interior

Edition 09.2015

Protected by copyright. Copying for private or commercial purposes, in part or in whole, is not permitted unless authorised by Volkswagen AG. Volkswagen AG does not guarantee or accept any liability with respect to the correctness of information in this document. Copyright by Volkswagen AG.

List of Workshop Manual Repair Groups

Repair Group

00 - General, Technical Data
68 - Interior Equipment
69 - Passenger Protection, Airbags, Seat Belts
70 - Interior Trim
72 - Seat Frames
74 - Seat Upholstery, Covers

Protected by copyright. Copying for private or commercial purposes, in part or in whole, is not permitted unless authorised by Volkswagen AG. Volkswagen AG does not guarantee or accept any liability with respect to the correctness of information in this document. Copyright by Volkswagen AG.

Technical information should always be available to the foremen and mechanics, because their careful and constant adherence to the instructions is essential to ensure vehicle road-worthiness and safety. In addition, the normal basic safety precautions for working on motor vehicles must, as a matter of course, be observed.

All rights reserved.
No reproduction without prior agreement from publisher.

Copyright © 2016 Volkswagen AG, Wolfsburg

D4B8040F858

Contents

00 - General, Technical Data . . . 1

1 **Safety Precautions** . . . 1
1.1 Safety Precautions when Working on Start/Stop System . . . 2
1.2 Safety Precautions for Pyrotechnic Components . . . 3
1.3 Airbag, Belt Tensioner and Battery Cut-Out Units, Storing, Transporting and Disposing (Pyrotechnic Components) . . . 5
1.4 Additional Side Airbag Safety Precautions . . . 6
1.5 Additional Head Curtain Airbag Safety Precautions . . . 7
1.6 Front Side Airbag Crash Sensors (Pressure Sensors) Safety Precautions . . . 7
1.7 Passenger Occupant Detection System Deactivation Additional Safety Precautions, Market-Specific . . . 9
1.8 Restraint System Pyrotechnical, Electric and Mechanical Components, Replacing After a Collision . . . 9
1.9 Airbag Fasteners, Checking After a Collision . . . 11
1.10 Collision without Airbag Deployment . . . 11
1.11 Seat Belts, Checking . . . 12
1.12 Seat Belt Webbing, Checking . . . 12
1.13 Automatic Belt Retractor (Locking Function), Checking . . . 13
1.14 Seat Belt Latch, Visually Inspecting . . . 14
1.15 Seat Belt Latch, Function Test . . . 14
1.16 Seat Belt Relays and Belt Tongue, Checking . . . 14
1.17 Fasteners and Mounting Points, Checking After a Collision . . . 15
1.18 Seat Belt for Child Seat, Checking Child Seat Restraint Function, Market-Specific . . . 15
1.19 Child Seat Anchors, Checking After Collision . . . 15
1.20 Automatic Dimming Interior Rearview Mirror Safety Precautions . . . 16

2 **Repair Information** . . . 17
2.1 Contact Corrosion . . . 17
2.2 Wire Routing and Securing . . . 17

68 - Interior Equipment . . . 18

1 **Storage Compartments and Covers** . . . 18
1.1 Component Location Overview - Storage Compartment/Covers . . . 18
1.2 Overview - Driver Side Footwell Cover . . . 20
1.3 Overview - Driver Side Instrument Panel Cover . . . 22
1.4 Overview - Steering Column Trim Panel . . . 23
1.5 Overview - Glove Compartment . . . 24
1.6 Overview - Headliner Compartment . . . 25
1.7 Driver Side Footwell Cover, Removing and Installing . . . 25
1.8 Driver Side Storage Compartment, Removing and Installing . . . 28
1.9 Driver Side Instrument Panel Cover, Removing and Installing . . . 28
1.10 Instrument Cluster Gap Cover, Removing and Installing . . . 30
1.11 Upper Steering Column Trim Panel, Removing and Installing . . . 30
1.12 Lower Steering Column Trim Panel, Removing and Installing . . . 31
1.13 Front Passenger Side Footwell Cover, Removing and Installing . . . 33
1.14 Glove Compartment Handle, Removing and Installing . . . 33
1.15 Glove Compartment Lid Service Position . . . 35
1.16 Glove Compartment Lid Dampening Mechanism, Removing and Installing . . . 35
1.17 Glove Compartment, Removing and Installing . . . 36
1.18 Glove Compartment Lid, Removing and Installing . . . 37
1.19 Headliner Storage Compartment, Removing and Installing . . . 38
1.20 Parking Brake Lever Trim, Removing and Installing . . . 38
1.21 Parking Brake Lever Handle, Removing and Installing . . . 39

2 **Equipment** . . . 41

Protected by copyright. Copying for private or commercial purposes, in part or in whole, is not permitted unless authorised by Volkswagen AG. Volkswagen AG does not guarantee or accept any liability with respect to the correctness of information in this document. Copyright by Volkswagen AG.

2.1 Overview - Screen Separator . . . 41
2.2 Overview - Sun Visors . . . 43
2.3 Overview - Roof Grab Handle . . . 44
2.4 Screen Separator, Removing and Installing . . . 44
2.5 Screen Separator Mount, Removing and Installing . . . 45
2.6 Screen Separator Bracket, Removing and Installing . . . 46
2.7 Screen Separator Mount, Removing and Installing . . . 46
2.8 Sun Visor, Removing and Installing . . . 47
2.9 Sun Visor Center Support, Removing and Installing . . . 49
2.10 Roof Grab Handle, Removing and Installing . . . 50
2.11 Roof Grab Handle Bracket, Removing and Installing . . . 52

3 Center Console . . . 53
3.1 Overview - Center Console . . . 53
3.2 Front Ashtray, Removing and Installing . . . 55
3.3 Center Console Rear Trim, Removing and Installing . . . 55
3.4 Front Footwell Center Console Trim Panel, Removing and Installing . . . 55
3.5 Display and Control Unit Trim, Removing and Installing . . . 56
3.6 Front Center Console Storage Compartment, Removing and Installing . . . 57
3.7 Center Console Cover, Removing and Installing . . . 57
3.8 Center Console, Removing and Installing . . . 59
3.9 Center Console Bracket, Removing and Installing . . . 61

4 Front Center Armrest . . . 62
4.1 Overview - Front Center Armrest . . . 62
4.2 Front Center Armrest, Removing and Installing . . . 63

5 Interior Rearview Mirror . . . 64
5.1 Overview - Interior Rearview Mirror . . . 64
5.2 Interior Rearview Mirror, Removing and Installing . . . 68
5.3 Retaining Plate, Removing and Installing . . . 70

6 Special Tools . . . 74

69 - Passenger Protection, Airbags, Seat Belts . . . 76

1 Seat Belts . . . 76
1.1 Component Location Overview - Seat Belts and Mounting Points . . . 76
1.2 Overview - Front Three-Point Seat Belt . . . 83
1.3 Overview - Outer Rear Three-Point Seat Belt . . . 88
1.4 Overview - Rear Center Three-Point Seat Belt . . . 94
1.5 Overview - Front Seat Belt Latch . . . 95
1.6 Overview - Rear Seat Belt Latch . . . 97
1.7 Front Three-Point Seat Belt, Removing and Installing . . . 98
1.8 Rear Three-Point Seat Belt, Removing and Installing . . . 106
1.9 Front Seat Belt Guide, Removing and Installing . . . 114
1.10 Rear Seat Belt Guide, Removing and Installing . . . 115
1.11 Front Belt End Fitting, Removing and Installing . . . 116
1.12 Rear Outer Belt End Fitting, Removing and Installing . . . 117
1.13 Seat Belt Height Adjuster, Removing and Installing . . . 118
1.14 Front Seat Belt Latch, Removing and Installing . . . 120
1.15 Rear Seat Belt Latch, Removing and Installing . . . 121

2 Child Seat Anchors . . . 122
2.1 Overview - Rear Child Seat Anchors . . . 122
2.2 LATCH Child Seat Anchor Guide, Removing and Installing . . . 123
2.3 Top Tether, Removing and Installing . . . 123

3 Airbag System . . . 125
3.1 Component Location Overview - Airbag System . . . 125

4 Airbag Control Module . . . 127
4.1 Overview - Airbag Control Module . . . 127

Protected by copyright. Copying for private or commercial purposes in part or in whole, is not permitted unless authorised by Volkswagen AG. Volkswagen AG does not guarantee or accept any liability with respect to the correctness of information in this document. Copyright by Volkswagen AG.

4.2 Airbag Control Module J234 , Removing and Installing . . . 127
5 Driver Side Airbag . . . 131
5.1 Overview - Driver Side Airbag . . . 131
5.2 Airbag Unit with Igniter, Removing and Installing . . . 132
5.3 Airbag Connector, Replacing . . . 136
6 Front Passenger Airbag . . . 138
6.1 Overview - Front Passenger Airbag . . . 138
6.2 Front Passenger Airbag Unit with Igniter, Removing and Installing . . . 139
6.3 Front Passenger Airbag Deactivation Key Switch, Removing and Installing . . . 141
6.4 Front Passenger Airbag -Disabled- Indicator Lamp K145 , Removing and Installing . . . 142
7 Side Airbags . . . 143
7.1 Overview - Front Side Airbag . . . 143
7.2 Overview - Rear Side Airbag . . . 144
7.3 Front Side Airbag with Igniter, Removing and Installing . . . 145
7.4 Rear Side Airbag with Igniter, Removing and Installing . . . 146
8 Head Curtain Airbags . . . 147
8.1 Overview - Head Curtain Airbag . . . 147
8.2 Head Curtain Airbag with Igniter, Removing and Installing . . . 147
9 Knee Airbags . . . 156
9.1 Overview - Knee Airbag . . . 156
9.2 Knee Airbag with Igniter, Removing and Installing . . . 157
10 Airbag Crash Sensors . . . 160
10.1 Component Location Overview - Airbag Crash Sensors . . . 160
10.2 Driver Front Airbag Crash Sensor G283 , Removing and Installing . . . 161
10.3 Passenger Side Front Airbag Crash Sensor G284 , Removing and Installing . . . 164
10.4 Driver Side Airbag Crash Sensor G179 / Front Passenger Side Airbag Crash Sensor G180 , Removing and Installing . . . 166
10.5 Driver Side Rear Side Airbag Crash Sensor G256 / Passenger Side Rear Side Airbag Crash Sensor G257 , Removing and Installing . . . 169
11 Seat Position Sensor . . . 171
11.1 Overview - Seat Position Sensor . . . 171
11.2 Seat Position Sensor, Removing and Installing . . . 172
12 Belt Fastening Detection . . . 175
12.1 Front Passenger Occupant Detection Sensor G128 , Removing and Installing . . . 175
13 Passenger Occupant Detection System . . . 178
13.1 Overview - Passenger Occupant Detection System . . . 178
13.2 Passenger Occupant Detection System Pressure Sensor, Removing and Installing . . . 180
13.3 Passenger Occupant Detection System Control Module J706 , Removing and Installing . . . 186
13.4 Passenger Occupant Detection System Control Module J706 Bracket, Removing and Installing . . . 189
13.5 Required Importer Notification . . . 190
14 Special Tools . . . 192

70 - Interior Trim . . . 193
1 Front Door Trim Panels . . . 193
1.1 Overview - Front Door Trim Panel . . . 193
1.2 Front Door Trim Panel, Removing and Installing . . . 194
1.3 Mirror Cover Trim, Removing and Installing . . . 198
1.4 Interior Door Mechanism, Removing and Installing . . . 198
1.5 Trim Molding, Removing and Installing . . . 199
2 Rear Door Trim Panels . . . 202
2.1 Overview - Rear Door Trim Panel . . . 202
2.2 Rear Door Trim Panel, Removing and Installing . . . 203
2.3 Interior Door Mechanism, Removing and Installing . . . 206

Protected by copyright. Copying for private or commercial purposes, in part or in whole, is not permitted unless authorized by Volkswagen AG. Volkswagen AG does not guarantee or accept any liability with respect to the correctness of information in this document. Copyright by Volkswagen AG.

2.4 Trim Molding, Removing and Installing . . . 207
3 Instrument Panel . . . 210
3.1 Overview - Instrument Panel . . . 210
3.2 Instrument Panel Side Cover, Removing and Installing . . . 211
3.3 Instrument Panel Decorative Trim, Removing and Installing . . . 211
3.4 Light Switch Trim, Removing and Installing . . . 212
3.5 Instrument Cluster Trim, Removing and Installing . . . 212
3.6 Instrument Panel, Removing and Installing . . . 213
3.7 Instrument Panel Vent, Removing and Installing . . . 220
3.8 Side Defroster Vent, Removing and Installing . . . 223
3.9 Front Passenger Side Impact Absorber, Removing and Installing . . . 223
4 Instrument Panel Central Tube . . . 225
4.1 Overview - Instrument Panel Central Tube . . . 225
4.2 Overview - Driver Side Impact Absorber . . . 227
4.3 Crash Bolster, Removing and Installing . . . 228
4.4 Instrument Panel Central Tube, Removing and Installing . . . 229
4.5 Driver Side Impact Absorber, Removing and Installing . . . 232
5 Passenger Compartment Trim . . . 234
5.1 Component Location Overview - Vehicle Interior Trim Panel . . . 234
5.2 Overview - Sill Panel Strip . . . 238
5.3 Overview - A-Pillar Trim Panel . . . 239
5.4 Overview - B-Pillar Trim Panel . . . 240
5.5 Overview - C-Pillar Trim Panel . . . 242
5.6 Overview - D-Pillar Trim Panel . . . 244
5.7 Overview - Side Trim Panel . . . 246
5.8 Overview - Wheel Housing Trim Panel . . . 246
5.9 Overview - Foot Rest and Carpet . . . 249
5.10 Sill Panel Strip, Removing and Installing . . . 249
5.11 A-Pillar Gap Cover, Removing and Installing . . . 251
5.12 A-Pillar Trim Panel, Removing and Installing . . . 252
5.13 B-Pillar Trim Panel, Removing and Installing . . . 256
5.14 C-Pillar Trim Panel, Removing and Installing . . . 261
5.15 D-Pillar Trim Panel, Removing and Installing . . . 264
5.16 Side Trim Panel, Removing and Installing . . . 265
5.17 Wheel Housing Trim Panel, Removing and Installing . . . 267
5.18 Foot Rest, Removing and Installing . . . 271
5.19 Carpet, Removing and Installing . . . 272
6 Luggage Compartment Trim Panels . . . 274
6.1 Component Location Overview - Luggage Compartment Trim Panels . . . 274
6.2 Overview - Rear Shelf Compartment . . . 277
6.3 Overview - Luggage Compartment Side Trim Panel . . . 278
6.4 Overview - Luggage Compartment Floor . . . 280
6.5 Overview - Upper Rear Lid Trim Panel . . . 282
6.6 Overview - Rear Lid Lower Trim Panel . . . 283
6.7 Luggage Compartment Cover, Removing and Installing . . . 283
6.8 Lock Carrier Trim Panel, Removing and Installing . . . 284
6.9 Rear Shelf Compartment, Removing and Installing . . . 285
6.10 Tie Down, Removing and Installing . . . 287
6.11 Luggage Compartment Floor Covering Bracket, Removing and Installing . . . 287
6.12 Luggage Compartment Side Trim Panel, Removing and Installing . . . 289
6.13 Rear Lid Upper Trim Panel, Removing and Installing . . . 293
6.14 Rear Lid Lower Trim Panel, Removing and Installing . . . 295
7 Roof Trim Panels . . . 297
7.1 Overview - Headliner . . . 297
7.2 Roof End Strip, Removing and Installing . . . 299

Copyright by Volkswagen AG. Protected by copyright. Copying, distribution and publication are not permitted without authorised by Volkswagen AG. Volkswagen AG does not guarantee or accept any liability with respect to the correctness of information in this document.

7.3 Headliner, Removing and Installing . . . 299
7.4 Roof Reinforcement, Attaching to Body . . . 303
8 Special Tools . . . 307

72 - Seat Frames . . . 310

1 Overview - Seat Versions . . . 310
1.1 Component Location Overview - Seat Versions . . . 310
1.2 Front Seat, Mounting on Fixture for Seat Repair . . . 311
2 Front Seats . . . 313
2.1 Component Location Overview - Electric and Electronic Components . . . 314
2.2 Overview - Front Seat . . . 318
2.3 Overview - Backrest Release and Entry Assistance . . . 322
2.4 Overview - Front Backrest . . . 323
2.5 Overview - Seat Pan . . . 327
2.6 Overview - Seat Height Adjuster . . . 331
2.7 Overview - Seat Angle Adjuster . . . 333
2.8 Overview - Storage Compartment . . . 334
2.9 Overview - Fire Extinguisher . . . 335
2.10 Front Seat, Removing and Installing . . . 335
2.11 Front Seat, Removing with Faulty Driver/Front Passenger Seat Forward/Back Adjustment Motor V28 / V31 . . . 339
2.12 Airbag Adapter, Connecting and Disconnecting . . . 343
2.13 Tunnel-Side Seat Trim, Removing and Installing . . . 344
2.14 Sill-Side Seat Trim, Removing and Installing . . . 345
2.15 Seat Trim Bracket, Removing and Installing . . . 348
2.16 Front Backrest, Removing and Installing . . . 349
2.17 Seat Angle Adjuster, Removing and Installing . . . 351
2.18 Seat Height Adjustment Handle, Removing and Installing . . . 352
2.19 Seat Height Adjuster, Removing and Installing . . . 353
2.20 Seat Pan with Driver/Front Passenger Seat Forward/Back Adjustment Motor V28 / V31 , Removing and Installing . . . 357
2.21 Backrest Adjuster, Removing and Installing . . . 358
2.22 Lumbar Support Adjuster, Removing and Installing . . . 359
2.23 Headrest, Removing and Installing . . . 360
2.24 Headrest Guide, Removing and Installing . . . 361
2.25 Backrest Release Trim, Removing and Installing . . . 361
2.26 Backrest Release, Removing and Installing . . . 362
2.27 Connecting Cable, Removing and Installing . . . 363
2.28 Backrest Release Mount, Removing and Installing . . . 363
2.29 Backrest Release Cable, Removing and Installing . . . 364
2.30 Backrest Release Cable, Adjusting . . . 365
2.31 Entry Assistance Release Cable A, Removing and Installing . . . 367
2.32 Entry Assistance Release Cable A, Adjusting . . . 367
2.33 Entry Assistance Release Cable B, Removing and Installing . . . 369
2.34 Gliding Piece, Removing and Installing . . . 370
2.35 Storage Compartment, Removing and Installing . . . 371
2.36 Driver/Front Passenger Seat Lumbar Support Adjustment Switch E176 / E177 , Removing and Installing . . . 372
2.37 Lumbar Support Adjustment Motors V125 / V126 / V129 / V130 , Removing and Installing . . . 372
2.38 Driver and Front Passenger Seat Adjustment Control Head E470 / E471 , Removing and Installing . . . 373
3 Rear Seats . . . 375
3.1 Overview - Bench Seat/Single Seat . . . 375
3.2 Overview - Rear Seat Backrest . . . 377
3.3 Overview - Locking Mechanism . . . 379

Protected by copyright. Copying for private or commercial purposes, in part or in whole, is not permitted unless authorised by Volkswagen AG. Volkswagen AG does not guarantee or accept any liability with respect to the correctness of information in this document. Copyright by Volkswagen AG.

3.4 Overview - Center Armrest . . . 380
3.5 Overview - Side Cushion . . . 381
3.6 Overview - Backrest Remote Release . . . 381
3.7 Bench Seat/Single Seat, Removing and Installing . . . 382
3.8 Rear Seat Backrest, Removing and Installing . . . 384
3.9 Locking Mechanism Trim, Removing and Installing . . . 386
3.10 Rear Seat Backrest Locking Mechanism, Removing and Installing . . . 386
3.11 Pass-Through Cover Frame, Removing and Installing . . . 387
3.12 Pass-Through Door, Removing and Installing . . . 388
3.13 Center Armrest, Removing and Installing . . . 389
3.14 Headrest, Removing and Installing . . . 390
3.15 Headrest Guide, Removing and Installing . . . 390
3.16 Side Cushion, Removing and Installing . . . 391
3.17 Release Cable for Rear Seat Backrest Remote Release, Disconnecting and Connecting . . . 393
3.18 Actuator for Rear Seat Backrest Remote Release, Removing and Installing . . . 394
3.19 Rear Seat Backrest Remote Release Cable, Removing and Installing . . . 395
4 Special Tools . . . 398

74 - Seat Upholstery, Covers . . . 402
1 Front Seat Covers and Cushions . . . 402
1.1 Overview - Seat Pan Cover and Cushion . . . 402
1.2 Overview - Backrest Cover and Cushion . . . 403
1.3 Overview - Seat Heating Element . . . 404
1.4 Seat Pan Cover and Cushion, Removing and Installing . . . 405
1.5 Backrest Cover and Cushion, Removing and Installing . . . 406
1.6 Seat Pan Cover and Cushion, Separating . . . 408
1.7 Backrest Cover and Cushion, Separating . . . 410
1.8 Driver/Front Passenger Seat Heating Element Z6 / Z8 , Removing and Installing . . . 414
1.9 Driver/Front Passenger Backrest Heating Element Z7 / Z9 , Removing and Installing . . . 415
2 Rear Seat Covers and Cushions . . . 417
2.1 Overview - Bench Seat Cover and Cushion . . . 417
2.2 Overview - Rear Seat Backrest Cover and Cushion . . . 418
2.3 Bench Seat Cover and Padding, Removing and Installing . . . 419
2.4 Rear Seat Backrest Cover and Cushion, Removing and Installing . . . 419
2.5 Center Cushion, Removing and Installing, Backrest with Pass-Through . . . 422
2.6 Bench Seat Cover and Cushion, Separating . . . 422
2.7 Rear Seat Backrest Cover and Cushion, Separating . . . 423
3 Special Tools . . . 424
4 Revision History . . . 425

Protected by copyright. Copying for private or commercial purposes, in part or in whole, is not permitted unless authorised by Volkswagen AG. Volkswagen AG does not guarantee or accept any liability with respect to the correctness of information in this document. Copyright by Volkswagen AG.

00 – General, Technical Data

1 Safety Precautions

(Edition 09.2015)

Protected by copyright. Copying for private or commercial purposes, in part or in whole, is not permitted unless authorised by Volkswagen AG. Volkswagen AG does not guarantee or accept any liability with respect to the correctness of information in this document. Copyright by Volkswagen AG.

⇒ “1.1 Safety Precautions when Working on Start/Stop System”, page 2

⇒ “1.2 Safety Precautions for Pyrotechnic Components”, page 3

⇒ “1.3 Airbag, Belt Tensioner and Battery Cut-Out Units, Storing, Transporting and Disposing (Pyrotechnic Components)”, page 5

⇒ “1.4 Additional Side Airbag Safety Precautions”, page 6

⇒ “1.5 Additional Head Curtain Airbag Safety Precautions”, page 7

⇒ “1.6 Front Side Airbag Crash Sensors (Pressure Sensors) Safety Precautions”, page 7

⇒ “1.7 Passenger Occupant Detection System Deactivation Additional Safety Precautions, Market-Specific”, page 9

⇒ “1.8 Restraint System Pyrotechnical, Electric and Mechanical Components, Replacing After a Collision”, page 9

⇒ “1.9 Airbag Fasteners, Checking After a Collision”, page 11

⇒ “1.10 Collision without Airbag Deployment”, page 11

⇒ “1.11 Seat Belts, Checking”, page 12

⇒ “1.12 Seat Belt Webbing, Checking”, page 12

⇒ “1.13 Automatic Belt Retractor (Locking Function), Checking”, page 13

⇒ “1.14 Seat Belt Latch, Visually Inspecting”, page 14

⇒ “1.15 Seat Belt Latch, Function Test”, page 14

⇒ “1.16 Seat Belt Relays and Belt Tongue, Checking”, page 14

⇒ “1.17 Fasteners and Mounting Points, Checking After a Collision”, page 15

⇒ “1.18 Seat Belt for Child Seat, Checking Child Seat Restraint Function, Market-Specific”, page 15

⇒ “1.19 Child Seat Anchors, Checking After Collision”, page 15

⇒ “1.20 Automatic Dimming Interior Rearview Mirror Safety Precautions”, page 16

1.1 Safety Precautions when Working on Start/Stop System

Pay Attention to the following When Working on Vehicles with a Stop/Start System:

WARNING

There is a risk of injury if the engine starts automatically in vehicles with the Start/Stop System.

- *For vehicles with an activated Start/Stop system (recognized by a signal in the instrument cluster), the engine can be started automatically if needed.*
- *Make sure that the Start/Stop System is disabled when working on the vehicle (turn off ignition, if needed, turn the ignition back on).*

Protected by copyright. Copyright by Volkswagen AG. Volkswagen AG does not guarantee or accept any liability with respect to the correctness of information in this document. Copyright by Volkswagen AG.

1.2 Safety Precautions for Pyrotechnic Components

Note

Pyrotechnic components:

- Airbag units
- Belt Tensioner
- Seat belt force limiter (depending on vehicle equipment)
- Belt end fitting tensioner (depending on equipment)
- Battery cut-out elements (depending on vehicle equipment)

Protected by copyright. Copying for private or commercial purposes, in part or in whole, is not permitted unless authorised by Volkswagen AG. Volkswagen AG does not guarantee or accept any liability with respect to the correctness of information in this document. Copyright by Volkswagen AG.

General

Caution

- *Testing, assembly, and repair work may only be performed by qualified personnel.*
- *There is no change interval for airbag units.*
- *Never test with a test light, volt meter or ohm meter.*
- *The pyrotechnic components may be checked only when they are installed and with a Volkswagen approved vehicle diagnostic tester.*
- *When working on pyrotechnic components and on the Airbag Control Module - J234- , the battery ground cable must be disconnected when the ignition is switched on. Then cover the negative terminal.*
- *Wait for 10 seconds after disconnecting the battery.*
- *The ignition must be SWITCHED ON when connecting the battery. Nobody should be inside the vehicle with doing this.*
- *If the ignition is not switched on after the battery is reconnected - "indicator lamps in the instrument cluster do not light up" - the ignition (key/button) may only be switched on when the driver seat is positioned all the way back.*
- *Follow all steps after connecting the battery. Refer to ⇒ Electrical Equipment; Rep. Gr. 27 ; Battery; Battery, Disconnecting and Connecting .*
- *Before handling pyrotechnic components of the restraint system, for example, before disconnecting the electrical harness connector, the technician must discharge static electricity. Touching grounded metal parts, for example, touching the door striker, will discharge the static electricity.*
- *Wash hands after touching ignited restraint system pyrotechnic components.*
- *Pyrotechnic components may not be opened nor repaired; always use new parts (risk of injury).*
- *Pyrotechnic components that have fallen onto a hard surface or show signs of damage must not be installed in vehicle.*
- *Pyrotechnic components should be installed immediately upon removal from shipping package.*
- *If the work must be stopped for awhile, put the pyrotechnic component back into its shipping package.*
- *Do not leave the pyrotechnic component out unattended.*
- *When connecting the passenger safety system pyrotechnic components, only the person performing the work should be in the vehicle.*
- *Do not use any grease, cleaning solutions or similar on pyrotechnic components.*
- *Replace the airbag unit if any contaminants such as oil, grease, paint, dye or solvents have penetrated the fabric.*
- *Pyrotechnic components must not be exposed to temperatures over 100 °C (212 °F), even for a short time.*

Protected by copyright. Copying for private or commercial purposes, in part or in whole, is not permitted unless authorised by Volkswagen AG. Volkswagen AG does not guarantee or accept any liability with respect to the correctness of information in this document. Copyright by Volkswagen AG.

Special Information Regarding Driver and Front Passenger Airbags

- Store the driver and front passenger airbag units in the uninstalled state so that the cushioned side faces upward.

When replacing airbag units, the following sequence must be followed exactly:

1 - Remove the old airbag unit and store with the upholstered side facing up.

2 - Remove the new airbag unit from the transport container and store it with the upholstered side facing up.

3 - Place the old airbag unit in the transport container immediately.

4 - Install the new airbag unit in the vehicle.

Belt Tensioner Special Instructions

- Use extreme care when removing and installing belt tensioner units. Handling belt tensioners improperly is very dangerous and could result in serious personal injury.
- Belt tensioner units that are mechanically damaged (dents, cracks) must always be replaced.
- The open end of the belt tensioner should never be pointed at anyone.
- When connecting a belt tensioner, all mechanical parts, including those in the three-point seat belt, must be secured correctly. If it is not possible to connect the belt tensioner because of insufficient space, the seat belt webbing must be rolled up completely prior to connection. In this case there is no increased safety risk, if all other safety instructions are followed. In particular, this includes the notes regarding the disconnection of the battery and the static discharging of the technician prior to connection of the belt tensioner.
- Even after a crash, it is possible that the belt tensioner ignited, but the belt force limiter did NOT. Treat these components as if they had not ignited!

1.3 Airbag, Belt Tensioner and Battery Cut-Out Units, Storing, Transporting and Disposing (Pyrotechnic Components)

- Storage must conform to national legislation.
- Transport must conform to national and international guidelines, whereby packaging, identification and shipping documents are controlled to the greatest detail.
- Undeployed pyrotechnic components must be disposed of in an orderly manner, conforming to national legislation, in their original packaging! Direct questions to your importer.
- Only pyrotechnic components, which have been ignited completely, may be disposed in industrial waste.

Protected by copyright. Copying for private or commercial purposes, in part or in whole, is not permitted unless authorised by Volkswagen AG. Volkswagen AG does not guarantee or accept any liability with respect to the correctness of information in this document. Copyright by Volkswagen AG.

WARNING

- *This does not apply to belt tensioners that function according to the Wankel pretensioner principle. These are to be treated like undeployed pyrotechnic components (such as airbags, seat belts, pyrotechnic battery cut-out elements).*
- *Workshop equipment cannot determine if Wankel belt tensioners have deployed all pyrotechnic materials.*

1.4 Additional Side Airbag Safety Precautions

Caution

- *Seat covers or protective covers that are not approved specially for use on Volkswagen seats with side airbags must not be used.*
- *Do not cut the backrest cushion in side airbag area.*
- *When installing, the seam in side airbag region must run straight.*
- *All upholstery clips must be replaced (metal and plastic clips).*
- *During installation, all upholstery clips must be placed in the same place they were when they were removed.*
- *If the cover is damaged (with rips, burned holes, etc.) in side airbag region, it must be replaced for safety reasons so that airbag deploys correctly.*
- *Do not repair the backrest cover in the side airbag area (because of special materials and strictly defined seams).*
- *Always replace the backrest padding if the side airbag deploys.*
- *After an accident, all damaged parts must be replaced. If no airbag unit damage is detected, the airbag unit can still be used.*
- *If side airbag units are replaced, the new side airbag number sticker should be removed and placed over the old sticker on the seat pan.*
- *Do not poke the cover with an upholstery needle or other sharp objects near the airbag, the Front Passenger Seat Occupant Sensor - G128- or the passenger occupant detection system mat.*

Protected by copyright. Copying or private or commercial purposes, in part or in whole, is not permitted unless authorised by Volkswagen AG. Volkswagen AG does not guarantee or accept any liability with respect to the correctness of information in this document. Copyright by Volkswagen AG

1.5 Additional Head Curtain Airbag Safety Precautions

Caution

- *Visually inspect the trim panels for damage every time before installing.*
- *Always replace damaged pillar trim panels, never repair.*
- *Ensure secure trim panel seating when installing.*
- *Always replace the entire module when making repairs behind the head curtain airbag.*
- *Handle head curtain airbag modules with great care when removing and installing them to prevent causing any damage.*
- *Place any removed head curtain airbag modules back in their transport containers or on a clean and even surface with a cloth underneath.*
- *After servicing the body in the vicinity of the head curtain airbag, check the body for welding beads, deformation and chafe marks (compare with opposite side of vehicle if necessary).*
- *As long as the gas generator is NOT attached, hold it securely when transporting, removing, installing, etc.*
- *Never rotate, coil, knot, throw, slide, push, hang, squeeze, press, pinch or clamp head curtain airbag module.*
- *They may be folded as long as this does not damage them, especially the protective sleeve.*

1.6 Front Side Airbag Crash Sensors (Pressure Sensors) Safety Precautions

The side airbag crash sensors react to changes in pressure and therefore must be handled very carefully. Note the following points:

Caution

- *Always note the correct installation position and only install in the component location intended in the door.*
- *Protect the crash sensor from impact. Do not use a crash sensor if it has fallen on the floor. When doing body work on the door, the crash sensor should be removed.*
- *The crash sensor is calibrated to the volume of air inside the door. If the door is deformed resulting in a reduced air space inside the door, the function of the crash sensor will be affected.*
- *Avoid contaminating the crash sensor. Do not use compressed air in the area surrounding the crash sensor. Protect crash sensor from filings or shavings (for example, when installing door speakers later). Do not use cavity sealant or spray lubricant in the area of the crash sensor.*
- *Protect against heat and cold. Avoid heating, for example when painting or doing other body work. Crash sensors should not be subjected to temperatures below -40 °C (for example, in non-climate-controlled airplane cargo holds).*
- *Protect the crash sensor from moisture when storing or installing it.*

For proper crash sensor function, effective door seal must be ensured after installation. Note the following points:

- All components (for example, cover, speaker, door trim panel) must be installed correctly.
- The door trim panel clips seal the system. If necessary, replace the clips.

Volkswagen AG. Volkswagen AG does not guarantee or accept any liability with respect to the correctness of information in this document. Copyright by Volkswagen AG. Reproduced by permission of authority. Commercial use or distribution of the data is not permitted, in part or in whole, for private or commercial purposes.

1.7 Passenger Occupant Detection System Deactivation Additional Safety Precautions, Market-Specific

Caution

- *After every repair on the passenger seat in which the seat cover, for example, was "replaced", a basic setting for the Passenger Occupant Detection System Control Module - J706- must be performed using the Vehicle Diagnostic Tester .*
- *Passenger occupant detection system must not come in contact with grease.*
- *There is the danger that the passenger occupant detection system components may be damaged by sharp objects when working on the seat. It is necessary to avoid this danger.*
- *Make sure the seat cushion and the seat cover are installed correctly.*
- *Replace all upholstery clips. Make sure the seat cushion is positioned correctly.*
- *Basic setting of the system is only possible between temperatures of 0 °C and +40 °C (32° and 104 °F).*
- *Make sure that no objects are placed on seat when performing basic setting.*
- *Using a seat cover or placing a cushion on the seat will impair the passenger occupant detection system as well as the effectiveness of the airbag system.*

1.8 Restraint System Pyrotechnical, Electric and Mechanical Components, Replacing After a Collision

Special tools and workshop equipment required

- Vehicle Diagnostic Tester

Note

- *The airbag control module can be used for up to two deployments of the side airbag and/or belt tensioner with airbag generation 8.* »not 8.R«.*
- *The airbag control module can be used for up to two side, driver and front passenger airbag and/or belt tensioner deployments with airbag generation 9.*, 10.* and 8.R.*
- *After the third deployment, the malfunction indicator "Control module faulty" appears.*

The Airbag Control Module Must Be Replaced:

- With driver and passenger airbag deployment "but not with airbag generation 9.*, 10.* and 8.R". Refer to ⇒ page 9
- After three side, driver, and passenger airbag or belt tensioner deployments
- If housing is damaged

Copyright by Volkswagen AG. Protected by copyright. Copying for private or commercial purposes, in part or in whole, is not permitted unless authorised by Volkswagen AG. Volkswagen AG does not guarantee or accept any liability with respect to the correctness of information in this document.

- If there is deformation on tunnel in 200 mm circumference around control module

Always Replace the Following:

- All deployed airbag units

Also with Front Passenger Airbag Deployment:

- Instrument Panel
- Deformed supports of the front passenger airbag unit (cannot be reformed).
- All sensors for front airbag on front end
- Remaining transverse acceleration sensors if the mounting points are deformed in the sensor area

Also with Driver Airbag Deployment:

- Return Spring with Slip Ring
- All sensors for front airbag on front end
- Remaining transverse acceleration sensors if the mounting points are deformed in the sensor area

Also with Side Airbag Deployment:

- Pressure sensors on the deployed side
- Transverse acceleration sensors on the deployed side
- Cover
- Cushion
- With a folding rear seat backrest: side cushion (if equipped)
- Remaining transverse acceleration sensors if the mounting points are deformed in the sensor area

Also with Passenger Occupant Detection System

- Each time the front passenger airbag and/or belt tensioner on the front passenger side is deployed, the Passenger Occupant Detection System Control Module - J706- basic setting must be performed using the Vehicle Diagnostic Tester
- If the seat rail and/or the seat pan need are replaced due to deformations, then a basic setting must be done on the Passenger Occupant Detection System Control Module - J706- using the Vehicle Diagnostic Tester Vehicle Diagnostic Tester .

Also:

- All automatic belt retractors with deployed belt tensioners.
- All automatic belt retractors with deployed seat belt force limiters (depending on vehicle equipment).
- Seat belt latches for all automatic belt retractors with deployed seat belt tensioners with the belt on
- Seat belt height adjuster (manual and power) for all automatic belt retractors with deployed seat belt tensioners with the belt on

– Connect the Vehicle Diagnostic Tester if there is a chance the belt tensioner and/or seat belt force limiter deployed.

– In »Guided Fault Finding« under “15 - Airbag”, check whether there is a crash entry in the airbag control module.

– Also check if the “Resistance too large” error is stored for the belt tensioner and/or belt force limiter. Deployed belt tension-

Protected by copyright. Copying for private or commercial purposes, in part or in whole, is not permitted unless authorized by Volkswagen AG. Volkswagen AG does not guarantee or accept any liability with respect to the correctness of information in this document. Copyright by Volkswagen AG.

ers and/or belt force limiters must fulfill both conditions. “Requirement: the airbag control module was not replaced yet”.

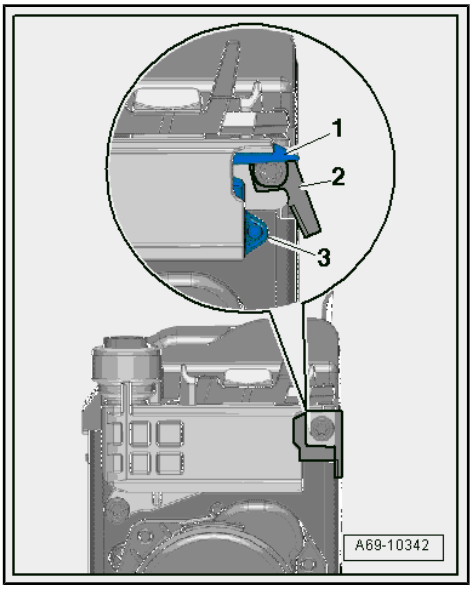

Note

- *The “Resistance too large” error may also be stored if there is an open circuit. Then there is normally no crash entry.*
- *Depending on the crash, the belt tensioner may have deployed while the belt force limiter did »NOT«. Follow the disposal information for pyrotechnic components. Refer to* *⇒ “1.3 Airbag, Belt Tensioner and Battery Cut-Out Units, Storing, Transporting and Disposing (Pyrotechnic Components)”, page 5* .
- *Also check the seat belts. Refer to* *⇒ “1.11 Seat Belts, Checking”, page 12* .
- *Deployed seat belt force limiters can be recognized by the following characteristics:*
- *The pin -1- and tab -3- are protruding out of the belt force limiter housing on the automatic belt retractor.*
- *The tab -2- is no longer vertical but is diagonal toward the outside.*

– If parts of the seat belt system are removed due to an accident, replace the belt system bolts.

– If needed (visual inspection), the following must also be replaced: all faulty components.

– After replacing the airbag units or the control module, affix stickers (only tear-off strips) to the registration card and return the registration card to the relevant Sales Center or to the Importer for registration.

1.9 Airbag Fasteners, Checking After a Collision

All Damaged Fastening Elements Must Always Be Replaced. Reshaping the Components or »Making Them Fit« Is Not Permitted.

The following components must be checked after every airbag deployment.

With a Front Passenger Airbag Deployment:

- Instrument panel central tube, front passenger airbag supports and passenger airbag unit must be installed free of tension. Replace the central tube.
- Check the glove compartment for damage. Replace the glove compartment if damaged.

With a Driver Airbag Deployment:

- Steering wheel: Remove the steering wheel and place it with the rim on a flat surface. The entire steering wheel rim must rest on the surface. Otherwise the steering wheel should be replaced.
- Check steering wheel for smoke residue. If smoke residue is present, replace the steering wheel.

1.10 Collision without Airbag Deployment

- If the Airbag Indicator Lamp - K75- does not indicate a malfunction, then it is not necessary to replace the pyrotechnic components. Seat belts must be checked separately.

Protected by copyright. Copying for private or commercial purposes, in part or in whole, is not permitted unless authorised by Volkswagen AG. Volkswagen AG does not guarantee or accept any liability with respect to the correctness of information in this document. Copyright by Volkswagen AG.

1.11 Seat Belts, Checking

WARNING

After every accident the seat belt system must be inspected systematically! If damage is determined at any inspection point, the customer must be informed that it is necessary to replace the seat belt.

Inspection Points

- Check the seat belt webbing. Refer to ⇒ “1.12 Seat Belt Webbing, Checking”, page 12 .
- Check the automatic belt retractor (locking function). Refer to ⇒ “1.13 Automatic Belt Retractor (Locking Function), Checking”, page 13 .
- Visual inspection of the seat belt latch. Refer to ⇒ “1.14 Seat Belt Latch, Visually Inspecting”, page 14 .
- Seat belt latch function test. Refer to ⇒ “1.15 Seat Belt Latch, Function Test”, page 14 .
- Check the seat belt relays and belt tongue. Refer to ⇒ “1.16 Seat Belt Relays and Belt Tongue, Checking”, page 14 .
- Check the fasteners and mounting points. Refer to ⇒ “1.17 Fasteners and Mounting Points, Checking After a Collision”, page 15 .
- Check the function of the child seat anchorage for additional child seats (not for the driver safety belt). Refer to ⇒ “1.18 Seat Belt for Child Seat, Checking Child Seat Restraint Function, Market-Specific”, page 15 .

Caution

If customer refuses to have a damaged seat belt replaced, an appropriate note should be made in the maintenance schedule booklet.

1.12 Seat Belt Webbing, Checking

Procedure

– Pull the belt completely out of the automatic belt retractor or lap belt adjustment tongue.

– Check the seat belt webbing for contamination, wash with mild soapy water if necessary. Refer to the Owner's Manual.

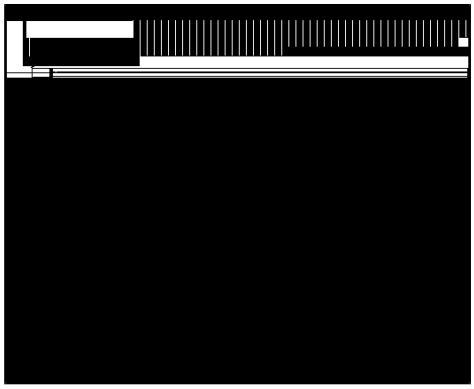

Protected by copyright. Copying for commercial purposes, in part or in whole, is not permitted unless authorised by Volkswagen AG. Volkswagen AG does not guarantee or accept any liability with respect to the correctness of information in this document. Copyright by Volkswagen AG.

Protected by copyright. Copying for private or commercial purposes, in part or in whole, is not permitted unless authorised by Volkswagen AG. Volkswagen AG does not guarantee or accept any liability with respect to the correctness of information in this document. Copyright by Volkswagen AG.

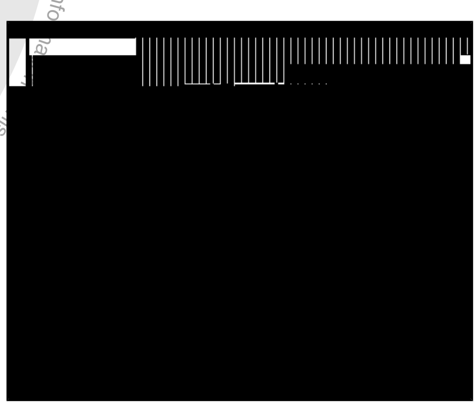

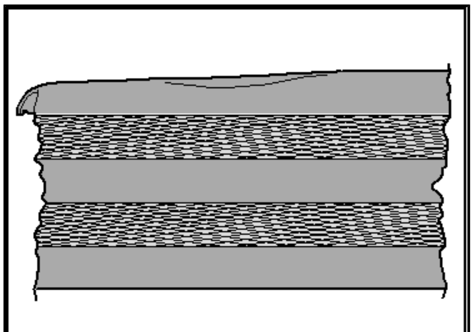
N69-10029

- If one of the types of damage (1 and 2) shown in the following is detected on a vehicle which has been in an accident - replace the entire seat belt with seat belt latch.
- If one kind of damage under points 1, 2, 3 and 4 is detected on a vehicle which has not been in an accident, only the damaged seat belt needs to be replaced.
- 1 - Seat belt webbing cut, torn or frayed.
- 2 - Webbing loops on seat belt edge torn.
- 3 - Burn marks from cigarettes or similar.
- 4 - One side of belt edge deformed or area of belt edge is wavy.

1.13 Automatic Belt Retractor (Locking Function), Checking

The automatic belt retractor has two locking functions.

♦ The first locking function is initiated by the belt being jerked out of the automatic belt retractor (belt extraction acceleration).

Test 1

– Pull the seat belt webbing out of the automatic belt retractor with a firm jerk.

- No locking effect - replace the entire seat belt with seat belt latch.
- If malfunctions are experienced when pulling out or retracting belt, first check whether position of the automatic belt retractor has been altered.
- The second locking function is initiated by change in vehicle velocity (vehicle-dependent locking function).

Test 2

WARNING

For safety reasons, road test should be carried out on traffic-free stretch to ensure that other drivers/pedestrians etc. are not endangered.

– Fasten the seat belt.

– Accelerate the vehicle to 20 km/h (12 mph) and then perform a hard braking maneuver with the foot brake.

• Replace the entire seat belt with the seat belt latch if the seat belt is not locked by locking mechanism during the braking procedure.

1.14 Seat Belt Latch, Visually Inspecting

– Inspect the seat belt latch for the formation of cracks and fracturing.

• If damaged, replace the entire seat belt with seat belt latch.

1.15 Seat Belt Latch, Function Test

Seat Belt Latch, Checking

– Insert the belt tongue into the seat belt latch until it clicks into place. Check whether the locking mechanism is properly engaged by giving the seat belt webbing a firm jerk.

• Replace the entire seat belt with the seat belt latch if the belt tongue fails even once to engage properly in the seat belt latch during at least five tests.

Release, Checking

– Press the seat belt latch to release the seat belt. With the seat belt relaxed, the lock tongue must spring out of seat belt latch without assistance.

• Perform the test at least five times. Replace the entire seat belt with the seat belt latch if the belt tongue fails to spring out even once.

WARNING

Under no circumstances may grease be used to eliminate noise or stiffness at seat belt latch buttons.

1.16 Seat Belt Relays and Belt Tongue, Checking

The plastic-covered guides show fine parallel scoring after straining of the belt system (belt was fastened during accident). (Wear from frequent belt use can be identified by smooth signs of wear that are free of scoring.)

– Check plastic for deformation, rupture and the formation of cracks.

• For groove build-up and/or damage, replace the entire seat belt with the seat belt latch.

Protected by copyright. Copyright. Copying for private and commercial purposes, in part or in whole, is not permitted unless authorised by Volkswagen AG. Volkswagen AG does not guarantee or accept any liability with respect to the correctness of information in this document. Copyright by Volkswagen AG.

1.17 Fasteners and Mounting Points, Checking After a Collision

- ♦ Seat belt latch tongue deformed (stretched).
- ♦ Height adjustment not functional.
- ♦ Mounting points (seat, pillar, vehicle floor) distorted or threads damaged.
- • If damage is found on the components, replace the entire seat belt with the seat belt latch.
- • If parts of the seat belt system are removed due to an accident, replace the belt system bolts.
- • Replace the mounting points.

Note

In damage is discovered that is not accident-related, for example, wear, replace only the particular part which is damaged.

1.18 Seat Belt for Child Seat, Checking Child Seat Restraint Function, Market-Specific

To Check the Function, You Must Install the Entire Belt System, including the Side Trim Panel.

Hold Function, Switching On

- ♦ Pull out the seat belt all the way.

Proper Function

- ♦ The belt must retract with a chattering sound.
- ♦ If the retracting process is stopped, the belt cannot be pulled out anymore.

Switching Off

- ♦ Belt retraction to about 100 mm remaining.
- ♦ Hold function must switch off with a remainder of 100 mm, at the latest. The belt functions normally again.

If the seat belt child seat anchorage does not work, replace the seat belt

1.19 Child Seat Anchors, Checking After Collision

Inspection Points

- ♦ Child seat anchors must be checked for damage or deformation after a collision.
- ♦ Child seat anchors welded or bolted into the body or the seat or backrest must not be repaired or straightened.
- ♦ Child seat anchors bolted into the body or the seat or backrest must be replaced if damaged or deformed.
- ♦ Child seat anchors bolts should be replaced if bracket is damaged.

Copyright © Volkswagen AG. Volkswagen AG does not guarantee or accept any liability with respect to the correctness of information in this document. Protected by copyright. Copying for private or commercial purposes, in part or in whole, is not permitted unless authorised by Volkswagen AG.

1.20 Automatic Dimming Interior Rearview Mirror Safety Precautions

WARNING

- *To produce its unique properties, the interior rearview mirror glass is composed of several layers and contains an electrolyte. Be careful of electrolyte leaking from a broken mirror.*
- *The liquid electrolyte can cause irritation to the skin, eyes and respiratory system.*
- *If liquid electrolyte comes into contact with the eyes or skin, flush thoroughly with plenty of water. If irritation continues, see a doctor.*

Caution

Electrolyte leaking from a broken mirror will damage all plastic surfaces it comes in contact with. Remove spilled electrolyte immediately using clean water and a sponge.

Protected by copyright. Copying for private or commercial purposes, in whole or in part, is not permitted unless authorised by Volkswagen AG. Volkswagen AG does not guarantee or accept any liability with respect to the correctness of information in this document. Copyright by Volkswagen AG.

2 Repair Information

⇒ “2.1 Contact Corrosion”, page 17

⇒ “2.2 Wire Routing and Securing”, page 17

2.1 Contact Corrosion

Contact corrosion can occur if incorrect fasteners (bolts, nuts, washers, etc.) are used.

For this reason, only fasteners with a special surface coating are installed.

In addition, rubber or plastic parts and adhesives are made of non-conductive materials.

Use new parts if necessary. Refer to the Parts Catalog.

Note

- *We recommend only using original replacement parts. They have been tested and are compatible with aluminum.*
- *The use of VW accessories is recommended.*
- *Contact corrosion damage is not covered under warranty!*

2.2 Wire Routing and Securing

Note

When loosening or removing and installing hydraulic, pneumatic or electrical lines, draw sketches or take pictures. This ensures installation is the same as the original.

Protected by copyright. Copying for private or commercial purposes, in part or in whole, is not permitted unless authorised by Volkswagen AG. Volkswagen AG does not guarantee or accept any liability with respect to the correctness of information in this document. Copyright by Volkswagen AG.

68 – Interior Equipment

1 Storage Compartments and Covers

⇒ “1.1 Component Location Overview - Storage Compartment/ Covers”, page 18

⇒ “1.2 Overview - Driver Side Footwell Cover”, page 20

⇒ “1.3 Overview - Driver Side Instrument Panel Cover”, page 22

⇒ “1.4 Overview - Steering Column Trim Panel”, page 23

⇒ “1.5 Overview - Glove Compartment”, page 24

⇒ “1.6 Overview - Headliner Compartment”, page 25

⇒ “1.7 Driver Side Footwell Cover, Removing and Installing”, page 25

⇒ “1.8 Driver Side Storage Compartment, Removing and Installing”, page 28

⇒ “1.9 Driver Side Instrument Panel Cover, Removing and Installing”, page 28

⇒ “1.10 Instrument Cluster Gap Cover, Removing and Installing”, page 30

⇒ “1.11 Upper Steering Column Trim Panel, Removing and Installing”, page 30

⇒ “1.12 Lower Steering Column Trim Panel, Removing and Installing”, page 31

⇒ “1.13 Front Passenger Side Footwell Cover, Removing and Installing”, page 33

⇒ “1.14 Glove Compartment Handle, Removing and Installing”, page 33

⇒ “1.15 Glove Compartment Lid Service Position”, page 35

⇒ “1.16 Glove Compartment Lid Dampening Mechanism, Removing and Installing”, page 35

⇒ “1.17 Glove Compartment, Removing and Installing”, page 36

⇒ “1.18 Glove Compartment Lid, Removing and Installing”, page 37

⇒ “1.19 Headliner Storage Compartment, Removing and Installing”, page 38

⇒ “1.20 Parking Brake Lever Trim, Removing and Installing”, page 38

⇒ “1.21 Parking Brake Lever Handle, Removing and Installing”, page 39

1.1 Component Location Overview - Storage Compartment/Covers

Protected by copyright. Copying for private or commercial purposes, in part or in whole, is not permitted unless authorised by Volkswagen AG. Volkswagen AG does not guarantee or accept any liability with respect to the correctness of information in this document. Copyright by Volkswagen AG.

1 - Instrument Panel

- ❑ Overview. Refer to ⇒ “3.1 Overview - Instrument Panel”, page 210 .

2 - Glove Compartment

- ❑ Overview. Refer to ⇒ “1.5 Overview - Glove Compartment”, page 24 .

3 - Center Console

- ❑ Overview. Refer to ⇒ “3.1 Overview - Center Console”, page 53 .

4 - Steering Column Trim Panel

- ❑ Overview. Refer to ⇒ “1.4 Overview - Steering Column Trim Panel”, page 23 .

5 - Driver Side Instrument Panel Cover

- ❑ Overview. Refer to ⇒ “1.3 Overview - Driver Side Instrument Panel Cover”, page 22 .

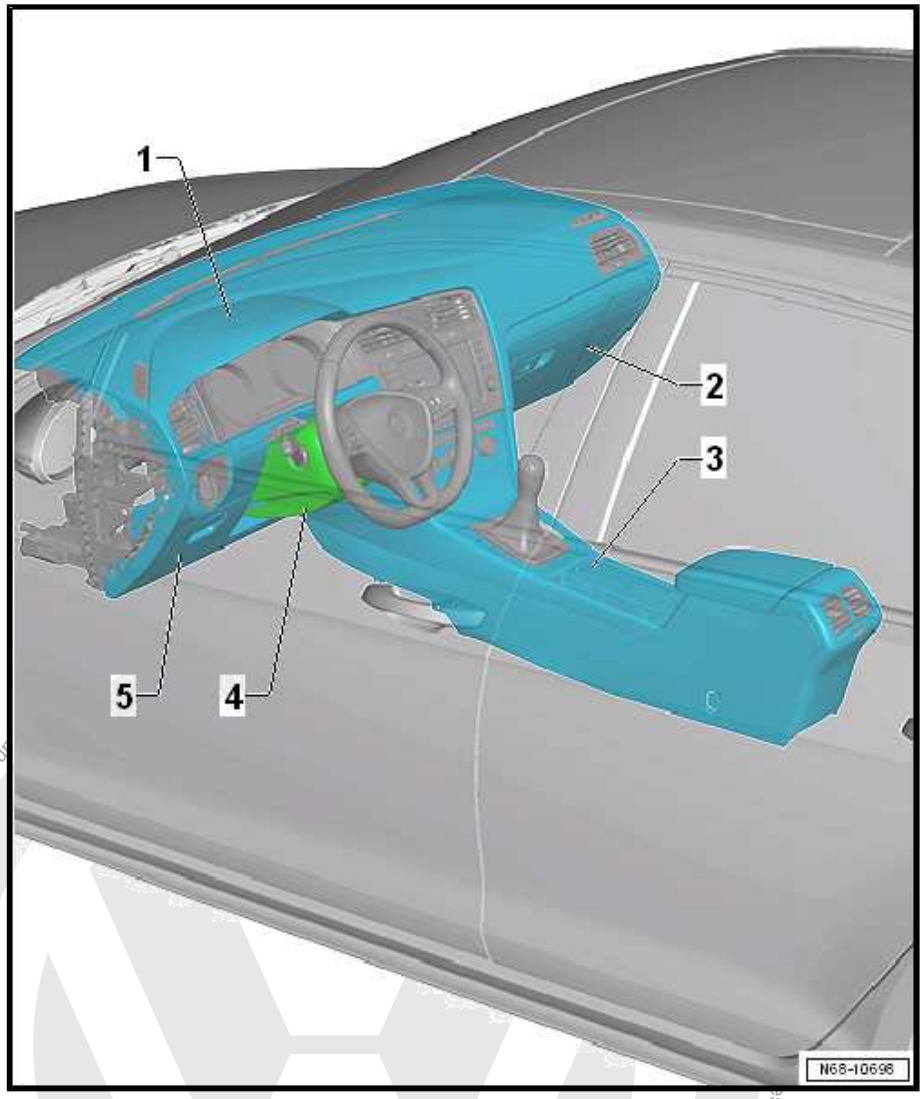

Protected by copyright. Copying for private or commercial purposes, in part or in whole, is not permitted unless authorized. Copyright by Volkswagen AG.

1.2 Overview - Driver Side Footwell Cover

⇒ “1.2.1 Overview - Driver Side Footwell Cover, Vehicles with Manual Transmission”, page 20

⇒ “1.2.2 Overview - Driver Side Footwell Cover, Vehicles without Manual Transmission”, page 21

1.2.1 Overview - Driver Side Footwell Cover, Vehicles with Manual Transmission

1 - Driver Side Footwell Cover

- ❑ Removing and installing. Refer to ⇒ “1.7.1 Driver Side Footwell Cover, Removing and Installing, Vehicles with Manual Transmission”, page 25 .

2 - Bracket

3 - Screw

- ❑ 1.5 Nm

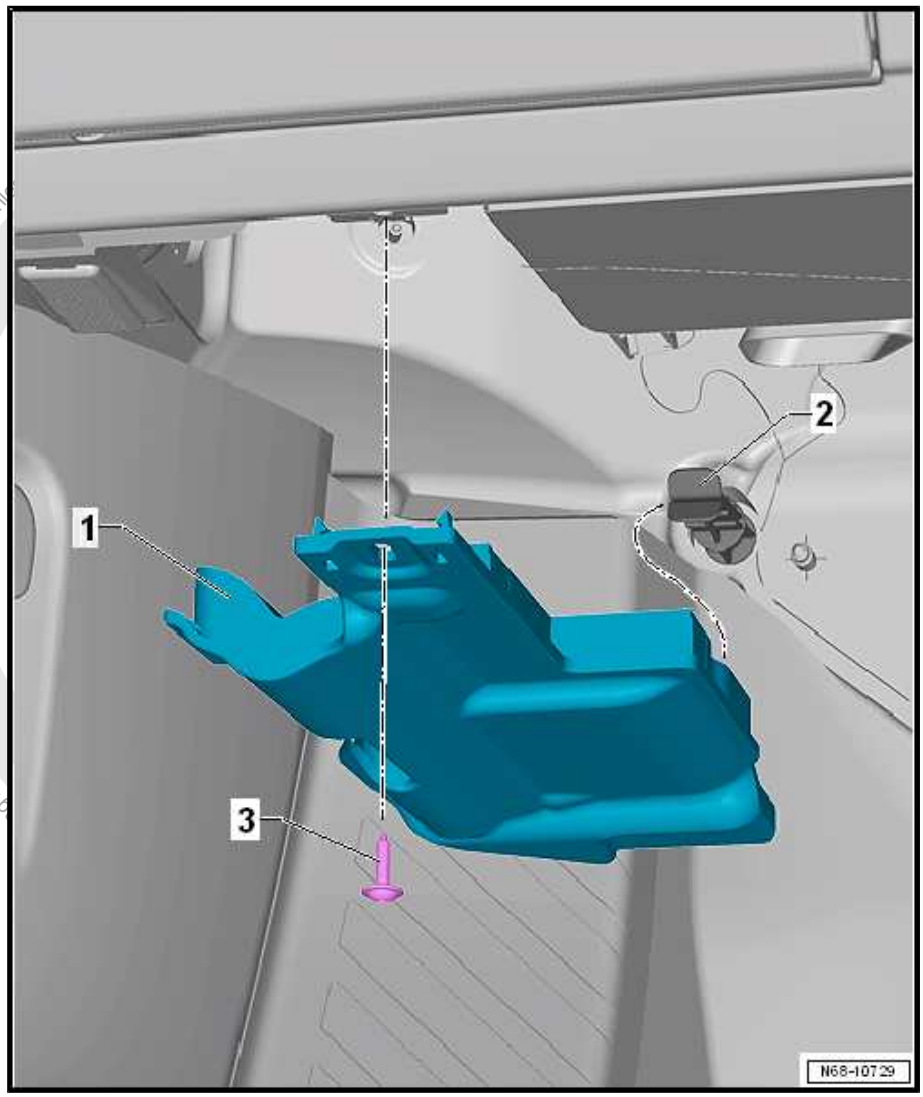

for private or commercial purposes, in part or in whole, is not permitted unl

1.2.2 Overview - Driver Side Footwell Cover, Vehicles without Manual Transmission

1 - Driver Side Footwell Cover

- ❑ Removing and installing. Refer to ⇒ "1.7.2 Driver Side Footwell Cover, Removing and Installing, Vehicles without Manual Transmission", page 26 .

2 - Bracket

- ❑ Quantity: 2

3 - Screw

- ❑ 1.5 Nm
- ❑ Quantity: 2

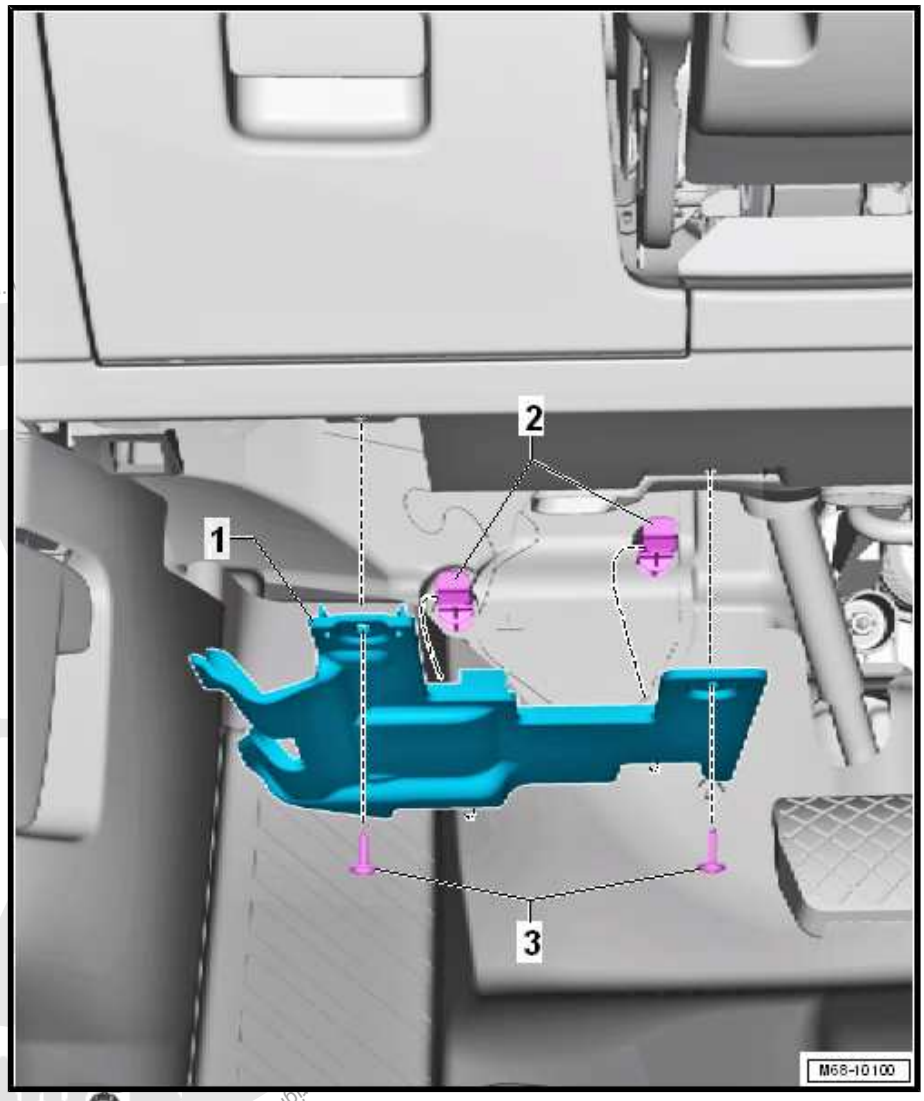

Protected by copyright. Copying for private or commercial purposes, in part or in whole, is not permitted unless authorised by Volkswagen AG.

1.3 Overview - Driver Side Instrument Panel Cover

1 - Screw

- ❑ 1.5 Nm

2 - Screw

- ❑ 1.5 Nm

3 - Driver Side Instrument Panel Cover

- ❑ Removing and installing. Refer to ⇒ “1.9 Driver Side Instrument Panel Cover, Removing and Installing”, page 28 .

4 - Screw

- ❑ 1.5 Nm
- ❑ Quantity: 2

5 - Screw

- ❑ 1.5 Nm

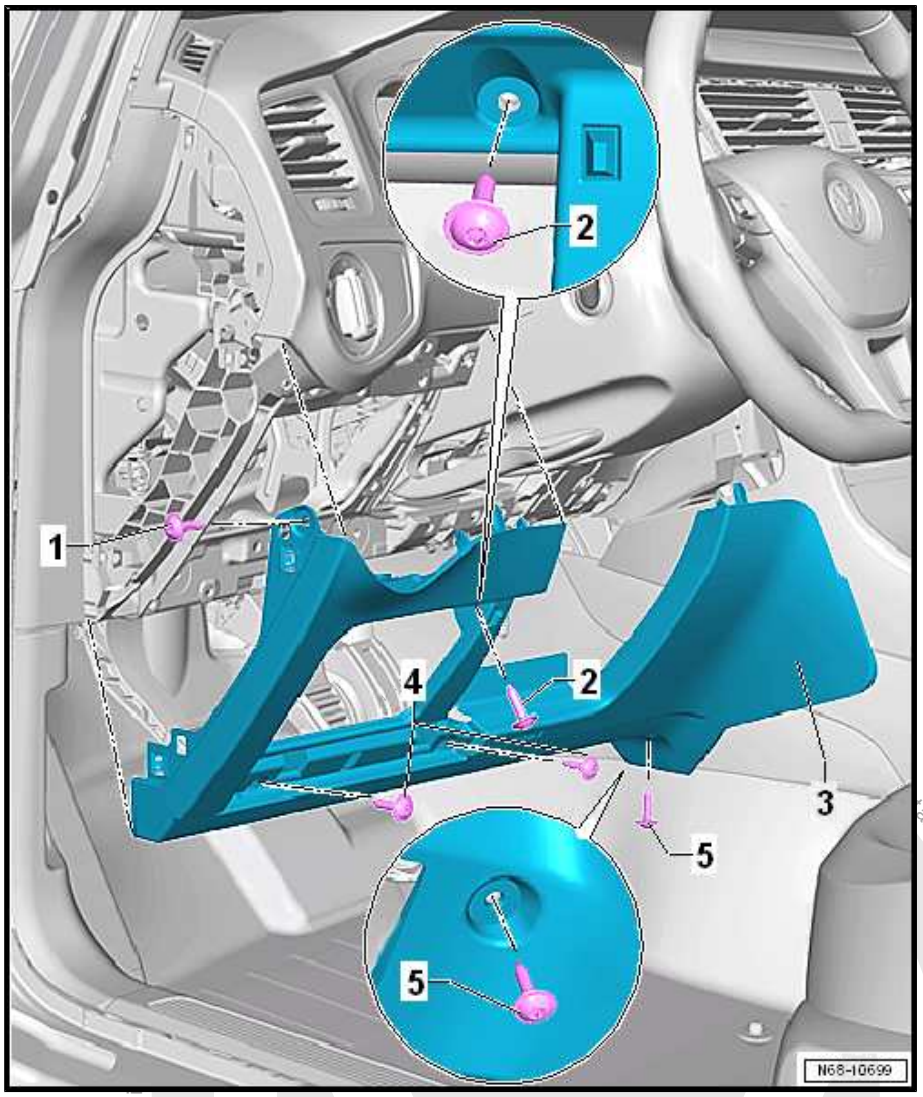

Protected by copyright. Copying for private or commercial purposes, any liability with respect to the correctness of information in this document. Copyright by Volkswagen AG.

1.4 Overview - Steering Column Trim Panel

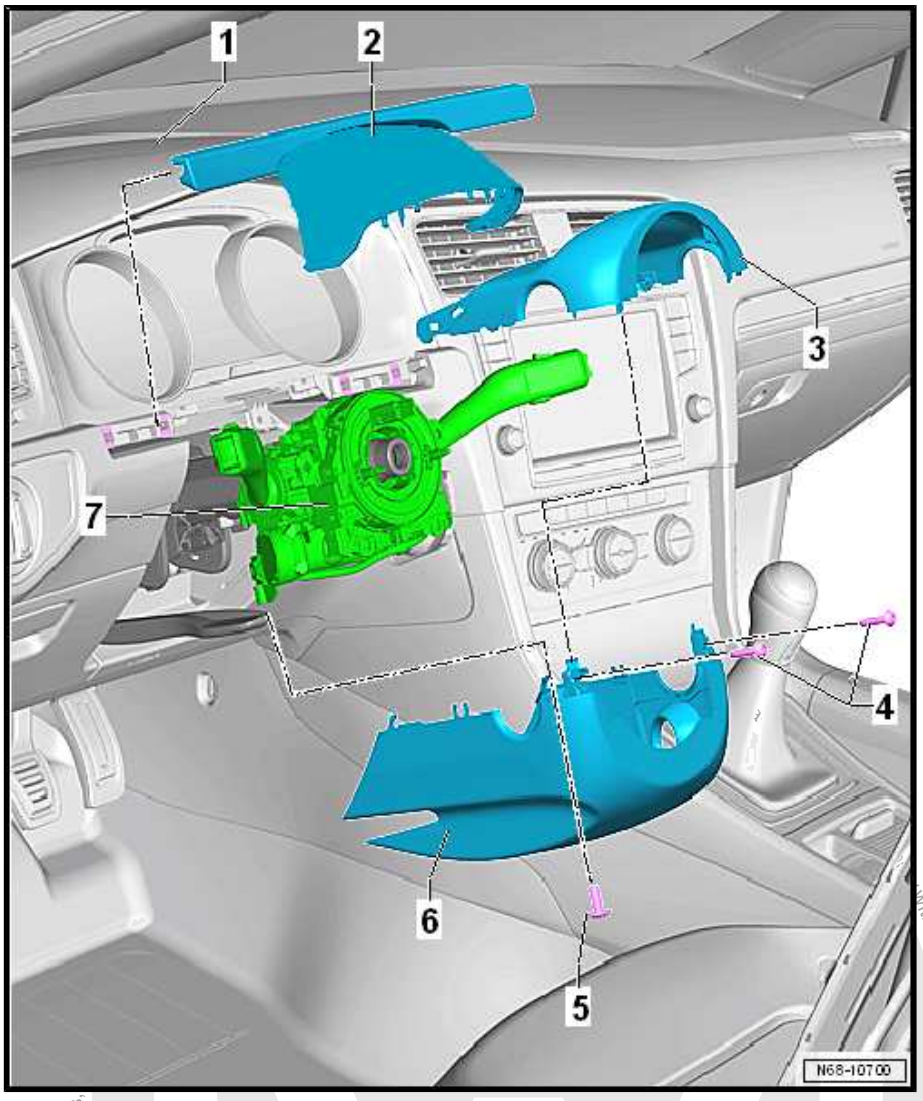

1 - Instrument Panel

- ❑ Overview. Refer to ⇒ "3.1 Overview - Instrument Panel", page 210 .

2 - Gap Cover

- ❑ Removing and installing. Refer to ⇒ "1.10 Instrument Cluster Gap Cover, Removing and Installing", page 30 .

3 - Upper Steering Column Trim Panel

- ❑ Removing and installing. Refer to ⇒ "1.11 Upper Steering Column Trim Panel, Removing and Installing", page 30 .
- ❑ Press on until it engages audibly.

4 - Screw

- ❑ 2.5 Nm
- ❑ Quantity: 2

5 - Screw

- ❑ 2.5 Nm

6 - Lower Steering Column Trim Panel

- ❑ Removing and installing. Refer to ⇒ "1.12 Lower Steering Column Trim Panel, Removing and Installing", page 31 .

7 - Steering Column Switch Module

- ❑ Overview. Refer to ⇒ Electrical Equipment; Rep. Gr. 94 ; Steering Column Switch Module .

Protected by copyright. Copying for private or commercial purposes, with respect to the correctness of information in this document. Copyright by Volkswagen AG.

Protected by copyright. Commercial purposes, in part or in whole, are not permitted unless authorised by Volkswagen AG. Volkswagen AG does not guarantee or accept any liability w

1.5 Overview - Glove Compartment

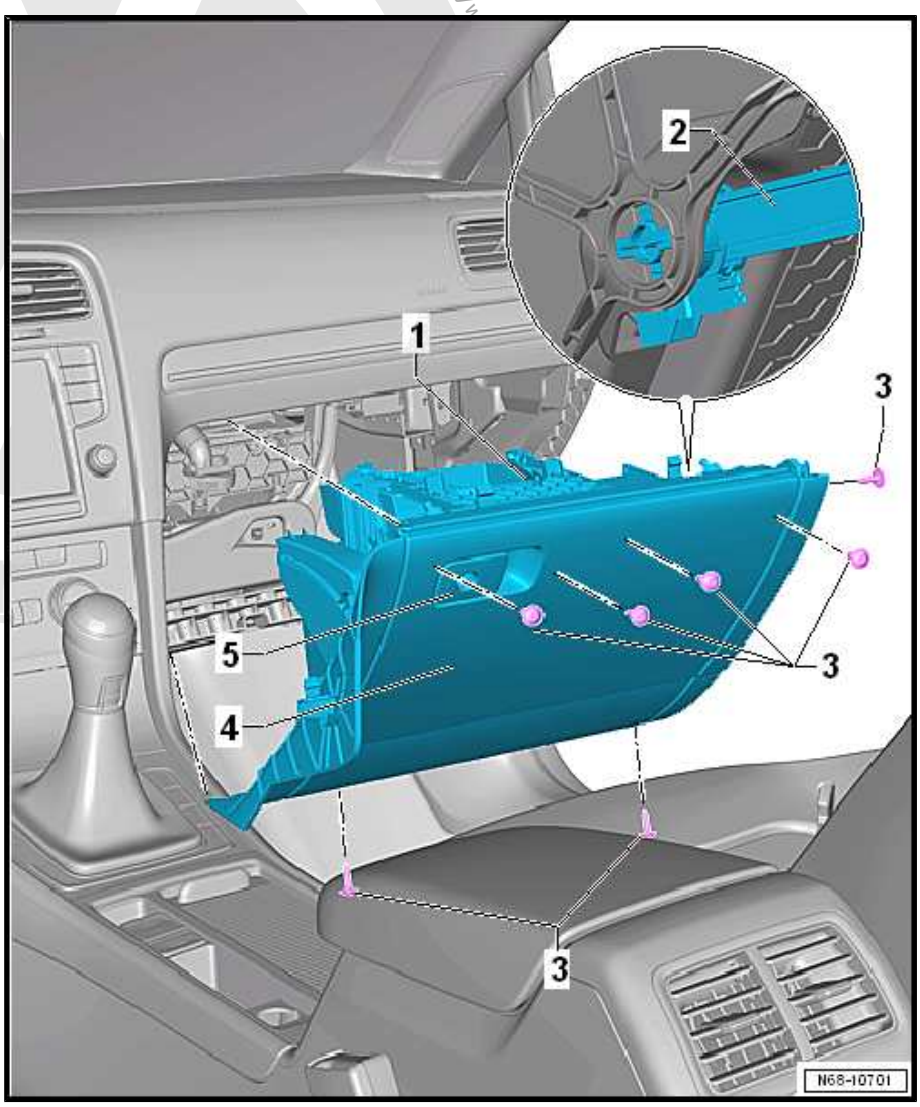

1 - Glove Compartment

- ❑ Removing and installing. Refer to ⇒ “1.17 Glove Compartment, Removing and Installing”, page 36 .

2 - Dampening Mechanism

- ❑ For the glove compartment lid
- ❑ With Glove Compartment Lamp Switch - E26-
- ❑ Removing and installing. Refer to ⇒ “1.16 Glove Compartment Lid Dampening Mechanism, Removing and Installing”, page 35 .

3 - Screw

- ❑ 1.5 Nm
- ❑ Quantity: 7

4 - Glove Compartment Lid

- ❑ Removing and installing. Refer to ⇒ “1.18 Glove Compartment Lid, Removing and Installing”, page 37 .

5 - Glove Compartment Handle

- ❑ Removing and installing. Refer to ⇒ “1.14 Glove Compartment Handle, Removing and Installing”, page 33 .

Protected by copyright. Copying for private or commercial purposes, in part or in whole, is not permitted unless authorised by Volkswagen AG. Volkswagen AG does not guarantee or ac

1.6 Overview - Headliner Compartment

1 - Storage Compartment

- ❑ Removing and installing. Refer to ⇒ "1.19 Headliner Storage Compartment, Removing and Installing", page 38 .

2 - Cover

3 - Screw

- ❑ 1.5 Nm
- ❑ Quantity: 4

4 - Front Interior Lamp - WX1-

- ❑ Component location overview. Refer to ⇒ Electrical Equipment; Rep. Gr. 96 ; Lamps; Component Location Overview - Roof Trim Panel Lamps .

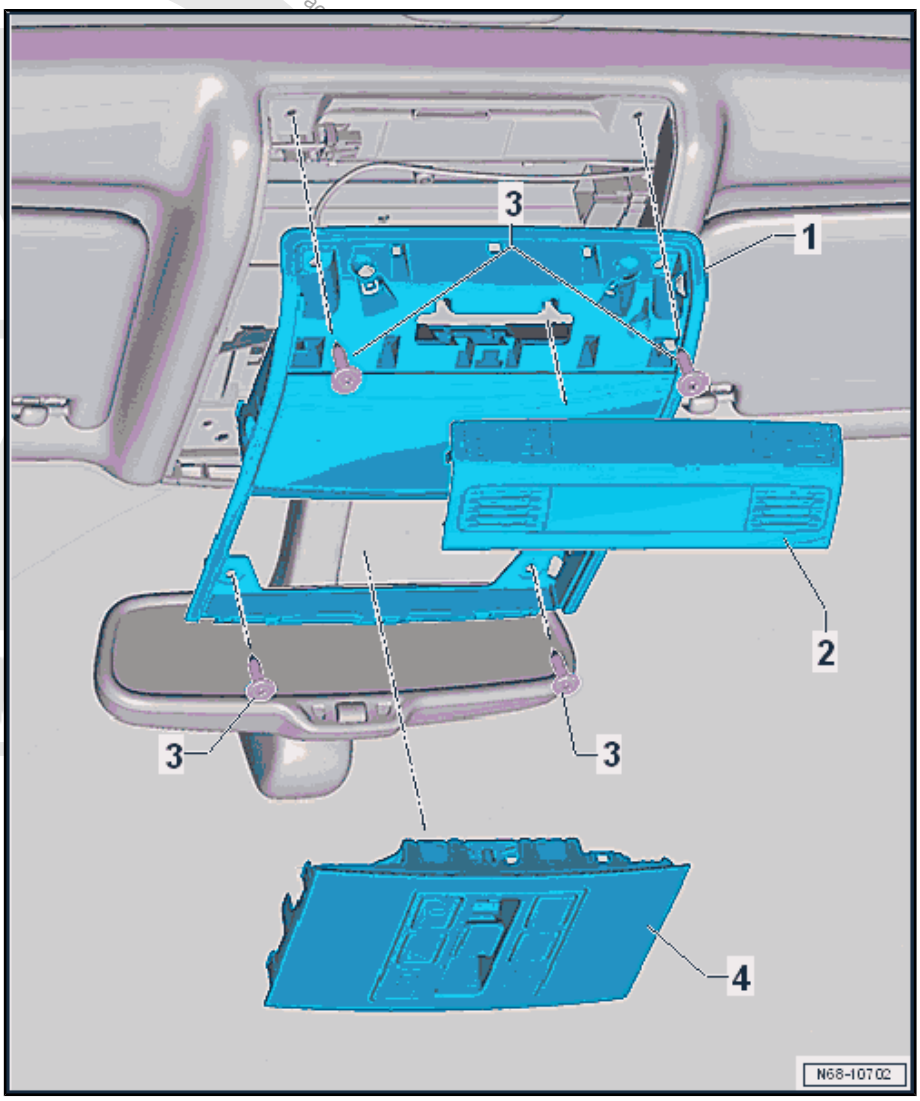

1.7 Driver Side Footwell Cover, Removing and Installing

⇒ "1.7.1 Driver Side Footwell Cover, Removing and Installing, Vehicles with Manual Transmission", page 25

⇒ "1.7.2 Driver Side Footwell Cover, Removing and Installing, Vehicles without Manual Transmission", page 26

1.7.1 Driver Side Footwell Cover, Removing and Installing, Vehicles with Manual Transmission

Special tools and workshop equipment required

- ♦ Torque Wrench 1783 - 2-10Nm - VAG1783-

Removing

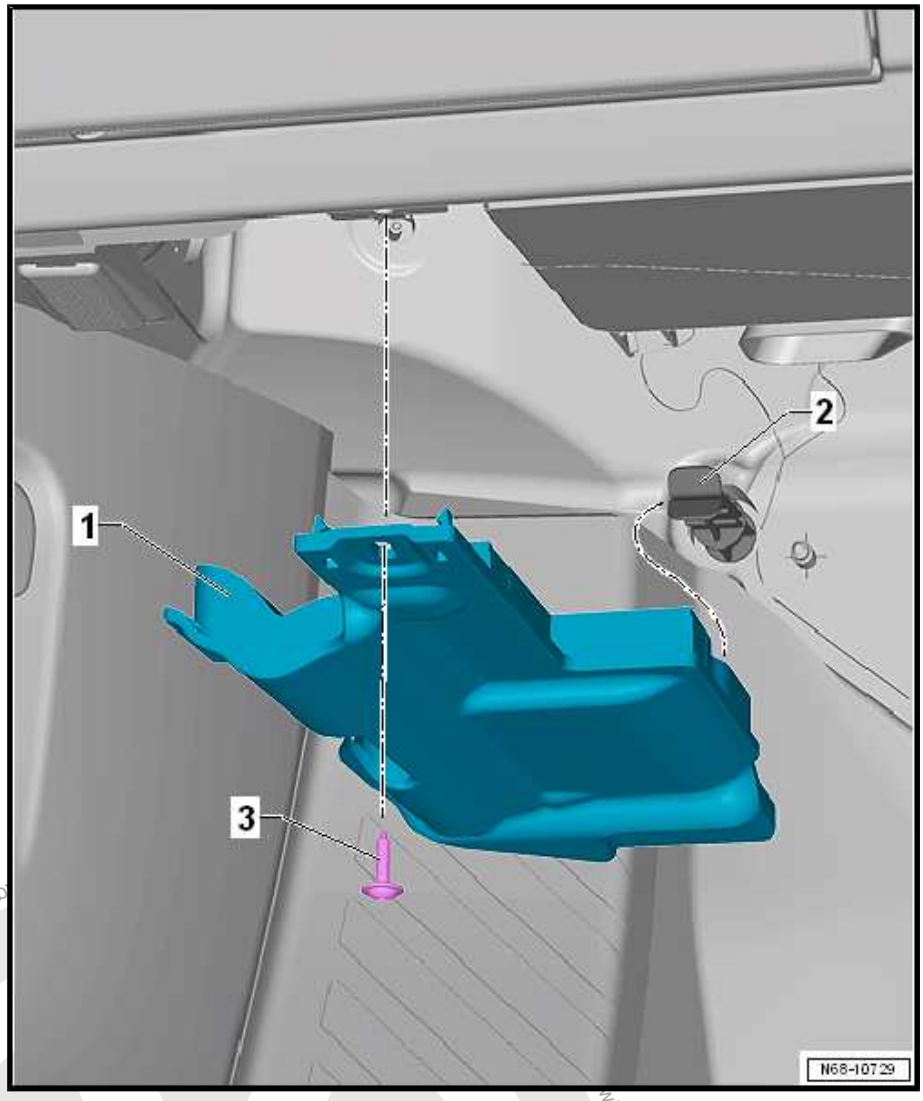

– Remove the bolt -3-.

– Pull the footwell cover -1- on the driver side out of the bracket -2- and remove.

Installing

Note

Check all the fasteners for damage and replace if necessary.

Install in reverse order of removal.

Tightening Specifications

♦ Refer to
⇒ "1.2.1 Overview - Driver Side Footwell Cover, Vehicles with Manual Transmission", page 20

1.7.2 Driver Side Footwell Cover, Removing and Installing, Vehicles without Manual Transmission

Special tools and workshop equipment required

Copyright by Volkswagen. Protected by copyright. Copying for private or commercial purposes, in part or in whole, is not permitted unless authorised by ... with respect to the correctness of information in this document. Copyright by Volkswagen ...

ted unless authorised by Volkswagen AG. Volkswagen AG does not guarantee or accept any
respect to the correctness of inform

- Torque Wrench 1783 - 2-10Nm - VAG1783-

Removing

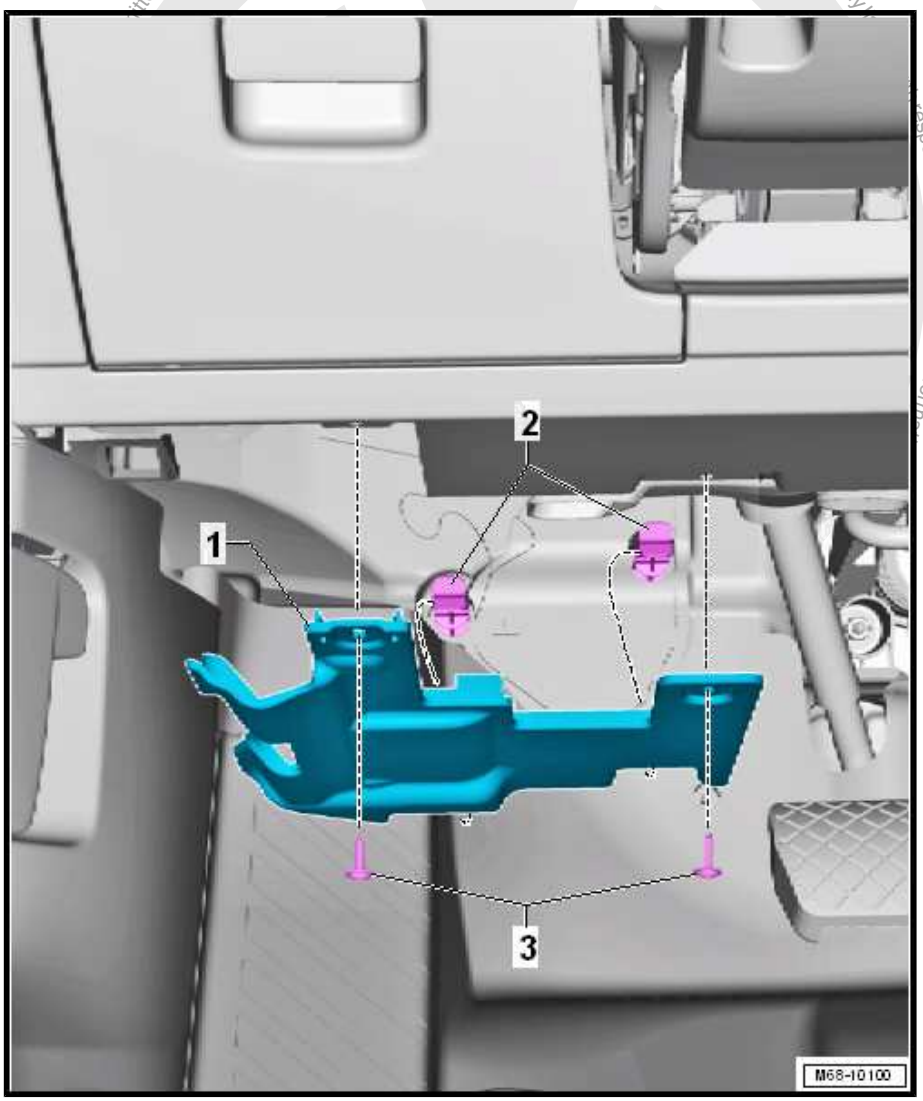

– Remove the bolts -3-.

– Pull the footwell cover -1- on the driver side out of the brackets -2- and remove.

Installing

Note

Check all the fasteners for damage and replace if necessary.

Install in reverse order of removal.

Tightening Specifications

- Refer to
⇒ "1.2.2 Overview - Driver Side Footwell Cover, Vehicles without Manual Transmission", page 21

1.8 Driver Side Storage Compartment, Removing and Installing

Removing

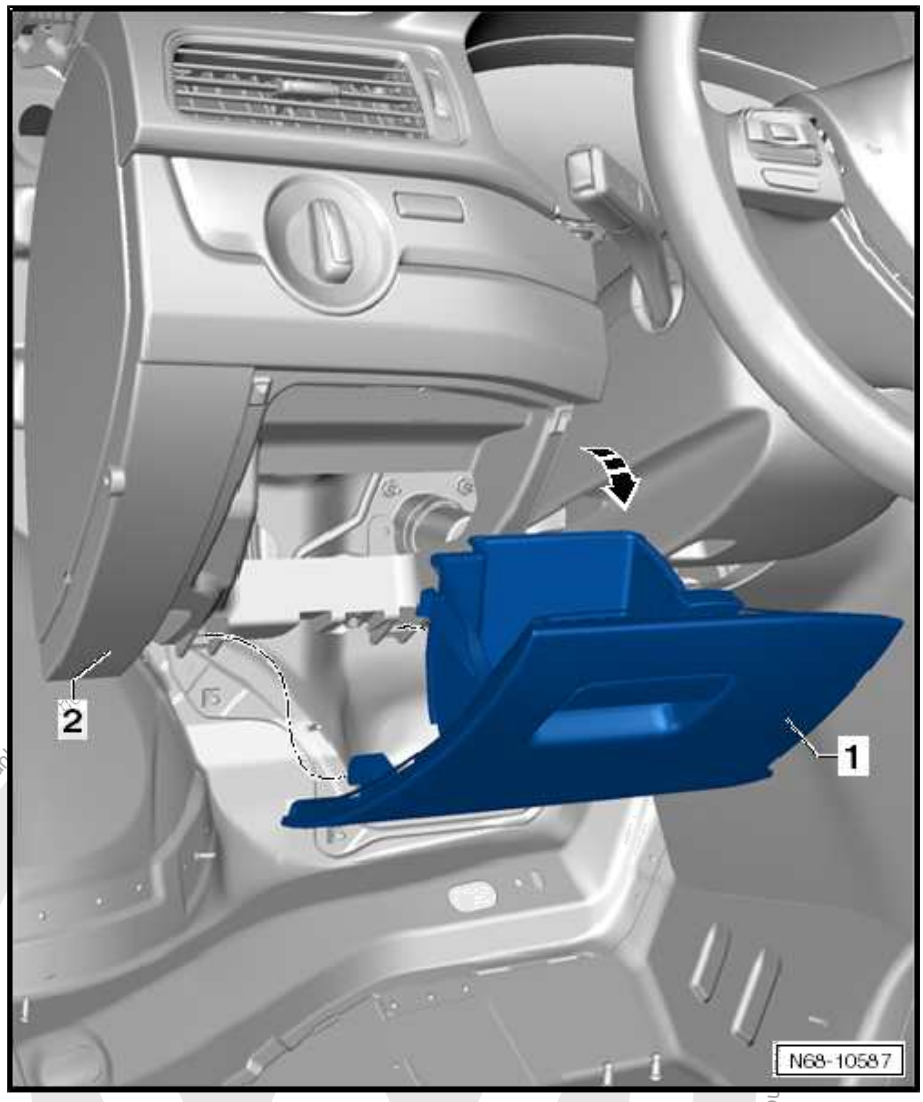

– Open the driver side storage compartment -1- in the direction of the -arrow-.

– Loosen the driver side storage compartment -1- from the upper retainers and remove it from the instrument panel -2-.

Installing

Note

Check all the fasteners for damage and replace if necessary.

Install in reverse order of removal.

1.9 Driver Side Instrument Panel Cover, Removing and Installing

Special tools and workshop equipment required

♦ Torque Wrench 1783 - 2-10Nm - VAG1783-

Protected by copyright. Copying for private or commercial purposes, in part or in whole, is not permitted unless authorized by Volkswagen AG. Copyright by Volkswagen AG.

Removing

- Remove the driver side instrument panel side cover. Refer to ⇒ “3.2 Instrument Panel Side Cover, Removing and Installing”, page 211 .
- Remove the footwell cover on the driver side. Refer to ⇒ “1.7 Driver Side Footwell Cover, Removing and Installing”, page 25 .
- Remove the driver side storage compartment. Refer to ⇒ “1.8 Driver Side Storage Compartment, Removing and Installing”, page 28 .
- Remove center console. Refer to ⇒ “3.8 Center Console, Removing and Installing”, page 59

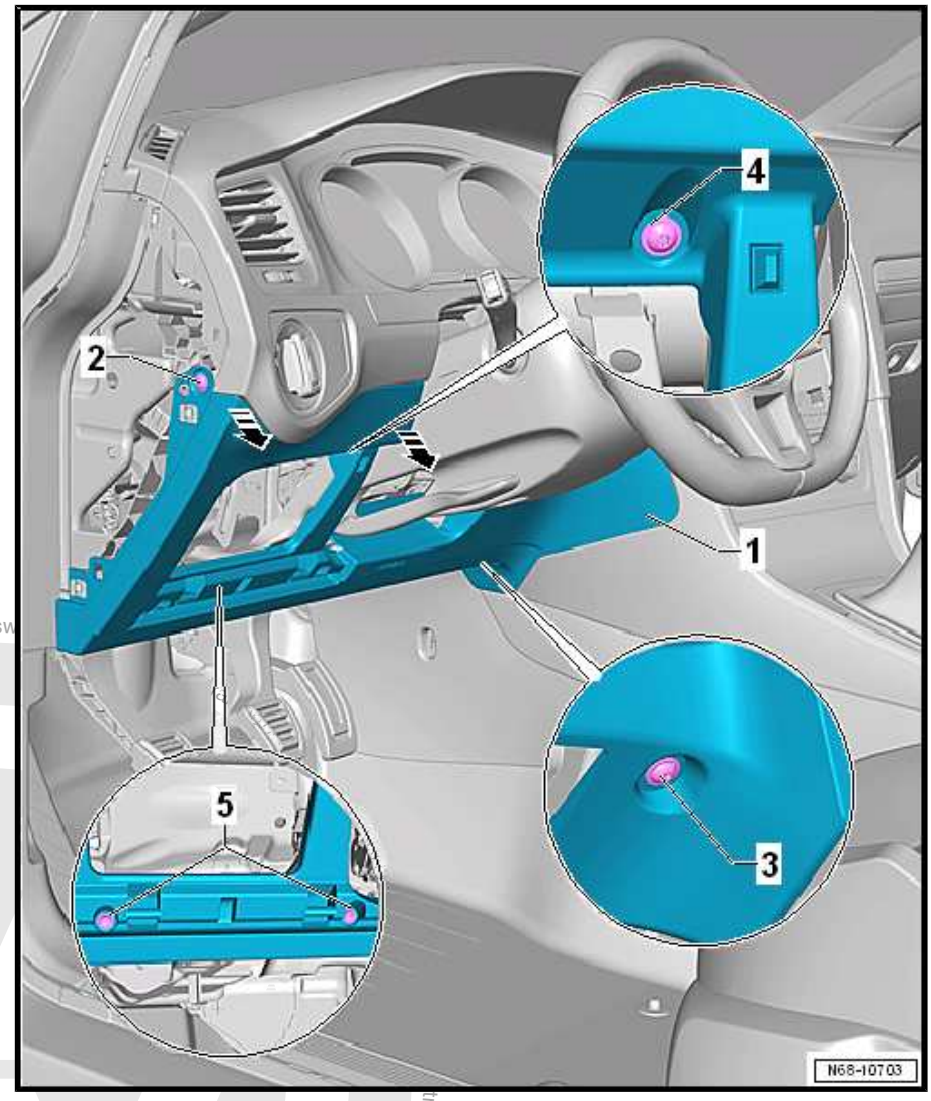

- Remove the side screw -2-.
- Remove the lower screw -3-.
- Remove the bolts -4 and 5-.
- Unclip the driver side instrument panel cover -1- from the instrument panel -arrows- and remove.

Protected by copyright. Copying for private or commercial purposes, in part or in whole, is not permitted unless authorised by Volkswagen AG. Volksw
Copyright by Volkswagen AG.
ness of information in this document.

Installing

Note

Check all the fasteners for damage and replace if necessary.

Install in reverse order of removal.

Tightening Specifications

- Refer to ⇒ “1.3 Overview - Driver Side Instrument Panel Cover”, page 22

1.10 Instrument Cluster Gap Cover, Removing and Installing

Special tools and workshop equipment required

- Trim Removal Wedge - 3409-

Removing

– Release the steering wheel adjustment lever.

– Pull out the steering wheel completely, push it downward and lock it.

– Loosen the instrument cluster gap cover -2- off the mounts on the instrument cluster -1- using the Trim Removal Wedge - 3409- -arrows A-.

– Loosen the instrument cluster gap cover -2- off the mounts on the upper steering column trim panel -3- -arrows B- and remove.

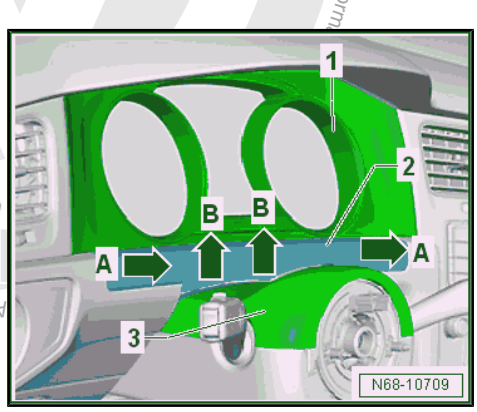

Installing

Note

Check all the fasteners for damage and replace if necessary.

Install in reverse order of removal.

1.11 Upper Steering Column Trim Panel, Removing and Installing

Special tools and workshop equipment required

- Trim Removal Wedge - 3409-

Removing

– Release the steering wheel adjustment lever.

– Pull out the steering wheel completely, push it downward and lock it.

– Loosen the instrument cluster gap cover off the mounts on the instrument cluster using the Trim Removal Wedge - 3409- in direction of -arrows A-.

– Loosen the upper steering column trim panel -1- off the lower steering column trim panel mounts -arrow B- and -arrow C-. To do so, turn the steering wheel accordingly.

Protected by copyright. Copying for private or commercial purposes, in part or in whole, is not permitted unless authorised by Volkswagen AG. Volkswagen AG does not guarantee or accept any liability with respect to the correctness of inform

– Disengage the upper steering column trim panel from the lower steering column trim panel and remove it with the instrument cluster gap cover.

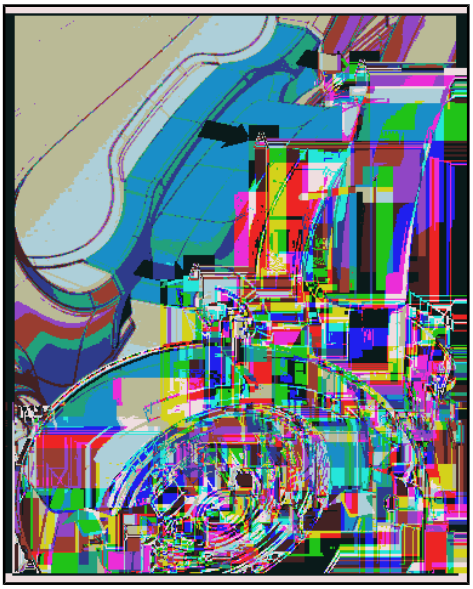

Installing

Note

Check all the fasteners for damage and replace if necessary.

Install in reverse order of removal.

1.12 Lower Steering Column Trim Panel, Removing and Installing

Special tools and workshop equipment required

- Torque Wrench 1783 - 2-10Nm - VAG1783-

Removing

– Remove the upper steering column trim. Refer to ⇒ “1.11 Upper Steering Column Trim Panel, Removing and Installing”, page 30 .

– If necessary, remove the ignition key.

Protected by copyright. Copyright by Volkswagen AG. Volkswagen AG does not guarantee or accept any liability with respect to the correctness of information in this document. Copyright by Volkswagen AG. Copying for private or commercial purposes, in part or in whole, is not permitted unless authorised by Volkswagen AG.

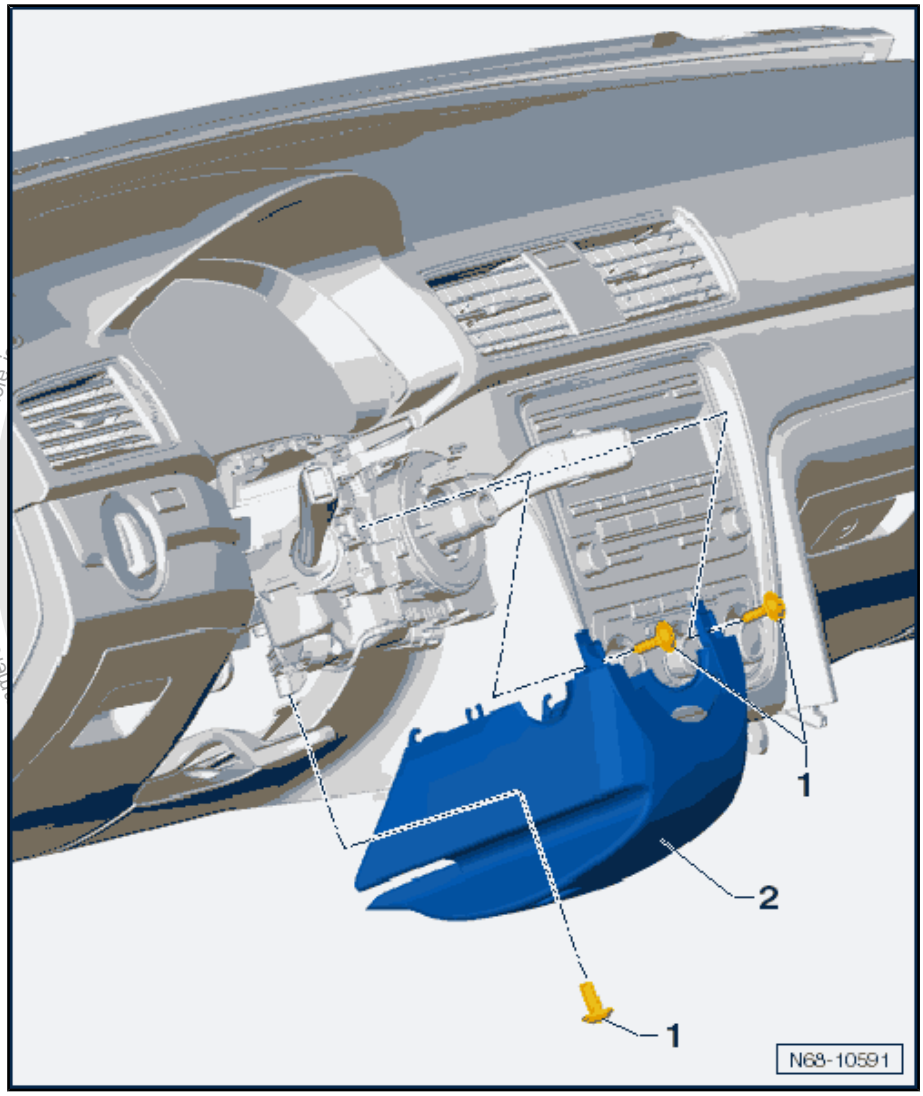

mercial purposes, in part or in whole

– Remove the screws -1- from the lower steering column trim panel. To do so, turn the steering wheel accordingly.
– Remove the lower steering column trim panel -2- from the steering column.
– For vehicles with keyless locking and starting system, disconnect the connector for the Anti-Theft Immobilizer Reader Coil - D2- .

Installing

Note

Check all the fasteners for damage and replace if necessary.

Install in reverse order of removal.

Tightening Specifications

♦ Refer to
⇒ “1.4 Overview - Steering Column Trim Panel”, page 23

1.13 Front Passenger Side Footwell Cover, Removing and Installing

Removing

– Remove the bolts -1-.

– Guide the front passenger side footwell cover -2- out of the instrument panel and center console and remove it.

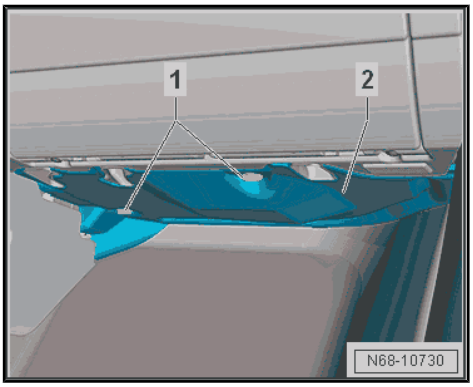

Installing

Note

- *Check all the fasteners for damage and replace if necessary.*
- *The screws -1- are installed hand-tight.*

Install in reverse order of removal.

1.14 Glove Compartment Handle, Removing and Installing

Special tools and workshop equipment required

- Torque Wrench 1783 - 2-10Nm - VAG1783-

Protected by copyright. Copying for private or commercial purposes, in part or in whole, is not permitted unless authorised by Volkswagen AG. Volkswagen AG does not guarantee or accept any liability with respect to the correctness of information in this document. Copyright by Volkswagen AG.

Copyright. Copying for private or commercial purposes, in part or in whole, is not permitted unless authorised

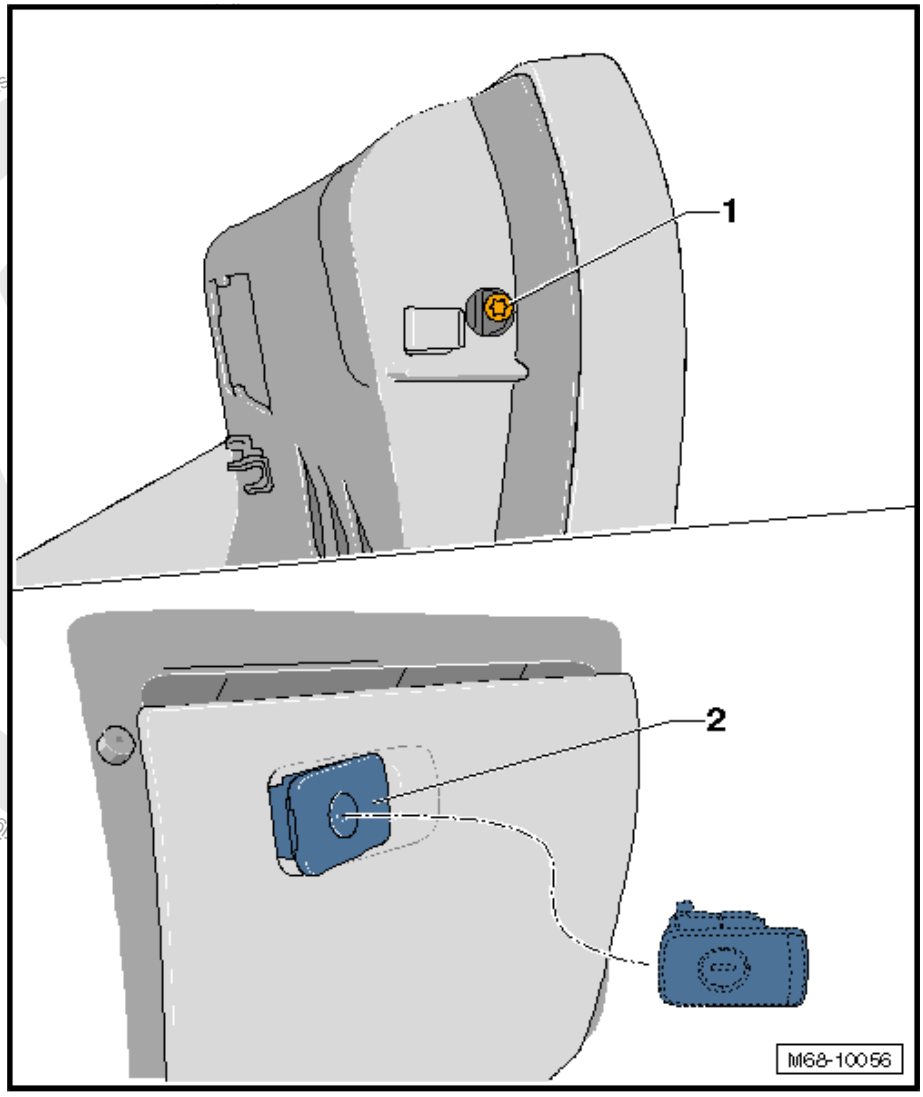

Removing

– Open the glove compartment.

– Remove the bolt -1- and the unlock button -2- from the glove compartment lid.

Installing

Install in reverse order of removal.

Tightening Specifications

Component	Tightening Specification
Release button to glove compartment lid	1.5 Nm

1.15 Glove Compartment Lid Service Position

Moving into Service Position

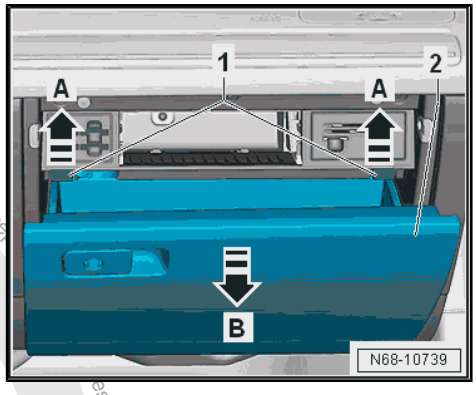

- Open the glove compartment lid -2-.
- Press the stops -1- for the glove compartment lid -2- upward in direction of -arrows A -.
- At the same time, open the glove compartment lid farther -2- in direction of -arrow B-. While doing so, remove the braking element for the dampening mechanism carefully from the damper.

Service Position, Resetting

- Slowly close the glove compartment lid while inserting the braking element for the braking component carefully into the insulation component.
- Close the glove compartment lid farther and lock behind the end stops.

1.16 Glove Compartment Lid Dampening Mechanism, Removing and Installing

Removing

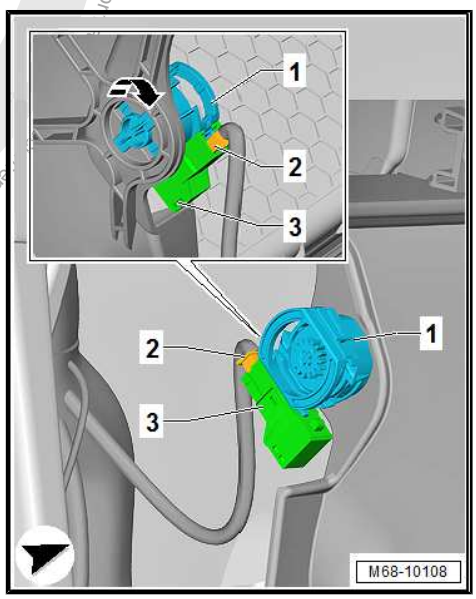

- Move the glove compartment lid into the service position. Refer to
⇒ “1.15 Glove Compartment Lid Service Position”, page 35 .
- Disconnect the connector -2- from the Glove Compartment Lamp Switch - E26- -3-.
- Turn the damper -1- 90° ($^1/_4$ turn) -arrow- and remove it from the glove compartment.

Protected by copyright. Copyright by Volkswagen AG.

– Move/release the braking element -1- in the direction of the -arrow- and remove it from the glove compartment lid -2-.

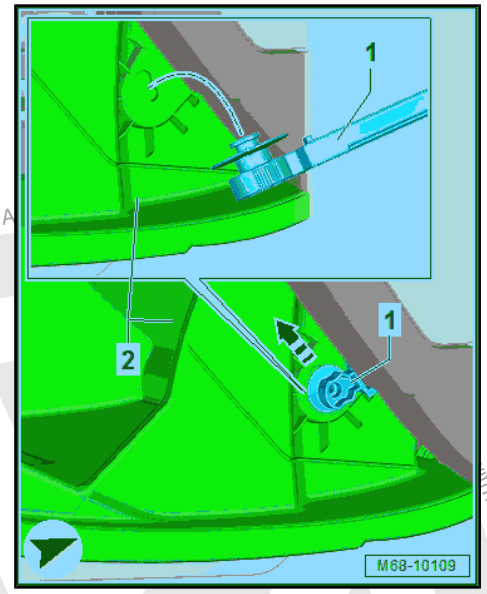

Installing

Note

Check all the fasteners for damage and replace if necessary.

Install in reverse order of removal.

1.17 Glove Compartment, Removing and Installing

Special tools and workshop equipment required

♦ Torque Wrench 1783 - 2-10Nm - VAG1783-

Removing

– Remove the front passenger instrument panel side cover. Refer to
⇒ “3.2 Instrument Panel Side Cover, Removing and Installing”, page 211 .

– Remove the footwell cover on the front passenger side. Refer to
⇒ “1.13 Front Passenger Side Footwell Cover, Removing and Installing”, page 33 .

– Remove center console. Refer to
⇒ “3.8 Center Console, Removing and Installing”, page 59

– If equipped, remove the Information Electronics Control Module 1 - J794- . Refer to ⇒ Communication; Rep. Gr. 91 ; Infotainment System; Information Electronics Control Module 1 J794, Removing and Installing .

Protected by copyright. Copying for private or commercial purposes, in part or in whole, is not permitted unless authorised by Volkswagen AG. Copyright by Volkswagen AG. No liability with respect to the correctness of information in this document.

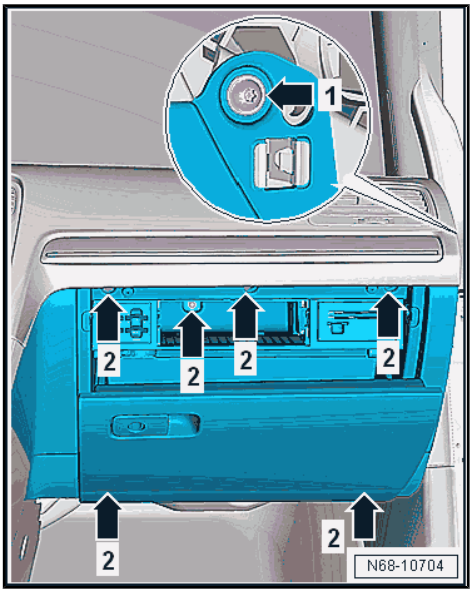

– Remove the side screw -arrow 1-.
– Open the glove compartment lid and remove the screws -2 arrows-.
– Unclip the glove compartment from the instrument panel and remove it just far enough until the hose for the glove compartment cooling is accessible.
– Remove the glove compartment cooling hose from the glove compartment.
– Disconnect any connectors from the glove compartment, free up the wiring guides and remove the glove compartment.

Installing

Note

Check all the fasteners for damage and replace if necessary.

Install in reverse order of removal.

Tightening Specifications

♦ Refer to ⇒ “1.5 Overview - Glove Compartment”, page 24
♦ Refer to ⇒ “3.1 Overview - Center Console”, page 53

1.18 Glove Compartment Lid, Removing and Installing

Removing

– Remove the glove compartment. Refer to ⇒ “1.17 Glove Compartment, Removing and Installing”, page 36 .
– Place the glove compartment on a soft surface.
– Move the glove compartment lid into the service position. Refer to ⇒ “1.15 Glove Compartment Lid Service Position”, page 35 .
– Drive out the left and right hinge bolts -1- with a punch in direction of the -arrow B-.
– Remove the glove compartment lid from the glove compartment.

Installing

Note

Check all the fasteners for damage and replace if necessary.

Install in reverse order of removal.

Protected by copyright. Copying for private or commercial purposes, in part or in whole, is not permitted unless authorised by Volkswagen AG. Volkswagen AG does not guarantee or accept any liability with respect to the correctness of

1.19 Headliner Storage Compartment, Removing and Installing

Special tools and workshop equipment required

- Torque Wrench 1783 - 2-10Nm - VAG1783-

Removing

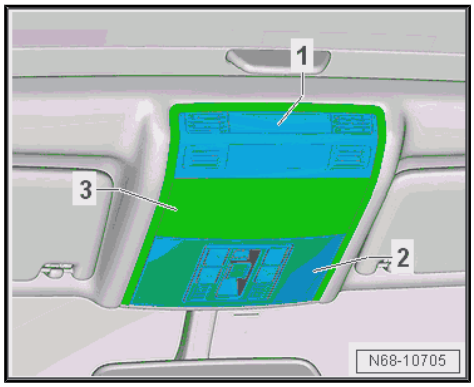

- Switch off the ignition.
- Unclip the cover -1- from the headliner storage compartment -3- and remove it.
- Remove the Front Interior Lamp - WX1- -2-. Refer to ⇒ Electrical Equipment; Rep. Gr. 96 ; Controls; Front Interior Lamp/ Reading Lamp, Removing and Installing .
- If necessary, remove the covers for the interior rearview mirror. Refer to
  ⇒ “5.1 Overview - Interior Rearview Mirror”, page 64 .
- Remove the bolts -1-.

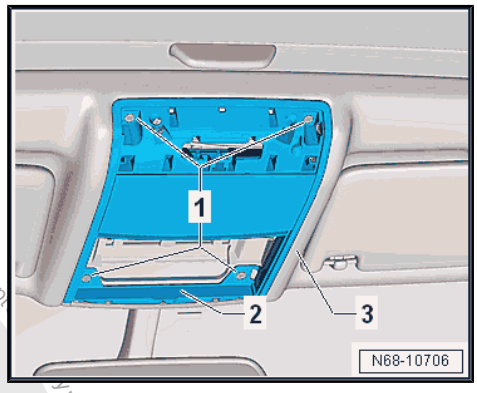

- Remove the headliner storage compartment -2- from the reinforcement frame in the headliner -3-.

Installing

Note

Check all the fasteners for damage and replace if necessary.

Install in reverse order of removal.

Tightening Specifications

- Refer to
  ⇒ “1.6 Overview - Headliner Compartment”, page 25

1.20 Parking Brake Lever Trim, Removing and Installing

Special tools and workshop equipment required

- Trim Removal Wedge - 3409-

Removing

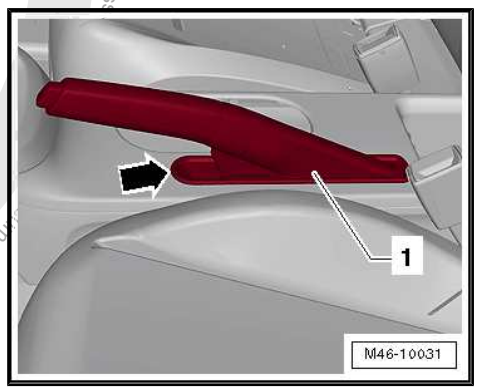

- Unclip the front parking brake lever trim -1- -arrow-.

Protected by copyright. Copying for private or commercial purposes, part or whole, is not permitted unless authorised by Volkswagen AG. Volkswagen AG does not guarantee or accept any liability with respect to the correctness of information. Copyright by Volkswagen AG.

– Set the parking brake.

– Roll the parking brake lever trim -1- on the parking brake lever -2- up and over the handle.

– Carefully unclip and remove the parking brake lever trim -1- on the handle -arrow- using the Trim Removal Wedge - 3409- .

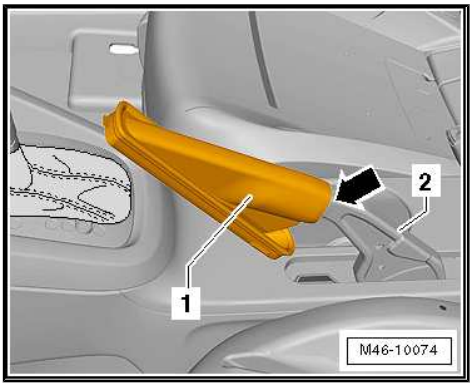

Installing

– Pull the parking brake lever trim -1- over the handle.

– Insert the parking brake lever trim -1- into the groove -arrow A- in the handle.

– Insert the parking brake lever trim -1- into the center console and clip it in the front -arrow B-.

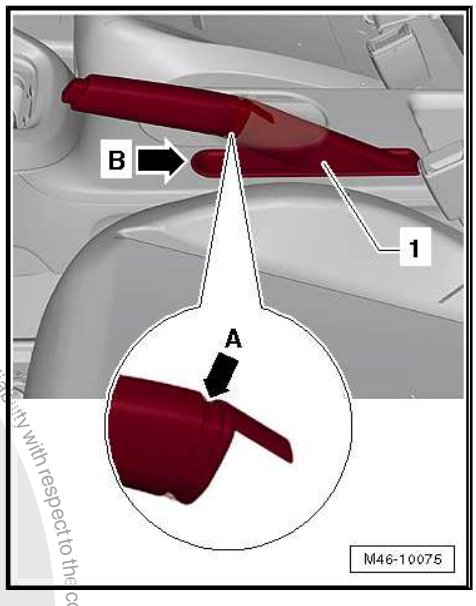

Protected by copyright. Copying for private or commercial purposes, in part or in whole, is not permitted unless authorised by Volkswagen AG. Volkswagen AG does not guarantee or accept any liability with respect to the correctness of information in this document. Copyright by Volkswagen AG.

1.21 Parking Brake Lever Handle, Removing and Installing

Special tools and workshop equipment required

- Trim Removal Wedge - 3409-
- Puller - Unit Injector - T10055-
- Assembly Tool - T10488-

Removing

– Remove the parking brake lever trim. Refer to ⇒ "1.20 Parking Brake Lever Trim, Removing and Installing", page 38 .

– Position the Puller - Unit Injector - T10055- -1- on the side of the handle -2-.

– Remove the handle -2- from the parking brake lever -3- using the Puller - Unit Injector - T10055- .

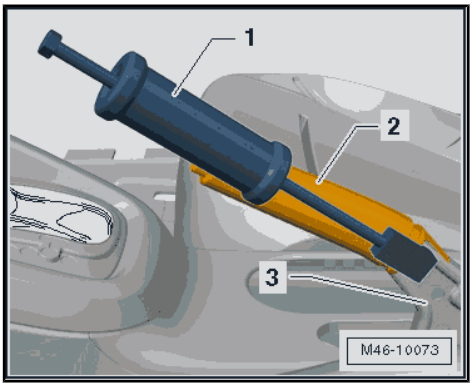

Installing

> **WARNING**
>
> ***Do not re-use the handle for the parking brake lever.***

– Set the parking brake.

– Put tape over the handle -2- to prevent it from getting damaged.
– Install the handle -2- on the parking brake lever -3-.
– Use the Assembly Tool - T10488- -1-.

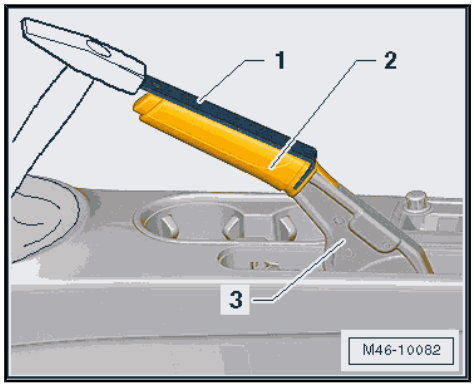

– Mount the handle carefully on the parking brake lever -1- until dimension -a- is reached.

  Dimension -a-: 10 mm ± 1 mm

– Install the parking brake lever trim. Refer to ⇒ “1.20 Parking Brake Lever Trim, Removing and Installing”, page 38 .

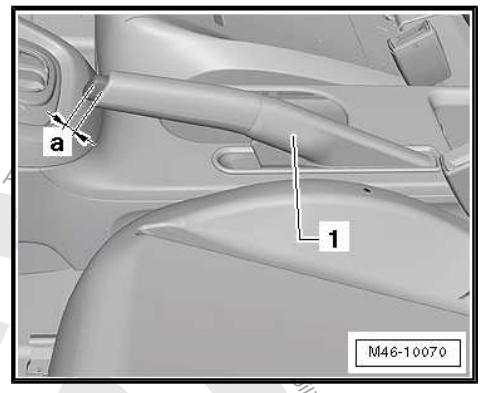

Protected by copyright. Copying for private or commercial purposes, in part or in whole, is not permitted unless authorised by Volkswagen AG. Copyright by Volkswagen AG. ...ility with respect to the correctness of information in this document.

2 Equipment

⇒ “2.1 Overview - Screen Separator”, page 41

⇒ “2.2 Overview - Sun Visors”, page 43

⇒ “2.3 Overview - Roof Grab Handle”, page 44

⇒ “2.4 Screen Separator, Removing and Installing”, page 44

⇒ “2.5 Screen Separator Mount, Removing and Installing”, page 45

⇒ “2.6 Screen Separator Bracket, Removing and Installing”, page 46

⇒ “2.7 Screen Separator Mount, Removing and Installing”, page 46

⇒ “2.8 Sun Visor, Removing and Installing”, page 47

⇒ “2.9 Sun Visor Center Support, Removing and Installing”, page 49

⇒ “2.10 Roof Grab Handle, Removing and Installing”, page 50

⇒ “2.11 Roof Grab Handle Bracket, Removing and Installing”, page 52

2.1 Overview - Screen Separator

Protected by copyright. Copying for private or commercial purposes, in part or in whole, is not permitted unless authorised by Volkswagen AG. Volkswagen AG does not guarantee or accept any liability with respect to the correctness of information in this document. Copyright by Volkswagen AG.

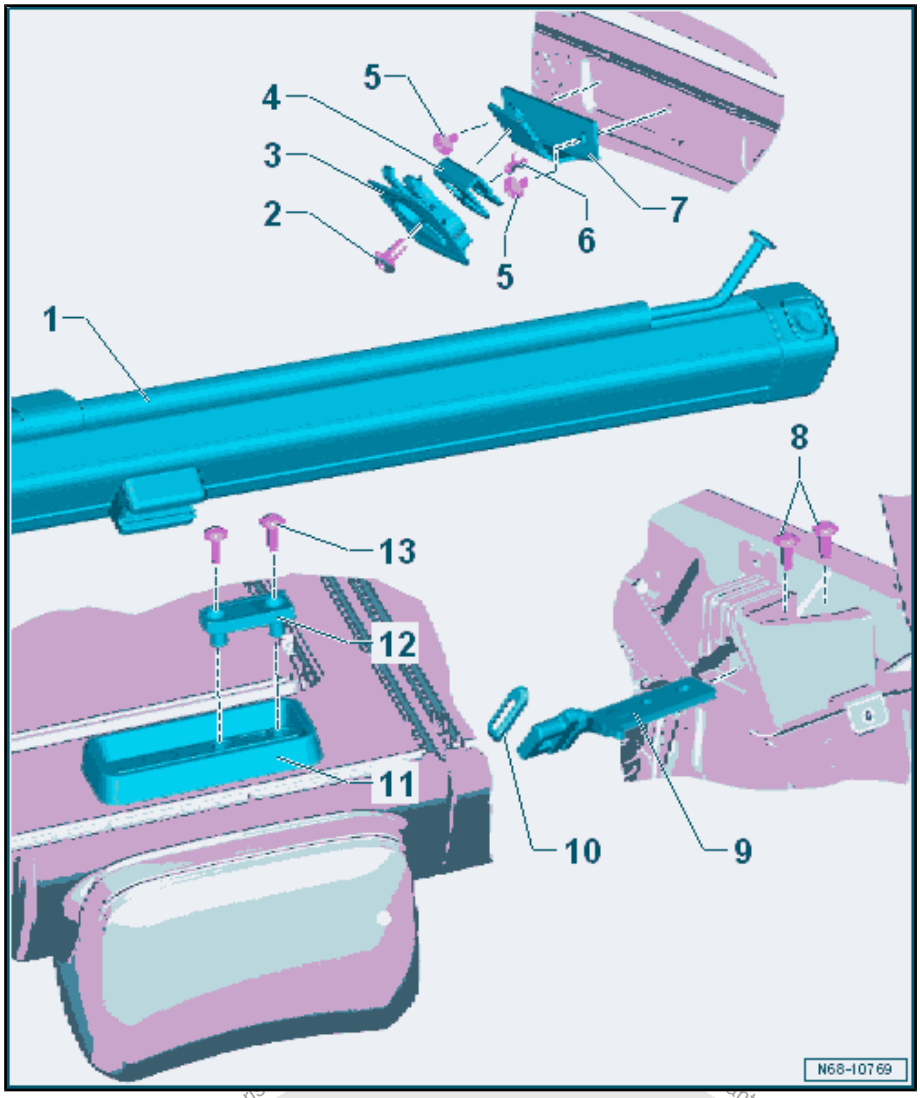

1 - Screen Separator

- ❑ Removing and installing. Refer to ⇒ “2.4 Screen Separator, Removing and Installing”, page 44 .

2 - Screw

- ❑ 4.5 Nm

3 - Mount Trim

- ❑ Allocation. Refer to the Parts Catalog.
- ❑ Removing and installing. Refer to ⇒ “2.7 Screen Separator Mount, Removing and Installing”, page 46 .

4 - Screen Separator Mount

- ❑ Removing and installing. Refer to ⇒ “2.7 Screen Separator Mount, Removing and Installing”, page 46 .

5 - Screw

- ❑ 4.5 Nm
- ❑ Quantity: 2

6 - Screw

- ❑ 1.5 Nm

7 - Mount Bracket

- ❑ Allocation. Refer to the Parts Catalog.
- ❑ Removing

– Remove the headliner. Refer to ⇒ “7.3.2 Headliner, Removing and Installing, Wagon”, page 301 .

– Remove the screws -5- and the mount bracket.

8 - Screw

- ❑ Refer to ⇒ “1.3 Overview - Outer Rear Three-Point Seat Belt”, page 88

9 - Screen Separator Bracket

- ❑ Removing and installing. Refer to ⇒ “2.6 Screen Separator Bracket, Removing and Installing”, page 46 .

10 - Rubber Grommet

- ❑ Slide over the screen separator bracket and insert into the luggage compartment side trim panel

11 - Mount

- ❑ On the right 2/3 rear seat backrest
- ❑ Removing and installing. Refer to ⇒ “2.5 Screen Separator Mount, Removing and Installing”, page 45 .

12 - Selector

- ❑ Removing and installing. Refer to ⇒ “2.5 Screen Separator Mount, Removing and Installing”, page 45 .

13 - Bolt

- ❑ 8 Nm
- ❑ Quantity: 2

Protected by copyright. Copying for private or commercial purposes, in part or in whole, is not permitted unless authorized. Copyright by Volkswagen AG. ...antee or accept any liability with respect to the correctness of information in this document.

Note

- *Remove the locking fluid from the bolt threads using a wire brush. Then insert the bolts with locking compound. Refer to the Parts Catalog.*
- *Remove the locking fluid from the bolt holes, for example using a thread tap.*

2.2 Overview - Sun Visors

Note

The overview illustration shows the driver side. The illustration for the front passenger side is identical.

1 - Sun Visor

- ❑ Removing and installing. Refer to ⇒ “2.8 Sun Visor, Removing and Installing”, page 47 .

2 - Sun Visor Mount

- ❑ Cannot be removed from the sun visor

3 - Center Support

- ❑ For the sun visor
- ❑ Removing and installing. Refer to ⇒ “2.9 Sun Visor Center Support, Removing and Installing”, page 49 .

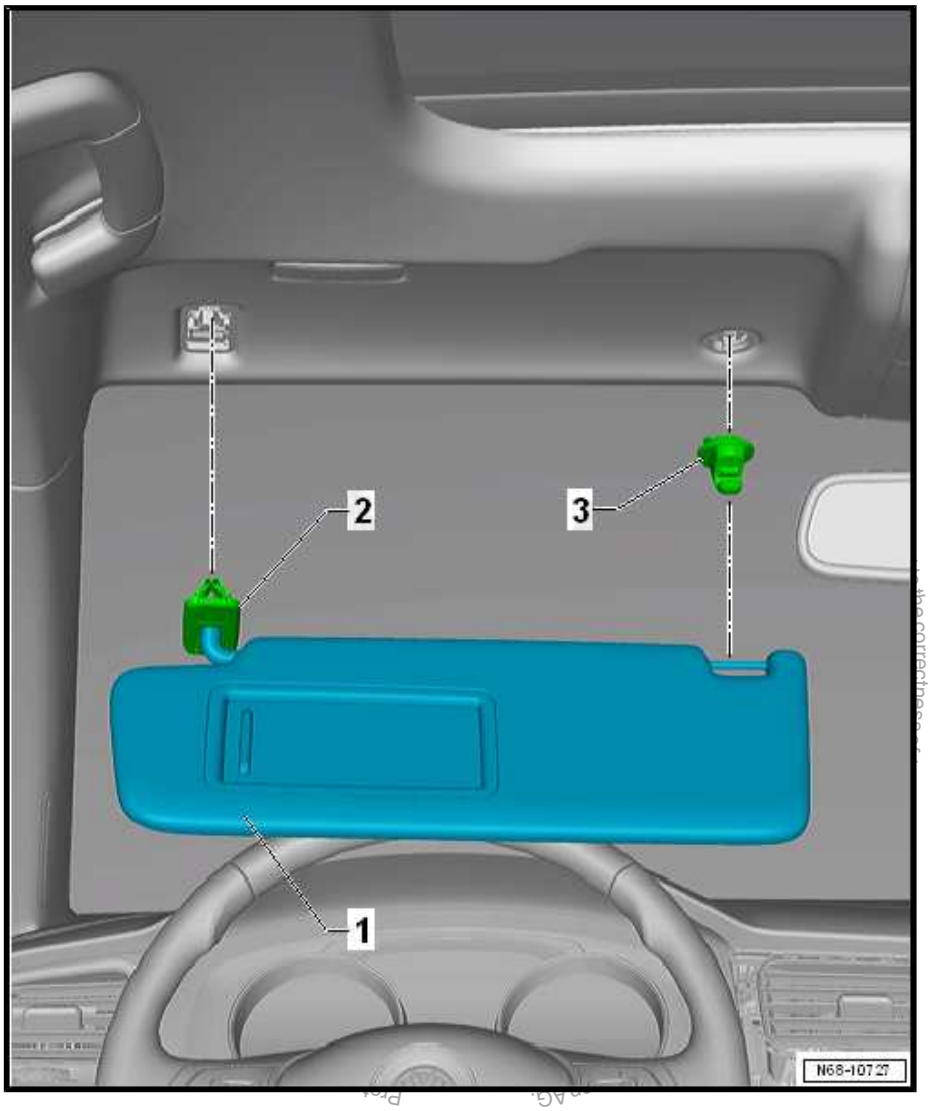

2.3 Overview - Roof Grab Handle

Note

The overview illustration shows the left front roof grab handle. The illustration for the remaining roof grab handles is identical.

1 - Roof Grab Handle Bracket

- ❑ Removing and installing. Refer to ⇒ "2.11 Roof Grab Handle Bracket, Removing and Installing", page 52 .

2 - Spacer

- ❑ Clipped to the roof grab handle
- ❑ Before reinstalling, ensure the correct installation position, and correct if necessary.
- ❑ Removing the spacer is not permitted

3 - Headliner

- ❑ Removing and installing. Refer to ⇒ "7.3 Headliner, Removing and Installing", page 299 .

4 - Roof Grab Handle

- ❑ Removing and installing. Refer to ⇒ "2.10 Roof Grab Handle, Removing and Installing", page 50 .

5 - Screw

- ❑ 4.5 Nm
- ❑ Quantity: 2

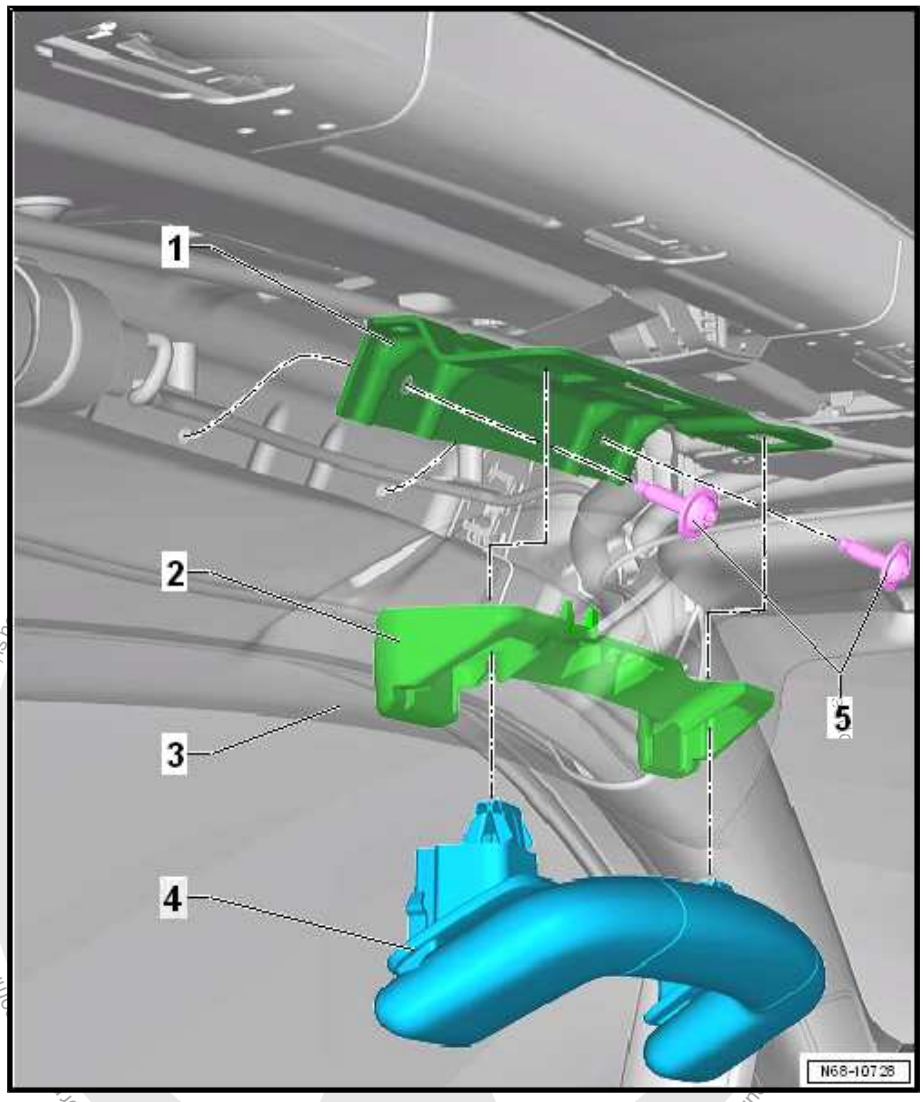

2.4 Screen Separator, Removing and Installing

Removing

– Fold both rear seat backrests forward.

Protected by copyright. Copying for commercial purposes, part or in whole, is not permitted. Copyright by Volkswagen AG.

– Remove the screen separator -1- to the right from out of the mounts -2- on the right 2/3 of the rear seat backrest.

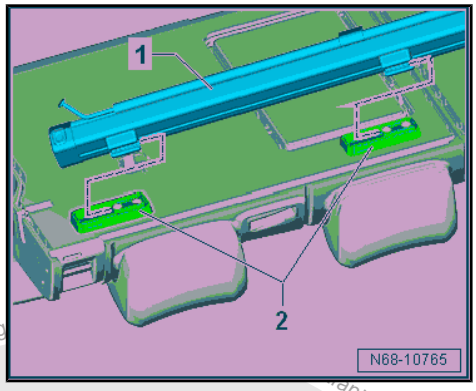

Installing

– Position the screen separator -1- with the guides into the mounts -2- on the right 2/3 of the rear seat backrest.

– Press the screen separator all the way to the left into the mounts -2- on the right 2/3 of the rear seat backrest.

2.5 Screen Separator Mount, Removing and Installing

Removing

– Remove the screen separator. Refer to ⇒ “2.4 Screen Separator, Removing and Installing”, page 44 .

– Remove the bolts -2-.

– Remove the insert -3- and mount -1- from the right 2/3 rear seat backrest.

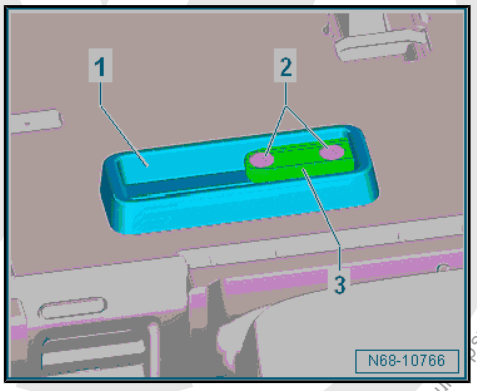

Installing

Install in reverse order of removal while paying attention to the following:

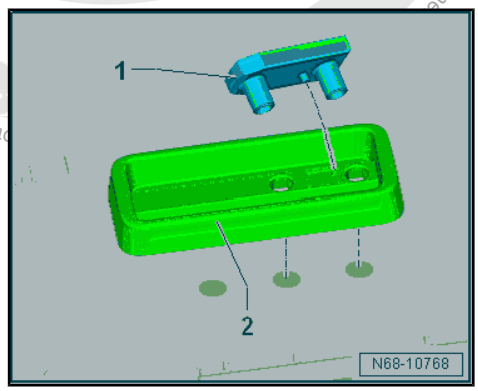

Note

- *Note the installation position of the insert -1- and the mount -2-.*
- *Secure the mount -2- in the left threaded holes.*
- *Insert the tab on the insert -1- into the mount opening -2-.*
- *Remove the locking fluid from the bolt threads using a wire brush. Then insert the bolts with locking compound. Refer to the Parts Catalog.*
- *Remove the locking fluid from the bolt holes, for example using a thread tap.*

Tightening Specifications

- Refer to ⇒ “2.1 Overview - Screen Separator”, page 41

Protected by copyright. Copying for private or commercial purposes, in part or in whole, is not permitted unless authorised by Volkswagen. We do not guarantee or accept any liability with respect to the correctness of information in this document.

2.6 Screen Separator Bracket, Removing and Installing

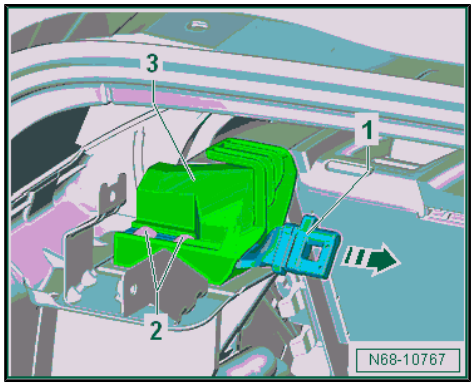

Removing

– Remove the luggage compartment side trim panel. Refer to ⇒ “6.12.2 Luggage Compartment Side Trim Panel, Removing and Installing, Wagon”, page 291 .

– Pull the seat belt webbing to the side and remove the bolts -2-.

– Pull the screen separator bracket -1- out of the seat belt guide -3- in direction of -arrow- and remove it.

Installing

Install in reverse order of removal.

Tightening Specifications

♦ Refer to ⇒ “1.3 Overview - Outer Rear Three-Point Seat Belt”, page 88

Protected by copyright. Copyright. Volkswagen AG. Volkswagen AG does not guarantee or accept any liability with authorised by Volkswagen AG, Volkswagen AG does not guarantee or accept any liability with respect to the correctness, in part or in whole, is not permitted. Commercial use and distribution of the contents of this publication are not permitted.

2.7 Screen Separator Mount, Removing and Installing

Special tools and workshop equipment required

♦ Trim Removal Wedge - 3409-

Removing

Screen Separator Mount without Rear Reading Lamp

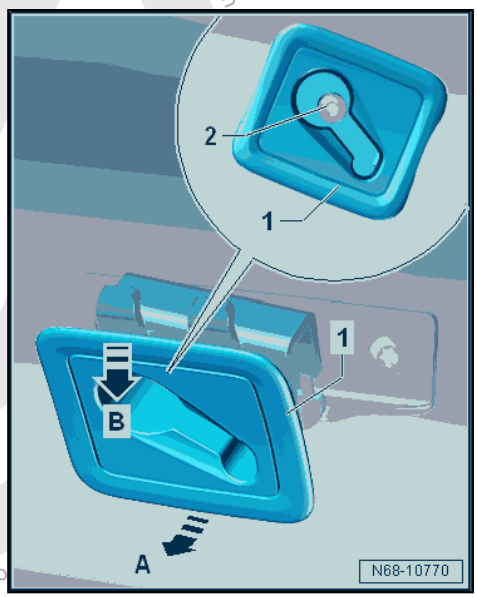

Note

The removal and installation of the left rear screen separator mount is described. The removal and installation of the other screen separator mounts is identical.

– Remove the bolt -2-.

– Loosen the trim -1- with the screen separator mount from the headliner at the bottom using the Trim Removal Wedge - 3409- in direction of -arrow A-.

– Then slightly guide the trim -1- with the screen separator mount downward out of the headliner in direction of -arrow B-.

– Then guide the screen separator mount with the trim upward out of the headliner and remove it.

Note

For vehicles with a sunroof, the retaining tabs are turned 180° and attached to the rear trim -1-. The removing and installing procedure for these screen separator mounts is identical.

Screen Separator Mount with Rear Reading Lamp

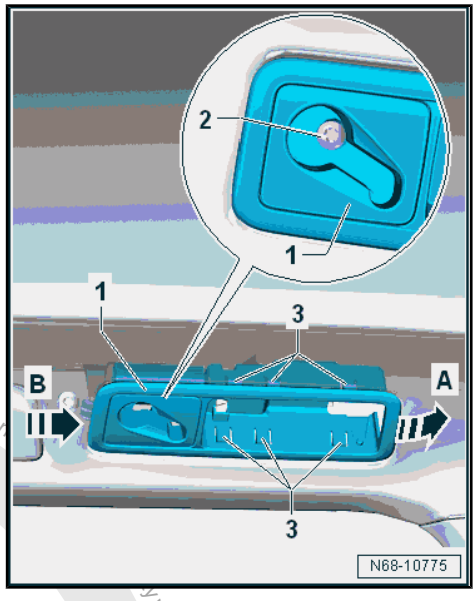

Note

The removal and installation of the left screen separator mount is described. Removing and installing the right screen separator mount is identical.

– Remove the Left Rear Reading Lamp - W11- . Refer to ⇒ Electrical Equipment; Rep. Gr. 96 ; Controls; Rear Interior Lamp/Reading Lamp, Removing and Installing .

– Remove the bolt -2-.

– Release the retaining tabs -3- on the trim -1- and loosen the trim from the headliner using the Trim Removal Wedge - 3409- in direction of -arrow A-.

– Then guide the trim -1- with the screen separator mount forward out of the headliner in direction of -arrow B- and remove it.

Installing

Install in reverse order of removal while paying attention to the following:

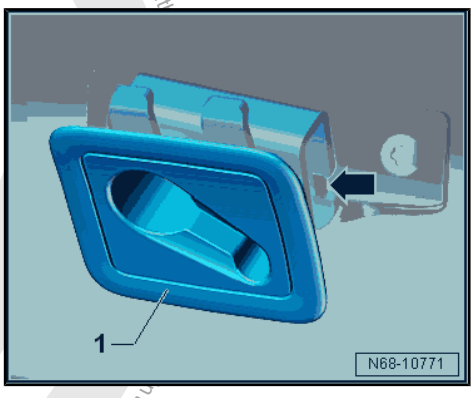

Note

Make sure that the guide tab -arrow- on the screen separator bracket is resting properly in the opening for the screen separator mount -1-.

Tightening Specifications

♦ Refer to ⇒ “2.1 Overview - Screen Separator”, page 41

2.8 Sun Visor, Removing and Installing

Note

The removal and installation of the driver side sun visor is described. The removal and installation for the front passenger side is identical.

Special tools and workshop equipment required

♦ Release Pliers - VAS6427-

Removing

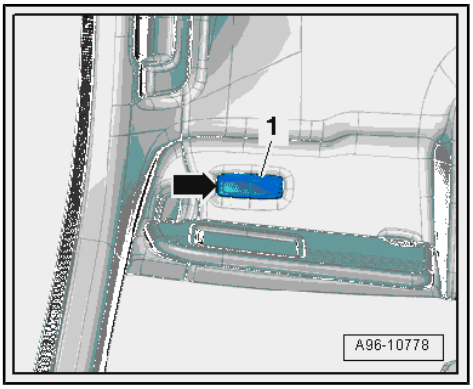

– Pivot the sun visor forward.

– Using a flat-head screwdriver, carefully pry out the vanity mirror lighting -1- at the opening -arrow-.

– Disconnect the connector.

Protected by copyright. Copying for private or commercial purposes, in part or in whole, is not permitted unless authorised by Volkswagen AG. Volkswagen AG does not guarantee this document. Copyright by Volkswagen AG.

– Disengage the sun visor -2- at the center support -1-.
– Open the caps -3- in the sun visor mount.

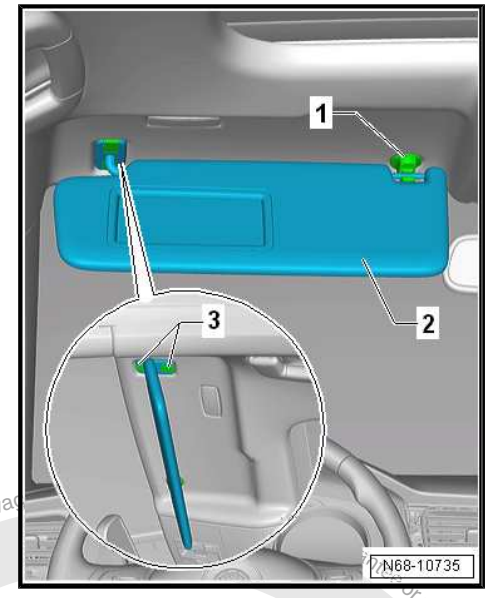

Note

For the following steps, make sure that the Release Pliers - VAS6427- are positioned in the center of the retainers.

Protected by copyright. Copying for private or commercial purposes, in part or in whole, is not permitted unless authorised by Volkswagen AG. Copyright by Volkswagen AG. We do not accept any liability with respect to the correctness of information in this document.

– Using the Release Pliers - VAS6427- , loosen the front retainer -3- in the sun visor mount -1- from the body mount.

– Keep tension on the sun visor to prevent the retainer from unintentionally locking again.

– Using the Release Pliers - VAS6427- , loosen the rear retainer -3- in the sun visor mount -1- from the body mount.

– Carefully remove the sun visor -2- with the sun visor mount -3- downward from the body mount and remove the transportation safeguard.

– Pull the wiring harness bonded to the headliner forward. Disconnect the connector and remove the sun visor.

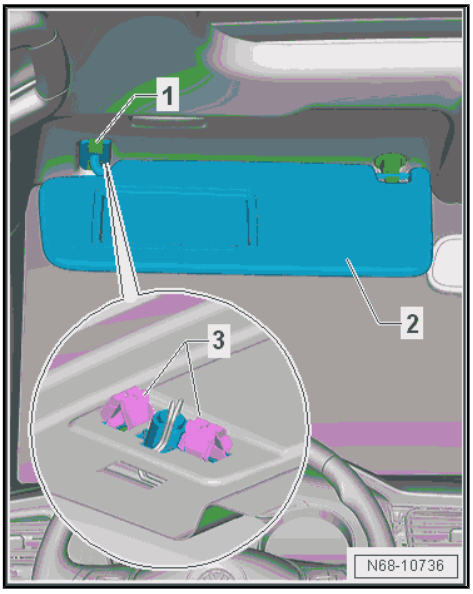

Note

If the wiring harness is torn off when »pulling forward«, lower the headliner. To service the wiring harness, use the Wiring Harness Repair Set - VAS1978B- .

Installing

Note

Check all the fasteners for damage and replace if necessary.

– Tape around the connector with a layer of foam tape.

– Using a finger, reach into the vanity mirror lighting opening. Slightly pull the headliner downward.

– Slide the connector approximately 6 cm (2.3 inches) toward the rear between the headliner and the roof crossmember.

– Engage the front retainer in the sun visor mount into the body mount.

– Engage the rear retainer in the sun visor mount into the body mount.

– Make sure both retainers are completely engaged in the vehicle body.

Install in reverse order of removal.

2.9 Sun Visor Center Support, Removing and Installing

Note

The removal and installation of the driver side sun visor center support is described. The removal and installation for the front passenger side is identical.

Removing

– Detach the sun visor at the sun visor center mount and fold to the side.

– Turn the sun visor center support -1- approximately 90° ($^1/_4$ of a turn) counter-clockwise in direction of -arrow-.

Protected by copyright. Copyright by Volkswagen AG. Volkswagen AG does not guarantee or accept any liability with respect to the correctness of information in this document. Copyright by Volkswagen AG.

– Remove the sun visor center support -1- downward.

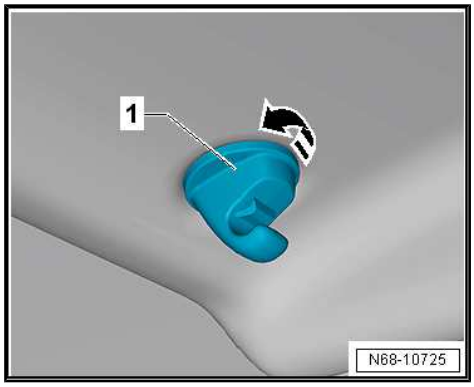

Installing

Install in reverse order of removal.

2.10 Roof Grab Handle, Removing and Installing

Note

The removal and installation for the left front roof grab handle is described. The removal and installation of the other roof grab handles is identical.

Special tools and workshop equipment required

♦ Release Tool - T10518-

Removing

– Fold the roof grab handle -1- down and unclip the caps -2-.

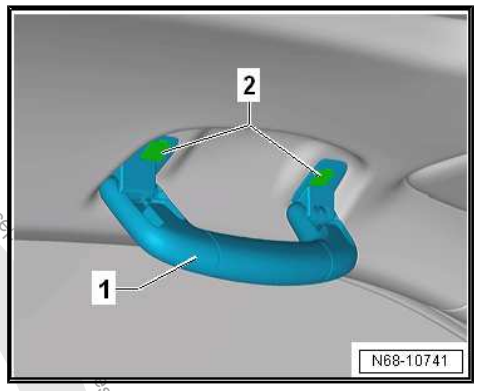

– Fold the roof grab handle -1- downward and push the Release Tool - T10518- all the way into the left retainer -arrow-.
– Using the inserted Release Tool - T10518- , carefully pull on the roof grab handle -1- near the left retainer.
– Unclip the right retainer as described.
– The retainers -2- of the roof grab handle -1- are thus loosened from the mounts in the roof grab handle bracket.
– Remove the roof grab handle from the mounts.

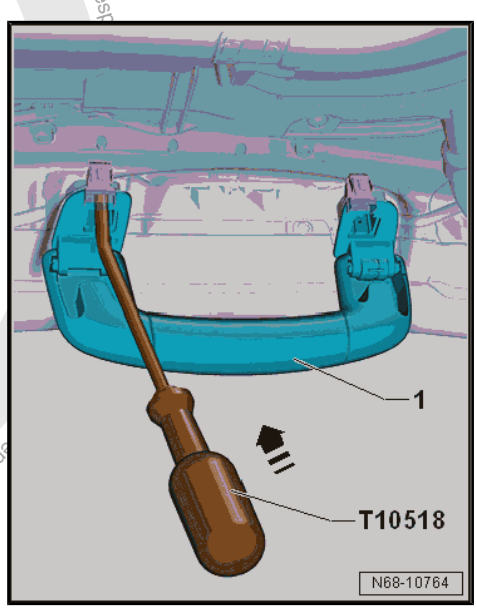

Protected by copyright. Copying for private or commercial purposes, in part or in whole, is not permitted unless authorised by Volkswagen AG. Volkswagen AG does not guarantee or accept any guarantee or liability with respect to the content. Copyright by Volkswagen AG.

– Place the two caps in the roof grab handle, but do not lock in place.

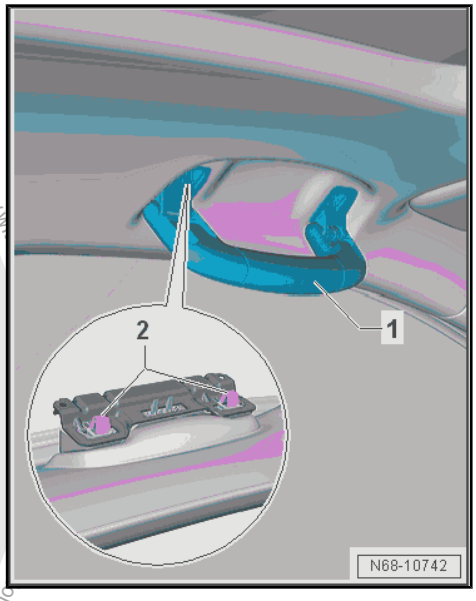

Installing

Note

Check all the fasteners for damage and replace if necessary.

- Roof grab handle -2- folded down during the assembly.
- Both caps -1- inserted in the roof grab handle -2-, but not locked in place.

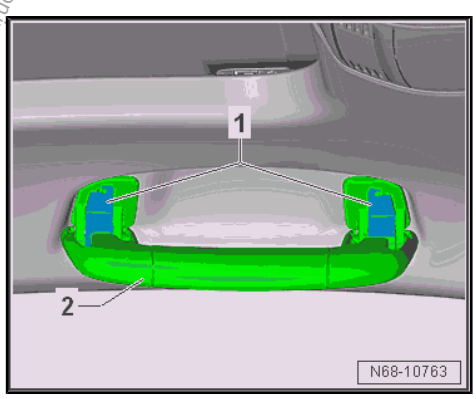

– Press the folded down roof grab handle -1- into the appropriate installation opening in the vehicle roof using both retainers -2-.

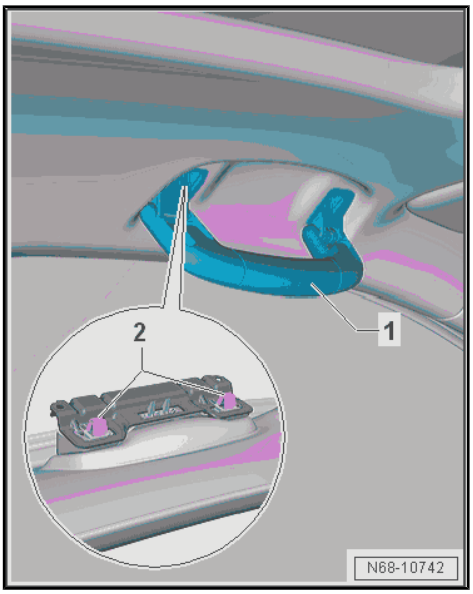

Volkswagen AG. Volkswagen AG does not guarantee or accept any liability w
commercial purposes, in part or in whole, is not permitted unless authorised by
on this document. Copyright by Volkswagen AG.
Protected by copyright. Copying for private

– Fold up the roof grab handle -1-. As a result, the caps -2- engage audibly into the locking position.

– Fold the roof grab handle down and check if both caps are completely engaged in the roof grab handle. This is the case if the caps and the respective roof grab handle base form a flat surface.

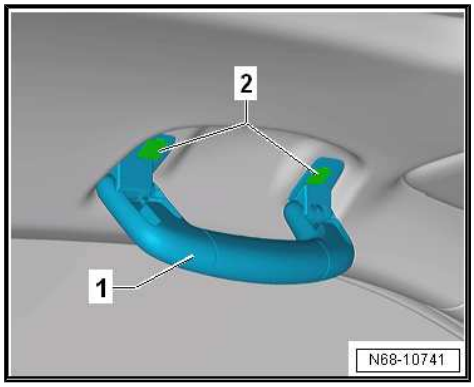

2.11 Roof Grab Handle Bracket, Removing and Installing

Note

The removal and installation for the left front roof grab handle bracket is described. The removal and installation of the other roof grab handle brackets is identical.

Special tools and workshop equipment required

♦ Torque Wrench 1783 - 2-10Nm - VAG1783-

Removing

– Remove the headliner. Refer to ⇒ “7.3 Headliner, Removing and Installing”, page 299 .

– If equipped, unclip the wiring guide -1- from the roof grab handle bracket -3-.

– Remove the screws -2- and remove the roof grab handle bracket -3-.

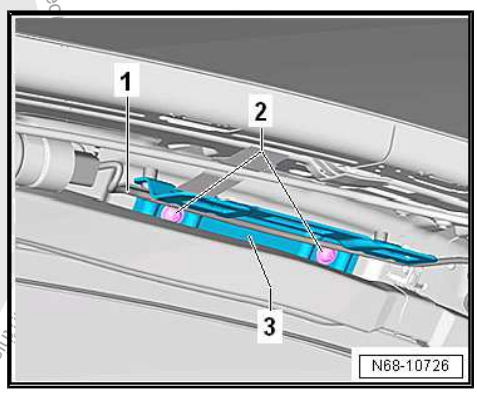

Installing

Note

Check all the fasteners for damage and replace if necessary.

Install in reverse order of removal.

Tightening Specifications

♦ Refer to ⇒ “2.3 Overview - Roof Grab Handle”, page 44

Protected by copyright. Copying for private or commercial purposes, in part or in whole, is not permitted unless authorised by Volkswagen AG. Volkswagen AG does not guarantee or accept any liability with respect to this document. Copyright by Volkswagen AG.

3 Center Console

⇒ “3.1 Overview - Center Console”, page 53

⇒ “3.2 Front Ashtray, Removing and Installing”, page 55

⇒ “3.3 Center Console Rear Trim, Removing and Installing”, page 55

⇒ “3.4 Front Footwell Center Console Trim Panel, Removing and Installing”, page 55

⇒ “3.5 Display and Control Unit Trim, Removing and Installing”, page 56

⇒ “3.6 Front Center Console Storage Compartment, Removing and Installing”, page 57

⇒ “3.7 Center Console Cover, Removing and Installing”, page 57

⇒ “3.8 Center Console, Removing and Installing”, page 59

⇒ “3.9 Center Console Bracket, Removing and Installing”, page 61

3.1 Overview - Center Console

1 - Display and Control Unit Trim

- ❑ Removing and installing. Refer to ⇒ “3.5 Display and Control Unit Trim, Removing and Installing”, page 56 .

2 - Front Center Console Storage Compartment

- ❑ Removing and installing. Refer to ⇒ “3.6 Front Center Console Storage Compartment, Removing and Installing”, page 57 .

3 - Service Door Storage Compartment Mat

- ❑ Placed in the center console

4 - Footwell Center Console Trim Panel

- ❑ Left and right
- ❑ Removing and installing. Refer to ⇒ “3.4 Front Footwell Center Console Trim Panel, Removing and Installing”, page 55 .

5 - Screw

- ❑ 1.5 Nm
- ❑ Quantity: 2

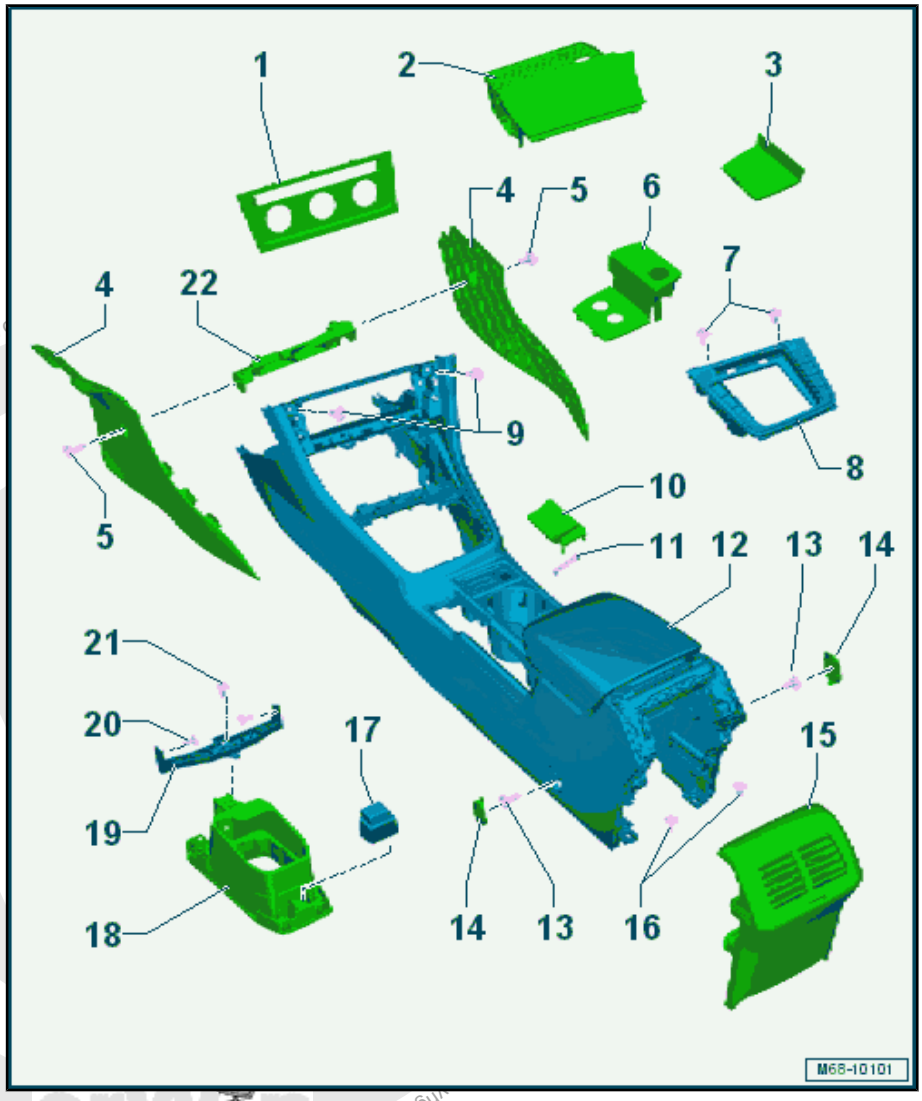

Protected by copyright. Copying for private or commercial purposes, in part or in whole, is not permitted unless authorised by Volkswagen AG.

Protected by copyright. Copying for private or commercial purposes, in part or in whole, is not permitted unless authorised by Volkswagen AG. Volkswagen AG does not guarantee or accept any liability with respect to the correctness of information in this document. Copyright by Volkswagen AG.

6 - Service Door

- ❑ Clipped in the center console

7 - Screw

- ❑ 1.5 Nm
- ❑ Quantity: 2

8 - Shift Mechanism Cover

- ❑ Removing and installing. Refer to ⇒ “3.7 Center Console Cover, Removing and Installing”, page 57 .

9 - Screw

- ❑ 1.5 Nm
- ❑ Quantity: 2

10 - Cap

- ❑ Clipped in the center console

11 - Clip

- ❑ Clipped in the center console

12 - Center Console

- ❑ Removing and installing. Refer to ⇒ “3.8 Center Console, Removing and Installing”, page 59 .

13 - Screw

- ❑ 6 Nm
- ❑ Quantity: 2

14 - Cap

- ❑ Left and right
- ❑ Push in the center console

15 - Center Console Rear Trim

- ❑ Removing and installing. Refer to ⇒ “3.3 Center Console Rear Trim, Removing and Installing”, page 55 .

16 - Screw

- ❑ 6 Nm
- ❑ Quantity: 2

17 - Bracket Behind Shifting Mechanism

- ❑ Clipped on the gearshift mechanism noise insulation

18 - Shifting Mechanism Noise Insulation

19 - Bracket in Front of Shifting Mechanism

- ❑ For the center console
- ❑ Removing and installing. Refer to ⇒ “3.9 Center Console Bracket, Removing and Installing”, page 61 .

20 - Screw

- ❑ 1.5 Nm
- ❑ Quantity: 2

21 - Screw

- ❑ 6 Nm

22 - Bracket

- ❑ For the footwell center console trim panel
- ❑ Clipped with the heater and A/C unit

3.2 Front Ashtray, Removing and Installing

Removing

– Remove the front ashtray -1- upward from the center console -2-.

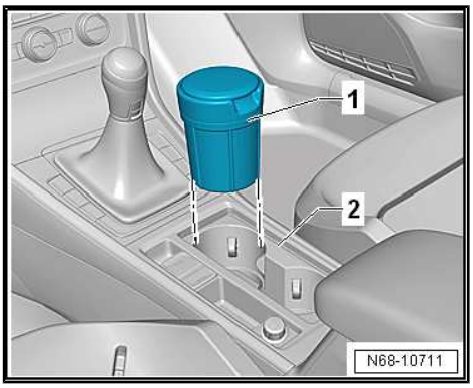

Installing

Install in reverse order of removal.

3.3 Center Console Rear Trim, Removing and Installing

Special tools and workshop equipment required

♦ Backrest Panel Tool - 3370-

Removing

– Move the front seats all the way forward.

– Pull the rear trim -1- at the lower end off of the center console -2- toward the rear.

– Pull the rear trim -1- upward off of the center console -2- -arrow- and remove it.

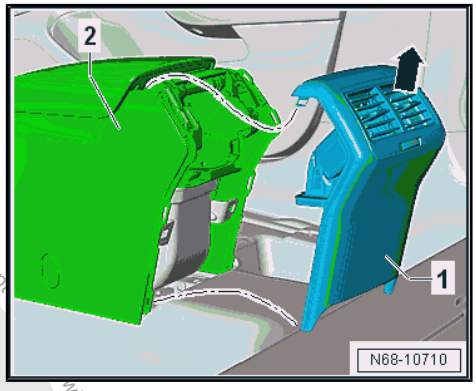

Installing

Note

Check all the fasteners for damage and replace if necessary.

Install in reverse order of removal.

3.4 Front Footwell Center Console Trim Panel, Removing and Installing

Note

Removal and installation are described for the footwell center console trim panel on the driver side. The removal and installation for the front passenger side is identical.

Special tools and workshop equipment required

♦ Torque Wrench 1783 - 2-10Nm - VAG1783-

Removing

Protected by copyright. Copying for private or commercial purposes, in part or in whole, is not permitted unless authorised by Volkswagen AG. Volkswagen AG does not guarantee or accept any liability with respect to the correctness of information in this document. Copyright by Volkswagen AG.

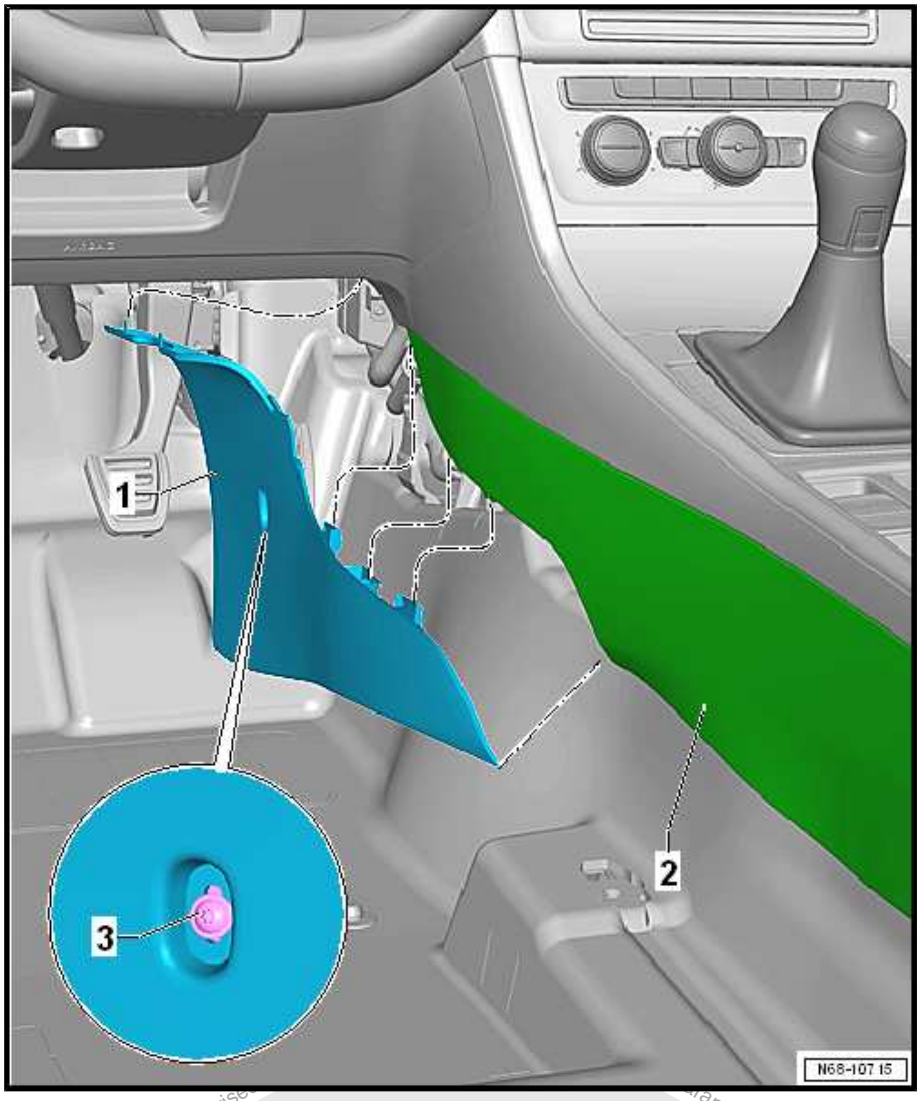

– Remove the bolt -3-.
– Pull the footwell center console trim panel -1- downward off of the mounts for the center console -2- and remove.

Installing

Note

Check all the fasteners for damage and replace if necessary.

Install in reverse order of removal.

Tightening Specifications

♦ Refer to
⇒ "3.4 Front Footwell Center Console Trim Panel, Removing and Installing", page 55

3.5 Display and Control Unit Trim, Removing and Installing

Special tools and workshop equipment required

♦ Trim Removal Wedge - 3409-

Protected by copyright. Copyright by Volkswagen AG.

Removing

– Loosen but do not remove the center instrument panel panel trim in the lower area using -3409- .

– Unclip the display and control unit trim -1- from the display and control unit -2- starting at the bottom and remove.

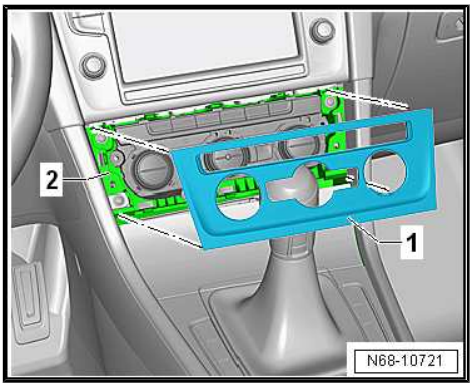

Installing

Note

Check all the fasteners for damage and replace if necessary.

Install in reverse order of removal.

3.6 Front Center Console Storage Compartment, Removing and Installing

Removing

– Remove the display and control head trim. Refer to ⇒ “3.5 Display and Control Unit Trim, Removing and Installing”, page 56 .

– Unclip the front storage compartment -1- from the center console -2- -arrows A-.

– Remove the front storage compartment -1- from the center console -2- toward the rear -arrow B-.

– If equipped, disconnect the connectors from the front storage compartment.

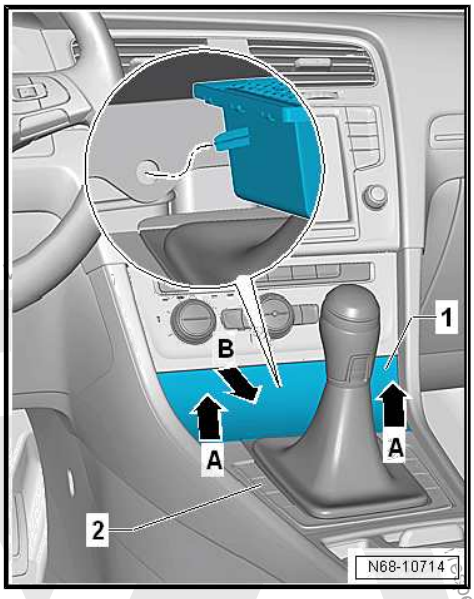

Installing

Note

- *Check all the fasteners for damage and replace if necessary.*
- *Make sure the tab on the front storage compartment is seated correctly in the center console hole.*

Install in reverse order of removal.

Note

When installing, position the storage compartment at a slight angle in order to insert it into the rear guide. Then press the storage compartment downward and lock in place.

3.7 Center Console Cover, Removing and Installing

Special tools and workshop equipment required

- Torque Wrench 1783 - 2-10Nm - VAG1783-

Removing

– For vehicles with a Direct Shift Gearbox (DSG) transmission, move the selector lever into “D/S”.

Protected by copyright. Copying for private or commercial purposes, in part or in whole, is not permitted unless authorised by Volkswagen AG. Copyright by Volkswagen AG. No liability is accepted with respect to the correctness of information in this document.

– Switch off the ignition.

– Carefully unclip the selector lever/shift lever boot from the center console and fold it upward.

– Remove the front storage compartment. Refer to ⇒ “3.6 Front Center Console Storage Compartment, Removing and Installing”, page 57 .

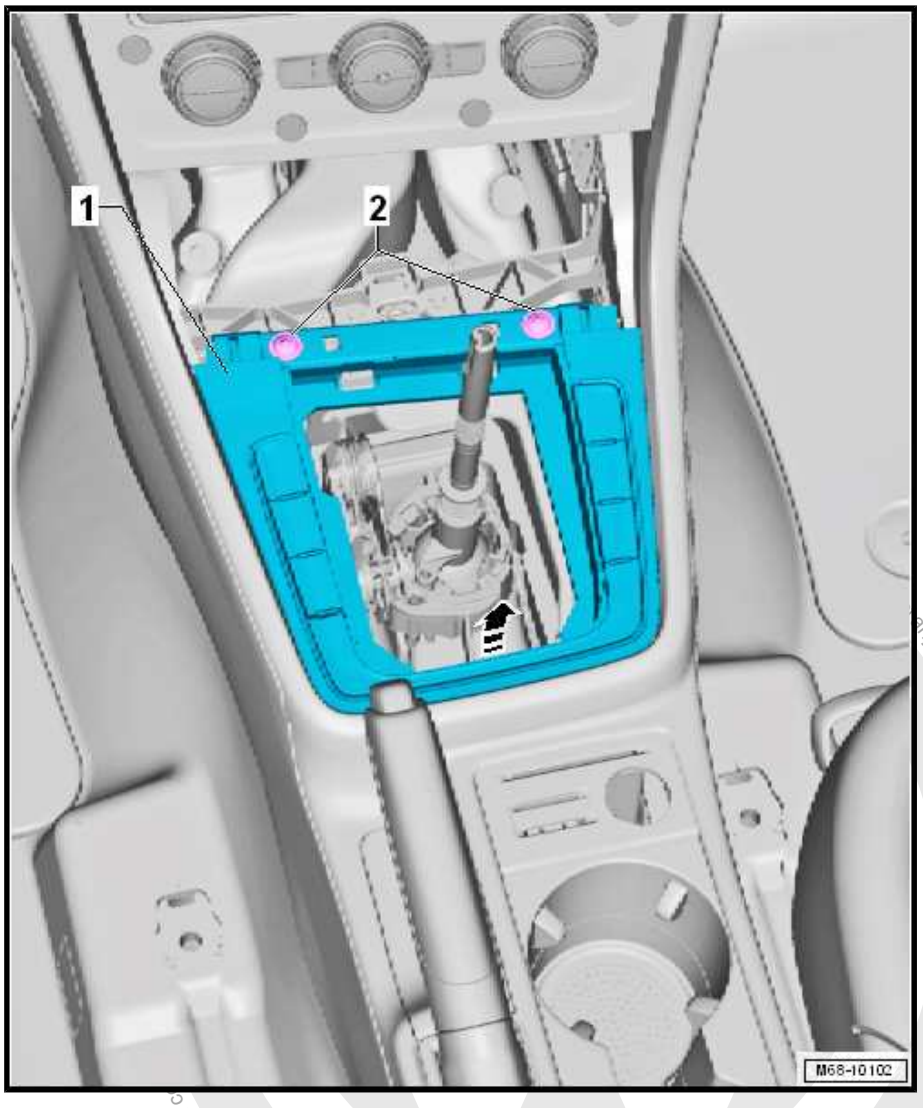

– Remove the bolts -2-.

– Remove the gearshift mechanism cover -1- from the center console in the direction of the -arrow- until the connectors are accessible.

– Release and disconnect any existing connectors.

– Carefully remove the gearshift mechanism cover -1- over the selector lever/gearshift lever.

Installing

Note

Check all the fasteners for damage and replace if necessary.

Protected by copyright. Copyright by Volkswagen AG. ... any liability with respect to the correctness of information in this document.

Install in reverse order of removal.

Tightening Specifications

- Refer to ⇒ “3.1 Overview - Center Console”, page 53

3.8 Center Console, Removing and Installing

Special tools and workshop equipment required

- Torque Wrench 1783 - 2-10Nm - VAG1783-

Removing

– Remove the center console rear trim. Refer to ⇒ “3.3 Center Console Rear Trim, Removing and Installing”, page 55 .

– Remove the gearshift mechanism cover. Refer to ⇒ “3.7 Center Console Cover, Removing and Installing”, page 57 .

– Remove the parking brake lever trim. Refer to ⇒ “1.20 Parking Brake Lever Trim, Removing and Installing”, page 38 .

– Remove the left and right footwell center console trim panels. Refer to ⇒ “3.4 Front Footwell Center Console Trim Panel, Removing and Installing”, page 55 .

– Remove the display and control unit. Refer to ⇒ Heating, Ventilation and Air Conditioning; Rep. Gr. 87 ; Display and Control Head; Display and Control Head, Removing and Installing .

– Remove the mounting bracket in front of the gearshift mechanism. Refer to ⇒ “3.9 Center Console Bracket, Removing and Installing”, page 61 .

– Remove the bolts -1- for the center console -2-.

– If equipped, release and disconnect the connector -3- for the 12 V socket.

– Move the front seats as far forward as possible using the forward/back adjuster.

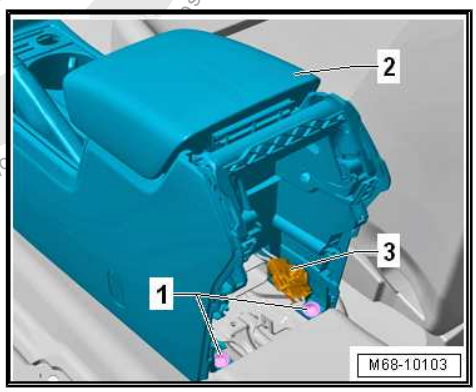

– Remove the left and right cap -1- from the center console -3-.

– Remove the bolt -2- for the center console -3- on the left and right sides.

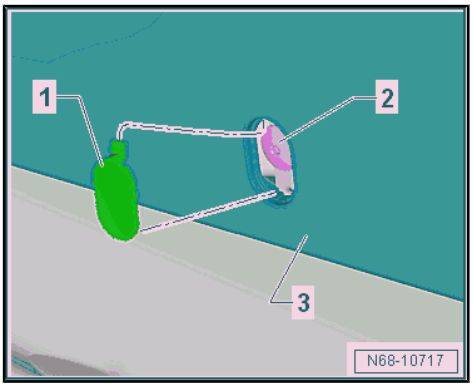

Protected by copyright. Copying for private or commercial purposes, in part or in whole, is not permitted unless authorised by Volkswagen AG. Volkswagen AG does not guarantee or accept any liability with respect to the correctness of information in this

– Remove the bolts -2- for the center console -1-.

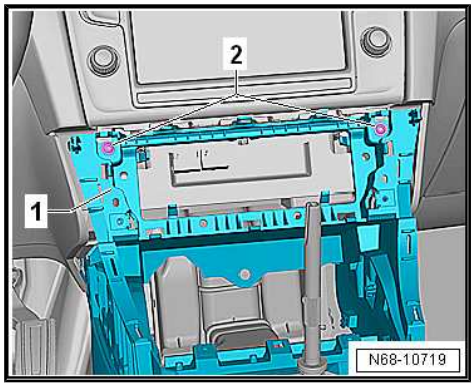

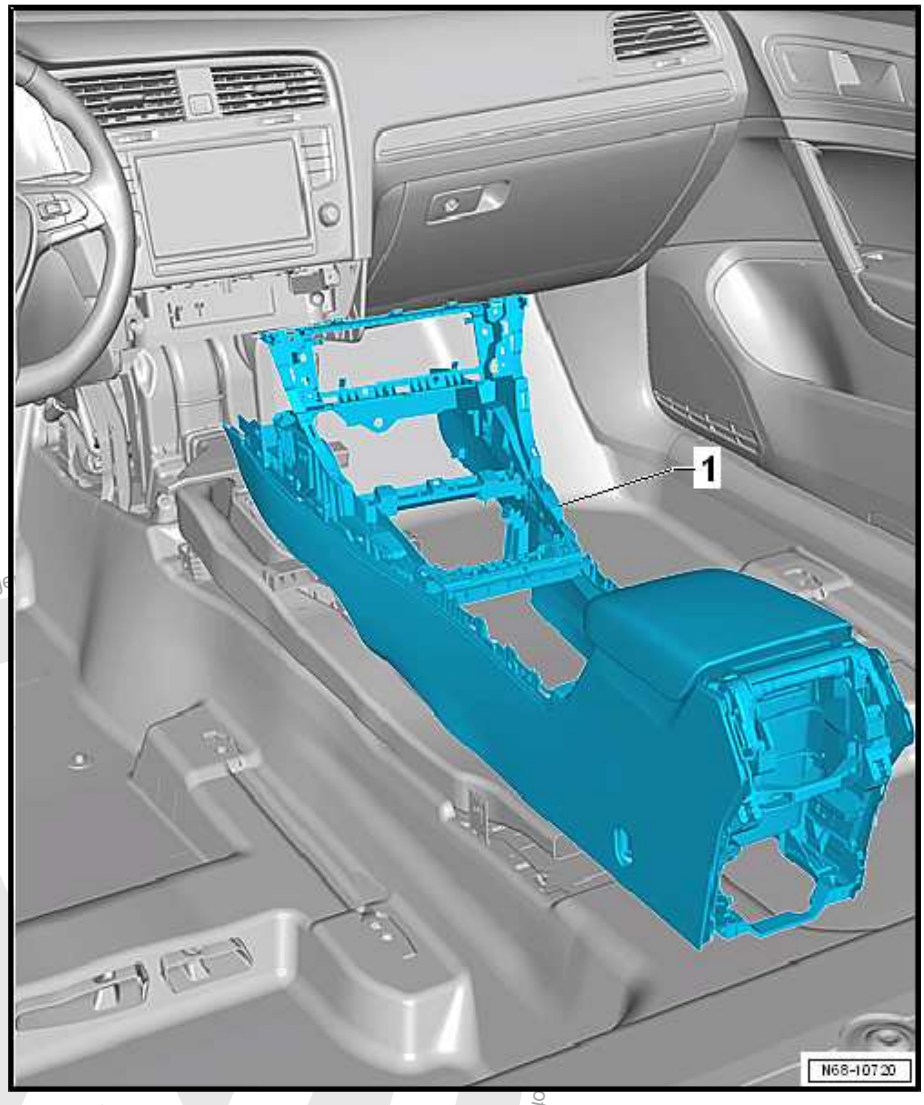

– Lift the center console -1- at the rear and remove it from the instrument panel toward the rear.

– Carefully remove the center console -1- over the selector lever/gearshift lever and the parking brake lever.

Protected by copyright. Copying for private or commercial purposes, in part or in whole, is not permitted unless authorised by Volkswagen AG. Copyright by Volkswagen AG.

Installing

Note

Check all the fasteners for damage and replace if necessary.

Install in reverse order of removal.

Tightening Specifications

- Refer to ⇒ "3.1 Overview - Center Console", page 53

3.9 Center Console Bracket, Removing and Installing

Special tools and workshop equipment required

- Torque Wrench 1783 - 2-10Nm - VAG1783-

Removing

– Remove the screw -1- on the left and right.

– Remove the bolt -2-.

– Pivot the mounting bracket -3- out of the center console.

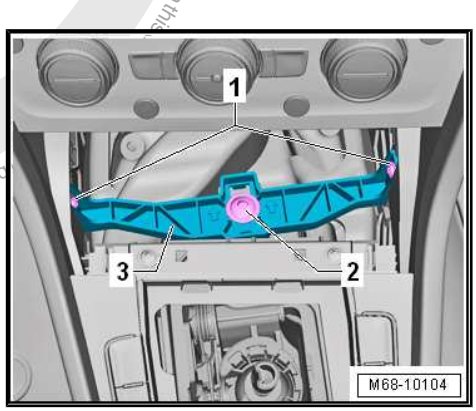

Installing

Note

Check all the fasteners for damage and replace if necessary.

Install in reverse order of removal.

Tightening Specifications

- Refer to ⇒ "3.1 Overview - Center Console", page 53

Protected by copyright. Copying for private or commercial purposes, in part or in whole, is not permitted unless authorised by Volkswagen AG. Volkswagen AG does not guarantee or accept any liability with respect to the correctness of information in this

4 Front Center Armrest

⇒ “4.1 Overview - Front Center Armrest”, page 62

⇒ “4.2 Front Center Armrest, Removing and Installing”, page 63

4.1 Overview - Front Center Armrest

1 - Front Center Armrest

- ❑ Removing and installing. Refer to ⇒ “4.2 Front Center Armrest, Removing and Installing”, page 63 .

2 - Screw

- ❑ 3 Nm
- ❑ Quantity: 2

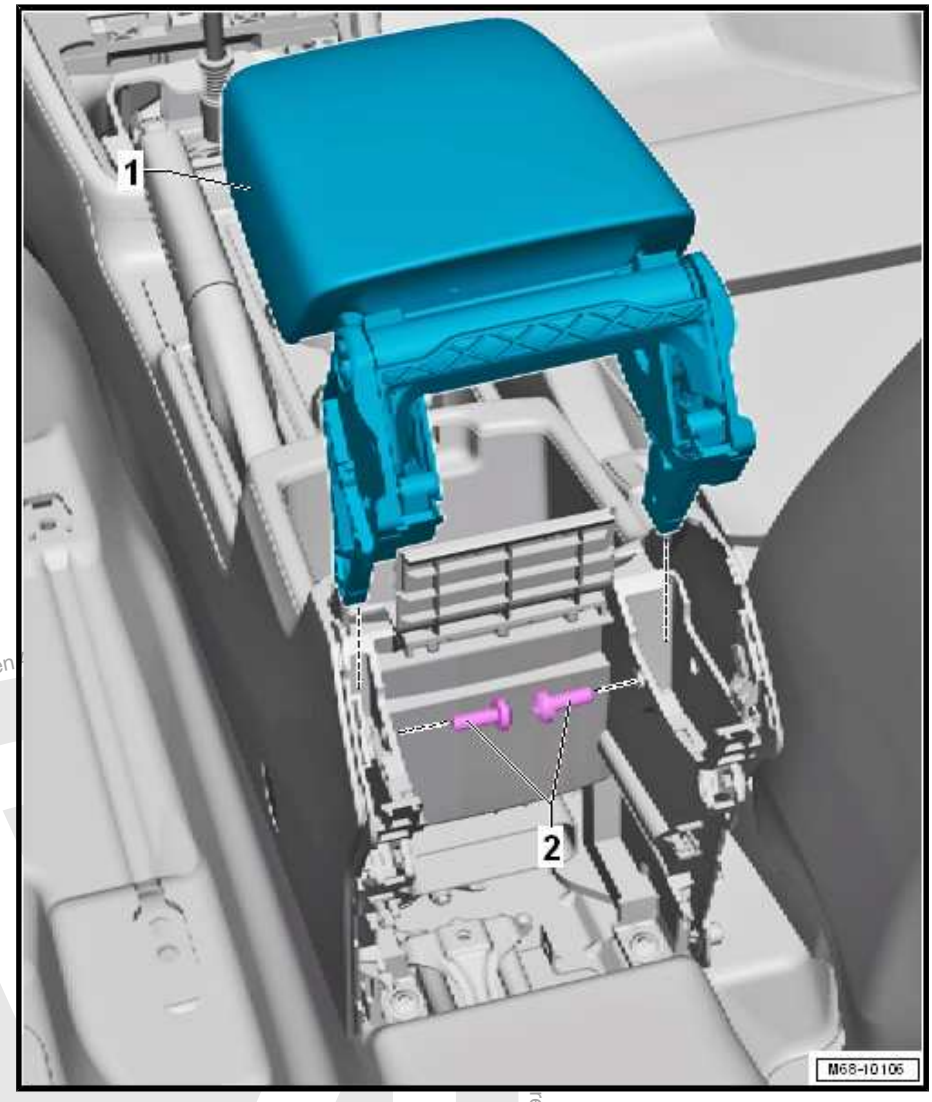

Protected by copyright. Copyright for private or commercial purposes, in part or in whole, is not permitted unless authorised by Volkswagen AG. Copyright by Volkswagen AG. Correctness of information in this document.

4.2 Front Center Armrest, Removing and Installing

Removing

– Remove the center console rear trim. Refer to ⇒ “3.3 Center Console Rear Trim, Removing and Installing”, page 55 .

– Remove the air guide channel in the rear center console. Refer to ⇒ Heating, Ventilation, and Air Conditioning; Rep. Gr. 87 ; Air Routing; Overview - Air Routing and Air Distribution in Passenger Compartment .

– Remove the screw -2- on the left and right.

– Remove the front center armrest -1- upward from the center console -3- in direction of -arrow-.

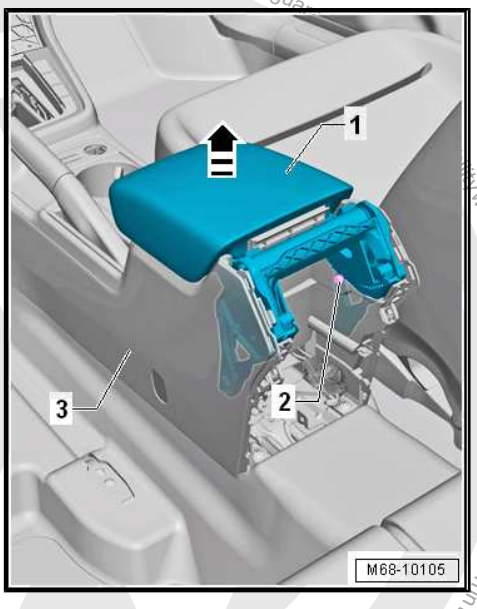

Installing

Note

Check all the fasteners for damage and replace if necessary.

Install in reverse order of removal.

Tightening Specifications

♦ Refer to ⇒ “4.1 Overview - Front Center Armrest”, page 62

Protected by copyright. Copying for private or commercial purposes, in part or in whole, is not permitted unless authorised by Volkswagen AG. Volkswagen AG does not guarantee or accept any liability with respect to the correctness of information in this document. Copyright by Volkswagen AG.

5 Interior Rearview Mirror

⇒ “5.1 Overview - Interior Rearview Mirror”, page 64

⇒ “5.2 Interior Rearview Mirror, Removing and Installing”, page 68

⇒ “5.3 Retaining Plate, Removing and Installing”, page 70

5.1 Overview - Interior Rearview Mirror

⇒ “5.1.1 Overview - Interior Rearview Mirror with Manual Dimming, without Rain/Light Recognition Sensor G397 and Driver Assistance Systems Front Camera R242 ”, page 64

⇒ “5.1.2 Overview - Interior Rearview Mirror with Manual or Automatic Dimming, with Rain/Light Recognition Sensor G397 and without Driver Assistance Systems Front Camera R242 ”, page 66

⇒ “5.1.3 Overview - Interior Rearview Mirror with Automatic Dimming, with Rain/Light Recognition Sensor G397 and Driver Assistance Systems Front Camera R242 ”, page 67

5.1.1 Overview - Interior Rearview Mirror with Manual Dimming, without Rain/Light Recognition Sensor - G397- and Driver Assistance Systems Front Camera - R242-

Protected by copyright. Copying for private or commercial purposes, in part or in whole, is not permitted unless authorised by Volkswagen AG. Volkswagen AG does not guarantee or accept any liability with respect to the correctness of information in this document. Copyright by Volkswagen AG.

1 - Baseplate

- ❑ Baseplate for mirror base
- ❑ Bonded to the windshield
- ❑ Removing and installing. Refer to ⇒ “5.3 Retaining Plate, Removing and Installing”, page 70 .

2 - Interior Rearview Mirror

- ❑ Manual dimming
- ❑ Removing and installing. Refer to ⇒ “5.2 Interior Rearview Mirror, Removing and Installing”, page 68 .

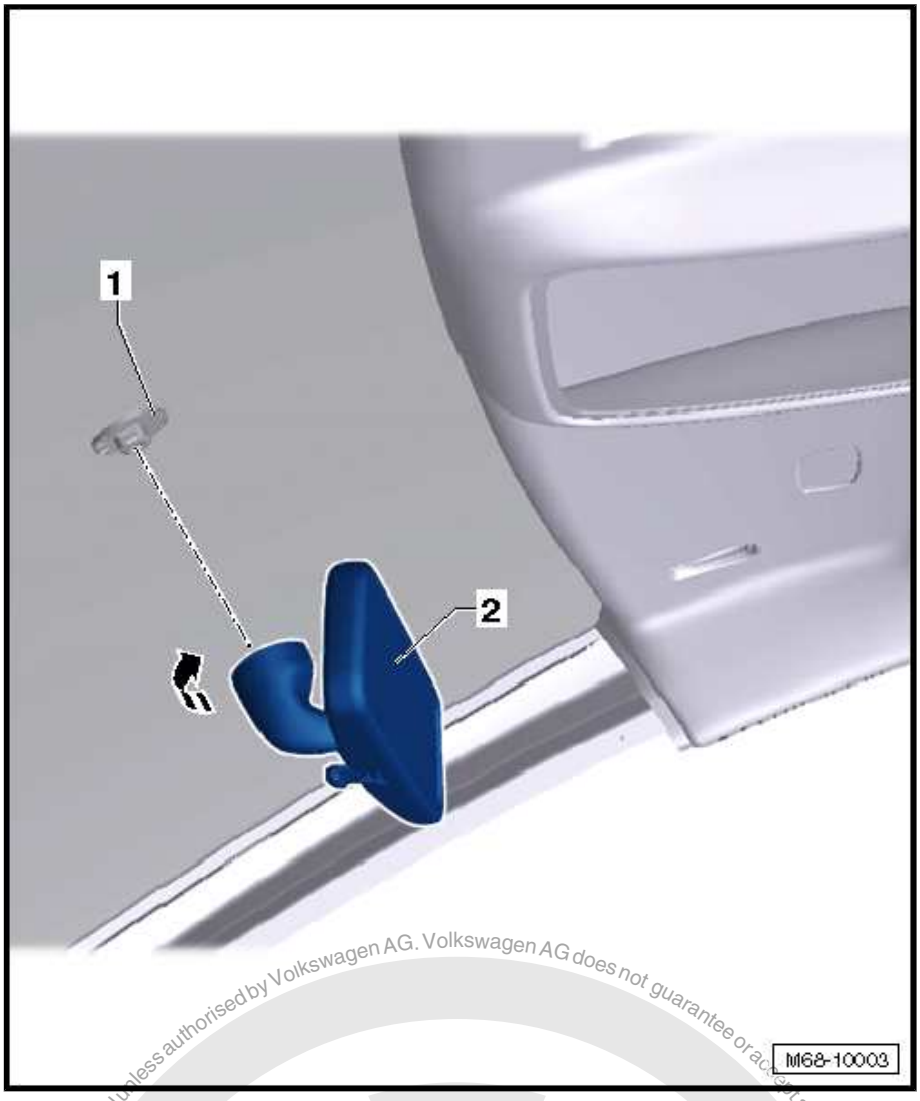

Protected by copyright. Copying for private or commercial purposes, in part or in whole, is not permitted unless authorised by Volkswagen AG. Volkswagen AG does not guarantee or accept any liability with respect to the correctness of information in this document. Copyright by Volkswagen AG.

5.1.2 Overview - Interior Rearview Mirror with Manual or Automatic Dimming, with Rain/Light Recognition Sensor - G397- and without Driver Assistance Systems Front Camera - R242-

1 - Front Cover

- ❑ for the mirror base

2 - Automatic High Beam Assist Control Module - J844-

- ❑ Equipment levels
- ❑ Not available separately.

3 - Baseplate

- ❑ For the interior rearview mirror
- ❑ Bonded to the windshield
- ❑ Removing and installing. Refer to ⇒ “5.3 Retaining Plate, Removing and Installing”, page 70 .

4 - Trim

- ❑ Clipped into the headliner frame
- ❑ To remove, first remove the rear cover -5-

5 - Rear Cover

- ❑ For the mirror base

6 - Interior Rearview Mirror

- ❑ Allocation. Refer to the Parts Catalog.
- ❑ Removing and installing. Refer to ⇒ “5.2 Interior Rearview Mirror, Removing and Installing”, page 68 .

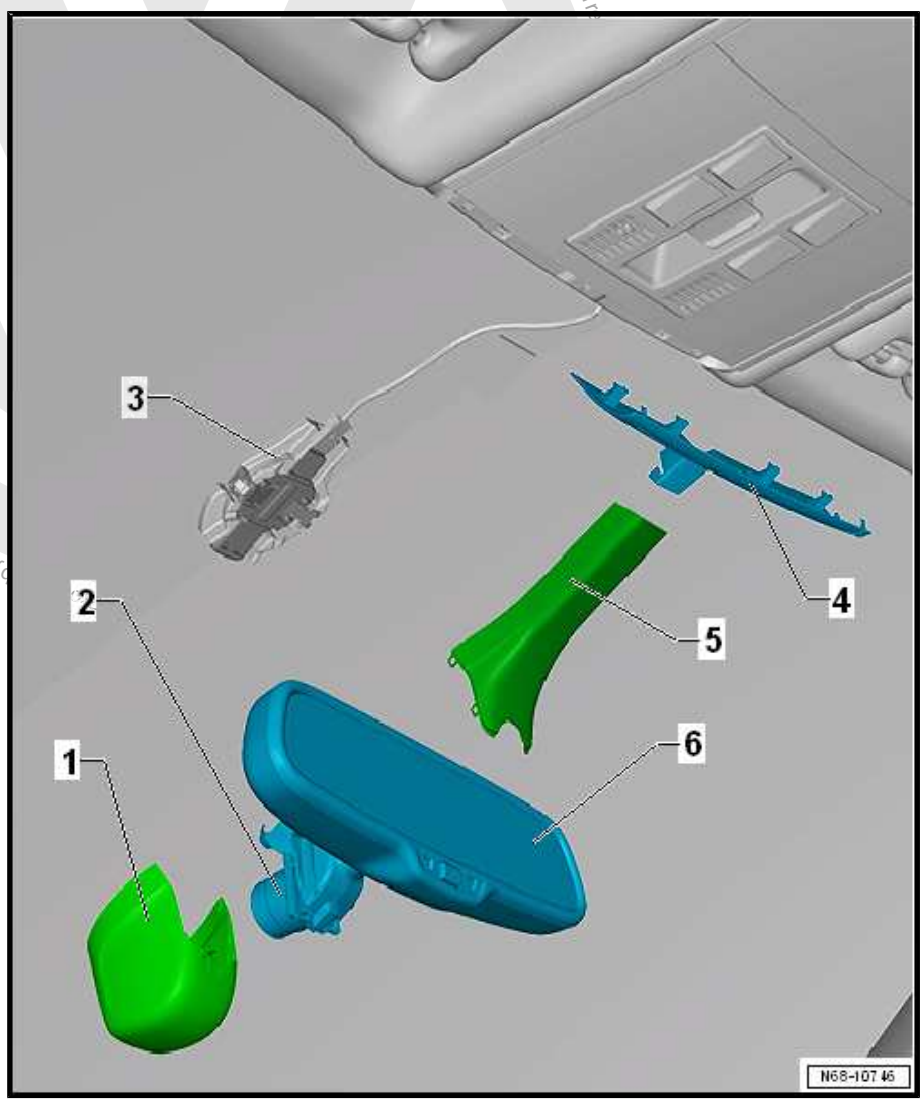

Volkswagen AG. Volkswagen AG does not guarantee or accept any liability with respect to the correctness of information in this document. Copyright by Volkswagen AG.

5.1.3 Overview - Interior Rearview Mirror with Automatic Dimming, with Rain/ Light Recognition Sensor - G397- and Driver Assistance Systems Front Camera - R242-

1 - Front Cover

- ❑ For the mirror base

2 - Baseplate

- ❑ For the interior rearview mirror
- ❑ Bonded to the windshield

3 - Rear Cover

- ❑ For the mirror base

4 - Interior Rearview Mirror

- ❑ Removing and installing. Refer to ⇒ "5.2 Interior Rearview Mirror, Removing and Installing", page 68 .

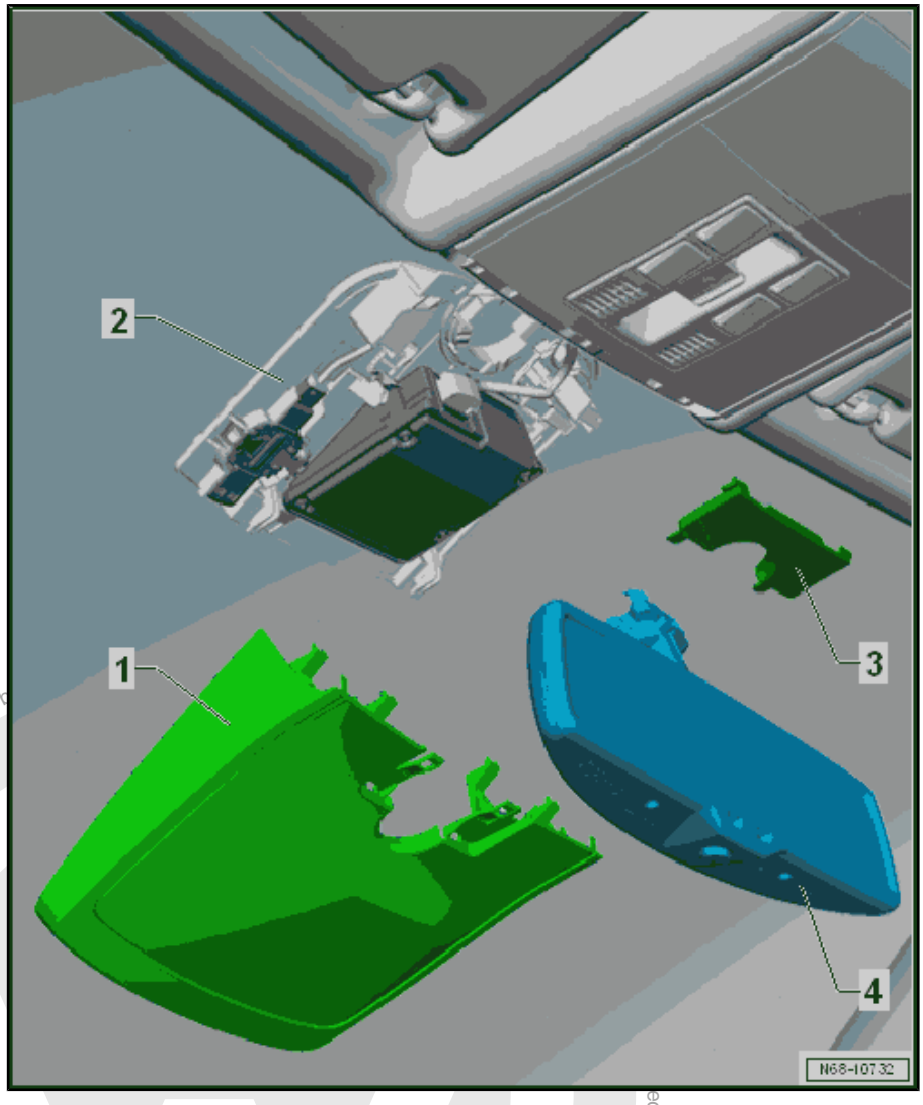

Protected by copyright. Copying for private or commercial purposes, in part or in whole, is not permitted unless authorised by Volkswagen AG. Copyright by Volkswagen AG. No liability for the correctness of information in this document.

5.2 Interior Rearview Mirror, Removing and Installing

⇒ "5.2.1 Manual Dimming Interior Rearview Mirror, Removing and Installing, without Rain/Light Recognition Sensor G397 and Driver Assistance Systems Front Camera R242 ", page 68

⇒ "5.2.2 Manual or Automatic Dimming Interior Rearview Mirror, Removing and Installing, with Rain/Light Recognition Sensor G397 and without Driver Assistance Systems Front Camera R242 ", page 69

⇒ "5.2.3 Automatic Dimming Interior Rearview Mirror, Removing and Installing, with Rain/Light Recognition Sensor G397 and Driver Assistance Systems Front Camera R242 ", page 70

5.2.1 Manual Dimming Interior Rearview Mirror, Removing and Installing, without Rain/Light Recognition Sensor - G397- and Driver Assistance Systems Front Camera - R242-

Removing

authorised by Volkswagen AG. Volkswagen AG does not guarantee or accep
ng for private or commercial purposes, in part or in whole, is not permitted unle

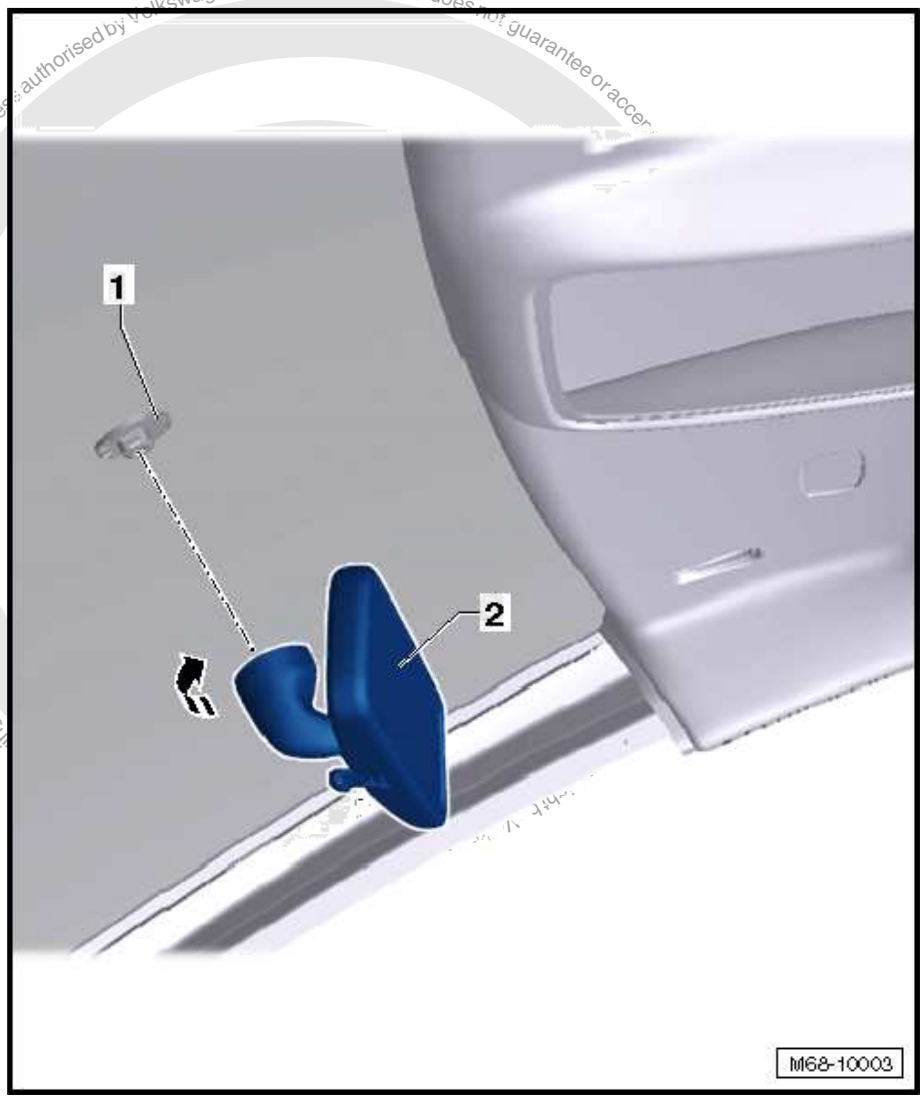

– Turn the interior rearview mirror -2- 90° ($^1/_4$ rotation) counter-clockwise in direction of -arrow-.

– Remove the interior rearview mirror -2- from the bonded base-plate -1-.

Installing

Note

Check all the fasteners for damage and replace if necessary.

Install in reverse order of removal.

5.2.2 Manual or Automatic Dimming Interior Rearview Mirror, Removing and Installing, with Rain/Light Recognition Sensor - G397- and without Driver Assistance Systems Front Camera - R242-

Removing

– Pivot the interior rearview mirror downward until stop, approximately 25°.

– Pull the cover -2- rearward and downward in direction of -arrow- and at the same time release the catches -1- with a screwdriver.

– Disengage the cover from the mirror base and remove.

– Carefully disengage the tabs in direction of -arrows- and remove the front cover -1- downward out of the guide rods on the interior rearview mirror base -2-.

– Turn the interior rearview mirror -1- 20° counter-clockwise in direction of -arrow- and remove it downward.

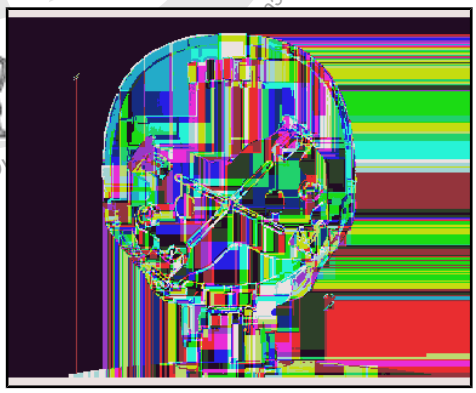

– If equipped, disconnect the connector from the interior rearview mirror.

Installing

Note

Check all the fasteners for damage and replace if necessary.

Install in reverse order of removal.

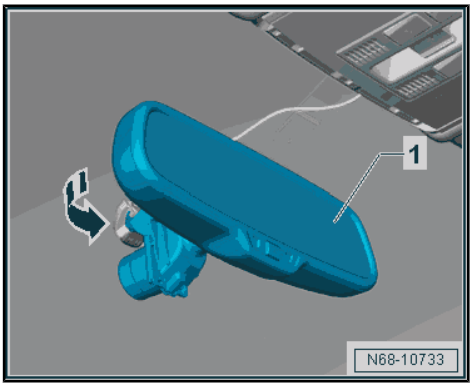

Protected by copyright. Copying for private or commercial purposes, in part or in whole, is not permitted unless authorised. Volkswagen AG does not guarantee or accept any liability with resp

Protected by copyright. Copying for private or commercial purposes, in part or in whole, is not permitted unless authorised by Volkswagen AG. Volkswagen AG does not guarantee or accept any liability with respect to the correctness of information

5.2.3 Automatic Dimming Interior Rearview Mirror, Removing and Installing, with Rain/Light Recognition Sensor - G397- and Driver Assistance Systems Front Camera - R242-

Removing

- Unclip the front cover -1- from the Front Interior Lamp - WX1- and pull it downward approximately 10 mm in direction of -arrows B-.
- Release the retaining tabs -3- using a small screwdriver.
- Pull the front cover -1- forward off of the Front Interior Lamp - WX1- and the retaining plate in direction of -arrow B- and remove.
- Remove the rear cover -2- toward the rear.
- Using a 13 mm open-end wrench -2-, turn the interior rearview mirror -1- 20° counter-clockwise -arrow- and remove it downward.

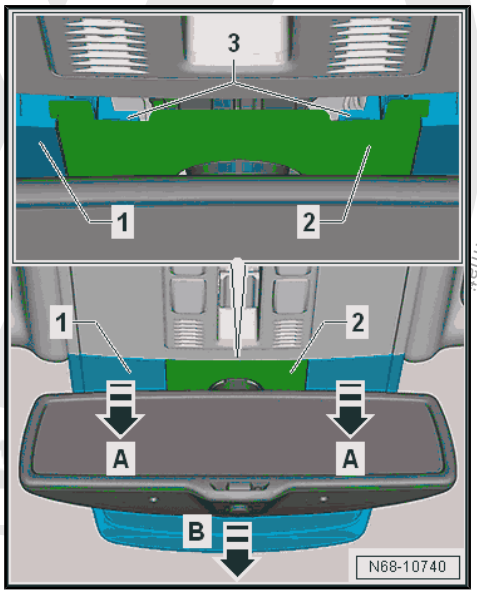

- Disconnect the connector from the interior rearview mirror.

Installing

Note

Check all the fasteners for damage and replace if necessary.

Install in reverse order of removal.

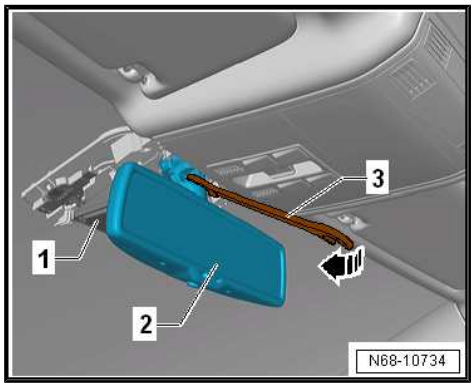

5.3 Retaining Plate, Removing and Installing

⇒ "5.3.1 Manual or Automatic Dimming Interior Rearview Mirror Retaining Plate, Removing and Installing, without Rain/Light Recognition Sensor G397 and Driver Assistance Systems Front Camera R242 ", page 70

⇒ "5.3.2 Manual Dimming Interior Rearview Mirror Retaining Plate, Removing and Installing, with Rain/Light Recognition Sensor G397 and without Driver Assistance Systems Front Camera R242 ", page 72

5.3.1 Manual or Automatic Dimming Interior Rearview Mirror Retaining Plate, Removing and Installing, without Rain/Light Recognition Sensor - G397- and Driver Assistance Systems Front Camera - R242-

Special tools and workshop equipment required

- Window scraper (commercially available)
- Blade (commercially available)

Materials

- Glass/Metal Adhesive Set - D 000 703 A1-

Attaching

– Remove the baseplate -1- from the mirror base -2- in the direction of the -arrow-.

– Remove the PUR adhesive sealant from the baseplate -1- with a wire brush.

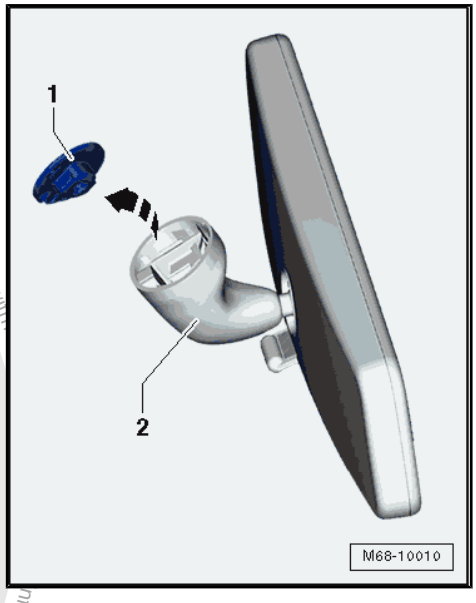

– Sand off the three spacer knobs -arrows- on the adhesive surface. Use 360 - 400 grit sand paper on the flat surface.

– Keep the sanded surface free of dirt and grease.

– Remove the PUR adhesive sealant as well as the old glass/paint primer up to the ceramic layer from the windshield with a scraper.

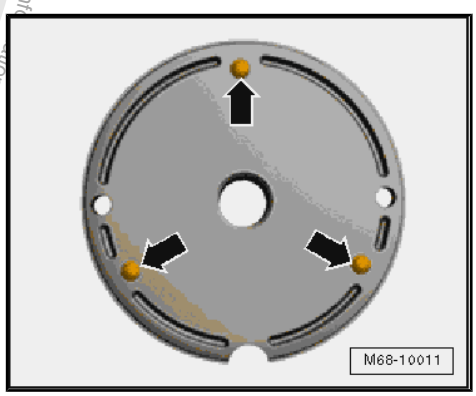

Caution

Do not damage the ceramic layer. Scratches always remain visible.

– Clean the adhesive surface with Adhesive Remover - D 002 000 10- or Cleaning Solution - D 009 401 04- .

– Cut the nylon mesh -3- taken from the Glass/Metal Adhesive Set - D 000 703 A1- to the exact size of the baseplate -2-.

Note

- *Protective gloves (rubber gloves) should be worn.*
- *Pay attention to the adhesive working time.*
- *30 seconds are available from laying the nylon mesh on the adhesive to pressing on the windshield.*

– Apply adhesive -1- from the Glass/Metal Adhesive Set - D 000 703 A1- evenly over the baseplate -2-.

– Place the nylon mesh -3- on the baseplate -2-.

Copyright by Volkswagen AG. Volkswagen AG does not guarantee or accept any liability with respect to the correctness and completeness of information in this document. Copyright by Volkswagen AG. Protected by copyright. Copying for private or commercial purposes, in part or in whole, is not permitted unless authorised by Volkswagen AG.

– With the adhesive tube -1- dab more adhesive onto the nylon mesh -3-.

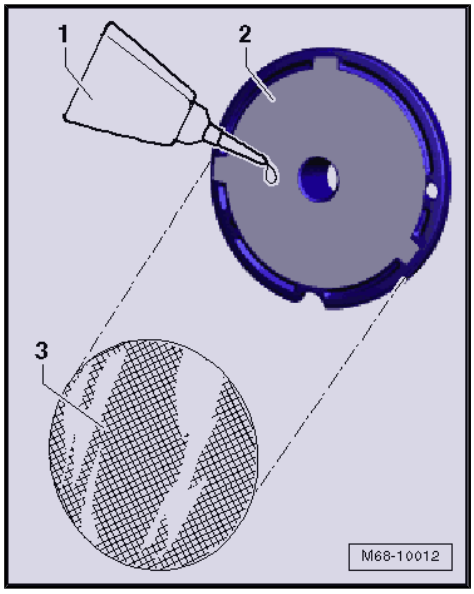

– Press the baseplate -1- onto the windshield -2- and hold for 15 seconds (without using force).

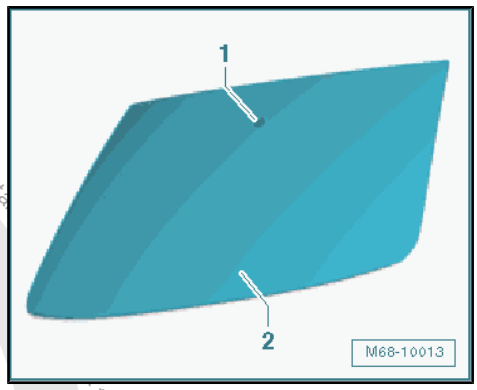

Note

The interior rearview mirror can be installed after 15 minutes.

5.3.2 Manual Dimming Interior Rearview Mirror Retaining Plate, Removing and Installing, with Rain/Light Recognition Sensor - G397- and without Driver Assistance Systems Front Camera - R242-

Note

- *Removal of windshield is no longer necessary, as with previous repair procedure.*
- *At the same time, it is possible to use the old, detached mirror base.*

Windshield, Preparing

– All adhesive and primer residue must be removed up to ceramic coating.

– Clean the adhesive surface using Cleaning Solution - D 009 401 04- .

– Maintain a “drying time” of at least 10 minutes.

– Apply the Glass/Paint Primer - D 009 200 02- on the ceramic coating.

– Let it dry for 10 minutes to maximum one hour.

Protected by copyright. Copying for private or commercial purposes, in part or in whole, is not permitted unless authorised by Volkswagen AG. Volkswagen AG does not guarantee or accept any liability with respect to the correctness of information in this document. Copyright by Volkswagen AG.

Preparing the Fallen Retaining Plate

– Remove the remaining adhesive:

♦ Prepare the adhesive surface by “wet-sanding” with fine emery paper (800-1200 grit) until water coats the entire adhesive surface.

♦ Then clean using Cleaning Solution - D 009 401 04- .

♦ Maintain a “drying time” of at least 10 minutes.

Baseplate, Bonding

– Apply the Two-Part Polyurethane Adhesive - D 180 KD2 A1- directly onto the sanded and cleaned adhesive surface -1- on the baseplate.

Adhesive bead diameter: approximately 2.5 to 3.0 mm.

– Press the retaining plate onto the prepared windshield -2- immediately after applying the adhesive.

– Align the retaining plate in its designated position on the ceramic coating and secure using adhesive tape.

Excess Adhesive, Cleaning and Removing

– Carefully remove the adhesive tape 0.5 to 1 hour after attaching the baseplate.

– Carefully the remove excess soft adhesive all around using a small scraper.

– Then remove any remaining excess adhesive using a primer applicator or cloth, saturated with Cleaning Solution - D 009 401 04- .

Note

The interior rearview mirror can be installed 2.5 hours after gluing on the retaining plate.

Protected by copyright. Copying for private or commercial purposes, in part or in whole, is not permitted unless authorised by Volkswagen AG. Volkswagen AG does not guarantee or accept any liability with respect to the correctness of information in this document. Copyright by Volkswagen AG.

6 Special Tools

Special tools and workshop equipment required

- Puller - Unit Injector - T10055-

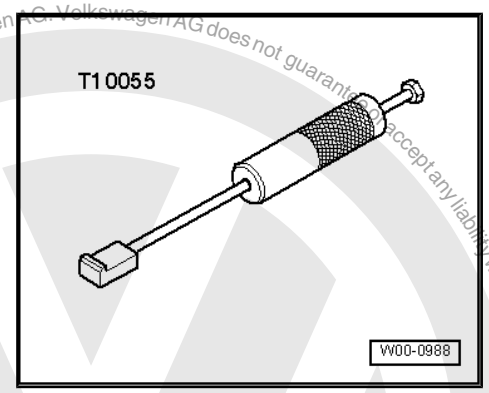

- Assembly Tool - T10488-
- Release Tool - T10518-

- Torque Wrench 1783 - 2-10Nm - VAG1783-

- Release Pliers - VAS6427-

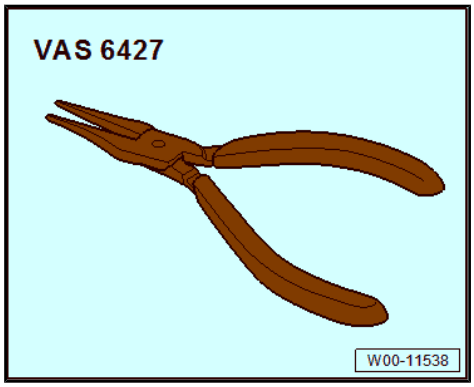

Protected by copyright. Copying for private or commercial purposes, in part or in whole, is not permitted unless authorised by Volkswagen AG. Volkswagen AG does not guarantee or accept any liability with respect to the correctness of information in

- Trim Removal Wedge - 3409-

Protected by copyright. Copying for private or commercial purposes, in part or in whole, is not permitted unless authorised by Volkswagen AG. Volkswagen AG does not guarantee or accept any liability with respect to the correctness of information in this document. Copyright by Volkswagen AG.

69 – Passenger Protection, Airbags, Seat Belts

1 Seat Belts

⇒ “1.1 Component Location Overview - Seat Belts and Mounting Points”, page 76

⇒ “1.2 Overview - Front Three-Point Seat Belt”, page 83

⇒ “1.3 Overview - Outer Rear Three-Point Seat Belt”, page 88

⇒ “1.4 Overview - Rear Center Three-Point Seat Belt”, page 94

⇒ “1.5 Overview - Front Seat Belt Latch”, page 95

⇒ “1.6 Overview - Rear Seat Belt Latch”, page 97

⇒ “1.7 Front Three-Point Seat Belt, Removing and Installing”, page 98

⇒ “1.8 Rear Three-Point Seat Belt, Removing and Installing”, page 106

⇒ “1.9 Front Seat Belt Guide, Removing and Installing”, page 114

⇒ “1.10 Rear Seat Belt Guide, Removing and Installing”, page 115

⇒ “1.11 Front Belt End Fitting, Removing and Installing”, page 116

⇒ “1.12 Rear Outer Belt End Fitting, Removing and Installing”, page 117

⇒ “1.13 Seat Belt Height Adjuster, Removing and Installing”, page 118

⇒ “1.14 Front Seat Belt Latch, Removing and Installing”, page 120

⇒ “1.15 Rear Seat Belt Latch, Removing and Installing”, page 121

1.1 Component Location Overview - Seat Belts and Mounting Points

⇒ “1.1.1 Component Location Overview - Seat Belts and Mounting Points, 2-Door Sedan”, page 76

⇒ “1.1.2 Component Location Overview - Seat Belts and Mounting Points, 4-Door Sedan”, page 79

⇒ “1.1.3 Component Location Overview - Seat Belts and Mounting Points, Wagon”, page 81

1.1.1 Component Location Overview - Seat Belts and Mounting Points, 2-Door Sedan

Protected by copyright. Copying for private or commercial purposes, in part or whole, is not permitted unless authorised by Volkswagen AG. Volkswagen AG does not guarantee or accept any liability with respect to the correctness of information in this document. Copyright by Volkswagen AG.

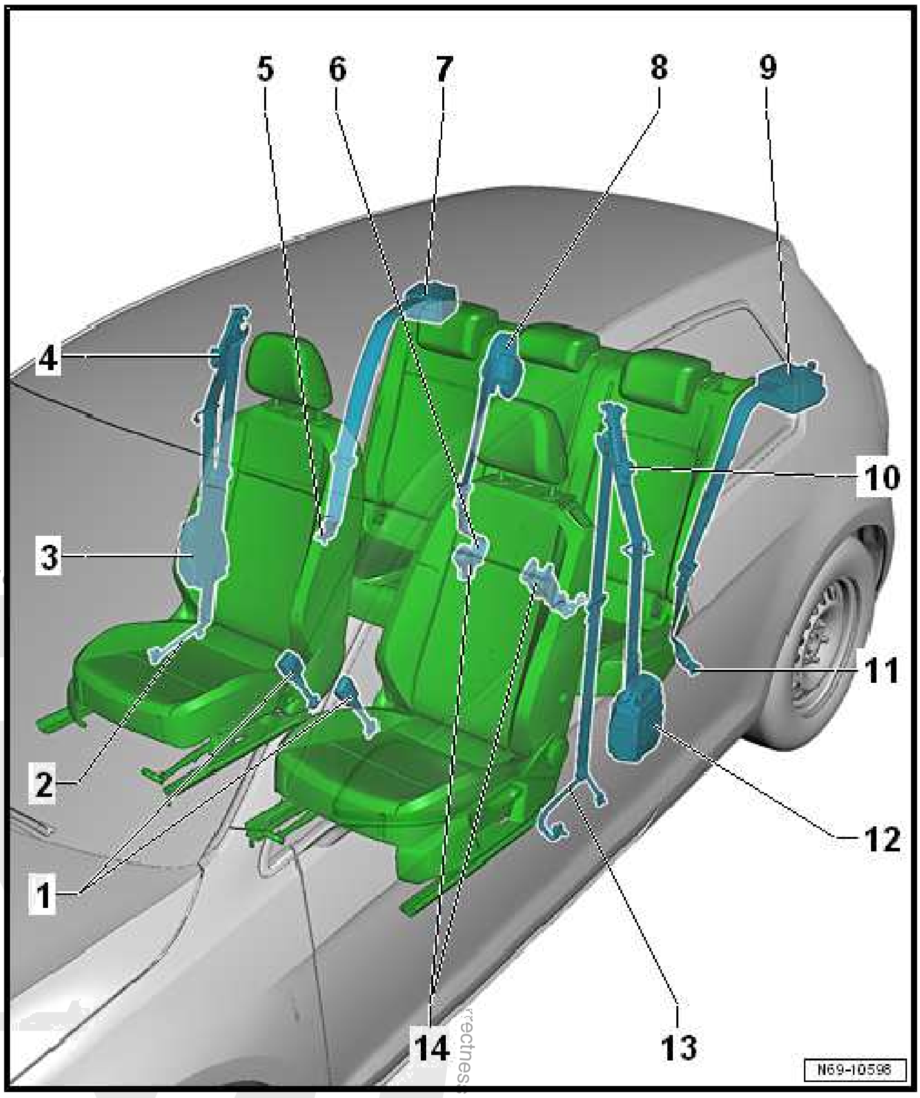

1 - Front Seat Belt Latches

- ❑ Overview. Refer to ⇒ “1.5.1 Overview - Front Seat Belt Latch, 2-Door Sedan”, page 95 .
- ❑ Removing and installing. Refer to ⇒ “1.14 Front Seat Belt Latch, Removing and Installing”, page 120 .

2 - Front Belt End Fitting

- ❑ Overview. Refer to ⇒ “1.2 Overview - Front Three-Point Seat Belt”, page 83 .
- ❑ Removing and installing. Refer to ⇒ “1.11 Front Belt End Fitting, Removing and Installing”, page 116 .

3 - Front Three-Point Seat Belt

- ❑ With Front Passenger Seat Belt Tensioner Igniter 1 - N154- and Right Front Seat Belt Tensioner Control Module - J855-
- ❑ Overview. Refer to ⇒ “1.2 Overview - Front Three-Point Seat Belt”, page 83 .
- ❑ Removing and installing. Refer to ⇒ “1.7 Front Three-Point Seat Belt, Removing and Installing”, page 98 .

4 - Seat Belt Height Adjuster

- ❑ Overview. Refer to ⇒ “1.2 Overview - Front Three-Point Seat Belt”, page 83 .
- ❑ Removing and installing. Refer to ⇒ “1.13 Seat Belt Height Adjuster, Removing and Installing”, page 118 .

5 - Outer Rear Belt End Fitting

- ❑ Overview. Refer to ⇒ “1.3 Overview - Outer Rear Three-Point Seat Belt”, page 88 .
- ❑ Removing and installing. Refer to ⇒ “1.12 Rear Outer Belt End Fitting, Removing and Installing”, page 117 .

6 - Center Rear Belt End Fitting

- ❑ Overview. Refer to ⇒ “1.4 Overview - Rear Center Three-Point Seat Belt”, page 94 .
- ❑ Removing and installing. Refer to ⇒ “1.15 Rear Seat Belt Latch, Removing and Installing”, page 121 .

7 - Automatic Belt Retractor

- ❑ For outer rear three-point seat belt
- ❑ Overview. Refer to ⇒ “1.3 Overview - Outer Rear Three-Point Seat Belt”, page 88 .
- ❑ Removing and installing. Refer to ⇒ “1.8 Rear Three-Point Seat Belt, Removing and Installing”, page 106 .

8 - Automatic Belt Retractor

- ❑ For the rear three-point seat belt in the center
- ❑ Overview. Refer to ⇒ “1.4 Overview - Rear Center Three-Point Seat Belt”, page 94 .

Protected by copyright. Copying for private or commercial purposes, in part or in whole, is not permitted unless authorised by Volkswagen AG. Volkswagen AG does not guarantee or accept any liability with respect to the correctness of information in this document. Copyright by Volkswagen AG.

- ❑ Removing and installing. Refer to
  ⇒ “1.8.7 Rear Three Point Seat Belt in Center, Removing and Installing”, page 113 .

9 - Automatic Belt Retractor

- ❑ For outer rear three-point seat belt
- ❑ Overview. Refer to ⇒ “1.3 Overview - Outer Rear Three-Point Seat Belt”, page 88 .
- ❑ Removing and installing. Refer to
  ⇒ “1.8 Rear Three-Point Seat Belt, Removing and Installing”, page 106 .

10 - Seat Belt Height Adjuster

- ❑ Overview. Refer to ⇒ “1.2 Overview - Front Three-Point Seat Belt”, page 83 .
- ❑ Removing and installing. Refer to
  ⇒ “1.13 Seat Belt Height Adjuster, Removing and Installing”, page 118 .

11 - Outer Rear Belt End Fitting

- ❑ Overview. Refer to ⇒ “1.3 Overview - Outer Rear Three-Point Seat Belt”, page 88 .
- ❑ Removing and installing. Refer to
  ⇒ “1.12 Rear Outer Belt End Fitting, Removing and Installing”, page 117 .

12 - Automatic Belt Retractor

- ❑ For the front three-point seat belt
- ❑ With Driver Seat Belt Tensioner Igniter 1 - N153- and Left Front Seat Belt Tensioner Control Module - J854-
- ❑ Overview. Refer to ⇒ “1.2 Overview - Front Three-Point Seat Belt”, page 83 .
- ❑ Removing and installing. Refer to
  ⇒ “1.7 Front Three-Point Seat Belt, Removing and Installing”, page 98 .

13 - Front Belt End Fitting

- ❑ Overview. Refer to ⇒ “1.2 Overview - Front Three-Point Seat Belt”, page 83 .
- ❑ Removing and installing. Refer to ⇒ “1.11 Front Belt End Fitting, Removing and Installing”, page 116 .

14 - Rear Seat Belt Latch

- ❑ Overview. Refer to ⇒ “1.6 Overview - Rear Seat Belt Latch”, page 97 .
- ❑ Removing and installing. Refer to ⇒ “1.15 Rear Seat Belt Latch, Removing and Installing”, page 121 .

Protected by copyright. Copying for private or commercial purposes, in part or in whole, is not permitted unless authorised by Volkswagen AG. Volkswagen AG does not guarantee or accept any liability with respect to the correctness of information in this document. Copyright by Volkswagen AG.

1.1.2 Component Location Overview - Seat Belts and Mounting Points, 4-Door Sedan

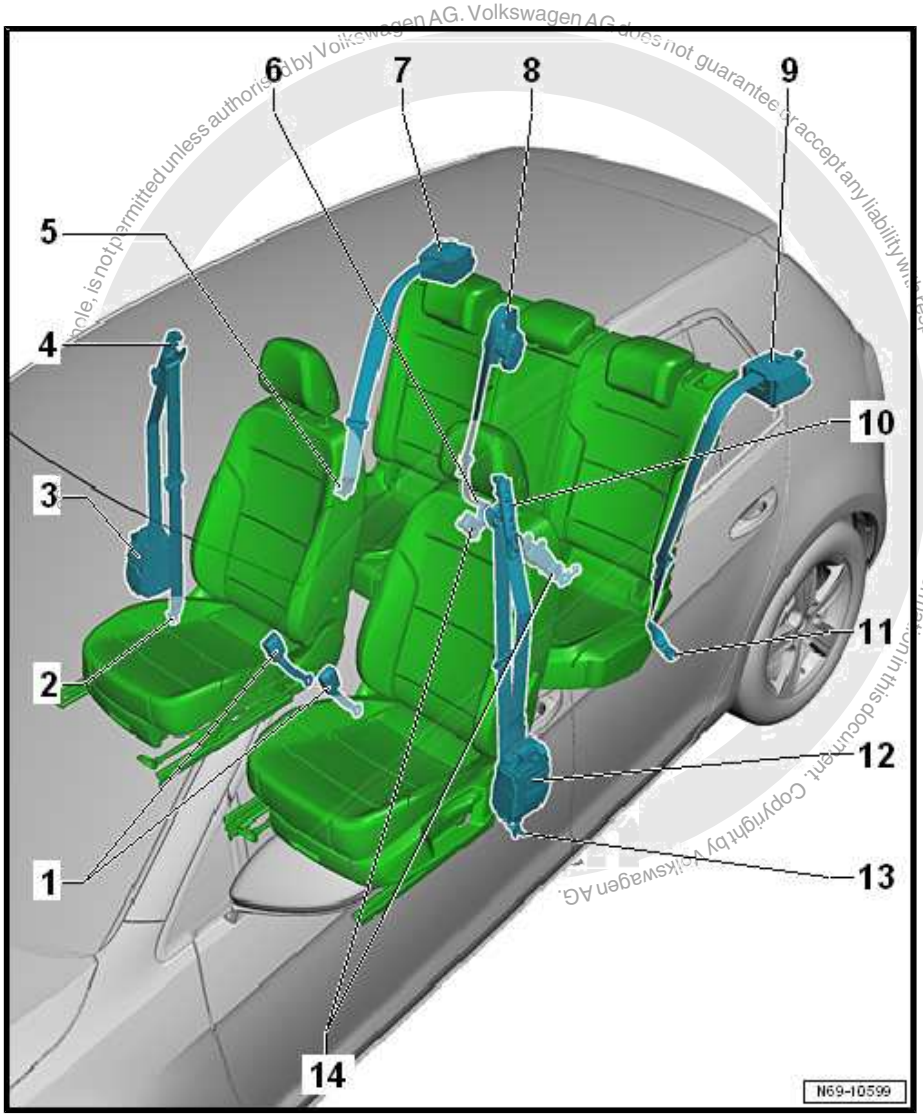

1 - Front Seat Belt Latches

- ❑ Overview. Refer to ⇒ “1.5.2 Overview - Front Seat Belt Latch, 4-Door Sedan and Wagon”, page 96 .
- ❑ Removing and installing. Refer to ⇒ “1.14 Front Seat Belt Latch, Removing and Installing”, page 120 .

2 - Front Belt End Fitting

- ❑ Overview. Refer to ⇒ “1.2 Overview - Front Three-Point Seat Belt”, page 83 .
- ❑ Removing and installing. Refer to ⇒ “1.11 Front Belt End Fitting, Removing and Installing”, page 116 .

3 - Front Three-Point Seat Belt

- ❑ With Front Passenger Seat Belt Tensioner Igniter 1 - N154- and Right Front Seat Belt Tensioner Control Module - J855-
- ❑ Overview. Refer to ⇒ “1.2 Overview - Front Three-Point Seat Belt”, page 83 .
- ❑ Removing and installing. Refer to ⇒ “1.7 Front Three-Point Seat Belt, Removing and Installing”, page 98 .

4 - Seat Belt Height Adjuster

- ❑ Overview. Refer to ⇒ “1.2 Overview - Front Three-Point Seat Belt”, page 83 .
- ❑ Removing and installing. Refer to ⇒ “1.13 Seat Belt Height Adjuster, Removing and Installing”, page 118 .

5 - Outer Rear Belt End Fitting

- ❑ Overview. Refer to ⇒ “1.3 Overview - Outer Rear Three-Point Seat Belt”, page 88 .
- ❑ Removing and installing. Refer to ⇒ “1.12 Rear Outer Belt End Fitting, Removing and Installing”, page 117 .

6 - Center Rear Belt End Fitting

- ❑ Overview. Refer to ⇒ “1.4 Overview - Rear Center Three-Point Seat Belt”, page 94 .
- ❑ Removing and installing. Refer to ⇒ “1.15 Rear Seat Belt Latch, Removing and Installing”, page 121 .

7 - Automatic Belt Retractor

- ❑ For outer rear three-point seat belt
- ❑ Overview. Refer to ⇒ “1.3 Overview - Outer Rear Three-Point Seat Belt”, page 88 .
- ❑ Removing and installing. Refer to ⇒ “1.8 Rear Three-Point Seat Belt, Removing and Installing”, page 106 .

Copyright by Volkswagen AG. Volkswagen AG does not guarantee or accept any liability with respect to the correctness of information in this document. Copyright by Volkswagen AG. This document, or any part thereof, is not permitted unless authorised by Volkswagen AG.

8 - Automatic Belt Retractor

- ❑ For the rear three-point seat belt in the center
- ❑ Overview. Refer to ⇒ “1.4 Overview - Rear Center Three-Point Seat Belt”, page 94 .
- ❑ Removing and installing. Refer to ⇒ “1.8.7 Rear Three Point Seat Belt in Center, Removing and Installing”, page 113 .

9 - Automatic Belt Retractor

- ❑ For outer rear three-point seat belt
- ❑ Overview. Refer to ⇒ “1.3 Overview - Outer Rear Three-Point Seat Belt”, page 88 .
- ❑ Removing and installing. Refer to ⇒ “1.8 Rear Three-Point Seat Belt, Removing and Installing”, page 106 .

10 - Seat Belt Height Adjuster

- ❑ Overview. Refer to ⇒ “1.2 Overview - Front Three-Point Seat Belt”, page 83 .
- ❑ Removing and installing. Refer to ⇒ “1.13 Seat Belt Height Adjuster, Removing and Installing”, page 118 .

11 - Outer Rear Belt End Fitting

- ❑ Overview. Refer to ⇒ “1.3 Overview - Outer Rear Three-Point Seat Belt”, page 88 .
- ❑ Removing and installing. Refer to ⇒ “1.12 Rear Outer Belt End Fitting, Removing and Installing”, page 117 .

12 - Automatic Belt Retractor

- ❑ For the front three-point seat belt
- ❑ With Driver Seat Belt Tensioner Igniter 1 - N153- and Left Front Seat Belt Tensioner Control Module - J854-
- ❑ Overview. Refer to ⇒ “1.2 Overview - Front Three-Point Seat Belt”, page 83 .
- ❑ Removing and installing. Refer to ⇒ “1.7 Front Three-Point Seat Belt, Removing and Installing”, page 98 .

13 - Front Belt End Fitting

- ❑ Overview. Refer to ⇒ “1.2 Overview - Front Three-Point Seat Belt”, page 83 .
- ❑ Removing and installing. Refer to ⇒ “1.11 Front Belt End Fitting, Removing and Installing”, page 116 .

14 - Rear Seat Belt Latch

- ❑ Overview. Refer to ⇒ “1.6 Overview - Rear Seat Belt Latch”, page 97 .
- ❑ Removing and installing. Refer to ⇒ “1.15 Rear Seat Belt Latch, Removing and Installing”, page 121 .

Protected by copyright. Copying for private or commercial purposes, in part or in whole, is not permitted unless authorised by Volkswagen AG. Volkswagen AG does not guarantee or accept any liability with respect to the correctness of information in this document. Copyright by Volkswagen AG.

1.1.3 Component Location Overview - Seat Belts and Mounting Points, Wagon

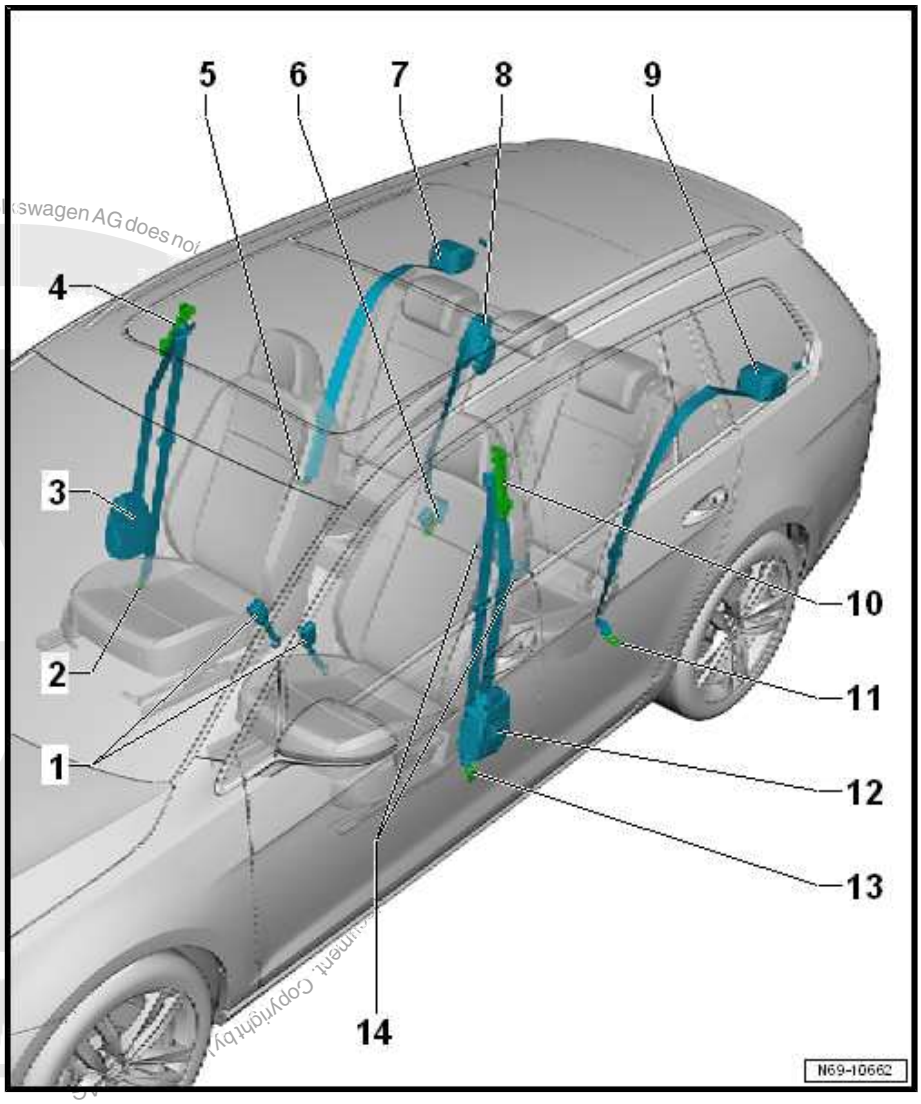

1 - Front Seat Belt Latches

- ❑ Overview. Refer to ⇒ "1.5.2 Overview - Front Seat Belt Latch, 4-Door Sedan and Wagon", page 96 .
- ❑ Removing and installing. Refer to ⇒ "1.14 Front Seat Belt Latch, Removing and Installing", page 120 .

2 - Front Belt End Fitting

- ❑ Overview. Refer to ⇒ "1.2 Overview - Front Three-Point Seat Belt", page 83 .
- ❑ Removing and installing. Refer to ⇒ "1.11 Front Belt End Fitting, Removing and Installing", page 116 .

3 - Front Three-Point Seat Belt

- ❑ With Front Passenger Seat Belt Tensioner Igniter 1 - N154- and Right Front Seat Belt Tensioner Control Module - J855-
- ❑ Overview. Refer to ⇒ "1.2 Overview - Front Three-Point Seat Belt", page 83 .
- ❑ Removing and installing. Refer to ⇒ "1.7 Front Three-Point Seat Belt, Removing and Installing", page 98 .

4 - Seat Belt Height Adjuster

- ❑ Overview. Refer to ⇒ "1.2 Overview - Front Three-Point Seat Belt", page 83 .
- ❑ Removing and installing. Refer to ⇒ "1.13 Seat Belt Height Adjuster, Removing and Installing", page 118 .

5 - Outer Rear Belt End Fitting

- ❑ Overview. Refer to ⇒ "1.3 Overview - Outer Rear Three-Point Seat Belt", page 88 .
- ❑ Removing and installing. Refer to ⇒ "1.12 Rear Outer Belt End Fitting, Removing and Installing", page 117 .

6 - Center Rear Belt End Fitting

- ❑ Overview. Refer to ⇒ "1.4 Overview - Rear Center Three-Point Seat Belt", page 94 .
- ❑ Removing and installing. Refer to ⇒ "1.15 Rear Seat Belt Latch, Removing and Installing", page 121 .

7 - Automatic Belt Retractor

- ❑ For outer rear three-point seat belt
- ❑ Overview. Refer to ⇒ "1.3 Overview - Outer Rear Three-Point Seat Belt", page 88 .
- ❑ Removing and installing. Refer to ⇒ "1.8 Rear Three-Point Seat Belt, Removing and Installing", page 106 .

Protected by copyright. Copying for private or commercial purposes, in part or in whole, is not permitted unless authorised by Volkswagen AG. Volkswagen AG does not

8 - Automatic Belt Retractor

- ❑ For the rear three-point seat belt in the center
- ❑ Overview. Refer to ⇒ “1.4 Overview - Rear Center Three-Point Seat Belt”, page 94 .
- ❑ Removing and installing. Refer to ⇒ “1.8.7 Rear Three Point Seat Belt in Center, Removing and Installing”, page 113 .

9 - Automatic Belt Retractor

- ❑ For outer rear three-point seat belt
- ❑ Overview. Refer to ⇒ “1.3 Overview - Outer Rear Three-Point Seat Belt”, page 88 .
- ❑ Removing and installing. Refer to ⇒ “1.8 Rear Three-Point Seat Belt, Removing and Installing”, page 106 .

10 - Seat Belt Height Adjuster

- ❑ Overview. Refer to ⇒ “1.2 Overview - Front Three-Point Seat Belt”, page 83 .
- ❑ Removing and installing. Refer to ⇒ “1.13 Seat Belt Height Adjuster, Removing and Installing”, page 118 .

11 - Outer Rear Belt End Fitting

- ❑ Overview. Refer to ⇒ “1.3 Overview - Outer Rear Three-Point Seat Belt”, page 88 .
- ❑ Removing and installing. Refer to ⇒ “1.12 Rear Outer Belt End Fitting, Removing and Installing”, page 117 .

12 - Automatic Belt Retractor

- ❑ For the front three-point seat belt
- ❑ With Driver Seat Belt Tensioner Igniter 1 - N153- and Left Front Seat Belt Tensioner Control Module - J854-
- ❑ Overview. Refer to ⇒ “1.2 Overview - Front Three-Point Seat Belt”, page 83 .
- ❑ Removing and installing. Refer to ⇒ “1.7 Front Three-Point Seat Belt, Removing and Installing”, page 98 .

13 - Front Belt End Fitting

- ❑ Overview. Refer to ⇒ “1.2 Overview - Front Three-Point Seat Belt”, page 83 .
- ❑ Removing and installing. Refer to ⇒ “1.11 Front Belt End Fitting, Removing and Installing”, page 116 .

14 - Rear Seat Belt Latch

- ❑ Overview. Refer to ⇒ “1.6 Overview - Rear Seat Belt Latch”, page 97 .
- ❑ Removing and installing. Refer to ⇒ “1.15 Rear Seat Belt Latch, Removing and Installing”, page 121 .

Protected by copyright. Copying for private or commercial purposes, in part or in whole, is not permitted unless authorised by Volkswagen AG. Volkswagen AG does not guarantee or accept any liability with respect to the correctness of information in this document. Copyright by Volkswagen AG.

1.2 Overview - Front Three-Point Seat Belt

⇒ “1.2.1 Overview - Front Three-Point Seat Belt, without Belt End Fitting Tensioner, 2-Door Sedan”, page 83

⇒ “1.2.2 Overview - Front Three-Point Seat Belt, without Belt End Fitting Tensioner, 4-Door Sedan and Wagon”, page 85

⇒ “1.2.3 Overview - Front Three-Point Seat Belt, with Belt End Fitting Tensioner”, page 86

1.2.1 Overview - Front Three-Point Seat Belt, without Belt End Fitting Tensioner, 2-Door Sedan

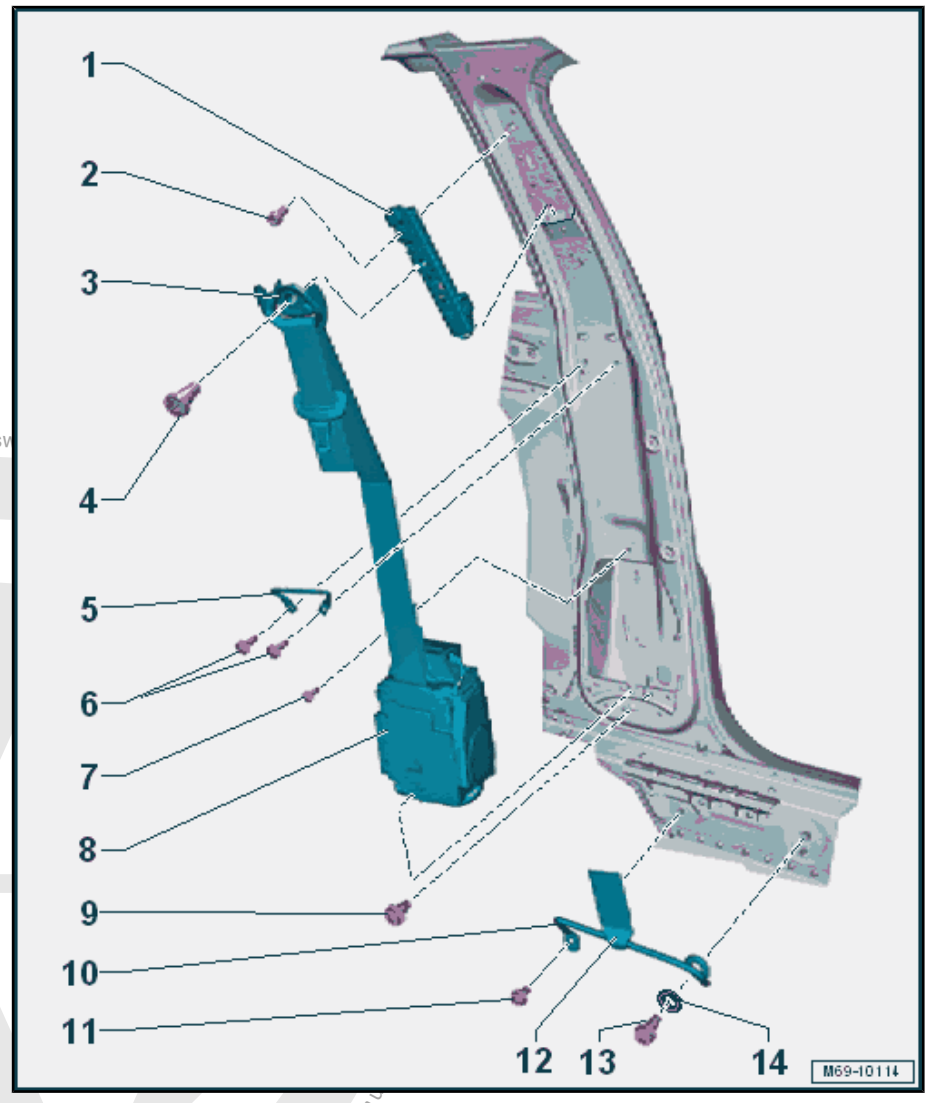

1 - Seat Belt Height Adjuster

- ❑ Removing and installing. Refer to ⇒ “1.13 Seat Belt Height Adjuster, Removing and Installing”, page 118 .
- ❑ Always replace if the belt tensioner has deployed when the seat belt was buckled.

2 - Screw

- ❑ 20 Nm
- ❑ Replace the bolt if it was removed because of an accident when the seat belt was buckled.

3 - Seat Belt Guide

- ❑ Must swing into vertical position or carrier direction by itself after tightening the screw.

4 - Screw

- ❑ 40 Nm
- ❑ Replace the bolt if it was removed because of an accident when the seat belt was buckled.

5 - Front Seat Belt Guide

- ❑ Removing and installing. Refer to ⇒ “1.9.1 Front Seat Belt Guide, Removing and Installing, 2-Door Sedan”, page 114 .
- ❑ When installing, pay attention to the correct installation position

6 - Screws

- ❑ 4.5 Nm
- ❑ Quantity: 2

7 - Screw

- ❑ 4.5 Nm

8 - Automatic Belt Retractor

- ❑ Driver side: with Driver Seat Belt Tensioner Igniter 1 - N153- and Left Front Seat Belt Tensioner Control Module - J854-

Protected by copyright. Copying for private or commercial purposes, in part or in whole, is not permitted unless authorised by Volkswagen AG. Copyright by Volkswagen AG.

- ❑ Front passenger side: with Front Passenger Seat Belt Tensioner Igniter 1 - N154- and Right Front Seat Belt Tensioner Control Module - J855-
- ❑ Removing and installing. Refer to
  ⇒ “1.7.1 Front Three-Point Seat Belt, Removing and Installing, without Belt End Fitting Tensioner, 2-Door Sedan”, page 98 .

9 - Screw

- ❑ 40 Nm
- ❑ Replace the bolt if it was removed because of an accident when the seat belt was buckled.

10 - Belt End Fitting

- ❑ Removing and installing. Refer to
  ⇒ “1.11.1 Front Belt End Fitting, Removing and Installing, without Belt End Fitting Tensioner, 2-Door Sedan”, page 116 .

11 - Screw

- ❑ 20 Nm
- ❑ Replace the bolt if it was removed because of an accident when the seat belt was buckled.

12 - Retaining Loop

13 - Screw

- ❑ 40 Nm
- ❑ Replace the bolt if it was removed because of an accident when the seat belt was buckled.
- ❑ Position by hand when installing

14 - Washer

Protected by copyright. Copying for private or commercial purposes, in part or in whole, is not permitted unless authorised by Volkswagen AG. Volkswagen AG does not guarantee or accept any liability with respect to the correctness of information in this document. Copyright by Volkswagen AG.

1.2.2 Overview - Front Three-Point Seat Belt, without Belt End Fitting Tensioner, 4-Door Sedan and Wagon

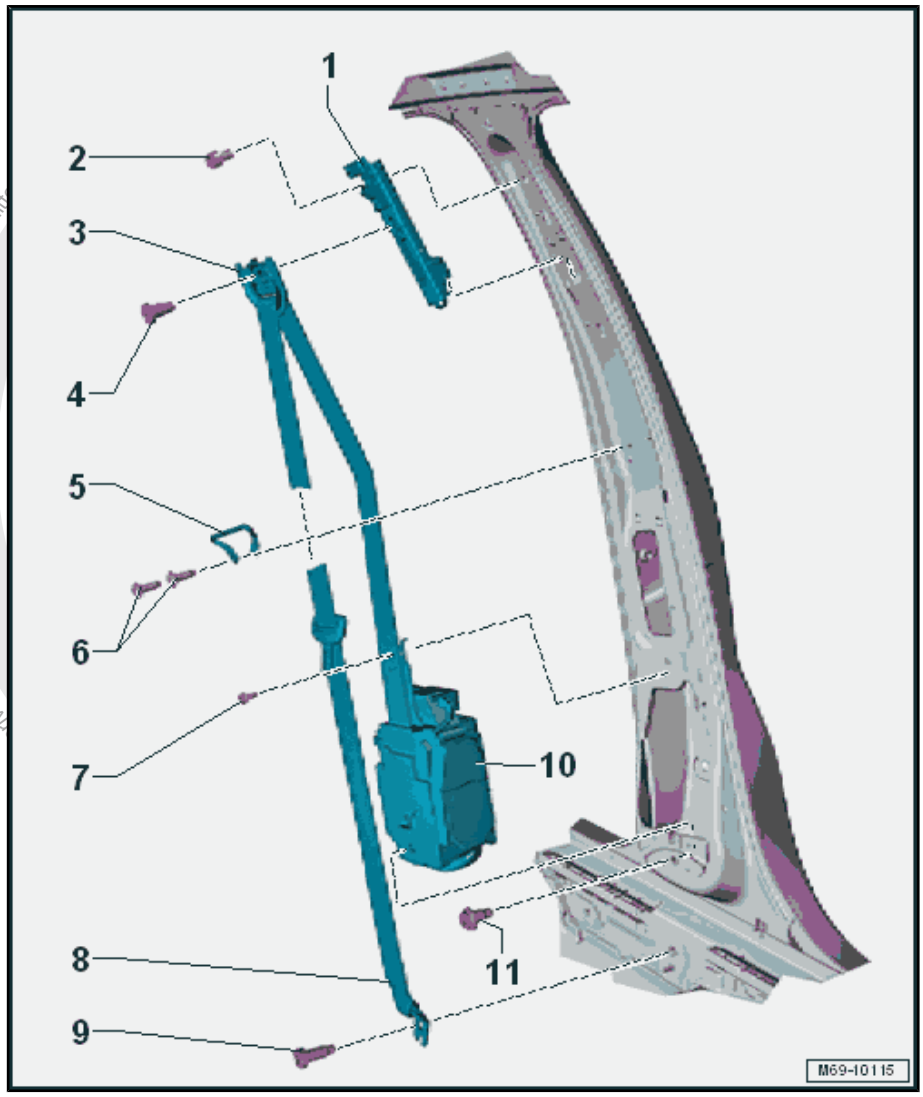

1 - Seat Belt Height Adjuster

- ❑ Removing and installing. Refer to ⇒ "1.13 Seat Belt Height Adjuster, Removing and Installing", page 118 .
- ❑ Always replace if the belt tensioner has deployed when the seat belt was buckled.

2 - Screw

- ❑ 20 Nm
- ❑ Replace the bolt if it was removed because of an accident when the seat belt was buckled.

3 - Seat Belt Guide

- ❑ Must swing into vertical position or carrier direction by itself after tightening the screw.

4 - Screw

- ❑ 40 Nm
- ❑ Replace the bolt if it was removed because of an accident when the seat belt was buckled.

5 - Front Seat Belt Guide

- ❑ Removing and installing. Refer to ⇒ "1.9.2 Front Seat Belt Guide, Removing and Installing, 4-Door Sedan and Wagon", page 114 .
- ❑ When installing, pay attention to the correct installation position

6 - Screws

- ❑ 4.5 Nm
- ❑ Quantity: 2

7 - Screw

- ❑ 4.5 Nm

8 - Belt End Fitting

- ❑ Removing and installing. Refer to ⇒ "1.11.2 Front Belt End Fitting, Removing and Installing, without Belt End Fitting Tensioner, 4-Door Sedan and Wagon", page 116 .

9 - Screw

- ❑ 40 Nm
- ❑ Replace the bolt if it was removed because of an accident when the seat belt was buckled.

10 - Automatic Belt Retractor

- ❑ Driver side: with Driver Seat Belt Tensioner Igniter 1 - N153- and Left Front Seat Belt Tensioner Control Module - J854-

Private or commercial purposes, in part or in whole, is not permitted

- ❑ Front passenger side: with Front Passenger Seat Belt Tensioner Igniter 1 - N154- and Right Front Seat Belt Tensioner Control Module - J855-
- ❑ Removing and installing. Refer to ⇒ “1.7.2 Front Three-Point Seat Belt, Removing and Installing, without Belt End Fitting Tensioner, 4-Door Sedan and Wagon”, page 101 .

11 - Screw

- ❑ 40 Nm
- ❑ Replace the bolt if it was removed because of an accident when the seat belt was buckled.

1.2.3 Overview - Front Three-Point Seat Belt, with Belt End Fitting Tensioner

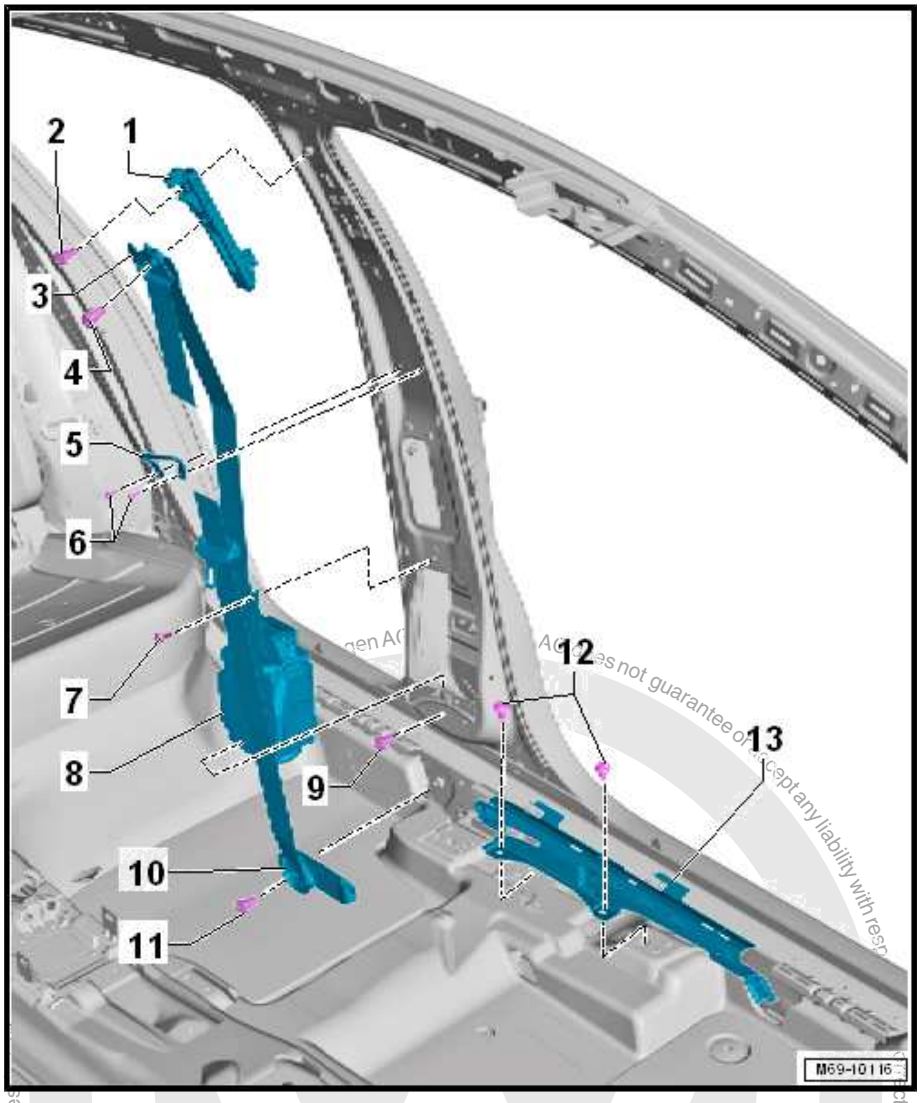

1 - Seat Belt Height Adjuster

- ❑ Removing and installing. Refer to ⇒ “1.13 Seat Belt Height Adjuster, Removing and Installing”, page 118 .
- ❑ Always replace if the belt tensioner has deployed when the seat belt was buckled.

2 - Screw

- ❑ 20 Nm
- ❑ Replace the bolt if it was removed because of an accident when the seat belt was buckled.

3 - Seat Belt Guide

- ❑ Must swing into vertical position or carrier direction by itself after tightening the screw.

4 - Screw

- ❑ 40 Nm
- ❑ Replace the bolt if it was removed because of an accident when the seat belt was buckled.

5 - Front Seat Belt Guide

- ❑ Removing and installing. Refer to ⇒ “1.9 Front Seat Belt Guide, Removing and Installing”, page 114 .
- ❑ When installing, pay attention to the correct installation position

6 - Screws

- ❑ 4.5 Nm
- ❑ Quantity: 2

7 - Screw

- ❑ 4.5 Nm

8 - Automatic Belt Retractor

- ❑ Driver side: with Driver Seat Belt Tensioner Igniter 1 - N153- and Left Front Seat Belt Tensioner Control Module - J854-

Protected by copyright. Copying for private or commercial purposes, in part, is not permitted unless authorized by Volkswagen AG. Volkswagen AG does not guarantee or accept any liability with respect to the correctness of information in this document.

- ❑ Front passenger side: with Front Passenger Seat Belt Tensioner Igniter 1 - N154- and Right Front Seat Belt Tensioner Control Module - J855-
- ❑ Removing and installing. Refer to
  ⇒ “1.7.3 Front Three-Point Seat Belt, Removing and Installing, with Belt End Fitting Tensioner”, page 103 .

9 - Screw

- ❑ 40 Nm
- ❑ Replace the bolt if it was removed because of an accident when the seat belt was buckled.

10 - Belt End Fitting

- ❑ Removing and installing. Refer to
  ⇒ “1.11.3 Front Belt End Fitting, Removing and Installing, with Belt End Fitting Tensioner”, page 117 .

11 - Screw

- ❑ 20 Nm
- ❑ Replace the bolt if it was removed because of an accident when the seat belt was buckled.

12 - Screw

- ❑ 40 Nm
- ❑ Quantity: 2
- ❑ Replace the bolt if it was removed because of an accident when the seat belt was buckled.

13 - Belt End Fitting Tensioner

- ❑ Removing

– Remove the belt end fitting tensioner release cable from the belt end fitting. Refer to
⇒ “1.11.3 Front Belt End Fitting, Removing and Installing, with Belt End Fitting Tensioner”, page 117 .

– Remove the bolts -12-.

– Release and disconnect the connector for the belt end fitting tensioner.

– Pull the belt end fitting tensioner forward from the sill and remove it.

- ❑ Installing

Install in reverse order of removal.

Protected by copyright. Copying for private or commercial purposes, in part or in whole, is not permitted unless authorised by Volkswagen AG. Volkswagen AG does not guarantee or accept any liability with respect to the correctness of information in this document. Copyright by Volkswagen AG.

1.3 Overview - Outer Rear Three-Point Seat Belt

⇒ “1.3.1 Overview - Three-Point Seat Belt, 2-Door Sedan, without Belt Tensioner”, page 88

⇒ “1.3.2 Overview - Three-Point Seat Belt, 2-Door Sedan, with Belt Tensioner”, page 89

⇒ “1.3.3 Overview - Three-Point Seat Belt, 4-Door Sedan, without Belt Tensioner”, page 90

⇒ “1.3.4 Overview - Three-Point Seat Belt, 4-Door Sedan, with Belt Tensioner”, page 91

⇒ “1.3.5 Overview - Three-Point Seat Belt, Wagon without Belt Tensioner”, page 92

⇒ “1.3.6 Overview - Three-Point Seat Belt, Wagon with Belt Tensioner”, page 93

1.3.1 Overview - Three-Point Seat Belt, 2-Door Sedan, without Belt Tensioner

Copyright by Volkswagen AG. Volkswagen AG does not guarantee the accuracy and completeness of this publication nor shall it be liable for any direct, indirect, incidental or consequential damages arising from its use. This publication or any part thereof may not be reproduced in any form or by any means (including photocopying or storage in an electronic medium) without the express written permission of Volkswagen AG. Copyright for private or commercial purposes, in whole or in part, is not permitted unless authorized by Volkswagen AG.

1 - Automatic Belt Retractor

- ❑ Removing and installing. Refer to ⇒ “1.8.1 Rear Three-Point Seat Belt, Removing and Installing, 2-Door Sedan, without Belt Tensioner”, page 106 .

2 - Screw

- ❑ 40 Nm
- ❑ Replace the bolt if it was removed because of an accident when the seat belt was buckled.

3 - Screw

- ❑ 40 Nm
- ❑ Replace the bolt if it was removed because of an accident when the seat belt was buckled.

4 - Outer Rear Belt End Fitting

- ❑ Removing and installing. Refer to ⇒ “1.12 Rear Outer Belt End Fitting, Removing and Installing”, page 117 .

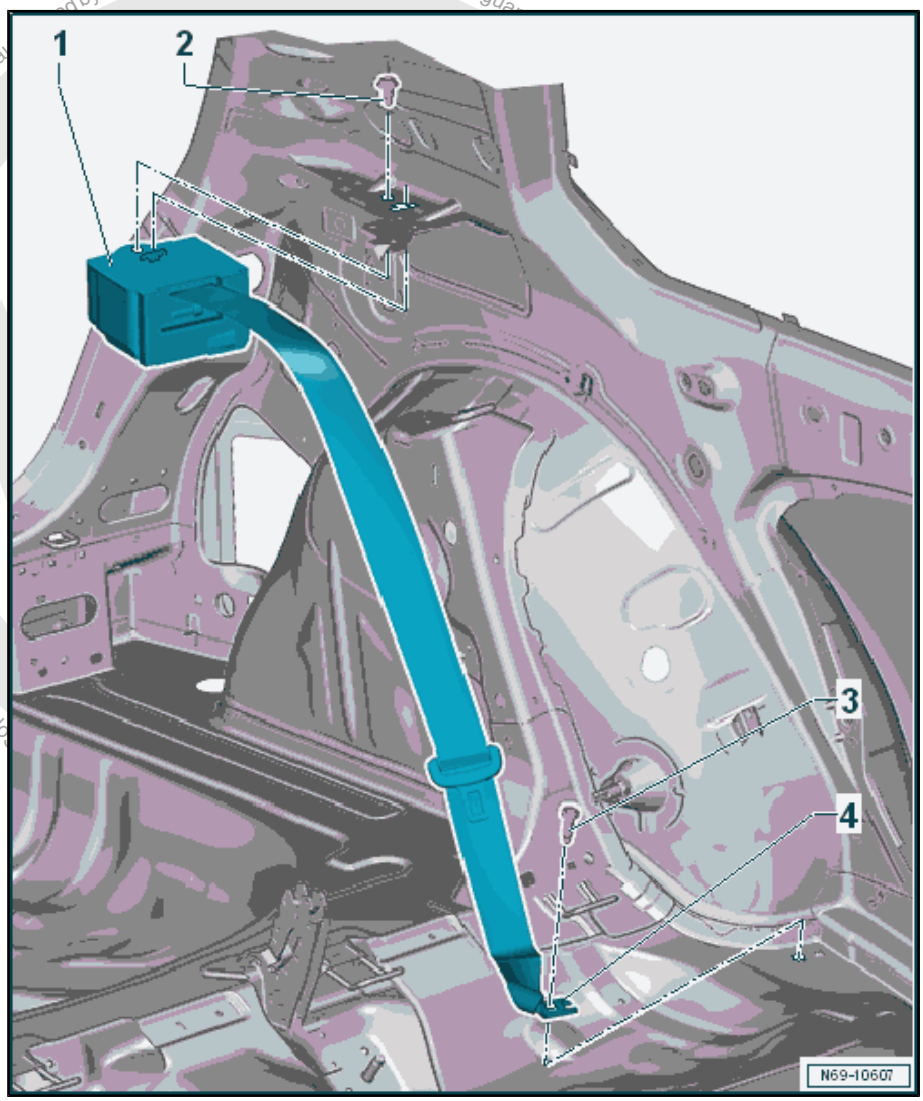

1.3.2 Overview - Three-Point Seat Belt, 2-Door Sedan, with Belt Tensioner

sed by Volkswagen AG. Volkswagen AG does not guarantee or accept any liability with respect to the correctness of information in this d

1 - Automatic Belt Retractor

- ❑ Removing and installing. Refer to ⇒ "1.8.2 Rear Three-Point Seat Belt, Removing and Installing, 2-Door Sedan, with Belt Tensioner", page 107 .

2 - Wiring Harness

3 - Screw

- ❑ 40 Nm
- ❑ Replace the bolt if it was removed because of an accident when the seat belt was buckled.

4 - Screw

- ❑ 40 Nm
- ❑ Replace the bolt if it was removed because of an accident when the seat belt was buckled.

5 - Outer Rear Belt End Fitting

- ❑ Removing and installing. Refer to ⇒ "1.12 Rear Outer Belt End Fitting, Removing and Installing", page 117 .

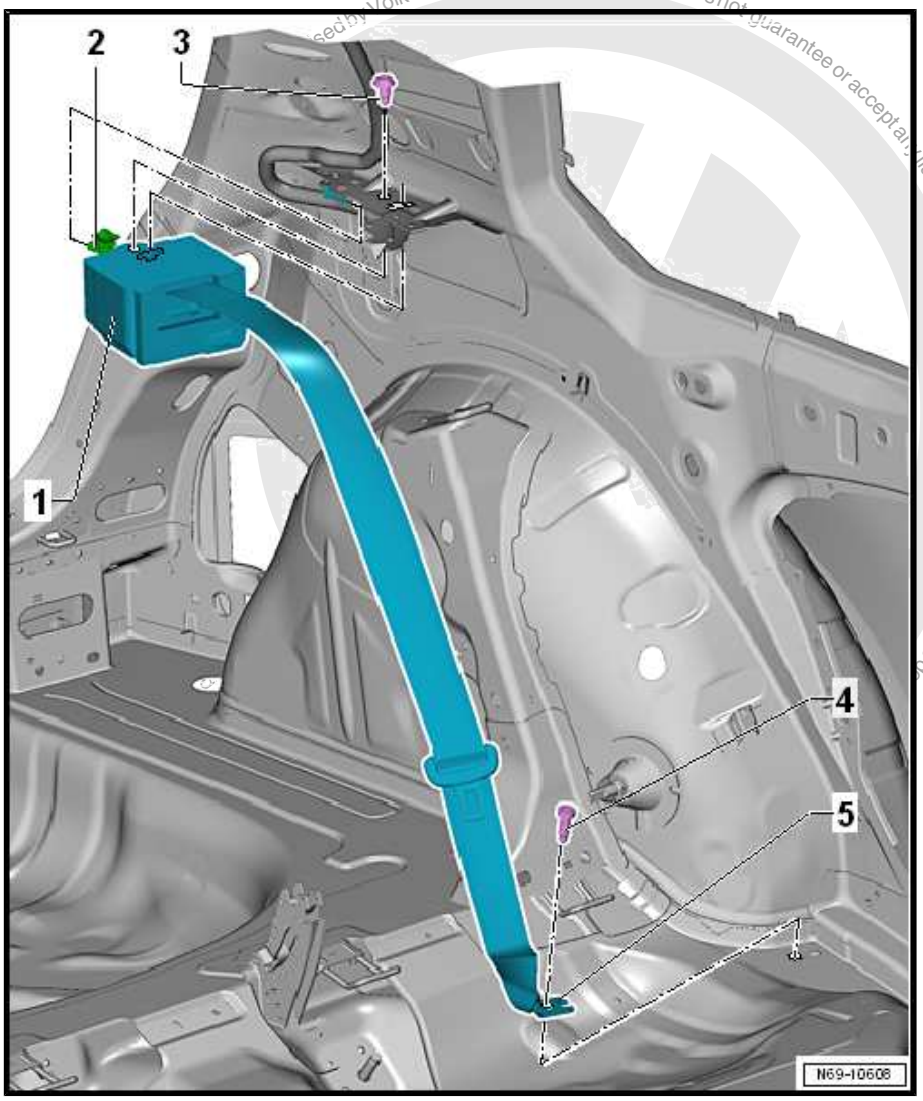

for private or commercial purposes, in part or in whole is not permitted unless authorised by Volkswagen AG. Volkswagen AG does not guarantee or accept any liability with respect to the correctness of information

1.3.3 Overview - Three-Point Seat Belt, 4-Door Sedan, without Belt Tensioner

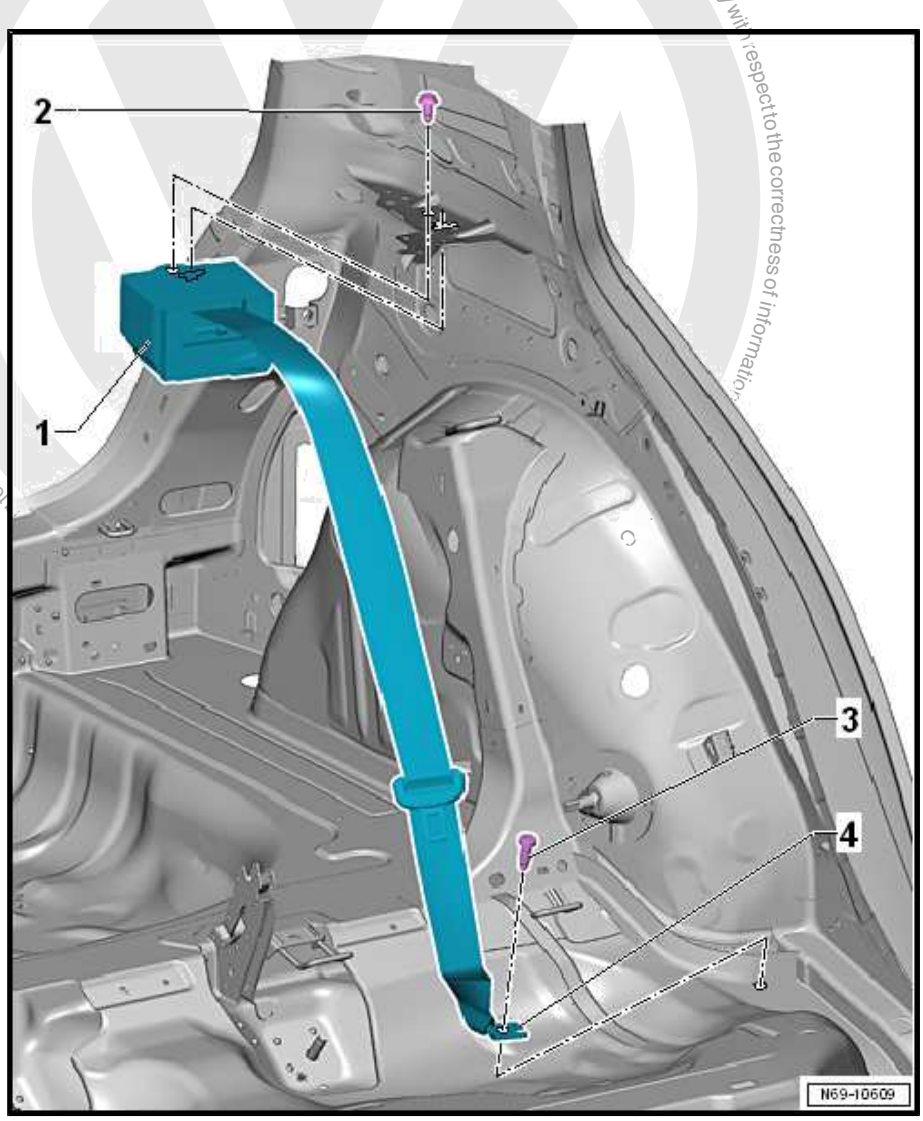

1 - Automatic Belt Retractor

- ❑ Removing and installing. Refer to ⇒ "1.8.3 Rear Three-Point Seat Belt, Removing and Installing, 4-Door Sedan, without Belt Tensioner", page 108 .

2 - Screw

- ❑ 40 Nm
- ❑ Replace the bolt if it was removed because of an accident when the seat belt was buckled.

3 - Screw

- ❑ 40 Nm
- ❑ Replace the bolt if it was removed because of an accident when the seat belt was buckled.

4 - Outer Rear Belt End Fitting

- ❑ Removing and installing. Refer to ⇒ "1.12 Rear Outer Belt End Fitting, Removing and Installing", page 117 .

1.3.4 Overview - Three-Point Seat Belt, 4-Door Sedan, with Belt Tensioner

1 - Automatic Belt Retractor

- ❑ Removing and installing. Refer to ⇒ "1.8.4 Rear Three-Point Seat Belt, Removing and Installing, 4-Door Sedan, with Belt Tensioner", page 109 .

2 - Wiring Harness

3 - Screw

- ❑ 40 Nm
- ❑ Replace the bolt if it was removed because of an accident when the seat belt was buckled.

4 - Screw

- ❑ 40 Nm
- ❑ Replace the bolt if it was removed because of an accident when the seat belt was buckled.

5 - Outer Rear Belt End Fitting

- ❑ Removing and installing. Refer to ⇒ "1.12 Rear Outer Belt End Fitting, Removing and Installing", page 117 .

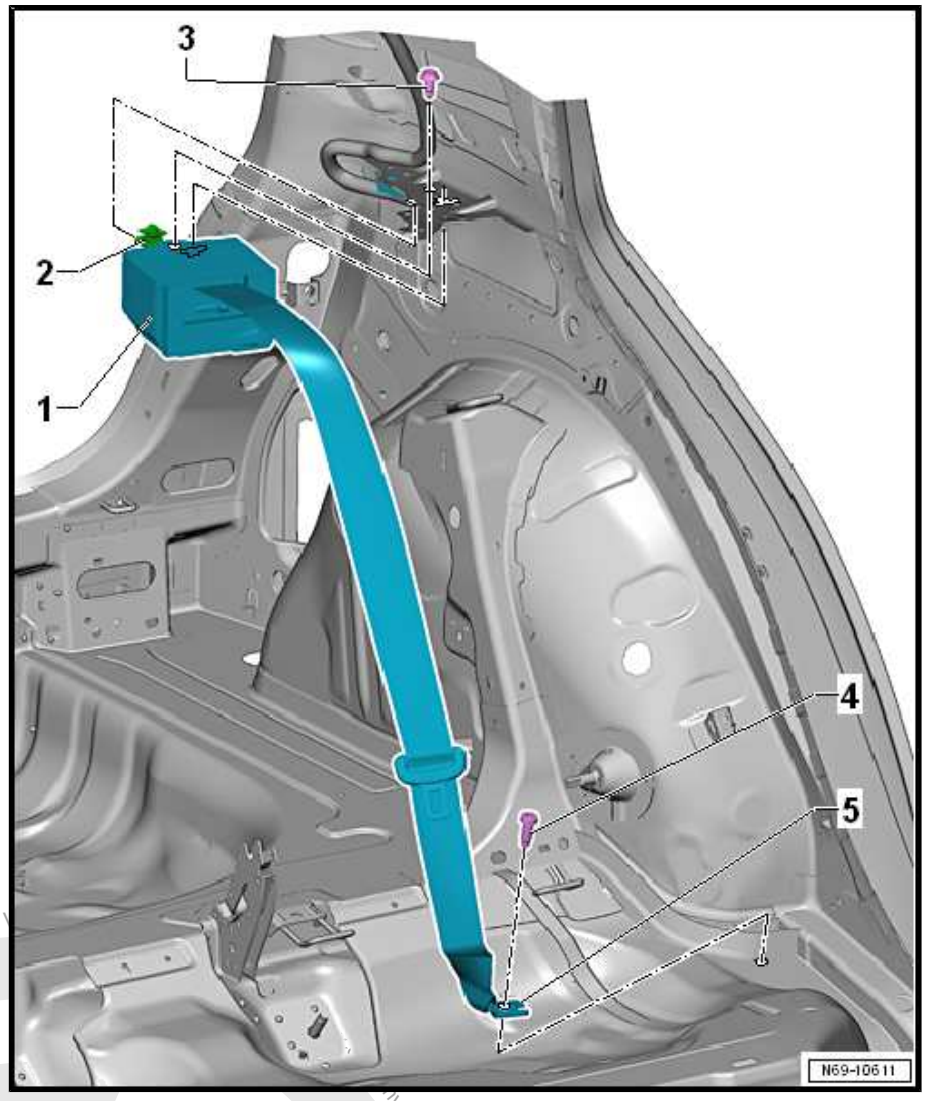

Protected by copyright. Copying for private or commercial purposes, in part or in whole, is not permitted unless authorised by Volkswagen AG. Copyright by Volkswagen AG. No liability with respect to the correctness of information in this document.

1.3.5 Overview - Three-Point Seat Belt, Wagon without Belt Tensioner

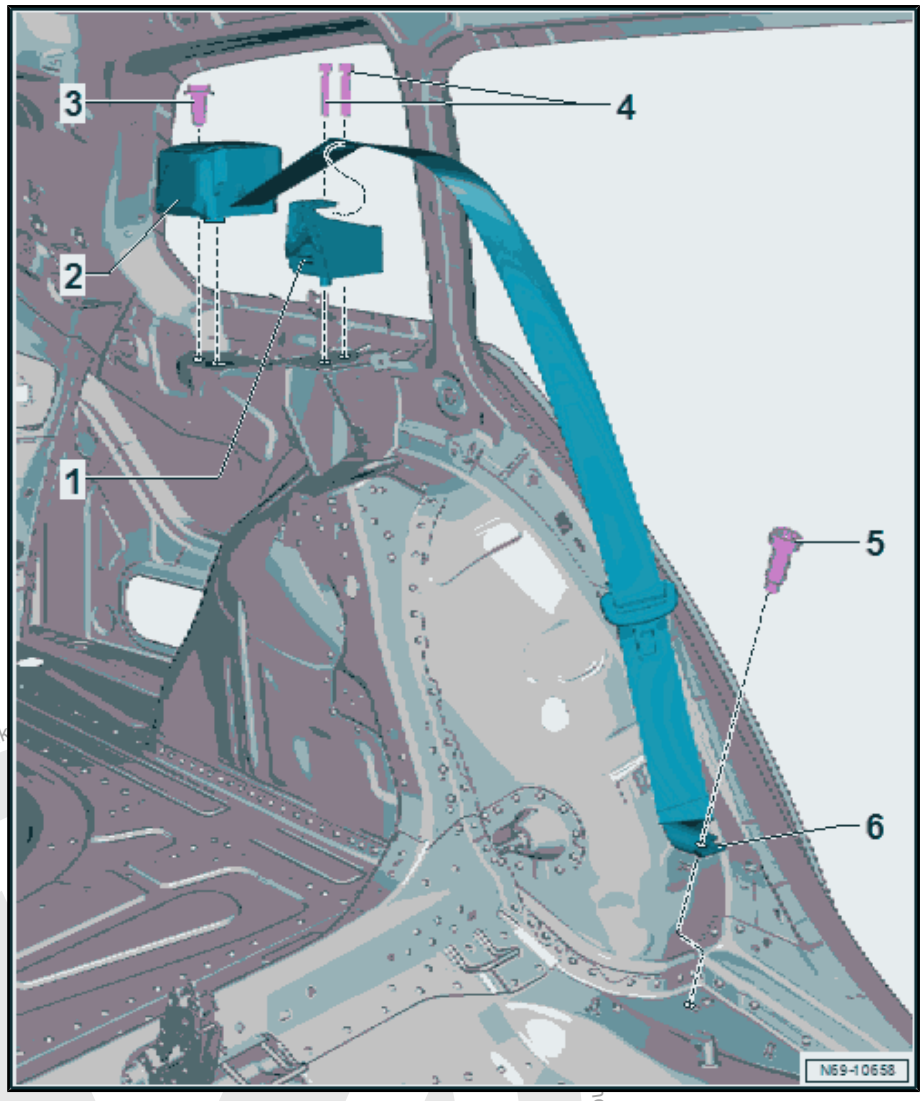

1 - Seat Belt Guide

- ❑ Removing and installing. Refer to ⇒ “1.10 Rear Seat Belt Guide, Removing and Installing”, page 115 .

2 - Automatic Belt Retractor

- ❑ Removing and installing. Refer to ⇒ “1.8.5 Rear Three-Point Seat Belt, Removing and Installing, Wagon without Belt Tensioner”, page 110 .

3 - Screw

- ❑ 40 Nm
- ❑ Replace the bolt if it was removed because of an accident when the seat belt was buckled.

4 - Screws

- ❑ 8 Nm
- ❑ Quantity: 2

5 - Bolt for Outer Rear Belt End Fitting

- ❑ 40 Nm
- ❑ Replace the bolt if it was removed because of an accident when the seat belt was buckled.

6 - Outer Rear Belt End Fitting

- ❑ Removing and installing. Refer to ⇒ “1.12 Rear Outer Belt End Fitting, Removing and Installing”, page 117 .

Protected by copyright. Copying for private or commercial purposes, in part or in whole, is not permitted unless authorised by Volkswagen AG. Copyright by Volkswagen AG. No liability for the correctness of information in this document.

1.3.6 Overview - Three-Point Seat Belt, Wagon with Belt Tensioner

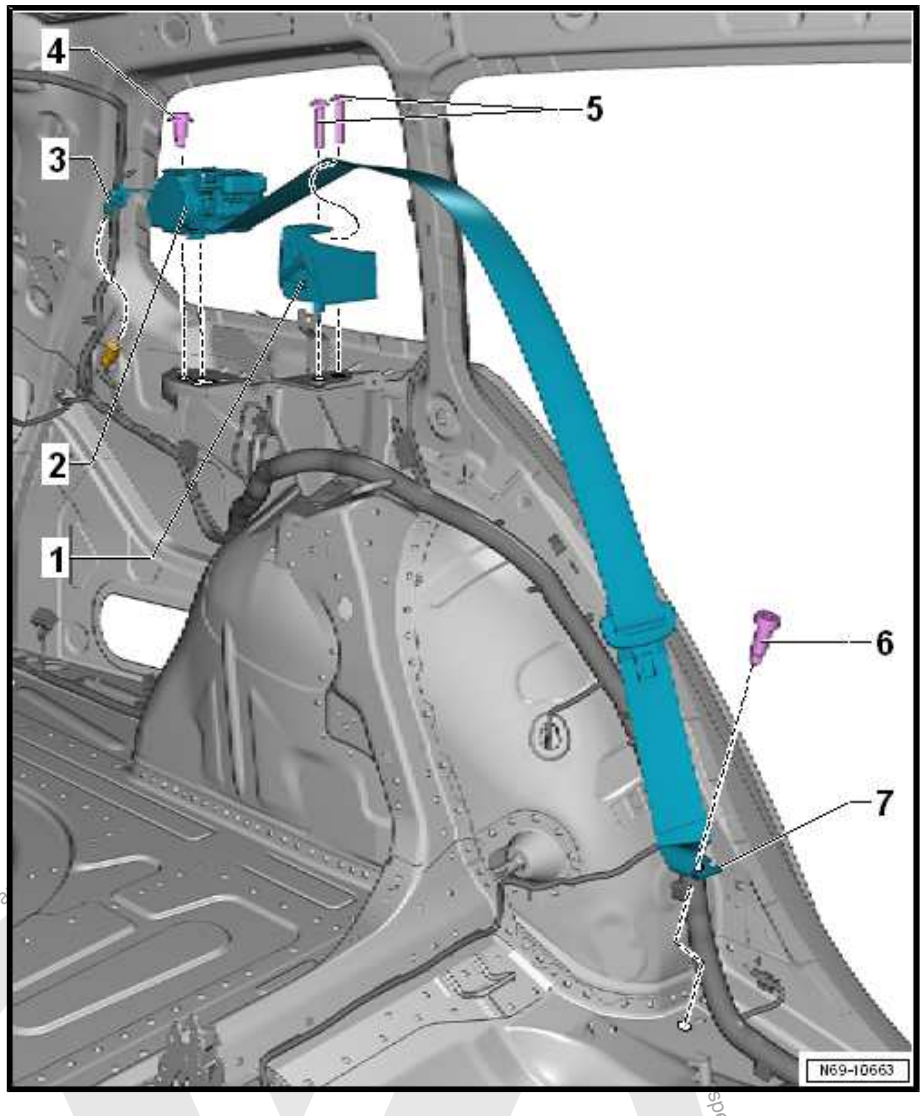

1 - Seat Belt Guide

- ❑ Removing and installing. Refer to ⇒ "1.10 Rear Seat Belt Guide, Removing and Installing", page 115 .

2 - Automatic Belt Retractor

- ❑ Removing and installing. Refer to ⇒ "1.8.6 Rear Three-Point Seat Belt, Removing and Installing, Wagon with Belt Tensioner", page 111 .

3 - Wiring Harness

4 - Screw

- ❑ 40 Nm
- ❑ Replace the bolt if it was removed because of an accident when the seat belt was buckled.

5 - Screws

- ❑ 8 Nm
- ❑ Quantity: 2

6 - Bolt for Outer Rear Belt End Fitting

- ❑ 40 Nm
- ❑ Replace the bolt if it was removed because of an accident when the seat belt was buckled.

7 - Outer Rear Belt End Fitting

- ❑ Removing and installing. Refer to ⇒ "1.12 Rear Outer Belt End Fitting, Removing and Installing", page 117 .

Protected by copyright. Copyright for private or commercial purposes, in part or whole is not permitted unless authorised by Volkswagen AG. Copyright by Volkswagen AG. No liability with respect to the correctness of information in this document.

1.4 Overview - Rear Center Three-Point Seat Belt

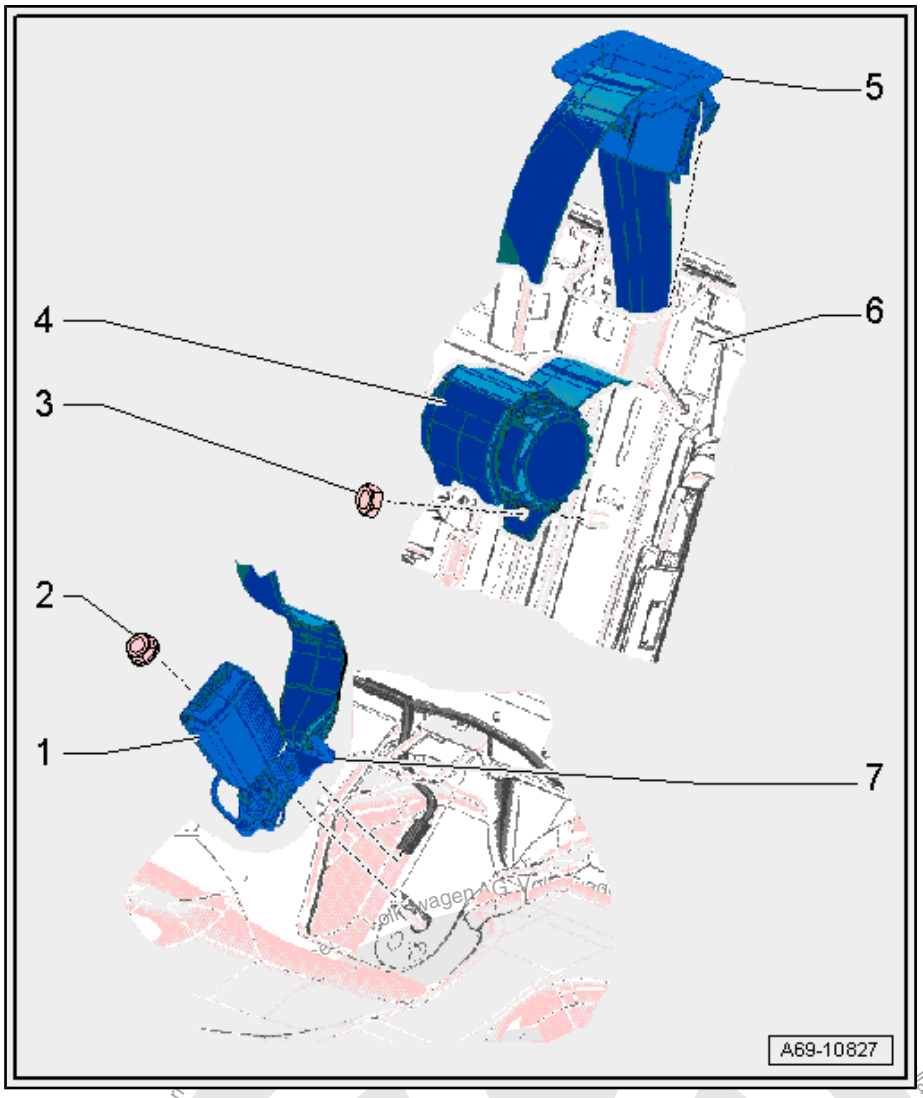

1 - Seat Belt Latch

- ❑ With Passenger Side Rear Seat Belt Switch - E259-
- ❑ Removing and installing. Refer to ⇒ "1.15 Rear Seat Belt Latch, Removing and Installing", page 121 .
- ❑ Always replace if the belt tensioner has deployed with the seat belt was buckled.
- ❑ Must lie on stop when tightening the nut.

2 - Nut

- ❑ Tightening specification: 40 Nm

3 - Nut

- ❑ Tightening specification: 40 Nm
- ❑ Replace the bolt if it was removed because of an accident when the seat belt was buckled.

4 - Automatic Belt Retractor

- ❑ Removing and installing. Refer to ⇒ "1.8.7 Rear Three Point Seat Belt in Center, Removing and Installing", page 113 .

5 - Rear Center Seat Belt Guide

- ❑ Replace the entire seat belt guide if damaged.
- ❑ To remove, press the two side tabs inward and remove the seat belt guide
- ❑ When installing, press on until it engages audibly.

6 - Right 2/3 Rear Seat Backrest

7 - Center Rear Belt End Fitting

- ❑ Removing and installing. Refer to ⇒ "1.15 Rear Seat Belt Latch, Removing and Installing", page 121 .

Protected by copyright. Copying for private or commercial purposes, in part or in whole, is not permitted unless authorized by Volkswagen AG. Volkswagen AG does not guarantee or assume liability with respect to the correctness of information in this document. Copyright by Volkswagen AG.

1.5 Overview - Front Seat Belt Latch

⇒ "1.5.1 Overview - Front Seat Belt Latch, 2-Door Sedan", page 95

⇒ "1.5.2 Overview - Front Seat Belt Latch, 4-Door Sedan and Wagon", page 96

1.5.1 Overview - Front Seat Belt Latch, 2-Door Sedan

1 - Front Seat Belt Latch

- ❑ Removing and installing. Refer to ⇒ "1.14 Front Seat Belt Latch, Removing and Installing", page 120 .

2 - Front Seat

- ❑ Driver side: with Driver Seat Belt Switch - E24-
- ❑ Front passenger side: with Front Passenger Seat Belt Switch - E25-
- ❑ Removing and installing. Refer to ⇒ "2.10 Front Seat, Removing and Installing", page 335 .
- ❑ Always replaced if the belt tensioner has deployed when the seat belt was buckled.

3 - Screw

- ❑ 40 Nm
- ❑ Replace the bolt if it was removed because of an accident when the seat belt was buckled.

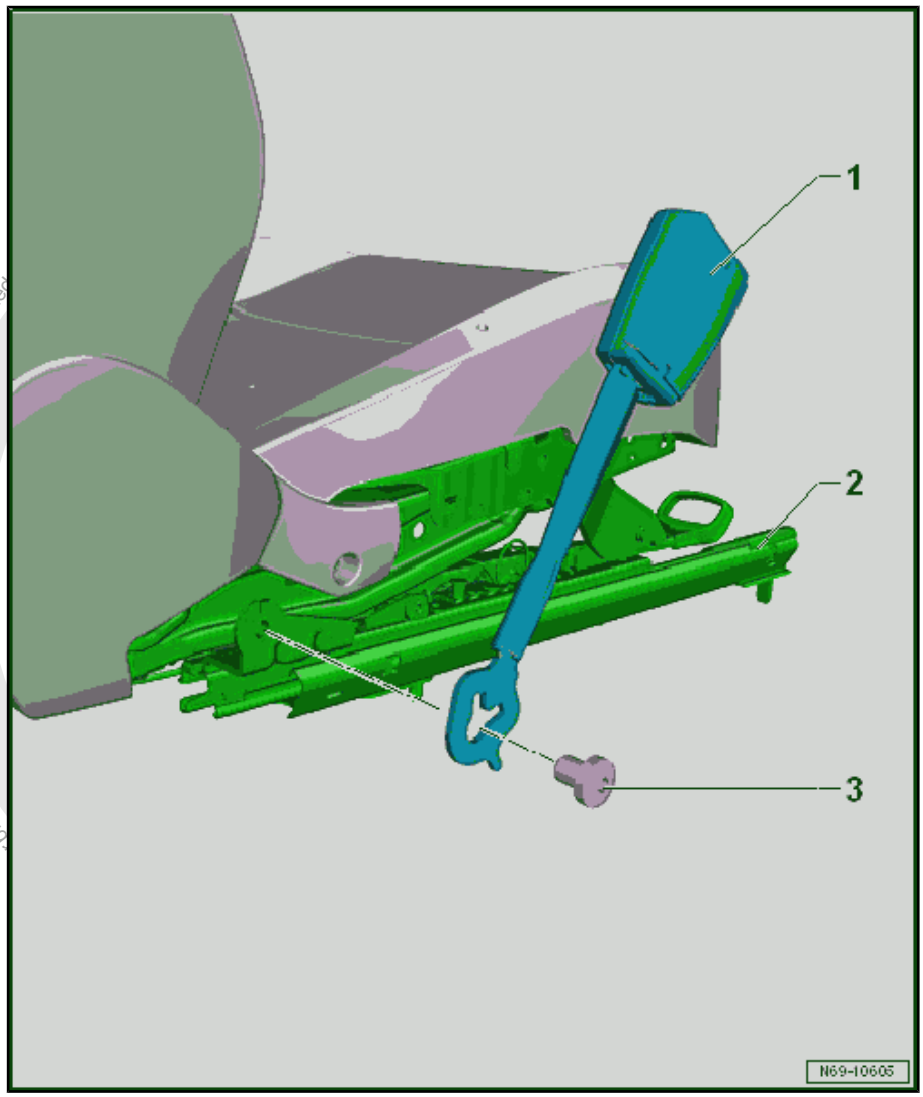

Copyright © commercial purposes in part or in whole is not permitted

1.5.2 Overview - Front Seat Belt Latch, 4-Door Sedan and Wagon

1 - Front Seat Belt Latch

- ❑ Removing and installing. Refer to ⇒ “1.14 Front Seat Belt Latch, Removing and Installing”, page 120 .

2 - Front Seat

- ❑ Driver side: with Driver Seat Belt Switch - E24-
- ❑ Front passenger side: with Front Passenger Seat Belt Switch - E25-
- ❑ Removing and installing. Refer to ⇒ “2.10 Front Seat, Removing and Installing”, page 335 .
- ❑ Always replaced if the belt tensioner has deployed when the seat belt was buckled.

3 - Screw

- ❑ 40 Nm
- ❑ Replace the bolt if it was removed because of an accident when the seat belt was buckled.

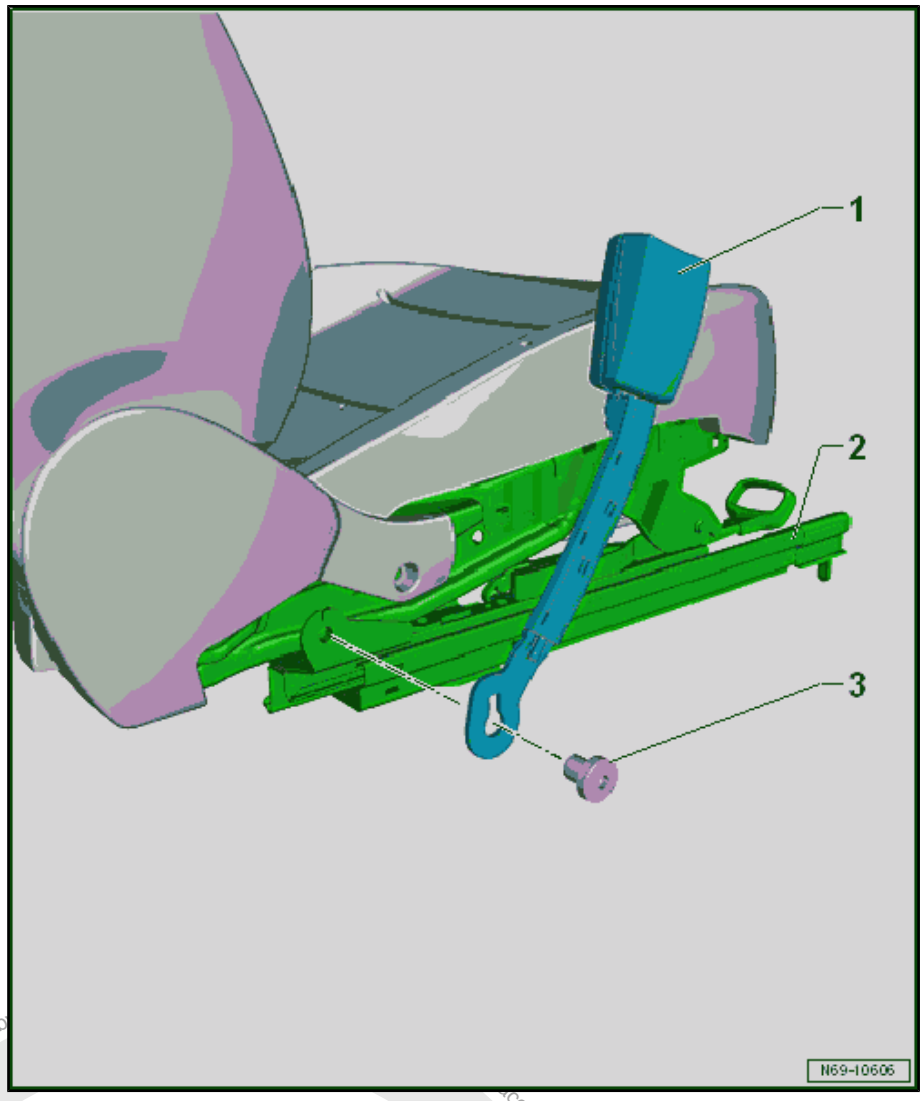

Copyright by Volkswagen AG. Reproduced by copyright. Copying for private or commercial purposes, in part or in whole, is not permitted unless authorised by Volkswagen AG. Volkswagen AG does not accept any liability with respect to the correctness of information in this document.

1.6 Overview - Rear Seat Belt Latch

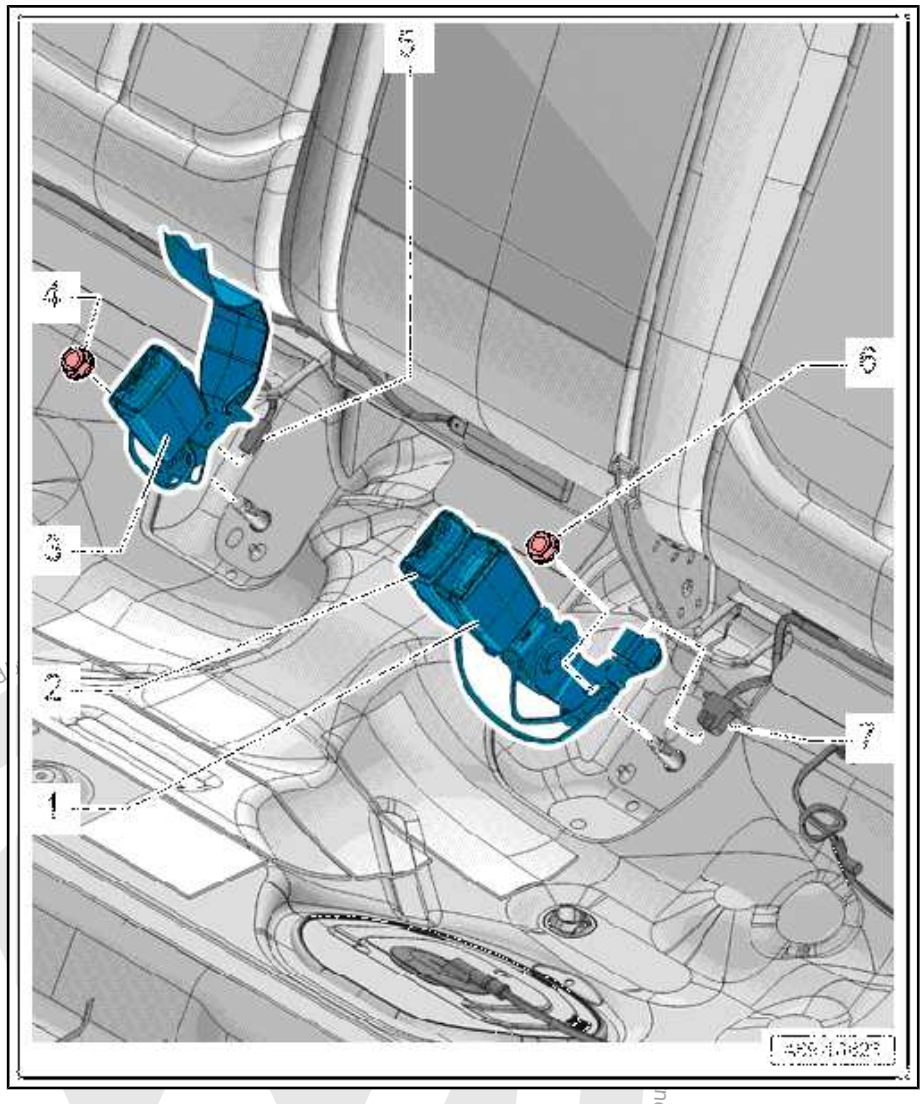

1 - Left Dual Seat Belt Latch

- With Driver Side Rear Seat Belt Switch - E258-
- Removing and installing. Refer to ⇒ "1.15 Rear Seat Belt Latch, Removing and Installing", page 121 .
- Always replaced if the belt tensioner has deployed when the seat belt was buckled.
- When tightening push the belt latch assembly against the stop.
- Must make contact with the stop.

2 - Center Seat Belt Latch

- With Center Rear Seat Belt Switch - E609-
- Removing and installing. Refer to ⇒ "1.15 Rear Seat Belt Latch, Removing and Installing", page 121 .
- Always replaced if the belt tensioner has deployed when the seat belt was buckled.
- When tightening push the belt latch assembly against the stop.
- Must make contact with the stop.

3 - Right Seat Belt Latch with Rear Center Belt End Fitting

- With Passenger Side Rear Seat Belt Switch - E259-
- Removing and installing. Refer to ⇒ "1.15 Rear Seat Belt Latch, Removing and Installing", page 121 .
- Always replaced if the belt tensioner has deployed when the seat belt was buckled.
- Must lie on stop when tightening the nut.

4 - Nut

- 40 Nm
- Replace the bolt if it was removed because of an accident when the seat belt was buckled.

5 - Connector

- For Passenger Side Rear Seat Belt Switch - E259-

6 - Nut

- 40 Nm
- Replace the bolt if it was removed because of an accident when the seat belt was buckled.

7 - Connector

- For Driver Side Rear Seat Belt Switch - E258- and Center Rear Seat Belt Switch - E609- .

Protected by copyright. Copyright by Volkswagen AG.

1.7 Front Three-Point Seat Belt, Removing and Installing

⇒ “1.7.1 Front Three-Point Seat Belt, Removing and Installing, without Belt End Fitting Tensioner, 2-Door Sedan”, page 98

⇒ “1.7.2 Front Three-Point Seat Belt, Removing and Installing, without Belt End Fitting Tensioner, 4-Door Sedan and Wagon”, page 101

⇒ “1.7.3 Front Three-Point Seat Belt, Removing and Installing, with Belt End Fitting Tensioner”, page 103

1.7.1 Front Three-Point Seat Belt, Removing and Installing, without Belt End Fitting Tensioner, 2-Door Sedan

Removing

WARNING

- *Observe the safety precautions for pyrotechnical components. Refer to ⇒ “1.2 Safety Precautions for Pyrotechnic Components”, page 3 .*
- *Observe the disposal regulations for pyrotechnical components. Refer to ⇒ “1.3 Airbag, Belt Tensioner and Battery Cut-Out Units, Storing, Transporting and Disposing (Pyrotechnic Components)”, page 5 .*

– Disconnect the battery ground cable with the ignition turned on. Refer to ⇒ Electrical Equipment; Rep. Gr. 27 ; Battery; Battery, Disconnecting and Connecting .

– Remove the B-pillar upper trim panel. Refer to ⇒ “5.13.1 B-Pillar Trim Panel, Removing and Installing, 2-Door Sedan”, page 256 .

– Remove the front belt end fitting. Refer to ⇒ “1.11.1 Front Belt End Fitting, Removing and Installing, without Belt End Fitting Tensioner, 2-Door Sedan”, page 116 .

– Remove the front seat belt guide. Refer to ⇒ “1.9.1 Front Seat Belt Guide, Removing and Installing, 2-Door Sedan”, page 114 .

Protected by copyright. Copying for private or commercial purposes, in part or in whole, is not permitted unless authorised by Volkswagen AG. Volkswagen AG does not guarantee or accept any liability with respect to the correctness of information in this document. Copyright by Volkswagen AG.

– Remove the bolt -1-.

– Remove the seat belt guide -2- and seat belt webbing.

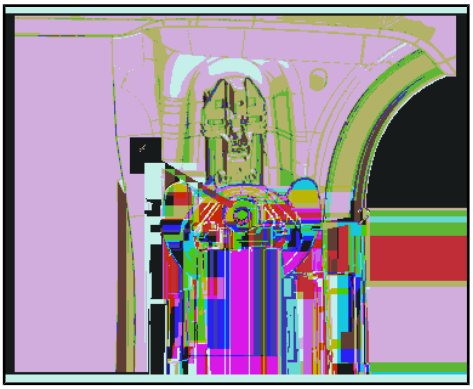

> **WARNING**
>
> *Before handling pyrotechnic components (for example, disconnecting the connector), the person handling it must "discharge static electricity". This can be done by touching the door striker pin, for example.*

Vehicles without Reversible Belt Tensioner

– Release the connector lock with a small screwdriver in direction of -arrow-, and remove the connector for the belt tensioner igniter 1 -item 1-.

– If equipped, release and remove the second connector from the front automatic belt retractor -2- in the same way.

– Remove the bolt -3- and the automatic belt retractor -2- from the mount.

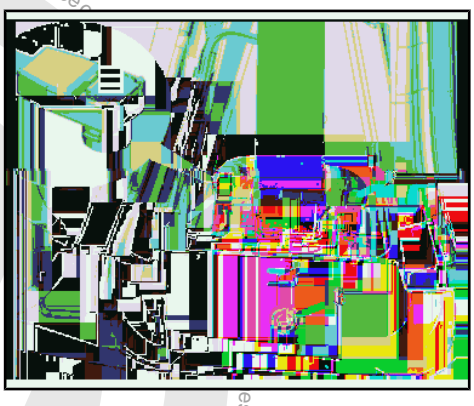

Protected by copyright. Copying for private or commercial purposes, in part or in whole, is not permitted unless authorised by Volkswagen AG. Volkswagen AG does not guarantee or assume liability for the accuracy of information in this document. Copyright by Volkswagen AG.

Vehicles with Reversible Belt Tensioner

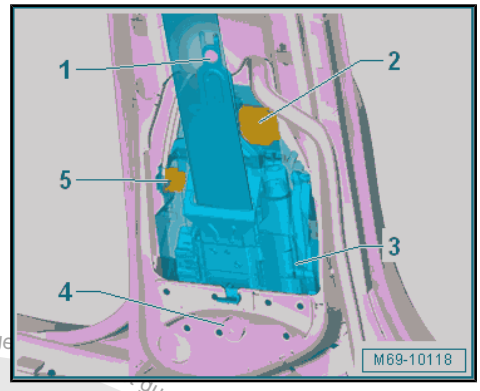

– Release and disconnect the connectors -2 and 5-.

– Remove the bolts -1 and 4- and then remove the automatic belt retractor -3- from the mount.

Installing

WARNING

- *Observe the safety precautions for pyrotechnical components. Refer to ⇒ "1.2 Safety Precautions for Pyrotechnic Components", page 3 .*
- *Before handling pyrotechnic components (for example, connecting the connector), the person handling it must "discharge static electricity". This can be done by touching the door striker pin, for example.*

Install in reverse order of removal while paying attention to the following:

– If parts of the seat belt system are removed due to an accident, replace the belt system bolts.

Note

Make sure the connectors are pushed in all the way and that they engage audibly.

– Insert the automatic belt retractor with the anti-twist mechanism -1- in the mount -2- -arrow- and tighten the bolt.

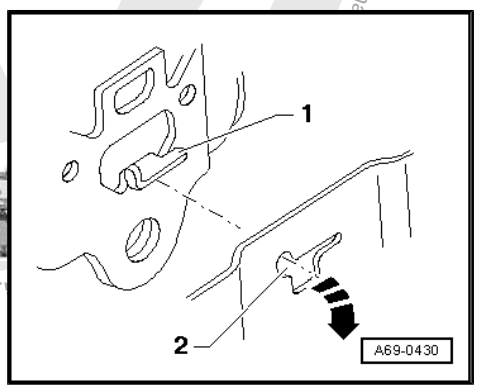

WARNING

The ignition must be on when connecting the battery. If pyrotechnic components (for example, airbag, belt tensioner) are not repaired correctly, they may deploy unintentionally after connecting battery. There must not be anyone inside the vehicle when connecting the battery.

– Connect the battery ground cable with the ignition turned on. Refer to ⇒ Electrical Equipment; Rep. Gr. 27 ; Battery; Battery, Disconnecting and Connecting .

WARNING

If the ignition is not switched on after the battery is reconnected - "indicator lamps in the instrument cluster do not light up" - the ignition (key/button) may only be switched on when the driver seat is positioned all the way back.

Tightening Specifications

- Refer to ⇒ "1.2.1 Overview - Front Three-Point Seat Belt, without Belt End Fitting Tensioner, 2-Door Sedan", page 83

Protected by copyright. Copying for private or commercial purposes, in part or whole, is not permitted unless authorised by Volkswagen AG. Volkswagen AG does not guarantee or accept any liability with respect to the correctness of information

1.7.2 Front Three-Point Seat Belt, Removing and Installing, without Belt End Fitting Tensioner, 4-Door Sedan and Wagon

Removing

WARNING

- *Observe the safety precautions for pyrotechnical components. Refer to ⇒ "1.2 Safety Precautions for Pyrotechnic Components", page 3 .*
- *Observe the disposal regulations for pyrotechnical components. Refer to ⇒ "1.3 Airbag, Belt Tensioner and Battery Cut-Out Units, Storing, Transporting and Disposing (Pyrotechnic Components)", page 5 .*

– Disconnect the battery ground cable with the ignition turned on. Refer to ⇒ Electrical Equipment; Rep. Gr. 27 ; Battery; Battery, Disconnecting and Connecting .

– Remove the upper and lower B-pillar trim panel. Refer to ⇒ "5.13.2 B-Pillar Trim Panel, Removing and Installing, 4-Door Sedan and Wagon", page 258 .

– Remove the front belt end fitting. Refer to ⇒ "1.11.2 Front Belt End Fitting, Removing and Installing, without Belt End Fitting Tensioner, 4-Door Sedan and Wagon", page 116 .

– Remove the front seat belt guide. Refer to ⇒ "1.9.2 Front Seat Belt Guide, Removing and Installing, 4-Door Sedan and Wagon", page 114 .

– Remove the bolt -1-.

– Remove the seat belt guide -2- and seat belt webbing.

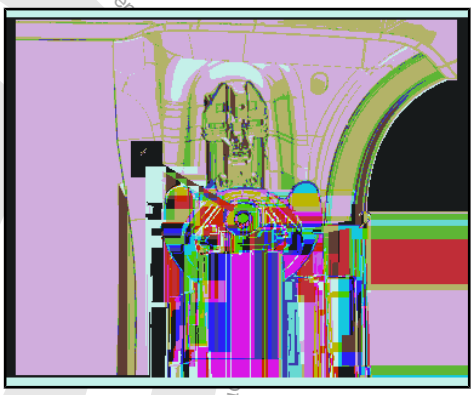

WARNING

Before handling pyrotechnic components (for example, disconnecting the connector), the person handling it must "discharge static electricity". This can be done by touching the door striker pin, for example.

Vehicles without Reversible Belt Tensioner

– Release the connector lock with a small screwdriver in direction of -arrow-, and remove the connector for the belt tensioner igniter 1 -item 1-.

– If equipped, release and remove the second connector from the front automatic belt retractor -2- in the same way.

Protected by copyright. Copying for private or commercial purposes, in part or in whole, is not permitted unless authorised by Volkswagen AG. Volkswagen AG does not guarantee or accept any guarantee for the accuracy of information in this document. Copyright by Volkswagen AG.

– Remove the bolt -3- and the automatic belt retractor -2- from the mount.

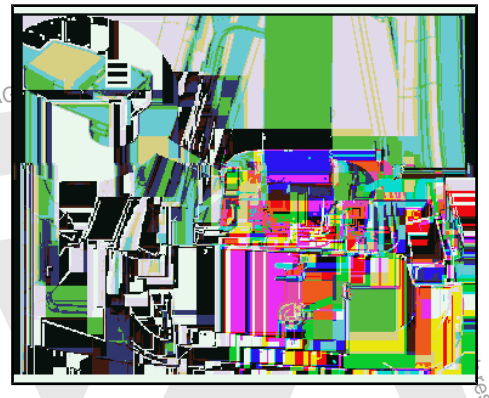

Vehicles with Reversible Belt Tensioner

– Release and disconnect the connectors -2 and 5-.

– Remove the bolts -1 and 4- and then remove the automatic belt retractor -3- from the mount.

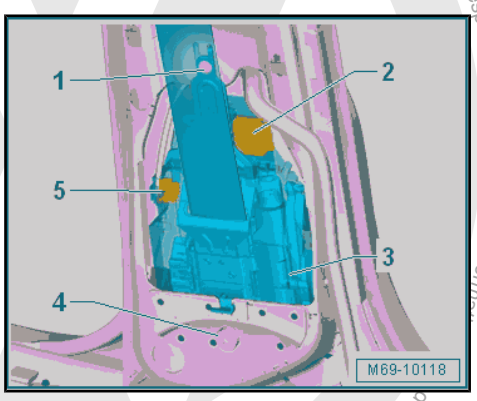

Installing

> **WARNING**
>
> - *Observe the safety precautions for pyrotechnical components. Refer to* *⇒ "1.2 Safety Precautions for Pyrotechnic Components", page 3* *.*
> - *Before handling pyrotechnic components (for example, connecting the connector), the person handling it must "discharge static electricity". This can be done by touching the door striker pin, for example.*

Install in reverse order of removal while paying attention to the following:

– If parts of the seat belt system are removed due to an accident, replace the belt system bolts.

Note

Make sure the connectors are pushed in all the way and that they engage audibly.

Protected by copyright. Copying for private or commercial purposes, in part or in whole, is not permitted unless authorised by Volkswagen AG. Copyright by Volkswagen AG. ...respect to the correctness of information in this document.

– Insert the automatic belt retractor with the anti-twist mechanism -1- in the mount -2- -arrow- and tighten the bolt.

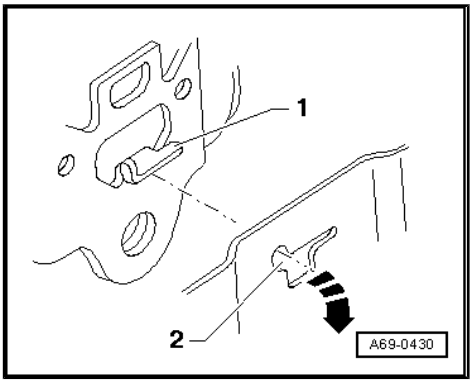

WARNING

The ignition must be on when connecting the battery. If pyrotechnic components (for example, airbag, belt tensioner) are not repaired correctly, they may deploy unintentionally after connecting battery. There must not be anyone inside the vehicle when connecting the battery.

– Connect the battery ground cable with the ignition turned on. Refer to ⇒ Electrical Equipment; Rep. Gr. 27 ; Battery; Battery, Disconnecting and Connecting .

WARNING

If the ignition is not switched on after the battery is reconnected - "indicator lamps in the instrument cluster do not light up" - the ignition (key/button) may only be switched on when the driver seat is positioned all the way back.

Tightening Specifications

- Refer to
⇒ "1.2.2 Overview - Front Three-Point Seat Belt, without Belt End Fitting Tensioner, 4-Door Sedan and Wagon", page 85

1.7.3 Front Three-Point Seat Belt, Removing and Installing, with Belt End Fitting Tensioner

Removing

WARNING

- *Observe the safety precautions for pyrotechnical components. Refer to*
⇒ "1.2 Safety Precautions for Pyrotechnic Components", page 3 .
- *Observe the disposal regulations for pyrotechnical components. Refer to*
⇒ "1.3 Airbag, Belt Tensioner and Battery Cut-Out Units, Storing, Transporting and Disposing (Pyrotechnic Components)", page 5 .

– Disconnect the battery ground cable with the ignition turned on. Refer to ⇒ Electrical Equipment; Rep. Gr. 27 ; Battery; Battery, Disconnecting and Connecting .

Only 2-Door Vehicles

– Remove the B-pillar upper trim panel. Refer to
⇒ "5.13.1 B-Pillar Trim Panel, Removing and Installing, 2-Door Sedan", page 256 .

Only 4-Door Vehicles and Wagons

– Remove the upper and lower B-pillar trim panel. Refer to
⇒ "5.13.2 B-Pillar Trim Panel, Removing and Installing, 4-Door Sedan and Wagon", page 258 .

Protected by copyright. Copyright by Volkswagen AG. Copyrighted unless authorised by Volkswagen AG. Volkswagen AG does not guarantee or accept any liability with respect to the correctness of information in this document.

– Sill panel strip, removing and installing. Refer to ⇒ “5.10.1 Sill Panel Strip, Removing and Installing, 2-Door Sedan”, page 249 .

Continuation for All Vehicles

– Remove the front belt end fitting. Refer to ⇒ “1.11.3 Front Belt End Fitting, Removing and Installing, with Belt End Fitting Tensioner”, page 117 .

– Remove the front seat belt guide. Refer to ⇒ “1.9 Front Seat Belt Guide, Removing and Installing”, page 114 .

– Remove the bolt -1-.

– Remove the seat belt guide -2- and seat belt webbing.

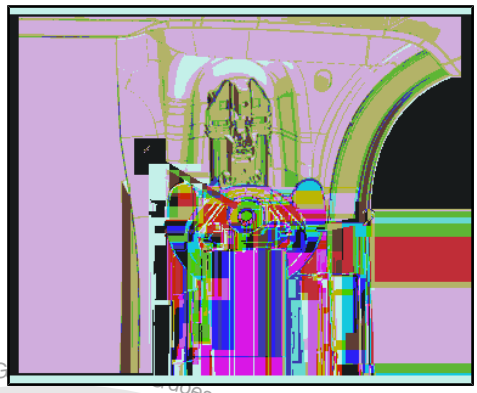

WARNING

Before handling pyrotechnic components (for example, disconnecting the connector), the person handling it must “discharge static electricity”. This can be done by touching the door striker pin, for example.

Vehicles without Reversible Belt Tensioner

– Release the connector lock with a small screwdriver in direction of -arrow-, and remove the connector for the belt tensioner igniter 1 -item 1-.

– If equipped, release and remove the second connector from the front automatic belt retractor -2- in the same way.

– Remove the bolt -3- and the automatic belt retractor -2- from the mount.

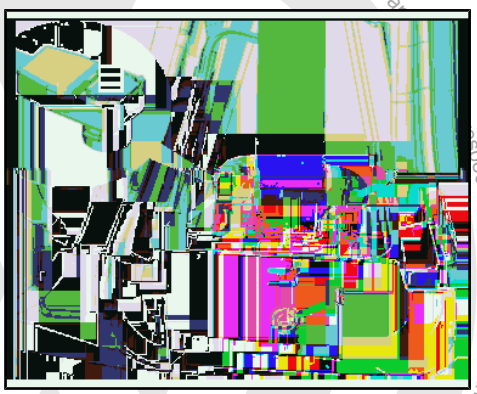

Vehicles with Reversible Belt Tensioner

– Release and disconnect the connectors -2 and 5-.

Protected by copyright. Copying for private or commercial purposes, in part or in whole, is not permitted unless authorised by Volkswagen AG. Volkswagen AG does not guarantee or accept any liability with respect to the correctness of information in this document. Copyright by Volkswagen AG.

– Remove the bolts -1- and 4- and then remove the automatic belt retractor -3- from the mount.

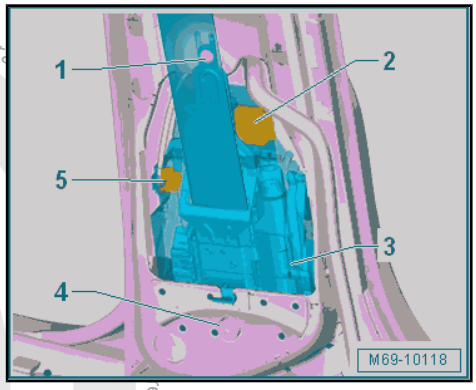

Installing

WARNING

- *Observe the safety precautions for pyrotechnical components. Refer to ⇒ "1.2 Safety Precautions for Pyrotechnic Components", page 3 .*
- *Before handling pyrotechnic components (for example, connecting the connector), the person handling it must "discharge static electricity". This can be done by touching the door striker pin, for example.*

Install in reverse order of removal while paying attention to the following:

– If parts of the seat belt system are removed due to an accident, replace the belt system bolts.

Note

Make sure the connectors are pushed in all the way and that they engage audibly.

– Insert the automatic belt retractor with the anti-twist mechanism -1- in the mount -2- -arrow- and tighten the bolt.

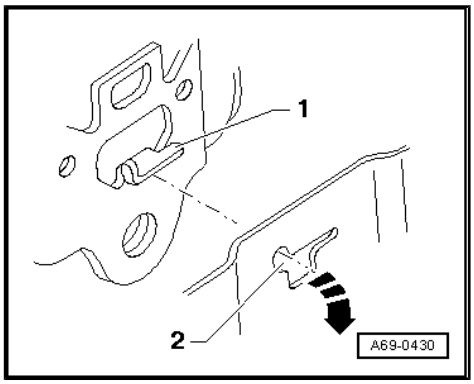

WARNING

The ignition must be on when connecting the battery. If pyrotechnic components (for example, airbag, belt tensioner) are not repaired correctly, they may deploy unintentionally after connecting battery. There must not be anyone inside the vehicle when connecting the battery.

– Connect the battery ground cable with the ignition turned on. Refer to ⇒ Electrical Equipment; Rep. Gr. 27 ; Battery; Battery, Disconnecting and Connecting .

WARNING

If the ignition is not switched on after the battery is reconnected - "indicator lamps in the instrument cluster do not light up" - the ignition (key/button) may only be switched on when the driver seat is positioned all the way back.

Tightening Specifications

- Refer to ⇒ "1.2.3 Overview - Front Three-Point Seat Belt, with Belt End Fitting Tensioner", page 86

Protected by copyright. Copyright by Volkswagen AG. Volkswagen AG does not guarantee or accept any liability with respect to the correctness of information in this document. Copying for private or commercial purposes, in part or in whole, is not permitted unless authorised by Volkswagen AG.

1.8 Rear Three-Point Seat Belt, Removing and Installing

⇒ "1.8.1 Rear Three-Point Seat Belt, Removing and Installing, 2-Door Sedan, without Belt Tensioner", page 106

⇒ "1.8.2 Rear Three-Point Seat Belt, Removing and Installing, 2-Door Sedan, with Belt Tensioner", page 107

⇒ "1.8.3 Rear Three-Point Seat Belt, Removing and Installing, 4-Door Sedan, without Belt Tensioner", page 108

⇒ "1.8.4 Rear Three-Point Seat Belt, Removing and Installing, 4-Door Sedan, with Belt Tensioner", page 109

⇒ "1.8.5 Rear Three-Point Seat Belt, Removing and Installing, Wagon without Belt Tensioner", page 110

⇒ "1.8.6 Rear Three-Point Seat Belt, Removing and Installing, Wagon with Belt Tensioner", page 111

⇒ "1.8.7 Rear Three Point Seat Belt in Center, Removing and Installing", page 113

1.8.1 Rear Three-Point Seat Belt, Removing and Installing, 2-Door Sedan, without Belt Tensioner

Removing

– Remove the rear shelf compartment. Refer to ⇒ "6.9 Rear Shelf Compartment, Removing and Installing", page 285 .

– Remove the outer rear belt end fitting. Refer to ⇒ "1.12 Rear Outer Belt End Fitting, Removing and Installing", page 117 .

– Remove the bolt -1-.

– Remove the automatic belt retractor -2- from the mount.

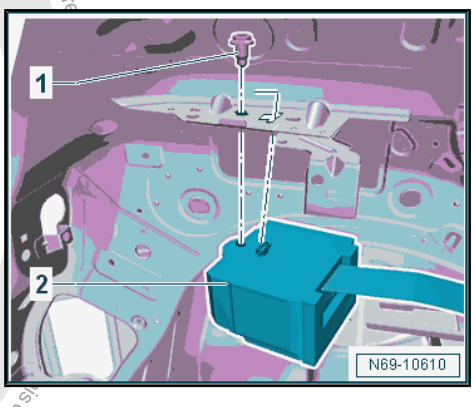

Installing

Install in reverse order of removal while paying attention to the following:

– If parts of the seat belt system are removed due to an accident, replace the belt system bolts.

Tightening Specifications

♦ Refer to ⇒ "1.3.1 Overview - Three-Point Seat Belt, 2-Door Sedan, without Belt Tensioner", page 88

Protected by copyright. Copying for private or commercial purposes, in part or in whole, is not permitted unless authorized by Volkswagen AG. Volkswagen AG does not guarantee or accept any liability with re... is document. Copyright by Volkswagen AG.

1.8.2 Rear Three-Point Seat Belt, Removing and Installing, 2-Door Sedan, with Belt Tensioner

Removing

Volkswagen AG. Volkswagen AG does not guarantee or accept any liability with respect to the correctness of information in this document. Copyright by Volkswagen AG. Not for commercial purposes, in part or in whole, is not permitted unless authorized by Volkswagen AG.

WARNING

- *Observe the safety precautions for pyrotechnical components. Refer to ⇒ "1.2 Safety Precautions for Pyrotechnic Components", page 3 .*
- *Observe the disposal regulations for pyrotechnical components. Refer to ⇒ "1.3 Airbag, Belt Tensioner and Battery Cut-Out Units, Storing, Transporting and Disposing (Pyrotechnic Components)", page 5 .*

– Disconnect the battery ground cable with the ignition turned on. Refer to ⇒ Electrical Equipment; Rep. Gr. 27 ; Battery; Battery, Disconnecting and Connecting .

– Remove the rear shelf compartment. Refer to ⇒ "6.9 Rear Shelf Compartment, Removing and Installing", page 285 .

Remove the outer rear belt end fitting. Refer to ⇒ "1.12 Rear Outer Belt End Fitting, Removing and Installing", page 117 .

WARNING

Electrostatic discharges can lead to unintended deployment of the airbag. Therefore the technician must discharge static electricity from the body before separating the ignition and ground wiring. This is done, for example, by briefly touching the body or door striker.

– Disconnect the wiring harness and unclip the connector -1-.

– Remove the bolt -2-.

– Remove the automatic belt retractor -3- from the mount.

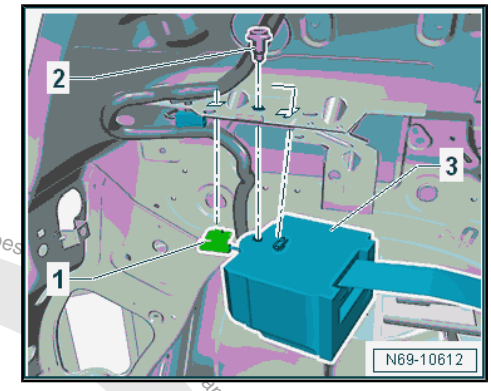

Installing

WARNING

- *Observe the safety precautions for pyrotechnical components. Refer to ⇒ "1.2 Safety Precautions for Pyrotechnic Components", page 3 .*
- *Before handling pyrotechnic components (for example, connecting the connector), the person handling it must "discharge static electricity". This can be done by touching the door striker pin, for example.*

Install in reverse order of removal while paying attention to the following:

– If parts of the seat belt system are removed due to an accident, replace the belt system bolts.

Note

Make sure the connectors are pushed in all the way and that they engage audibly.

WARNING

The ignition must be on when connecting the battery. If pyrotechnic components (for example, airbag, belt tensioner) are not repaired correctly, they may deploy unintentionally after connecting battery. There must not be anyone inside the vehicle when connecting the battery.

– Connect the battery ground cable with the ignition turned on. Refer to ⇒ Electrical Equipment; Rep. Gr. 27 ; Battery; Battery, Disconnecting and Connecting .

WARNING

If the ignition is not switched on after the battery is reconnected - "indicator lamps in the instrument cluster do not light up" - the ignition (key/button) may only be switched on when the driver seat is positioned all the way back.

Tightening Specifications

- Refer to ⇒ "1.3.2 Overview - Three-Point Seat Belt, 2-Door Sedan, with Belt Tensioner", page 89

1.8.3 Rear Three-Point Seat Belt, Removing and Installing, 4-Door Sedan, without Belt Tensioner

Removing

– Remove the rear shelf compartment. Refer to ⇒ "6.9 Rear Shelf Compartment, Removing and Installing", page 285 .

Volkswagen AG. Volkswagen AG does any liability with respect to the correctness of information in this document. Copyright by Volkswagen AG. Copyright by Volkswagen AG. Volkswagen AG does not permit commercial purposes, in part or in whole, not authorised by Volkswagen AG. Volkswagen AG does

– Remove the outer rear belt end fitting. Refer to ⇒ “1.12 Rear Outer Belt End Fitting, Removing and Installing”, page 117 .

– Remove the bolt -1-.

– Remove the automatic belt retractor -2- from the mount.

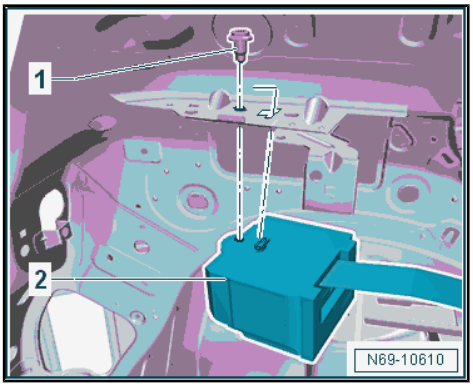

Installing

Install in reverse order of removal while paying attention to the following:

– If parts of the seat belt system are removed due to an accident, replace the belt system bolts.

Tightening Specifications

◆ Refer to ⇒ “1.3.3 Overview - Three-Point Seat Belt, 4-Door Sedan, without Belt Tensioner”, page 90

1.8.4 Rear Three-Point Seat Belt, Removing and Installing, 4-Door Sedan, with Belt Tensioner

Removing

WARNING

◆ *Observe the safety precautions for pyrotechnical components. Refer to ⇒ “1.2 Safety Precautions for Pyrotechnic Components”, page 3 .*

◆ *Observe the disposal regulations for pyrotechnical components. Refer to ⇒ “1.3 Airbag, Belt Tensioner and Battery Cut-Out Units, Storing, Transporting and Disposing (Pyrotechnic Components)”, page 5 .*

– Disconnect the battery ground cable with the ignition turned on. Refer to ⇒ Electrical Equipment; Rep. Gr. 27; Battery; Battery, Disconnecting and Connecting .

– Remove the rear shelf compartment. Refer to ⇒ “6.9 Rear Shelf Compartment, Removing and Installing”, page 285 .

– Remove the outer rear belt end fitting. Refer to ⇒ “1.12 Rear Outer Belt End Fitting, Removing and Installing”, page 117 .

WARNING

Electrostatic discharges can lead to unintended deployment of the airbag. Therefore the technician must discharge static electricity from the body before separating the ignition and ground wiring. This is done, for example, by briefly touching the body or door striker.

– Disconnect the wiring harness and unclip the connector -1-.

– Remove the bolt -2-.

Copyright by Volkswagen AG. Volkswagen AG does not guarantee or accept any liability with respect to the correctness of information in this document. Copyright by Volkswagen AG. Copying for private or commercial purposes, in part or in whole, is not permitted unless authorized by Volkswagen AG.

– Remove the automatic belt retractor -3- from the mount.

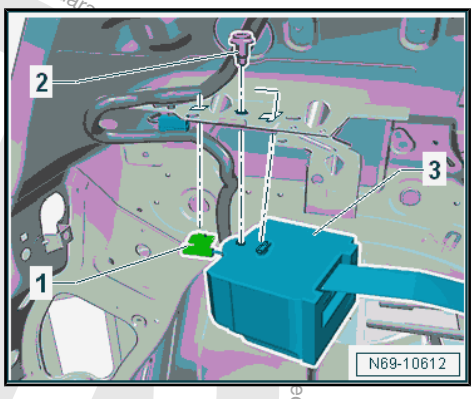

Installing

WARNING

- *Observe the safety precautions for pyrotechnical components. Refer to ⇒ "1.2 Safety Precautions for Pyrotechnic Components", page 3 .*
- *Before handling pyrotechnic components (for example, connecting the connector), the person handling it must "discharge static electricity". This can be done by touching the door striker pin, for example.*

Install in reverse order of removal while paying attention to the following:

– If parts of the seat belt system are removed due to an accident, replace the belt system bolts.

Note

Make sure the connectors are pushed in all the way and that they engage audibly.

WARNING

The ignition must be on when connecting the battery. If pyrotechnic components (for example, airbag, belt tensioner) are not repaired correctly, they may deploy unintentionally after connecting battery. There must not be anyone inside the vehicle when connecting the battery.

– Connect the battery ground cable with the ignition turned on. Refer to ⇒ Electrical Equipment; Rep. Gr. 27 ; Battery; Battery, Disconnecting and Connecting .

WARNING

If the ignition is not switched on after the battery is reconnected - "indicator lamps in the instrument cluster do not light up" - the ignition (key/button) may only be switched on when the driver seat is positioned all the way back.

Tightening Specifications

- Refer to ⇒ "1.3.4 Overview - Three-Point Seat Belt, 4-Door Sedan, with Belt Tensioner", page 91

1.8.5 Rear Three-Point Seat Belt, Removing and Installing, Wagon without Belt Tensioner

Removing

– Remove the bench seat. Refer to ⇒ "3.7 Bench Seat/Single Seat, Removing and Installing", page 382 .

Protected by copyright. Copying for private and commercial purposes, in whole or in part, is not permitted unless authorised by Volkswagen AG. Volkswagen AG does not guarantee the accuracy and completeness of information in this document. Copyright by Volkswagen AG.

Volkswagen AG does not guarantee or accept any liability with respect to the correctness of information. Copying for private or commercial purposes, in part or in whole, is not permitted unless authorised by Volkswagen AG. Protected by copyright.

– Remove the rear seat backrest. Refer to
⇒ “3.8 Rear Seat Backrest, Removing and Installing”, page 384 .

– Remove the D-pillar trim panel. Refer to
⇒ “5.15 D-Pillar Trim Panel, Removing and Installing”, page 264 .

– Luggage Compartment Side Trim Panel, Removing and Installing. Refer to
⇒ “6.12.2 Luggage Compartment Side Trim Panel, Removing and Installing, Wagon”, page 291 .

– Remove the outer rear belt end fitting. Refer to
⇒ “1.12 Rear Outer Belt End Fitting, Removing and Installing”, page 117 .

– Remove the bolt -1-.

– Pull the seat belt -3- under the seat belt guide -4- forward.

– Remove the automatic belt retractor -2- from the mount.

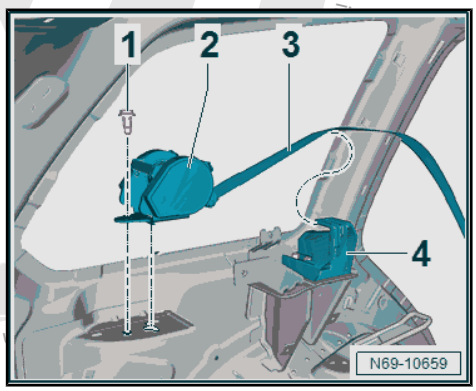

Installing

Install in reverse order of removal while paying attention to the following:

– If parts of the seat belt system are removed due to an accident, replace the belt system bolts.

Tightening Specifications

♦ Refer to
⇒ “1.3.5 Overview - Three-Point Seat Belt, Wagon without Belt Tensioner”, page 92

1.8.6 Rear Three-Point Seat Belt, Removing and Installing, Wagon with Belt Tensioner

Removing

WARNING

♦ *Observe the safety precautions for pyrotechnical components. Refer to ⇒ “1 Safety Precautions”, page 1 .*

♦ *Observe the disposal regulations for pyrotechnical components.*

– Disconnect the battery ground cable with the ignition turned on. Refer to ⇒ Electrical Equipment; Rep. Gr. 27 ; Battery; Battery, Disconnecting and Connecting .

– Remove the bench seat. Refer to
⇒ “1.12 Rear Outer Belt End Fitting, Removing and Installing”, page 117 .

– Remove the rear seat backrest. Refer to
⇒ “3.8 Rear Seat Backrest, Removing and Installing”, page 384 .

– Remove the D-pillar trim panel. Refer to
⇒ “5.15 D-Pillar Trim Panel, Removing and Installing”, page 264 .

– Luggage Compartment Side Trim Panel, Removing and Installing. Refer to

⇒ “6.12.2 Luggage Compartment Side Trim Panel, Removing and Installing, Wagon”, page 291 .

– Remove the outer rear belt end fitting. Refer to ⇒ “1.12 Rear Outer Belt End Fitting, Removing and Installing”, page 117 .

WARNING

Electrostatic discharges can lead to unintended deployment of the airbag. Therefore the technician must discharge static electricity from the body before separating the ignition and ground wiring. This is done, for example, by briefly touching the body or door striker.

– Disconnect the wiring harness and unclip the connector -1-.
– Pull the seat belt -4- under the seat belt guide -5- forward.
– Remove the bolt -2-.

Protected by copyright. Copying for private or commercial purposes, in part or in whole, is not permitted unless authorised by Volkswagen AG. Volkswagen AG does not guarantee or accept any liability with respect to the correctness of information in this document. Copyright by Volkswagen AG.

– Remove the automatic belt retractor -3- from the mount.

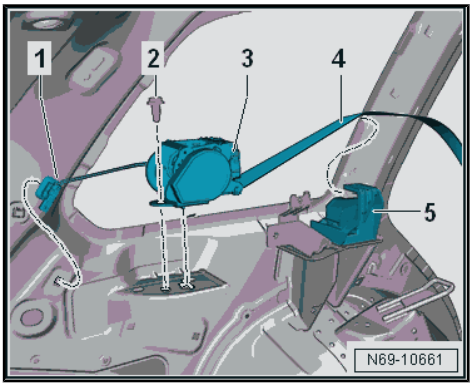

Installing

> **WARNING**
>
> ♦ *Observe the safety precautions for pyrotechnical components. Refer to ⇒ "1 Safety Precautions", page 1 .*
>
> ♦ *Before handling pyrotechnic components (for example, connecting the connector), the person handling it must "discharge static electricity". This can be done by touching the door striker pin, for example.*

Install in reverse order of removal while paying attention to the following:

– If parts of the seat belt system are removed due to an accident, replace the belt system bolts.

Note

Make sure the connectors are pushed in all the way and that they engage audibly.

> **WARNING**
>
> *The ignition must be on when connecting the battery. If pyrotechnic components (for example, airbag, belt tensioner) are not repaired correctly, they may deploy unintentionally after connecting battery. There must not be anyone inside the vehicle when connecting the battery.*

– Connect the battery ground cable with the ignition turned on. Refer to ⇒ Electrical Equipment; Rep. Gr. 27 ; Battery; Battery, Disconnecting and Connecting .

> **WARNING**
>
> *If the ignition is not switched on after the battery is reconnected - "indicator lamps in the instrument cluster do not light up" - the ignition (key/button) may only be switched on when the driver seat is positioned all the way back.*

Tightening Specifications

♦ Refer to
⇒ "1.3.6 Overview - Three-Point Seat Belt, Wagon with Belt Tensioner", page 93

1.8.7 Rear Three Point Seat Belt in Center, Removing and Installing

Removing

– Remove the backrest cover and backrest cushion from the rear seat backrest. Refer to
⇒ "2.4 Rear Seat Backrest Cover and Cushion, Removing and Installing", page 419 .

– Remove the nut -1-.

Protected by Copyright. Copyright by Volkswagen AG. Volkswagen AG does not guarantee or accept any liability with respect to the correctness of information in this document. Copyright by Volkswagen AG. Not for commercial purposes, in part or in whole, is not permitted unless authorised by Volkswagen AG.

– Disengage the three-point seat belt -2- and remove it.

– Guide out the seat belt -3-.

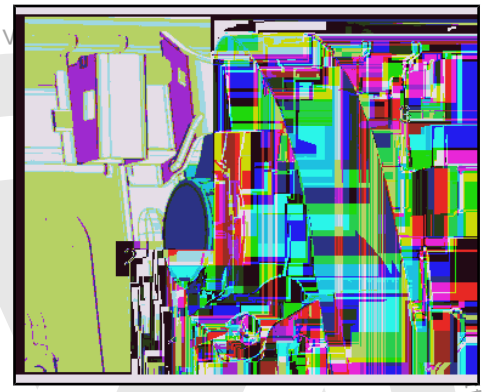

Installing

– If parts of the seat belt system are removed due to an accident, replace the belt system bolts.

– Insert the three-point seat belt with the anti-twist mechanism in the mount and tighten the nut.

Install in reverse order of removal.

Tightening Specifications

♦ Refer to
⇒ “1.4 Overview - Rear Center Three-Point Seat Belt”, page 94

1.9 Front Seat Belt Guide, Removing and Installing

⇒ “1.9.1 Front Seat Belt Guide, Removing and Installing, 2-Door Sedan”, page 114

⇒ “1.9.2 Front Seat Belt Guide, Removing and Installing, 4-Door Sedan and Wagon”, page 114

1.9.1 Front Seat Belt Guide, Removing and Installing, 2-Door Sedan

Removing

– Remove the side trim panel. Refer to
⇒ “5.16 Side Trim Panel, Removing and Installing”, page 265 .

– Remove the two bolts -2- and then the seat belt guide -1-.

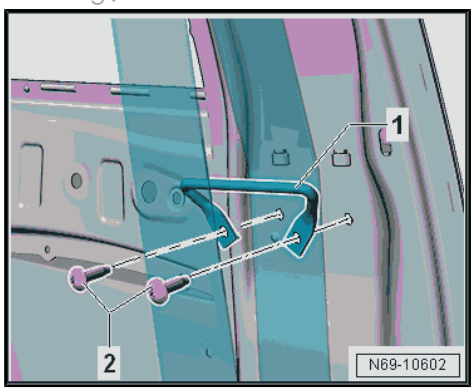

Installing

Install in reverse order of removal.

Note

When installing, note the correct installation position of the seat belt guide.

Tightening Specifications

♦ Refer to
⇒ “1.2 Overview - Front Three-Point Seat Belt”, page 83

1.9.2 Front Seat Belt Guide, Removing and Installing, 4-Door Sedan and Wagon

Removing

– Remove the B-pillar upper trim panel. Refer to
⇒ “5.13.2 B-Pillar Trim Panel, Removing and Installing, 4-Door Sedan and Wagon”, page 258 .

Protected by copyright. Copyright by Volkswagen AG. Copying for commercial purposes, part or in whole, is not permitted unless authorised by Volkswagen AG. Volkswagen AG does not guarantee or accept any liability with respect to the correctness of information in this document. Copyright by Volkswagen AG.

– Remove the two bolts -2- and then the seat belt guide -1-.

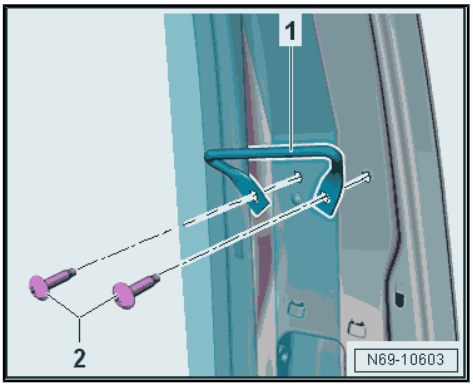

Note

For vehicles that have the seat belt guides inserted into the body, the two bolts -2- do not apply.

Installing

Install in reverse order of removal.

Note

When installing, note the correct installation position of the seat belt guide.

Tightening Specifications

♦ Refer to
⇒ “1.2 Overview - Front Three-Point Seat Belt”, page 83

1.10 Rear Seat Belt Guide, Removing and Installing

Removing

– Luggage Compartment Side Trim Panel, Removing and Installing. Refer to
⇒ “6.12.2 Luggage Compartment Side Trim Panel, Removing and Installing, Wagon”, page 291 .

– Remove the two bolts -1- and then the seat belt guide -2-.

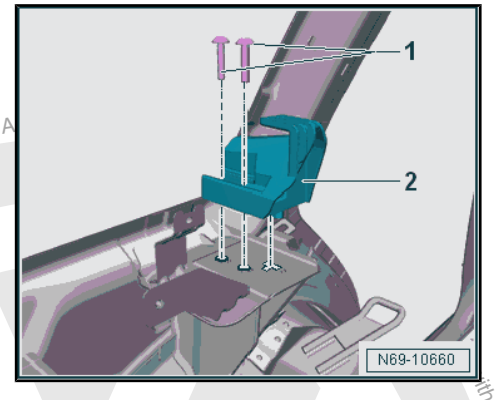

Installing

Install in reverse order of removal.

Note

When installing, note the correct installation position of the seat belt guide.

Tightening Specifications

♦ Refer to
⇒ “1.3.5 Overview - Three-Point Seat Belt, Wagon without Belt Tensioner”, page 92

♦ Refer to
⇒ “1.3.6 Overview - Three-Point Seat Belt, Wagon with Belt Tensioner”, page 93

Protected by copyright. Copying for private or commercial purposes, in part or in whole, is not permitted unless authorised by Volkswagen AG. Copyright by Volkswagen AG. No liability is accepted with respect to the correctness of information in this document.

1.11 Front Belt End Fitting, Removing and Installing

⇒ “1.11.1 Front Belt End Fitting, Removing and Installing, without Belt End Fitting Tensioner, 2-Door Sedan”, page 116

⇒ “1.11.2 Front Belt End Fitting, Removing and Installing, without Belt End Fitting Tensioner, 4-Door Sedan and Wagon”, page 116

⇒ “1.11.3 Front Belt End Fitting, Removing and Installing, with Belt End Fitting Tensioner”, page 117

1.11.1 Front Belt End Fitting, Removing and Installing, without Belt End Fitting Tensioner, 2-Door Sedan

Removing

– Remove the sill panel. Refer to ⇒ “5.10.1 Sill Panel Strip, Removing and Installing, 2-Door Sedan”, page 249 .

– Remove the bolt -3-.

– Remove the bolt -2- and remove with the washer -1-.

– Remove the seat belt loop from the belt end fitting -4-.

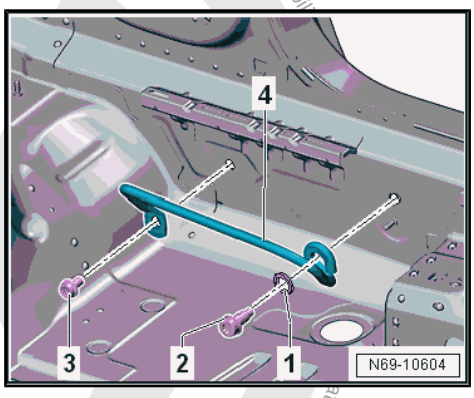

Installing

– Guide the belt end fitting -4- through the seat belt loop.

– Attach the belt end fitting with the washer -1- and the bolt -2-.

– Install the belt end fitting with the bolt -3-.

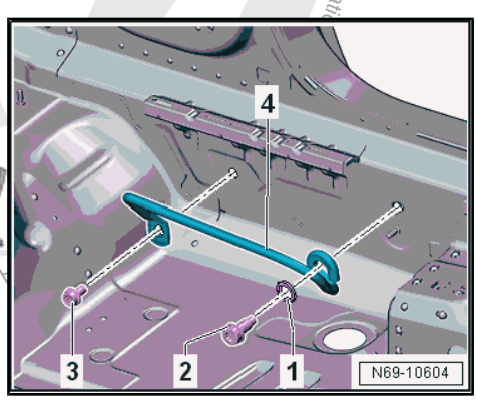

> **WARNING**
>
> *Follow the bolt sequence exactly.*

Tightening Specifications

♦ Refer to ⇒ “1.2.1 Overview - Front Three-Point Seat Belt, without Belt End Fitting Tensioner, 2-Door Sedan”, page 83

1.11.2 Front Belt End Fitting, Removing and Installing, without Belt End Fitting Tensioner, 4-Door Sedan and Wagon

Removing

• Front seat positioned all the forward and raised all the way up.

Protected by copyright. Copying for private or commercial purposes, in part or in whole, is not permitted unless authorised by Volkswagen AG. Volkswagen AG does not guarantee or accept any liability

– Fold the service door in the sill panel strip near the belt end fitting toward the inside.

– Remove the bolt -1- and detach the belt end fitting -2- from the body.

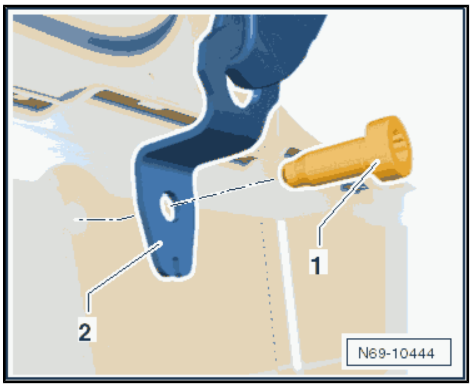

Installing

Install in reverse order of removal.

Tightening Specifications

- Refer to ⇒ “1.2.2 Overview - Front Three-Point Seat Belt, without Belt End Fitting Tensioner, 4-Door Sedan and Wagon”, page 85

1.11.3 Front Belt End Fitting, Removing and Installing, with Belt End Fitting Tensioner

Removing

– Remove the sill panel. Refer to ⇒ “5.10 Sill Panel Strip, Removing and Installing”, page 249 .

– Open the cover for the coupling point -1- in direction of -arrow-.

– Guide the release cable -2- out of the coupling point -1-.

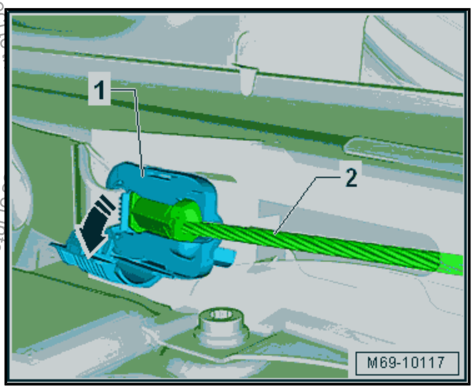

– Remove the bolt -2- and detach the belt end fitting -1- from the body.

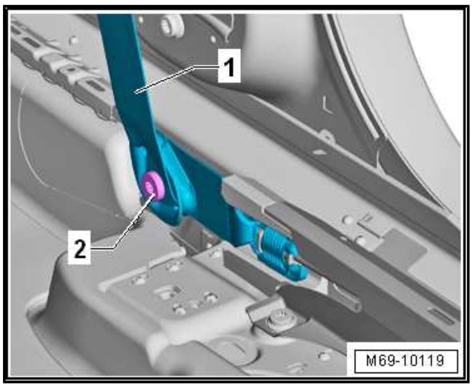

Installing

Install in reverse order of removal.

Tightening Specifications

- Refer to ⇒ “1.2.3 Overview - Front Three-Point Seat Belt, with Belt End Fitting Tensioner”, page 86

1.12 Rear Outer Belt End Fitting, Removing and Installing

Removing

Only 2-Door Vehicles

– Remove the side trim panel. Refer to ⇒ “5.16 Side Trim Panel, Removing and Installing”, page 265 .

Protected by copyright. Copying for private or commercial purposes, in part or in whole, is not permitted unless authorised by Volkswagen AG. Volkswagen AG does not guarantee or accept any liability with respect to the correctness of information in this document. Copyright by Volkswagen AG.

Protected by copyright. Copying for private or commercial purposes, in part or in whole, is not permitted unless authorised by Volkswagen AG. Volkswagen AG does not guarantee or accept any liability with respe

Only 4-Door Vehicles and Wagons without Rear Side Airbags

– Remove the wheel housing trim panel. Refer to ⇒ “5.17 Wheel Housing Trim Panel, Removing and Installing”, page 267 .

Only 4-Door Vehicles and Wagons with Rear Side Airbags

– Remove the side cushion. Refer to ⇒ “3.16 Side Cushion, Removing and Installing”, page 391 .

Continuation for All Vehicles

– Remove the bolt -1- on the belt end fitting -2-.

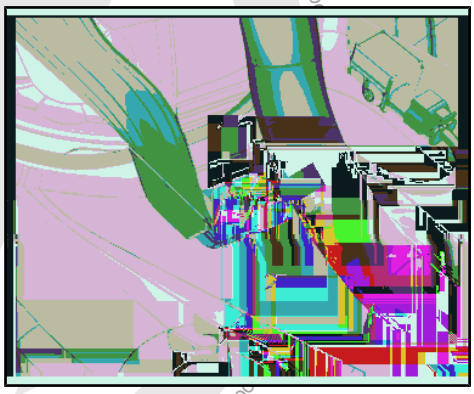

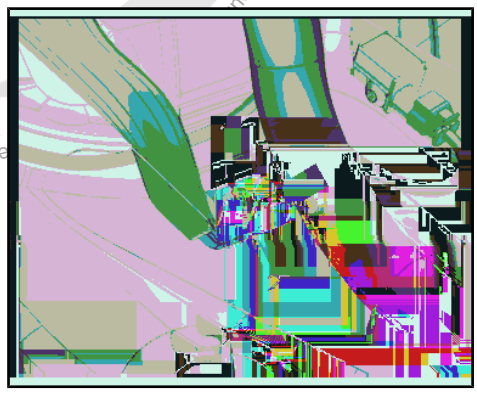

Installing

• The anti-twist mechanism -arrow- on the floor panel must rest in the belt end fitting opening -2-.

– Tighten the belt end fitting -2- with the bolt -1-.

Install in reverse order of removal.

Tightening Specifications

♦ Refer to ⇒ “1.3 Overview - Outer Rear Three-Point Seat Belt”, page 88

1.13 Seat Belt Height Adjuster, Removing and Installing

Removing

– Press the seat belt height adjustment button and move the slider for seat belt height adjustment into the lowest position.

– Detach the B-pillar upper trim panel. Refer to ⇒ “5.13.2 B-Pillar Trim Panel, Removing and Installing, 4-Door Sedan and Wagon”, page 258 .

– Set aside the B-pillar trim with the seat belt webbing still threaded through it.

– Remove the bolt -4-.

– Remove the seat belt guide -1- with the seat belt webbing.

– Remove the bolt -3-.

– Remove the seat belt height adjuster -2- upward from the B-pillar.

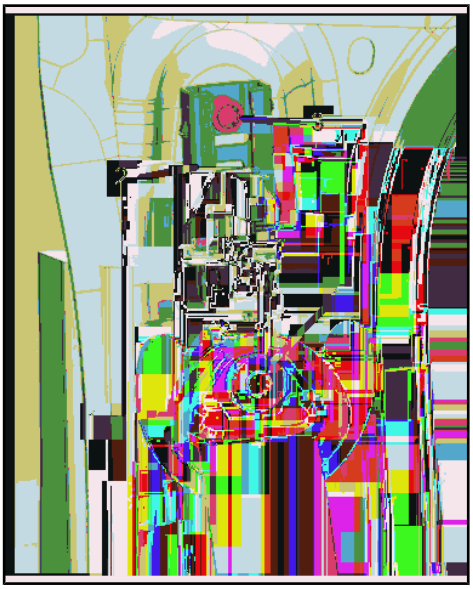

Installing

Install in reverse order of removal while paying attention to the following:

– If parts of the seat belt system are removed due to an accident, replace the belt system bolts.

Note

♦ *Replacement seat belt height adjusters are delivered with the slider in the lowest position (installation position).*

♦ *If removed seat belt height adjusters are reinstalled, these should be placed in the lowest position (installation position).*

– Engage the seat belt height adjuster -2- into the B-pillar.

– Tighten the bolt -3-.

– Install the seat belt height adjuster -1- and tighten the bolt -4-.

Note

The seat belt height adjuster button must not be pressed when assembling the B-pillar trim panel.

– First, insert the B-pillar trim panel -3- upward into the mount on the roof.

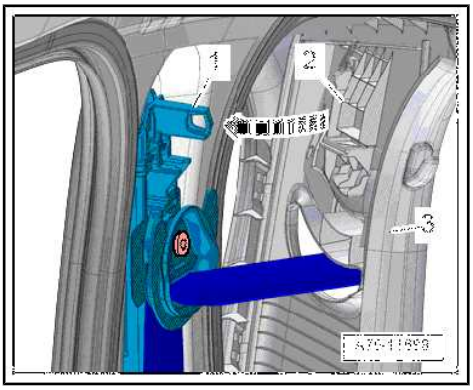

• The mount -2- for the sliding piece of the B-pillar trim must engage in the retaining pin -1- on the seat belt height adjuster in direction of -arrow-.

– Seat belt height adjuster replacement part: after installing the B-pillar trim, push the slider all the way up.

• This unlocks the seat belt height adjuster assembly anchorage.

– When performing the function test, the following conditions must be fulfilled:

• The seat belt height adjuster must audibly engage in each of the three possible positions (and also in the highest position).

• Belt height adjuster button must return to upper position by itself after being pressed.

• The belt relay must swing into vertical position or carrier direction by itself after tightening the screw.

If any of the listed conditions are not fulfilled, the belt height adjuster assembly must be checked; if necessary, replace the belt height adjuster.

Tightening Specifications

♦ Refer to
⇒ “1.2 Overview - Front Three-Point Seat Belt”, page 83

Protected by copyright. Copyright by Volkswagen AG. Copying for private or commercial purposes, in part or in whole, is not permitted unless authorised by Volkswagen AG. Volkswagen AG does not guarantee or accept any liability with respect to the correctness of information in this document.

1.14 Front Seat Belt Latch, Removing and Installing

Removing

– Remove the front seat. Refer to ⇒ “2.10 Front Seat, Removing and Installing”, page 335 .

– Disconnect the seat belt latch connector from the connector station underneath the seat frame.

– Loosen the wire from the seat frame.

– Remove the bolt -3- and then remove the seat belt latch -1- from the seat -2-.

Protected by copyright. Copying for private or commercial purposes, in part or in whole, is not permitted unless authorised by Volkswagen AG. Volkswagen AG does no

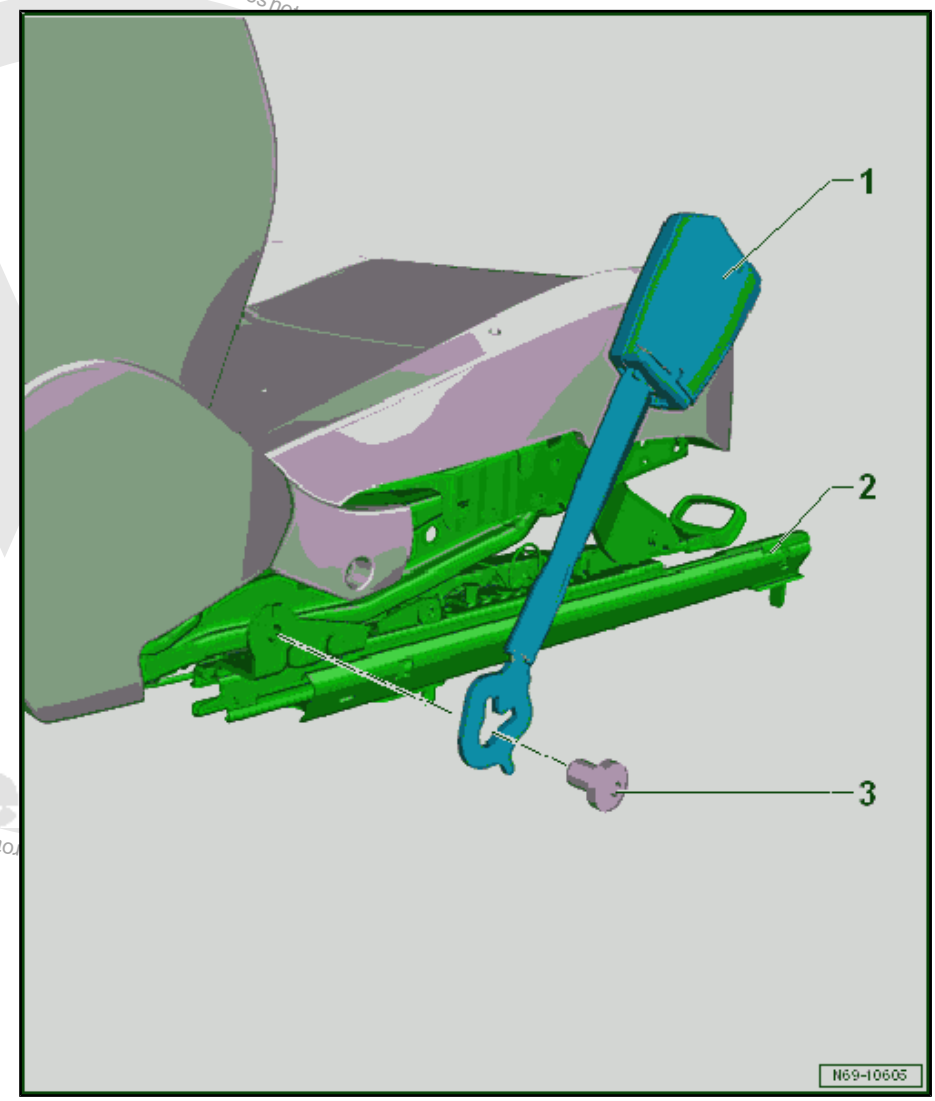

Installing

Install in reverse order of removal while paying attention to the following:

– Position the seat belt latch -2- so that the cut-out -arrow B- lines up with the hole -arrow A- on the seat pan -1-.

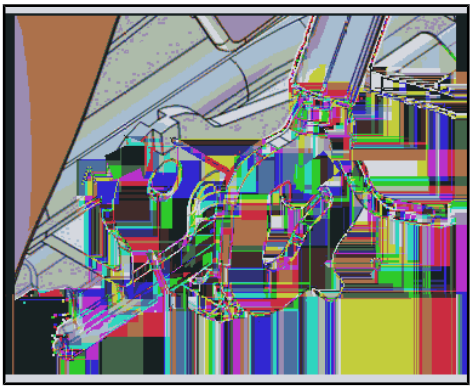

Tightening Specifications

♦ Refer to ⇒ “1.5 Overview - Front Seat Belt Latch”, page 95

1.15 Rear Seat Belt Latch, Removing and Installing

Removing

– Remove the rear bench seat. Refer to ⇒ “3.7 Bench Seat/Single Seat, Removing and Installing”, page 382 .

Right: Seat Belt Latch with Belt End Fitting

Note

The seat belt latch with belt end fitting is a component of the rear center seat belt.

– If equipped, disconnect the connector -2- for the seat belt switch.

– Remove the nut -1-.

– Remove the seat belt latch -3- with the belt end fitting.

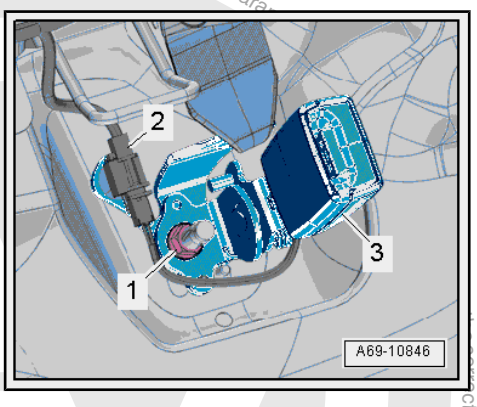

Left: Dual Seat Belt Latch

– If equipped, disconnect the connector -3- for the seat belt switch.

– Remove the nut -2-.

– Remove the dual seat belt latch -1-.

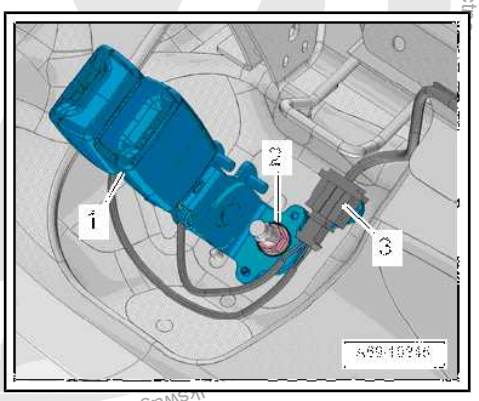

Installing

Install in reverse order of removal.

Tightening Specifications

♦ Refer to ⇒ “1.6 Overview - Rear Seat Belt Latch”, page 97

Protected by copyright. Copying for private or commercial purposes, in part or in whole, is not permitted unless authorised by Volkswagen AG. Volkswagen AG does not guarantee

2 Child Seat Anchors

⇒ “2.1 Overview - Rear Child Seat Anchors”, page 122

⇒ “2.2 LATCH Child Seat Anchor Guide, Removing and Installing”, page 123

⇒ “2.3 Top Tether, Removing and Installing”, page 123

2.1 Overview - Rear Child Seat Anchors

Outer Seat Child Seat Anchor. Refer to ⇒ page 122

Center Seat Top Tether. Refer to
⇒ Fig. ““Center Seat Top Tether”“ , page 123

Outer Seat Child Seat Anchor

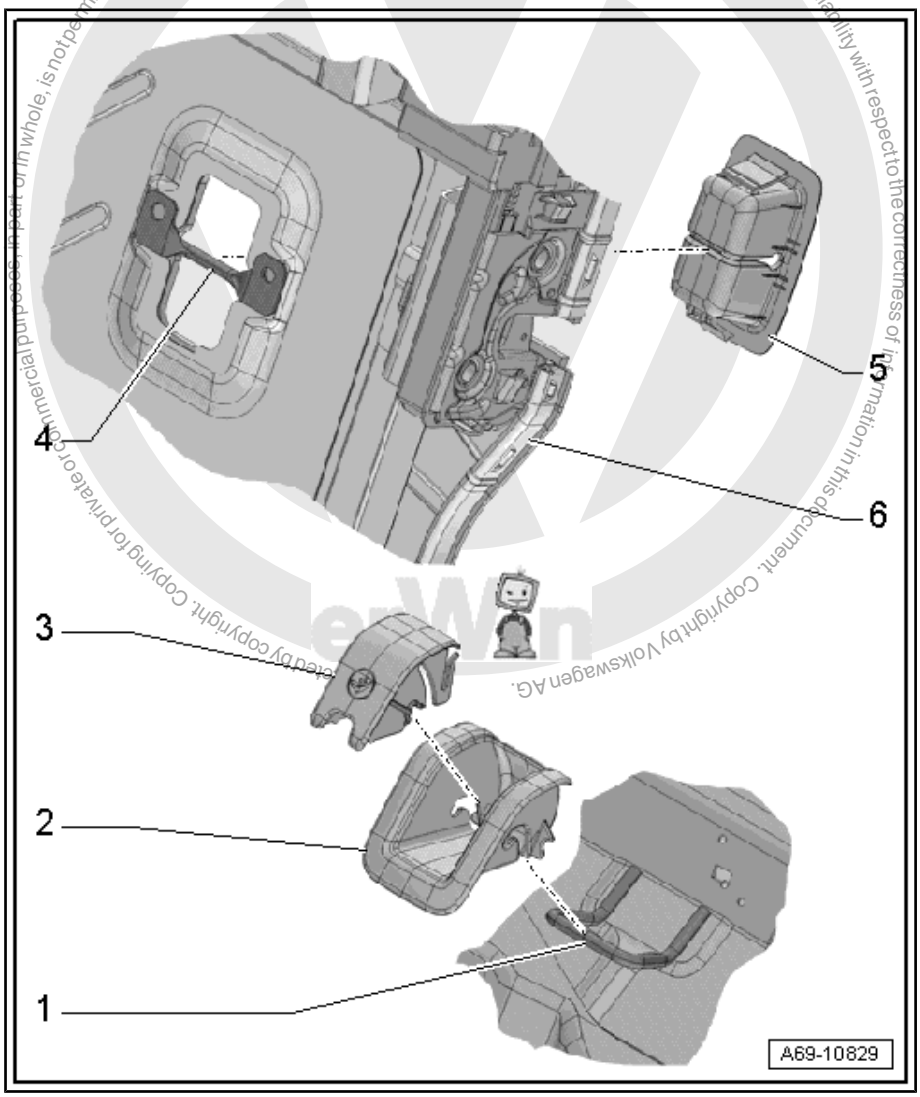

1 - LATCH Child Seat Anchor

- ❑ Quantity: 4
- ❑ Welded to the underbody

2 - Guide

- ❑ For the LATCH child seat anchor
- ❑ Quantity: 4
- ❑ Removing and installing. Refer to ⇒ “2.2 LATCH Child Seat Anchor Guide, Removing and Installing”, page 123 .
- ❑ Must be secure on the anchor

3 - Cover

- ❑ For the LATCH child seat anchor
- ❑ Quantity: 4
- ❑ Removing and installing. Refer to ⇒ “2.2 LATCH Child Seat Anchor Guide, Removing and Installing”, page 123 .
- ❑ Must be secure on the anchor

4 - Child Seat Anchor Top Tether

- ❑ Quantity: 2
- ❑ Welded to the backrest frame.

5 - Cover

- ❑ For Top Tether child seat anchor
- ❑ Quantity: 2
- ❑ Removing and installing. Refer to ⇒ “2.3 Top Tether, Removing and Installing”, page 123 .
- ❑ Insert in the anchor and press on it until it engages audibly
- ❑ Can only be pushed in one position in the rear seat backrest

6 - Rear Seat Backrest

Copyright by Volkswagen AG. Volkswagen AG does not guarantee or accept any liability with respect to the correctness of information in this document. Copyright by Volkswagen AG. Copying for private or commercial purposes, in part or in whole, is not permitted unless authorised by Volkswagen AG.

Center Seat Top Tether

1 - Top Tether

2 - Bolt, 8 Nm

3 - Cap

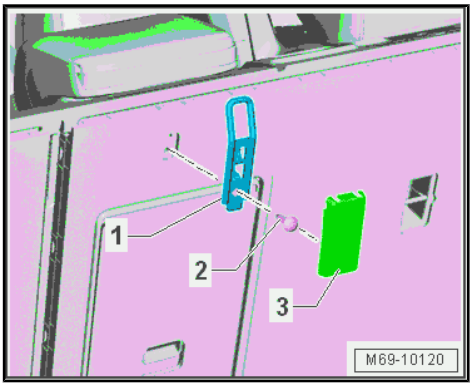

2.2 LATCH Child Seat Anchor Guide, Removing and Installing

Removing

– Unclip and remove the cover -1- from the LATCH child seat anchor -arrow-.

– Push the guide -1-, corresponding to cut-out, downward and disengage it from the LATCH child seat anchor -2-.

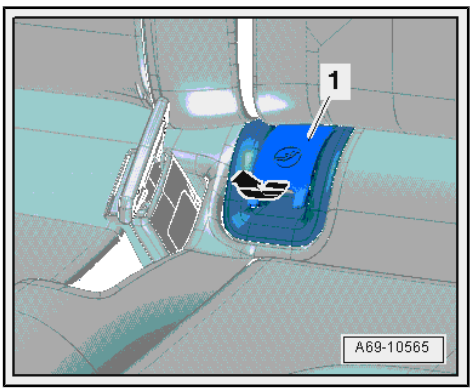

– Remove the guide forward -arrow-.

Installing

Install in reverse order of removal.

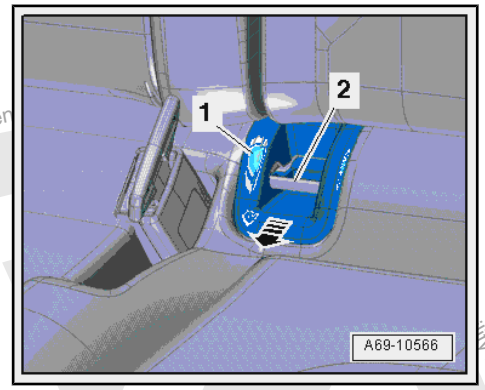

2.3 Top Tether, Removing and Installing

Special tools and workshop equipment required

- Wedge Set - T10383-
- Torque Wrench 1783 - 2-10Nm - VAG1783-

Protected by copyright. Copying for private or commercial purposes, in part or in whole, is not permitted unless authorised by Volkswagen AG. Copyright by Volkswagen AG. No liability with respect to the correctness of information in this document.

Copyright. Copying for private or commercial purposes, in part or in whole, is not permitted unless authorised by Volkswagen AG. Volkswagen AG does not guarantee any liability with respect to the correctness of information in this document.

Removing

Top Tether Cover for the Outer Seats

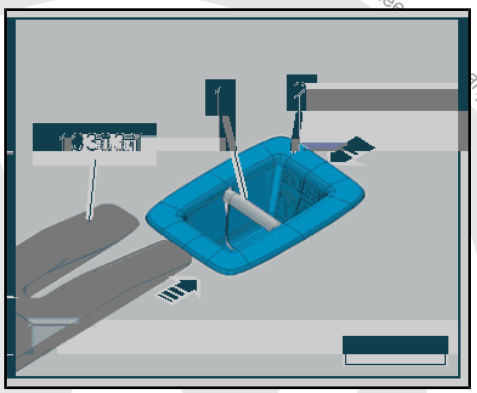

- Fold the rear seat backrest forward.
- Release the retaining tabs using the Wedge Set - Wedge 1 - T10383/1- in direction of -arrows-.
- Pry the Top Tether child seat anchor cover -2- off upward from the rear seat backrest.
- Carefully pull off the cover for the Top Tether child seat anchor from the anchor -1- and remove it.

Top Tether for Center Seats

- Fold the 2/3 rear seat backrest toward the front.
- Unclip the cap -3- from the top tether -1-.
- Remove the bolt -2-.
- Remove the top tether -1- from the rear seat backrest.

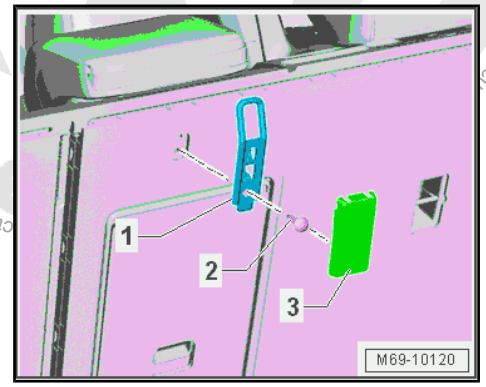

Installing

Installation is performed in the reverse of removal, but note the following:

Top Tether for Center Seats

- Make sure the guide tab on the top tether is seated correctly in the rear seat backrest opening.

Tightening Specifications

♦ Refer to
⇒ “2.1 Overview - Rear Child Seat Anchors”, page 122

3 Airbag System

⇒ “3.1 Component Location Overview - Airbag System”, page 125

3.1 Component Location Overview - Airbag System

Reproduced for educational purposes only. Not to be sold or in whole, is not permitted without authorization by Volkswagen AG. Volkswagen AG does not

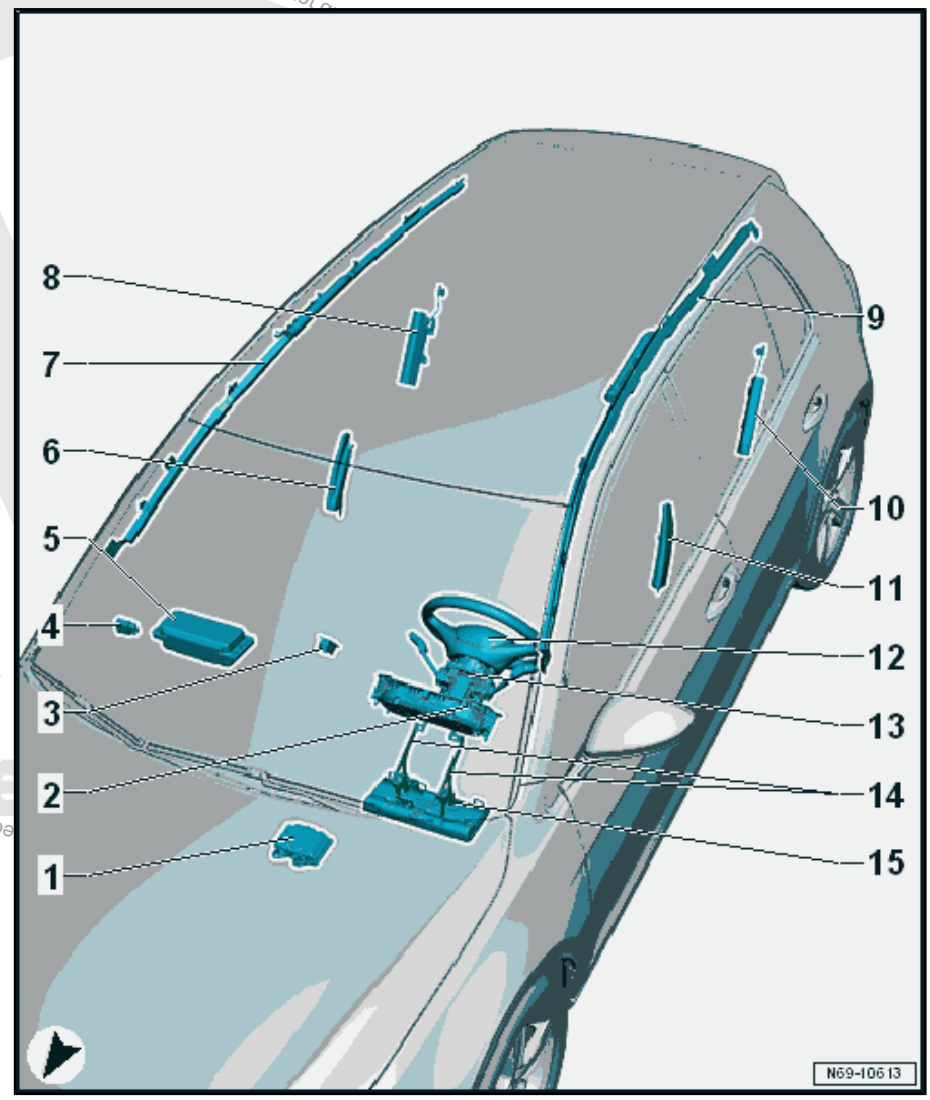

1 - Airbag Control Module - J234-

- Overview. Refer to ⇒ “4.1 Overview - Airbag Control Module”, page 127 .

2 - Airbag Indicator Lamp - K75-

- Integrated in the instrument cluster.
- Cannot be replaced separately
- Instrument Cluster, removing and installing. Refer to ⇒ Electrical Equipment; Rep. Gr. 90 ; Instrument Cluster; Overview - Instrument Cluster .

3 - Front Passenger Airbag - Disabled- Indicator Lamp - K145-

- Cannot be replaced separately
- Removing and installing. Refer to ⇒ Electrical Equipment; Rep. Gr. 96 ; Controls; Emergency Flasher Switch EX3, Removing and Installing .

4 - Front Passenger Airbag Deactivation Key Switch - E224-

- Not for North American market.

5 - Front Passenger Airbag

- Depending on the market, single-stage airbag with Front Passenger Airbag Igniter 1 - N131- or dual-stage airbag with Front Passenger Airbag Igniter 1 - N131- and Front Passenger Airbag Igniter 2 - N132- .
- Overview. Refer to ⇒ “6.1 Overview - Front Passenger Airbag”, page 138 .

6 - Front Passenger Front Side Airbag

- With Front Passenger Thorax Airbag Igniter - N200-
- Overview. Refer to ⇒ “7.1 Overview - Front Side Airbag”, page 143 .

7 - Front Passenger Head Curtain Airbag

- With Front Passenger Head Curtain Airbag Igniter - N252-
- Overview. Refer to ⇒ “8.1 Overview - Head Curtain Airbag”, page 147 .

8 - Rear Side Airbag on Front Passenger Side

- With Passenger Side Rear Thorax Airbag Igniter - N202-
- Overview. Refer to ⇒ “7.2 Overview - Rear Side Airbag”, page 144 .

Protected by copyright. Copyright by Volkswagen AG. Volkswagen AG does not guarantee or accept any liability with respect to the correctness of information in this document. Copyright by Volkswagen AG. Copying for private or commercial purposes, in part or in whole, is not permitted unless authorised by Volkswagen AG.

9 - Driver Head Curtain Airbag

- With Driver Head Curtain Airbag Igniter - N251-
- Overview. Refer to ⇒ “8.1 Overview - Head Curtain Airbag”, page 147 .

10 - Rear Side Airbag on Driver Side

- With Driver Side Rear Thorax Airbag Igniter - N201-
- Overview. Refer to ⇒ “7.2 Overview - Rear Side Airbag”, page 144 .

11 - Front Side Airbag on Driver Side

- With Driver Thorax Airbag Igniter - N199-
- Overview. Refer to ⇒ “7.1 Overview - Front Side Airbag”, page 143 .

12 - Driver Side Airbag

- With Driver Airbag Igniter - N95-
- Overview. Refer to ⇒ “5.1 Overview - Driver Side Airbag”, page 131 .

13 - Steering Column Electronics Control Module - J527-

- With Airbag Spiral Spring/Return Spring with Slip Ring - F138-
- Overview. Refer to ⇒ Electrical Equipment; Rep. Gr. 94 ; Steering Column Switch Module .

14 - Driver Side Knee Airbag Bracket

- Overview. Refer to ⇒ Suspension, Wheels, Steering; Rep. Gr. 48 ; Steering Column .

15 - Driver Side Knee Airbag

- With the Driver Knee Airbag Igniter - N295-
- Overview. Refer to ⇒ “9.1 Overview - Knee Airbag”, page 156 .

4 Airbag Control Module

⇒ "4.1 Overview - Airbag Control Module", page 127

⇒ "4.2 Airbag Control Module J234 , Removing and Installing", page 127

4.1 Overview - Airbag Control Module

1 - Airbag Control Module - J234-

- ❑ Removing and installing. Refer to ⇒ "4.2 Airbag Control Module J234 , Removing and Installing", page 127 .
- ❑ Control module is grounded via the housing with the body.

2 - Nut

- ❑ 9 Nm
- ❑ Nut and ground bolt serve as a ground connection for the control module
- ❑ The threads must be free of paint and dirt

3 - Nut

- ❑ 9 Nm
- ❑ Quantity: 2
- ❑ Nut and ground bolt serve as a ground connection for the control module
- ❑ The threads must be free of paint and dirt

4 - Connector

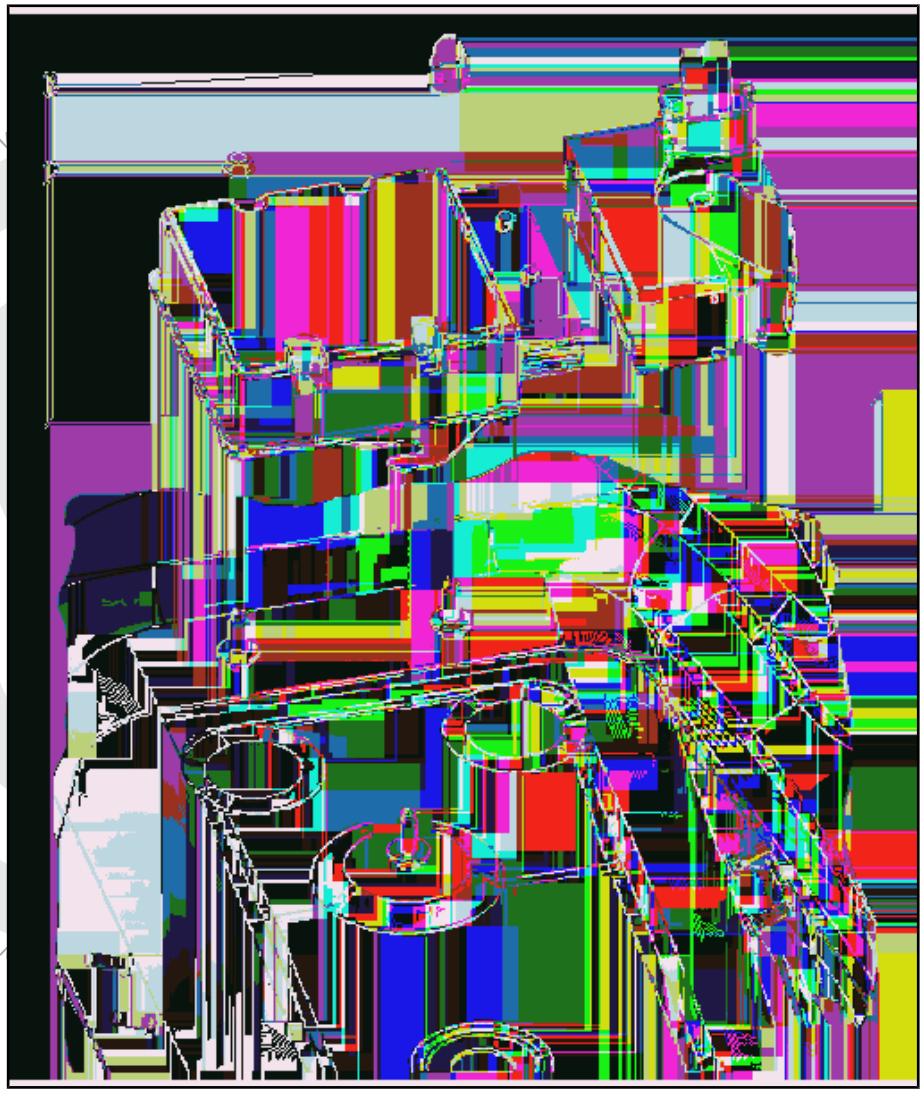

4.2 Airbag Control Module - J234- , Removing and Installing

Removing

> **WARNING**
>
> *Observe the safety precautions for pyrotechnical components. Refer to ⇒ "1.2 Safety Precautions for Pyrotechnic Components", page 3 .*

– Disconnect the battery ground cable with the ignition turned on. Refer to ⇒ Electrical Equipment; Rep. Gr. 27 ; Battery; Battery, Disconnecting and Connecting .

– Remove the footwell center console trim panel. Refer to ⇒ “3.4 Front Footwell Center Console Trim Panel, Removing and Installing”, page 55 .

Protected by copyright. Copying for private or commercial purposes, in part or in whole, is not permitted unless authorised by Volkswagen AG. Volkswagen AG does not guarantee or accept any liability with respect to the correctness of information in this document. Copyright by Volkswagen AG.

– Remove the nut -3- in the front footwell.

> **WARNING**
>
> ***Before handling pyrotechnic components (for example, disconnecting the connector), the person handling it must "discharge static electricity". This can be done by touching the door striker pin, for example.***

– Disconnect the connector in the front passenger footwell, by releasing the connector safety catch and opening the locking clip -5- on the connector in direction of -arrow-.

– Remove the nuts -1 and 4-.

– Carefully lift the airbag control module -2- from the threaded pins and remove to the passenger side.

Note

For reasons of clarity, the instrument panel and heater and A/C unit are not shown.

Installing

> **WARNING**
>
> - ***Observe the safety precautions for pyrotechnical components. Refer to ⇒ "1.2 Safety Precautions for Pyrotechnic Components", page 3 .***
> - ***Before handling pyrotechnic components (for example, connecting the connector), the person handling it must "discharge static electricity". This can be done by touching the door striker pin, for example.***

Install in reverse order of removal while paying attention to the following:

Note

Make sure the connectors are pushed in all the way and that they engage audibly.

> **WARNING**
>
> ***The ignition must be on when connecting the battery. If pyrotechnic components (for example, airbag, belt tensioner) are not repaired correctly, they may deploy unintentionally after connecting battery. There must not be anyone inside the vehicle when connecting the battery.***

– Connect the battery ground cable with the ignition turned on. Refer to ⇒ Electrical Equipment; Rep. Gr. 27 ; Battery; Battery, Disconnecting and Connecting .

Protected by copyright. Copying for private or commercial purposes, in part or in whole, is not permitted unless authorized by Volkswagen AG.
Copyright by Volkswagen AG. No liability is accepted with respect to the correctness of information in this document.

WARNING

If the ignition is not switched on after the battery is reconnected - "indicator lamps in the instrument cluster do not light up" - the ignition (key/button) may only be switched on when the driver seat is positioned all the way back.

Note

- *If the Airbag Indicator Lamp - K75- signals a fault after installing, check the DTC memory, erase it and check it again use the Vehicle Diagnostic Tester .*
- *Code the Airbag Control Module - J234- after replacing it using the Vehicle Diagnostic Tester .*

Tightening Specifications

- Refer to ⇒ "4.1 Overview - Airbag Control Module", page 127

Protected by copyright. Copying for private or commercial purposes, in part or in whole, is not permitted unless authorised by Volkswagen AG. Volkswagen AG does not guarantee or accept any liability with respect to the correctness of information in this document. Copyright by Volkswagen AG.

5 Driver Side Airbag

⇒ "5.1 Overview - Driver Side Airbag", page 131

⇒ "5.2 Airbag Unit with Igniter, Removing and Installing", page 132

⇒ "5.3 Airbag Connector, Replacing", page 136

5.1 Overview - Driver Side Airbag

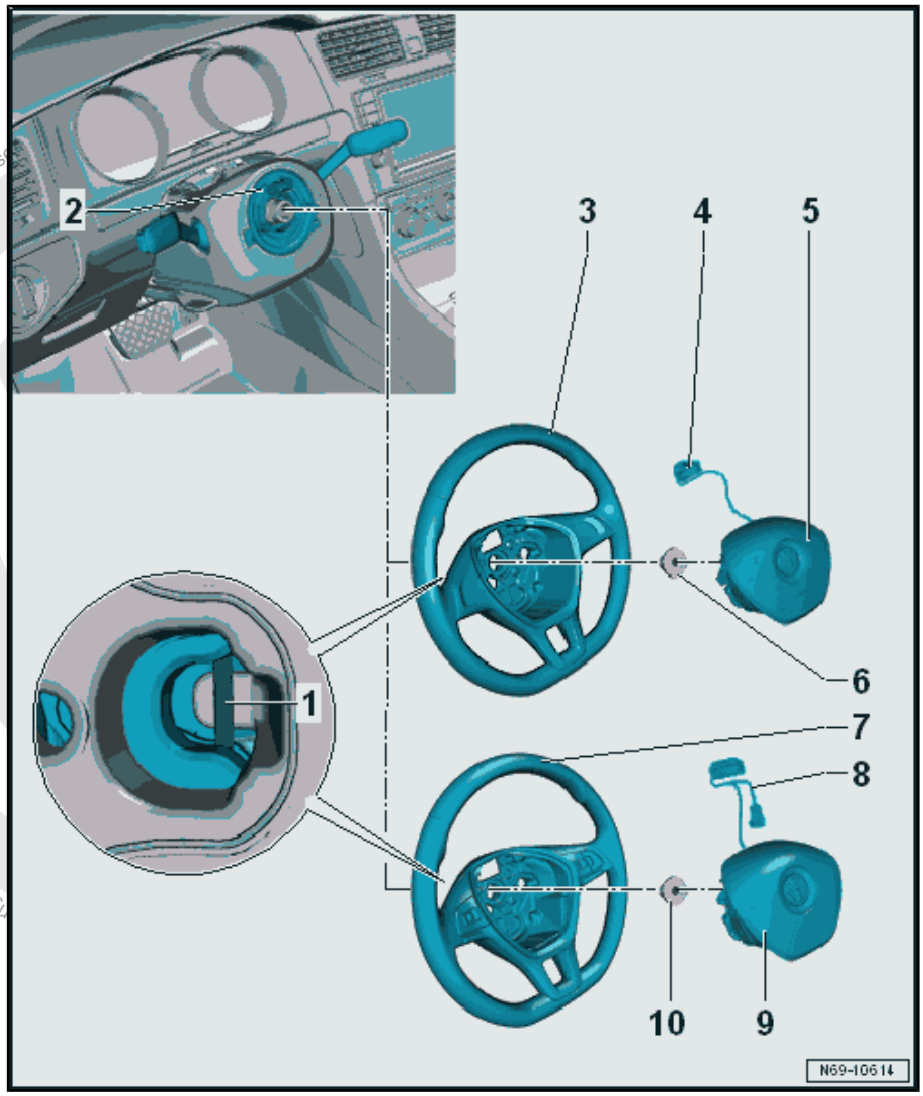

1 - Locking Bracket

- ❑ Use a T25 TORX® screwdriver, approximately 100 mm long

2 - Steering Column Electronics Control Module - J527-

- ❑ With Airbag Spiral Spring/Return Spring with Slip Ring - F138-
- ❑ Overview. Refer to ⇒ Electrical Equipment; Rep. Gr. 94 ; Steering Column Switch Module .

3 - Steering Wheel without Multifunction

- ❑ Equipment levels
- ❑ Overview. Refer to ⇒ Suspension, Wheels, Steering; Rep. Gr. 48 ; Steering Wheel .

4 - Wiring Harness without Multifunction

- ❑ For Driver Airbag Igniter - N95-
- ❑ Replacing. Refer to ⇒ "5.3 Airbag Connector, Replacing", page 136 .
- ❑ Press in to secure in the pockets on the steering wheel.

5 - Driver Side Airbag

- ❑ With Driver Airbag Igniter - N95-

> **WARNING**
>
> *Observe the safety precautions for pyrotechnical components. Refer to ⇒ "1.2 Safety Precautions for Pyrotechnic Components", page 3 .*

- ❑ Removing and installing. Refer to ⇒ "5.2 Airbag Unit with Igniter, Removing and Installing", page 132 .

6 - Screw

- ❑ Tightening specification. Refer to ⇒ Suspension, Wheels, Steering; Rep. Gr. 48 ; Steering Wheel; Overview - Steering Wheel .

Protected by copyright. Copying for private or commercial purposes, in part or in whole, is not permitted unless authorised by Volkswagen AG. Volkswagen AG does not guarantee or accept any liability with respect to the correctness of information in this document. Copyright by Volkswagen AG.

7 - Steering Wheel with Multifunction

- ❑ Equipment levels
- ❑ Overview. Refer to ⇒ Suspension, Wheels, Steering; Rep. Gr. 48 ; Steering Wheel; Overview - Steering Wheel .

8 - Wiring Harness with Multifunction

- ❑ For Driver Airbag Igniter - N95-
- ❑ Replacing. Refer to ⇒ "5.3 Airbag Connector, Replacing", page 136 .
- ❑ Press in to secure in the pockets on the steering wheel.

9 - Driver Side Airbag

- ❑ With Driver Airbag Igniter - N95-

> **WARNING**
>
> *Observe the safety precautions for pyrotechnical components. Refer to ⇒ "1.2 Safety Precautions for Pyrotechnic Components", page 3 .*

- ❑ Removing and installing. Refer to ⇒ "5.2 Airbag Unit with Igniter, Removing and Installing", page 132 .

10 - Screw

- ❑ Tightening specification. Refer to ⇒ Suspension, Wheels, Steering; Rep. Gr. 48 ; Steering Wheel; Overview - Steering Wheel .

5.2 Airbag Unit with Igniter, Removing and Installing

Special tools and workshop equipment required

- ♦ TORX® screwdriver T25, approximately 100 mm long, commercially available

Removing

> **WARNING**
>
> - ♦ *Observe the safety precautions for pyrotechnical components. Refer to ⇒ "1.2 Safety Precautions for Pyrotechnic Components", page 3 .*
> - ♦ *Observe the disposal regulations for pyrotechnical components. Refer to ⇒ "1.3 Airbag, Belt Tensioner and Battery Cut-Out Units, Storing, Transporting and Disposing (Pyrotechnic Components)", page 5 .*

– Position the steering wheel as far back and down as possible.

– Use the full adjustment range of the steering column adjuster.

– Remove the upper steering column trim. Refer to ⇒ "1.11 Upper Steering Column Trim Panel, Removing and Installing", page 30 .

– Turn the steering wheel so the opening on the rear side of it faces upward.

– Releases the locking bracket -1- for the driver side airbag -2- in direction of -arrows-. Use a T25 TORX® screwdriver, approximately 100 mm long.

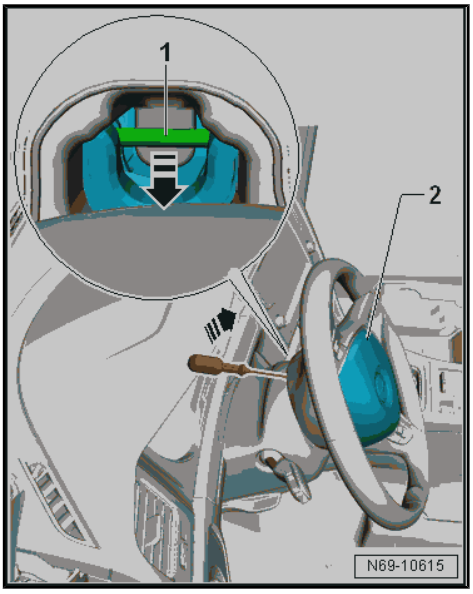

Note

Electrical wires can be damaged with a flat-head screwdriver.

– Turn the steering wheel 180° and repeat the procedure on the opposite side.

– Bring the steering wheel back into the center (wheels are straight).

– Disconnect the battery ground cable with the ignition turned on. Refer to ⇒ Electrical Equipment; Rep. Gr. 27 ; Battery; Battery, Disconnecting and Connecting .

WARNING

Before handling pyrotechnic components (for example, disconnecting the connector), the person handling it must "discharge static electricity". This can be done by touching the door striker pin, for example.

Protected by copyright. Copying for private or commercial purposes, in part or in whole, is not permitted unless authorised by Volkswagen AG. Volkswagen AG does not guarantee or accept any liability with respect to the correctness of information in this document. Copyright by Volkswagen AG.

– Remove the driver side airbag -3- from the steering wheel slightly.

– Pull out the connector lock -2- -arrow- and press it down, disconnect the connector -1-.

– Vehicles with multifunction steering wheel: Disconnect the connector.

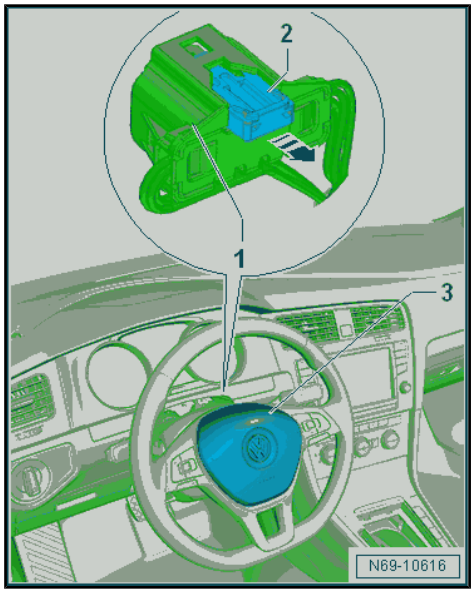

WARNING

Lay airbag unit so padding faces upward.

Installing

WARNING

- *Observe the safety precautions for pyrotechnical components. Refer to* *⇒ "1.2 Safety Precautions for Pyrotechnic Components", page 3* .
- *Before handling pyrotechnic components (for example, connecting the connector), the person handling it must "discharge static electricity". This can be done by touching the door striker pin, for example.*

Install in reverse order of removal while paying attention to the following:

Note

- *Make sure the connectors are pushed in all the way and that they engage audibly.*
- *Make sure the wires are not pinched.*

– Connect the connector.

– Press in the connector to secure it in the pockets on the steering wheel.

– Position the driver side airbag -1- in the steering wheel and press on the edge with both hands until it locks into place.

Protected by copyright. Copying for private or commercial purposes, in part or in whole, is not permitted unless authorised by Volkswagen AG. Volkswagen AG does not guarantee or accept any liability with respect to the correctness of information in this document. Copyright by Volkswagen AG.

Protected by copyright. Copying for private or commercial purposes, in part or in whole, is not permitted unless authorised by Volkswagen AG. Vo

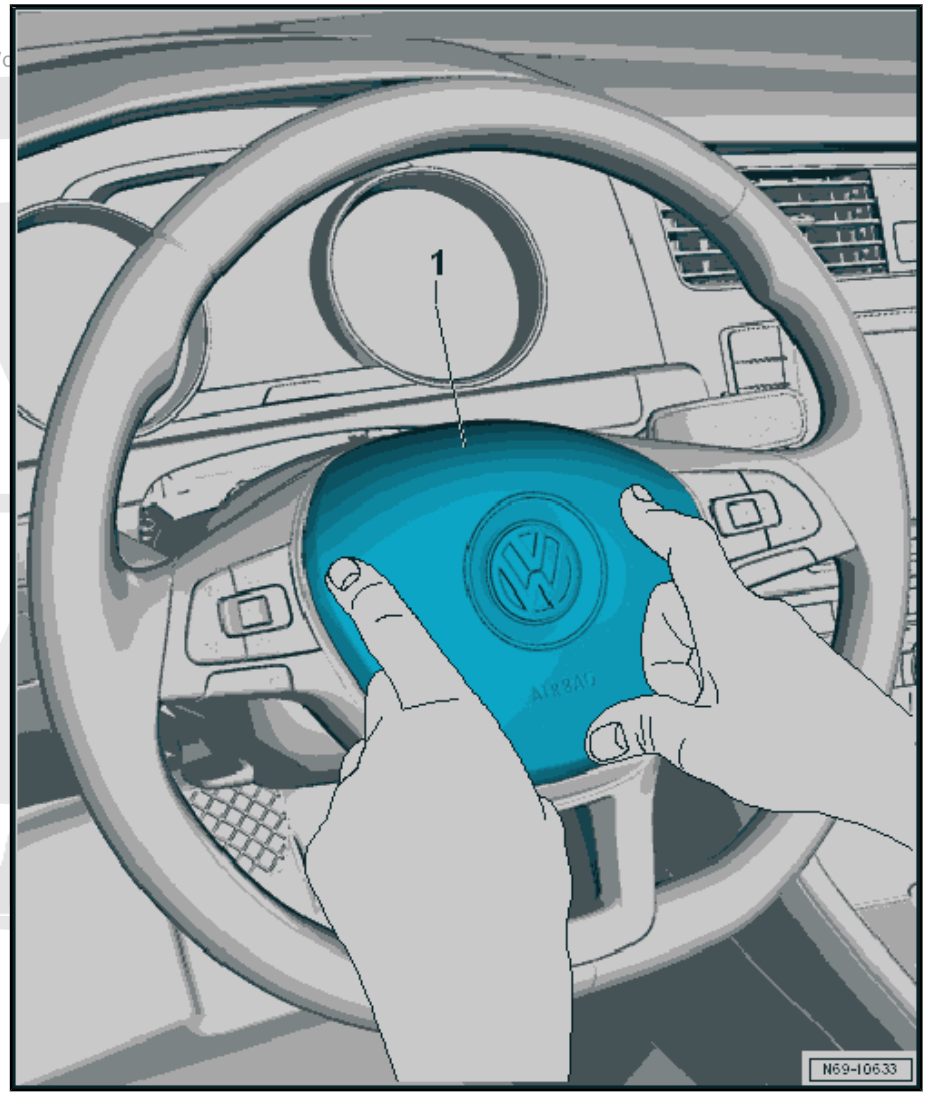

WARNING

The ignition must be on when connecting the battery. If pyrotechnic components (for example, airbag, belt tensioner) are not repaired correctly, they may deploy unintentionally after connecting battery. There must not be anyone inside the vehicle when connecting the battery.

– Connect the battery ground cable with the ignition turned on. Refer to ⇒ Electrical Equipment; Rep. Gr. 27 ; Battery; Battery, Disconnecting and Connecting .

WARNING

If the ignition is not switched on after the battery is reconnected - "indicator lamps in the instrument cluster do not light up" - the ignition (key/button) may only be switched on when the driver seat is positioned all the way back.

– Check and erase the airbag control module DTC memory because faults can be stored from when the connectors are disconnected use the Vehicle Diagnostic Tester .

Tightening Specifications

♦ Refer to ⇒ “5.1 Overview - Driver Side Airbag”, page 131

5.3 Airbag Connector, Replacing

Removing

> **WARNING**
>
> *Observe the safety precautions for pyrotechnical components. Refer to ⇒ “1.2 Safety Precautions for Pyrotechnic Components”, page 3 .*

– Remove the driver side airbag. Refer to ⇒ “5.2 Airbag Unit with Igniter, Removing and Installing”, page 132 .

Equipment Levels: Steering Wheel without Multifunction

> **WARNING**
>
> *Before handling pyrotechnic components (for example, disconnecting the connector), the person handling it must “discharge static electricity”. This can be done by touching the door striker pin, for example.*

– Release the connector lock -2- using a small screwdriver in direction of -arrow- and remove the connector -1- from the Driver Airbag Igniter - N95- .

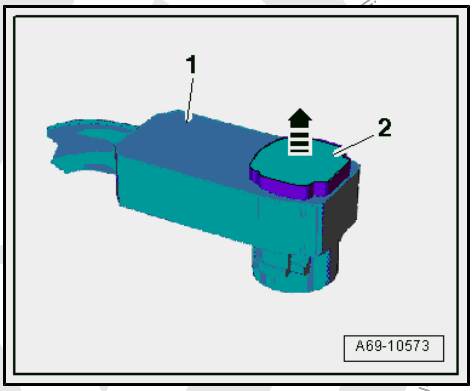

– Disconnect the connectors from the wiring harness -1-.

– Disengage the wiring harness at the brackets and remove from the driver side airbag -2-.

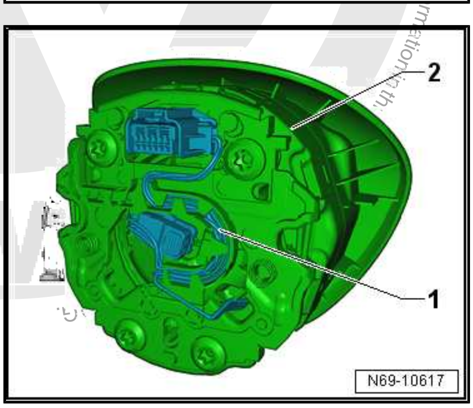

Equipment Levels: Steering Wheel with Multifunction

> **WARNING**
>
> *Before handling pyrotechnic components (for example, disconnecting the connector), the person handling it must “discharge static electricity”. This can be done by touching the door striker pin, for example.*

– Release the connector lock -2- using a small screwdriver in direction of -arrow- and remove the connector -1- from the Driver Airbag Igniter - N95- .

– Disconnect the connectors from the wiring harness -1-.

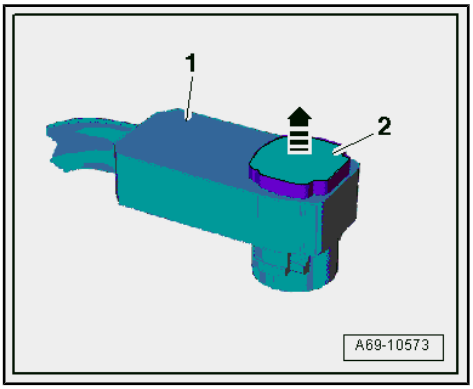

– Disengage the wiring harness at the brackets and remove from the driver side airbag -2-.

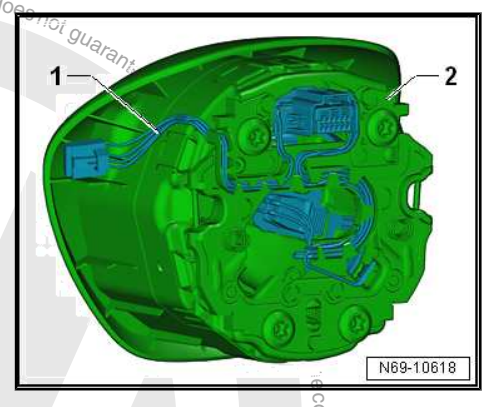

Installing

WARNING

- *Observe the safety precautions for pyrotechnical components. Refer to* *⇒ "1.2 Safety Precautions for Pyrotechnic Components", page 3* *.*
- *Before handling pyrotechnic components (for example, connecting the connector), the person handling it must "discharge static electricity". This can be done by touching the door striker pin, for example.*

– Connect the connector -1- to the airbag igniter in direction of -arrow A-.

– Install the connector locking mechanism -2- in direction of -arrow B-. While doing this, the connector is pushed into the airbag igniter and locks into place.

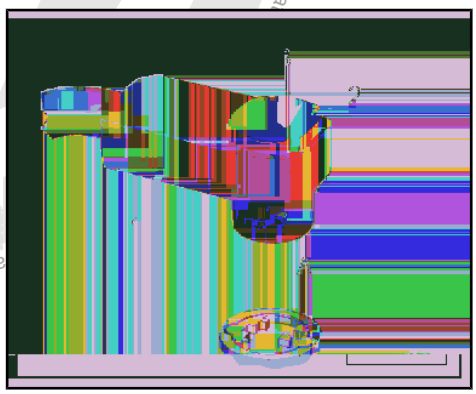

Installation is performed in reverse order of removal, while noting the following:

Note

Make sure the connectors are pushed in all the way and that they engage audibly.

Tightening Specifications

- Refer to ⇒ "5.1 Overview - Driver Side Airbag", page 131

Protected by copyright. Copying for private or commercial purposes, in whole or in part, is not permitted unless authorised by Volkswagen AG. Volkswagen AG does not guarantee the correctness of information.

6 Front Passenger Airbag

⇒ “6.1 Overview - Front Passenger Airbag”, page 138

⇒ “6.2 Front Passenger Airbag Unit with Igniter, Removing and Installing”, page 139

⇒ “6.4 Front Passenger Airbag -Disabled- Indicator Lamp K145 , Removing and Installing”, page 142

6.1 Overview - Front Passenger Airbag

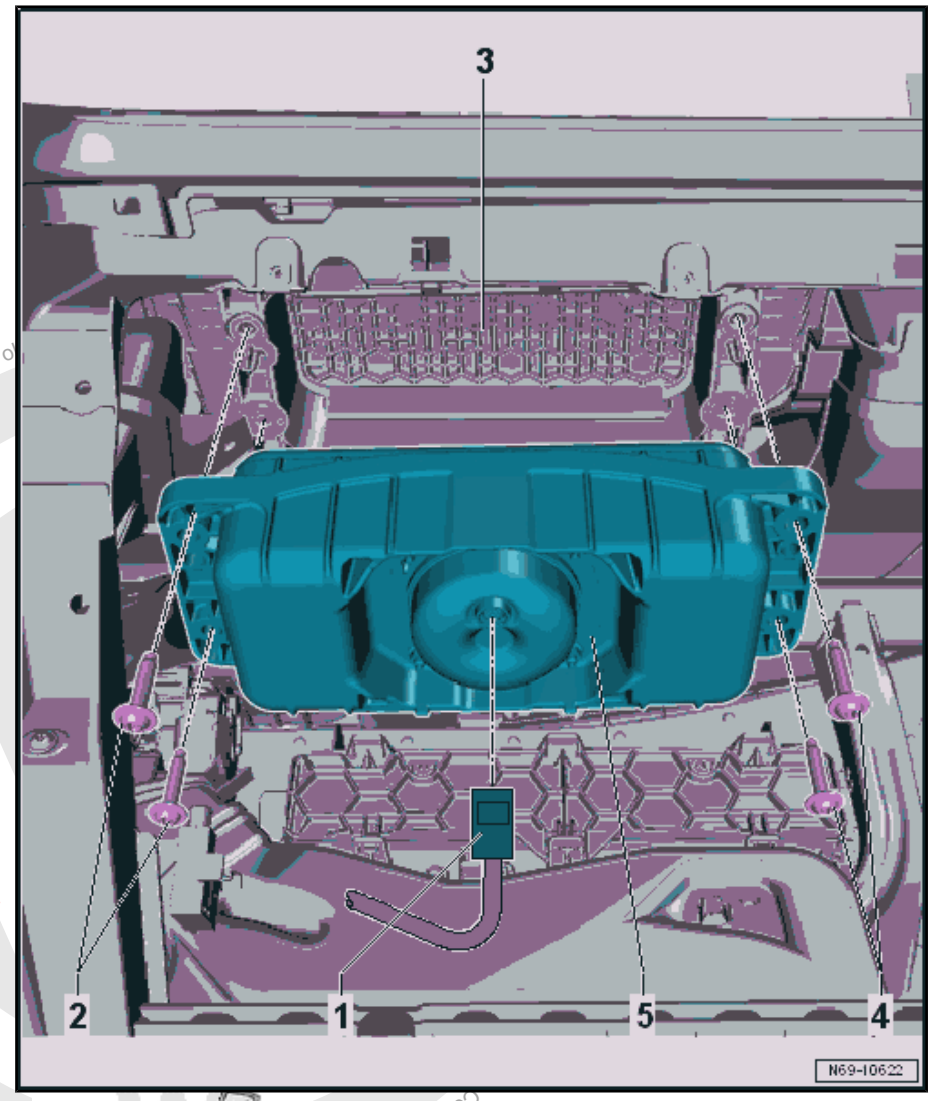

1 - Connector

- ❑ Depending on the market, one connector (single-stage airbag) or two connectors (dual-stage airbag)
- ❑ Single-stage airbag with one connector for Front Passenger Airbag Igniter 1 - N131-
- ❑ Dual-stage airbag with two connectors for Front Passenger Airbag Igniter 1 - N131- and Front Passenger Airbag Igniter 2 - N132-

2 - Screws

- ❑ 8 Nm
- ❑ Quantity: 2
- ❑ Clean before reinstalling
- ❑ Insert with locking compound. Refer to the Parts Catalog.

3 - Instrument Panel

- ❑ Replace the instrument panel after an airbag has deployed. Refer to ⇒ “3.6 Instrument Panel, Removing and Installing” page 213 .

4 - Screws

- ❑ 8 Nm
- ❑ Quantity: 2
- ❑ Clean before reinstalling
- ❑ Insert with locking compound. Refer to the Parts Catalog.

5 - Front Passenger Airbag

- ❑ Depending on the market, single- or dual-stage
- ❑ Single-stage: with Front Passenger Airbag Igniter 1 - N131-
- ❑ Dual-stage: with Front Passenger Airbag Igniter 1 - N131- and Front Passenger Airbag Igniter 2 - N132-

Protected by copyright. Copying for private or commercial purposes, in part or in whole, is not permitted unless authorized by Volkswagen AG.

Copyright by Volkswagen AG. Volkswagen AG does not guarantee or accept any liability with respect to the correctness of information in this document. Copyright by Volkswagen AG. Protected by copyright. Copying for private or commercial purposes, in part or in whole, is not permitted unless authorised by Volkswagen AG.

WARNING

Observe the safety precautions for pyrotechnical components. Refer to ⇒ "1.2 Safety Precautions for Pyrotechnic Components", page 3 .

Observe the allocation of the airbag unit for the instrument panel. Refer to the Parts Catalog.

- ❑ Locking and activating possible with key switch
- ❑ Removing and installing. Refer to ⇒ "6.2 Front Passenger Airbag Unit with Igniter, Removing and Installing", page 139 .

6.2 Front Passenger Airbag Unit with Igniter, Removing and Installing

Removing

WARNING

- *Observe the safety precautions for pyrotechnical components. Refer to ⇒ "1.2 Safety Precautions for Pyrotechnic Components", page 3 .*
- *Observe the disposal regulations for pyrotechnical components. Refer to ⇒ "1.3 Airbag, Belt Tensioner and Battery Cut-Out Units, Storing, Transporting and Disposing (Pyrotechnic Components)", page 5 .*
- *Observe the allocation of the airbag unit for the instrument panel. Refer to the Parts Catalog.*

– Disconnect the battery ground cable with the ignition turned on. Refer to ⇒ Electrical Equipment; Rep. Gr. 27 ; Battery; Battery, Disconnecting and Connecting .

– Remove the glove compartment. Refer to ⇒ "1.17 Glove Compartment, Removing and Installing", page 36 .

WARNING

Before handling pyrotechnic components (for example, disconnecting the connector), the person handling it must "discharge static electricity". This can be done by touching the door striker pin, for example.

– Disconnect the connector -4- from the Front Passenger Airbag Igniter 1 - N131- .

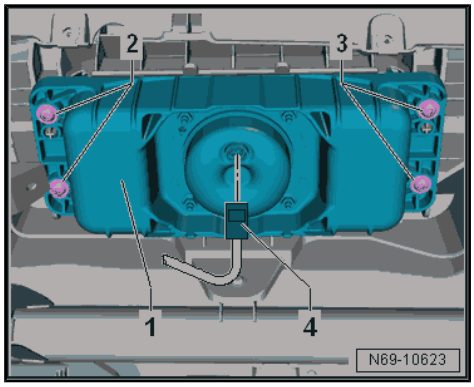

– To do so, release the connector lock -2- with a small screwdriver in direction of -arrow- and disconnect the connector -1-.

– If equipped, disconnect the second connector for the Front Passenger Airbag Igniter 2 - N132- in the same manner.

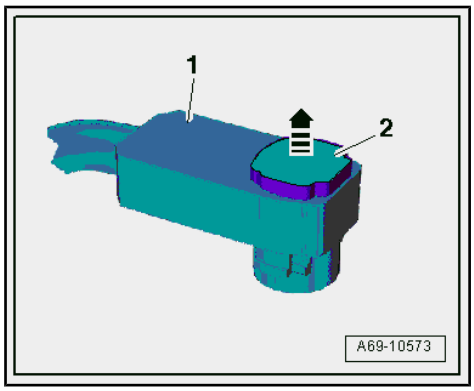

– Remove the bolts -2 and 3-.

– Remove the front passenger airbag -1- downward.

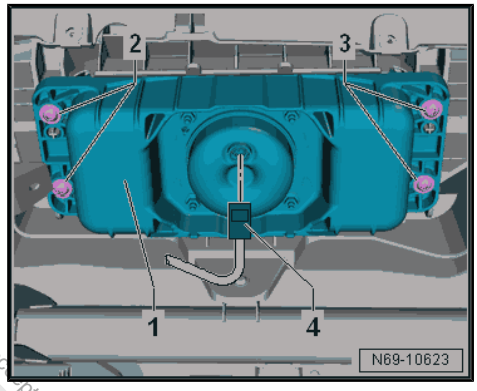

WARNING

Lay airbag unit so that the padding faces upward.

Installing

Note

Before installing the bolts, the bolt and nut threads in the instrument panel must be cleaned.

WARNING

- *Observe the safety precautions for pyrotechnical components. Refer to* *⇒ "1.2 Safety Precautions for Pyrotechnic Components", page 3* .
- *Before handling pyrotechnic components (for example, connecting the connector), the person handling it must "discharge static electricity". This can be done by touching the door striker pin, for example.*
- *Observe the airbag allocation for the instrument panel. Refer to the Parts Catalog.*

Protected by copyright. Copying for private or commercial purposes, in whole or in part, is not permitted unless authorised by Volkswagen AG. Volkswagen AG does not guarantee or accept any liability with respect to the correctness of information in this document. Copyright by Volkswagen AG.

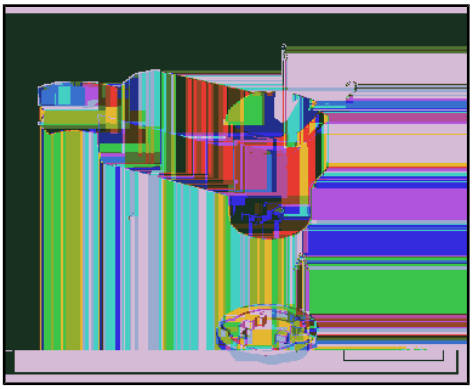

– Connect the connector -1- to the airbag igniter(s) in direction of -arrow A-.
– Install the connector locking mechanism -2- in direction of -arrow B-. While doing this, the connector is pushed into the airbag igniter and locks into place.

Install in reverse order of removal while paying attention to the following:

Note

- *Make sure the connectors are pushed in all the way and that they engage audibly.*
- *Make sure the wires are not pinched.*

WARNING

The ignition must be on when connecting the battery. If pyrotechnic components (for example, airbag, belt tensioner) are not repaired correctly, they may deploy unintentionally after connecting battery. There must not be anyone inside the vehicle when connecting the battery.

– Connect the battery ground cable with the ignition turned on. Refer to ⇒ Electrical Equipment; Rep. Gr. 27 ; Battery; Battery, Disconnecting and Connecting .

WARNING

If the ignition is not switched on after the battery is reconnected - "indicator lamps in the instrument cluster do not light up" - the ignition (key/button) may only be switched on when the driver seat is positioned all the way back.

Note

If the Airbag Indicator Lamp - K75- signals a fault after installing, check the DTC memory, erase it and check it again use the Vehicle Diagnostic Tester .

Tightening Specifications

- Refer to
⇒ "6.1 Overview - Front Passenger Airbag", page 138

6.3 Front Passenger Airbag Deactivation Key Switch, Removing and Installing

NOT FOR NORTH AMERICAN MARKET

Protected by copyright. Copying for private or commercial purposes, in part or in whole, is not permitted unless authorised by Volkswagen AG. Volkswagen AG does not guarantee or accept any liability with respect to the correctness of information in this document. Copyright by Volkswagen AG.

Note

These versions are not installed on vehicles that were released in the USA.

Removing

– Switch off the ignition.

– Remove the instrument panel side cover. Refer to ⇒ "3.2 Instrument Panel Side Cover, Removing and Installing", page 211 .

– Press the catch -1- in the direction of the -arrow- until the connector disengages.

– Disconnect the connector -2-.

– Release the springs -3- and -5-.

– Push the Front Passenger Airbag Deactivation Key Switch - E224- -item 4- out of the key switch housing.

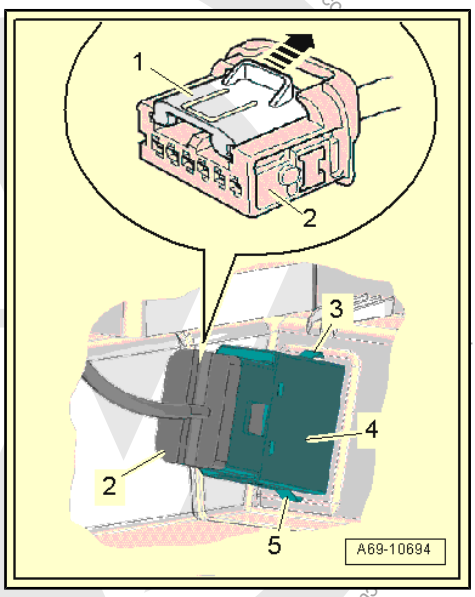

Installing

Install in reverse order of removal while paying attention to the following:

Note

- *Make sure the connectors are pushed in all the way and that they engage audibly.*
- *Make sure the wires are not pinched.*

– Make sure the Front Passenger Airbag Deactivation Key Switch - E224- clicks into the housing.

6.4 Front Passenger Airbag -Disabled- Indicator Lamp - K145- , Removing and Installing

Note

The Front Passenger Airbag -Disabled- Indicator Lamp - K145- is integrated in one component with the Emergency Flasher Switch - EX3- and cannot be replaced separately if faulty.

– Emergency Flasher Switch - EX3- , removing and installing. Refer to ⇒ Electrical Equipment; Rep. Gr. 96 ; Controls; Emergency Flasher Switch EX3, Removing and Installing .

Protected by copyright. Copying for private or commercial purposes, in part or in whole, is not permitted unless authorised by Volkswagen AG. Volkswagen AG does not guarantee or accept any liability with respect to the correctness of information in this document. Copyright by Volkswagen AG.

7 Side Airbags

⇒ "7.1 Overview - Front Side Airbag", page 143

⇒ "7.2 Overview - Rear Side Airbag", page 144

⇒ "7.3 Front Side Airbag with Igniter, Removing and Installing", page 145

⇒ "7.4 Rear Side Airbag with Igniter, Removing and Installing", page 146

7.1 Overview - Front Side Airbag

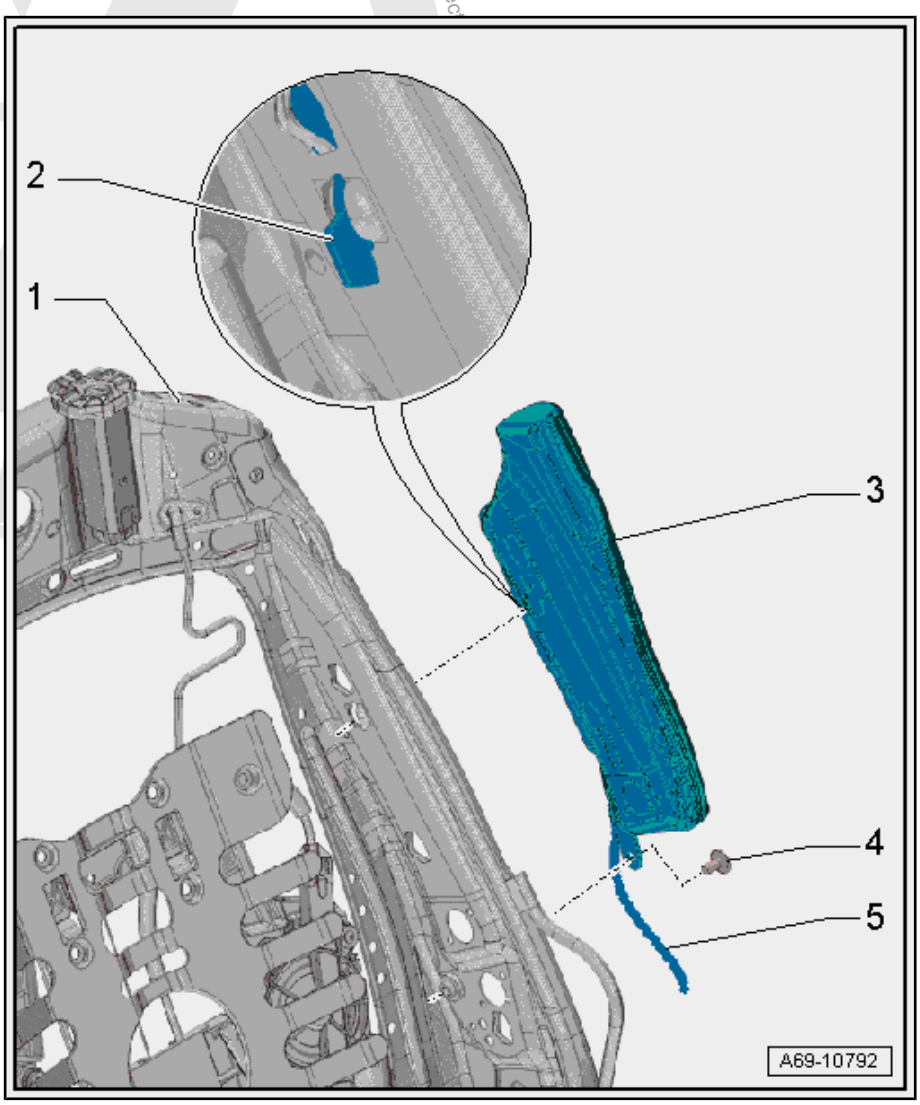

1 - Backrest Frame

2 - Hook

- ❑ for securing the side airbag to the backrest frame

3 - Front Side Airbag

- ❑ Driver side: with the Driver Thorax Airbag Igniter - N199-
- ❑ Front passenger side: with Front Passenger Thorax Airbag Igniter - N200-

> **WARNING**
> *Observe the safety precautions for pyrotechnical components. Refer to ⇒ "1.2 Safety Precautions for Pyrotechnic Components", page 3 .*

- ❑ Removing and installing. Refer to ⇒ "7.3 Front Side Airbag with Igniter, Removing and Installing", page 145 .

4 - Screw

- ❑ 8 Nm
- ❑ Replace after removing

5 - Wire

- ❑ From Driver Thorax Airbag Igniter - N199- / Front Passenger Thorax Airbag Igniter - N200-

Protected by copyright. Copying for private or commercial purposes, in part or in whole, is not permitted unless authorised by Volkswagen AG. Volkswagen AG does not guarantee or accept any liability with respect

unless authorised by Volkswagen AG. Volkswagen AG does not guarantee or accep
ercial purposes, in part or in whol

7.2 Overview - Rear Side Airbag

1 - Seat Pan

2 - Wire

- ❑ From Driver Side Rear Thorax Airbag Igniter - N201- / Passenger Side Rear Thorax Airbag Igniter - N202-

> **WARNING**
>
> *Observe the safety precautions for pyrotechnical components. Refer to* *⇒ "1.2 Safety Precautions for Pyrotechnic Components", page 3* .

3 - Screws

- ❑ 8 Nm
- ❑ Quantity: 2

4 - Rear Side Airbag

- ❑ Driver side: with Driver Side Rear Thorax Airbag Igniter - N201-
- ❑ Passenger side: with Passenger Side Rear Thorax Airbag Igniter - N202-
- ❑ Removing and installing. Refer to ⇒ "7.4 Rear Side Airbag with Igniter, Removing and Installing", page 146 .

5 - Airbag Pocket

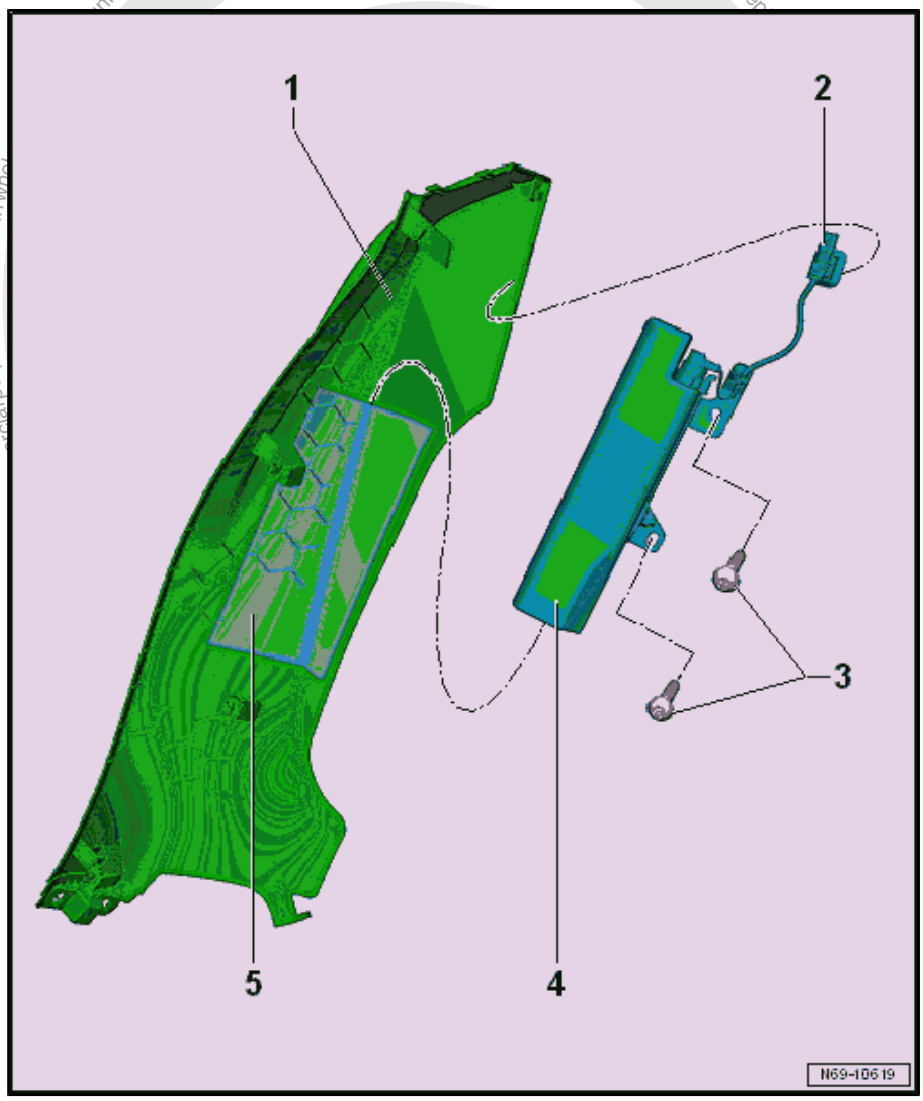

7.3 Front Side Airbag with Igniter, Removing and Installing

Removing

> **WARNING**
>
> - *Observe the safety precautions for pyrotechnical components. Refer to* *⇒ "1.2 Safety Precautions for Pyrotechnic Components", page 3* .
> - *Observe the additional safety precautions for the side airbag. Refer to* *⇒ "1.4 Additional Side Airbag Safety Precautions", page 6* .
> - *Observe the disposal regulations for pyrotechnical components. Refer to* *⇒ "1.3 Airbag, Belt Tensioner and Battery Cut-Out Units, Storing, Transporting and Disposing (Pyrotechnic Components)", page 5* .

– Remove the front seat. Refer to ⇒ "2.10 Front Seat, Removing and Installing", page 335 .

– Remove the front backrest. Refer to ⇒ "2.16 Front Backrest, Removing and Installing", page 349 .

– Remove the cover and the backrest cushion. Refer to ⇒ "1.5 Backrest Cover and Cushion, Removing and Installing", page 406 .

– Remove the bolt -2-.

– Slide the side airbag -1- upward and remove it from the backrest frame.

– Carefully loosen the wiring bracket of the side airbag wiring harness -3- from the backrest.

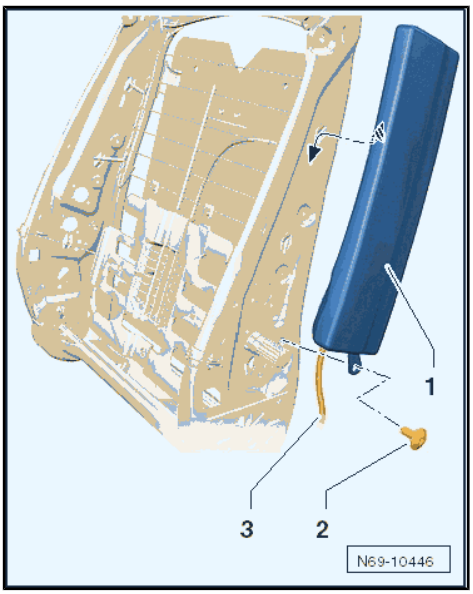

Installing

Install in reverse order of removal while paying attention to the following:

– Switch the ignition on.

> **WARNING**
>
> *Make sure that no persons are in the vehicle.*

– Connect the battery. Refer to ⇒ Electrical Equipment; Rep. Gr. 27 ; Battery; Battery, Disconnecting and Connecting .

> **WARNING**
>
> *If the ignition is not switched on after the battery is reconnected - "indicator lamps in the instrument cluster do not light up" - the ignition (key/button) may only be switched on when the driver seat is positioned all the way back.*

Tightening Specifications

- Refer to ⇒ "7.1 Overview - Front Side Airbag", page 143

Protected by copyright. Copyright by Volkswagen AG. Copyright by Volkswagen AG. Protected by copyright. Copyright by Volkswagen AG. Not to be reproduced, in part or in whole, is not permitted for commercial purposes, in part or in whole, is not permitted for commercial purposes, without the express authorised by Volkswagen AG. Volkswagen AG does not guarantee or accept any liability with respect to the correctness of information in this document.

7.4 Rear Side Airbag with Igniter, Removing and Installing

Removing

WARNING

- *Observe the safety precautions for pyrotechnical components. Refer to ⇒ "1.2 Safety Precautions for Pyrotechnic Components", page 3 .*
- *Observe the additional safety precautions for the side airbag. Refer to ⇒ "1.4 Additional Side Airbag Safety Precautions", page 6 .*
- *Observe the disposal regulations for pyrotechnical components. Refer to ⇒ "1.3 Airbag, Belt Tensioner and Battery Cut-Out Units, Storing, Transporting and Disposing (Pyrotechnic Components)", page 5 .*

– Remove the side cushion. Refer to ⇒ "3.16 Side Cushion, Removing and Installing", page 391 .

– Remove the two screws -2-.

– Unclip the connector -1- from the seat pan.

– Remove the side airbag -3- from the airbag pocket -4-.

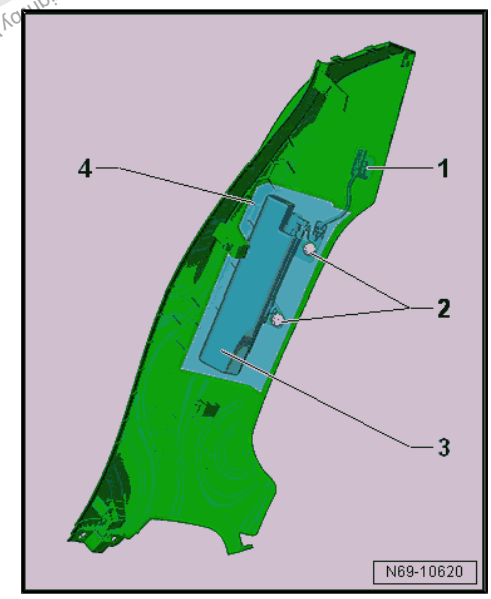

Installing

Install in reverse order of removal while paying attention to the following:

– Switch the ignition on.

WARNING

Make sure that no persons are in the vehicle.

– Connect the battery. Refer to ⇒ Electrical Equipment; Rep. Gr. 27 ; Battery; Battery, Disconnecting and Connecting .

WARNING

If the ignition is not switched on after the battery is reconnected - "indicator lamps in the instrument cluster do not light up" - the ignition (key/button) may only be switched on when the driver seat is positioned all the way back.

Tightening Specifications

- Refer to ⇒ "7.2 Overview - Rear Side Airbag", page 144

Protected by copyright. Copying for private or commercial purposes, in whole or in part, is not permitted unless authorised by Volkswagen AG. Volkswagen AG does not guarantee or accept any liability with respect to the correctness of information in this document. Copyright by Volkswagen AG.

8 Head Curtain Airbags

⇒ “8.1 Overview - Head Curtain Airbag”, page 147

⇒ “8.2 Head Curtain Airbag with Igniter, Removing and Installing”, page 147

8.1 Overview - Head Curtain Airbag

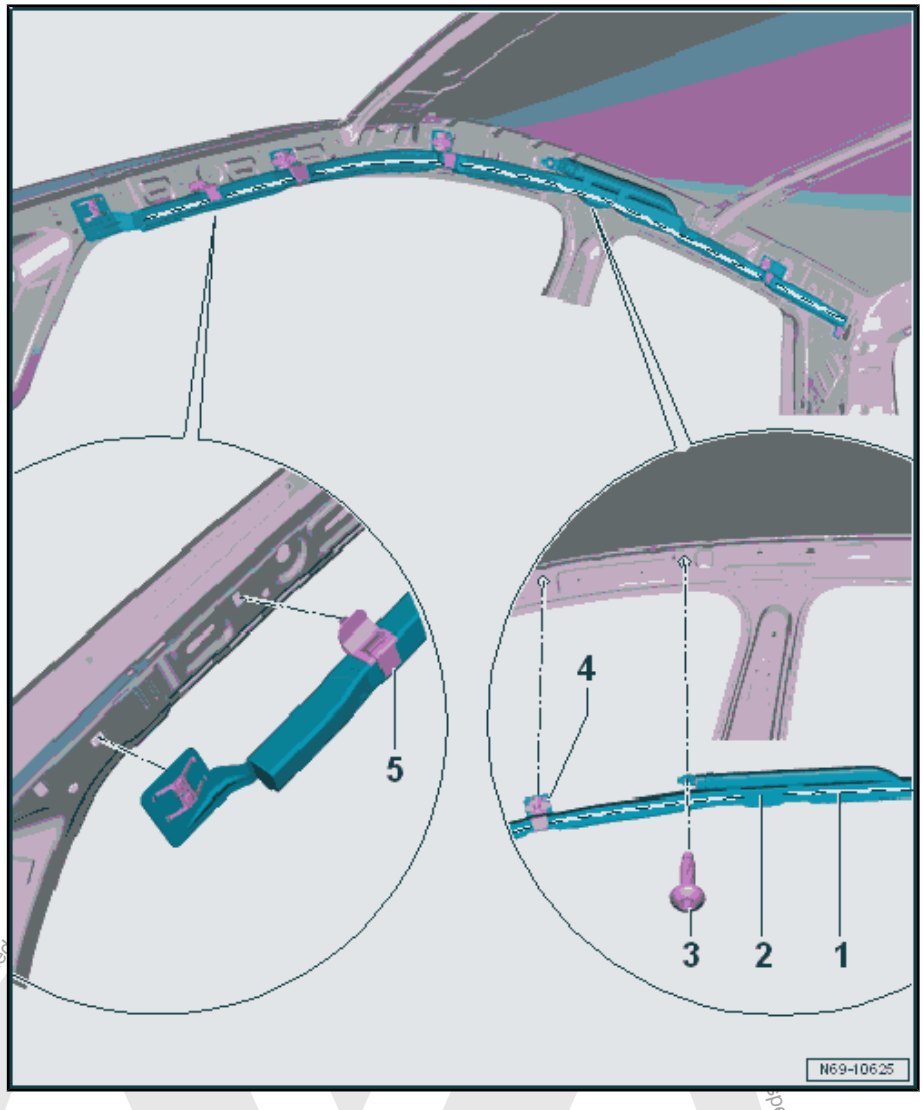

1 - Anti-Rotation Protection Line

- ❑ Serves as anti-twist mechanism
- ❑ Must be visible after assembly.

2 - Head Curtain Airbag

- ❑ Driver side: with Driver Head Curtain Airbag Igniter - N251-
- ❑ Front passenger side: with Front Passenger Head Curtain Airbag Igniter - N252-

> **WARNING**
>
> *Observe the safety precautions for pyrotechnical components. Refer to ⇒ “1.2 Safety Precautions for Pyrotechnic Components”, page 3 .*

- ❑ Removing and installing. Refer to ⇒ “8.2 Head Curtain Airbag with Igniter, Removing and Installing”, page 147 .

3 - Screw

- ❑ 4.5 Nm
- ❑ Replace after removing

4 - Clip

- ❑ Quantity: 5

5 - Clip

8.2 Head Curtain Airbag with Igniter, Removing and Installing

⇒ “8.2.1 Head Curtain Airbag with Igniter, Removing and Installing, Sedan”, page 147

⇒ “8.2.2 Head Curtain Airbag with Igniter, Removing and Installing, Wagon”, page 151

8.2.1 Head Curtain Airbag with Igniter, Removing and Installing, Sedan

Special tools and workshop equipment required

Protected by copyright. Copying for commercial purposes, in part or in whole, is not permitted. Copyright by Volkswagen AG. No liability is assumed with respect to the correctness of information in this document.

- Release Tool Set - Extraction Tool 17 - VAS1978/17- from the Release Tool Set - VAS1978/35-

Removing

WARNING

- *Observe the safety precautions for pyrotechnical components. Refer to* *⇒ "1.2 Safety Precautions for Pyrotechnic Components", page 3* .
- *Observe the additional safety precautions for the head curtain airbag. Refer to* *⇒ "1.5 Additional Head Curtain Airbag Safety Precautions", page 7* .
- *Observe the disposal regulations for pyrotechnical components. Refer to* *⇒ "1.3 Airbag, Belt Tensioner and Battery Cut-Out Units, Storing, Transporting and Disposing (Pyrotechnic Components)", page 5* .

– Disconnect the battery ground cable with the ignition turned on. Refer to ⇒ Electrical Equipment; Rep. Gr. 27 ; Battery; Battery, Disconnecting and Connecting .

– Remove the headliner. Refer to ⇒ "7.3 Headliner, Removing and Installing", page 299 .

– Disengage the clips -1 through 5- in the head curtain airbag mounting tabs from the vehicle body.

– To do so, forcefully push the Release Tool Set - Extraction Tool 17 - VAS1978/17- with the »spoon« -arrow- all the way into the opening -A-, as shown in the illustration.

– At the same time, pull the left side of the clip out of the vehicle body.

– Pull the Release Tool Set - Extraction Tool 17 - VAS1978/17- back out and make sure that the clips on the loosened side do not re-engage.

– Turn the Release Tool Set - Extraction Tool 17 - VAS1978/17- 180°.

– Repeat the procedure on the opening -B-.

Protected by copyright. Copying for private or commercial purposes, in part or in whole, is not permitted unless authorised by Volkswagen AG. Volkswagen AG does not guarantee or accept any liability with respect to the correctness of information in this document. Copyright by Volkswagen AG.

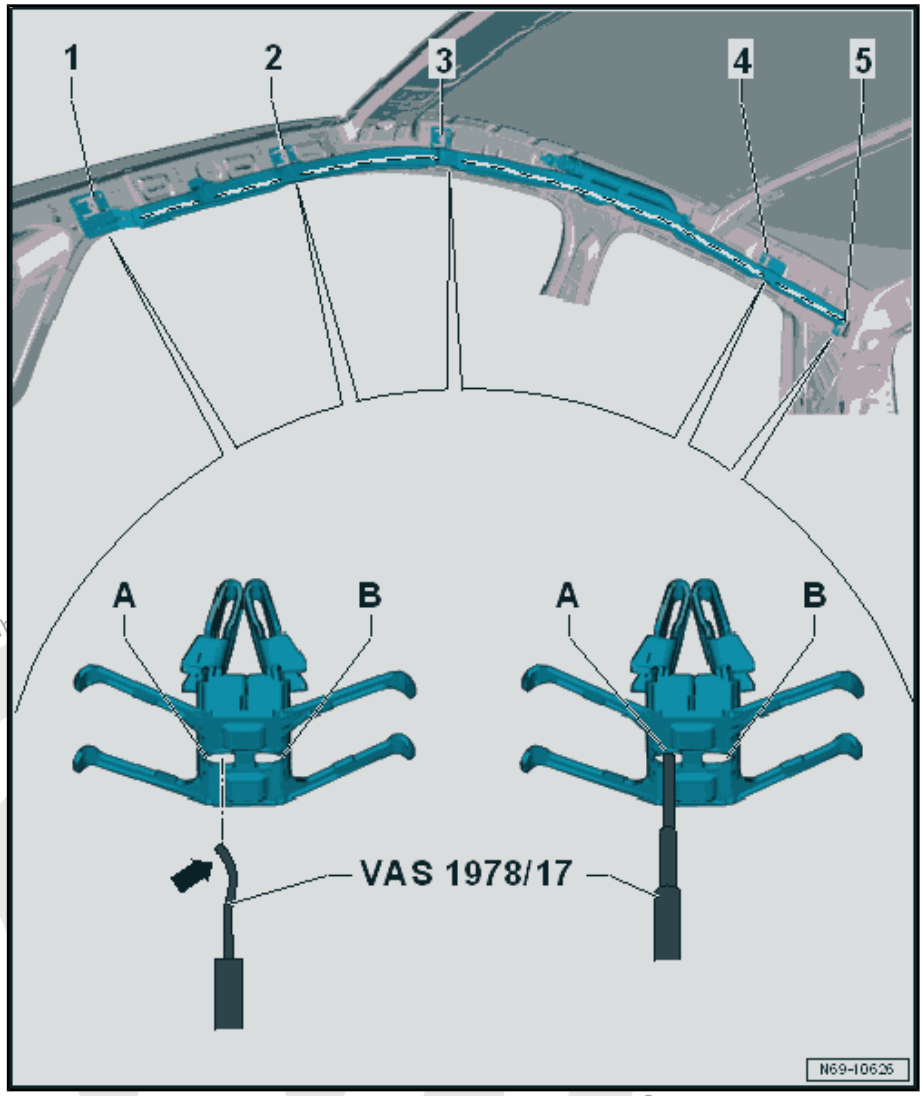

– Remove the clip -1- from the A-pillar.

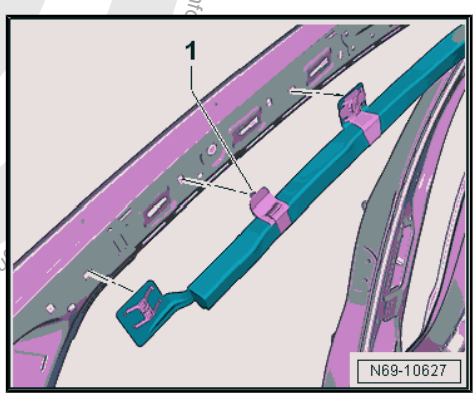

WARNING

Before handling pyrotechnic components (for example, disconnecting the connector), the person handling it must "discharge static electricity". This can be done by touching the door striker pin, for example.

Protected by copyright. Copyright by Volkswagen AG.

– Remove the connector lock and remove the connector -1- from the head curtain airbag -2- -arrow-.
– Remove the bolt -3- from the head curtain airbag.
– Disengage the head curtain airbag -1- from the mount on the body in direction of -arrow B- and push rearward.

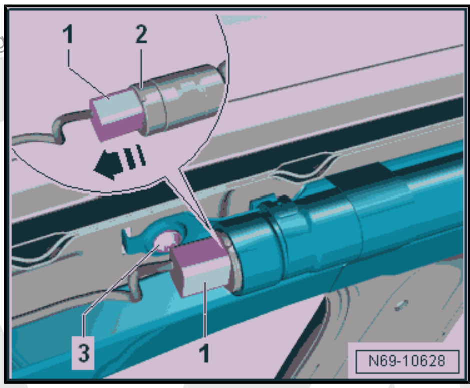

– Disengage the rear head curtain airbag from the mount on the body in direction of -arrow A- and remove.

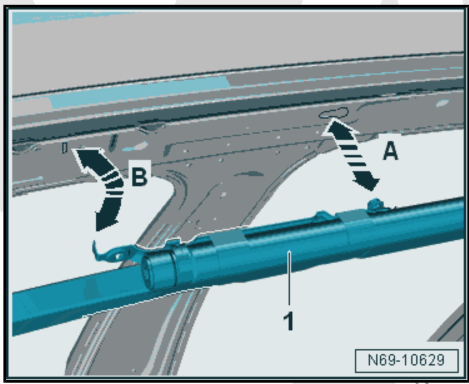

Installing

WARNING

- *Observe the safety precautions for pyrotechnical components. Refer to* *⇒ “1.2 Safety Precautions for Pyrotechnic Components”, page 3 .*
- *Always follow head curtain airbag installation procedure.*
- *Before handling pyrotechnic components (for example, connecting the connector), the person handling it must “discharge static electricity”. This can be done by touching the door striker pin, for example.*

– Engage the head curtain airbag -1- at the rear in the bracket on the body in direction of -arrow A- and push forward.
– Engage the front head curtain airbag in the bracket on the body in direction of -arrow B-.

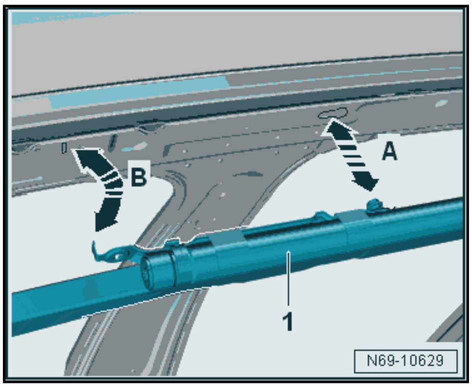

– Attach the head curtain airbag with the bolt -1-.

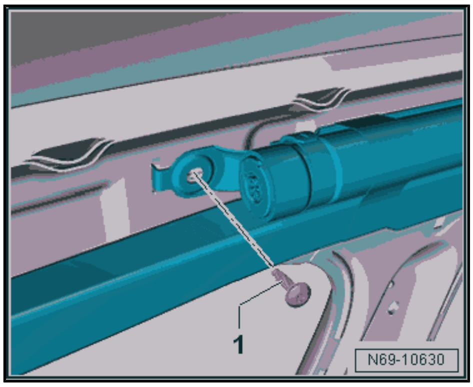

Protected by copyright. Copying for private or commercial purposes, in part or in whole, is not permitted unless authorised by Volkswagen AG. Volkswagen AG does not guarantee or accept any liability with respect to the correctness of information in this document. Copyright by Volkswagen AG.

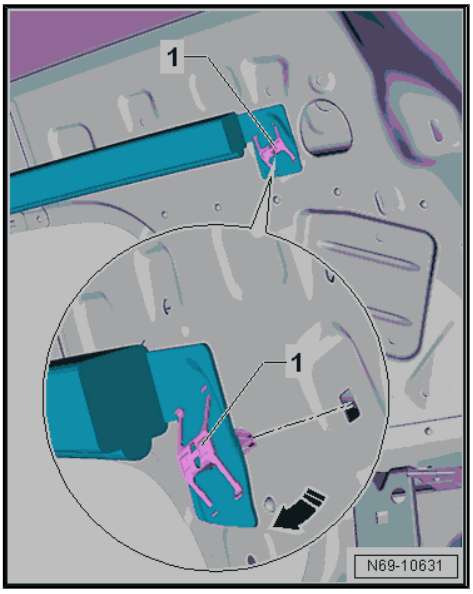

– Turn the rearmost clip -1- downward 90° -arrow- and clip into the vehicle body.
– Install the remaining head curtain airbag clips until they audibly engage, toward the front and rear starting from the gas generator
– Check the clips by pulling on them and make sure they are completely engaged.
– Connect the connector to the head curtain airbag igniter.
– Press in the connector lock. This slides the connector into the head curtain airbag igniter all the way and simultaneously locks it.
– Make sure the anti-rotation protection line is visible along the entire length and it is straight. By making sure it is will ensure that the head curtain airbag is NOT twisted.

Install in reverse order of removal.

WARNING

The ignition must be on when connecting the battery. If pyrotechnic components (for example, airbag, belt tensioner) are not repaired correctly, they may deploy unintentionally after connecting battery. There must not be anyone inside the vehicle when connecting the battery.

– Connect the battery ground cable with the ignition turned on. Refer to ⇒ Electrical Equipment; Rep. Gr. 27 ; Battery; Battery, Disconnecting and Connecting .

WARNING

If the ignition is not switched on after the battery is reconnected - "indicator lamps in the instrument cluster do not light up" - the ignition (key/button) may only be switched on when the driver seat is positioned all the way back.

Note

If the Airbag Indicator Lamp - K75- indicates a fault, check the DTC memory, erase it and check it again using the Vehicle Diagnostic Tester .

Tightening Specifications

♦ Refer to ⇒ "8.1 Overview - Head Curtain Airbag", page 147

8.2.2 Head Curtain Airbag with Igniter, Removing and Installing, Wagon

Special tools and workshop equipment required

♦ Release Tool Set - Extraction Tool 17 - VAS1978/17- from the Release Tool Set - VAS1978/35-

Protected by copyright. Copying for private or commercial purposes, in part or in whole, is not permitted unless authorised by Volkswagen AG. Volkswagen AG does not guarantee or accept any liability with respect to the correctness of information in this document. Copyright by Volkswagen AG.

Removing

WARNING

- *Observe the safety precautions for pyrotechnical components. Refer to ⇒ "1.2 Safety Precautions for Pyrotechnic Components", page 3 .*
- *Observe the additional safety precautions for the head curtain airbag. Refer to ⇒ "1.5 Additional Head Curtain Airbag Safety Precautions", page 7 .*
- *Observe the disposal regulations for pyrotechnical components. Refer to ⇒ "1.3 Airbag, Belt Tensioner and Battery Cut-Out Units, Storing, Transporting and Disposing (Pyrotechnic Components)", page 5 .*

– Disconnect the battery ground cable with the ignition turned on. Refer to ⇒ Electrical Equipment; Rep. Gr. 27 ; Battery; Battery, Disconnecting and Connecting .

– Remove the headliner. Refer to ⇒ "7.3.2 Headliner, Removing and Installing, Wagon", page 301 .

Protected by copyright. Copying for private or commercial purposes, in part or in whole, is not permitted unless authorised by Volkswagen AG. Volkswagen AG does not guarantee or accept any liability with respect to the correctness of information in this document. Copyright by Volkswagen AG.

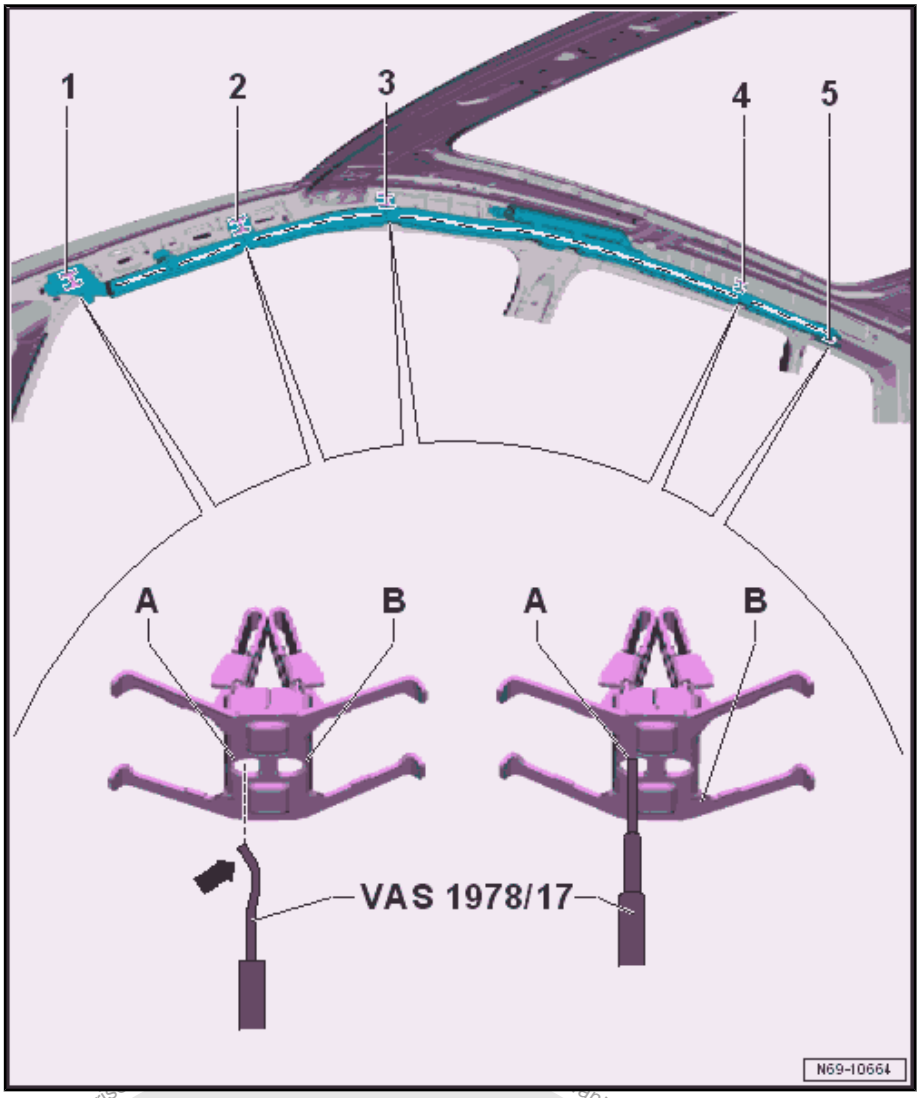

- Disengage the clips -1-, -2-, -3-, -4- and -5- in the head curtain airbag mounting tabs from the vehicle body.
- To do so, forcefully push the Release Tool Set - Extraction Tool 17 - VAS1978/17- with the »spoon« -arrow- all the way into the opening -A-, as shown in the illustration.
- At the same time, pull the left side of the clip out of the vehicle body.
- Pull the Release Tool Set - Extraction Tool 17 - VAS1978/17- back out and make sure that the clips on the loosened side do not re-engage.
- Turn the Release Tool Set - Extraction Tool 17 - VAS1978/17- 180°.
- Repeat the procedure on the opening -B-.

Protected by copyright. Copying for private or commercial purposes, in part or in whole, is not permitted unless authorised. Copyright by Volkswagen AG. ...antee or accept any liability with respect to the correctness of information in this document.

– Remove the clip -1- from the A-pillar.

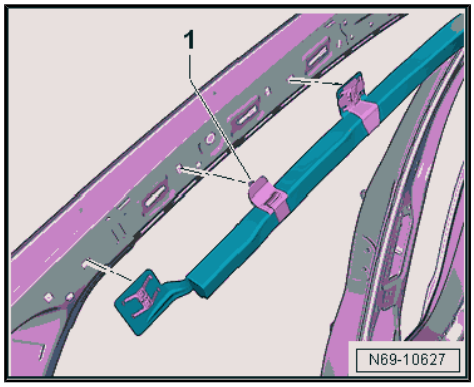

WARNING

Before handling pyrotechnic components (for example, disconnecting the connector), the person handling it must "discharge static electricity". This can be done by touching the door striker pin, for example.

– Remove the connector lock and remove the connector -1- from the head curtain airbag -2- -arrow-.

– Remove the bolt -3- from the head curtain airbag.

– Disengage the head curtain airbag -1- from the mount on the body in direction of -arrow B- and push rearward.

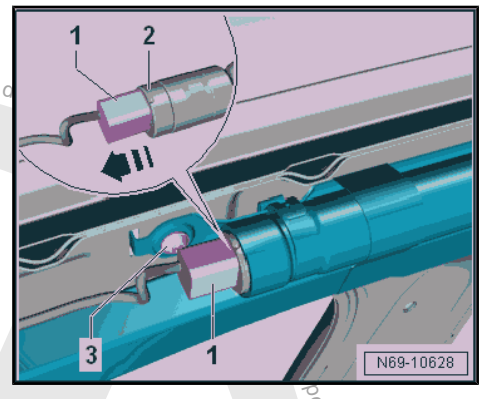

– Disengage the rear head curtain airbag from the mount on the body in direction of -arrow A- and remove.

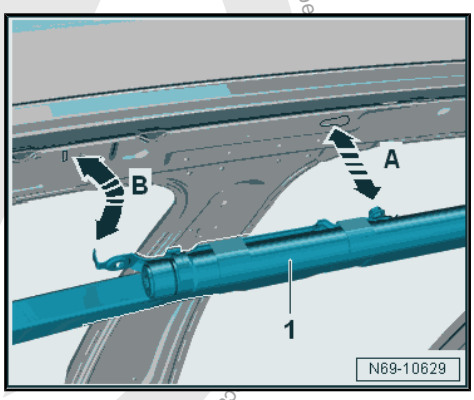

Installing

WARNING

- *Observe the safety precautions for pyrotechnical components. Refer to* *⇒ "1.2 Safety Precautions for Pyrotechnic Components", page 3* *.*
- *Always follow head curtain airbag installation procedure.*
- *Before handling pyrotechnic components (for example, connecting the connector), the person handling it must "discharge static electricity". This can be done by touching the door striker pin, for example.*

– Engage the head curtain airbag -1- at the rear in the bracket on the body in direction of -arrow A- and push forward.

– Engage the front head curtain airbag in the bracket on the body in direction of -arrow B-.

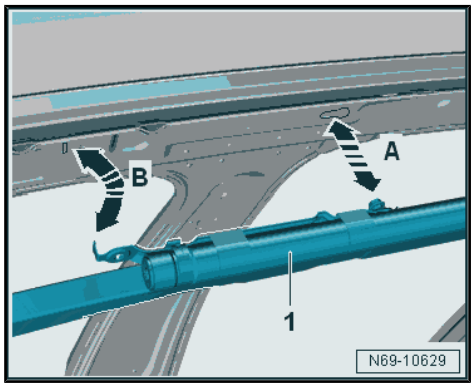

Protected by copyright. Copyright by Volkswagen AG.

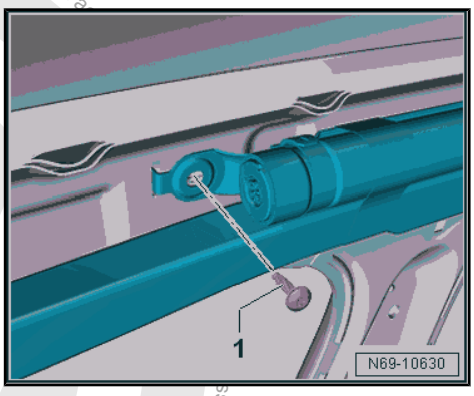

– Attach the head curtain airbag with the bolt -1-.
– Starting from the gas generator and moving toward the front and rear, install the head curtain airbag clips until they audibly lock into place.
– Check the clips by pulling on them and make sure they are completely engaged.
– Connect the connector to the head curtain airbag igniter.
– Press in the connector lock. This slides the connector into the head curtain airbag igniter all the way and simultaneously locks it.
– Make sure the anti-rotation protection line is visible along the entire length and it is straight. By making sure it is will ensure that the head curtain airbag is NOT twisted.

Install in reverse order of removal.

WARNING

The ignition must be on when connecting the battery. If pyrotechnic components (for example, airbag, belt tensioner) are not repaired correctly, they may deploy unintentionally after connecting battery. There must not be anyone inside the vehicle when connecting the battery.

– Connect the battery ground cable with the ignition turned on. Refer to ⇒ Electrical Equipment; Rep. Gr. 27 ; Battery; Battery, Disconnecting and Connecting .

WARNING

If the ignition is not switched on after the battery is reconnected - "indicator lamps in the instrument cluster do not light up" - the ignition (key/button) may only be switched on when the driver seat is positioned all the way back.

Note

If the Airbag Indicator Lamp - K75- indicates a fault, check the DTC memory, erase it and check it again using the Vehicle Diagnostic Tester .

Tightening Specifications

♦ Refer to ⇒ "8.1 Overview - Head Curtain Airbag", page 147

Protected by copyright. Copying for private or commercial purposes, in part or in whole, is not permitted unless authorised by Volkswagen AG. Volkswagen AG does not guarantee or a... ...ss of information in this document. Copyright by Volkswagen AG.

commercial purposes, in part or in whole, is not permitted unless authorised by Volkswagen AG. Volkswagen AG does not guarantee or accept any liability with respect to th

9 Knee Airbags

⇒ “9.1 Overview - Knee Airbag”, page 156

⇒ “9.2 Knee Airbag with Igniter, Removing and Installing”, page 157

9.1 Overview - Knee Airbag

1 - Knee Airbag

- ❑ With the Driver Knee Airbag Igniter - N295-
- ❑ Removing and installing. Refer to ⇒ “9.2 Knee Airbag with Igniter, Removing and Installing”, page 157 .

> **Caution**
>
> *The risk of damaging the knee airbag surface due to mechanical stress is to be prevented.*
>
> - *After finishing work perform a visual inspection if the surface of the knee airbag especially along the area of the perforation is undamaged.*

2 - Attachment Point

- ❑ For the knee airbag

> **Caution**
>
> *Avoid malfunctions due to faulty ground connections.*
>
> - *Mounting thread and contact surface must be free of paint, coating, and corrosion.*
>
> - *The threaded connection serves as a ground connection for the knee airbag.*

3 - Screw

- ❑ 8 Nm
- ❑ Quantity: 3

4 - Connector

- ❑ For the Driver Knee Airbag Igniter - N295-

9.2 Knee Airbag with Igniter, Removing and Installing

Removing

WARNING

- *Observe the safety precautions for pyrotechnical components. Refer to ⇒ "1.2 Safety Precautions for Pyrotechnic Components", page 3 .*
- *Observe the disposal regulations for pyrotechnical components. Refer to ⇒ "1.3 Airbag, Belt Tensioner and Battery Cut-Out Units, Storing, Transporting and Disposing (Pyrotechnic Components)", page 5 .*
- *Observe the allocation of the airbag unit for the instrument panel. Refer to the Parts Catalog.*

– Disconnect the battery ground cable with the ignition turned on. Refer to ⇒ Electrical Equipment; Rep. Gr. 27 ; Battery; Battery, Disconnecting and Connecting .

– Remove the instrument panel cover on the driver side. Refer to ⇒ "1.9 Driver Side Instrument Panel Cover, Removing and Installing", page 28 .

– Remove the three bolts -2-.

– Remove the driver side knee airbag -1- rearward.

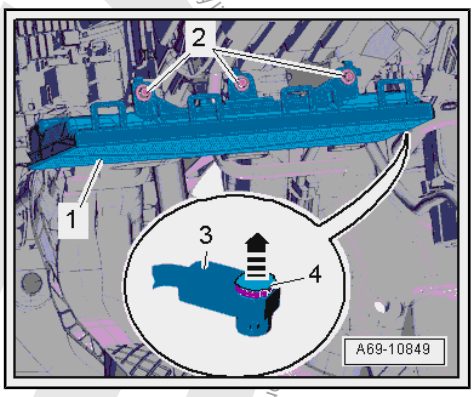

WARNING

Before handling pyrotechnic components (for example, disconnecting the connector), the person handling it must "discharge static electricity". This can be done by touching the door striker pin, for example.

– Disconnect the connector -3- from the Driver Knee Airbag Igniter - N295- .

– Open the connector lock -4- with a small screwdriver -arrow- and disconnect the connector.

WARNING

Lay airbag unit so that the padding faces upward.

Protected by copyright. Copying for private or commercial purposes, in whole or in part, is not permitted unless authorised by Volkswagen AG. Volkswagen AG does not guarantee or accept any liability with respect to the correctness of information in this document. Copyright by Volkswagen AG.

Installing

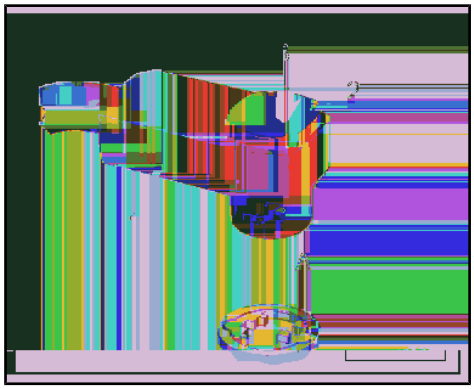

WARNING

- *Observe the safety precautions for pyrotechnical components. Refer to* *⇒ "1.2 Safety Precautions for Pyrotechnic Components", page 3* *.*
- *Before handling pyrotechnic components (for example, connecting the connector), the person handling it must "discharge static electricity". This can be done by touching the door striker pin, for example.*
- *Observe the airbag allocation for the instrument panel. Refer to the Parts Catalog.*

– Connect the connector -1- to the airbag igniter in direction of -arrow A-.

– Install the connector locking mechanism -2- in direction of -arrow B-. While doing this, the connector is pushed into the airbag igniter and locks into place.

Installation is performed in reverse order of removal, while noting the following:

Note

- *Make sure the connectors are pushed in all the way and that they engage audibly.*
- *Make sure the wires are not pinched.*

Caution

The risk of damaging the knee airbag surface due to mechanical stress is to be prevented.

- *After performing work visually inspect that the surface of the knee airbag is undamaged.*

WARNING

The ignition must be on when connecting the battery. If pyrotechnic components (for example, airbag, belt tensioner) are not repaired correctly, they may deploy unintentionally after connecting battery. There must not be anyone inside the vehicle when connecting the battery.

– Connect the battery ground cable with the ignition turned on. Refer to ⇒ Electrical Equipment; Rep. Gr. 27 ; Battery; Battery, Disconnecting and Connecting .

WARNING

If the ignition is not switched on after the battery is reconnected - "indicator lamps in the instrument cluster do not light up" - the ignition (key/button) may only be switched on when the driver seat is positioned all the way back.

Copyright. Copying for private or commercial purposes, in part or in whole, is not permitted unless authorised by Volkswagen AG. Volkswagen AG does not guarantee or accept any liability with respect to the correctness of information in this document.

Note

If the Airbag Indicator Lamp - K75- signals a fault after installing, check the DTC memory, erase it and check it again use the Vehicle Diagnostic Tester .

Tightening Specifications

- Refer to ⇒ “9.1 Overview - Knee Airbag”, page 156

Protected by copyright. Copying for private or commercial purposes, in part or in whole, is not permitted unless authorised by Volkswagen AG. Volkswagen AG does not guarantee or accept any liability with respect to the correctness of information in this document. Copyright by Volkswagen AG.

Private or commercial use, in whole or in part, is not permitted unless authorised by Volkswagen AG. Volkswagen AG does not guarantee or accept any liability with respect to the correctness of information in

10 Airbag Crash Sensors

⇒ “10.1 Component Location Overview - Airbag Crash Sensors”, page 160

⇒ “10.2 Driver Front Airbag Crash Sensor G283 , Removing and Installing”, page 161

⇒ “10.3 Passenger Side Front Airbag Crash Sensor G284 , Removing and Installing”, page 164

⇒ “10.4 Driver Side Airbag Crash Sensor G179 / Front Passenger Side Airbag Crash Sensor G180 , Removing and Installing”, page 166

⇒ “10.5 Driver Side Rear Side Airbag Crash Sensor G256 / Passenger Side Rear Side Airbag Crash Sensor G257 , Removing and Installing”, page 169

10.1 Component Location Overview - Airbag Crash Sensors

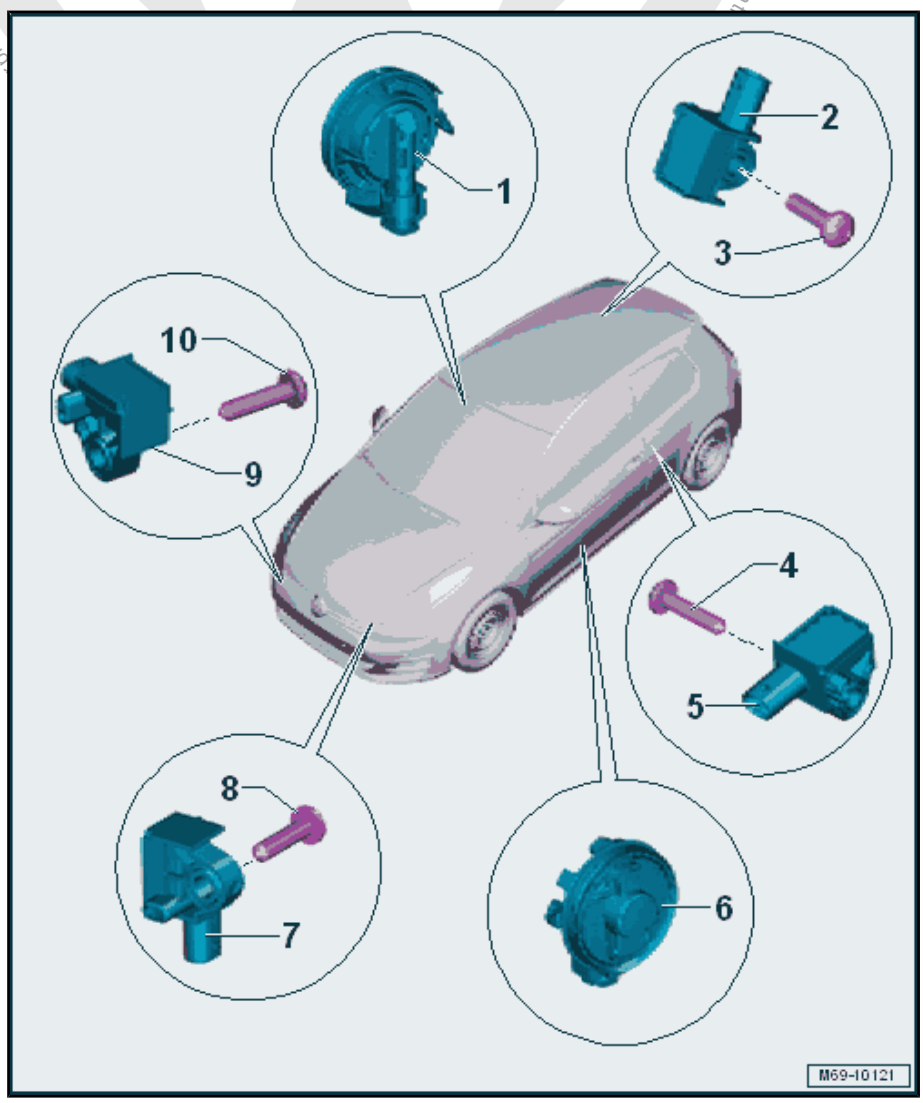

1 - Front Passenger Side Airbag Crash Sensor - G180-

- ❑ Component location: inside the door
- ❑ For the safety precautions for working with front side airbag crash sensors (pressure sensors). Refer to ⇒ “1.6 Front Side Airbag Crash Sensors (Pressure Sensors) Safety Precautions”, page 7 .
- ❑ Removing and installing. Refer to ⇒ “10.4 Driver Side Airbag Crash Sensor G179 / Front Passenger Side Airbag Crash Sensor G180 , Removing and Installing”, page 166 .

2 - Passenger Side Rear Side Airbag Crash Sensor - G257-

- ❑ Component location: under the wheel housing trim panel
- ❑ Removing and installing. Refer to ⇒ “10.5 Driver Side Rear Side Airbag Crash Sensor G256 / Passenger Side Rear Side Airbag Crash Sensor G257 , Removing and Installing”, page 169 .

3 - Screw

- ❑ 9 Nm

4 - Screw

- ❑ 9 Nm

5 - Driver Side Rear Side Airbag Crash Sensor - G256-

- ❑ Component location: under the wheel housing trim panel
- ❑ Removing and installing. Refer to
  ⇒ "10.5 Driver Side Rear Side Airbag Crash Sensor G256 / Passenger Side Rear Side Airbag Crash Sensor G257 , Removing and Installing", page 169 .

6 - Driver Side Airbag Crash Sensor - G179-

- ❑ Component location: inside the door
- ❑ For the safety precautions for working with front side airbag crash sensors (pressure sensors). Refer to
  ⇒ "1.6 Front Side Airbag Crash Sensors (Pressure Sensors) Safety Precautions", page 7 .
- ❑ Removing and installing. Refer to
  ⇒ "10.4 Driver Side Airbag Crash Sensor G179 / Front Passenger Side Airbag Crash Sensor G180 , Removing and Installing", page 166 .

7 - Driver Front Airbag Crash Sensor - G283-

- ❑ Removing and installing. Refer to
  ⇒ "10.2 Driver Front Airbag Crash Sensor G283 , Removing and Installing", page 161 .

8 - Screw

- ❑ 9 Nm

9 - Passenger Side Front Airbag Crash Sensor - G284-

- ❑ Removing and installing. Refer to
  ⇒ "10.3 Passenger Side Front Airbag Crash Sensor G284 , Removing and Installing", page 164 .

10 - Screw

- ❑ 9 Nm

10.2 Driver Front Airbag Crash Sensor - G283- , Removing and Installing

Removing

> **WARNING**
>
> ***Observe the safety precautions for pyrotechnical components. Refer to ⇒ "1.2 Safety Precautions for Pyrotechnic Components", page 3 .***
>
> ***There is a risk of injury if the engine starts automatically in vehicles with the Start/Stop System.***
>
> - ***For vehicles with an activated Start/Stop system (recognized by a signal in the instrument cluster), the engine can be started automatically if needed.***
> - ***Make sure that the Start/Stop System is disabled when working on the vehicle (turn off ignition, if needed, turn the ignition back on).***

– Disconnect the battery ground cable with the ignition turned on. Refer to ⇒ Electrical Equipment; Rep. Gr. 27 ; Battery; Battery, Disconnecting and Connecting .

– Open the hood.

– If necessary, remove the air filter housing. Refer to ⇒ Rep. Gr. 23 ; Air Filter or ⇒ Rep. Gr. 24 ; Air Filter .

– Disengage the washer fluid reservoir filler tube from the support. Refer to ⇒ Electrical Equipment; Rep. Gr. 92 ; Windshield Washer System; Washer Fluid Reservoir, Removing and Installing .

Protected by copyright. Copying for private or commercial purposes, in part or in whole, is not permitted unless authorised by Volkswagen AG. Volkswagen AG does not guarantee or accept any liability with respect to the correctness of information in this document. Copyright by Volkswagen AG.

– Remove the screw -2- and the front airbag crash sensor -1- from the lock carrier.

WARNING

Before handling pyrotechnic components (for example, disconnecting the connector), the person handling it must “discharge static electricity”. This can be done by touching the door striker pin, for example.

– Disconnect the connector -3-.

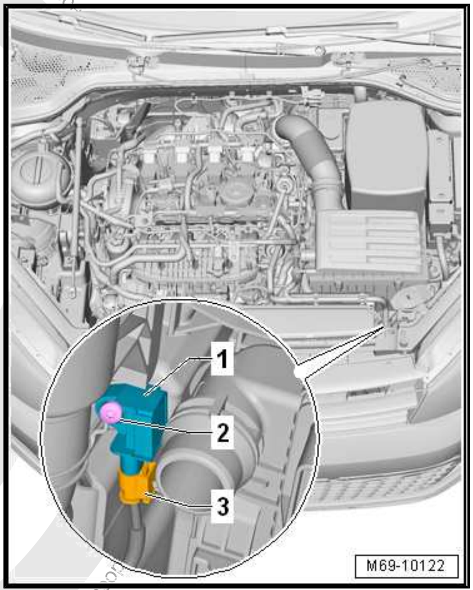

– To do this pull out the connector lock -2- and push down in direction of -arrow-, disconnect the connector -1- on the crash sensor.

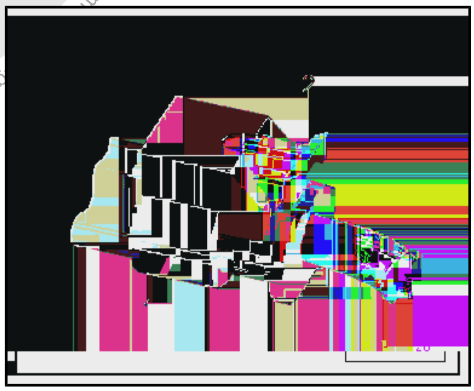

Protected by copyright. Copying for private or commercial purposes, in part or in whole, is not permitted unless authorised by Volkswagen AG. Volkswagen AG does not guarantee or acc ... ght by Volkswagen AG.

Installing

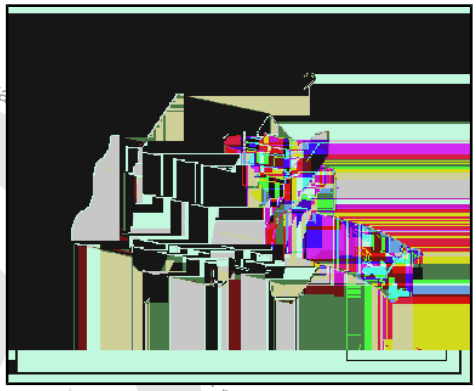

WARNING

- *Observe the safety precautions for pyrotechnical components. Refer to ⇒ "1.2 Safety Precautions for Pyrotechnic Components", page 3 .*
- *Before handling pyrotechnic components (for example, connecting the connector), the person handling it must "discharge static electricity". This can be done by touching the door striker pin, for example.*

– Connect the connector -1- to the crash sensor until it clicks into place -arrow-.

– Push in the connector lock -2- to secure the connector.

Installation is performed in reverse order of removal, while noting the following:

Note

- *Make sure the connectors are pushed in all the way and that they engage audibly.*
- *Make sure the wires are not pinched.*

WARNING

The ignition must be on when connecting the battery. If pyrotechnic components (for example, airbag, belt tensioner) are not repaired correctly, they may deploy unintentionally after connecting battery. There must not be anyone inside the vehicle when connecting the battery.

– Connect the battery ground cable with the ignition turned on. Refer to ⇒ Electrical Equipment; Rep. Gr. 27 ; Battery; Battery, Disconnecting and Connecting .

WARNING

If the ignition is not switched on after the battery is reconnected - "indicator lamps in the instrument cluster do not light up" - the ignition (key/button) may only be switched on when the driver seat is positioned all the way back.

Note

If the Airbag Indicator Lamp - K75- indicates a fault, check the DTC memory, erase it and check it again using the Vehicle Diagnostic Tester .

Tightening Specifications

- Refer to ⇒ "10.1 Component Location Overview - Airbag Crash Sensors", page 160

Protected by copyright. Copying for private or commercial purposes, in part or in whole, is not permitted unless authorised by Volkswagen AG. Volkswagen AG does not guarantee or accept any liability with respect to the correctness of information in this document. Copyright by Volkswagen AG.

10.3 Passenger Side Front Airbag Crash Sensor - G284- , Removing and Installing

Removing

WARNING

Observe the safety precautions for pyrotechnical components. Refer to ⇒ "1.2 Safety Precautions for Pyrotechnic Components", page 3 .

There is a risk of injury if the engine starts automatically in vehicles with the Start/Stop System.

- *For vehicles with an activated Start/Stop system (recognized by a signal in the instrument cluster), the engine can be started automatically if needed.*
- *Make sure that the Start/Stop System is disabled when working on the vehicle (turn off ignition, if needed, turn the ignition back on).*

– Disconnect the battery ground cable with the ignition turned on. Refer to ⇒ Electrical Equipment; Rep. Gr. 27 ; Battery; Battery, Disconnecting and Connecting .

– Open the hood.

– Remove the screw -2- and the front airbag crash sensor -1- from the lock carrier.

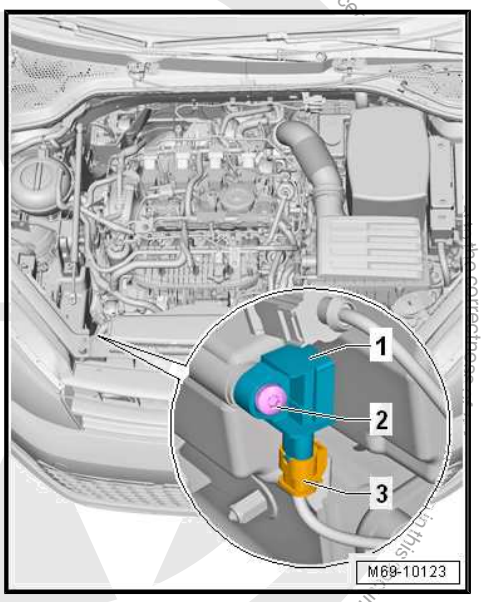

WARNING

Before handling pyrotechnic components (for example, disconnecting the connector), the person handling it must "discharge static electricity". This can be done by touching the door striker pin, for example.

– Disconnect the connector -3-.

– To do this pull out the connector lock -2- and push down in direction of -arrow-, disconnect the connector -1- on the crash sensor.

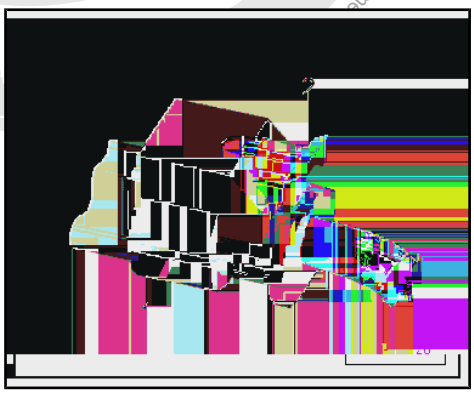

Protected by copyright. Copying for private or commercial purposes, in part or in whole, is not permitted unless authorised by Volkswagen AG. Volkswagen AG does not guarantee or accept any liability with respect to the correctness of information in this document.

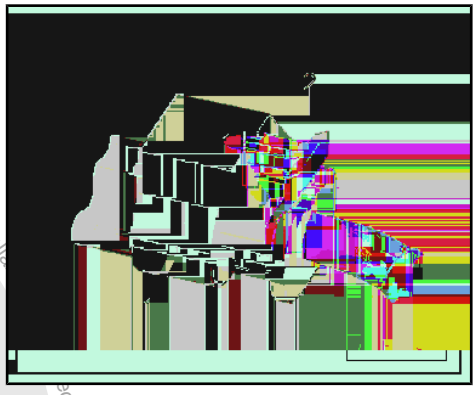

Installing

WARNING

- *Observe the safety precautions for pyrotechnical components. Refer to ⇒ "1.2 Safety Precautions for Pyrotechnic Components", page 3 .*
- *Before handling pyrotechnic components (for example, connecting the connector), the person handling it must "discharge static electricity". This can be done by touching the door striker pin, for example.*

1 Connect the connector -1- to the crash sensor until it clicks into place in direction of -arrow-.

2 Push in the connector lock -2- to secure the connector.

Installation is performed in reverse order of removal, while noting the following:

Note

- *Make sure the connectors are pushed in all the way and that they engage audibly.*
- *Make sure the wires are not pinched.*

WARNING

The ignition must be on when connecting the battery. If pyrotechnic components (for example, airbag, belt tensioner) are not repaired correctly, they may deploy unintentionally after connecting battery. There must not be anyone inside the vehicle when connecting the battery.

– Connect the battery ground cable with the ignition turned on. Refer to ⇒ Electrical Equipment; Rep. Gr. 27 ; Battery; Battery, Disconnecting and Connecting .

WARNING

If the ignition is not switched on after the battery is reconnected - "indicator lamps in the instrument cluster do not light up" - the ignition (key/button) may only be switched on when the driver seat is positioned all the way back.

Note

If the Airbag Indicator Lamp - K75- indicates a fault, check the DTC memory, erase it and check it again using the Vehicle Diagnostic Tester .

Tightening Specifications

- Refer to ⇒ "10.1 Component Location Overview - Airbag Crash Sensors", page 160

Volkswagen AG. Volkswagen AG does not guarantee or accept any liability with respect to the correctness of information in this document. Copyright by Volkswagen AG. Protected by copyright. Copying for private or commercial purposes, in part or in whole, is not permitted unless authorised by Volkswagen AG.

10.4 Driver Side Airbag Crash Sensor - G179- / Front Passenger Side Airbag Crash Sensor - G180- , Removing and Installing

Removing

WARNING

- *Observe the safety precautions for pyrotechnical components. Refer to* *⇒ "1.2 Safety Precautions for Pyrotechnic Components", page 3* .
- *Observe the safety precautions for front side airbag crash sensors (pressure sensors). Refer to* *⇒ "1.6 Front Side Airbag Crash Sensors (Pressure Sensors) Safety Precautions", page 7* .

– Disconnect the battery ground cable with the ignition turned on. Refer to ⇒ Electrical Equipment; Rep. Gr. 27 ; Battery; Battery, Disconnecting and Connecting .

– Remove the front door trim panel. Refer to ⇒ "1.2 Front Door Trim Panel, Removing and Installing", page 194 .

WARNING

Before handling pyrotechnic components (for example, disconnecting the connector), the person handling it must "discharge static electricity". This can be done by touching the door striker pin, for example.

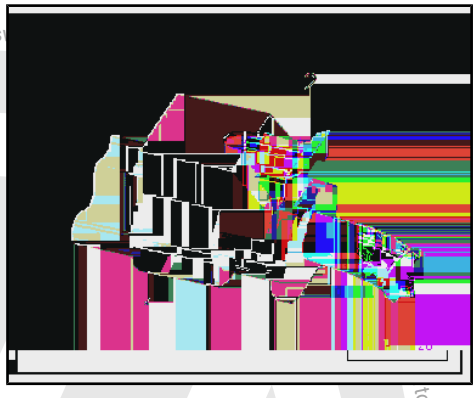

– Pull out the connector lock -2- and push down in direction of -arrow-, disconnect the connector -1- on the crash sensor.

– Release the locking mechanism -2- and turn the retainer -1- for the crash sensor approximately 45° counterclockwise in direction of -arrow-.

– Disengage the side airbag crash sensor -3- from the door and remove.

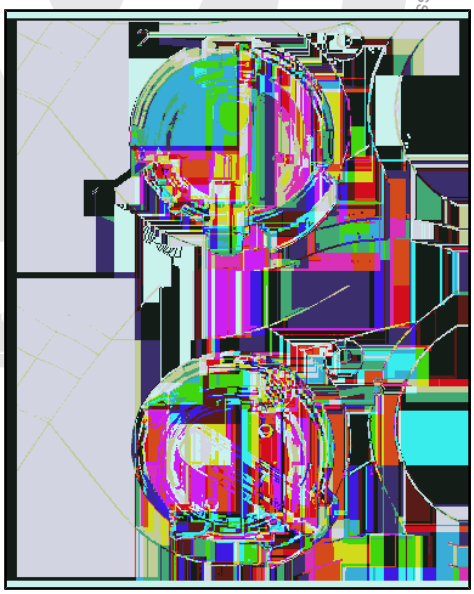

Protected by copyright. Copying for private or commercial purposes, in part or in whole, is not permitted unless authorised by Volkswagen AG. Volkswagen AG does not guarantee or accept any liability with respect to the correctness

Installing

> **WARNING**
>
> ***For proper crash sensor (pressure sensor) function, ensure door does not leak.***

- Pay attention that the seal -2- is seated correctly. Replace crash sensor if damaged or deformed
- Engage the side airbag crash sensor in the door.
- Turn the locking mechanism -1- for the crash sensor clockwise in direction of -arrow-.
- The retaining tab -3- must engage audibly.

Protected by copyright. Copying for private or commercial purposes, in part or in whole, is not permitted unless authorised by Volkswagen AG. Volks
he correctness of information in this document. Copyright by Volkswagen AG.

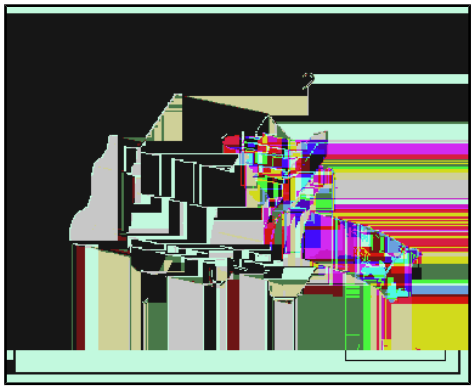

WARNING

- *Observe the safety precautions for pyrotechnical components. Refer to* *⇒ "1.2 Safety Precautions for Pyrotechnic Components", page 3* .
- *Observe the safety precautions for front side airbag crash sensors (pressure sensors). Refer to* *⇒ "1.6 Front Side Airbag Crash Sensors (Pressure Sensors) Safety Precautions", page 7* .
- *Before handling pyrotechnic components (for example, connecting the connector), the person handling it must "discharge static electricity". This can be done by touching the door striker pin, for example.*

– Connect the connector -1- to the crash sensor until it clicks into place -arrow-.

– Push in the connector lock -2- to secure the connector.

Installation is performed in reverse order of removal, while noting the following:

Note

- *Make sure the connectors are pushed in all the way and that they engage audibly.*
- *Make sure the wires are not pinched.*

WARNING

The ignition must be on when connecting the battery. If pyrotechnic components (for example, airbag, belt tensioner) are not repaired correctly, they may deploy unintentionally after connecting battery. There must not be anyone inside the vehicle when connecting the battery.

– Connect the battery ground cable with the ignition turned on. Refer to ⇒ Electrical Equipment; Rep. Gr. 27 ; Battery; Battery, Disconnecting and Connecting .

WARNING

If the ignition is not switched on after the battery is reconnected - "indicator lamps in the instrument cluster do not light up" - the ignition (key/button) may only be switched on when the driver seat is positioned all the way back.

Note

If the Airbag Indicator Lamp - K75- indicates a fault, check the DTC memory, erase it and check it again using the Vehicle Diagnostic Tester .

Protected by copyright. Copying for private or commercial purposes, in part or in whole, is not permitted unless authorised by Volkswagen AG. Volkswagen AG does not guarantee or accept any liability with respect to the correctness of information in this document. Copyright by Volkswagen AG.

10.5 Driver Side Rear Side Airbag Crash Sensor - G256- / Passenger Side Rear Side Airbag Crash Sensor - G257- , Removing and Installing

Removing

WARNING

- *Observe the safety precautions for pyrotechnical components. Refer to ⇒ "1.2 Safety Precautions for Pyrotechnic Components", page 3 .*
- *Before handling pyrotechnic components (for example, disconnecting the connector), the person handling it must "discharge static electricity". This can be done by touching the door striker pin, for example.*

– Disconnect the battery ground cable with the ignition turned on. Refer to ⇒ Electrical Equipment; Rep. Gr. 27 ; Battery; Battery, Disconnecting and Connecting .

2-Door Sedan

– Remove the side trim panel. Refer to ⇒ "5.16 Side Trim Panel, Removing and Installing", page 265 .

4-Door Sedan and Wagon

– Remove the wheel housing trim panel. Refer to ⇒ "5.17 Wheel Housing Trim Panel, Removing and Installing", page 267 .

– Remove the bolt -1- and the side airbag crash sensor -2- from the body.

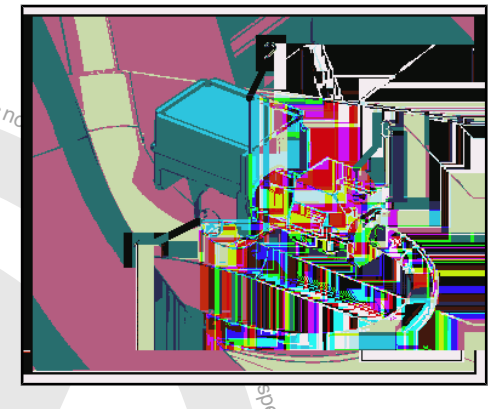

WARNING

Before handling pyrotechnic components (for example, disconnecting the connector), the person handling it must "discharge static electricity". This can be done by touching the door striker pin, for example.

– Disconnect the connector -3-.

– To do this pull out the connector lock -2- and push down in direction of -arrow-, disconnect the connector -1- on the crash sensor.

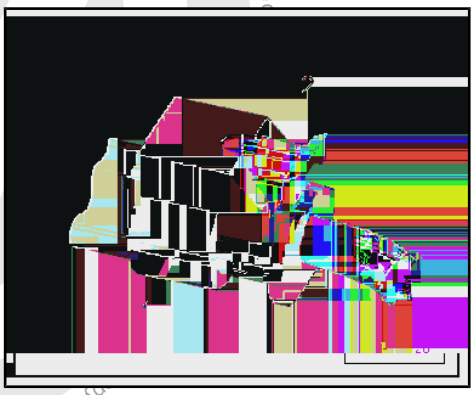

Protected by copyright. Copying for private or commercial purposes, in part or in whole, is not permitted unless authorised by Volkswagen AG. Volkswagen AG does not guarantee or accept any liability with respect to the correctness of information in this document. Copyright by Volkswagen AG.

Installing

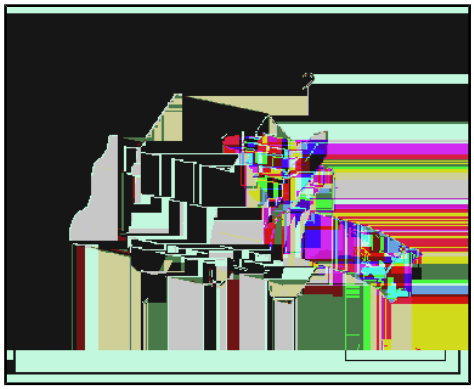

WARNING

- *Observe the safety precautions for pyrotechnical components. Refer to* *⇒ "1.2 Safety Precautions for Pyrotechnic Components", page 3* *.*
- *Before handling pyrotechnic components (for example, connecting the connector), the person handling it must "discharge static electricity". This can be done by touching the door striker pin, for example.*

– Connect the connector -1- to the crash sensor until it clicks into place -arrow-.

– Push in the connector lock -2- to secure the connector.

Installation is performed in reverse order of removal, while noting the following:

Note

- *Make sure the connectors are pushed in all the way and that they engage audibly.*
- *Make sure the wires are not pinched.*

WARNING

The ignition must be on when connecting the battery. If pyrotechnic components (for example, airbag, belt tensioner) are not repaired correctly, they may deploy unintentionally after connecting battery. There must not be anyone inside the vehicle when connecting the battery.

– Connect the battery ground cable with the ignition turned on. Refer to ⇒ Electrical Equipment; Rep. Gr. 27 ; Battery; Battery, Disconnecting and Connecting .

WARNING

If the ignition is not switched on after the battery is reconnected - "indicator lamps in the instrument cluster do not light up" - the ignition (key/button) may only be switched on when the driver seat is positioned all the way back.

Note

If the Airbag Indicator Lamp - K75- indicates a fault, check the DTC memory, erase it and check it again using the Vehicle Diagnostic Tester .

Tightening Specifications

- Refer to ⇒ "10.1 Component Location Overview - Airbag Crash Sensors", page 160

Protected by copyright. Copying for private or commercial purposes, in part or in whole, is not permitted unless authorised by Volkswagen AG. Volkswagen AG does not guarantee or accept any liability with respect to the correctness of information in this document. Copyright by Volkswagen AG.

11 Seat Position Sensor

⇒ “11.1 Overview - Seat Position Sensor”, page 171

⇒ “11.2 Seat Position Sensor, Removing and Installing”, page 172

11.1 Overview - Seat Position Sensor

Protected by copyright. Copying for private or commercial purposes, in part or in whole, is not permitted unless authorised by Volkswagen AG. Volkswagen AG does not guarantee or accept any

1 - Seat Pan Lower Frame

2 - Seat Position Sensor

- ❑ Driver side: Driver Seat Position Sensor - G553-
- ❑ Front passenger side: Front Passenger Seat Position Sensor - G554-
- ❑ Removing and installing. Refer to ⇒ “11.2 Seat Position Sensor, Removing and Installing”, page 172 .

3 - Screw

- ❑ 1.2 Nm

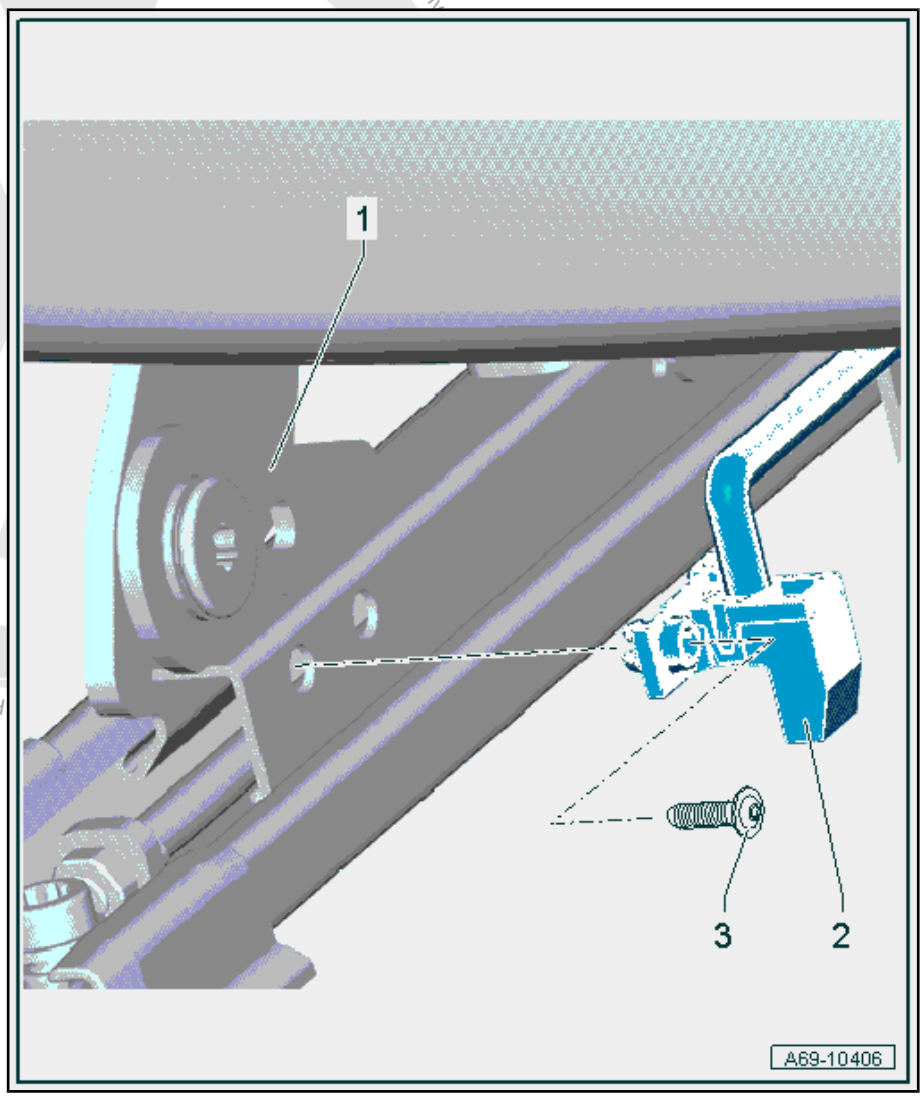

11.2 Seat Position Sensor, Removing and Installing

Removing

WARNING

- *Observe the safety precautions for pyrotechnical components. Refer to ⇒ "1.2 Safety Precautions for Pyrotechnic Components", page 3 .*
- *Before handling pyrotechnic components (for example, disconnecting the connector), the person handling it must "discharge static electricity". This can be done by touching the door striker pin, for example.*

– Remove the front seat. Refer to ⇒ "2.10 Front Seat, Removing and Installing", page 335 .

– Attach the front seat to the Fixture For Seat Repair . Refer to ⇒ "1.2 Front Seat, Mounting on Fixture for Seat Repair", page 311 .

Protected by copyright. Copyright by Volkswagen AG. Volkswagen AG does not guarantee or accept any liability with respect to the correctness of information in this document. Copyright by Volkswagen AG.

– Remove the bolt -3-.

– Release the hook -arrow- of the seat position sensor -2- from the seat pan lower frame -1-.

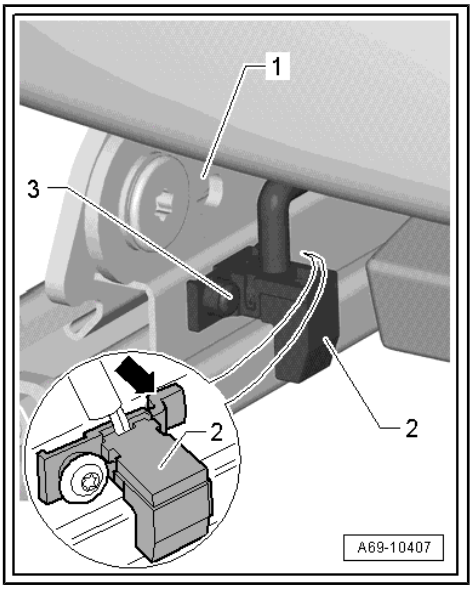

Note

It may be helpful to make drawings or take photos of the wire routing. This assures the wires will be reconnected correctly.

– Disconnect the wire from the seat position sensor and free it up.

– Remove the seat position sensor with the wires from the seat pan lower frame.

Installing

WARNING

- *Observe the safety precautions for pyrotechnical components. Refer to* *⇒ "1.2 Safety Precautions for Pyrotechnic Components", page 3* .
- *Before handling pyrotechnic components (for example, disconnecting the connector), the person handling it must "discharge static electricity". This can be done by touching the door striker pin, for example.*

Install in reverse order of removal. Note the following:

Note

- *Make sure the connectors are pushed in all the way and that they engage audibly.*
- *Make sure the wires are not pinched.*

WARNING

The ignition must be on when connecting the battery. If pyrotechnic components (for example, airbag, belt tensioner) are not repaired correctly, they may deploy unintentionally after connecting battery. There must not be anyone inside the vehicle when connecting the battery.

– Connect the battery ground cable with the ignition turned on. Refer to ⇒ Electrical Equipment; Rep. Gr. 27 ; Battery; Battery, Disconnecting and Connecting .

WARNING

If the ignition is not switched on after the battery is reconnected - "indicator lamps in the instrument cluster do not light up" - the ignition (key/button) may only be switched on when the driver seat is positioned all the way back.

Copyright by Volkswagen AG. We do not guarantee or accept any liability with respect to the correctness of information in this document. Copyright by Volkswagen AG. Copyright protected by copyright. Copy, distribution, publication or commercial use of this document not permitted unless authorised by Volkswagen AG. Copyright by Volkswagen AG. Copyright protected by copyright. Copy, distribution, publication or commercial use of this document not permitted unless authorised by Volkswagen AG.

Note

If the Airbag Indicator Lamp - K75- indicates a fault, check the DTC memory, erase it and check it again using the Vehicle Diagnostic Tester .

Tightening Specifications

- Refer to ⇒ “11.1 Overview - Seat Position Sensor”, page 171

Protected by copyright. Copying for private or commercial purposes, in part or in whole, is not permitted unless authorised by Volkswagen AG. Volkswagen AG does not guarantee or accept any liability with respect to the correctness of information in this document. Copyright by Volkswagen AG.

12 Belt Fastening Detection

⇒ "12.1 Front Passenger Occupant Detection Sensor G128 , Removing and Installing", page 175

12.1 Front Passenger Occupant Detection Sensor - G128- , Removing and Installing

Note

The passenger occupant detection sensor is only installed in the front passenger seat.

Removing

WARNING

- ***Observe the safety precautions for pyrotechnical components. Refer to ⇒ "1.2 Safety Precautions for Pyrotechnic Components", page 3 .***
- ***Before handling pyrotechnic components (for example, disconnecting the connector), the person handling it must "discharge static electricity". This can be done by touching the door striker pin, for example.***

– Disconnect the battery ground cable with the ignition turned on. Refer to ⇒ Electrical Equipment; Rep. Gr. 27 ; Battery; Battery, Disconnecting and Connecting .

– Remove the front passenger seat. Refer to ⇒ "2.10 Front Seat, Removing and Installing", page 335 .

– Remove the seat pan cover and cushion. Refer to ⇒ "1.4 Seat Pan Cover and Cushion, Removing and Installing", page 405 .

– Disconnect the connector for the passenger occupant detection system pressure sensor.

Protected by copyright. Copying or distribution of this material purposes, in part or in whole, is not permitted unless authorised by Volkswagen AG. Volkswagen AG does not guarantee or accept any liability with respect to the correctness of information in this document. Copyright by Volkswagen AG.

– Unclip the clips -1- from the seat backrest and remove the passenger occupant detection system pressure sensor -2-.

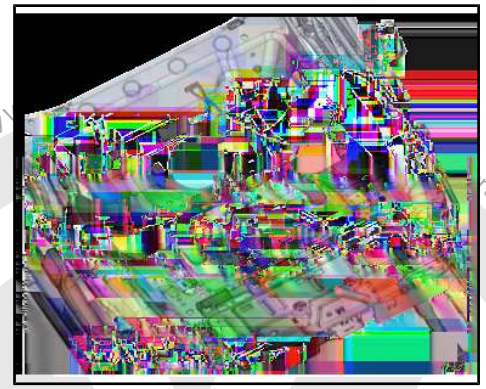

Installing

WARNING

- *Observe the safety precautions for pyrotechnical components. Refer to ⇒ "1.2 Safety Precautions for Pyrotechnic Components", page 3 .*
- *Before handling pyrotechnic components (for example, connecting the connector), the person handling it must "discharge static electricity". This can be done by touching the door striker pin, for example.*

Caution

The new passenger occupant detection system pressure sensor should be installed in the same location as the old sensor.

Install in reverse order of removal while paying attention to the following:

– Push the clips for the passenger occupant detection system pressure sensor into the seat pan until they click into place.

Note

Make sure the connectors are pushed in all the way and that they engage audibly.

WARNING

The ignition must be on when connecting the battery. If pyrotechnic components (for example, airbag, belt tensioner) are not repaired correctly, they may deploy unintentionally after connecting battery. There must not be anyone inside the vehicle when connecting the battery.

– Connect the battery ground cable with the ignition turned on. Refer to ⇒ Electrical Equipment; Rep. Gr. 27 ; Battery; Battery, Disconnecting and Connecting .

WARNING

If the ignition is not switched on after the battery is reconnected - "indicator lamps in the instrument cluster do not light up" - the ignition (key/button) may only be switched on when the driver seat is positioned all the way back.

Protected by copyright. Copyright by Volkswagen AG.

Note

If the Airbag Indicator Lamp - K75- signals a fault after installing, check the DTC memory, erase it and check it again use the Vehicle Diagnostic Tester .

Protected by copyright. Copying for private or commercial purposes, in part or in whole, is not permitted unless authorised by Volkswagen AG. Volkswagen AG does not guarantee or accept any liability with respect to the correctness of information in this document. Copyright by Volkswagen AG.

13 Passenger Occupant Detection System

⇒ “13.1 Overview - Passenger Occupant Detection System”, page 178

⇒ “13.2 Passenger Occupant Detection System Pressure Sensor, Removing and Installing”, page 180

⇒ “13.3 Passenger Occupant Detection System Control Module J706 , Removing and Installing”, page 186

⇒ “13.4 Passenger Occupant Detection System Control Module J706 Bracket, Removing and Installing”, page 189

13.1 Overview - Passenger Occupant Detection System

Note

- *The passenger occupant detection system pressure sensor automatically deactivates the front passenger airbag when the front passenger seat is not occupied.*
- *The passenger occupant detection system pressure sensor and the Front Passenger Seat Heating Element - Z8- are a shared component.*
- *This equipment is only installed on vehicles released in the USA.*
- *The components pictured can vary in form and appearance from the present vehicle. However the assembly and functionality are identical.*

Protected copyright. Copyright by Volkswagen AG. Volkswagen AG does not guarantee or accept any liability with respect to the correctness of information in this document. Copying for private or commercial purposes, in part or in whole, is not permitted unless authorised by Volkswagen AG.

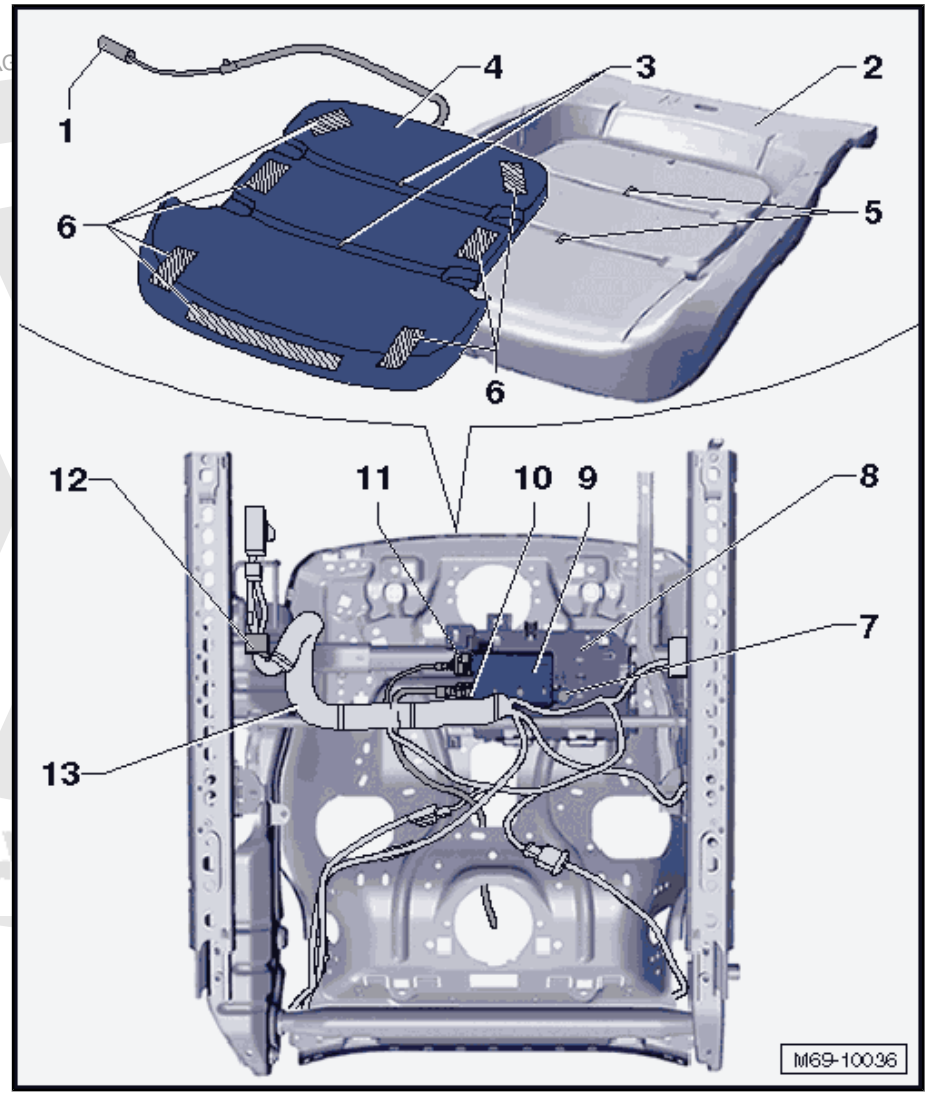

1 - Wiring Harness

- ❑ Pay attention to the exact wire routing. Refer to ⇒ “13.2 Passenger Occupant Detection System Pressure Sensor, Removing and Installing”, page 180 .

2 - Front Seat Cushion

- ❑ Must not be disconnected from the passenger occupant detection system pressure sensor
- ❑ The components are separated from each other; replace both components
- ❑ It is not necessary to replace the Passenger Occupant Detection System Control Module - J706- .

3 - Positioning Aids

- ❑ Positioning aids on the passenger occupant detection system pressure sensor

4 - Passenger Occupant Detection System Pressure Sensor

- ❑ Must not be separated from the front seat cushion cover
- ❑ The components are separated from each other; replace both components
- ❑ On vehicles with seat heating, the passenger occupant detection system pressure sensor and the Front Passenger Seat Heating Element - Z8- are a shared component.
- ❑ It is not necessary to replace the Passenger Occupant Detection System Control Module - J706- .
- ❑ Removing and installing. Refer to ⇒ “13.2 Passenger Occupant Detection System Pressure Sensor, Removing and Installing”, page 180 .

5 - Positioning Aids

- ❑ Positioning aids on the front seat cushion padding

6 - Adhesive Surfaces

- ❑ Adhesion surface for gluing to the front seat cushion cover

7 - Screw

- ❑ 1.5 Nm
- ❑ Screw for Passenger Occupant Detection System Control Module - J706-

8 - Bracket

- ❑ Passenger Occupant Detection System Control Module - J706- bracket
- ❑ Clipped to the seat frame
- ❑ Removing and installing. Refer to ⇒ “13.4 Passenger Occupant Detection System Control Module J706 Bracket, Removing and Installing”, page 189 .

Protected by copyright. Copying for private or commercial purposes, in part or in whole, is not permitted unless authorized by Volkswagen AG

9 - Passenger Occupant Detection System Control Module - J706-

- ❑ If the Passenger Occupant Detection System Control Module - J706- must be replaced, it is not necessary to replace the passenger occupant detection system pressure sensor.
- ❑ Removing and installing. Refer to ⇒ "13.3 Passenger Occupant Detection System Control Module J706 , Removing and Installing", page 186 .

10 - Connector

- ❑ Pay attention to the exact wire routing. Refer to ⇒ "13.2 Passenger Occupant Detection System Pressure Sensor, Removing and Installing", page 180 .

11 - Connector

- ❑ Voltage supply connector for Passenger Occupant Detection System Control Module - J706-

12 - Connector

- ❑ Coupling location of the passenger occupant detection system to the vehicle electrical system

13 - Front Seat Wiring Harness

13.2 Passenger Occupant Detection System Pressure Sensor, Removing and Installing

Note

- *The passenger occupant detection system pressure sensor and the front seat cushion can only be replaced as one unit.*
- *The Passenger Occupant Detection System Control Module - J706- may not be replaced separately.*
- *Removing and installing the passenger occupant detection system pressure sensor is described for the "Comfort" front seat with manual seat adjustment.*
- *Removing and installing on the other versions of the front seat is identical.*

Removing

WARNING

- ***Observe the safety precautions for pyrotechnical components. Refer to ⇒ "1.2 Safety Precautions for Pyrotechnic Components", page 3 .***
- ***Before handling pyrotechnic components (for example, disconnecting the connector), the person handling it must "discharge static electricity". This can be done by touching the door striker pin, for example.***

– Remove the front seat. Refer to ⇒ "2.10 Front Seat, Removing and Installing", page 335 .

– Secure the seat on the fixture for seat repair. Refer to ⇒ "1.2 Front Seat, Mounting on Fixture for Seat Repair", page 311 .

– Remove the tunnel side seat trim. Refer to ⇒ "2.13 Tunnel-Side Seat Trim, Removing and Installing", page 344 .

Protected by copyright. Copying for private or commercial purposes, in part or in whole, is not permitted unless authorised by Volkswagen AG. Volkswagen AG does not guarantee or accept any liability with respect to the correctness of information in this document. Copyright by Volkswagen AG.

– Remove the sill-side seat trim. Refer to
⇒ “2.14 Sill-Side Seat Trim, Removing and Installing”, page 345 .

– Remove the seat trim bracket. Refer to
⇒ “2.15 Seat Trim Bracket, Removing and Installing”, page 348 .

– Remove the storage compartment, if equipped. Refer to
⇒ “2.35 Storage Compartment, Removing and Installing”, page 371 .

Note

The components pictured can vary in form and appearance from the present vehicle. However the assembly and functionality are identical.

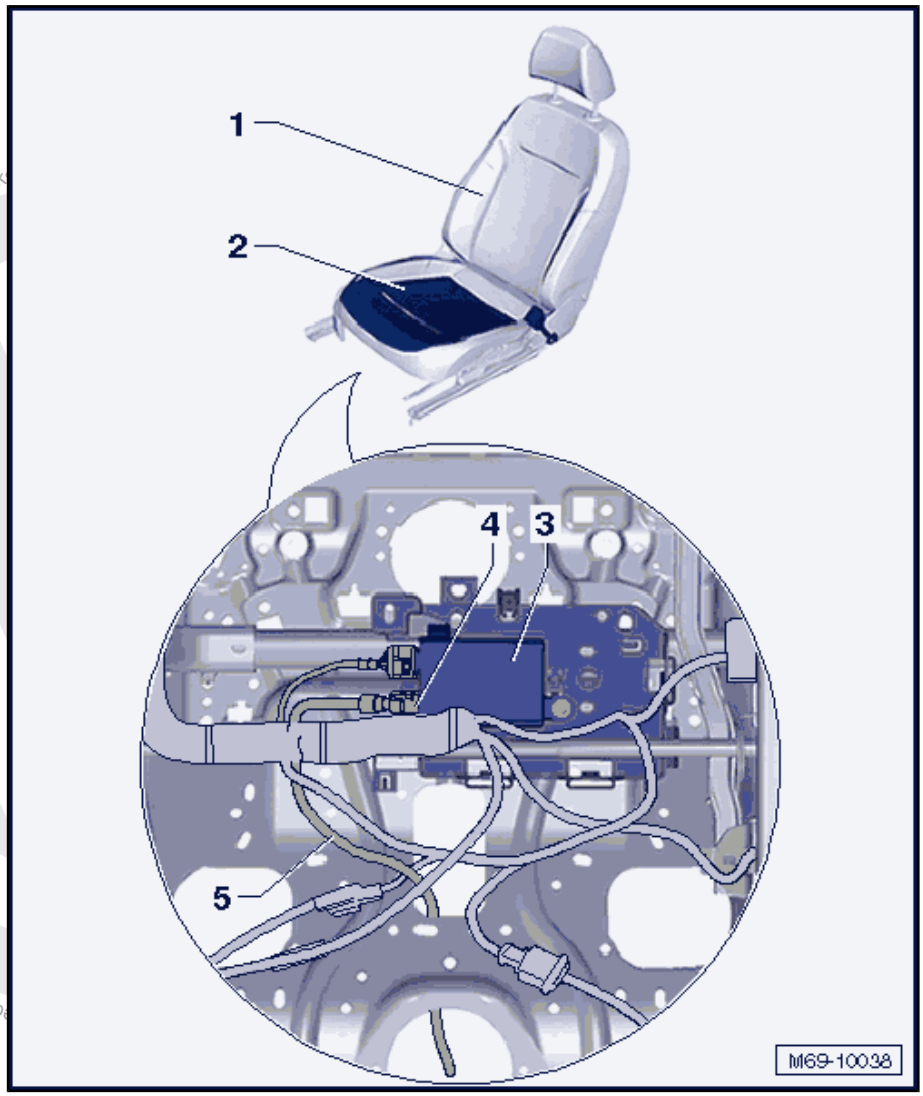

Protected by copyright. Copying for private or commercial purposes, in part or in whole, is not permitted unless authorised by Volk

– Remove the front seat backrest -1-. Refer to
⇒ “2.16 Front Backrest, Removing and Installing”, page 349 .

– Disconnect the connector -4- for the passenger occupant detection system pressure sensor -2- from the Passenger Occupant Detection System Control Module - J706- -3-.

– Loosen the passenger occupant detection system pressure sensor wiring harness -5- from the seat frame.

– Remove the seat cushion with passenger occupant detection system pressure sensor -2- and the cover from the seat frame. Refer to ⇒ “1.4 Seat Pan Cover and Cushion, Removing and Installing”, page 405 .

– Disconnect the cover from the seat cushion with passenger occupant detection system pressure sensor -2-. Refer to ⇒ “1.6 Seat Pan Cover and Cushion, Separating”, page 408 .

WARNING

The passenger occupant detection system pressure sensor -2- is permanently glued to the seat cushion -1-. It is not possible to remove and install separately. The passenger occupant detection system pressure sensor must be replaced with the seat cushion.

On vehicles with seat heating, the passenger occupant detection system pressure sensor and the seat heating element are a shared component.

Note

- *To prevent any removed components from being installed again by mistake, the components should be separated from each other and disposed.*
- *The following work applies to these components.*
- *The components pictured can vary in form and appearance from the present vehicle. However the assembly and functionality are identical.*

Protected by copyright. Copying for private or commercial purposes, in part or in whole, is not permitted unless authorised by Volkswagen AG. Volkswagen AG does not guarantee or accept any liability with respect to the correctness of information in this document. Copyright by Volkswagen AG.

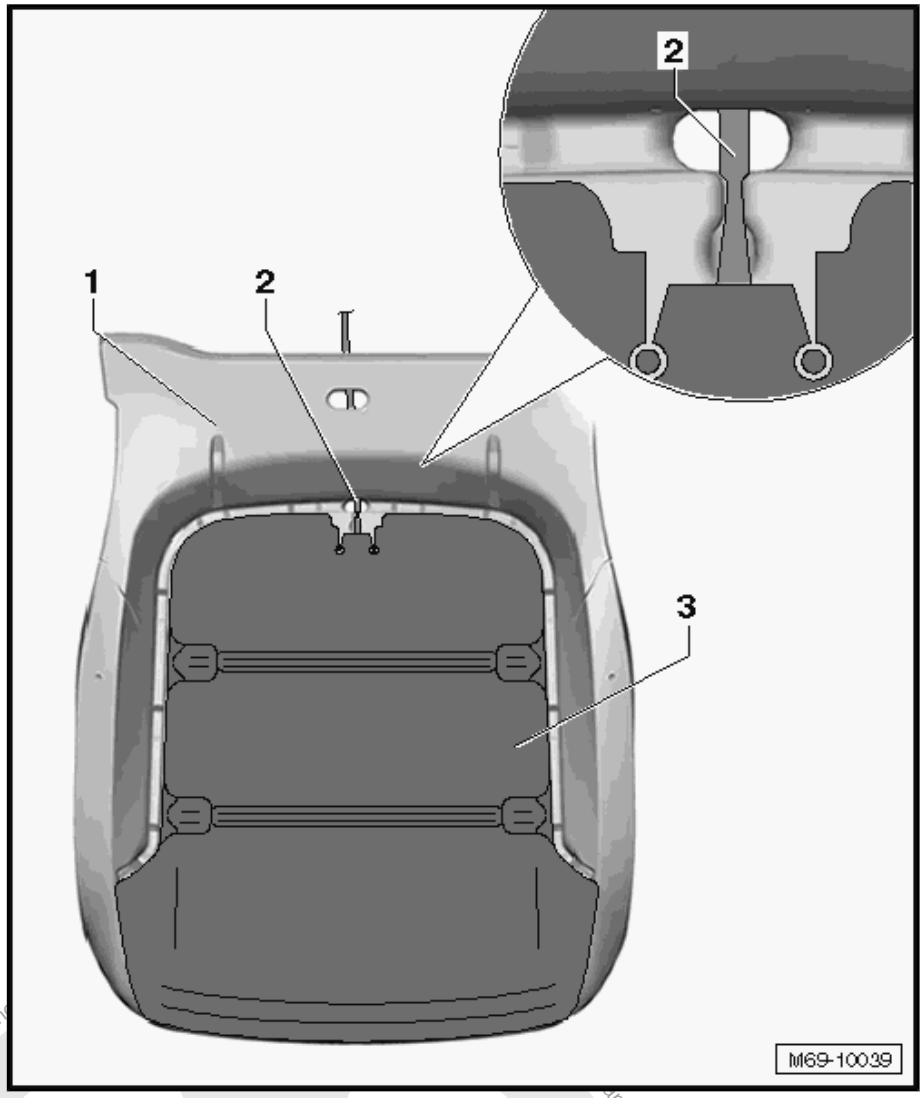

– Remove the wiring harness -2- for the passenger occupant detection system pressure sensor -3- from the channel and guide it through the seat cushion -1-.

Note

The components pictured can vary in form and appearance from the present vehicle. However the assembly and functionality are identical.

Protected by copyright. Copying for private or commercial purposes, in part or in whole, is not permitted unless authorised. Copyright by Volkswagen AG. No liability with respect to the correctness of information in this document.

Copyright. Copying for private or commercial purposes, in part or in whole, is not permitted unless authorised by Volkswagen AG. Volkswagen AG does not guarantee or accept a

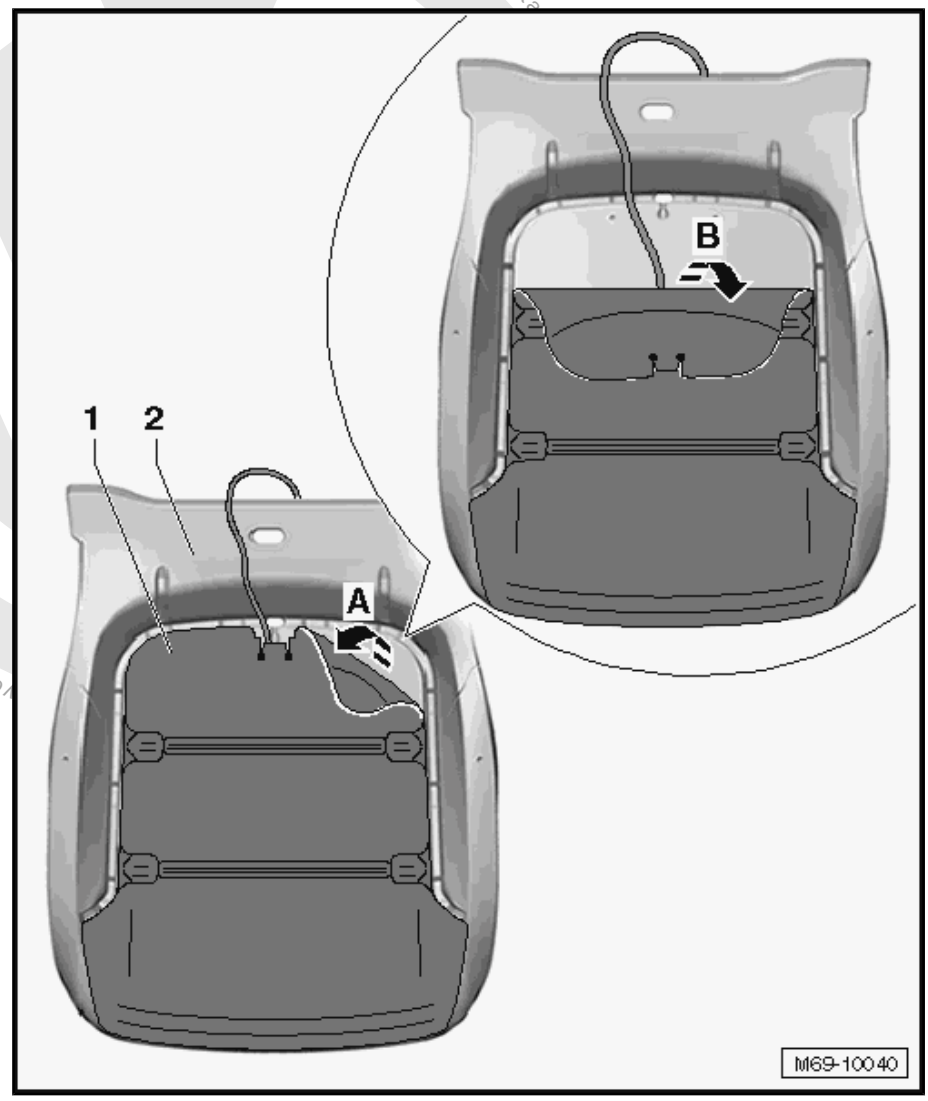

– Loosen the passenger occupant detection system pressure sensor -1- from the seat cushion -2- starting from direction of -arrow A- in direction of -arrow B-.

– Remove the passenger occupant detection system pressure sensor -1- from the seat cushion -2-.

Installing

WARNING

- *Observe the safety precautions for pyrotechnical components. Refer to* *⇒ "1.2 Safety Precautions for Pyrotechnic Components", page 3* *.*
- *Before handling pyrotechnic components (for example, connecting the connector), the person handling it must "discharge static electricity". This can be done by touching the door striker pin, for example.*

Note

The components pictured can vary in form and appearance from the present vehicle. However the assembly and functionality are identical.

Copyright. Copying for private or commercial purposes, in part or in whole, is not permitted unless authorised

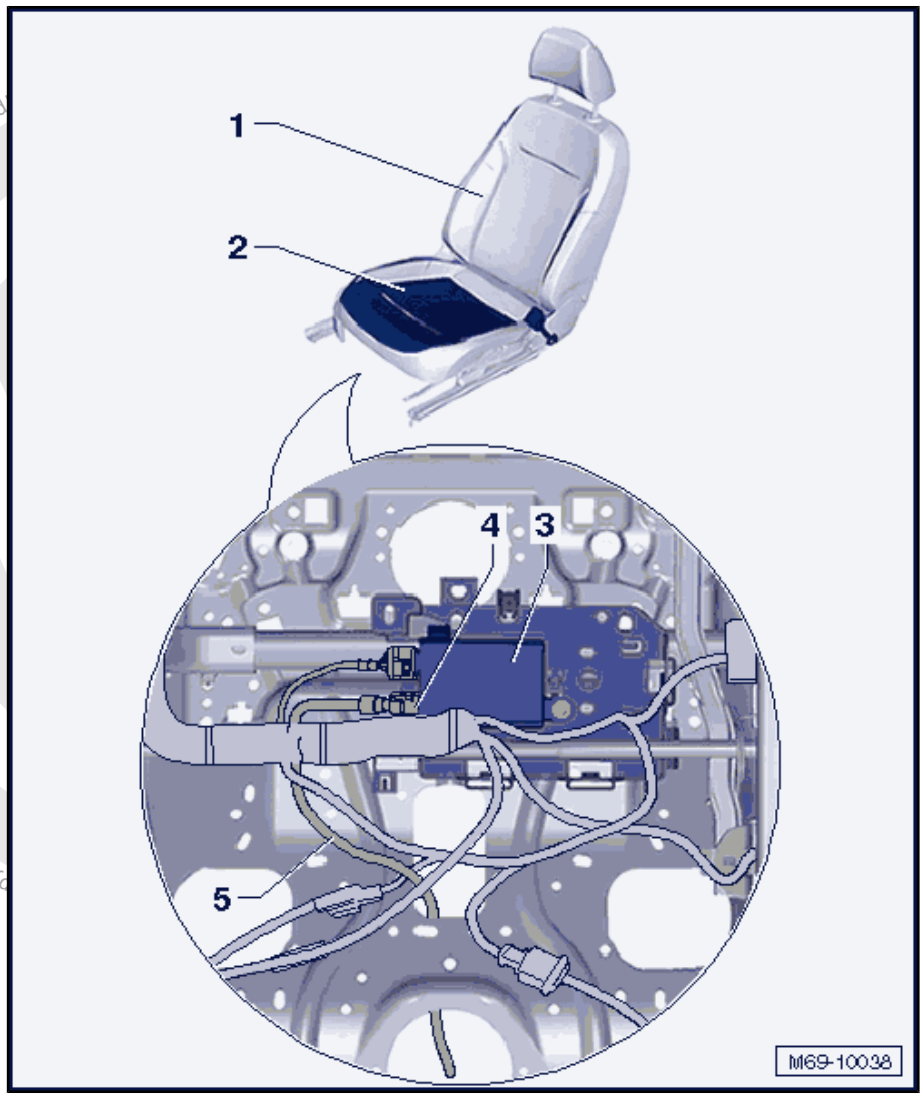

WARNING

The passenger occupant detection system pressure sensor -2- is permanently glued to the seat cushion -1-. It is not possible to remove and install separately. The passenger occupant detection system pressure sensor must be replaced with the seat cushion.

On vehicles with seat heating, the passenger occupant detection system pressure sensor and the seat heating element are a shared component.

– Connect the cover and seat cushion to the passenger occupant detection system pressure sensor -2-. Refer to ⇒ “1.6 Seat Pan Cover and Cushion, Separating”, page 408 .

– Install the seat cushion with passenger occupant detection system pressure sensor -2- and cover on the seat frame. Refer to ⇒ “1.4 Seat Pan Cover and Cushion, Removing and Installing”, page 405 .

– Route and secure the wiring harness -5- for the passenger occupant detection system pressure sensor -2- on the seat frame as shown.

– Connect the connector -4- on the wiring harness -5- to the Passenger Occupant Detection System Control Module - J706- -3-.

Note

Make sure the connector is pushed in all the way and that it engages audibly.

Installation is performed in reverse order of removal, while noting the following:

Note

♦ *Make sure the connectors are pushed in all the way and that they engage audibly.*

♦ *Make sure the wires are not pinched.*

WARNING

The ignition must be on when connecting the battery. If pyrotechnic components (for example, airbag, belt tensioner) are not repaired correctly, they may deploy unintentionally after connecting battery. There must not be anyone inside the vehicle when connecting the battery.

– Connect the battery ground cable with the ignition turned on. Refer to ⇒ Electrical Equipment; Rep. Gr. 27 ; Battery; Battery, Disconnecting and Connecting .

WARNING

If the ignition is not switched on after the battery is reconnected - “indicator lamps in the instrument cluster do not light up” - the ignition (key/button) may only be switched on when the driver seat is positioned all the way back.

Note

If the Airbag Indicator Lamp - K75- indicates a fault, check the DTC memory, erase it and check it again using the Vehicle Diagnostic Tester .

13.3 Passenger Occupant Detection System Control Module - J706- , Removing and Installing

Special tools and workshop equipment required

Protected by copyright. Copying for private or commercial purposes, in part or in whole, is not permitted unless authorised by Volkswagen AG. Volkswagen AG does not guarantee or accept any liability with respect to the correctness of information in this document. Copyright by Volkswagen AG.

- Torque Wrench 1783 - 2-10Nm - VAG1783-

WARNING

- *Observe the safety precautions for pyrotechnical components. Refer to* *⇒ "1.2 Safety Precautions for Pyrotechnic Components", page 3* *.*
- *Before handling pyrotechnic components (for example, disconnecting the connector), the person handling it must "discharge static electricity". This can be done by touching the door striker pin, for example.*

– Remove the front seat. Refer to ⇒ "2.10 Front Seat, Removing and Installing", page 335 .

– Secure the seat on the fixture for seat repair. Refer to ⇒ "1.2 Front Seat, Mounting on Fixture for Seat Repair", page 311 .

Note

The components pictured can vary in form and appearance from the present vehicle. However the assembly and functionality are identical.

Protected by copyright. Copying for private or commercial purposes, in part or in whole, is not permitted unless authorised by Volkswagen AG. Volkswagen AG does not guarantee or accept any liability with respect to the correctness of information in this document. Copyright by Volkswagen AG.

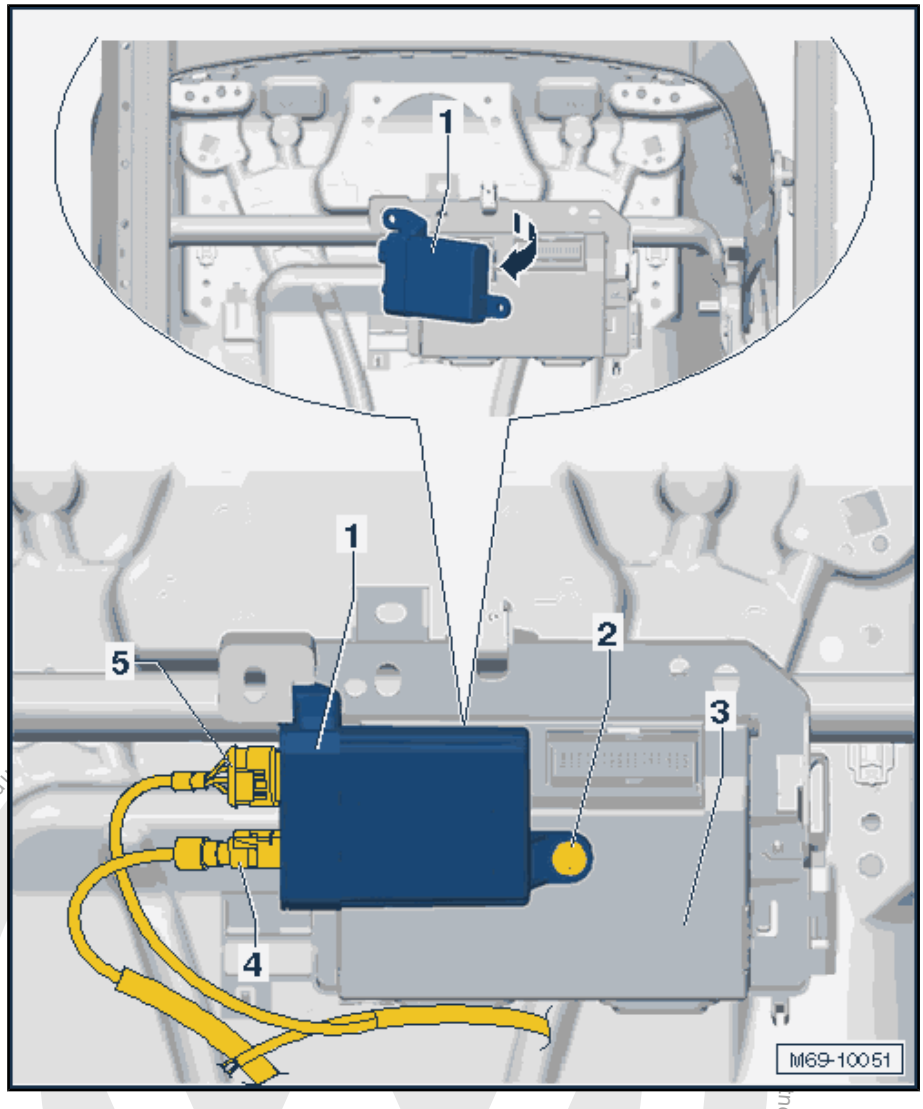

– Disconnect the connectors -4 and 5- from the Passenger Occupant Detection System Control Module - J706- -1-.
– Remove the bolt -2-.
– Remove the Passenger Occupant Detection System Control Module - J706- -1- from the bracket -3- in direction of -arrow-.

Installing

WARNING

- *Observe the safety precautions for pyrotechnical components. Refer to* *⇒ "1.2 Safety Precautions for Pyrotechnic Components", page 3* *.*
- *Before handling pyrotechnic components (for example, connecting the connector), the person handling it must "discharge static electricity". This can be done by touching the door striker pin, for example.*

Installation is performed in reverse order of removal, while noting the following:

Protected by copyright. Copyright for private or commercial purposes, in part or in whole, is not permitted unless authorized by Volkswagen AG. Copyright by Volkswagen AG. No liability for the correctness of information in this document.

Note

- *Make sure the connectors are pushed in all the way and that they engage audibly.*
- *Make sure the wires are not pinched.*
- *It is necessary to perform a basic setting/coding in "Guided Fault Finding" if the Passenger Occupant Detection System Control Module - J706- was replaced. Refer to Vehicle Diagnostic Tester .*

WARNING

The ignition must be on when connecting the battery. If pyrotechnic components (for example, airbag, belt tensioner) are not repaired correctly, they may deploy unintentionally after connecting battery. There must not be anyone inside the vehicle when connecting the battery.

– Connect the battery ground cable with the ignition turned on. Refer to ⇒ Electrical Equipment; Rep. Gr. 27 ; Battery; Battery, Disconnecting and Connecting .

WARNING

If the ignition is not switched on after the battery is reconnected - "indicator lamps in the instrument cluster do not light up" - the ignition (key/button) may only be switched on when the driver seat is positioned all the way back.

Note

If the Airbag Indicator Lamp - K75- indicates a fault, check the DTC memory, erase it and check it again using the Vehicle Diagnostic Tester .

13.4 Passenger Occupant Detection System Control Module - J706- Bracket, Removing and Installing

Removing

– Remove the Passenger Occupant Detection System Control Module - J706-. Refer to
⇒ "13.3 Passenger Occupant Detection System Control Module J706 , Removing and Installing", page 186 .

Note

The components pictured can vary in form and appearance from the present vehicle. However the assembly and functionality are identical.

Protected by copyright. Copying for private or commercial purposes, in part or in whole, is not permitted unless authorised by Volkswagen AG. Volkswagen AG does not guarantee or accept any liability with respect to the correctness of information in this document. Copyright by Volkswagen AG.

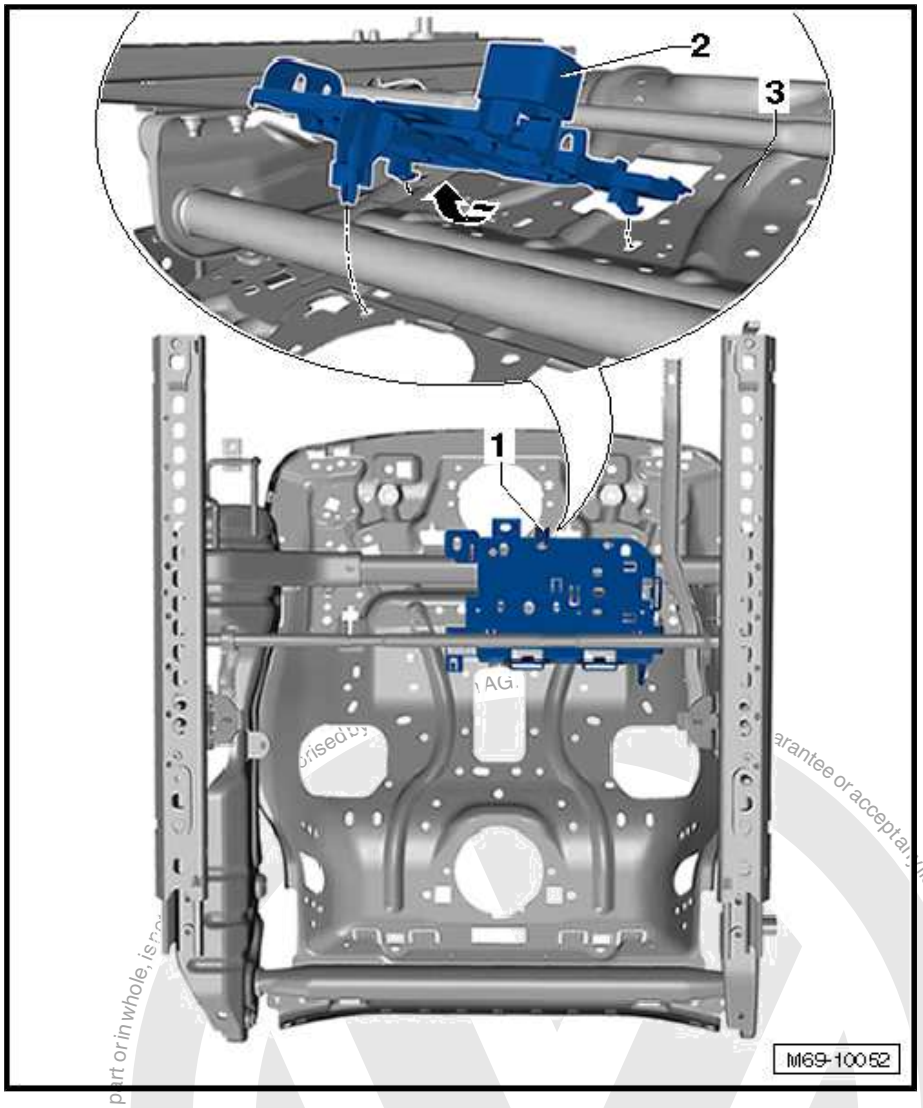

– Remove the clamping pin on the clip -1- and loosen the clip -1-.

– Remove the bracket -2- from the seat frame -3- in direction of -arrow-.

Installing

Install in reverse order of removal.

13.5 Required Importer Notification

After installing the new components for the passenger occupant detection system (passenger occupant detection system pressure sensor / Passenger Occupant Detection System Control Module - J706-), attach the labels (only tear-off strips) for the new components on the “registration tag 2 for airbag systems”. “Registration tag 2 for airbag systems” should be sent to importer for registration.

The “registration tag 2 for airbag systems” can be printed from the “Technical Service Handbook”:

ElsaWin

→ Technical Service Handbook (HST)

→ Technical Service Bulletin (TSB)

Protected by copyright. Copying for private or commercial purposes, in part or in whole, is not permitted unless authorised by Volkswagen AG. Volkswagen AG does not guarantee or accept any liability with respect to the correctness of information in this document. Copyright by Volkswagen AG.

→ Electrical system

→ Function

→ Passenger protection area

→ Turning off the airbag unit/child seat, installing a set, etc.

→ System 2

The “process ID” and “TPI number” for this procedure can be found in “Technical Service Handbook 2”:“2022327/1”

Protected by copyright. Copying for private or commercial purposes, in part or in whole, is not permitted unless authorised by Volkswagen AG. Volkswagen AG does not guarantee or accept any liability with respect to the correctness of information in this document. Copyright by Volkswagen AG.

14 Special Tools

Special tools and workshop equipment required

- Wedge Set - T10383-

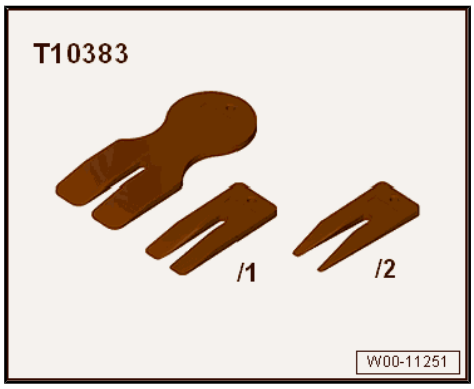

- Torque Wrench 1783 - 2-10Nm - VAG1783-

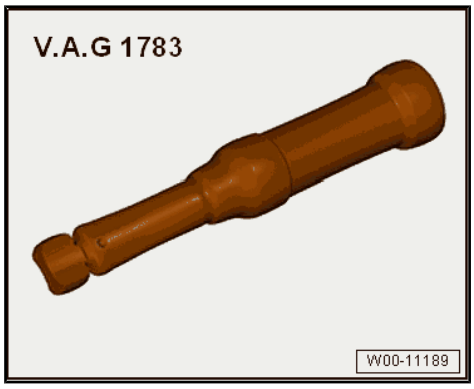

- Release Tool Set - Extraction Tool 17 - VAS1978/17- from the Release Tool Set - VAS1978/35-

Protected by copyright. Copying for private or commercial purposes, in part or in whole, is not permitted unless authorised by Volkswagen AG. Volks
Copyright by Volkswagen AG. ct to the correctness of information in this document.

70 – Interior Trim

1 Front Door Trim Panels

⇒ “1.1 Overview - Front Door Trim Panel”, page 193

⇒ “1.2 Front Door Trim Panel, Removing and Installing”, page 194

⇒ “1.3 Mirror Cover Trim, Removing and Installing”, page 198

⇒ “1.4 Interior Door Mechanism, Removing and Installing”, page 198

⇒ “1.5 Trim Molding, Removing and Installing”, page 199

1.1 Overview - Front Door Trim Panel

Note

- *The overview illustration shows the driver side front door trim panel. The illustration for the front passenger side is identical.*
- *The overview illustration applies to vehicles with 4 doors. The illustration for vehicles with 2 doors is identical.*

1 - Door Trim Panel

- ❑ Removing and installing. Refer to ⇒ “1.2 Front Door Trim Panel, Removing and Installing”, page 194 .

2 - Central Locking -SAFE- Indicator Lamp - K133-

- ❑ Driver door only
- ❑ Component Location Overview. Refer to ⇒ Electrical Equipment; Rep. Gr. 96 ; Lamps; Component Location Overview - Front Door Lamps .

3 - Sleeve

- ❑ For Central Locking - SAFE- Indicator Lamp - K133-
- ❑ Driver door only

4 - Mirror Cover Trim

- ❑ Removing and installing. Refer to ⇒ “1.3 Mirror Cover Trim, Removing and Installing”, page 198 .

5 - Clip

- ❑ Quantity: 2
- ❑ Replace damaged or deformed clips

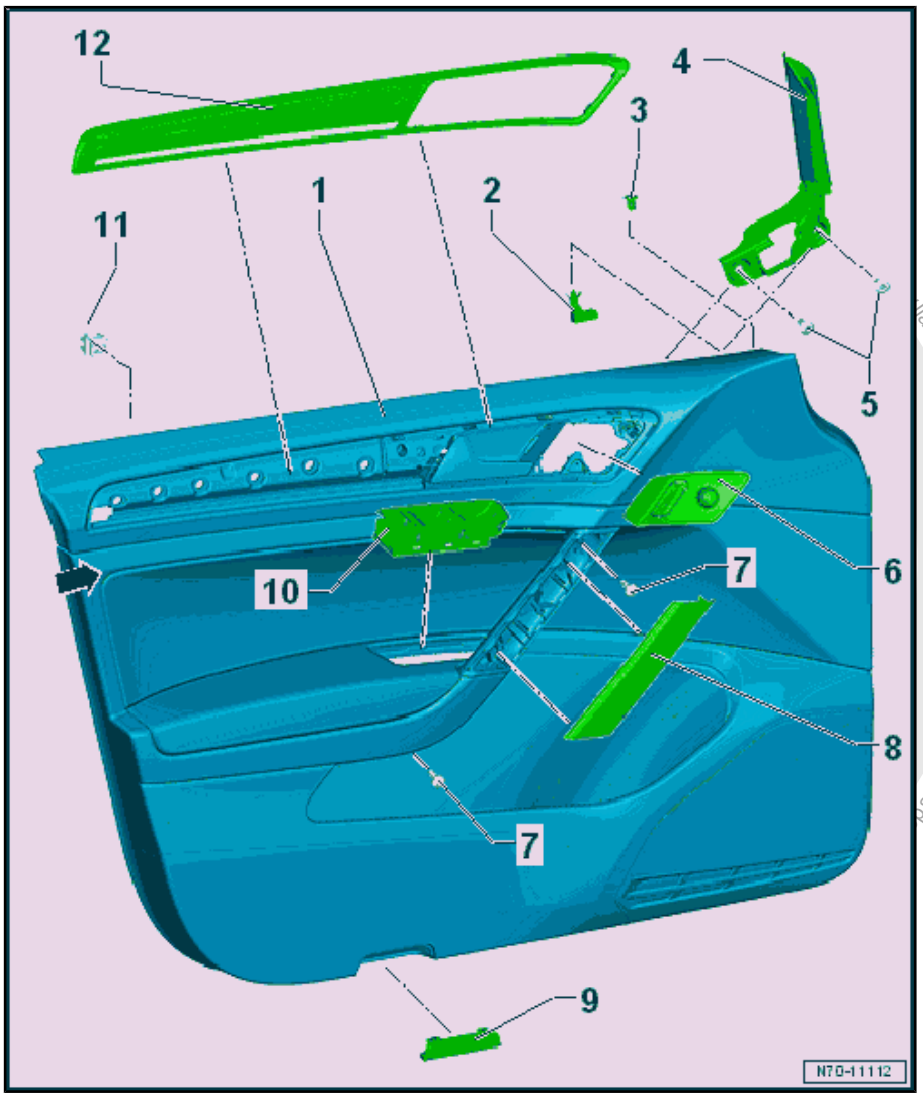

liability with respect to the correctness of information in this

6 - Exterior Rearview Mirror Adjuster - EX11-

- ❑ With Driver Interior Locking Button - E308-
- ❑ Component Location Overview. Refer to ⇒ Electrical Equipment; Rep. Gr. 96 ; Controls; Component Location Overview - Front Door Controls .

7 - Screw

- ❑ 4.5 Nm
- ❑ Quantity: 2

8 - Grip Recess Upper Section

9 - Rear Reflector

- ❑ Component Location Overview. Refer to ⇒ Electrical Equipment; Rep. Gr. 96 ; Lamps; Component Location Overview - Front Door Lamps .

10 - Power Window Control Head in Driver Door - E512-

- ❑ Component Location Overview. Refer to ⇒ Electrical Equipment; Rep. Gr. 96 ; Controls; Component Location Overview - Controls in Front Doors .

11 - Clip

- ❑ 2-door: quantity: 7
- ❑ 4-door: quantity: 6 (one of which is the left upper crash clip -arrow-)
- ❑ Insert in the trim panel
- ❑ Replace damaged or deformed clips

12 - Trim Molding

- ❑ Allocation. Refer to the Parts Catalog.
- ❑ Removing and installing. Refer to ⇒ “1.5 Trim Molding, Removing and Installing”, page 199 .

1.2 Front Door Trim Panel, Removing and Installing

Note

- *The removal and installation for the driver side front door trim panel is described. The removal and installation for the front passenger side is identical.*
- *The removal and installation for vehicles with 4-doors is shown. The removal and installation for 2-door vehicles is identical.*

Special tools and workshop equipment required

- Trim Removal Wedge - 3409-
- Wedge Set - T10383-
- Torque Wrench 1783 - 2-10Nm - VAG1783-

Removing

– Turn off the ignition and all electrical equipment and remove the ignition key.

Protected by copyright. Copying for private or commercial purposes, in whole or in part, is not permitted unless authorised by Volkswagen AG. Volkswagen AG does not guarantee or accept any liability with respect to the correctness of information in this document. Copyright by Volkswagen AG.

– Remove the handle molding upper section -1- with the Trim Removal Wedge - 3409- from the mounts in the door trim panel.

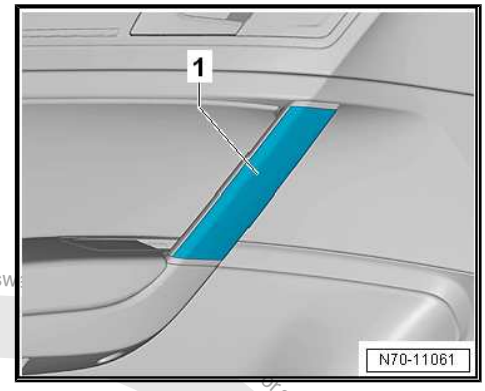

– Remove the bolts -1-.

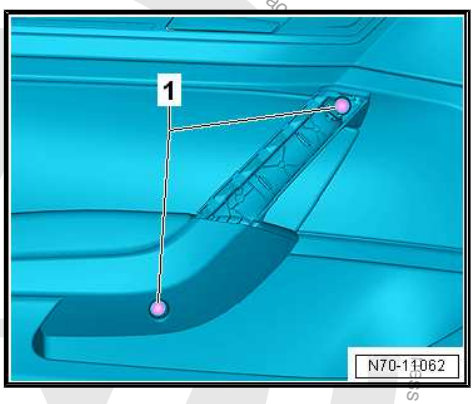

– Turn/release the clip -1- 90° in direction of the -arrow- ($^1/_4$ of a turn) using the open-end wrench (10 mm).

• Clip -arrow- is loosened.

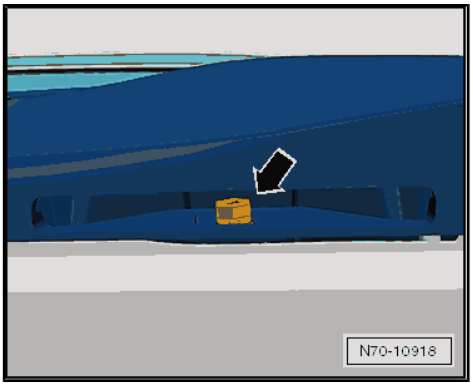

Protected by copyright. Copying for private or commercial purposes, in part or in whole, is not permitted unless authorised by Volkswagen AG. Volkswagen AG.

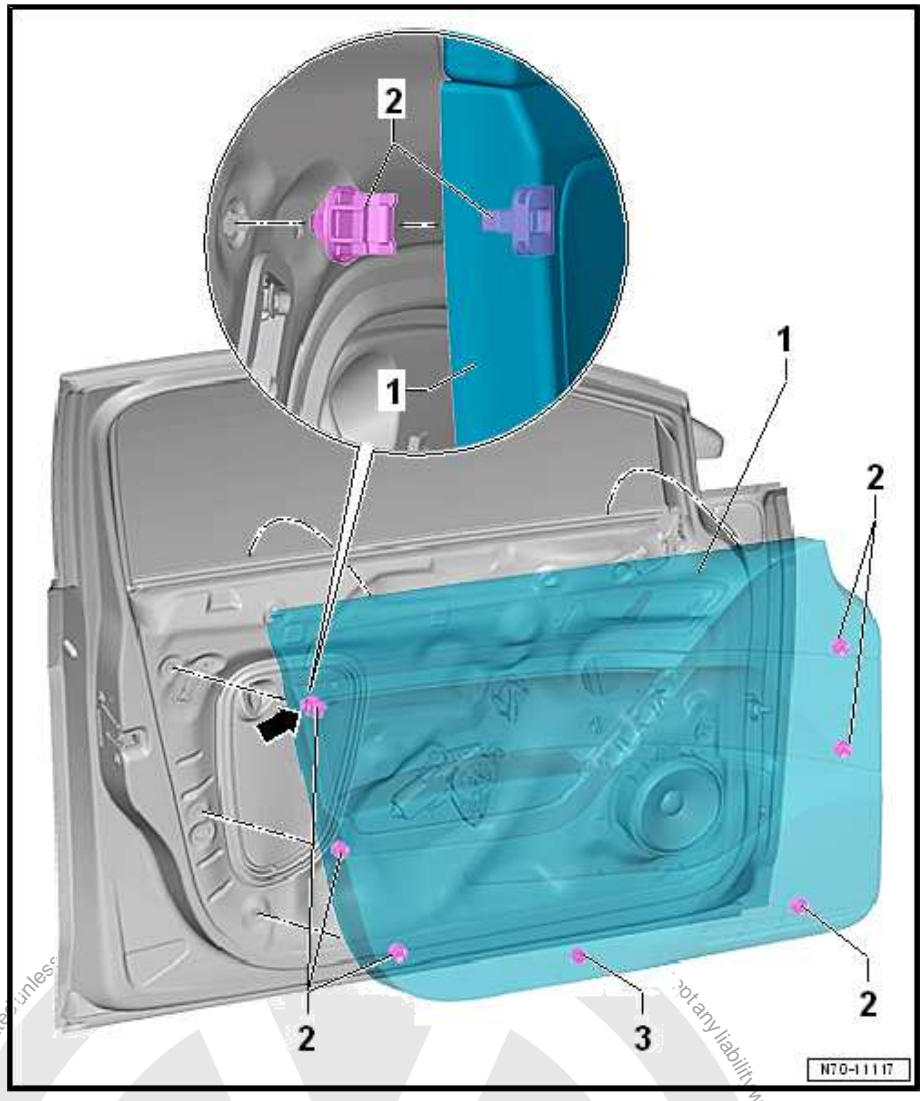

– Loosen the clips -2- for the door trim panel -1- out of the mounts using the Wedge Set - T10383- . The clip -3- was already released.

Note

- *For 4-door vehicles, the left upper clip -arrow- is designed as a crash clip. When prying out the door trim panel, it is automatically released from the window shaft strip.*
- *A crash clip is not installed on 2-door vehicles. All door trim panel clips must be released as described.*

Caution

If the door trim panel is pulled vertically upward out of the window shaft strip, make sure that the door trim panel does not bump into the mirror cover trim and become damaged.

– Remove the door trim panel -1- vertically from the window shaft strip. The crash clip -arrow- is automatically released on 4-door vehicles.

– Depending on the vehicle equipment level, disconnect the connectors from the door trim panel -1-.

Copyright by Volkswagen AG.

– Disconnect the cable -1- from the interior door mechanism.

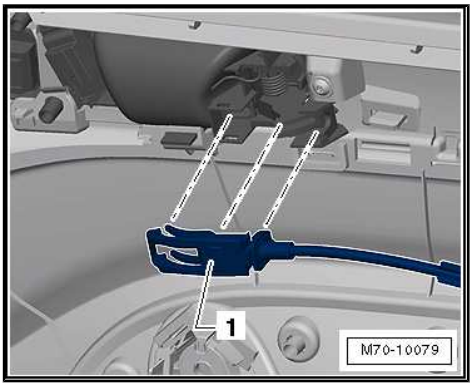

Installing

Note

Check all the fasteners for damage and replace if necessary.

Install in reverse order of removal while paying attention to the following:

– Insert the clips into the front door trim panel.

Caution

Before installing the door trim panel, make sure that the locking mechanism of all clip connections are in -position 1-.

It is not possible to install the door trim panel correctly if the clips are in the -2 position-.

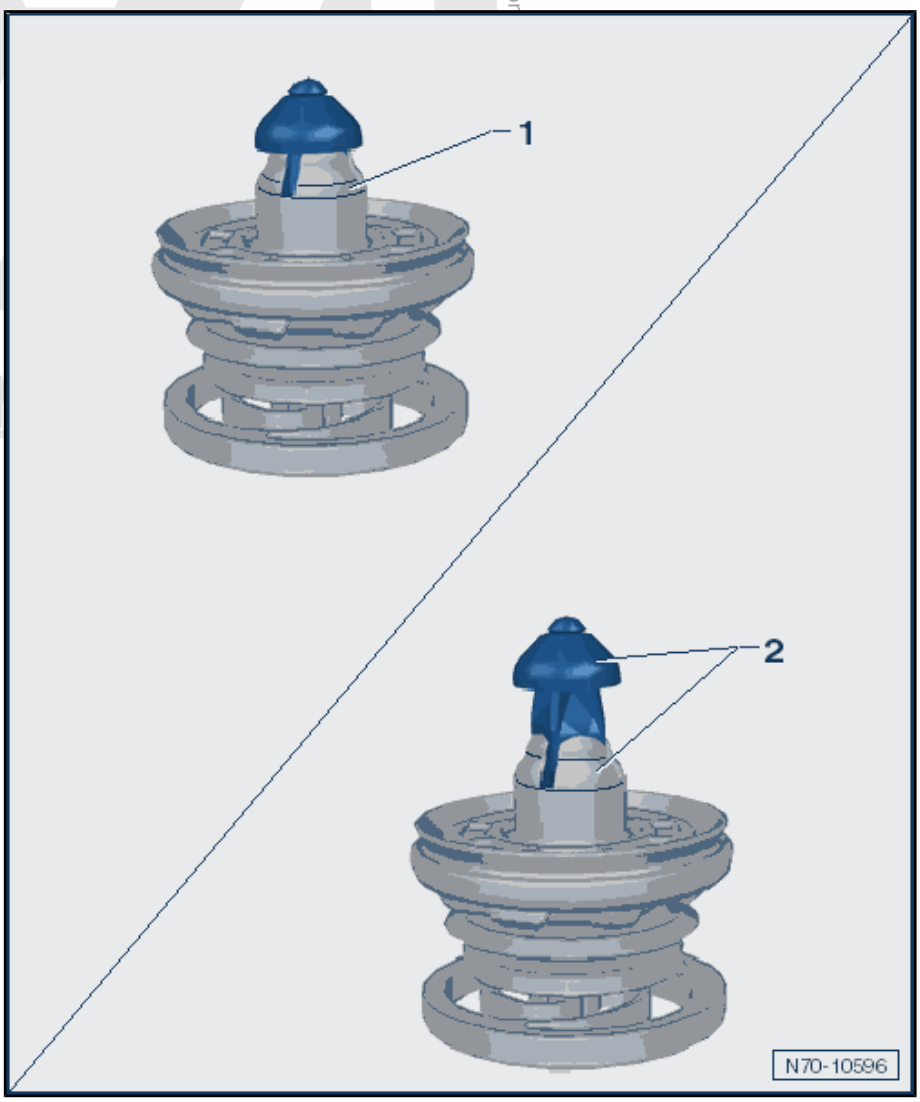

Protected by copyright. Copying for private or commercial purposes, in part or in whole, is not permitted unless authorised by Volkswagen AG. Volkswagen AG does not guarantee or accept any liability with respect to the con

Protected by copyright. Copying for private or commercial purposes, in part or in whole, is not permitted unless authorised by Volkswagen AG. Volkswagen AG does not guarantee or accept any liability with respect to the correctness of information in this document. Copyright by Volkswagen AG.

Tightening Specifications

- Refer to ⇒ “1.1 Overview - Front Door Trim Panel”, page 193

1.3 Mirror Cover Trim, Removing and Installing

Note

- *Removal and installation are described for the mirror cover trim on the driver side. The removal and installation for the front passenger side is identical.*
- *The removal and installation for vehicles with 4-doors is shown. The removal and installation for 2-door vehicles is identical.*

Removing

– Remove the front door trim panel. Refer to ⇒ “1.2 Front Door Trim Panel, Removing and Installing”, page 194 .

– Remove the clips -1- for the mirror cover trim -2-.

– Remove the mirror cover trim -2- from the front door toward the rear -arrow-.

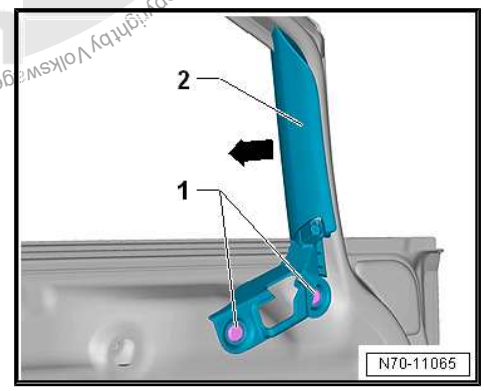

Installing

Note

Check all the fasteners for damage and replace if necessary.

Install in reverse order of removal.

1.4 Interior Door Mechanism, Removing and Installing

The interior door mechanism is clipped into the trim molding for the door trim panel.

Note

- *The removal and installation of the driver side trim molding is described. The removal and installation for the front passenger side is identical.*
- *The removal and installation for vehicles with 4-doors is shown. The removal and installation for 2-door vehicles is identical.*

Removing

– Remove the front door trim panel. Refer to ⇒ “1.2 Front Door Trim Panel, Removing and Installing”, page 194 .

– Remove the Exterior Rearview Mirror Adjuster - EX11- with the Driver Interior Locking Button - E308- . Refer to ⇒ Electrical Equipment; Rep. Gr. 96 ; Controls; Component Location Overview - Front Door Controls .

– Remove the trim molding. Refer to
⇒ “1.5 Trim Molding, Removing and Installing”, page 199 .

– Carefully unclip the interior door mechanism all the way around from the nine retainers in the trim molding.

Installing

Install in reverse order of removal.

1.5 Trim Molding, Removing and Installing

Protected by copyright. Copying for private or commercial purposes, in part or whole, is not permitted unless authorised by Volkswagen AG. Volkswagen AG does not guarantee or accept any liability with respect to the correctness of information in this document. Copyright by Volkswagen AG.

Note

- *The removal and installation of the driver side trim molding is described. The removal and installation for the front passenger side is identical.*
- *The removal and installation for vehicles with 4-doors is shown. The removal and installation for 2-door vehicles is identical.*

Removing

– Remove the front door trim panel. Refer to
⇒ “1.2 Front Door Trim Panel, Removing and Installing”, page 194 .

– Remove the Exterior Rearview Mirror Adjuster - EX11- with the Driver Interior Locking Button - E308- . Refer to ⇒ Electrical Equipment; Rep. Gr. 96 ; Controls; Component Location Overview - Front Door Controls .

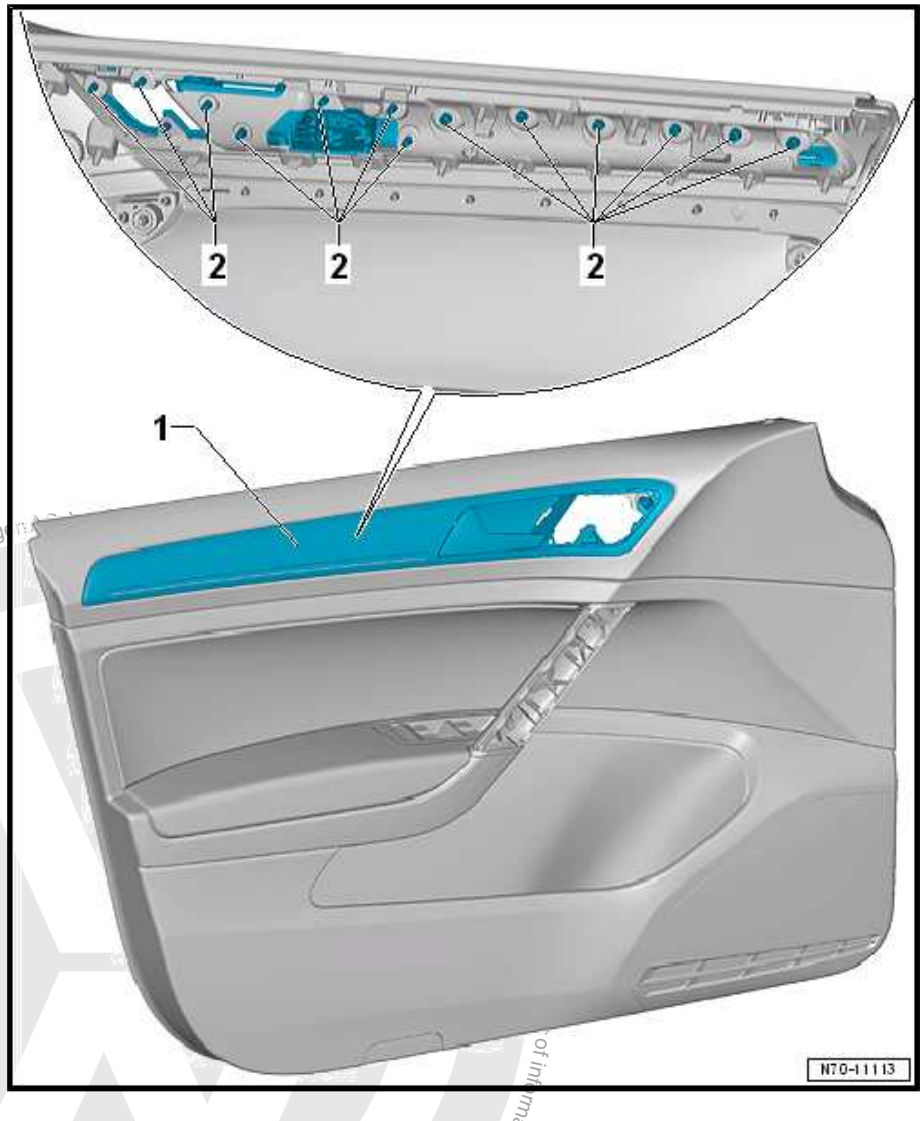

– Drill out the attachment points -2- for the trim molding -1- from the door trim panel using an appropriate drill until the trim molding starts to loosen from the door trim panel.

Caution

The door trim panel must not be damaged by drilling.

– Carefully loosen the attachment points -2- one after the other and remove the trim molding -1- from the door trim panel.

Installing

Lock washers near the trim strip (4-door): 17 mm × 7.5 mm, quantity: 6. Allocation. Refer to the Parts Catalog.

Lock washers near the trim strip (2-door): 17 mm × 7.5 mm, quantity: 9. Allocation. Refer to the Parts Catalog.

Lock washers near the interior door mechanism: 13.4 mm × 6 mm, quantity: 8. Allocation. Refer to the Parts Catalog.

Protected by copyright. Copyright by Volkswagen AG. Commercial purposes, in part or in whole, is not permitted unless authorised by Volkswagen AG. Copyright by Volkswagen AG. of information in this document.

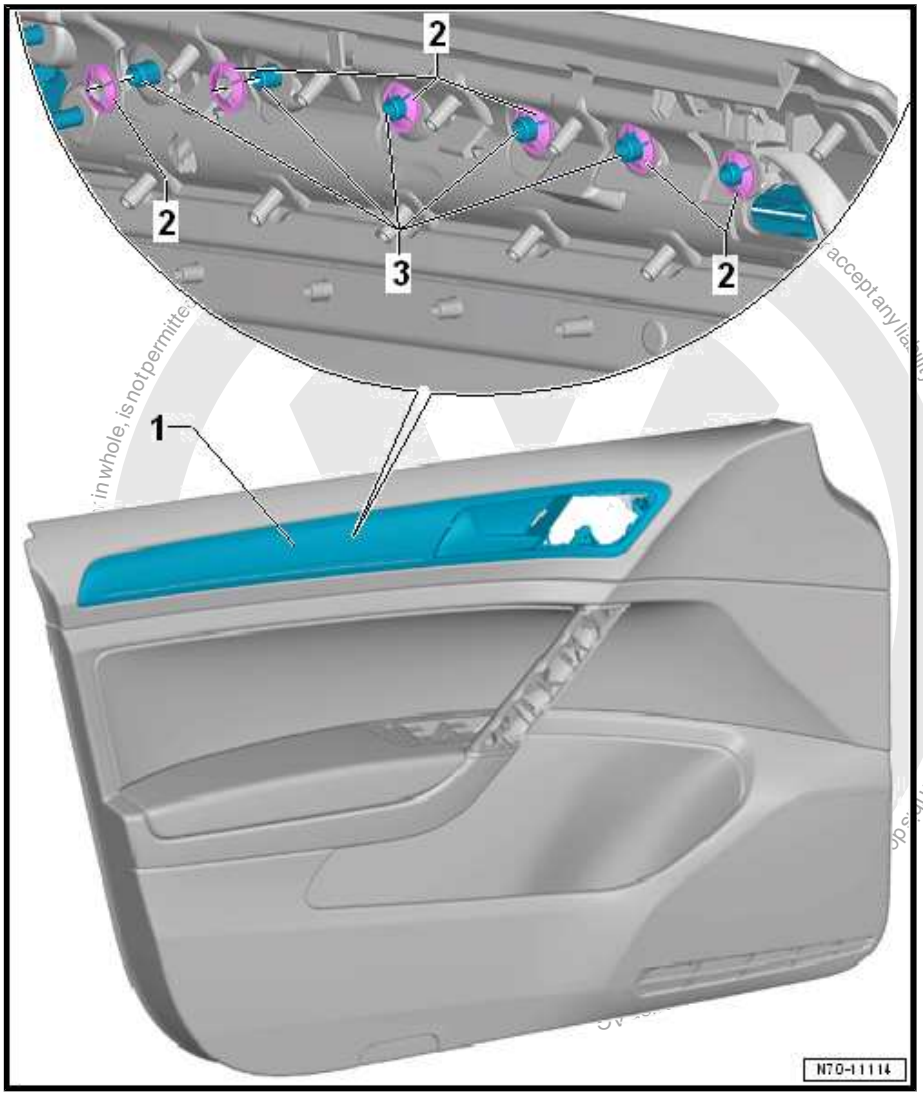

- Insert the new trim molding -1- into the door trim panel.
- Press the lock washers -2- all the way onto the pins -3- of the trim molding.
- Press the remaining lock washers near the interior door mechanism onto the trim molding pins as described.
- Cut back the trim molding pins -3- above the lock washers -2- so that the projecting end is a maximum of 2 mm.
- Install the Exterior Rearview Mirror Adjuster - EX11- with the Driver Interior Locking Button - E308- . Refer to ⇒ Electrical Equipment; Rep. Gr. 96 ; Component Location Overview - Controls in Front Doors .
- Install the front door trim panel. Refer to ⇒ “1.2 Front Door Trim Panel, Removing and Installing”, page 194 .

2 Rear Door Trim Panels

⇒ “2.1 Overview - Rear Door Trim Panel”, page 202

⇒ “2.2 Rear Door Trim Panel, Removing and Installing”, page 203

⇒ “2.3 Interior Door Mechanism, Removing and Installing”, page 206

⇒ “2.4 Trim Molding, Removing and Installing”, page 207

2.1 Overview - Rear Door Trim Panel

Protected by copyright. Copyright by Volkswagen AG. Volkswagen AG does not guarantee or accept any liability with respect to the correctness, in part or in whole, is not permitted unless authorised by Volkswagen AG.

Note

The overview illustration shows the driver side rear door trim panel The illustration for the front passenger side is identical.

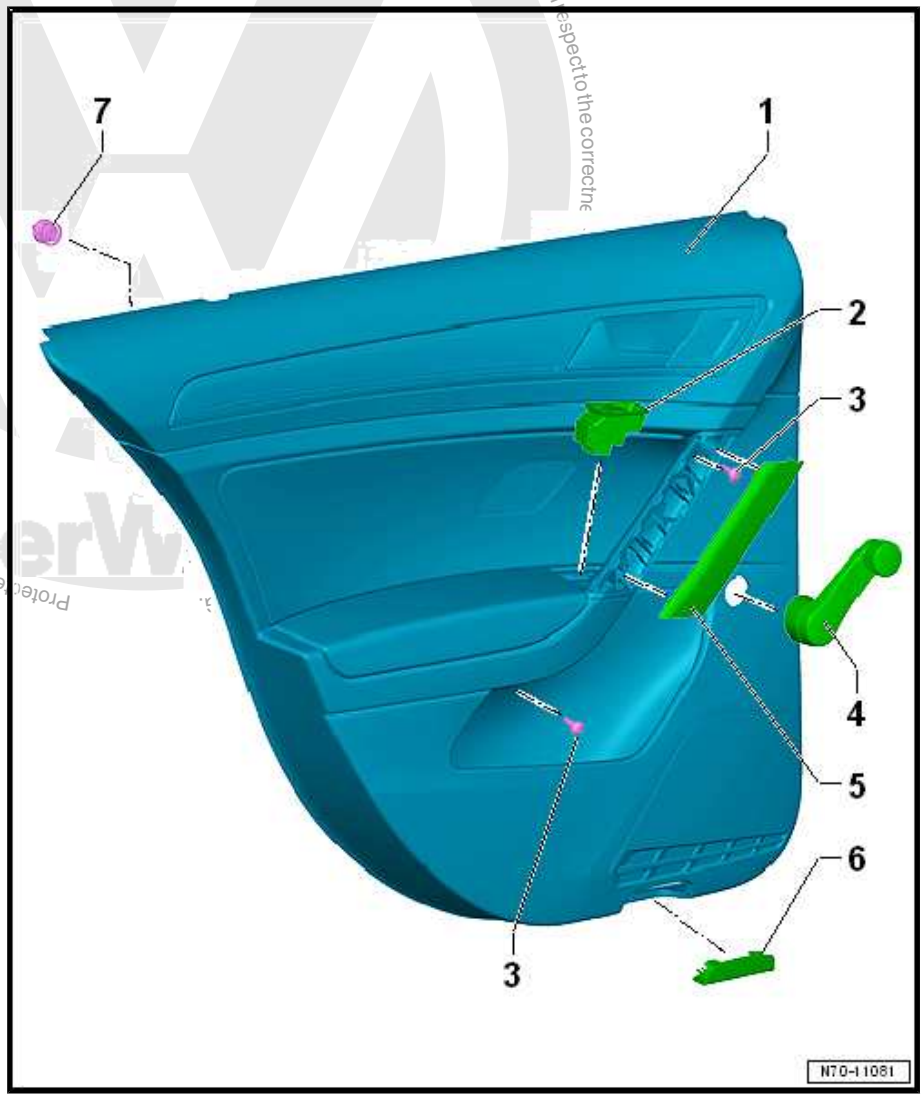

1 - Door Trim Panel

- ❑ Removing and installing. Refer to ⇒ “2.2 Rear Door Trim Panel, Removing and Installing”, page 203 .

2 - Driver Side Rear Power Window Button - E711-

- ❑ Only on vehicles with a power window regulator
- ❑ Component Location Overview. Refer to ⇒ Electrical Equipment; Rep. Gr. 96 ; Controls; Component Location Overview - Controls in Rear Doors .

3 - Screw

- ❑ 4.5 Nm
- ❑ Quantity: 2

4 - Window Crank

- ❑ Only on vehicles with a manual window regulator
- ❑ Removing and installing. Refer to ⇒ Body Exterior; Rep. Gr. 58 ; Door Components; Window Crank, Removing and Installing .

5 - Grip Recess Upper Section

6 - Rear Reflector

- ❑ Component Location Overview. Refer to ⇒ Electrical Equipment; Rep. Gr. 96 ; Lamps; Component Location Overview - Rear Door Lamps .

7 - Clip

- ❑ Quantity: 6
- ❑ Insert in the trim panel

❑ Replace damaged or deformed clips

2.2 Rear Door Trim Panel, Removing and Installing

Note

The removal and installation for the driver side rear door trim panel is described. The removal and installation for the front passenger side is identical.

Special tools and workshop equipment required

- Trim Removal Wedge - 3409-
- Wedge Set - T10383-
- Torque Wrench 1783 - 2-10Nm - VAG1783-

Removing

Vehicles without Power Window Regulator

– Remove the window crank. Refer to ⇒ Body Exterior; Rep. Gr. 58 ; Door Components; Window Crank, Removing and Installing .

Continuation for All Vehicles

– Turn off the ignition and all electrical equipment and remove the ignition key.

– Remove the handle molding upper section -1- with the Trim Removal Wedge - 3409- from the mounts in the door trim panel.

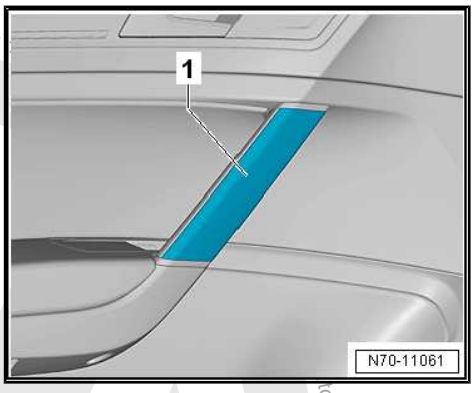

– Remove the bolts -1-.

– Remove the rear reflector. Refer to ⇒ Electrical Equipment; Rep. Gr. 96 ; Lamps; Component Location Overview - Rear Door Lamps for the component location overview.

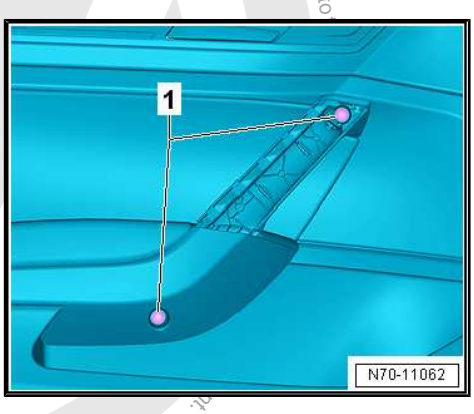

Protected by copyright. Copying for private or commercial purposes, in part or in whole, is not permitted unless authorised by Volkswagen AG. Copyright by Volkswagen AG.

– Turn/release the clip -1- 90° in direction of the -arrow- ($^1/_4$ of a turn) using TORX® T30.

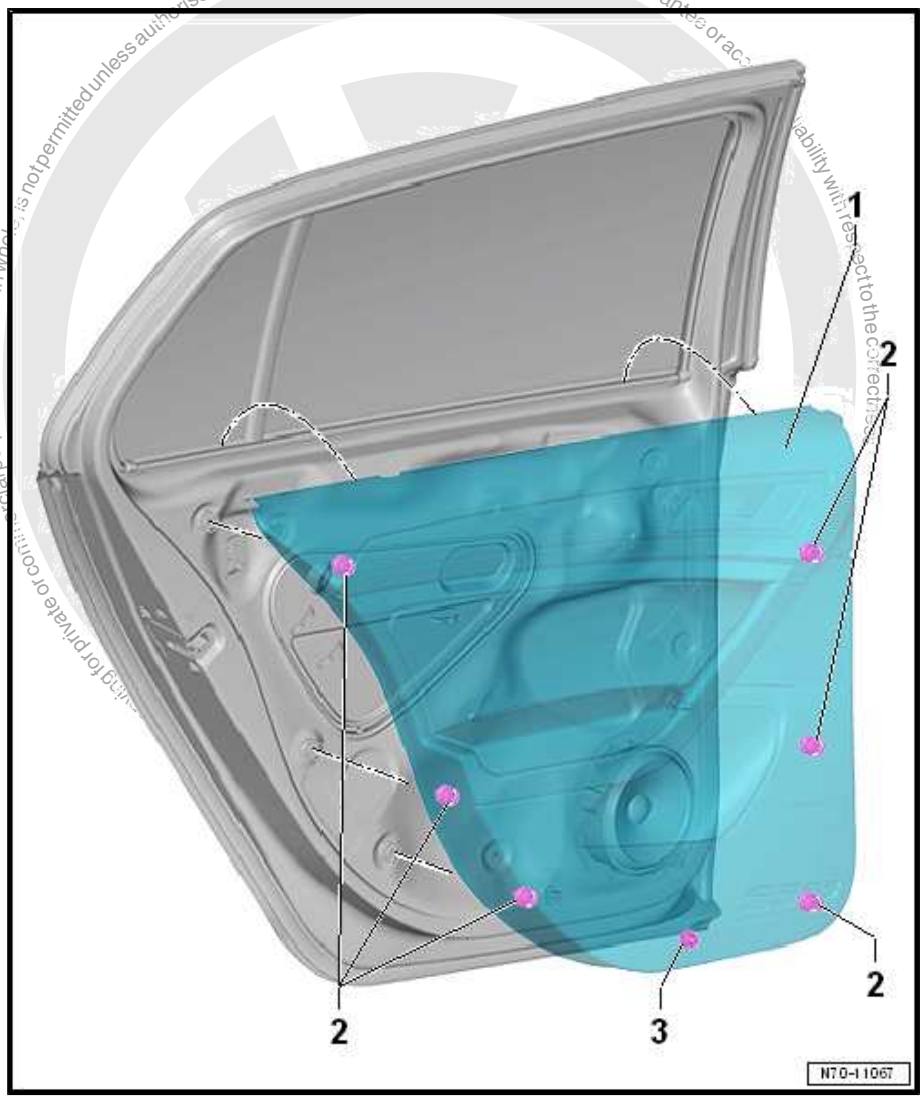

– Loosen the clips -2- for the door trim panel -1- out of the mounts using the Wedge Set - T10383- . The clip -3- was already released.

– Remove the door trim panel -1- vertically from the window shaft strip.
– Depending on the vehicle equipment level, disconnect the connectors from the door trim panel -1-.
– Disconnect the cable -1- from the interior door mechanism.

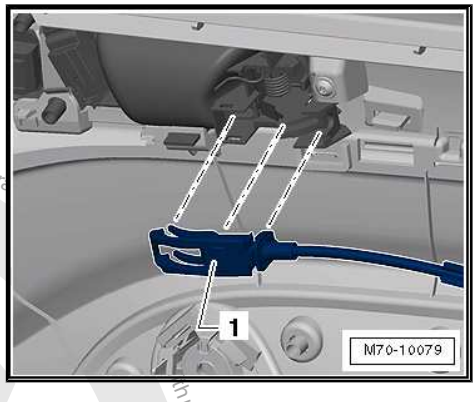

Installing

Note

Check all the fasteners for damage and replace if necessary.

Install in reverse order of removal while paying attention to the following:

– Insert the clips into the rear door trim panel.

Caution

Before installing the door trim panel, make sure that the locking mechanism of all clip connections are in -position 1-.

It is not possible to install the door trim panel correctly if the clips are in the -2 position-.

Protected by copyright. Copying for private or commercial purposes, in part or in whole, is not permitted unless authorised by Volkswagen AG. Volkswagen AG does not guarantee or accept any liability with respect to the correctness of information in this document. Copyright by Volkswagen AG.

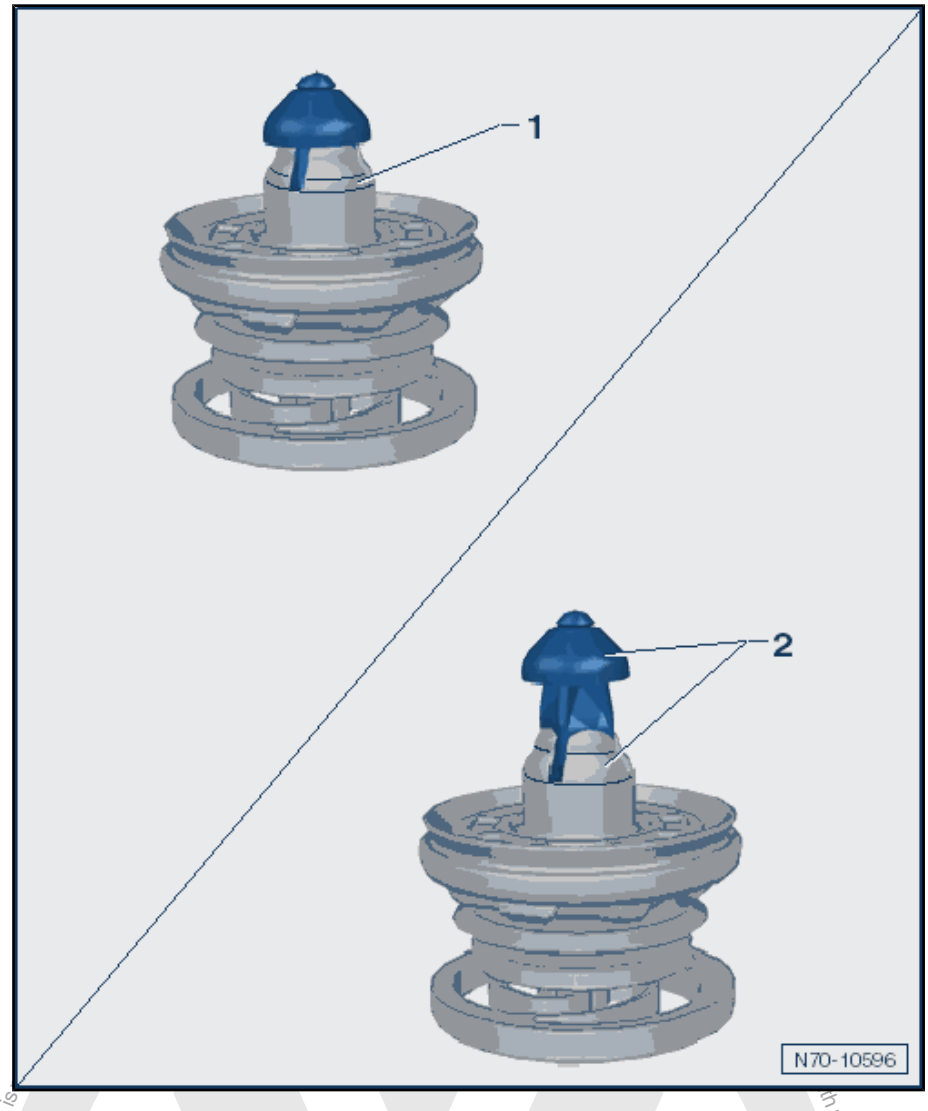

Tightening Specifications

- Refer to ⇒ “2.1 Overview - Rear Door Trim Panel”, page 202

2.3 Interior Door Mechanism, Removing and Installing

The interior door mechanism is clipped into the trim molding for the door trim panel.

Note

The removal and installation of the driver side trim molding is described. The removal and installation for the front passenger side is identical.

Removing

– Remove the rear door trim panel. Refer to ⇒ “2.2 Rear Door Trim Panel, Removing and Installing”, page 203 .

– Remove the trim molding. Refer to ⇒ “2.4 Trim Molding, Removing and Installing”, page 207 .

Copyright by Volkswagen AG. Protected by copyright. Copying for private or commercial purposes, part or in whole, is not permitted unless authorised by Volkswagen AG. Volkswagen AG does not guarantee or accept any liability with respect to the correctness of information in this document.

– Carefully unclip the interior door mechanism all the way around from the retainers in the trim molding.

Installing

Install in reverse order of removal.

2.4 Trim Molding, Removing and Installing

Note

The removal and installation of the driver side trim molding is described. The removal and installation for the front passenger side is identical.

Removing

– Remove the rear door trim panel. Refer to ⇒ “2.2 Rear Door Trim Panel, Removing and Installing”, page 203 .

– Drill out the attachment points -2- for the trim molding -1- from the door trim panel using an appropriate drill until the trim molding starts to loosen from the door trim panel.

Caution

The door trim panel must not be damaged by drilling.

– Carefully loosen the attachment points -2- one after the other and remove the trim molding -1- from the door trim panel.

Protected by copyright. Copying for private or commercial purposes, in part or in whole, is not permitted unless authorised by Volkswagen AG. Volkswagen AG does not guarantee or accept any liability with respect to the correctness of information in this document. Copyright by Volkswagen AG.

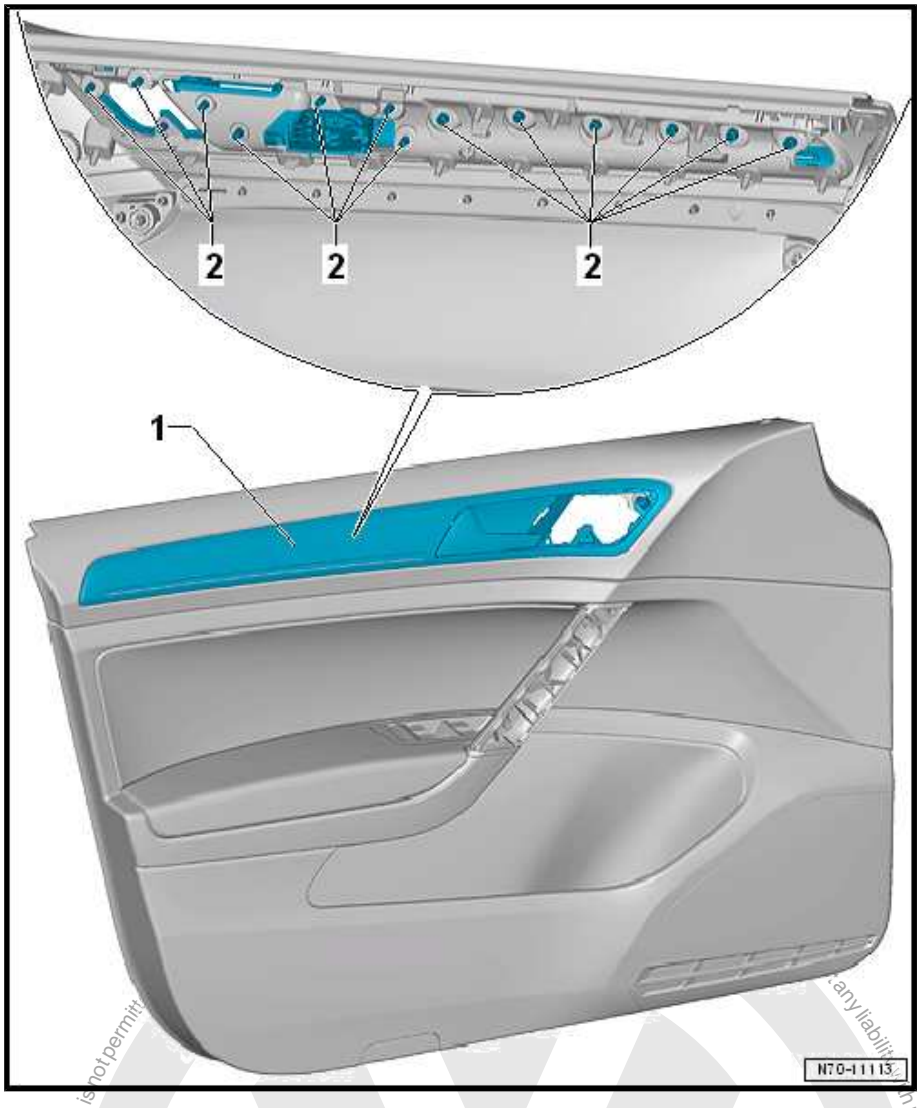

Installing

Lock washers near the trim strip: 17 mm × 7.5 mm, quantity: 7. Allocation. Refer to the Parts Catalog.

Lock washers near the interior door mechanism: 13.4 mm × 6 mm, quantity: 6. Allocation. Refer to the Parts Catalog.

– Insert the new trim molding -1- into the door trim panel.

– Press the lock washers -2- all the way onto the pins -3- of the trim molding.

– Press the remaining lock washers near the interior door mechanism onto the trim molding pins as described.

– Cut back the trim molding pins -3- above the lock washers -2- so that the projecting end is a maximum of 2 mm.

– Install the rear door trim panel. Refer to ⇒ “2.2 Rear Door Trim Panel, Removing and Installing”, page 203 .

Protected by copyright. Copying for private or commercial purposes, in part or in whole, is not permitted unless authorized by Volkswagen AG. Volkswagen AG does not guarantee or accept any liability with respect to the correctness of information in this document. Copyright by Volkswagen AG.

Copyright. Copying for private or commercial purposes, in part or in whole, is not permitted unless authorised by Volkswagen AG. Volkswagen AG does not guarantee or a

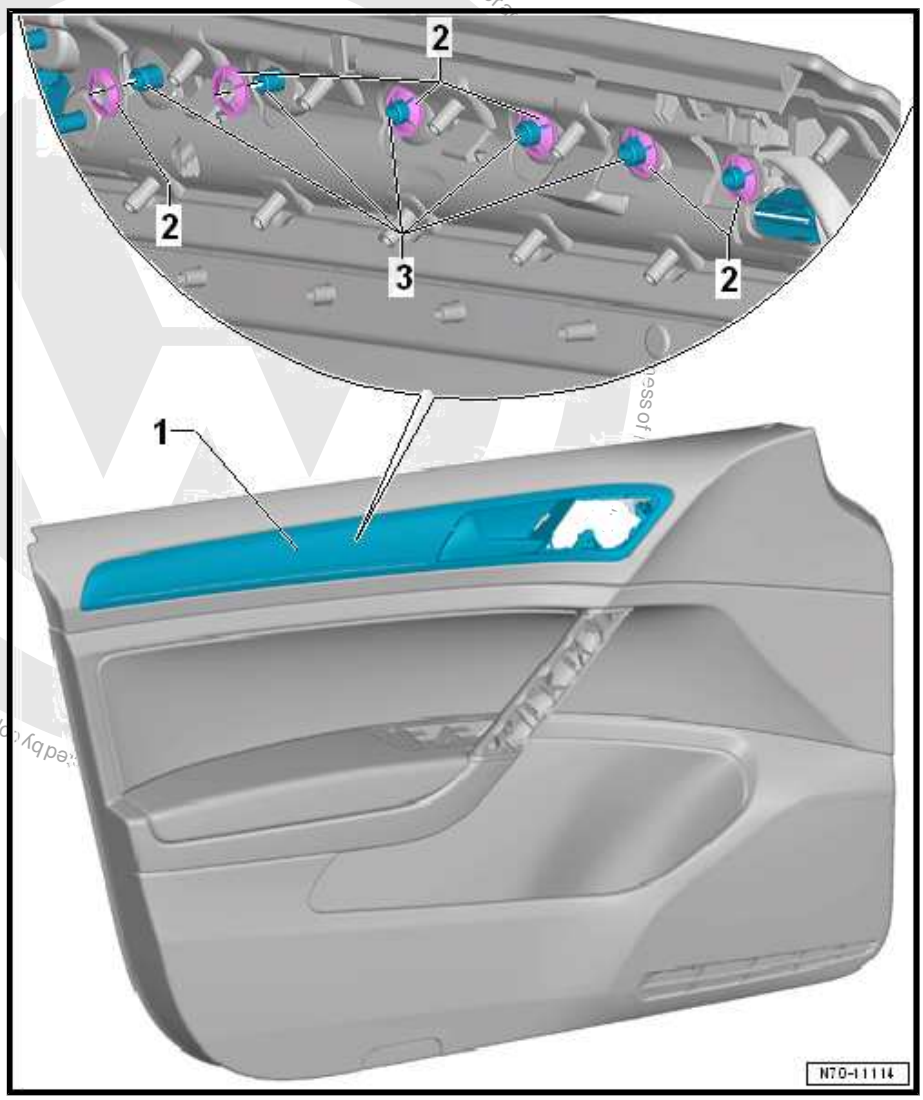

3 Instrument Panel

⇒ "3.1 Overview - Instrument Panel", page 210

⇒ "3.2 Instrument Panel Side Cover, Removing and Installing", page 211

⇒ "3.3 Instrument Panel Decorative Trim, Removing and Installing", page 211

⇒ "3.4 Light Switch Trim, Removing and Installing", page 212

⇒ "3.5 Instrument Cluster Trim, Removing and Installing", page 212

⇒ "3.6 Instrument Panel, Removing and Installing", page 213

⇒ "3.7 Instrument Panel Vent, Removing and Installing", page 220

⇒ "3.8 Side Defroster Vent, Removing and Installing", page 223

⇒ "3.9 Front Passenger Side Impact Absorber, Removing and Installing", page 223

Protected by copyright. Copying for private or commercial purposes, in part or in whole, is not permitted unless authorised by Volkswagen AG. Volkswagen AG does not guarantee or accept any liability with respect to the correctness of information in this document. C

3.1 Overview - Instrument Panel

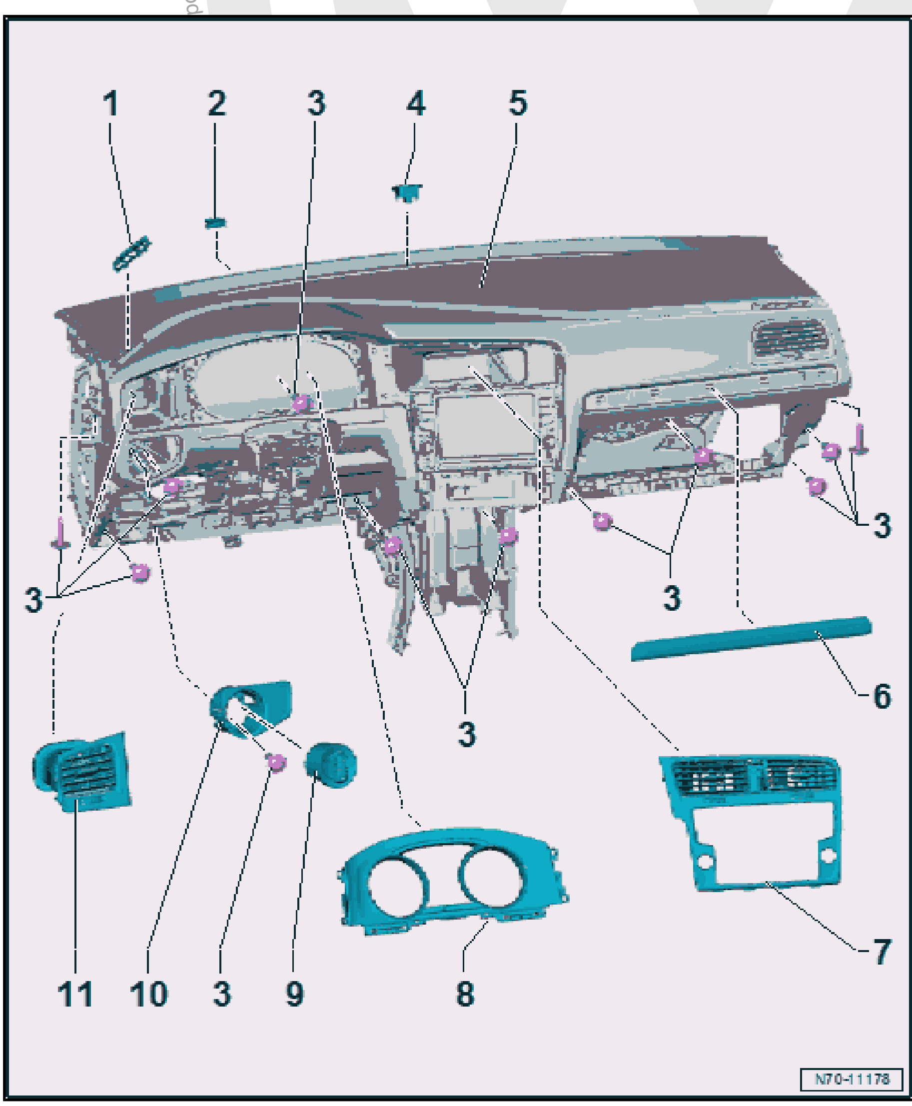

1 - Side Defroster Vent
- ❑ Left and right
- ❑ Removing and installing. Refer to ⇒ "3.8 Side Defroster Vent, Removing and Installing", page 223 .

2 - Rubber Buffer
- ❑ Quantity: 2
- ❑ Pushed on the instrument panel mount under the windshield frame

3 - Screw
- ❑ 1.5 Nm

4 - Sunlight Photo Sensor - G107-
- ❑ Removing and installing. Refer to ⇒ Heating, Ventilation, and Air Conditioning; Rep. Gr. 87 ; Additional Components for Control and Regulation; Sunlight Photo Sensor G107, Removing and Installing .

5 - Instrument Panel
- ❑ Removing and installing. Refer to ⇒ "3.6 Instrument Panel, Removing and Installing", page 213 .

6 - Instrument Panel Decorative Trim
- ❑ Allocation. Refer to the Parts Catalog.

- ❑ Removing and installing. Refer to
  ⇒ “3.3 Instrument Panel Decorative Trim, Removing and Installing”, page 211 .

7 - Center Vent with Front Information Display Control Head - J685- Trim

Note

Always remove the Front Information Display Control Head - J685- trim together with the center vent.

- ❑ Removing and installing. Refer to ⇒ “3.7 Instrument Panel Vent, Removing and Installing”, page 220 .

8 - Instrument Cluster Trim

- ❑ Removing and installing. Refer to ⇒ “3.5 Instrument Cluster Trim, Removing and Installing”, page 212 .

9 - Rotary Light Switch - EX1-

- ❑ Removing and installing. Refer to ⇒ Electrical Equipment; Rep. Gr. 96 ; Controls; Rotary Light Switch EX1, Removing and Installing .

10 - Light Switch Trim

- ❑ Removing and installing. Refer to ⇒ “3.4 Light Switch Trim, Removing and Installing”, page 212 .

11 - Side Instrument Panel Vent

- ❑ Left and right
- ❑ Removing and installing. Refer to ⇒ “3.7 Instrument Panel Vent, Removing and Installing”, page 220 .

3.2 Instrument Panel Side Cover, Removing and Installing

Note

Removal and installation are described for the driver side instrument panel side cover. The removal and installation for the front passenger side is identical.

Special tools and workshop equipment required

- ♦ Trim Removal Wedge - 3409-

Removing

– Pry off the instrument panel side cover -1- using the Trim Removal Wedge - 3409- .

– Remove the cover rearward from the A-pillar gap cover.

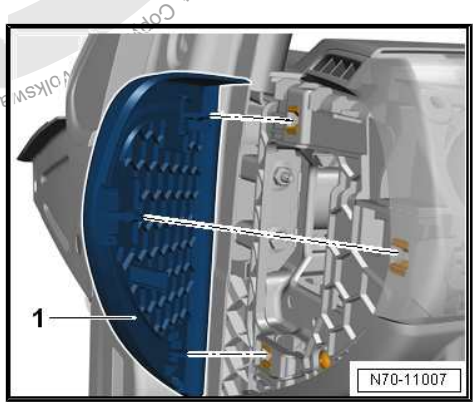

Installing

Note

Check all the fasteners for damage and replace if necessary.

Install in reverse order of removal.

3.3 Instrument Panel Decorative Trim, Removing and Installing

Special tools and workshop equipment required

- ♦ Trim Removal Wedge - 3409-

Protected by copyright. Copying for private or commercial purposes in part or in whole, is not permitted unless authorised by Volkswagen AG. Volkswagen AG does not guarantee or accept any liability with respect to the correctness of information in this document. Copyright by Volkswagen AG.

Removing

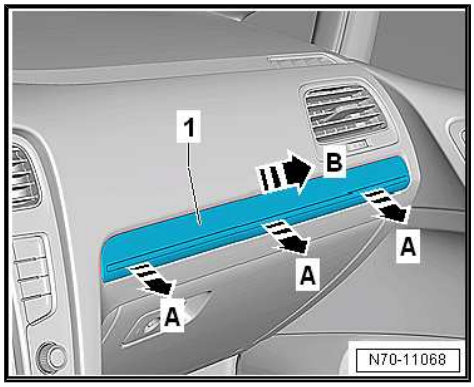

– First loosen the trim molding -1- from the retainers using the Trim Removal Wedge - 3409- in direction of -arrows A-.

– Then slide the trim molding -1- outward in direction of -arrow B- and remove it.

Installing

Note

Check all the fasteners for damage and replace if necessary.

Install in reverse order of removal.

3.4 Light Switch Trim, Removing and Installing

Special tools and workshop equipment required

♦ Torque Wrench 1783 - 2-10Nm - VAG1783-

Removing

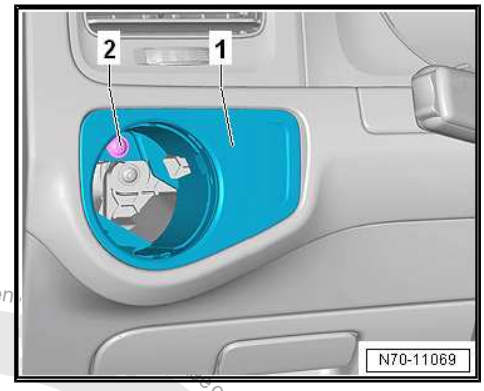

– Remove the Rotary Light Switch - EX1- . Refer to ⇒ Electrical Equipment; Rep. Gr. 96 ; Controls; Component Location Overview - Instrument Panel Controls .

– Remove the bolt -2-.

– Remove the light switch trim -1- from the instrument panel toward the rear.

– If installed, release and disconnect the connector from the Headlamp Range Control Adjuster - E102- .

Installing

Note

Check all the fasteners for damage and replace if necessary.

Install in reverse order of removal.

Tightening Specifications

♦ Refer to ⇒ “3.1 Overview - Instrument Panel”, page 210

3.5 Instrument Cluster Trim, Removing and Installing

Special tools and workshop equipment required

♦ Trim Removal Wedge - 3409-

Removing

– Remove the side instrument panel vent on the driver side. Refer to ⇒ “3.7 Instrument Panel Vent, Removing and Installing”, page 220 .

– Loosen the center vent, but do not completely remove it. Refer to ⇒ “3.7 Instrument Panel Vent, Removing and Installing”, page 220 .

Protected by copyright. Copying for private or commercial purposes, in part or in whole, is not permitted unless authorised by Volkswagen AG. Volkswagen does not give any warranty or accept any liability with respect to the correctness of information in this document. Copyright by Volkswagen AG.

– Loosen the gap cover near the instrument cluster trim, but do not completely remove it. Refer to
⇒ “1.10 Instrument Cluster Gap Cover, Removing and Installing”, page 30 .

– Unclip the instrument cluster trim -1- from the instrument panel using the Trim Removal Wedge - 3409- .

– Remove the instrument cluster trim -1- from the instrument cluster -2-.

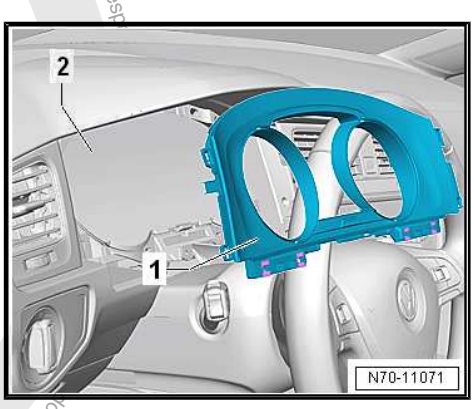

Installing

Note

Check all the fasteners for damage and replace if necessary.

Install in reverse order of removal.

3.6 Instrument Panel, Removing and Installing

Special tools and workshop equipment required

♦ Torque Wrench 1783 - 2-10Nm - VAG1783-

Removing

– Remove the center console. Refer to
⇒ “3.8 Center Console, Removing and Installing”, page 59 .

– Move the front seats all the way back.

– Disconnect the battery ground cable. Refer to ⇒ Electrical Equipment; Rep. Gr. 27 ; Battery; Battery, Disconnecting and Connecting .

– Remove the driver side airbag. Refer to
⇒ “5.2 Airbag Unit with Igniter, Removing and Installing”, page 132 .

– Remove the steering wheel. Refer to ⇒ Suspension, Wheels, Steering; Rep. Gr. 48 ; Steering Wheel; Steering Wheel, Removing and Installing .

– Remove the steering column switch. Refer to ⇒ Electrical Equipment; Rep. Gr. 94 ; Steering Column Switch Module; Steering Column Switch Module, Removing and Installing .

– Remove the light switch trim. Refer to
⇒ “3.4 Light Switch Trim, Removing and Installing”, page 212 .

– Remove the instrument panel cover on the driver side. Refer to
⇒ “1.9 Driver Side Instrument Panel Cover, Removing and Installing”, page 28 .

– Remove the glove compartment. Refer to
⇒ “1.17 Glove Compartment, Removing and Installing”, page 36 .

– Remove the center vent. Refer to
⇒ “3.7 Instrument Panel Vent, Removing and Installing”, page 220 .

– Remove the instrument cluster. Refer to ⇒ Electrical Equipment; Rep. Gr. 90 ; Instrument Cluster; Instrument Cluster - KX2- , Removing and Installing .

Protected by copyright. Copyright for private or commercial purposes, in part or in whole, is not permitted unless authorised by Volkswagen AG. Volkswagen AG does not guarantee or accept any liability with respect to the document. Copyright by Volkswagen AG.

– Remove the Front Information Display Control Head - J685- . Refer to ⇒ Communication; Rep. Gr. 91 ; Infotainment System; Infotainment System Display, Removing and Installing .

– Remove the left and right triangular window trim panel. Refer to ⇒ “5.12 A-Pillar Trim Panel, Removing and Installing”, page 252 .

– If equipped, remove the Sunlight Photo Sensor - G107- . Refer to ⇒ Heating, Ventilation, and Air Conditioning; Rep. Gr. 87 ; Additional Components for Control and Regulation; Sunlight Photo Sensor G107, Removing and Installing .

– Disconnect the front passenger airbag connector. Refer to ⇒ “6.2 Front Passenger Airbag Unit with Igniter, Removing and Installing”, page 139 .

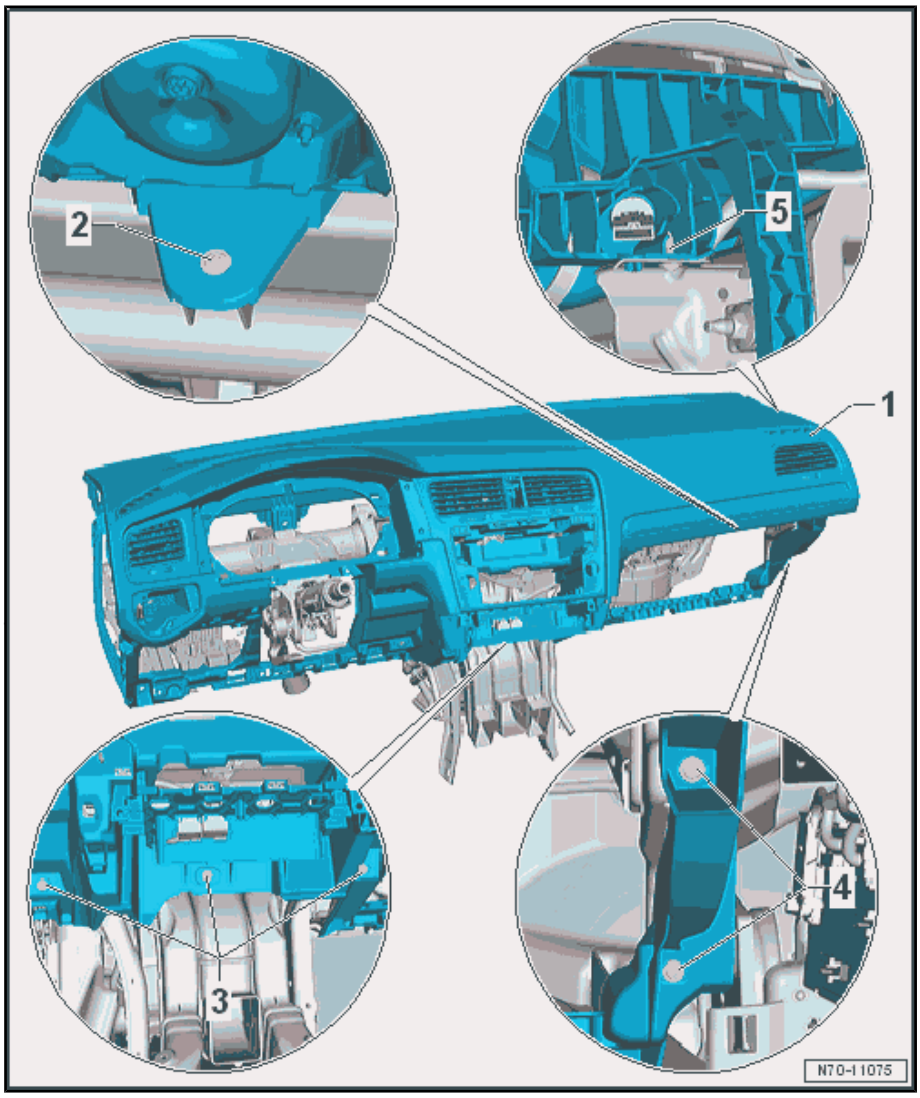

– Remove the screw -2- for securing the instrument panel -1- from the central tube on the front passenger side.

– Remove the screws -3- for securing the instrument panel -1- from the central tube in the center.

– Remove the screws -4 and 5- for securing the instrument panel -1- from the central tube on the right side.

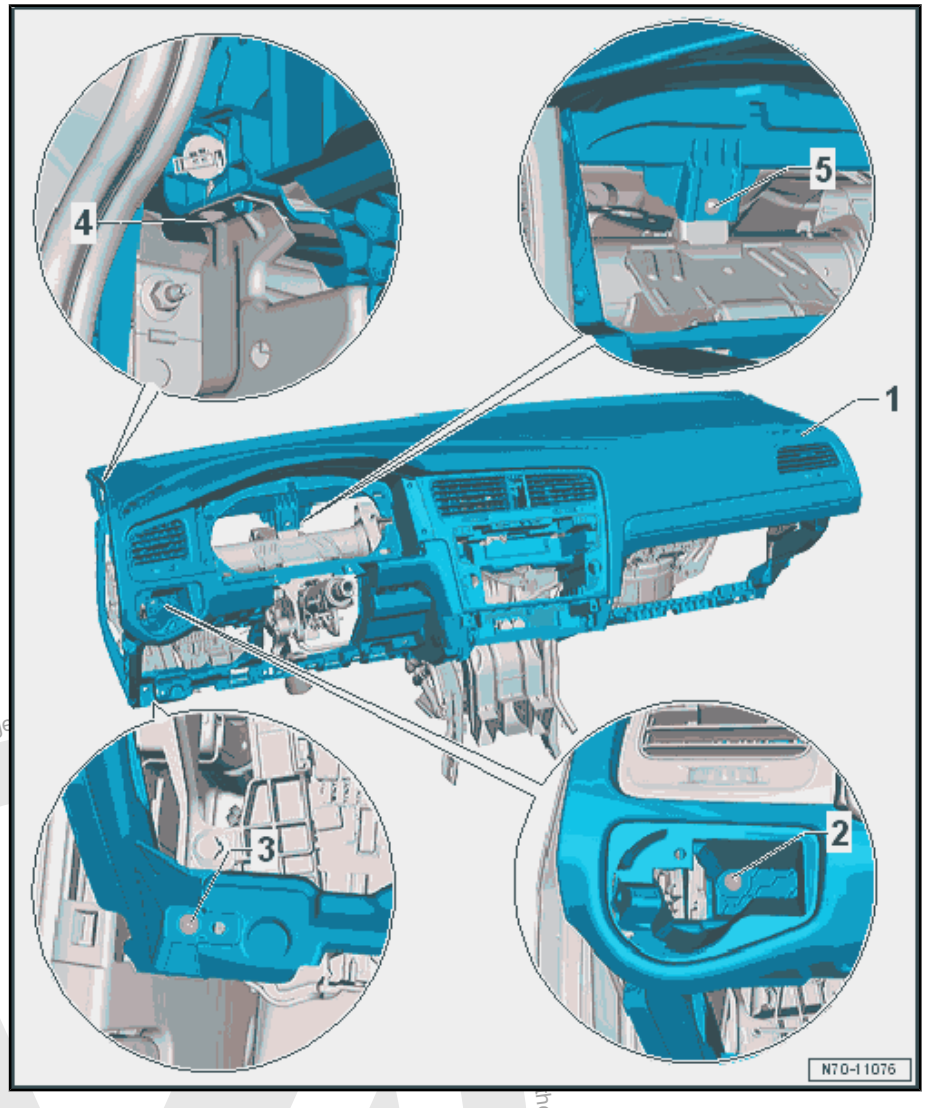

– Remove the screws -2 through 4- for securing the instrument panel -1- from the central tube on the left side.

– Remove the screw -5- for securing the instrument panel -1- from the central tube on the driver side.

Protected by copyright. Copyright for private or commercial purposes, in part or in whole, is not permitted unless authorised by Volkswagen AG. Copyright by Volkswagen AG. The correctness of information in this document

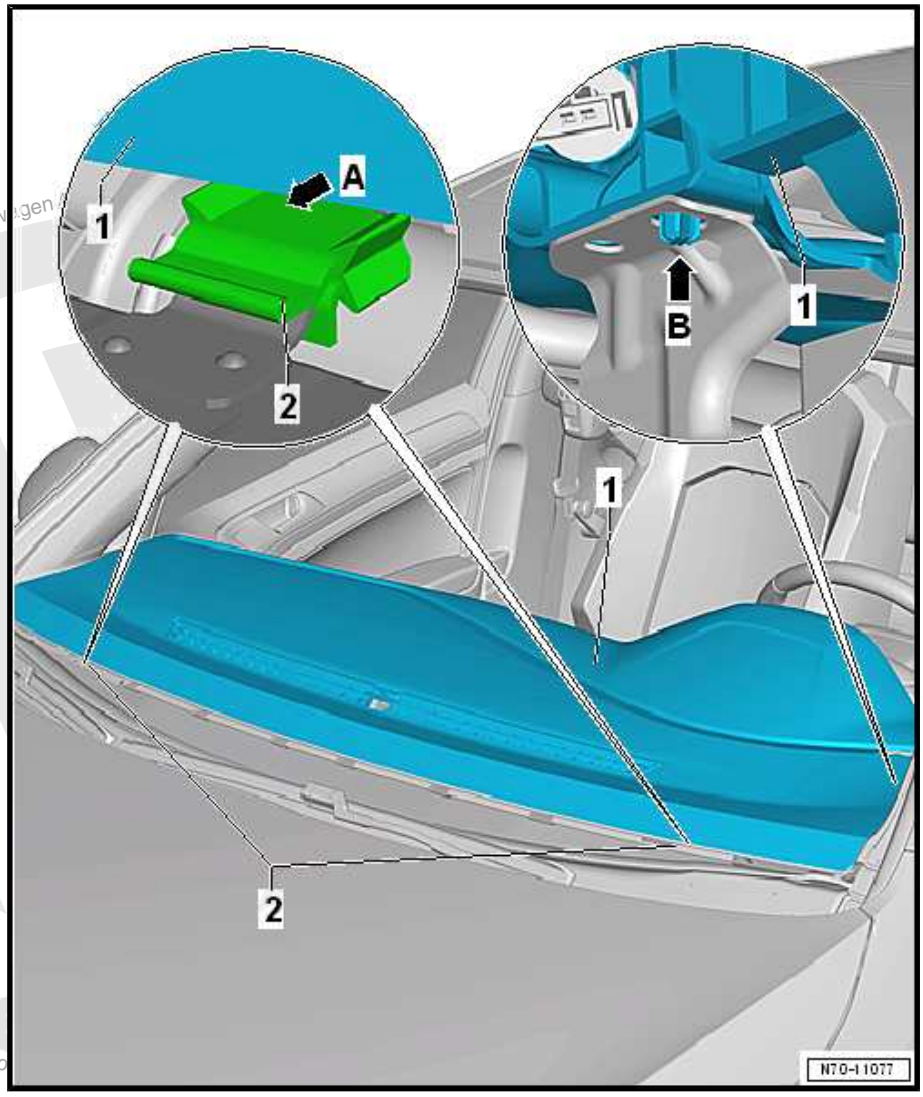

ted by copyright. Copying for private or commercial purposes, in part or in whole, is not permitted unless authorised by Volkswagen

– Lift the instrument panel -1- until the left and right guide tabs -arrow B- are free.

– At the same time, remove the instrument panel -1- from the mounts -2- in the windshield transition area -arrow A-.

Note

A second technician is needed to remove the instrument panel.

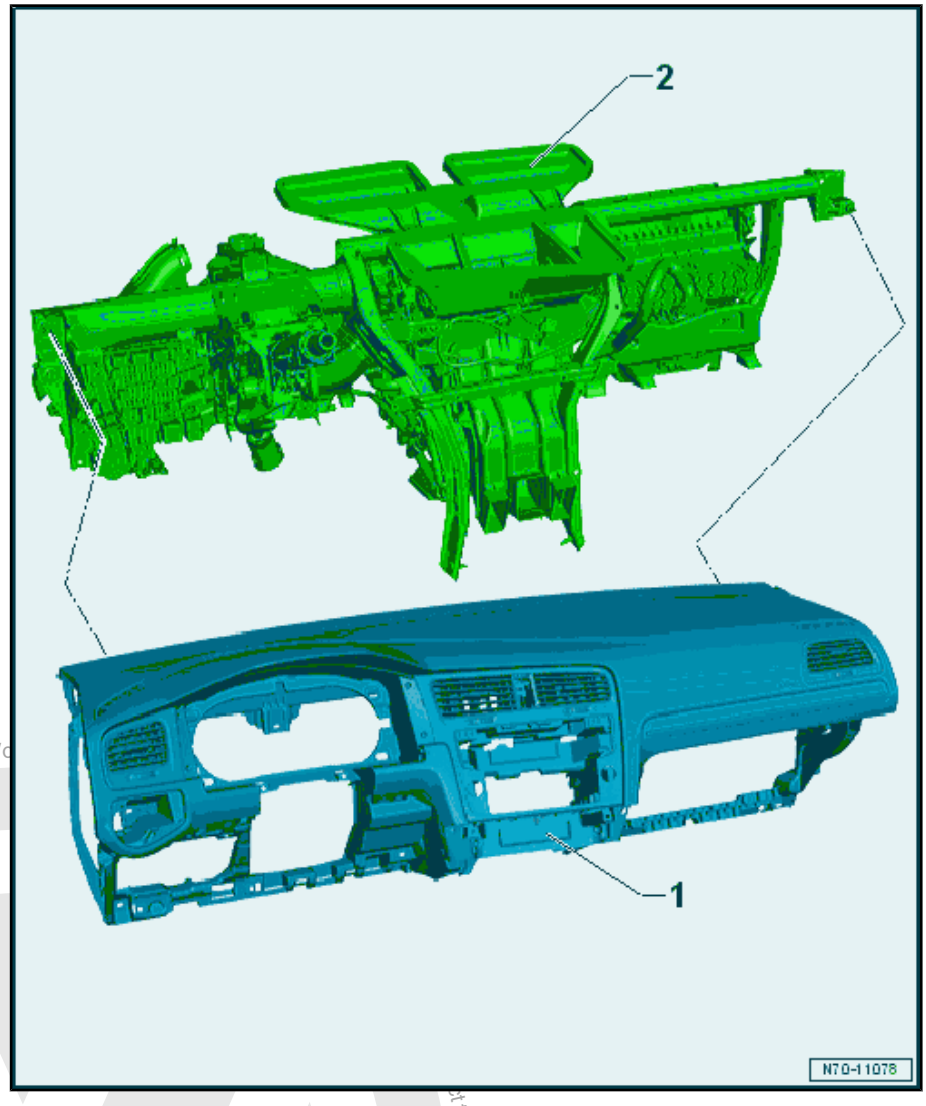

– Remove the instrument panel -1- from the instrument panel central tube -2-.

– Disconnect the connector and free up the wiring harness from the instrument panel.

– Carefully remove the instrument panel from the vehicle interior and lay it on a soft surface.

Installing

Note

- *Check all the fasteners for damage and replace if necessary.*
- *Follow the bolt sequence for securing the instrument panel in the reverse order.*

Install in reverse order of removal while paying attention to the following:

Protected by copyright. Copying for private or commercial purposes, in part or in whole, is not permitted unless authorised by Volkswagen AG. Volkswagen AG does not guarantee or accept any liability with respect to the correctness of information in this document. Copyright by Volkswagen AG.

Protected by copyright. Copying for private or commercial purposes, in part or in whole, is not permitted unless authorised by Volkswagen AG. Volkswagen AG does no

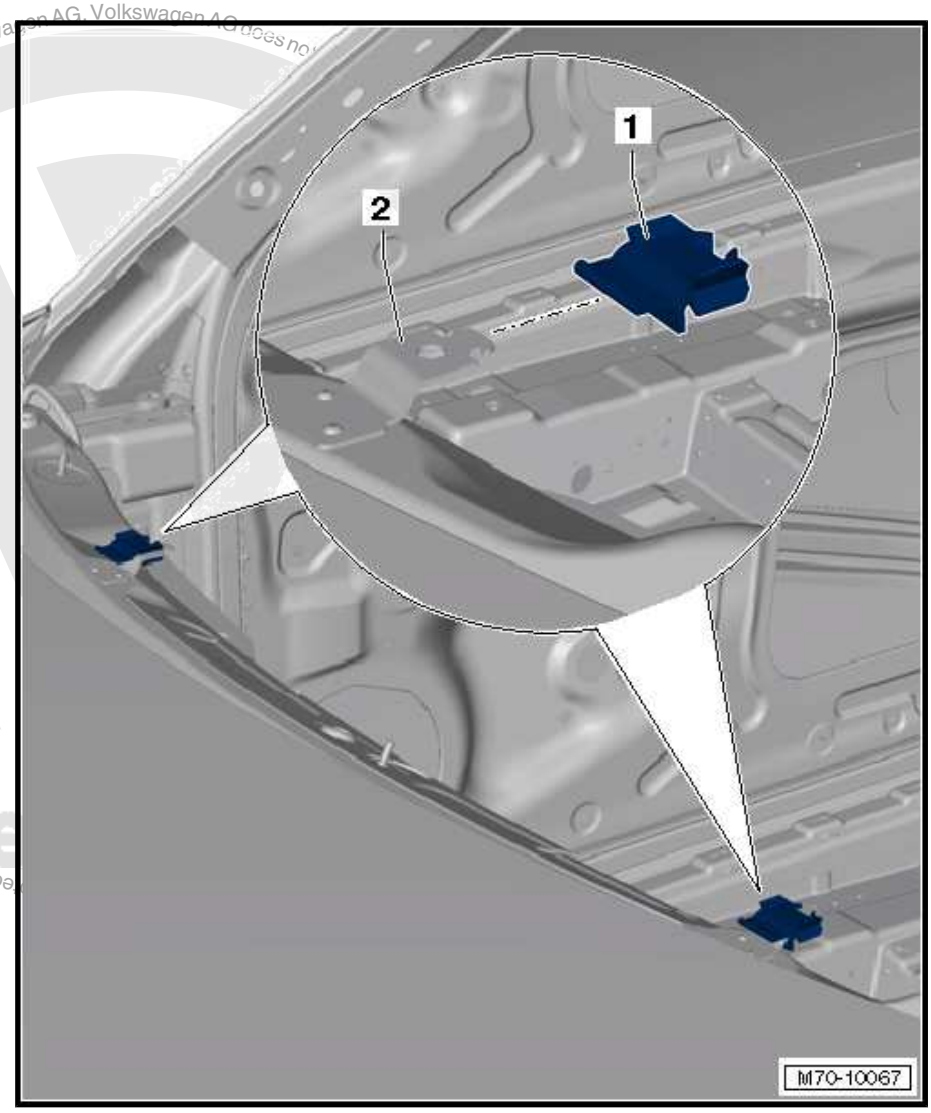

– Make sure that the mounts -1- are secured inside the body -2- before installing the instrument panel.

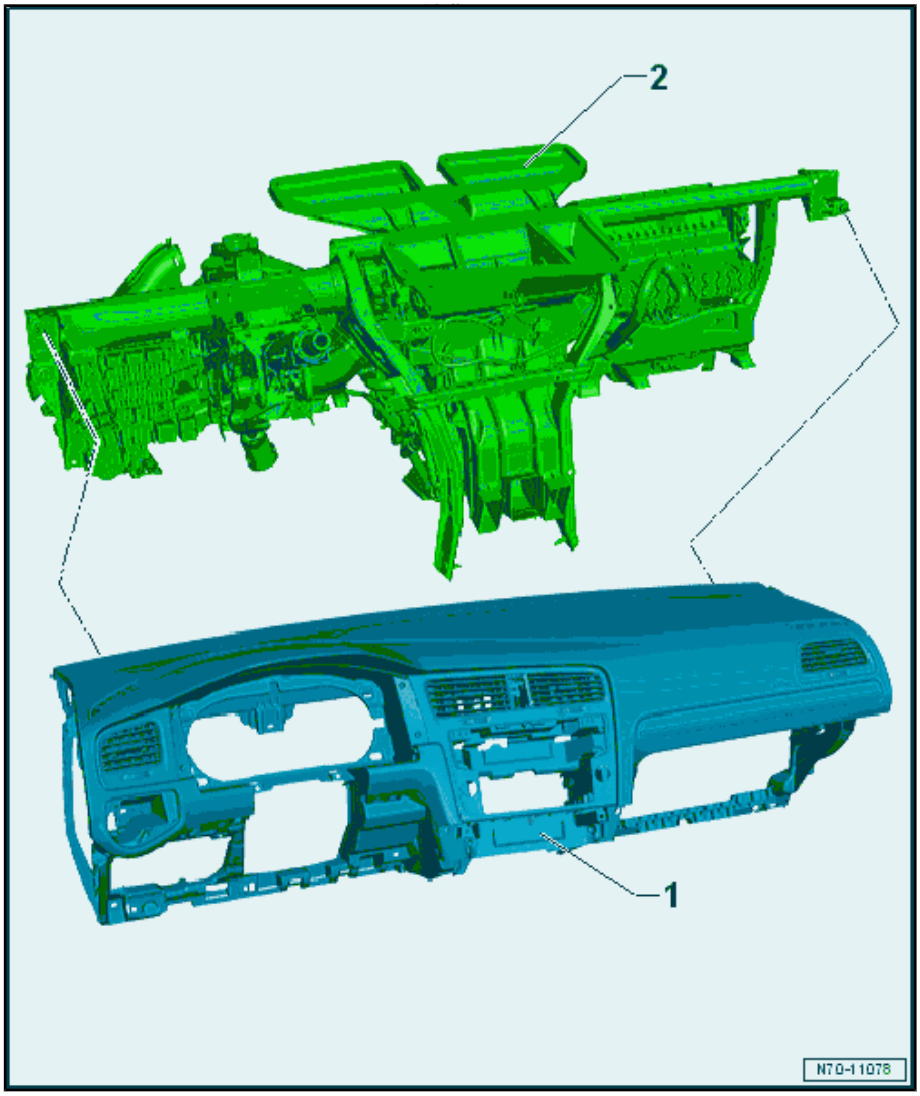

– Position the instrument panel -1- precisely on the instrument panel central tube -2- with the help of a second technician.

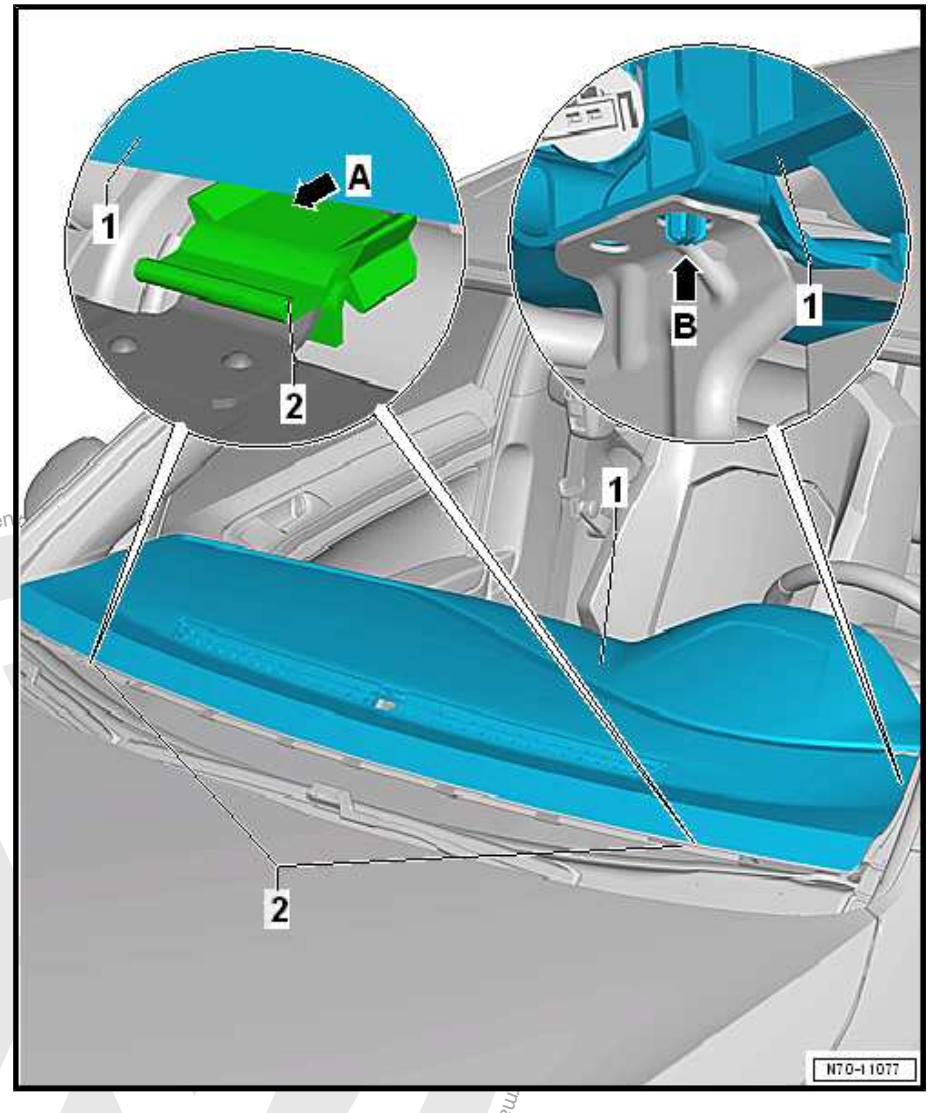

– Slide the instrument panel -1- into the mounts -2- in the windshield transition area -arrow A-.

– Insert the left and right guide tabs into the guide holes -arrow B-.

Tightening Specifications

♦ Refer to ⇒ “3.1 Overview - Instrument Panel”, page 210

3.7 Instrument Panel Vent, Removing and Installing

Special tools and workshop equipment required

♦ Backrest Panel Tool - 3370-

♦ Trim Removal Wedge - 3409-

Commercial purposes, in part or in whole, is not permitted unless authorised by Volkswagen
Protected by copyright. Copyright by Volkswagen

Removing

Side Instrument Panel Vent

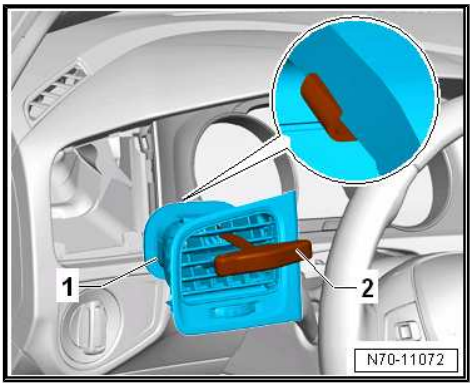

Note

The removal and installation for the side instrument panel vent on the driver side is described. The removal and installation for the front passenger side is identical.

– Completely open the side instrument panel vent -1- using the thumbwheel.

– Carefully guide the Backrest Panel Tool - 3370- -2- into the center of the second slat from above and hook it in to the rear of the vent -1-.

Note

The insertion depth of the Backrest Panel Tool - 3370- is 115 mm.

– Pull the side instrument panel vent out of the instrument panel installation opening with a firm jerk.

Center Vent with Front Information Display Control Head - J685- trim

Note

The center vent is removed together with the Front Information Display Control Head - J685- trim.

Caution

The Front Information Display Control Head - J685- trim cannot be removed as an individual part without being destroyed.

- Center vent is completely open at both thumbwheels.
- The vertical slats of the center vent are positioned in the direction of travel.

– Remove the display and control head trim. Refer to ⇒ “3.5 Display and Control Unit Trim, Removing and Installing”, page 56 .

– Grab the Front Passenger Airbag -Disabled- Indicator Lamp - K145- -1- at the side -arrows A- and pull it out of the instrument panel.

– Disconnect the connectors.

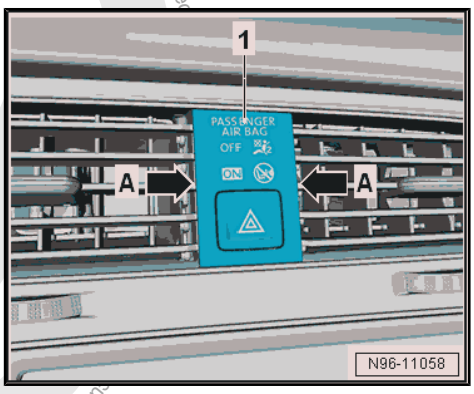

Protected by copyright. Copying for private or commercial purposes, in part or in whole, is not permitted unless authorised by Volkswagen AG. Volkswagen AG does not guarantee or accept any liability with respect to the content. Copyright by Volkswagen AG.

– Carefully guide a Backrest Panel Tool - 3370- in both the right and left center vent -arrows-.

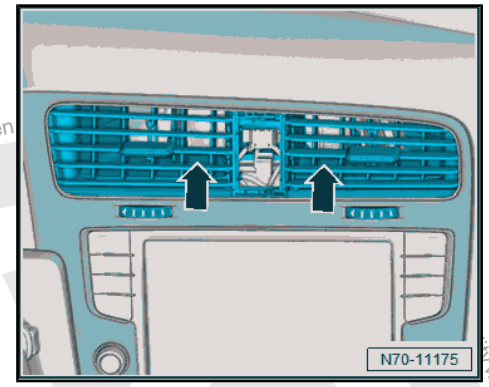

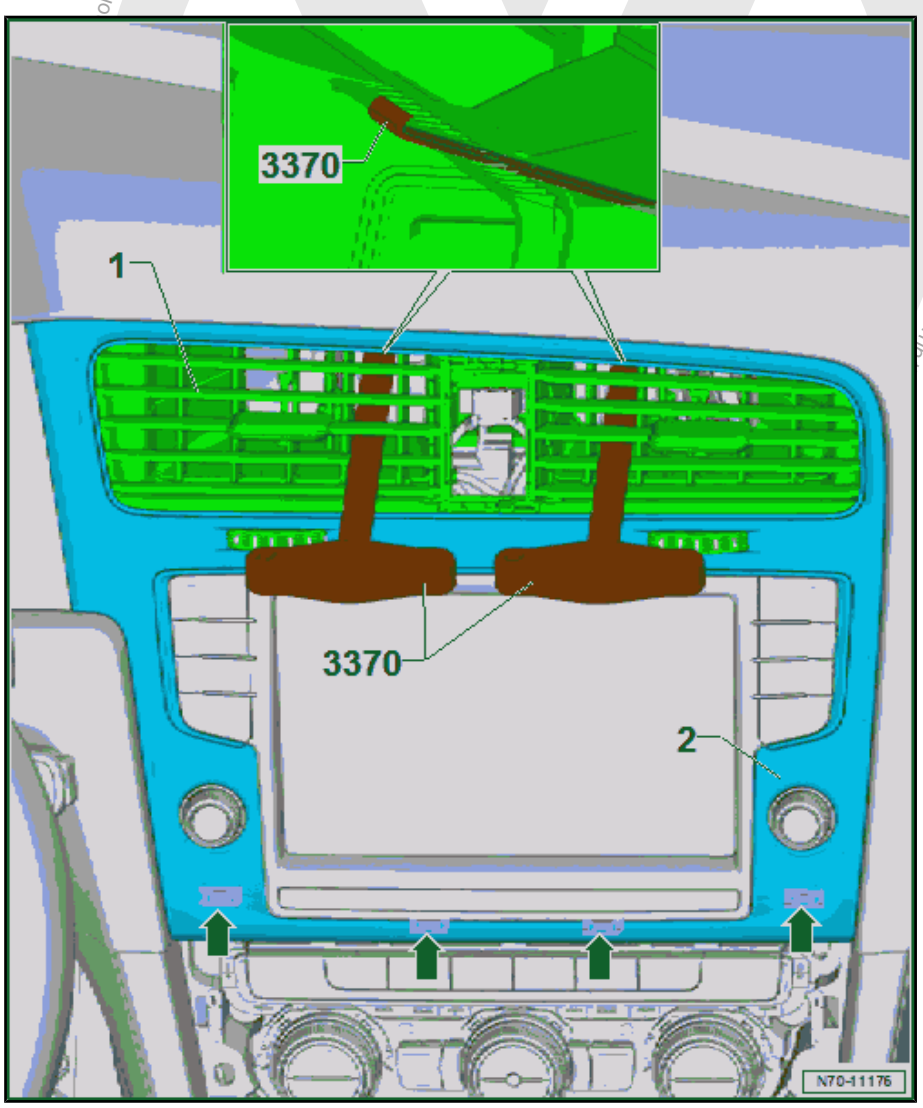

– Hook both Backrest Panel Tools - 3370- into the top end of the corresponding fresh air duct.

Note

The insertion depth of the Backrest Panel Tool - 3370- is approximately 110 mm.

ole, is not permitted unless authorised by Volkswagen
with respect to the correctness of information in

– Remove the center vent -1- including the installed trim -2- from the instrument panel installation opening at the same time by firmly tugging on the two Backrest Panel Tools - 3370- .
– Carefully unclip the trim -2- from the mounts in the instrument panel -arrows- using the Trim Removal Wedge - 3409- .

Installing

Note

Check all the fasteners for damage and replace if necessary.

Install in reverse order of removal.

3.8 Side Defroster Vent, Removing and Installing

Note

The removal and installation for the side defroster vent on the driver side is described. The removal and installation for the front passenger side is identical.

Special tools and workshop equipment required

♦ Trim Removal Wedge - 3409-

Removing

– Pry the defroster vent -1- upward out of the instrument panel installation opening using the Trim Removal Wedge - 3409- and remove it.

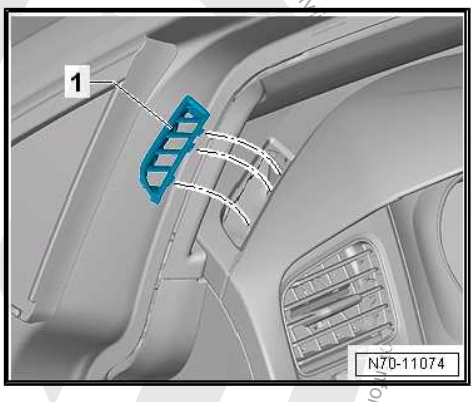

Installing

Install in reverse order of removal.

3.9 Front Passenger Side Impact Absorber, Removing and Installing

Protected by copyright. Copying for private or commercial purposes, in part or in whole, is not permitted unless authorised by Volkswagen AG. Volkswagen AG does not guarantee or accept any liability with respect to the correctness of information in this document. Copyright by Volkswagen AG.

Volkswagen AG does not guarant
by copyright. Copying for private or commercial purposes, in part or in whole, is not permitted unless authorised by Volkswagen AG.

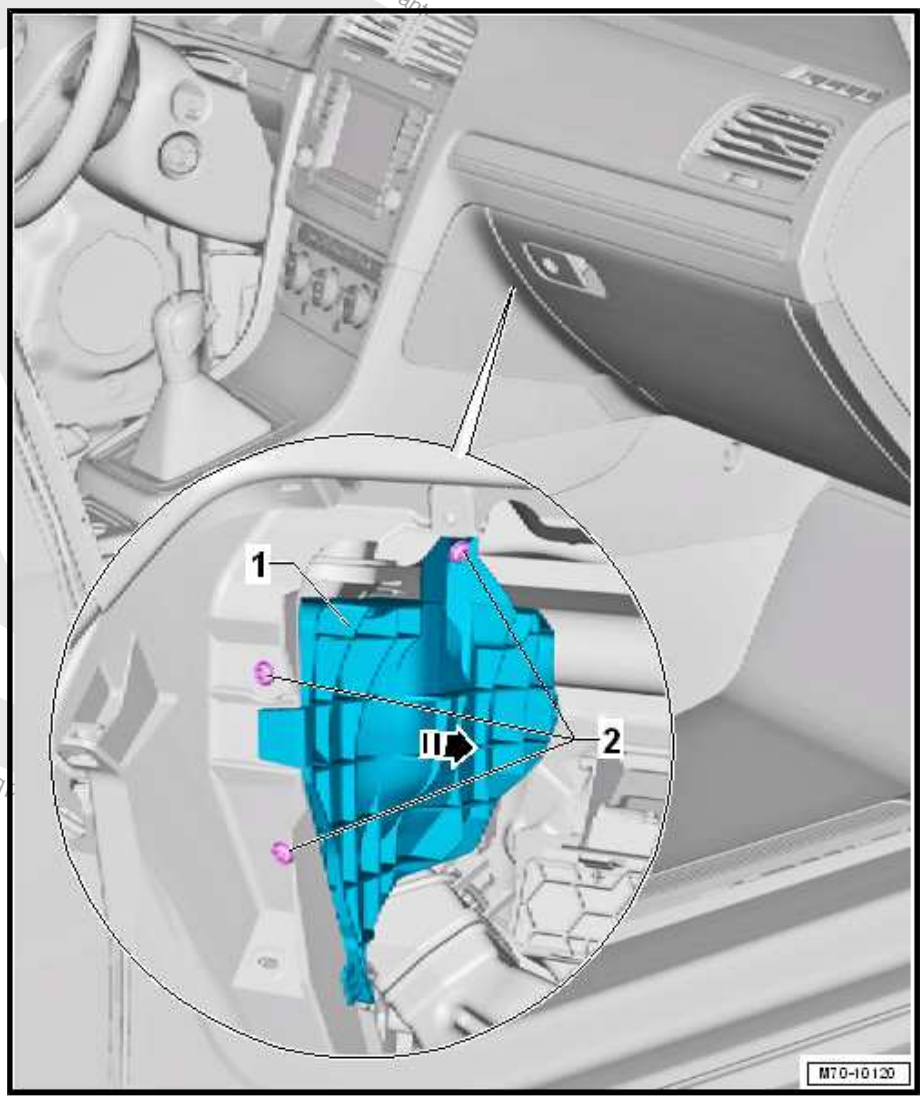

Removing

- Remove the glove compartment. Refer to ⇒ “1.17 Glove Compartment, Removing and Installing”, page 36 .
- Remove the spreader plug -2-.
- Pull the front passenger side impact absorber -1- out of the instrument panel in direction of -arrow- and remove it.

Installing

Install in reverse order of removal.

4 Instrument Panel Central Tube

⇒ “4.1 Overview - Instrument Panel Central Tube”, page 225

⇒ “4.2 Overview - Driver Side Impact Absorber”, page 227

⇒ “4.3 Crash Bolster, Removing and Installing”, page 228

⇒ “4.4 Instrument Panel Central Tube, Removing and Installing”, page 229

⇒ “4.5 Driver Side Impact Absorber, Removing and Installing”, page 232

4.1 Overview - Instrument Panel Central Tube

Note

It may be helpful to make drawings or take photos of any wires that are going to be loosened, removed and then installed. This assures the wires will be reconnected correctly.

1 - Bracket

- ❑ Welded to the body

2 - Threaded Pin

- ❑ 20 Nm
- ❑ Quantity: 2

3 - Screw

- ❑ 20 Nm

4 - Central Tube

- ❑ For the instrument panel
- ❑ Removing and installing. Refer to ⇒ “4.4 Instrument Panel Central Tube, Removing and Installing”, page 229 .

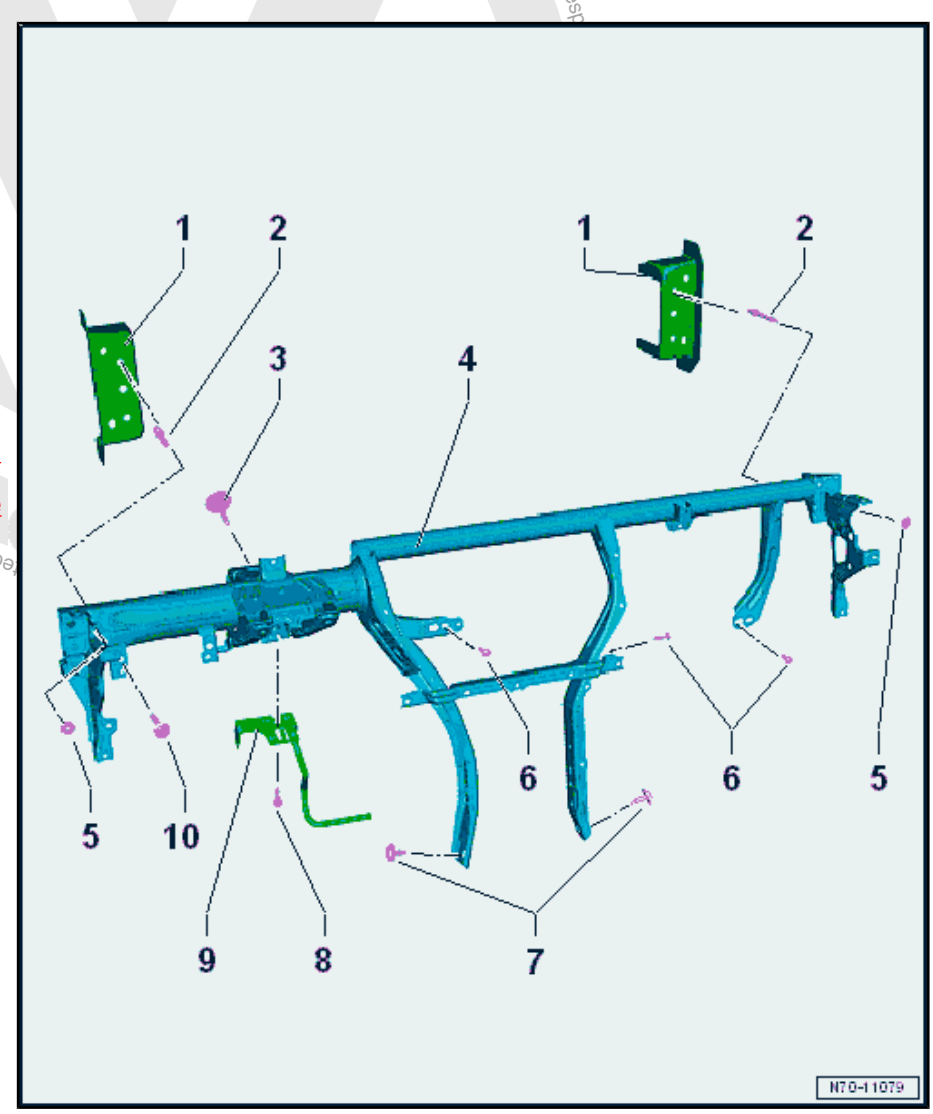

Caution

If the central tube is to be replaced with a new part, malfunctions due to faulty ground connections cannot be ruled out.
The ground connections must be free of paint, coating, and corrosion so that an error-free ground connection is guaranteed.

Mounting threads and contact surfaces between the central tube and securing brackets must also be free of paint, coating, and corrosion. The threaded connections serve as the ground connection for the knee airbag.

The contact surfaces for the left and right tunnel support must be free of paint on both sides. These serve as the main ground path.

Protected by copyright. Copyright by Volkswagen AG. Volkswagen AG does not guarantee or accept any liability with respect to the correctness of information in this document. Copyright by Volkswagen AG.

5 - Nut

- ❑ 20 Nm
- ❑ Quantity: 2

Caution

There is a risk of malfunctions do to a faulty ground connection.
The contact surface must be free of paint, coating, and corrosion, the threaded connection serves as the ground connection for the knee airbag.

6 - Screw

- ❑ 4 Nm
- ❑ Quantity: 3
- ❑ If one of the screws is overtightened when installing the heater and A/C unit, use the Screw - N. 911.981.01- as a replacement.

7 - Screw

- ❑ 20 Nm
- ❑ Quantity: 2

8 - Screw

- ❑ 20 Nm

9 - Crash Bolster

- ❑ Allocation. Refer to the Parts Catalog.
- ❑ Removing and installing. Refer to ⇒ “4.3 Crash Bolster, Removing and Installing”, page 228 .

10 - Screw

- ❑ 20 Nm
- ❑ Driver side only

> **Caution**
>
> *There is a risk of malfunctions do to a faulty ground connection.*
> *The counter threaded and contact surface must be free of paint, coating, and corrosion, the threaded connection serves as the ground connection for the knee airbag.*

4.2 Overview - Driver Side Impact Absorber

1 - Left Driver Side Impact Absorber

- ❑ Removing and installing. Refer to ⇒ "4.5 Driver Side Impact Absorber, Removing and Installing", page 232 .

2 - Spreader Plug

- ❑ Replace damaged or deformed spreader plug

3 - Screw

- ❑ 4.5 Nm
- ❑ Quantity: 2
- ❑ Also screws for Vehicle Electrical System Control Module - J519- bracket

4 - Bracket

- ❑ Removing
  - – Remove the right driver side impact absorber. Refer to ⇒ "4.5 Driver Side Impact Absorber, Removing and Installing", page 232 .
  - – Remove the screws -5-.
  - – Disengage the bracket on the central tube and remove.
- ❑ Installing

  Install in reverse order of removal.

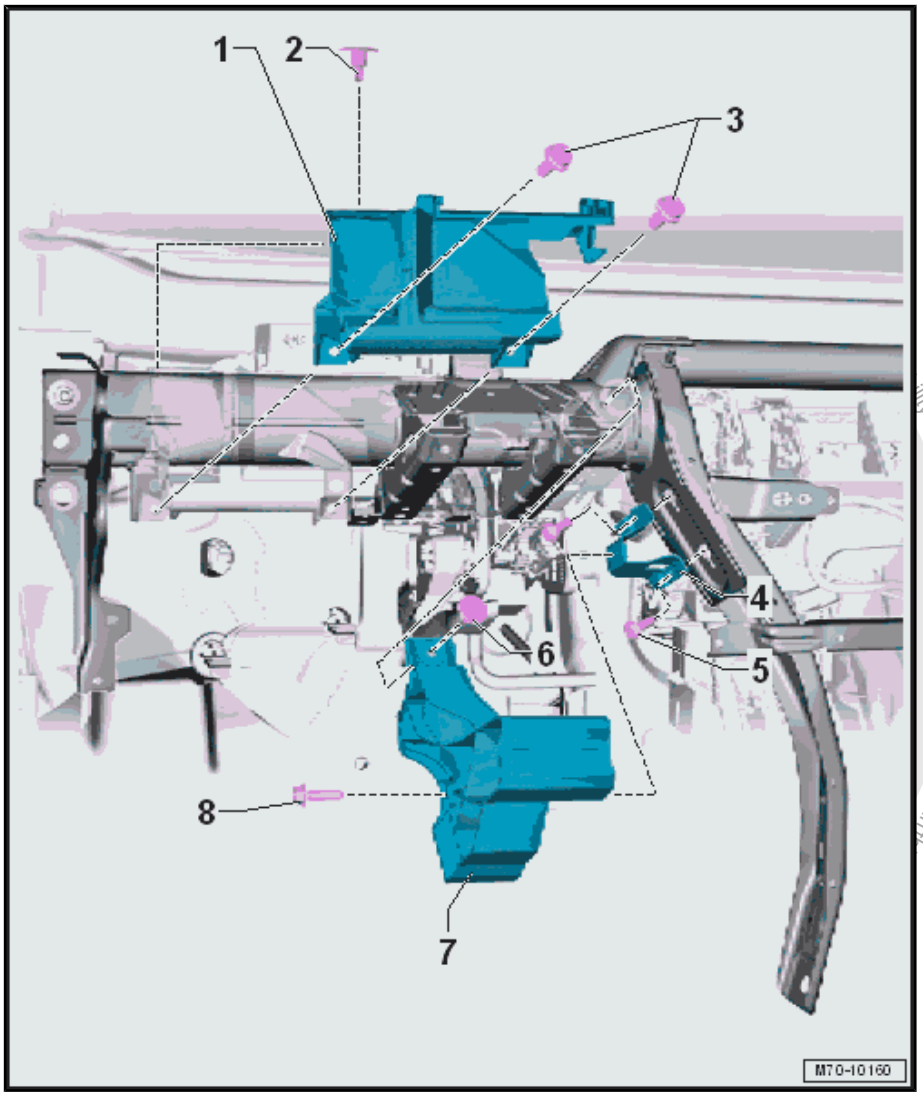

ith with respect to the correctness of information in

5 - Screw

- ❑ 2.5 Nm
- ❑ Quantity: 2

6 - Spreader Plug

- ❑ Replace damaged or deformed spreader plug.

7 - Right Driver Side Impact Absorber

- ❑ Removing and installing. Refer to
  ⇒ “4.5 Driver Side Impact Absorber, Removing and Installing”, page 232 .

8 - Screw

- ❑ 4.5 Nm

4.3 Crash Bolster, Removing and Installing

Special tools and workshop equipment required

- ♦ Torque Wrench 1331 5-50Nm - VAG1331-

Removing

– If installed, remove the knee airbag with igniter. Refer to
⇒ “9.2 Knee Airbag with Igniter, Removing and Installing”, page 157 .

– Remove the driver side footwell vent. Refer to ⇒ Heating, Ventilation and Air Conditioning; Rep. Gr. 87 ; Air Routing; Overview - Air Routing and Air Distribution in Passenger Compartment .

– Remove the Data Bus on Board Diagnostic Interface - J533- . Refer to ⇒ Electrical Equipment; Rep. Gr. 97 ; Control Modules; Component Location Overview - Control Modules .

– Remove the bolt -2-, disengage the crash bolster -1- and guide it out.

Installing

Install in reverse order of removal while paying attention to the following:

– Engage the crash bolster -2- on the central tube -1- -arrow- and fasten.

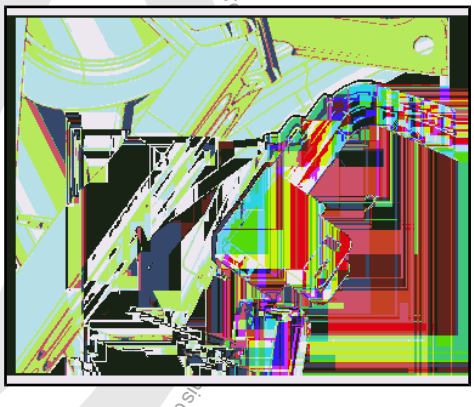

Tightening Specifications

- ♦ Refer to
  ⇒ “4.1 Overview - Instrument Panel Central Tube”, page 225

Protected by copyright. Copying for private or commercial purposes, in part or in whole, is not permitted unless authorised by Volkswagen AG. Volkswagen AG does not guarantee the accuracy and completeness of this document. Copyright by Volkswagen AG.

4.4 Instrument Panel Central Tube, Removing and Installing

Special tools and workshop equipment required

- Torque Wrench 1331 5-50Nm - VAG1331-
- Torque Wrench 1783 - 2-10Nm - VAG1783-

Note

It may be helpful to make drawings or take photos of any wires that are going to be loosened, removed and then installed. This assures the wires will be reconnected correctly.

Removing

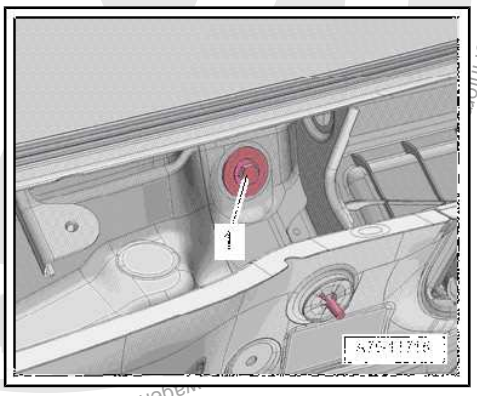

– Remove the left plenum chamber cover. Refer to ⇒ Body Exterior; Rep. Gr. 50 ; Bulkhead; Overview - Plenum Chamber Cover .

– Remove the bolt -1- for the brace and central tube from the plenum chamber bulkhead.

– Remove the instrument panel. Refer to ⇒ “3.6 Instrument Panel, Removing and Installing”, page 213 .

– If installed, remove the knee airbag with igniter. Refer to ⇒ “9.2 Knee Airbag with Igniter, Removing and Installing”, page 157 .

– Remove the driver side footwell vent. Refer to ⇒ Heating, Ventilation and Air Conditioning; Rep. Gr. 87 ; Air Routing; Overview - Air Routing and Air Distribution in Passenger Compartment .

– Remove the driver side impact absorber, if installed. Refer to ⇒ “4.5 Driver Side Impact Absorber, Removing and Installing”, page 232 .

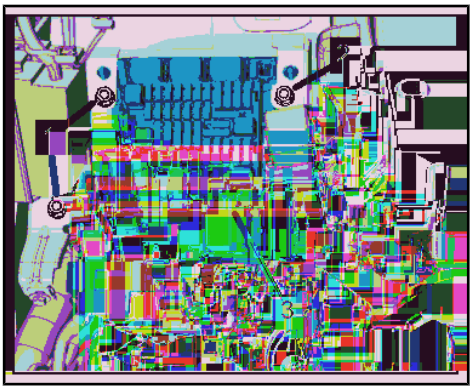

– Remove the bolts -1 and 2-.

– Disengage the bracket -3- for the control module, and the relay and fuse carrier on the instrument panel central tube.

– Unbolt steering column from the instrument panel central tube and lay it on the floor of the vehicle. Refer to ⇒ Suspension, Wheels Steering; Rep. Gr. 48 ; Steering Column; Steering Column, Removing and Installing .

– Remove the crash bolster. Refer to ⇒ “4.3 Crash Bolster, Removing and Installing”, page 228 .

– If equipped, remove the Access/Start System Interface -J965- . Refer to ⇒ Electrical Equipment; Rep. Gr. 97 ; Component Location Overview - Control Modules .

Protected by copyright. Copying for private or commercial purposes, in part or in whole, is not permitted unless authorised by Volkswagen AG. Volkswagen AG does not guarantee or accept any liability with respect to the correctness of info

– Release the expanding rivet -1- and remove it upward.

– Remove the intermediate piece for the defroster air vent -3- from the instrument panel central tube.

– Unclip and remove the intermediate piece for the center vent -2- from the heater and A/C unit.

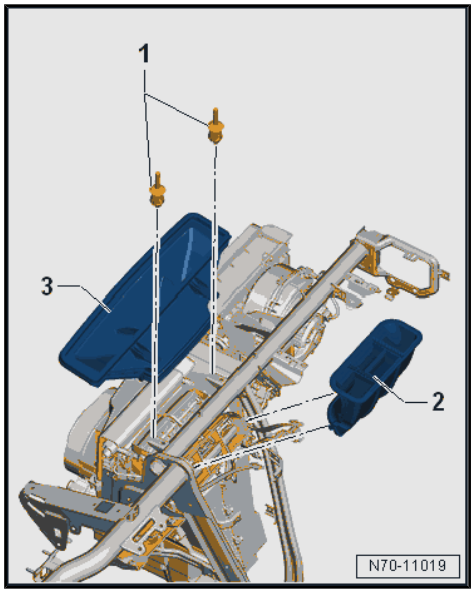

– Remove the nut -1- from the central tube ground connection -2- and free up the wires.

– Remove the footwell vent on the front passenger side. Refer to ⇒ Heating, Ventilation and Air Conditioning; Rep. Gr. 87 ; Air Routing; Overview - Air Routing and Air Distribution in Passenger Compartment .

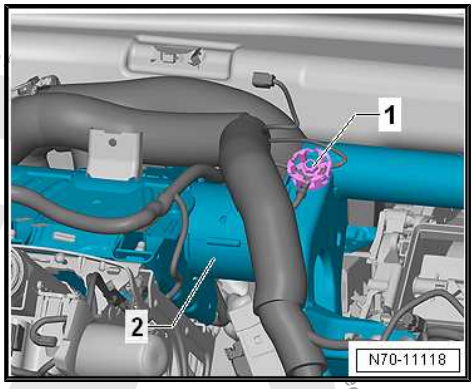

– Remove the A/C unit bolts -arrows-.

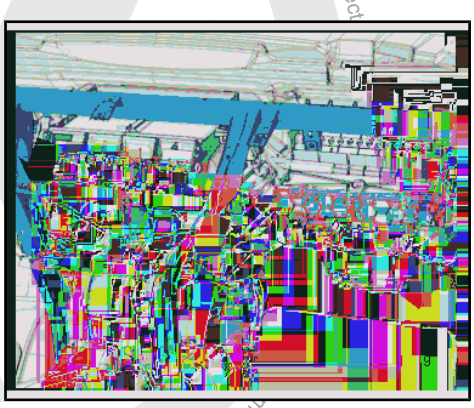

– Push the carpet near the threaded connection to the side and remove the left and right bolt -2- for the instrument panel central tube support.

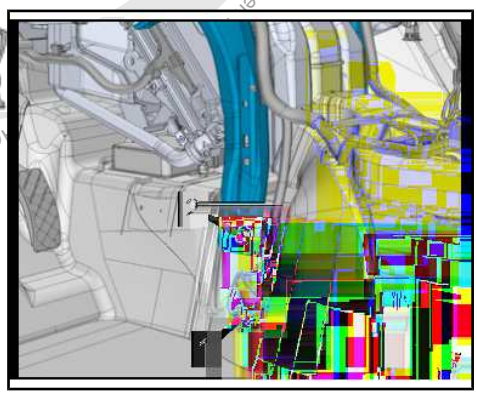

Note

Mark height and side position on instrument panel central tube for reinstallation.

Protected by copyright. Copying for private or commercial purposes, in part or in whole, is not permitted unless authorised by Volkswagen AG. Volkswagen

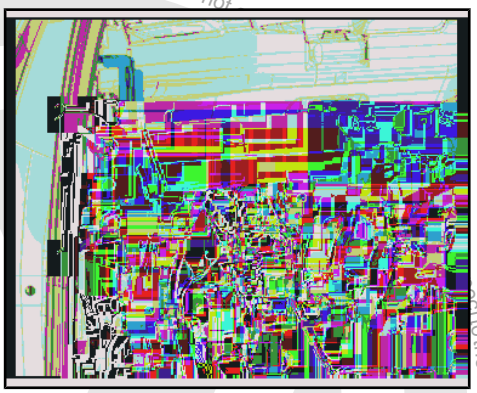

Note

Mark the height and side position of the central tube in the vehicle around the left and right nut -1- as well as the bolt -2- with a scriber.

– Remove the bolt -1- from the instrument panel central tube.

– Remove the nut -2- for the instrument panel central tube from the left and right A-pillar.

– Unclip, disengage and free up the wires from the instrument panel central tube.

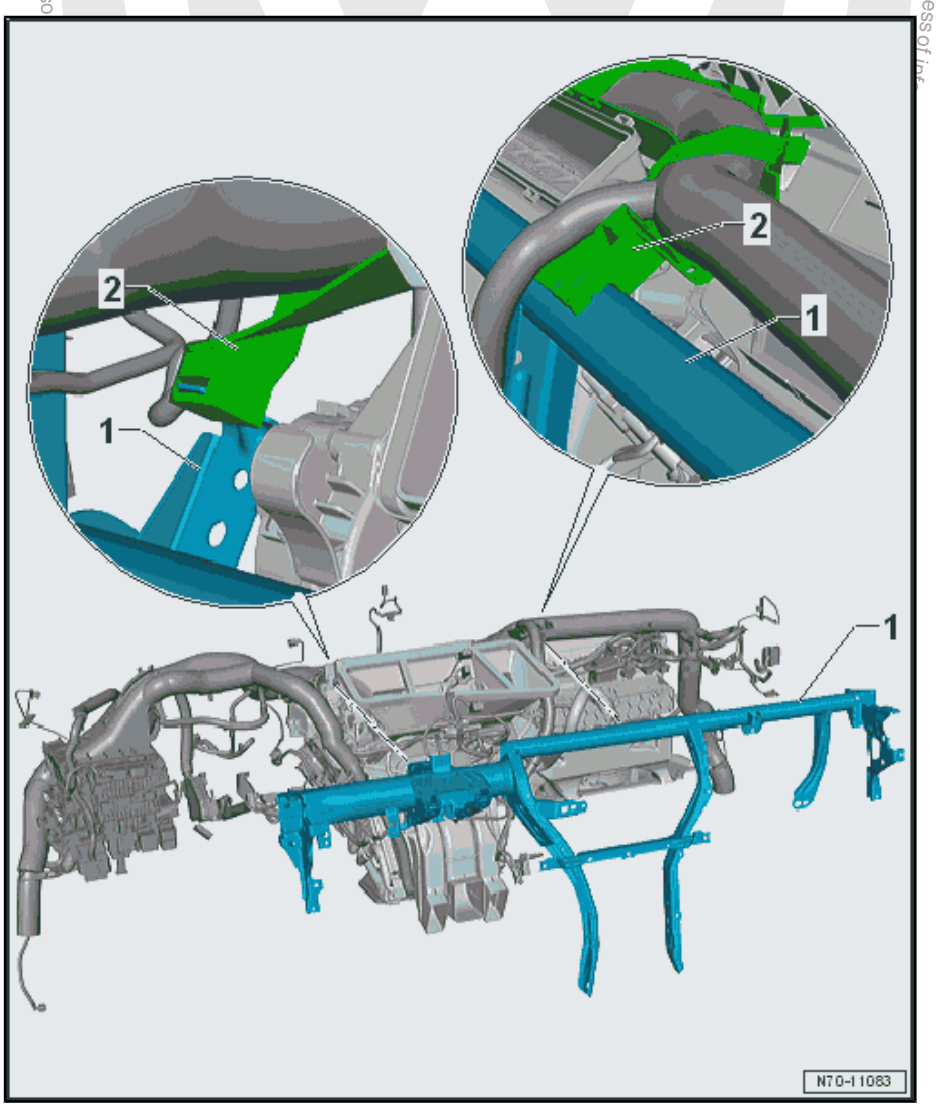

– Remove the wiring harness bracket -2- from the instrument panel central tube -1-.

– Loosen the instrument panel central tube -1- and pull it slightly to the rear.

– Carefully lift the instrument panel central tube -1- out of the vehicle with the help of a second technician. Pay attention to the wiring harnesses.

Installing

Note

- *Before installing the instrument panel central tube, line it up with the markings made before it was removed.*
- *Check all the fasteners for damage and replace if necessary.*

Install in reverse order of removal while paying attention to the following:

Caution

If the central tube is to be replaced with a new part, malfunctions due to faulty ground connections cannot be ruled out.

- ***The ground connections must be free of paint, coating, and corrosion so that an error-free ground connection is guaranteed.***
- ***Mounting threads and contact surfaces between the central tube and securing brackets must also be free of paint, coating, and corrosion. The threaded connections serve as the ground connection for the knee airbag.***
- ***The contact surfaces for the left and right tunnel support must be free of paint on both sides. These serve as the main ground path.***

Tightening Specifications

- Refer to
⇒ “4.1 Overview - Instrument Panel Central Tube”, page 225

Component	Tightening Specification
Nut to central tube ground connection	9 Nm

4.5 Driver Side Impact Absorber, Removing and Installing

Special tools and workshop equipment required

- Torque Wrench 1783 - 2-10Nm - VAG1783-

Protected by copyright. Copyright by Volkswagen AG. Volkswagen AG does not guarantee or accept any liability with respect to the correctness of information in this document. Copyright by Volkswagen AG.

Removing

– Remove the instrument panel. Refer to ⇒ “3.6 Instrument Panel, Removing and Installing”, page 213 .

Left Driver Side Impact Absorber

– Remove the spreader plug -2-.

– Remove the bolts -3-.

– Remove the left driver side impact absorber -1- from the central tube.

Right Driver Side Impact Absorber

– Remove the spreader plug -2-.

– Remove the bolt -3-.

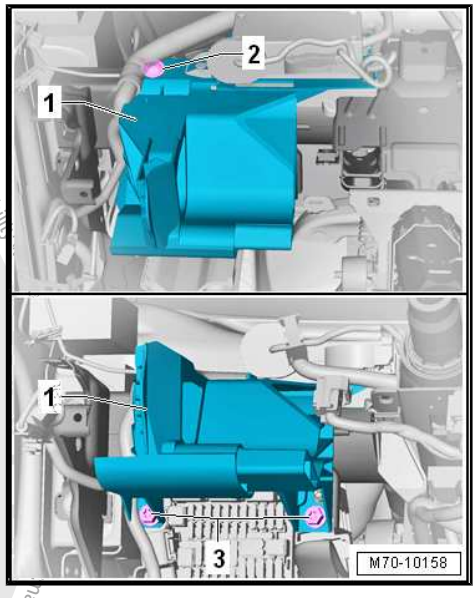

– Remove the right driver side impact absorber -1- from the central tube.

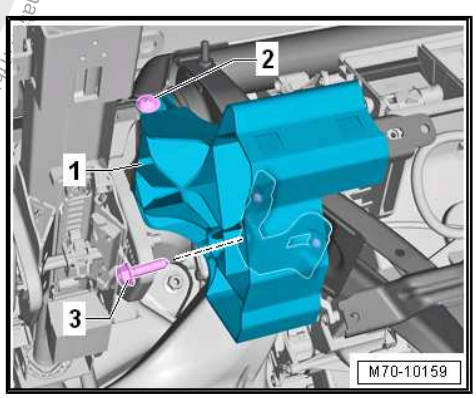

Installing

Install in reverse order of removal.

Tightening Specifications

♦ Refer to ⇒ “4.2 Overview - Driver Side Impact Absorber”, page 227

Protected by copyright. Copying for private or commercial purposes, in part or in whole, is not permitted unless authorized by Volkswagen AG. Volkswagen AG does not guarantee or accept any liability for this document. Copyright by Volkswagen AG.

5 Passenger Compartment Trim

⇒ "5.1 Component Location Overview - Vehicle Interior Trim Panel", page 234

⇒ "5.2 Overview - Sill Panel Strip", page 238

⇒ "5.3 Overview - A-Pillar Trim Panel", page 239

⇒ "5.4 Overview - B-Pillar Trim Panel", page 240

⇒ "5.5 Overview - C-Pillar Trim Panel", page 242

⇒ "5.6 Overview - D-Pillar Trim Panel", page 244

⇒ "5.7 Overview - Side Trim Panel", page 246

⇒ "5.8 Overview - Wheel Housing Trim Panel", page 246

⇒ "5.9 Overview - Foot Rest and Carpet", page 249

⇒ "5.10 Sill Panel Strip, Removing and Installing", page 249

⇒ "5.11 A-Pillar Gap Cover, Removing and Installing", page 251

⇒ "5.12 A-Pillar Trim Panel, Removing and Installing", page 252

⇒ "5.13 B-Pillar Trim Panel, Removing and Installing", page 256

⇒ "5.14 C-Pillar Trim Panel, Removing and Installing", page 261

⇒ "5.15 D-Pillar Trim Panel, Removing and Installing", page 264

⇒ "5.16 Side Trim Panel, Removing and Installing", page 265

⇒ "5.17 Wheel Housing Trim Panel, Removing and Installing", page 267

⇒ "5.18 Foot Rest, Removing and Installing", page 271

⇒ "5.19 Carpet, Removing and Installing", page 272

5.1 Component Location Overview - Vehicle Interior Trim Panel

⇒ "5.1.1 Component Location Overview - Vehicle Interior Trim Panel, 2-Door Sedan", page 234

⇒ "5.1.2 Component Location Overview - Vehicle Interior Trim Panel, 4-Door Sedan", page 236

⇒ "5.1.3 Component Location Overview - Passenger Compartment Trim, Wagon", page 237

5.1.1 Component Location Overview - Vehicle Interior Trim Panel, 2-Door Sedan

Protected by copyright. Copying for private or commercial purposes, in part or in whole, is not permitted unless authorised by Volkswagen AG. Volkswagen AG does not guarantee or accept any liability with respect to the correctness of information in this document. Copyright by Volkswagen AG.

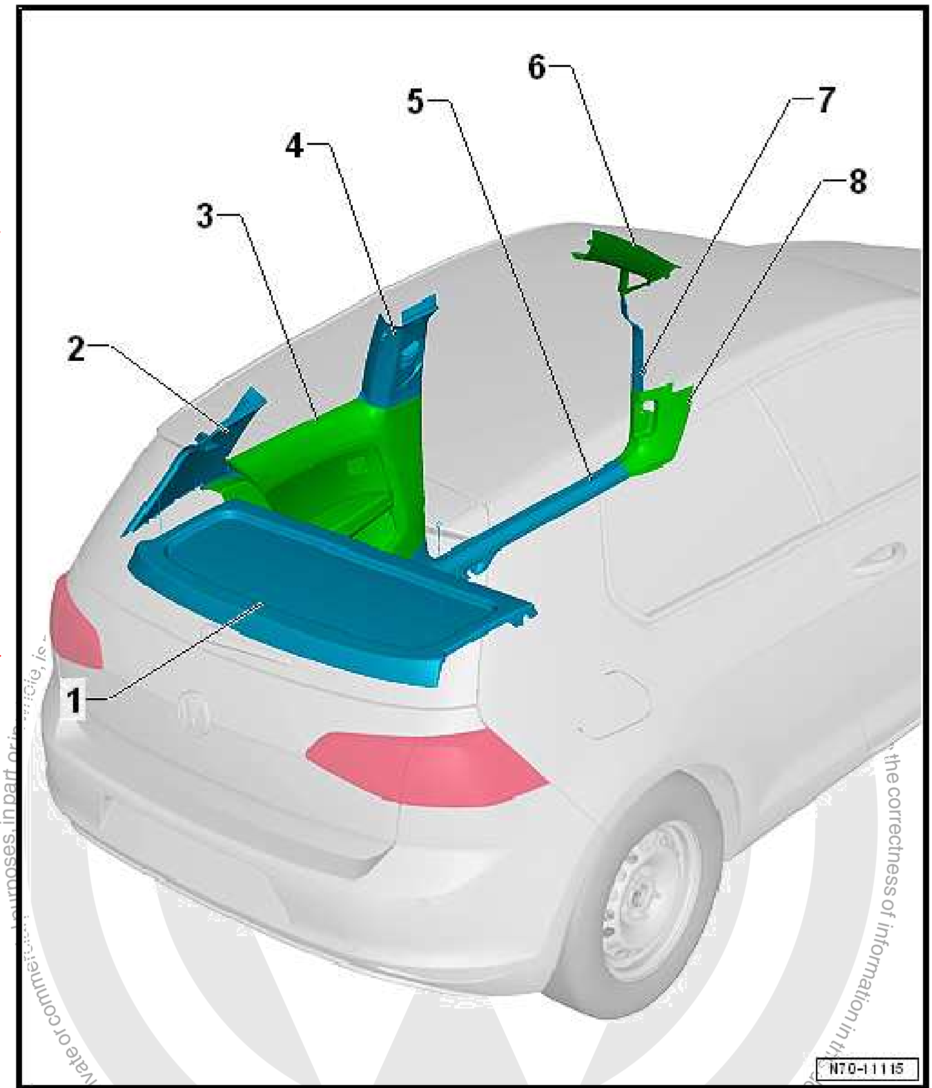

1 - Rear Shelf

- ❑ Clipped in the mounts for the rear shelf compartment

2 - C-Pillar Trim Panel

- ❑ Overview. Refer to ⇒ “5.5 Overview - C-Pillar Trim Panel”, page 242 .
- ❑ Removing and installing. Refer to ⇒ “5.14 C-Pillar Trim Panel, Removing and Installing”, page 261 .

3 - Side Trim Panel

- ❑ Overview. Refer to ⇒ “5.7 Overview - Side Trim Panel”, page 246 .
- ❑ Removing and installing. Refer to ⇒ “5.16 Side Trim Panel, Removing and Installing”, page 265 .

4 - B-Pillar Trim Panel

- ❑ Overview. Refer to ⇒ “5.4 Overview - B-Pillar Trim Panel”, page 240 .
- ❑ Removing and installing. Refer to ⇒ “5.13.1 B-Pillar Trim Panel, Removing and Installing, 2-Door Sedan”, page 256 .

5 - Sill Panel Strip

- ❑ Overview. Refer to ⇒ “5.2 Overview - Sill Panel Strip”, page 238 .
- ❑ Removing and installing. Refer to ⇒ “5.10.1 Sill Panel Strip, Removing and Installing, 2-Door Sedan”, page 249 .

6 - A-Pillar Upper Trim Panel

- ❑ Overview. Refer to ⇒ “5.3 Overview - A-Pillar Trim Panel”, page 239 .
- ❑ Removing and installing. Refer to ⇒ “5.12 A-Pillar Trim Panel, Removing and Installing”, page 252 .

7 - A-Pillar Gap Cover

- ❑ Overview. Refer to ⇒ “5.3 Overview - A-Pillar Trim Panel”, page 239 .
- ❑ Removing and installing. Refer to ⇒ “5.11 A-Pillar Gap Cover, Removing and Installing”, page 251 .

8 - A-Pillar Lower Trim Panel

- ❑ Overview. Refer to ⇒ “5.3 Overview - A-Pillar Trim Panel”, page 239 .
- ❑ Removing and installing. Refer to ⇒ “5.12 A-Pillar Trim Panel, Removing and Installing”, page 252 .

5.1.2 Component Location Overview - Vehicle Interior Trim Panel, 4-Door Sedan

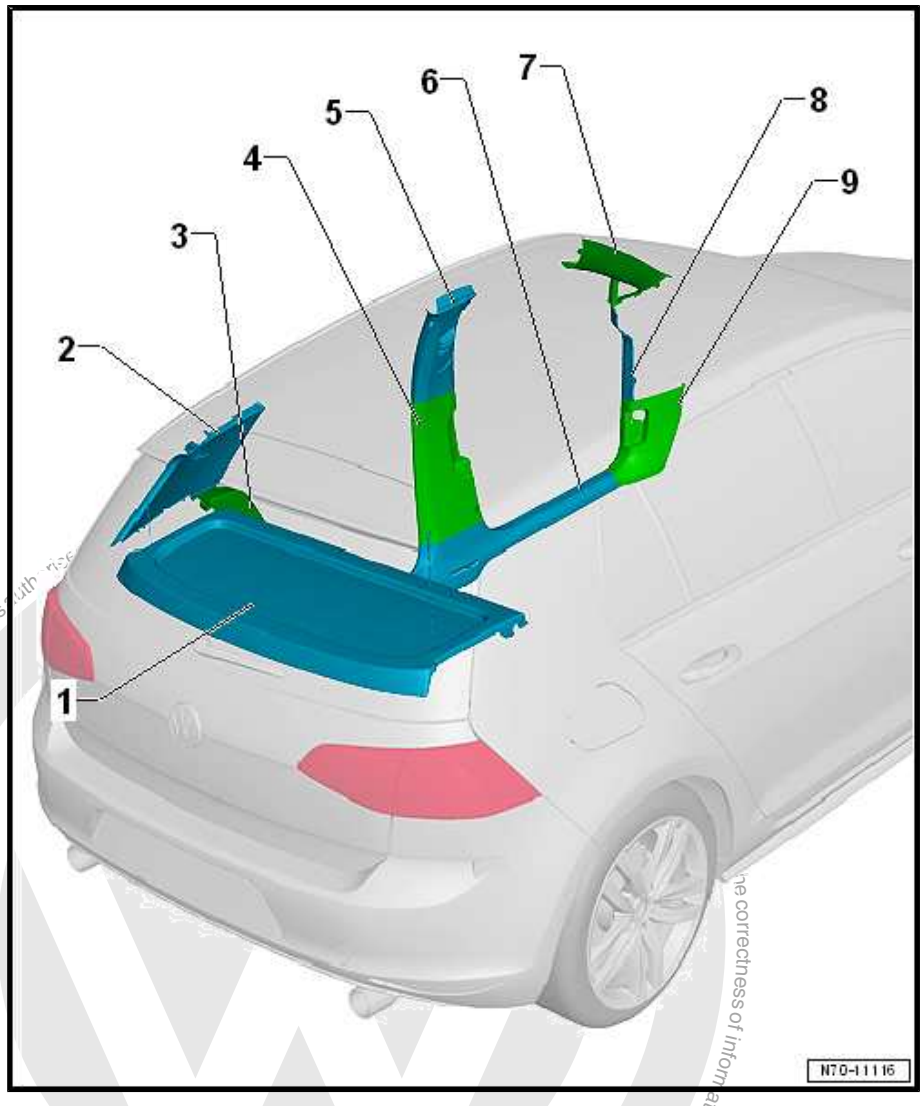

1 - Rear Shelf

- ❑ Clipped in the mounts for the rear shelf compartment

2 - C-Pillar Trim Panel

- ❑ Overview. Refer to ⇒ “5.5 Overview - C-Pillar Trim Panel”, page 242 .
- ❑ Removing and installing. Refer to ⇒ “5.14 C-Pillar Trim Panel, Removing and Installing”, page 261 .

3 - Wheel Housing Trim Panel

- ❑ Overview. Refer to ⇒ “5.8 Overview - Wheel Housing Trim Panel”, page 246 .
- ❑ Removing and installing. Refer to ⇒ “5.17 Wheel Housing Trim Panel, Removing and Installing”, page 267 .

4 - B-Pillar Lower Trim Panel

- ❑ Overview. Refer to ⇒ “5.4 Overview - B-Pillar Trim Panel”, page 240 .
- ❑ Removing and installing. Refer to ⇒ “5.13.2 B-Pillar Trim Panel, Removing and Installing, 4-Door Sedan and Wagon”, page 258 .

5 - B-Pillar Upper Trim Panel

- ❑ Overview. Refer to ⇒ “5.4 Overview - B-Pillar Trim Panel”, page 240 .
- ❑ Removing and installing. Refer to ⇒ “5.13.2 B-Pillar Trim Panel, Removing and Installing, 4-Door Sedan and Wagon”, page 258 .

6 - Sill Panel Strip

- ❑ Overview. Refer to ⇒ “5.2 Overview - Sill Panel Strip”, page 238 .
- ❑ Removing and installing. Refer to ⇒ “5.10.2 Sill Panel Strip, Removing and Installing, 4-Door Sedan and Wagon”, page 250 .

7 - A-Pillar Upper Trim Panel

- ❑ Overview. Refer to ⇒ “5.3 Overview - A-Pillar Trim Panel”, page 239 .
- ❑ Removing and installing. Refer to ⇒ “5.12 A-Pillar Trim Panel, Removing and Installing”, page 252 .

8 - A-Pillar Gap Cover

- ❑ Overview. Refer to ⇒ “5.3 Overview - A-Pillar Trim Panel”, page 239 .
- ❑ Removing and installing. Refer to ⇒ “5.11 A-Pillar Gap Cover, Removing and Installing”, page 251 .

9 - A-Pillar Lower Trim Panel

- ❑ Overview. Refer to ⇒ “5.3 Overview - A-Pillar Trim Panel”, page 239 .

Protected by copyright. Copyright by Volkswagen AG.

- ❑ Removing and installing. Refer to ⇒ “5.12 A-Pillar Trim Panel, Removing and Installing”, page 252 .

5.1.3 Component Location Overview - Passenger Compartment Trim, Wagon

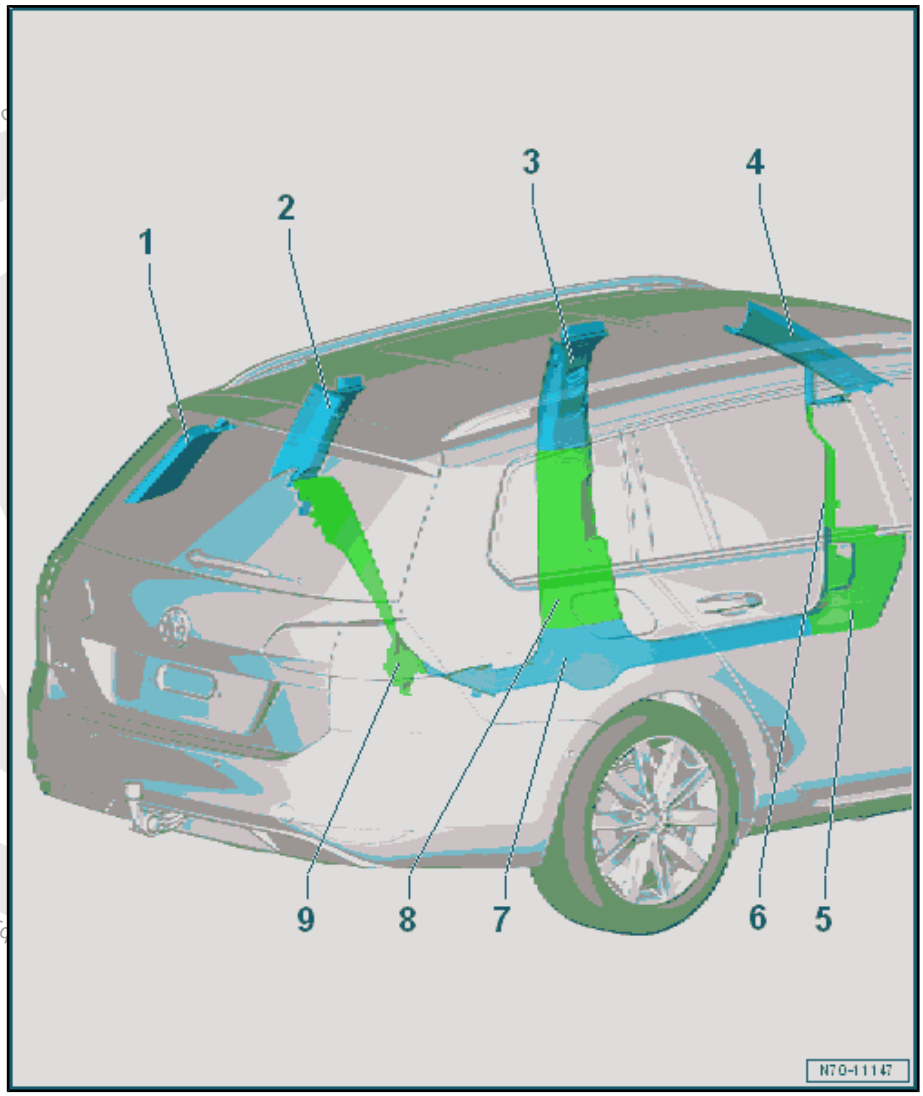

1 - D-Pillar Trim Panel

- ❑ Overview. Refer to ⇒ “5.6 Overview - D-Pillar Trim Panel”, page 244 .
- ❑ Removing and installing. Refer to ⇒ “5.15 D-Pillar Trim Panel, Removing and Installing”, page 264 .

2 - C-Pillar Trim Panel

- ❑ Overview. Refer to ⇒ “5.5.2 Overview - C-Pillar Trim Panel, Wagon”, page 244 .
- ❑ Removing and installing. Refer to ⇒ “5.14.2 C-Pillar-Trim Panel, Removing and Installing, Wagon”, page 262 .

3 - B-Pillar Upper Trim Panel

- ❑ Overview. Refer to ⇒ “5.4 Overview - B-Pillar Trim Panel”, page 240 .
- ❑ Removing and installing. Refer to ⇒ “5.13.2 B-Pillar Trim Panel, Removing and Installing, 4-Door Sedan and Wagon”, page 258 .

4 - A-Pillar Upper Trim Panel

- ❑ Overview. Refer to ⇒ “5.3 Overview - A-Pillar Trim Panel”, page 239 .
- ❑ Removing and installing. Refer to ⇒ “5.12 A-Pillar Trim Panel, Removing and Installing”, page 252 .

5 - A-Pillar Lower Trim Panel

- ❑ Overview. Refer to ⇒ “5.3 Overview - A-Pillar Trim Panel”, page 239 .
- ❑ Removing and installing. Refer to ⇒ “5.12 A-Pillar Trim Panel, Removing and Installing”, page 252 .

6 - A-Pillar Gap Cover

- ❑ Overview. Refer to ⇒ “5.3 Overview - A-Pillar Trim Panel”, page 239 .
- ❑ Removing and installing. Refer to ⇒ “5.11 A-Pillar Gap Cover, Removing and Installing”, page 251 .

7 - Sill Panel Strip

- ❑ Overview. Refer to ⇒ “5.2 Overview - Sill Panel Strip”, page 238 .
- ❑ Removing and installing. Refer to ⇒ “5.10.2 Sill Panel Strip, Removing and Installing, 4-Door Sedan and Wagon”, page 250 .

8 - B-Pillar Lower Trim Panel

- ❑ Overview. Refer to ⇒ “5.4 Overview - B-Pillar Trim Panel”, page 240 .

- ❑ Removing and installing. Refer to
  ⇒ “5.13.2 B-Pillar Trim Panel, Removing and Installing, 4-Door Sedan and Wagon”, page 258 .

9 - Wheel Housing Trim Panel

- ❑ Overview. Refer to ⇒ “5.8.2 Overview - Wheel Housing Trim Panel, Wagon”, page 247 .
- ❑ Removing and installing. Refer to
  ⇒ “5.17.2 Wheel Housing Trim Panel, Removing and Installing, Wagon”, page 269 .

5.2 Overview - Sill Panel Strip

Note

The illustration shows the sill panel strip on the left side. The right side is similar.

I: Sill Panel Strip, 4-Door

II: Sill Panel Strip, 2-Door

1 - Sill Panel Strip

- ❑ Removing and installing. Refer to
  ⇒ “5.10 Sill Panel Strip, Removing and Installing”, page 249 .

2 - Clip

- ❑ Insert in the sill panel strip
- ❑ Remove the clips that are still in the mounting points on the body using the Omega Clip Tool - T40280-
- ❑ Replace damaged or deformed retaining clips

3 - Bracket

- ❑ Install inside the body

4 - Expanding Clip

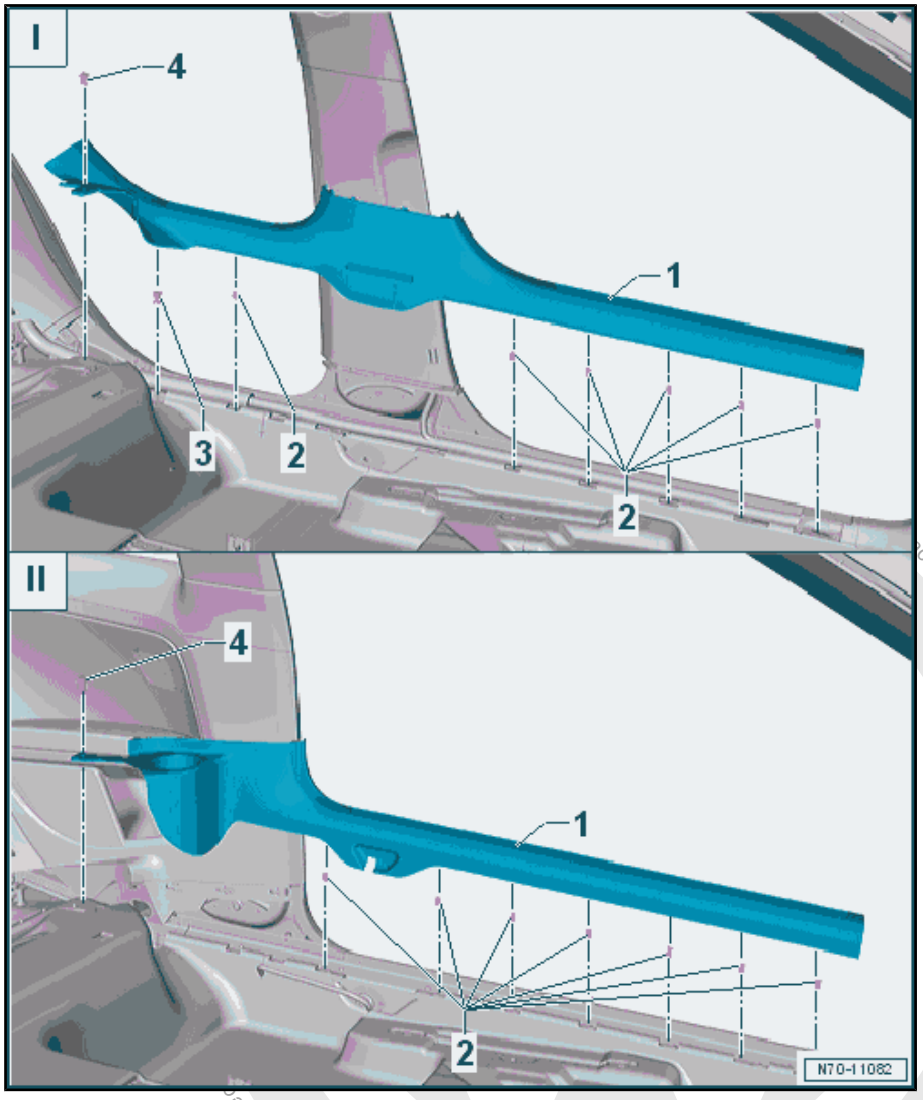

Protected by copyright. Copying for private or commercial purposes, in part, is not permitted unless authorised by Volkswagen AG. Volkswagen AG does not guarantee or accept any liability with respect to the correctness of information in this document. Copyright by Volkswagen AG.

Protected by copyright. Copying for private or commercial purposes, in part or in whole, is not permitted unless authorised by Volkswagen AG. Volkswagen AG does not guarantee or accept any liability with respect

5.3 Overview - A-Pillar Trim Panel

Note

The illustrations show the A-pillar trim panels on the left side. The right side is similar.

Upper A-Pillar Trim Panel and Triangular Window Trim Panel

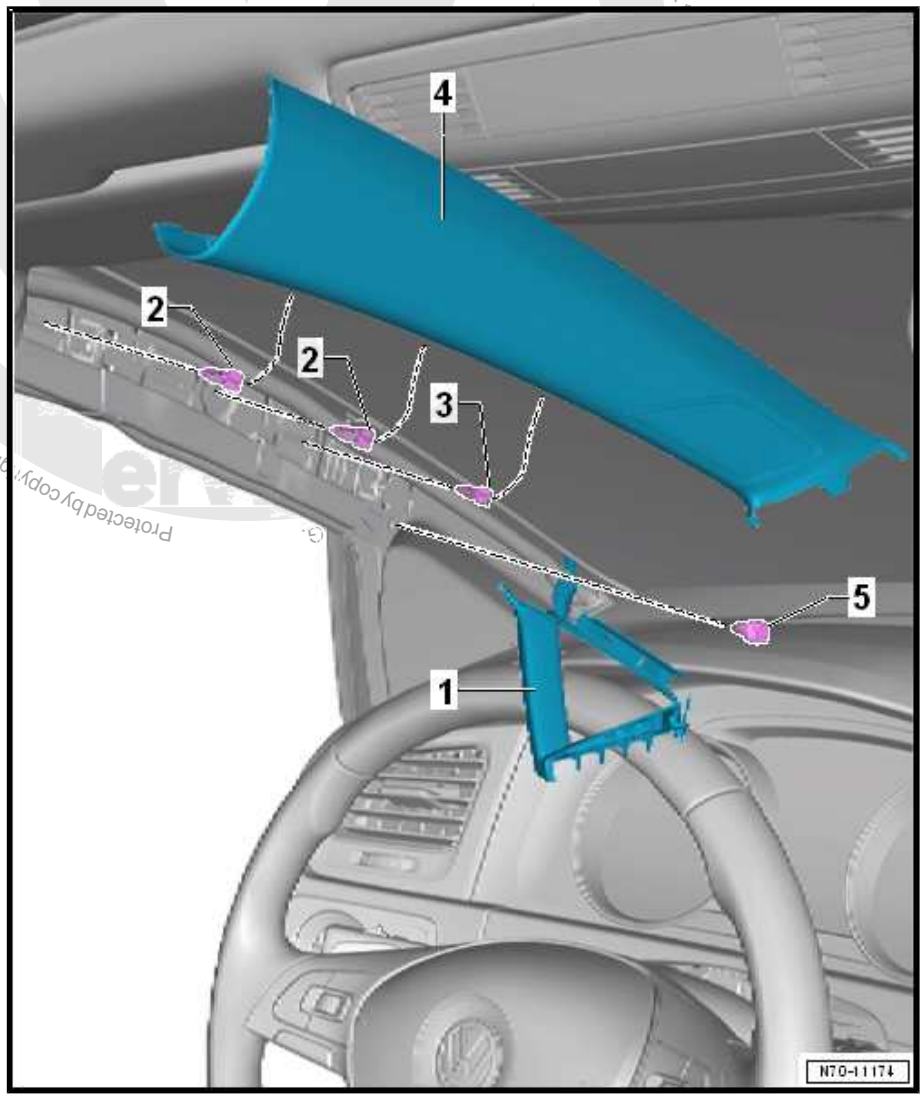

1 - Triangular Window Trim Panel

- ❑ Removing and installing. Refer to ⇒ "5.12 A-Pillar Trim Panel, Removing and Installing", page 252 .

2 - Clips

- ❑ With hooks
- ❑ Insert in the trim panel
- ❑ Remove the clips that are still in the mounting points on the body using the Omega Clip Tool -T40280-
- ❑ Always replace the clips

3 - Clip

- ❑ Insert in the trim panel
- ❑ Remove the clips that are still in the mounting points on the body using the Omega Clip Tool - T40280-
- ❑ Replace damaged or deformed retaining clips

4 - A-Pillar Upper Trim Panel

- ❑ Removing and installing. Refer to ⇒ "5.12 A-Pillar Trim Panel, Removing and Installing", page 252 .

5 - Clip

- ❑ Remove and install together with the triangular window trim panel
- ❑ Insert in the trim panel
- ❑ Replace damaged or deformed clip

Lower A-Pillar Trim Panel and Gap Cover

1 - A-Pillar Lower Trim Panel

- ❑ Removing and installing. Refer to ⇒ “5.12 A-Pillar Trim Panel, Removing and Installing”, page 252 .

2 - Expanding Clip

3 - Spreader Plug

4 - A-Pillar Gap Cover

- ❑ Removing and installing. Refer to ⇒ “5.11 A-Pillar Gap Cover, Removing and Installing”, page 251 .

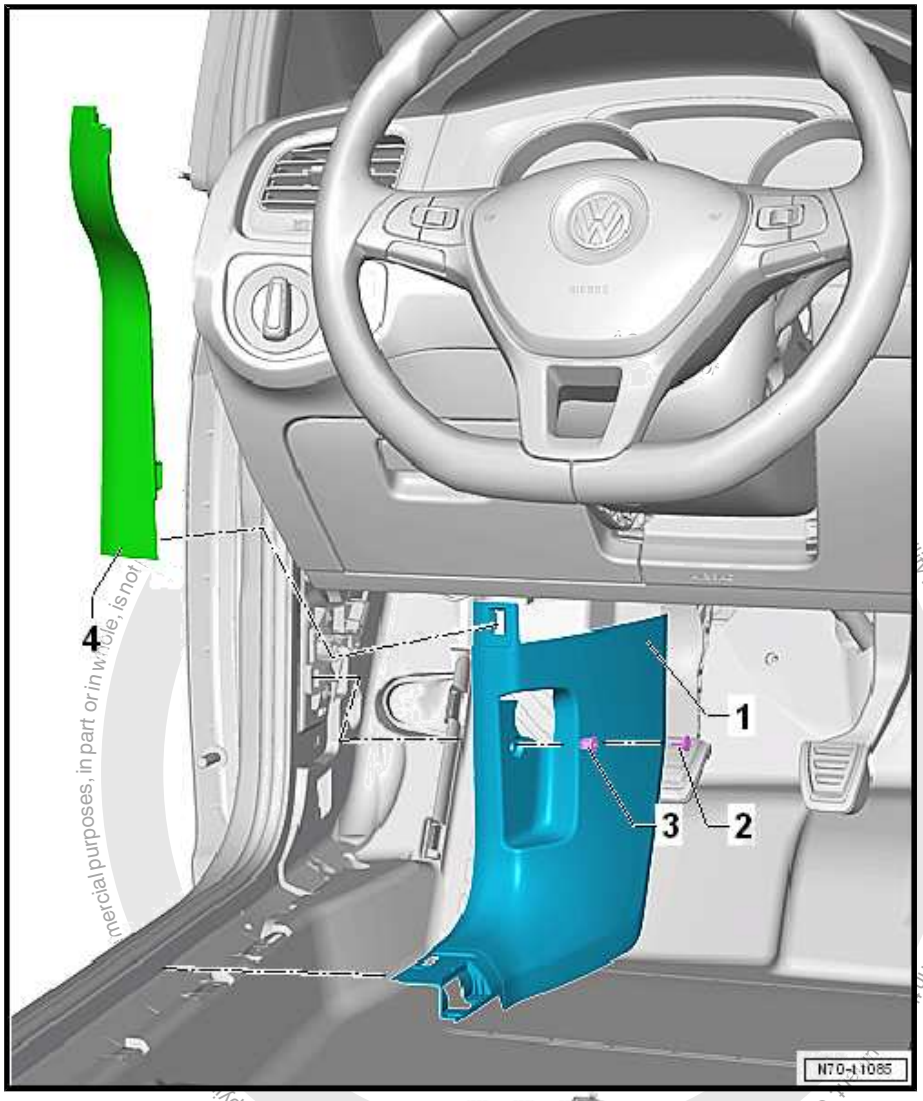

5.4 Overview - B-Pillar Trim Panel

Note

The illustrations show the B-pillar trim panels on the left side. The right side is similar.

Protected by copyright. Copyright by Volkswagen AG.

B-Pillar Upper Trim Panel

I: Upper B-Pillar Trim Panel, 4-Door

II: Upper B-Pillar Trim Panel, 2-Door

1 - B-Pillar Upper Trim Panel

- ❑ Removing and installing. Refer to ⇒ “5.13 B-Pillar Trim Panel, Removing and Installing”, page 256 .

2 - Clip

- ❑ Insert into the upper B-pillar trim panel
- ❑ Replace damaged or deformed retaining clips

3 - Screw

- ❑ 1.8 Nm

4 - Cap

- ❑ With the “Airbag” symbol

5 - Clip

- ❑ Insert in the B-pillars
- ❑ Replace damaged or deformed retaining clips

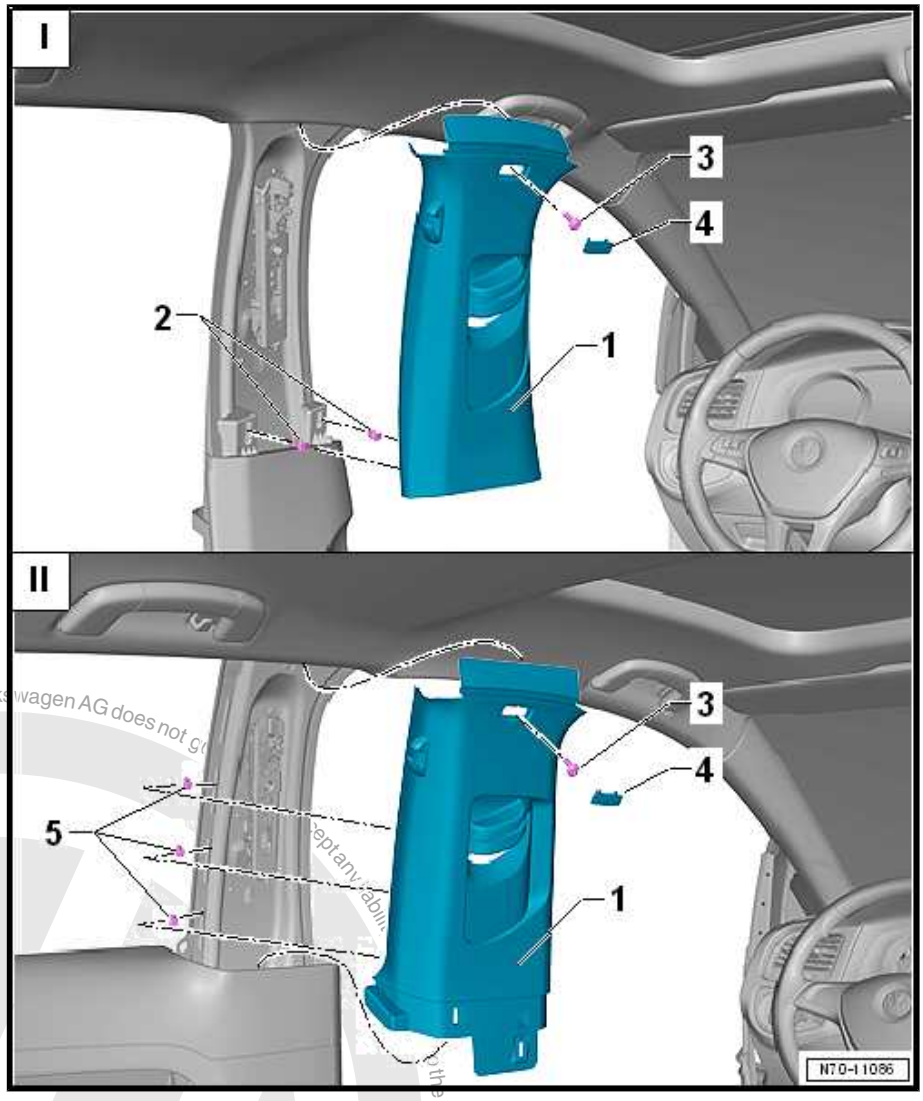

B-Pillar Lower Trim Panel

Protected by copyright. Copying for private or commercial purposes, in part or in whole, is not permitted unless authorised by Volkswagen AG. Volkswagen AG does not guarantee the correctness of information in this document. Copyright by Volkswagen AG.

1 - B-Pillar Lower Trim Panel

- ❑ Removing and installing. Refer to ⇒ "5.13 B-Pillar Trim Panel, Removing and Installing", page 256 .

2 - Interior Monitoring and Vehicle Inclination Deactivation Button - E616-

- ❑ Removing and installing. Refer to ⇒ Electrical Equipment; Rep. Gr. 96 ; Anti-Theft Alarm System; Overview - Interior Monitoring .

3 - Clip

- ❑ Insert in the trim panel
- ❑ Remove the clips that are still in the mounting points on the body using the Omega Clip Tool - T40280-
- ❑ Replace damaged or deformed retaining clips

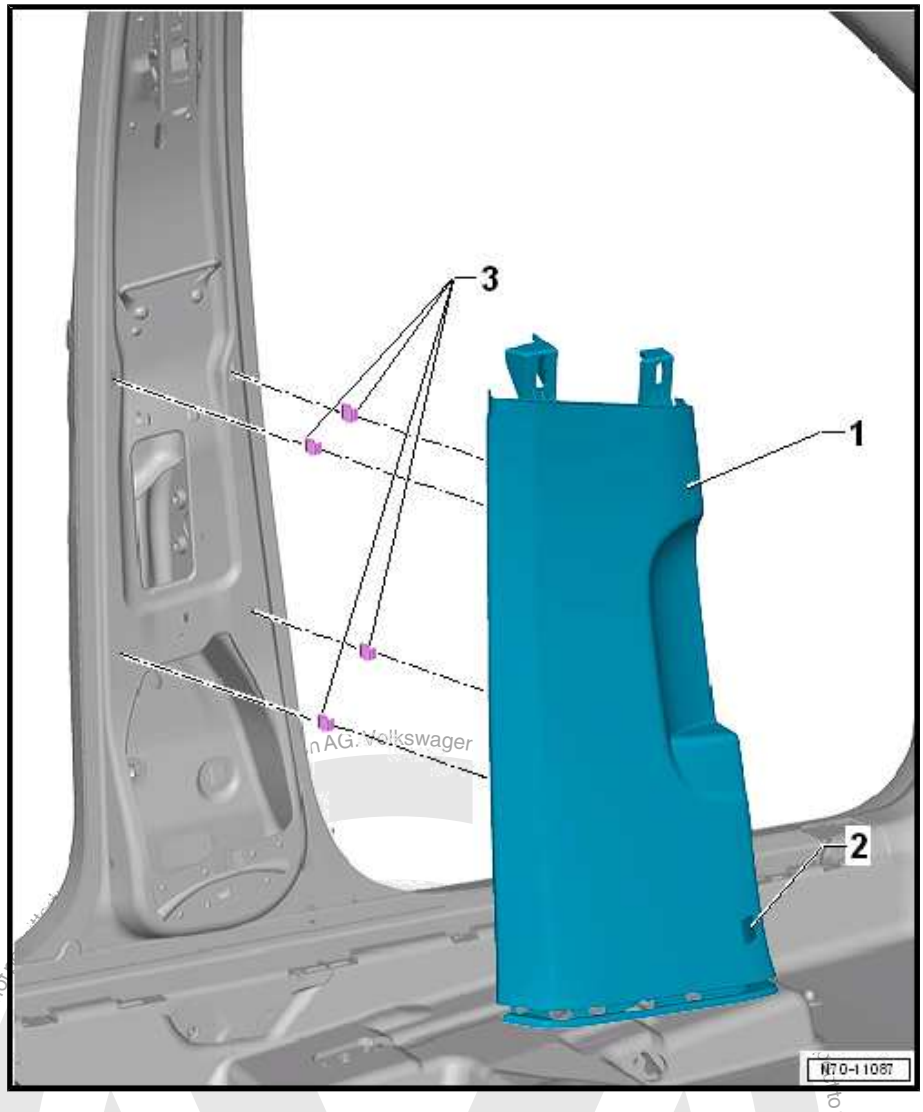

5.5 Overview - C-Pillar Trim Panel

⇒ "5.5.1 Overview - C-Pillar Trim Panel, Sedan", page 242

⇒ "5.5.2 Overview - C-Pillar Trim Panel, Wagon", page 244

5.5.1 Overview - C-Pillar Trim Panel, Sedan

Note

The illustration shows the C-pillar trim panel on the left side. The right side is similar.

Protected by copyright. Copyright by Volkswagen AG.

Protected by copyright. Copying for private or commercial purposes, in part or in whole, is not permitted unless authorised by Volkswagen AG. Volkswagen AG does not guarantee or accept any liability w

I: C-Pillar Trim Panel, 2-Door

II: C-Pillar Trim Panel, 4-Door

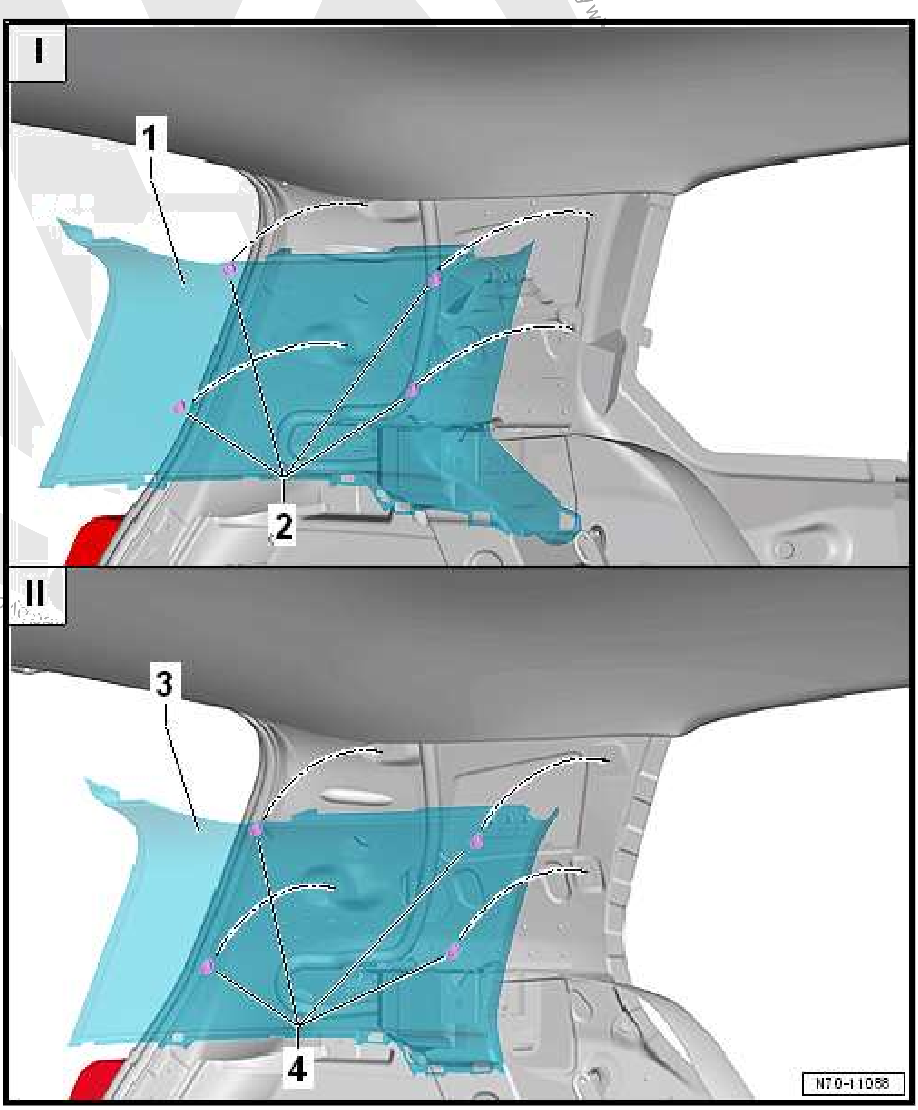

1 - C-Pillar Trim Panel

- ❑ Removing and installing. Refer to ⇒ “5.14 C-Pillar Trim Panel, Removing and Installing”, page 261 .

2 - Clip

- ❑ Insert in the trim panel
- ❑ Remove the clips that are still in the mounting points on the body using the Omega Clip Tool - T40280-
- ❑ Replace damaged or deformed retaining clips

3 - C-Pillar Trim Panel

- ❑ Removing and installing. Refer to ⇒ “5.14 C-Pillar Trim Panel, Removing and Installing”, page 261 .

4 - Clip

- ❑ Insert in the trim panel
- ❑ Remove the clips that are still in the mounting points on the body using the Omega Clip Tool - T40280-
- ❑ Replace damaged or deformed retaining clips

5.5.2 Overview - C-Pillar Trim Panel, Wagon

Note

The illustration shows the C-pillar trim panel on the left side. The right side is similar.

1 - C-Pillar Trim Panel

- ❑ Removing and installing. Refer to ⇒ "5.14.2 C-Pillar-Trim Panel, Removing and Installing, Wagon", page 262 .

2 - Clip

- ❑ Insert in the trim panel
- ❑ Remove the clips that are still in the mounting points on the body using the Omega Clip Tool -T40280-
- ❑ Replace damaged or deformed retaining clips

3 - Clip

- ❑ Insert in the C-pillar
- ❑ Always replace the clips

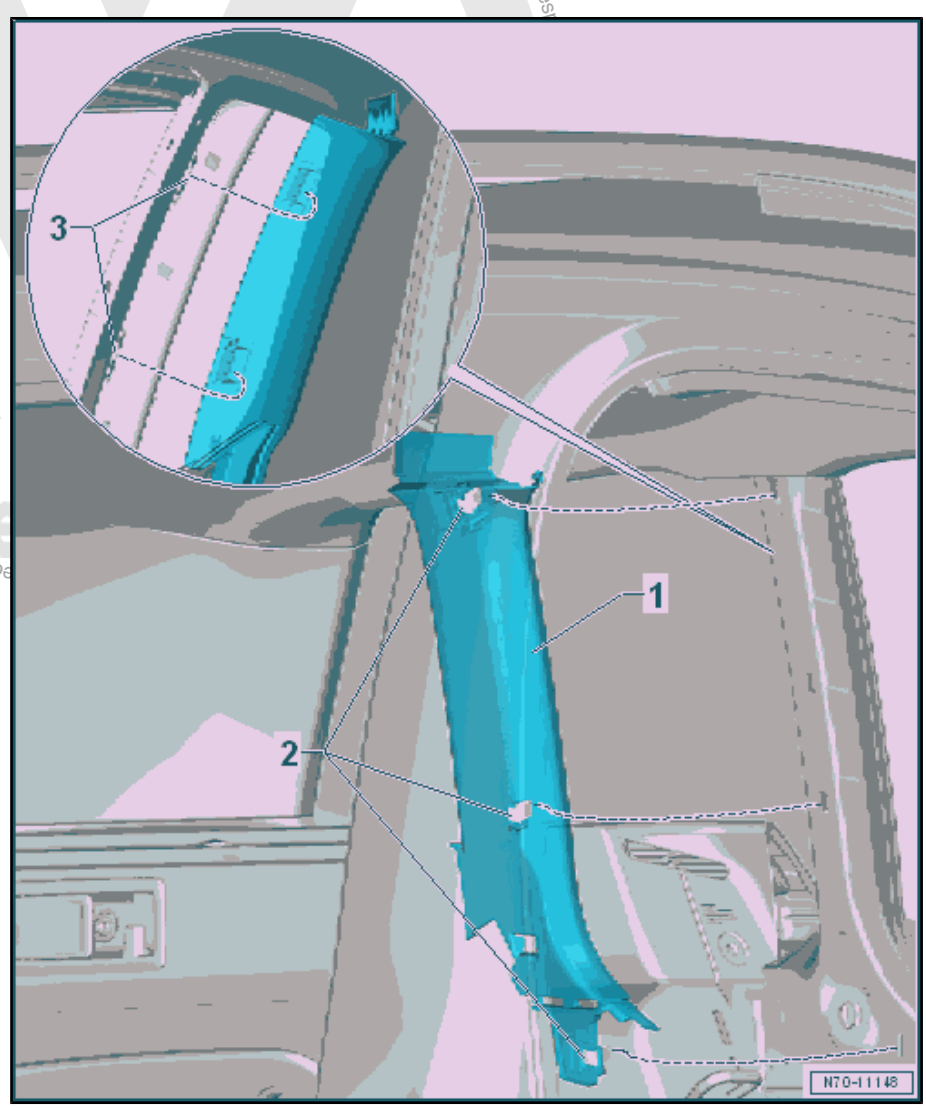

5.6 Overview - D-Pillar Trim Panel

Caution

This procedure contains mandatory replaceable parts. Refer to component overview prior to starting procedure.

Mandatory Replacement Parts

- ♦ Clips -3-

Note

The illustration shows the D-pillar trim panel on the left side. The right side is similar.

1 - D-Pillar Trim Panel

- ❑ Removing and installing. Refer to ⇒ "5.15 D-Pillar Trim Panel, Removing and Installing", page 264 .

2 - Clip

- ❑ Insert in the trim panel
- ❑ Remove the clips that are still in the mounting points on the body using the Omega Clip Tool - T40280-
- ❑ Replace damaged or deformed retaining clips

3 - Clip

- ❑ Insert in the D-pillar
- ❑ Always replace the clips

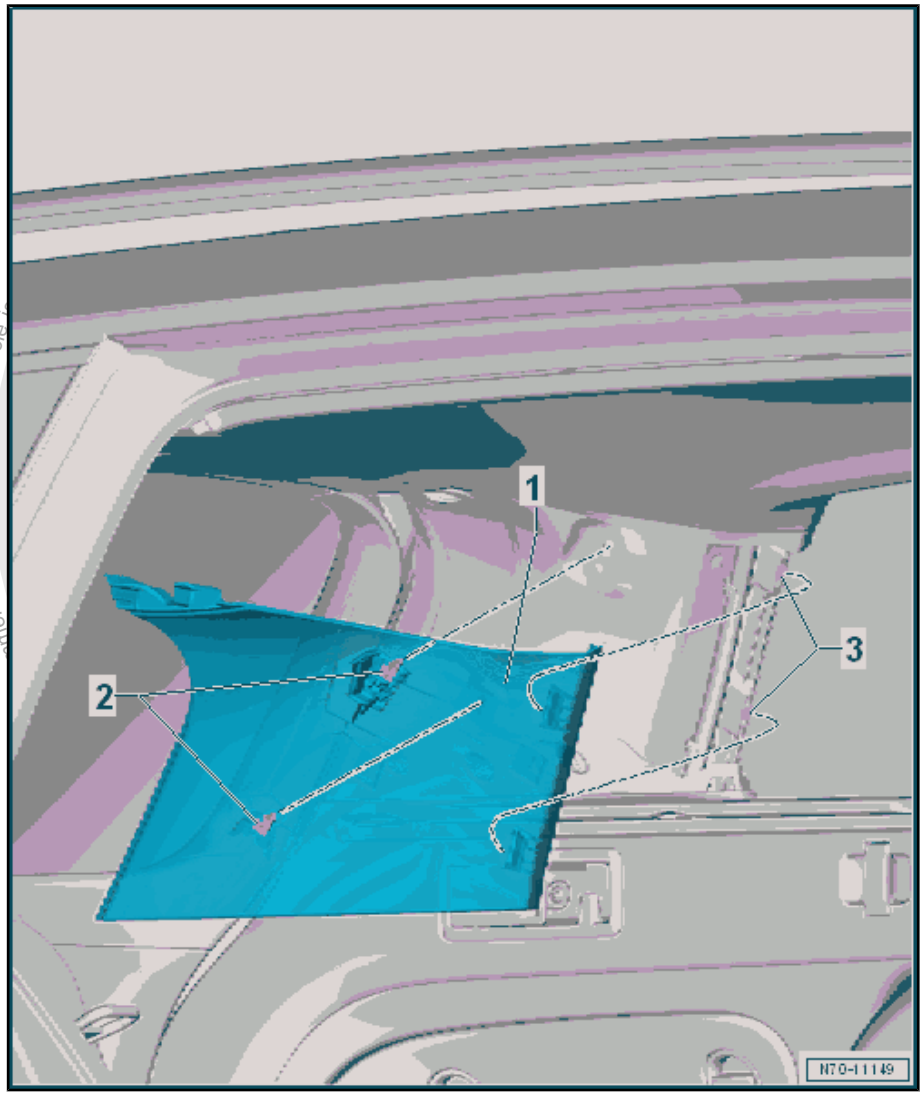

mercial purposes, in part or in whole

5.7 Overview - Side Trim Panel

Note

The illustration shows the side trim panel on the left side. The right side is similar.

1 - Side Trim Panel

- ❑ Removing and installing. Refer to ⇒ "5.16 Side Trim Panel, Removing and Installing", page 265 .

2 - Clip

- ❑ Insert in the trim panel
- ❑ Replace damaged or deformed clips

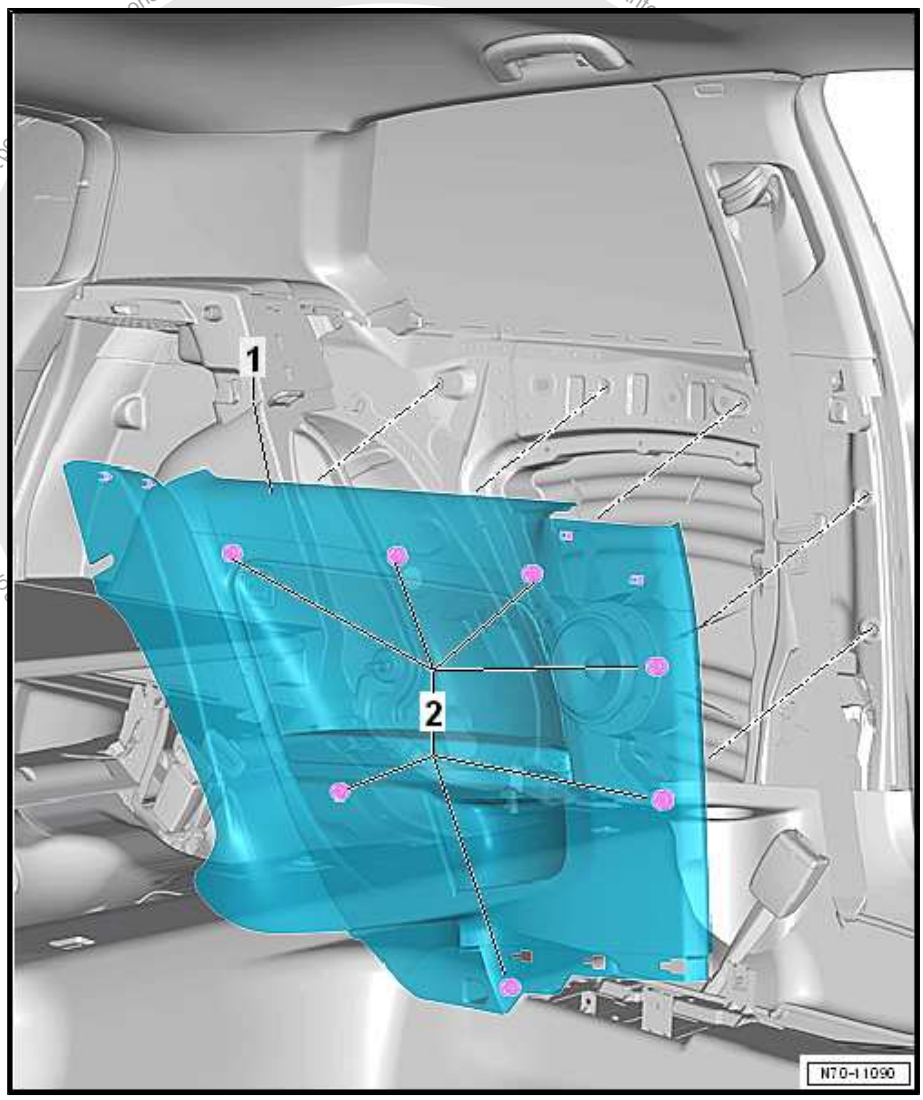

5.8 Overview - Wheel Housing Trim Panel

⇒ "5.8.1 Overview - Wheel Housing Trim Panel, 4-Door Sedan", page 246

⇒ "5.8.2 Overview - Wheel Housing Trim Panel, Wagon", page 247

5.8.1 Overview - Wheel Housing Trim Panel, 4-Door Sedan

Note

The illustration shows the wheel housing trim panel on the left side. The right side is similar.

I: Vehicles without Side Cushion

II: Vehicles with Side Cushion

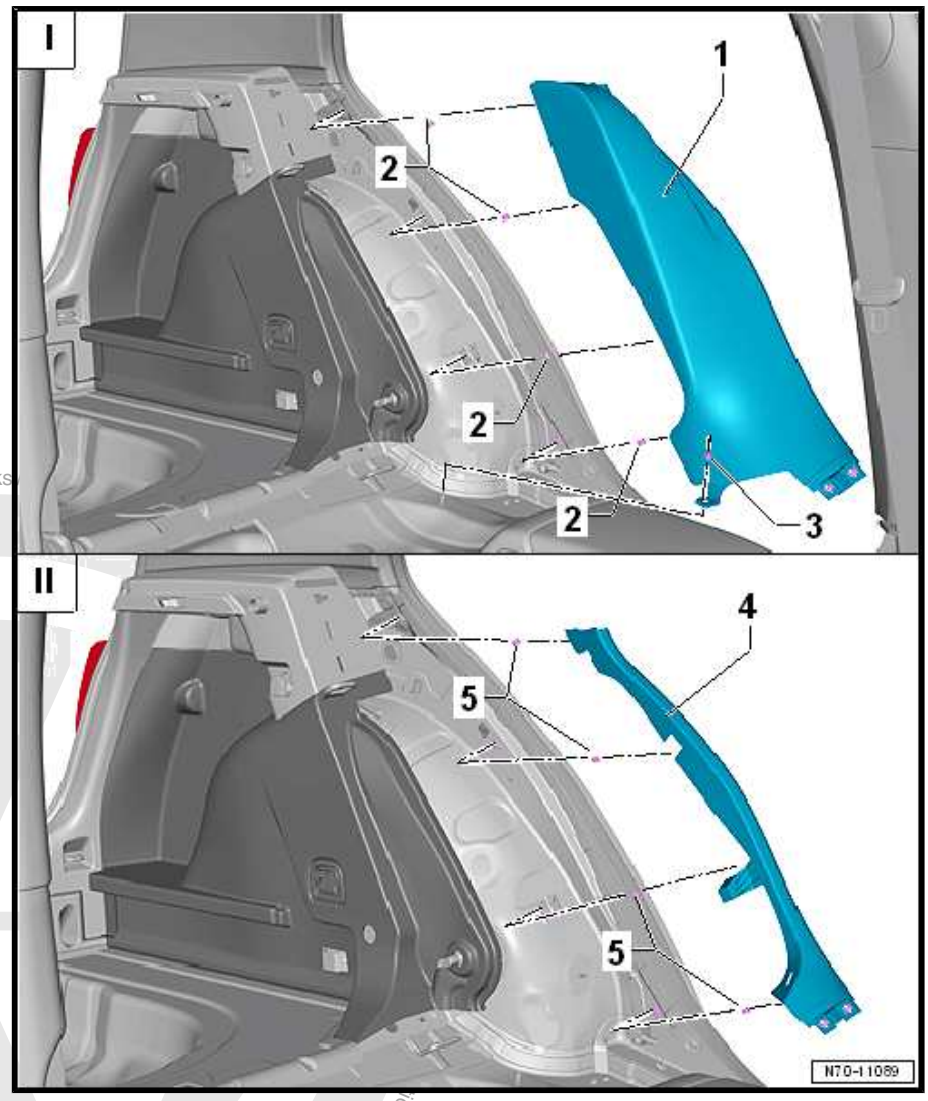

1 - Wheel Housing Trim Panel

- ❑ Removing and installing. Refer to ⇒ "5.17 Wheel Housing Trim Panel, Removing and Installing", page 267 .

2 - Clip

- ❑ Insert in the trim panel
- ❑ Remove the clips that are still in the mounting points on the body using the Omega Clip Tool - T40280-
- ❑ Replace damaged or deformed retaining clips

3 - Nut

- ❑ 3.5 Nm

4 - Wheel Housing Trim Panel

- ❑ Removing and installing. Refer to ⇒ "5.17 Wheel Housing Trim Panel, Removing and Installing", page 267 .

5 - Clip

- ❑ Insert in the trim panel
- ❑ Remove the clips that are still in the mounting points on the body using the Omega Clip Tool - T40280-
- ❑ Replace damaged or deformed retaining clips

5.8.2 Overview - Wheel Housing Trim Panel, Wagon

Note

The illustration shows the wheel housing trim panel on the left side. The right side is similar.

Protected by copyright. Copyright by Volkswagen AG. Copyright in this document. Copyright by Volkswagen AG.

Upper Half of Image: Vehicles without Side Padding

Lower Half of Image: Vehicles with Side Padding

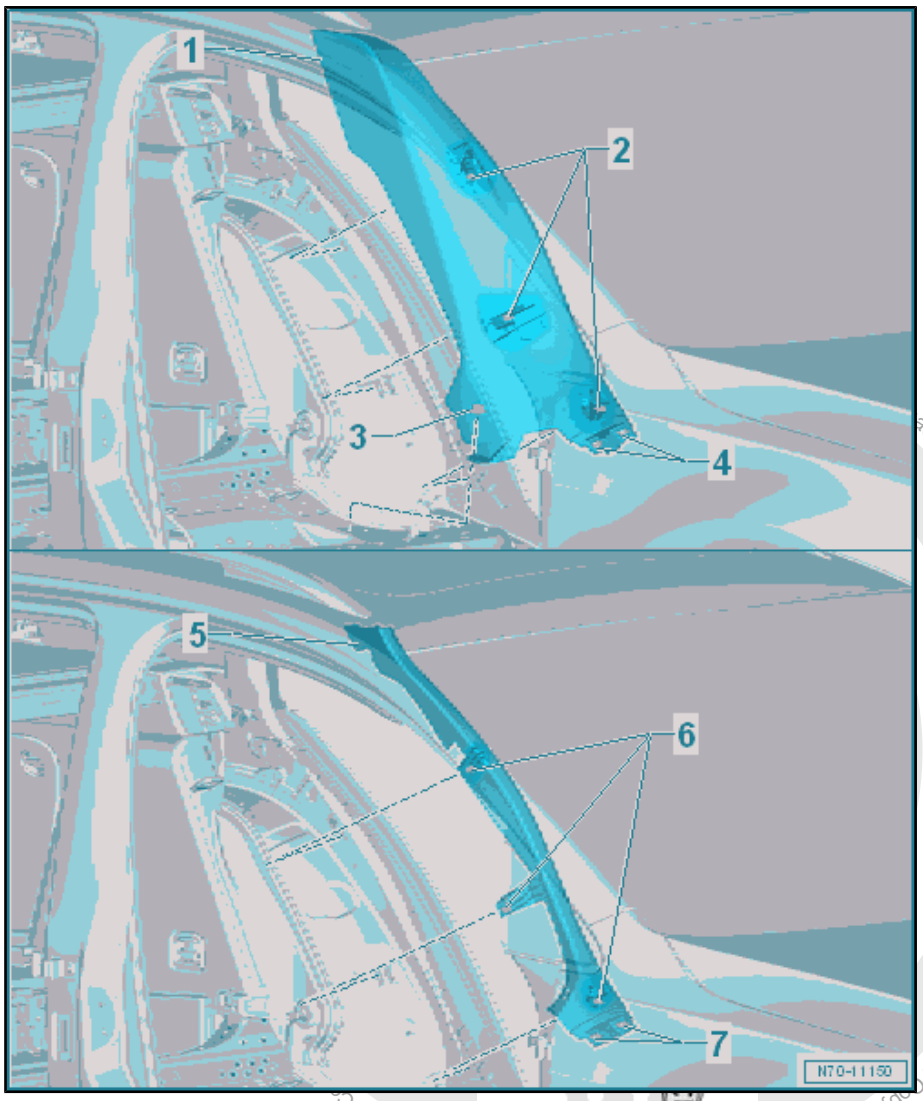

1 - Wheel Housing Trim Panel

- ❑ Removing and installing. Refer to ⇒ "5.17.2 Wheel Housing Trim Panel, Removing and Installing, Wagon", page 269 .

2 - Clip

- ❑ Insert in the trim panel
- ❑ Remove the clips that are still in the mounting points on the body using the Omega Clip Tool - T40280-
- ❑ Replace damaged or deformed retaining clips

3 - Nut

- ❑ 3.5 Nm

4 - Clip

- ❑ For attaching the sill panel strip
- ❑ Insert into the wheel housing trim panel
- ❑ Replace damaged or deformed retaining clips

5 - Wheel Housing Trim Panel

- ❑ Removing and installing. Refer to ⇒ "5.17.2 Wheel Housing Trim Panel, Removing and Installing, Wagon", page 269 .

6 - Clip

- ❑ Insert in the trim panel
- ❑ Remove the clips that are still in the mounting points on the body using the Omega Clip Tool - T40280-
- ❑ Replace damaged or deformed retaining clips

7 - Clip

- ❑ For attaching the sill panel strip
- ❑ Insert into the wheel housing trim panel
- ❑ Replace damaged or deformed retaining clips

Protected by copyright. Copyright Volkswagen AG. accept any liability with respect to the correctness of information in this document.

5.9 Overview - Foot Rest and Carpet

1 - Footrest

- ❑ Removing and installing. Refer to ⇒ "5.18 Foot Rest, Removing and Installing", page 271 .
- ❑ Must engage completely in the bracket

2 - Nut

- ❑ 2 Nm
- ❑ Quantity: 3

3 - Bracket

- ❑ Removing and installing. Refer to ⇒ "5.18 Foot Rest, Removing and Installing", page 271 .

4 - Carpet

- ❑ One piece
- ❑ Removing and installing. Refer to ⇒ "5.19 Carpet, Removing and Installing", page 272 .

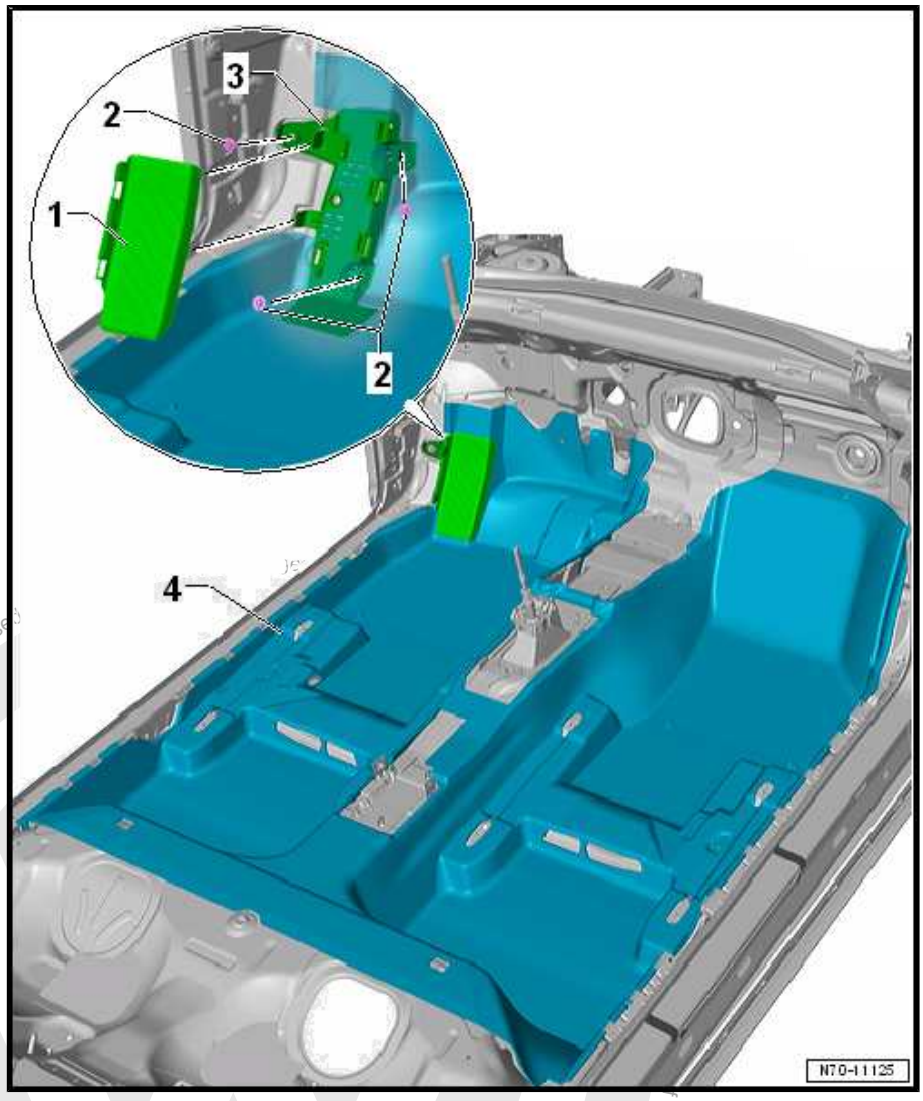

5.10 Sill Panel Strip, Removing and Installing

⇒ "5.10.1 Sill Panel Strip, Removing and Installing, 2-Door Sedan", page 249

⇒ "5.10.2 Sill Panel Strip, Removing and Installing, 4-Door Sedan and Wagon", page 250

5.10.1 Sill Panel Strip, Removing and Installing, 2-Door Sedan

Note

The following describes the removing and installing on the left side of the vehicle. Removing and installing on the right side is identical.

Special tools and workshop equipment required

- ♦ Wedge Set - T10383-

Protected copyright. Copyright by Volkswagen AG. Copying for private or commercial purposes, in part or in whole, is not permitted unless authorised. Information in this document.

Removing

– Remove the rear bench seat. Refer to ⇒ “3.7 Bench Seat/Single Seat, Removing and Installing”, page 382 .

– Loosen the sill panel -1- from the side sill and door seal molding using the Wedge Set - T10383- in direction of -arrows-.

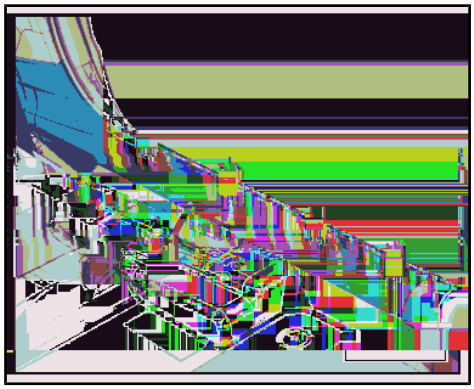

– Remove the expanding clip -1-.

– Release the sill panel strip retaining tab -3- from the side trim panel using the Wedge Set - T10383- in direction of -arrow A-.

– Remove the sill panel strip -2- at the same time forward from the side trim panel in direction of -arrow B-.

– Remove the sill panel strip.

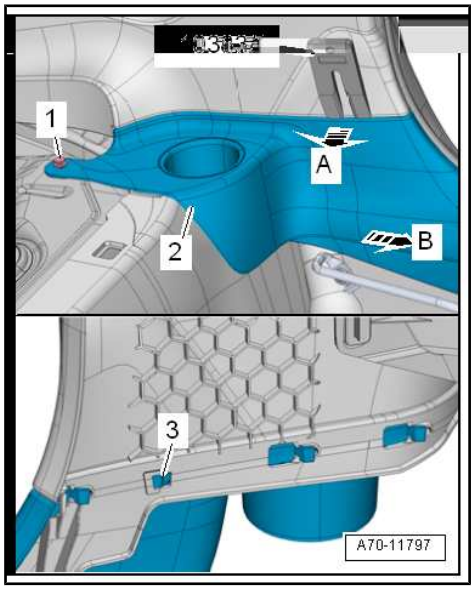

Installing

Note

- *Check all the fasteners for damage and replace if necessary.*
- *Remove any remaining clips in the body mounting points using the Omega Clip Tool - T40280- . To install, insert into the sill panel strip.*
- *Make sure that the sill panel strip is inside the door seal molding after installing.*

Install in reverse order of removal.

5.10.2 Sill Panel Strip, Removing and Installing, 4-Door Sedan and Wagon

Note

The following describes the removing and installing on the left side of the vehicle. Removing and installing on the right side is identical.

Special tools and workshop equipment required

- Wedge Set - T10383-

Removing

– Remove the rear bench seat. Refer to ⇒ “3.7 Bench Seat/Single Seat, Removing and Installing”, page 382 .

– Remove the expanding clip -1-.

Protected by copyright. Copying for private or commercial purposes, partly or in whole, is not permitted unless authorised by Volkswagen AG. Volkswagen AG does not guarantee or accept any liability with respect to the correctness of information in this document. Copyright by Volkswagen AG.

– Release the sill panel strip retaining tabs -2- from the lower B-pillar trim panel -3- using the Wedge Set - T10383- in direction of -arrow A-.
– Loosen the sill panel -1- from the side sill and door seal molding using the Wedge Set - T10383- in direction of -arrows-.
– Remove the sill panel strip -1- slightly forward at the same time.
– Open the belt guide cover and guide the seat belt out.

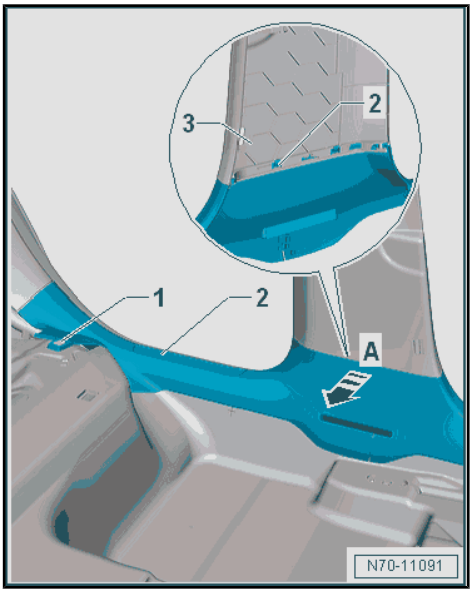

– Remove the sill panel strip.

Installing

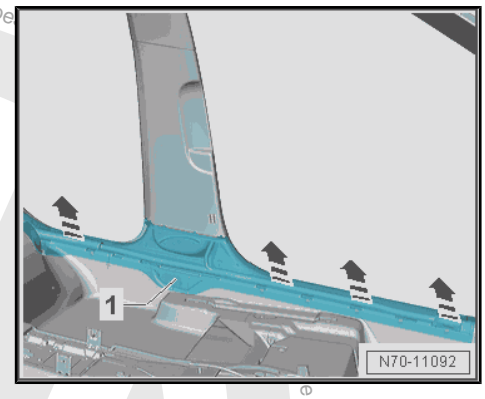

Note

- *Check all the fasteners for damage and replace if necessary.*
- *Remove any remaining clips in the body mounting points using the Omega Clip Tool - T40280- . To install, insert into the sill panel strip.*
- *Make sure that the sill panel strip is inside the door seal molding after installing.*

Install in reverse order of removal.

5.11 A-Pillar Gap Cover, Removing and Installing

Note

The following describes the removing and installing on the left side of the vehicle. Removing and installing on the right side is identical.

Special tools and workshop equipment required

- Trim Removal Wedge - 3409-

Protected by copyright. Copying for private or commercial purposes, in part or in whole, is not permitted unless authorised by Volkswagen AG. Volkswagen AG does not guarantee the correctness of information in this document. Copyright by Volkswagen AG.

Removing

– Remove the instrument panel side cover. Refer to ⇒ “3.2 Instrument Panel Side Cover, Removing and Installing”, page 211 .

– Unclip the A-pillar gap cover -1- from the A-pillar upper trim panel and A-pillar lower trim panel -arrows-.

– Loosen and remove the A-pillar gap cover -1- from the door seal molding.

Installing

Note

Make sure that the A-pillar gap cover is inside the door seal molding after installing.

Install in reverse order of removal.

5.12 A-Pillar Trim Panel, Removing and Installing

Special tools and workshop equipment required

- Trim Removal Wedge - 3409-
- Torque Wrench 1783 - 2-10Nm - VAG1783-

Caution

This procedure contains mandatory replaceable parts. Refer to component overview prior to starting procedure.

Mandatory Replacement Parts

- Clips (Upper Clips (Qty. 2))

Protected by copyright. Copying for private or commercial purposes, in part or in whole, is not permitted unless authorised by Volkswagen AG. Volkswagen AG does not guarantee or accept any liability with respect to the correctness of information in this document. Copyright by Volkswagen AG.

Removing

A-Pillar Upper Trim Panel

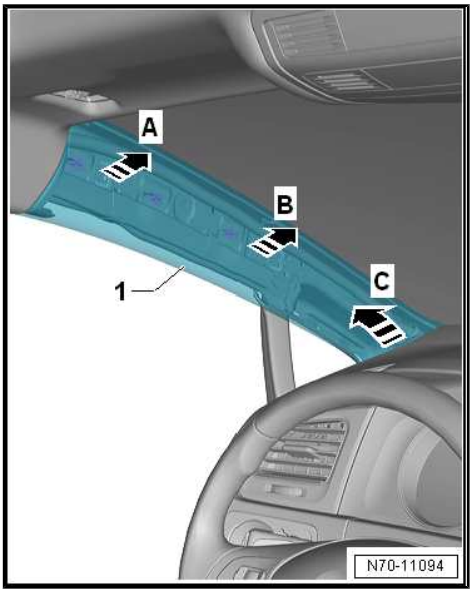

Note

The following describes the removing and installing on the left side of the vehicle. Removing and installing on the right side is identical.

– Detach the A-pillar upper trim panel -1- from the door seal molding.

– Starting at the top, carefully loosen the upper A-pillar trim panel -1- up to the first retainer using the Trim Removal Wedge -3409- in direction of -arrows A and B-.

Caution

It is theoretically possible to damage the head curtain airbag during the following steps. Therefore proceed with great care when bending the hooks.

– Slide a screwdriver between the body and the head curtain airbag near the upper two clips.

– Using the screwdriver, bend the hooks of the upper two clips until it is possible to remove the clips.

Caution

Always replace the upper two clips before installing.

– Raise the upper A-pillar trim panel -1- upward out of the instrument panel in direction of -arrow C-.

– Disconnect the connector from the treble speaker and remove the upper A-pillar trim panel -1-.

Triangular Window Trim Panel, Removing

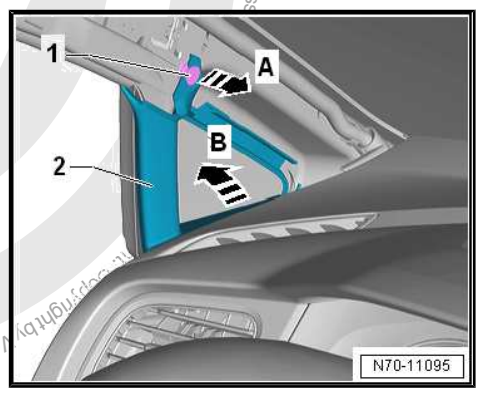

Note

The following describes the removing and installing on the left side of the vehicle. Removing and installing on the right side is identical.

– Remove the upper A-pillar trim panel. Refer to ⇒ page 253 .

– Remove the A-pillar gap cover. Refer to ⇒ “5.11 A-Pillar Gap Cover, Removing and Installing”, page 251 .

– Loosen the triangular window trim panel -2- with the clip -1- in direction of the -arrow A- from the body mount.

– Remove the triangular window trim panel -2- with the clip -1- upward from the instrument panel in direction of -arrow B-.

Protected by copyright. Copying for private or commercial purposes, in part or in whole, is not permitted unless authorised by Volkswagen AG. Volkswagen AG does not guarantee or accept any liability with respect to the correctness of information in this document. Copyright by Volkswagen AG.

Lower A-Pillar Trim Panel on the Driver Side, Removing

– Detach the sill panel from the body in the transition area to the A-pillar lower trim panel. Refer to ⇒ “5.10 Sill Panel Strip, Removing and Installing”, page 249 .

– Remove the A-pillar gap cover. Refer to ⇒ “5.11 A-Pillar Gap Cover, Removing and Installing”, page 251 .

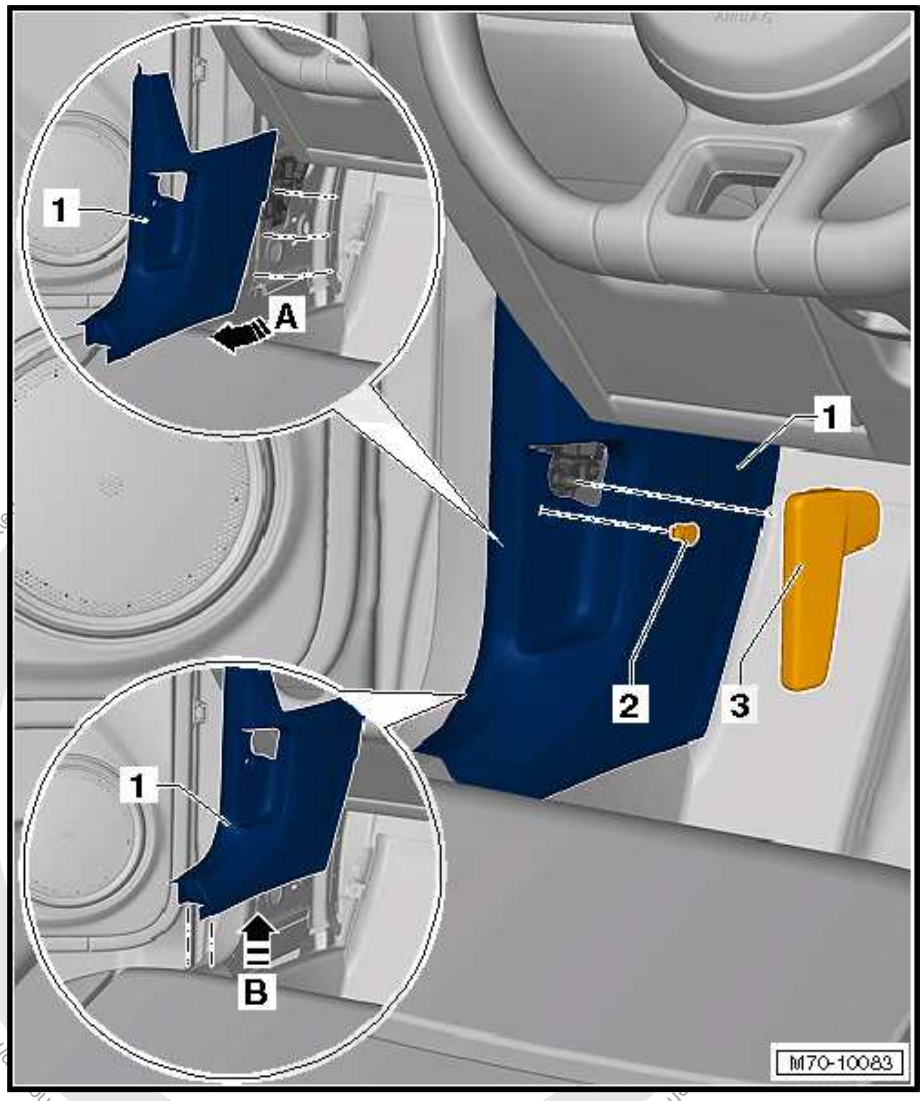

– Remove the hood release lever -3-. Refer to ⇒ Body Exterior; Rep. Gr. 55 ; Hood; Hood Release Lever, Removing and Installing .

– Remove the clip -2-.

– Loosen the lower A-pillar trim panel -1- from the body in the direction of the -arrow B-. Loosen the lower A-pillar trim panel from the door seal molding.

– Remove the lower A-pillar trim panel -1- from the mount direction of -arrow A-.

Protected by copyright. Copyright by Volkswagen AG.

Lower A-Pillar Trim Panel on the Front Passenger Side, Removing

– Detach the sill panel from the body in the transition area to the A-pillar lower trim panel. Refer to
⇒ “5.10 Sill Panel Strip, Removing and Installing”, page 249 .

– Remove the A-pillar gap cover. Refer to
⇒ “5.11 A-Pillar Gap Cover, Removing and Installing”, page 251 .

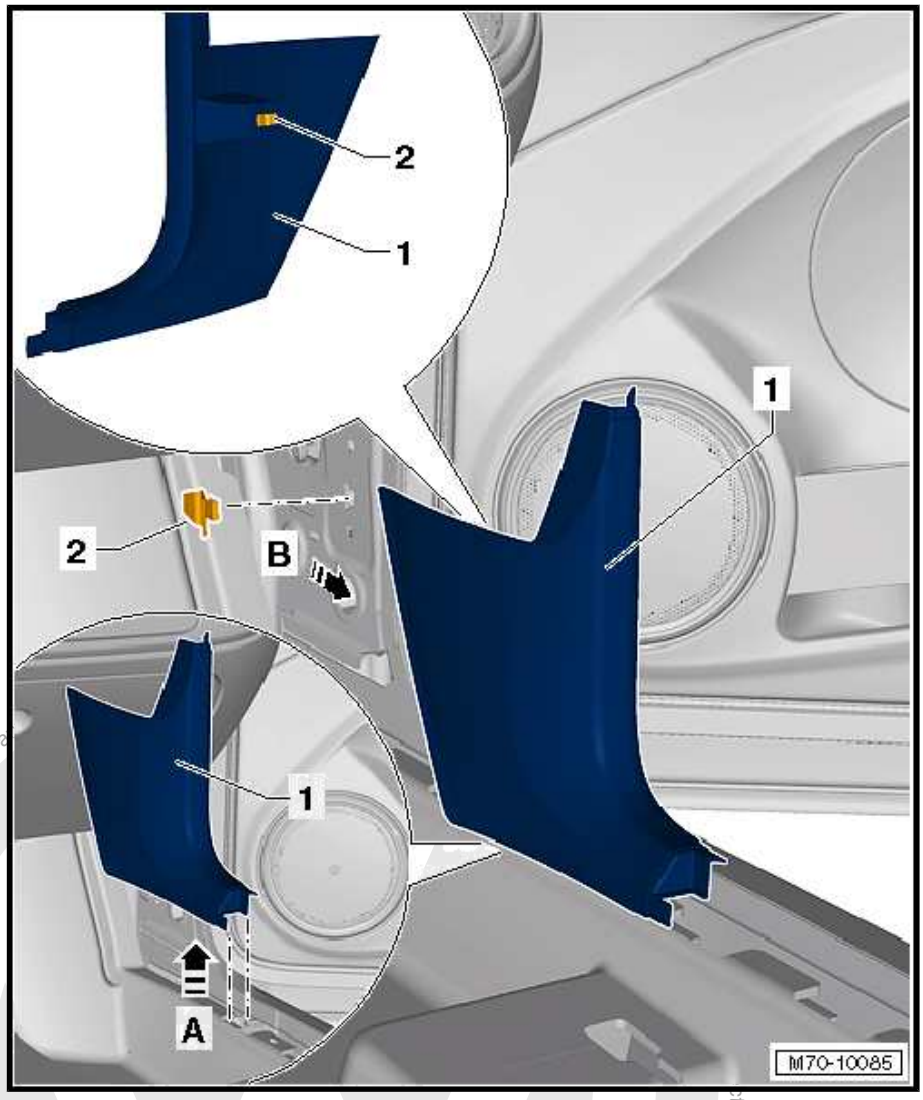

– Loosen the lower A-pillar trim panel -1- from the body in the direction of the -arrow A-. Loosen the lower A-pillar trim panel from the door seal molding.

– Remove the lower A-pillar trim panel -1- from the A-pillar in the direction of the -arrow B-.

Protected by copyright. Copying for private or commercial purposes, in part or in whole, is not permitted unless authorised by Volkswagen AG. Copyright by Volkswagen AG. No liability for the correctness of information in this document.

Installing

Note

- *Check all the fasteners for damage and replace if necessary.*
- *Remove any remaining clips in the body mounting points using the Omega Clip Tool - T40280- . To install, insert into the A-pillar trim panels.*
- *Make sure that the A-pillar trim panels are inside the door seal molding after installing.*

Install in reverse order of removal.

5.13 B-Pillar Trim Panel, Removing and Installing

⇒ “5.13.1 B-Pillar Trim Panel, Removing and Installing, 2-Door Sedan”, page 256

⇒ “5.13.2 B-Pillar Trim Panel, Removing and Installing, 4-Door Sedan and Wagon”, page 258

5.13.1 B-Pillar Trim Panel, Removing and Installing, 2-Door Sedan

Note

The following describes the removing and installing on the left side of the vehicle. Removing and installing on the right side is identical.

Special tools and workshop equipment required

- Wedge Set - T10383-

Removing

– Remove the front belt end fitting. Refer to ⇒ “1.11 Front Belt End Fitting, Removing and Installing”, page 116 .

– Move seat belt height adjuster to the lowest position.

Protected by copyright. Copying for private or commercial purposes, in part or in whole, is not permitted unless authorised by Volkswagen AG. Volkswagen AG does not guarantee or accept any liability with respect to the correctness of information in this document. Copyright by Volkswagen AG.

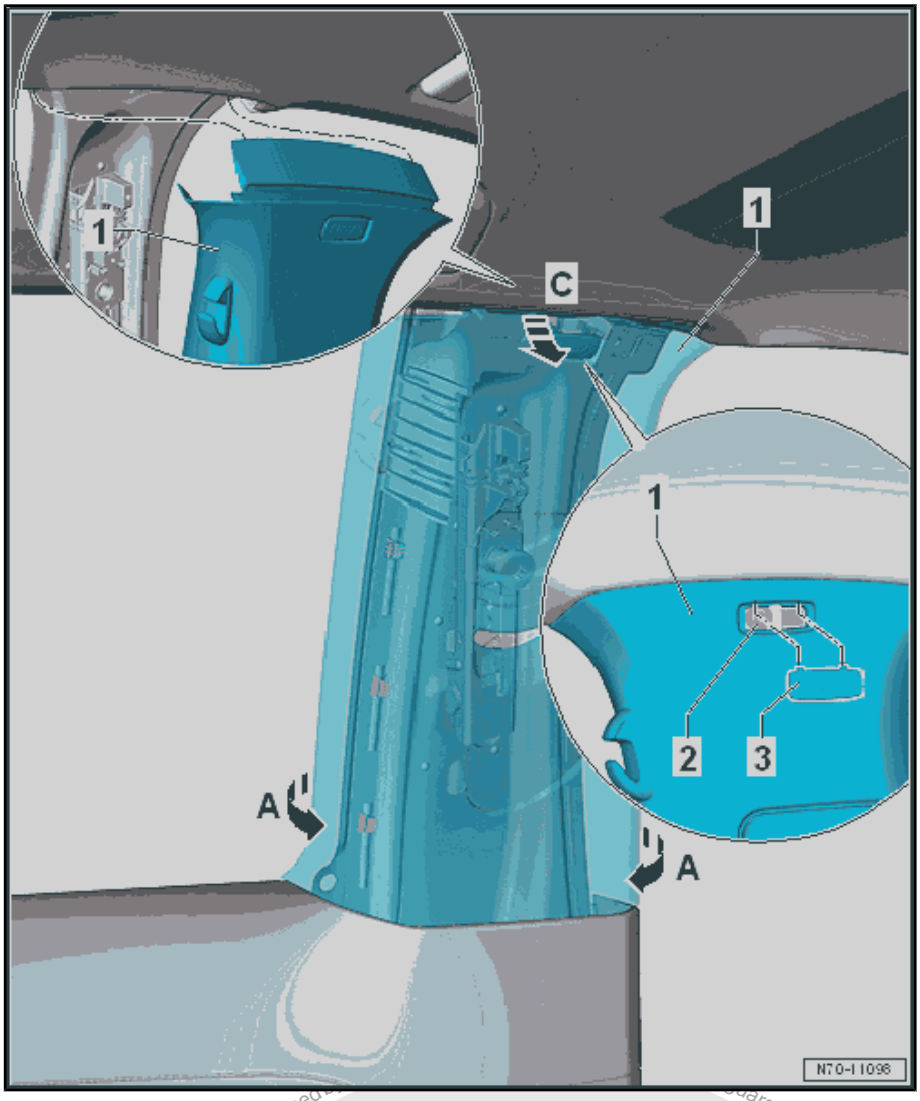

- Pry out the expanding cap -3- with the symbol “Airbag” using a screwdriver.
- Remove the bolt -2-.
- Loosen the side trim panel in the transition area to the upper B-pillar trim panel -1-. Refer to ⇒ “5.16 Side Trim Panel, Removing and Installing”, page 265 .
- Starting at the bottom, disengage the upper B-pillar trim panel -1- at the door seal and loosen from the clips using the Wedge Set - T10383- in direction of -arrows A-.
- Remove the upper B-pillar trim panel -1- from the mount on the body in direction of -arrow C- by moving the trim panel inward and pulling it downward at the same time.
- Guide the seat belt webbing out through the slide for the seat belt height adjuster, and then remove the upper B-pillar trim panel.

Protected by copyright. Copying for private or commercial purposes, in any form whatsoever, is not permitted unless authorised by Volkswagen AG. Volkswagen AG does not guarantee or accept any liability with respect to the correctness of information in this document. Copyright by Volkswagen AG.

Installing

Note

- *Check all the fasteners for damage and replace if necessary.*
- *Make sure that the upper B-pillar trim panel is in the door seal molding after installing.*

Install in reverse order of removal.

Tightening Specifications

- Refer to ⇒ “5.4 Overview - B-Pillar Trim Panel”, page 240

5.13.2 B-Pillar Trim Panel, Removing and Installing, 4-Door Sedan and Wagon

Special tools and workshop equipment required

- Wedge Set - T10383-
- Torque Wrench 1783 - 2-10Nm - VAG1783-

Removing

Upper B-Pillar Trim Panel

Note

The following describes the removing and installing on the left side of the vehicle. Removing and installing on the right side is identical.

– Remove the front belt end fitting. Refer to ⇒ “1.11 Front Belt End Fitting, Removing and Installing”, page 116 .

– Move seat belt height adjuster to the lowest position.

Protected by copyright. Copying for private or commercial purposes, in part or in whole, is not permitted unless authorised by Volkswagen AG. Volkswagen AG does not guarantee or accept any liability with respect to the correctness of information in this document. Copyright by Volkswagen AG.

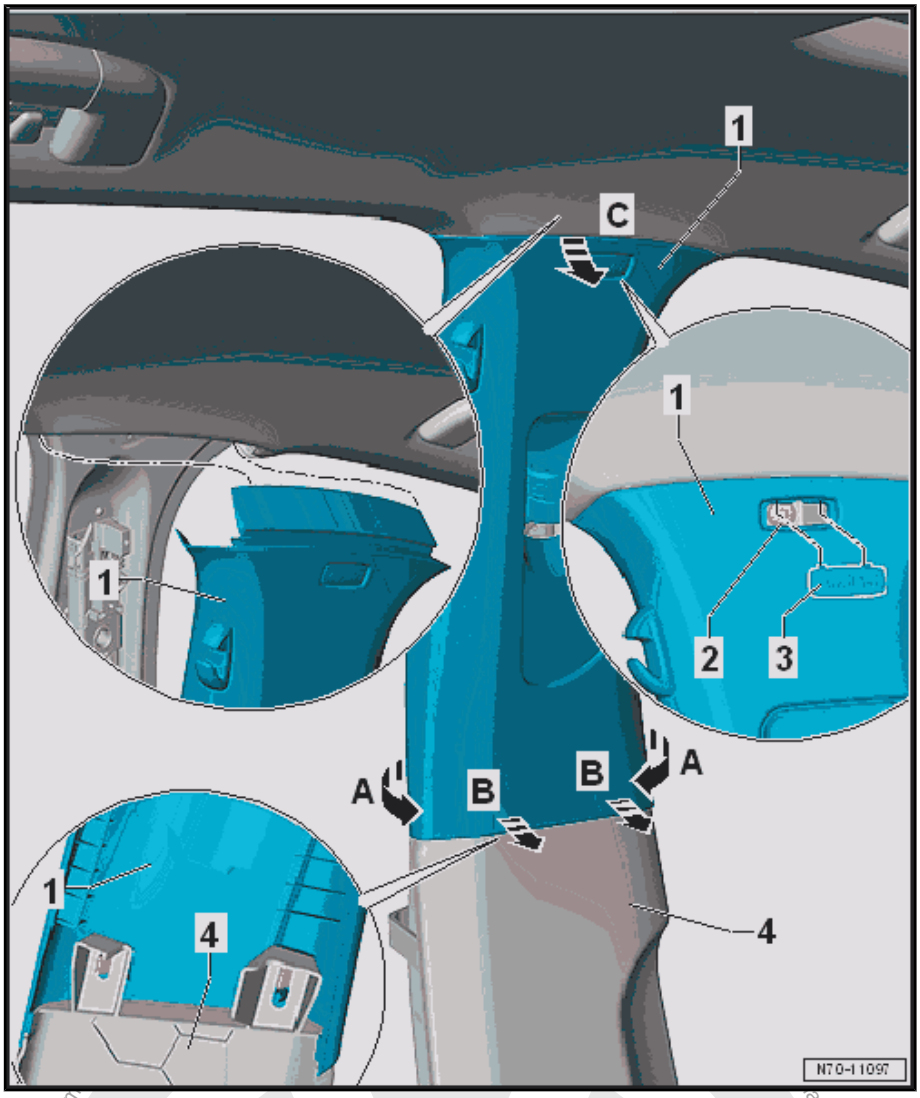

- Pry out the expanding cap -3- with the symbol “Airbag” using a screwdriver.
- Remove the bolt -2-.
- Starting at the bottom, disengage the upper B-pillar trim panel -1- at the door seal in direction of -arrow A- by placing the Wedge Set - T10383- on the front edge of the trim panel.
- Unclip the upper B-pillar trim panel -1- from the lower B-pillar trim panel -4- in direction of -arrows B- by placing the Wedge Set - T10383- on the lower edge of the trim panel.
- Remove the upper B-pillar trim panel -1- from the mount on the body in direction of -arrow C- by moving the trim panel inward and pulling it downward at the same time.
- Guide the seat belt webbing with belt tongue out through the slide for the seat belt height adjuster, and then remove the upper B-pillar trim panel.

Protected by copyright. Copying for private or commercial purposes, in whole or in part, is not permitted unless authorised by Volkswagen AG. Volkswagen AG does not guarantee or accept any liability with respect to the correctness of information in this document. Copyright by Volkswagen AG.

B-Pillar Lower Trim Panel

Note

The following describes the removing and installing on the left side of the vehicle. Removing and installing on the right side is identical.

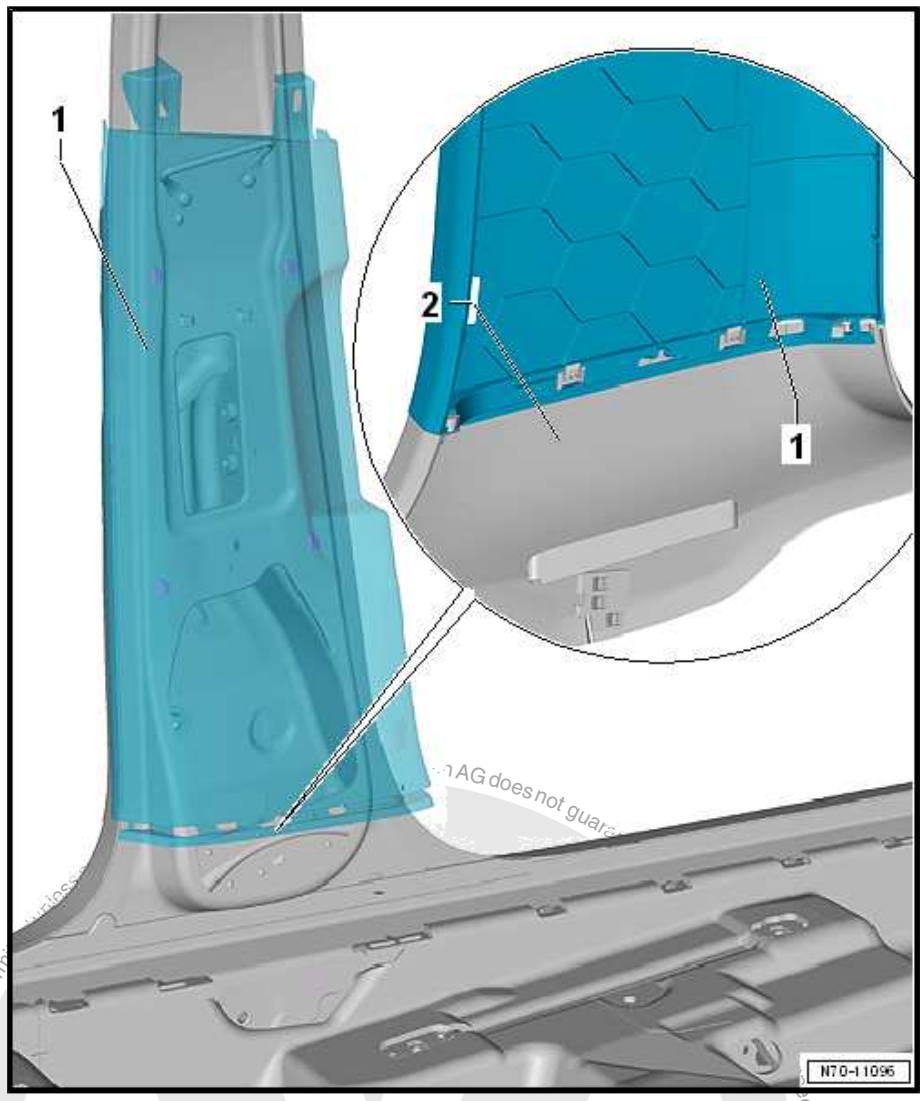

- Loosen the sill panel strip -2- near the transition area to the lower B-pillar trim panel -1-. Refer to ⇒ “5.10 Sill Panel Strip, Removing and Installing”, page 249 .
- Loosen the upper B-pillar trim panel in the transition area to the lower B-pillar trim panel -1-. Refer to ⇒ page 258 .
- Loosen the lower B-pillar trim panel -1- from the door seal molding.
- Loosen the lower B-pillar trim panel -1- near the clips from the body mounts using the Wedge Set - T10383- .
- If equipped, disconnect the connector from the Interior Monitoring and Vehicle Inclination Deactivation Button - E616- and remove the B-pillar lower trim panel -1-.

Protected by copyright. Copyright by Volkswagen AG.

Installing

Note

- *Check all the fasteners for damage and replace if necessary.*
- *Remove any remaining clips in the body mounting points using the Omega Clip Tool - T40280- . To install, insert into the B-pillar trim panels.*
- *Make sure that the B-pillar trim panels are inside the door seal molding after installing.*

Install in reverse order of removal.

Tightening Specifications

- Refer to ⇒ "5.4 Overview - B-Pillar Trim Panel", page 240

5.14 C-Pillar Trim Panel, Removing and Installing

⇒ "5.14.1 C-Pillar-Trim Panel, Removing and Installing, Sedan", page 261

⇒ "5.14.2 C-Pillar-Trim Panel, Removing and Installing, Wagon", page 262

5.14.1 C-Pillar-Trim Panel, Removing and Installing, Sedan

Note

The following describes the removing and installing on the left side of the vehicle. Removing and installing on the right side is identical.

Special tools and workshop equipment required

- Pry Lever - 80-200-

Protected by copyright. Copyright by Volkswagen AG. Volkswagen AG does not guarantee or accept any liability with respect to the correctness of information in this document. Copyright by Volkswagen AG.

Removing

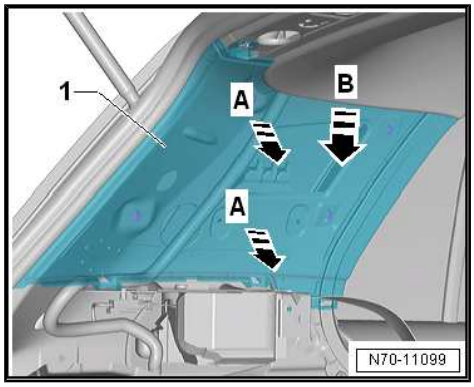

- Remove the rear shelf compartment. Refer to ⇒ “6.9 Rear Shelf Compartment, Removing and Installing”, page 285 .
- Remove the roof end strip. Refer to ⇒ “7.2 Roof End Strip, Removing and Installing”, page 299 .
- Unclip the C-pillar trim panel near the clips from the body mounts using the Pry Lever - 80-200- in direction of -arrows A-.
- Remove the C-pillar trim panel downward in direction of -arrow B-.

Installing

Note

- *Check all the fasteners for damage and replace if necessary.*
- *Remove any remaining clips in the body mounting points using the Omega Clip Tool - T40280- . To install, insert into the C-pillar trim panel.*
- *Make sure that the C-pillar trim panel is inside the rear lid seal molding after it is installed.*

Install in reverse order of removal.

5.14.2 C-Pillar-Trim Panel, Removing and Installing, Wagon

Note

The following describes the removing and installing on the left side of the vehicle. Removing and installing on the right side is identical.

Special tools and workshop equipment required

- Pry Lever - 80-200-

Caution

This procedure contains mandatory replaceable parts. Refer to component overview prior to starting procedure.

Mandatory Replacement Parts

- Upper Clips -3-

Removing

Protected by copyright. Copying for private or commercial purposes, in part or in whole, is not permitted unless authorised by Volkswagen AG. Volkswagen AG does not guarantee or accept any liability with respect to the correctness of information in this document. Copyright by Volkswagen AG.

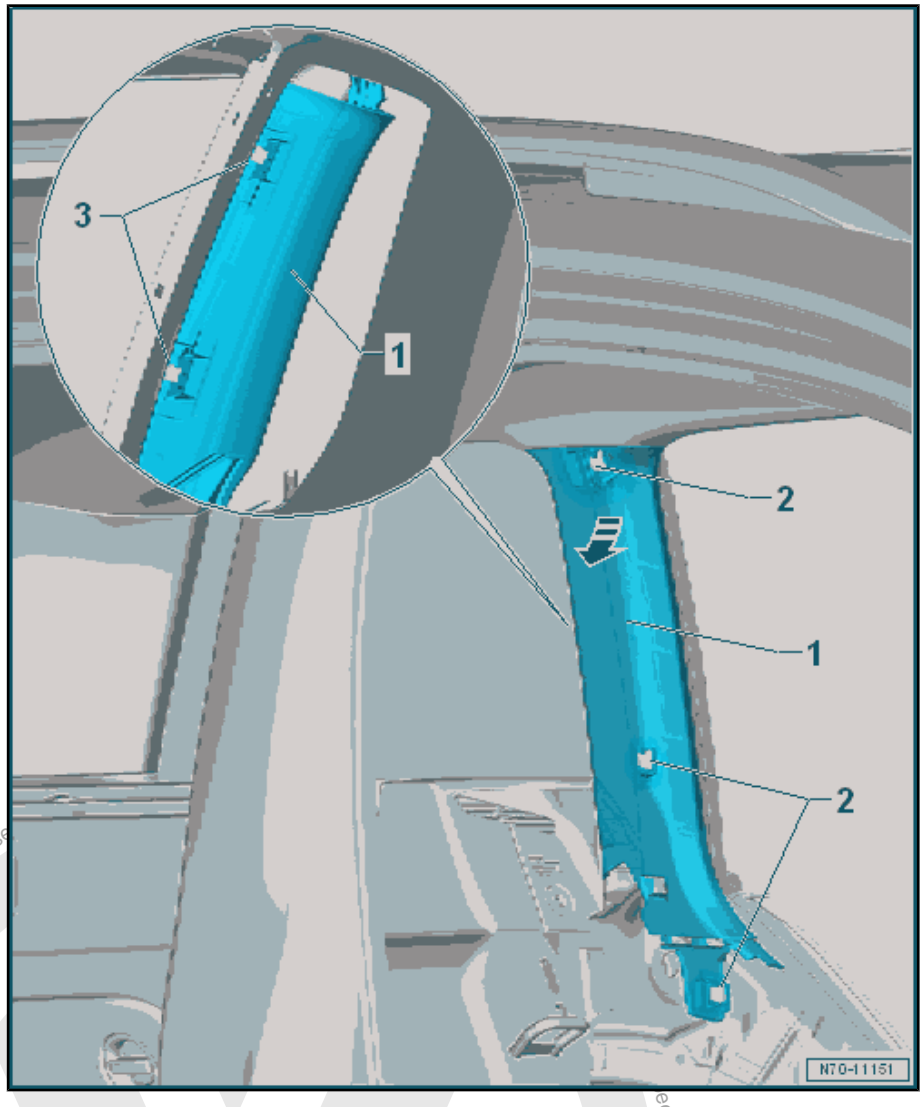

– Remove the D-pillar trim panel. Refer to ⇒ “5.15 D-Pillar Trim Panel, Removing and Installing”, page 264 .

– Remove the wheel housing trim panel. Refer to ⇒ “5.17.2 Wheel Housing Trim Panel, Removing and Installing, Wagon”, page 269 .

– Only loosen the luggage compartment side trim panel near the C-pillar, D-pillar and rear side window (do not remove completely).

– Unclip the C-pillar trim panel -1- near the clips -2- from the body mounts using the Pry Lever - 80-200- .

– Unclip the C-pillar trim panel from the clips -3-.

– Remove the C-pillar trim panel downward in direction of -arrow-.

Protected by copyright. Copying for private or commercial purposes, in part or in whole, is not permitted unless authorised ... ect to the correctness of information in this document. Copyright by Volkswagen AG.

Installing

Note

- *Check all the fasteners for damage and replace if necessary.*
- *Remove any remaining clips in the body mounting points -2- using the Omega Clip Tool - T40280- . To install, insert into the C-pillar trim panel.*
- *Make sure that the C-pillar trim panel is inside the door seal molding after installing.*

Install in reverse order of removal.

5.15 D-Pillar Trim Panel, Removing and Installing

Note

The following describes the removing and installing on the left side of the vehicle. Removing and installing on the right side is identical.

Special tools and workshop equipment required

- Pry Lever - 80-200-

Removing

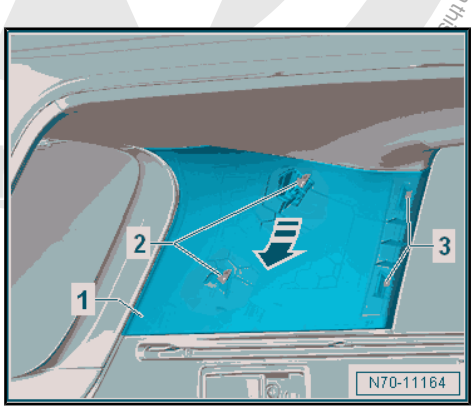

– Remove the roof end strip. Refer to ⇒ “7.2 Roof End Strip, Removing and Installing”, page 299 .

– Loosen the D-pillar trim panel -1- near the clips -2- from the body mounts using the Pry Lever - 80-200- .

– Loosen the D-pillar trim panel -1- from the luggage compartment side trim panel.

– Unclip the D-pillar trim panel from the clips -3-.

– Pull the D-pillar trim panel -1- downward out of the headliner in direction of -arrow- and remove it.

Installing

Note

- *Check all the fasteners for damage and replace if necessary.*
- *Remove any remaining clips in the body mounting points -2- using the Omega Clip Tool - T40280- . To install, insert into the D-pillar trim panel.*
- *Make sure that the D-pillar trim panel is inside the rear lid seal molding after it is installed.*

Install in reverse order of removal.

Protected by copyright. Copying for private or commercial purposes, in part or in whole, is not permitted unless authorised by Volkswagen AG. Volkswagen AG does not guarantee or accept any liability with respect to the correctness of information in this

5.16 Side Trim Panel, Removing and Installing

Note

The following describes the removing and installing on the left side of the vehicle. Removing and installing on the right side is identical.

Special tools and workshop equipment required

- Wedge Set - T10383-

Removing

– Remove the rear seat backrest. Refer to ⇒ “3.8 Rear Seat Backrest, Removing and Installing”, page 384 .

– Remove the sill panel. Refer to ⇒ “5.10.1 Sill Panel Strip, Removing and Installing, 2-Door Sedan”, page 249 .

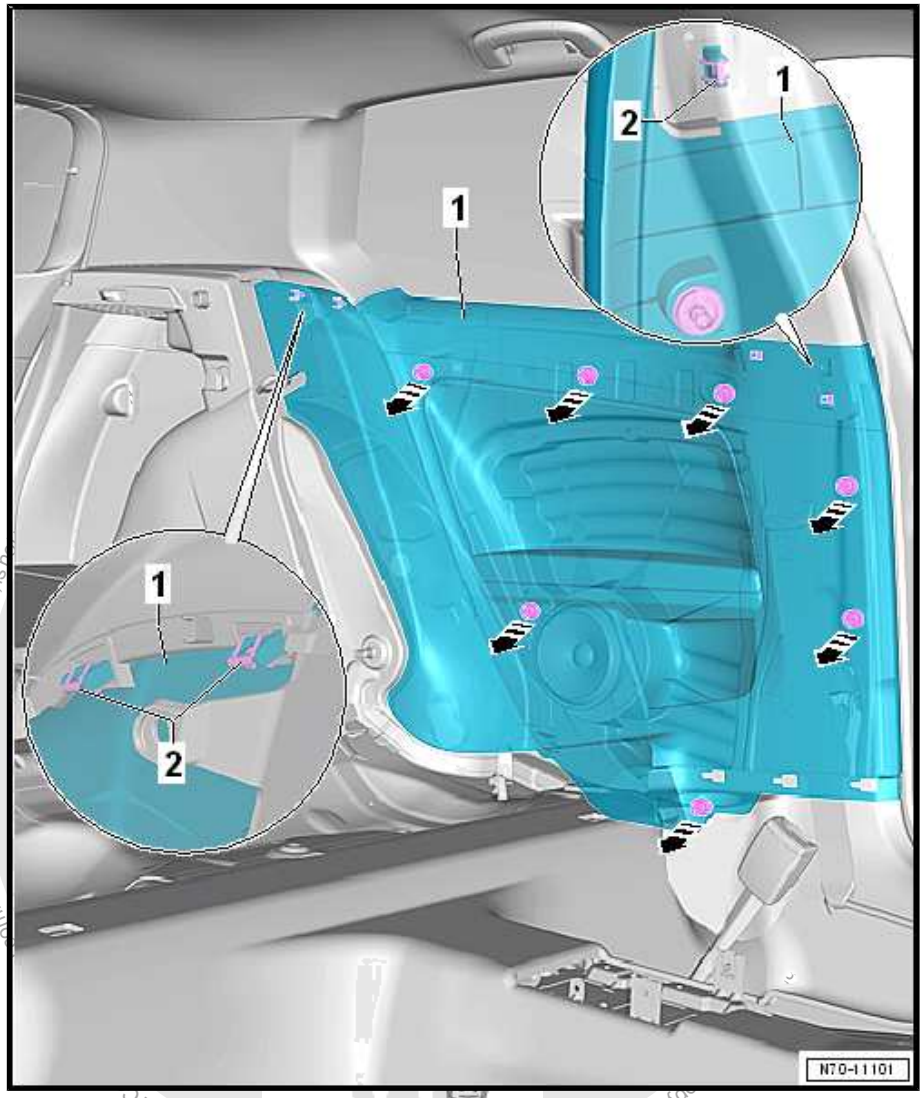

Protected by copyright. Copyright by Volkswagen AG.

– Unclip the side trim panel -1- at the upper B-pillar trim panel and C-pillar trim panel -2-.
– Starting at the front, loosen the side trim panel -1- near the clips from the body mounts using the Wedge Set - T10383- in direction of -arrows-.
– If equipped, disconnect the connector from the Interior Monitoring and Vehicle Inclination Deactivation Button - E616- and remove the side trim panel -1-.

Installing

Note

- *Check all the fasteners for damage and replace if necessary.*
- *Make sure that the side trim panel is inside the door seal molding after installing.*

Install in reverse order of removal while paying attention to the following:

– Insert the clips into the side trim panel.

Caution

Before installing the side trim panel, make sure the locking mechanisms on all clip connections are in the -1 position-.

It is not possible to install the side trim panel correctly if the clips are in the -2 position-!

Protected by copyright. Copying for private or commercial purposes, in part or in whole, is not permitted unless authorised by Volkswagen AG. Volkswagen AG does not guarantee or accept any liability with respect to the correctness of information in this document. Copyright by Volkswagen AG.

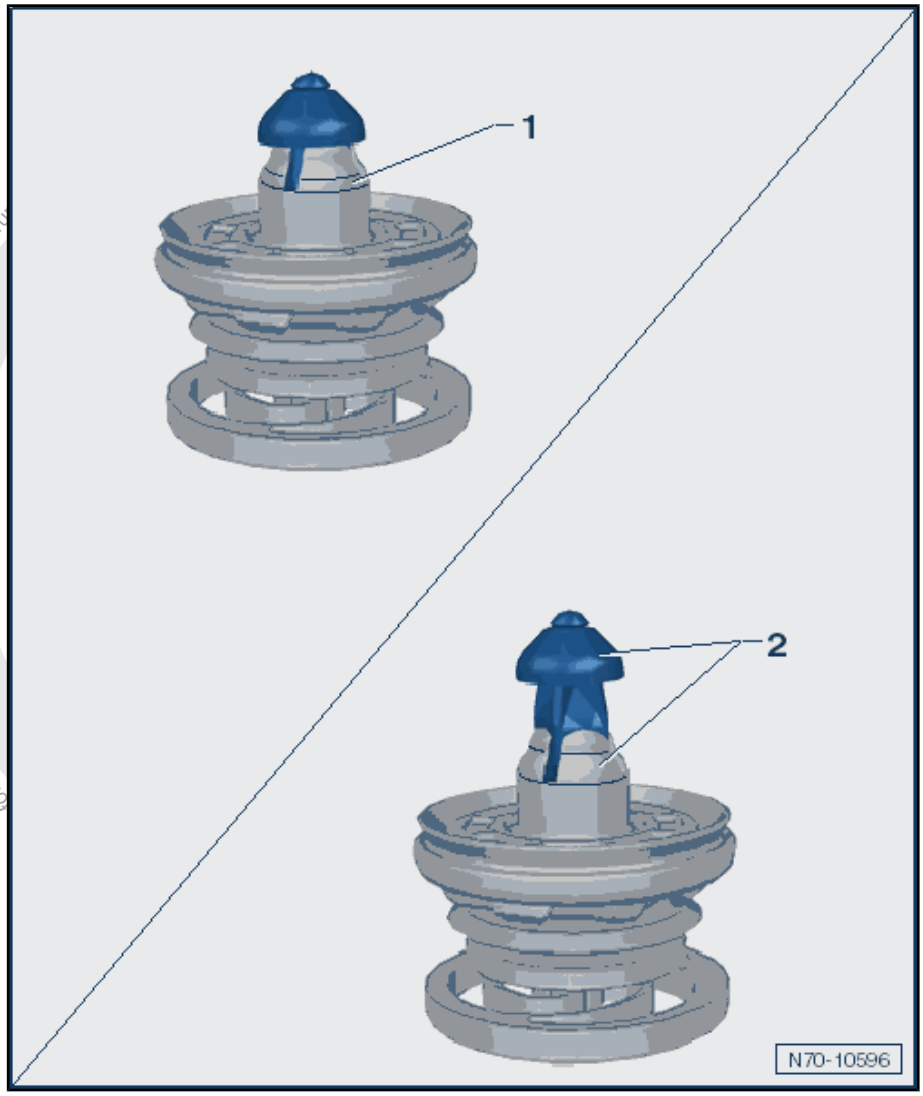

for private or commercial purposes, in part or in whole, is not permitted u

5.17 Wheel Housing Trim Panel, Removing and Installing

⇒ "5.17.1 Wheel Housing Trim Panel, Removing and Installing, Sedan", page 267

⇒ "5.17.2 Wheel Housing Trim Panel, Removing and Installing, Wagon", page 269

5.17.1 Wheel Housing Trim Panel, Removing and Installing, Sedan

Note

The following describes the removing and installing on the left side of the vehicle. Removing and installing on the right side is identical.

Special tools and workshop equipment required

- Wedge Set - T10383-
- Torque Wrench 1783 - 2-10Nm - VAG1783-

Removing

Vehicles with Side Cushion

– Remove the side cushion. Refer to
⇒ “3.16 Side Cushion, Removing and Installing”, page 391 .

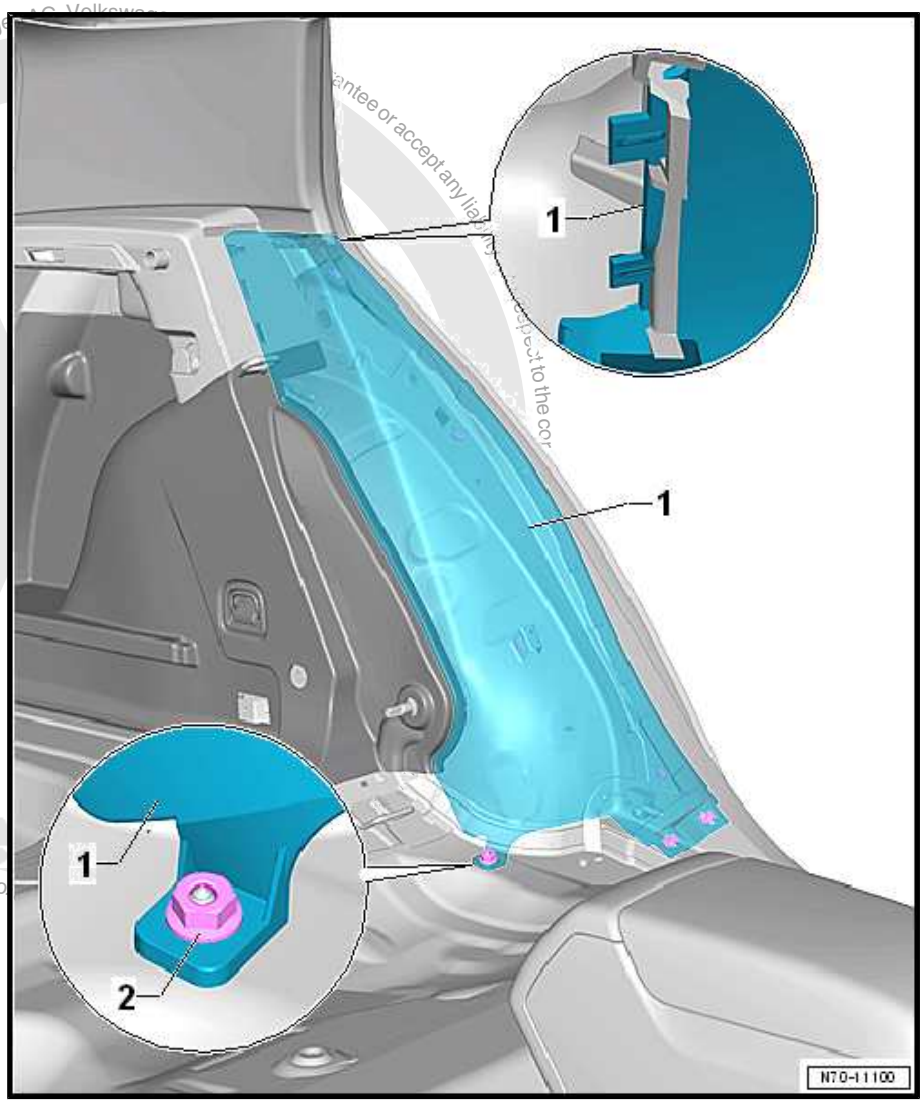

Vehicles without Side Cushion

– Remove the rear bench seat. Refer to
⇒ “3.7 Bench Seat/Single Seat, Removing and Installing”, page 382 .

– Remove the nut -2-.

Continuation for All Vehicles

– Loosen the sill panel strip from the body and wheel housing trim panel in the transition area to the wheel housing trim panel. Refer to
⇒ “5.10.2 Sill Panel Strip, Removing and Installing, 4-Door Sedan and Wagon”, page 250 .

– Fold the rear seat backrest forward.

– Loosen the wheel housing trim panel -1- from the C-pillar trim panel using the Wedge Set - T10383- .

– Loosen the wheel housing trim panel -1- near the clips from the body mounts using the Wedge Set - T10383- .

Installing

Note

- *Check all the fasteners for damage and replace if necessary.*
- *Remove any remaining clips in the body mounting points using the Omega Clip Tool - T40280- . To install, insert into the wheel housing trim panel.*
- *Make sure that the wheel housing trim panel is inside the door seal molding after installing.*

Install in reverse order of removal.

Tightening Specifications

- Refer to
⇒ “5.8 Overview - Wheel Housing Trim Panel”, page 246

5.17.2 Wheel Housing Trim Panel, Removing and Installing, Wagon

Note

The following describes the removing and installing on the left side of the vehicle. Removing and installing on the right side is identical.

Special tools and workshop equipment required

- Wedge Set - T10383-
- Torque Wrench 1783 - 2-10Nm - VAG1783-

Removing

Vehicles with Side Cushion

– Remove the side cushion. Refer to
⇒ “3.16 Side Cushion, Removing and Installing”, page 391 .

Copyright by Volkswagen AG. Protected by copyright. Copying for private or commercial purposes, in part or in whole, is not permitted unless authorized by Volkswagen AG. Volkswagen AG does not guarantee or accept any liability with respect to the correctness of information in this document.

Copyright. Copying for private or commercial purposes, in part or in whole, is not permitted unless authorised by Volkswagen AG. Volkswagen AG does not guarantee

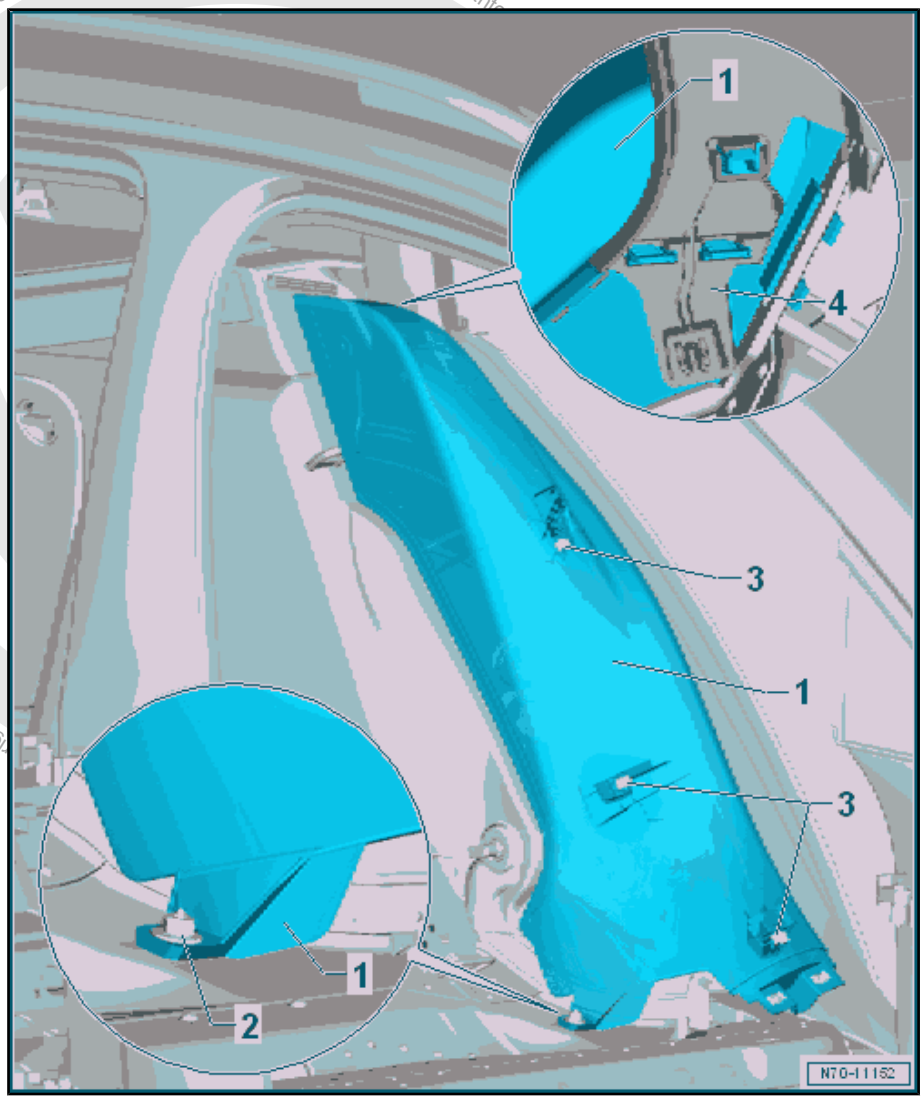

Vehicles without Side Cushion

– Remove the rear bench seat. Refer to
⇒ “3.7 Bench Seat/Single Seat, Removing and Installing”, page 382 .

– Remove the nut -2-.

Continuation for All Vehicles

– Loosen the sill panel strip from the body and wheel housing trim panel in the transition area to the wheel housing trim panel. Refer to
⇒ “5.10.2 Sill Panel Strip, Removing and Installing, 4-Door Sedan and Wagon”, page 250 .

– Fold the rear seat backrest forward.

– Loosen the wheel housing trim panel -1- from the C-pillar trim panel -4- using the Wedge Set - T10383- .

– Loosen the wheel housing trim panel -1- near the clips -3- from the body mounts using the Wedge Set - T10383- .

Installing

Note

- *Check all the fasteners for damage and replace if necessary.*
- *Remove any remaining clips -3- in the body mounting points using the Omega Clip Tool - T40280- . To install, insert into the wheel housing trim panel.*
- *Make sure that the wheel housing trim panel is inside the door seal molding after installing.*

Install in reverse order of removal.

Tightening Specifications

- Refer to
⇒ “5.8 Overview - Wheel Housing Trim Panel”, page 246

5.18 Foot Rest, Removing and Installing

Special tools and workshop equipment required

- Trim Removal Wedge - 3409-
- Torque Wrench 1783 - 2-10Nm - VAG1783-

Removing

– Remove the lower A-pillar trim panel on the driver side. Refer to
⇒ “5.12 A-Pillar Trim Panel, Removing and Installing”, page 252 .

– Release the retainers -1-, unclip the foot rest -2- using the Trim Removal Wedge - 3409- in direction of -arrows- and remove.

– Push aside the carpet in the area of the threaded connections and remove the nuts -arrows-.

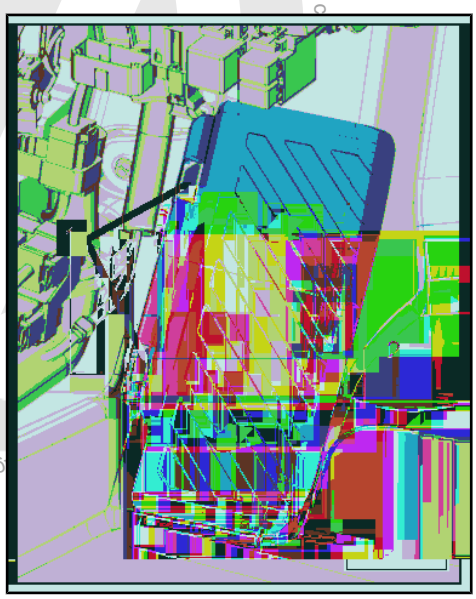

Protected by copyright. Copying for private or commercial purposes, in part or in whole, is not permitted unless authorised by Volkswagen AG. Volkswagen AG does not guarantee or accept any liability with respect to the c

– Remove the bracket -1- from the threaded bins and remove under the carpet.

Installing

Note

Check all the fasteners for damage and replace if necessary.

Install in reverse order of removal.

Tightening Specifications

♦ Refer to ⇒ “5.9 Overview - Foot Rest and Carpet”, page 249

5.19 Carpet, Removing and Installing

Removing

– Remove the front seats. Refer to ⇒ “2.10 Front Seat, Removing and Installing”, page 335 .

– Remove the rear bench seat. Refer to ⇒ “3.7 Bench Seat/Single Seat, Removing and Installing”, page 382 .

– Remove the sill panels. Refer to ⇒ “5.10 Sill Panel Strip, Removing and Installing”, page 249 .

– Remove the A-pillar lower trim panel. Refer to ⇒ “5.12 A-Pillar Trim Panel, Removing and Installing”, page 252 .

– Remove the front belt end fittings. Refer to ⇒ “1.11 Front Belt End Fitting, Removing and Installing”, page 116 .

– Remove the center console. Refer to ⇒ “3.8 Center Console, Removing and Installing”, page 59 .

– Remove the foot rest. Refer to ⇒ “5.18 Foot Rest, Removing and Installing”, page 271 .

– If equipped, remove the rear air guide duct. Refer to ⇒ Heating, Ventilation and Air Conditioning; Rep. Gr. 87 ; Air Routing; Overview - Air Routing and Air Distribution in Passenger Compartment .

Protected by copyright. Copyright by Volkswagen AG. Copying for private or commercial purposes, in part or in whole, is not permitted unless authorised by Volkswagen AG. Volkswagen AG does not accept any liability with respect to the correctness of information in this document.

– Remove the floor mats -1 and 2-.
– Lift the rear carpet -3- and pull rearward.

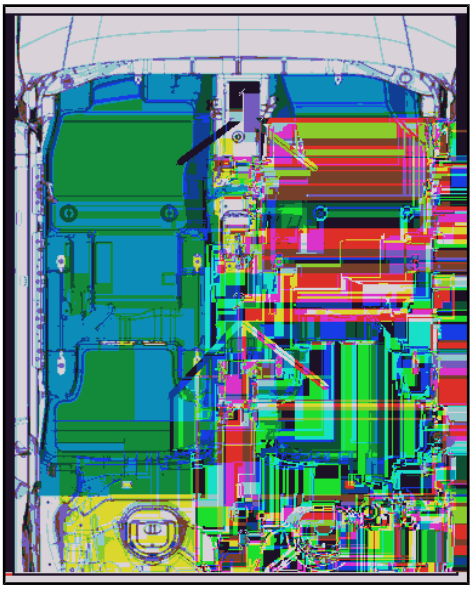

Caution

Make sure the floor covering does not tear at the openings.

– Fold the carpet together and remove it through the front door.

Installing

Install in reverse order of removal.

Protected by copyright. Copying for private or commercial purposes, in part or in whole, is not permitted unless authorised by Volkswagen AG. Volkswagen AG does not guarantee or accept any liability with respect to the correctness of information in this document. Copyright by Volkswagen AG.

6 Luggage Compartment Trim Panels

⇒ “6.1 Component Location Overview - Luggage Compartment Trim Panels”, page 274

⇒ “6.2 Overview - Rear Shelf Compartment”, page 277

⇒ “6.3 Overview - Luggage Compartment Side Trim Panel”, page 278

⇒ “6.4 Overview - Luggage Compartment Floor”, page 280

⇒ “6.5 Overview - Upper Rear Lid Trim Panel”, page 282

⇒ “6.6 Overview - Rear Lid Lower Trim Panel”, page 283

⇒ “6.7 Luggage Compartment Cover, Removing and Installing”, page 283

⇒ “6.8 Lock Carrier Trim Panel, Removing and Installing”, page 284

⇒ “6.9 Rear Shelf Compartment, Removing and Installing”, page 285

⇒ “6.10 Tie Down, Removing and Installing”, page 287

⇒ “6.11 Luggage Compartment Floor Covering Bracket, Removing and Installing”, page 287

⇒ “6.12 Luggage Compartment Side Trim Panel, Removing and Installing”, page 289

⇒ “6.13 Rear Lid Upper Trim Panel, Removing and Installing”, page 293

⇒ “6.14 Rear Lid Lower Trim Panel, Removing and Installing”, page 295

6.1 Component Location Overview - Luggage Compartment Trim Panels

⇒ “6.1.1 Component Location Overview - Luggage Compartment Trim Panels, Sedan”, page 274

⇒ “6.1.2 Component Location Overview - Luggage Compartment Trim Panels, Wagon”, page 276

6.1.1 Component Location Overview - Luggage Compartment Trim Panels, Sedan

Protected by copyright. Copying for private or commercial purposes, in part or in whole is not permitted unless authorised by Volkswagen AG. Volkswagen AG does not guarantee or accept any liability with respect to the correctness of information in this document. Copyright by Volkswagen AG.

1 - Rear Lid Lower Trim Panel

- ❑ Overview. Refer to ⇒ “6.6 Overview - Rear Lid Lower Trim Panel”, page 283 .
- ❑ Removing and installing. Refer to ⇒ “6.14 Rear Lid Lower Trim Panel, Removing and Installing”, page 295 .

2 - Rear Lid Upper Trim Panel

- ❑ Overview. Refer to ⇒ “6.5 Overview - Upper Rear Lid Trim Panel”, page 282 .
- ❑ Removing and installing. Refer to ⇒ “6.13 Rear Lid Upper Trim Panel, Removing and Installing”, page 293 .

3 - Rear Shelf Compartment

- ❑ Overview. Refer to ⇒ “6.2 Overview - Rear Shelf Compartment”, page 277 .
- ❑ Removing and installing. Refer to ⇒ “6.9 Rear Shelf Compartment, Removing and Installing”, page 285 .

4 - Luggage Compartment Side Trim Panel

- ❑ Overview. Refer to ⇒ “6.3 Overview - Luggage Compartment Side Trim Panel”, page 278 .
- ❑ Removing and installing. Refer to ⇒ “6.12.1 Luggage Compartment Side Trim Panel, Removing and Installing, Sedan”, page 289 .

5 - Luggage Compartment Floor

- ❑ Overview. Refer to ⇒ “6.4 Overview - Luggage Compartment Floor”, page 280 .

6 - Lock Carrier Trim

- ❑ Removing and installing. Refer to ⇒ “6.8 Lock Carrier Trim Panel, Removing and Installing”, page 284 .

7 - Luggage Compartment Floor Covering

- ❑ Overview. Refer to ⇒ “6.4 Overview - Luggage Compartment Floor”, page 280 .

6.1.2 Component Location Overview - Luggage Compartment Trim Panels, Wagon

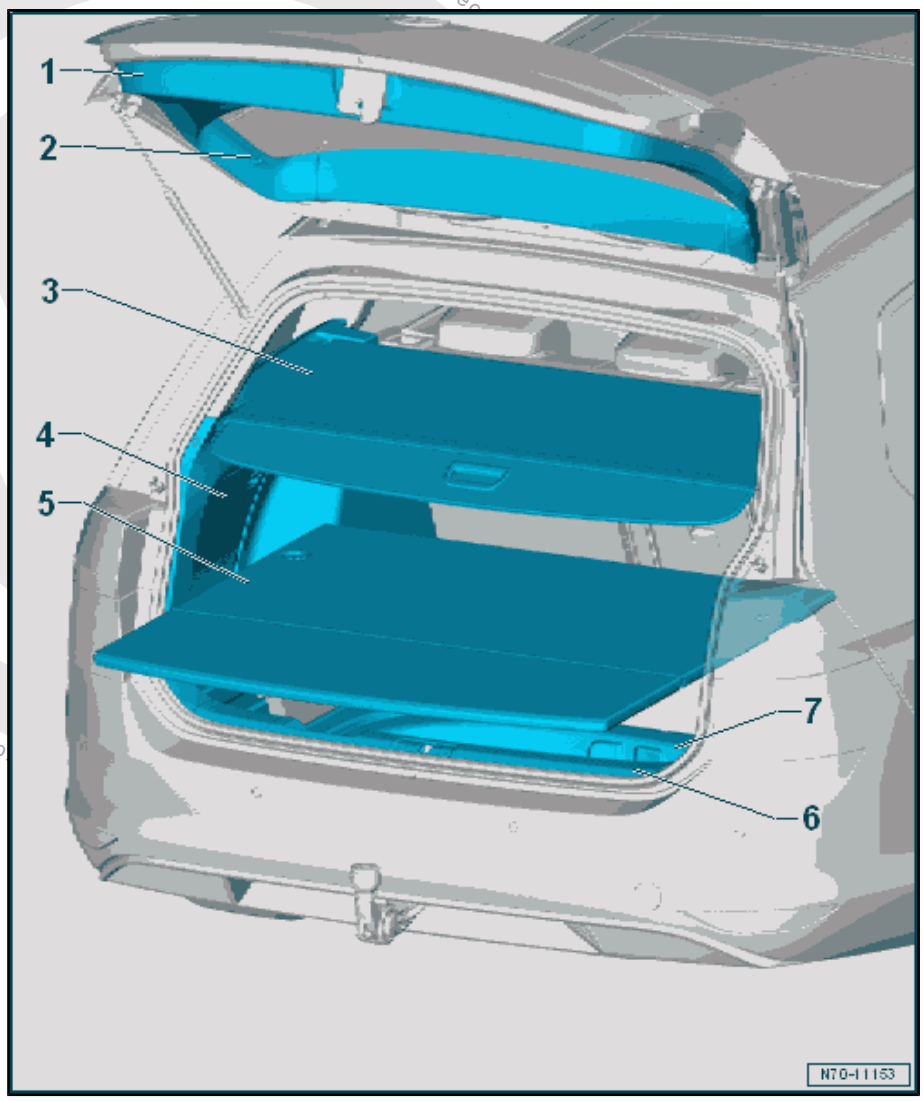

1 - Rear Lid Lower Trim Panel

- ❑ Overview. Refer to ⇒ “6.6 Overview - Rear Lid Lower Trim Panel”, page 283 .
- ❑ Removing and installing. Refer to ⇒ “6.14 Rear Lid Lower Trim Panel, Removing and Installing”, page 295 .

2 - Rear Lid Upper Trim Panel

- ❑ Overview. Refer to ⇒ “6.5 Overview - Upper Rear Lid Trim Panel”, page 282 .
- ❑ Removing and installing. Refer to ⇒ “6.13 Rear Lid Upper Trim Panel, Removing and Installing”, page 293 .

3 - Luggage Compartment Cover

- ❑ Removing and installing. Refer to ⇒ “6.7 Luggage Compartment Cover, Removing and Installing”, page 283 .

4 - Luggage Compartment Side Trim Panel

- ❑ Overview. Refer to ⇒ “6.3.2 Overview - Luggage Compartment Side Trim Panel, Wagon”, page 279 .
- ❑ Removing and installing. Refer to ⇒ “6.12.2 Luggage Compartment Side Trim Panel, Removing and Installing, Wagon”, page 291 .

5 - Luggage Compartment Floor

- ❑ Overview. Refer to ⇒ “6.4.2 Overview - Luggage Compartment Floor, Wagon”, page 281 .

6 - Rear Lid End Trim Panel

- ❑ Removing and installing. Refer to ⇒ “6.8 Lock Carrier Trim Panel, Removing and Installing”, page 284 .

7 - Luggage Compartment Floor Covering

- ❑ Overview. Refer to ⇒ “6.4.2 Overview - Luggage Compartment Floor, Wagon”, page 281 .

Protected by copyright. Copying for private or commercial purposes, in part or in whole, is not permitted unless authorised by Volkswagen AG. Volkswagen AG does not guarantee or accept any liability with respect to

6.2 Overview - Rear Shelf Compartment

Note

The illustration shows the rear shelf compartment on the left side. The right side is similar.

1 - Rear Shelf Compartment

- ❑ Removing and installing. Refer to ⇒ "6.9 Rear Shelf Compartment, Removing and Installing", page 285 .

2 - Spreader Plug

- ❑ Replace damaged or deformed spreader plug

3 - Screw

- ❑ 1.5 Nm

4 - Clip

- ❑ Insert in the rear shelf compartment
- ❑ Remove the clips that are still in the mounting points on the body using the Omega Clip Tool - T40280-
- ❑ Replace damaged or deformed retaining clips

5 - Screw

- ❑ 8 Nm

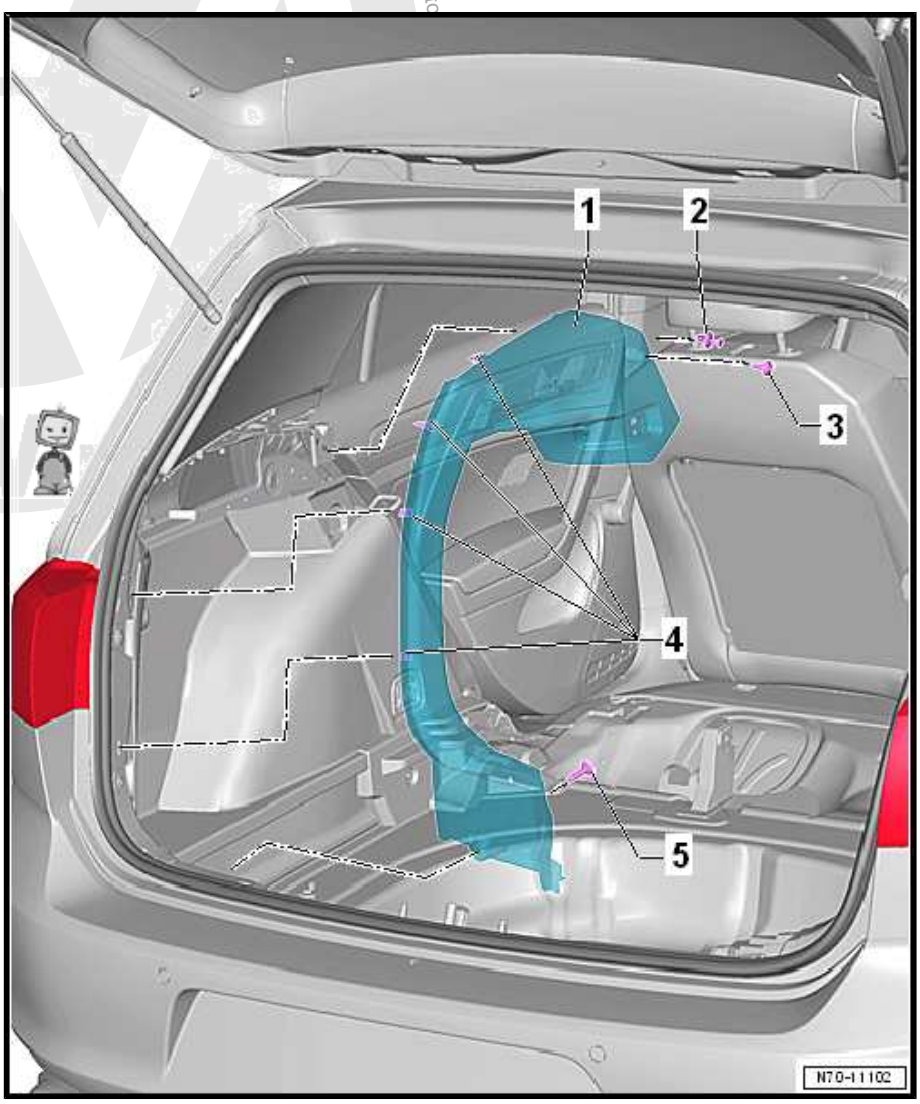

6.3 Overview - Luggage Compartment Side Trim Panel

⇒ “6.3.1 Overview - Luggage Compartment Side Trim Panel, Sedan”, page 278

⇒ “6.3.2 Overview - Luggage Compartment Side Trim Panel, Wagon”, page 279

6.3.1 Overview - Luggage Compartment Side Trim Panel, Sedan

Note

The illustration shows the luggage compartment side trim panel on the left side. The right side is similar.

Volkswagen AG. Volkswagen AG does not

1 - Luggage Compartment Side Trim Panel

- ❑ Removing and installing. Refer to ⇒ “6.12.1 Luggage Compartment Side Trim Panel, Removing and Installing, Sedan”, page 289 .

2 - Tie Down

- ❑ Removing and installing. Refer to ⇒ “6.10 Tie Down, Removing and Installing”, page 287 .

3 - Screw

- ❑ 8 Nm

4 - Clip

- ❑ Quantity: 3
- ❑ Replace damaged or deformed clips

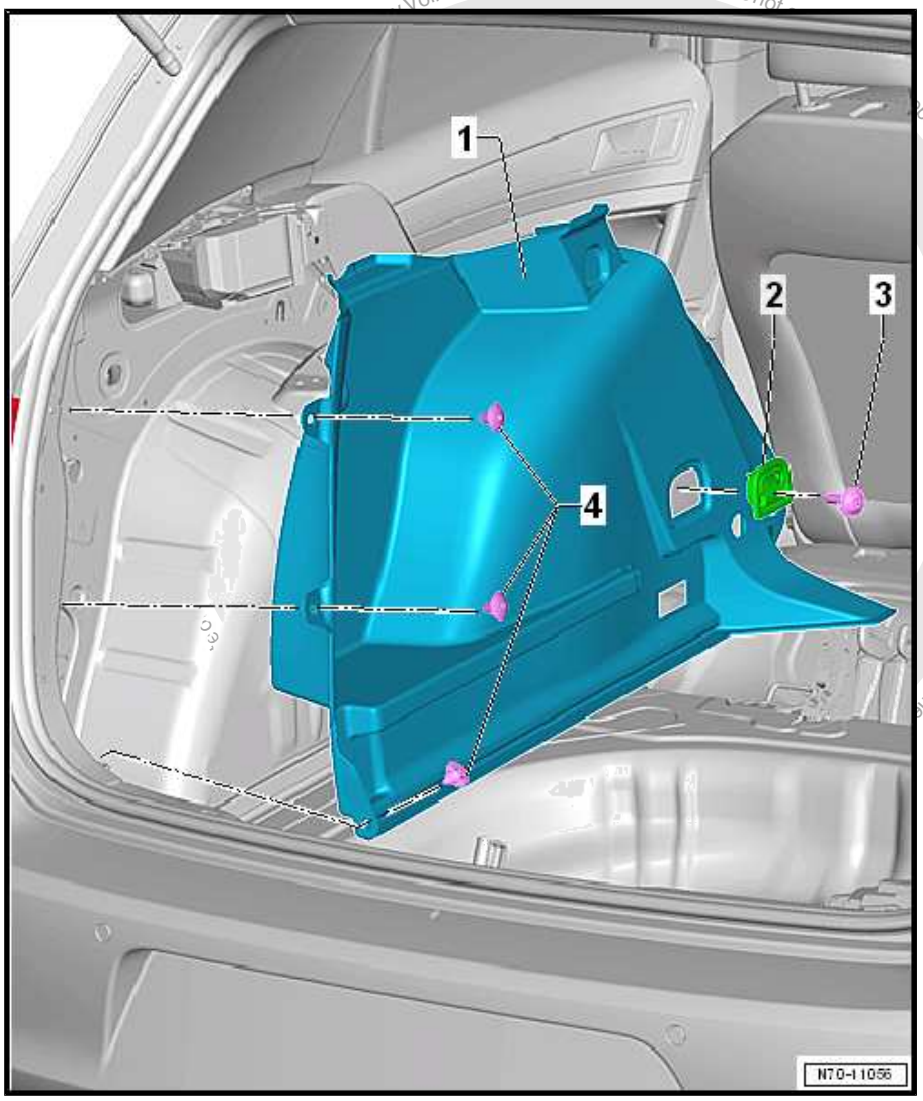

pt any liability with respect to the correctness of information in this docum

6.3.2 Overview - Luggage Compartment Side Trim Panel, Wagon

Note

The illustration shows the luggage compartment side trim panel on the left side. The right side is similar.

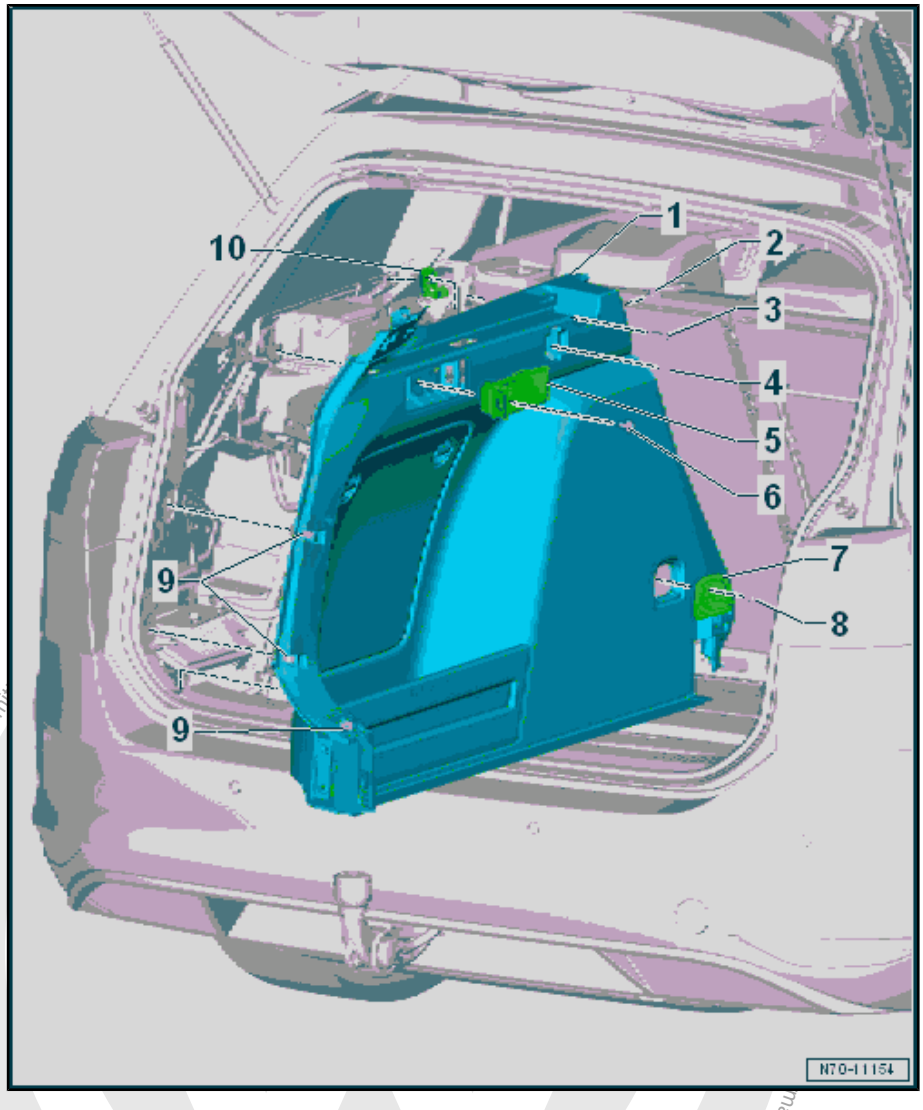

1 - Luggage Compartment Side Trim Panel

- ❑ Removing and installing. Refer to ⇒ "6.12.2 Luggage Compartment Side Trim Panel, Removing and Installing, Wagon", page 291 .

2 - Clip

- ❑ Replace damaged or deformed clip

3 - Screw

- ❑ 1.5 Nm

4 - Screw

- ❑ 7 Nm

5 - Actuator for Backrest Remote Release

- ❑ Removing and installing. Refer to ⇒ "3.18 Actuator for Rear Seat Backrest Remote Release, Removing and Installing", page 394 .

6 - Screw

- ❑ 7 Nm

7 - Tie Down

- ❑ Removing and installing. Refer to ⇒ "6.10 Tie Down, Removing and Installing", page 287 .

8 - Screw

- ❑ 8 Nm

9 - Clip

- ❑ Insert in the luggage compartment side trim panel
- ❑ Remove the clips that are still in the mounting points on the body using the Omega Clip Tool - T40280-
- ❑ Replace damaged or deformed retaining clips

10 - Bag Hooks

- ❑ Clipped into the luggage compartment side trim panel -1- from the rear

Protected by copyright. Copying for private or commercial purposes in part or in whole, is not permitted. Copyright by Volkswagen AG

6.4 Overview - Luggage Compartment Floor

⇒ “6.4.1 Overview - Luggage Compartment Floor, Sedan”, page 280

⇒ “6.4.2 Overview - Luggage Compartment Floor, Wagon”, page 281

6.4.1 Overview - Luggage Compartment Floor, Sedan

1 - Luggage Compartment Floor

- ❑ Allocation. Refer to the Parts Catalog.
- ❑ Remove from the vehicle toward the rear

2 - Screw

- ❑ 8 Nm
- ❑ Quantity: 2

3 - Luggage Compartment Floor Covering Bracket

- ❑ Left and right
- ❑ For the luggage compartment floor
- ❑ Removing and installing. Refer to ⇒ “6.11 Luggage Compartment Floor Covering Bracket, Removing and Installing”, page 287 .

4 - Luggage Compartment Floor Covering

- ❑ Allocation. Refer to the Parts Catalog.
- ❑ Remove from the vehicle toward the rear

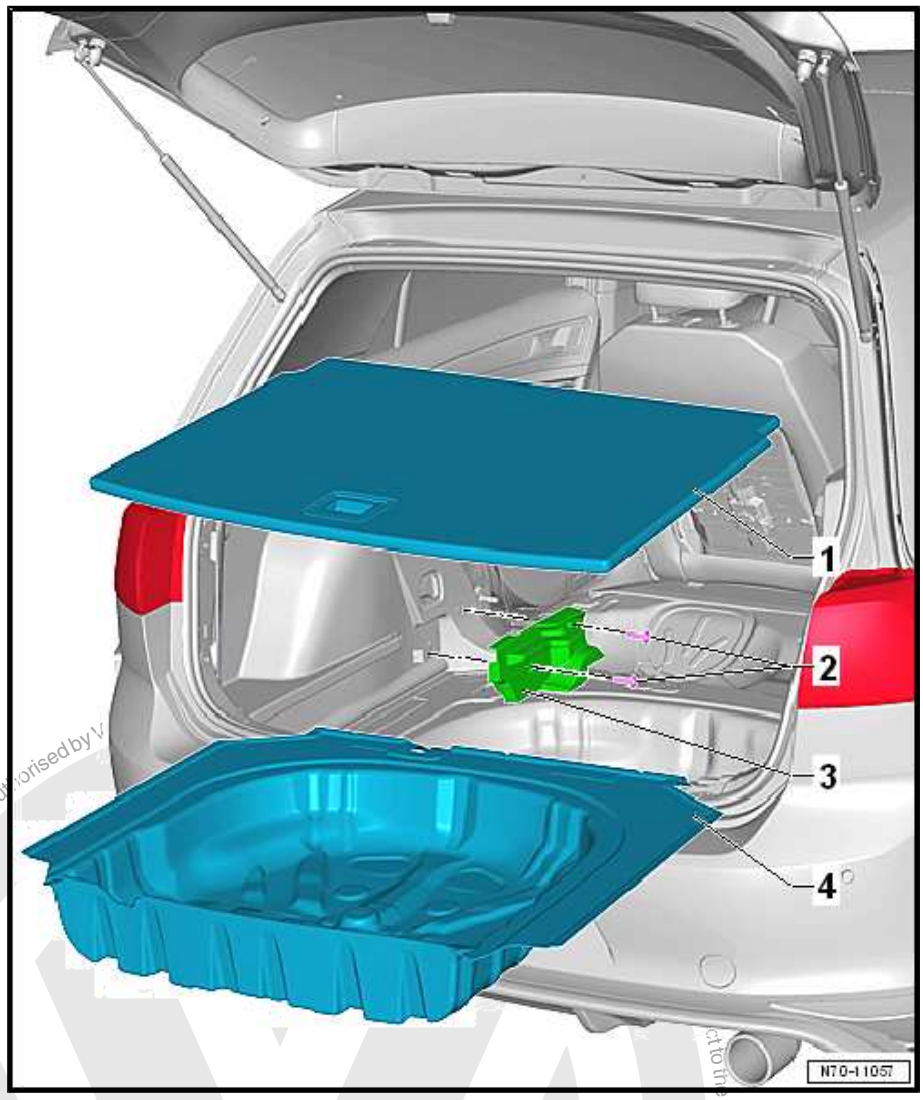

Protected by copyright. Copying for private or commercial purposes, in part or in whole, is not permitted unless authorised by Volkswagen AG. Copyright by Volkswagen AG. No liability is accepted as to the correctness of information in this document.

6.4.2 Overview - Luggage Compartment Floor, Wagon

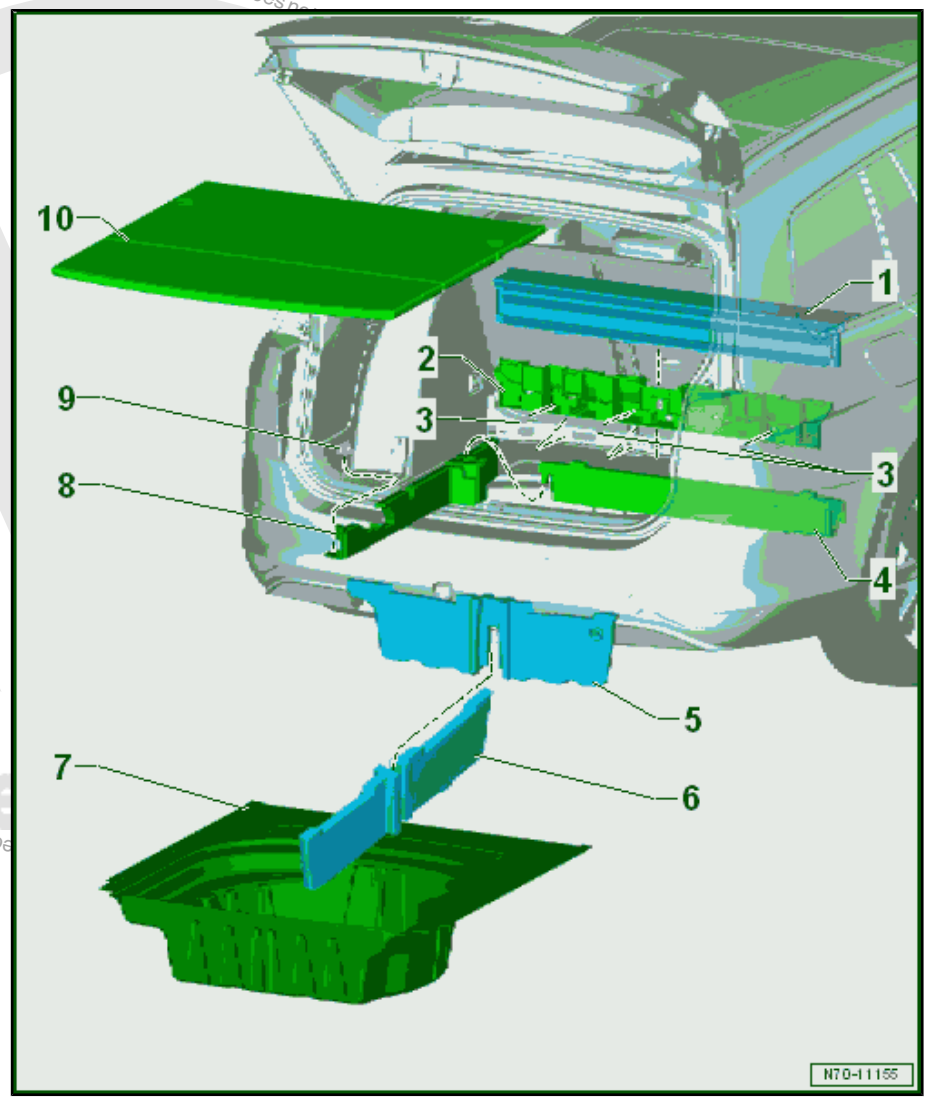

1 - Center Luggage Compartment Floor Trim

- ❑ Removing and installing. Refer to ⇒ "6.11.2 Luggage Compartment Floor Covering Bracket, Removing and Installing, Wagon", page 288 .

2 - Trim Carrier

- ❑ Removing and installing. Refer to ⇒ "6.11.2 Luggage Compartment Floor Covering Bracket, Removing and Installing, Wagon", page 288 .

3 - Screw

- ❑ 1.5 Nm
- ❑ Quantity: 3

4 - Support

- ❑ Removing:
  - – Release the mount on the left and right side on the luggage compartment floor by it turning 90° and remove the luggage compartment floor -10- toward the rear out of the vehicle.
  - – Remove the luggage compartment floor support upward.

5 - Longitudinal Separating Element

- ❑ Removing:
  - – Release the mount on the left and right side on the luggage compartment floor by it turning 90° and remove the luggage compartment floor -10- toward the rear out of the vehicle.
  - – Remove the longitudinal separating element upward.

6 - Transverse Separating Element

- ❑ Removing:
  - – Remove the longitudinal separating element -5-.
  - – Remove the transverse separating element upward.

7 - Luggage Compartment Floor Covering

- ❑ Allocation. Refer to the Parts Catalog.
- ❑ Remove from the vehicle toward the rear

8 - Luggage Compartment Floor Trim

- ❑ Left and right
- ❑ Removing and installing. Refer to ⇒ "6.11.2 Luggage Compartment Floor Covering Bracket, Removing and Installing, Wagon", page 288 .

9 - Installation Bracket

- ❑ Left and right
- ❑ Removing and installing. Refer to ⇒ “6.11.2 Luggage Compartment Floor Covering Bracket, Removing and Installing, Wagon”, page 288 .

10 - Luggage Compartment Floor

- ❑ Removing:

– Release the mount on the left and right side by it turning 90° and remove the luggage compartment floor toward the rear out of the vehicle.

6.5 Overview - Upper Rear Lid Trim Panel

1 - Rear Lid with Mounted Lower Trim Panel

- ❑ Overview - rear lid lower trim panel. Refer to ⇒ “6.6 Overview - Rear Lid Lower Trim Panel”, page 283 .
- ❑ Rear lid lower trim panel, removing and installing. Refer to ⇒ “6.14 Rear Lid Lower Trim Panel, Removing and Installing”, page 295 .

2 - Center Window Frame

- ❑ Removing and installing. Refer to ⇒ “6.13 Rear Lid Upper Trim Panel, Removing and Installing”, page 293 .

3 - Side Window Frame

- ❑ Left and right
- ❑ Removing and installing. Refer to ⇒ “6.13 Rear Lid Upper Trim Panel, Removing and Installing”, page 293 .

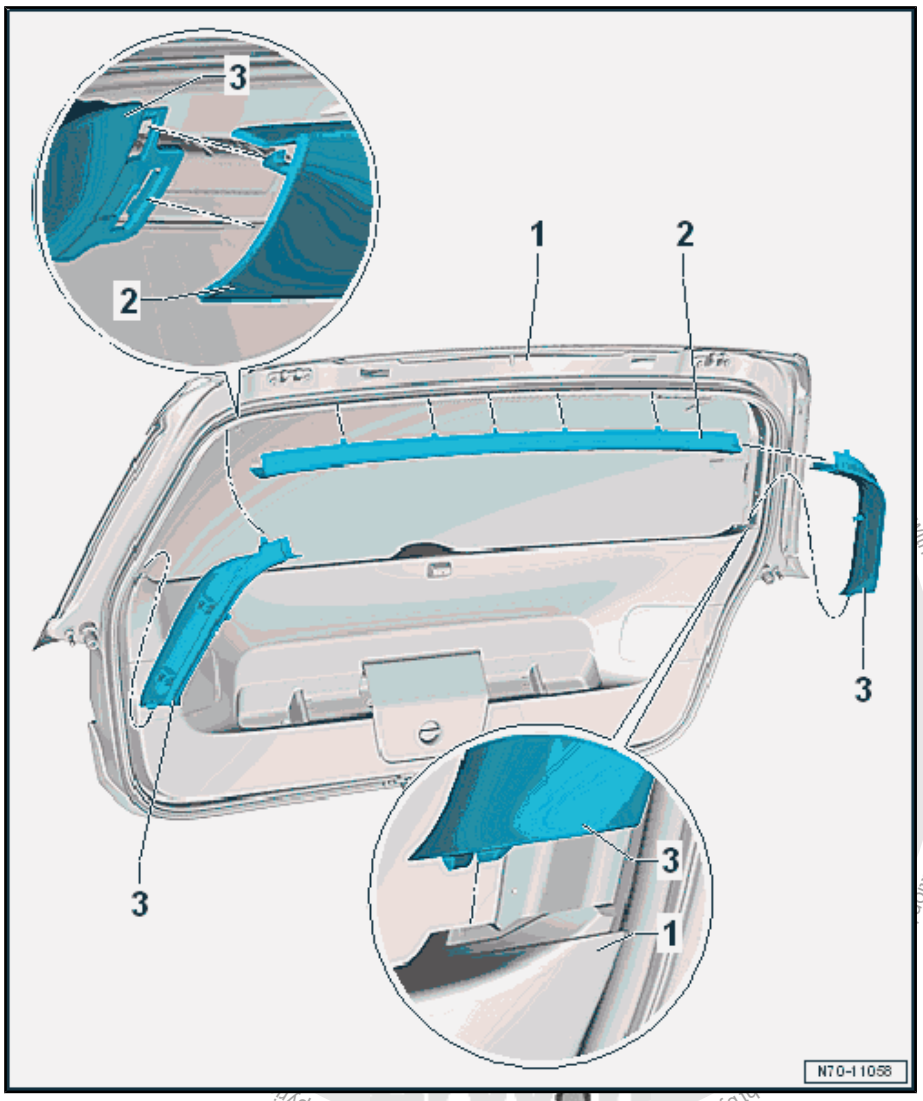

Protected by copyright by Volkswagen AG.
with respect to the correctness of information

6.6 Overview - Rear Lid Lower Trim Panel

1 - Rear Lid

2 - Screw

- ❑ 1.5 Nm
- ❑ Quantity: 4

3 - Rear Lid Lower Trim Panel

- ❑ Removing and installing. Refer to ⇒ "6.14 Rear Lid Lower Trim Panel, Removing and Installing", page 295 .

4 - Clip

- ❑ Insert in the trim panel
- ❑ Remove the clips that are still in the mounting points on the body using the Omega Clip Tool - T40280-
- ❑ Replace damaged or deformed retaining clips

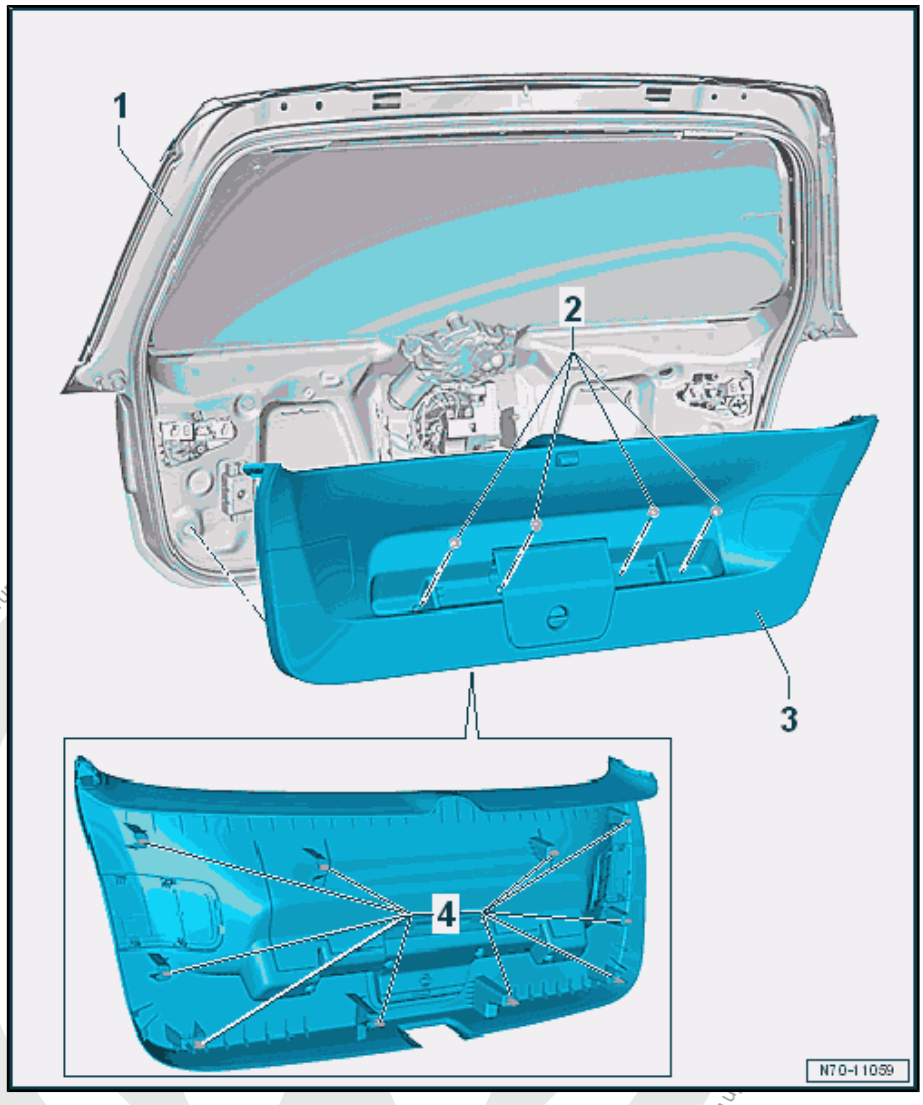

6.7 Luggage Compartment Cover, Removing and Installing

Removing

– Completely open the luggage compartment cover -1-.

– Fold the rear seat backrests forward.

– Push the luggage compartment cover -1- in direction of the -arrow A-.

– Lift the luggage compartment cover -1- upward from the right luggage compartment side trim panel at the same time in direction of -arrow B-.

Protected by copyright. Copyright by Volkswagen AG. Copying for private or commercial purposes, in part or in whole, is not permitted unless authorized by Volkswagen AG.

– Pull the luggage compartment cover -1- out of the left luggage compartment side trim panel and remove it.

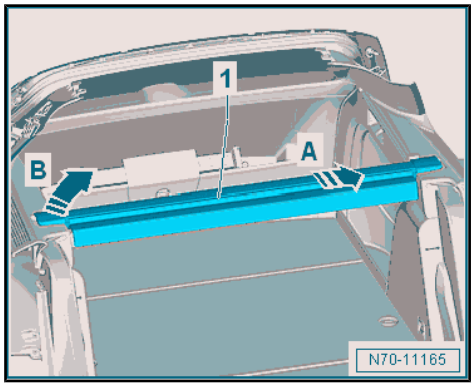

Installing

Install in reverse order of removal.

6.8 Lock Carrier Trim Panel, Removing and Installing

Special tools and workshop equipment required

♦ Pry Lever - 80-200-

Removing

Vehicles with Trailer Hitch, Sedan

– Remove the luggage compartment floor toward the rear.

– Release the clip -2- from the cable bracket -1-.

– Remove the cable bracket -1- upward from the cable -3-.

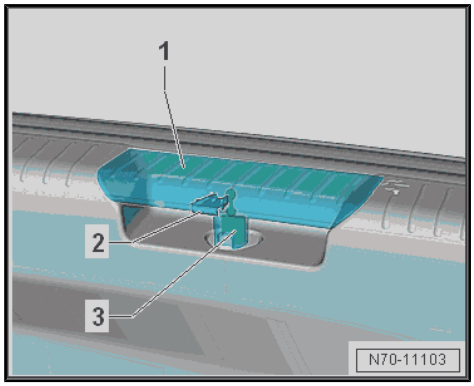

Vehicles with Trailer Hitch, Wagon

– Release the mount on the left and right side on the luggage compartment floor by it turning 90° and remove the luggage compartment floor toward the rear out of the vehicle.

– Release the clip -1- from the release cable lever -2- and move it upward in direction of -arrow A-.

– Remove the release cable lever -2- forward from the release cable -3- in direction of -arrow B-.

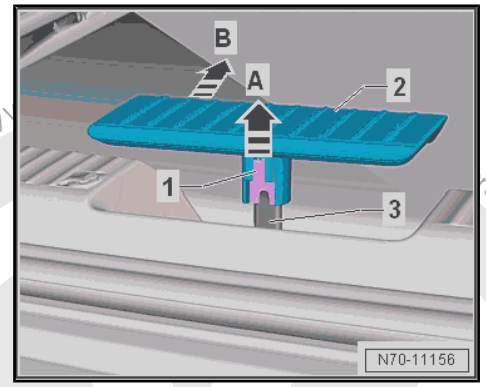

Continuation for All Vehicles

– Remove the rear lid seal -2- near the lock carrier trim panel -1-.

Protected by copyright. Copying for private or commercial purposes, in part or in whole, is not permitted unless authorised by Volkswagen AG. Copyright by Volkswagen AG. We accept any liability with respect to the correctness of information in this document.

– Loosen the lock carrier trim panel -1- near the clips from the body mounts using the Pry Lever - 80-200- -arrows-.

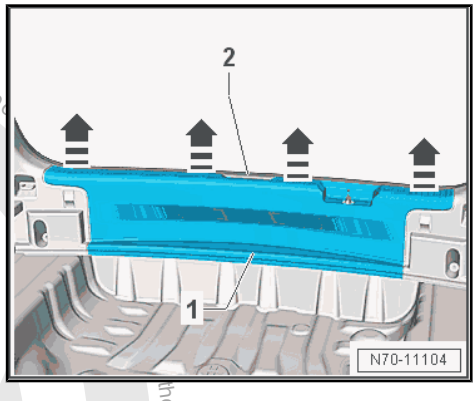

Vehicles with Trailer Hitch

– Disconnect the connector from the Trailer Hitch -Locked- Indicator Lamp - K226- .

Continuation for All Vehicles

– Remove the lock carrier trim panel -1- upward.

Installing

Note

- *Check all the fasteners for damage and replace if necessary.*
- *Remove any remaining clips in the body mounting points using the Omega Clip Tool - T40280- . To install, insert into the lock carrier trim panel.*
- *Make sure the lock carrier trim panel is inside the rear lid seal molding after it is installed.*

Install in reverse order of removal.

6.9 Rear Shelf Compartment, Removing and Installing

Note

The following describes the removing and installing on the left side of the vehicle. Removing and installing on the right side is identical.

Special tools and workshop equipment required

- Pry Lever - 80-200-
- Torque Wrench 1783 - 2-10Nm - VAG1783-

Removing

4-Door

– Remove the wheel housing trim panel. Refer to ⇒ “5.17 Wheel Housing Trim Panel, Removing and Installing”, page 267 .

2-Door

– Remove the side trim panel. Refer to ⇒ “5.16 Side Trim Panel, Removing and Installing”, page 265 .

Continuation for All Vehicles

– Remove the lock carrier trim panel. Refer to ⇒ “6.8 Lock Carrier Trim Panel, Removing and Installing”, page 284 .

Protected by copyright. Copying for private or commercial purposes, in part or in whole, is not permitted unless authorised by Volkswagen AG. Volkswagen AG does not guarantee the correctness of information in this document. Copyright by Volkswagen AG.

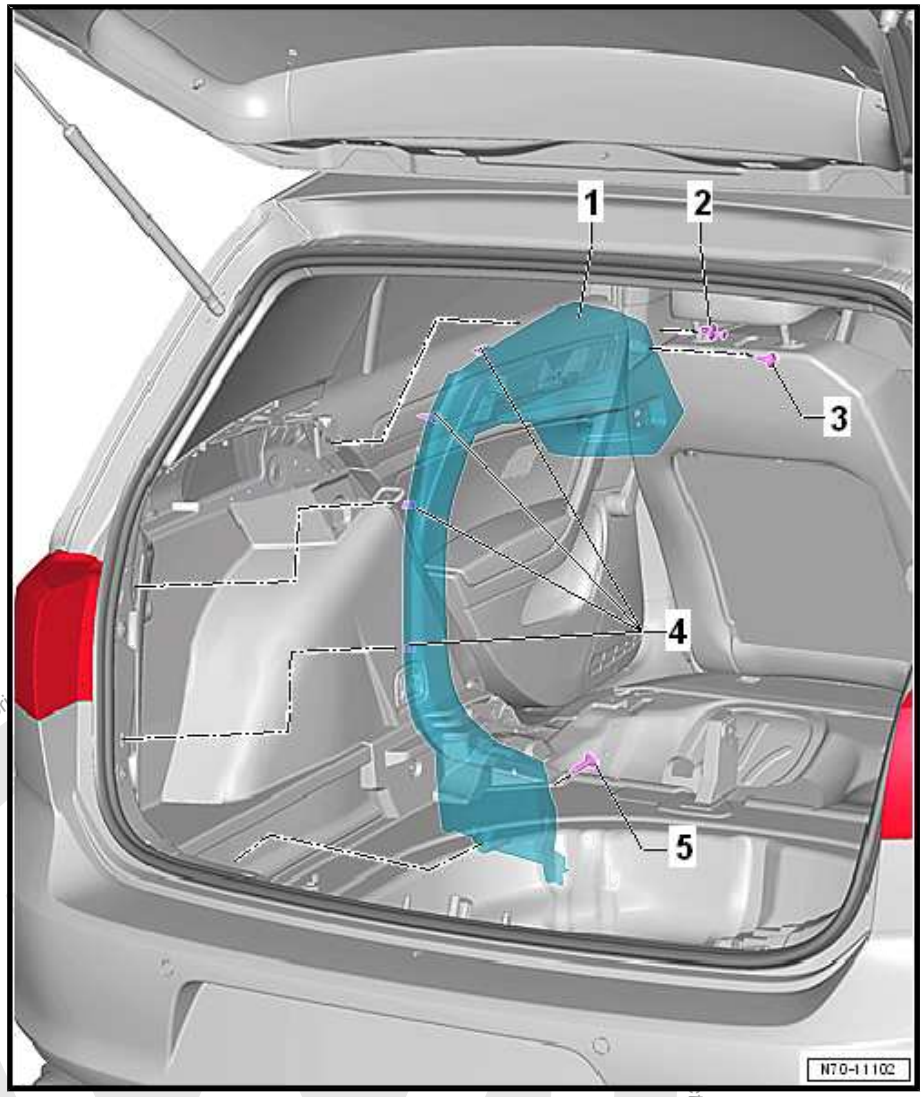

– Remove the bolts -3 and 5-.
– Remove the spreader plug -2-.
– Loosen the rear shelf compartment -1- near the clips -4- from the body mounts using the Pry Lever - 80-200- .
– If equipped, disconnect the connectors and remove the rear shelf compartment -1-.

Installing

Note

- *Check all the fasteners for damage and replace if necessary.*
- *Remove any remaining clips in the body mounting points using the Omega Clip Tool - T40280- . To install, insert into the rear shelf compartment.*
- *Make sure the rear shelf compartment is inside the rear lid seal molding after it is installed.*

Install in reverse order of removal.

Protected by copyright. Copyright for commercial purposes, in part or in whole, is not permitted unless authorized by Volkswagen AG. Copyright by Volkswagen AG. No liability for the correctness of information in this document.

Tightening Specifications

- Refer to
⇒ “6.2 Overview - Rear Shelf Compartment”, page 277

6.10 Tie Down, Removing and Installing

Note

The following describes the removing and installing on the left side of the vehicle. Removing and installing on the right side is identical.

Special tools and workshop equipment required

- Torque Wrench 1783 - 2-10Nm - VAG1783-

Removing

– Open the bracket -4- and open the cover -1- using a screwdriver.

– Remove the bolt -3- and the tie-down -2-.

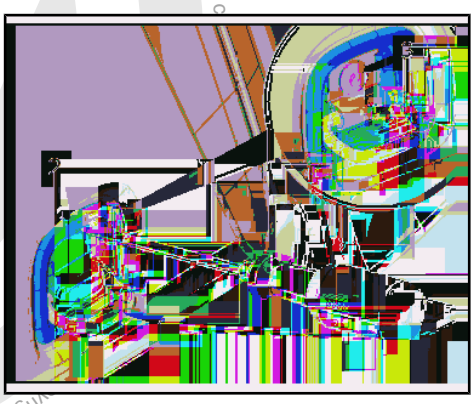

Installing

Install in reverse order of removal.

Tightening Specifications

- Refer to
⇒ “6.3 Overview - Luggage Compartment Side Trim Panel”, page 278

6.11 Luggage Compartment Floor Covering Bracket, Removing and Installing

⇒ “6.11.1 Luggage Compartment Floor Covering Bracket, Removing and Installing, Sedan”, page 287

⇒ “6.11.2 Luggage Compartment Floor Covering Bracket, Removing and Installing, Wagon”, page 288

6.11.1 Luggage Compartment Floor Covering Bracket, Removing and Installing, Sedan

Note

The following describes the removing and installing on the left side of the vehicle. Removing and installing on the right side is identical.

Special tools and workshop equipment required

- Torque Wrench 1783 - 2-10Nm - VAG1783-

Removing

– Fold the rear seat backrests forward.

– Remove the luggage compartment floor toward the rear.

– Remove the bolts -2-.

Copyright by Volkswagen AG. Volkswagen AG does not guarantee or accept any liability with respect to the c
Copyright. Copying for private or commercial purposes, in part or in whole, is not permitted unless authorised by Volkswagen AG.

– Remove the luggage compartment floor covering bracket -1-.

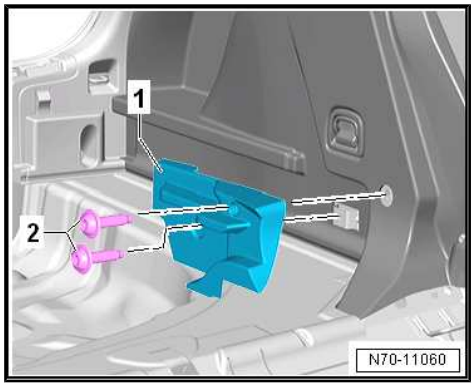

Installing

Install in reverse order of removal.

Tightening Specifications

♦ Refer to
⇒ “6.4 Overview - Luggage Compartment Floor”, page 280

6.11.2 Luggage Compartment Floor Covering Bracket, Removing and Installing, Wagon

Special tools and workshop equipment required

♦ Torque Wrench 1783 - 2-10Nm - VAG1783-

Removing

– Fold the rear seat backrests forward.

– Release the mount on the left and right side on the luggage compartment floor by it turning 90° and remove the luggage compartment floor toward the rear out of the vehicle.

– Remove the luggage compartment floor support upward -item 4- ⇒ Item 4 (page 281) .

– Pull the sidewall -3- upward out of the left and right luggage compartment side trim panels and remove it.

– Turn the installation bracket -1- on the left and right side 90° counter-clockwise and remove upward.

– Remove the luggage compartment floor trim -2- on the left and right side upward.

– Unclip the center luggage compartment floor trim -1- upward from the carrier -3-.

– Remove the bolts -2-.

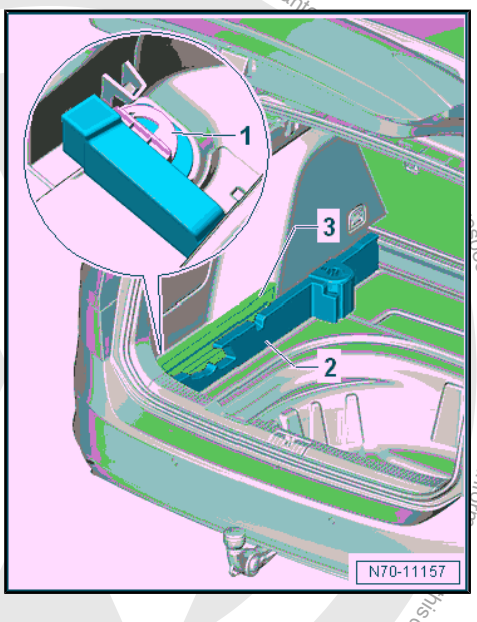

Protected by copyright. Copying for private or commercial purposes, in part or in whole, is not permitted unless authorised by Volkswagen AG. Volkswagen AG does not guarantee or accept any liability with respect to the correctness of information in this document. Copyright by Volkswagen AG.

– Remove the support -3- for the center luggage compartment liner -1- toward the rear.

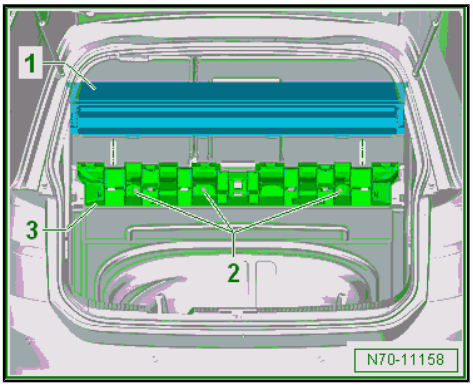

Installing

Install in reverse order of removal.

Tightening Specifications

♦ Refer to
⇒ “6.4.2 Overview - Luggage Compartment Floor, Wagon”, page 281

6.12 Luggage Compartment Side Trim Panel, Removing and Installing

⇒ “6.12.1 Luggage Compartment Side Trim Panel, Removing and Installing, Sedan”, page 289

⇒ “6.12.2 Luggage Compartment Side Trim Panel, Removing and Installing, Wagon”, page 291

6.12.1 Luggage Compartment Side Trim Panel, Removing and Installing, Sedan

Note

The following describes the removing and installing on the left side of the vehicle. Removing and installing on the right side is identical.

Special tools and workshop equipment required

♦ Torque Wrench 1783 - 2-10Nm - VAG1783-

♦ Pry Lever - 80-200-

Removing

– Remove the rear seat backrest. Refer to
⇒ “3.8 Rear Seat Backrest, Removing and Installing”, page 384 .

– Remove the rear shelf compartment. Refer to
⇒ “6.9 Rear Shelf Compartment, Removing and Installing”, page 285 .

– If equipped, remove the luggage compartment floor covering bracket. Refer to
⇒ “6.11.1 Luggage Compartment Floor Covering Bracket, Removing and Installing, Sedan”, page 287 .

Volkswagen AG. Volkswagen AG does not guarantee or accept any liability with respect to the correctness of information in this document. Copyright by Volkswagen AG. Protected by copyright. Copying for private or commercial purposes, in part or in whole, is not permitted unless authorised by Volkswagen AG.

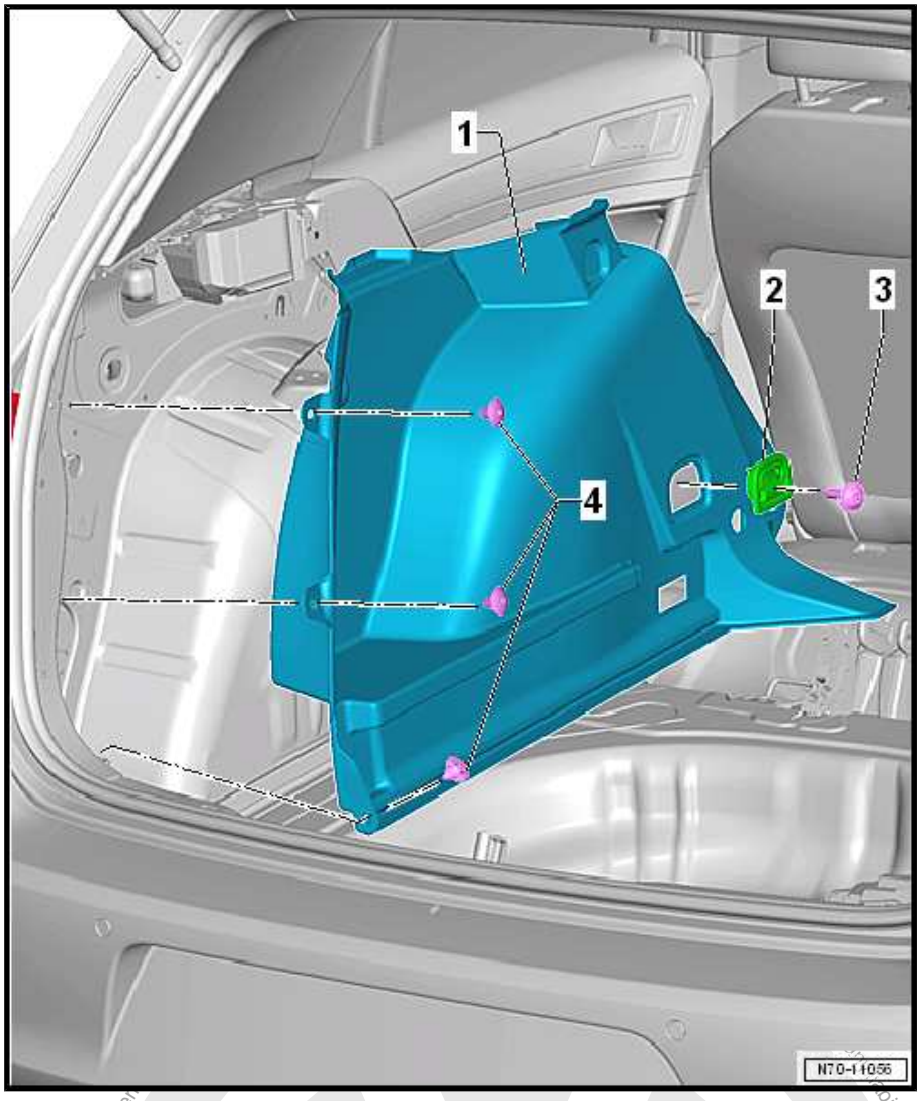

– Remove the tie-down -2-. Refer to ⇒ “6.10 Tie Down, Removing and Installing”, page 287 .

– Remove the clips -4-.

– Disengage and remove the luggage compartment side trim panel -1-.

Installing

Note

- *Check all the fasteners for damage and replace if necessary.*
- *Make sure the luggage compartment side trim panel fits inside the rear lid seal molding after it is installed.*

Install in reverse order of removal.

Tightening Specifications

- Refer to ⇒ “6.3.1 Overview - Luggage Compartment Side Trim Panel, Sedan”, page 278

Protected by copyright. Copying for private or commercial purposes, in part or in whole, is not permitted unless authorised by Volkswagen AG. Volkswagen AG does not guarantee or accept any liability with respect to the correctness of information in this document. Copyright by Volkswagen AG.

6.12.2 Luggage Compartment Side Trim Panel, Removing and Installing, Wagon

Note

The following describes the removing and installing on the left side of the vehicle. Removing and installing on the right side is identical.

Protected by copyright. Copying for private or commercial purposes, in part or in whole, is not permitted unless authorised by Volkswagen AG. Volkswagen AG does not guarantee or accept any liability with respect to the correctness of information in this document. Copyright by Volkswagen AG.

Special tools and workshop equipment required

- Torque Wrench 1783 - 2-10Nm - VAG1783-
- Pry Lever - 80-200-

Removing

– Remove the luggage compartment cover. Refer to ⇒ “6.7 Luggage Compartment Cover, Removing and Installing”, page 283 .

– Remove the rear seat backrest. Refer to ⇒ “3.8 Rear Seat Backrest, Removing and Installing”, page 384 .

Vehicles with Side Cushion

– Remove the side cushion. Refer to ⇒ “3.16 Side Cushion, Removing and Installing”, page 391 .

Vehicles without Side Cushion

– Remove the wheel housing trim panel. Refer to ⇒ “5.17.2 Wheel Housing Trim Panel, Removing and Installing, Wagon”, page 269 .

Continuation for All Vehicles

– Remove the D-pillar trim panel. Refer to ⇒ “5.15 D-Pillar Trim Panel, Removing and Installing”, page 264 .

– Remove the lock carrier trim panel. Refer to ⇒ “6.8 Lock Carrier Trim Panel, Removing and Installing”, page 284 .

– Remove the tie-down -7-. Refer to ⇒ “6.10 Tie Down, Removing and Installing”, page 287 .

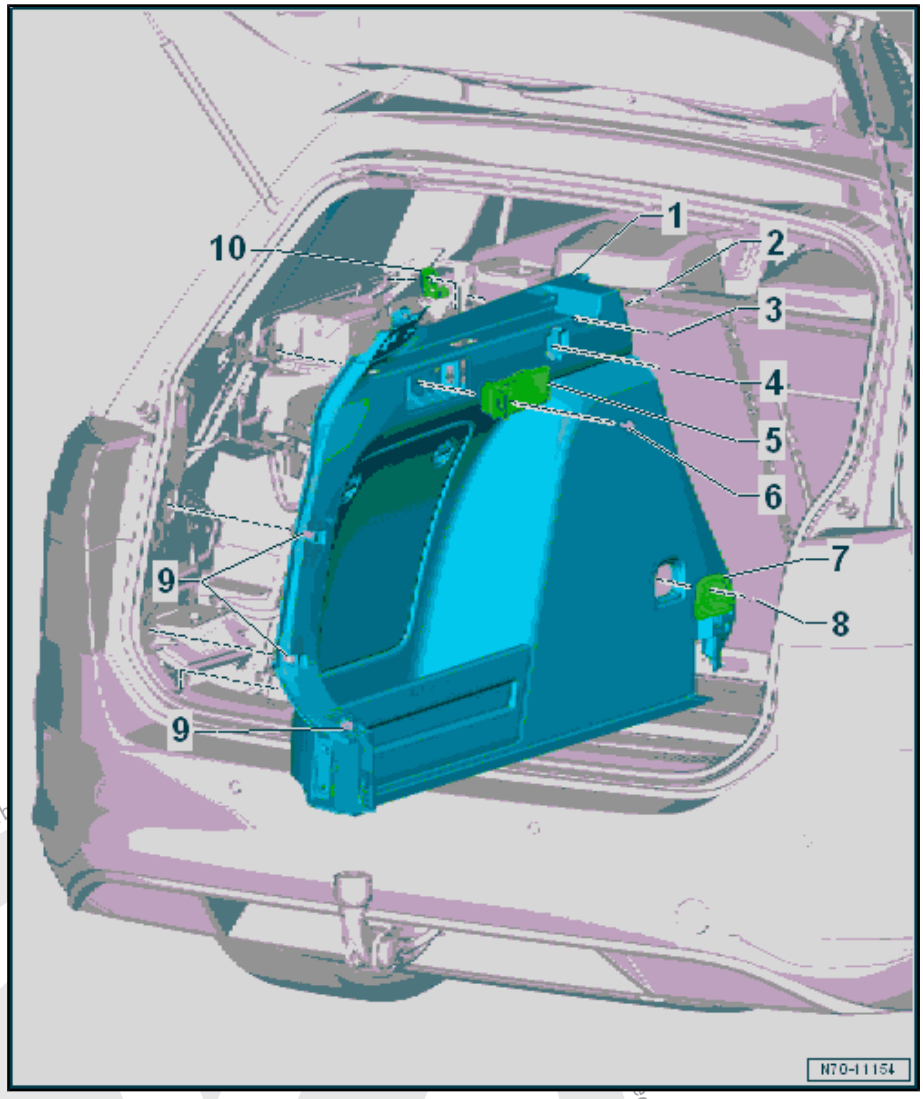

– Remove the clip -2-.
– Remove the bolts -3-.
– Fold up the coat hook -10- and remove the bolt -4-.
– Pull and hold the operating lever for the backrest remote release -5-.
– Remove the bolt -6-.
– Loosen the luggage compartment side trim panel -1- near the clips -9- from the body mounts using the Pry Lever - 80-200- .

Vehicles with Converter with Socket

– Loosen the leaf spring -2- from the cover -1-.
– Release the retaining tabs on the cover -1- for the socket with converter -3-.

Protected by copyright. Copying for private or commercial purposes, in part or in whole, is not permitted unless authorised by Volkswagen AG. Copyright by Volkswagen AG. No liability is accepted with respect to the correctness of information in this document.

– Remove the socket with the converter -3- from the cover -1-.

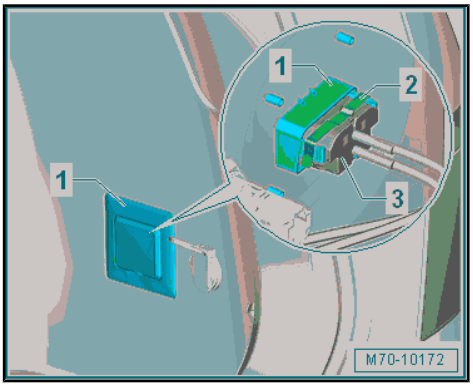

Continuation for All Vehicles

– If equipped, disconnect the connectors and remove the luggage compartment side trim panel.

Installing

Note

- *Check all the fasteners for damage and replace if necessary.*
- *Remove any remaining clips in the body mounting points using the Omega Clip Tool - T40280- . To install, insert into the luggage compartment side trim panel.*
- *Make sure the luggage compartment side trim panel fits inside the rear lid seal molding after it is installed.*

Install in reverse order of removal.

Tightening Specifications

- Refer to
⇒ “6.3.2 Overview - Luggage Compartment Side Trim Panel, Wagon”, page 279

6.13 Rear Lid Upper Trim Panel, Removing and Installing

Special tools and workshop equipment required

- Wedge Set - T10383-

Removing

Protected by copyright. Copying for private or commercial purposes, in part or in whole, is not permitted unless authorised by Volkswagen AG. Volkswagen AG does not guarantee or accept any liability with respect to the correctness of information in this document. Copyright by Volkswagen AG.

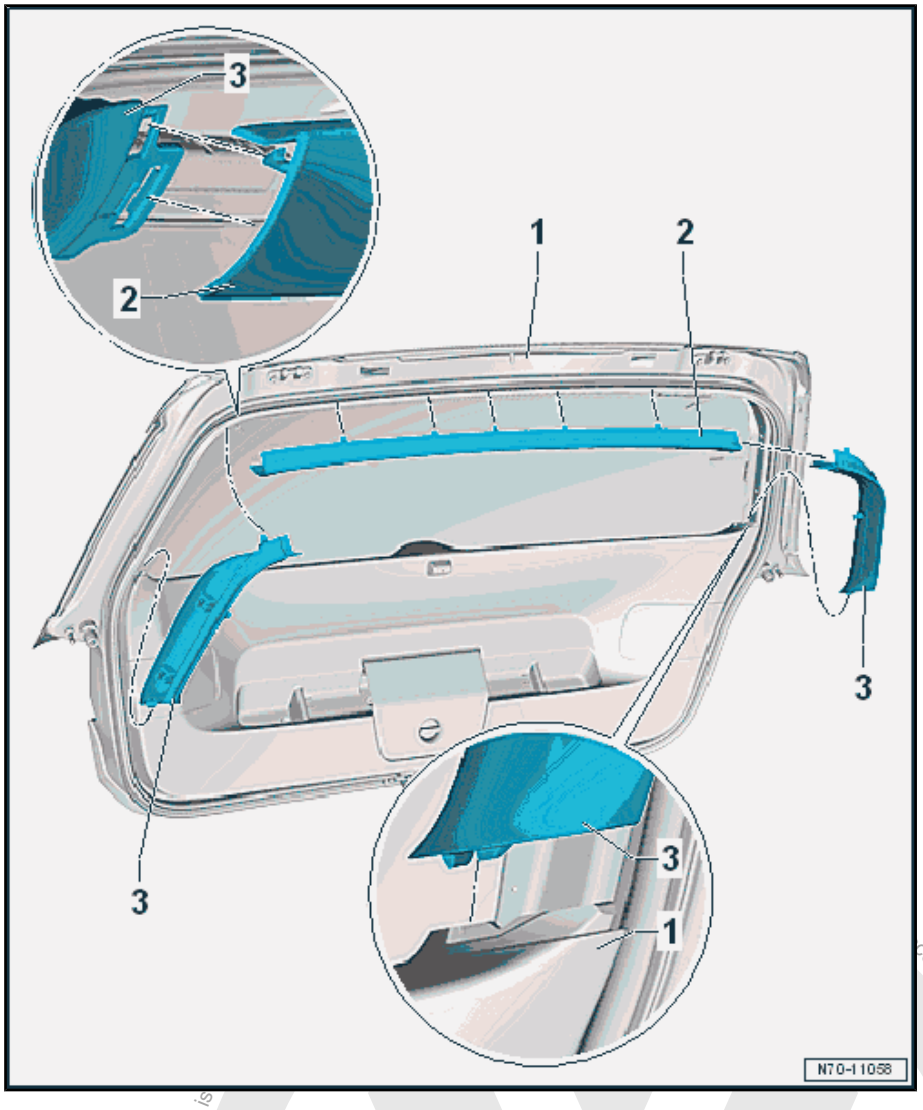

– Disengage the retaining cable for the rear shelf at the left and right side window frames.

– Loosen the center window frame -2- with the Wedge Set - T10383- from the mounts in the rear lid and the side trim panels -3-.

– Remove the center window frame -2-.

– Loosen the side window frame -3- with the Wedge Set - T10383- from the retainers in the rear lid and the lower trim panel -1-.

– Remove the side window frame -3-.

Installing

Note

- *Check all the fasteners for damage and replace if necessary.*
- *Remove any remaining clips in the rear lid mounting points using the Omega Clip Tool - T40280- . To install, insert into the window frame.*

Install in reverse order of removal.

Protected by copyright. Copying for private or commercial purposes, in part or in whole, is not permitted unless authorised by Volkswagen AG. Volkswagen AG does not guarantee or accept any liability with respect to the correctness of information in this document. Copyright by Volkswagen AG.

6.14 Rear Lid Lower Trim Panel, Removing and Installing

Special tools and workshop equipment required

- Omega Clip Tool - T40280-

Removing

– Remove the rear lid upper trim panel. Refer to ⇒ “6.13 Rear Lid Upper Trim Panel, Removing and Installing”, page 293 .

– Remove the emergency triangle.

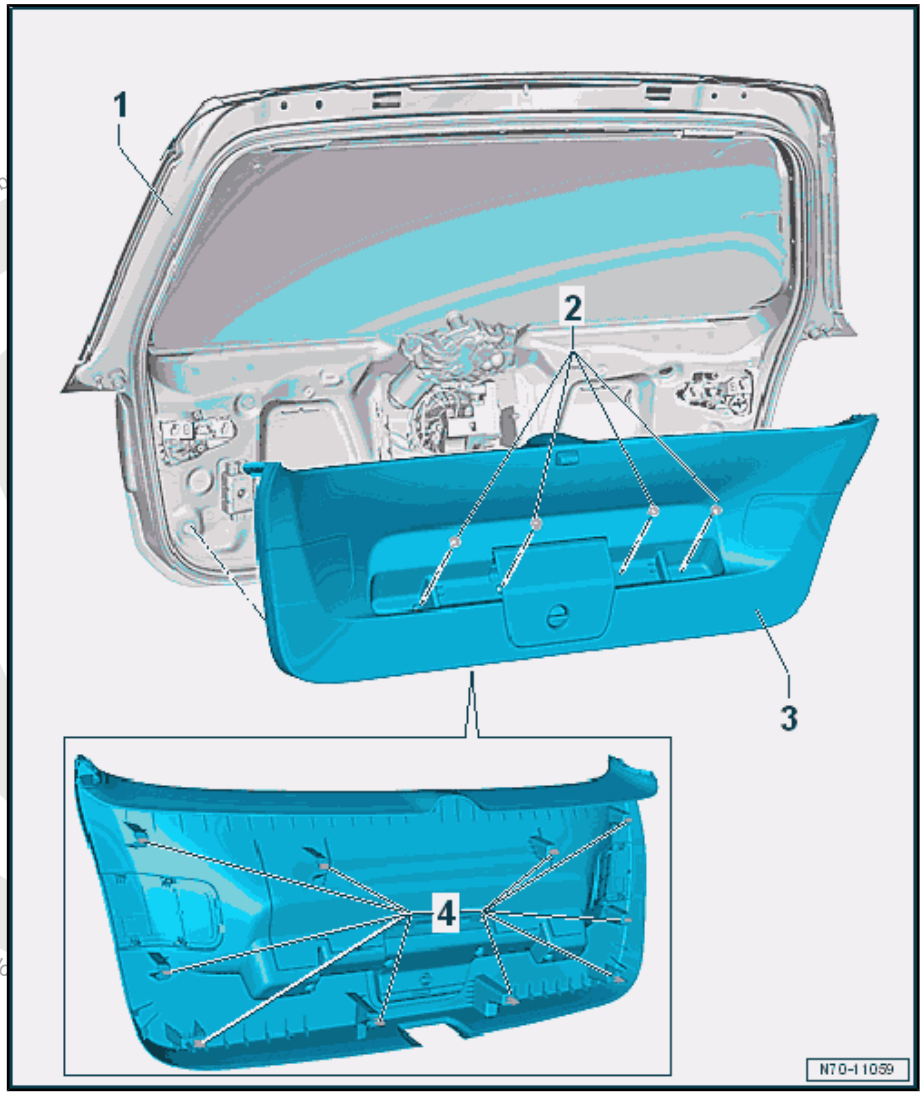

– Remove the bolts -2-.

– Unclip the side access covers in the trim panel -3-.

– Reach into the trim panel access openings with hands.

– Loosen the trim panel -3- with a »jerky pulling motion« from the rear lid mounts -1-.

– Make sure that the entire number of clips -4- is in the trim panel -3-.

Copyright. Copying for private or commercial purposes, in part or in whole, is not permitted unless authorised b

Protected by copyright. Copying for private or commercial purposes, in part or in whole, is not permitted unless authorised by Volkswagen AG. Volkswagen AG does not guarantee or accept any liability with respect to the correctness of information in this document. Copyright by Volkswagen AG.

– Unclip any remaining clips in the rear lid using the Omega Clip Tool - T40280- .
– Insert the removed clips into the trim panel -3- again.

Installing

Note

Check all the fasteners for damage and replace if necessary.

Install in reverse order of removal.

Tightening Specifications

♦ Refer to
⇒ “6.6 Overview - Rear Lid Lower Trim Panel”, page 283

7 Roof Trim Panels

⇒ “7.1 Overview - Headliner”, page 297
⇒ “7.2 Roof End Strip, Removing and Installing”, page 299
⇒ “7.3 Headliner, Removing and Installing”, page 299
⇒ “7.4 Roof Reinforcement, Attaching to Body”, page 303

7.1 Overview - Headliner

⇒ “7.1.1 Overview - Headliner, Sedan”, page 297
⇒ “7.1.2 Overview - Headliner, Wagon”, page 298

7.1.1 Overview - Headliner, Sedan

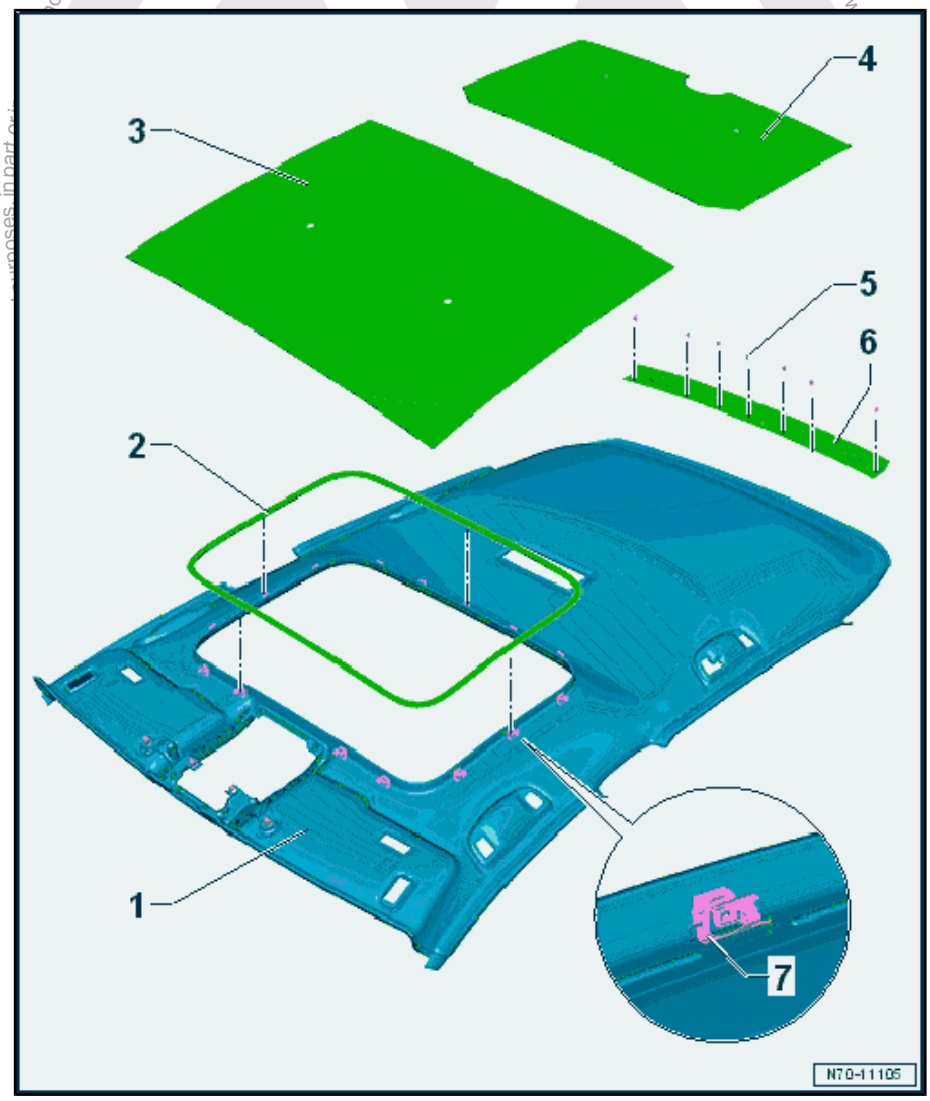

1 - Headliner

- ❑ Allocation. Refer to the Parts Catalog.
- ❑ For certain equipment levels, it is necessary to cut openings in the new headliner. Refer to ⇒ page 301
- ❑ Removing and installing. Refer to ⇒ “7.3.1 Headliner, Removing and Installing, Sedan”, page 299 .

> **Caution**
>
> *The headliner bends easily.*
>
> *Replace the headliner if it is bent.*

2 - Frame

- ❑ Only with a sunroof

3 - Roof Reinforcement

- ❑ Not with a sunroof
- ❑ Install on the body. Refer to ⇒ “7.4 Roof Reinforcement, Attaching to Body”, page 303 .

4 - Roof Reinforcement

- ❑ Install on the body. Refer to ⇒ “7.4 Roof Reinforcement, Attaching to Body”, page 303 .

5 - Clip

- ❑ Quantity: 7
- ❑ Remove the clips that are still in the mounting points on the body using the Omega Clip Tool - T40280-
- ❑ Replace damaged or deformed retaining clips

6 - Roof End Strip

- ❑ Removing and installing. Refer to ⇒ “7.2 Roof End Strip, Removing and Installing”, page 299 .

not permitted unless authorised by Volkswagen AG. Volkswagen AG does not guarantee or accept any liability w

7 - Clip

- ❑ Only with a sunroof
- ❑ Quantity: 15
- ❑ Insert in the headliner
- ❑ Remove any remaining clips in the frame
- ❑ Replace damaged or deformed retaining clips

7.1.2 Overview - Headliner, Wagon

ised by Volkswagen AG. Volkswagen AG does not guara
y liability with respect to the correctness of information in this do

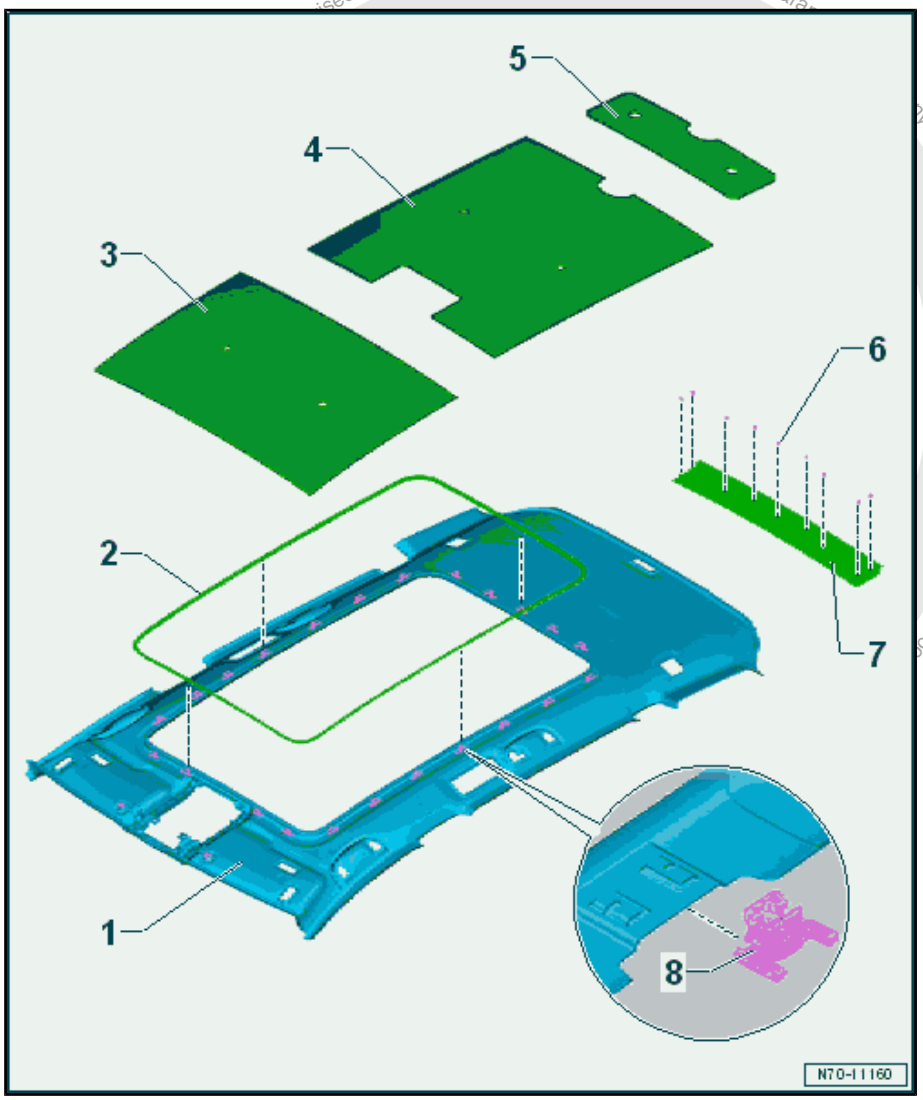

1 - Headliner

- ❑ Allocation. Refer to the Parts Catalog.
- ❑ For certain equipment levels, it is necessary to cut openings in the new headliner. Refer to ⇒ page 303
- ❑ Removing and installing. Refer to ⇒ "7.3.2 Headliner, Removing and Installing, Wagon", page 301 .

> **Caution**
>
> *The headliner bends easily.*
>
> *Replace the headliner if it is bent.*

2 - Frame

- ❑ Only with a sunroof

3 - Roof Reinforcement

- ❑ Not with a sunroof
- ❑ Install on the body. Refer to ⇒ "7.4 Roof Reinforcement, Attaching to Body", page 303 .

4 - Roof Reinforcement

- ❑ Not with a sunroof
- ❑ Install on the body. Refer to ⇒ "7.4 Roof Reinforcement, Attaching to Body", page 303 .

5 - Roof Reinforcement

- ❑ Only with a sunroof
- ❑ Install on the body. Refer to ⇒ "7.4 Roof Reinforcement, Attaching to Body", page 303 .

6 - Clip

- ❑ Quantity: 9
- ❑ Remove the clips that are still in the mounting points on the body using the Omega Clip Tool - T40280-
- ❑ Replace damaged or deformed retaining clips

7 - Roof End Strip

- ❑ Removing and installing. Refer to ⇒ "7.2 Roof End Strip, Removing and Installing", page 299 .

8 - Clip

- ❑ Only with a sunroof
- ❑ Quantity: 23
- ❑ Insert in the headliner
- ❑ Remove any remaining clips in the frame
- ❑ Replace damaged or deformed retaining clips

7.2 Roof End Strip, Removing and Installing

Special tools and workshop equipment required

- ♦ Wedge Set - T10383-

Removing

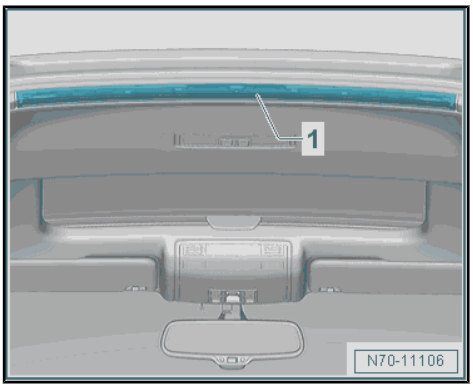

– Loosen the roof end strip -1- near the clips from the body mounts using the Wedge Set - T10383- .

– Remove the roof end strip -1- downward.

Installing

Note

- ♦ *Check all the fasteners for damage and replace if necessary.*
- ♦ *Remove any remaining clips in the body mounting points using the Omega Clip Tool - T40280- . To install, insert into the roof end strip.*
- ♦ *Make sure the roof end strip is inside the rear lid seal molding after it is installed.*

Install in reverse order of removal.

7.3 Headliner, Removing and Installing

⇒ "7.3.1 Headliner, Removing and Installing, Sedan", page 299

⇒ "7.3.2 Headliner, Removing and Installing, Wagon", page 301

7.3.1 Headliner, Removing and Installing, Sedan

Special tools and workshop equipment required

- ♦ Wedge Set - T10383-
- ♦ Release Pliers - VAS6427-

Removing

Vehicles with Sunroof

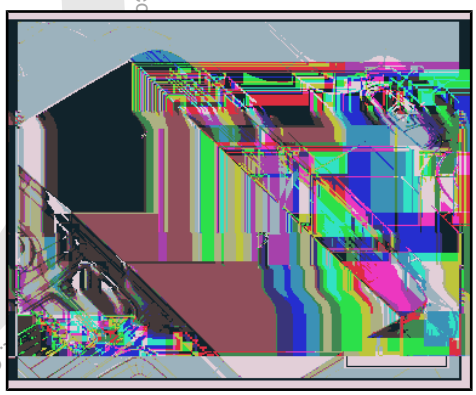

– Open the sunroof -1- all the way.

– Open the sun shade -2- about $^{2}/_{3}$.

Protected by copyright. Copying for private or commercial purposes, in part or whole, is not permitted unless authorised by Volkswagen AG. Volkswagen AG does not guarantee or accept any liability with respect to the co
Copyright by Volkswagen AG.

– Loosen the sunroof clamping strip -1- from the clips -2- using the Wedge Set - T10383- and remove.

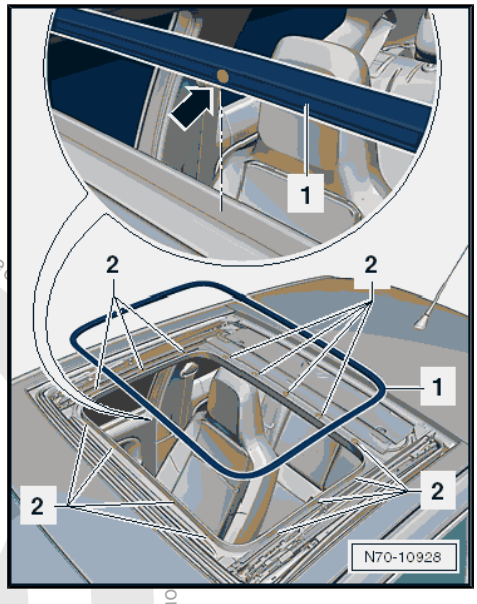

Continuation for All Vehicles

– Remove the A-pillar upper trim panels. Refer to ⇒ “5.11 A-Pillar Gap Cover, Removing and Installing”, page 251 .

– Remove the upper B-pillar trim panels. Refer to ⇒ “5.13 B-Pillar Trim Panel, Removing and Installing”, page 256 .

– Remove the C-pillar trim panels. Refer to ⇒ “5.14 C-Pillar Trim Panel, Removing and Installing”, page 261 .

– If necessary, remove the covers for the interior rearview mirror. Refer to ⇒ “5.2 Interior Rearview Mirror, Removing and Installing”, page 68 .

– Remove the sun visors. Refer to ⇒ “2.8 Sun Visor, Removing and Installing”, page 47 .

– Remove the center support for the sun visors. Refer to ⇒ “2.9 Sun Visor Center Support, Removing and Installing”, page 49 .

– Remove the headliner storage compartment. Refer to ⇒ “1.19 Headliner Storage Compartment, Removing and Installing”, page 38 .

– Only loosen the roof grab handles from the mounts in the roof grab handle bracket. Do not completely remove. Refer to ⇒ “2.10 Roof Grab Handle, Removing and Installing”, page 50 .

– Disconnect the headliner wiring harness connector in the headliner frame.

– Fold the rear seat backrests forward.

– Adjust the front backrest to a 45° angle

Caution

- *The headliner bends easily.*
- *Replace the headliner if it is bent.*

Note

For the following steps, make sure that the Release Pliers - VAS6427- are positioned in the center of the retainers.

Protected by copyright. Copyright for this document. Copyright by Volkswagen AG. Volkswagen AG does not guarantee the correctness of information in this document. Copyright by Volkswagen AG. Volkswagen AG does not permit any alterations or modifications to this document. Copyright by Volkswagen AG.

– Loosen the clips -2- in the headliner frame -1- from the body mounts using the Release Pliers - VAS6427- .

– At the same time keep tension on the headliner -1- -arrows- to prevent the already loosened clips -2- from re-engaging.

– Carefully remove the headliner -1- through the rear lid opening with the help of a second technician.

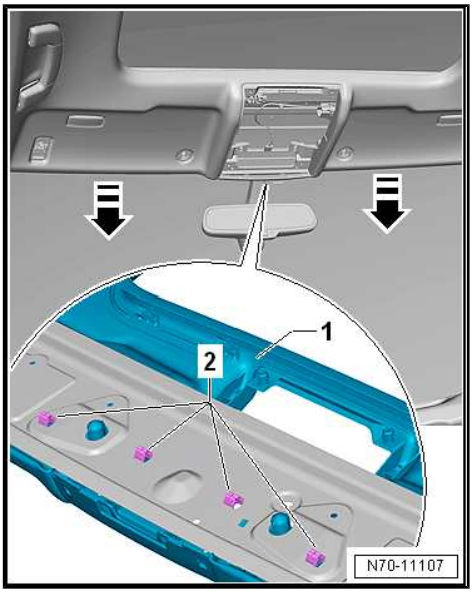

Installing

Cutting Openings in the New Headliner

For vehicles with illuminated vanity mirrors and/or Rain/Light Recognition Sensor - G397- , the appropriate openings must be cut into a new headliner.

– With the help of the markings, cut out the necessary openings in the new headliner using a carpet knife.

Installation is performed in reverse order of removal, while noting the following:

Note

- *Check all the fasteners for damage and replace if necessary.*
- *The yellow marking -arrow- on the clamping strip -1- must point in the direction of travel.*
- *Always replace the clips -2- (quantity: 15) before assembling.*

– Secure the sunroof clamping strip -1- to the headliner clips -2-.

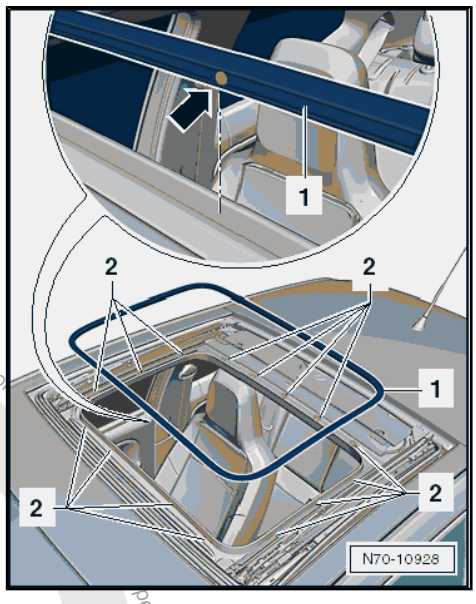

7.3.2 Headliner, Removing and Installing, Wagon

Special tools and workshop equipment required

- Pry Lever - 80-200-
- Release Pliers - VAS6427-

Protected by copyright. Copying for private or commercial purposes, in part or in whole, is not permitted unless authorised by Volkswagen AG. Volkswagen AG does not guarantee or accept any liability with respect to the correctness of information in this document. Copyright by Volkswagen AG.

Removing

Vehicles with Sunroof

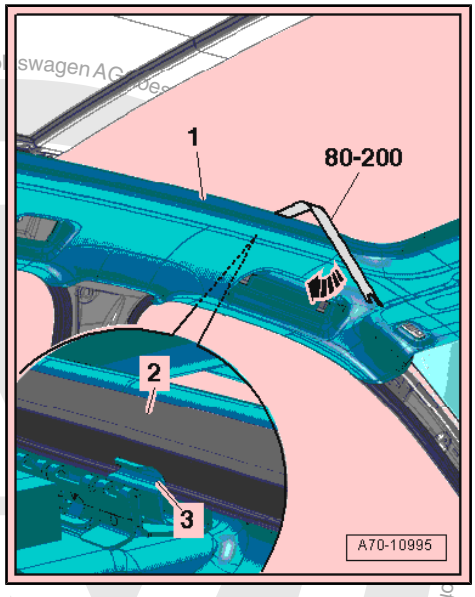

- Open the sunroof all the way.
- Open the sun shade about $^{2}/_{3}$.
- Clean the Pry Lever - 80-200- to avoid to dirtying the headliner.
- Using the Pry Lever - 80-200- , slide it along between the cover frame -2- and headliner -1- until one of the clips -3- is touched.
- Unclip the cover frame -2- all around near the clips -3- using the Pry Lever - 80-200- -arrow-.

Continuation for All Vehicles

- Unclip the upper A-pillar trim panels in the transition area to the headliner. Refer to ⇒ “5.11 A-Pillar Gap Cover, Removing and Installing”, page 251 .
- Remove the upper B-pillar trim panels. Refer to ⇒ “5.13 B-Pillar Trim Panel, Removing and Installing”, page 256 .
- Remove the C-pillar trim panels. Refer to ⇒ “5.14 C-Pillar Trim Panel, Removing and Installing”, page 261 .
- Remove the D-pillar trim panel. Refer to ⇒ “5.15 D-Pillar Trim Panel, Removing and Installing”, page 264 .
- If necessary, remove the covers for the interior rearview mirror. Refer to ⇒ “5.2 Interior Rearview Mirror, Removing and Installing”, page 68 .
- Remove the sun visors. Refer to ⇒ “2.8 Sun Visor, Removing and Installing”, page 47 .
- Remove the sun visor center support. Refer to ⇒ “2.9 Sun Visor Center Support, Removing and Installing”, page 49 .
- Remove the headliner storage compartment. Refer to ⇒ “1.19 Headliner Storage Compartment, Removing and Installing”, page 38 .
- If installed, remove the screen separator mount bolts, but do not remove the mounts. Refer to ⇒ “2.7 Screen Separator Mount, Removing and Installing”, page 46 .
- Only loosen the roof grab handles from the mounts in the roof grab handle bracket, and do not completely remove. Refer to ⇒ “2.10 Roof Grab Handle, Removing and Installing”, page 50 .
- Remove the Luggage Compartment Lamp - W3- . Refer to ⇒ Electrical Equipment; Rep. Gr. 96 ; Lamps; Luggage Compartment Lamp - W3- , Removing and Installing .
- Fold the rear seat backrests forward.
- Move the front backrest to a 45° angle.
- Disconnect the headliner wiring harness connector in the headliner frame.

Protected by copyright. Copying for private or commercial purposes, in part or in whole, is not permitted unless authorised by Volkswagen AG. Volkswagen AG does not guarantee or assume any liability for the accuracy of information in this document. Copyright by Volkswagen AG.

Volkswagen AG. Volkswagen AG does not guarantee or accept any liability with respect to the correctness of information in this document. Copyright by Volkswagen AG. Protected by copyright. Copying for private or commercial purposes, in part or in whole, is not permitted unless authorised by Volkswagen AG.

Caution

- *The headliner bends easily.*
- *Replace the headliner if it is bent.*

Note

For the following steps, make sure that the Release Pliers - VAS6427- are positioned in the center of the retainers.

– Loosen the clips -2- in the headliner frame -1- from the body mounts using the Release Pliers - VAS6427- .

– At the same time keep tension on the headliner -1- in direction of -arrows- to prevent the already loosened clips -2- from re-engaging.

– Carefully remove the headliner -1- through the rear lid opening with the help of a second technician.

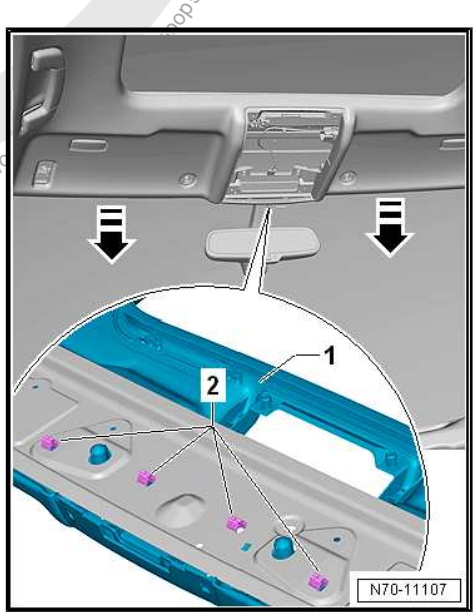

Installing

Cutting Openings in the New Headliner

For vehicles with illuminated vanity mirrors and/or Rain/Light Recognition Sensor - G397- , the appropriate openings must be cut into a new headliner.

– With the help of the markings, cut out the necessary openings in the new headliner using a carpet knife.

If it is possible, use the used part as a template.

There are two rectangular recesses on the inner side of the headliner at the markings for the vanity mirror lamps.

Make the rectangular openings in the center of the rectangular recesses:

- Dimensions: 20.5 mm × 59.6 mm

Installation is performed in reverse order of removal, while noting the following:

Note

- *Check all the fasteners for damage and replace if necessary.*
- *Always replace the clips for the cover frame (quantity: 23) before assembling.*

7.4 Roof Reinforcement, Attaching to Body

⇒ "7.4.1 Roof Reinforcement, Attaching to Body, Sedan and Wagon without Sunroof", page 303

⇒ "7.4.2 Roof Reinforcement, Attaching to Body, Wagon with Sunroof", page 305

7.4.1 Roof Reinforcement, Attaching to Body, Sedan and Wagon without Sunroof

Special tools and workshop equipment required

- Window Cutter - VAG1561A-
- Scraper Blade - 45mm - VAG1561/20-
- Cartridge Gun - VAG1628-
- Trim Release Lever - T10039 -

Removing

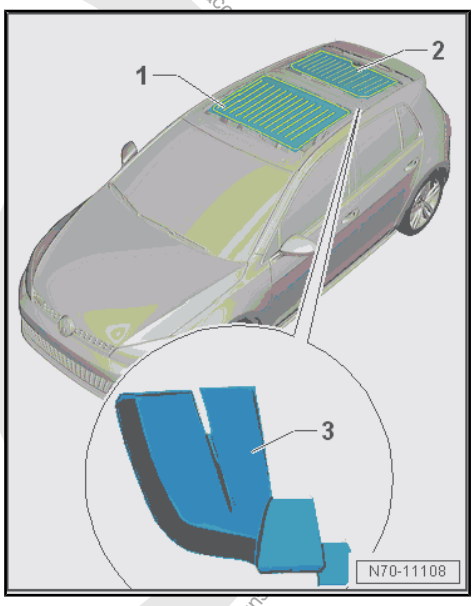

– Remove the headliner. Refer to ⇒ “7.3 Headliner, Removing and Installing”, page 299 .

– Cut the roof reinforcements -1 and 2- with a carpet knife into strips -3- approximately 6 cm wide -broken lines-.

– Remove the strips -3- from the roof.

– Cut back any remaining adhesive using the Window Cutter - VAG1561A- and Scraper Blade - 45mm - VAG1561/20- .

Note

If the paint structure was damaged while removing the roof reinforcements, paint damage must be repaired according to the specifications. Refer to ⇒ Paint; Rep. Gr. 00

Installing

Note

Processing instructions of adhesive must be observed when installing roof reinforcements.

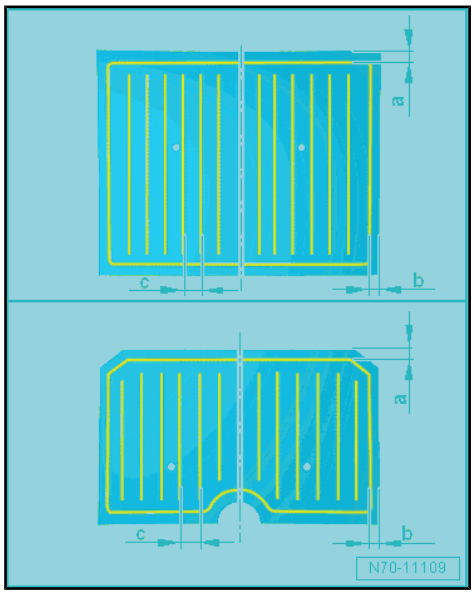

– Using the Cartridge Gun - VAG1628- , apply the one-part assembly adhesive onto the roof reinforcements in adhesive beads according to the following dimensions. Refer to the Parts Catalog.

- Dimension -a- = 35 mm
- Dimension -b- = 31 mm
- Dimension -c- = 58 mm

Protected by copyright. Copying for private or commercial purposes, in part or in whole, is not permitted unless authorised by Volkswagen AG. Volkswagen AG does not guarantee or accept any liability with respect to the correctness of information. Copyright by Volkswagen AG.

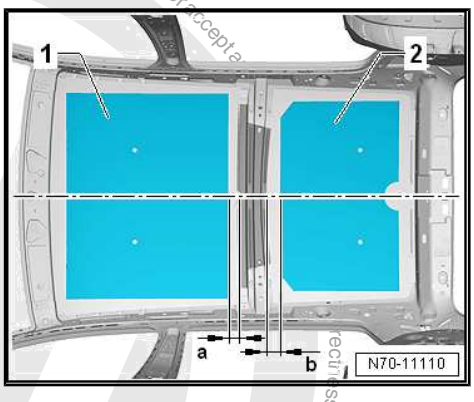

– Measure the width of the roof reinforcements -1 and 2- and mark the center on both sides.

– Guide the roof reinforcement -1- into the vehicle.

– Position the roof reinforcement -1- according to dimension -a- at the center of the roof and press on the entire surface.

Dimension -a-, Sedan: 50.5 ± 3 mm from the front panel edge

Dimension -a-, Wagon without sunroof: 25 ± 1 mm from the front panel edge

– Guide the roof reinforcement -2- into the vehicle.

– Position the roof reinforcement -2- according to dimension -b- at the center of the roof and press on the entire surface.

Dimension -b-, Sedan: 61 ± 3 mm from the rear panel edge

Dimension -b-, Wagon without sunroof: 25 ± 1 mm from the rear panel edge

7.4.2 Roof Reinforcement, Attaching to Body, Wagon with Sunroof

Special tools and workshop equipment required

- Window Cutter - VAG1561A-
- Scraper Blade - 45mm - VAG1561/20-
- Cartridge Gun - VAG1628-
- Trim Release Lever - T10039 -

Removing

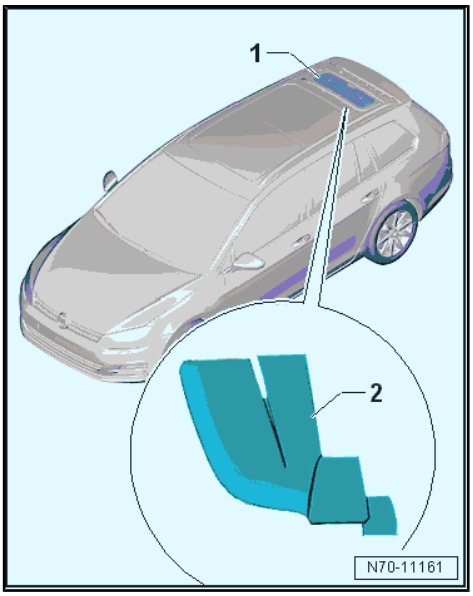

– Remove the headliner. Refer to ⇒ “7.3 Headliner, Removing and Installing”, page 299 .

– Cut the roof reinforcements -1- with a carpet knife into strips -2- approximately 6 cm wide -broken lines-.

– Pull off the strips -2- from the roof.

– Cut back any remaining adhesive using the Window Cutter - VAG1561A- and Scraper Blade - 45mm - VAG1561/20- .

Note

If the paint structure was damaged while removing the roof reinforcements, paint damage must be repaired according to the specifications. Refer to the ⇒ Paint; Rep. Gr. 00 .

Installing

Note

Processing instructions of adhesive must be observed when installing roof reinforcements.

Protected by copyright. Copyright by Volkswagen AG. Volkswagen AG does not guarantee or accept any liability for the rightness of information in this document. Copyright by Volkswagen AG.

– Using the Cartridge Gun - VAG1628- , apply the one-part assembly adhesive onto the roof reinforcements in adhesive beads according to the following dimensions. Refer to the Parts Catalog.

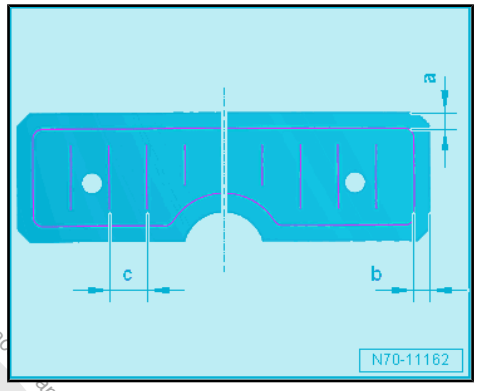

- ♦ Dimension -a- = 35 mm
- ♦ Dimension -b- = 30 mm
- ♦ Dimension -c- = 58 mm

– Measure the width of the roof reinforcements -1- and mark the center on both sides.

– Guide the roof reinforcement -1- into the vehicle.

– Position the roof reinforcement -1- according to dimension -a- at the center of the roof and press on the entire surface.

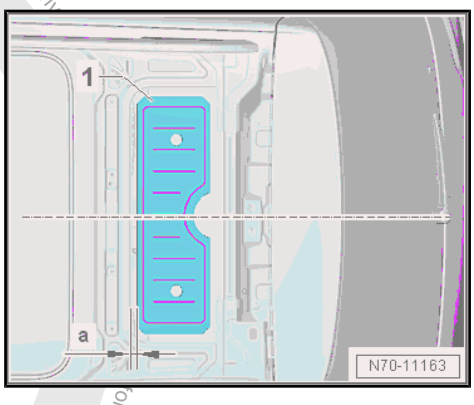

Dimension -a-: 12 ± 1 mm from the rear panel edge

Protected by copyright. Copyright for private or commercial purposes, in part or in whole, not permitted unless authorised by Volkswagen AG. Volkswagen AG does not guarantee or assume any liability for the accuracy of information in this document. Copyright by Volkswagen AG.

8 Special Tools

Special tools and workshop equipment required

- Trim Release Lever - T10039-

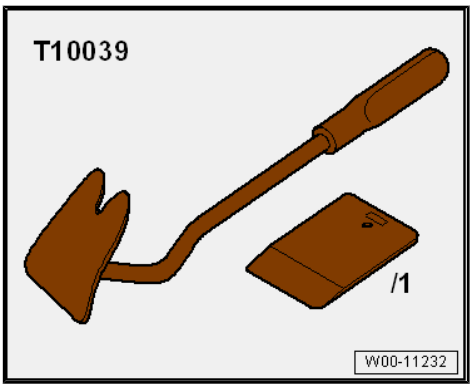

- Wedge Set - T10383-

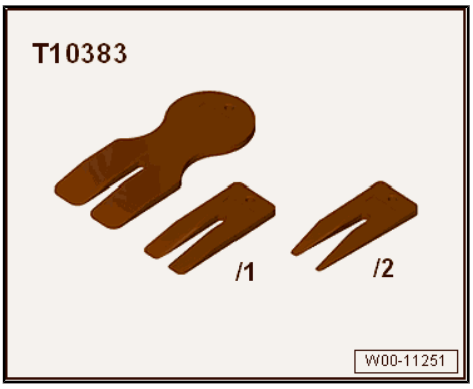

- Omega Clip Tool - T40280-

- Torque Wrench 1331 5-50Nm - VAG1331-

Protected by copyright. Copying for private or commercial purposes, in part or whole, is not permitted unless authorised by Volkswagen AG. Copyright by Volkswagen AG. No liability with respect to the correctness of information in this document.

- Window Cutter - VAG1561A-

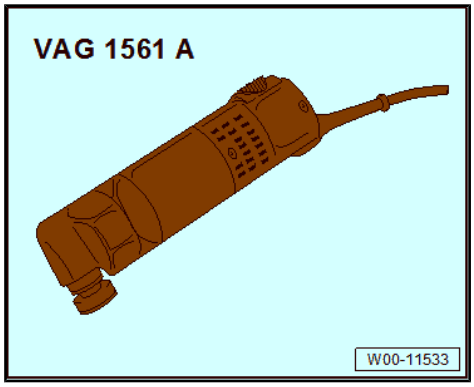

- Scraper Blade - 45mm - VAG1561/20-

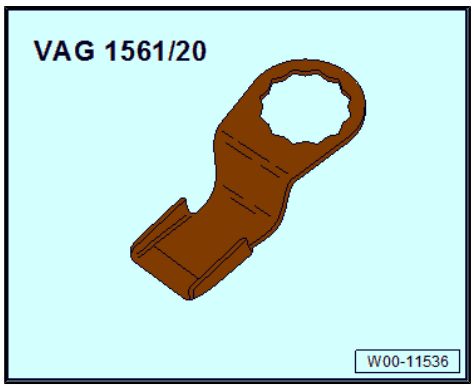

- Cartridge Gun - VAG1628-

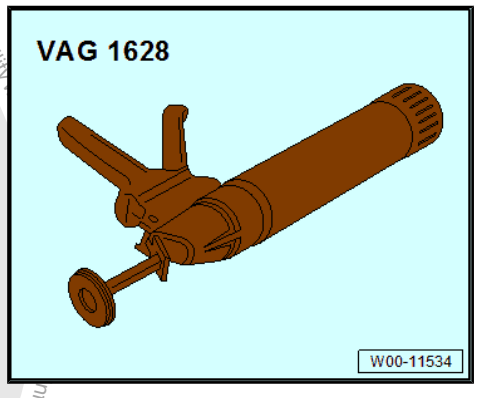

- Torque Wrench 1783 - 2-10Nm - VAG1783-

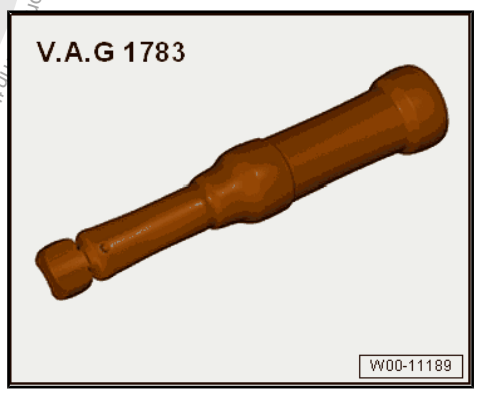

Protected by copyright. Copying for private or commercial purposes, in part or in whole, is not permitted unless authorised by Volkswagen AG. Volkswagen AG does not guarantee or accept any liability with respect to the correctness of information in this document. Copyright by Volkswagen AG.

- Release Pliers - VAS6427-

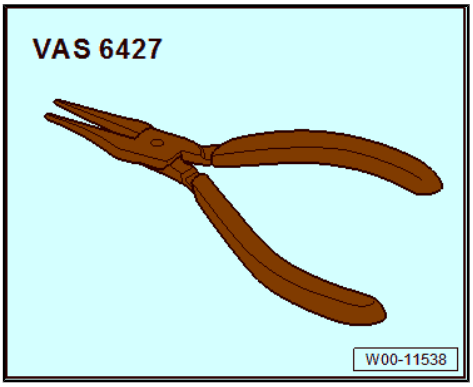

- Pry Lever - 80-200-

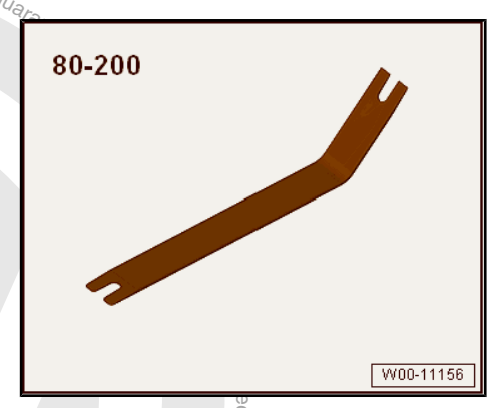

- Backrest Panel Tool - 3370-

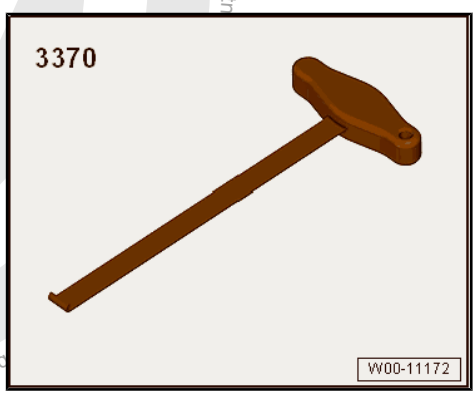

- Trim Removal Wedge - 3409-

Protected by copyright. Copying for private or commercial purposes, in part or in whole, is not permitted unless authorised by Volkswagen AG. Volkswagen AG does not guarantee

72 – Seat Frames

1 Overview - Seat Versions

⇒ “1.1 Component Location Overview - Seat Versions”, page 310

⇒ “1.2 Front Seat, Mounting on Fixture for Seat Repair”, page 311

1.1 Component Location Overview - Seat Versions

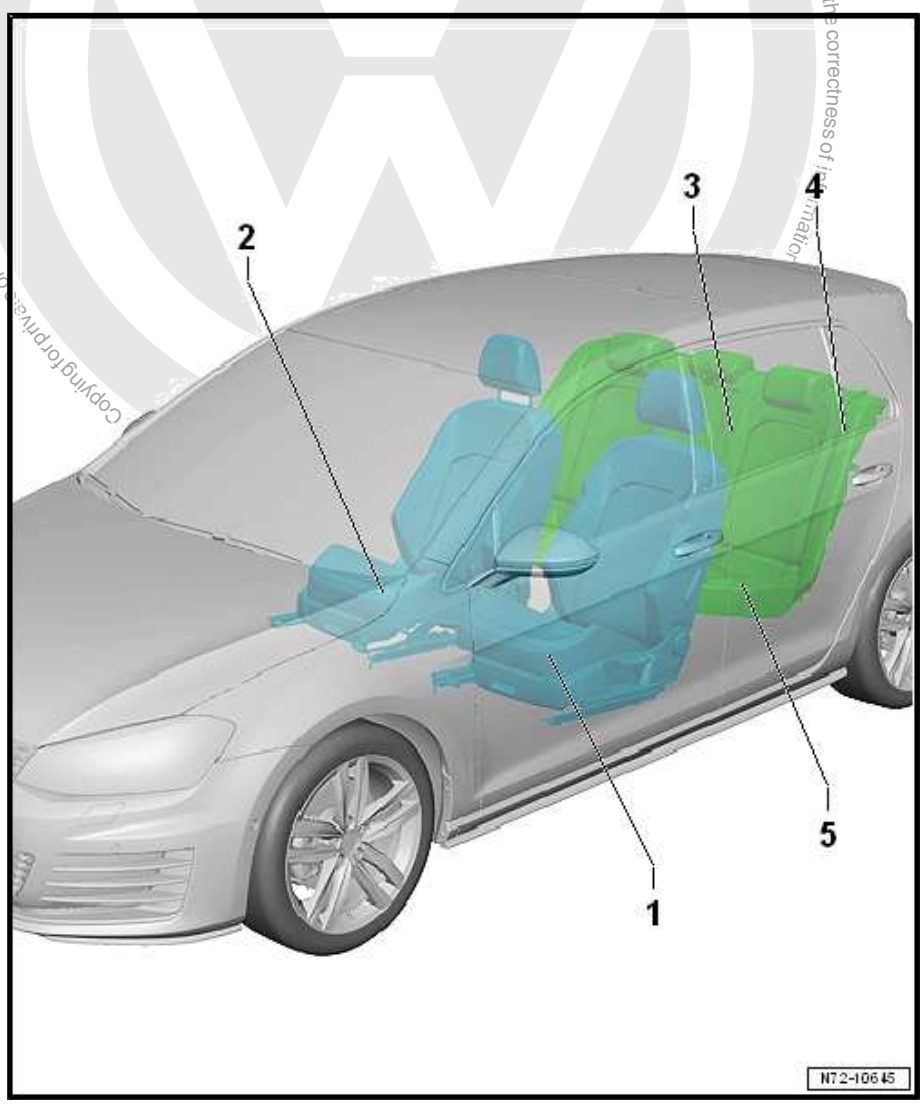

1 - Driver Side Front Seat

- ❑ The design depends on vehicle equipment
- ❑ Overview - Front Seat. Refer to ⇒ “2.2 Overview - Front Seat”, page 318 .
- ❑ Overview - Front Backrest. Refer to ⇒ “2.4 Overview - Front Backrest”, page 323 .
- ❑ Overview - Seat Pan. Refer to ⇒ “2.5 Overview - Seat Pan”, page 327 .

2 - Front Passenger Side Front Seat

- ❑ The design depends on vehicle equipment
- ❑ Overview - Front Seat. Refer to ⇒ “2.2 Overview - Front Seat”, page 318 .
- ❑ Overview - Front Backrest. Refer to ⇒ “2.4 Overview - Front Backrest”, page 323 .
- ❑ Overview - Seat Pan. Refer to ⇒ “2.5 Overview - Seat Pan”, page 327 .

3 - Rear Seat Backrest

- ❑ The design depends on vehicle equipment
- ❑ Overview - Rear Seat Backrest. Refer to ⇒ “3.2 Overview - Rear Seat Backrest”, page 377 .

4 - Side Cushion

- ❑ Installation depends on vehicle equipment
- ❑ Overview - Side Cushion. Refer to ⇒ “3.5 Overview - Side Cushion”, page 381 .

5 - Bench Seat / Single Seats

- ❑ The design depends on vehicle equipment
- ❑ Overview - Bench Seat/Single Seats. Refer to ⇒ “3.1 Overview - Bench Seat/Single Seat”, page 375 .

1.2 Front Seat, Mounting on Fixture for Seat Repair

Special tools and workshop equipment required

- Torque Wrench 1331 5-50Nm - VAG1331-
- Torque Wrench 1783 - 2-10Nm - VAG1783-
- Engine and Gearbox Bracket VAS6095A - VAS6095A-
- Engine/Transmission Holder - Seat Repair Fixture - VAS6136-

Assembly

– Remove the front seats. Refer to ⇒ “2.10 Front Seat, Removing and Installing”, page 335 .

– Attach the Engine/Transmission Holder - Seat Repair Fixture - VAS6136- onto the Engine and Gearbox Bracket - VAS6095A- .

– Place the seat on the Engine/Transmission Holder - Seat Repair Fixture - VAS6136- .

– Secure the front seat on the Engine/Transmission Holder - Seat Repair Fixture - VAS6136- .

Disassembly

Disassembly is performed in reverse order.

Tightening Specifications

- Refer to ⇒ “2.10 Front Seat, Removing and Installing”, page 335

Protected by copyright. Copying for private or commercial purposes, in part or in whole, is not permitted unless authorised by Volkswagen AG. Volkswagen AG does not guarantee or accept any liability with respect to the correctness of information in this document. Copyright by Volkswagen AG.

Protected by copyright. Copying for private or commercial purposes, in part or in whole, is not permitted unless authorised by Volkswagen AG. Volkswagen AG does not guarantee or accept any liability with respect to the correctness of information in this document. Copyright by Volkswagen AG.

2 Front Seats

⇒ “2.1 Component Location Overview - Electric and Electronic Components”, page 314

⇒ “2.2 Overview - Front Seat”, page 318

⇒ “2.3 Overview - Backrest Release and Entry Assistance”, page 322

⇒ “2.4 Overview - Front Backrest”, page 323

⇒ “2.5 Overview - Seat Pan”, page 327

⇒ “2.6 Overview - Seat Height Adjuster”, page 331

⇒ “2.7 Overview - Seat Angle Adjuster”, page 333

⇒ “2.8 Overview - Storage Compartment”, page 334

⇒ “2.9 Overview - Fire Extinguisher”, page 335

⇒ “2.10 Front Seat, Removing and Installing”, page 335

⇒ “2.11 Front Seat, Removing with Faulty Driver/Front Passenger Seat Forward/Back Adjustment Motor V28 / V31 ”, page 339

⇒ “2.12 Airbag Adapter, Connecting and Disconnecting”, page 343

⇒ “2.13 Tunnel-Side Seat Trim, Removing and Installing”, page 344

⇒ “2.14 Sill-Side Seat Trim, Removing and Installing”, page 345

⇒ “2.15 Seat Trim Bracket, Removing and Installing”, page 348

⇒ “2.16 Front Backrest, Removing and Installing”, page 349

⇒ “2.17 Seat Angle Adjuster, Removing and Installing”, page 351

⇒ “2.18 Seat Height Adjustment Handle, Removing and Installing”, page 352

⇒ “2.19 Seat Height Adjuster, Removing and Installing”, page 353

⇒ “2.20 Seat Pan with Driver/Front Passenger Seat Forward/Back Adjustment Motor V28 / V31 , Removing and Installing”, page 357

⇒ “2.21 Backrest Adjuster, Removing and Installing”, page 358

⇒ “2.22 Lumbar Support Adjuster, Removing and Installing”, page 359

⇒ “2.23 Headrest, Removing and Installing”, page 360

⇒ “2.24 Headrest Guide, Removing and Installing”, page 361

⇒ “2.25 Backrest Release Trim, Removing and Installing”, page 361

⇒ “2.26 Backrest Release, Removing and Installing”, page 362

⇒ “2.27 Connecting Cable, Removing and Installing”, page 363

⇒ “2.28 Backrest Release Mount, Removing and Installing”, page 363

⇒ “2.29 Backrest Release Cable, Removing and Installing”, page 364

⇒ “2.30 Backrest Release Cable, Adjusting”, page 365

Protected by copyright. Copying for private or commercial purposes, in part or in whole, is not permitted unless authorised by Volkswagen AG. Volkswagen AG does not guarantee or accept any liability with respect to the correctness of information in this document. Copyright by Volkswagen AG.

⇒ “2.31 Entry Assistance Release Cable A, Removing and Installing”, page 367

⇒ “2.32 Entry Assistance Release Cable A, Adjusting”, page 367

⇒ “2.33 Entry Assistance Release Cable B, Removing and Installing”, page 369

⇒ “2.34 Gliding Piece, Removing and Installing”, page 370

⇒ “2.35 Storage Compartment, Removing and Installing”, page 371

⇒ “2.36 Driver/Front Passenger Seat Lumbar Support Adjustment Switch E176 / E177 , Removing and Installing”, page 372

⇒ “2.37 Lumbar Support Adjustment Motors V125 / V126 / V129 / V130 , Removing and Installing”, page 372

⇒ “2.38 Driver and Front Passenger Seat Adjustment Control Head E470 / E471 , Removing and Installing”, page 373

2.1 Component Location Overview - Electric and Electronic Components

⇒ “2.1.1 Component Locations Overview - Electric and Electronic Components, Except Power Seat”, page 314

⇒ “2.1.2 Component Locations Overview - Electric and Electronic Components, Power Seat”, page 316

2.1.1 Component Locations Overview - Electric and Electronic Components, Except Power Seat

Protected by copyright. Copying for private or commercial purposes, in part or in whole, is not permitted unless authorised by Volkswagen AG. Volkswagen AG does not guarantee or accept any liability with respect to the correctness of information in this document. Copyright by Volkswagen AG.

1 - Seat Heating Element

- ❑ Driver Seat Heating Element - Z6-
- ❑ Front Passenger Seat Heating Element - Z8-
- ❑ Depending on the vehicle equipment level
- ❑ Removing and installing. Refer to ⇒ “1.8 Driver/Front Passenger Seat Heating Element Z6 / Z8 , Removing and Installing”, page 414 .

2 - Backrest Heating Element

- ❑ Driver Backrest Heating Element - Z7-
- ❑ Front Passenger Backrest Heating Element - Z9-
- ❑ Depending on the vehicle equipment level
- ❑ Removing and installing. Refer to ⇒ “1.9 Driver/Front Passenger Backrest Heating Element Z7 / Z9 , Removing and Installing”, page 415 .

3 - Lumbar Support

- ❑ Driver Seat Lumbar Support Curvature Adjustment Motor - V125-
- ❑ Driver Seat Lumbar Support Height Adjustment Motor - V129-
- ❑ Front Passenger Seat Lumbar Support Curvature Adjustment Motor - V126-
- ❑ Front Passenger Seat Lumbar Support Height Adjustment Motor - V130-
- ❑ Equipment levels
- ❑ Overview. Refer to ⇒ page 326 .
- ❑ Removing and installing. Refer to ⇒ “2.37 Lumbar Support Adjustment Motors V125 / V126 / V129 / V130 , Removing and Installing”, page 372 .

4 - Lumbar Support Adjustment Switch

- ❑ Driver Seat Lumbar Support Adjustment Switch - E176-
- ❑ Front Passenger Seat Lumbar Support Adjustment Switch - E177-
- ❑ Depending on the vehicle equipment level
- ❑ Removing and installing. Refer to ⇒ “2.36 Driver/Front Passenger Seat Lumbar Support Adjustment Switch E176 / E177 , Removing and Installing”, page 372 .
- ❑ Lumbar support, removing and installing. Refer to ⇒ “2.37 Lumbar Support Adjustment Motors V125 / V126 / V129 / V130 , Removing and Installing”, page 372 .

2.1.2 Component Locations Overview - Electric and Electronic Components, Power Seat

1 - Seat Angle Adjuster

- ❑ Driver Seat Angle Adjustment Motor - V243-
- ❑ Front Passenger Seat Angle Adjustment Motor - V244-
- ❑ Overview. Refer to ⇒ page 333 .
- ❑ Removing and installing. Refer to ⇒ "2.17 Seat Angle Adjuster, Removing and Installing", page 351 .

2 - Seat Forward/Back Adjuster

- ❑ Driver Seat Forward/Back Adjustment Motor - V28-
- ❑ Front Passenger Seat Forward/Back Adjustment Motor - V31-
- ❑ Removing and installing. Refer to ⇒ "2.20 Seat Pan with Driver/Front Passenger Seat Forward/Back Adjustment Motor V28 / V31 , Removing and Installing", page 357 .

3 - Seat Heating Element

- ❑ Driver Seat Heating Element - Z6-
- ❑ Front Passenger Seat Heating Element - Z8-
- ❑ Depending on the vehicle equipment level
- ❑ Removing and installing. Refer to ⇒ "1.8 Driver/Front Passenger Seat Heating Element Z6 / Z8 , Removing and Installing", page 414 .

4 - Backrest Adjuster

- ❑ Driver Backrest Adjustment Motor - V45-
- ❑ Front Passenger Backrest Adjustment Motor - V46-
- ❑ Removing and installing. Refer to ⇒ "2.21.2 Backrest Adjuster, Removing and Installing, Power Seat", page 358 .

5 - Backrest Heating Element

- ❑ Driver Backrest Heating Element - Z7-
- ❑ Front Passenger Backrest Heating Element - Z9-
- ❑ Depending on the vehicle equipment level
- ❑ Removing and installing. Refer to ⇒ "1.9 Driver/Front Passenger Backrest Heating Element Z7 / Z9 , Removing and Installing", page 415 .

6 - Lumbar Support

- ❑ Driver Seat Lumbar Support Curvature Adjustment Motor - V125-
- ❑ Driver Seat Lumbar Support Height Adjustment Motor - V129-

Protected by copyright. Copying for private or commercial purposes, in part or in whole, is not permitted unless authorised by Volkswagen AG. Volkswagen AG does not guarantee or accept any liability with respect to the correctness and completeness of this document.

- ❑ Front Passenger Seat Lumbar Support Curvature Adjustment Motor - V126-
- ❑ Front Passenger Seat Lumbar Support Height Adjustment Motor - V130-
- ❑ Overview. Refer to ⇒ page 326 .
- ❑ Removing and installing. Refer to ⇒ "2.37 Lumbar Support Adjustment Motors V125 / V126 / V129 / V130 , Removing and Installing", page 372 .

7 - Seat Height Adjuster

- ❑ Driver Seat Height Adjustment Motor - V138-
- ❑ Front Passenger Seat Height Adjustment Motor - V246-
- ❑ Overview. Refer to ⇒ page 332 .
- ❑ Removing and installing. Refer to ⇒ "2.19.2 Seat Height Adjuster, Removing and Installing, Power Seat", page 355 .

8 - Seat Adjustment Control Head

- ❑ Driver Seat Adjustment Control Head - E470-
- ❑ Front Passenger Seat Adjustment Control Head - E471-
- ❑ Removing and installing. Refer to ⇒ "2.38 Driver and Front Passenger Seat Adjustment Control Head E470 / E471 , Removing and Installing", page 373 .

9 - Lumbar Support Adjustment Switch

- ❑ Driver Seat Lumbar Support Adjustment Switch - E176-
- ❑ Front Passenger Seat Lumbar Support Adjustment Switch - E177-
- ❑ Removing and installing. Refer to ⇒ "2.36 Driver/Front Passenger Seat Lumbar Support Adjustment Switch E176 / E177 , Removing and Installing", page 372 .
- ❑ Lumbar support, removing and installing. Refer to ⇒ "2.37 Lumbar Support Adjustment Motors V125 / V126 / V129 / V130 , Removing and Installing", page 372 .

Protected by copyright. Copying for private or commercial purposes, in part or in whole, is not permitted unless authorised by Volkswagen AG. Volkswagen AG does not guarantee or accept any liability with respect to the correctness of information in this document. Copyright by Volkswagen AG.

2.2 Overview - Front Seat

⇒ “2.2.1 Overview - Front Seat, Except Power Seat”, page 318

⇒ “2.2.2 Overview - Front Seat, Power Seat”, page 320

2.2.1 Overview - Front Seat, Except Power Seat

Note

The illustration shows the driver side front seat. The front seat on the front passenger side is similar.

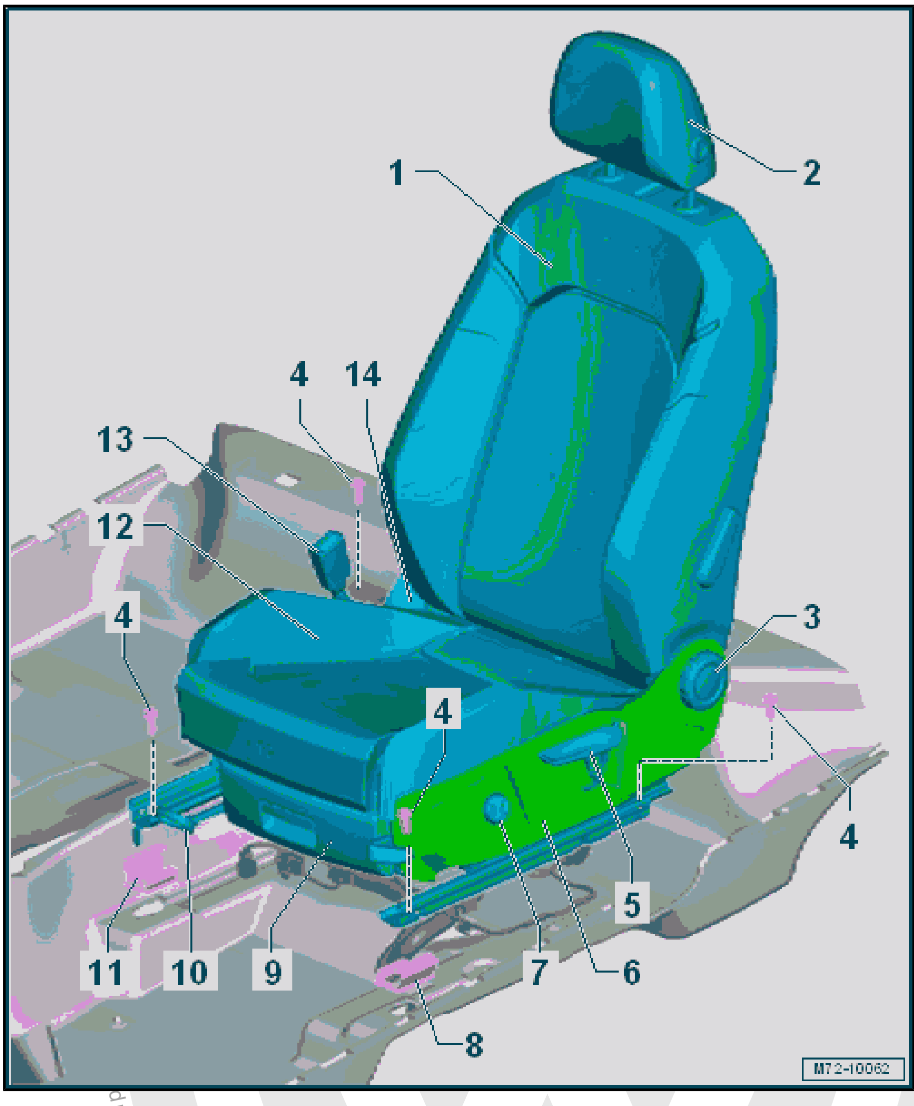

1 - Backrest

- ❑ Overview. Refer to ⇒ “2.4.1 Overview - Front Backrest, Except Power Seat”, page 323 .
- ❑ Removing and installing. Refer to ⇒ “2.16 Front Backrest, Removing and Installing”, page 349 .
- ❑ Backrest release/entry assistance for vehicles with two doors
- ❑ Backrest release/entry assistance, removing and installing. Refer to ⇒ “2.27 Connecting Cable, Removing and Installing”, page 363 .

2 - Headrest

- ❑ Removing and installing. Refer to ⇒ “2.23 Headrest, Removing and Installing”, page 360 .

3 - Hand Wheel

- ❑ For manual backrest adjustment
- ❑ Removing and installing. Refer to ⇒ “2.21.1 Backrest Adjuster, Removing and Installing, Except Power Seat”, page 358 .

4 - Screw

- ❑ 40 Nm
- ❑ Quantity: 4

5 - Seat Height Adjuster

- ❑ Overview. Refer to ⇒ page 331 .
- ❑ Removing and installing. Refer to ⇒ “2.19.1 Seat Height Adjuster, Removing and Installing, Except Power Seat”, page 353 .
- ❑ Seat Height Adjustment Handle, Removing and installing. Refer to ⇒ “2.18 Seat Height Adjustment Handle, Removing and Installing”, page 352 .

Protected by copyright. Copying for private or commercial purposes, in part or in whole, is not permitted unless authorised by Volkswagen AG. Volkswagen AG does not guarantee or accept any liability with respect to the correctness of information in this document. Copyright by Volkswagen AG.

Protected by copyright. Copying for private or commercial purposes, in part or in whole, is not permitted unless authorised by Volkswagen AG. Volkswagen AG does not guarantee or accept any liability with respect to the correctness of information in this document. Copyright by Volkswagen AG.

6 - Sill-Side Seat Trim Panel

- ❑ Removing and installing. Refer to
  ⇒ “2.14.1 Door Sill Side Seat Trim, Removing and Installing, Except Power Seat”, page 345

7 - Lumbar Support Adjustment Switch

- ❑ Driver Seat Lumbar Support Adjustment Switch - E176-
- ❑ Front Passenger Seat Lumbar Support Adjustment Switch - E177-
- ❑ Depending on the vehicle equipment level
- ❑ Removing and installing. Refer to
  ⇒ “2.36 Driver/Front Passenger Seat Lumbar Support Adjustment Switch E176 / E177 , Removing and Installing”, page 372
- ❑ Lumbar support, removing and installing. Refer to
  ⇒ “2.37 Lumbar Support Adjustment Motors V125 / V126 / V129 / V130 , Removing and Installing”, page 372 .

8 - Cover

- ❑ For sill-side seat rail
- ❑ Installed in rear and front
- ❑ Quantity: 2
- ❑ Loosen and remove from the seat rail by carefully releasing the retaining tabs without breaking them using a screwdriver.
- ❑ Carefully push onto the seat rail until it audibly latches

9 - Storage Compartment

- ❑ Depending on the vehicle equipment level
- ❑ Overview. Refer to ⇒ page 334 .
- ❑ Removing and installing. Refer to ⇒ “2.35 Storage Compartment, Removing and Installing”, page 371 .

10 - Seat Forward/Back Adjustment Handle

- ❑ Remove by hand or separate from the handle mount using a rubber or plastic mallet.
- ❑ Hit the seat forward/back adjustment handle all the way back on using a rubber mallet. Do not damage the surface while doing so.

11 - Cover

- ❑ For tunnel side seat rail
- ❑ Quantity: 2
- ❑ Installed in rear and front
- ❑ Loosen and remove from the seat rail by carefully releasing the retaining tabs without breaking them using a screwdriver.
- ❑ Carefully push onto the seat rail until it audibly latches

12 - Seat Pan

- ❑ Overview. Refer to ⇒ “2.5.1 Overview - Seat Pan, Except Power Seat”, page 327 .

13 - Seat Belt Latch

- ❑ Removing and installing. Refer to ⇒ “1.14 Front Seat Belt Latch, Removing and Installing”, page 120 .

14 - Tunnel-Side Seat Trim Panel

- ❑ Removing and installing. Refer to
  ⇒ “2.13 Tunnel-Side Seat Trim, Removing and Installing”, page 344 .

2.2.2 Overview - Front Seat, Power Seat

Note

The illustration shows the driver side front seat. The front seat on the front passenger side is similar.

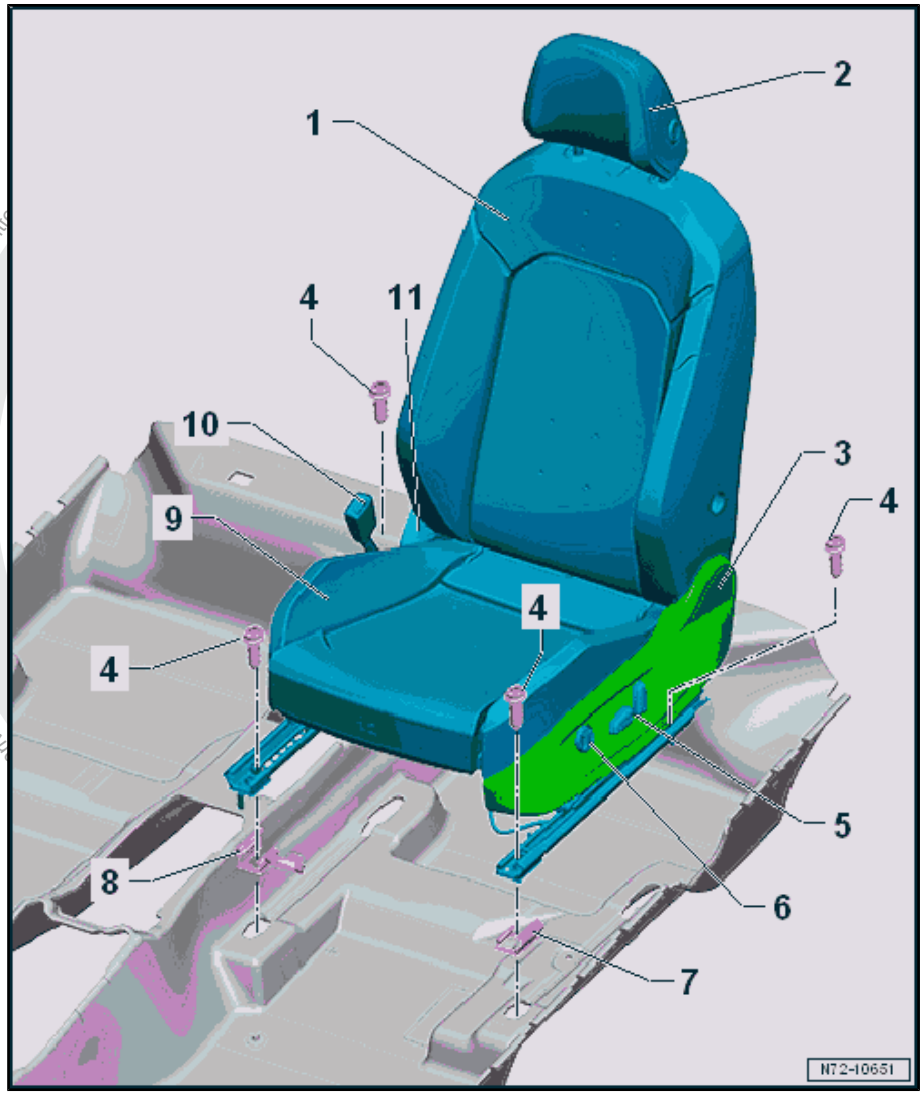

1 - Backrest

- ❑ Overview. Refer to ⇒ "2.4.2 Overview - Front Backrest, Power Seat", page 325 .
- ❑ Removing and installing. Refer to ⇒ "2.16 Front Backrest, Removing and Installing", page 349 .

2 - Headrest

- ❑ Removing and installing. Refer to ⇒ "2.23 Headrest, Removing and Installing", page 360 .

3 - Sill-Side Seat Trim Panel

- ❑ Removing and installing. Refer to ⇒ "2.14.2 Door Sill Side Seat Trim, Removing and Installing, Power Seat", page 347 .

4 - Screw

- ❑ 40 Nm
- ❑ Quantity: 4

5 - Seat Adjustment Control Head

- ❑ Driver Seat Adjustment Control Head - E470-
- ❑ Front Passenger Seat Adjustment Control Head - E471-
- ❑ Removing and installing. Refer to ⇒ "2.38 Driver and Front Passenger Seat Adjustment Control Head E470 / E471 , Removing and Installing", page 373 .

6 - Lumbar Support Adjustment Switch

- ❑ Driver Seat Lumbar Support Adjustment Switch - E176-
- ❑ Front Passenger Seat Lumbar Support Adjustment Switch - E177-
- ❑ Removing and installing. Refer to ⇒ "2.36 Driver/Front Passenger Seat Lumbar Support Adjustment Switch E176 / E177 , Removing and Installing", page 372 .
- ❑ Lumbar support, removing and installing. Refer to ⇒ "2.37 Lumbar Support Adjustment Motors V125 / V126 / V129 / V130 , Removing and Installing", page 372 .

7 - Cover

- ❑ For sill-side seat rail
- ❑ Installed in rear and front

Private or commercial purposes, in part or in whole, is not permitte

- ❑ Quantity: 2
- ❑ Loosen and remove from the seat rail by carefully releasing the retaining tabs without breaking them using a screwdriver.
- ❑ Carefully push onto the seat rail until it audibly latches

8 - Cover

- ❑ For tunnel side seat rail
- ❑ Quantity: 2
- ❑ Installed in rear and front
- ❑ Loosen and remove from the seat rail by carefully releasing the retaining tabs without breaking them using a screwdriver.
- ❑ Carefully push onto the seat rail until it audibly latches

9 - Seat Pan

- ❑ Overview. Refer to ⇒ “2.5.2 Overview - Seat Pan, Power”, page 328 .
- ❑ Removing and installing. Refer to ⇒ “2.20 Seat Pan with Driver/Front Passenger Seat Forward/Back Adjustment Motor V28 / V31 , Removing and Installing”, page 357 .

10 - Seat Belt Latch

- ❑ Removing and installing. Refer to ⇒ “1.14 Front Seat Belt Latch, Removing and Installing”, page 120 .

11 - Tunnel-Side Seat Trim Panel

- ❑ Removing and installing. Refer to ⇒ “2.13 Tunnel-Side Seat Trim, Removing and Installing”, page 344 .

Protected by copyright. Copying for private or commercial purposes, in part or in whole, is not permitted unless authorised by Volkswagen AG. Volkswagen AG does not guarantee or accept any liability with respect to the correctness of information in this document. Copyright by Volkswagen AG.

2.3 Overview - Backrest Release and Entry Assistance

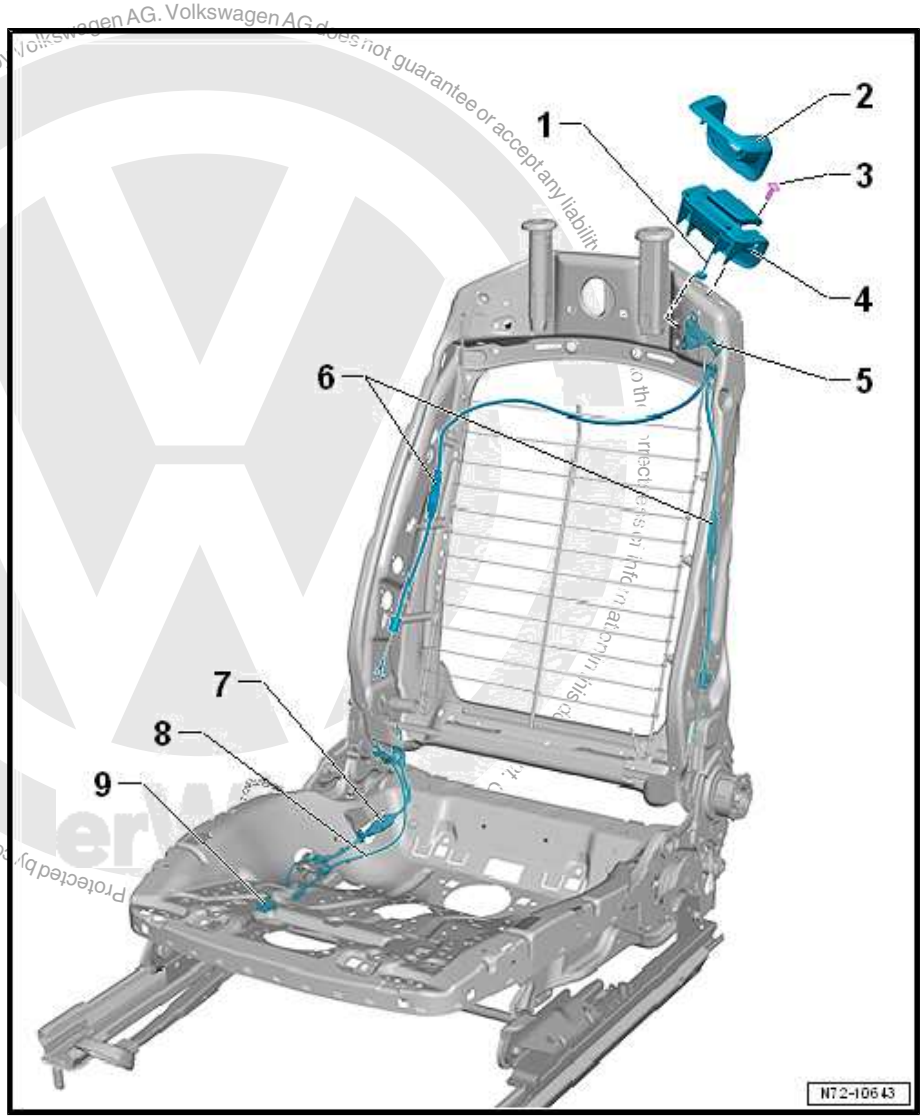

1 - Connecting Cable

- ❑ Between the backrest release and backrest release mount
- ❑ Removing and installing. Refer to ⇒ “2.27 Connecting Cable, Removing and Installing”, page 363 .

2 - Backrest Release Trim

- ❑ Removing and installing. Refer to ⇒ “2.25 Backrest Release Trim, Removing and Installing”, page 361 .

3 - Screw

- ❑ 3.5 Nm

4 - Backrest Release

- ❑ Removing and installing. Refer to ⇒ “2.26 Backrest Release, Removing and Installing”, page 362 .

5 - Backrest Release Mount

- ❑ Riveted to backrest frame
- ❑ Removing and installing. Refer to ⇒ “2.28 Backrest Release Mount, Removing and Installing”, page 363 .

6 - Backrest Release Cable

- ❑ With a release cable adjuster on each side
- ❑ Removing and installing. Refer to ⇒ “2.29 Backrest Release Cable, Removing and Installing”, page 364 .
- ❑ Adjusting. Refer to ⇒ “2.30 Backrest Release Cable, Adjusting”, page 365 .

7 - Entry Assistance Release Cable A

- ❑ With a release cable adjuster
- ❑ Removing and installing. Refer to ⇒ “2.31 Entry Assistance Release Cable A, Removing and Installing”, page 367 .
- ❑ Adjusting. Refer to ⇒ “2.32 Entry Assistance Release Cable A, Adjusting”, page 367 .

8 - Entry Assistance Release Cable B

- ❑ Removing and installing. Refer to ⇒ “2.33 Entry Assistance Release Cable B, Removing and Installing”, page 369 .

9 - Slider

- ❑ Removing and installing. Refer to ⇒ “2.34 Gliding Piece, Removing and Installing”, page 370 .

2.4 Overview - Front Backrest

⇒ “2.4.1 Overview - Front Backrest, Except Power Seat”, page 323

⇒ “2.4.2 Overview - Front Backrest, Power Seat”, page 325

⇒ “2.4.3 Overview - Front Backrest, Power Lumbar Support”, page 326

2.4.1 Overview - Front Backrest, Except Power Seat

Note

The illustration shows the driver side front backrest. The front backrest on the front passenger side is similar.

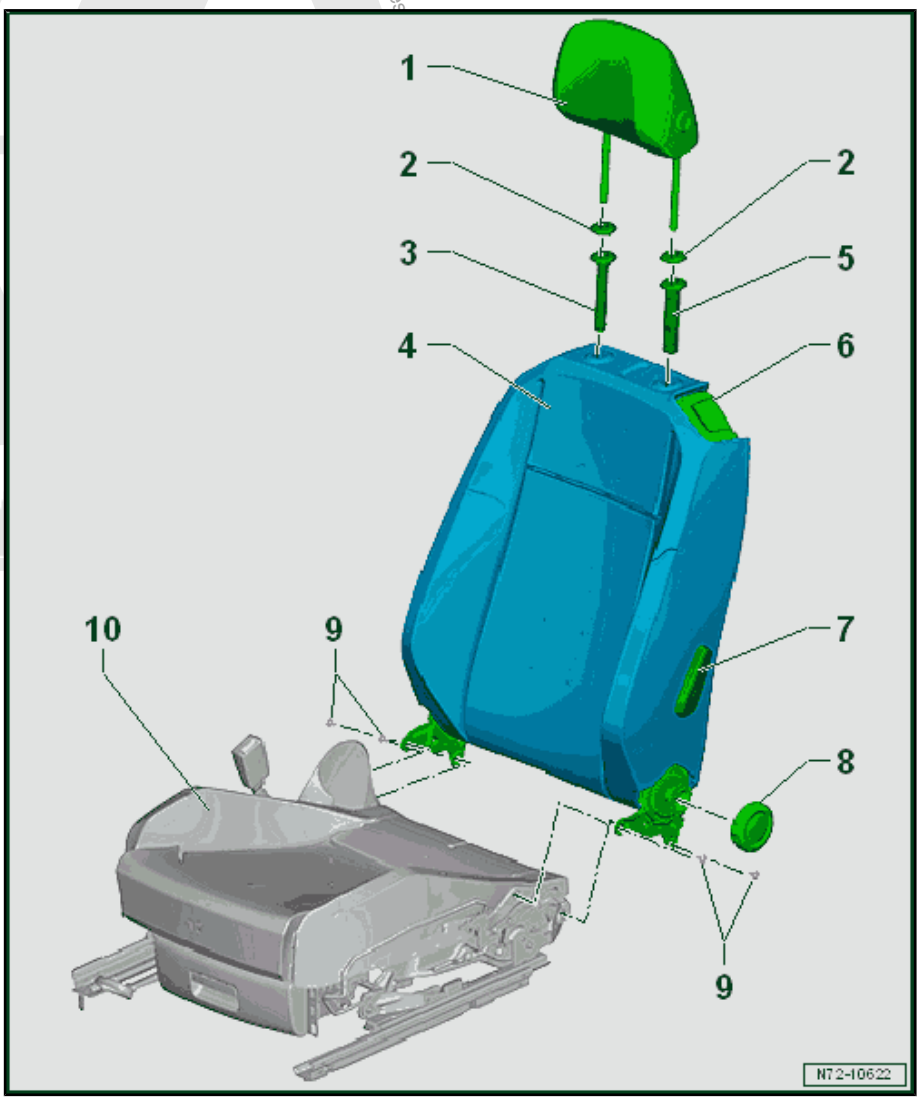

1 - Headrest

- ❑ Removing and installing. Refer to ⇒ “2.23 Headrest, Removing and Installing”, page 360 .
- ❑ Must be correctly locked in the headrest guides

2 - Cover

- ❑ Quantity: 2

3 - Right Headrest Guide

- ❑ Removing and installing. Refer to ⇒ “2.24 Headrest Guide, Removing and Installing”, page 361 .

4 - Backrest

- ❑ Removing and installing. Refer to ⇒ “2.16 Front Backrest, Removing and Installing”, page 349 .
- ❑ Backrest Cover and Cushion, Removing and installing. Refer to ⇒ “1.5 Backrest Cover and Cushion, Removing and Installing”, page 406 .
- ❑ Backrest Cover and Cushion, Separating. Refer to ⇒ “1.7 Backrest Cover and Cushion, Separating”, page 410 .
- ❑ Depends on vehicle equipment with power lumbar support. Refer to ⇒ page 326

5 - Left Headrest Guide

- ❑ Removing and installing. Refer to ⇒ “2.24 Headrest Guide, Removing and Installing”, page 361 .

6 - Backrest Release

- ❑ On 2-door vehicles
- ❑ Backrest release trim, removing and installing. Refer to ⇒ “2.25 Backrest Release Trim, Removing and Installing”, page 361 .

Protected by copyright. Copying for private or commercial purposes, in part or in whole, is not permitted unless authorised by Volkswagen AG. Volkswagen AG does not guarantee or accept any liability with respect to the correctness of information in this document.

- ❑ Backrest release, removing and installing. Refer to
  ⇒ “2.26 Backrest Release, Removing and Installing”, page 362 .
- ❑ Backrest release mount, removing and installing. Refer to
  ⇒ “2.28 Backrest Release Mount, Removing and Installing”, page 363 .

7 - Lever

- ❑ For manually adjusting lumbar support
- ❑ Removing and installing. Refer to
  ⇒ “2.22 Lumbar Support Adjuster, Removing and Installing”, page 359 .

8 - Hand Wheel

- ❑ For manual backrest adjustment
- ❑ Removing and installing. Refer to
  ⇒ “2.21.1 Backrest Adjuster, Removing and Installing, Except Power Seat”, page 358 .

9 - Screw

- ❑ 34 Nm
- ❑ Quantity: 4
- ❑ Self-locking
- ❑ Replace after removing
- ❑ Threaded holes for the bolts must be cleaned, for example, with a thread tap

10 - Seat Pan

- ❑ Overview. Refer to ⇒ “2.5.1 Overview - Seat Pan, Except Power Seat”, page 327 .

Protected by copyright. Copying for private or commercial purposes, in part or in whole, is not permitted unless authorised by Volkswagen AG. Volkswagen AG does not guarantee or accept any liability with respect to the correctness of information in this document. Copyright by Volkswagen AG.

2.4.2 Overview - Front Backrest, Power Seat

Note

The illustration shows the driver side front backrest. The front backrest on the front passenger side is similar.

ing for private or commercial purposes, in part or in whole, is not permitted unless authorised by Volkswagen AG. Volkswagen AG does not guarantee or acc

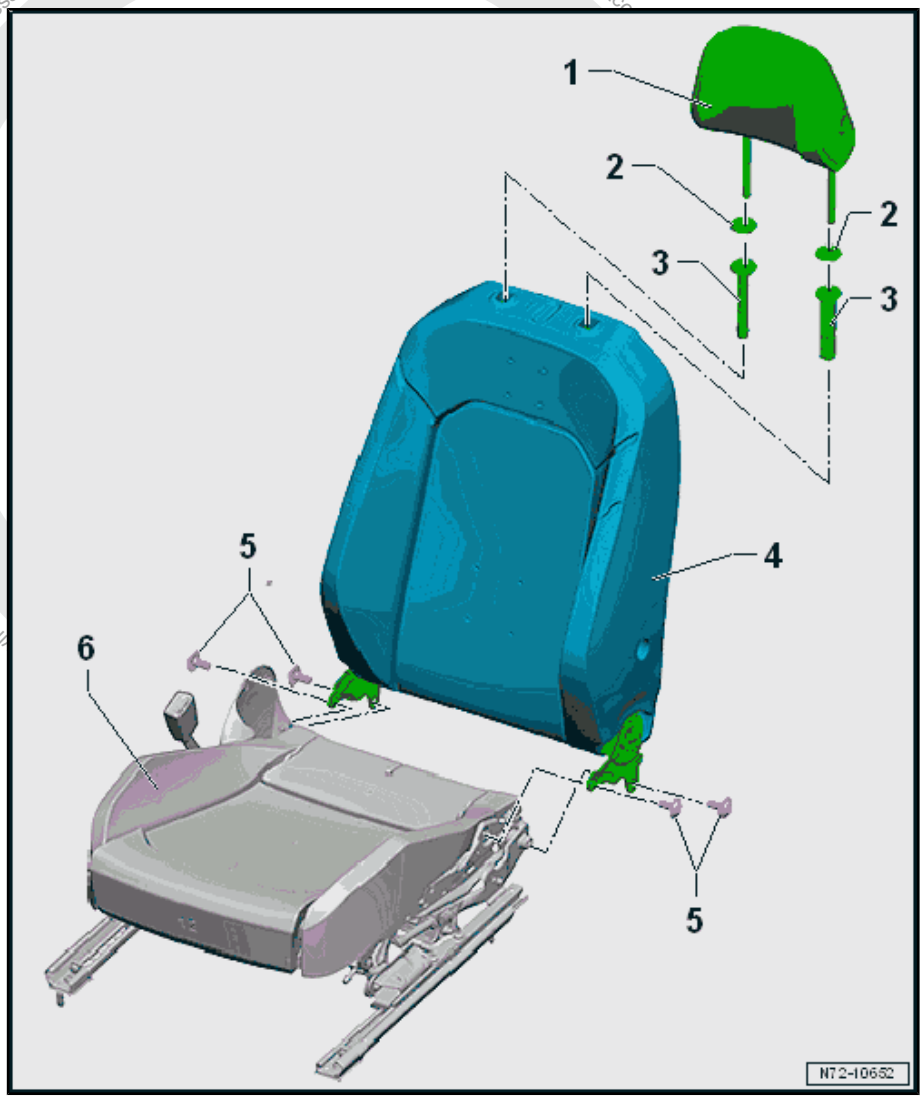

1 - Headrest

- ❑ Removing and installing. Refer to ⇒ "2.23 Headrest, Removing and Installing", page 360 .
- ❑ Must be correctly locked in the headrest guides

2 - Cover

- ❑ Quantity: 2

3 - Headrest Guide

- ❑ Quantity: 2
- ❑ Removing and installing. Refer to ⇒ "2.24 Headrest Guide, Removing and Installing", page 361 .

4 - Backrest

- ❑ Removing and installing. Refer to ⇒ "2.16 Front Backrest, Removing and Installing", page 349 .
- ❑ Backrest Cover and Cushion, Removing and installing. Refer to ⇒ "1.5 Backrest Cover and Cushion, Removing and Installing", page 406 .
- ❑ Backrest Cover and Cushion, Separating. Refer to ⇒ "1.7 Backrest Cover and Cushion, Separating", page 410 .
- ❑ With power lumbar support. Refer to ⇒ page 326

5 - Screw

- ❑ 34 Nm
- ❑ Quantity: 4
- ❑ Self-locking
- ❑ Replace after removing
- ❑ Threaded holes for the bolts must be cleaned, for example, with a thread tap

6 - Seat Pan

- ❑ Overview. Refer to ⇒ "2.5.2 Overview - Seat Pan, Power", page 328 .

2.4.3 Overview - Front Backrest, Power Lumbar Support

1 - No Replacement Part

- ❑ The washer is molded in the lumbar support.

2 - Lumbar Support

- ❑ Driver side with Driver Seat Lumbar Support Curvature Adjustment Motor - V125- / Driver Seat Lumbar Support Height Adjustment Motor - V129-
- ❑ Front passenger side with Front Passenger Seat Lumbar Support Curvature Adjustment Motor - V126- / Front Passenger Seat Lumbar Support Height Adjustment Motor - V130-
- ❑ Removing and installing. Refer to ⇒ "2.37 Lumbar Support Adjustment Motors V125 / V126 / V129 / V130 , Removing and Installing", page 372 .

3 - Backrest Frame

4 - Rivet

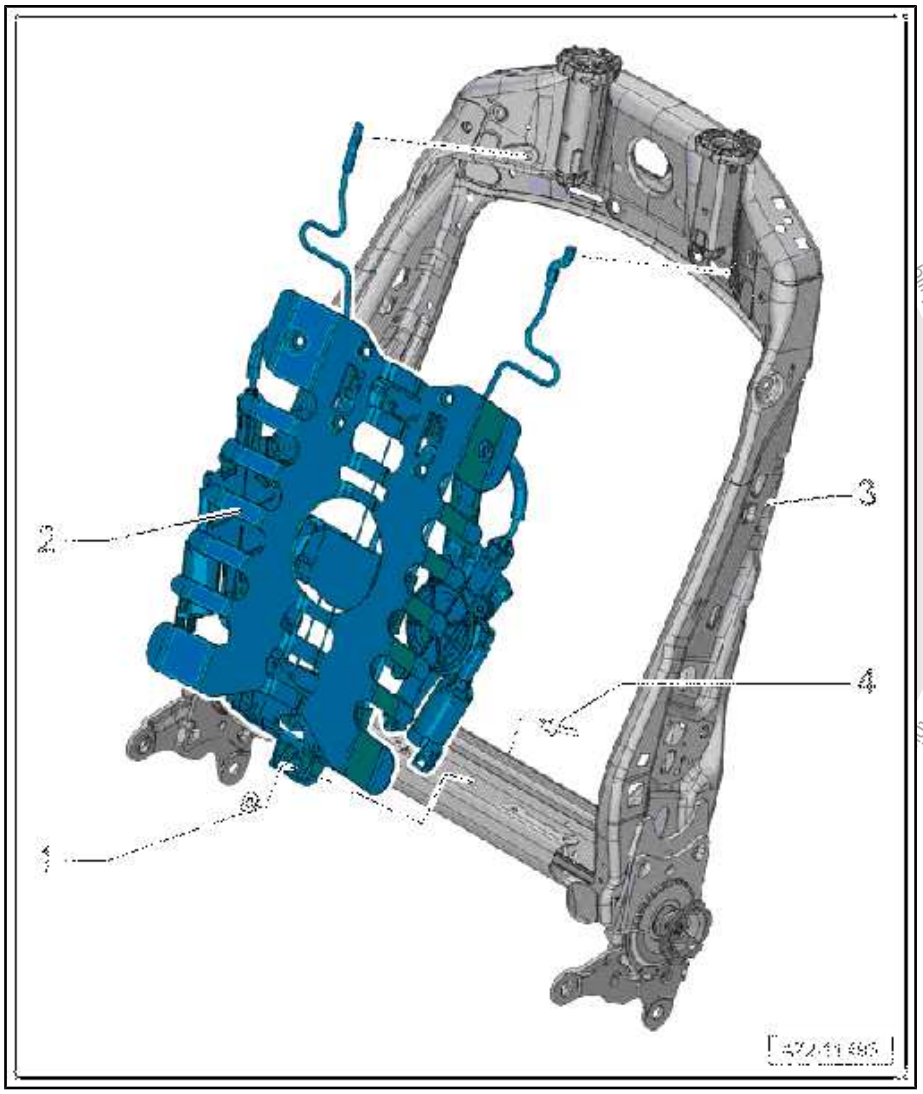

ility with respect to the correctness of information in th

2.5 Overview - Seat Pan

⇒ “2.5.1 Overview - Seat Pan, Except Power Seat”, page 327

⇒ “2.5.2 Overview - Seat Pan, Power”, page 328

⇒ “2.5.3 Overview - Torsion Bar”, page 330

2.5.1 Overview - Seat Pan, Except Power Seat

Note

The illustration shows the driver side seat pan. The seat pan on the front passenger side is similar.

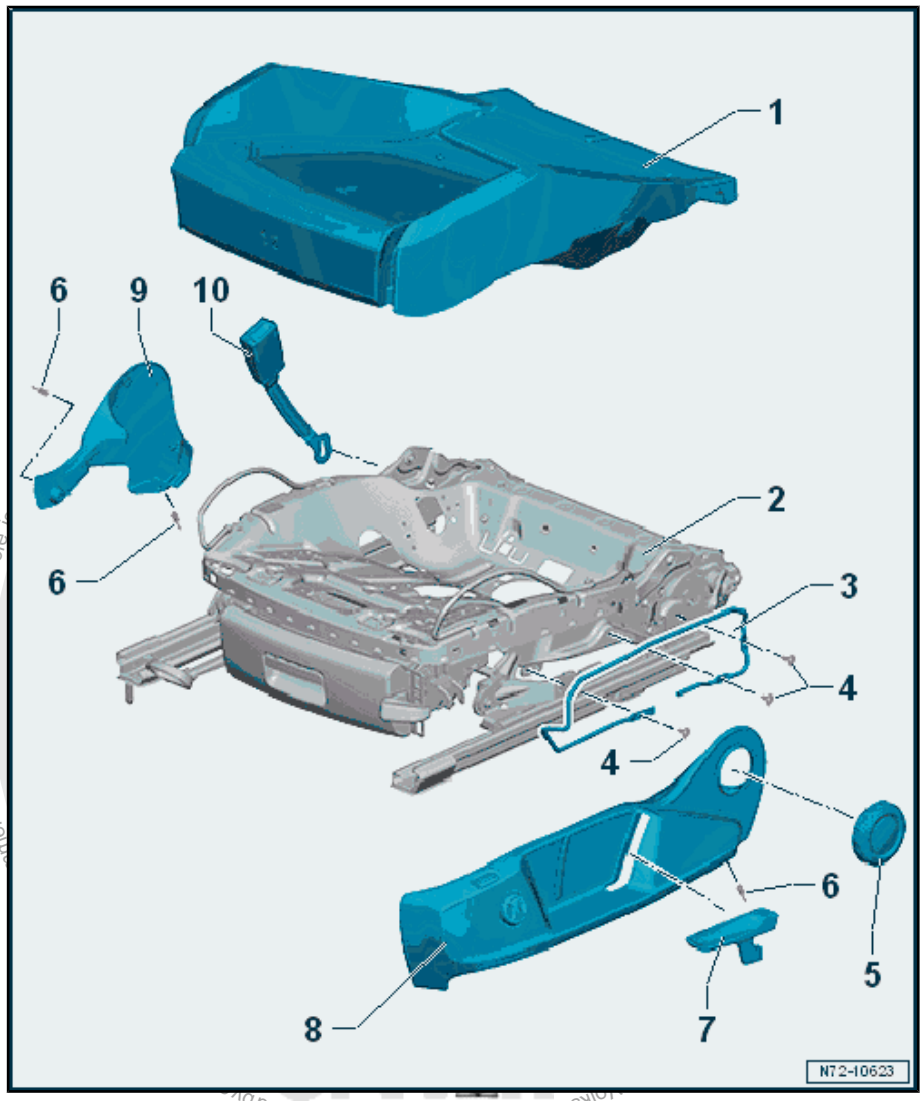

1 - Seat Cushion

- ❑ Seat Pan Cover and Padding, Removing and installing. Refer to ⇒ “1.4 Seat Pan Cover and Cushion, Removing and Installing”, page 405 .
- ❑ Seat pan cover and cushion, separating. Refer to ⇒ “1.6 Seat Pan Cover and Cushion, Separating”, page 408 .

2 - Seat Pan

- ❑ Vehicle equipment with a storage compartment. Refer to ⇒ page 334

3 - Bracket

- ❑ For the sill-side seat trim panel
- ❑ Removing and installing. Refer to ⇒ “2.15.1 Seat Trim Bracket, Removing and Installing, Except Power Seat”, page 348 .

4 - Screw

- ❑ 8 Nm
- ❑ Quantity: 3

5 - Hand Wheel

- ❑ For manual backrest adjustment
- ❑ Removing and installing. Refer to ⇒ “2.21.1 Backrest Adjuster, Removing and Installing, Except Power Seat”, page 358 .

6 - Expanding Rivet

7 - Handle

- ❑ For seat height adjustment. Refer to ⇒ page 331
- ❑ Removing and installing. Refer to ⇒ “2.18 Seat Height Adjustment Handle, Removing and Installing”, page 352 .

8 - Seat Trim Panel

- ❑ Sill-side

- ❑ The design depends on the vehicle equipment
- ❑ Removing and installing. Refer to
  ⇒ “2.14.1 Door Sill Side Seat Trim, Removing and Installing, Except Power Seat”, page 345 .

9 - Seat Trim Panel

- ❑ Tunnel side
- ❑ Removing and installing. Refer to
  ⇒ “2.13 Tunnel-Side Seat Trim, Removing and Installing”, page 344 .

10 - Seat Belt Latch

- ❑ Removing and installing. Refer to ⇒ “1.14 Front Seat Belt Latch, Removing and Installing”, page 120 .

© Copyright by Volkswagen AG. Volkswagen AG does not guarantee or accept any liability with respect to the ... in part or in whole, is not permitted unless authorised by Volkswagen AG. ... for private or commercial purposes.

2.5.2 Overview - Seat Pan, Power

Note

The illustration shows the driver side seat pan. The seat pan on the front passenger side is similar.

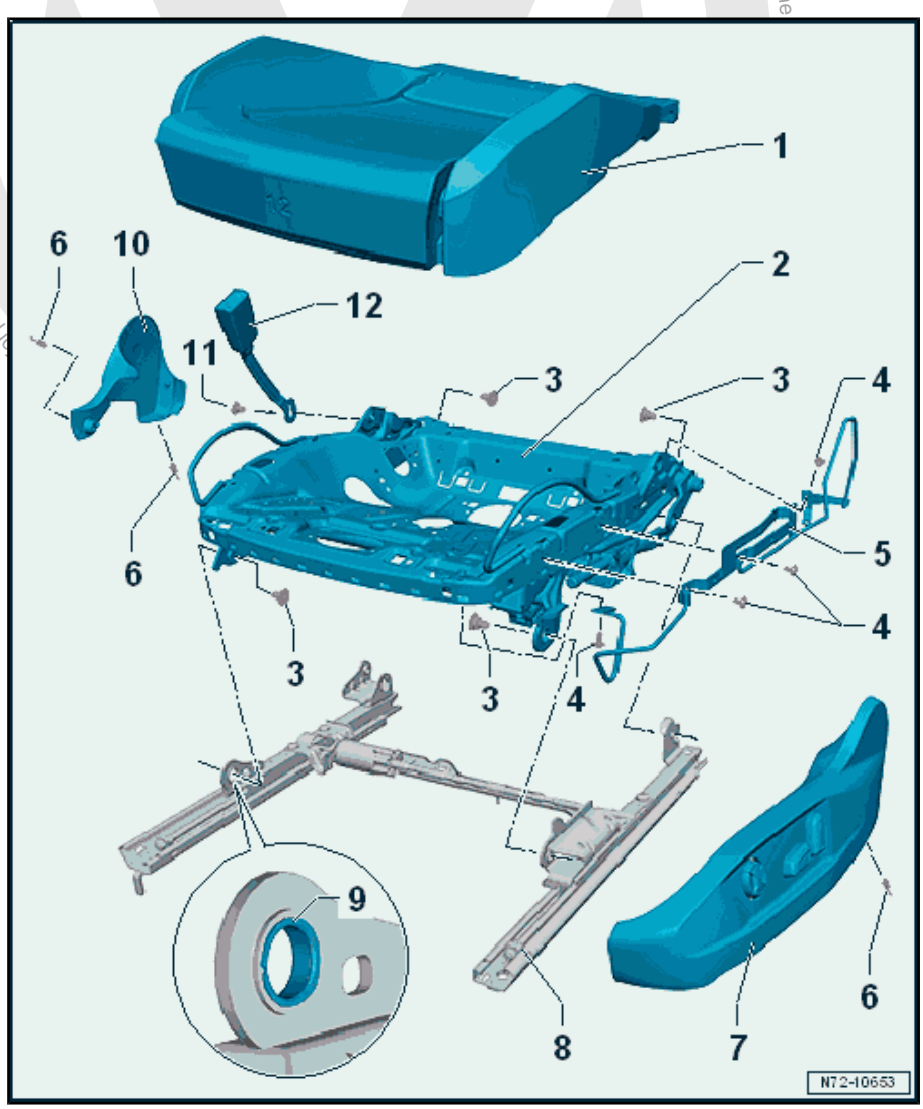

1 - Seat Cushion

- ❑ Seat Pan Cover and Padding, Removing and installing. Refer to
  ⇒ “1.4 Seat Pan Cover and Cushion, Removing and Installing”, page 405 .
- ❑ Seat pan cover and cushion, separating. Refer to
  ⇒ “1.6 Seat Pan Cover and Cushion, Separating”, page 408 .

2 - Seat Pan

3 - Screw

- ❑ 22 Nm
- ❑ Quantity: 4
- ❑ Self-locking
- ❑ Replace after removing
- ❑ Threaded holes for the bolts must be cleaned, for example, with a thread tap

4 - Screw

- ❑ 8 Nm
- ❑ Quantity: 4

5 - Bracket

- ❑ For the sill-side seat trim panel
- ❑ Removing and installing. Refer to
  ⇒ “2.15.2 Seat Trim Bracket, Removing and Installing, Power Seat”, page 349 .

6 - Expanding Rivet

7 - Seat Trim Panel

- ❑ Sill-side
- ❑ Removing and installing. Refer to
  ⇒ “2.14.2 Door Sill Side Seat Trim, Removing and Installing, Power Seat”, page 347 .

8 - Seat Pan Lower Frame

- ❑ Driver Seat Forward/Back Adjustment Motor - V28-
- ❑ Front Passenger Seat Forward/Back Adjustment Motor - V31-
- ❑ Cannot be disassembled
- ❑ Removing and installing. Refer to
  ⇒ “2.20 Seat Pan with Driver/Front Passenger Seat Forward/Back Adjustment Motor V28 / V31 , Removing and Installing”, page 357 .
- ❑ To replace, install the seat belt latch in the new lower frame. Refer to
  ⇒ “1.14 Front Seat Belt Latch, Removing and Installing”, page 120

9 - Bushing

- ❑ Inserted in all bearing locations
- ❑ Cannot be replaced with service equipment
- ❑ If the bushing is damaged, the seat pan lower frame must be replaced

10 - Seat Trim Panel

- ❑ Tunnel side
- ❑ Removing and installing. Refer to
  ⇒ “2.13 Tunnel-Side Seat Trim, Removing and Installing”, page 344 .

11 - Screw

- ❑ Refer to ⇒ “1.5 Overview - Front Seat Belt Latch”, page 95

12 - Seat Belt Latch

- ❑ Removing and installing. Refer to ⇒ “1.14 Front Seat Belt Latch, Removing and Installing”, page 120 .

Protected by copyright. Copying for private or commercial purposes, in part or in whole, is not permitted unless authorised by Volkswagen AG. Volkswagen AG does not guarantee or accept any liability with respect to the correctness of information in this document. Copyright by Volkswagen AG.

2.5.3 Overview - Torsion Bar

1 - Seat Pan

2 - Bearing

- ❑ For the torsion bar
- ❑ Slide into the guide

3 - Torsion Bar

- ❑ Lubricated. Refer to the Parts Catalog for the grease.

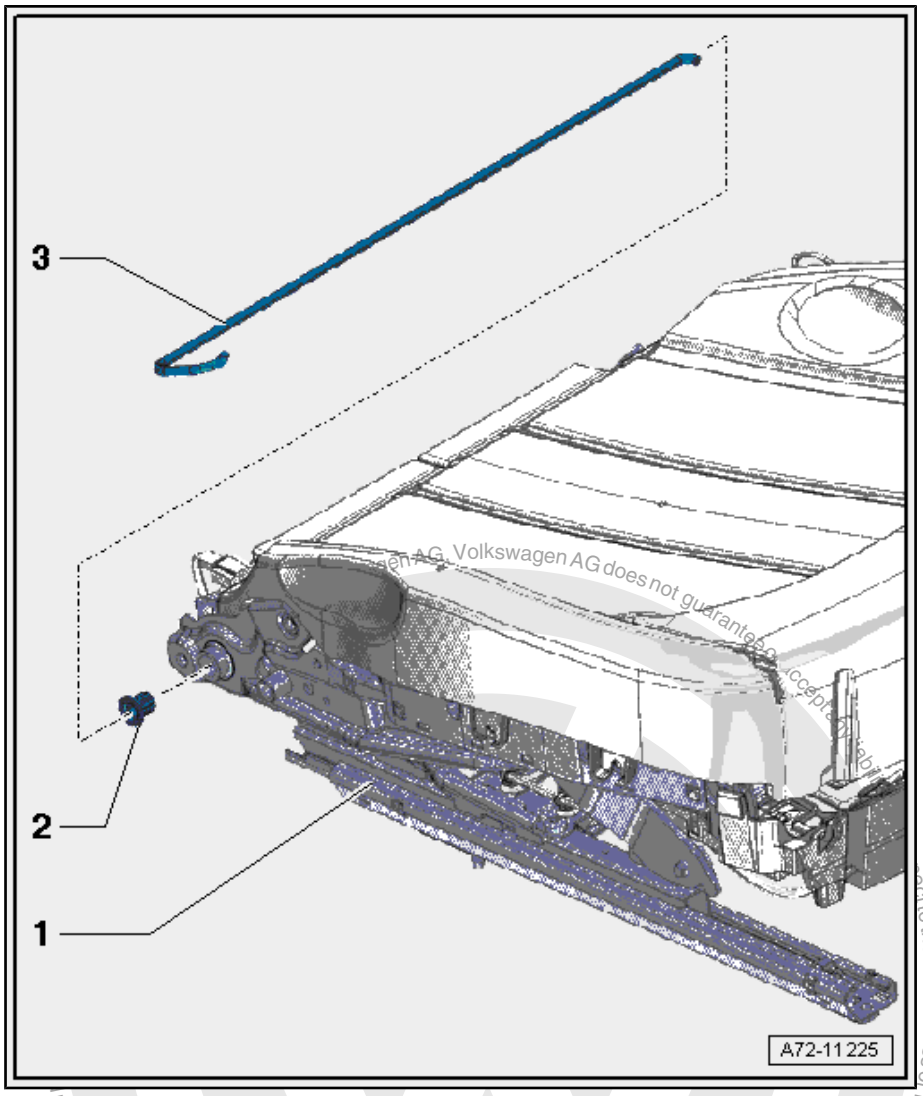

Protected by copyright. Copying for private or commercial purposes, in part, is not permitted unless authorized by Volkswagen AG. Volkswagen AG does not guarantee or accept any liability with respect to the correctness of information in this document. Copyright by Volkswagen AG.

2.6 Overview - Seat Height Adjuster

⇒ “2.6.1 Overview - Seat Height Adjuster, Except Power Seat”, page 331

⇒ “2.6.2 Overview - Seat Height Adjuster, Power Seat”, page 332

2.6.1 Overview - Seat Height Adjuster, Except Power Seat

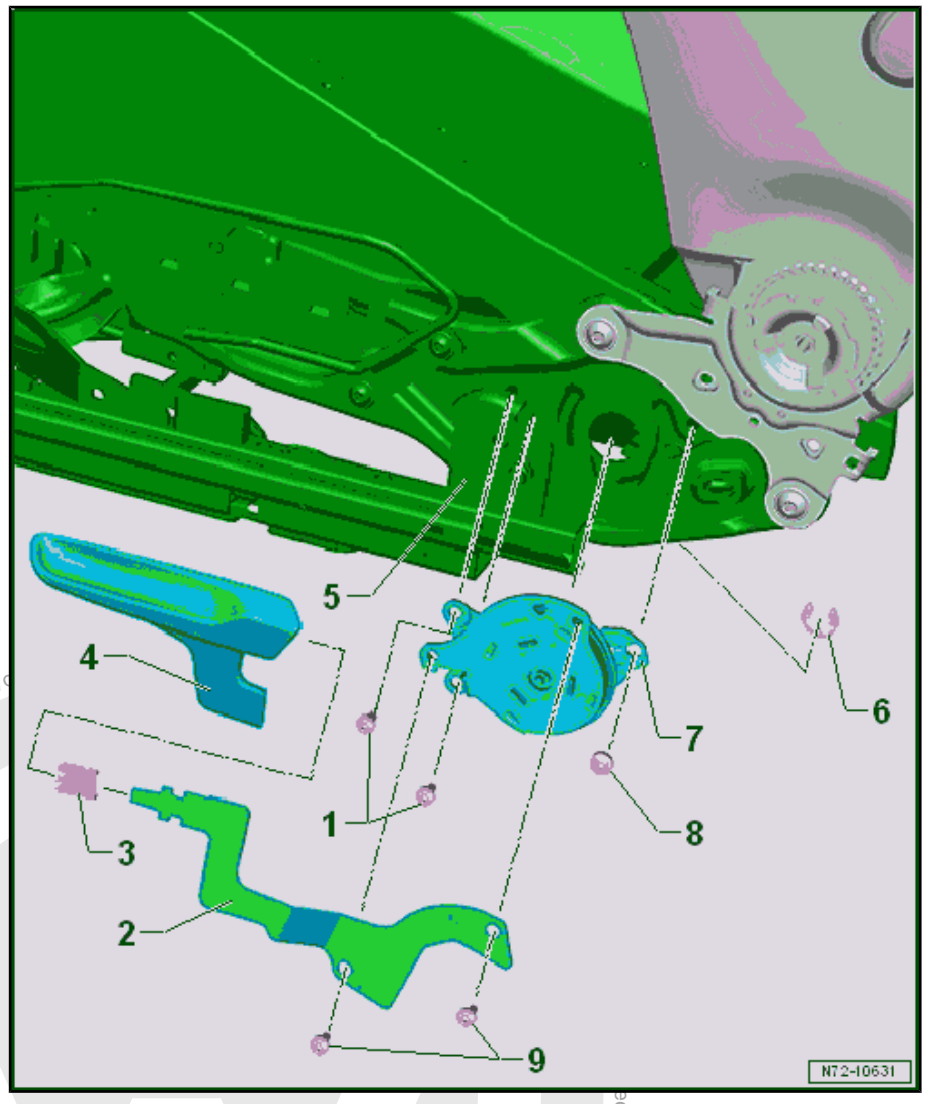

1 - Screws

- ❑ 6.5 Nm
- ❑ Quantity: 2
- ❑ Note the different bolt length -item 8-

2 - Seat Height Adjusting Lever

- ❑ For seat height adjustment
- ❑ Removing and installing. Refer to ⇒ “2.19 Seat Height Adjuster, Removing and Installing”, page 353 .

3 - Clip

- ❑ Make sure it is secure

4 - Seat Height Adjustment Handle

- ❑ Removing and installing. Refer to ⇒ “2.18 Seat Height Adjustment Handle, Removing and Installing”, page 352 .

5 - Seat Pan

- ❑ Overview. Refer to ⇒ “2.5.1 Overview - Seat Pan, Except Power Seat”, page 327 .

6 - Lock Washer

- ❑ Replace after removing

7 - Seat Height Adjuster

- ❑ Removing and installing. Refer to ⇒“2.19.1 Seat Height Adjuster, Removing and Installing, Except Power Seat”, page 353 .

8 - Screw

- ❑ 10 Nm
- ❑ Note the different bolt lengths -item 1-

9 - Screws

- ❑ 8 Nm
- ❑ Quantity: 2

Protected by copyright. Copyright by Volkswagen AG.

2.6.2 Overview - Seat Height Adjuster, Power Seat

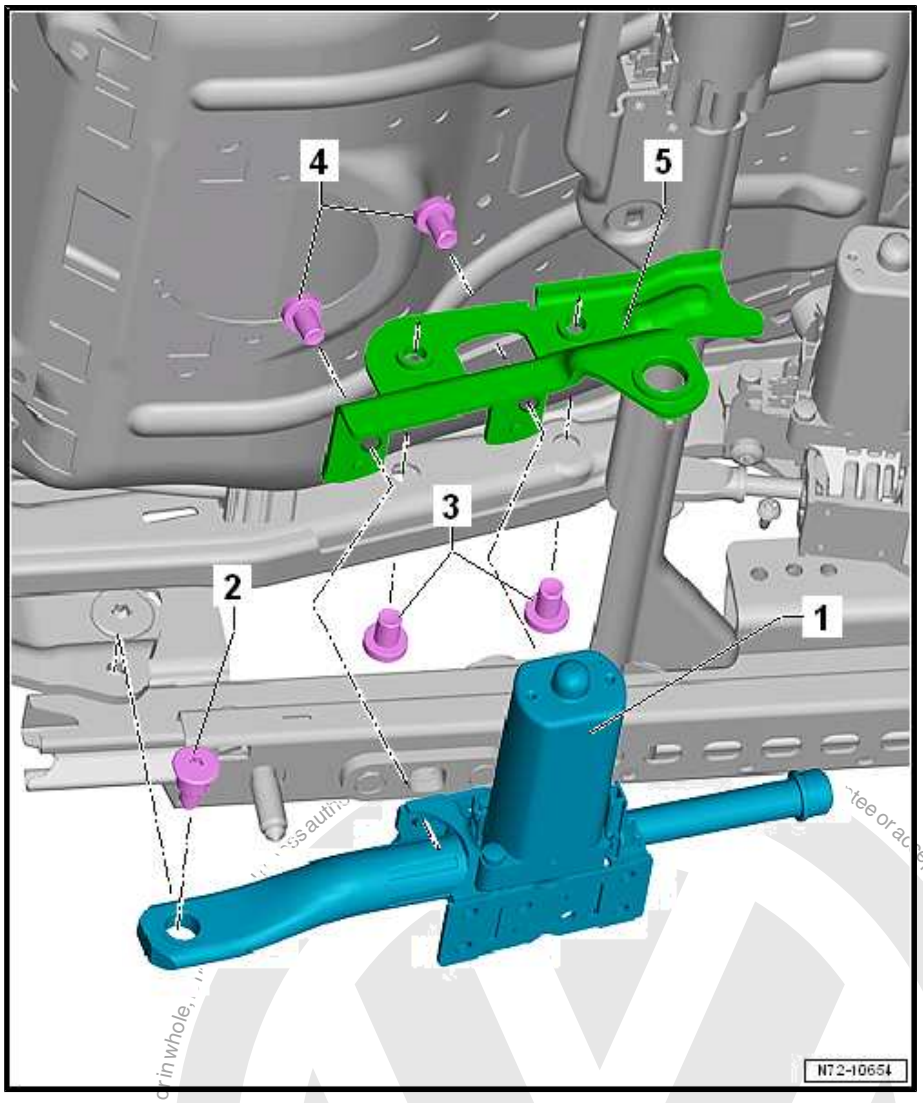

1 - Height Adjustment Motor

- ❑ Driver Seat Height Adjustment Motor - V138-
- ❑ Front Passenger Seat Height Adjustment Motor - V246-
- ❑ Removing and installing. Refer to ⇒ "2.19.2 Seat Height Adjuster, Removing and Installing, Power Seat", page 355 .

2 - Screw

> **Caution**
> *The bolt has a left-hand thread.*

- ❑ 22 Nm
- ❑ Self-locking
- ❑ Replace after removing
- ❑ Removing and installing. Refer to ⇒ "2.19.2 Seat Height Adjuster, Removing and Installing, Power Seat", page 355 .
- ❑ Clean the threaded hole with a thread tap.

3 - Screws

- ❑ 20 Nm
- ❑ Quantity: 2
- ❑ Self-locking
- ❑ Replace after removing
- ❑ Threaded holes for the bolts must be cleaned, for example, with a thread tap

4 - Screws

- ❑ 10 Nm
- ❑ Quantity: 2
- ❑ Self-locking
- ❑ Replace after removing
- ❑ Threaded holes for the bolts must be cleaned, for example, with a thread tap

5 - Bracket

- ❑ Bolted with the seat pan

Protected by copyright. Copying for private or commercial purposes, in part or in whole, ... Copyright by Volkswagen AG.

2.7 Overview - Seat Angle Adjuster

1 - Angle Adjustment Motor

- ❑ Driver Seat Angle Adjustment Motor - V243-
- ❑ Front Passenger Seat Angle Adjustment Motor - V244-
- ❑ Removing and installing. Refer to ⇒ "2.17 Seat Angle Adjuster, Removing and Installing", page 351 .

2 - Bracket

- ❑ Bolted with the seat pan

3 - Screw

- ❑ 20 Nm
- ❑ Self-locking
- ❑ Replace after removing
- ❑ Clean the threaded hole with a thread tap.

4 - Screws

- ❑ 10 Nm
- ❑ Quantity: 2
- ❑ Self-locking
- ❑ Replace after removing
- ❑ Threaded holes for the bolts must be cleaned, for example, with a thread tap

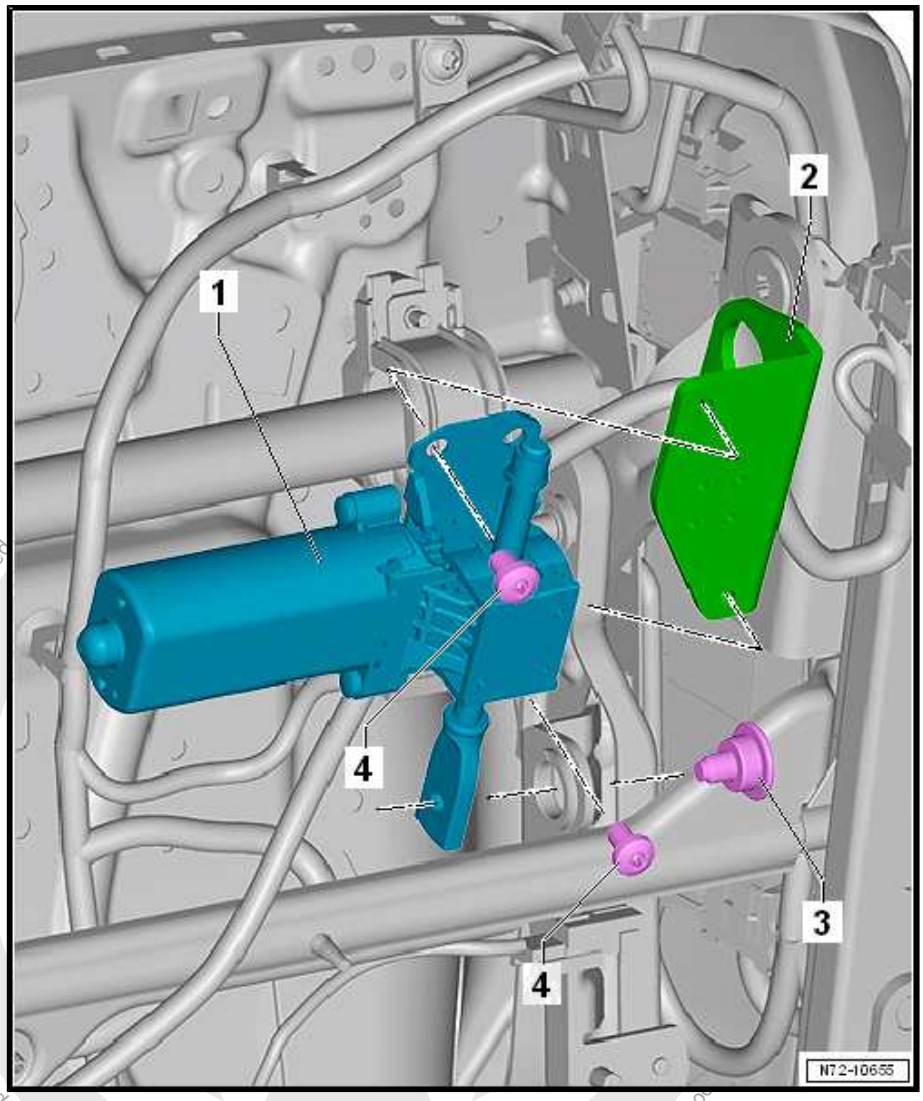

Protected by copyright. Copying for private or commercial purposes, in part or in whole, is not permitted. Copyright by Volkswagen AG.

2.8 Overview - Storage Compartment

1 - Screw

- ❑ 1.5 Nm
- ❑ Quantity: 2

2 - Storage Compartment

- ❑ Depending on the vehicle equipment level
- ❑ Removing and installing. Refer to ⇒ “2.35 Storage Compartment, Removing and Installing”, page 371 .
- ❑ Cannot be disassembled
- ❑ Allocation. Refer to the Parts Catalog.

3 - Spring Nut

- ❑ Quantity: 2
- ❑ Inserted in the seat pan
- ❑ Replace any damaged or deformed threaded clips

4 - Seat Pan

Protected by copyright. Copying for private or commercial purposes, in part or in whole, is not permitted unless authorised by Volksw
Copyright by Volkswagen AG.
spect to the correctness of information in this document.

copyright. Copying for private or commercial purposes, in part or in whole, is not permitted unless authorised by Volkswagen AG. Volkswagen AG does not guarantee or accept a

2.9 Overview - Fire Extinguisher

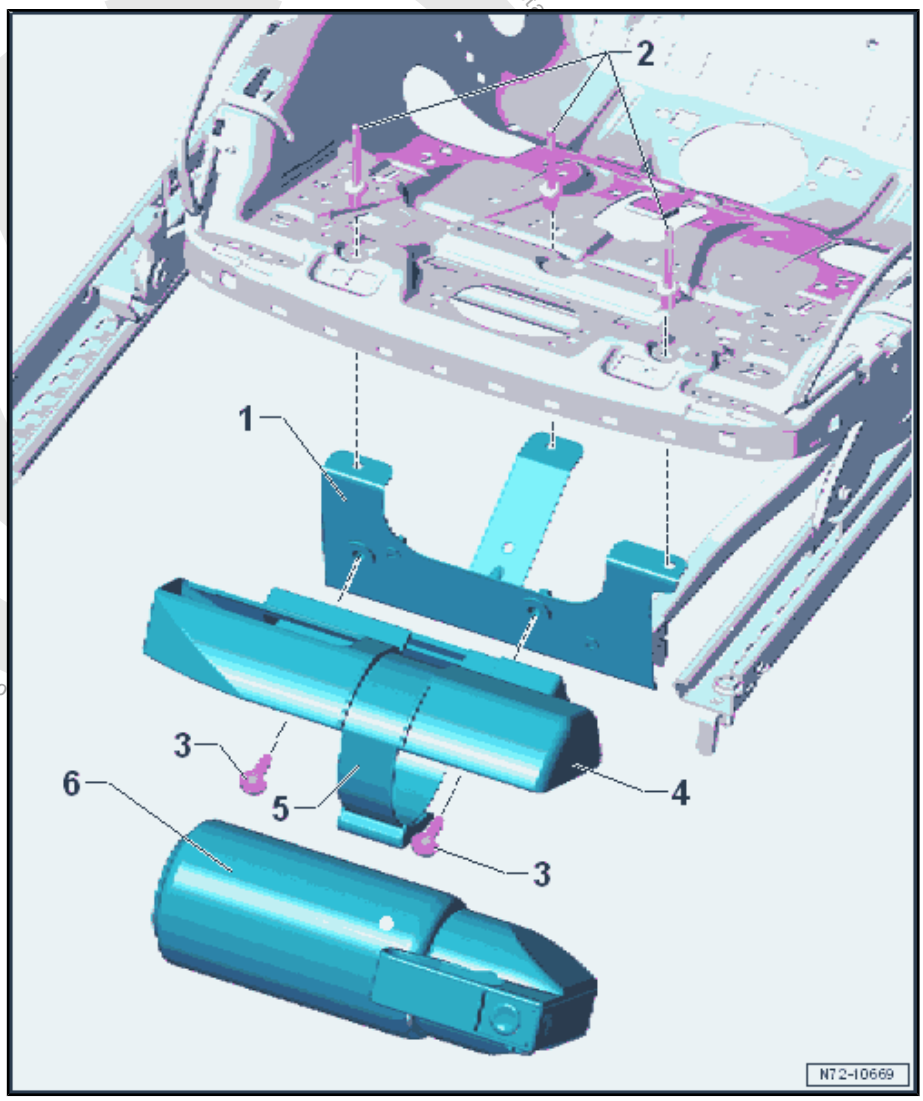

1 - Bracket

- ❑ Removing
- – Remove the bracket -4-.
- – Remove the seat pan cover and cushion. Refer to ⇒ "1.4 Seat Pan Cover and Cushion, Removing and Installing", page 405 .

> **WARNING**
> *Danger of eye injury. Wear protective eyewear.*

- – Drill out the rivets -2- using a drill and remove the bracket.

2 - Rivet

- ❑ Quantity: 3

3 - Screw

- ❑ 8 Nm
- ❑ Quantity: 2

4 - Bracket

- ❑ Removing
- – Remove the fire extinguisher -6-.
- – Remove the bolts -3- and the bracket.

5 - Mounting Strap

6 - Fire Extinguisher

- ❑ Removing
- – Open the mounting strap -5- and remove the fire extinguisher.

2.10 Front Seat, Removing and Installing

Note

- ♦ *The following describes removing and installing the left seat. Removing and installing the right seat is identical.*
- ♦ *The following describes removing and installing a manual seat. Removing and installing a power seat is identical.*

Caution

With 2-door vehicles pay attention that the seat outside the vehicle is carefully moved in the end positions of the seat forward/back adjustment, there is a risk of damage.

Special tools and workshop equipment required

- Torque Wrench 1331 5-50Nm - VAG1331-
- Airbag Lockout Adapter - VAS6282-

Removing

WARNING

Follow the General Safety Precautions when working with airbags, belt tensioners and battery cut-out units (pyrotechnic components). Refer to ⇒ "1 Safety Precautions", page 1 .

– Move the seat as far forward as possible using the forward/back adjuster.

If the Driver Seat Forward/Back Adjustment Motor - V28- / Front Passenger Seat Forward/Back Adjustment Motor - V31- is faulty, it is not possible to adjust a power front seat using the Driver Seat Adjustment Control Head - E470- / Front Passenger Seat Adjustment Control Head - E471- . In this case, perform the appropriate procedure. Refer to
⇒ "2.11 Front Seat, Removing with Faulty Driver/Front Passenger Seat Forward/Back Adjustment Motor V28 / V31 ", page 339 .

– Remove the bolts -3 and 4-.

– Move the seat as far back as possible using the forward/back adjuster.

– Remove the bolts -1 and 2-.

Protected by copyright. Copying for private or commercial purposes, in part or in whole, is not permitted unless authorised by Volkswagen AG. Volkswagen AG does not guarantee or accept any liability with respect to the correctness of information in this document. Copyright by Volkswagen AG.

Protected by copyright. Copying for private or commercial purposes, in part or in whole, is not permitted unless authorised by Volkswagen AG. Volkswagen AG does not guara

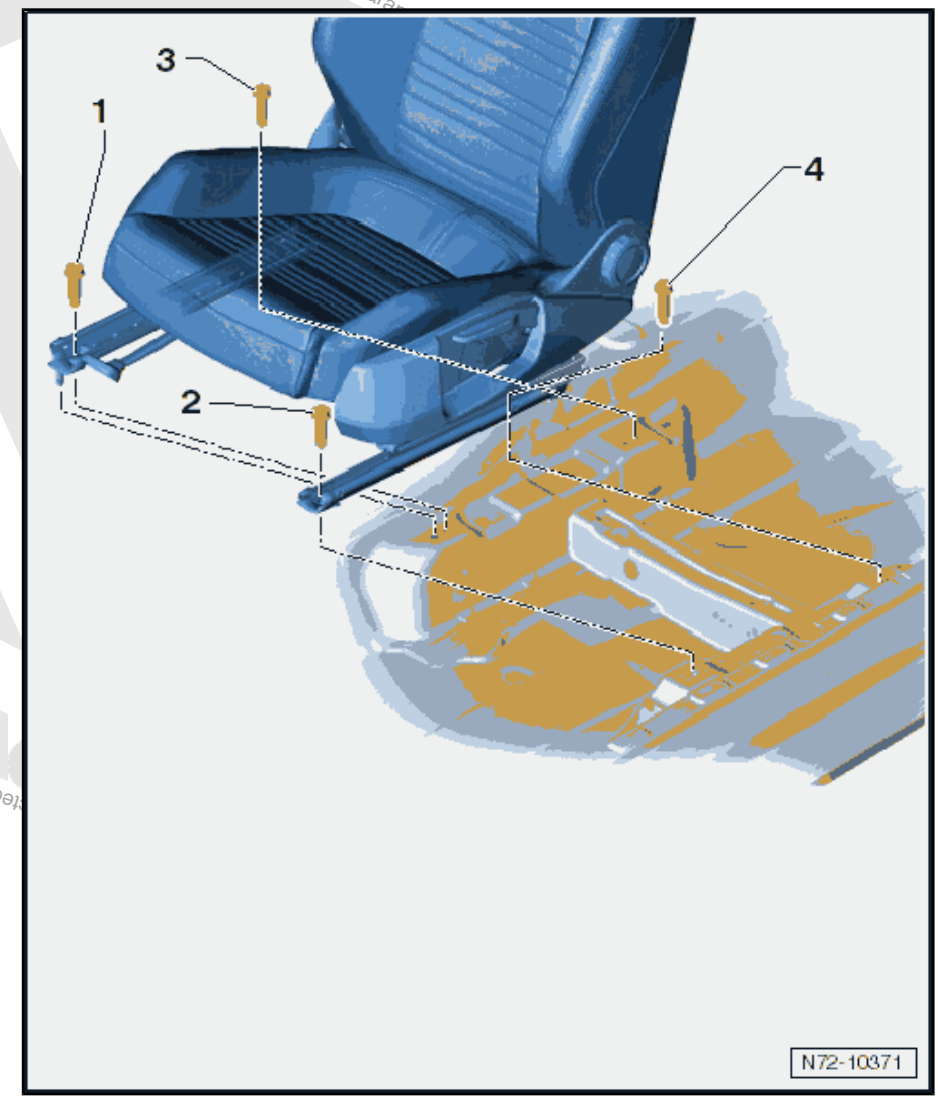

- Disconnect the battery. Refer to ⇒ Electrical Equipment; Rep. Gr. 27 ; Battery; Battery, Disconnecting and Connecting .
- Tilt the seat back.
- Open the cover in the carpet.
- Depending on the vehicle equipment level, release and remove the wiring harnesses from the seat at the connector station.
- Connect the airbag adapter. Refer to ⇒ “2.12 Airbag Adapter, Connecting and Disconnecting”, page 343 .

Caution

If seat is to be lifted out or transported out of the vehicle, it must not be grasped by the attachments, for example, seat belt latch, lever for seat fore/aft adjustment, lever for seat height adjustment or seat trim panels in order to prevent damage.

- Protect the attachments from damage using suitable materials.

– Reach between the backrest and seat cushion with the right hand. Grab the front of the seat cushion with the left hand and lift the seat out of the vehicle.

Installing

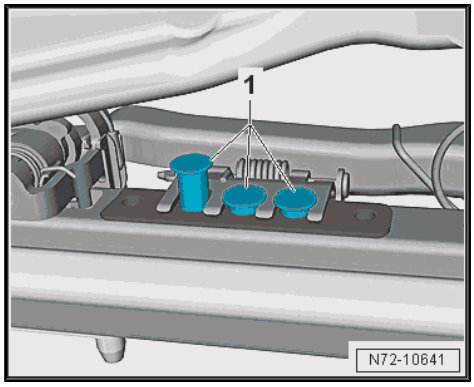

Note

Before installing the seat in the vehicle, make sure that the two identical locking pins -1- are at the bottom in both seat rails.

– Lift seat through the front door and into the vehicle.
– First position the front seat.
– Guide the seat into the centering pins.

– Attach the seat with the front bolt -1- in the vehicle.
– Attach the seat with the front bolt -2- in the vehicle.
– Move the seat forward as far as possible.
– Attach the seat with the rear bolt -3- in the vehicle.
– Attach the seat with the rear bolt -4- in the vehicle.

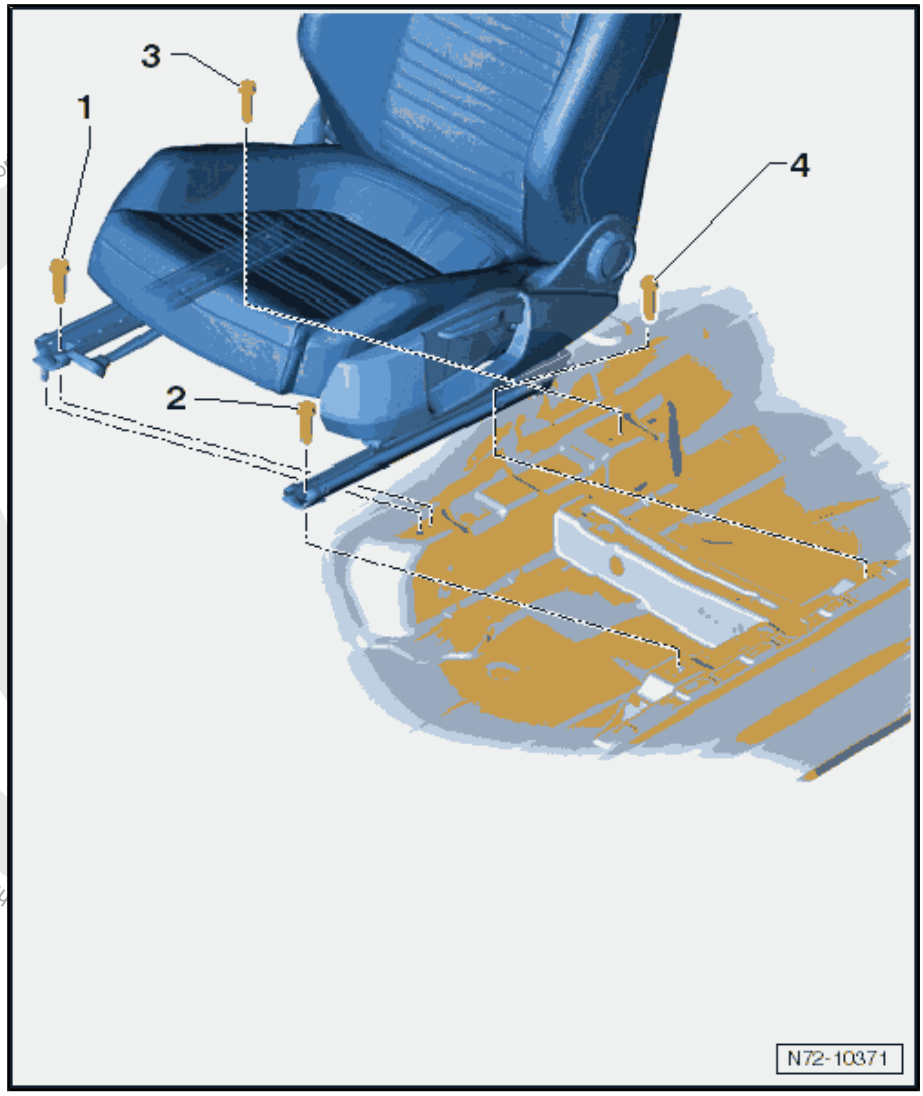

ht. copying for private or commercial purposes, in part or in whole, is not permitted unless autho

> **WARNING**
>
> *When installing the seat, if a thread in the seat crossmember mounting plate was damaged, a reworking of the damaged thread is forbidden. In this case, the seat crossmember mounting plate must be replaced.*

If there is damage to threads in the seat crossmember mounting plate:

– Replace the affected seat crossmember mounting plate. Refer to ⇒ Body Repair; Rep. Gr. 51 .

– Remove the Airbag Lockout Adapter - VAS 6282- .

– Attach the thorax airbag wiring harness to the connector station.

– Depending on the vehicle equipment level, engage the wiring harnesses in the coupling station.

– Close the cover in the carpet.

– Switch the ignition on.

> **WARNING**
>
> *Make sure that no persons are in the vehicle.*

– Connect the battery. Refer to ⇒ Electrical Equipment; Rep. Gr. 27 ; Battery; Battery, Disconnecting and Connecting .

Protected by copyright. Copying for private or commercial purposes, in part or in whole, is not permitted unless authorised by Volkswagen AG. Volkswagen AG does not guarantee or accept any liability with respect to the correctness of information in this document. Copyright by Volkswagen AG.

Note

If the Airbag Indicator Lamp - K75- signals a fault after installing, check the DTC memory, erase it and check it again use the Vehicle Diagnostic Tester .

Tightening Specifications

♦ Refer to ⇒ “2.2 Overview - Front Seat”, page 318

2.11 Front Seat, Removing with Faulty Driver/Front Passenger Seat Forward/Back Adjustment Motor -V28- / -V31-

Driver Seat Forward/Back Adjustment Motor - V28- / Front Passenger Seat Forward/Back Adjustment Motor - V31- , Checking

– Move the front seat into its highest position.

Note

To avoid unnecessary repair costs, check the Driver Seat Forward/Back Adjustment Motor - V28- / Front Passenger Seat Forward/Back Adjustment Motor - V31- before removing the front seat.

– Check the Driver Seat Forward/Back Adjustment Motor - V28- / Front Passenger Seat Forward/Back Adjustment Motor - V31- using the Vehicle Diagnostic Tester .

– Replace the seat pan lower frame with the faulty Driver Seat Forward/Back Adjustment Motor - V28- / Front Passenger

Seat Forward/Back Adjustment Motor - V31- . Refer to
⇒ “2.20 Seat Pan with Driver/Front Passenger Seat Forward/ Back Adjustment Motor V28 / V31 , Removing and Installing”, page 357 .

Removing with faulty Driver Seat Forward/Back Adjustment Motor - V28- / Front Passenger Seat Forward/Back Adjustment Motor - V31-

– Disconnect the battery. Refer to ⇒ Electrical Equipment; Rep. Gr. 27 ; Battery; Battery, Disconnecting and Connecting .

Caution

- *Loosen the bolts -3- only after checking the Driver Seat Forward/Back Adjustment Motor - V28- / Front Passenger Seat Forward/Back Adjustment Motor - V31- .*
- *After loosening the bolts -2-, replace the seat pan lower frame including the seat forward/back adjustment motor.*

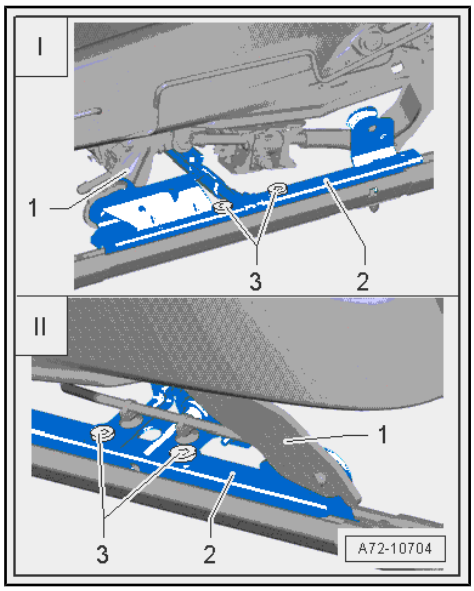

– Remove the bolts -3- on both sides (quantity: 4).

I - Seat Forward/Back Adjustment Motor Threaded Connection on Sill Side

II - Seat Forward/Back Adjustment Motor Threaded Connection on Tunnel-Side

Note

To remove the tunnel-side bolts, reach under the seat from the front.

Protected by copyright. Copying for private or commercial purposes, in part or in whole, is not permitted unless authorised by Volkswagen AG. Volkswagen AG does not guarantee or accept any liability with respect to the correctness of information in this document. Copyright by Volkswagen AG.

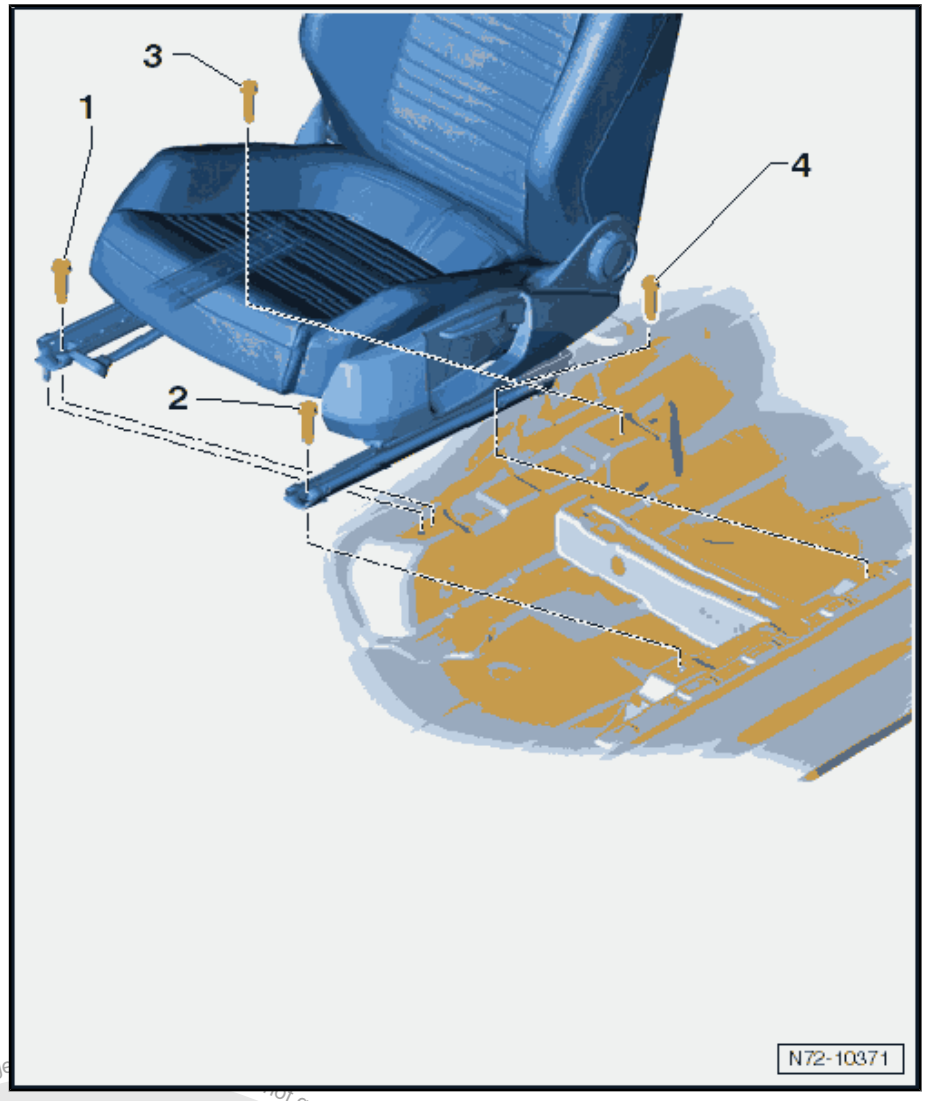

– Move the seat forward as far as possible.
– Remove the bolts -3 and 4-.
– Move the seat as far back as possible.
– Remove the bolts -1 and 2-.
– Tilt the seat back.
– Open the cover in the carpet.
– Depending on the vehicle equipment level, release and remove the wiring harnesses from the seat at the connector station.
– Connect the airbag adapter. Refer to ⇒ "2.12 Airbag Adapter, Connecting and Disconnecting", page 343 .

Caution

If seat is to be lifted out or transported out of the vehicle, it must not be grasped by the attachments, for example, seat belt latch, lever for seat fore/aft adjustment, lever for seat height adjustment or seat trim panels in order to prevent damage.

Protected by copyright. Copyright by Volkswagen AG. Not guarantee or accept any liability with respect to the correctness of information in this document. Copyright by Volkswagen AG.

– Protect the attachments from damage using suitable materials.

– Reach between the backrest and seat cushion with the right hand. Grab the front of the seat cushion with the left hand and lift the seat out of the vehicle.

– Separate the seat pan lower frame from the seat pan. Refer to
⇒ “2.20 Seat Pan with Driver/Front Passenger Seat Forward/ Back Adjustment Motor V28 / V31 , Removing and Installing”, page 357 .

– Replace the seat pan lower frame together with the seat forward/back adjustment motor.

Installing

Install in reverse order of removal while paying attention to the following:

– Attach the seat pan lower frame to the seat pan. Refer to
⇒ “2.20 Seat Pan with Driver/Front Passenger Seat Forward/ Back Adjustment Motor V28 / V31 , Removing and Installing”, page 357 .

part or in whole is not permitted unless authorised by Volkswagen AG. Volkswagen AG does not guarantee or accept any liability with respect to the correctness of inf

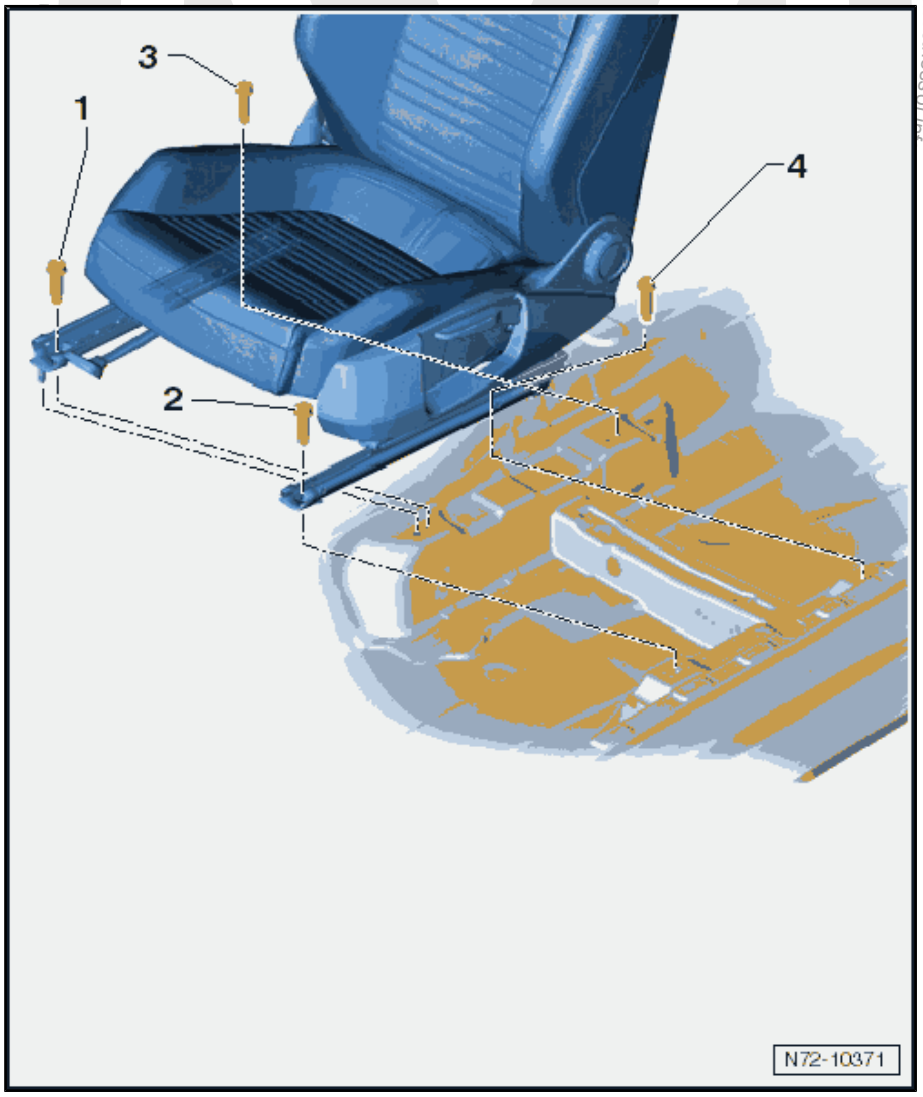

– Lift seat through the front door and into the vehicle.

– First position the front seat.
– Guide the seat into the centering pins.

WARNING

When installing the seat, if a thread in the seat crossmember mounting plate was damaged, a reworking of the damaged thread is forbidden. In this case, the seat crossmember mounting plate must be replaced.

If there is Damage to Threads in the Seat Crossmember Mounting Plate:

– Replace the affected seat crossmember mounting plate.
– Remove the Airbag Lockout Adapter - VAS6282- .
– Attach the side airbag wiring harness to the connector station.
– Depending on the vehicle equipment level, engage the wiring harnesses in the coupling station.
– Close the cover in the carpet.
– Switch the ignition on.

WARNING

Make sure that no persons are in the vehicle.

– Connect the battery. Refer to ⇒ Electrical Equipment; Rep. Gr. 27 ; Battery; Battery, Disconnecting and Connecting .

Note

If the Airbag Indicator Lamp - K75- signals a fault after installing, check the DTC memory, erase it and check it again use the Vehicle Diagnostic Tester .

Tightening Specifications

♦ Refer to ⇒ “2.2 Overview - Front Seat”, page 318

2.12 Airbag Adapter, Connecting and Disconnecting

Special tools and workshop equipment required

♦ Airbag Lockout Adapter - VAS6282-

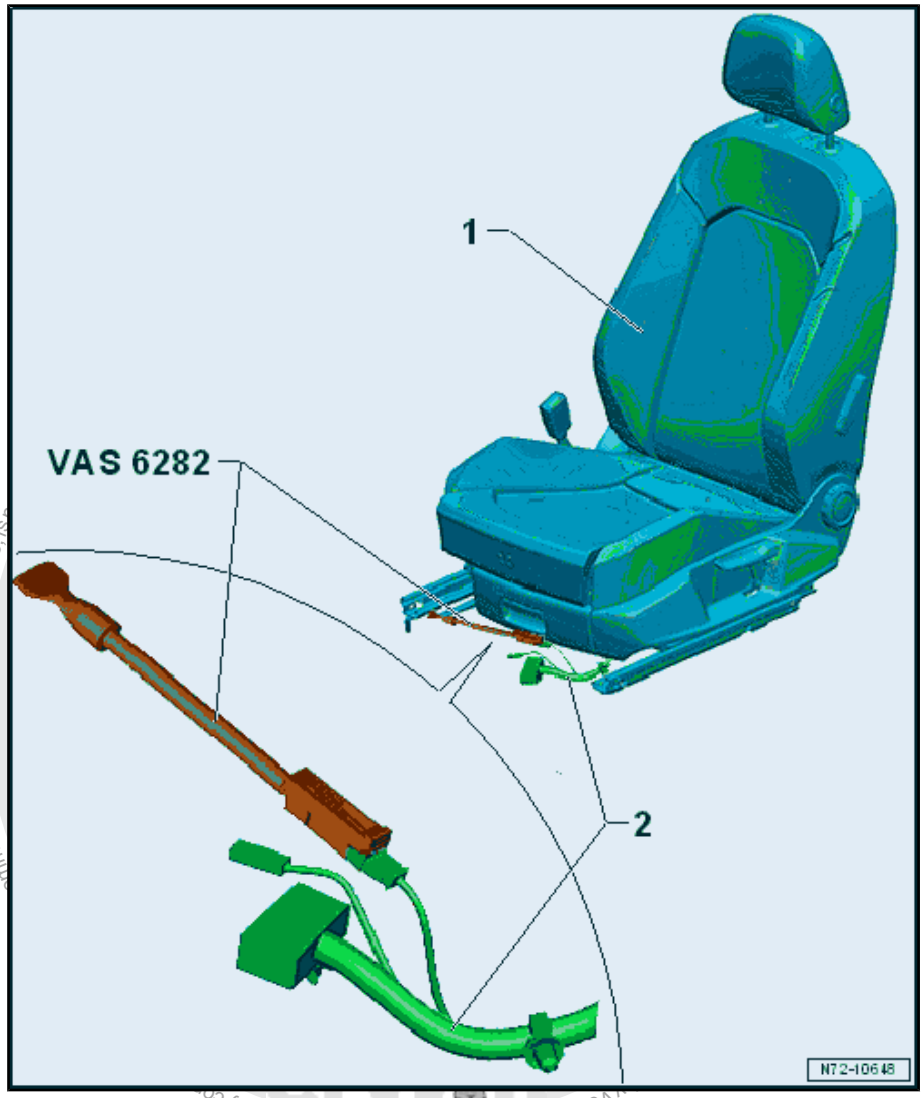

Protected by copyright. Copyright by Volkswagen AG. Commercial purposes, in part or in whole, is

– Connect the Airbag Lockout Adapter - VAS6282- to the side airbag wiring harness -1-.

Caution

The Airbag Lockout Adapter - VAS6282- must stay connected to seat until seat is installed again.

2.13 Tunnel-Side Seat Trim, Removing and Installing

Note

The following describes the removing and installing on the left side of the vehicle. Removing and installing on the right side is identical.

Special tools and workshop equipment required

- Trim Removal Wedge - 3409-

Removing

– Remove the front seat. Refer to ⇒ “2.10 Front Seat, Removing and Installing”, page 335 .

– Remove the trim panel -1- expanding rivets -arrows-.

– To do so, press the clamping pins in the expanding rivets -arrows- toward the inside.

– Pry off the expanding rivets -arrows- using the Trim Removal Wedge - 3409- .

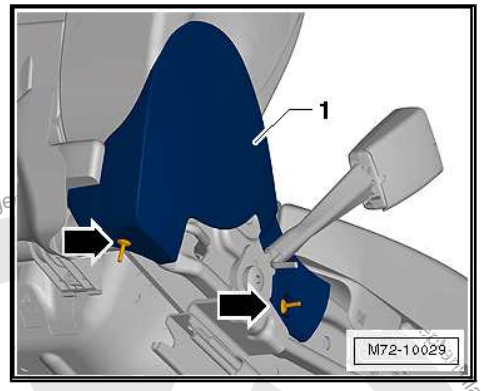

– Remove the trim panel -1- from the mounts in the seat frame.

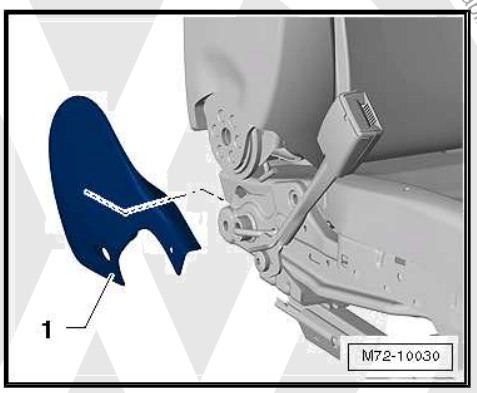

Installing

Install in reverse order of removal while paying attention to the following:

– Insert the expanding rivets -arrows- and push the pins in.

Tightening Specifications

♦ Refer to ⇒ “2.2 Overview - Front Seat”, page 318

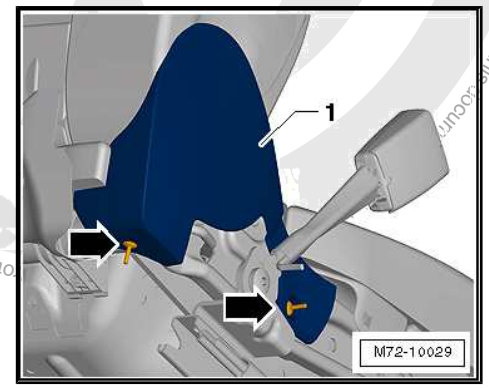

2.14 Sill-Side Seat Trim, Removing and Installing

⇒ “2.14.1 Door Sill Side Seat Trim, Removing and Installing, Except Power Seat”, page 345

⇒ “2.14.2 Door Sill Side Seat Trim, Removing and Installing, Power Seat”, page 347

2.14.1 Door Sill Side Seat Trim, Removing and Installing, Except Power Seat

Note

The following describes the removing and installing on the left side of the vehicle. Removing and installing on the right side is identical.

Special tools and workshop equipment required

♦ Trim Removal Wedge - 3409-

Protected by copyright. Copying for private or commercial purposes, in part or in whole, is not permitted unless authorised by Volkswagen AG. No liability with respect to the correctness of information in this document.

Copying for private or commercial purposes, in part or in whole, is not permitted unless authorised by Volkswagen AG. Volkswagen AG does not guarantee or accept any liability with

Removing

– Position the seat into its highest position.

– Remove the backrest adjuster. Refer to ⇒ “2.21.1 Backrest Adjuster, Removing and Installing, Except Power Seat”, page 358 .

– Remove the seat height adjustment handle. Refer to ⇒ “2.18 Seat Height Adjustment Handle, Removing and Installing”, page 352 .

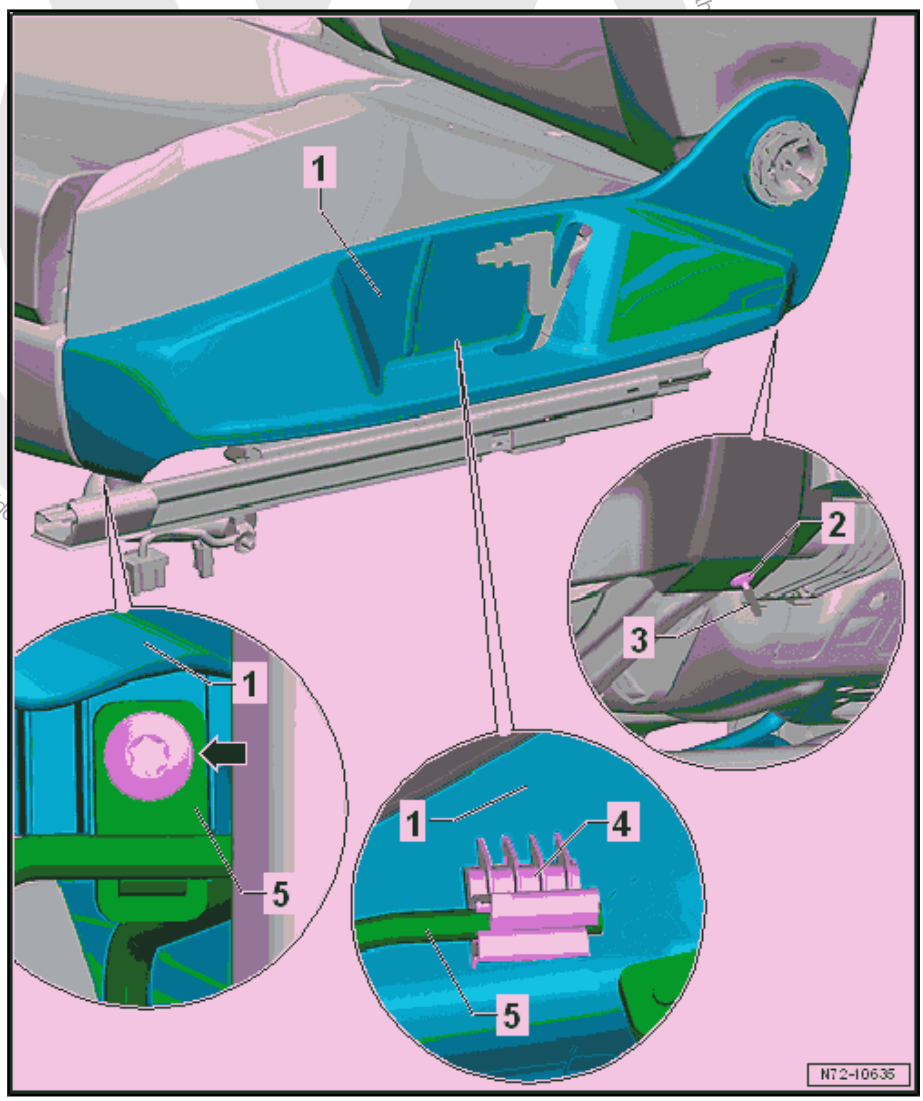

– Press the clamping pin -3- toward the inside.

– Pry off the expanding rivet -2- using the Trim Removal Wedge - 3409- .

– Remove the bolt -arrow- from below.

– Open the bracket -4- on the trim panel -1- from below.

– Guide out the rear trim panel -1-.

– Remove the trim panel -1- forward from the bracket -5-.

Installing

Install in reverse order of removal.

Tightening Specifications

Component	Tightening Specification
Screw between bracket and side trim panel. Refer to ⇒ page 346	2 Nm

2.14.2 Door Sill Side Seat Trim, Removing and Installing, Power Seat

Note

The following describes the removing and installing on the left side of the vehicle. Removing and installing on the right side is identical.

Special tools and workshop equipment required

- Trim Removal Wedge - 3409-

Removing

– Position the seat into its highest position.

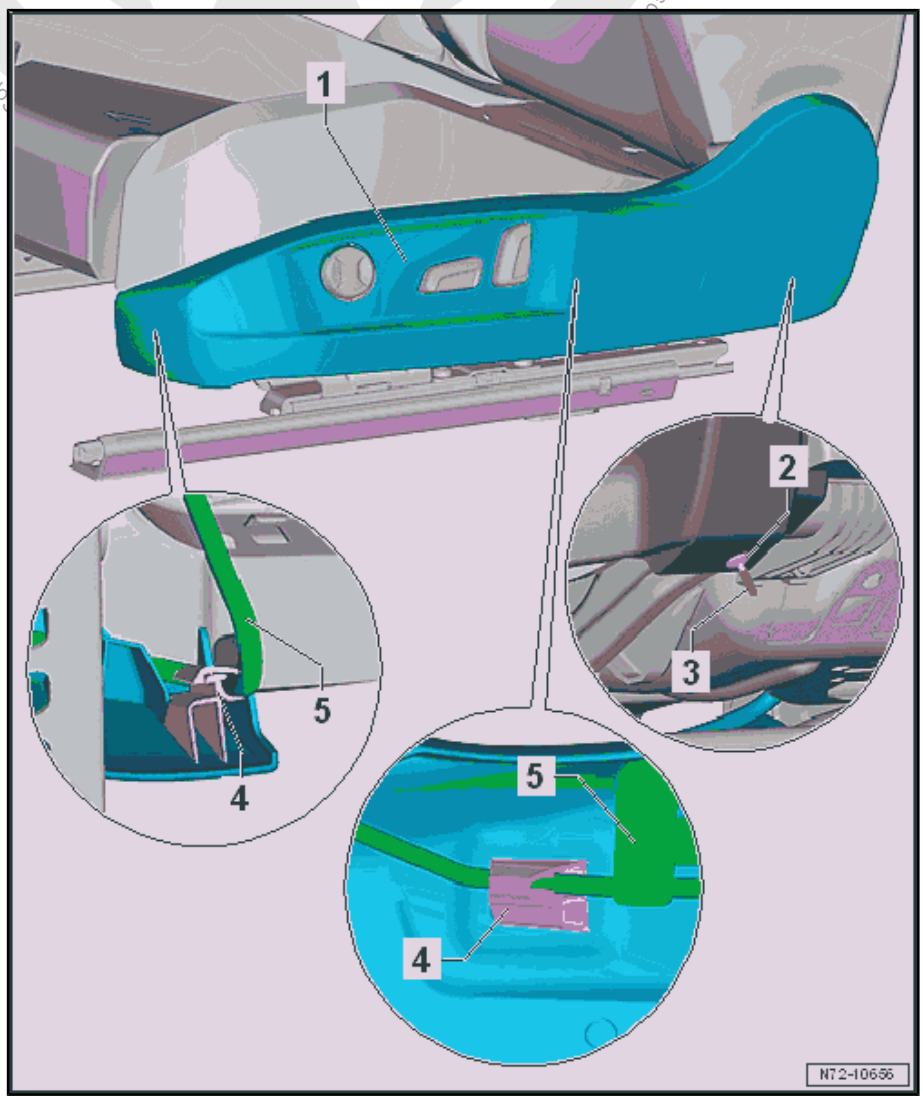

Copyright Volkswagen AG. Volkswagen AG does not guarantee or accept any liability with respect to the correctness of information in this copy. Copying for private or commercial purposes, in part or in whole, is not permitted unless authorised by Volkswagen AG.

– Press the clamping pin -3- toward the inside.

– Pry off the expanding rivet -2- using the Trim Removal Wedge - 3409- .

– Open the bracket -4- on the trim panel -1- from below.

– Guide out the rear trim panel -1-.

– Remove the trim panel -1- forward from the bracket -5-.

– Disconnect the connectors to the controls.

Installing

Install in reverse order of removal.

2.15 Seat Trim Bracket, Removing and Installing

⇒ "2.15.1 Seat Trim Bracket, Removing and Installing, Except Power Seat", page 348

⇒ "2.15.2 Seat Trim Bracket, Removing and Installing, Power Seat", page 349

2.15.1 Seat Trim Bracket, Removing and Installing, Except Power Seat

Note

The following describes the removing and installing on the left side of the vehicle. Removing and installing on the right side is identical.

Special tools and workshop equipment required

♦ Torque Wrench 1783 - 2-10Nm - VAG1783-

Removing

– Position the seat into its highest position.

– Remove the sill-side seat trim. Refer to ⇒ "2.14.1 Door Sill Side Seat Trim, Removing and Installing, Except Power Seat", page 345 .

– Remove the bolts -2-.

– Guide the retaining bracket -1- out of the mount -arrow- on the storage compartment -3-, if necessary.

– Remove the retaining bracket -1- from the front seat.

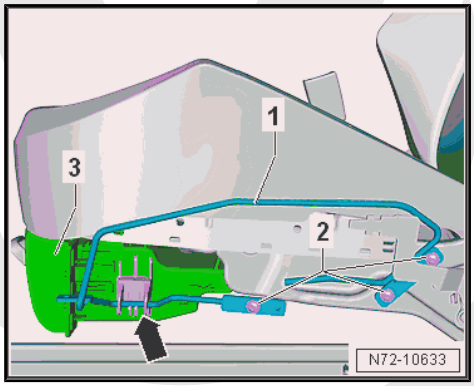

Installing

Install in reverse order of removal while paying attention to the following:

– If equipped, make sure the retaining bracket is seated correctly in the storage compartment mount.

Tightening Specifications

♦ Refer to ⇒ "2.5.1 Overview - Seat Pan, Except Power Seat", page 327

Protected by copyright. Copying for private or commercial purposes, in part or in whole, is not permitted unless authorised by Volkswagen AG. Volkswagen AG does not guarantee or accept any liability with respect to the correctness of information in this document. Copyright by Volkswagen AG.

2.15.2 Seat Trim Bracket, Removing and Installing, Power Seat

Note

The following describes the removing and installing on the left side of the vehicle. Removing and installing on the right side is identical.

Special tools and workshop equipment required

- Torque Wrench 1783 - 2-10Nm - VAG1783-

Removing

– Position the seat into its highest position.

– Remove the sill-side seat trim. Refer to ⇒ "2.14.2 Door Sill Side Seat Trim, Removing and Installing, Power Seat", page 347 .

– Remove the bolts -2 and 3-.

Note

If necessary, carefully push the seat cover near the bolt -3- to the side in order to remove the bolt -3-.

– Remove the retaining bracket -1- from the front seat.

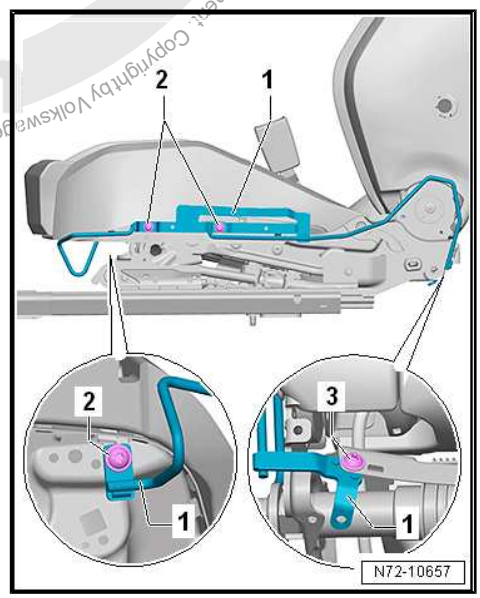

Installing

Install in reverse order of removal.

Tightening Specifications

- Refer to ⇒ "2.5.2 Overview - Seat Pan, Power", page 328

2.16 Front Backrest, Removing and Installing

Special tools and workshop equipment required

- Torque Wrench 1331 5-50Nm - VAG1331-

Caution

This procedure contains mandatory replaceable parts. Refer to component overview prior to starting procedure.

Mandatory Replacement Parts

- Screws for backrest

Protected by copyright. Copying for private or commercial purposes, in part or in whole is not permitted unless authorised by Volkswagen AG. Volkswagen AG does not guarantee or accept any liability with respect to the correctness of information in this document. Copyright by Volkswagen AG.

Removing

- Remove the front seat. Refer to ⇒ “2.10 Front Seat, Removing and Installing”, page 335 .
- Secure the seat on the Fixture for Seat Repair . Refer to ⇒ “1.2 Front Seat, Mounting on Fixture for Seat Repair”, page 311 .
- Remove the tunnel side seat trim. Refer to ⇒ “2.13 Tunnel-Side Seat Trim, Removing and Installing”, page 344 .
- Remove the sill-side seat trim. Refer to ⇒ “2.14 Sill-Side Seat Trim, Removing and Installing”, page 345 .
- Disconnect the connectors from the backrest wiring harness.
- Unclip the clips -2 and 5- from the wiring harness -1- on the seat pan.
- Loosen the wiring harness -1- with the mesh hose from the seat pan.
- To do so, loosen all cable ties -3 and 4-.

The wiring harness between the connector station and the side airbag is continuous.

- Guide the wiring harness to the side airbag out of the mesh hose.
- To do so, loosen the cable ties -3 and 4-.

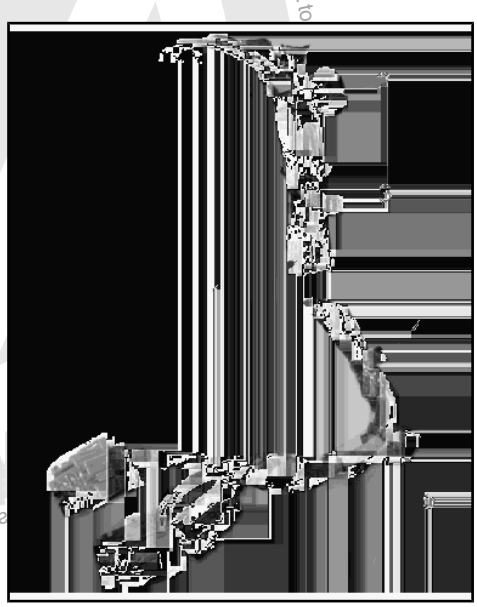

Only for Vehicles with Entry Assistance

- Disengage the release cable bracket -3 and 4- for entry assistance from the bracket on the seat pan.
- Disengage the release cable -1 and 2- for entry assistance from the seat rail release.
- Disengage the bracket -5- for the release cable from the seat rail.

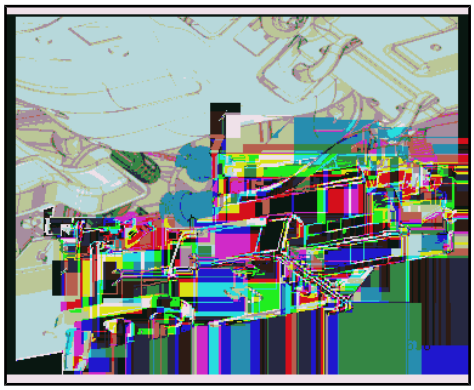

Continuation for All Vehicles

- Remove the bolts -2-.
- Tilt the backrest -3- forward onto the seat pan -1-.
- Move the seat pan cushion to the side.
- Carefully remove the wiring harness for the side airbag -4- from the seat pan.

Protected by copyright. Copying for private or commercial purposes, in part or in whole, is not permitted unless authorised by Volkswagen AG. Volkswagen AG does not guarantee or accept any liability with respect to

– Remove the backrest.

Installing

Install in reverse order of removal while paying attention to the following:

– Replace the damaged cable ties and clips.

– Route the wires in their original locations.

Tightening Specifications

♦ Refer to ⇒ "2.2 Overview - Front Seat", page 318

♦ Refer to ⇒ "2.5 Overview - Seat Pan", page 327

♦ Refer to ⇒ "2.4 Overview - Front Backrest", page 323

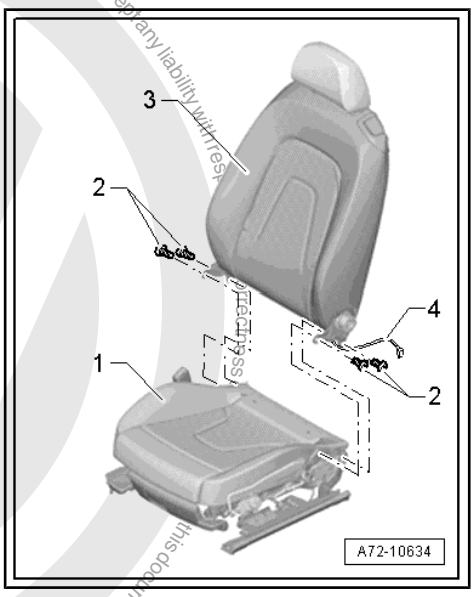

2.17 Seat Angle Adjuster, Removing and Installing

Note

The following describes the removing and installing on the left side of the vehicle. Removing and installing on the right side is identical.

Special tools and workshop equipment required

♦ Torque Wrench 1783 - 2-10Nm - VAG1783-

Removing

– Remove the front seat. Refer to ⇒ "2.10 Front Seat, Removing and Installing", page 335 .

– Attach the front seat to the Fixture For Seat Repair . Refer to ⇒ "1.2 Front Seat, Mounting on Fixture for Seat Repair", page 311 .

– Remove bolt -2- for seat angle adjustment motor (preset by the manufacturer) adjusting spindle -1-.

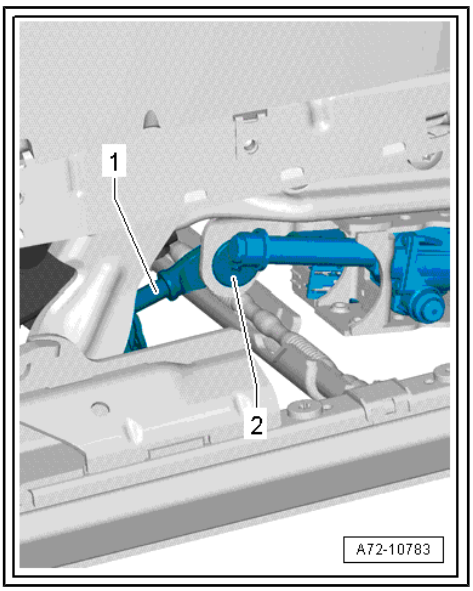

Protected by copyright. Copying for private or commercial purposes, in part or in whole, is not permitted unless authorised by Volkswagen AG. Volkswagen AG does not guarantee or accept any liability with respect to this document. Copyright by Volkswagen AG.

Caution

Risk of damage to the bushing -1- in the bearing point -2- (adjusting spindle/seat pan bolting).

- *The bushing cannot be replaced with workshop materials.*
- *If the bushing is damaged, the corresponding assembly parts must be replaced.*

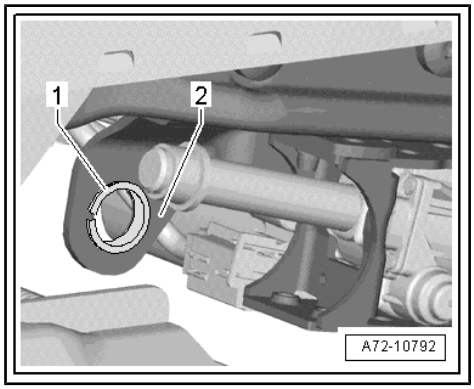

– Disconnect the connector -3- at the seat angle adjustment motor.

– Remove the bolts -1- and the seat angle adjustment motor -4-.

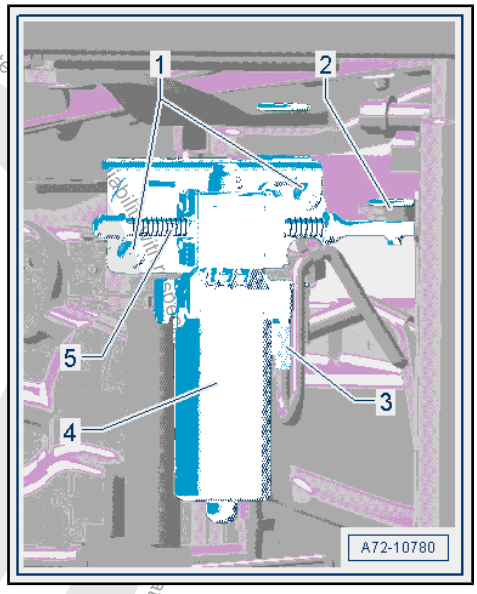

Installing

Install in reverse order of removal.

Tightening Specifications

- Refer to ⇒ “2.7 Overview - Seat Angle Adjuster”, page 333

2.18 Seat Height Adjustment Handle, Removing and Installing

Note

The seat height adjustment handle can only be replaced with the front seat installed.

Removing

Note

- *Remove the seat height adjustment handle as described. Never drive the seat height adjustment handle off the lever.*
- *If the tab gets damaged while removing the handle, then it is not possible to install it again. The handle must be replaced.*

– Pull the seat height adjustment handle in direction of -1- as far upward as possible and hold it in that position.

– Guide a small screwdriver up to the retainer -3- between the seat height adjuster handle -1- and the trim -2-.

– Press the retaining tab -3- inward using the screwdriver.

Protected by copyright. Copying for private or commercial purposes, in part or in whole, is not permitted unless authorised by Volkswagen AG. Volkswagen AG does not guarantee the accuracy and completeness of information in this document. Copyright by Volkswagen AG.

– At the same time, remove the seat height adjuster handle -1- from the lever -4- in the direction of the -arrow-.

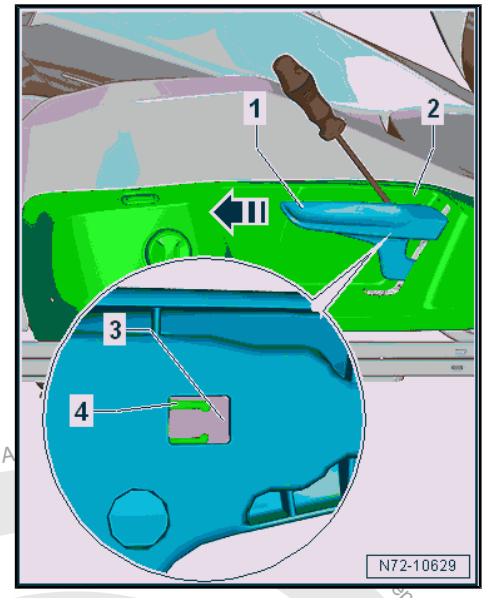

Installing

Install in reverse order of removal while paying attention to the following:

– Check for damage and proper seating of the retainer -3- on the lever -4-.

– Slide the seat height adjustment handle -1- onto the lever -4- until it engages.

– After installing, make sure the retainer -4- is properly engaged.

– Check for secure fit by pulling on it.

2.19 Seat Height Adjuster, Removing and Installing

⇒ “2.19.1 Seat Height Adjuster, Removing and Installing, Except Power Seat”, page 353

⇒ “2.19.2 Seat Height Adjuster, Removing and Installing, Power Seat”, page 355

2.19.1 Seat Height Adjuster, Removing and Installing, Except Power Seat

Note

The following describes the removing and installing on the left side of the vehicle. Removing and installing on the right side is identical.

Special tools and workshop equipment required

♦ Torque Wrench 1783 - 2-10Nm - VAG1783-

Removing

– Position the seat into its highest position.

– Remove the backrest adjuster. Refer to ⇒ “2.21.1 Backrest Adjuster, Removing and Installing, Except Power Seat”, page 358 .

– Remove the seat height adjustment handle. Refer to ⇒ “2.18 Seat Height Adjustment Handle, Removing and Installing”, page 352 .

– Remove the sill-side seat trim. Refer to ⇒ “2.14.1 Door Sill Side Seat Trim, Removing and Installing, Except Power Seat”, page 345 .

Protected by copyright. Copying for private or commercial purposes, in part or in whole, is not permitted unless authorised by Volkswagen AG. Copyright by Volkswagen AG. Volkswagen AG does not accept any liability with respect to the correctness of information in this document.

– Remove the bolts -2-.

– Remove the lever -1-.

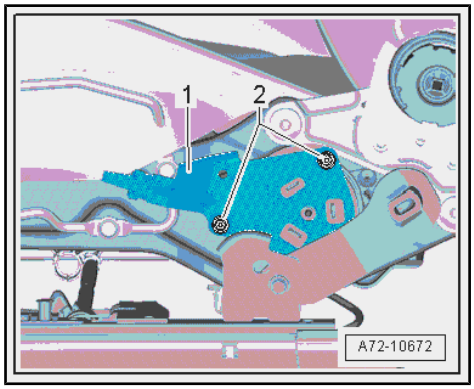

– Remove the lock washer -1-.

– Remove the bolts -1 and 3-.

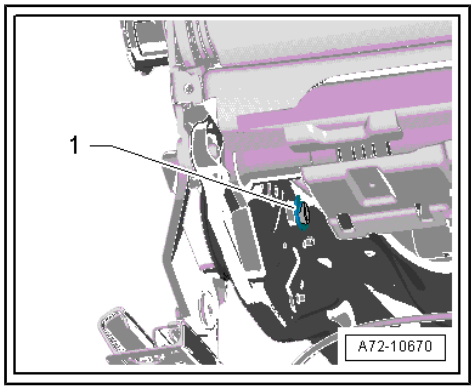

– Remove the seat height adjuster -2-.

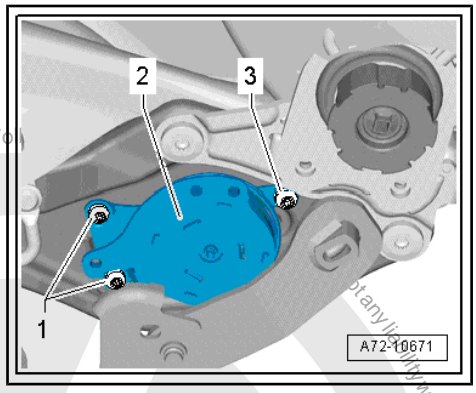

Installing

Install in reverse order of removal while paying attention to the following:

Note

- *The bolts -1- and the bolt -3- are different lengths.*
- *The bolt -3- is shorter.*
- *The bolt -3- has a larger bolt head.*
- *Ensure the correct allocation.*

– Push the seat downward via the backrest.

– Attach the seat height adjuster -2-.

– Tighten the bolts -1 and 3-.

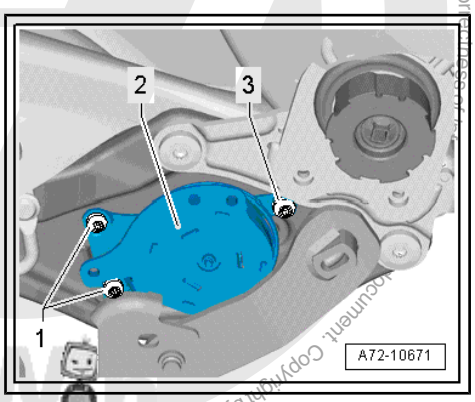

Tightening Specifications

- Refer to
⇒ “2.6.1 Overview - Seat Height Adjuster, Except Power Seat”, page 331

Protected by copyright. Copying for private or commercial purposes, in part or in whole, is not permitted unless authorised by Volkswagen AG. Volkswagen AG does not any liability with respect to the correctness of the document. Copyright by Volkswagen AG.

2.19.2 Seat Height Adjuster, Removing and Installing, Power Seat

Note

The following describes the removing and installing on the left side of the vehicle. Removing and installing on the right side is identical.

Protected by copyright. Copying for private or commercial purposes, in part or in whole, is not permitted unless authorised by Volkswagen AG. Volkswagen AG does not guarantee or accept any liability with respect to the c

Special tools and workshop equipment required

- Torque Wrench 1783 - 2-10Nm - VAG1783-

Removing

– Remove the front seat. Refer to ⇒ “2.10 Front Seat, Removing and Installing”, page 335 .

– Attach the front seat to the Fixture For Seat Repair . Refer to ⇒ “1.2 Front Seat, Mounting on Fixture for Seat Repair”, page 311 .

– Remove the sill-side seat trim. Refer to ⇒ “2.14.2 Door Sill Side Seat Trim, Removing and Installing, Power Seat”, page 347 .

– Disconnect the connector -1- at seat height adjustment motor -2-.

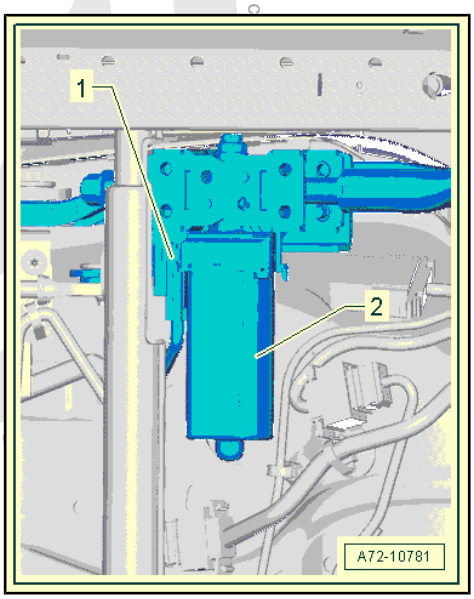

Caution

Threaded hole in the seat pan damaged or destroyed.

- *The bolt -2- has left-hand thread.*
- *When removing or installing, the adjusting spindle/seat pan threaded connection must be relieved. To do so, a second technician must be pushing down on the seat backrest.*

Risk of damage to the bushing -3- in the bearing point (adjusting spindle/seat pan bolting).

- *The bushing cannot be replaced with workshop materials.*
- *If the bushing is damaged, the corresponding assembly parts must be replaced.*

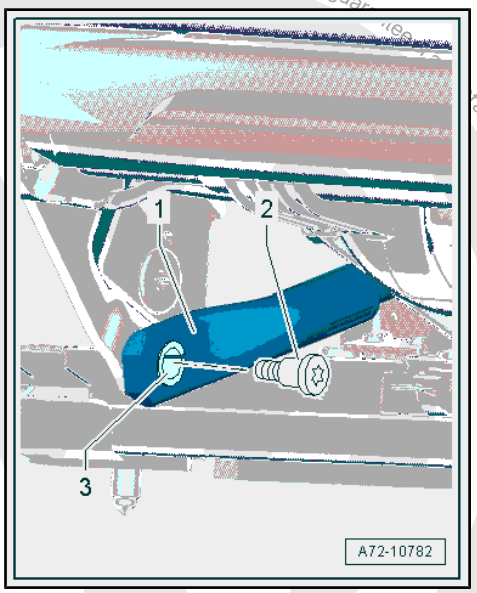

– Remove bolt -2- on the seat height adjustment motor adjusting spindle -1-.

– Remove bolt -1- for seat angle adjustment motor adjusting spindle (preset by the manufacturer).

– Move the upper seat frame as far upward as possible and support with a suitable wood block on the Engine/Transmission Holder - Seat Repair Fixture - VAS6136- .

– Remove the bolts -2- and -3-.

– Remove the fixture with the height adjustment motor -4- from the seat pan.

– Remove the bolts -1-.

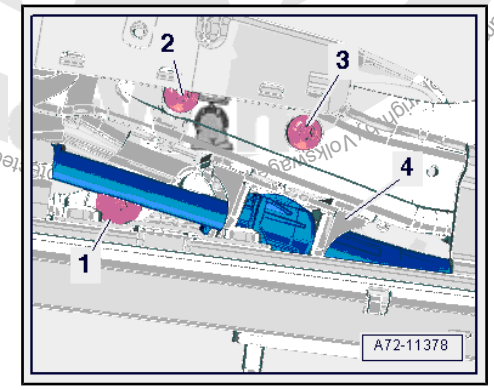

– Remove the bracket -2- from the seat height adjustment motor -3-.

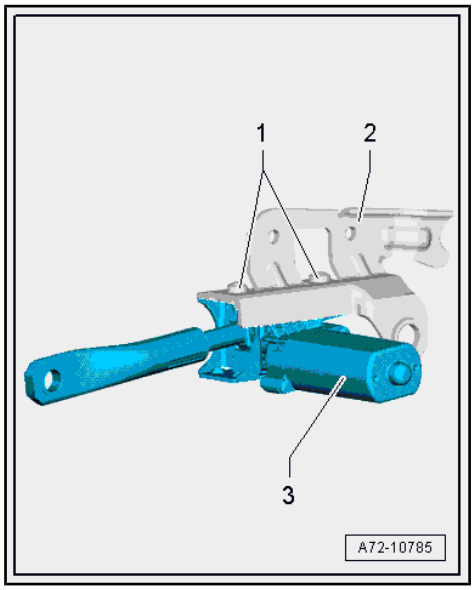

Installing

Install in reverse order of removal.

Tightening Specifications

- Refer to ⇒ “2.6.2 Overview - Seat Height Adjuster, Power Seat”, page 332

Copyright by Volkswagen AG. Volkswagen AG does not guarantee or accept any liability with respect to the correctness of information in this document. Copyright by Volkswagen AG. Volkswagen AG does not permit copying for private or commercial purposes, in part or in whole, or other forms of reproduction or transmission unless authorised by Volkswagen AG.

2.20 Seat Pan with Driver/Front Passenger Seat Forward/Back Adjustment Motor - V28- / -V31- , Removing and Installing

Removing

– Move front seat to the highest position possible to keep the torsion bar tension as low as possible.

– Remove the front seat. Refer to ⇒ “2.10 Front Seat, Removing and Installing”, page 335 .

– Remove the front seat belt latch. Refer to ⇒ “1.14 Front Seat Belt Latch, Removing and Installing”, page 120 .

– Disconnect the connector on the seat forward/back adjustment motor.

– Unclip the wire from the seat pan and set aside.

> **Caution**
>
> *Danger of damaging the threaded holes or the bushing in the bearing points (connecting the upper/ lower frame).*
>
> ♦ *The bolt -3- has left-hand thread.*
>
> ♦ *A second technician must be pushing down on the seat backrest when removing the following bolts.*

– Remove the bolt -3-.

– Remove the bolts -2-.

– Remove the seat pan -1- from the lower frame -4-.

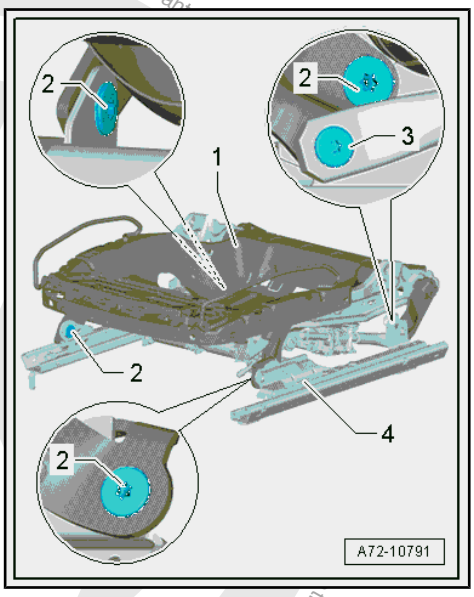

> **Caution**
>
> *Risk of damage to the bushings -1- in the bearing points -2- (seat pan threaded connection and lower frame).*
>
> ♦ *The bushings cannot be replaced with workshop materials.*
>
> ♦ *If the bushings are damaged, the seat pan must be replaced.*

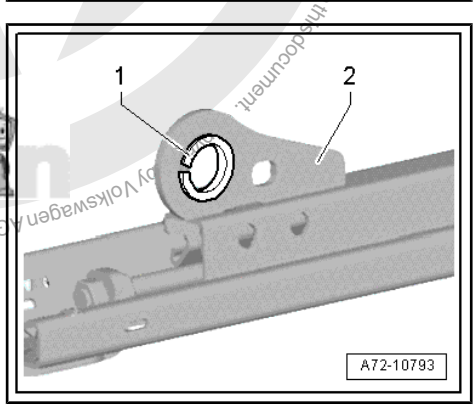

Installing

Install in reverse order of removal.

Tightening Specifications

♦ Refer to ⇒ “2.5.2 Overview - Seat Pan, Power”, page 328

2.21 Backrest Adjuster, Removing and Installing

⇒ “2.21.1 Backrest Adjuster, Removing and Installing, Except Power Seat”, page 358

⇒ “2.21.2 Backrest Adjuster, Removing and Installing, Power Seat”, page 358

2.21.1 Backrest Adjuster, Removing and Installing, Except Power Seat

Note

The following describes the removing and installing on the left side of the vehicle. Removing and installing on the right side is identical.

Special tools and workshop equipment required

♦ Assembly Tool - 3399-

Removing

– Turn the backrest adjuster -1- until the retainer can be seen from the rear -arrow A-. Use a flashlight if necessary.

– Insert the Assembly Tool - 3399- and lift it in the direction of -arrow B-.

– Turn the backrest adjuster 120° farther.

– Insert the Assembly Tool - 3399- and lift it in the direction of -arrow B-.

– Remove the backrest adjuster.

Installing

Install in reverse order of removal while paying attention to the following:

– Note the correct installation position of the backrest adjuster.

– Pull on the backrest adjuster to make sure it is secure.

– Replace the backrest adjuster if it is too loose after assembling.

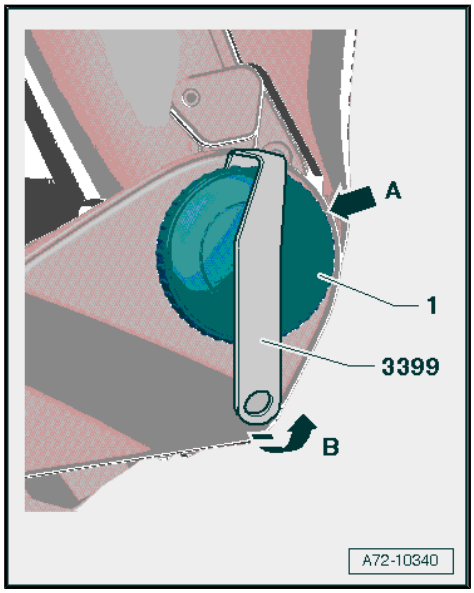

2.21.2 Backrest Adjuster, Removing and Installing, Power Seat

The Driver Backrest Adjustment Motor - V45- / Front Passenger Backrest Adjustment Motor - V46- cannot be replaced separately. If the backrest adjuster is faulty, the backrest frame must be replaced.

2.22 Lumbar Support Adjuster, Removing and Installing

Special tools and workshop equipment required

- Door Trim Pliers - 3392-

Note

The following describes the removing and installing on the left side of the vehicle. Removing and installing on the right side is identical.

Removing

– Remove the lumbar support adjusting lever -1- from the shaft -2- using the Door Trim Pliers - 3392- .

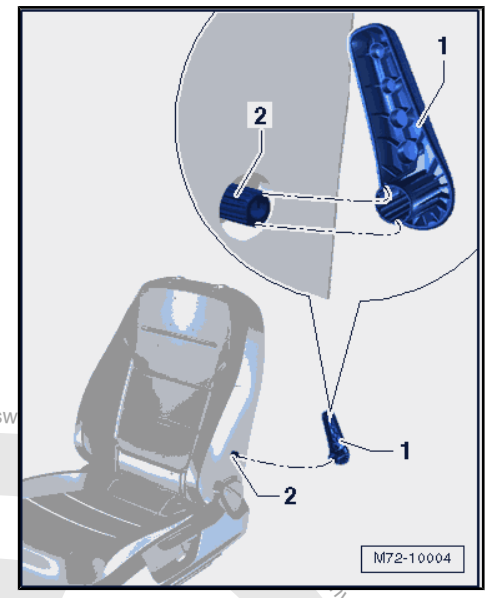

Installing

Install in reverse order of removal while paying attention to the following:

– Make sure the splines on the lumbar support adjusting lever -1- align with the splines on the shaft -2-.

– Pull on it to make sure the lever is secure.

– Replace the adjusting lever if it is too loose after assembling.

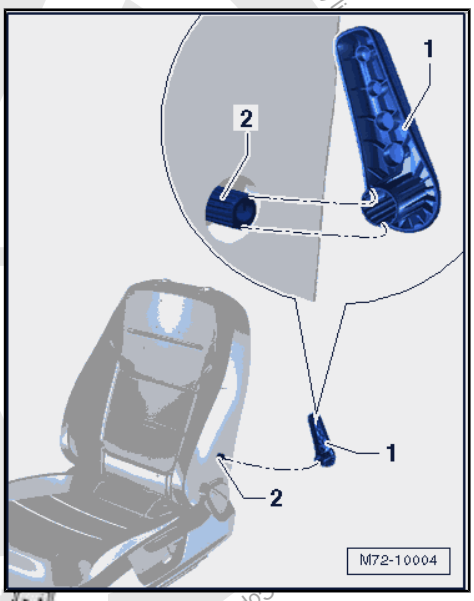

Protected by copyright. Copyright for private or commercial purposes, in part or in whole, is not permitted unless authorised by Volkswagen AG. Volksw
Copyright by Volkswagen AG.

2.23 Headrest, Removing and Installing

Removing

Note

- *The headrests can be removed with the front seats installed.*
- *The release button is located on the outer left of the driver seat and inner left of the passenger seat.*

– Move the front seat forward into the lowest position and tilt backrests approximately 45°.

– Push the cushion near the headrest guides slightly downward.

– Push the locking plate -1- all the way toward the retainer on both headrest guides.

– Remove the headrest from the backrest.

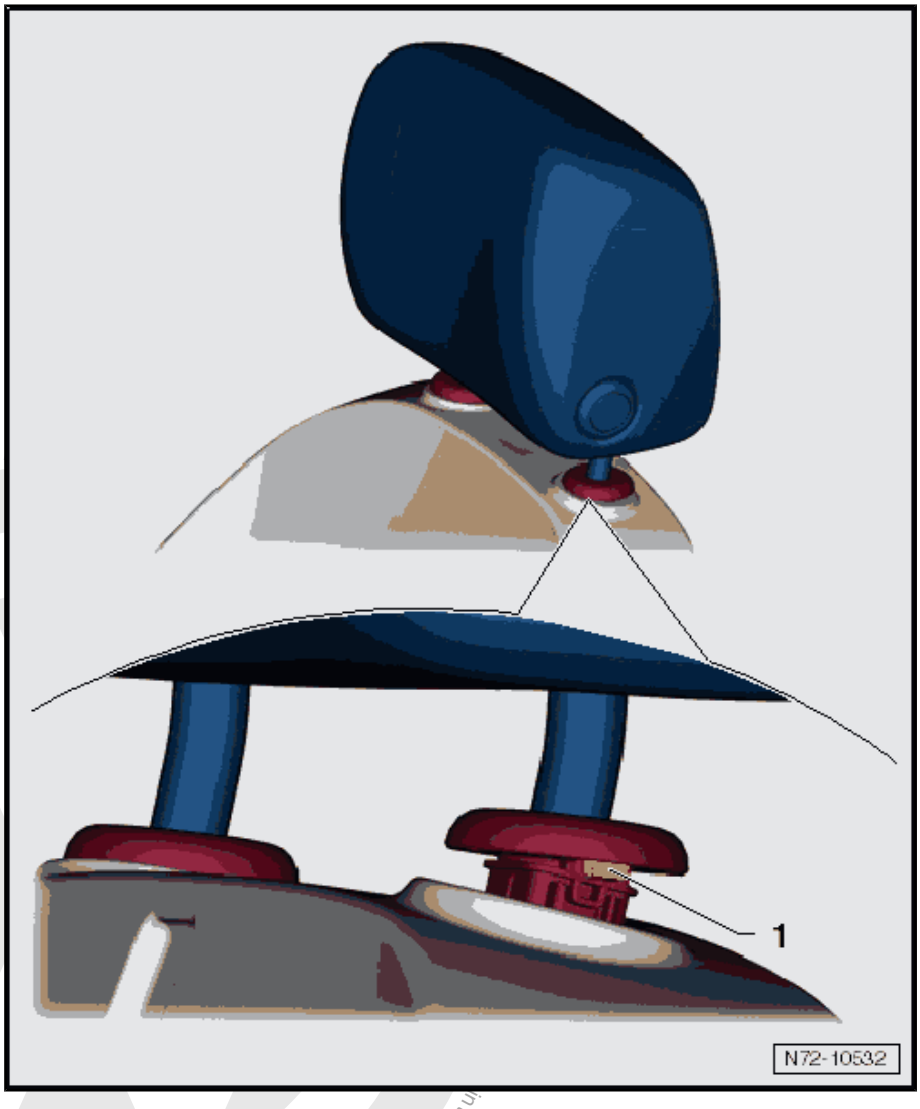

Installing

Install in reverse order of removal.

Protected by copyright. Copying for private or commercial purposes, in part or in whole, is not permitted unless authorised by Volkswagen AG. Copyright by Volkswagen AG.

2.24 Headrest Guide, Removing and Installing

Removing

– Remove the backrest cover with the backrest cushion. Refer to
⇒ "1.5 Backrest Cover and Cushion, Removing and Installing" page 406 .

Right Headrest Guide

– Press retaining tabs in -arrows- and simultaneously pull the headrest guide -1- out of the backrest frame -2-.

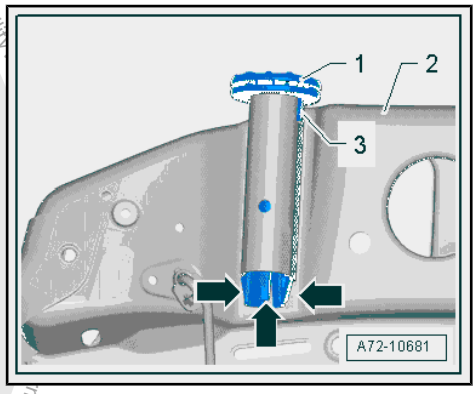

Note

Ignore -item 3-.

Left Headrest Guide

– Press in the retaining tab -arrows- and simultaneously pull headrest guide -1- out of the backrest frame -2-.

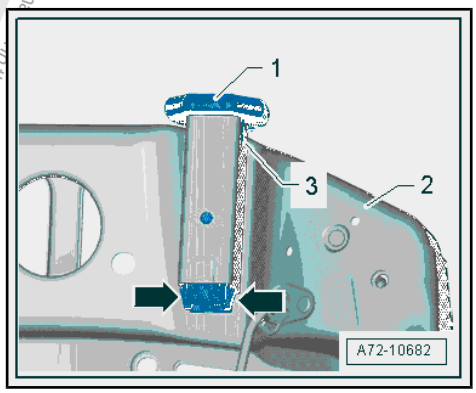

Installing

Install in reverse order of removal while paying attention to the following:

Note

The headrest guide can only be inserted in one position.

- The tab -3- on the headrest guide must engage in the mount cut-out on the backrest frame.
- The tabs must engage correctly in backrest frame.

2.25 Backrest Release Trim, Removing and Installing

Removing

– Pull the operating lever -1- upward in direction of -arrow A-.

– Push a flat-head screwdriver between the trim and operating lever, as shown in the illustration.

– Release the right catches in direction of -arrow B-.

– Hold the operating lever pushed -1-, push a flat-head screwdriver between the trim and operating lever, as shown in the illustration.

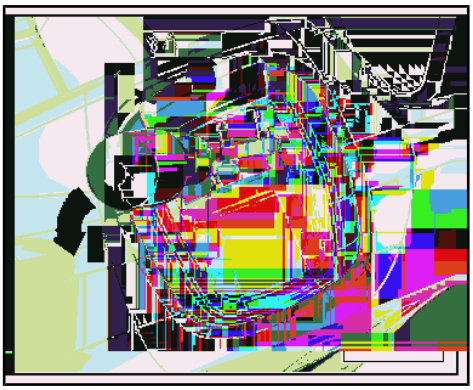

Protected by copyright. Copyright by Volkswagen AG. Volkswagen AG does not guarantee or accept any liability in this document. Copyright by Volkswagen AG.

– Release the left catches in direction of -arrow-.

– Bring the operating lever -1- back into the resting position.

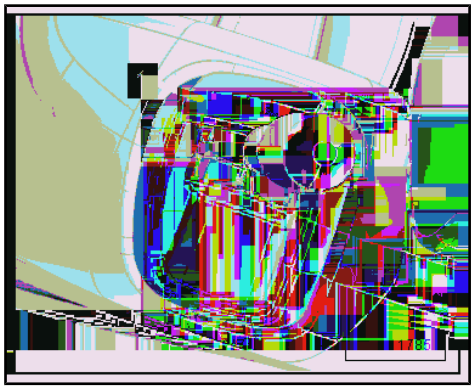

– Disengage the trim -2- by hand in the direction of the -arrow-, and if necessary push on the opposite side.

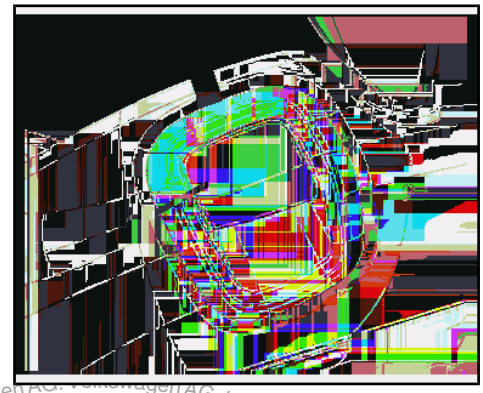

Installing

Install in reverse order of removal while paying attention to the following:

– Pull the operating lever slightly upward, guide the trim over the operating lever and engage the rear tabs in the backrest release.

2.26 Backrest Release, Removing and Installing

Removing

– Remove the backrest cover with the backrest cushion. Refer to ⇒ “1.5 Backrest Cover and Cushion, Removing and Installing”, page 406 .

– Pull the operating lever -1- upward and remove the bolt -2-.

– Push the backrest release mount -4- upward in direction of -arrow- and disengage the connecting cable -3-.

– Disengage the backrest release retaining tabs -5-.

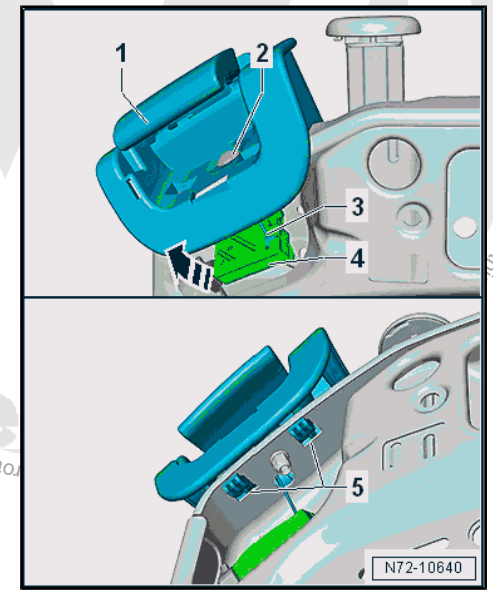

Installing

Install in reverse order of removal.

Tightening Specifications

♦ Refer to ⇒ “2.3 Overview - Backrest Release and Entry Assistance”, page 322

♦ Refer to ⇒ “2.4 Overview - Front Backrest”, page 323

♦ Refer to ⇒ “2.2 Overview - Front Seat”, page 318

Protected by copyright. Copyright of private or commercial purposes, in part or in whole, is not permitted unless authorised by Volkswagen AG. Volkswagen AG does not guarantee or accept any liability with respect to the correctness of information in th

2.27 Connecting Cable, Removing and Installing

Removing

– Remove the backrest cover with the backrest cushion. Refer to
⇒ “1.5 Backrest Cover and Cushion, Removing and Installing”, page 406 .

– Pivot the backrest release bearing -1- upward in direction of -arrow- until stop and hold in this position.

– Disengage the connecting cable -3- at the mount.

– Pivot the operating lever -2- upward until it stops.

– Disengage and remove the connecting cable from the operating lever.

Installing

Install in reverse order of removal.

Tightening Specifications

♦ Refer to ⇒ “2.4 Overview - Front Backrest”, page 323

♦ Refer to ⇒ “2.2 Overview - Front Seat”, page 318

2.28 Backrest Release Mount, Removing and Installing

Special tools and workshop equipment required

♦ Pop Rivet Pliers - VAG1753B-

♦ Drill

♦ Protective Eyewear

Removing

– Remove the backrest cover with the backrest cushion. Refer to
⇒ “1.5 Backrest Cover and Cushion, Removing and Installing”, page 406 .

– Remove the connecting cable. Refer to
⇒ “2.27 Connecting Cable, Removing and Installing”, page 363 .

> **WARNING**
>
> *Danger of eye injury.*
>
> ♦ *Wear protective eyewear.*

– Pry the release cable -1- from the backrest release bearing with a screwdriver in the direction of the -arrow-.

Protected by copyright. Copying for private or commercial purposes, in part or in whole, is not permitted unless authorised by Volkswagen AG. Volkswagen AG does not guarantee or accept any liability with respect to the con

– Drill out the rivets -2- from the backrest frame.

– Remove the backrest release bearing -3- from the backrest frame.

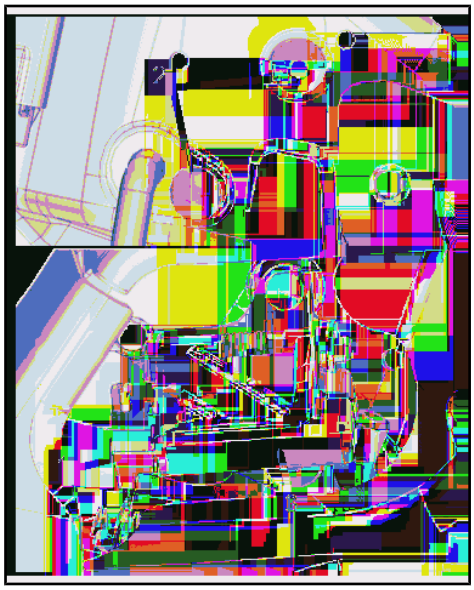

Installing

Install in reverse order of removal.

Tightening Specifications

♦ Refer to ⇒ “2.4 Overview - Front Backrest”, page 323

♦ Refer to ⇒ “2.2 Overview - Front Seat”, page 318

2.29 Backrest Release Cable, Removing and Installing

Note

The left and right release cables cannot be replaced separately.

Special tools and workshop equipment required

♦ Pop Rivet Pliers - VAG1753B-

♦ Drill

♦ Protective Eyewear

Removing

– Remove the backrest cover with the backrest cushion. Refer to ⇒ “1.5 Backrest Cover and Cushion, Removing and Installing”, page 406 .

Note

The spring mat or lumbar support does not need to be removed when removing and installing the release cables.

Protected by copyright. Copying for private or commercial purposes, in part or in whole, is not permitted unless authorised by Volkswagen AG. Volkswagen AG does not guarantee or accept any liability with respect to the correctness of information in this document. Copyright by Volkswagen AG.

– Using pliers, disengage the eyelet -3- from the pins -4- for the backrest release on both sides.

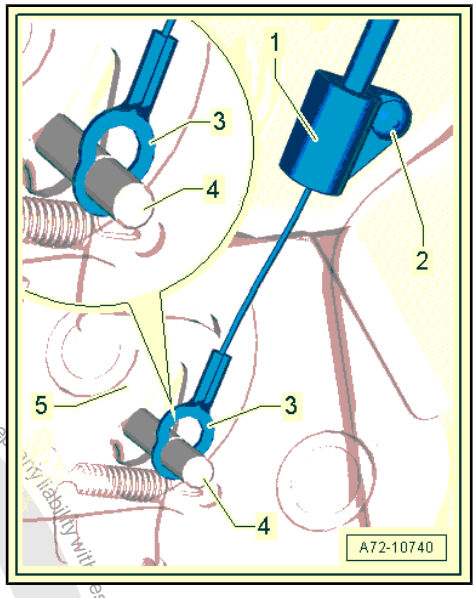

> **WARNING**
>
> *Danger of eye injury.*
>
> ♦ *Wear protective eyewear.*

– Remove the left and right rivet -2- and remove the bracket -1- from the backrest frame -5-.

– Pry the release cable -1- from the backrest release bearing -2- with a screwdriver in the direction of the -arrow-.

– Unclip the bracket -1- from the backrest frame -2-.

– Guide out the end of the release cable through the mount opening in the backrest frame.

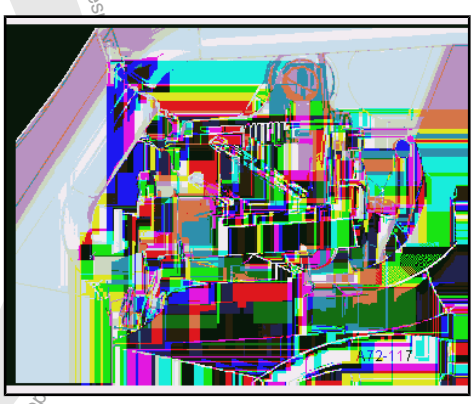

– Separate the cable tie and remove the release cables from the backrest frame.

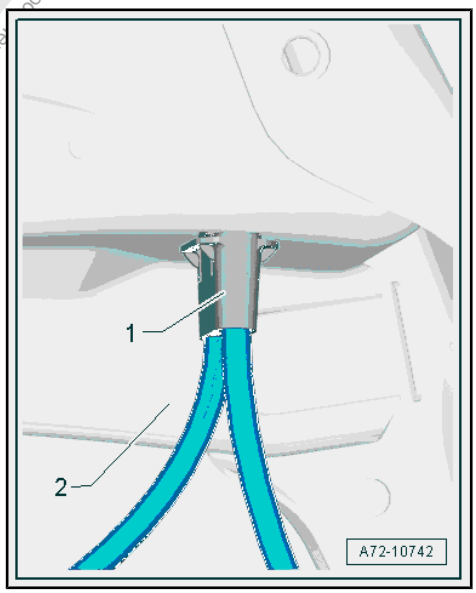

Installing

Install in reverse order of removal.

Tightening Specifications

♦ Refer to ⇒ “2.4 Overview - Front Backrest”, page 323

♦ Refer to ⇒ “2.2 Overview - Front Seat”, page 318

2.30 Backrest Release Cable, Adjusting

> **WARNING**
>
> *Make sure the backrest is locked (zero position), otherwise it could tip forward accidentally.*

Protected by copyright. Copyright by Volkswagen AG. Volkswagen AG does not guarantee or accept any liability with respect to the correctness of information. Copying for private or commercial purposes, in part or in whole, is not permitted unless authorised by Volkswagen AG.

– Remove the backrest cover with the backrest cushion. Refer to
⇒ “1.5 Backrest Cover and Cushion, Removing and Installing”, page 406 .

The following prerequisites must be met to adjust:

- Backrest release -2- to the lower stop (backrest locks).

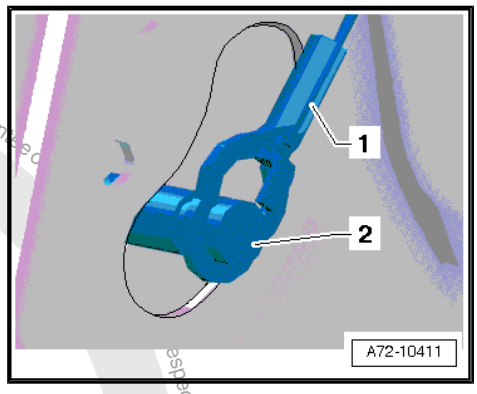

– Pivot the backrest release bearing -1- upward until a distance of -a- = 2 to 4 mm is between the backrest frame stop surface -arrow A- and the bearing stop -arrow B-.

– Secure the backrest release bearing in this position, using for example an angled metal rod.

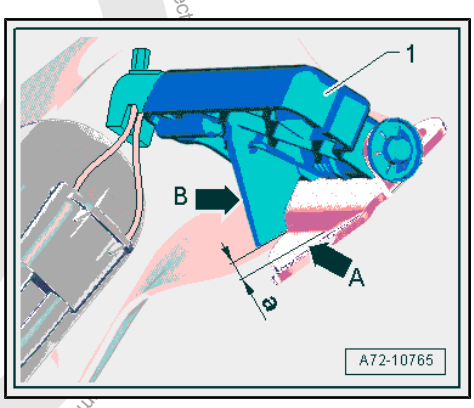

– Adjust the release cables on both release cable adjusters -1 and 2-.

– To adjust, turn the upper section -3- and the lower section -4- contrary to each other.

– Adjust the cable so it is free of play and tension.

Protected by copyright. Copying for private or commercial purposes, in part or in whole, is not permitted unless authorised by Volkswagen AG. Volkswagen AG does not guarantee or accept any liability with respect to the correctness and completeness of this document.

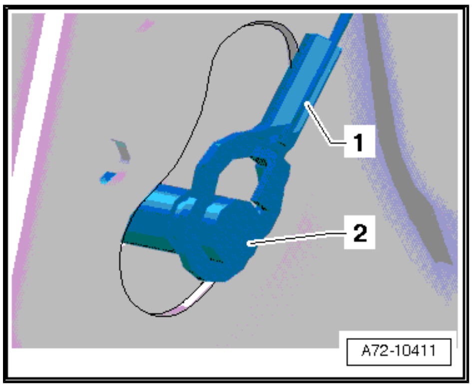

Note

- *The illustration only shows one side of the retainer.*
- *When adjusting cables -1-, they must not be tensioned at the backrest release -2-.*

– After adjusting release cables, perform a functionality test of the backrest release.

– If it does not release or only releases partially, check the release cable routing or repeat the adjustment.

2.31 Entry Assistance Release Cable A, Removing and Installing

Removing

– Remove the front seat. Refer to ⇒ “2.10 Front Seat, Removing and Installing”, page 335 .

– Attach the front seat to the Fixture For Seat Repair . Refer to ⇒ “1.2 Front Seat, Mounting on Fixture for Seat Repair”, page 311 .

– Move the front seat into its highest position.

– Remove the tunnel side seat trim. Refer to ⇒ “2.13 Tunnel-Side Seat Trim, Removing and Installing”, page 344 .

– Turn the backrest adjustment hand wheel forward until stop.

– Unclip the release cable A bracket -1- from the backrest.

– Disengage the release cable A -2- from the lever on the backrest hinge.

– Disengage the cable A bracket -1- for entry assistance from the bracket on the seat pan.

– Unclip the bracket -2- for the release cable from the seat pan.

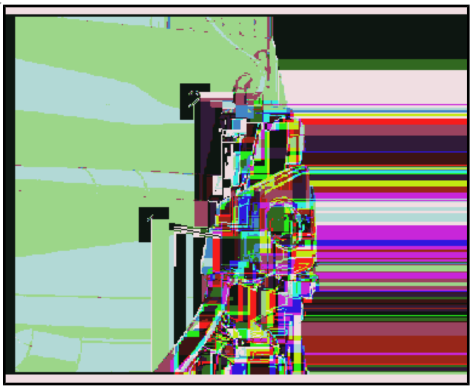

– Disengage the release cable A from the seat longitudinal adjuster -arrow- and remove.

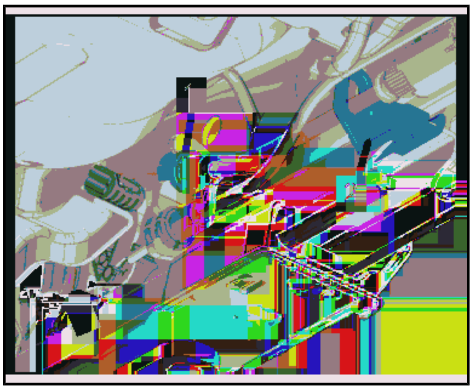

Installing

Install in reverse order of removal while paying attention to the following:

– Adjust the release cable A. Refer to ⇒ “2.32 Entry Assistance Release Cable A, Adjusting”, page 367 .

Tightening Specifications

- Refer to ⇒ “2.2 Overview - Front Seat”, page 318

2.32 Entry Assistance Release Cable A, Adjusting

Special tools and workshop equipment required

Protected by copyright. Copying for private or commercial purposes, in part or in whole, is not permitted unless authorised by Volkswagen AG. Volkswagen AG does not guarantee or accept any liability with respect to the correctness of information in this document. Copyright by Volkswagen AG.

- Feeler Gauge - VAS 5301/10-

Adjustment Conditions

- The padding must be removed from the seat pan and backrest and they must be bolted to each other.
- The backrest adjustment hand wheel is turned forward until stop.
- The release cable B must be engaged in the seat longitudinal adjuster and backrest hinge.
- The adjustment is only performed on the inside of the vehicle on the tunnel side of the seat.

Caution

Before the adjustment of the "entry assistance" function, operating the "entry assistance" is not permitted.

Checking and Correcting

– Adjust both seat rails so that the two respective locking bolts -2- are upward.

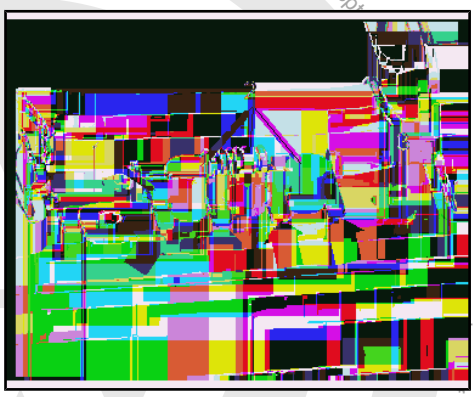

Note

Make sure that on both seat rails the identical locking bolts are upward.

– Adjust the seat rails so that the two respective locking bolts -2- are upward.

Note

- *It does not matter which of the two locking bolts are upward.*
- *Ignore items -1 and 3- in the illustration.*

– Push the lever -1- on the backrest hinge until stop in the direction of the -arrow-.

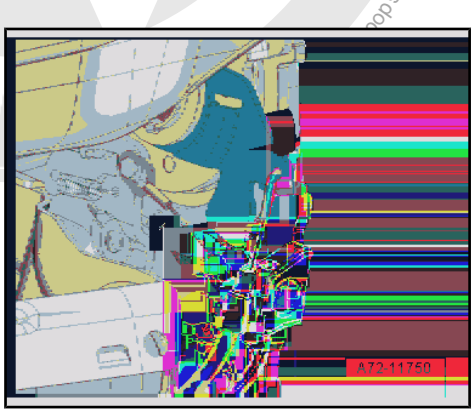

Note

The cushion and cover are not shown in the illustration.

Protected by copyright. Copying for private or commercial purposes, in part or in whole, is not permitted unless authorised by Volkswagen AG. Volkswagen AG does not guarantee or accept any liability with respect to the correctness of information in this document.

– Using the feeler gauge, determine the distance between the tabs -arrows- of the release plate -1- and the plate -2-.

• The 0.1 mm feeler must slide through all tabs -arrows- of the release plate.

• The 0.3 mm feeler does not have to slide through a maximum of one end.

If the adjustment is incorrect, proceed as follows.

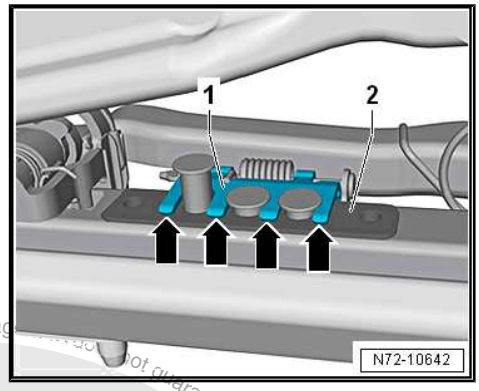

– Release the release cable adjuster by holding the upper section -1- with pliers and turning the securing sleeve -2- approximately 45° in the direction of -arrow A-.

– Press the securing sleeve all the way down as far as the stop to release it -arrow B-.

• The lower section -3- must be able to rotate.

– To adjust, turn the upper and lower sections in opposite directions.

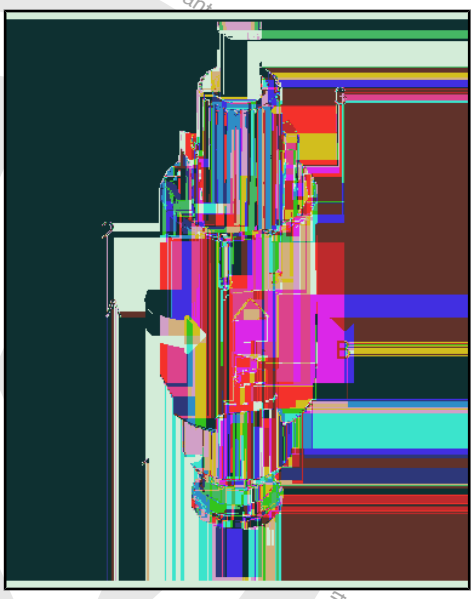

– Adjust the release cable so that the release plate -1- on the plate -2- just begins to raise.

• The 0.1 mm feeler must slide through all tabs -arrows- of the release plate.

• The 0.3 mm feeler does not have to slide through a maximum of one end.

– After adjusting the release cables perform a functionality test.

– If it does not release or only releases partially, check the release cable routing or repeat adjustment.

– Re-engage the release cable adjuster.

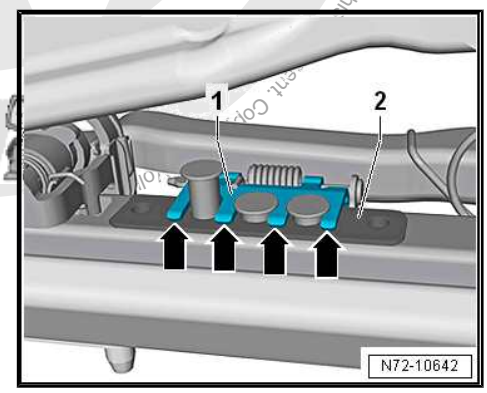

2.33 Entry Assistance Release Cable B, Removing and Installing

Removing

– Remove the front seat. Refer to ⇒ “2.10 Front Seat, Removing and Installing”, page 335 .

– Attach the front seat to the Fixture For Seat Repair . Refer to ⇒ “1.2 Front Seat, Mounting on Fixture for Seat Repair”, page 311 .

– Move the front seat into its highest position.

– Remove the tunnel side seat trim. Refer to ⇒ “2.13 Tunnel-Side Seat Trim, Removing and Installing”, page 344 .

Protected by copyright. Copying for private or commercial purposes, in part or in whole, is not permitted unless authorised by Volkswagen AG. Volkswagen AG does not guarantee

– Turn the backrest adjustment hand wheel forward until stop.

– Disengage the cable B bracket -2- for entry assistance from the bracket on the seat pan.

– Disengage the eyelet -1- of the entry assistance cable B from the pins on the seat forward/back adjustment.

– Disengage the bracket -1- of the entry assistance cable B from the backrest hinge, to do this release the catches -arrow-.

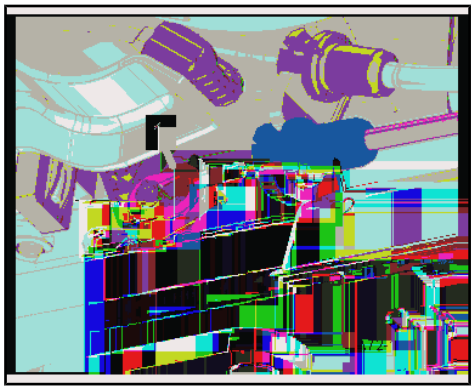

– Disengage the eyelet -2- of the entry assistance cable B with a screwdriver from the backrest hinge pins and remove.

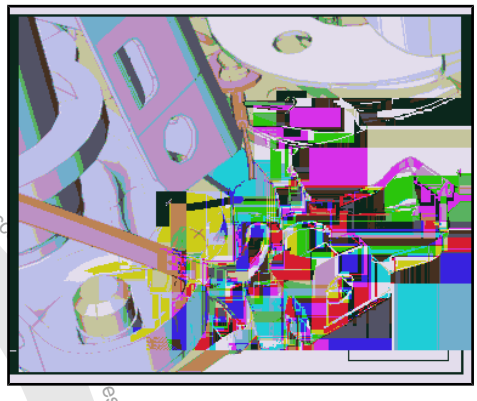

Installing

Install in reverse order of removal.

Tightening Specifications

♦ Refer to ⇒ “2.2 Overview - Front Seat”, page 318

2.34 Gliding Piece, Removing and Installing

Removing

– Move the front seat all the way to the rear and then into its highest position.

– Unlock the backrest, fold forward and at the same time push the front seat all the way forward.

– Remove the rear bolt from the tunnel-side seat rail. Refer to ⇒ “2.10 Front Seat, Removing and Installing”, page 335 .

– Push the rocker switch -arrow A- from the gliding piece in the direction of the -arrow- and pull the gliding piece rearward.

– Lightly lift the rear gliding piece -1- with a screwdriver and remove rearward from the seat rail -2-.

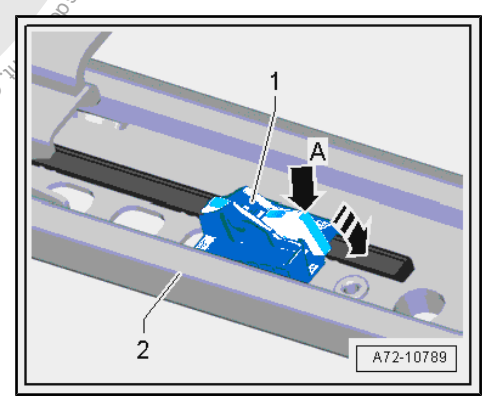

Protected by copyright. Copyright by Volkswagen AG. Volkswagen AG does not guarantee or accept any liability with respect to the correctness of information in this document. Copyright by Volkswagen AG.

Installing

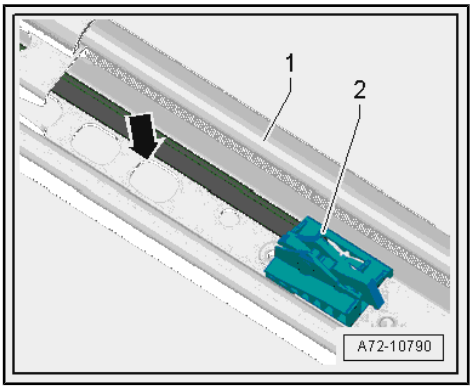

- If the gliding piece is replaced, clean the seat rail area of any residue of the previous gliding piece.
- Insert the gliding piece -2- in the seat rail -1-.
- Engage the glide piece in the back catch -arrow-.

Note

Adjusting the gliding piece is not necessary.

Install in reverse order of removal.

2.35 Storage Compartment, Removing and Installing

Special tools and workshop equipment required

- Torque Wrench 1783 - 2-10Nm -VAG1783-

Removing

- Loosen the front seat and tip it toward the rear. Do not completely remove the seat. Refer to ⇒ "2.10 Front Seat, Removing and Installing", page 335 .
- Remove the seat trim bracket. Refer to ⇒ "2.15 Seat Trim Bracket, Removing and Installing", page 348 .

Caution

Handle the customers property in the glove compartment with great care.

- ***Store the items from the storage compartment is a closable plastic box.***

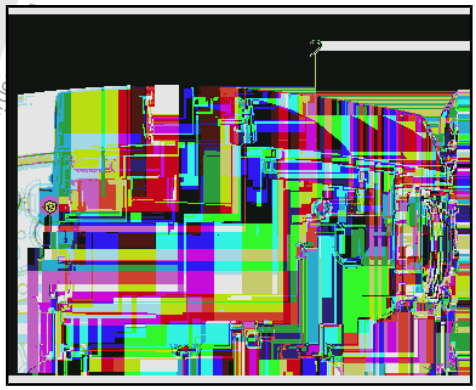

- Clean out the storage compartment -2-.
- Remove the storage compartment -2-.
- Remove the bolt -3-.
- Insert the storage compartment -2-.
- Remove the bolt -1-.
- Lower the storage compartment -1- on the front seat -2-.
- Pull the storage compartment -1- forward in the direction of travel.

Protected by copyright. Copying for private or commercial purposes, in part or in whole, is not permitted unless authorised by Volkswagen AG. Volkswagen AG does not guarantee or accept any liability with respect to the correctness of information in this document. Copyright by Volkswagen AG.

– Remove the storage compartment -1- from the right and left mounts -arrow-.

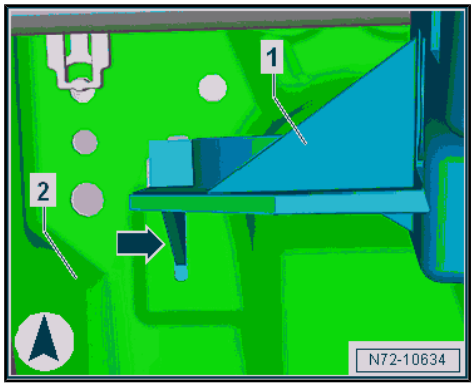

Installing

Install in reverse order of removal while paying attention to the following:

– Make sure that the side trim panel bracket engages correctly in the storage compartment mount.

Tightening Specifications

♦ Refer to ⇒ “2.8 Overview - Storage Compartment”, page 334

2.36 Driver/Front Passenger Seat Lumbar Support Adjustment Switch -E176- / -E177- , Removing and Installing

Note

The following describes the removing and installing on the left side of the vehicle. Removing and installing on the right side is identical.

Removing

– Remove the sill-side seat trim. Refer to ⇒ “2.14 Sill-Side Seat Trim, Removing and Installing”, page 345 .

– Remove the bolts -1-.

– Remove the switch -2-.

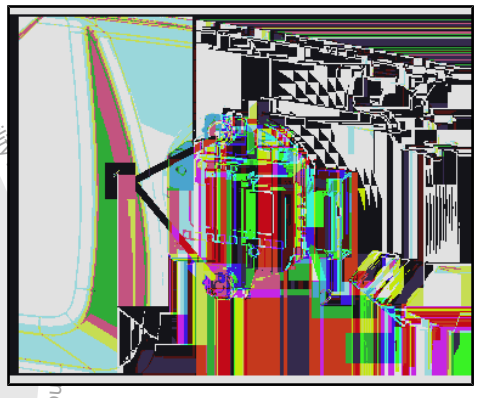

Installing

Install in reverse order of removal.

Tightening Specifications

Component	Tightening Specification
Bolt -1-	1 Nm

2.37 Lumbar Support Adjustment Motors - V125- / -V126- / -V129- / -V130- , Removing and Installing

Special tools and workshop equipment required

♦ Pop Rivet Pliers - VAG1753B-

♦ Drill

♦ Protective Eyewear

Removing

– Remove the front seat. Refer to ⇒ “2.10 Front Seat, Removing and Installing”, page 335 .

– Attach the front seat to the Fixture For Seat Repair . Refer to ⇒ “1.2 Front Seat, Mounting on Fixture for Seat Repair”, page 311 .

Protected by copyright. Copying for private or commercial purposes, in part or in whole, is not permitted unless authorised by Volkswagen AG. Volkswagen AG does not guarantee or accept any liability with respect to the correctness of information in this document. Copyright by Volkswagen AG.

– Remove the backrest cover with the backrest cushion. Refer to ⇒ “1.5 Backrest Cover and Cushion, Removing and Installing”, page 406 .

– Release and remove the connectors -1 and 2- from the motors.

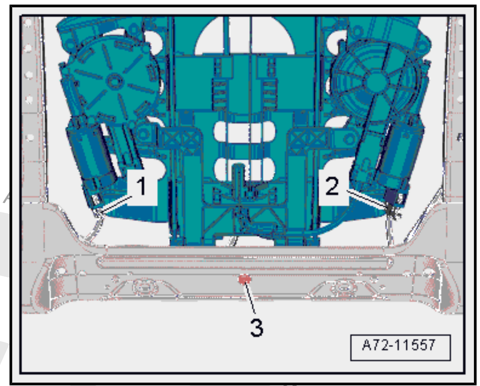

> **WARNING**
>
> *Danger of eye injury.*
>
> ♦ *Wear protective eyewear.*

– Drill out the rivet -3-.

Vehicles with Entry Assistance

– Disconnect the cable tie for the backrest release cable.

Continuation for All Vehicles

– Pivot the lower lumbar support -1- forward.

– Disengage the upper lumbar support -1- at the backrest frame -2- -arrows- and remove.

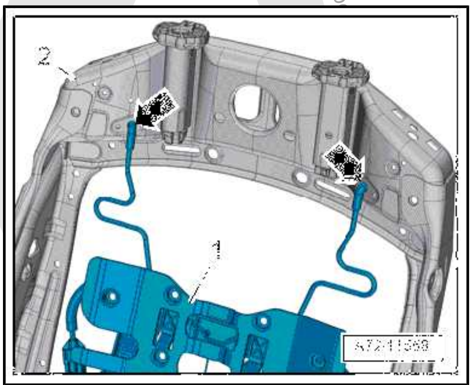

Installing

Install in reverse order of removal while paying attention to the following:

– Attach the upper lumbar support -1- in the backrest frame -2- -arrows- and move it down and to the rear.

– Rivet lumbar support to the backrest frame.

Tightening Specifications

♦ Refer to ⇒ “2.4 Overview - Front Backrest”, page 323

♦ Refer to ⇒ “2.2 Overview - Front Seat”, page 318

2.38 Driver and Front Passenger Seat Adjustment Control Head -E470- / -E471- , Removing and Installing

Note

The following describes the removing and installing on the left side of the vehicle. Removing and installing on the right side is identical.

Special tools and workshop equipment required

♦ Window Release Tool - T10236-

Removing

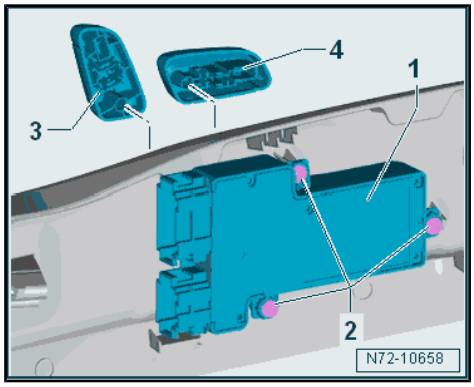

- Remove the sill-side seat trim. Refer to ⇒ “2.14.2 Door Sill Side Seat Trim, Removing and Installing, Power Seat”, page 347 .
- Carefully pry off the buttons -3- and -4- from the seat adjustment control head retainers using the Window Release Tool - T10236- .
- Remove the bolts -2-.
- Remove the seat adjustment control head -1-.

Installing

Install in reverse order of removal.

Tightening Specifications

Component	Tightening Specification
Bolt -1-	1 Nm

Protected by copyright. Copying for private or commercial purposes, in part or in whole, is not permitted unless authorised by Volkswagen AG. Volkswagen AG does not guarantee or accept any liability with respect to the correctness of information in this document. Copyright by Volkswagen AG.

3 Rear Seats

⇒ “3.1 Overview - Bench Seat/Single Seat”, page 375

⇒ “3.2 Overview - Rear Seat Backrest”, page 377

⇒ “3.3 Overview - Locking Mechanism”, page 379

⇒ “3.4 Overview - Center Armrest”, page 380

⇒ “3.5 Overview - Side Cushion”, page 381

⇒ “3.6 Overview - Backrest Remote Release”, page 381

⇒ “3.7 Bench Seat/Single Seat, Removing and Installing”, page 382

⇒ “3.8 Rear Seat Backrest, Removing and Installing”, page 384

⇒ “3.9 Locking Mechanism Trim, Removing and Installing”, page 386

⇒ “3.10 Rear Seat Backrest Locking Mechanism, Removing and Installing”, page 386

⇒ “3.11 Pass-Through Cover Frame, Removing and Installing”, page 387

⇒ “3.12 Pass-Through Door, Removing and Installing”, page 388

⇒ “3.13 Center Armrest, Removing and Installing”, page 389

⇒ “3.14 Headrest, Removing and Installing”, page 390

⇒ “3.15 Headrest Guide, Removing and Installing”, page 390

⇒ “3.16 Side Cushion, Removing and Installing”, page 391

⇒ “3.17 Release Cable for Rear Seat Backrest Remote Release, Disconnecting and Connecting”, page 393

⇒ “3.18 Actuator for Rear Seat Backrest Remote Release, Removing and Installing”, page 394

⇒ “3.19 Rear Seat Backrest Remote Release Cable, Removing and Installing”, page 395

3.1 Overview - Bench Seat/Single Seat

Protected by copyright. Copying for private or commercial purposes, in part or in whole, is not permitted unless authorised by Volkswagen AG. Volkswagen AG does not guarantee or accept any liability with respect to the correctness of information in this document. Copyright by Volkswagen AG.

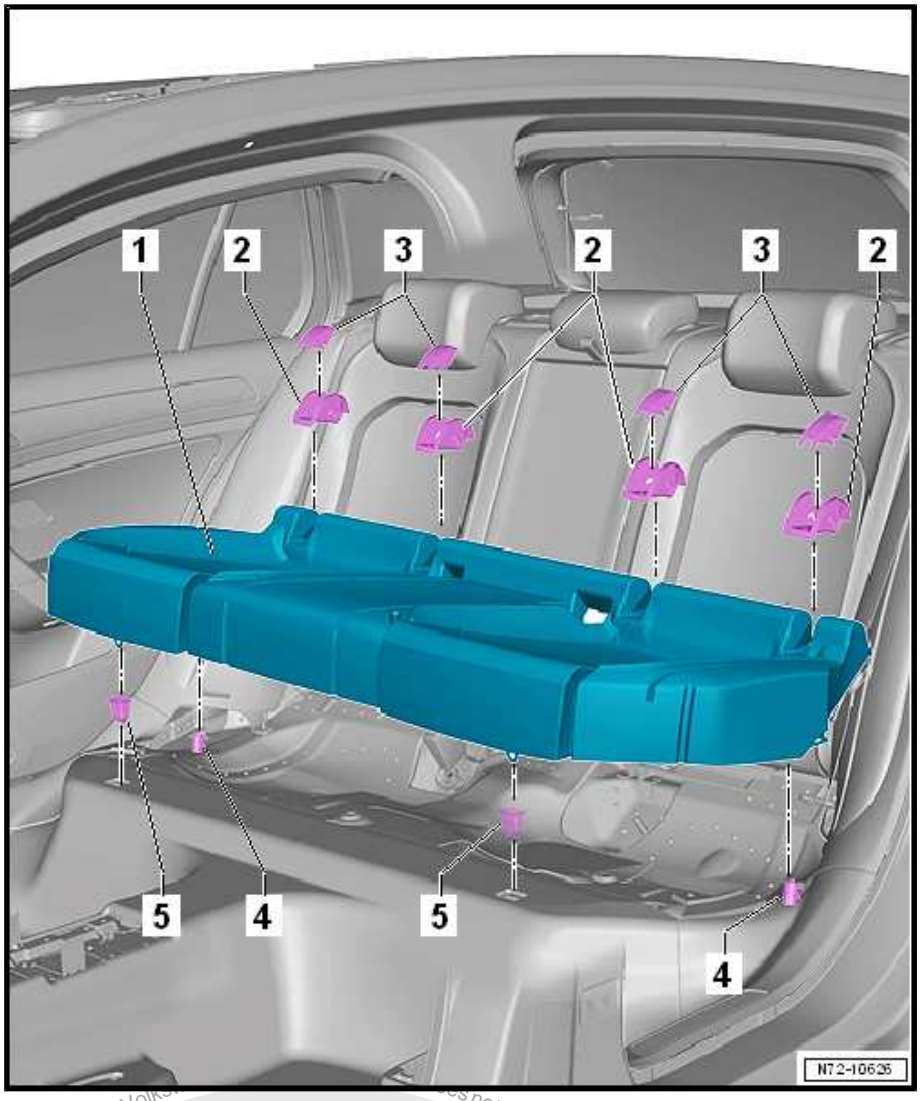

1 - Rear Bench Seat

- ❑ Allocation. Refer to the Parts Catalog.
- ❑ Removing and installing. Refer to ⇒ "3.7 Bench Seat/Single Seat, Removing and Installing", page 382 .

2 - Guide

- ❑ For the LATCH child seat anchor
- ❑ Quantity: 4
- ❑ Removing and installing. Refer to ⇒ "2.2 LATCH Child Seat Anchor Guide, Removing and Installing", page 123 .

3 - Cover

- ❑ For the LATCH child seat anchor
- ❑ Quantity: 4
- ❑ Removing and installing. Refer to ⇒ "2.2 LATCH Child Seat Anchor Guide, Removing and Installing", page 123 .

4 - Hook

- ❑ Quantity: 2
- ❑ Engages in the rear bench seat wire frame

5 - Grommets

- ❑ Quantity: 2
- ❑ For securing the rear bench seat
- ❑ Clipped into underbody
- ❑ Replace if damaged

Protected by copyright. Copying for private or commercial purposes, in part or in whole, is not permitted unless authorised by Volkswagen AG. Copyright by Volkswagen AG. does not guarantee or accept any liability with respect to the correctness of information in this document.

3.2 Overview - Rear Seat Backrest

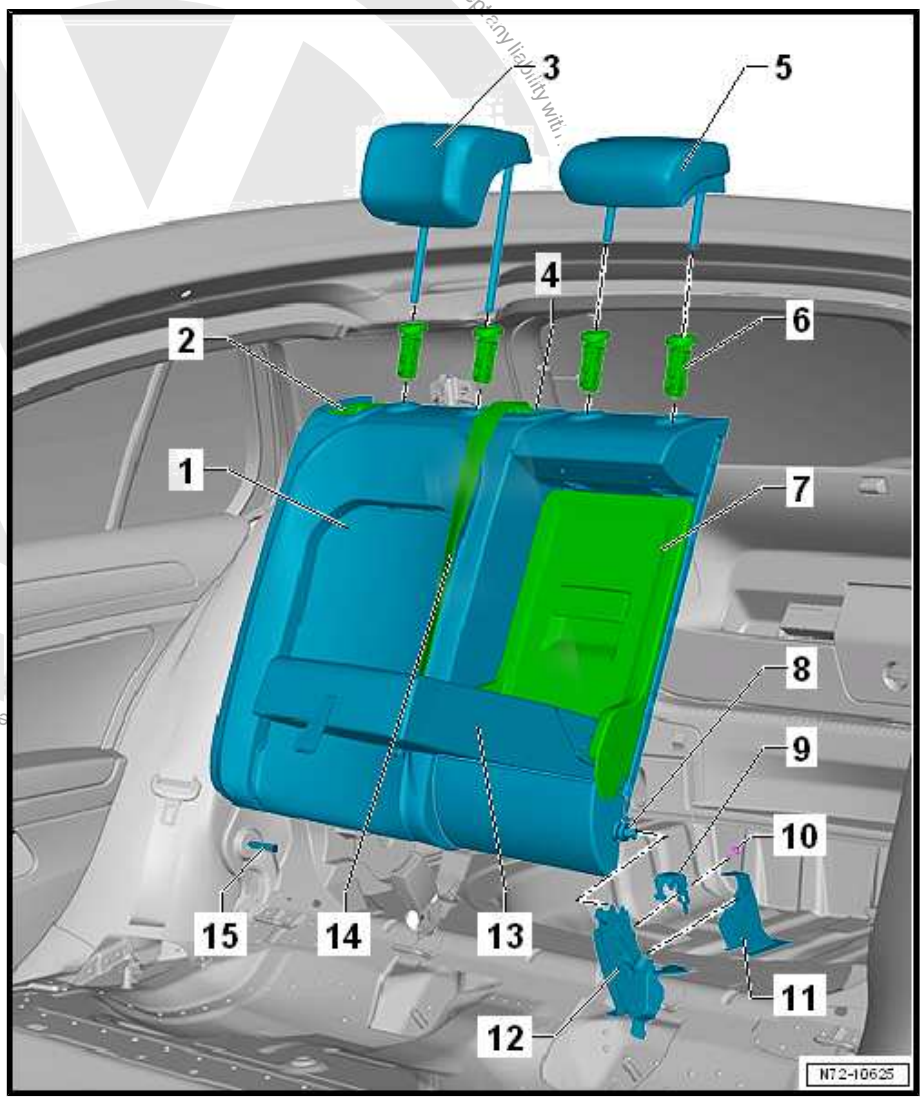

1 - Rear Seat Backrest

- ❑ Allocation. Refer to the Parts Catalog.
- ❑ Removing and installing. Refer to ⇒ "3.8 Rear Seat Backrest, Removing and Installing", page 384 .

2 - Locking Mechanism

- ❑ For the rear seat backrest
- ❑ Overview. Refer to ⇒ "3.3 Overview - Locking Mechanism", page 379 .

3 - Outer Headrests

- ❑ Removing and installing. Refer to ⇒ "3.14 Headrest, Removing and Installing", page 390 .

4 - Rear Center Seat Belt Guide

- ❑ Replace the entire seat belt guide if damaged.
- ❑ Removing and installing. Refer to ⇒ "1.4 Overview - Rear Center Three-Point Seat Belt", page 94 .

5 - Headrest in the Center

- ❑ Removing and installing. Refer to ⇒ "3.14 Headrest, Removing and Installing", page 390 .

6 - Headrest Guide

- ❑ Removing and installing. Refer to ⇒ "3.15 Headrest Guide, Removing and Installing", page 390 .

7 - Door

- ❑ For the pass-through opening
- ❑ Allocation. Refer to the Parts Catalog.
- ❑ Removing and installing. Refer to ⇒ "3.12 Pass-Through Door, Removing and Installing", page 388 .

8 - Inner Mounting Pin

- ❑ 13.5 Nm
- ❑ For the rear seat backrest

9 - Securing bracket

- ❑ for the center bracket
- ❑ Removing and installing. Refer to ⇒ "3.8 Rear Seat Backrest, Removing and Installing", page 384 .

10 - Screw

- ❑ 8 Nm

11 - Cover

- ❑ For the center bracket

Copyright Volkswagen AG. Volkswagen AG does not guarantee or accept any liability with respect to the correctness of information in this document. Copyright by Volkswagen AG. Volkswagen AG does not guarantee or accept any liability with respect to the correctness of information in this document. Copyright by Volkswagen AG.

- ❑ Removing and installing. Refer to ⇒ “3.8 Rear Seat Backrest, Removing and Installing”, page 384 .

12 - Center Support

- ❑ Welded to the floor panel.

13 - Center Armrest

- ❑ Allocation. Refer to the Parts Catalog.
- ❑ Overview. Refer to ⇒ “3.4 Overview - Center Armrest”, page 380 .
- ❑ Removing and installing. Refer to ⇒ “3.13 Center Armrest, Removing and Installing”, page 389 .

14 - Rear Three-Point Seat Belt

- ❑ Removing and installing. Refer to ⇒ “1.8.7 Rear Three Point Seat Belt in Center, Removing and Installing”, page 113 .

15 - Outer Pivot Pin

- ❑ Welded to the body

Protected by copyright. Copying for private or commercial purposes, in part or in whole, is not permitted unless authorised by Volkswagen AG. Volkswagen AG does not guarantee or accept any liability with respect to the correctness of information in this document. Copyright by Volkswagen AG.

3.3 Overview - Locking Mechanism

Note

The overview shows the locking mechanism on the left 1/3 rear seat backrest. The locking mechanism on the right 2/3 rear seat backrest is identical.

1 - Backrest Frame

2 - Locking Mechanism Trim

- ❑ Removing and installing. Refer to ⇒ "3.9 Locking Mechanism Trim, Removing and Installing", page 386 .

3 - Rear Seat Backrest Locking Mechanism

- ❑ Removing and installing. Refer to ⇒ "3.10 Rear Seat Backrest Locking Mechanism, Removing and Installing", page 386 .

4 - Screw

- ❑ 23 Nm
- ❑ Quantity: 2

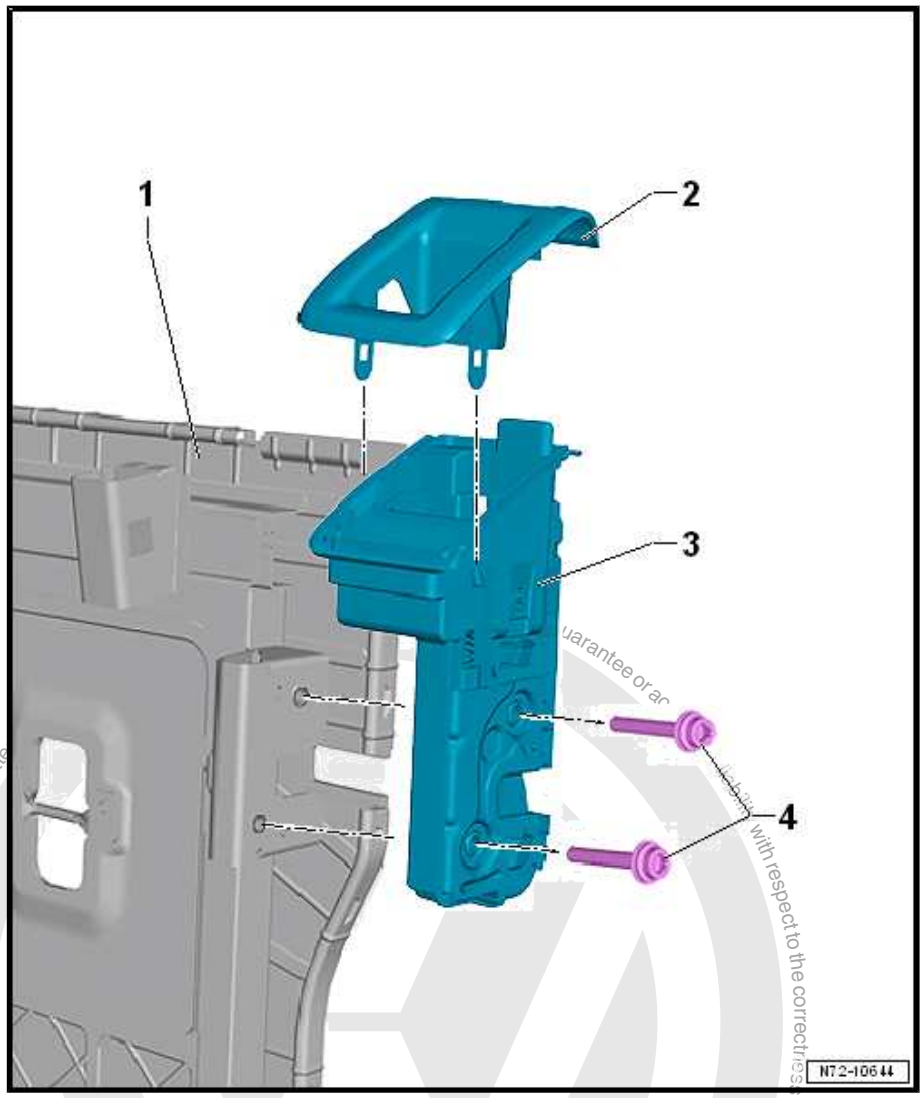

Protected by copyright. Copying for private or commercial purposes, in part or in whole, is not permitted. Copyright by Volkswagen AG. No guarantee or acceptance of liability with respect to the correctness of information in this document.

3.4 Overview - Center Armrest

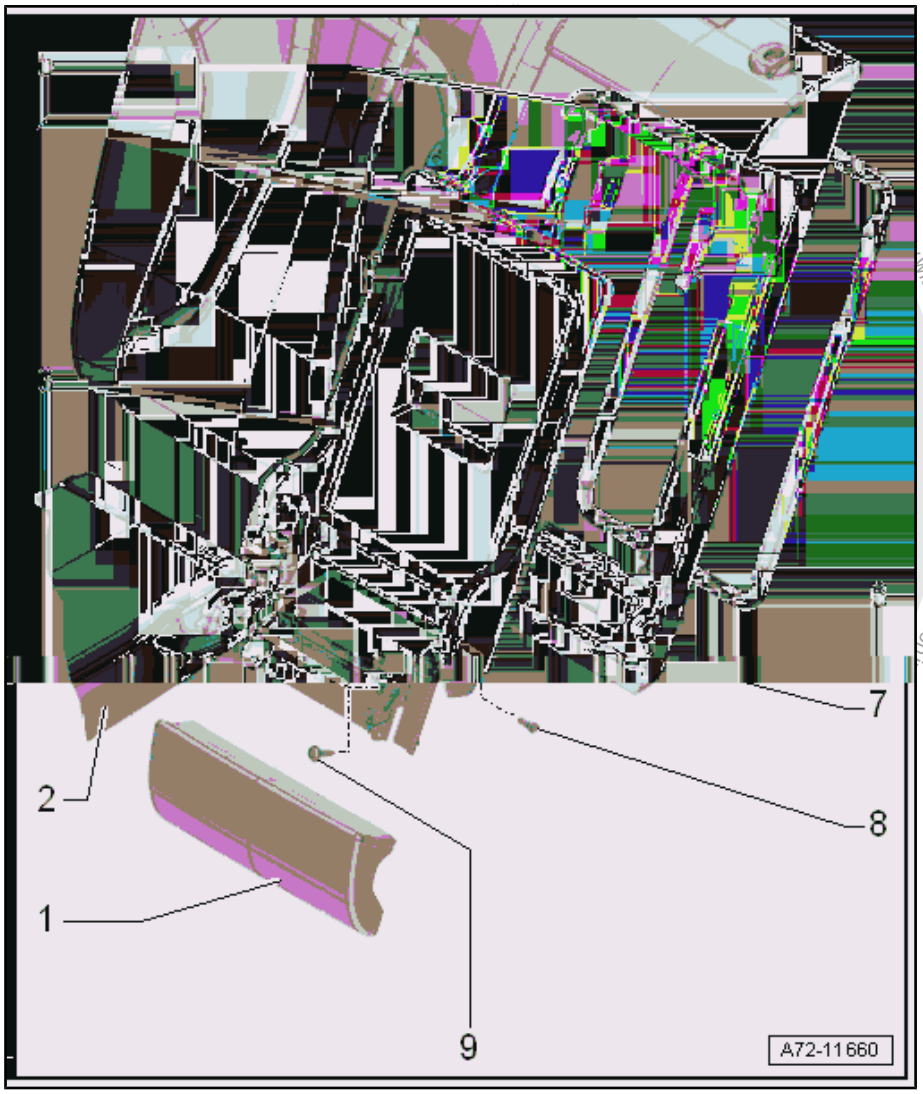

1 - Center Cushion

- ❑ Allocation. Refer to the Parts Catalog.
- ❑ Removing and installing. Refer to ⇒ "2.5 Center Cushion, Removing and Installing, Backrest with Pass-Through", page 422 .

2 - Center Armrest

- ❑ Removing and installing. Refer to ⇒ "3.13 Center Armrest, Removing and Installing", page 389 .

3 - Door

- ❑ For the pass-through opening
- ❑ Removing and installing. Refer to ⇒ "3.12 Pass-Through Door, Removing and Installing", page 388 .

4 - Trim

- ❑ For the rear lid locking mechanism
- ❑ Removing and installing. Refer to ⇒ "3.11 Pass-Through Cover Frame, Removing and Installing", page 387 .

5 - Stop Strip

- ❑ Clipped into the rear seat backrest
- ❑ Removing and installing. Refer to ⇒ "3.11 Pass-Through Cover Frame, Removing and Installing", page 387 .

6 - Cover Frame

- ❑ For the pass-through opening
- ❑ Clipped into the rear seat backrest
- ❑ Removing and installing. Refer to ⇒ "3.11 Pass-Through Cover Frame, Removing and Installing", page 387 .

7 - Right 2/3 Rear Seat Backrest

- ❑ With pass-through opening
- ❑ Allocation. Refer to the Parts Catalog.

8 - Screw

- ❑ 12 Nm
- ❑ Quantity: 2
- ❑ Self-tapping
- ❑ Replace after removing

9 - Screw

- ❑ 8 Nm

with respect to the correctness of information

- ❑ Quantity: 2

Protected by copyright. Copying for private or commercial purposes, in part or in whole, is not permitted unless authorised by Volkswagen AG. Volkswagen AG does not guarantee or accept

3.5 Overview - Side Cushion

1 - Side Cushion

- ❑ Allocation. Refer to the Parts Catalog.
- ❑ Removing and installing. Refer to ➤ "3.16 Side Cushion, Removing and Installing", page 391 .

2 - Mounting Grommet

- ❑ Clipped into the side cushion bracket
- ❑ Replace if damaged

3 - Side Cushion Bracket

4 - Screw

- ❑ 8 Nm

5 - Nut

- ❑ 8 Nm

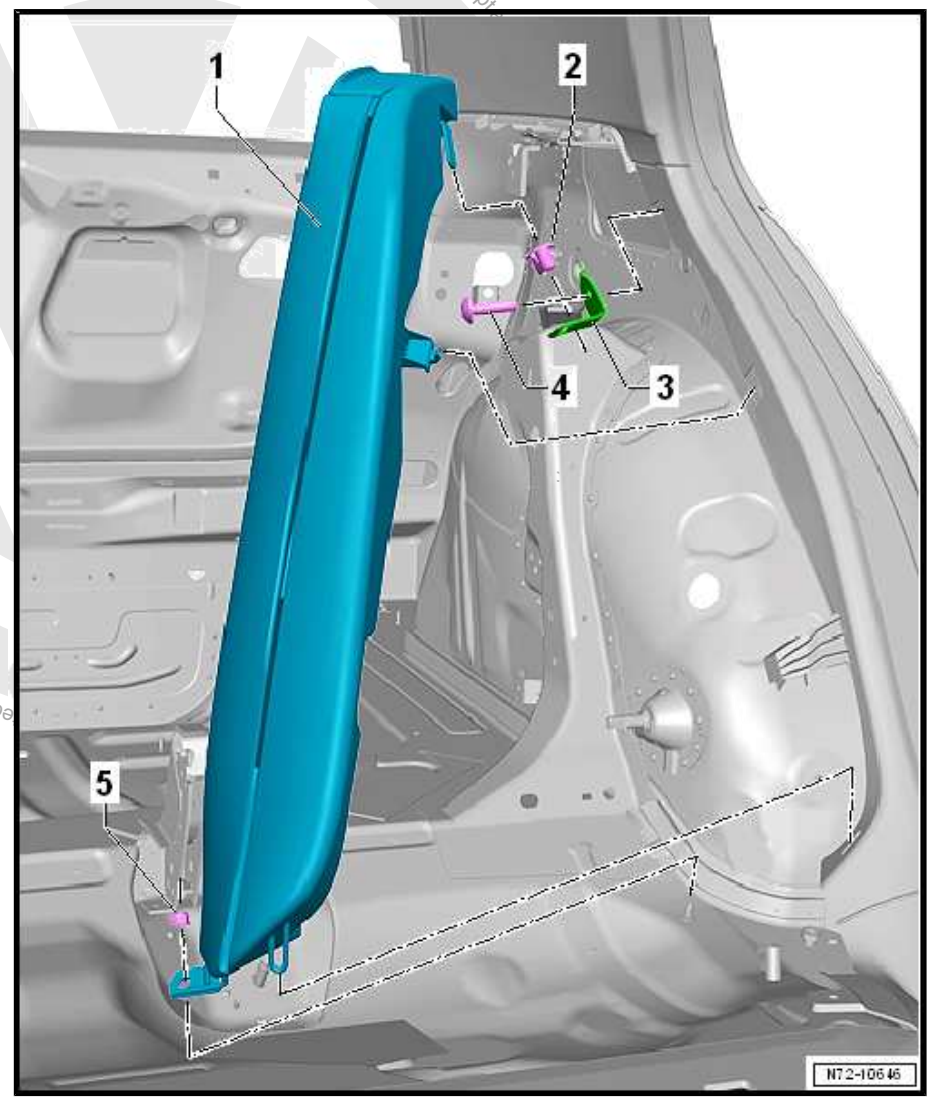

3.6 Overview - Backrest Remote Release

Note

The illustration shows the backrest remote release on the left side. The right side is similar.

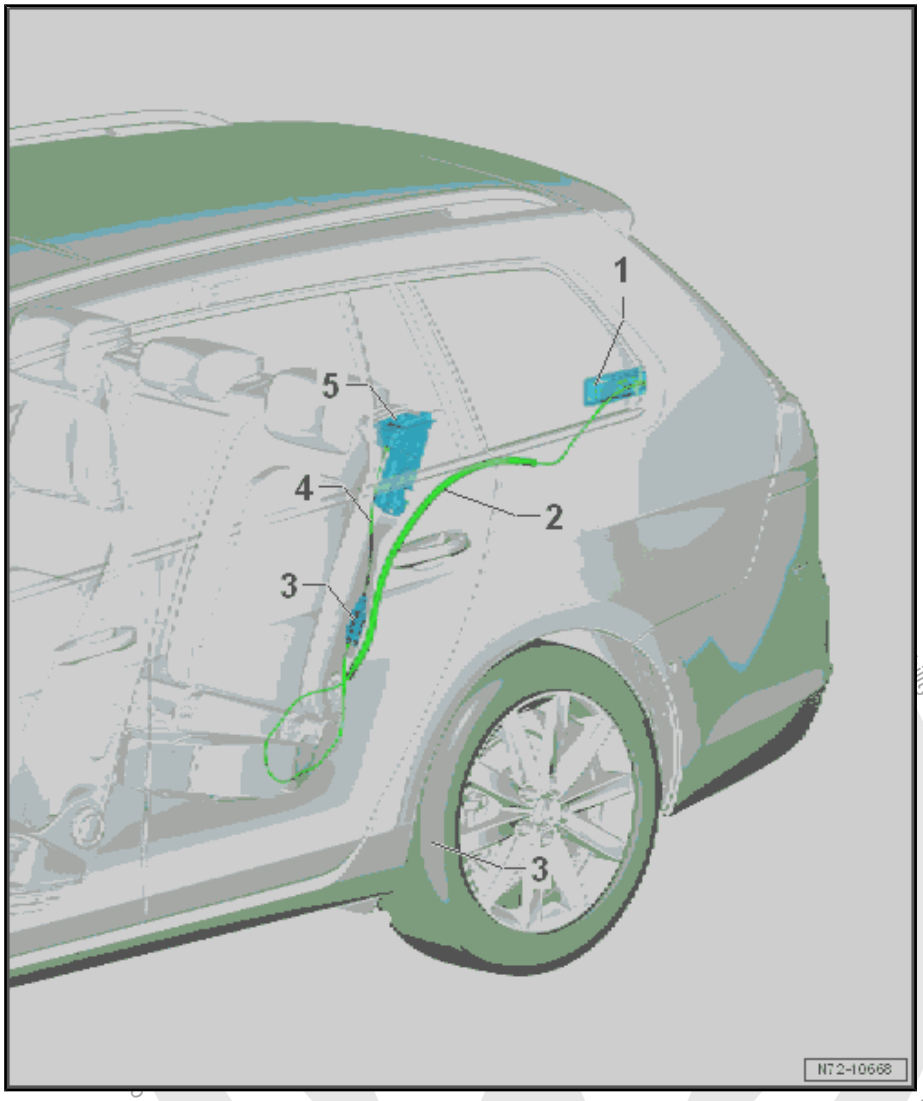

1 - Actuator for Backrest Remote Release

- ❑ Removing and installing. Refer to ⇒ “3.18 Actuator for Rear Seat Backrest Remote Release, Removing and Installing”, page 394 .

2 - Vehicle-Side Release Cable

- ❑ Removing and installing. Refer to ⇒ “3.19 Rear Seat Backrest Remote Release Cable, Removing and Installing”, page 395 .

3 - Connecting Part

- ❑ Release cable for backrest remote release, disconnecting and connecting. Refer to ⇒ “3.17 Release Cable for Rear Seat Backrest Remote Release, Disconnecting and Connecting”, page 393 .

4 - Seat-Side Release Cable

- ❑ Removing and installing. Refer to ⇒ “3.19 Rear Seat Backrest Remote Release Cable, Removing and Installing”, page 395 .

5 - Rear Seat Backrest Locking Mechanism

- ❑ Removing and installing. Refer to ⇒ “3.10 Rear Seat Backrest Locking Mechanism, Removing and Installing”, page 386 .

3.7 Bench Seat/Single Seat, Removing and Installing

Removing

– Move the front seats all the way forward.

– Unclip the guides -1- for the LATCH child seat anchor (quantity: 4) from the anchors. Refer to ⇒ “2.2 LATCH Child Seat Anchor Guide, Removing and Installing”, page 123 .

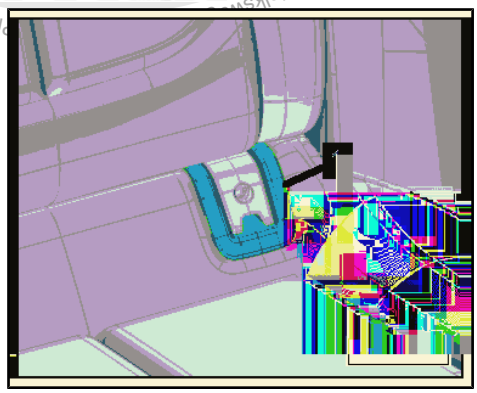

Protected by copyright. Copyright by Volkswagen AG. Copying for private or commercial purposes, in part or in whole, is not permitted unless authorized by Volkswagen AG. Volkswagen AG does not guarantee or accept any liability with respect to the correctness of information in this document.

– With both hands, grasp the rear bench seat under the seat frame.
– Pull the rear bench seat -1- up forcefully with both hands in direction of -arrows A- so the wire hooks -2- on the rear bench seat release from the mounting grommet -3-.
– Repeat the procedure on the other side of the rear bench seat in direction of -arrows B-.
– Gently lift the rear bench seat -1- at front and slide the wire frame -2- out of the hook -3- toward the rear.

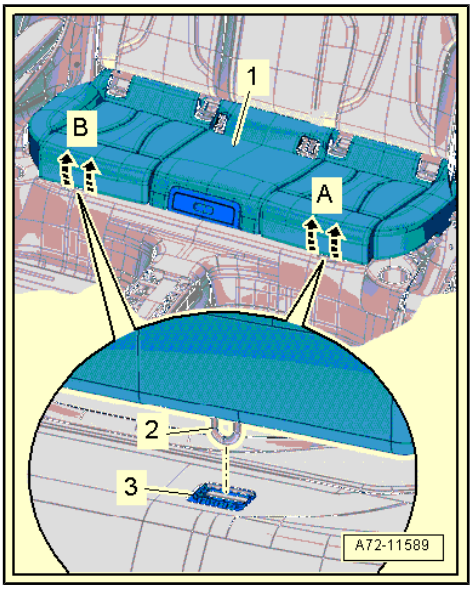

– Remove the rear bench seat from the vehicle.

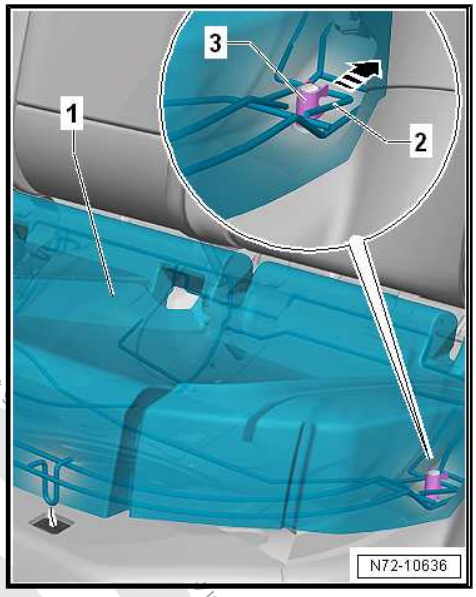

Protected by copyright. Copying for private or commercial purposes, in part or in whole, is not permitted unless authorised by Volkswagen AG. Volkswagen AG does not
with respect to the correctness of information in this document. Copyright by Volkswagen AG.

Installing

Install in reverse order of removal while paying attention to the following:

– Check body openings -arrow- for deformations.

– In the case of deformation, readjust the panel with a plastic hammer.

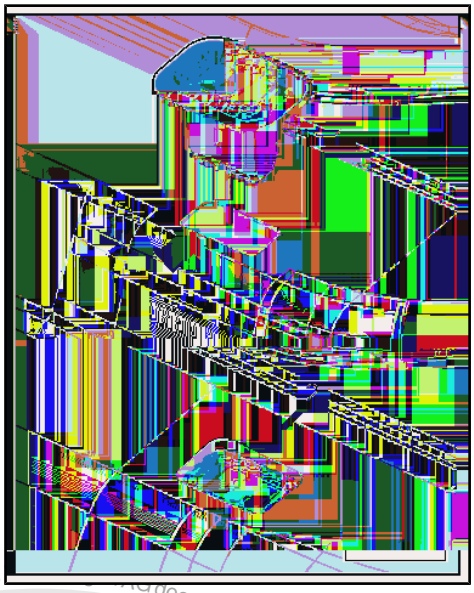

Note

Remaining minor deformation is permissible.

– Lift the carpet -2- and press in new mounting grommets -1- until they engage audibly in body opening -arrow-.

– Place the carpet around the grommet as illustrated.

Note

The carpet must not cover the grommet.

– Check if the wire frame is aligned in the marked area -arrows- before installing the rear bench seat.

– If the wire frame is bent, bend it back far enough until it is re-aligned.

– Install the rear bench seat and push the wire hooks into the mounting grommets.

– Make sure the wire hooks are engaged correctly in the grommets.

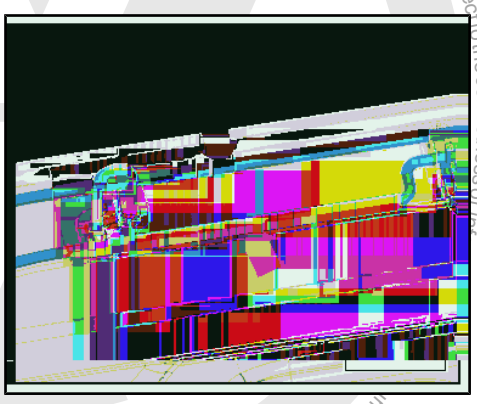

3.8 Rear Seat Backrest, Removing and Installing

Special tools and workshop equipment required

♦ Torque Wrench 1331 5-50Nm - VAG1331-

Protected by copyright. Copying for private or commercial purposes, in part or whole, is not permitted unless authorised by Volkswagen AG. Volkswagen AG does not guarantee or accept any liability with respect to the correctness of information. Copyright by Volkswagen AG.

Protected by copyright. Copying for private or commercial purposes, in part or in whole, is not permitted unless authorised by Volkswagen AG. Volkswagen AG does not guarantee

Removing

– Remove the rear bench seat. Refer to ⇒ “3.7 Bench Seat/Single Seat, Removing and Installing”, page 382 .

– Remove the seat belt latch with the right rear belt end fitting. Refer to ⇒ “1.15 Rear Seat Belt Latch, Removing and Installing”, page 121 .

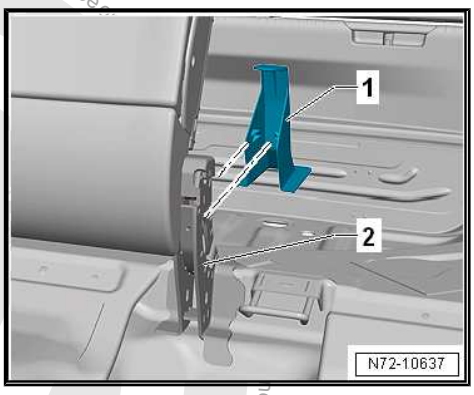

– Remove the cover -1- from the center support -2-.

– Remove the bolt -2-.

– Equipment levels with pass-through: open the pass through door, and fold forward.

– Fold the rear securing clip -1- in direction of -arrow A-, disengage at the front from the center support -arrow B- and remove.

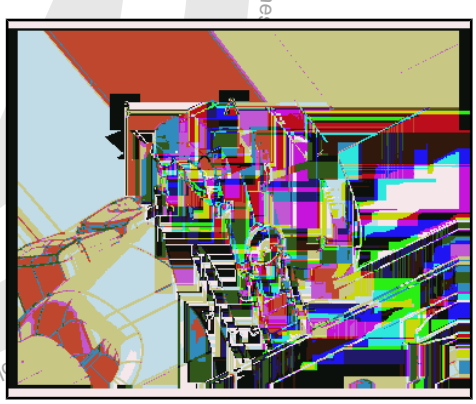

Note

To improve clarity, the left rear seat backrest 1/3 is not shown.

– Lift the rear seat backrest -2- out of the center support -3- and pull it out toward the center of the vehicle out of its outer mounts -1- -arrows-.

– Remove rear seat backrest from the vehicle.

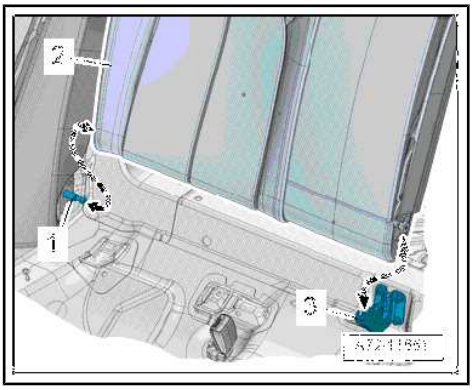

Installing

– In a vertical installation position, slide the rear seat backrest -2- onto the outer mounting pins -1-.

– Place the rear seat backrest -2- in the center support -3-.

Installation is performed in reverse order of the removal.

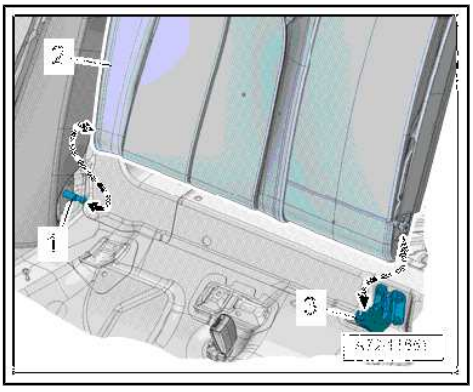

Tightening Specifications

♦ Refer to ⇒ “3.2 Overview - Rear Seat Backrest”, page 377

3.9 Locking Mechanism Trim, Removing and Installing

Special tools and workshop equipment required

- Trim Removal Wedge - 3409-
- Hook - T10538-

Removing

Note

Due to the limited amount of space near the "locking mechanism trim", it is helpful to work with a second technician.

– Remove the respective rear headrest. Refer to ⇒ "3.14 Headrest, Removing and Installing", page 390 .

– Using a screwdriver, unhook the side and upper backrest cover molding strip near the trim from the backrest.

– Using the Trim Removal Wedge - 3409- , carefully push the cover outward at the side of the trim -2-.

– Using a light, determine the position of the respective release tab -1-.

– Carefully bend the respective release tab -1- outward using the Hook - T10538- .

– After both release tabs -1- have been bent outward, pull the trim upward in direction of -arrow- and remove.

Installing

Install in reverse order of removal while paying attention to the following:

– After installing the trim, the rear seat backrest locking mechanism must function easily.

3.10 Rear Seat Backrest Locking Mechanism, Removing and Installing

Special tools and workshop equipment required

- Torque Wrench 1331 5-50Nm - VAG1331-

Removing

– Remove the locking mechanism trim. Refer to ⇒ "3.9 Locking Mechanism Trim, Removing and Installing", page 386 .

Protected by copyright. Copying for private or commercial purposes, in part or in whole, is not permitted unless authorised by Volkswagen AG. Volkswagen AG does not guarantee or accept any liability with respect to the correctness of information in this document. Copyright by Volkswagen AG.

– Only loosen the cover in the locking mechanism area. Refer to
⇒ “2.4 Rear Seat Backrest Cover and Cushion, Removing and Installing”, page 419 .

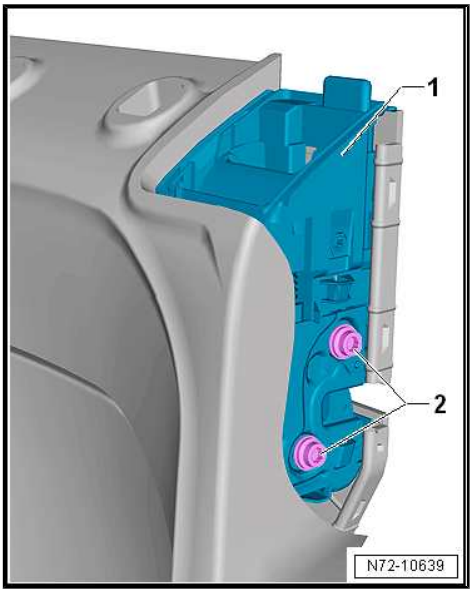

Wagon

– Remove the seat-side release cable from the locking mechanism -1-. Refer to ⇒ page 395 .

Continuation for All Vehicles

– Remove the bolts -2-.

– Remove the locking mechanism -1- from the backrest frame.

Installing

Install in reverse order of removal.

Tightening Specifications

♦ Refer to ⇒ “3.3 Overview - Locking Mechanism”, page 379

3.11 Pass-Through Cover Frame, Removing and Installing

Special tools and workshop equipment required

♦ Trim Removal Wedge - 3409-

♦ Trim Release Lever - T10039-

♦ Hook Tool - T40207-

Removing

– Fold down the center armrest and open the pass-through door.

– Unclip the trim -1- from the rear seat backrest using the Trim Removal Wedge - 3409- -arrows-.

– Use the Hook Tool - T40207- to remove the retaining tabs -2- alternating between the sides.

– Pry off the cover frame -2- using the Trim Release Lever - T10039- from the rear seat backrest -1- in direction of -arrow A-.

– Continue prying off starting at the upper left corner in direction of -arrow B-.

Protected by copyright. Copying for private or commercial purposes, in part or in whole, is not permitted unless authorised by Volkswagen AG.
Protected by copyright. Copying for private or commercial purposes, in part or in whole, is not permitted unless authorised by Volkswagen AG.
Copyright by Volkswagen AG.
Copyright by Volkswagen AG.
erWin

– Remove the pass-through cover frame.

– Push the backrest cushion with backrest cover slightly aside, and unclip the pass-through door stop strip -1- from the rear seat backrest in direction of -arrows-.

– Remove the pass-through door stop strip.

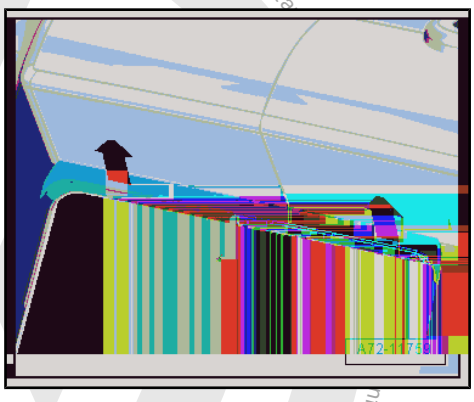

Installing

Install in reverse order of removal.

3.12 Pass-Through Door, Removing and Installing

Special tools and workshop equipment required

♦ Torque Wrench 1410 - VAG1410-

Removing

– Fold down the center armrest and open the pass-through door.

– Remove the bolts -2-.

– Remove the center armrest with the cover -1- for the pass through.

– Remove the center armrest. Refer to ⇒ “3.13 Center Armrest, Removing and Installing”, page 389 .

Protected by copyright. Copying for private or commercial purposes, in part or in whole, not permitted unless authorised by Volkswagen AG. Volkswagen AG. Copyright by Volkswagen AG. No information in this document.

– Remove the lower center cushion. Refer to ⇒ “2.5 Center Cushion, Removing and Installing, Backrest with Pass-Through”, page 422 .

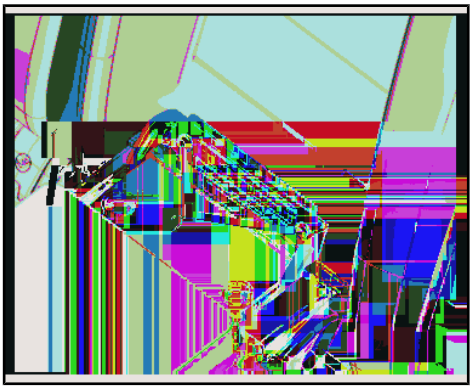

Installing

– Install the pass-through door -1- and the center armrest and tighten the bolts hand tight.

– Close the pass-through door and align.

– Tighten the bolts -2- on the rear seat backrest.

Install in reverse order of removal.

Tightening Specifications

♦ Refer to ⇒ “3.4 Overview - Center Armrest”, page 380

3.13 Center Armrest, Removing and Installing

Special tools and workshop equipment required

♦ Torque Wrench 1410 - VAG1410-

Removing

– Open the pass through door -2- with the center armrest approximately $^1/_3$.

– Remove the bolts -arrows-.

– Remove the renter armrest -1- from the pass-through door.

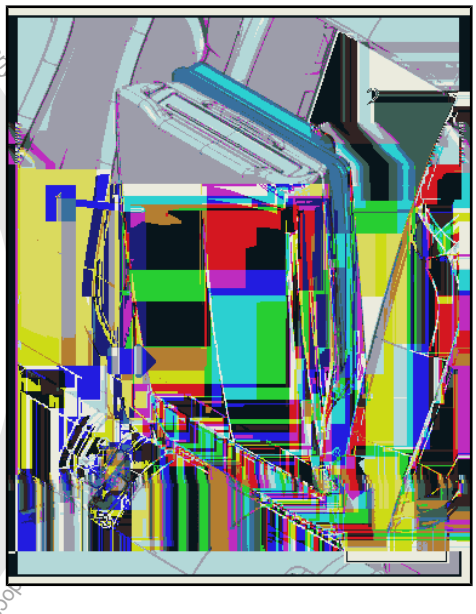

Installing

Install in reverse order of removal.

Tightening Specifications

♦ Refer to ⇒ “3.4 Overview - Center Armrest”, page 380

Protected by copyright. Copying for private or commercial purposes, in part or in whole, is not permitted unless authorised by Volkswagen AG. Copyright by Volkswagen AG. Volkswagen AG does not guarantee or accept any liability with respect to the correctness of information in this document.

3.14 Headrest, Removing and Installing

Removing

– Press the height adjustment release button -3- on the headrest guide -4- in direction of the -arrow-.

– At the same time, remove the headrest -1- all the way from the rear seat backrest -2-.

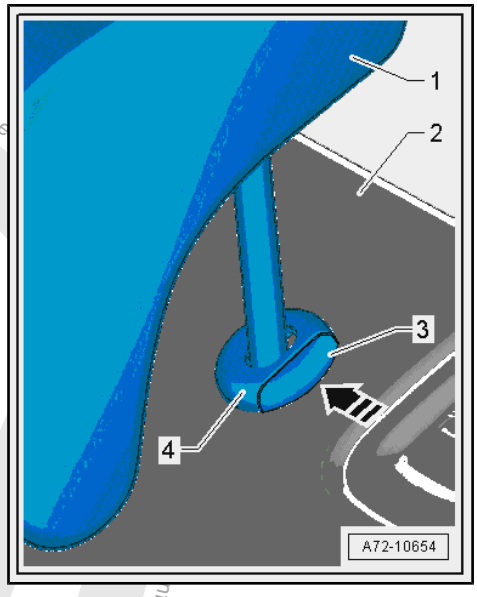

– Using a small flat-head screwdriver, press the locking spring as far as the stop through the opening -arrow- in the headrest guide -1-.

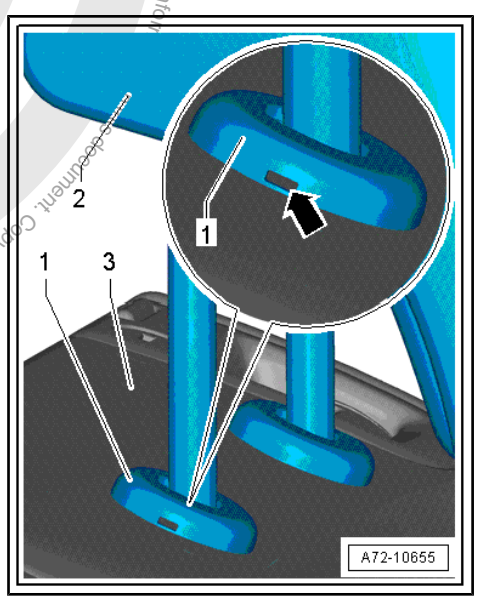

Note

The position of the opening in the headrest guide -arrow- can either be in direction of travel »on the right« or »on the left side«.

– At the same time, remove the headrest -2- from the rear seat backrest -3-.

Installing

Install in reverse order of removal.

3.15 Headrest Guide, Removing and Installing

Note

Two commercially available screwdrivers are required for removal. Blade height: 0.4 mm, blade width: 8 mm.

Removing

– Remove the rear headrest. Refer to
⇒ “3.14 Headrest, Removing and Installing”, page 390 .

– Press the backrest cover with backrest cushion -1- slightly downward at the outer sides.

– Insert a screwdriver on each side of the headrest tube -3- up to the height of the tabs in direction of -arrows- in the backrest.

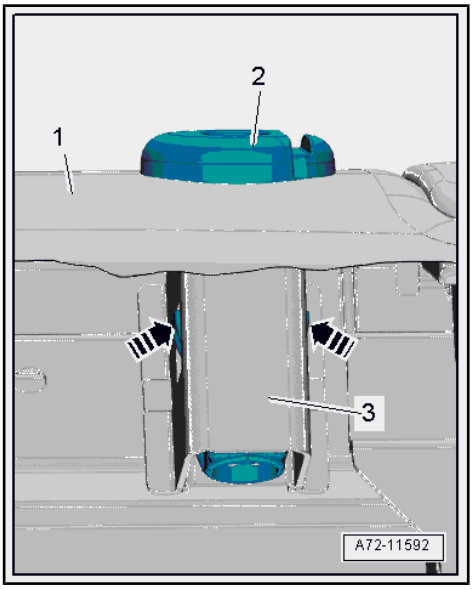

Note

Place the two screwdrivers next to the retaining tabs so that the flat side of the screwdriver blade contacts the retaining tab.

– Turn both screwdrivers 90°, which releases the headrest guide retaining tabs.

– Carefully pry the headrest guide -2- out of the backrest using a third screwdriver.

Installing

Install in reverse order of removal.

3.16 Side Cushion, Removing and Installing

Special tools and workshop equipment required

♦ Torque Wrench 1410 - VAG1410-

Removing

WARNING

Follow the General Safety Precautions when working with air-bags, belt tensioners and battery cut-out units (pyrotechnic components). Refer to ⇒ “1.2 Safety Precautions for Pyrotechnic Components”, page 3 .

– Disconnect the battery. Refer to ⇒ Electrical Equipment; Rep. Gr. 27 ; Battery; Battery, Disconnecting and Connecting .

– Remove the rear bench seat. Refer to
⇒ “3.7 Bench Seat/Single Seat, Removing and Installing”, page 382 .

Protected by copyright. Copying for private or commercial purposes, in part or in whole, is not permitted unless authorised by Volkswagen AG. Volkswagen AG does not guarantee or accept any liability with respect to the correctness of information in this document. Copyright by Volkswagen AG.

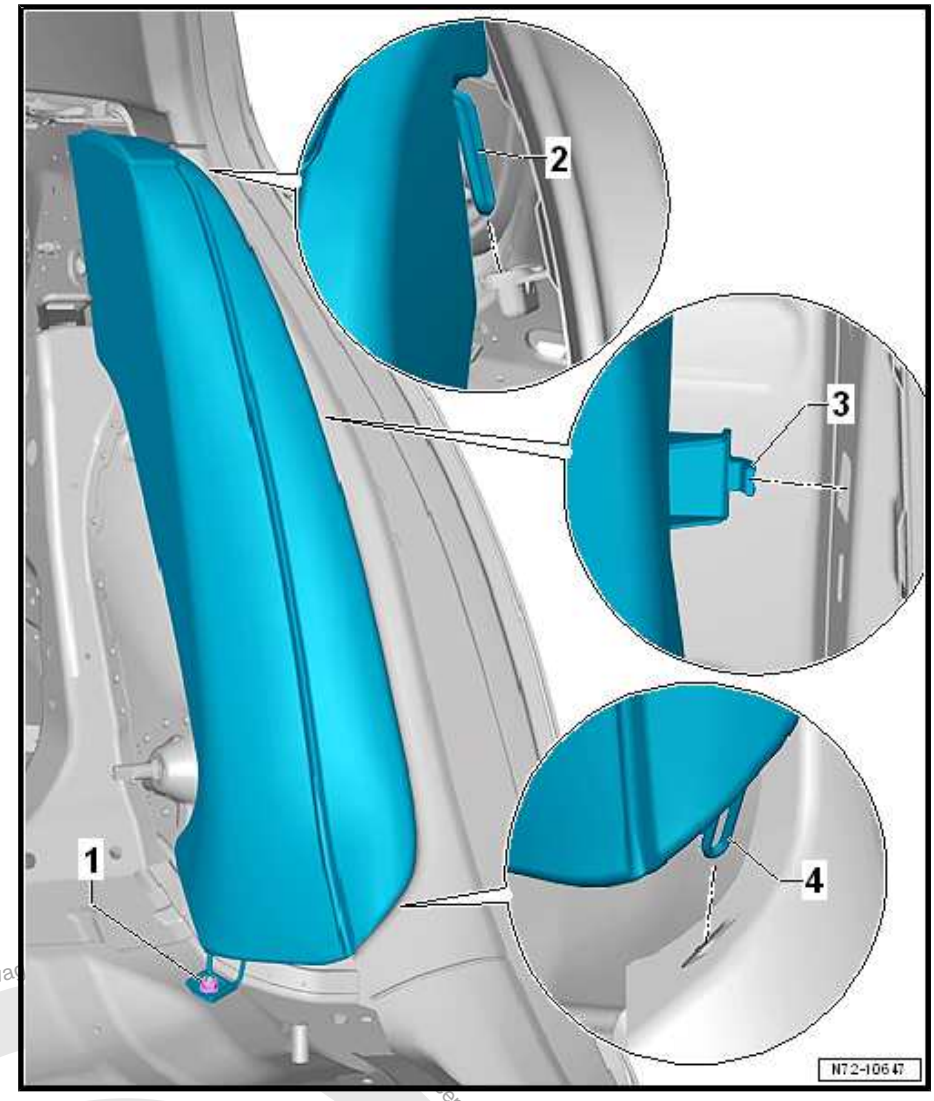

– Remove the nut -1-.
– Fold the rear seat backrest forward.
– Loosen the retaining tab -3- from the side body.
– Remove the side cushion with the retaining brackets -2 and 4- upward.
– Disconnect the wire for the side airbag from the side cushion.

Installing

Install in reverse order of removal while paying attention to the following:

– Switch the ignition on.

> **WARNING**
>
> ***Make sure that no persons are in the vehicle.***

– Connect the battery. Refer to ⇒ Electrical Equipment; Rep. Gr. 27 ; Battery; Battery, Disconnecting and Connecting.

Protected by copyright. Copying for private or commercial purposes, in part or in whole, is not permitted unless authorised by Volkswagen AG. Copyright by Volkswagen AG. No liability is accepted any liability with respect to the correctness of information in this document.

Note

If the Airbag Indicator Lamp - K75- signals a fault after installing, check the DTC memory, erase it and check it again use the Vehicle Diagnostic Tester .

Tightening Specifications

♦ Refer to ⇒ “3.5 Overview - Side Cushion”, page 381

3.17 Release Cable for Rear Seat Backrest Remote Release, Disconnecting and Connecting

Protected by copyright. Copyright by Volkswagen AG. Volkswagen AG does not guarantee or accept any liability with respect to the correctness of information in this document. Copying for private or commercial purposes, in part or in whole, is not permitted unless authorised by Volkswagen AG.

Note

The disconnecting and connecting procedure is described for the left side of the vehicle. Disconnecting and connecting on the right side is identical.

Disconnecting

– Fold the rear seat backrest forward.

– Unclip the cover -1- from the rear seat backrest.

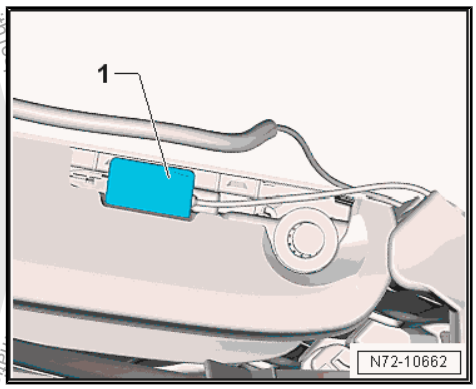

– Remove the release cable -1- from the cable bracket -2-.

– Remove the release cable pin -3- from the mount -4- in the connecting piece.

– Guide the release cable -1- out of the rear seat backrest -arrow-.

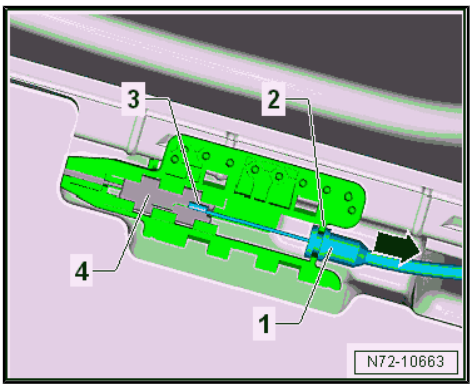

Connecting

Connecting the release cables occurs in the reverse order, while noting the following:

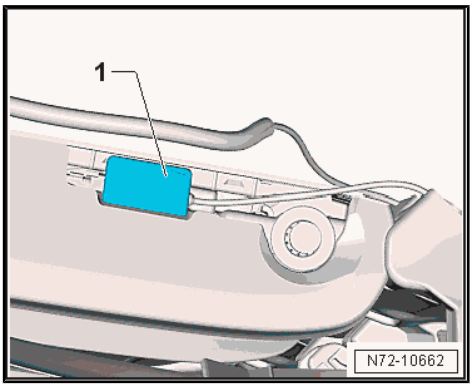

Note

The backrest cover must be securely clamped all around the cover -1-.

Copyright by Volkswagen AG. Volkswagen AG does not guarantee or accept any liability with respect to the correctness of information in this document. Copy, in part or in whole, is not permitted unless authorised by Volkswagen AG.

3.18 Actuator for Rear Seat Backrest Remote Release, Removing and Installing

Note

The following describes the removing and installing on the left side of the vehicle. Removing and installing on the right side is identical.

Removing

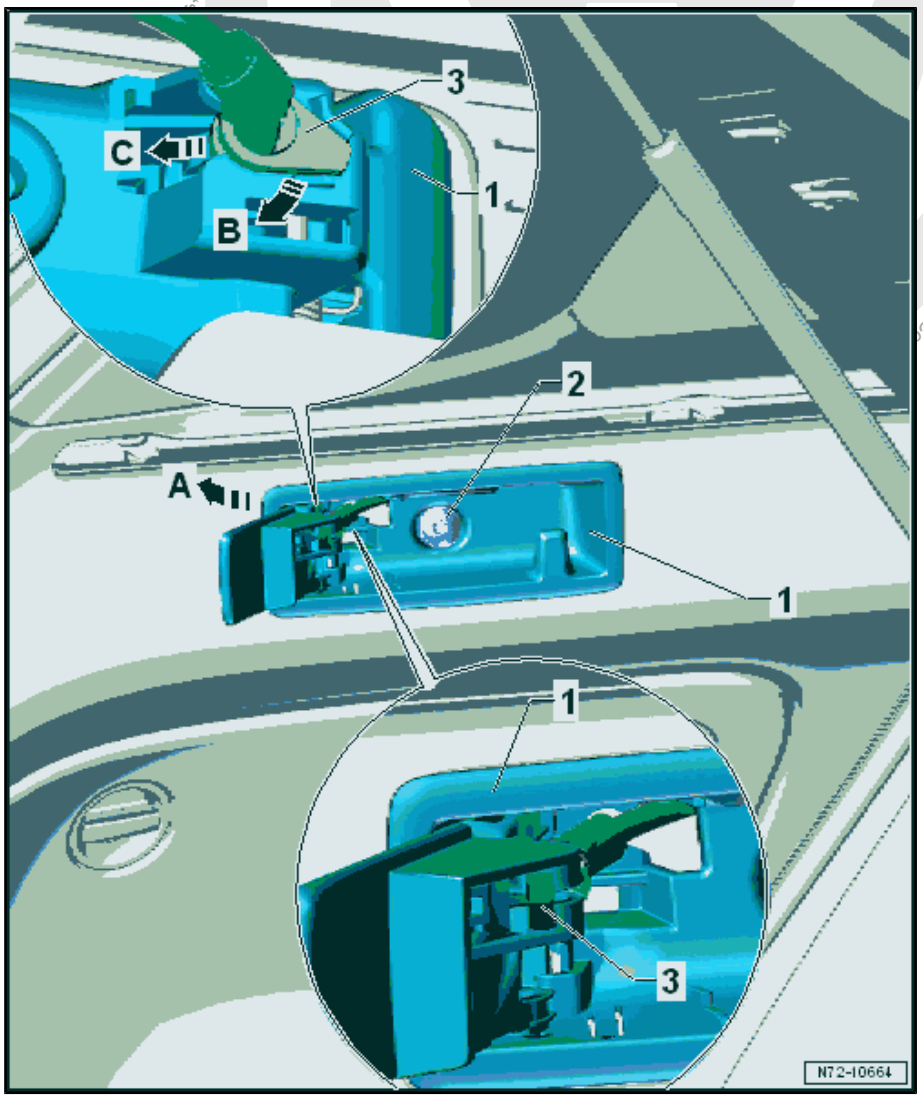

- Pull and hold the operating lever for the backrest remote release -1-.
- Remove the bolt -2-.
- Unclip the actuator for the backrest remote release -1- from the luggage compartment side trim panel and tilt it out in direction of -arrow A-.
- Release the cable bracket from the release cable -3- in direction of -arrow B-.
- Slide the release cable -3- out of the cable bracket for the backrest remote release actuator -1- in direction of -arrow C-.

– Disengage the release cable pin -3- from the release lever for the backrest remote release -1-.

– Remove the actuator for backrest remote release.

Installing

Install in reverse order of removal while paying attention to the following:

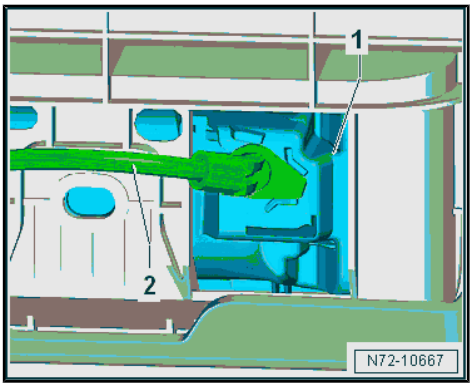

Note

Make sure that the release cable bracket -2- is positioned correctly in the guide tabs of the actuator for the backrest remote release -1-.

Tightening Specifications

♦ Refer to
⇒ "6.3.2 Overview - Luggage Compartment Side Trim Panel, Wagon", page 279

3.19 Rear Seat Backrest Remote Release Cable, Removing and Installing

Note

The following describes the removing and installing on the left side of the vehicle. Removing and installing on the right side is identical.

Removing

Backrest-Side

– Remove the rear seat backrest. Refer to
⇒ "3.8 Rear Seat Backrest, Removing and Installing", page 384 .

Protected by copyright. Copying for private or commercial purposes, in part or in whole, is not permitted unless authorised by Volkswagen AG. Volkswagen AG does not guarantee or accept any liability with respect to the correctness of information in this document. Copyright by Volkswagen AG.

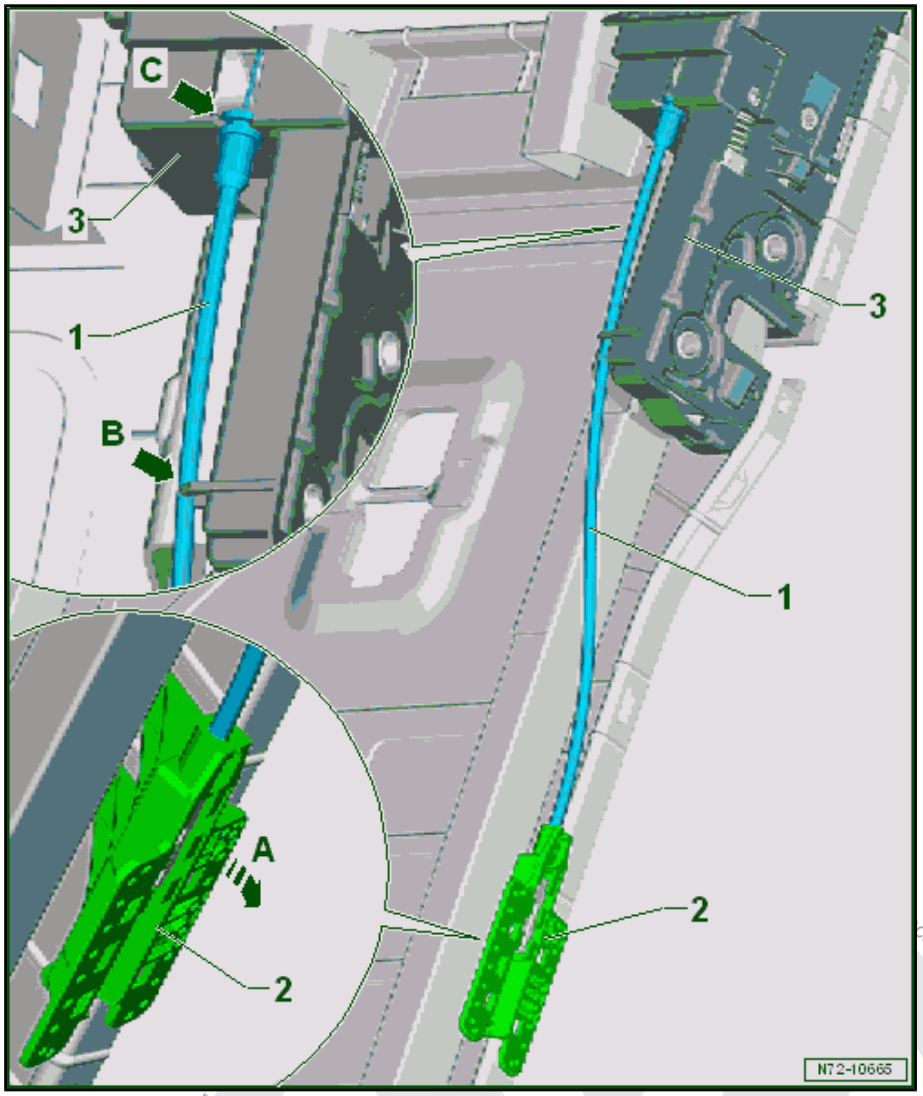

- Only loosen the cover and cushion near the release cable -1-. Refer to ⇒ “2.4 Rear Seat Backrest Cover and Cushion, Removing and Installing”, page 419 .
- Unclip the connecting piece -2- with the release cable -1- from the backrest frame in direction of -arrow A-.
- Unclip the release cable -1- from the bracket -arrow B-.
- Push the release cable -1- out of the cable bracket -arrow C- for the rear seat backrest locking mechanism -3-.
- Disengage the pin for the release cable -1- from the rear seat backrest locking mechanism -3- and remove the release cable -1-.

Protected by copyright. Copying for private or commercial purposes, in part or in whole, is not permitted unless authorised by Volkswagen AG. Copyright by Volkswagen AG. Volkswagen AG does not accept any liability with respect to the correctness of information in this document.

Vehicle-Side Release Cable

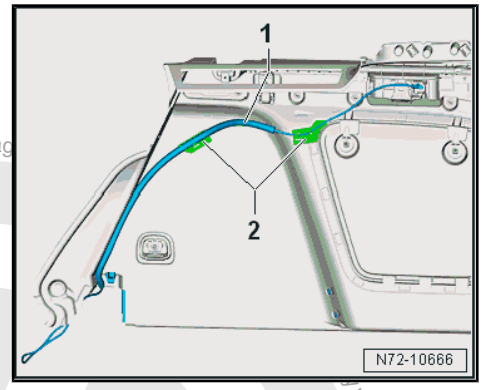

- Remove the luggage compartment side trim panel. Refer to ⇒ “6.12 Luggage Compartment Side Trim Panel, Removing and Installing”, page 289 .
- Remove the actuator for backrest remote release. Refer to ⇒ “3.18 Actuator for Rear Seat Backrest Remote Release, Removing and Installing”, page 394 .
- Unclip the release cable -1- from the brackets -2- on the luggage compartment side trim panel and remove.

Installing

Install in reverse order of removal.

Protected by copyright. Copying for private or commercial purposes, in part or in whole, is not permitted unless authorised by Volkswagen AG. Volkswagen AG. Copyright by Volkswagen AG. No liability is accepted with respect to the correctness of information in this document.

4 Special Tools

Special tools and workshop equipment required

- Trim Release Lever - T10039-

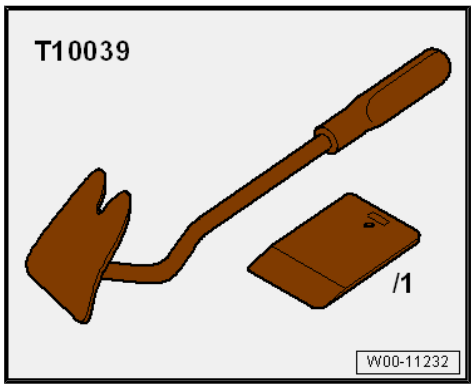

- Window Release Tool - T10236-

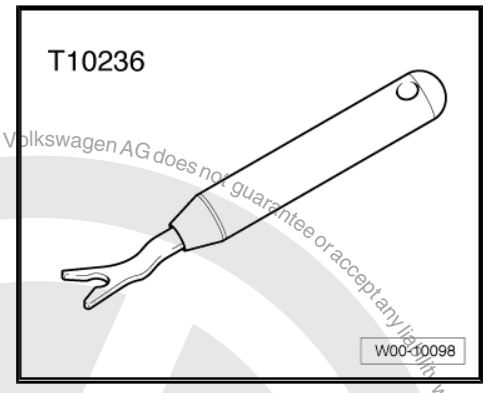

- Hook Tool - T40207-

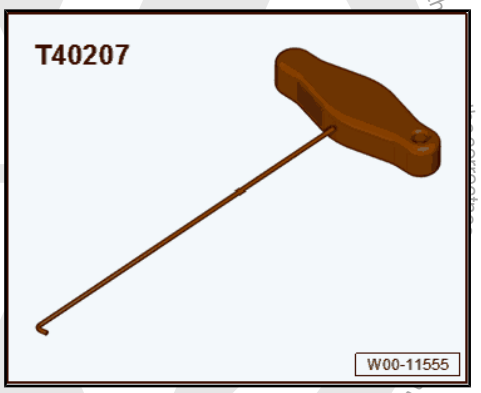

- Torque Wrench 1331 5-50Nm - VAG1331-

Protected by copyright. Copying for private or commercial purposes, in part or in whole, is not permitted unless authorised by Volkswagen AG. Volkswagen AG does not guarantee or accept any liability with

- Torque Wrench 1410 - VAG1410-

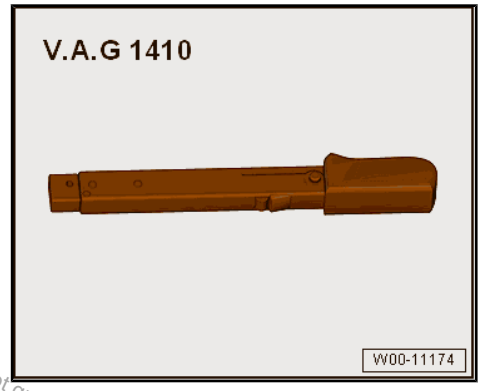

- Pop Rivet Pliers - VAG1753B-

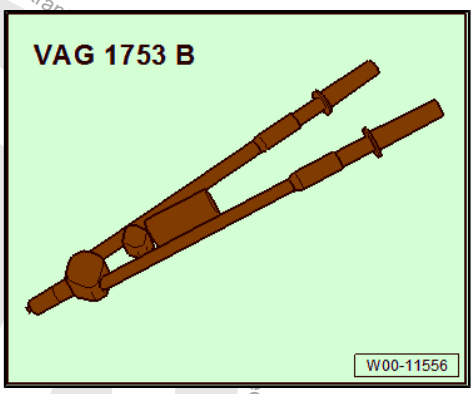

- Torque Wrench 1783 - 2-10Nm - VAG1783-

- Feeler Gauge - VAS5301/10-
- Engine And Transmission Holder - VAS6095-

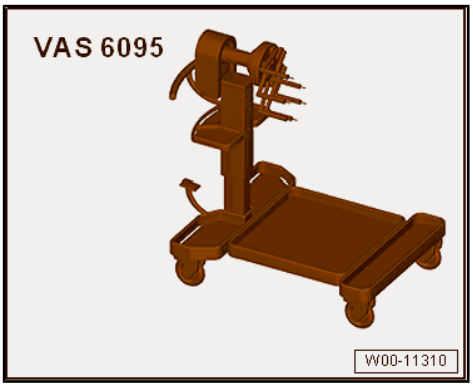

Protected by copyright. Copying for private or commercial purposes, in part or in whole, is not permitted unless authorised by Volkswagen AG. Volkswagen AG does not guarantee

- Engine/Transmission Holder - Seat Repair Fixture - VAS6136-

- Airbag Lockout Adapter - VAS6282-

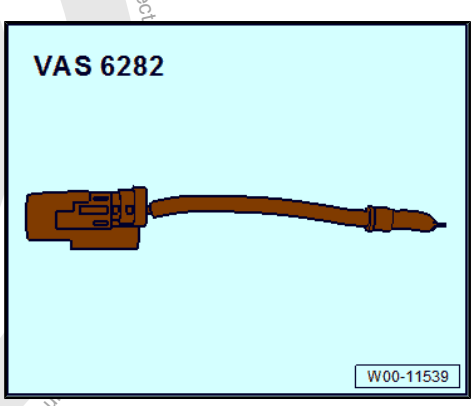

- Door Trim Pliers - 3392-

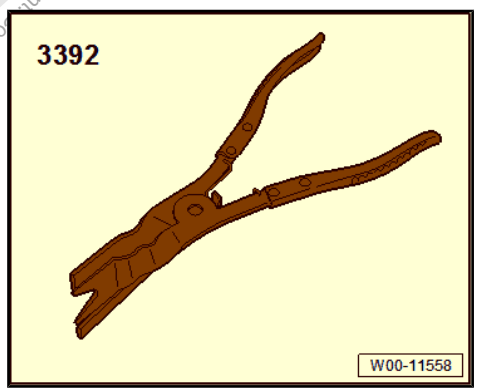

- Assembly Tool - 3399-

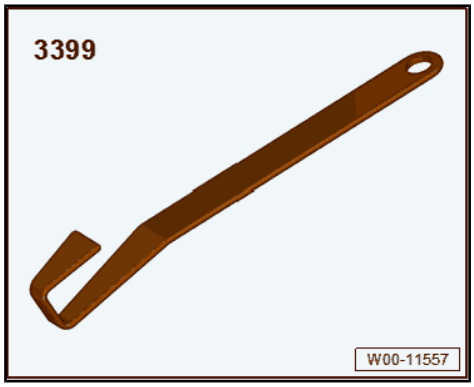

Protected by copyright. Copying for private or commercial purposes, in part or in whole, is not permitted unless authorised by Volkswagen AG. Volkswagen AG does not guarantee or accept any liability with respect to the correctness of information. Copyright by Volkswagen AG.

- Trim Removal Wedge - 3409-

Protected by copyright. Copying for private or commercial purposes, in part or in whole, is not permitted unless authorised by Volkswagen AG. Volkswagen AG does not guarantee or accept any liability with respect to the correctness of information in this document. Copyright by Volkswagen AG.

74 – Seat Upholstery, Covers

1 Front Seat Covers and Cushions

⇒ “1.1 Overview - Seat Pan Cover and Cushion”, page 402

⇒ “1.2 Overview - Backrest Cover and Cushion”, page 403

⇒ “1.3 Overview - Seat Heating Element”, page 404

⇒ “1.4 Seat Pan Cover and Cushion, Removing and Installing”, page 405

⇒ “1.5 Backrest Cover and Cushion, Removing and Installing”, page 406

⇒ “1.6 Seat Pan Cover and Cushion, Separating”, page 408

⇒ “1.7 Backrest Cover and Cushion, Separating”, page 410

⇒ “1.8 Driver/Front Passenger Seat Heating Element Z6 / Z8 , Removing and Installing”, page 414

⇒ “1.9 Driver/Front Passenger Backrest Heating Element Z7 / Z9 , Removing and Installing”, page 415

1.1 Overview - Seat Pan Cover and Cushion

1 - Seat Pan

- ❑ Overview. Refer to ⇒ “2.5 Overview - Seat Pan”, page 327 .

2 - Seat Cushion

- ❑ Allocation. Refer to the Parts Catalog.
- ❑ Seat cover and cushion, removing and installing. Refer to ⇒ “1.4 Seat Pan Cover and Cushion, Removing and Installing”, page 405 .
- ❑ Separate the seat cover from the seat cushion. Refer to ⇒ “1.6 Seat Pan Cover and Cushion, Separating”, page 408 .

3 - Upholstery Clip

- ❑ For attachment of the seat cover to the seat cushion
- ❑ Replace after removing
- ❑ Install at the same location with Upholstery Clip Pliers - VAG1634- .

4 - Seat Cover

- ❑ Different equipment levels
- ❑ Allocation. Refer to the Parts Catalog.
- ❑ Seat cover and cushion,

removing and installing.
Refer to ⇒ “1.4 Seat Pan Cover and Cushion, Removing and Installing”, page 405 .

- ❑ Separate the seat cover from the seat cushion. Refer to ⇒ “1.6 Seat Pan Cover and Cushion, Separating”, page 408 .
- ❑ Make sure there are no folds after installing

5 - Molding

- ❑ Sewn into seat cover
- ❑ For engaging seat cover on seat pan upper frame
- ❑ Make sure it fits correctly in the upper seat frame

6 - Molding

- ❑ Sewn into seat cover
- ❑ For engaging seat cover on seat pan upper frame
- ❑ Make sure it fits correctly in the upper seat frame

1.2 Overview - Backrest Cover and Cushion

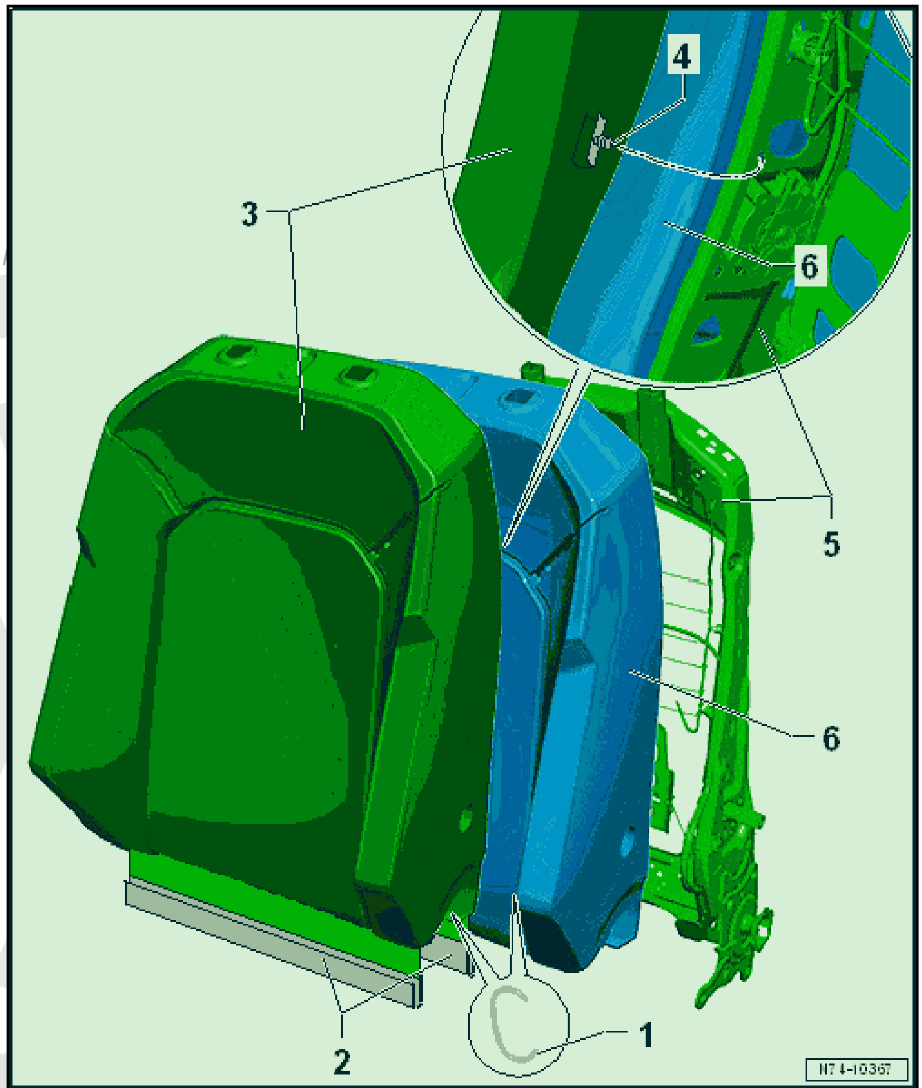

1 - Upholstery Clip

- ❑ For attachment of backrest cover to backrest cushion
- ❑ Replace after removing
- ❑ Install at the same location with Upholstery Clip Pliers - VAG1634- .

2 - Clamping Strip

- ❑ Sewn into backrest cover
- ❑ Check for proper seating

3 - Backrest Cover

- ❑ Different equipment levels
- ❑ Allocation. Refer to the Parts Catalog.
- ❑ Backrest cover and cushion, removing and installing. Refer to ⇒ “1.5 Backrest Cover and Cushion, Removing and Installing”, page 406 .
- ❑ Backrest cover and backrest cushion, separating. Refer to ⇒ “1.7 Backrest Cover and Cushion, Separating”, page 410 .
- ❑ Make sure there are no folds after installing

4 - Clip

- ❑ For securing the backrest cover on the rear frame
- ❑ Right and left

Protected by copyright. Copying for private or commercial purposes, in part or in whole, is not permitted unless authorised by Volkswagen AG. Volkswagen AG.

5 - Backrest Frame

6 - Backrest Cushion

- ❑ Allocation. Refer to the Parts Catalog.
- ❑ Backrest cover and cushion, removing and installing. Refer to ⇒ “1.5 Backrest Cover and Cushion, Removing and Installing”, page 406 .
- ❑ Backrest cover and backrest cushion, separating. Refer to ⇒ “1.7 Backrest Cover and Cushion, Separating”, page 410 .

1.3 Overview - Seat Heating Element

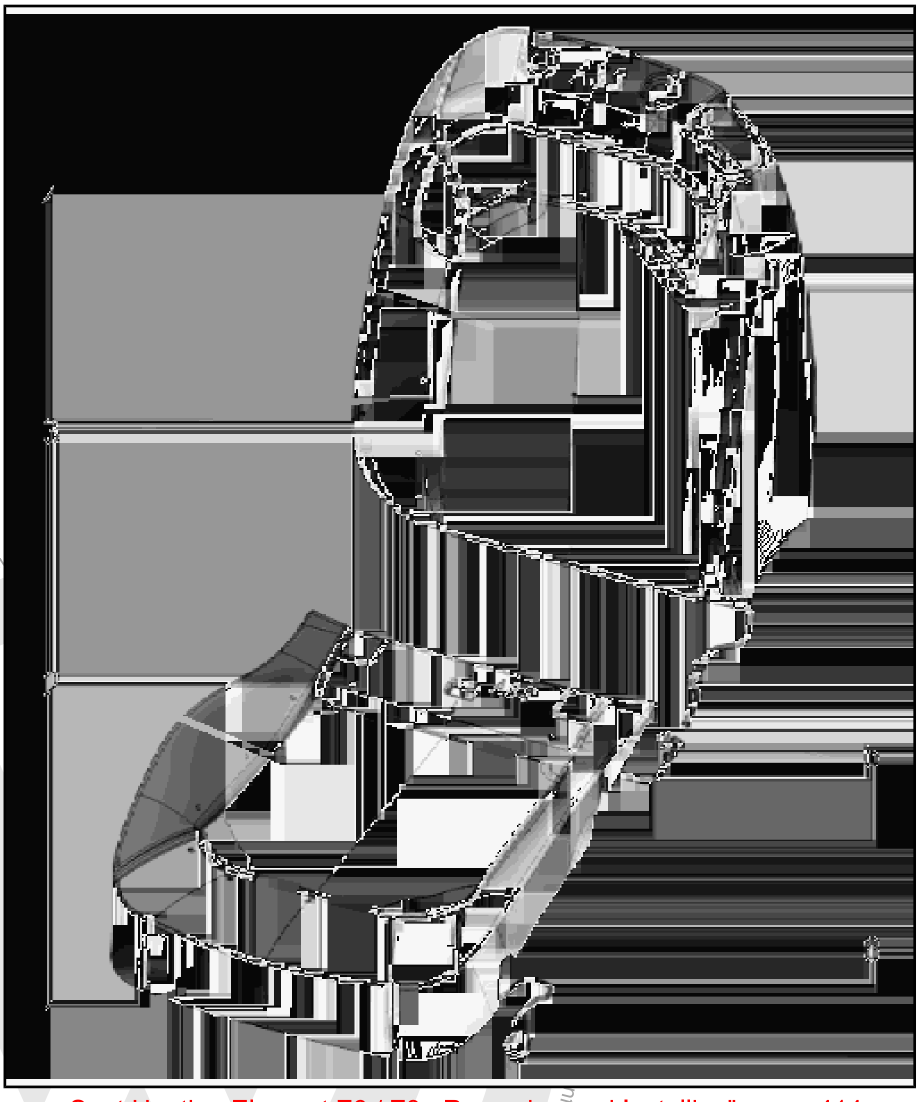

1 - Seat Cushion

- ❑ Allocation. Refer to the Parts Catalog.

2 - Heating Element

- ❑ Driver seat Driver Seat Heating Element - Z6-
- ❑ Passenger seat Front Passenger Seat Heating Element - Z8-
- ❑ On vehicles with a passenger occupant detection system, the Front Passenger Seat Heating Element - Z8- and the passenger occupant detection system pressure sensor are a shared component.
- ❑ On vehicles with a passenger occupant detection system, the seat heating element must not be separated from the front seat cushion cover.
- ❑ If the seat heating element is separated from the front seat cushion cover on vehicles with a passenger occupant detection system, then both components must be replaced.
- ❑ Allocation. Refer to the Parts Catalog.
- ❑ Replace after removing. Refer to ⇒ “1.8 Driver/Front Passenger Seat Heating Element Z6 / Z8 , Removing and Installing”, page 414 .

3 - Backrest Cushion

- ❑ Allocation. Refer to the Parts Catalog.

4 - Heating Element

- ❑ Driver seat Driver Backrest Heating Element - Z7-
- ❑ Passenger seat Front Passenger Backrest Heating Element - Z9-
- ❑ Allocation. Refer to the Parts Catalog.
- ❑ Replace after removing. Refer to ⇒ “1.9 Driver/Front Passenger Backrest Heating Element Z7 / Z9 , Removing and Installing”, page 415 .

5 - Wire

6 - Wire

1.4 Seat Pan Cover and Cushion, Removing and Installing

Special tools and workshop equipment required

- ♦ Backrest Panel Tool - 3370-

Note

The following describes removing and installing components on the left seat. Removing and installing components on the right seat is identical.

Removing

– Remove the front seat. Refer to ⇒ “2.10 Front Seat, Removing and Installing”, page 335 .

– Secure the seat on the Fixture for Seat Repair . Refer to ⇒ “1.2 Front Seat, Mounting on Fixture for Seat Repair”, page 311 .

– Remove the tunnel side seat trim. Refer to ⇒ “2.13 Tunnel-Side Seat Trim, Removing and Installing”, page 344 .

– Remove the sill-side seat trim. Refer to ⇒ “2.14 Sill-Side Seat Trim, Removing and Installing”, page 345 .

– Remove the sill-side seat trim bracket. Refer to ⇒ “2.15 Seat Trim Bracket, Removing and Installing”, page 348 .

– Remove the backrest. Refer to ⇒ “2.16 Front Backrest, Removing and Installing”, page 349 .

– Remove the storage compartment, if equipped. Refer to ⇒ “2.35 Storage Compartment, Removing and Installing”, page 371 .

– Release and remove the connector.

– Free up the wiring harnesses.

– Disengage the clamping strips -1 and 2- using the Backrest Panel Tool - 3370- .

– Remove the cover with the cushion from the seat pan.

– Separate the cover from the cushion. Refer to ⇒ “1.6 Seat Pan Cover and Cushion, Separating”, page 408 .

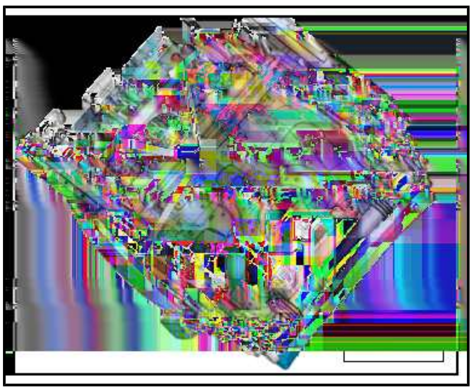

Installing

Install in reverse order of removal.

Tightening Specifications

- ♦ Refer to ⇒ “2.2 Overview - Front Seat”, page 318

Protected by copyright. Copying for private or commercial purposes, in part or in whole, is not permitted unless authorised by Volkswagen AG. Volkswagen AG does not guarantee or accept any liability with respect to the correctness of information in this document. Copyright by Volkswagen AG.

1.5 Backrest Cover and Cushion, Removing and Installing

Note

The following describes removing and installing components on the left seat. Removing and installing components on the right seat is identical.

Special tools and workshop equipment required

- Trim Removal Wedge - 3409-
- Upholstery Clip Pliers - VAG1634-
- Backrest Panel Tool - 3370-

Removing

WARNING

Follow the General Safety Precautions when working with air-bags, belt tensioners and battery cut-out units (pyrotechnic components). Refer to ⇒ "1.2 Safety Precautions for Pyrotechnic Components", page 3 .

– Remove the front seat. Refer to ⇒ "2.10 Front Seat, Removing and Installing", page 335 .

– Secure the seat on the Fixture for Seat Repair . Refer to ⇒ "1.2 Front Seat, Mounting on Fixture for Seat Repair", page 311 .

Only for Vehicles without Entry Assistance

– Remove the backrest. Refer to ⇒ "2.16 Front Backrest, Removing and Installing", page 349 .

Continuation for All Vehicles

– Remove the headrest. Refer to ⇒ "2.23 Headrest, Removing and Installing", page 360 .

– Unclip the headrest locking mechanism caps using the Trim Removal Wedge - 3409- .

– If equipped, remove the lumbar support adjusting lever. Refer to ⇒ "2.22 Lumbar Support Adjuster, Removing and Installing", page 359 .

Protected by copyright. Copying for private or commercial purposes, in part or in whole, is not permitted unless authorised by Volkswagen AG. Volkswagen AG does not guarantee or accept any liability with respect to the correctness of information in this document. Copyright by Volkswagen AG.

Protected by copyright. Copying for private or commercial purposes, in part or in whole, is not permitted unless authorised by Volkswagen AG. Volkswagen AG does not guarante

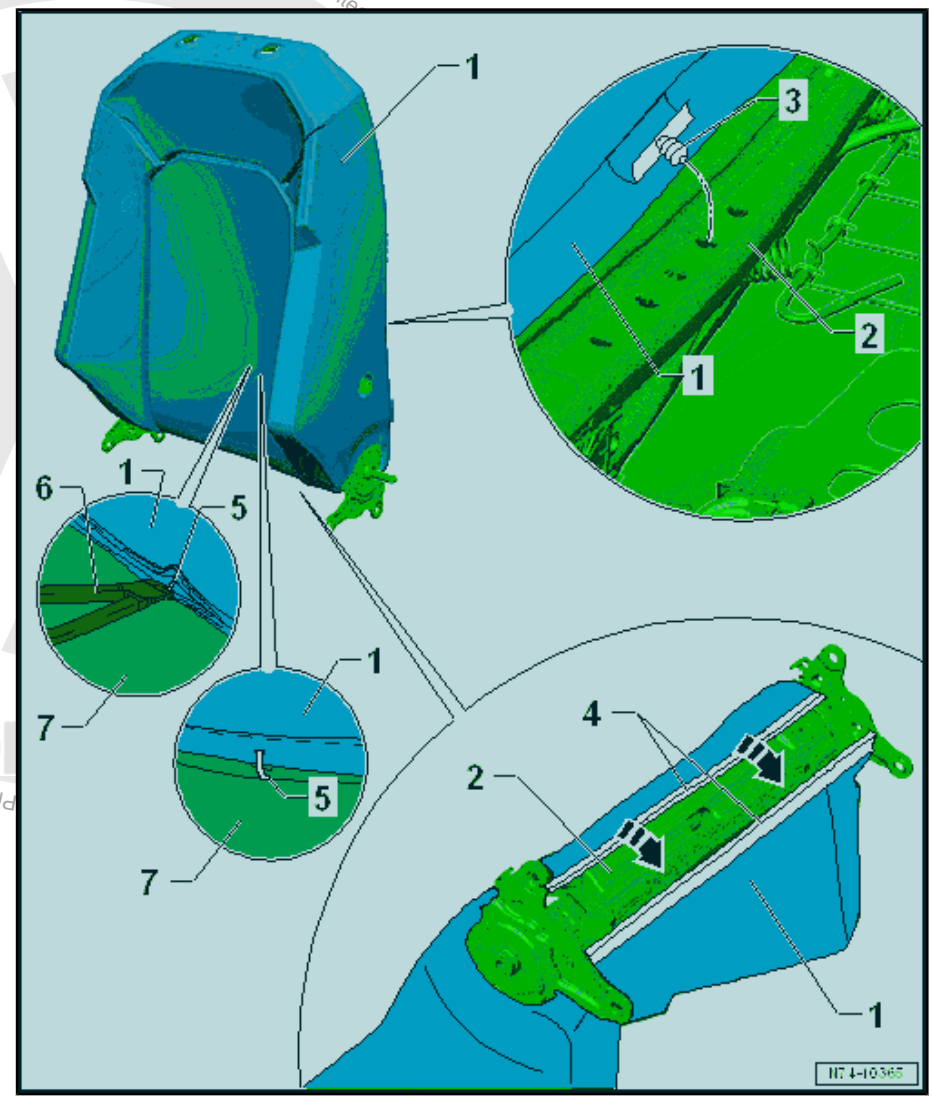

- Open the clamping strip -4- using the Backrest Panel Tool - 3370- .
- Roll the front and rear backrest cover -1- upward.
- Pull up the backrest cover -1- in order to reach the right and left upholstery clips -5-.
- Open the upholstery clips -5- using pliers -6-.
- Pull the backrest cover -1- on the cushion -7- upward.
- Continue pulling the backrest cover -1- up in order to reach the next upholstery clips -5-.
- Loosen the clip -3- from both sides of the back of the backrest frame -2-.
- To do so, use the Trim Removal Wedge - 3409- .
- Open the upholstery clips -5- on the backside.
- Continue pulling the backrest cover -1- up in order to reach the next upholstery clips -5-.

Note

The topmost clips must not be removed.

Only for Vehicles with Entry Assistance

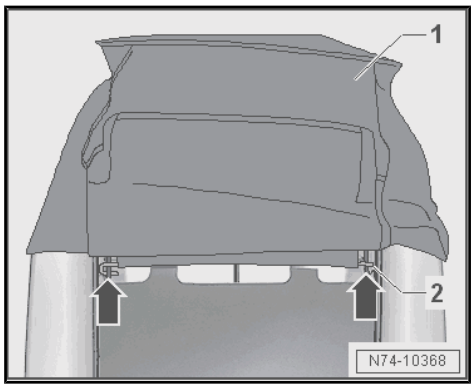

– Pull the backrest cover on the backside upward up to the crossbrace -2-.

– Disengage the crossbrace on the left and right sides from the seat frame -arrows-.

– Remove the locking mechanism trim. Refer to ⇒ “2.25 Backrest Release Trim, Removing and Installing”, page 361 .

Continuation for All Vehicles

– Guide out the backrest cover and cushion at the headrest locking mechanism.

– Remove the backrest cover and cushion from the backrest.

– At the same time, guide out the wiring harness.

Installing

Install in reverse order of removal while paying attention to the following:

– If necessary, install the backrest heating element. Refer to ⇒ “1.9 Driver/Front Passenger Backrest Heating Element Z7 / Z9 , Removing and Installing”, page 415 .

– Attach the backrest cover on the cushion. Refer to ⇒ “1.7 Backrest Cover and Cushion, Separating”, page 410 .

Tightening Specifications

♦ Refer to ⇒ “1.2 Overview - Backrest Cover and Cushion”, page 403

♦ Refer to ⇒ “2.2 Overview - Front Seat”, page 318

♦ Refer to ⇒ “2.4 Overview - Front Backrest”, page 323

1.6 Seat Pan Cover and Cushion, Separating

Special tools and workshop equipment required

♦ Upholstery Clip Pliers - VAG1634-

Removing

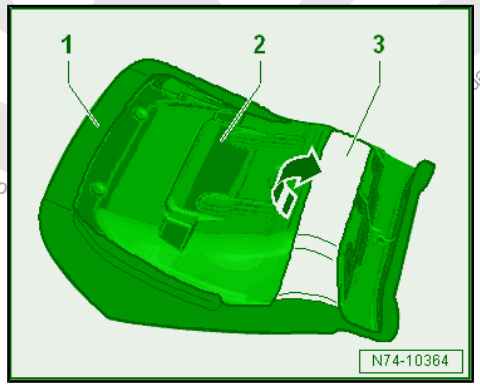

– Remove the cover with the cushion. Refer to ⇒ “1.4 Seat Pan Cover and Cushion, Removing and Installing”, page 405 .

– Remove the mounting tab -3- of the seat cover -1- in direction of the -arrow- from the seat cushion -2-.

– Remove the seat cover -1- from the seat cushion -2-.

Copyright. Copying for private or commercial purposes, in part or in whole, is not permitted unless authorised by Volkswagen AG. Volkswagen AG does not guarantee or accept any liability with respect to the correctness of information in this document.

– Cut through the upholstery clips -3- with pliers -4-.

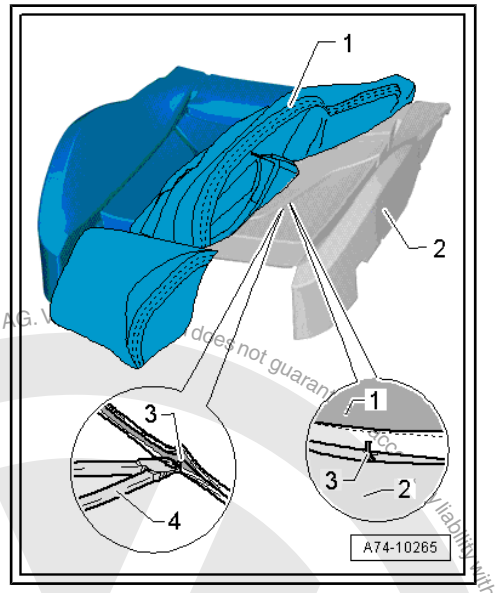

Installing

Install in reverse order of removal while paying attention to the following:

- Replace all opened clips -item 1- ⇒ Item 1 (page 403) and mount again in the same location.

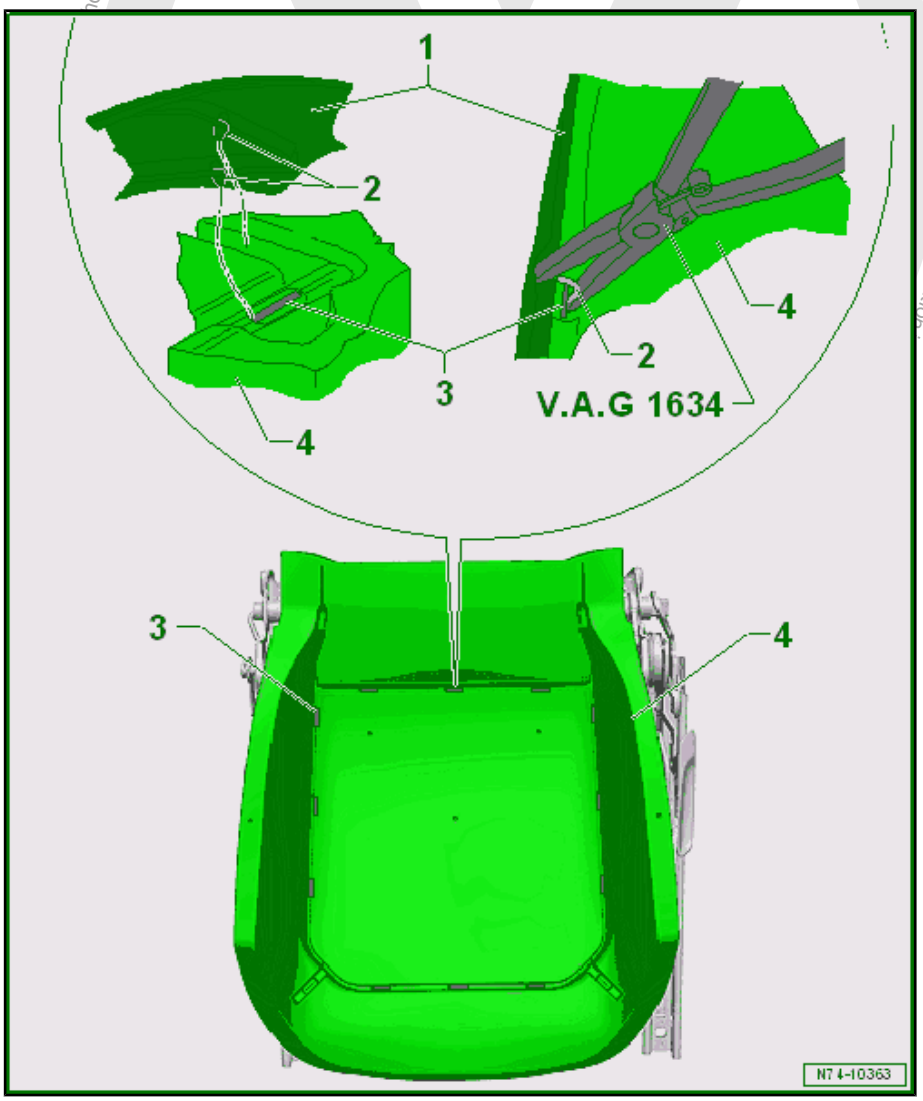

– Pull the seat cover -1- over the cushion -4-.

– Secure the seat cover -1- to the mounts -3- using the upholstery clips -2-.

– To do so, use the Upholstery Clip Pliers - VAG1634- .

– Make sure the seat cover -1- is free of folds.

Tightening Specifications

♦ Refer to
⇒ “1.1 Overview - Seat Pan Cover and Cushion”, page 402

♦ Refer to ⇒ “2.2 Overview - Front Seat”, page 318

1.7 Backrest Cover and Cushion, Separating

Note

The following describes removing and installing components on the left seat. Removing and installing components on the right seat is identical.

Special tools and workshop equipment required

♦ Trim Removal Wedge - 3409-

♦ Upholstery Clip Pliers - VAG1634-

♦ Backrest Panel Tool - 3370-

Removing

– Remove the front seat. Refer to
⇒ “2.10 Front Seat, Removing and Installing”, page 335 .

– Secure the seat on the Fixture for Seat Repair . Refer to
⇒ “1.2 Front Seat, Mounting on Fixture for Seat Repair”, page 311 .

Only for Vehicles without Entry Assistance

– Remove the backrest. Refer to
⇒ “2.16 Front Backrest, Removing and Installing”, page 349 .

Continuation for All Vehicles

– Remove the headrest. Refer to
⇒ “2.23 Headrest, Removing and Installing”, page 360 .

– Unclip the headrest locking mechanism caps using the Trim Removal Wedge - 3409- .

– If equipped, remove the lumbar support adjusting lever. Refer to
⇒ “2.22 Lumbar Support Adjuster, Removing and Installing”, page 359 .

Copyright by Volkswagen AG. Volkswagen AG does not guarantee or accept any liability with respect to the correctness of information in this document. Copyright by Volkswagen AG. Partial or complete copy, in any form or in whole, is not permitted unless authorized by Volkswagen AG for internal purposes only.

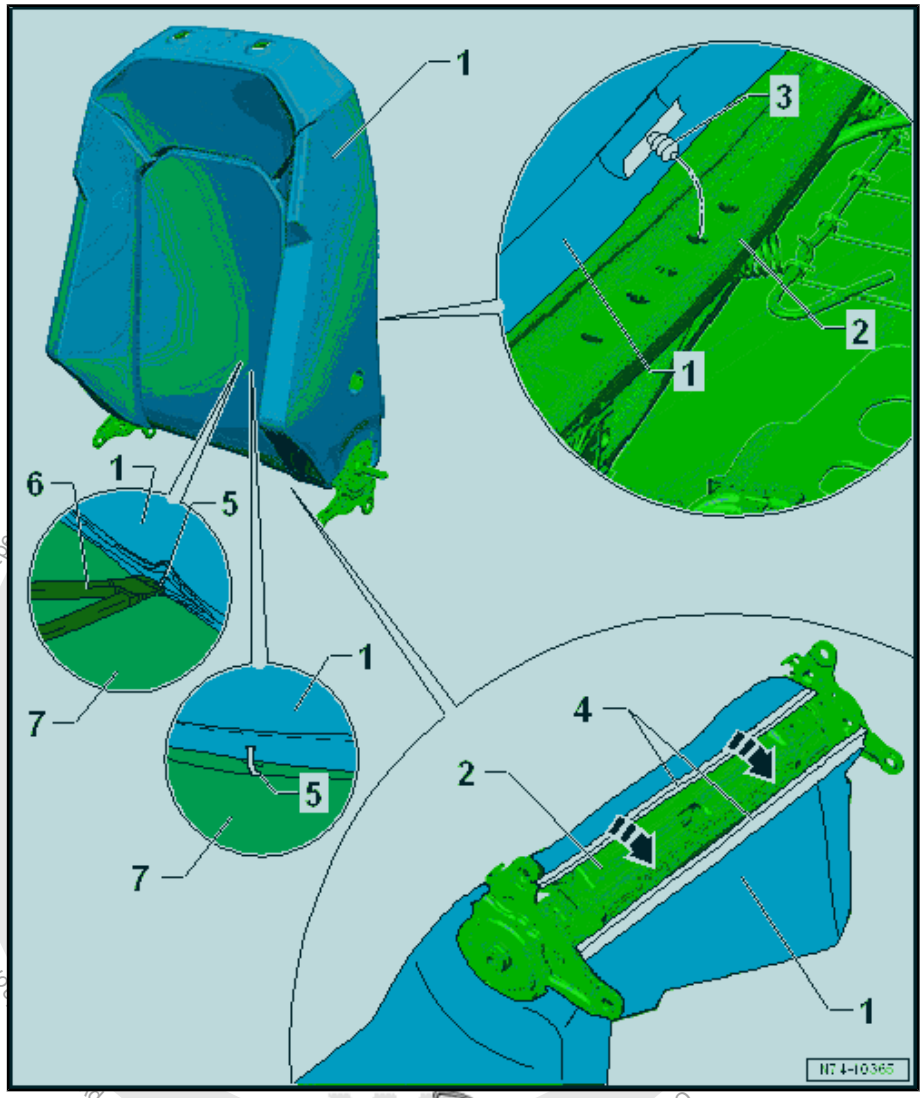

Copyright by Volkswagen AG. Protected by copyright. Copy or commercial purposes, in part or in whole, is not

- Open the clamping strip -4- using the Backrest Panel Tool - 3370- .
- Roll the front and rear backrest cover -1- upward.
- Pull up the backrest cover -1- in order to reach the right and left upholstery clips -5-.
- Open the upholstery clips -5- using pliers -6-.
- Pull the backrest cover -1- on the cushion -7- upward.
- Continue pulling the backrest cover -1- up in order to reach the next upholstery clips -5-.
- Loosen the clip -3- from both sides of the back of the backrest frame -2-.
- To do so, use the Trim Removal Wedge - 3409- .
- Open the upholstery clips -5- on the backside.
- Continue pulling the backrest cover -1- up in order to reach the remaining upholstery clips -5-.

Only for Vehicles with Entry Assistance

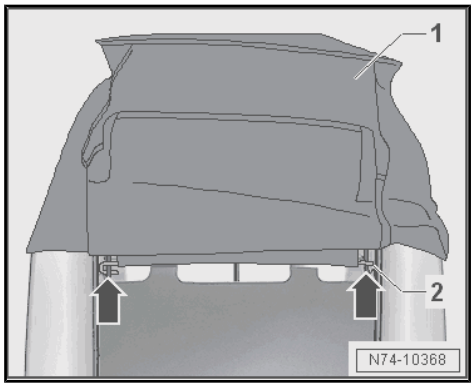

– Pull the backrest cover on the backside upward up to the crossbrace -2-.

– Disengage the crossbrace on the left and right sides from the seat frame -arrows-.

– Remove the locking mechanism trim. Refer to ⇒ “2.25 Backrest Release Trim, Removing and Installing”, page 361 .

Continuation for All Vehicles

– Guide out the backrest cover at the headrest locking mechanism.

– Remove the backrest cover from the backrest cushion.

Installing

Install in reverse order of removal while paying attention to the following:

- Replace all opened clips -item 1- ⇒ Item 1 (page 403) and mount again in the same location.

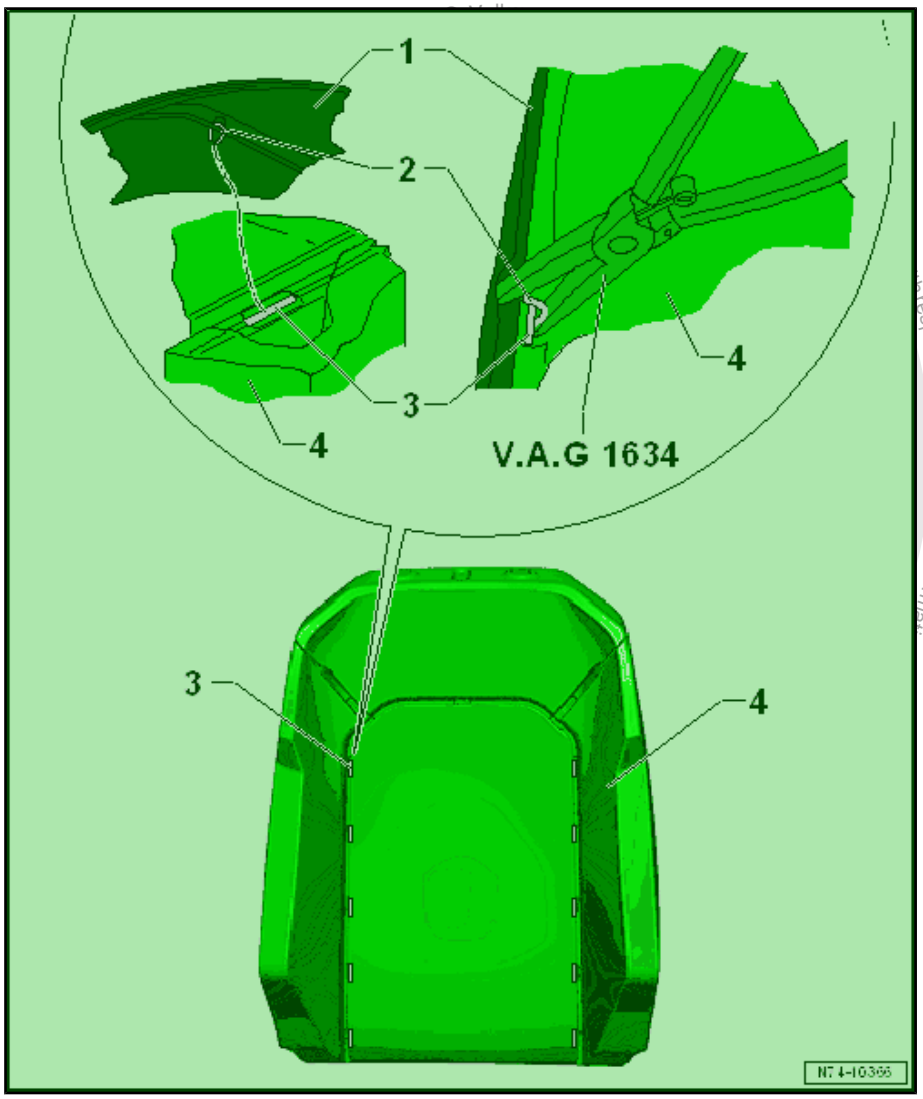

– Pull the backrest cover -1- over the cushion -4-.

Protected by copyright. Copying for private or commercial purposes, in part or in whole, is not permitted unless authorised by Volkswagen AG. Volkswagen AG does not guarantee or accept any liability with respect to the correctness of information in this document. Copyright by Volkswagen AG.

– Guide in the backrest cover -1- at the headrest guide.
– Secure the backrest cover -1- to the mounts -3- using the upholstery clips -2-.
– To do so, use the Upholstery Clip Pliers - VAG1634- .
– Make sure the backrest cover -1- is free of folds.

Tightening Specifications

- Refer to ⇒ “1.2 Overview - Backrest Cover and Cushion”, page 403
- Refer to ⇒ “2.2 Overview - Front Seat”, page 318
- Refer to ⇒ “2.4 Overview - Front Backrest”, page 323

1.8 Driver/Front Passenger Seat Heating Element -Z6- / -Z8- , Removing and Installing

⇒ "1.8.1 Driver/Front Passenger Seat Heating Element Z6 / Z8 , Removing and Installing, Vehicles without Passenger Occupant Detection System", page 414

⇒ "1.8.2 Front Passenger Seat Heating Element Z8 , Removing and Installing, Vehicles with Passenger Occupant Detection System", page 415

1.8.1 Driver/Front Passenger Seat Heating Element -Z6- / -Z8- , Removing and Installing, Vehicles without Passenger Occupant Detection System

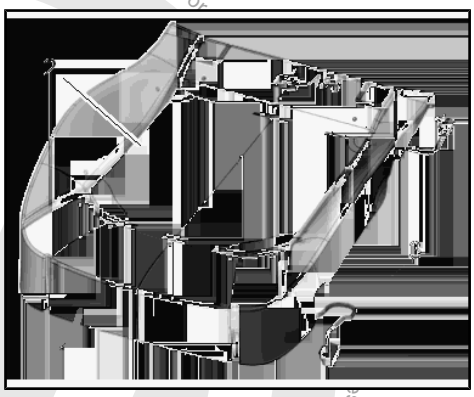

Removing

– Separate the seat cover from the seat cushion. Refer to ⇒ "1.6 Seat Pan Cover and Cushion, Separating", page 408 .

– Disconnect the wire -3- directly from the old heating element -2-.

Note

The old heating elements remain on the cushion -1- and will be covered over by the new heating element.

Installing

Install in reverse order of removal while paying attention to the following:

– Guide the wire -3- through the wiring guide.

– Align the new heating elements on the seat cushion while not pulling off the protective film.

– Remove protective films from the heating elements in succession, taking care not to damage the heating elements.

– Glue the heating elements so that they align with the old heating elements and are free of wrinkles.

– Route the connections to the individual heating elements in the base of the gaps.

Tightening Specifications

♦ Refer to ⇒ "1.1 Overview - Seat Pan Cover and Cushion", page 402

♦ Refer to ⇒ "1.3 Overview - Seat Heating Element", page 404

♦ Refer to ⇒ "2.2 Overview - Front Seat", page 318

♦ Refer to ⇒ "2.4 Overview - Front Backrest", page 323

Protected by copyright. Copyright by Volkswagen AG. Volkswagen AG does not guarantee or ... unless authorized by Volkswagen AG. Volkswagen AG does not guarantee or ... ness of information in this document. Copyright by Volkswagen AG.

1.8.2 Front Passenger Seat Heating Element - Z8- , Removing and Installing, Vehicles with Passenger Occupant Detection System

WARNING

The seat heating element and the passenger occupant detection system pressure sensor are a shared component.

The seat heating element is securely bonded to the seat cushion. It is not possible to remove and install separately. The seat heating element must be replaced with the seat cushion.

Since the seat heating element and the passenger occupant detection system pressure sensor are a shared component and can only be replaced together, the removal and installation description is done only for the passenger occupant detection system pressure sensor. Refer to
⇒ “13.2 Passenger Occupant Detection System Pressure Sensor, Removing and Installing”, page 180 .

1.9 Driver/Front Passenger Backrest Heating Element -Z7- / -Z9- , Removing and Installing

Removing

Note

If the backrest cushion is to be replaced on a vehicle with seat heating, always replace the corresponding backrest heating element as well.

Protected by copyright. Copying for private or commercial purposes, in part or in whole, is not permitted unless authorized by Volkswagen AG. Volkswagen AG does not guarantee or accept any liability with respect to the correctness of information in this document. Copyright by Volkswagen AG.

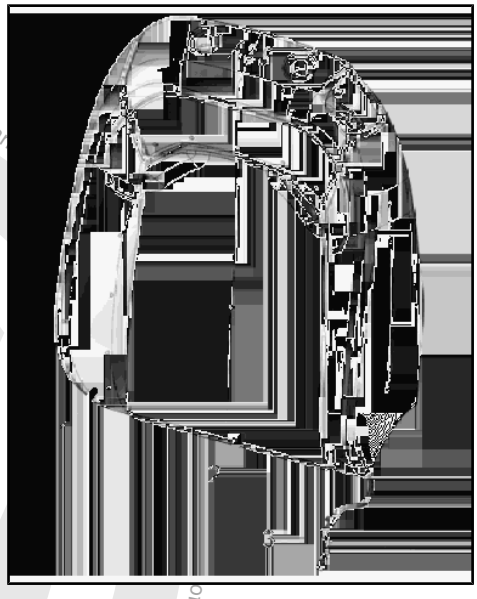

– Separate the backrest cover and backrest cushion. Refer to ⇒ “1.7 Backrest Cover and Cushion, Separating”, page 410 .
– Cut the wire -3- directly from the old heating element -2-.

Note

The old heating elements remain on the backrest cushion -1- and will be covered over by the new heating elements.

Installing

Install in reverse order of removal while paying attention to the following:

– Guide the wire -3- through the wiring guide.
– Align the new heating elements on the backrest cushion while not pulling off the protective film.
– Remove protective films from the heating elements in succession, taking care not to damage the heating elements.
– Glue the heating elements so that they align with the old heating elements and are free of wrinkles.
– Route the connections to the individual heating elements in the base of the gaps.

Tightening Specifications

- Refer to ⇒ “1.2 Overview - Backrest Cover and Cushion”, page 403
- Refer to ⇒ “1.3 Overview - Seat Heating Element”, page 404
- Refer to ⇒ “2.2 Overview - Front Seat”, page 318
- Refer to ⇒ “2.4 Overview - Front Backrest”, page 323

Protected by copyright. Copying for private or commercial purposes, in part or in whole, is not permitted unless authorised by Volkswagen AG. Volkswagen AG does not guarantee the accuracy and completeness of information in this document. Copyright by Volkswagen AG.

2 Rear Seat Covers and Cushions

⇒ “2.1 Overview - Bench Seat Cover and Cushion”, page 417

⇒ “2.2 Overview - Rear Seat Backrest Cover and Cushion”, page 418

⇒ “2.3 Bench Seat Cover and Padding, Removing and Installing”, page 419

⇒ “2.4 Rear Seat Backrest Cover and Cushion, Removing and Installing”, page 419

⇒ “2.5 Center Cushion, Removing and Installing, Backrest with Pass-Through”, page 422

⇒ “2.6 Bench Seat Cover and Cushion, Separating”, page 422

⇒ “2.7 Rear Seat Backrest Cover and Cushion, Separating”, page 423

2.1 Overview - Bench Seat Cover and Cushion

1 - Seat Frame

2 - Seat Cushion

- ❑ Allocation. Refer to the Parts Catalog.
- ❑ Seat cover and cushion, removing and installing. Refer to ⇒ “2.3 Bench Seat Cover and Padding, Removing and Installing”, page 419 .
- ❑ Separate the seat cover from the seat cushion. Refer to ⇒ “2.6 Bench Seat Cover and Cushion, Separating”, page 422 .

3 - Upholstery Clip

- ❑ For attachment of the seat cover to the seat cushion
- ❑ Replace after removing
- ❑ Install at the same location with Upholstery Clip Pliers - VAG1634- .

4 - Seat Cover

- ❑ Different equipment levels
- ❑ Allocation. Refer to the Parts Catalog.
- ❑ Seat cover and cushion, removing and installing. Refer to ⇒ “2.3 Bench Seat Cover and Padding, Removing and Installing”, page 419 .
- ❑ Separate the seat cover from the seat cushion. Refer to ⇒ “2.6 Bench Seat Cover and Cushion, Separating”, page 422 .
- ❑ Make sure there are no folds after installing

Protected by copyright. Copyright by Volkswagen AG.
No liability with respect to the correctness of information in this document

5 - Molding

- ❑ Sewn into seat cover
- ❑ For engaging the seat cover in the seat frame

2.2 Overview - Rear Seat Backrest Cover and Cushion

1 - Backrest Cover

- ❑ Different equipment levels
- ❑ Allocation. Refer to the Parts Catalog.
- ❑ Backrest cover and cushion, removing and installing. Refer to ⇒ “2.4 Rear Seat Backrest Cover and Cushion, Removing and Installing”, page 419 .
- ❑ Backrest cover and backrest cushion, separating. Refer to ⇒ “2.7 Rear Seat Backrest Cover and Cushion, Separating”, page 423 .
- ❑ Make sure there are no folds after installing

2 - Upholstery Clip

- ❑ For attachment of backrest cover to backrest cushion
- ❑ Replace after removing
- ❑ Install at the same location with Upholstery Clip Pliers - VAG1634- .

3 - Backrest Cushion

- ❑ Allocation. Refer to the Parts Catalog.
- ❑ Backrest cover and cushion, removing and installing. Refer to ⇒ “2.4 Rear Seat Backrest Cover and Cushion, Removing and Installing”, page 419 .
- ❑ Backrest cover and backrest cushion, separating. Refer to ⇒ “2.7 Rear Seat Backrest Cover and Cushion, Separating”, page 423 .

4 - Backrest Frame

5 - Clamping Strip

- ❑ Sewn into backrest cover
- ❑ For attaching the backrest cover on the backrest frame

unless authorised by Volkswagen AG. Volkswagen AG does not guarantee or accept a
commercial purpose in part or in whole, is no

2.3 Bench Seat Cover and Padding, Removing and Installing

Removing

– Remove the rear bench seat. Refer to ⇒ “3.7 Bench Seat/Single Seat, Removing and Installing”, page 382 .

– Disengage the seat cover molding -3- around the seat frame.

– Disengage the seat cover molding -1- at the seat belt latch openings.

– Remove the seat cover -2- with the seat cushion from the seat frame.

> **Caution**
>
> *Do not damage the seat cover.*
>
> ♦ *Do not pull on the seat cover. The seat cover can rip.*

Installing

Install in reverse order of removal while paying attention to the following:

– After installing, make sure the seat cover is free of folds.

2.4 Rear Seat Backrest Cover and Cushion, Removing and Installing

Special tools and workshop equipment required

♦ Trim Removal Wedge - 3409-

♦ Wedge Set - T10383-

Removing

– Remove the rear seat backrest. Refer to ⇒ “3.8 Rear Seat Backrest, Removing and Installing”, page 384 .

– Remove the rear headrest. Refer to ⇒ “3.14 Headrest, Removing and Installing”, page 390 .

– Remove the locking mechanism trim. Refer to ⇒ “3.9 Locking Mechanism Trim, Removing and Installing”, page 386 .

– Loosen the clips -2- from the backrest cover -1- near the inner mounting pins.

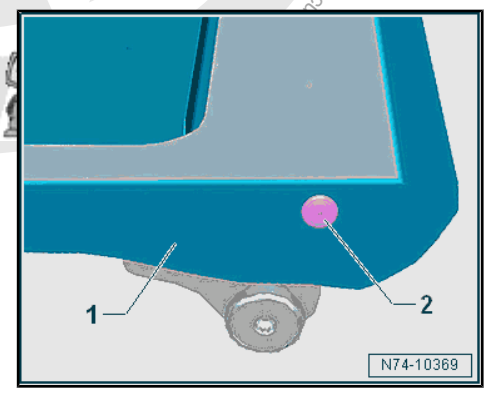

Protected by copyright. Copying for private or commercial purposes, in part or in whole, is not permitted unless authorised by Volkswagen AG. Volkswagen AG does not guarantee or assume any liability with respect to the correctness of information in this document.

Left 1/3 Rear Seat Backrest

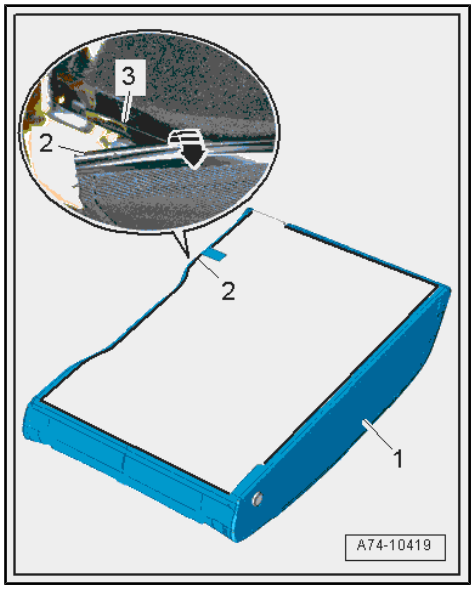

- Starting at the locking mechanism, pry off the clamping strip -2- for the backrest cover using a screwdriver all around the backrest frame -3- -arrow-.
- Remove the rear headrest guides. Refer to ⇒ “3.15 Headrest Guide, Removing and Installing”, page 390 .
- Remove the backrest cover -1- and backrest cushion from the backrest frame.

Rear Seat Backrest, 2/3 Right Without a Pass-Through

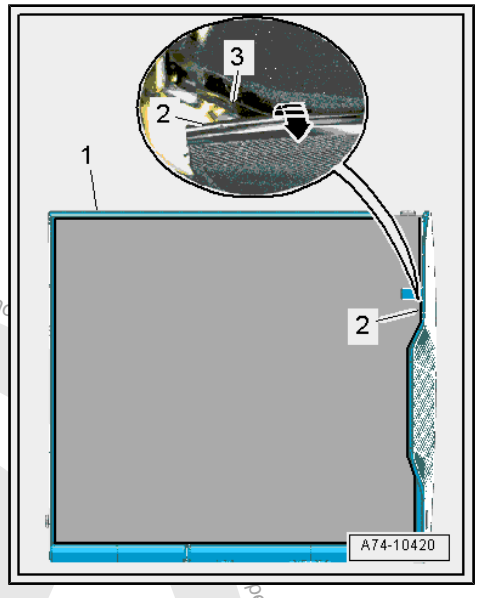

- Remove the rear center seat belt guide. Refer to ⇒ “1.4 Overview - Rear Center Three-Point Seat Belt”, page 94 .
- Starting at the locking mechanism, pry off the clamping strip -2- for the backrest cover using a screwdriver all around the backrest frame -3- -arrow-.
- Remove the rear headrest guides. Refer to ⇒ “3.15 Headrest Guide, Removing and Installing”, page 390 .
- Remove the backrest cover -1- and backrest cushion from the backrest frame.

Protected by copyright. Copying for private or commercial purposes, in part or in whole, is not permitted unless authorised by Volkswagen AG. Volkswagen AG does not guarantee or accept any liability with respect to the correctness of information in this document. Copyright by Volkswagen AG.

Rear Seat Backrest, 2/3 Right with a Pass-Through

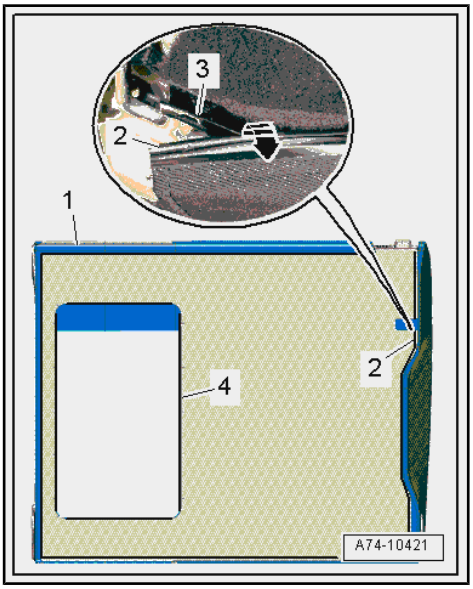

- Remove the rear center seat belt guide. Refer to ⇒ “1.4 Overview - Rear Center Three-Point Seat Belt”, page 94 .
- Remove the pass-through door with the rear center armrest. Refer to ⇒ “3.12 Pass-Through Door, Removing and Installing”, page 388 .
- Remove the pass-through cover frame. Refer to ⇒ “3.11 Pass-Through Cover Frame, Removing and Installing”, page 387 .
- Starting at the locking mechanism, pry off the clamping strip -2- for the backrest cover using a screwdriver all around the backrest frame -3- -arrow-.
- Pry off the clamping strip -4- for the backrest cover with a screwdriver from the opening for the pass-through.
- Remove the rear headrest guides. Refer to ⇒ “3.15 Headrest Guide, Removing and Installing”, page 390 .
- Remove the backrest cover -1- and backrest cushion from the backrest frame.

Installing

Install in reverse order of removal while paying attention to the following:

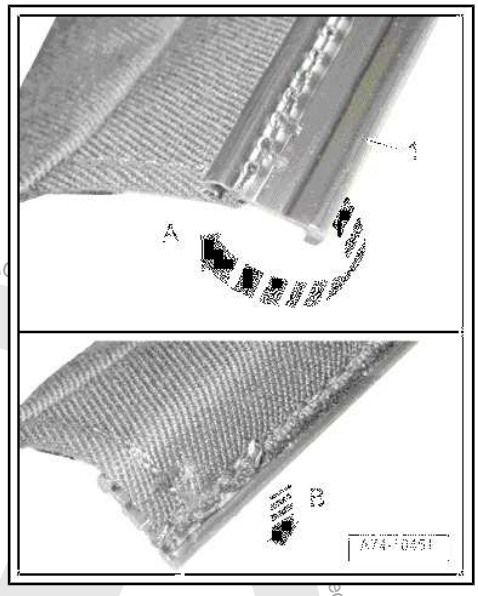

- Flip the protective strip -1- over 180° toward the inside in direction of -arrow A-.
- Engage the protective strip in the groove on the backrest frame in direction of -arrow B-.

Protected by copyright. Copying for private or commercial purposes, in part or in whole, is not permitted unless authorised by Volkswagen AG. Volkswagen AG
Copyright by Volkswagen AG. ect to the correctness of information in this document.

2.5 Center Cushion, Removing and Installing, Backrest with Pass-Through

Removing

– Fold the pass-through door forward.

– Release the tabs -1- with a screwdriver and push the center cushion -2- until stop downward at the same time in direction of -arrow A-.

– Slightly lift the upper center cushion in direction of -arrow B- and at the same time disengage downward from the pass-through door in direction of -arrow C-.

Installing

Install in reverse order of removal.

2.6 Bench Seat Cover and Cushion, Separating

Special tools and workshop equipment required

♦ Upholstery Clip Pliers - VAG1634-

Caution

This procedure contains mandatory replaceable parts. Refer to component overview prior to starting procedure.

Mandatory Replacement Parts

♦ Upholstery Clips

Removing

– Remove the rear bench seat cover and the cushion. Refer to ⇒ “2.3 Bench Seat Cover and Padding, Removing and Installing”, page 419 .

– Remove the seat cover -3- as far as possible from the seat cushion -2-.

– Cut through the upholstery clips -1- with pliers.

Protected by copyright. Copying for private or commercial purposes, in part or in whole, is not permitted unless authorised by Volkswagen AG. Volkswagen AG does not guarantee or accept any liability with respect to the correctness of information in this document. Copyright by Volkswagen AG.

– Separate the seat cover and the seat cushion.

Installing

Install in reverse order of removal while paying attention to the following:

– After installing, make sure the seat cover is free of folds.

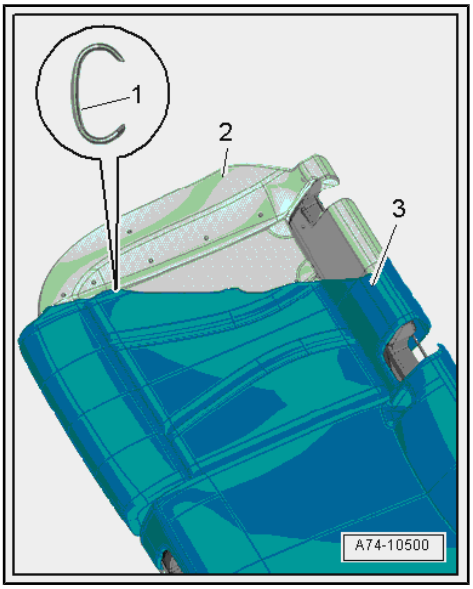

2.7 Rear Seat Backrest Cover and Cushion, Separating

Special tools and workshop equipment required

♦ Upholstery Clip Pliers - VAG1634-

> **Caution**
>
> *This procedure contains mandatory replaceable parts. Refer to component overview prior to starting procedure.*

Mandatory Replacement Parts

♦ Upholstery Clips

Removing

– Remove the backrest cover and backrest cushion from the rear seat backrest. Refer to ⇒ "2.4 Rear Seat Backrest Cover and Cushion, Removing and Installing", page 419 .

– Remove the backrest cover -2- as far as possible from the backrest cushion -3-.

– Cut through the upholstery clips -1- with pliers.

Installing

Install in reverse order of removal while paying attention to the following:

– After installing, make sure the seat cover is free of folds.

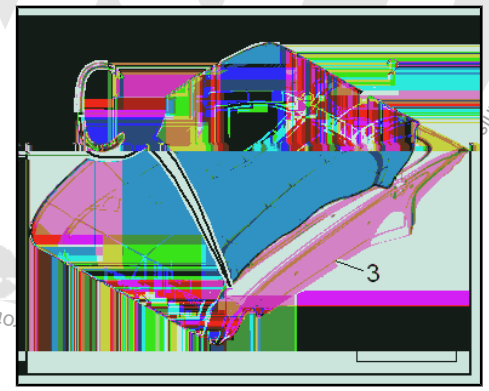

Protected by copyright. Copying for private or commercial purposes, partially or in whole, is not permitted unless authorised by Volkswagen AG. Volkswagen AG does not guarantee or accept any liability with respect to the correctness of information in this

3 Special Tools

Special tools and workshop equipment required

- Wedge Set - T10383-

- Upholstery Clip Pliers - VAG1634-

- Backrest Panel Tool - 3370-

- Trim Removal Wedge - 3409-

Protected by copyright. Copying for private or commercial purposes, in part or in whole, is not permitted unless authorised by Volkswagen AG. Volkswagen

4 Revision History

DRUCK NUMBER: K0059241221

Factory Edition	Edit Edition	Job Type	Feedback	Notes	Quality Checked By
09.2015	02/03/2016	Local Feedback	1146709		Joe Y
09.2015	01/12/2016	Local Feedback	1144847		Eric P.
09.2015	12/02/2015	Local Feedback	1137676		Joe Y
09.2015	11/17/2015	Local Feedback	1135133		Joe Y
09.2015	09/25/2015	Factory Update	1121163		Joe Y
	8/28/2015	Edit Review			Joe Y
	04/07/2015	Factory Update			Joe Y
	12/18/2014	Factory Update			Joe Y
	07/22/2014	Local Feedback	1025285		Joe Y
	06/06/2014	Local Feedback	1021810		Joe Y
	04/29/2014	Factory Update	N/A		Tom P
	04/18/2014	Factory New	N/A		Tom P

Protected by copyright. Copying for private or commercial purposes, in part or in whole, is not permitted unless authorised by Volkswagen AG. Volkswagen AG does not guarantee or accept any liability with respect to the correctness of information in this document. Copyright by Volkswagen AG.

Cautions & Warnings

Please read these WARNINGS and CAUTIONS before proceeding with maintenance and repair work. You must answer that you have read and you understand these WARNINGS and CAUTIONS before you will be allowed to view this information.

- If you lack the skills, tools and equipment, or a suitable workshop for any procedure described in this manual, we suggest you leave such repairs to an authorized Volkswagen retailer or other qualified shop. We especially urge you to consult an authorized Volkswagen retailer before beginning repairs on any vehicle that may still be covered wholly or in part by any of the extensive warranties issued by Volkswagen.

- Disconnect the battery negative terminal (ground strap) whenever you work on the fuel system or the electrical system. Do not smoke or work near heaters or other fire hazards. Keep an approved fire extinguisher handy.

- Volkswagen is constantly improving its vehicles and sometimes these changes, both in parts and specifications, are made applicable to earlier models. Therefore, part numbers listed in this manual are for reference only. Always check with your authorized Volkswagen retailer parts department for the latest information.

- Any time the battery has been disconnected on an automatic transmission vehicle, it will be necessary to reestablish Transmission Control Module (TCM) basic settings using the VAG 1551 Scan Tool (ST).

- Never work under a lifted vehicle unless it is solidly supported on stands designed for the purpose. Do not support a vehicle on cinder blocks, hollow tiles or other props that may crumble under continuous load. Never work under a vehicle that is supported solely by a jack. Never work under the vehicle while the engine is running.

- For vehicles equipped with an anti-theft radio, be sure of the correct radio activation code before disconnecting the battery or removing the radio. If the wrong code is entered when the power is restored, the radio may lock up and become inoperable, even if the correct code is used in a later attempt.

- If you are going to work under a vehicle on the ground, make sure that the ground is level. Block the wheels to keep the vehicle from rolling. Disconnect the battery negative terminal (ground strap) to prevent others from starting the vehicle while you are under it.

- Do not attempt to work on your vehicle if you do not feel well. You increase the danger of injury to yourself and others if you are tired, upset or have taken medicine or any other substances that may impair you or keep you from being fully alert.

- Never run the engine unless the work area is well ventilated. Carbon monoxide (CO) kills.

- Always observe good workshop practices. Wear goggles when you operate machine tools or work with acid. Wear goggles, gloves and other protective clothing whenever the job requires working with harmful substances.

- Tie long hair behind your head. Do not wear a necktie, a scarf, loose clothing, or a necklace when you work near machine tools or running engines. If your hair, clothing, or jewelry were to get caught in the machinery, severe injury could result.

- Do not re-use any fasteners that are worn or deformed in normal use. Some fasteners are designed to be used only once and are unreliable and may fail if used a second time. This includes, but is not limited to, nuts, bolts, washers, circlips and cotter pins. Always follow the recommendations in this manual - replace these fasteners with new parts where indicated, and any other time it is deemed necessary by inspection.

next

© 2002 Volkswagen of America, Inc.
All rights reserved. Information contained in this document is based on the latest information available at the time of printing and is subject to the copyright and other intellectual property rights of Volkswagen of America, Inc., its affiliated companies and its licensors. All rights are reserved to make changes at any time without notice. No part of this document may be reproduced, stored in a retrieval system, or transmitted in any form or by any means, electronic, mechanical, photocopying, recording, or otherwise, nor may these materials be modified or reposted to other sites, without the prior expressed written permission of the publisher.
Version 1.0

Cautions & Warnings

- Illuminate the work area adequately but safely. Use a portable safety light for working inside or under the vehicle. Make sure the bulb is enclosed by a wire cage. The hot filament of an accidentally broken bulb can ignite spilled fuel or oil.

- Friction materials such as brake pads and clutch discs may contain asbestos fibers. Do not create dust by grinding, sanding, or by cleaning with compressed air. Avoid breathing asbestos fibers and asbestos dust. Breathing asbestos can cause serious diseases such as asbestosis or cancer, and may result in death.

- Finger rings should be removed so that they cannot cause electrical shorts, get caught in running machinery, or be crushed by heavy parts.

- Before starting a job, make certain that you have all the necessary tools and parts on hand. Read all the instructions thoroughly; do not attempt shortcuts. Use tools that are appropriate to the work and use only replacement parts meeting Volkswagen specifications. Makeshift tools, parts and procedures will not make good repairs.

- Catch draining fuel, oil or brake fluid in suitable containers. Do not use empty food or beverage containers that might mislead someone into drinking from them. Store flammable fluids away from fire hazards. Wipe up spills at once, but do not store the oily rags, which can ignite and burn spontaneously.

- Use pneumatic and electric tools only to loosen threaded parts and fasteners. Never use these tools to tighten fasteners, especially on light alloy parts. Always use a torque wrench to tighten fasteners to the tightening torque listed.

- Keep sparks, lighted matches, and open flame away from the top of the battery. If escaping hydrogen gas is ignited, it will ignite gas trapped in the cells and cause the battery to explode.

- Be mindful of the environment and ecology. Before you drain the crankcase, find out the proper way to dispose of the oil. Do not pour oil onto the ground, down a drain, or into a stream, pond, or lake. Consult local ordinances that govern the disposal of wastes.

- The air-conditioning (A/C) system is filled with a chemical refrigerant that is hazardous. The A/C system should be serviced only by trained automotive service technicians using approved refrigerant recovery/recycling equipment, trained in related safety precautions, and familiar with regulations governing the discharging and disposal of automotive chemical refrigerants.

- Before doing any electrical welding on vehicles equipped with anti-lock brakes (ABS), disconnect the battery negative terminal (ground strap) and the ABS control module connector.

- Do not expose any part of the A/C system to high temperatures such as open flame. Excessive heat will increase system pressure and may cause the system to burst.

- When boost-charging the battery, first remove the fuses for the Engine Control Module (ECM), the Transmission Control Module (TCM), the ABS control module, and the trip computer. In cases where one or more of these components is not separately fused, disconnect the control module connector(s).

- Some of the vehicles covered by this manual are equipped with a supplemental restraint system (SRS), that automatically deploys an airbag in the event of a frontal impact. The airbag is operated by an explosive device. Handled improperly or without adequate safeguards, it can be accidentally activated and cause serious personal injury. To guard against personal injury or airbag system failure, only trained Volkswagen Service technicians should test, disassemble or service the airbag system.

back next

© 2002 Volkswagen of America, Inc.
All rights reserved. Information contained in this document is based on the latest information available at the time of printing and is subject to the copyright and other intellectual property rights of Volkswagen of America, Inc., its affiliated companies and its licensors. All rights are reserved to make changes at any time without notice. No part of this document may be reproduced, stored in a retrieval system, or transmitted in any form or by any means, electronic, mechanical, photocopying, recording, or otherwise, nor may these materials be modified or reposted to other sites, without the prior expressed written permission of the publisher.
Version 1.0

Cautions & Warnings

- Do not quick-charge the battery (for boost starting) for longer than one minute, and do not exceed 16.5 volts at the battery with the boosting cables attached. Wait at least one minute before boosting the battery a second time.

- Never use a test light to conduct electrical tests of the airbag system. The system must only be tested by trained Volkswagen Service technicians using the VAG 1551 Scan Tool (ST) or an approved equivalent. The airbag unit must never be electrically tested while it is not installed in the vehicle.

- Some aerosol tire inflators are highly flammable. Be extremely cautious when repairing a tire that may have been inflated using an aerosol tire inflator. Keep sparks, open flame or other sources of ignition away from the tire repair area. Inflate and deflate the tire at least four times before breaking the bead from the rim. Completely remove the tire from the rim before attempting any repair.

- When driving or riding in an airbag-equipped vehicle, never hold test equipment in your hands or lap while the vehicle is in motion. Objects between you and the airbag can increase the risk of injury in an accident.

I have read and I understand these Cautions and Warnings.

back OK

Protected by copyright. Copying for private or commercial purposes, in part or in whole, is not permitted unless authorised by Volkswagen AG. Volkswagen AG does not guarantee or accept any liability with respect to the correctness of information in this document. Copyright by Volkswagen AG.

© 2002 Volkswagen of America, Inc.
All rights reserved. Information contained in this document is based on the latest information available at the time of printing and is subject to the copyright and other intellectual property rights of Volkswagen of America, Inc., its affiliated companies and its licensors. All rights are reserved to make changes at any time without notice. No part of this document may be reproduced, stored in a retrieval system, or transmitted in any form or by any means, electronic, mechanical, photocopying, recording, or otherwise, nor may these materials be modified or reposted to other sites, without the prior expressed written permission of the publisher.
Version 1.0