2009 Chevrolet Aveo Owner Manual

Seats and Restraint System 1-1
Head Restraints 1-2
Front Seats 1-4
Rear Seats 1-9
Safety Belts 1-16
Child Restraints 1-34
Airbag System 1-60
Restraint System Check 1-75

Features and Controls 2-1
Keys 2-2
Doors and Locks 2-6
Windows 2-12
Theft-Deterrent Systems 2-14
Starting and Operating Your Vehicle 2-18
Mirrors 2-34
OnStar® System 2-36
Storage Areas 2-39
Sunroof 2-40

Instrument Panel 3-1
Instrument Panel Overview 3-4
Climate Controls 3-18
Warning Lights, Gages, and Indicators 3-23
Trip Computer 3-38
Audio System(s) 3-40

Driving Your Vehicle 4-1
Your Driving, the Road, and the Vehicle 4-2
Towing 4-24

Service and Appearance Care 5-1
Service 5-3
Fuel 5-5
Checking Things Under the Hood 5-11
Headlamp Aiming 5-43
Bulb Replacement 5-43
Windshield Wiper Blade Replacement 5-50
Tires 5-51
Appearance Care 5-79
Vehicle Identification 5-86
Electrical System 5-86
Capacities and Specifications 5-93

Maintenance Schedule 6-1
Maintenance Schedule 6-2

Customer Assistance Information 7-1
Customer Assistance and Information 7-2
Reporting Safety Defects 7-16
Vehicle Data Recording and Privacy 7-18

Index 1

GENERAL MOTORS, GM, the GM Emblem, CHEVROLET, the CHEVROLET Emblem, and the name AVEO are registered trademarks of General Motors Corporation.

This manual includes the latest information at the time it was printed. GM reserves the right to make changes after that time without further notice. For vehicles first sold in Canada, substitute the name “General Motors of Canada Limited” for Chevrolet Motor Division wherever it appears in this manual.

This manual describes features that may or may not be on your specific vehicle.

Read this manual from beginning to end to learn about the vehicle’s features and controls. Pictures, symbols, and words work together to explain vehicle operation.

Keep this manual in the vehicle for quick reference.

Litho in U.S.A.
Part No. 25853987 B Second Printing

Canadian Owners

A French language copy of this manual can be obtained from your dealer/retailer or from:

Helm, Incorporated
P.O. Box 07130
Detroit, MI 48207

1-800-551-4123
www.helminc.com

Propriétaires Canadiens

On peut obtenir un exemplaire de ce guide en français auprès de concessionnaire ou à l’adresse suivante:

Helm, Incorporated
P.O. Box 07130
Detroit, MI 48207

1-800-551-4123
www.helminc.com

Index

To quickly locate information about the vehicle, use the index in the back of the manual. It is an alphabetical list of what is in the manual and the page number where it can be found.

©2008 General Motors Corporation. All Rights Reserved.

Safety Warnings and Symbols

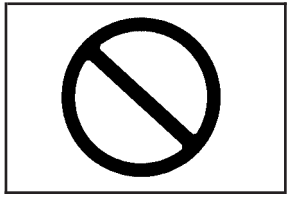

A circle with a slash through it is a safety symbol which means “Do Not,” “Do not do this,” or “Do not let this happen.”

A box with the word CAUTION is used to tell about things that could hurt you or others if you were to ignore the warning.

⚠ CAUTION:

These mean there is something that could hurt you or other people.

Cautions tell what the hazard is and what to do to avoid or reduce the hazard. Read these cautions.

A notice tells about something that can damage the vehicle.

Notice: **These mean there is something that could damage your vehicle.**

Many times, this damage would not be covered by the vehicle’s warranty, and it could be costly. The notice tells what to do to help avoid the damage.

There are also warning labels on the vehicle which use the same words, CAUTION or Notice.

Vehicle Symbols

The vehicle has components and labels that use symbols instead of text. Symbols are shown along with the text describing the operation or information relating to a specific component, control, message, gage, or indicator.

📖 **:** This symbol is shown when you need to see your owner manual for additional instructions or information.

🔧 **:** This symbol is shown when you need to see a service manual for additional instructions or information.

Vehicle Symbol Chart

Here are some additional symbols that may be found on the vehicle and what they mean. For more information on the symbol, refer to the index.

: Airbag Readiness Light

: Air Conditioning

: Antilock Brake System (ABS)

: Audio Steering Wheel Controls or OnStar®

: Brake System Warning Light

: Charging System

: Cruise Control

: Engine Coolant Temperature

: Exterior Lamps

: Fog Lamps

: Fuel Gage

: Fuses

: Headlamp High/Low-Beam Changer

: LATCH System Child Restraints

: Malfunction Indicator Lamp

: Oil Pressure

: Power

: Remote Vehicle Start

: Safety Belt Reminders

: Tire Pressure Monitor

: Traction Control

: Windshield Washer Fluid

Section 1 Seats and Restraint System

Head Restraints 1-2

Front Seats 1-4
- Manual Seats 1-4
- Seat Height Adjuster 1-5
- Manual Lumbar 1-5
- Reclining Seatbacks 1-6

Rear Seats 1-9
- Rear Seat Operation (Sedan) 1-9
- Rear Seat Operation (Hatchback) 1-12

Safety Belts 1-16
- Safety Belts: They Are for Everyone 1-16
- How to Wear Safety Belts Properly 1-21
- Lap-Shoulder Belt 1-30
- Safety Belt Use During Pregnancy 1-33
- Safety Belt Extender 1-34

Child Restraints 1-34
- Older Children 1-34
- Infants and Young Children 1-38
- Child Restraint Systems 1-41
- Where to Put the Restraint 1-44
- Lower Anchors and Tethers for Children (LATCH) 1-46
- Securing a Child Restraint in a Rear Seat Position 1-53
- Securing a Child Restraint in the Right Front Seat Position 1-56

Airbag System 1-60
- Where Are the Airbags? 1-62
- When Should an Airbag Inflate? 1-64
- What Makes an Airbag Inflate? 1-65
- How Does an Airbag Restrain? 1-65
- What Will You See After an Airbag Inflates? 1-66
- Passenger Sensing System 1-67
- Servicing Your Airbag-Equipped Vehicle 1-73
- Adding Equipment to Your Airbag-Equipped Vehicle 1-74

Restraint System Check 1-75
- Checking the Restraint Systems 1-75
- Replacing Restraint System Parts After a Crash 1-76

Head Restraints

The front seats have adjustable head restraints in the outboard seating positions.

⚠ CAUTION:

With head restraints that are not installed and adjusted properly, there is a greater chance that occupants will suffer a neck/spinal injury in a crash. Do not drive until the head restraints for all occupants are installed and adjusted properly.

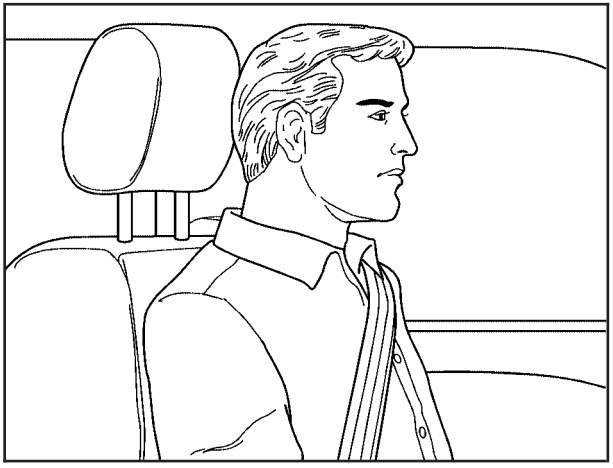

Adjust the head restraint so that the top of the restraint is at the same height as the top of the occupant's head. This position reduces the chances of a neck injury in a crash.

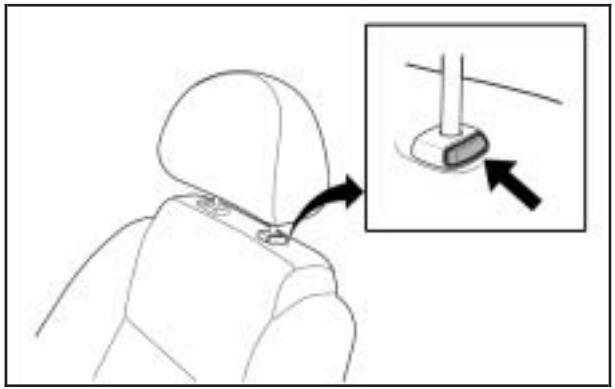

Pull the head restraint up to raise it. To lower the head restraint, press the button, located on the top of the seatback, and push the restraint down.

Push down on the head restraint after the button is released to make sure that it is locked in place.

The head restraints are not designed to be removed.

The rear seats have head rests that are adjustable up and down.

Front Seats

Manual Seats

⚠ CAUTION:

You can lose control of the vehicle if you try to adjust a manual driver's seat while the vehicle is moving. The sudden movement could startle and confuse you, or make you push a pedal when you do not want to. Adjust the driver's seat only when the vehicle is not moving.

Pull up and hold the bar located under the front of the seat to unlock it.

Slide the seat to where you want it and release the bar. Then try to move the seat with your body, to make sure the seat is locked into place.

Seat Height Adjuster

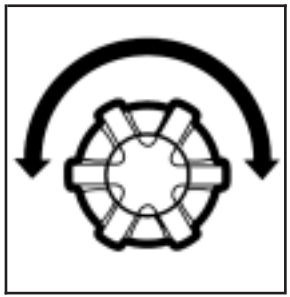

Turn the knob located on the outboard side of the seat cushion to adjust the height of the driver seat cushion.

Turn the knob forward to raise the height of the seat cushion and rearward to lower it.

Manual Lumbar

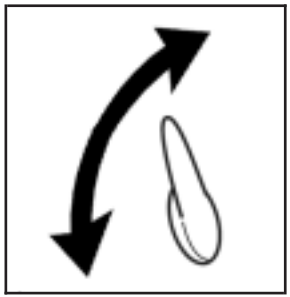

On vehicles with front seat manual lumbar, the adjustment lever is located on the outboard side of the seatback.

Move the lever up or down to one of its three positions to increase or decrease the lumbar support. The highest position provides the most support and the lowest position provides the least support.

Reclining Seatbacks

⚠ CAUTION:

You can lose control of the vehicle if you try to adjust a manual driver's seat while the vehicle is moving. The sudden movement could startle and confuse you, or make you push a pedal when you do not want to. Adjust the driver's seat only when the vehicle is not moving.

⚠ CAUTION:

If either seatback is not locked, it could move forward in a sudden stop or crash. That could cause injury to the person sitting there. Always push and pull on the seatbacks to be sure they are locked.

The seats have manual reclining seatbacks. The lever used to operate them is located on the outboard side of the seats.

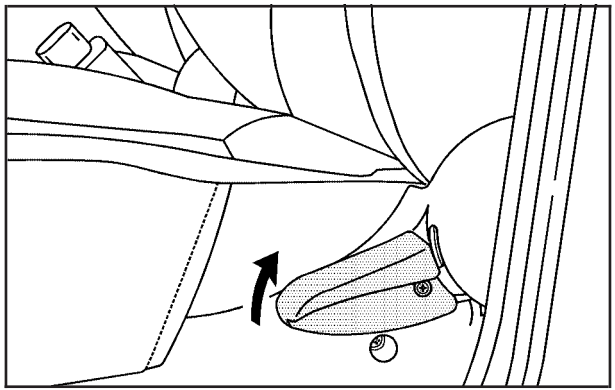

To recline the seatback:

1. Lift the recline lever.
2. Move the seatback to the desired position, then release the lever to lock the seatback in place.
3. Push and pull on the seatback to make sure it is locked.

To return the seatback to an upright position:

1. Lift the lever fully without applying pressure to the seatback and the seatback will return to the upright position.
2. Push and pull on the seatback to make sure it is locked.

⚠ CAUTION:

Sitting in a reclined position when the vehicle is in motion can be dangerous. Even if when buckled up, the safety belts cannot do their job when reclined like this.

The shoulder belt cannot do its job because it will not be against your body. Instead, it will be in front of you. In a crash, you could go into it, receiving neck or other injuries.

The lap belt cannot do its job either. In a crash, the belt could go up over your abdomen. The belt forces would be there, not at your pelvic bones. This could cause serious internal injuries.

For proper protection when the vehicle is in motion, have the seatback upright. Then sit well back in the seat and wear the safety belt properly.

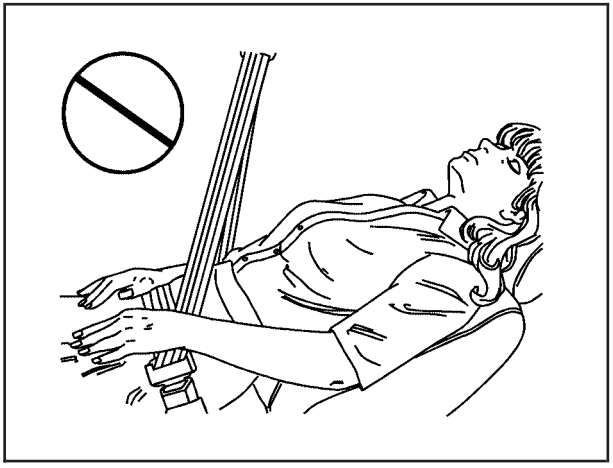

Do not have a seatback reclined if the vehicle is moving.

Rear Seats

Rear Seat Operation (Sedan)

Folding the Seatbacks

The rear seatbacks can be folded down to increase cargo space.

To fold down the seatbacks:

Notice: **Folding a rear seat with the safety belts still fastened may cause damage to the seat or the safety belts. Always unbuckle the safety belts and return them to their normal stowed position before folding a rear seat.**

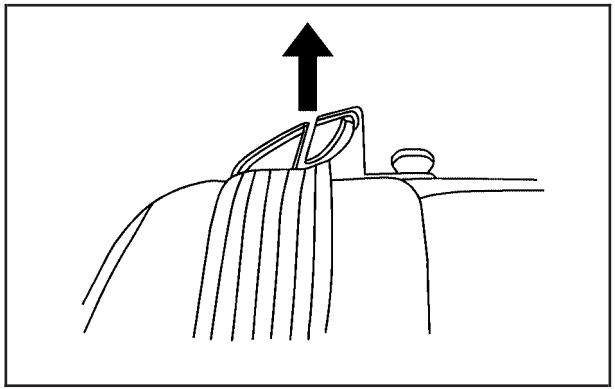

1. Remove the safety belt strap from the safety belt guide by pulling it through the slot.
2. Push the head restraints all the way down.
3. Unlatch the center safety belt by pressing the red button on the buckle.

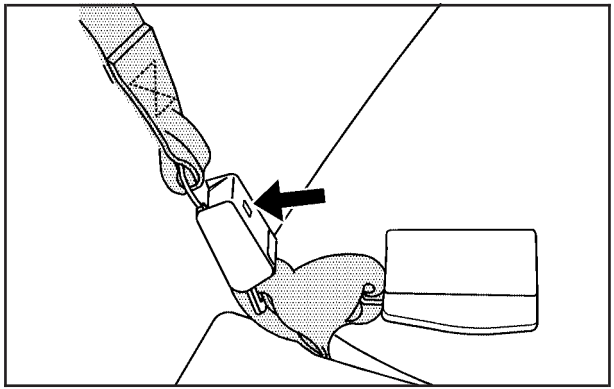

4. Detach the center safety belt from the mini buckle by inserting the ignition key into the slot in the mini buckle, pressing the release button, and allowing the belt to retract.

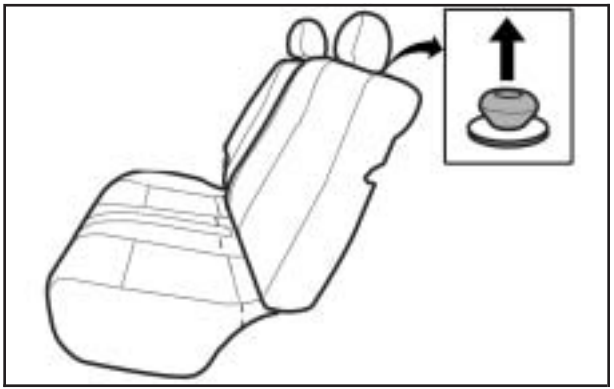

5. Pull up the release knob located on top of either of the rear seatbacks.
6. Fold the rear seatback forward and down.

To return the seatback to the upright position:

1. Hook the safety belts into the safety belt guide.
2. Lift the seatback up and push it to its original position.

⚠ CAUTION:

If either seatback is not locked, it could move forward in a sudden stop or crash. That could cause injury to the person sitting there. Always push and pull on the seatbacks to be sure they are locked.

3. Push down and rearward firmly on the top of the seatbacks until it latches securely in the fully upright position.
4. To reattach the center seat safety belt to the mini buckle, pull it from the retractor.
5. Push the latch plate at the end of the safety belt strap into the mini-buckle until the mechanism clicks. Make sure the strap is not twisted. The sliding latch plate will face the front of the vehicle.

⚠ CAUTION:

A safety belt that is improperly routed, not properly attached, or twisted will not provide the protection needed in a crash. The person wearing the belt could be seriously injured. After raising the rear seatback, always check to be sure that the safety belts are properly routed and attached, and are not twisted.

6. Insert the safety belt strap back into the safety belt guide.

Rear Seat Operation (Hatchback)

Folding the Rear Seats

The rear seats can be folded to increase cargo space.

To fold the rear seats:

1. Lower the head restraints completely.
2. Unlatch the center safety belt by pressing the red button on the buckle.

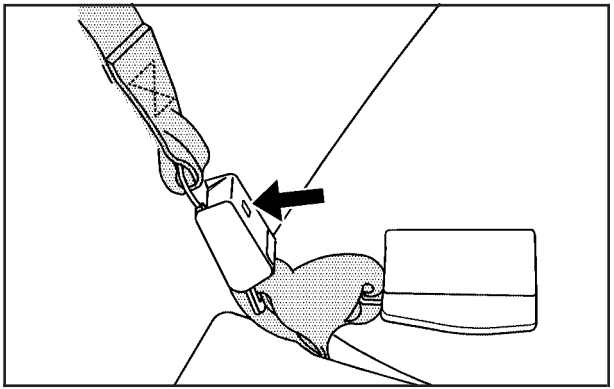

3. Detach the center safety belt from the mini buckle by inserting the key into the slot in the mini buckle, pressing the release button, and allowing it to retract.

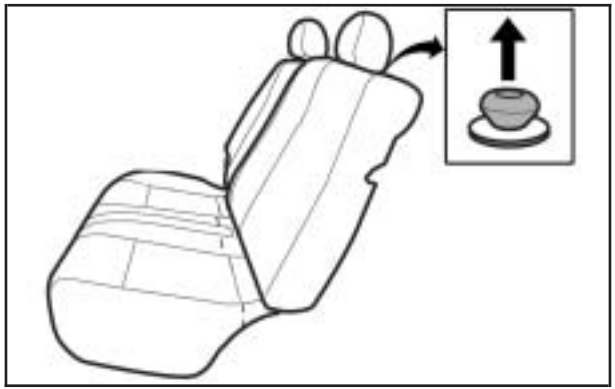

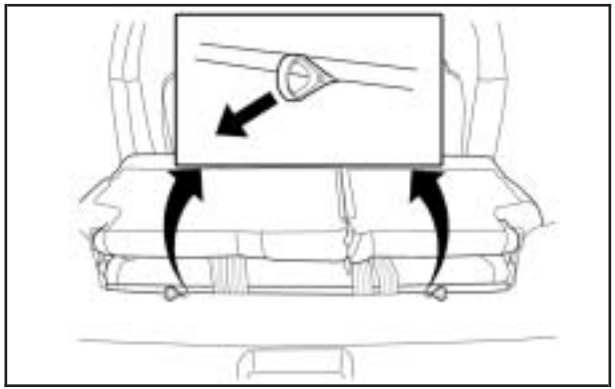

4. Pull up the release knob, located on the top of the seatbacks, and fold the seatbacks forward and down.

Notice: **Folding a rear seat with the safety belts still fastened may cause damage to the seat or the safety belts. Always unbuckle the safety belts and return them to their normal stowed position before folding a rear seat.**

5. Move the safety belt buckles and safety belt in the center seating position out of the space between the seatbacks and the seat cushion so they are not in the way as the seat is being folded.

6. Firmly pull the release handles on the rear side of the seat cushion to unlock the seat cushion.

7. Lift the seat cushion up and flip it forward.

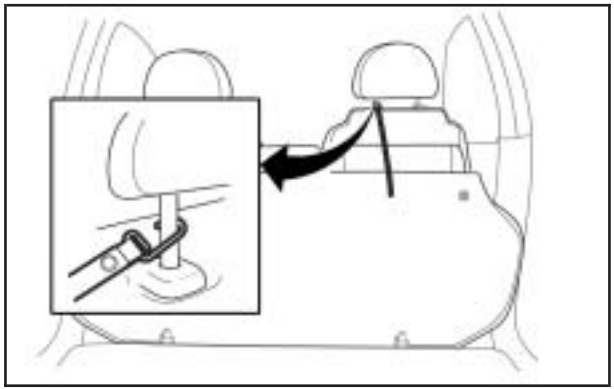

8. Clip the hook to the front seat head restraint to keep the rear seat secure.

Unfolding the Seats

To return the rear seats to the normal seating position:

1. Unclip the hook from the front seat head restraint.
2. Position the buckles in back of the seat latches when moving the rear seats to the sitting position.

Notice: **Damage to the safety belt buckle or rear seat locking mechanism can occur if the safety belt and buckles are pinched under the rear seat cushion. Do not place the safety belt and buckles on the floor under the rear seat cushion when the rear seat is put back to the sitting position.**

3. Push the seat cushion down to its original position until it latches securely. Try to pull up on the seat to make sure it is locked in place.

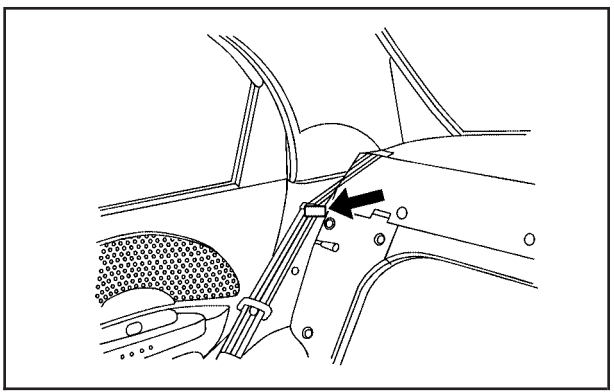

4. Hook the safety belts in the outboard seating positions into the retaining clips.

⚠ CAUTION:

A safety belt that is improperly routed, not properly attached, or twisted will not provide the protection needed in a crash. The person wearing the belt could be seriously injured. After raising the rear seatback, always check to be sure that the safety belts are properly routed and attached, and are not twisted.

5. Lift the seatbacks up and push them back to their original latched positions.
6. Unhook the safety belts in the outboard seating positions from the retaining clips.
7. Return the safety belt buckles and the center seat safety belt to their original position between the rear seatback and the seat cushion. Make sure the straps of the safety belt and buckles are not twisted.
8. To reattach the center seat safety belt to the mini buckle, pull it from the retractor.

⚠ CAUTION:

If either seatback is not locked, it could move forward in a sudden stop or crash. That could cause injury to the person sitting there. Always push and pull on the seatbacks to be sure they are locked.

9. Push down and rearward firmly on the top of the seatbacks until they latch securely in the fully upright position.

Safety Belts

Safety Belts: They Are for Everyone

This section of the manual describes how to use safety belts properly. It also describes some things not to do with safety belts.

⚠ CAUTION:

Do not let anyone ride where a safety belt cannot be worn properly. In a crash, if you or your passenger(s) are not wearing safety belts, the injuries can be much worse. You can hit things inside the vehicle harder or be ejected from the vehicle. You and your passenger(s) can be seriously injured or killed. In the same crash, you might not be, if you are buckled up. Always fasten your safety belt, and check that your passenger(s) are restrained properly too.

⚠ CAUTION:

It is extremely dangerous to ride in a cargo area, inside or outside of a vehicle. In a collision, people riding in these areas are more likely to be seriously injured or killed. Do not allow people to ride in any area of your vehicle that is not equipped with seats and safety belts. Be sure everyone in your vehicle is in a seat and using a safety belt properly.

This vehicle has indicators as a reminder to buckle the safety belts. See *Safety Belt Reminders on page 3-26* for additional information.

In most states and in all Canadian provinces, the law requires wearing safety belts. Here is why:

You never know if you will be in a crash. If you do have a crash, you do not know if it will be a serious one.

A few crashes are mild, and some crashes can be so serious that even buckled up, a person would not survive. But most crashes are in between. In many of them, people who buckle up can survive and sometimes walk away. Without safety belts, they could have been badly hurt or killed.

After more than 40 years of safety belts in vehicles, the facts are clear. In most crashes buckling up does matter... a lot!

Why Safety Belts Work

When you ride in or on anything, you go as fast as it goes.

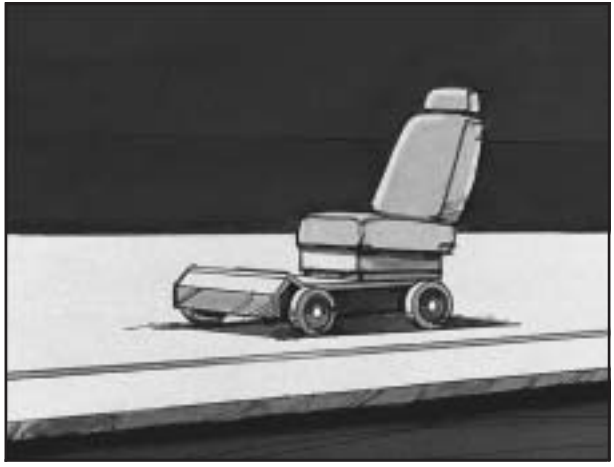

Take the simplest vehicle. Suppose it is just a seat on wheels.

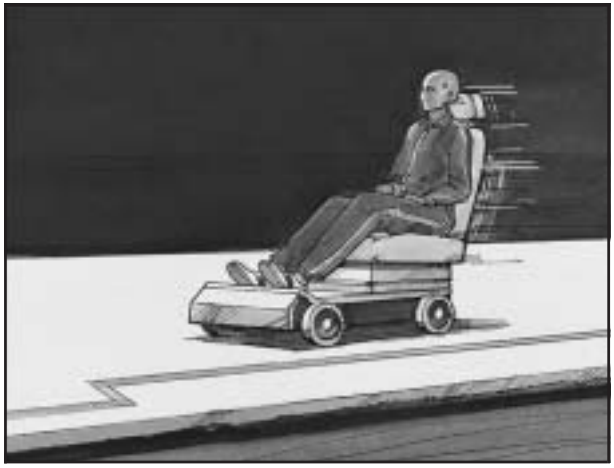

Put someone on it.

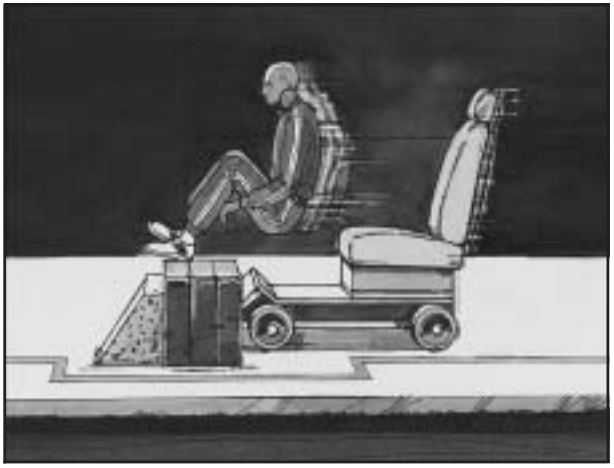

Get it up to speed. Then stop the vehicle. The rider does not stop.

The person keeps going until stopped by something. In a real vehicle, it could be the windshield...

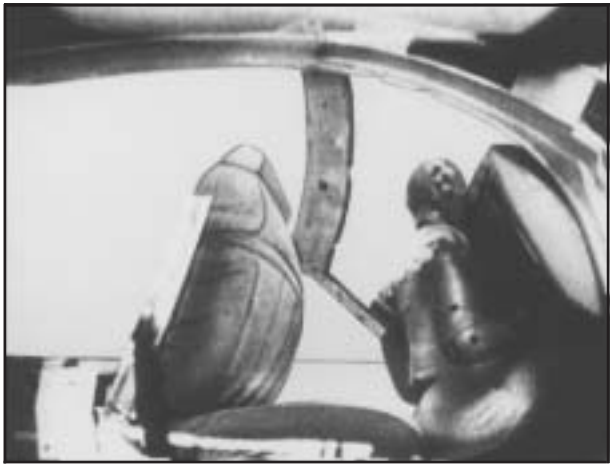

or the instrument panel...

or the safety belts!

With safety belts, you slow down as the vehicle does. You get more time to stop. You stop over more distance, and your strongest bones take the forces. That is why safety belts make such good sense.

Questions and Answers About Safety Belts

Q: Will I be trapped in the vehicle after a crash if I am wearing a safety belt?

A: You *could* be — whether you are wearing a safety belt or not. But your chance of being conscious during and after an accident, so you *can* unbuckle and get out, is *much* greater if you are belted. And you can unbuckle a safety belt, even if you are upside down.

Q: If my vehicle has airbags, why should I have to wear safety belts?

A: Airbags are supplemental systems only; so they work *with* safety belts — not instead of them. Whether or not an airbag is provided, all occupants still have to buckle up to get the most protection. That is true not only in frontal collisions, but especially in side and other collisions.

Q: If I am a good driver, and I never drive far from home, why should I wear safety belts?

A: You may be an excellent driver, but if you are in a crash — even one that is not your fault — you and your passenger(s) can be hurt. Being a good driver does not protect you from things beyond your control, such as bad drivers.

Most accidents occur within 25 miles (40 km) of home. And the greatest number of serious injuries and deaths occur at speeds of less than 40 mph (65 km/h).

Safety belts are for everyone.

How to Wear Safety Belts Properly

This section is only for people of adult size.

Be aware that there are special things to know about safety belts and children. And there are different rules for smaller children and infants. If a child will be riding in the vehicle, see *Older Children on page 1-34* or *Infants and Young Children on page 1-38*. Follow those rules for everyone's protection.

It is very important for all occupants to buckle up. Statistics show that unbelted people are hurt more often in crashes than those who are wearing safety belts.

Occupants who are not buckled up can be thrown out of the vehicle in a crash. And they can strike others in the vehicle who are wearing safety belts.

First, before you or your passenger(s) wear a safety belt, there is important information you should know.

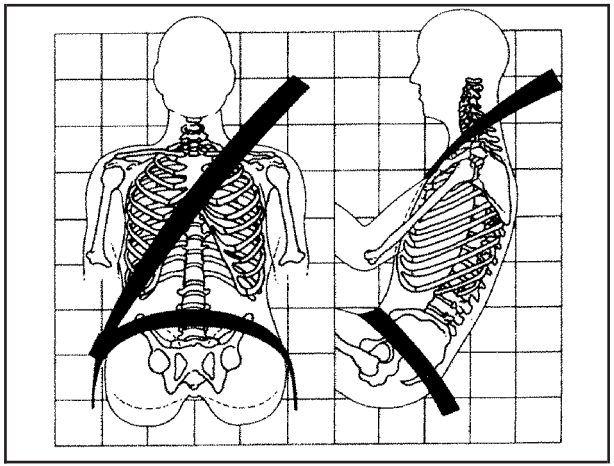

Sit up straight and always keep your feet on the floor in front of you. The lap part of the belt should be worn low and snug on the hips, just touching the thighs.

In a crash, this applies force to the strong pelvic bones and you would be less likely to slide under the lap belt. If you slid under it, the belt would apply force on your abdomen. This could cause serious or even fatal injuries. The shoulder belt should go over the shoulder and across the chest. These parts of the body are best able to take belt restraining forces.

The shoulder belt locks if there is a sudden stop or crash.

Q: What is wrong with this?

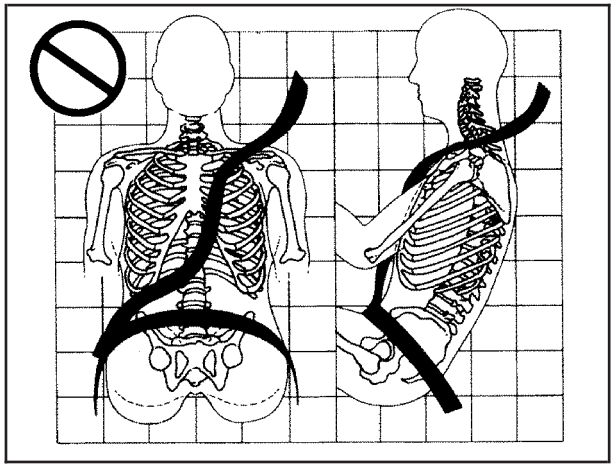

A: The shoulder belt is too loose. It will not give as much protection this way.

⚠ CAUTION:

You can be seriously hurt if your shoulder belt is too loose. In a crash, you would move forward too much, which could increase injury. The shoulder belt should fit snugly against your body.

Q: What is wrong with this?

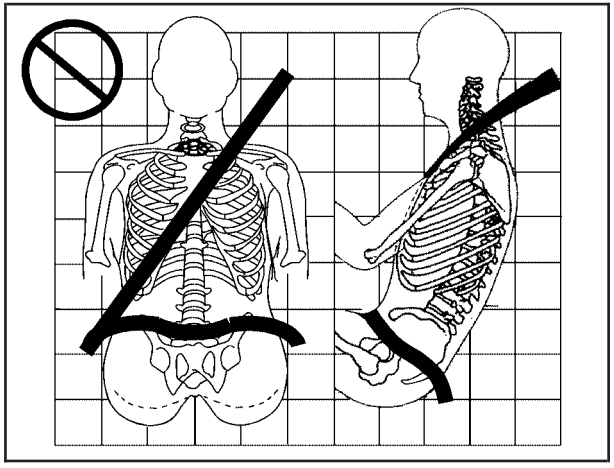

A: The lap belt is too loose. It will not give nearly as much protection this way.

⚠ CAUTION:

You can be seriously hurt if your lap belt is too loose. In a crash, you could slide under the lap belt and apply force on your abdomen. This could cause serious or even fatal injuries. The lap belt should be worn low and snug on the hips, just touching the thighs.

Q: What is wrong with this?

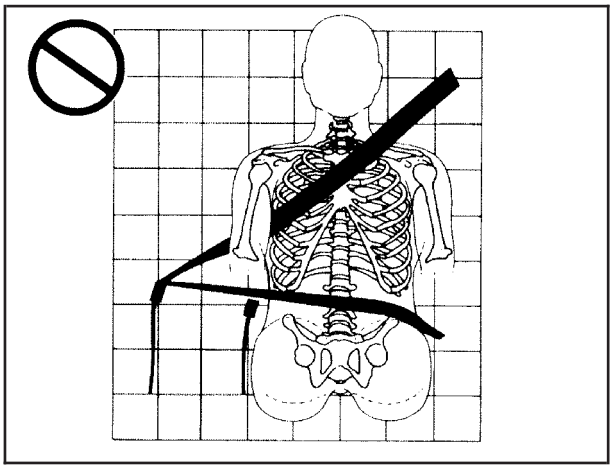

A: The belt is buckled in the wrong buckle.

⚠ CAUTION:

You can be seriously injured if your belt is buckled in the wrong place like this. In a crash, the belt would go up over your abdomen. The belt forces would be there, not on the pelvic bones. This could cause serious internal injuries. Always buckle your belt into the buckle nearest you.

Q: What is wrong with this?

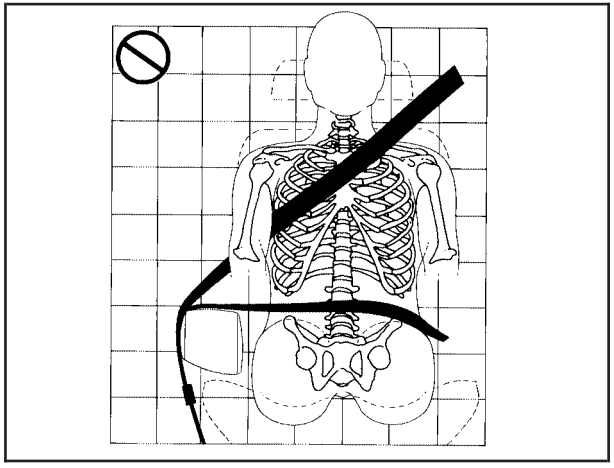

A: The belt is over an armrest.

⚠ CAUTION:

You can be seriously injured if your belt goes over an armrest like this. The belt would be much too high. In a crash, you can slide under the belt. The belt force would then be applied on the abdomen, not on the pelvic bones, and that could cause serious or fatal injuries. Be sure the belt goes under the armrests.

Q: What is wrong with this?

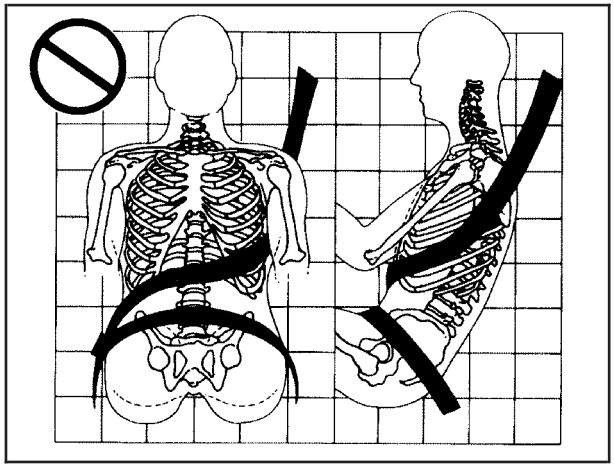

A: The shoulder belt is worn under the arm. It should be worn over the shoulder at all times.

⚠ CAUTION:

You can be seriously injured if you wear the shoulder belt under your arm. In a crash, your body would move too far forward, which would increase the chance of head and neck injury. Also, the belt would apply too much force to the ribs, which are not as strong as shoulder bones. You could also severely injure internal organs like your liver or spleen. The shoulder belt should go over the shoulder and across the chest.

Q: What is wrong with this?

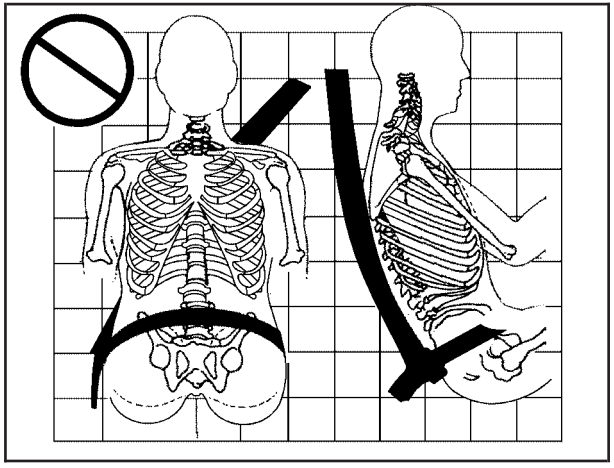

A: The belt is behind the body.

⚠ CAUTION:

You can be seriously injured by not wearing the lap-shoulder belt properly. In a crash, you would not be restrained by the shoulder belt. Your body could move too far forward increasing the chance of head and neck injury. You might also slide under the lap belt. The belt force would then be applied right on the abdomen. That could cause serious or fatal injuries. The shoulder belt should go over the shoulder and across the chest.

Q: What is wrong with this?

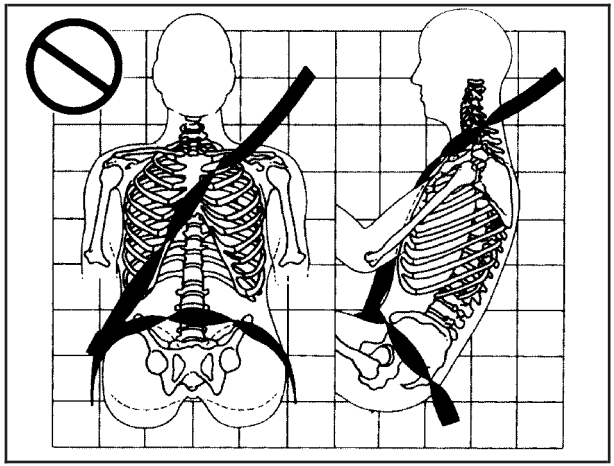

A: The belt is twisted across the body.

⚠ CAUTION:

You can be seriously injured by a twisted belt. In a crash, you would not have the full width of the belt to spread impact forces. If a belt is twisted, make it straight so it can work properly, or ask your dealer/retailer to fix it.

Lap-Shoulder Belt

All seating positions in the vehicle have a lap-shoulder belt.

If you are using a rear seating position with a detachable safety belt and the safety belt is not attached, see *Rear Seat Operation (Sedan) on page 1-9* or *Rear Seat Operation (Hatchback) on page 1-12* for instruction on reconnecting the safety belt to the mini-buckle.

The following instructions explain how to wear a lap-shoulder belt properly.

1. Adjust the seat, if the seat is adjustable, so you can sit up straight. To see how, see “Seats” in the Index.
2. Pick up the latch plate and pull the belt across you. Do not let it get twisted.

   The lap-shoulder belt may lock if you pull the belt across you very quickly. If this happens, let the belt go back slightly to unlock it. Then pull the belt across you more slowly.

   If the shoulder portion of a passenger belt is pulled out all the way, the child restraint locking feature may be engaged. If this happens, let the belt go back all the way and start again.

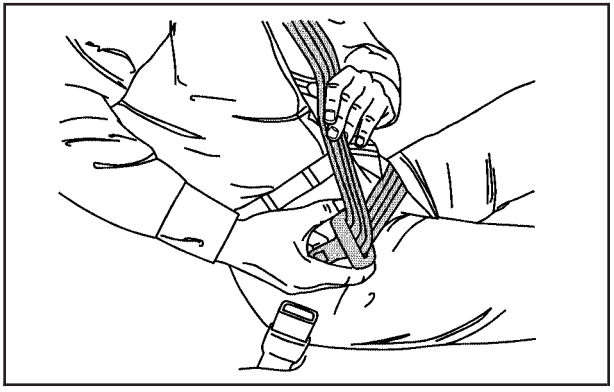

3. If the belt stops before it reaches the buckle, tilt the latch plate and keep pulling until it can be buckled.

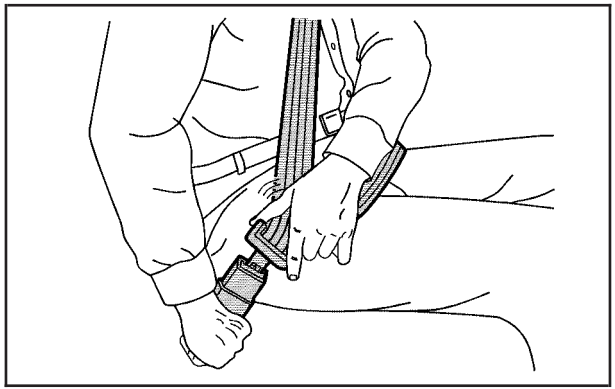

4. Push the latch plate into the buckle until it clicks.

   If the latch plate will not go fully into the buckle, check if the correct buckle is being used.

   Pull up on the latch plate to make sure it is secure. If the belt is not long enough, see *Safety Belt Extender on page 1-34*.

   Position the release button on the buckle so that the safety belt could be quickly unbuckled if necessary.

5. If equipped with a shoulder belt height adjuster, move it to the height that is right for you. See “Shoulder Belt Height Adjustment” later in this section for instructions on use and important safety information.

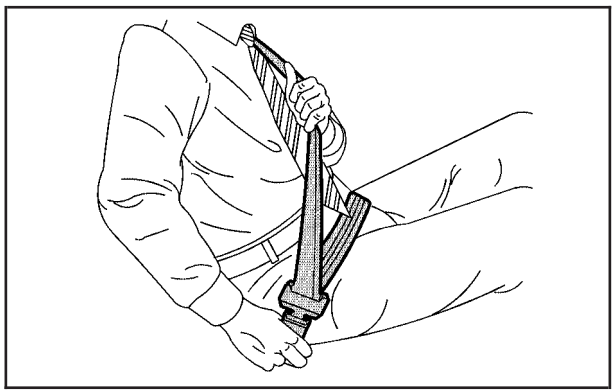

6. To make the lap part tight, pull up on the shoulder belt.

   It may be necessary to pull stitching on the safety belt through the latch plate to fully tighten the lap belt on smaller occupants.

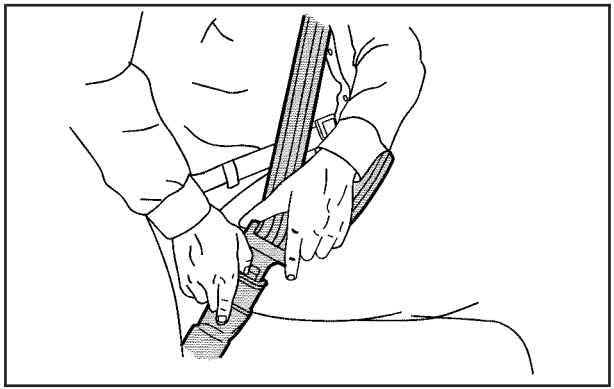

To unlatch the belt, push the button on the buckle. The belt should return to its stowed position.

Before a door is closed, be sure the belt is out of the way. If a door is slammed against a safety belt, damage can occur to both the safety belt and the vehicle.

Shoulder Belt Height Adjuster

The vehicle has a shoulder belt height adjuster for the driver and right front passenger seating positions.

Adjust the height so that the shoulder portion of the belt is centered on the shoulder. The belt should be away from the face and neck, but not falling off the shoulder. Improper shoulder belt height adjustment could reduce the effectiveness of the safety belt in a crash.

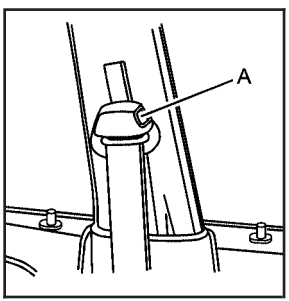

To move it down, press the release button (A) and move the height adjuster to the desired position.

After the adjuster is set to the desired position, try to move it down without pressing the release button to make sure it has locked into position.

Safety Belt Pretensioners

This vehicle has safety belt pretensioners for front outboard occupants. Although the safety belt pretensioners cannot be seen, they are part of the safety belt assembly. They can help tighten the safety belts during the early stages of a moderate to severe frontal or near frontal crash if the threshold conditions for pretensioner activation are met.

Pretensioners work only once. If the pretensioners activate in a crash, they will need to be replaced, and probably other new parts for the vehicle's safety belt system. See *Replacing Restraint System Parts After a Crash on page 1-76*.

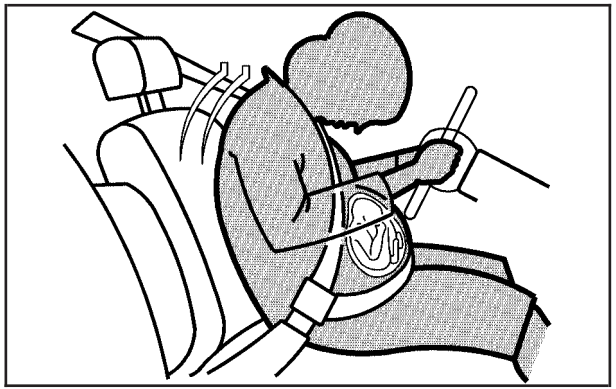

Safety Belt Use During Pregnancy

Safety belts work for everyone, including pregnant women. Like all occupants, they are more likely to be seriously injured if they do not wear safety belts.

A pregnant woman should wear a lap-shoulder belt, and the lap portion should be worn as low as possible, below the rounding, throughout the pregnancy.

The best way to protect the fetus is to protect the mother. When a safety belt is worn properly, it is more likely that the fetus will not be hurt in a crash. For pregnant women, as for anyone, the key to making safety belts effective is wearing them properly.

Safety Belt Extender

If the vehicle's safety belt will fasten around you, you should use it.

But if a safety belt is not long enough, your dealer/retailer will order you an extender. When you go in to order it, take the heaviest coat you will wear, so the extender will be long enough for you. To help avoid personal injury, do not let someone else use it, and use it only for the seat it is made to fit. The extender has been designed for adults. Never use it for securing child seats. To wear it, attach it to the regular safety belt. For more information, see the instruction sheet that comes with the extender.

Child Restraints

Older Children

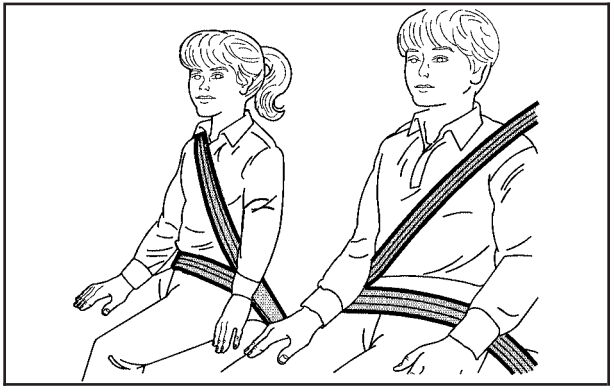

Older children who have outgrown booster seats should wear the vehicle's safety belts.

The manufacturer's instructions that come with the booster seat, state the weight and height limitations for that booster. Use a booster seat with a lap-shoulder belt until the child passes the below fit test:

- Sit all the way back on the seat. Do the knees bend at the seat edge? If yes, continue. If no, return to the booster seat.
- Buckle the lap-shoulder belt. Does the shoulder belt rest on the shoulder? If yes, continue. If no, then return to the booster seat.
- Does the lap belt fit low and snug on the hips, touching the thighs? If yes, continue. If no, return to the booster seat.
- Can proper safety belt fit be maintained for the length of the trip? If yes, continue. If no, return to the booster seat.

Q: What is the proper way to wear safety belts?

A: An older child should wear a lap-shoulder belt and get the additional restraint a shoulder belt can provide. The shoulder belt should not cross the face or neck. The lap belt should fit snugly below the hips, just touching the top of the thighs. This applies belt force to the child's pelvic bones in a crash. It should never be worn over the abdomen, which could cause severe or even fatal internal injuries in a crash.

According to accident statistics, children and infants are safer when properly restrained in the rear seating positions than in the front seating positions.

In a crash, children who are not buckled up can strike other people who are buckled up, or can be thrown out of the vehicle. Older children need to use safety belts properly.

⚠ CAUTION:

Never do this.

Never allow two children to wear the same safety belt. The safety belt can not properly spread the impact forces. In a crash, the two children can be crushed together and seriously injured. A safety belt must be used by only one person at a time.

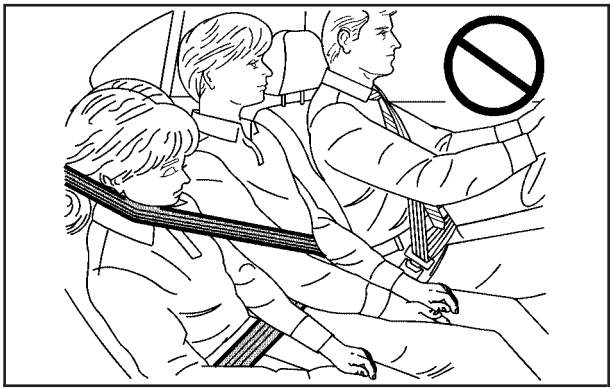

⚠ CAUTION:

Never do this.

Never allow a child to wear the safety belt with the shoulder belt behind their back. A child can be seriously injured by not wearing the lap-shoulder belt properly. In a crash, the child would not be restrained by the shoulder belt. The child could move too far forward increasing the chance of head and neck injury. The child might also slide under the lap belt. The belt force would then be applied right on the abdomen. That could cause serious or fatal injuries. The shoulder belt should go over the shoulder and across the chest.

Infants and Young Children

Everyone in a vehicle needs protection! This includes infants and all other children. Neither the distance traveled nor the age and size of the traveler changes the need, for everyone, to use safety restraints. In fact, the law in every state in the United States and in every Canadian province says children up to some age must be restrained while in a vehicle.

⚠ CAUTION:

Children can be seriously injured or strangled if a shoulder belt is wrapped around their neck and the safety belt continues to tighten. Never leave children unattended in a vehicle and never allow children to play with the safety belts.

Airbags plus lap-shoulder belts offer protection for adults and older children, but not for young children and infants. Neither the vehicle's safety belt system nor its airbag system is designed for them. Every time infants and young children ride in vehicles, they should have the protection provided by appropriate child restraints.

Children who are not restrained properly can strike other people, or can be thrown out of the vehicle.

⚠ CAUTION:

Never do this.

Never hold an infant or a child while riding in a vehicle. Due to crash forces, an infant or a child will become so heavy it is not possible to hold it during a crash. For example, in a crash at only 25 mph (40 km/h), a 12 lb (5.5 kg) infant will suddenly become a 240 lb (110 kg) force on a person's arms. An infant should be secured in an appropriate restraint.

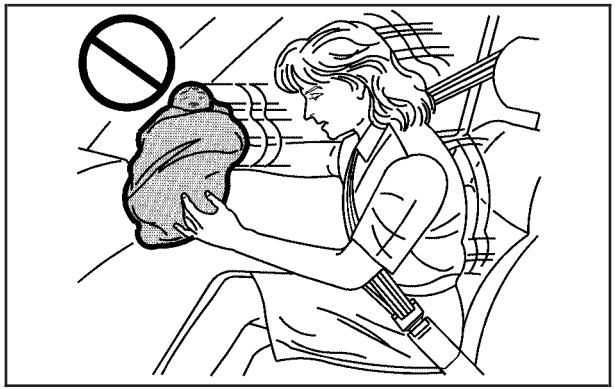

⚠ CAUTION:

Never do this.

Children who are up against, or very close to, any airbag when it inflates can be seriously injured or killed. Never put a rear-facing child restraint in the right front seat. Secure a rear-facing child restraint

CAUTION: (Continued)

CAUTION: (Continued)

in a rear seat. It is also better to secure a forward-facing child restraint in a rear seat. If you must secure a forward-facing child restraint in the right front seat, always move the front passenger seat as far back as it will go.

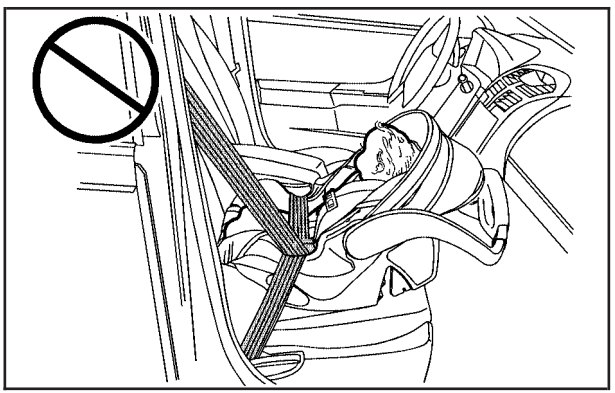

Q: What are the different types of add-on child restraints?

A: Add-on child restraints, which are purchased by the vehicle's owner, are available in four basic types. Selection of a particular restraint should take into consideration not only the child's weight, height, and age but also whether or not the restraint will be compatible with the motor vehicle in which it will be used.

For most basic types of child restraints, there are many different models available. When purchasing a child restraint, be sure it is designed to be used in a motor vehicle. If it is, the restraint will have a label saying that it meets federal motor vehicle safety standards.

The restraint manufacturer's instructions that come with the restraint state the weight and height limitations for a particular child restraint. In addition, there are many kinds of restraints available for children with special needs.

⚠ CAUTION:

To reduce the risk of neck and head injury during a crash, infants need complete support. This is because an infant's neck is not fully developed and its head weighs so much compared with the rest of its body. In a crash, an infant in a rear-facing child restraint settles into the restraint, so the crash forces can be distributed across the strongest part of an infant's body, the back and shoulders. Infants should always be secured in rear-facing child restraints.

⚠ CAUTION:

A young child's hip bones are still so small that the vehicle's regular safety belt may not remain low on the hip bones, as it should. Instead, it may settle up around the child's abdomen. In a crash, the belt would apply force on a body area that is unprotected by any bony structure. This alone could cause serious or fatal injuries. To reduce the risk of serious or fatal injuries during a crash, young children should always be secured in appropriate child restraints.

Child Restraint Systems

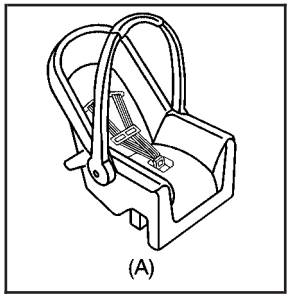

A rear-facing infant seat (A) provides restraint with the seating surface against the back of the infant.

The harness system holds the infant in place and, in a crash, acts to keep the infant positioned in the restraint.

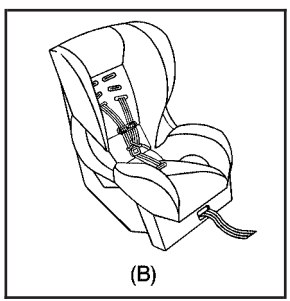

A forward-facing child seat (B) provides restraint for the child's body with the harness.

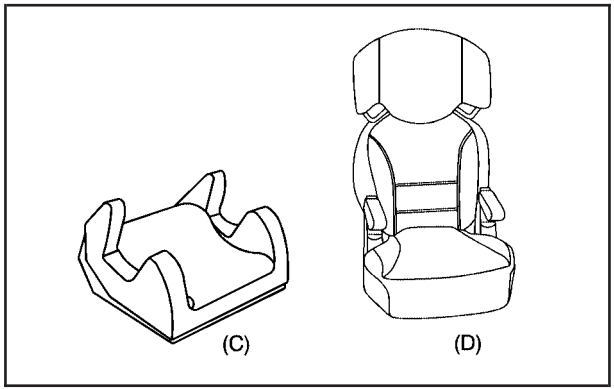

A booster seat (C-D) is a child restraint designed to improve the fit of the vehicle's safety belt system. A booster seat can also help a child to see out the window.

Securing an Add-On Child Restraint in the Vehicle

⚠ CAUTION:

A child can be seriously injured or killed in a crash if the child restraint is not properly secured in the vehicle. Secure the child restraint properly in the vehicle using the vehicle's safety belt or LATCH system, following the instructions that came with that child restraint and the instructions in this manual.

To help reduce the chance of injury, the child restraint must be secured in the vehicle. Child restraint systems must be secured in vehicle seats by lap belts or the lap belt portion of a lap-shoulder belt, or by the LATCH system. See *Lower Anchors and Tethers for Children (LATCH) on page 1-46* for more information. A child can be endangered in a crash if the child restraint is not properly secured in the vehicle.

When securing an add-on child restraint, refer to the instructions that come with the restraint which may be on the restraint itself or in a booklet, or both, and to this manual. The child restraint instructions are important, so if they are not available, obtain a replacement copy from the manufacturer.

Keep in mind that an unsecured child restraint can move around in a collision or sudden stop and injure people in the vehicle. Be sure to properly secure any child restraint in the vehicle — even when no child is in it.

Securing the Child Within the Child Restraint

⚠ CAUTION:

A child can be seriously injured or killed in a crash if the child is not properly secured in the child restraint. Secure the child properly following the instructions that came with that child restraint.

Where to Put the Restraint

Accident statistics show that children are safer if they are restrained in the rear rather than the front seat.

We recommend that children and child restraints be secured in a rear seat, including: an infant or a child riding in a rear-facing child restraint; a child riding in a forward-facing child seat; an older child riding in a booster seat; and children, who are large enough, using safety belts.

A label on your sun visor says, “Never put a rear-facing child seat in the front.” This is because the risk to the rear-facing child is so great, if the airbag deploys.

⚠ CAUTION:

A child in a rear-facing child restraint can be seriously injured or killed if the right front passenger airbag inflates. This is because the back of the rear-facing child restraint would be very close to the inflating airbag. A child in a forward-facing child restraint can be seriously injured or killed if the right front passenger airbag inflates and the passenger seat is in a forward position.

Even if the passenger sensing system has turned off the right front passenger frontal airbag, no system is fail-safe. No one can guarantee that an airbag will not deploy under some unusual circumstance, even though it is turned off.

Secure rear-facing child restraints in a rear seat, even if the airbag is off. If you secure a forward-facing child restraint in the right front seat, always move the front passenger seat as far back as it will go. It is better to secure the child restraint in a rear seat.

See *Passenger Sensing System on page 1-67* for additional information.

When securing a child restraint in a rear seating position, study the instructions that came with your child restraint to make sure it is compatible with this vehicle.

There are a couple of things you need to know about using child restraints in your rear seat:

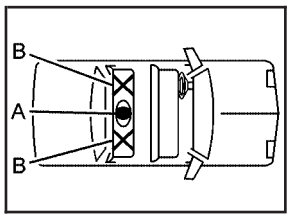

If you use a child restraint in the center rear seating position (A), the safety belts and the child restraint LATCH anchors for the rear outside seating positions (B) will not be accessible.

Therefore, you will not be able to secure child restraints or have passengers ride in the rear outside seating positions.

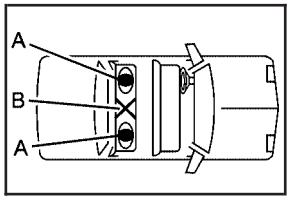

If you use two child restraints (A) in the rear outside seating positions, the safety belt for the center rear seat position (B) will not be accessible.

Therefore, you will not be able to secure a child restraint or have a passenger ride in the center rear seating position.

Wherever you install a child restraint, be sure to secure the child restraint properly.

Keep in mind that an unsecured child restraint can move around in a collision or sudden stop and injure people in the vehicle. Be sure to properly secure any child restraint in your vehicle — even when no child is in it.

Lower Anchors and Tethers for Children (LATCH)

The LATCH system holds a child restraint during driving or in a crash. This system is designed to make installation of a child restraint easier. The LATCH system uses anchors in the vehicle and attachments on the child restraint that are made for use with the LATCH system.

Make sure that a LATCH-compatible child restraint is properly installed using the anchors, or use the vehicle's safety belts to secure the restraint, following the instructions that came with that restraint, and also the instructions in this manual. When installing a child restraint with a top tether, you must also use either the lower anchors or the safety belts to properly secure the child restraint. A child restraint must never be installed using only the top tether and anchor.

In order to use the LATCH system in your vehicle, you need a child restraint that has LATCH attachments. The child restraint manufacturer will provide you with instructions on how to use the child restraint and its attachments. The following explains how to attach a child restraint with these attachments in your vehicle.

Not all vehicle seating positions or child restraints have lower anchors and attachments or top tether anchors and attachments.

Lower Anchors

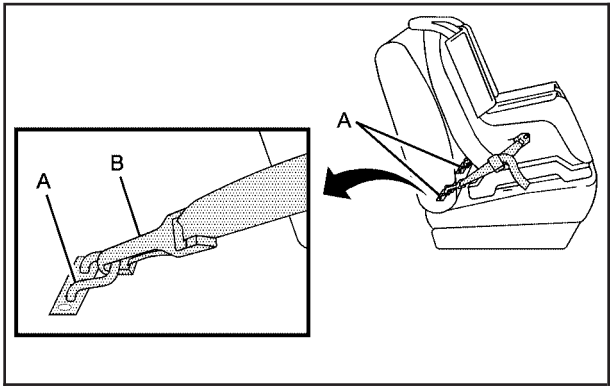

Lower anchors (A) are metal bars built into the vehicle. There are two lower anchors for each LATCH seating position that will accommodate a child restraint with lower attachments (B).

Top Tether Anchor

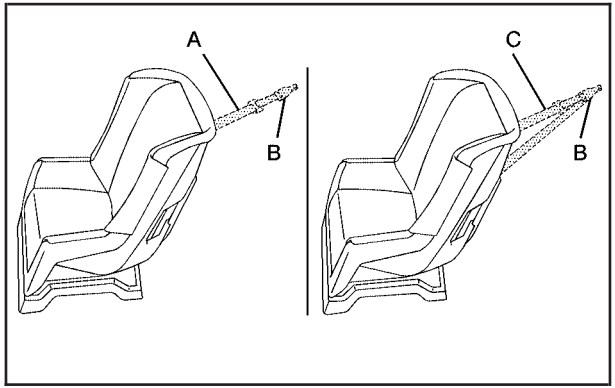

A top tether (A, C) anchors the top of the child restraint to the vehicle. A top tether anchor is built into the vehicle. The top tether attachment (B) on the child restraint connects to the top tether anchor in the vehicle in order to reduce the forward movement and rotation of the child restraint during driving or in a crash.

Your child restraint may have a single tether (A) or a dual tether (C). Either will have a single attachment (B) to secure the top tether to the anchor.

Some child restraints that have a top tether are designed for use with or without the top tether being attached. Others require the top tether always to be attached. In Canada, the law requires that forward-facing child restraints have a top tether, and that the tether be attached. Be sure to read and follow the instructions for your child restraint.

If the child restraint does not have a top tether, one can be obtained, in kit form, for many child restraints. Ask the child restraint manufacturer whether or not a kit is available.

Lower Anchor and Top Tether Anchor Locations

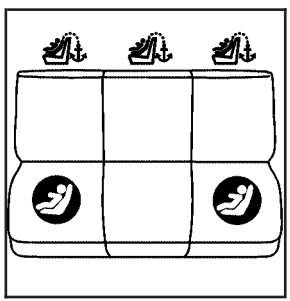

(Top Tether Anchor): Seating positions with top tether anchors.

(Lower Anchor): Seating positions with two lower anchors.

To assist you in locating the lower anchors, each seating position with lower anchors has two labels, near the crease between the seatback and the seat cushion.

Hatchback models may have zippers over the lower anchor areas. If so, unzip the seat cover below the labels to access each lower anchor.

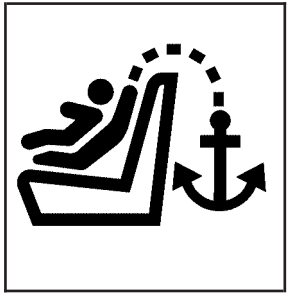

To assist you in locating the top tether anchors, the top tether anchor symbol is located on the cover.

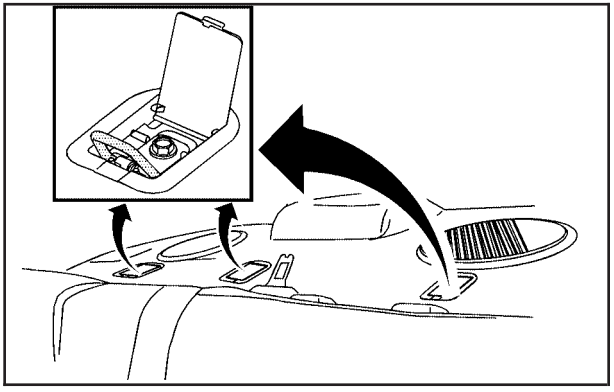

Sedan

For sedan models, the top tether anchors are located under the covers behind the rear seat on the filler panel. Pull open the cover to access the top tether anchors. Be sure to use an anchor located on the same side of the vehicle as the seating position where the child restraint will be placed.

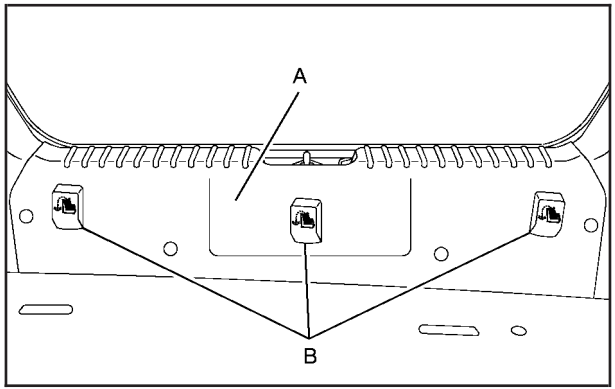

Hatchback

For hatchback models, the top tether anchors (B) are located in the rear cargo area, attached to the back wall (A) of the vehicle. Squeeze and pull the front part of the plastic cover to access the top tether anchors. Remove the cargo shade before installing the top tether. The cargo shade should remain off while the top tether is in use. Be sure to use an anchor located on the same side of the vehicle as the seating position where the child restraint will be placed.

Do not secure a child restraint in a position without a top tether anchor if a national or local law requires that the top tether be attached, or if the instructions that come with the child restraint say that the top tether must be attached.

Accident statistics show that children are safer if they are restrained in the rear rather than the front seat. See *Where to Put the Restraint on page 1-44* for additional information.

Securing a Child Restraint Designed for the LATCH System

⚠ CAUTION:

If a LATCH-type child restraint is not attached to anchors, the child restraint will not be able to protect the child correctly. In a crash, the child could be seriously injured or killed. Install a LATCH-type child restraint properly using the anchors, or use the vehicle's safety belts to secure the restraint, following the instructions that came with the child restraint and the instructions in this manual.

⚠ CAUTION:

Do not attach more than one child restraint to a single anchor. Attaching more than one child restraint to a single anchor could cause the anchor or attachment to come loose or even break during a crash. A child or others could be injured. To reduce the risk of serious or fatal injuries during a crash, attach only one child restraint per anchor.

⚠ CAUTION:

Children can be seriously injured or strangled if a shoulder belt is wrapped around their neck and the safety belt continues to tighten. Buckle any unused safety belts behind the child restraint so children cannot reach them. Pull the shoulder belt all the way out of the retractor to set the lock, if your vehicle has one, after the child restraint has been installed.

Notice: **Do not let the LATCH attachments rub against the vehicle's safety belts. This may damage these parts. If necessary, move buckled safety belts to avoid rubbing the LATCH attachments.**

Do not fold the empty rear seat with a safety belt buckled. This could damage the safety belt or the seat. Unbuckle and return the safety belt to its stowed position, before folding the seat.

1. Attach and tighten the lower attachments to the lower anchors. If the child restraint does not have lower attachments or the desired seating position does not have lower anchors, secure the child restraint with the top tether and the safety belts. Refer to your child restraint manufacturer instructions and the instructions in this manual.
   - 1.1. Find the lower anchors for the desired seating position.
   - 1.2. Put the child restraint on the seat.
   - 1.3. Attach and tighten the lower attachments on the child restraint to the lower anchors.
2. If the child restraint manufacturer recommends that the top tether be attached, attach and tighten the top tether to the top tether anchor, if equipped. Refer to the child restraint instructions and the following steps:
   - 2.1. Find the top tether anchor.
   - 2.2. Flip the cover to access the top tether anchors.
   - 2.3. For hatchback models, remove the cargo shade before installing the top tether. The cargo shade should remain off while the top tether is in use.
   - 2.4. Raise the headrest or head restraint if the desired seating position has an adjustable headrest or head restraint. See *Head Restraints on page 1-2*.

2.5. Route and tighten the top tether according to your child restraint instructions and the following instructions:

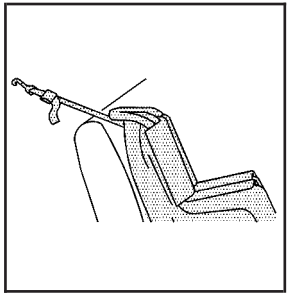

If the position you are using does not have a headrest or head restraint and you are using a single tether, route the tether over the seatback.

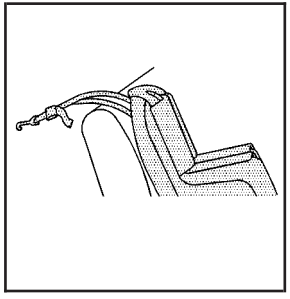

If the position you are using does not have a headrest or head restraint and you are using a dual tether, route the tether over the seatback.

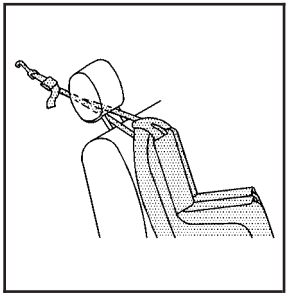

If the position you are using has a headrest or head restraint and you are using a dual tether, route the tether under the headrest or head restraint and in between the headrest or head restraint posts.

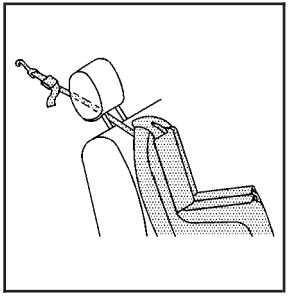

If the position you are using has an adjustable headrest or head restraint and you are using a single tether, route the tether under the headrest or head restraint and in between the headrest or head restraint posts.

3. Push and pull the child restraint in different directions to be sure it is secure.

Securing a Child Restraint in a Rear Seat Position

When securing a child restraint in a rear seating position, study the instructions that came with your child restraint to make sure it is compatible with this vehicle.

If your child restraint has the LATCH system, see *Lower Anchors and Tethers for Children (LATCH) on page 1-46* for how to install your child restraint using LATCH. If you secure a child restraint using a safety belt and it uses a top tether, see *Lower Anchors and Tethers for Children (LATCH) on page 1-46* for top tether anchor locations.

Do not secure a child restraint in a position without a top tether anchor if a national or local law requires that the top tether be anchored, or if the instructions that come with the child restraint say that the top strap must be anchored.

In Canada, the law requires that forward-facing child restraints have a top tether, and that the tether be attached.

If your child restraint does not have the LATCH system, you will be using the safety belt to secure the child restraint in this position. Be sure to follow the instructions that came with the child restraint. Secure the child in the child restraint when and as the instructions say.

If you need to install more than one child restraint in the rear seat, be sure to read *Where to Put the Restraint on page 1-44*.

1. Put the child restraint on the seat.
2. Pick up the latch plate, and run the lap and shoulder portions of the vehicle's safety belt through or around the restraint. The child restraint instructions will show you how.

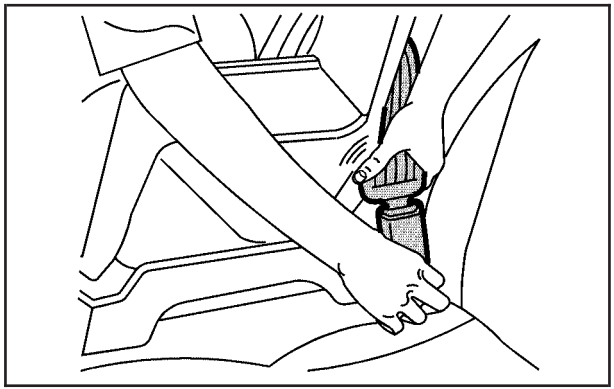

3. Push the latch plate into the buckle until it clicks.

   If you find that the latch plate will not go fully into the buckle, see if you are using the correct buckle.

   Make sure the release button is positioned so you would be able to unbuckle the safety belt quickly if necessary.

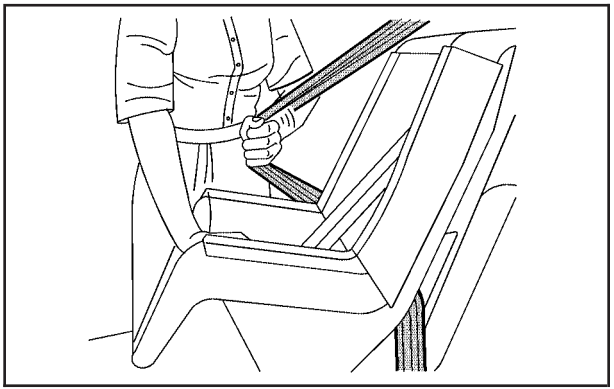

4. Pull the rest of the shoulder belt all the way out of the retractor to set the lock.

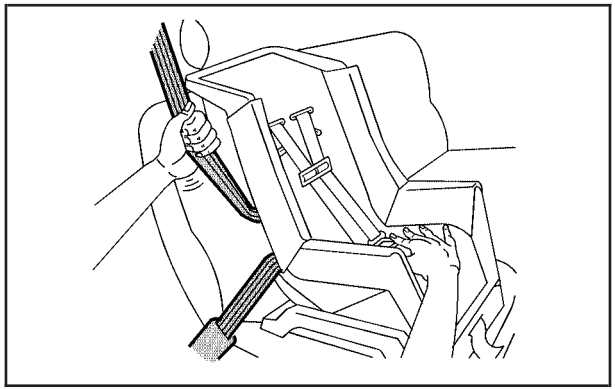

5. To tighten the belt, push down on the child restraint, pull the shoulder portion of the belt to tighten the lap portion of the belt and feed the shoulder belt back into the retractor. If you are using a forward-facing child restraint, you may find it helpful to use your knee to push down on the child restraint as you tighten the belt.

6. If your child restraint has a top tether, follow the child restraint manufacturer's instructions regarding the use of the top tether. See *Lower Anchors and Tethers for Children (LATCH) on page 1-46*.

7. Push and pull the child restraint in different directions to be sure it is secure.

To remove the child restraint, unbuckle the vehicle's safety belt and let it go back all the way. If the top tether is attached to a top tether anchor, disconnect it.

Securing a Child Restraint in the Right Front Seat Position

This vehicle has airbags. A rear seat is a safer place to secure a forward-facing child restraint. See *Where to Put the Restraint on page 1-44*.

In addition, the vehicle has a passenger sensing system which is designed to turn off the right front passenger frontal airbag and seat-mounted side impact airbag (if equipped) under certain conditions. See *Passenger Sensing System on page 1-67* and *Passenger Airbag Status Indicator on page 3-27* for more information on this, including important safety information.

A label on the sun visor says, “Never put a rear-facing child seat in the front.” This is because the risk to the rear-facing child is so great, if the airbag deploys.

⚠ CAUTION:

A child in a rear-facing child restraint can be seriously injured or killed if the right front passenger airbag inflates. This is because the back of the rear-facing child restraint would be very close to the inflating airbag. A child in a forward-facing child restraint can be seriously injured or killed if the right front passenger airbag inflates and the passenger seat is in a forward position.

Even if the passenger sensing system has turned off the right front passenger frontal airbag, no system is fail-safe. No one can guarantee that an airbag will not deploy under some unusual circumstance, even though it is turned off.

CAUTION: (Continued)

CAUTION: (Continued)

Secure rear-facing child restraints in a rear seat, even if the airbag is off. If you secure a forward-facing child restraint in the right front seat, always move the front passenger seat as far back as it will go. It is better to secure the child restraint in a rear seat.

See *Passenger Sensing System on page 1-67* for additional information.

If the child restraint has the LATCH system, see *Lower Anchors and Tethers for Children (LATCH) on page 1-46* for how to install your child restraint using LATCH. If a child restraint is secured using a safety belt and it uses a top tether, see *Lower Anchors and Tethers for Children (LATCH) on page 1-46* for top tether anchor locations.

Do not secure a child seat in a position without a top tether anchor if a national or local law requires that the top tether be anchored, or if the instructions that come with the child restraint say that the top strap must be anchored.

In Canada, the law requires that forward-facing child restraints have a top tether, and that the tether be attached.

You will be using the lap-shoulder belt to secure the child restraint in this position. Follow the instructions that came with the child restraint.

1. Move the seat as far back as it will go before securing the forward-facing child restraint.

   When the passenger sensing system has turned off the right front passenger frontal airbag and seat-mounted side impact airbag (if equipped), the off indicator on the passenger airbag status indicator should light and stay lit when you start the vehicle. See *Passenger Airbag Status Indicator on page 3-27*.

2. Put the child restraint on the seat.

3. Pick up the latch plate, and run the lap and shoulder portions of the vehicle's safety belt through or around the restraint. The child restraint instructions will show you how.

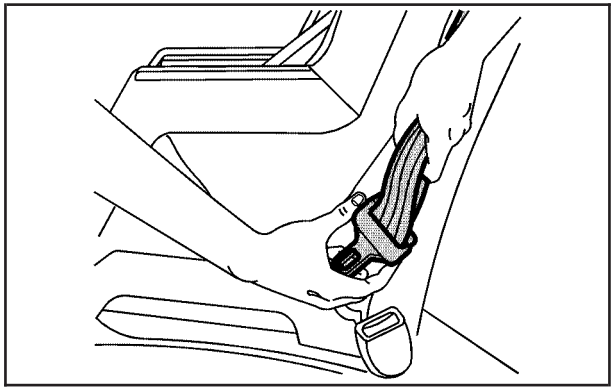

Tilt the latch plate to adjust the belt if needed.

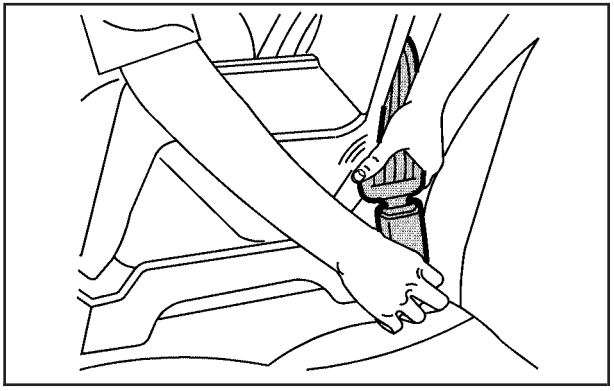

4. Push the latch plate into the buckle until it clicks.

   Position the release button on the buckle so that the safety belt could be quickly unbuckled if necessary.

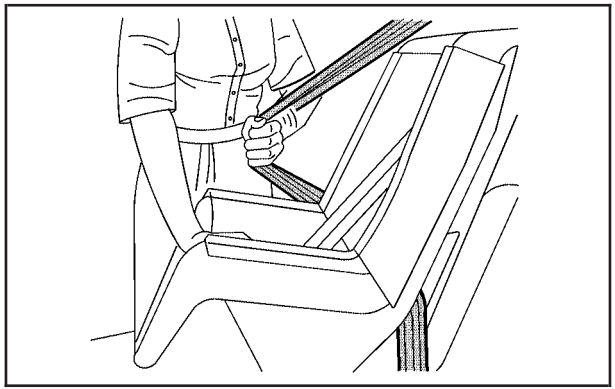

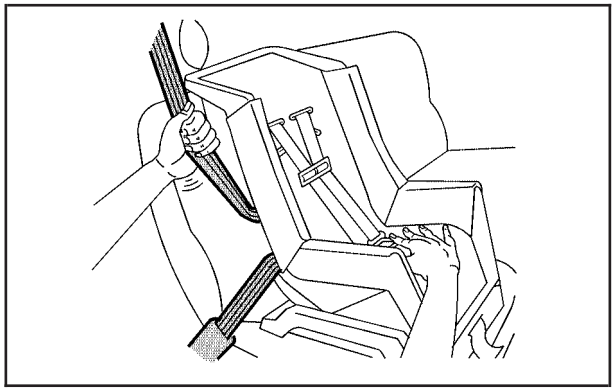

5. Pull the rest of the shoulder belt all the way out of the retractor to set the lock.

6. To tighten the belt, push down on the child restraint, pull the shoulder portion of the belt to tighten the lap portion of the belt and feed the shoulder belt back into the retractor. If you are using a forward-facing child restraint, you may find it helpful to use your knee to push down on the child restraint as you tighten the belt.

7. Push and pull the child restraint in different directions to be sure it is secure.

If the airbag or airbags are off, the off indicator in the passenger airbag status indicator will come on and stay on when the vehicle is started.

If a child restraint has been installed and the off symbol is not lit, see “If the On Indicator is Lit for a Child Restraint” under *Passenger Sensing System on page 1-67* for more information.

To remove the child restraint, unbuckle the vehicle’s safety belt and let it go back all the way.

Airbag System

The vehicle has the following airbags:

- A frontal airbag for the driver.
- A frontal airbag for the right front passenger.

The vehicle may have the following airbags:

- A seat-mounted side impact airbag for the driver.
- A seat-mounted side impact airbag for the right front passenger.

All of the airbags in your vehicle will have the word AIRBAG embossed in the trim or on an attached label near the deployment opening.

For frontal airbags, the word AIRBAG will appear on the middle part of the steering wheel for the driver and on the instrument panel for the right front passenger.

With seat-mounted side impact airbags, the word AIRBAG will appear on the side of the seatback closest to the door.

Airbags are designed to supplement the protection provided by safety belts. Even though today’s airbags are also designed to help reduce the risk of injury from the force of an inflating bag, all airbags must inflate very quickly to do their job.

Here are the most important things to know about the airbag system:

⚠ CAUTION:

You can be severely injured or killed in a crash if you are not wearing your safety belt — even if you have airbags. Airbags are designed to work with safety belts, but do not replace them. Also, airbags are not designed to deploy in every crash. In some crashes safety belts are your only restraint. See *When Should an Airbag Inflate? on page 1-64*.

Wearing your safety belt during a crash helps reduce your chance of hitting things inside the vehicle or being ejected from it. Airbags are “supplemental restraints” to the safety belts. Everyone in your vehicle should wear a safety belt properly — whether or not there is an airbag for that person.

⚠ CAUTION:

Airbags inflate with great force, faster than the blink of an eye. Anyone who is up against, or very close to, any airbag when it inflates can be seriously injured or killed. Do not sit unnecessarily close to the airbag, as you would be if you were sitting on the edge of your seat or leaning forward. Safety belts help keep you in position before and during a crash. Always wear your safety belt, even with airbags. The driver should sit as far back as possible while still maintaining control of the vehicle.

Occupants should not lean on or sleep against the door or side windows in seating positions with seat-mounted airbags.

⚠ CAUTION:

Children who are up against, or very close to, any airbag when it inflates can be seriously injured or killed. Airbags plus lap-shoulder belts offer protection for adults and older children, but not for young children and infants. Neither the vehicle's safety belt system nor its airbag system is designed for them. Young children and infants need the protection that a child restraint system can provide. Always secure children properly in your vehicle. To read how, see *Older Children on page 1-34* or *Infants and Young Children on page 1-38*.

There is an airbag readiness light on the instrument panel, which shows the airbag symbol.

The system checks the airbag electrical system for malfunctions. The light tells you if there is an electrical problem. See *Airbag Readiness Light on page 3-26* for more information.

Where Are the Airbags?

The driver's frontal airbag is in the middle of the steering wheel.

The right front passenger's frontal airbag is in the instrument panel on the passenger's side.

Driver Side shown, Passenger Side similar

If your vehicle has seat-mounted side impact airbags for the driver and right front passenger, they are in the side of the seatbacks closest to the door.

⚠ CAUTION:

If something is between an occupant and an airbag, the airbag might not inflate properly or it might force the object into that person causing severe injury or even death. The path of an inflating airbag must be kept clear. Do not put anything between an occupant and an airbag, and do not attach or put anything on the steering wheel hub or on or near any other airbag covering.

Do not use seat accessories that block the inflation path of a seat-mounted side impact airbag.

When Should an Airbag Inflate?

Frontal airbags are designed to inflate in moderate to severe frontal or near-frontal crashes to help reduce the potential for severe injuries mainly to the driver's or right front passenger's head and chest. However, they are only designed to inflate if the impact exceeds a predetermined deployment threshold. Deployment thresholds are used to predict how severe a crash is likely to be in time for the airbags to inflate and help restrain the occupants.

Whether your frontal airbags will or should deploy is not based on how fast your vehicle is traveling. It depends largely on what you hit, the direction of the impact, and how quickly your vehicle slows down.

Frontal airbags may inflate at different crash speeds. For example:

- If the vehicle hits a stationary object, the airbags could inflate at a different crash speed than if the vehicle hits a moving object.
- If the vehicle hits an object that deforms, the airbags could inflate at a different crash speed than if the vehicle hits an object that does not deform.
- If the vehicle hits a narrow object (like a pole), the airbags could inflate at a different crash speed than if the vehicle hits a wide object (like a wall).
- If the vehicle goes into an object at an angle, the airbags could inflate at a different crash speed than if the vehicle goes straight into the object.

Thresholds can also vary with specific vehicle design.

In addition, your vehicle has dual-stage frontal airbags. Dual-stage airbags adjust the restraint according to crash severity. Your vehicle has electronic frontal sensors, which help the sensing system distinguish between a moderate frontal impact and a more severe frontal impact. For moderate frontal impacts, dual-stage airbags inflate at a level less than full deployment. For more severe frontal impacts, full deployment occurs.

Frontal airbags are not intended to inflate during vehicle rollovers, rear impacts, or in many side impacts.

The vehicle may or may not have seat-mounted side impact airbags. See *Airbag System on page 1-60*. Seat-mounted side impact airbags are intended to inflate in moderate to severe side crashes. Seat-mounted side impact airbags will inflate if the crash severity is above the system's designed threshold level. The threshold level can vary with specific vehicle design.

Seat-mounted side impact airbags are not intended to inflate in frontal impacts, near-frontal impacts, rollovers, or rear impacts. A seat-mounted side impact airbag is intended to deploy on the side of the vehicle that is struck.

In any particular crash, no one can say whether an airbag should have inflated simply because of the damage to a vehicle or because of what the repair costs were. For frontal airbags, inflation is determined by what the vehicle hits, the angle of the impact, and how quickly the vehicle slows down. For seat-mounted side impact airbags, deployment is determined by the location and severity of the side impact.

What Makes an Airbag Inflate?

In a deployment event, the sensing system sends an electrical signal triggering a release of gas from the inflator. Gas from the inflator fills the airbag causing the bag to break out of the cover and deploy. The inflator, the airbag, and related hardware are all part of the airbag module.

Frontal airbag modules are located inside the steering wheel and instrument panel. For vehicles with seat-mounted side impact airbags, there are airbag modules in the side of the front seatbacks closest to the door.

How Does an Airbag Restrain?

In moderate to severe frontal or near frontal collisions, even belted occupants can contact the steering wheel or the instrument panel. In moderate to severe side collisions, even belted occupants can contact the inside of the vehicle.

Airbags supplement the protection provided by safety belts. Frontal airbags distribute the force of the impact more evenly over the occupant's upper body, stopping the occupant more gradually. Seat-mounted side impact airbags distribute the force of the impact more evenly over the occupant's upper body.

But airbags would not help in many types of collisions, primarily because the occupant's motion is not toward those airbags. See *When Should an Airbag Inflate? on page 1-64* for more information.

Airbags should never be regarded as anything more than a supplement to safety belts.

What Will You See After an Airbag Inflates?

After the frontal and seat-mounted side impact airbags inflate, they quickly deflate, so quickly that some people may not even realize the airbags inflated. Some components of the airbag module may be hot for several minutes. For location of the airbag modules, see *What Makes an Airbag Inflate? on page 1-65*.

The parts of the airbag that come into contact with you may be warm, but not too hot to touch. There may be some smoke and dust coming from the vents in the deflated airbags. Airbag inflation does not prevent the driver from seeing out of the windshield or being able to steer the vehicle, nor does it prevent people from leaving the vehicle.

⚠ CAUTION:

When an airbag inflates, there may be dust in the air. This dust could cause breathing problems for people with a history of asthma or other breathing trouble. To avoid this, everyone in the vehicle should get out as soon as it is safe to do so. If you have breathing problems but cannot get out of the vehicle after an airbag inflates, then get fresh air by opening a window or a door. If you experience breathing problems following an airbag deployment, you should seek medical attention.

The vehicle has a feature that may automatically unlock the doors, turn the interior lamps on, and turn on the hazard warning flashers when the airbags inflate. You can lock the doors, turn the interior lamps off, and turn the hazard warning flashers off by using the controls for those features.

In many crashes severe enough to inflate the airbag, windshields are broken by vehicle deformation. Additional windshield breakage may also occur from the right front passenger airbag.

- Airbags are designed to inflate only once. After an airbag inflates, you will need some new parts for the airbag system. If you do not get them, the airbag system will not be there to help protect you in another crash. A new system will include airbag modules and possibly other parts. The service manual for your vehicle covers the need to replace other parts.
- The vehicle has a crash sensing and diagnostic module which records information after a crash. See *Vehicle Data Recording and Privacy on page 7-18* and *Event Data Recorders on page 7-19*.
- Let only qualified technicians work on the airbag system. Improper service can mean that the airbag system will not work properly. See your dealer/retailer for service.

Passenger Sensing System

The vehicle has a passenger sensing system for the right front passenger position. The passenger airbag status indicator will be visible when you start the vehicle.

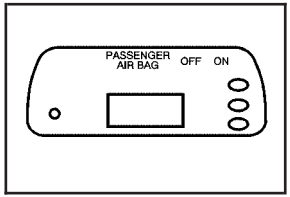

United States

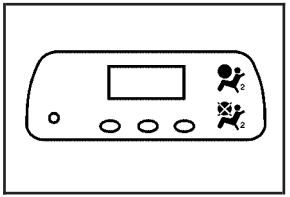

Canada

The word OFF or off symbol will be visible near the clock, located in the center of the instrument panel, during the system check. See *Passenger Airbag Status Indicator on page 3-27*.

When the system check is complete, either the words ON and OFF or the symbol for on and off will be visible under certain conditions.

The passenger sensing system will turn off the right front passenger frontal airbag and seat-mounted side impact airbag (if equipped) under certain conditions. The driver airbags are not part of the passenger sensing system.

The passenger sensing system works with a sensor that is part of the right front passenger seat. The sensor is designed to detect the presence of a properly-seated occupant and determine if the right front passenger frontal airbag and seat-mounted side impact airbag (if equipped) should be enabled (may inflate) or not.

According to accident statistics, children are safer when properly secured in a rear seat in the correct child restrain for their weight and size.

We recommend that children be secured in a rear seat, including: an infant or a child riding in a rear-facing child restraint; a child riding in a forward-facing child seat; an older child riding in a booster seat; and children, who are large enough, using safety belts.

A label on the sun visor says, “Never put a rear-facing child seat in the front.” This is because the risk to the rear-facing child is so great, if the airbag deploys.

⚠ CAUTION:

A child in a rear-facing child restraint can be seriously injured or killed if the right front passenger airbag inflates. This is because the back of the rear-facing child restraint would be very close to the inflating airbag. A child in a forward-facing child restraint can be seriously injured or killed if the right front passenger airbag inflates and the passenger seat is in a forward position.

CAUTION: (Continued)

CAUTION: (Continued)

Even if the passenger sensing system has turned off the right front passenger frontal airbag and seat-mounted side impact airbag (if equipped), no system is fail-safe. No one can guarantee that an airbag will not deploy under some unusual circumstance, even though the airbag(s) are off.

Secure rear-facing child restraints in a rear seat, even if the airbag(s) are off. If you secure a forward-facing child restraint in the right front seat, always move the front passenger seat as far back as it will go. It is better to secure the child restraint in a rear seat.

The passenger sensing system is designed to turn off the right front passenger frontal airbag and seat-mounted side impact airbag (if equipped) if:

- The right front passenger seat is unoccupied.
- The system determines that an infant is present in a rear-facing infant seat.
- The system determines that a small child is present in a child restraint.

- The system determines that a small child is present in a booster seat.
- A right front passenger takes his/her weight off of the seat for a period of time.
- The right front passenger seat is occupied by a smaller person, such as a child who has outgrown child restraints.
- Or, if there is a critical problem with the airbag system or the passenger sensing system.

When the passenger sensing system has turned off the right front passenger frontal airbag and seat-mounted side impact airbag (if equipped), the off symbol will light and stay lit to remind you that the airbag or airbags are off. See *Passenger Airbag Status Indicator on page 3-27*.

The passenger sensing system is designed to enable (may inflate) the right front passenger's frontal airbag and seat-mounted side impact airbag (if equipped) anytime the system senses that a person of adult size is sitting properly in the right front passenger's seat. When the passenger sensing system has allowed the airbag or airbags to be enabled, the off symbol will not light.

For some children who have outgrown child restraints and for very small adults, the passenger sensing system may or may not turn off the right front passenger's frontal airbag and seat-mounted side impact airbag (if equipped), depending upon the person's seating posture and body build. Everyone in your vehicle who has outgrown child restraints should wear a safety belt properly — whether or not there is an airbag for that person.

⚠ CAUTION:

If the airbag readiness light ever comes on and stays on, it means that something may be wrong with the airbag system. To help avoid injury to yourself or others, have the vehicle serviced right away. See *Airbag Readiness Light on page 3-26* for more information, including important safety information.

If the On Indicator is Lit for a Child Restraint

If a child restraint has been installed and the on indicator is lit:

1. Turn the vehicle off.
2. Remove the child restraint from the vehicle.
3. Remove any additional items from the seat such as blankets, cushions, seat covers, seat heaters, or seat massagers.
4. Reinstall the child restraint following the directions provided by the child restraint manufacturer and refer to *Securing a Child Restraint in the Right Front Seat Position on page 1-56* Securing a Child Restraint in the Right Front Seat Position.
5. If, after reinstalling the child restraint and restarting the vehicle, the on indicator is still lit, turn the vehicle off. Then slightly recline the vehicle seatback and adjust the seat cushion, if adjustable, to make sure that the vehicle seatback is not pushing the child restraint into the seat cushion.

   Also make sure the child restraint is not trapped under the vehicle head restraint. If this happens, adjust the head restraint. See *Head Restraints on page 1-2*.
6. Restart the vehicle.

If the on indicator is still lit, secure the child in the child restraint in a rear seat position in the vehicle, and check with your dealer/retailer.

If the On Indicator is Lit for an Adult-Size Occupant

If a person of adult-size is sitting in the right front passenger seat, but the off symbol is lit, it could be because that person is not sitting properly in the seat.

If this happens, use the following steps to allow the system to detect that person and enable the right front passenger frontal airbag and seat-mounted side impact airbag (if equipped):

1. Turn the vehicle off.
2. Remove any additional material from the seat, such as blankets, cushions, seat covers, seat heaters, or seat massagers.
3. Place the seatback in the fully upright position.
4. Have the person sit upright in the seat, centered on the seat cushion, with legs comfortably extended.
5. Restart the vehicle and have the person remain in this position for two to three minutes after the on indicator is lit.

Additional Factors Affecting System Operation

Safety belts help keep the passenger in position on the seat during vehicle maneuvers and braking, which helps the passenger sensing system maintain the passenger airbag status. See “Safety Belts” and “Child Restraints” in the Index for additional information about the importance of proper restraint use.

A thick layer of additional material, such as a blanket or cushion, or aftermarket equipment such as seat covers, seat heaters, and seat massagers can affect how well the passenger sensing system operates. We recommend that you not use seat covers or other aftermarket equipment other than any that GM has approved for your specific vehicle. See *Adding Equipment to Your Airbag-Equipped Vehicle on page 1-74* Adding Equipment to Your Airbag-Equipped Vehicle for more information about modifications that can affect how the system operates.

⚠ CAUTION:

Stowing of articles under the passenger seat or between the passenger seat cushion and seatback may interfere with the proper operation of the passenger sensing system.

Servicing Your Airbag-Equipped Vehicle

Airbags affect how the vehicle should be serviced. There are parts of the airbag system in several places around the vehicle. Your dealer/retailer and the service manual have information about servicing the vehicle and the airbag system. To purchase a service manual, see *Service Publications Ordering Information on page 7-17*.

⚠ CAUTION:

For up to 10 seconds after the ignition is turned off and the battery is disconnected, an airbag can still inflate during improper service. You can be injured if you are close to an airbag when it inflates. Avoid yellow connectors. They are probably part of the airbag system. Be sure to follow proper service procedures, and make sure the person performing work for you is qualified to do so.

Adding Equipment to Your Airbag-Equipped Vehicle

Q: Is there anything I might add to or change about the vehicle that could keep the airbags from working properly?

A: Yes. If you add things that change your vehicle's frame, bumper system, height, front end or side sheet metal, they may keep the airbag system from working properly. Changing or moving any parts of the front seats, safety belts, the airbag sensing and diagnostic module, steering wheel, instrument panel, front sensors, or airbag wiring can affect the operation of the airbag system.

In addition, the vehicle has a passenger sensing system for the right front passenger position, which includes sensors that are part of the passenger seat. The passenger sensing system may not operate properly if the original seat trim is replaced with non-GM covers, upholstery or trim, or with GM covers, upholstery or trim designed for a different vehicle. Any object, such as an aftermarket seat heater or a comfort enhancing pad or device, installed under or on top of the seat fabric, could also interfere with the operation of the passenger sensing system. This could either prevent proper deployment of the passenger airbag(s) or prevent the passenger sensing system from properly turning off the passenger airbag(s). See *Passenger Sensing System on page 1-67*.

If you have any questions about this, you should contact Customer Assistance before you modify your vehicle. The phone numbers and addresses for Customer Assistance are in Step Two of the Customer Satisfaction Procedure in this manual. See *Customer Satisfaction Procedure on page 7-2*.

Q: Because I have a disability, I have to get my vehicle modified. How can I find out whether this will affect my airbag system?

A: If you have questions, call Customer Assistance. The phone numbers and addresses for Customer Assistance are in Step Two of the Customer Satisfaction Procedure in this manual. See *Customer Satisfaction Procedure on page 7-2*.

In addition, your dealer/retailer and the service manual have information about the location of the airbag sensors, sensing and diagnostic module and airbag wiring.

Restraint System Check

Checking the Restraint Systems

Safety Belts

Now and then, check that the safety belt reminder light, safety belts, buckles, latch plates, retractors, and anchorages are all working properly.

Look for any other loose or damaged safety belt system parts that might keep a safety belt system from doing its job. See your dealer/retailer to have it repaired. Torn or frayed safety belts may not protect you in a crash. They can rip apart under impact forces. If a belt is torn or frayed, get a new one right away.

Make sure the safety belt reminder light is working. See *Safety Belt Reminders on page 3-26* for more information.

Keep safety belts clean and dry. See *Care of Safety Belts on page 5-82*.

Airbags

The airbag system does not need regularly scheduled maintenance or replacement. Make sure the airbag readiness light is working. See *Airbag Readiness Light on page 3-26* for more information.

Notice: **If an airbag covering is damaged, opened, or broken, the airbag may not work properly. Do not open or break the airbag coverings. If there are any opened or broken airbag covers, have the airbag covering and/or airbag module replaced. For the location of the airbag modules, see *What Makes an Airbag Inflate? on page 1-65*. See your dealer/retailer for service.**

Replacing Restraint System Parts After a Crash

⚠ CAUTION:

A crash can damage the restraint systems in your vehicle. A damaged restraint system may not properly protect the person using it, resulting in serious injury or even death in a crash. To help make sure your restraint systems are working properly after a crash, have them inspected and any necessary replacements made as soon as possible.

If the vehicle has been in a crash, do you need new safety belts or LATCH system (if equipped) parts?

After a very minor crash, nothing may be necessary. But the safety belt assemblies that were used during any crash may have been stressed or damaged. See your dealer/retailer to have the safety belt assemblies inspected or replaced.

If the vehicle has the LATCH system and it was being used during a crash, you may need new LATCH system parts.

New parts and repairs may be necessary even if the safety belt or LATCH system (if equipped), was not being used at the time of the crash.

If an airbag inflates, you will need to replace airbag system parts. See the part on the airbag system earlier in this section.

Have the safety belt pretensioners checked if the vehicle has been in a crash, if the airbag readiness light stays on after the vehicle is started, or while you are driving. See *Airbag Readiness Light on page 3-26*.

Section 2 Features and Controls

Keys 2-2
Remote Keyless Entry (RKE) System 2-3
Remote Keyless Entry (RKE) System Operation 2-4

Doors and Locks 2-6
Door Locks 2-6
Central Door Unlocking System 2-7
Door Ajar Reminder 2-7
Rear Door Security Locks 2-7
Trunk (Sedan) 2-8
Liftgate (Hatchback) 2-10

Windows 2-12
Manual Windows 2-12
Power Windows 2-13
Sun Visors 2-14

Theft-Deterrent Systems 2-14
Immobilizer 2-14
Immobilizer Operation 2-15
Content Theft-Deterrent 2-16

Starting and Operating Your Vehicle 2-18
New Vehicle Break-In 2-18
Ignition Positions 2-18
Starting the Engine 2-19
Engine Heater 2-21
Automatic Transmission Operation 2-22
Manual Transmission Operation 2-26
Parking Brake 2-28
Shifting Into Park (Automatic Transmission) 2-29
Shifting Out of Park 2-30
Parking the Vehicle (Manual Transmission) 2-31
Parking Over Things That Burn 2-32
Engine Exhaust 2-32
Running the Vehicle While Parked 2-33

Mirrors 2-34
Manual Rearview Mirror 2-34
Outside Manual Mirrors 2-34
Outside Power Mirrors 2-35
Outside Convex Mirror 2-35
Outside Heated Mirrors 2-35

OnStar® System 2-36

Storage Areas 2-39
Glove Box 2-39
Cupholders 2-39
Sunglasses Storage Compartment 2-40

Sunroof 2-40

Keys

⚠ CAUTION:

Leaving children in a vehicle with the ignition key is dangerous for many reasons, children or others could be badly injured or even killed. They could operate the power windows or other controls or even make the vehicle move. The windows will function with the keys in the ignition and children could be seriously injured or killed if caught in the path of a closing window. Do not leave the keys in a vehicle with children.

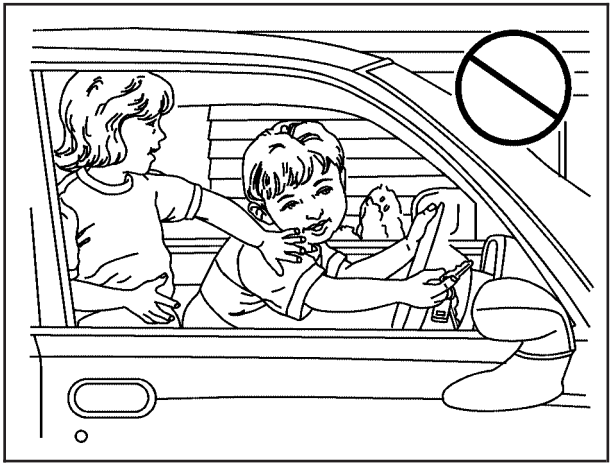

The key can be used for the ignition, doors and all other locks.

The key has a key code tag that the dealer/retailer or qualified locksmith can use to make new keys. Store this information in a safe place, not in your vehicle.

Your vehicle may have an electronic immobilizer designed to protect your car against theft. If so, only keys with the correct electronic code can be used to start the vehicle. See *Immobilizer Operation on*

page 2-15 for additional information. If a replacement key or an additional key is needed, it must be purchased from your dealer/retailer or certified locksmith.

Notice: **If you ever lock your keys in the vehicle, you may have to damage the vehicle to get in. Be sure you have spare keys.**

In an emergency, contact Roadside Assistance. See *Roadside Assistance Program on page 7-7* for more information.

Remote Keyless Entry (RKE) System

If this vehicle has the Remote Keyless Entry (RKE) system, it operates on a radio frequency subject to Federal Communications Commission (FCC) Rules and with Industry Canada.

This device complies with Part 15 of the FCC Rules. Operation is subject to the following two conditions:

1. This device may not cause interference.
2. This device must accept any interference received, including interference that may cause undesired operation of the device.

This device complies with RSS-210 of Industry Canada. Operation is subject to the following two conditions:

1. This device may not cause interference.
2. This device must accept any interference received, including interference that may cause undesired operation of the device.

Changes or modifications to this system by other than an authorized service facility could void authorization to use this equipment.

If there is a decrease in the RKE operating range, try this:

- Check the distance. The transmitter may be too far from the vehicle. Stand closer during rainy or snowy weather.
- Check the location. Other vehicles or objects may be blocking the signal. Take a few steps to the left or right, hold the transmitter higher, and try again.
- Check the transmitter's battery. See "Battery Replacement" later in this section.
- If the transmitter is still not working correctly, see your dealer/retailer or a qualified technician for service.

Remote Keyless Entry (RKE) System Operation

The Remote Keyless Entry (RKE) transmitter functions work up to 65 feet (20 m) away from the vehicle.

There are other conditions which can affect the performance of the transmitter. See *Remote Keyless Entry (RKE) System on page 2-3*.

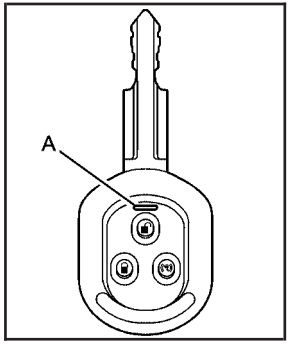

Hatchback

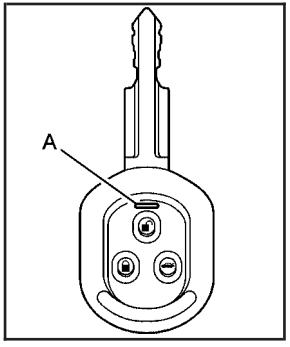

Sedan

The following functions may be available if the vehicle has RKE:

(Lock): Press to lock all of the doors. If all of the doors and the trunk or liftgate are closed, the hazard lamps flash once and the horn will sound to indicate that locking has occurred and the theft-deterrent system is active.

(Unlock): Press to unlock all of the doors. The hazard lamps flash twice to indicate that unlocking has occurred and that the theft-deterrent system is deactivated. If the doors are not opened within 30 seconds the doors will lock again.

(Panic) (Hatchback): Press to sound the panic alarm. The hazard lamps will flash and the panic alarm will stay on for about 30 seconds. Press any of the buttons on the transmitter to turn off the alarm.

(Remote Trunk Release) (Sedan): Press and hold for approximately one second to open the trunk.

The LED light (A) on the transmitter flashes when the buttons on the transmitter are pressed. If the light does not flash see “Battery Replacement” later in this section.

The buttons do not operate and the theft-deterrent system does not activate if the key is in the ignition.

Programming Transmitters to the Vehicle

Only RKE transmitters programmed to the vehicle will work. If a transmitter is lost or stolen, a replacement can be purchased and programmed through your dealer/retailer. When the replacement transmitter is programmed to the vehicle, all remaining transmitters must also be programmed. Any lost or stolen transmitters no longer work once the new transmitter is programmed. Each vehicle can have up to five transmitters programmed to it.

Battery Replacement

Replace the battery if the LED on the transmitter does not flash when you press the buttons.

Notice: **When replacing the battery, do not touch any of the circuitry on the transmitter. Static from your body could damage the transmitter.**

To replace the battery:

1. Remove the screw from the back of the cover and open the cover of the transmitter.
2. Pull the transmitter out of the cover and carefully turn the circle cover of the transmitter unit toward open.
3. Remove the battery.
4. Insert the new battery, positive side facing up. Use one three-volt, CR1620, or equivalent, type battery.
5. Turn the circle cover of the transmitter unit toward close and put the transmitter unit in the cover.
6. Put the two halves back together and replace the screw. Make sure the cover is on tightly, so water will not get in.
7. Test the transmitter operation.

Doors and Locks

Door Locks

⚠ CAUTION:

Unlocked doors can be dangerous.

- Passengers, especially children, can easily open the doors and fall out of a moving vehicle. When a door is locked, the handle will not open it. You increase the chance of being thrown out of the vehicle in a crash if the doors are not locked. So, wear safety belts properly and lock the doors whenever you drive.
- Young children who get into unlocked vehicles may be unable to get out. A child can be overcome by extreme heat and can suffer permanent injuries or even death from heat stroke. Always lock your vehicle whenever you leave it.
- Outsiders can easily enter through an unlocked door when you slow down or stop your vehicle. Locking your doors can help prevent this from happening.

There are several ways to lock and unlock your vehicle.

From the outside, use your key or the Remote Keyless Entry (RKE) transmitter. See *Remote Keyless Entry (RKE) System Operation on page 2-4*.

To manually unlock the front doors from the outside, insert the key and turn it toward the front of the vehicle. To manually lock the doors from the outside, insert the key and turn it toward the rear of the vehicle.

All doors, except for the driver's door, can be locked by pushing down the manual door lock and then closing the door. On vehicles with power locks, the driver's door can only by locked from the outside by using the key or the optional remote keyless entry transmitter.

From the inside, you can lock and unlock all of the doors by pushing or pulling the manual door lock located on each door.

Central Door Unlocking System

Your vehicle may be equipped with the central door unlocking system. This system is activated from the driver's door.

From the outside, you can lock or unlock all the doors by using either the key or the remote keyless entry transmitter, if equipped. From the inside, you can lock or unlock all the doors by using the driver's door lock switch.

Door Ajar Reminder

If one of the doors, trunk or liftgate is not closed properly while the ignition is on, the door ajar light on the instrument panel comes on and stays on until the doors are closed.

Rear Door Security Locks

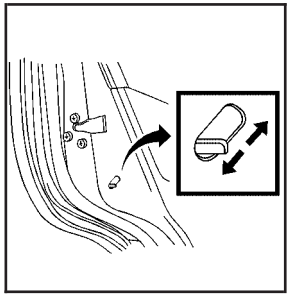

Your vehicle has rear door security locks on each rear door that prevent passengers from opening the rear doors from the inside.

Using the Rear Door Security Lock

1. Move the lever up to lock.
2. Close the door.
3. Do the same thing to the other rear door lock.

Notice: **Pulling the inside door handle while the rear door security locks are engaged could damage your vehicle. Do not pull the inside door handle while the rear door security locks are engaged.**

The rear doors on your vehicle cannot be opened from the inside while this feature is in use.

Opening a Rear Door When the Security Lock is On

1. Unlock the door from the inside.
2. Open the door from the outside.

If you do not cancel the security lock, adults or older children who ride in the rear will not be able to open the rear door from the inside. You should let adults and older children know how to cancel the locks.

Canceling the Rear Door Security Lock

1. Unlock the door from the inside and open the door from the outside.
2. Move the lever down to unlock.
3. Do the same for the other rear door.

The rear door locks can now be locked and unlocked normally.

Trunk (Sedan)

⚠ CAUTION:

Exhaust gases may enter the vehicle if it is driven with the liftgate, trunk/hatch open, or with any objects that pass through the seal between the body and the trunk/hatch or liftgate. Engine exhaust contains Carbon Monoxide (CO) which cannot be seen or smelled. It can cause unconsciousness and even death.

If the vehicle must be driven with the liftgate, or trunk/hatch open:

- Close all of the windows.
- Fully open the air outlets on or under the instrument panel.
- Adjust the Climate Control system to a setting that brings in only outside air and set the fan speed to the highest setting. See Climate Control System in the Index.
- If the vehicle is equipped with a power liftgate, disable the power liftgate function.

For more information about carbon monoxide, see *Engine Exhaust on page 2-32*.

To open the trunk on your sedan from outside of your vehicle, insert the key into the lock cylinder and turn the key clockwise or use the remote keyless entry transmitter, if equipped.

Remote Trunk Release

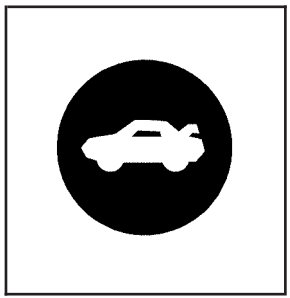

Trunk Release Button

If your vehicle has a trunk release button located on the driver's door, you can open the trunk from inside your vehicle by pressing the release button.

When closing the trunk, close from the center to ensure it fully latches.

Trunk Release Lever

If your vehicle has a trunk release lever located on the outboard side of the driver's seat, you can open the trunk from inside your vehicle by pulling the release lever.

Emergency Trunk Release Handle

Notice: **Do not use the emergency trunk release handle as a tie-down or anchor point when securing items in the trunk as it could damage the handle. The emergency trunk release handle is only intended to aid a person trapped in a latched trunk, enabling them to open the trunk from the inside.**

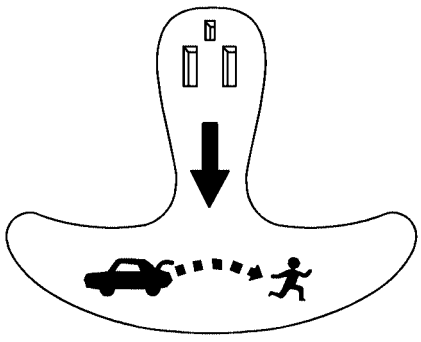

There is a glow-in-the-dark emergency trunk release handle located on the underside of the trunk lid. This handle will glow following exposure to light. Pull the release handle down to open the trunk from the inside.

Liftgate (Hatchback)

⚠ CAUTION:

Exhaust gases may enter the vehicle if it is driven with the liftgate, trunk/hatch open, or with any objects that pass through the seal between the body and the trunk/hatch or liftgate. Engine exhaust contains Carbon Monoxide (CO) which cannot be seen or smelled. It can cause unconsciousness and even death.

If the vehicle must be driven with the liftgate, or trunk/hatch open:

- Close all of the windows.
- Fully open the air outlets on or under the instrument panel.

CAUTION: (Continued)

CAUTION: (Continued)

- Adjust the Climate Control system to a setting that brings in only outside air and set the fan speed to the highest setting. See Climate Control System in the Index.
- If the vehicle is equipped with a power liftgate, disable the power liftgate function.

For more information about carbon monoxide, see *Engine Exhaust on page 2-32*.

To open the liftgate on your hatchback from outside of the vehicle, insert the key into the lock cylinder and turn it counterclockwise or use the remote keyless entry transmitter, if equipped. Then pull up the handle above the license plate to open the liftgate.

When closing the liftgate, close from the center to ensure it fully latches.

To lock the liftgate, insert the key into the lock cylinder and turn it clockwise or use the remote keyless entry transmitter, if equipped.

The liftgate can also be locked or unlocked by the central door unlocking system or remote keyless entry, if equipped. See *Central Door Unlocking System on page 2-7* and *Remote Keyless Entry (RKE) System Operation on page 2-4*.

Windows

⚠ CAUTION:

Leaving children, helpless adults, or pets in a vehicle with the windows closed is dangerous. They can be overcome by the extreme heat and suffer permanent injuries or even death from heat stroke. Never leave a child, a helpless adult, or a pet alone in a vehicle, especially with the windows closed in warm or hot weather.

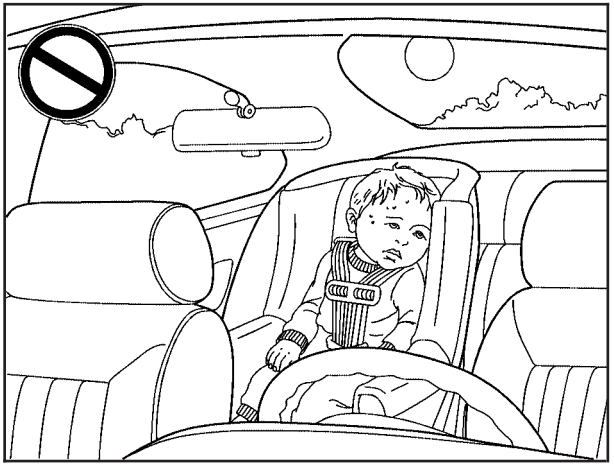

Manual Windows

Use the window crank to open and close each window.

The rear windows do not open fully.

Power Windows

⚠ CAUTION:

Leaving children in a vehicle with the keys is dangerous for many reasons, children or others could be badly injured or even killed. They could operate the power windows or other controls or even make the vehicle move. The windows will function and they could be seriously injured or killed if caught in the path of a closing window. Do not leave keys in a vehicle with children.

When there are children in the rear seat use the window lockout button to prevent unintentional operation of the windows.

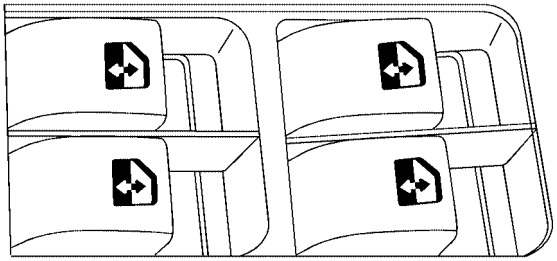

If your vehicle has power windows, the switches are located on the driver's door. In addition, each passenger door has a switch for its own window.

The ignition must be turned to ON/RUN to use the power windows. To lower the window, press and hold the switch. To raise the window, lift up on the switch. Release the switch when the window reaches the desired level.

Window Lockout

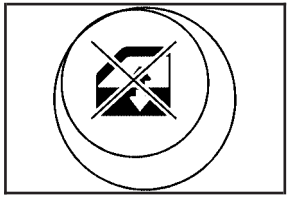

The window lockout is located with the driver's power window switches.

Press the lockout button to stop the rear passengers from using their window switches. The driver can still operate all the windows with the lockout on. Press the lockout button again to return to normal window operation.

Sun Visors

To block out glare you can swing down the visors. You can also remove them from the center mount and swing them to the side.

Visor Vanity Mirror

Your vehicle has vanity mirrors located on the back of the sun visors. Swing down the sun visor to expose the vanity mirror.

Theft-Deterrent Systems

Vehicle theft is big business, especially in some cities. This vehicle has theft-deterrent features, however, they do not make it impossible to steal.

Immobilizer

This device complies with Part 15 of the FCC Rules. Operation is subject to the following two conditions:

1. This device may not cause interference.
2. This device must accept any interference received, including interference that may cause undesired operation.

This device complies with RSS-210 of Industry Canada. Operation is subject to the following two conditions:

1. This device may not cause interference.
2. This device must accept any interference received, including interference that may cause undesired operation of the device.

Changes or modifications to this system by other than an authorized service facility could void authorization to use this equipment.

Immobilizer Operation

The vehicle may have a passive theft-deterrent system.

The immobilizer system prevents the vehicle from being started by an unauthorized person by isolating the power supply to the ignition system, the fuel pump and the fuel injectors.

The system is automatically armed when the key is removed from the ignition. You do not have to manually arm or disarm the system.

Your vehicle has a special key that works with the theft-deterrent system. There is a transponder in the key head that is electronically coded. The correct key will start the vehicle. An invalid key immobilizes the engine. If your key is ever damaged, you may not be able to start your vehicle.

When trying to start the vehicle, if the engine does not start and the security light flashes or comes on, there may be a problem with the theft-deterrent system. Turn the ignition off and try again.

If the engine still does not start, and the key appears to be undamaged, try another key. At this time, you may also want to check the fuse. See *Fuses and Circuit Breakers on page 5-87*. If the engine still does not start with the other key, your vehicle needs service. If your vehicle does start, the first key may be faulty. See your dealer/retailer who can have a new key made.

Up to 10 keys may be programmed for the vehicle. If you lose or damage your keys, only a dealer/retailer can have new keys made.

If you are ever driving and the security light comes on and stays on, you will be able to restart the engine if you turn it off. The theft-deterrent system, however, is not working properly and must be serviced by your dealer/retailer. Your vehicle is not protected by the theft-deterrent system at this time.

In an emergency, contact Roadside Assistance. See *Roadside Assistance Program on page 7-7*.

Content Theft-Deterrent

Your vehicle may have a content theft-deterrent system.

The theft-deterrent system will not arm when you lock the doors using the key or the manual door lock. It arms only when you use the remote keyless entry transmitter.

Arming the System

To arm the system, do the following:

1. Close the doors, the windows, the hood, and the trunk or liftgate.

   Make sure that the windows are closed, as the system can be armed even if the windows are open.

2. Turn the key to LOCK/OFF and remove the key from the ignition.

   If the key is inserted in the ignition, the transmitter will not arm the theft-deterrent system.

3. Lock the doors by pressing the lock button on the remote keyless entry transmitter.

   - The LED light on the transmitter will flash once.
   - All of the doors will lock.
   - The hazard warning lamps will flash once and the horn will sound.
   - The security light will flash continuously to indicate that the theft-deterrent system is armed. The security light is located on the center of the instrument panel near the clock.

To avoid activating the alarm by accident, do one of the following:

- Unlock the driver's or passenger's front door using the key.
- Press the unlock button on the remote keyless entry transmitter.

Unlocking a door any other way will activate the alarm when a door or the trunk or liftgate is opened.

If you do not want to arm the theft-deterrent system, lock the vehicle using the key or the manual door locks.

Disarming the System

To disarm the system, do one of the following:

- Unlock the driver's or passenger's front door using the key.
- Press the unlock button on the remote keyless entry transmitter.
  - The LED light on the transmitter will flash once.
  - All of the doors will unlock.
  - The hazard warning lamps will flash twice.

If the door is not opened or if the engine is not started within 30 seconds after disarming the system using the transmitter, all of the doors will automatically lock and the theft-deterrent mode will rearm.

How the System Alarm is Activated

If a door or the trunk or liftgate is opened without using the key or the remote keyless entry transmitter, the horn will sound and the lamps will flash for up to 30 seconds.

How to Turn Off the System Alarm

If the system alarm is active, it can be deactivated using one of the following methods:

- Press one of the buttons on the remote keyless entry transmitter.
- Unlock the driver's or passenger's front door using the key.

Otherwise, the alarm will automatically stop after 30 seconds. The system will then lock the doors and rearm the theft-deterrent system.

How to Detect a Tamper Condition

If the hazard warning lamps flash once when you press the lock button on the remote keyless entry transmitter, the theft-deterrent system alarm was activated while you were away.

Starting and Operating Your Vehicle

New Vehicle Break-In

Notice: **The vehicle does not need an elaborate break-in. But it will perform better in the long run if you follow these guidelines:**

- **Do not drive at any one constant speed, fast or slow, for the first 500 miles (805 km). Do not make full-throttle starts. Avoid downshifting to brake or slow the vehicle.**
- **Avoid making hard stops for the first 200 miles (322 km) or so. During this time the new brake linings are not yet broken in. Hard stops with new linings can mean premature wear and earlier replacement. Follow this breaking-in guideline every time you get new brake linings.**

Following break-in, engine speed and load can be gradually increased.

Ignition Positions

The ignition switch has four different positions.

⚠ CAUTION:

On manual transmission vehicles, turning the key to LOCK/OFF will lock the steering column and result in a loss of ability to steer the vehicle. This could cause a collision. If you need to turn the engine off while the vehicle is moving, turn the key only to ACC/ACCESSORY. Do not push the key in while the vehicle is moving.

Notice: **Using a tool to force the key to turn in the ignition could cause damage to the switch or break the key. Use the correct key, make sure it is all the way in, and turn it only with your hand. If the key cannot be turned by hand, see your dealer/retailer.**

LOCK/OFF: This position locks the steering wheel, ignition, shift lever and transmission. This is the only position in which you can insert or remove the key.

The steering can bind with the wheels turned off center. If this happens, move the steering wheel from right to left while turning the key to ACC/ACCESSORY. If this doesn't work, then the vehicle needs service.

ACC/ACCESSORY: This position operates some of the electrical accessories, such as the radio, but not the climate control system.

ON/RUN: This position can be used to operate the electrical accessories, and to display some instrument panel cluster warning and indicator lights. The switch stays in this position when the engine is running. If you leave the key in the ACC/ACCESSORY or ON/RUN position with the engine off, the battery could be drained. You may not be able to start the vehicle if the battery is allowed to drain for an extended period of time.

START: This is the position that starts the engine. When the engine starts, release the key. The ignition switch returns to ON/RUN for driving. Do not turn the key to START if the engine is running.

Starting the Engine

Automatic Transmission

Move the shift lever to P (Park) or N (Neutral). The engine will not start in any other position. To restart the engine when the vehicle is already moving, use N (Neutral) only.

Notice: **Do not try to shift to P (Park) if the vehicle is moving. If you do, you could damage the transmission. Shift to P (Park) only when the vehicle is stopped.**

Manual Transmission

The shift lever should be in N (Neutral) and the parking brake engaged. Hold the clutch pedal to the floor and start the engine. The vehicle will not start if the clutch pedal is not all the way down.

Starting Procedure

1. With your foot off the accelerator pedal, turn the ignition to START. When the engine starts, let go of the key. The idle speed will go down as the engine gets warm.

Notice: **Holding the key in START for longer than 15 seconds at a time will cause the battery to be drained much sooner. And the excessive heat can damage the starter motor. Wait about 15 seconds between each try to help avoid draining the battery or damaging the starter.**

2. If the engine does not start, wait about 15 seconds and try again. Wait about 15 seconds between each try.

   When the engine has run about 10 seconds to warm up, the vehicle is ready to be driven. Do not run the engine at high speed when it is cold.

   If the weather is below freezing (32°F or 0°C), let the engine run for a few minutes to warm up.

3. If the engine still will not start, or starts but then stops, it could be flooded with too much gasoline. Try pushing the accelerator pedal all the way to the floor and holding it there as you hold the key in START for about three seconds. If the vehicle starts briefly but then stops again, do the same thing, but this time keep the pedal down for five or six seconds. This clears the extra gasoline from the engine.

Notice: **The engine is designed to work with the electronics in the vehicle. If electrical parts or accessories are added, you could change the way the engine operates. Before adding electrical equipment, check with your dealer/retailer. If you do not, the engine might not perform properly. Any resulting damage would not be covered by the vehicle warranty.**

Engine Heater

The engine heater can provide easier starting and better fuel economy during engine warm-up in cold weather conditions at or below 0°F (–18°C). Vehicles with an engine heater should be plugged in at least four hours before starting.

To Use the Engine Heater

1. Turn off the engine.

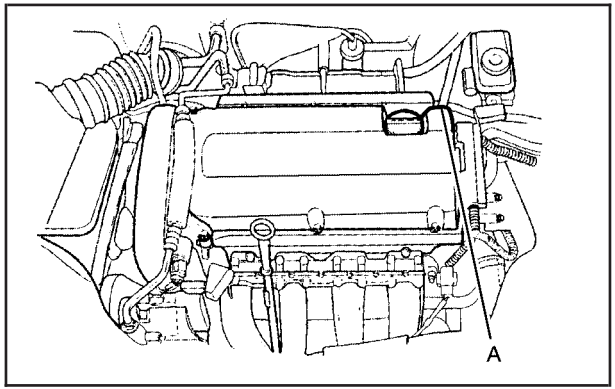

2. Remove the extension cord from the trunk. Open the hood and connect the electrical cord (A) with the extension cord.
3. Plug the extension cord into a normal, grounded 110-volt AC outlet.

⚠ CAUTION:

Plugging the cord into an ungrounded outlet could cause an electrical shock. Also, the wrong kind of extension cord could overheat and cause a fire. You could be seriously injured. Plug the cord into a properly grounded three-prong 110-volt AC outlet. If the cord will not reach, use a heavy-duty three-prong extension cord rated for at least 15 amps.

4. Before starting the engine, be sure to unplug both the extension cord and under hood electrical cord, and store them as they were before. This will keep them away from moving engine parts, and prevent damage.

The length of time the heater should remain plugged in depends on several factors. Ask a dealer/retailer in the area where you will be parking the vehicle for the best advice on this.

Automatic Transmission Operation

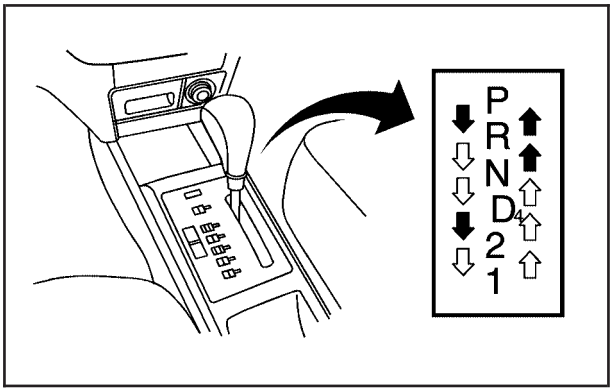

If the vehicle has an automatic transmission, the shift lever is located on the console between the seats.

Movement between certain positions requires pushing the release button on the front of the shifter.

P (Park): This position locks the front wheels. It is the best position to use when you start the engine because the vehicle cannot move easily.

⚠ CAUTION:

It is dangerous to get out of the vehicle if the shift lever is not fully in P (Park) with the parking brake firmly set. The vehicle can roll.

Do not leave the vehicle when the engine is running unless you have to. If you have left the engine running, the vehicle can move suddenly. You or others could be injured. To be sure the vehicle will not move, even when you are on fairly level ground, always set the parking brake and move the shift lever to P (Park). See *Shifting Into Park (Automatic Transmission) on page 2-29*.

Ensure that the shift lever is fully in P (Park) before starting the engine. The vehicle has an automatic transmission shift lock control system. You have to apply the brake pedal before you can shift from P (Park) when the key is in ON/RUN. If you cannot shift out of P (Park) while holding the brake pedal down, see *Shifting Out of Park on page 2-30*.

R (Reverse): Use this gear to back up.

When shifting from N (Neutral) to R (Reverse), you need to apply the brake pedal and push the release button on the front of the shifter.

Notice: **Shifting to R (Reverse) while the vehicle is moving forward could damage the transmission. The repairs would not be covered by the vehicle warranty. Shift to R (Reverse) only after the vehicle is stopped.**

To rock the vehicle back and forth to get out of snow, ice or sand without damaging the transmission, see *If Your Vehicle is Stuck in Sand, Mud, Ice, or Snow on page 4-15*.

N (Neutral): In this position, the engine does not connect with the wheels. To restart the engine while the vehicle is already moving, use N (Neutral) only. Also, use N (Neutral) when the vehicle is being towed.

⚠ CAUTION:

Shifting into a drive gear while the engine is running at high speed is dangerous. Unless your foot is firmly on the brake pedal, the vehicle could move very rapidly. You could lose control and hit people or objects. Do not shift into a drive gear while the engine is running at high speed.

Notice: **Shifting out of P (Park) or N (Neutral) with the engine running at high speed may damage the transmission. The repairs would not be covered by the vehicle warranty. Be sure the engine is not running at high speed when shifting the vehicle.**

D4 (Automatic Overdrive): This position is for normal driving.

When operating the vehicle in severe cold conditions, the transmission may be prevented from shifting into D4 gear until the transmission fluid has warmed up to it's operational temperature.

Notice: **If the vehicle seems to start up rather slowly or not shift gears when you go faster, and you continue to drive the vehicle that way, you could damage the transmission. Have the vehicle serviced right away. You can drive in 2 (Second) when you are driving less than 35 mph (55 km/h) and D4 (Automatic Overdrive) for higher speeds until then.**

2 (Second): This position gives you more power but lower fuel economy. You can use 2 (Second) on hills. It can help control vehicle speed as you go down steep mountain roads, while using the brakes off and on.

Notice: **Do not drive in 2 (Second) at speeds over 65 mph (105 km/h), or you can damage the transmission. Use D4 (Automatic Overdrive) as much as possible. Do not shift into 2 (Second) unless you are going slower than 65 mph (105 km/h) or you can damage the engine.**

1 (First): This position gives you even more power but lower fuel economy than 2 (Second). You can use it on very steep hills, or in deep snow or mud. If the shift lever is put in 1 (First), the transmission will not shift into first gear until the vehicle is going slowly enough.

Notice: **Spinning the tires or holding the vehicle in one place on a hill using only the accelerator pedal may damage the transmission. The repair will not be covered by the vehicle warranty. If you are stuck, do not spin the tires. When stopping on a hill, use the brakes to hold the vehicle in place.**

If there is a malfunction with the automatic transmission, the malfunction indicator lamp (MIL) or the HOLD indicator light will turn on or flash. See *Malfunction Indicator Lamp on page 3-32* or *Hold Mode Light on page 3-30*.

Have the vehicle fixed as soon as possible.

Hold Mode

If the vehicle's transmission has hold mode, you can select this mode to allow the automatic transmission to stay in a specific gear range.

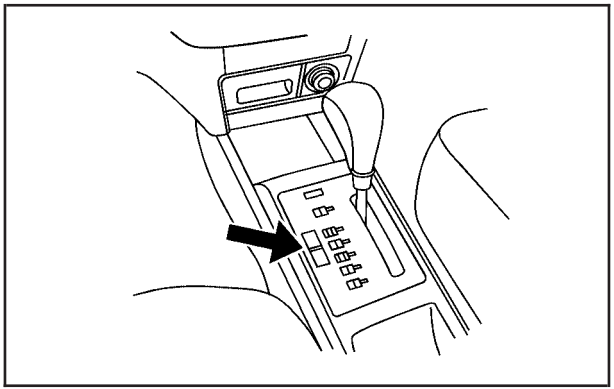

Press the HOLD button on the shift lever console to turn on hold mode. Press the button again to turn off hold mode, and return to normal automatic transmission operation.

The HOLD light will light up on the instrument panel cluster. See *Hold Mode Light on page 3-30*.

When hold mode is activated, the transmission runs as follows:

Selector Lever Position	Gear Range
D4	Third Gear
2	Second Gear
1	First Gear

Hold Mode Features

Winter Function

Select hold mode while in D4 (Automatic Overdrive) or 2 (Second) gear to help the vehicle maintain traction on slippery road surfaces, such as snow, mud, or ice.

Manual Transmission Operation

Five-Speed

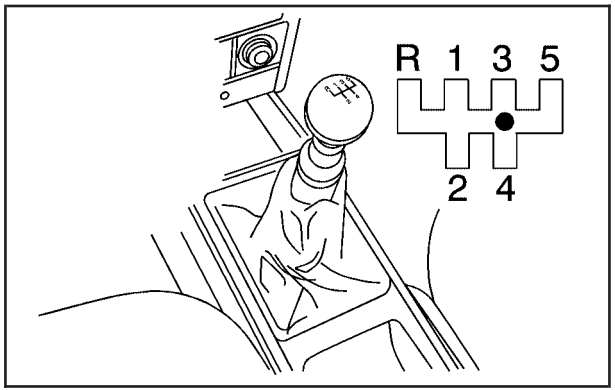

This is your shift pattern.

1 (First): Press the clutch pedal and shift into 1 (First). Then, slowly let up on the clutch pedal as you press the accelerator pedal.

You can shift into 1 (First) when you are going less than 20 mph (32 km/h). If you have come to a complete stop and it is hard to shift into 1 (First), put the shift lever in N (Neutral) and let up on the clutch. Press the clutch pedal back down. Then shift into 1 (First).

2 (Second): Press the clutch pedal as you let up on the accelerator pedal and shift into 2 (Second). Then, slowly let up on the clutch pedal as you press the accelerator pedal.

3 (Third), 4 (Fourth) and 5 (Fifth): Shift into 3 (Third), 4 (Fourth) and 5 (Fifth), the same way you do for 2 (Second). Slowly let up on the clutch pedal as you press the accelerator pedal.

To stop, let up on the accelerator pedal and press the brake pedal. Just before the vehicle stops, press the clutch pedal and the brake pedal, and shift to N (Neutral).

N (Neutral): Use this position when you start or idle the engine.

R (Reverse): To back up, press down the clutch pedal, lift up the ring on the shift lever and shift into R (Reverse). Let up on the clutch pedal slowly while pressing the accelerator pedal.

Notice: **Shifting to R (Reverse) while the vehicle is moving forward could damage the transmission. The repairs would not be covered by the vehicle warranty. Shift to R (Reverse) only after the vehicle is stopped.**

Also, use R (Reverse), along with the parking brake, for parking the vehicle.

Shift Speeds

⚠ CAUTION:

If you skip a gear when you downshift, you could lose control of the vehicle. You could injure yourself or others. Do not shift down more than one gear at a time when you downshift.

Up-Shift Light

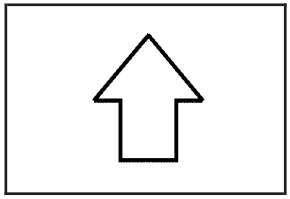

If you have a manual transmission, you may have an up-shift light. This light will show you when to shift to the next higher gear for the best fuel economy.

When this light comes on, you can shift to the next higher gear if weather, road, and traffic conditions let you. For the best fuel economy, accelerate slowly and shift when the light comes on.

While you accelerate, it is normal for the light to go on and off if you quickly change the position of the accelerator. Ignore the light when you downshift.

Parking Brake

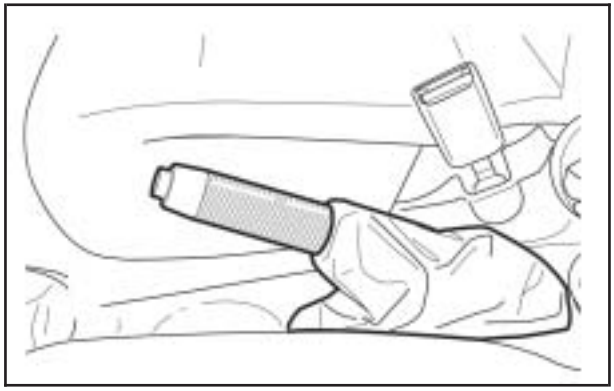

The parking brake lever is located between the bucket seats.

To set the parking brake, hold the brake pedal down and pull up on the parking brake lever. If the ignition is on, the brake system warning light will come on. See *Brake System Warning Light on page 3-28*.

To release the parking brake, hold the brake pedal down. Pull the parking brake lever up until you can press the release button. Hold the release button in as you move the brake lever all the way down.

Notice: **Driving with the parking brake on can overheat the brake system and cause premature wear or damage to brake system parts. Make sure that the parking brake is fully released and the brake warning light is off before driving.**

Shifting Into Park (Automatic Transmission)

⚠ CAUTION:

It can be dangerous to get out of the vehicle if the shift lever is not fully in P (Park) with the parking brake firmly set. The vehicle can roll. If you have left the engine running, the vehicle can move suddenly. You or others could be injured. To be sure the vehicle will not move, even when you are on fairly level ground, use the steps that follow.

1. Hold the brake pedal down and set the parking brake. See *Parking Brake on page 2-28* for more information.
2. Move the shift lever into P (Park) by pressing the button on the shift lever and pushing the lever all the way toward the front of the vehicle.
3. Turn the ignition key to LOCK/OFF.
4. Remove the key and take it with you. If you can leave the vehicle with the ignition key in your hand, the vehicle is in P (Park).

Leaving the Vehicle With the Engine Running (Automatic Transmission)

⚠ CAUTION:

It can be dangerous to leave the vehicle with the engine running. The vehicle could move suddenly if the shift lever is not fully in P (Park) with the parking brake firmly set. And, if you leave the vehicle with the engine running, it could overheat and even catch fire. You or others could be injured. Do not leave the vehicle with the engine running.

If you have to leave the vehicle with the engine running, be sure the vehicle is in P (Park) and the parking brake is firmly set before you leave it. After you have moved the shift lever into P (Park), hold the brake pedal down. Then see if you can move the shift lever away from P (Park) without first pushing the shift lock release button. If you can, it means that the shift lever was not fully locked into P (Park).

Torque Lock (Automatic Transmission)

If you are parking on a hill and you do not shift your transmission into P (Park) properly, the weight of the vehicle may put too much force on the parking pawl in the transmission. You may find it difficult to pull the shift lever out of P (Park). This is called “torque lock.” To prevent torque lock, set the parking brake and then shift into P (Park) properly before you leave the driver seat. To find out how, see *Shifting Into Park (Automatic Transmission) on page 2-29*.

When you are ready to drive, move the shift lever out of P (Park) before you release the parking brake.

If torque lock does occur, you may need to have another vehicle push yours a little uphill to take some of the pressure from the parking pawl in the transmission, so you can pull the shift lever out of P (Park).

Shifting Out of Park

Vehicles with an automatic transmission have a shift interlock system. You have to apply the brake pedal before you can shift from P (Park) when the ignition is in the ON/RUN position. See *Automatic Transmission Operation on page 2-22*.

If you cannot shift out of P (Park) while holding the brake pedal down, try this:

1. Set the parking brake.
2. Turn the ignition off and remove the key.
3. Remove the hole cover from the shift lock slot by prying it off using a small, flat object. The shift lock release slot is located at the top of the shift lever.

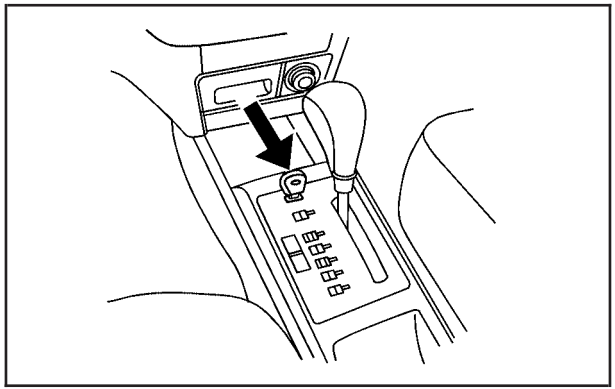

4. Insert the key into the shift lock slot and press and hold the key.
5. Shift to N (Neutral).
6. Remove the key from the slot, insert the key into the ignition and start the engine.
7. Replace the shift-lock release slot cover.
8. Apply and hold the brake pedal fully and release the parking brake.
9. Shift to the gear you want.
10. Have the vehicle fixed as soon as you can.

Parking the Vehicle (Manual Transmission)

Before leaving the vehicle, do the following:

1. Hold the brake pedal down and firmly apply the parking brake.
2. Fully press in the clutch pedal and place the shift lever into the gear position as stated below:
   - When parking on level ground, place the shift lever into N (Neutral).
   - When parking downhill, place the shift lever in R (Reverse).
   - When parking uphill, place the shift lever in 1 (First).
3. After shifting, turn the ignition to LOCK/OFF, remove the key and release the clutch.

Parking Over Things That Burn

⚠ CAUTION:

Things that can burn could touch hot exhaust parts under the vehicle and ignite. Do not park over papers, leaves, dry grass, or other things that can burn.

Engine Exhaust

⚠ CAUTION:

Engine exhaust contains Carbon Monoxide (CO) which cannot be seen or smelled. Exposure to CO can cause unconsciousness and even death.

CAUTION: (Continued)

CAUTION: (Continued)

Exhaust may enter the vehicle if:

- The vehicle idles in areas with poor ventilation (parking garages, tunnels, deep snow that may block underbody airflow or tail pipes).
- The exhaust smells or sounds strange or different.
- The exhaust system leaks due to corrosion or damage.
- The vehicle's exhaust system has been modified, damaged or improperly repaired.
- There are holes or openings in the vehicle body from damage or after-market modifications that are not completely sealed.

If unusual fumes are detected or if it is suspected that exhaust is coming into the vehicle:

- Drive it only with the windows completely down.
- Have the vehicle repaired immediately.

Never park the vehicle with the engine running in an enclosed area such as a garage or a building that has no fresh air ventilation.

Running the Vehicle While Parked

It is better not to park with the engine running. But if you ever have to, here are some things to know.

⚠ CAUTION:

Idling a vehicle in an enclosed area with poor ventilation is dangerous. Engine exhaust may enter the vehicle. Engine exhaust contains Carbon Monoxide (CO) which cannot be seen or smelled. It can cause unconsciousness and even death. Never run the engine in an enclosed area that has no fresh air ventilation. For more information, see *Engine Exhaust on page 2-32*.

⚠ CAUTION:

It can be dangerous to get out of the vehicle if the automatic transmission shift lever is not fully in P (Park) with the parking brake firmly set. The vehicle can roll. Do not leave the vehicle when the engine is running unless you have to. If you have left the engine running, the vehicle can move suddenly. You or others could be injured. To be sure the vehicle will not move, even when it is on fairly level ground, always set the parking brake and move the automatic transmission shift lever to P (Park), or the manual transmission shift lever to Neutral.

Follow the proper steps to be sure the vehicle will not move. If the vehicle has an automatic transmission, see *Shifting Into Park (Automatic Transmission) on page 2-29*.

Mirrors

Manual Rearview Mirror

Hold the inside rearview mirror in the center to move it for a clearer view behind your vehicle. Adjust the mirror to avoid glare from the headlamps behind you. Push the tab forward for daytime use and pull it for nighttime use.

Outside Manual Mirrors

Adjust the mirrors to see a little of the side of your vehicle.

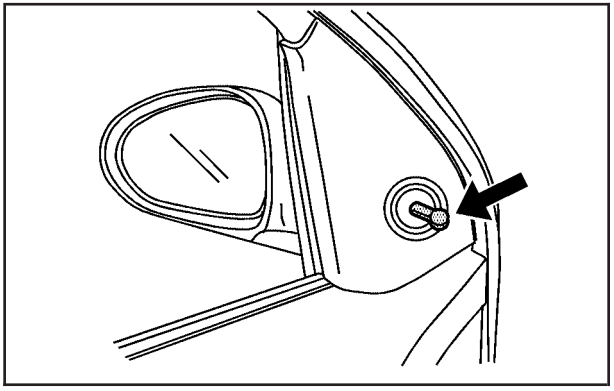

Controls for the outside manual mirrors are located next to each mirror.

Manually fold the mirrors inward to prevent damage when going through an automatic car wash. To fold, push the mirror toward the vehicle. Push the mirror outward, to return it to the original position.

Outside Power Mirrors

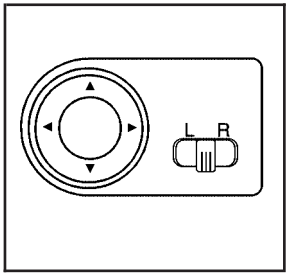

The control is located on the instrument panel, left of the steering wheel.

The ignition must be turned to ON/RUN to adjust the mirrors.

To adjust the mirrors:

1. Select the mirror you want to adjust by moving the selector switch to L for the driver side mirror or R for the passenger side mirror.
2. Press one of the four arrows located on the control pad to move the mirror to the desired direction.

Manually fold the mirrors inward to prevent damage when going through an automatic car wash. To fold, push the mirror toward the vehicle. Push the mirror outward, to return to its original position.

Outside Convex Mirror

⚠ CAUTION:

A convex mirror can make things (like other vehicles) look farther away than they really are. If you cut too sharply into the right lane, you could hit a vehicle on the right. Check the inside mirror or glance over your shoulder before changing lanes.

The passenger side mirror is convex shaped. A convex mirror's surface is curved so more can be seen from the driver seat.

Outside Heated Mirrors

For vehicles with this feature:

(Rear Window Defogger): Press to heat the mirrors. See "Rear Window and Outside Mirror Defogger" under *Climate Control System on page 3-18* for more information.

OnStar® System

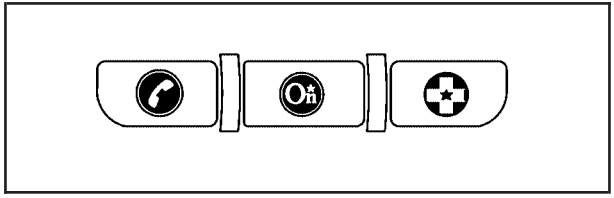

OnStar uses several innovative technologies and live advisors to provide a wide range of safety, security, information, and convenience services. If the airbags deploy, the system is designed to make an automatic call to OnStar Emergency advisors who can request emergency services be sent to your location.
If the keys are locked in the vehicle, call OnStar at 1-888-4-ONSTAR to have a signal sent to unlock the doors. OnStar Hands-Free Calling, including 30 trial minutes good for 60 days, is available on most vehicles. OnStar Turn-by-Turn Navigation service, with one trial route, is available on most vehicles. Press the OnStar button to have an OnStar advisor contact Roadside Service.

OnStar service is provided subject to the OnStar Terms and Conditions included in the OnStar Subscriber glove box literature.

Some services such as Remote Door Unlock or Stolen Vehicle Location Assistance may not be available until the owner of the vehicle registers with OnStar. After the first prepaid year, contact OnStar to select a monthly or annual subscription payment plan. If a payment plan is not selected, the OnStar system and all services, including airbag notification and emergency services, may be deactivated and no longer available. For more information visit onstar.com (U.S.) or onstar.ca (Canada), or press the OnStar button to speak with an advisor.

Not all OnStar services are available on all vehicles. To check if this vehicle is able to provide the services described below, or for a full description of OnStar services and system limitations, see the OnStar Owner's Guide in the glove box or visit onstar.com (U.S.) or onstar.ca (Canada), contact OnStar at 1-888-4-ONSTAR (1-888-466-7827) or TTY 1-877-248-2080, or press the OnStar button to speak with an OnStar advisor 24 hours a day, 7 days a week.

OnStar Services Available with the Safe & Sound Plan

- Automatic Notification of Airbag Deployment
- Advanced Automatic Crash Notification (AACN) (If equipped)
- Link to Emergency Services
- Roadside Assistance
- Stolen Vehicle Location Assistance
- Remote Door Unlock/Vehicle Alert
- OnStar Vehicle Diagnostic Email
- GM Goodwrench On Demand Diagnostics
- OnStar Hands-Free Calling with 30 trial minutes
- OnStar Virtual Advisor (U.S. Only)

OnStar Services Included with Directions & Connections Plan

- All Safe and Sound Plan Services
- RideAssist
- Information and Convenience Services

OnStar Hands-Free Calling

OnStar Hands-Free Calling allows eligible OnStar subscribers to make and receive calls using voice commands. Hands-Free Calling is fully integrated into the vehicle, and can be used with OnStar Pre-Paid Minute Packages. Most vehicles include 30 trial minutes good for 60 days. Hands-Free Calling can also be linked to a Verizon Wireless service plan in the U.S. or a Bell Mobility service plan in Canada, depending on eligibility. To find out more, refer to the OnStar Owner's Guide in the vehicle's glove box, visit onstar.com or onstar.ca, or speak with an OnStar advisor by pressing the OnStar button or calling 1-888-4-ONSTAR (1-888-466-7827).

OnStar Virtual Advisor

OnStar Virtual Advisor is a feature of OnStar Hands-Free Calling that uses minutes to access location-based weather, local traffic reports, and stock quotes. Press the phone button and give a few simple voice commands to browse through the various topics. See the OnStar Owner's Guide for more information. This feature is only available in the continental U.S.

How OnStar Service Works

The OnStar system can record and transmit vehicle information. This information is automatically sent to an OnStar Call Center when the OnStar button is pressed, the emergency button is pressed, or if the airbags or AACN system deploy. This information usually includes the vehicle's GPS location and, in the event of a crash, additional information regarding the crash that the vehicle was involved in (e.g. the direction from which the vehicle was hit). When the Virtual Advisor feature of OnStar Hands-Free Calling is used, the vehicle also sends OnStar the vehicle's GPS location so they can provide services where it is located.

OnStar service cannot work unless the vehicle is in a place where OnStar has an agreement with a wireless service provider for service in that area. OnStar service also cannot work unless the vehicle is in a place where the wireless service provider OnStar has hired for that area has coverage, network capacity and reception when the service is needed, and technology that is compatible with the OnStar service. Not all services are available everywhere, particularly in remote or enclosed areas, or at all times.

Location information about the vehicle is only available if the GPS satellite signals are unobstructed and available.

The vehicle must have a working electrical system, including adequate battery power, for the OnStar equipment to operate. There are other problems OnStar cannot control that may prevent OnStar from providing OnStar service at any particular time or place. Some examples are damage to important parts of the vehicle in a crash, hills, tall buildings, tunnels, weather or wireless phone network congestion.

Your Responsibility

Increase the volume of the radio if the OnStar advisor cannot be heard. If the light next to the OnStar buttons is red, the system may not be functioning properly. Press the OnStar button and request a vehicle diagnostic. If the light appears clear (no light is appearing), your OnStar subscription has expired and all services have been deactivated. Press the OnStar button to confirm that the OnStar equipment is active.

Storage Areas

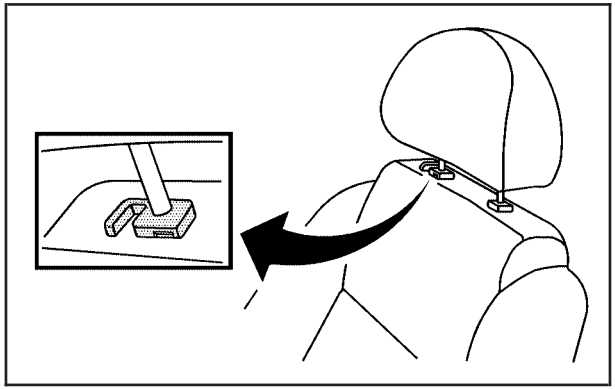

The vehicle has shopping hooks on each front seatback. Lift the headrest to access the hooks.

Glove Box

Lift up on the glove box lever to open it.

Cupholders

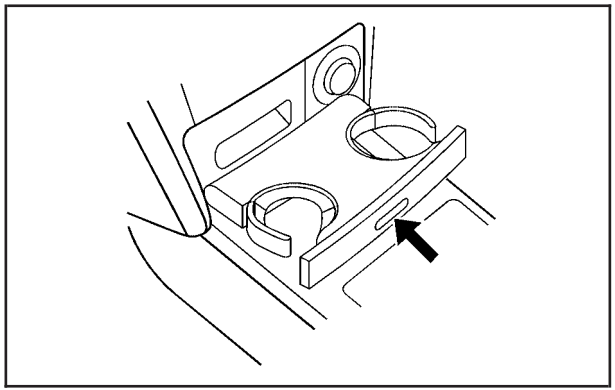

Two cupholders are located in the center instrument panel, below the climate control system. To use the cupholder, push in on the cover, then pull it out. After use, push in the cupholder until it latches.

There is also a cupholder located in the rear of the center console.

Sunglasses Storage Compartment

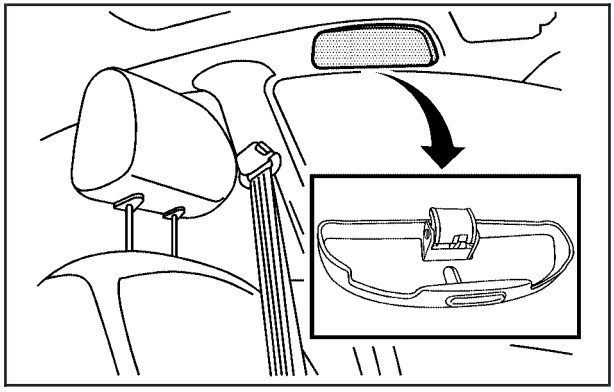

For vehicles with this feature, the sunglasses storage compartment is located above the driver's door.
To open, pull down and hold the upper part of the cover. Release the cover and the compartment will automatically close.

Sunroof

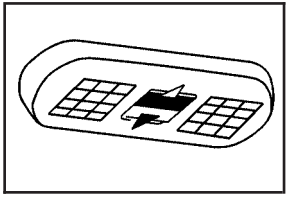

On vehicles with this feature, the switch is located on the headliner between the sun visors.

The sunroof only operates when the ignition is turned to ON/RUN. The sunroof can be opened to a vent position or it can be opened all of the way.

To open the sunroof, to the vent position, open the sunshade. Then press and hold the driver's side of the switch. To close the sunroof, press and hold the passenger's side of the switch until the sunroof reaches the desired position.

To fully open the sunroof, press and hold the passenger's side of the switch. The sunshade opens with the sunroof. To close the sunroof, press and hold the driver's side of the switch. The sunroof will stop if the switch is released during operation. Close the sunshade manually.

In both the vent and fully open positions, the air flow can be adjusted by pushing and holding the switch until the sunroof moves to the desired position.

The sunroof cannot be opened or closed if the vehicle has an electrical failure.

Section 3 Instrument Panel

Instrument Panel Overview 3-4
Hazard Warning Flashers 3-6
Horn 3-6
Tilt Wheel 3-6
Turn Signal/Multifunction Lever 3-7
Turn and Lane-Change Signals 3-7
Headlamp High/Low-Beam Changer 3-8
Flash-to-Pass 3-8
Windshield Wipers 3-8
Windshield Washer 3-9
Rear Window Wiper/Washer 3-10
Cruise Control 3-10
Exterior Lamps 3-13
Daytime Running Lamps (DRL) 3-14
Fog Lamps 3-15
Instrument Panel Brightness 3-15
Dome Lamp 3-16
Inadvertent Power Battery Saver 3-16
Accessory Power Outlet(s) 3-16
Ashtray(s) and Cigarette Lighter 3-17
Clock 3-17

Climate Controls 3-18
Climate Control System 3-18
Outlet Adjustment 3-21
Passenger Compartment Air Filter 3-22

Warning Lights, Gages, and Indicators 3-23
Instrument Panel Cluster 3-24
Speedometer and Odometer 3-25
Trip Odometer 3-25
Tachometer 3-25
Safety Belt Reminders 3-26
Airbag Readiness Light 3-26
Passenger Airbag Status Indicator 3-27
Charging System Light 3-28
Up-Shift Light 3-28
Brake System Warning Light 3-28
Antilock Brake System (ABS) Warning Light 3-30
Hold Mode Light 3-30
Engine Coolant Temperature Gage 3-31
Tire Pressure Light 3-31
Malfunction Indicator Lamp 3-32
Oil Pressure Light 3-34

Section 3 Instrument Panel

Change Engine Oil Light 3-35
Fog Lamp Light 3-35
Cruise Control Light 3-36
Highbeam On Light 3-36
Daytime Running Lamps (DRL)
Indicator Light 3-36
Door Ajar Light 3-36
Fuel Gage 3-37
Low Fuel Warning Light 3-38

Trip Computer 3-38

Audio System(s) 3-40
AM-FM Radio 3-41
Radio with CD 3-46
Using an MP3 3-54
XM Radio Messages 3-56
Audio Steering Wheel Controls 3-57
Radio Reception 3-58
Fixed Mast Antenna (Hatchback) 3-58
Backglass Antenna (Sedan) 3-59
Multi-Band Antenna 3-59

✍ NOTES

Instrument Panel Overview

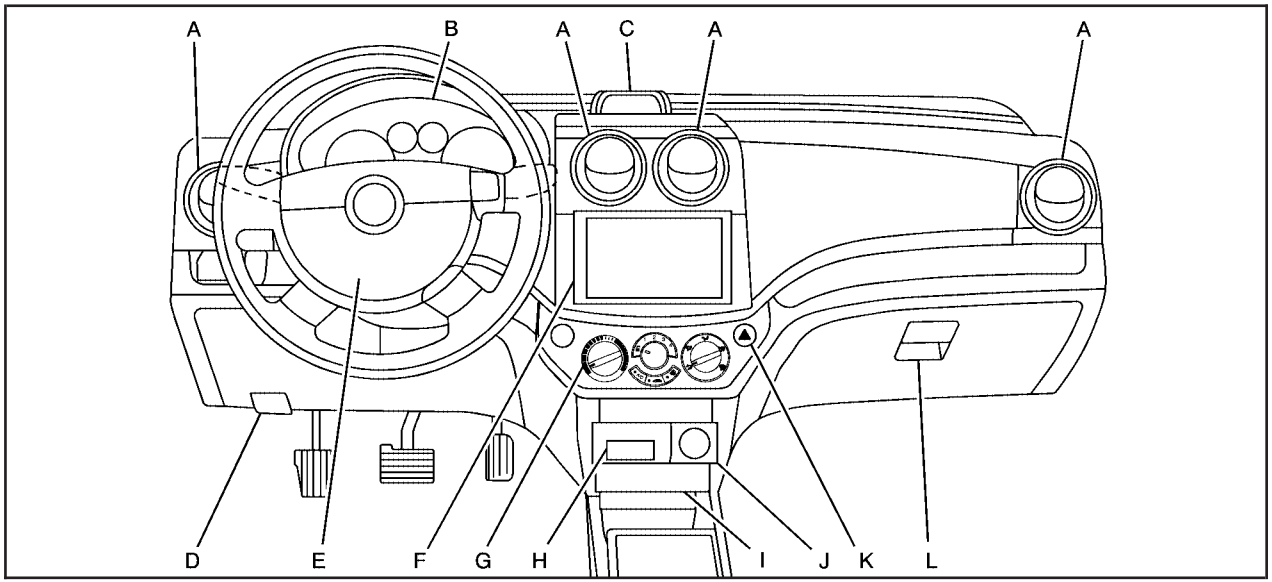

The main components of the instrument panel are the following:

A. *Outlet Adjustment on page 3-21*.
B. *Instrument Panel Cluster on page 3-24*.
C. *Clock on page 3-17*.
D. *Hood Release on page 5-12*.
E. *Horn on page 3-6*.
F. *Audio System(s) on page 3-40*.
G. *Climate Control System on page 3-18*.
H. Ashtray. See *Ashtray(s) and Cigarette Lighter on page 3-17*.
I. *Cupholders on page 2-39*.
J. Cigarette Lighter. See *Ashtray(s) and Cigarette Lighter on page 3-17*.
K. *Hazard Warning Flashers on page 3-6*.
L. *Glove Box on page 2-39*.

Hazard Warning Flashers

The hazard warning flasher button is located to the right of the climate control system on the sedan.

Hazard Warning Flasher: Press to make the front and rear turn signal lamps flash on and off. This warns others that you are having trouble. Press the button again to turn the flashers off.

When the hazard warning flashers are on, the turn signals will not work.

Horn

Press near or on the horn symbols on the steering wheel pad to sound the horn.

Tilt Wheel

A tilt wheel lets the steering wheel be adjusted.

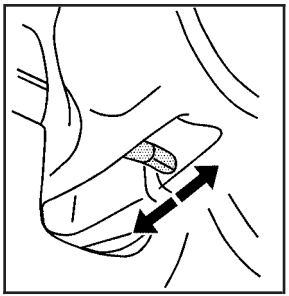

The tilt wheel lever is located underneath the steering column slightly to the left.

Pull the lever down to move the steering wheel up or down. Pull the lever up to lock the wheel in place.

Do not adjust the tilt lever while driving.

Turn Signal/Multifunction Lever

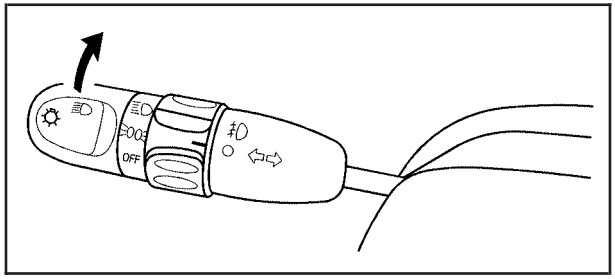

The lever on the left side of the steering column includes the following:

⇦⇨ **:** Turn and Lane-Change Signals

: Headlamp High/Low-Beam Changer

: Exterior Light Control

: Fog Lamps, if equipped

Flash-to-Pass Feature.

Information for these features is on the pages following.

Turn and Lane-Change Signals

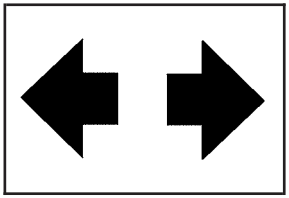

An arrow on the instrument panel cluster flashes in the direction of the turn or lane change.

Move the lever all the way up or down to signal a turn.

Raise or lower the lever until the arrow starts to flash to signal a lane change. Hold it there until the lane change is completed.

The lever returns to its starting position whenever it is released.

If after signaling a turn or a lane change the arrow flashes rapidly or does not come on, a signal bulb may be burned out.

Have the bulbs replaced. If the bulb is not burned out, check the fuse. See *Fuses and Circuit Breakers on page 5-87*.

Headlamp High/Low-Beam Changer

The headlamps must be on for this feature to work.

Push the turn signal lever away from you to turn the high beams on.

This instrument panel cluster light comes on while the high beams are on and the ignition is turned to ON/RUN.

Pull the lever towards you to return to low beams.

Flash-to-Pass

This feature is used to signal to the vehicle ahead that you want to pass.

Pull the turn signal/multifunction lever towards you until the high-beam headlamps come on, then release the lever to turn them off.

Windshield Wipers

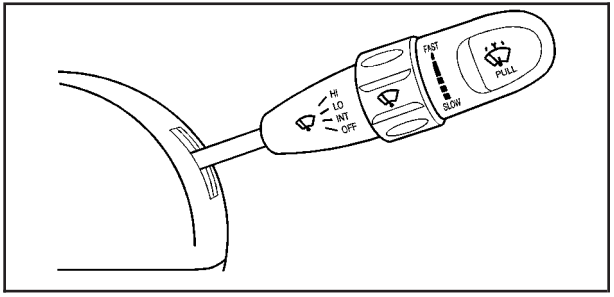

Sedan shown

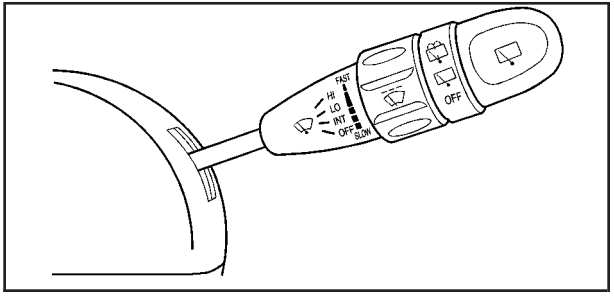

Hatchback shown

The lever is located on the right side of the steering column. The ignition must be turned to ON/RUN to operate the windshield wipers.

Move the lever to one of the following positions:

HI (High Speed): For steady wiping at high speed.

LO (Low Speed): For steady wiping at low speed.

INT (Intermittent): Move to this position for a delayed wiping cycle. Turn the band on the windshield wiper toward FAST or SLOW for a shorter or longer delay between wipes. The wiper speed can only be adjusted when the lever is in the INT position.

OFF: Turns the windshield wipers off.

Misting Function

Move the lever toward INT for a single wiping cycle. Hold it there until the windshield wipers start; then let go. The windshield wipers will stop after one wipe. If more wipes are needed, hold the band toward INT longer.

Clear ice and snow from the wiper blades before using them. If they are frozen to the windshield, carefully loosen or thaw them. If the blades become damaged, get new blades or blade inserts. See *Windshield Wiper Blade Replacement on page 5-50*.

Heavy snow or ice can overload the wipers. A circuit breaker stops them until the motor cools.

Windshield Washer

To use this feature the ignition must be turned to ON/RUN. Pull the windshield washer/wiper lever toward you to spray washer fluid on the windshield.

The spray continues until the lever is released. The wipers will run a few times and either stop or will resume at the speed being used previously. See *Windshield Washer Fluid on page 5-33* for information on filling the windshield washer fluid.

⚠ CAUTION:

In freezing weather, do not use your washer until the windshield is warmed. Otherwise the washer fluid can form ice on the windshield, blocking your vision.

Rear Window Wiper/Washer

⚠ CAUTION:

In freezing weather, do not use your washer until the windshield is warmed. Otherwise the washer fluid can form ice on the windshield, blocking your vision.

The vehicle may have a rear window wiper/washer.

Turn the rear wiper/washer band to operate the rear window wiper/washer.

OFF: Turns the rear window wiper/washer off.

: Turns the rear wiper on for intermittent wipes.

: Sprays washer fluid onto the rear window and the wiper operates continuously.

The windshield washer reservoir is used for the windshield and rear window. Check the fluid level if either washer is not working. See *Windshield Washer Fluid on page 5-33*.

Cruise Control

For vehicles with cruise control, a speed of about 24 mph (39 km/h) or more can be maintained without keeping your foot on the accelerator. Cruise control does not work at speeds below 24 mph (39 km/h).

When the brakes are applied, or the clutch pedal if you have a manual transmission, the cruise control turns off.

⚠ CAUTION:

Cruise control can be dangerous where you cannot drive safely at a steady speed. So, do not use the cruise control on winding roads or in heavy traffic.

Cruise control can be dangerous on slippery roads. On such roads, fast changes in tire traction can cause excessive wheel slip, and you could lose control. Do not use cruise control on slippery roads.

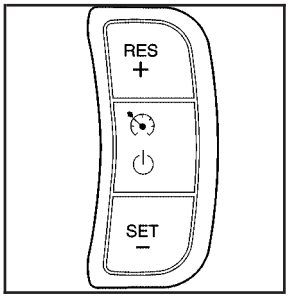

The cruise control buttons are located on the right side of the steering wheel.

/ (On/Off): Press to turn the cruise control on or off.

RES+ (Resume/Accelerate): Press to make the vehicle accelerate or resume to a previously set speed.

SET– (Set/Coast): Press to set the speed or make the vehicle decelerate.

Setting Cruise Control

⚠ CAUTION:

If you leave your cruise control on when you are not using cruise, you might hit a button and go into cruise when you do not want to. You could be startled and even lose control. Keep the cruise control switch off until you want to use cruise control.

1. Press / to turn cruise control on.
2. Accelerate to the speed desired.
3. Press the SET– button and release it. The cruise control light comes on in the instrument panel cluster to show that the cruise control is on.
4. Take your foot off the accelerate pedal.

Resuming a Set Speed

If the cruise control is set to a desired speed and then the brakes are applied, or the clutch pedal if you have a manual transmission, the cruise control shuts off. But it does not need to be reset.

Once the vehicle is going about 24 mph (39 km/h) or more, briefly press the RES+ button. The vehicle returns to the previously set speed and stays there.

If the RES+ button is held, the vehicle speed will continue to increase until the button is released or the brake pedal is applied. Do not hold in the RES+ button, unless you want the vehicle to go faster.

Increasing Speed While Using Cruise Control

There are two ways to go to a higher speed.

- Use the accelerator pedal to get to a higher speed. Press the SET– button, then release the button and the accelerator pedal.
- Press the RES+ button. Hold it there until the desired speed is reached, and then release it. To increase the vehicle speed in small amounts, briefly press the RES+ button and then release it. Each time this is done, the vehicle goes about 1 mph (1.6 km/h) faster.

The accelerate feature only works after the cruise control is turned on by pressing the SET– button.

Reducing Speed While Using Cruise Control

There are two ways to reduce the vehicle speed while using cruise control:

- Press the SET– button until the lower speed desired is reached, then release it.
- To slow down in small amounts, briefly press the SET– button. Each time this is done, the vehicle goes about 1 mph (1.6 km/h) slower.

Passing Another Vehicle While Using Cruise Control

Use the accelerator pedal to increase the vehicle speed. When you take your foot off the pedal, the vehicle slows down to the cruise control speed set earlier.

Using Cruise Control on Hills

How well the cruise control works on hills depends upon the vehicle speed, load, and the steepness of the hills. When going up steep hills, you might have to step on the accelerator pedal to maintain the vehicle's speed. When going downhill, you might have to brake or shift to a lower gear to keep the vehicle's speed down. When the brakes are applied the cruise control turns off.

Ending Cruise Control

There are two ways to turn off the cruise control:

- Step lightly on the brake pedal, or press the clutch pedal, if you have a manual transmission.
- Press / on the cruise control pad.

Erasing Speed Memory

The cruise control set speed memory is erased when the cruise control or the ignition is turned off.

Exterior Lamps

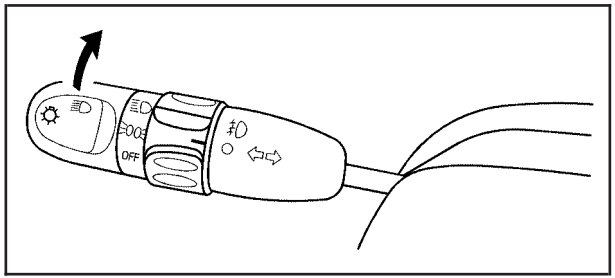

Uplevel shown, Base similar

The lever on the left side of the steering column operates the exterior lamps.

The exterior lamp band has three positions:

(Headlamps): Turns on the headlamps, together with the following:

- Taillamps
- License Plate Lamp
- Instrument Panel Lights
- Parking Lamps

The headlamps automatically turn off when the ignition key is turned to LOCK/OFF or ACC/ACCESSORY.

(Parking Lamps): Turns on the parking lamps, together with the taillamps, license plate lamp, and instrument panel lights.

OFF: Turns all the lamps off, except the Daytime Running Lamps (DRL).

Daytime Running Lamps (DRL)

Daytime Running Lamps (DRL) can make it easier for others to see the front of your vehicle during the day. Fully functional daytime running lamps are required on all vehicles first sold in Canada.

The DRL system makes the headlamps come on when the following conditions are met:

- The ignition is on.
- The exterior lamp band is in OFF or in the parking lamp position.
- The parking brake is released.

An indicator light on instrument panel cluster comes on when the DRL system is on.

When the DRL system is on, the taillamps, sidemarker lamps, parking lamps and instrument panel lights do not come on unless the exterior lamps control is turned to the parking lamp or headlamp position.

The DRL system turns off when one of the following conditions are met:

- The ignition is off.
- The parking brake is on.
- The high-beam headlamps are on.
- The low-beam headlamps are on.
- The flash-to-pass feature is used.

The regular headlamp system should be used when needed.

Fog Lamps

For vehicles with fog lamps, they are controlled by the band located on the middle of the turn signal/ multifunction lever.

To use the fog lamps, the ignition must be turned to ON/RUN and the low-beam headlamps or parking lamps must be on.

Turn the band to to turn the fog lamps on. The band automatically returns to its starting position when released. The fog lamp indicator light comes on in the instrument panel cluster. See *Fog Lamp Light on page 3-35*.

To turn the fog lamps off, turn the band to again. The fog lamp indicator light will go off.

The fog lamps will also turn off when the high-beam headlamps are turned on. When the high-beam headlamps are turned off, the fog lamps will turn on again.

Some localities have laws that require the headlamps to be on along with the fog lamps.

Instrument Panel Brightness

This feature controls the brightness of the instrument panel lights.

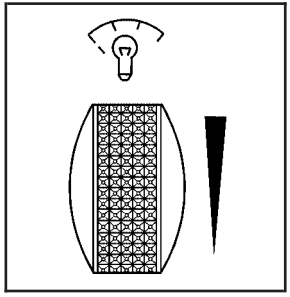

The thumbwheel for this feature is located on the instrument panel to the left of the steering column. Turn the thumbwheel to brighten or dim the lights.

Dome Lamp

The vehicle has a dome lamp.

ON: The light comes on and stays on.

● **(Door):** The light comes on when a door is opened. The light turns off when all the doors are closed.

OFF: The light remains off even when a door is opened.

Inadvertent Power Battery Saver

This feature is designed to protect the vehicle's battery against drainage. If the exterior lamps control is left in the ☀ or ≡D position, the key is removed and the driver door is opened, the lights will turn off automatically.

If the key is removed and the driver door is opened while the dome lamp is on, the dome lamp will not turn off automatically.

Accessory Power Outlet(s)

Accessory power outlets can be used to plug in auxiliary electrical equipment, such as a cellular phone.

The accessory power outlet is located next to the parking brake on the center console.

To use the accessory power outlet, remove the protective cap. When not in use, always cover the outlet with the protective cap. The accessory power outlet is operational when the ignition is turned to ACC/ACCESSORY or ON/RUN.

Notice: **Leaving electrical equipment on for extended periods will drain the battery. Always turn off electrical equipment when not in use and do not plug in equipment that exceeds the maximum amperage rating.**

Certain electrical accessories may not be compatible with the accessory power outlet and could result in blown vehicle or adapter fuses. If you experience a problem, see your dealer/retailer for additional information on accessory power outlets.

Notice: **Adding any electrical equipment to the vehicle can damage it or keep other components from working as they should. The repairs would not be covered by the vehicle warranty. Do not use equipment exceeding maximum amperage rating of 20 amperes. Check with your dealer/retailer before adding electrical equipment.**

When adding electrical equipment, be sure to follow the proper installation instructions included with the equipment.

Notice: **Improper use of the power outlet can cause damage not covered by the warranty. Do not hang any type of accessory or accessory bracket from the plug because the power outlets are designed for accessory power plugs only.**

Ashtray(s) and Cigarette Lighter

The ashtray is located at the lower part of the center instrument panel. To remove the front ashtray for cleaning, open the ashtray fully, press in the retaining tab and pull the bin out.

Notice: **If papers, pins, or other flammable items are put in the ashtray, hot cigarettes or other smoking materials could ignite them and possibly damage the vehicle. Never put flammable items in the ashtray.**

The cigarette lighter is located to the right of the front ashtray. To use it, turn the ignition to ACC/ACCESSORY or ON/RUN, push the cigarette lighter in all the way and let go. When it is ready, it will pop back out.

Notice: **Holding a cigarette lighter in while it is heating will not allow the lighter to back away from the heating element when it is hot. Damage from overheating may occur to the lighter or heating element. Do not hold a cigarette lighter in while it is heating.**

Clock

There is a digital clock located in the center of the instrument panel, above the center air outlets. When the ignition is turned to ACC/ACCESSORY or ON/RUN, the time is displayed in the digital clock. There are three buttons for adjusting the digital clock:

H (Hour): Press once to go forward one hour. To go forward more than one hour, press and hold the button until the correct hour is reached.

M (Minute): Press once to go forward one minute. To go forward more than one minute, press and hold the button until the correct minute is reached.

S (Set): Press to reset the time to the nearest hour.

For example, if the set button is pressed while the time is between 8:00 and 8:29, the display is set to 8:00. If this button is pressed while the time is between 8:30 and 8:59, the display is set to 9:00.

After disconnecting the battery or replacing the fuse, reset the clock.

Climate Controls

Climate Control System

The heating, cooling, and ventilation for the vehicle can be controlled with this system.

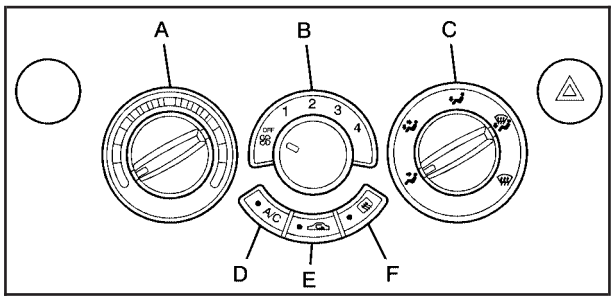

Climate Control System with Heater and Air Conditioning

A. Temperature Control
B. Fan Control
C. Air Delivery Mode Control
D. Air Conditioning (A/C)
E. Recirculation
F. Rear Window Defogger

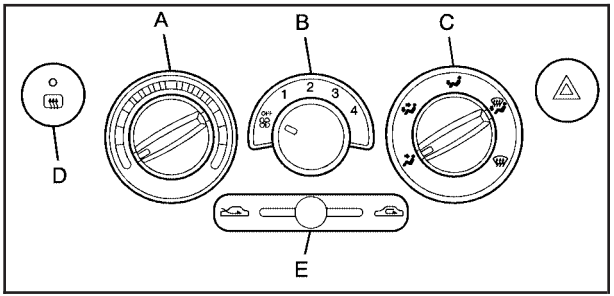

Climate Control System with Heater Only

A. Temperature Control
B. Fan Control
C. Air Delivery Mode Control
D. Rear Window Defogger
E. Outside Air/ Recirculation

OFF: Turns the fan off.

Temperature Control: Turn clockwise or counterclockwise to increase or decrease the temperature of the air flowing from the system.

(Fan Control): Turn clockwise or counterclockwise to increase or decrease the fan speed. The fan must be turned on to run the air conditioning compressor.

Air Delivery Mode Control: Turn clockwise or counterclockwise to change the current airflow mode.

Select from the following air delivery modes:

(Vent): Air is directed to the instrument panel outlets.

(Bi-Level): Air is divided between the instrument panel and floor outlets.

(Floor): Air is directed to the floor outlets, with some air directed to the rear outlets. Keep the area under the front seats clear to allow the flow of air to the rear compartment.

(Defog): This mode clears the windows of fog or moisture. Air is directed to the windshield, floor, and side window outlets. When this mode is selected, the system automatically runs the air-conditioning. To defog the windows faster, turn the temperature control to the warmest setting.

(Defrost): This mode quickly clears the windshield of fog or frost. Air is directed to the windshield and side window outlets. When this mode is selected, the system automatically runs the air-conditioning. To defrost the windows faster, turn the temperature control to the warmest setting.

Do not drive the vehicle until all the windows are clear.

A/C (Air Conditioning): For vehicles with air conditioning, follow these steps to use the system. Turn to the desired speed. The air conditioning does not operate when the fan control knob is in the off position. Press A/C to turn the air conditioning on and off. When A/C is pressed, an indicator light comes on to show that the air conditioning is on.

For quick cool down on hot days, do the following:

1. Open the windows to let hot air escape.
2. Press .
3. Press A/C.
4. Select the coolest temperature.
5. Select the highest speed.

Using these settings together for long periods of time may cause the air inside of the vehicle to become too dry. To prevent this from happening, after the air in the vehicle has cooled, turn the recirculation mode off.

The air conditioning system removes moisture from the air, so a small amount of water might drip under the vehicle while idling or after turning off the engine. This is normal.

(Recirculation): This mode recirculates and helps to quickly cool the air inside the vehicle. It can be used to prevent outside air and odors from entering the vehicle.

For vehicles with a recirculation button, press the button to turn the recirculation mode on. An indicator light comes on to show that the recirculation is on. Press the button again to return to outside air mode.

For vehicles with a lever, move the lever to choose the recirculation mode.

Using the recirculation mode for extended periods may cause the windows to fog. If this happens, select the defrost mode.

(Outside Air): This mode brings outside air into the vehicle.

For vehicles with a recirculation button, press the button until the recirculation mode is turned off. The vehicle then returns to the outside air mode.

For vehicles with a lever, move the lever to choose the outside air mode.

Rear Window and Outside Mirror Defogger

For vehicles with a rear window and outside mirror defogger, they only work when the ignition is turned to ON/RUN.

The rear window defogger uses a warming grid to remove fog or frost from the rear window.

(Rear Window Defogger): Press to turn the rear window and outside mirror defogger on or off. An indicator light comes on to show that the feature is on.

If the vehicle does not have air conditioning, the rear window defogger may turn off about 10 minutes after the button is pressed. If it remains on, it can be turned off by pressing again or by turning off the engine.

If the vehicle has air conditioning, the rear window defogger turns off about 10 minutes after the button is pressed. The defogger can also be turned off by turning the engine off.

Notice: **Do not use anything sharp on the inside of the rear window. If you do, you could cut or damage the warming grid, and the repairs would not be covered by the vehicle warranty. Do not attach a temporary vehicle license, tape, a decal or anything similar to the defogger grid.**

Outlet Adjustment

To open an outlet, press on its cover. Turn the cover to change the direction of the airflow.

Operation Tips

- Clear away any ice, snow or leaves from the air inlets at the base of the windshield that may block the flow of air into the vehicle.
- Use of non-GM approved hood deflectors may adversely affect the performance of the system.
- Keep the path under the front seats clear of objects to help circulate the air inside of the vehicle more effectively.

Passenger Compartment Air Filter

For vehicles with a passenger compartment air filter, it is located behind the glove box. It can be accessed after removing the glove box from its housing.

Pollen and dust are removed by the filter. The air cleaner/filter may need to be changed periodically.

To change the passenger compartment air filter, use the following steps:

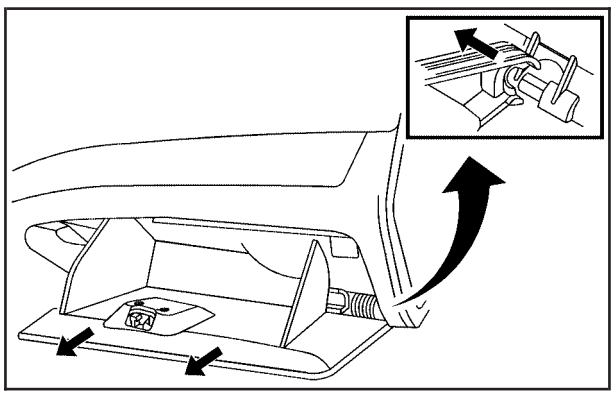

1. Open the glove box halfway down.
2. Grip the glove box by both the upper and lower sides and pull it out of its housing.

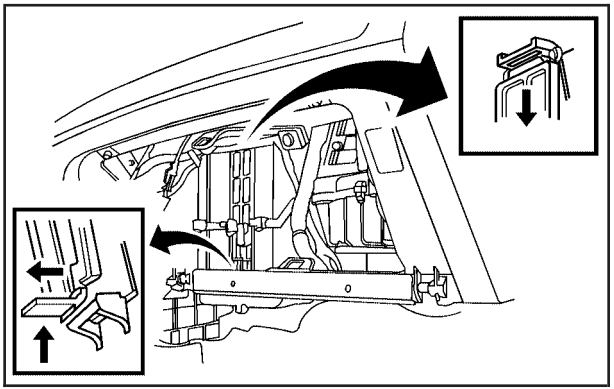

3. Remove the filter cover by pressing in on the bottom retaining tab and pulling the cover down.

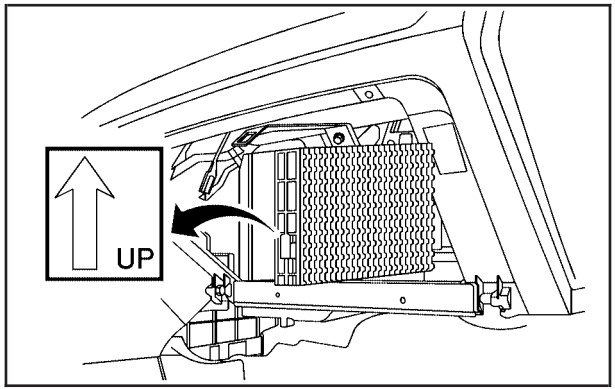

4. Replace the air conditioner filter.
5. View the air flow arrows on the filter before installing to ensure the filter is installed correctly.

Warning Lights, Gages, and Indicators

Warning lights and gages can signal that something is wrong before it becomes serious enough to cause an expensive repair or replacement. Paying attention to the warning lights and gages could prevent injury.

Warning lights come on when there may be or is a problem with one of the vehicle's functions. Some warning lights come on briefly when the engine is started to indicate they are working.

Gages can indicate when there may be or is a problem with one of the vehicle's functions. Often gages and warning lights work together to indicate a problem with the vehicle.

When one of the warning lights comes on and stays on while driving, or when one of the gages shows there may be a problem, check the section that explains what to do. Follow this manual's advice. Waiting to do repairs can be costly and even dangerous.

Instrument Panel Cluster

The instrument panel cluster is designed to show how the vehicle is running. It indicates how fast the vehicle is going, how much fuel is being used, and many other things needed to drive safely and economically.

The vehicle's instrument panel cluster includes indicator warning lights and gages that are explained on the following pages.

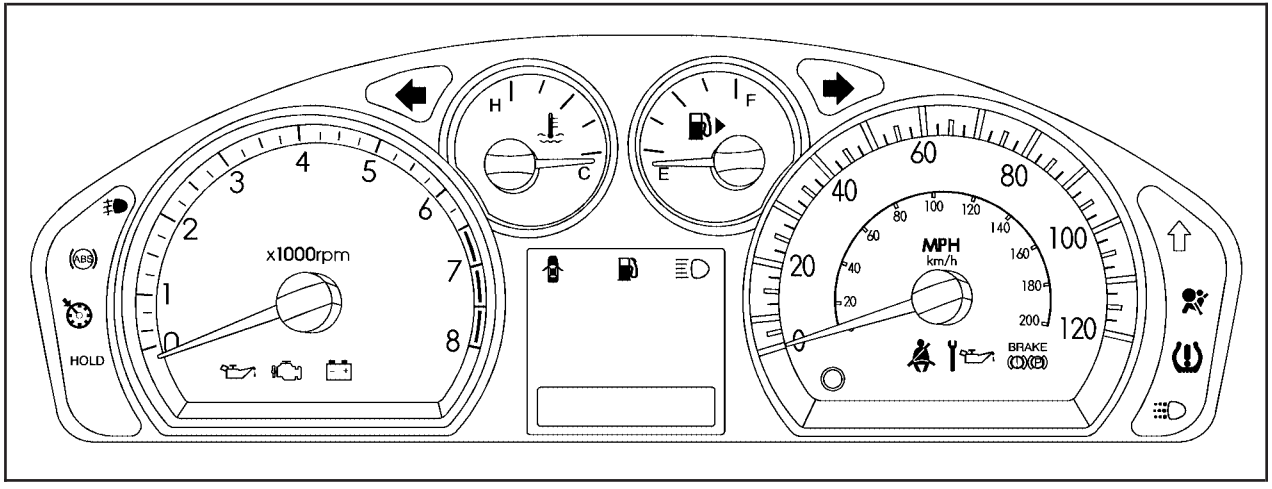

United States Manual Transmission shown, Canada and Automatic Transmission similar

Speedometer and Odometer

The speedometer shows the vehicle's speed in both miles per hour (mph) and kilometers per hour (km/h).

The odometer shows how far the vehicle has been driven, in either miles (used in the United States) or kilometers (used in Canada).

Trip Odometer

The trip odometer can record the number of miles, used in the United States, or kilometers, used in Canada, traveled for up to two trips.

Cycle between the odometer and trip odometers A and B by pressing the reset button located in the lower right area of the speedometer. Press the reset button to tell how many miles or kilometers have been recorded on either Trip A or Trip B since the trip odometer was last set back to zero.

To reset each trip odometer to zero, press and hold the reset button. The reset button resets only the trip odometer that is being displayed. Each trip odometer must be reset individually.

Tachometer

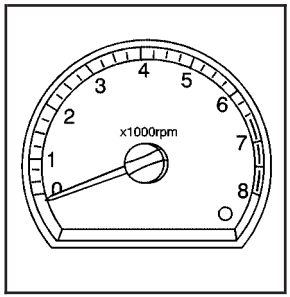

The tachometer displays the engine speed in revolutions per minute (rpm).

Notice: **If the engine is operated above 6,500 rpm, the vehicle could be damaged, and the damages would not be covered by the vehicle warranty. Do not operate the engine with the tachometer above 6,500 rpm.**

Safety Belt Reminders

Safety Belt Reminder Light

When the engine is started this light and chime comes on and stays on for several seconds to remind the people to fasten their safety belts. The light also begins to flash.

This cycle repeats if the driver remains unbuckled and the vehicle is moving.

If the driver safety belt is already buckled, neither the light nor chime comes on.

Airbag Readiness Light

There is an airbag readiness light on the instrument panel cluster, which shows the airbag symbol. The system checks the airbag's electrical system for malfunctions. The light tells if there is an electrical problem. The system check includes the airbag sensor, the airbag modules, the wiring and the crash sensing and diagnostic module. For more information on the airbag system, see *Airbag System on page 1-60*.

This light comes on when the vehicle is started, and it will flash for a few seconds. When the light goes out this indicates the system is functioning properly.

If the airbag readiness light stays on or comes on while driving, the airbag system may not work properly. Have the vehicle serviced right away.

⚠ CAUTION:

If the airbag readiness light stays on after the vehicle is started or comes on while driving, it means the airbag system might not be working properly. The airbags in the vehicle might not inflate in a crash, or they could even inflate without a crash. To help avoid injury, have the vehicle serviced right away.

Passenger Airbag Status Indicator

The vehicle has the passenger sensing system. See *Passenger Sensing System on page 1-67* for important safety information. The vehicle has a passenger airbag status indicator near the clock, located in the center of the instrument panel.

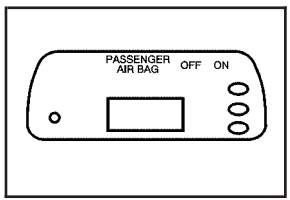

United States

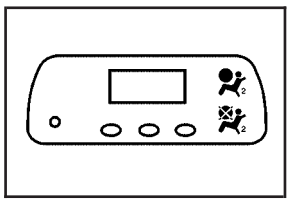

Canada

When the vehicle is started, the passenger airbag status indicator will light ON and OFF or the symbol for on and off, for several seconds as a system check. Then, after several more seconds, the status indicator will light either ON or OFF, or either the on or off symbol, to let you know the status of the right front passenger frontal and seat-mounted side impact airbag (if equipped).

If the word ON or the on symbol is lit on the passenger airbag status indicator, it means that the right front passenger frontal airbag and seat-mounted side impact airbag (if equipped) is enabled (may inflate).

If the word OFF or the off symbol is lit on the passenger airbag status indicator, it means that the passenger sensing system has turned off the right front passenger frontal airbag and seat-mounted side impact airbag (if equipped).

If, after several seconds, both status indicator lights remain on, or if there are no lights at all, there may be a problem with the lights or the passenger sensing system. See your dealer/retailer for service.

⚠ CAUTION:

If the airbag readiness light ever comes on and stays on, it means that something may be wrong with the airbag system. To help avoid injury to yourself or others, have the vehicle serviced right away. See *Airbag Readiness Light on page 3-26* for more information, including important safety information.

Charging System Light

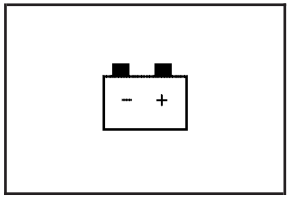

This light will come on briefly when the ignition is turned on, and the engine is not running, as a check to show it is working.

It should go out when the engine is started. If it stays on, or comes on while driving, there may have a problem with the electrical charging system. Have it checked by your dealer/retailer. Driving while this light is on could drain the battery. If a short distance must be driven with the light on, turn off all accessories, such as the radio and air conditioner to help reduce the drain on the battery.

Up-Shift Light

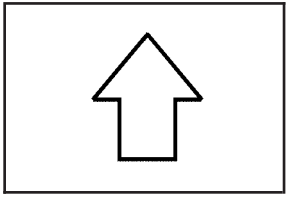

The vehicle may have an up-shift light.

When this light comes on, shift to the next higher gear if weather, road, and traffic conditions allow.

See *Manual Transmission Operation on page 2-26* for more information.

Brake System Warning Light

The vehicle's hydraulic brake system is divided into two parts. If one part is not working, the other part can still work and stop the vehicle. For good braking, both parts need to work.

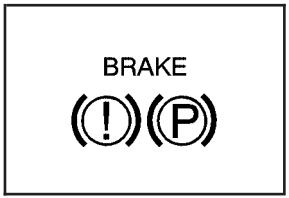

United States

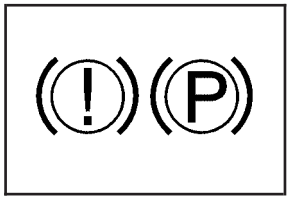

Canada

⚠ CAUTION:

The brake system might not be working properly if the brake system warning light is on. Driving with the brake system warning light on can lead to a crash. If the light is still on after the vehicle has been pulled off the road and carefully stopped, have the vehicle towed for service.

If the warning light comes on, there is a brake problem. Have the brake system inspected right away.

When the ignition is on, the brake system warning light will also come on when the parking brake is set. The light will stay on if the parking brake does not fully release. If it stays on after the parking brake is fully released, it means there is a brake problem.

If the light comes on while driving, carefully pull off the road and stop. The pedal may be harder to push or may go closer to the floor. It may take longer to stop. If the light is still on, have the vehicle towed for service. See *Towing Your Vehicle on page 4-24*.

Antilock Brake System (ABS) Warning Light

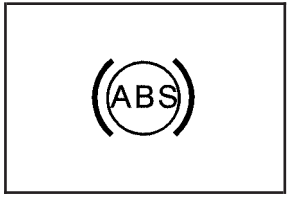

For vehicles with the Antilock Brake System (ABS), this light comes on briefly when the engine is started.

If the light stays on, turn the ignition to LOCK/OFF or if the light comes on, stop as soon as possible and turn the ignition off. Then start the engine again to reset the system. If the light still stays on, or comes on again while driving, the vehicle needs service. See your dealer/retailer. If the regular brake system warning light is not on, the brakes will still work, but the antilock brakes will not work. If the regular brake system warning light is also on, the antilock brakes will not work and there is a problem with the regular brakes. See *Brake System Warning Light on page 3-28*.

The ABS warning light will come on briefly when the ignition is turned to ON/RUN. This is normal. If the light does not come on then, have it fixed so it will be ready to warn if there is a problem.

Hold Mode Light

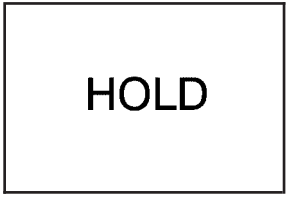

If the vehicle has this feature, this light comes on when the hold mode is active.

If the HOLD mode light flashes, have the vehicle checked. See “Hold Mode” under *Automatic Transmission Operation on page 2-22* for more information.

Engine Coolant Temperature Gage

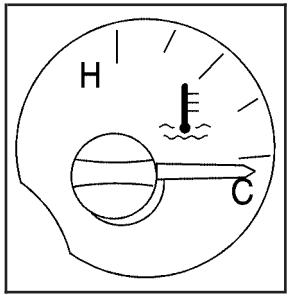

United States

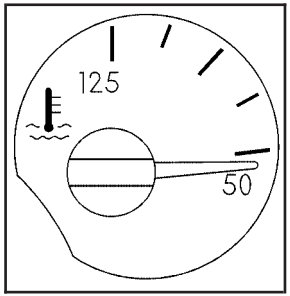

Canada

The vehicle has an engine coolant temperature gage. With the ignition turned to ON/RUN, this gage shows the engine coolant temperature.

If the gage pointer moves into the red area, the engine is too hot. It means that the engine coolant has overheated.

If the vehicle has been operating under normal driving conditions, pull off the road, stop the vehicle and turn off the engine as soon as possible.

See *Engine Overheating on page 5-30*.

Tire Pressure Light

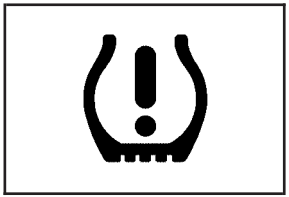

For vehicles with the tire pressure light, it comes on briefly when the engine is started.

It provides information about tire pressures and the Tire Pressure Monitoring System.

When the Light is On Steady

This indicates that one or more of the tires are significantly underinflated.

Stop and check the tires as soon as it is safe to do, and inflate them to the proper pressure. See *Tires on page 5-51* for more information.

When the Light Flashes First and Then is On Steady

This indicates that there may be a problem with the Tire Pressure Monitor System. The light flashes for about a minute and then stays on steady for the remainder of the ignition cycle. This sequence will repeat with every ignition cycle. See *Tire Pressure Monitor System on page 5-59* for more information.

Malfunction Indicator Lamp

Check Engine Light

A computer system called OBD II (On-Board Diagnostics-Second Generation) monitors operation of the fuel, ignition, and emission control systems. It makes sure that emissions are at acceptable levels for the life of the vehicle, helping to produce a cleaner environment.

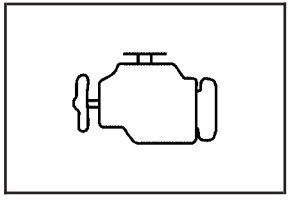

This light comes on when the ignition is on, but the engine is not running, as a check to show it is working. If it does not, have the vehicle serviced by your dealer/retailer.

If the check engine light comes on and stays on, while the engine is running, this indicates that there is an OBD II problem and service is required.

Malfunctions often are indicated by the system before any problem is apparent. Heeding the light can prevent more serious damage to the vehicle. This system assists the service technician in correctly diagnosing any malfunction.

Notice: **If the vehicle is continually driven with this light on, after a while, the emission controls might not work as well, the vehicle's fuel economy might not be as good, and the engine might not run as smoothly. This could lead to costly repairs that might not be covered by the vehicle warranty.**

Notice: **Modifications made to the engine, transmission, exhaust, intake, or fuel system of the vehicle or the replacement of the original tires with other than those of the same Tire Performance Criteria (TPC) can affect the vehicle's emission controls and can cause this light to come on. Modifications to these systems could lead to costly repairs not covered by the vehicle warranty. This could also result in a failure to pass a required Emission Inspection/Maintenance test. See *Accessories and Modifications on page 5-3*.**

This light comes on during a malfunction in one of two ways:

Light Flashing: A misfire condition has been detected. A misfire increases vehicle emissions and could damage the emission control system on the vehicle. Diagnosis and service might be required.

The following can prevent more serious damage to the vehicle:

- Reduce vehicle speed.
- Avoid hard accelerations.
- Avoid steep uphill grades.

If the light continues to flash, when it is safe to do so, stop the vehicle. Find a safe place to park the vehicle. Turn the key off, wait at least 10 seconds, and restart the engine. If the light is still flashing, follow the previous steps and see your dealer/retailer for service as soon as possible.

Light On Steady: An emission control system malfunction has been detected on the vehicle. Diagnosis and service might be required.

An emission system malfunction might be corrected by doing the following:

- Make sure the fuel cap is fully installed. See *Filling the Tank on page 5-8*. The diagnostic system can determine if the fuel cap has been left off or improperly installed. A loose or missing fuel cap allows fuel to evaporate into the atmosphere. A few driving trips with the cap properly installed should turn the light off.
- If the vehicle has been driven through a deep puddle of water, the vehicle's electrical system might be wet. The condition is usually corrected when the electrical system dries out. A few driving trips should turn the light off.
- Make sure to fuel the vehicle with quality fuel. Poor fuel quality causes the engine not to run as efficiently as designed and may cause: stalling after start-up, stalling when the vehicle is changed into gear, misfiring, hesitation on acceleration, or stumbling on acceleration. These conditions might go away once the engine is warmed up.

  If one or more of these conditions occurs, change the fuel brand used. It will require at least one full tank of the proper fuel to turn the light off.

  See *Gasoline Octane on page 5-5*.

If none of the above have made the light turn off, have your dealer/retailer check the vehicle. The dealer/retailer has the proper test equipment and diagnostic tools to fix any mechanical or electrical problems that might have developed.

Emissions Inspection and Maintenance Programs

Some state/provincial and local governments have or might begin programs to inspect the emission control equipment on the vehicle. Failure to pass this inspection could prevent getting a vehicle registration.

Here are some things to know to help the vehicle pass an inspection:

- The vehicle will not pass this inspection if the check engine light is on with the engine running, or if the key is in the ON/RUN and the light is not on.
- The vehicle will not pass this inspection if the OBD II (on-board diagnostic) system determines that critical emission control systems have not been completely diagnosed by the system. The vehicle would be considered not ready for inspection. This can happen if the battery has recently been replaced or if the battery has run down. The diagnostic system is designed to evaluate critical emission control systems during normal driving. This can take several days of routine driving. If this has been done and the vehicle still does not pass the inspection for lack of OBD II system readiness, your dealer/retailer can prepare the vehicle for inspection.

Oil Pressure Light

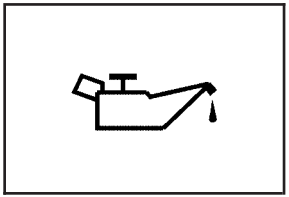

If the vehicle has low engine oil pressure, this light will stay on after the engine is started, or come on while driving.

This indicates that the engine is not receiving enough oil. The engine could be low on oil, or could have some other oil problem. Have it fixed immediately by your dealer/retailer.

The oil light could also come on in three other situations:

- When the ignition is on but the engine is not running, the light will come on as a test to show it is working. The light will go out when the ignition is turned on. If it does not come on with the ignition on, there may be a problem with the fuse or bulb. Have it fixed right away.
- If the vehicle comes to a hard stop, the light may come on for a moment. This is normal.

⚠ CAUTION:

Do not keep driving if the oil pressure is low. The engine can become so hot that it catches fire. Someone could be burned. Check the oil as soon as possible and have the vehicle serviced.

Notice: **Lack of proper engine oil maintenance can damage the engine. The repairs would not be covered by the vehicle warranty. Always follow the maintenance schedule in this manual for changing engine oil.**

Change Engine Oil Light

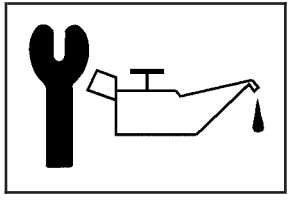

The vehicle may have an engine oil life system that indicates when the oil needs to be changed.

When the change engine oil light comes on, it means that the engine oil needs to be changed.

Once the engine oil has been changed, the engine oil life system must be reset. After reset, the change engine oil light goes out.

See *Engine Oil Life System on page 5-18*, *Scheduled Maintenance on page 6-4* and *Engine Oil on page 5-16* for more information.

Fog Lamp Light

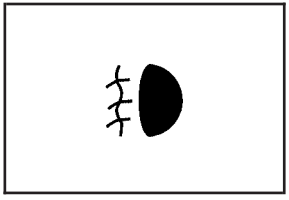

For vehicles with this feature, the fog lamps light will come on when the fog lamps are in use.

The light will go out when the fog lamps are turned off. See *Fog Lamps on page 3-15* for more information.

Cruise Control Light

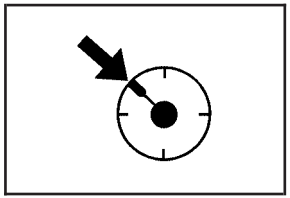

If the vehicle has cruise control, this light comes on whenever the cruise control is set.

The light will go out when the cruise control is turned off. See *Cruise Control on page 3-10* for more information.

Highbeam On Light

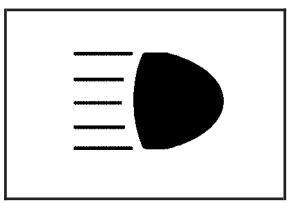

This light comes on when the high-beam headlamps are in use.

See *Headlamp High/Low-Beam Changer on page 3-8* for more information.

Daytime Running Lamps (DRL) Indicator Light

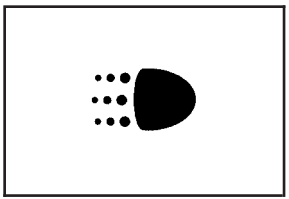

This light turns on whenever the Daytime Running Lamps are on.

See *Daytime Running Lamps (DRL) on page 3-14* for more information.

Door Ajar Light

The door ajar light comes on and stays on until all doors, trunk and liftgate are closed and completely latched.

If the key is in the ignition while the driver's door is open, a warning chime also sounds.

Fuel Gage

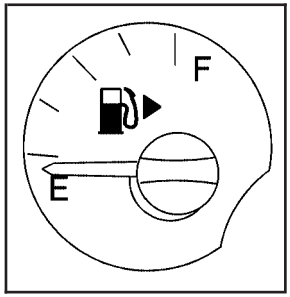

United States

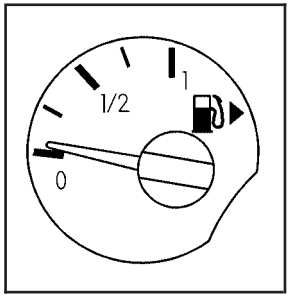

Canada

The fuel gage indicates about how much fuel is left when the ignition is turned to ON/RUN.

When the tank nears empty, the low fuel warning light will come on. There is still a little fuel left, but the vehicle's fuel tank should be filled soon. See *Low Fuel Warning Light on page 3-38* for more information.

An arrow on the fuel gage indicates the side of the vehicle the fuel door is located.

Here are four things that some owners ask about. None of these show a problem with the fuel gage:

- At the service station, the gas pump shuts off before the gage reads full.
- It takes a little more or less fuel to fill up than the gage indicated. For example, the gage may have indicated the tank was half full, but it actually took a little more or less than half the tank's capacity to fill the tank.
- The indicator moves a little when turning a corner or speeding up.
- The gage goes back to empty when the ignition is turned off.

Low Fuel Warning Light

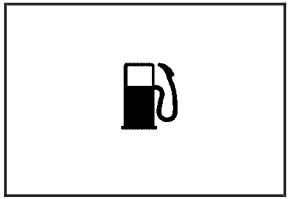

This light comes on when the vehicle is low on fuel.

The low fuel warning light comes on when there is approximately 1.7 gallons (6.0 liters) of fuel remaining in the tank.

To turn the light off, add fuel to the fuel tank. See *Filling the Tank on page 5-8*.

Trip Computer

The vehicle may have trip computer, it provides the driver with driving information such as the driving distance for the remaining fuel, outside temperature, average fuel economy, and driving time.

The trip computer button is located in the lower right area of the tachometer. Each time you press it, the display cycles through the available choices.

Range for Remaining Fuel

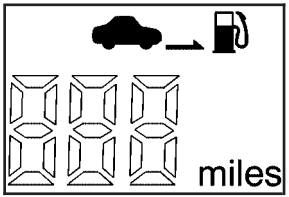

This display shows the approximate number of remaining miles the vehicle can be driven without refueling.

The minimum display for the range is 45 miles (72 km). Once the minimum display range is under 45 miles (72 km), you will see dashes on the display.

The fuel range estimate is based on an average of the vehicle's fuel economy over recent driving history and the amount of fuel remaining in the fuel tank. This estimate will change if driving conditions change. For example, if driving in traffic and making frequent stops, this display may read one number, but if the vehicle is driven on a freeway, the number may change even though the same amount of fuel is in the fuel tank. This is because different driving conditions produce different fuel economies. Generally, freeway driving produces better fuel economy than city driving.

Outside Temperature

This display shows the approximate outside temperature.

Average Fuel Economy

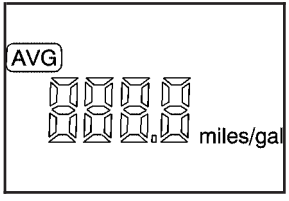

This display shows the approximate average miles per gallon (mpg).

This number is calculated based on the number of mpg recorded since the last time this menu item was reset. To reset the average fuel economy press and hold the trip computer button.

Driving Time

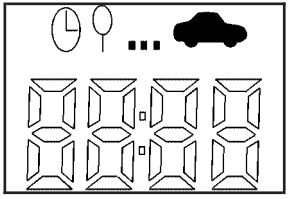

This display can be used as a timer.

The display will show the amount of time that has passed since the timer was last reset. The timer is only running while the vehicle is moving. To reset the driving time press and hold the trip computer button.

Audio System(s)

Determine which radio the vehicle has and read the following pages to become familiar with its features.

⚠ CAUTION:

Taking your eyes off the road for extended periods could cause a crash resulting in injury or death to you or others. Do not give extended attention to entertainment tasks while driving.

This system provides access to many audio and non audio listings.

To minimize taking your eyes off the road while driving, do the following while the vehicle is parked:

- Become familiar with the operation and controls of the audio system.
- Set up the tone, speaker adjustments, and preset radio stations.

For more information, see *Defensive Driving on page 4-2*.

Notice: **Contact your dealer/retailer before adding any equipment.**

Adding audio or communication equipment could interfere with the operation of the vehicle's engine, radio, or other systems, and could damage them. Follow federal rules covering mobile radio and telephone equipment.

AM-FM Radio

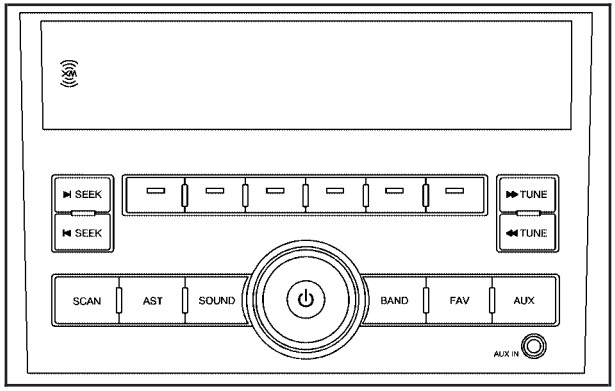

Playing the Radio

⏻ **(Power/Volume):** Press and release to turn the system on. Press and hold this knob for more than two seconds to turn the system off.

Turn to increase or decrease the volume.

When the system is on, press and release ⏻ to mute the system. Press and release ⏻ again to turn the sound back on.

Finding a Station

BAND: Press to choose FM, AM, or XM™ (if equipped). The display will show the selection.

▶| **SEEK:** Press to seek the next radio station with a strong signal in the selected band.

|◀ **SEEK:** Press to seek the previous radio station with a strong signal in the selected band.

▶▶ **TUNE:** Press to go to the next station manually.

◀◀ **TUNE:** Press to go to the previous station manually.

SCAN: Press to scan radio stations. The radio goes to a station, plays for a few seconds, then goes to the next station. Press this button again to stop scanning.

The radio only scans stations with a strong signal in the selected band.

AST (Automatic Store): Twelve preset stations with the strongest reception in the area can be automatically stored. The radio will only scan stations with a strong signal that are in the selected AM or FM band. If the Automatic Store function is started in the FM band, only FM stations are stored in preset pages A1 and A2.

If the Automatic Store function is started in the AM band, only AM stations are stored in A1 and A2. A combination of AM, FM and XM (if equipped) stations can be stored manually into the other four favorite pages.

To use Automatic Store:

1. Press and hold AST to use Auto Store mode.
2. Press the pushbutton below the ON tab on the radio display.
3. Automatic Store searches for radio stations with a strong signal and automatically set presets A1 and A2 with new stations.
4. After all stations are set, press the pushbutton below the arrow tab on the radio display to return to the main radio screen

To reset the automatically stored radio stations, press and hold AST. Then press the pushbutton below the RESE tab on the radio display. If no stations are stored on preset pages A1 and A2, the RESE option does not appear in the radio display. When the Automatic Store function is used, any stations that were previously set will be deleted and replaced with new stations.

Storing a Radio Station

Drivers are encouraged to set up radio station favorites while the vehicle is in P (Park). Tune to favorite stations using the pushbuttons, favorites button, and steering wheel controls. See *Defensive Driving on page 4-2*.

A maximum of 36 stations can be programmed as favorites using the six pushbuttons positioned below the radio station frequency labels and by using the radio favorites page button (FAV button). Press the FAV button to go through up to six pages of favorites, each having six favorite stations available per page. If Automatic Store is used, then four pages of favorites are available. Each page of favorites can contain any combination of AM, FM, or XM™ (if equipped) stations. To store a station as a favorite:

1. Tune in the desired station.
2. Press and release the FAV button to display the page where the station is to be stored.
3. Press and hold one of the six numbered pushbuttons until a beep sounds. When the pushbutton is pressed and released, the station that was set will return.
4. Repeat the Steps 1 through 3 for each radio station to be stored as a favorite.

To setup the number of favorites pages:

1. Press and hold FAV until the radio setup menu displays.
2. Select the desired number of favorites pages by pressing the pushbutton located below the displayed page numbers.
3. Press FAV to return to the original main radio screen showing the radio station frequency tabs and to begin the process of programming favorites for the chosen amount of numbered pages.

Setting the Tone (Bass/Mid/Treble)

SOUND (Bass/Mid/Treble): Press to adjust the bass, midrange, or treble.

Adjusting the Bass

To adjust the bass:

1. Press SOUND.
2. Press the pushbutton below the Bass tab on the display.
3. Turn ⏻ to adjust the setting.
4. The settings are saved after five seconds.

Adjusting the Midrange

To adjust the midrange:

1. Press SOUND.
2. Press the pushbutton below the Mid tab on the display.
3. Turn ⏻ to adjust the setting.
4. The settings are saved after five seconds.

Adjusting the Treble

To adjust the treble:

1. Press SOUND.
2. Press the pushbutton below the Treb tab on the display.
3. Turn ⏻ to adjust the setting.
4. The settings are saved after five seconds.

Adjusting the Speakers (Balance/Fade)

SOUND (Balance/Fade): Press to adjust the balance or fade.

Adjusting the Balance

To adjust the balance:

1. Press SOUND.
2. Press the pushbutton below the Bal tab on the display.
3. Turn ⏻ to adjust the setting.
4. The settings are saved after five seconds.

Adjusting the Fade

To adjust the fade:

1. Press SOUND.
2. Press the pushbutton below the Fad tab on the display.
3. Turn ⏻ to adjust the setting.
4. The settings are saved after five seconds.

Setting the EQ

SOUND (Equalization): Press to select an equalization setting.

Setting the EQ

To set the EQ:

1. Press SOUND.
2. Press the pushbutton below the P.EQ tab on the display. The Pop, Rock, Ctry, Voice, Jazz, Clas tabs appear on the display.
3. Press the pushbutton below the desired selection to set the EQ. Pressing the same pushbutton again cancels the EQ setting.

XM Satellite Radio Service

XM is a satellite radio service that is based in the 48 contiguous United States and 10 Canadian provinces. XM Satellite Radio has a wide variety of programming and commercial-free music, coast-to-coast, and in digital-quality sound. During your trial or when you subscribe, you will get unlimited access to XM Radio Online for when you are not in the vehicle. A service fee is required to receive the XM service. For more information, contact XM at xmradio.com or call 1-800-929-2100 in the U.S. and xmradio.ca or call 1-877-438-9677 in Canada.

Radio Messages for XM Only

See *XM Radio Messages on page 3-56* later in this section for further detail.

Using the Auxiliary Input Jack

The radio system has an auxiliary input jack located on the lower right side of the faceplate. This is not an audio output; do not plug the headphone set into the front auxiliary input jack. An external audio device such as an iPod®, laptop computer, MP3 player, CD changer, etc. can be connected to the auxiliary input jack for use as another audio source.

Drivers are encouraged to set up any auxiliary device while the vehicle is in P (Park). See *Defensive Driving on page 4-2* for more information on driver distraction.

To use a portable audio player, connect a 3.5 mm (1/8 inch) cable to the radio's front auxiliary input jack. When a device is connected, press the radio CD/AUX button to begin playing audio from the device over the vehicle speakers.

⏻ **(Power/Volume):** Turn to adjust the volume. Additional volume adjustments may have to be made from the portable device if the volume is too quiet or too loud.

AUX (Auxiliary): Press to listen to the radio while a portable audio device is playing. Press again and the system begins playing audio from the connected portable audio player. If a portable audio player is not connected, No Aux Input Device Found may display.

Radio with CD

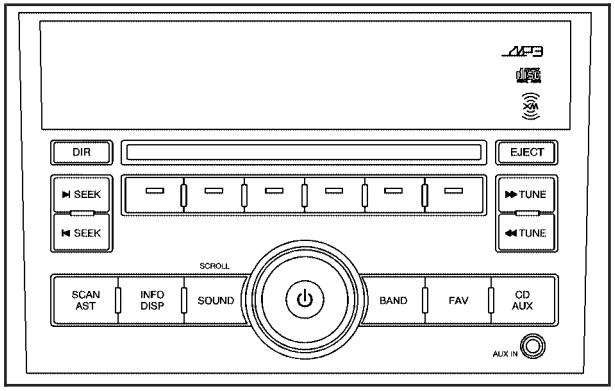

Playing the Radio

⏻ **(Power/Volume):** Press and release to turn the system on. Press and hold this knob for more than two seconds to turn the system off.

Turn to increase or decrease the volume.

When the system is on, press and release ⏻ to mute the system. Press and release ⏻ again to turn the sound back on.

Finding a Station

BAND: Press to choose FM, AM, or XM™ (if equipped). The display will show the selection.

▶| **SEEK:** Press to seek the next radio station with a strong signal in the selected band.

|◀ **SEEK:** Press to seek the previous radio station with a strong signal in the selected band.

▶▶ **TUNE:** Press to go to the next station manually.

◀◀ **TUNE:** Press to go to the previous station manually.

SCAN/AST: Press to scan radio stations. The radio goes to a station, plays for a few seconds, then goes to the next station. The radio only scans stations with a strong signal in the selected band. Press SCAN/AST again to stop scanning.

Press and hold SCAN/AST to use Auto Store.
The radio only scans stations with a strong signal in the selected band.

AST (Automatic Store): Twelve preset stations with the strongest reception in the area can be automatically stored. The radio will only scan stations with a strong signal that are in the selected AM or FM band.

If the Automatic Store function is started in the FM band, only FM stations are stored in preset pages A1 and A2. If the Automatic Store function is started in the AM band, only AM stations are stored in A1 and A2. A combination of AM, FM and XM (if equipped) stations can be stored manually into the other four favorite pages.

To use Automatic Store:

1. Press and hold SCAN/AST to use Auto Store mode.
2. Press the pushbutton below the ON tab on the radio display.
3. Automatic Store searches for radio stations with a strong signal and automatically set presets A1 and A2 with new stations.
4. After all stations are set, press the pushbutton below the arrow tab on the radio display to return to the main radio screen

To reset the automatically stored radio stations, press and hold SCAN/AST. Then press the pushbutton below the RESE tab on the radio display. If no stations are stored on preset pages A1 and A2, the RESE option does not appear in the radio display. When the Automatic Store function is used, any stations that were previously set will be deleted and replaced with new stations.

Storing a Radio Station

Drivers are encouraged to set up radio station favorites while the vehicle is in P (Park). Tune to favorite stations using the pushbuttons, favorites button, and steering wheel controls. See *Defensive Driving on page 4-2*.

A maximum of 36 stations can be programmed as favorites using the six pushbuttons positioned below the radio station frequency labels and by using the radio favorites page button (FAV button). Press the FAV button to go through up to six pages of favorites, each having six favorite stations available per page. If Automatic Store is used, then four pages of favorites are available. Each page of favorites can contain any combination of AM, FM, or XM™ (if equipped) stations. To store a station as a favorite:

1. Tune in the desired station.
2. Press and release the FAV button to display the page where the station is to be stored.
3. Press and hold one of the six numbered pushbuttons until a beep sounds. When the pushbutton is pressed and released, the station that was set will return.
4. Repeat the Steps 1 through 3 for each radio station to be stored as a favorite.

To setup the number of favorites pages:

1. Press and hold FAV until the radio setup menu displays.
2. Select the desired number of favorites pages by pressing the pushbutton located below the displayed page numbers.
3. Press FAV to return to the original main radio screen showing the radio station frequency tabs and to begin the process of programming favorites for the chosen amount of numbered pages.

Setting the Tone (Bass/Mid/Treble)

SOUND (Bass/Mid/Treble): Press to adjust the bass, midrange, or treble.

Adjusting the Bass

To adjust the bass:

1. Press SOUND.
2. Press the pushbutton below the Bass tab on the display.
3. Turn ⏻ to adjust the setting.
4. The settings are saved after five seconds.

Adjusting the Midrange

To adjust the midrange:

1. Press SOUND.
2. Press the pushbutton below the Mid tab on the display.
3. Turn ⏻ to adjust the setting.
4. The settings are saved after five seconds.

Adjusting the Treble

To adjust the treble:

1. Press SOUND.
2. Press the pushbutton below the Treb tab on the display.
3. Turn ⏻ to adjust the setting.
4. The settings are saved after five seconds.

Adjusting the Speakers (Balance/Fade)

SOUND (Balance/Fade): Press to adjust the balance or fade.

Adjusting the Balance

To adjust the balance:

1. Press SOUND.
2. Press the pushbutton below the Bal tab on the display.
3. Turn ⏻ to adjust the setting.
4. The settings are saved after five seconds.

Adjusting the Fade

To adjust the fade:

1. Press SOUND.
2. Press the pushbutton below the Fad tab on the display.
3. Turn ⏻ to adjust the setting.
4. The settings are saved after five seconds.

Setting the EQ

SOUND (Equalization): Press to select an equalization setting.

Setting the EQ

To set the EQ:

1. Press SOUND.
2. Press the pushbutton below the P.EQ tab on the display. The Pop, Rock, Ctry, Voice, Jazz, Clas tabs appear on the display.
3. Press the pushbutton below the desired selection to set the EQ. Pressing the same pushbutton again cancels the EQ setting.

XM Satellite Radio Service

XM is a satellite radio service that is based in the 48 contiguous United States and 10 Canadian provinces. XM Satellite Radio has a wide variety of programming and commercial-free music, coast-to-coast, and in digital-quality sound. During your trial or when you subscribe, you will get unlimited access to XM Radio Online for when you are not in the vehicle. A service fee is required to receive the XM service. For more information, contact XM at xmradio.com or call 1-800-929-2100 in the U.S. and xmradio.ca or call 1-877-438-9677 in Canada.

Radio Messages for XM Only

See *XM Radio Messages on page 3-56* later in this section for further detail.

Playing a CD

Insert a CD partway into the slot, label side up. The player pulls it in and the CD begins playing. A CD can be loaded while the ignition is in the OFF position.

When the CD is inserted, CDP appears on the display. As the CD is loading, LOADING appears on the display. As each new track starts to play, the track number displays.

If the ignition or radio is turned off with a CD in the player, it will stay in the player. When a CD is in the player and the ignition is in the ON/RUN position, the radio must be turned on before the CD will start playing. When the ignition and radio are turned on, the CD will start playing where it stopped, if it was the last selected audio source.

The CD player can play the smaller 3 inch (8 cm) single CDs with an adapter ring. Full-size CDs and the smaller CDs are loaded in the same manner.

⏩ TUNE (Next Track): Press ⏩ TUNE to go to the next track. The track number will appear on the display. The player will continue moving forward through the CD with each press of ⏩ TUNE.

⏪ TUNE (Previous Track): Press to go to the start of the current track. The track number will appear on the display. The player will continue moving backward through the CD with each press of ⏪ TUNE.

BAND: Press to listen to the radio while a CD is playing. The CD remains inside the radio for future listening.

CD/AUX: Press to play a CD when listening to the radio. CDP appears on the display when the CD player has been selected. The CD symbol will appear on the display when a CD is loaded.

Press CD/AUX while a CD is playing to pause the CD. PAUSE flashes on the display. Press CD/AUX again to start playing the CD.

Press CD/AUX to play a CD when listening to the audio contents from other device (AUX mode). CDP appears on the display when the CD player has been selected. The CD symbol will appear on the display when a CD is loaded.

EJECT: Press to eject a CD. The CD can be ejected when the ignition or the radio is turned off.

RPT (Repeat): Press the pushbutton under the RPT tab on the display to repeat the current track, RPT appears on the display. Press the pushbutton again to stop repeat.

RDM (Random): Press the pushbutton below the RDM tab on the display to play tracks in random, rather than sequential order, RDM appears on the display. Press the pushbutton again to stop random play.

INT (Scan): Press the pushbutton below the INT tab on the display to listen to the first few seconds of each track on the CD, INTRO appears on the display. Press the pushbutton again to stop scanning and the current track begins to play.

Playing an MP3/WMA CD-R Disc

The radio has the MP3/WMA CD-R disc capability. For more information, see *Using an MP3 on page 3-54* later in this section.

CD Messages

CHECK CD: If this message displays and/or the CD comes out, it could be for one of the following reasons:

- It is very hot. When the temperature returns to normal, the CD should play.
- The road is very rough. When the road becomes smoother, the CD should play.
- The CD is dirty, scratched, wet, or upside down.
- The air is very humid. If so, wait about an hour and try again.
- The format of the CD might not be compatible. See *Using an MP3 on page 3-54* later in this section.
- There could have been a problem while burning the CD.
- The label could be caught in the CD player.

If the CD is not playing correctly, for any other reason, try a known good CD.

If any error occurs repeatedly or if an error cannot be corrected, contact your dealer/retailer. If the radio displays an error message, write it down and provide it to your dealer/retailer when reporting the problem.

Care of CDs

If playing a CD-R, the sound quality can be reduced due to CD-R quality, the method of recording, the quality of the music that has been recorded, and the way the CD-R or CD-RW has been handled. Handle them carefully. Store CD-R(s) in their original cases or other protective cases and away from direct sunlight and dust. The CD player scans the bottom surface of the disc. If the surface of a CD is damaged, such as cracked, broken, or scratched, the CD does not play properly or not at all. Do not touch the bottom side of a CD while handling it; this could damage the surface. Pick up CDs by grasping the outer edges or the edge of the hole and the outer edge.

If the surface of a CD is soiled, clean it with a soft, lint free cloth or dampen a clean, soft cloth in a mild, neutral detergent solution mixed with water. Make sure the wiping process starts from the center to the edge.

Care of the CD Player

Do not add labels to a CD, it could get caught in the CD player. Use a marking pen to write on the top of the CD if a description is needed.

Do not use CD lens cleaners, they could damage the CD player.

Notice: **If a label is added to a CD, or more than one CD is inserted into the slot at a time, or an attempt is made to play scratched or damaged CDs, the CD player could be damaged. While using the CD player, use only CDs in good condition without any label, load one CD at a time, and keep the CD player and the loading slot free of foreign materials, liquids, and debris.**

If an error displays, see “CD Messages” earlier in this section.

Using the Auxiliary Input Jack

The radio system has an auxiliary input jack located on the lower right side of the faceplate. This is not an audio output; do not plug the headphone set into the front auxiliary input jack. An external audio device such as an iPod, laptop computer, MP3 player, CD changer, etc. can be connected to the auxiliary input jack for use as another audio source.

Drivers are encouraged to set up any auxiliary device while the vehicle is in P (Park). See *Defensive Driving on page 4-2* for more information on driver distraction.

To use a portable audio player, connect a 3.5 mm (1/8 inch) cable to the radio’s front auxiliary input jack. When a device is connected, press the radio CD/AUX button to begin playing audio from the device over the vehicle speakers.

⏻ **(Power/Volume):** Turn to adjust the volume. Additional volume adjustments may have to be made from the portable device if the volume is too quiet or too loud.

CD/AUX (Auxiliary): Press to play a CD while a portable audio device is playing. Press CD/AUX a second time for the system to begin playing audio from the connected portable audio player. The portable audio device continues playing until it is turned off.

Using an MP3

MP3/WMA CD-R Disc

MP3 Format

If you burn your own MP3/WMA disc on a personal computer:

- Make sure the MP3/WMA files are recorded on a CD-R disc.
- Do not mix standard audio and MP3/WMA files on one disc.
- Make sure each MP3/WMA file has a .m3u or .wma extension, other file extensions might not work.
- Files can be recorded with a variety of fixed or variable bit rates. Song title, artist name, and album are available for display by the radio when recorded using ID3 tags version 1 and 2.
- Make sure to finalize the disc when burning an MP3/WMA disc, using multiple sessions. It is usually better to burn the disc all at once.

The player is able to read and play a maximum of 50 folders, five sessions, and 999 files. Long file names and folder names can use more disc memory space than necessary. To conserve space on the disc, minimize the length of the file and folder names.

An MP3/WMA CD that was recorded using no file folders can also be played. The system can support up to eight folders in depth, though, keep the depth of the folders to a minimum in order to keep down the complexity and confusion in trying to locate a particular folder during playback. If a CD contains more than the maximum of 50 folders, five sessions, and 999 files, the player lets you access and navigate up to the maximum, but all items over the maximum are ignored.

Root Directory

The root directory is treated as a folder. If the root directory has compressed audio files, the directory is displayed as ROOT. All files contained directly under the root directory are accessed prior to any other directory.

Empty Directory or Folder

If a root directory or a folder exists somewhere in the file structure that contains only folders/subfolders and no compressed files directly beneath them, the player advances to the next folder in the file structure that contains compressed audio files. The empty folder does not display.

No Folder

When a CD contains only compressed files, the files are located under the root folder. The next and previous folder function does not function on a CD that was recorded without folders or playlists. When displaying the name of the folder the radio displays ROOT.

When a CD contains only compressed audio files, but no folders, all files are located under the root folder. When the radio displays the name of the folder, the radio displays ROOT.

Order of Play

The player play will begin from the first track under the root directory. When all tracks from the root directory have been played, play will continue from files according to their numerical listing. After playing the last track from the last folder, the player will begin playing again at the first track of the first folder or root directory.

File System and Naming

The song name in the ID3 tag is displayed. If the song name is not present in the ID3 tag, then the radio displays the file name without the extension (such as MP3/WMA) instead.

Track names longer than 32 characters or four pages are shortened. Parts of words on the last page of text and the extension of the filename does not display.

Playing an MP3/WMA

With the ignition in the ON/RUN position, insert a CD partway into the slot, label side up. The player pulls the disc in. LOADING, and then MP3 or WMA appears on the display. The CD should begin playing. As each new track starts to play, the track number, and the song name will appear on the display. If the ignition or radio is turned off with a CD in the player, it will stay in the player. When a CD is in the player and the ignition is turned on, the radio must be turned on before the CD will start playback. When the ignition and radio are turned on, the CD will start playing where it stopped, if it was the last selected audio source.

The CD player can play the smaller 3 inch (8 cm) single CDs with an adapter ring. Full-size CDs and the smaller CDs are loaded in the same manner.

Sound quality may be reduced due to CD-R quality, the method of recording, the quality of the music that has been recorded, and the way the CD-R has been handled.

DIR (Directory): Press to repeat the tracks in the current directory. DIR displays.

Press DIR again to repeat the tracks in all of the directories. ALL displays.

Press DIR again to turn off repeat play.

▶| SEEK |◀ (Next/Previous Folder) (in MP3/WMA Mode): Press to change the folder. If CD-R does not have any folders, “ROOT” flashes on the display for a short time.

▶▶ TUNE (Next Track): Press the up TUNE arrow to go to the next track. The track number displays. The player continues moving forward through the CD each time TUNE is pressed.

◀◀ TUNE (Previous Track): Press the down TUNE arrow to go to the start of the current track. The track number displays. The player continues moving backward through the CD each time TUNE is pressed.

INFO/DISP (Information/Display): Press to display additional text information related to the current MP3/WMA song. A choice of additional information such as: Song Title, Album Title, and Artist. Bit rate might also display.

When information is not available, No Info displays.

Press this button for longer than two seconds to change display mode.

SCROLL (MP3/WMA Mode Only): Press the SOUND button for longer than two seconds. The song title or other available information of a song scrolls on/off. The offset is scroll on. The scroll mode can be changed only when the SOUND button is pressed for longer than two seconds.

XM Radio Messages

UPDATING: The encryption code in the receiver is being updated, and no action is required. This process should take no longer than 30 seconds.

NO SIGNAL: The system is functioning correctly, but the vehicle is in a location that is blocking the XM™ signal. When the vehicle is moved into an open area, the signal should return.

LOADING: The audio system is acquiring and processing audio and text data. No action is needed. This message should disappear shortly.

OFF AIR: This channel is not currently in service. Tune in to another channel.

CH UNAVAILABLE: This previously assigned channel is no longer assigned. Tune to another station. If this station was one of the presets, choose another station for that preset button.

RADIO ID: If tuned to channel 0, this message alternates with the XM™ Radio 8 digit radio ID label. This label is needed to activate the service.

CHECK XM TUNER: If this message does not clear within a short period of time, the receiver could have a fault. Consult with your dealer/retailer.

Audio Steering Wheel Controls

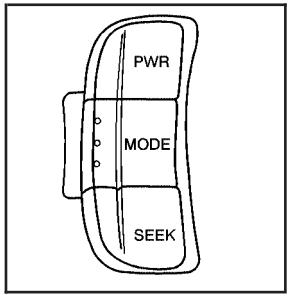

Front View of the Steering Wheel Controls

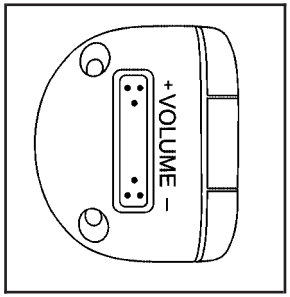

Side View of the Volume Control

If the vehicle has this feature, some audio controls can be adjusted at the steering wheel.

PWR (Power): Press and release to turn the system on and off.

When the system is on, press and release for a short time to mute the system. Press and release again to turn the sound back on.

+ VOLUME – : Press the toggle bar located below the + VOLUME – to adjust the volume. Press the left side of the toggle bar, below the + (plus) sign to increase the volume. Press the right side of the toggle bar, below the – (minus) sign to decrease the volume.

SEEK: Press and release to go to the next preset station.

Press and hold for a long time to go to the next AM, FM, or XM station. The radio seeks stations only with a strong signal that are in the selected band.

When playing a CD, press and release to go to the next track. Press and hold to fast forward through the tracks.

MODE: Press and release this button multiple times to cycle through the audio playback options that are available on the vehicle. Options may include FM, AM, XM, CD, and AUX.

Radio Reception

Frequency interference and static can occur during normal radio reception if items such as cell phone chargers, vehicle convenience accessories, and external electronic devices are plugged into the accessory power outlet. If there is interference or static, unplug the item from the accessory power outlet.

AM

The range for most AM stations is greater than for FM, especially at night. The longer range can cause station frequencies to interfere with each other. For better radio reception, most AM radio stations boost the power levels during the day, and then reduce these levels during the night. Static can also occur when things like storms and power lines interfere with radio reception. When this happens, try reducing the treble on the radio.

FM Stereo

FM signals only reach about 10 to 40 miles (16 to 65 km). Although the radio has a built-in electronic circuit that automatically works to reduce interference, some static can occur, especially around tall buildings or hills, causing the sound to fade in and out.

XM™ Satellite Radio Service

XM Satellite Radio Service gives digital radio reception from coast-to-coast in the 48 contiguous United States, and in Canada. Just as with FM, tall buildings or hills can interfere with satellite radio signals, causing the sound to fade in and out. In addition, traveling or standing under heavy foliage, bridges, garages, or tunnels may cause loss of the XM signal for a period of time.

Cellular Phone Usage

Cellular phone usage may cause interference with the vehicle's radio. This interference may occur when making or receiving phone calls, charging the phone's battery, or simply having the phone on. This interference causes an increased level of static while listening to the radio. If static is received while listening to the radio, unplug the cellular phone and turn it off.

Fixed Mast Antenna (Hatchback)

Vehicles without OnStar® have a fixed mast antenna that can withstand most car washes without being damaged. If the mast should ever become slightly bent, straighten it out by hand. If the mast is badly bent, replace it.

Check occasionally to make sure the mast is still tightened to the antenna base located on the roof of the vehicle. If tightening is required, tighten by hand.

Backglass Antenna (Sedan)

Vehicles without OnStar® have the AM-FM antenna integrated with the rear window defogger, located in the rear window. Make sure that the inside surface of the rear window is not scratched and that the lines on the glass are not damaged. If the inside surface is damaged, it could interfere with radio reception. Also, for proper radio reception, the antenna connector at the top-center of the rear window needs to be properly attached to the post on the glass.

Notice: **Using a razor blade or sharp object to clear the inside rear window may damage the rear window antenna and/or the rear window defogger. Repairs would not be covered by your warranty. Do not clear the inside rear window with sharp objects.**

Notice: **Do not apply aftermarket glass tinting with metallic film. The metallic film in some tinting materials will interfere with or distort the incoming radio reception. Any damage caused to your backglass antenna due to metallic tinting materials will not be covered by your warranty.**

Because this antenna is built into the rear window, there is a reduced risk of damage caused by car washes and vandals.

If static is heard on the radio, when the rear window defogger is turned on, it could mean that a defogger grid line has been damaged. If this is true, the grid line must be repaired.

If adding a cellular telephone to the vehicle, and the antenna needs to be attached to the glass, make sure that the grid lines for the AM-FM antenna are not damaged. There is enough space between the grid lines to attach a cellular telephone antenna without interfering with radio reception.

Multi-Band Antenna

Vehicles with OnStar® have a multi-band antenna that is located on the roof of the vehicle. The antenna is used for the AM/FM radio, OnStar® and the XM™ Satellite Radio Service System. Keep the antenna clear of obstructions for clear reception. If the vehicle has a sunroof, the performance of the AM/FM radio, OnStar®, and the XM system may be affected if the sunroof is open.

✍ NOTES

Section 4 Driving Your Vehicle

Your Driving, the Road, and the Vehicle 4-2
Driving for Better Fuel Economy 4-2
Defensive Driving 4-2
Drunk Driving 4-3
Control of a Vehicle 4-3
Braking 4-4
Antilock Brake System (ABS) 4-5
Braking in Emergencies 4-6
Steering 4-6
Off-Road Recovery 4-8
Passing 4-8
Loss of Control 4-8
Driving at Night 4-10
Driving in Rain and on Wet Roads 4-10
Before Leaving on a Long Trip 4-11
Highway Hypnosis 4-12
Hill and Mountain Roads 4-12
Winter Driving 4-13
If Your Vehicle is Stuck in Sand, Mud, Ice, or Snow 4-15
Rocking Your Vehicle to Get It Out 4-16
Loading the Vehicle 4-16
Towing 4-24
Towing Your Vehicle 4-24
Recreational Vehicle Towing 4-24
Towing a Trailer 4-27

Your Driving, the Road, and the Vehicle

Driving for Better Fuel Economy

Driving habits can affect fuel mileage. Here are some driving tips to get the best fuel economy possible.

- Avoid fast starts and accelerate smoothly.
- Brake gradually and avoid abrupt stops.
- Avoid idling the engine for long periods of time.
- When road and weather conditions are appropriate, use cruise control, if equipped.
- Always follow posted speed limits or drive more slowly when conditions require.
- Keep vehicle tires properly inflated.
- Combine several trips into a single trip.
- Replace the vehicle's tires with the same TPC Spec number molded into the tire's sidewall near the size.
- Follow recommended scheduled maintenance.

Defensive Driving

Defensive driving means "always expect the unexpected." The first step in driving defensively is to wear your safety belt — See *Safety Belts: They Are for Everyone on page 1-16*.

⚠ CAUTION:

Assume that other road users (pedestrians, bicyclists, and other drivers) are going to be careless and make mistakes. Anticipate what they might do and be ready. In addition:

- Allow enough following distance between you and the driver in front of you.
- Focus on the task of driving.

Driver distraction can cause collisions resulting in injury or possible death. These simple defensive driving techniques could save your life.

Drunk Driving

⚠ CAUTION:

Drinking and then driving is very dangerous. Your reflexes, perceptions, attentiveness, and judgment can be affected by even a small amount of alcohol. You can have a serious — or even fatal — collision if you drive after drinking. Do not drink and drive or ride with a driver who has been drinking. Ride home in a cab; or if you are with a group, designate a driver who will not drink.

Death and injury associated with drinking and driving is a global tragedy.

Alcohol affects four things that anyone needs to drive a vehicle: judgment, muscular coordination, vision, and attentiveness.

Police records show that almost 40 percent of all motor vehicle-related deaths involve alcohol. In most cases, these deaths are the result of someone who was drinking and driving. In recent years, more than 17,000 annual motor vehicle-related deaths have been associated with the use of alcohol, with about 250,000 people injured.

For persons under 21, it is against the law in every U.S. state to drink alcohol. There are good medical, psychological, and developmental reasons for these laws.

The obvious way to eliminate the leading highway safety problem is for people never to drink alcohol and then drive.

Medical research shows that alcohol in a person's system can make crash injuries worse, especially injuries to the brain, spinal cord, or heart. This means that when anyone who has been drinking — driver or passenger — is in a crash, that person's chance of being killed or permanently disabled is higher than if the person had not been drinking.

Control of a Vehicle

The following three systems help to control the vehicle while driving — brakes, steering, and accelerator. At times, as when driving on snow or ice, it is easy to ask more of those control systems than the tires and road can provide. Meaning, you can lose control of the vehicle.

Adding non-dealer/non-retailer accessories can affect vehicle performance. See *Accessories and Modifications on page 5-3*.

Braking

See *Brake System Warning Light on page 3-28*.

Braking action involves perception time and reaction time. Deciding to push the brake pedal is perception time. Actually doing it is reaction time.

Average reaction time is about three-fourths of a second. But that is only an average. It might be less with one driver and as long as two or three seconds or more with another. Age, physical condition, alertness, coordination, and eyesight all play a part. So do alcohol, drugs, and frustration. But even in three-fourths of a second, a vehicle moving at 60 mph (100 km/h) travels 66 feet (20 m). That could be a lot of distance in an emergency, so keeping enough space between the vehicle and others is important.

And, of course, actual stopping distances vary greatly with the surface of the road, whether it is pavement or gravel; the condition of the road, whether it is wet, dry, or icy; tire tread; the condition of the brakes; the weight of the vehicle; and the amount of brake force applied.

Avoid needless heavy braking. Some people drive in spurts — heavy acceleration followed by heavy braking — rather than keeping pace with traffic. This is a mistake. The brakes might not have time to cool between hard stops. The brakes will wear out much faster with a lot of heavy braking. Keeping pace with the traffic and allowing realistic following distances eliminates a lot of unnecessary braking. That means better braking and longer brake life.

If the engine ever stops while the vehicle is being driven, brake normally but do not pump the brakes. If the brakes are pumped, the pedal could get harder to push down. If the engine stops, there will still be some power brake assist but it will be used when the brake is applied. Once the power assist is used up, it can take longer to stop and the brake pedal will be harder to push.

Adding non-dealer/non-retailer accessories can affect vehicle performance. See *Accessories and Modifications on page 5-3*.

Antilock Brake System (ABS)

The vehicle might have the Antilock Brake System (ABS), an advanced electronic braking system that helps prevent a braking skid.

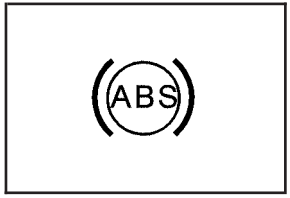

If the vehicle has ABS, this warning light comes on briefly when the vehicle is started.

The warning light is on the instrument panel cluster. See *Antilock Brake System (ABS) Warning Light on page 3-30*.

Let us say the road is wet and you are driving safely. Suddenly, an animal jumps out in front of you. You slam on the brakes and continue braking. Here is what happens with ABS:

A computer senses that the wheels are slowing down. If one of the wheels is about to stop rolling, the computer will separately work the brakes at each wheel.

ABS can change the brake pressure to each wheel, as required, faster than any driver could. This can help the driver steer around the obstacle while braking hard.

As the brakes are applied, the computer keeps receiving updates on wheel speed and controls braking pressure accordingly.

Remember: ABS does not change the time needed to get a foot up to the brake pedal or always decrease stopping distance. If you get too close to the vehicle in front of you, there will not be enough time to apply the brakes if that vehicle suddenly slows or stops. Always leave enough room up ahead to stop, even with ABS.

Using ABS

Do not pump the brakes. Just hold the brake pedal down firmly and let antilock work. A slight brake pedal pulsation might be felt or some noise might be heard, but this is normal.

Braking in Emergencies

At some time, nearly every driver gets into a situation that requires hard braking.

If the vehicle has ABS, it allows the driver to steer and brake at the same time. However, if the vehicle does not have ABS, the first reaction — to hit the brake pedal hard and hold it down — might be the wrong thing to do. The wheels can stop rolling. Once they do, the vehicle cannot respond to the driver's steering. Momentum will carry it in whatever direction it was headed when the wheels stopped rolling. That could be off the road, into the very thing the driver was trying to avoid, or into traffic.

If the vehicle does not have ABS, use a "squeeze" braking technique. This gives maximum braking while maintaining steering control. Do this by pushing on the brake pedal with steadily increasing pressure.

In an emergency, you will probably want to squeeze the brakes hard without locking the wheels. If you hear or feel the wheels sliding, ease off the brake pedal. This helps retain steering control. With ABS, it is different. See *Antilock Brake System (ABS) on page 4-5*.

In many emergencies, steering can help more than even the very best braking.

Steering

Power Steering

If power steering assist is lost because the engine stops or the system is not functioning, the vehicle can be steered but it will take more effort.

Steering Tips

It is important to take curves at a reasonable speed.

Traction in a curve depends on the condition of the tires and the road surface, the angle at which the curve is banked, and vehicle speed. While in a curve, speed is the one factor that can be controlled.

If there is a need to reduce speed, do it before entering the curve, while the front wheels are straight.

Try to adjust the speed so you can drive through the curve. Maintain a reasonable, steady speed. Wait to accelerate until out of the curve, and then accelerate gently into the straightaway.

Steering in Emergencies

There are times when steering can be more effective than braking. For example, you come over a hill and find a truck stopped in your lane, or a car suddenly pulls out from nowhere, or a child darts out from between parked cars and stops right in front of you. These problems can be avoided by braking — if you can stop in time. But sometimes you cannot stop in time because there is no room. That is the time for evasive action — steering around the problem.

The vehicle can perform very well in emergencies like these. First apply the brakes — but, unless the vehicle has antilock brakes, not enough to lock the wheels. See *Braking on page 4-4*. It is better to remove as much speed as possible from a collision. Then steer around the problem, to the left or right depending on the space available.

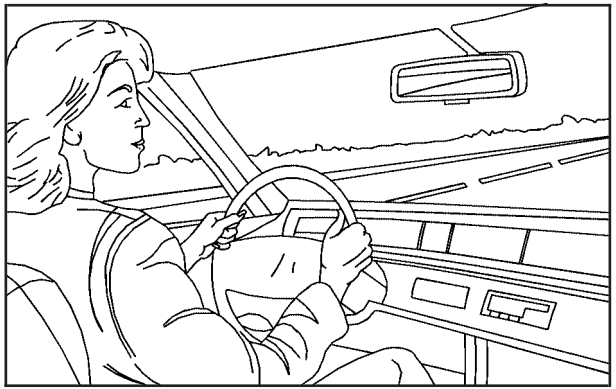

An emergency like this requires close attention and a quick decision. If holding the steering wheel at the recommended 9 and 3 o'clock positions, it can be turned a full 180 degrees very quickly without removing either hand. But you have to act fast, steer quickly, and just as quickly straighten the wheel once you have avoided the object.

The fact that such emergency situations are always possible is a good reason to practice defensive driving at all times and wear safety belts properly.

Off-Road Recovery

The vehicle's right wheels can drop off the edge of a road onto the shoulder while driving.

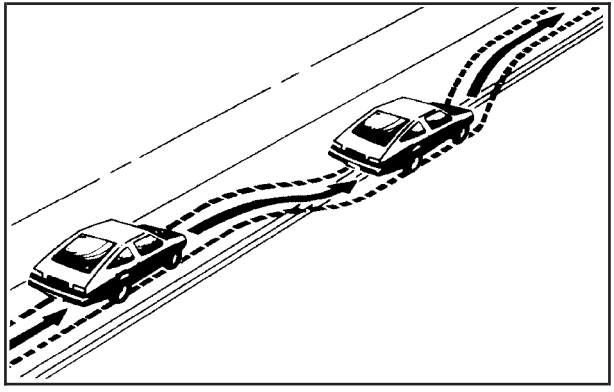

If the level of the shoulder is only slightly below the pavement, recovery should be fairly easy. Ease off the accelerator and then, if there is nothing in the way, steer so that the vehicle straddles the edge of the pavement. Turn the steering wheel 3 to 5 inches, 8 to 13 cm, (about one-eighth turn) until the right front tire contacts the pavement edge. Then turn the steering wheel to go straight down the roadway.

Passing

Passing another vehicle on a two-lane road can be dangerous. To reduce the risk of danger while passing:

- Look down the road, to the sides, and to crossroads for situations that might affect a successful pass. If in doubt, wait.
- Watch for traffic signs, pavement markings, and lines that could indicate a turn or an intersection. Never cross a solid or double-solid line on your side of the lane.
- Do not get too close to the vehicle you want to pass. Doing so can reduce your visibility.
- Wait your turn to pass a slow vehicle.
- When you are being passed, ease to the right.

Loss of Control

Let us review what driving experts say about what happens when the three control systems — brakes, steering, and acceleration — do not have enough friction where the tires meet the road to do what the driver has asked.

In any emergency, do not give up. Keep trying to steer and constantly seek an escape route or area of less danger.

Skidding

In a skid, a driver can lose control of the vehicle. Defensive drivers avoid most skids by taking reasonable care suited to existing conditions, and by not overdriving those conditions. But skids are always possible.

The three types of skids correspond to the vehicle's three control systems. In the braking skid, the wheels are not rolling. In the steering or cornering skid, too much speed or steering in a curve causes tires to slip and lose cornering force. And in the acceleration skid, too much throttle causes the driving wheels to spin.

If the vehicle starts to slide, ease your foot off the accelerator pedal and quickly steer the way you want the vehicle to go. If you start steering quickly enough, the vehicle may straighten out. Always be ready for a second skid if it occurs.

Of course, traction is reduced when water, snow, ice, gravel, or other material is on the road. For safety, slow down and adjust your driving to these conditions. It is important to slow down on slippery surfaces because stopping distance will be longer and vehicle control more limited.

While driving on a surface with reduced traction, try your best to avoid sudden steering, acceleration, or braking, including reducing vehicle speed by shifting to a lower gear. Any sudden changes could cause the tires to slide. You may not realize the surface is slippery until the vehicle is skidding. Learn to recognize warning clues — such as enough water, ice, or packed snow on the road to make a mirrored surface — and slow down when you have any doubt.

If the vehicle has the Antilock Brake System (ABS), remember: It helps avoid only the braking skid. If the vehicle does not have ABS, then in a braking skid, where the wheels are no longer rolling, release enough pressure on the brakes to get the wheels rolling again. This restores steering control. Push the brake pedal down steadily when you have to stop suddenly. As long as the wheels are rolling, you will have steering control.

Driving at Night

Night driving is more dangerous than day driving because some drivers are likely to be impaired — by alcohol or drugs, with night vision problems, or by fatigue.

Night driving tips include:

- Drive defensively.
- Do not drink and drive.
- Reduce headlamp glare by adjusting the inside rearview mirror.
- Slow down and keep more space between you and other vehicles because headlamps can only light up so much road ahead.
- Watch for animals.
- When tired, pull off the road.
- Do not wear sunglasses.
- Avoid staring directly into approaching headlamps.
- Keep the windshield and all glass on your vehicle clean — inside and out.
- Keep your eyes moving, especially during turns or curves.

No one can see as well at night as in the daytime. But, as we get older, these differences increase. A 50-year-old driver might need at least twice as much light to see the same thing at night as a 20-year-old.

Driving in Rain and on Wet Roads

Rain and wet roads can reduce vehicle traction and affect your ability to stop and accelerate. Always drive slower in these types of driving conditions and avoid driving through large puddles and deep-standing or flowing water.

⚠ CAUTION:

Wet brakes can cause crashes. They might not work as well in a quick stop and could cause pulling to one side. You could lose control of the vehicle.

After driving through a large puddle of water or a car/vehicle wash, lightly apply the brake pedal until the brakes work normally.

Flowing or rushing water creates strong forces. Driving through flowing water could cause your vehicle to be carried away. If this happens, you and other vehicle occupants could drown. Do not ignore police warnings and be very cautious about trying to drive through flowing water.

Hydroplaning

Hydroplaning is dangerous. Water can build up under your vehicle's tires so they actually ride on the water. This can happen if the road is wet enough and you are going fast enough. When your vehicle is hydroplaning, it has little or no contact with the road.

There is no hard and fast rule about hydroplaning. The best advice is to slow down when the road is wet.

Other Rainy Weather Tips

Besides slowing down, other wet weather driving tips include:

- Allow extra following distance.
- Pass with caution.
- Keep windshield wiping equipment in good shape.
- Keep the windshield washer fluid reservoir filled.
- Have good tires with proper tread depth. See *Tires on page 5-51*.
- Turn off cruise control.

Before Leaving on a Long Trip

To prepare your vehicle for a long trip, consider having it serviced by your dealer/retailer before departing.

Things to check on your own include:

- *Windshield Washer Fluid:* Reservoir full? Windows clean — inside and outside?
- *Wiper Blades:* In good shape?
- *Fuel, Engine Oil, Other Fluids:* All levels checked?
- *Lamps:* Do they all work and are lenses clean?
- *Tires:* Are treads good? Are tires inflated to recommended pressure?
- *Weather and Maps:* Safe to travel? Have up-to-date maps?

Highway Hypnosis

Always be alert and pay attention to your surroundings while driving. If you become tired or sleepy, find a safe place to park your vehicle and rest.

Other driving tips include:

- Keep the vehicle well ventilated.
- Keep interior temperature cool.
- Keep your eyes moving — scan the road ahead and to the sides.
- Check the rearview mirror and vehicle instruments often.

Hill and Mountain Roads

Driving on steep hills or through mountains is different than driving on flat or rolling terrain. Tips for driving in these conditions include:

- Keep the vehicle serviced and in good shape.
- Check all fluid levels and brakes, tires, cooling system, and transmission.
- Going down steep or long hills, shift to a lower gear.

⚠ CAUTION:

If you do not shift down, the brakes could get so hot that they would not work well. You would then have poor braking or even none going down a hill. You could crash. Shift down to let the engine assist the brakes on a steep downhill slope.

⚠ CAUTION:

Coasting downhill in N (Neutral) or with the ignition off is dangerous. The brakes will have to do all the work of slowing down and they could get so hot that they would not work well. You would then have poor braking or even none going down a hill. You could crash. Always have the engine running and the vehicle in gear when going downhill.

- Stay in your own lane. Do not swing wide or cut across the center of the road. Drive at speeds that let you stay in your own lane.
- Top of hills: Be alert — something could be in your lane (stalled car, accident).
- Pay attention to special road signs (falling rocks area, winding roads, long grades, passing or no-passing zones) and take appropriate action.

Winter Driving

Driving on Snow or Ice

Drive carefully when there is snow or ice between the tires and the road, creating less traction or grip. Wet ice can occur at about 32°F (0°C) when freezing rain begins to fall, resulting in even less traction. Avoid driving on wet ice or in freezing rain until roads can be treated with salt or sand.

Drive with caution, whatever the condition. Accelerate gently so traction is not lost. Accelerating too quickly causes the wheels to spin and makes the surface under the tires slick, so there is even less traction.

Try not to break the fragile traction. If you accelerate too fast, the drive wheels will spin and polish the surface under the tires even more.

The *Antilock Brake System (ABS) on page 4-5* improves vehicle stability during hard stops on a slippery roads, but whether the vehicle has ABS or not, apply the brakes sooner than when on dry pavement. Without ABS, if the vehicle begins to slide, let up on the brake pedal a little and apply steady pedal pressure to get the most traction. On vehicles without ABS, braking so hard that the wheels stop rolling can cause the vehicle to slide — brake so the wheels always keep rolling so you can still steer.

Allow greater following distance on any slippery road and watch for slippery spots. Icy patches can occur on otherwise clear roads in shaded areas. The surface of a curve or an overpass can remain icy when the surrounding roads are clear. Avoid sudden steering maneuvers and braking while on ice.

Turn off cruise control, if equipped, on slippery surfaces.

Blizzard Conditions

Being stuck in snow can be in a serious situation. Stay with the vehicle unless there is help nearby. If possible, use the *Roadside Assistance Program on page 7-7*. To get help and keep everyone in the vehicle safe:

- Turn on the *Hazard Warning Flashers on page 3-6*.
- Tie a red cloth to an outside mirror.

⚠ CAUTION:

Snow can trap engine exhaust under the vehicle. This may cause exhaust gases to get inside. Engine exhaust contains carbon monoxide (CO) which cannot be seen or smelled. It can cause unconsciousness and even death.

If the vehicle is stuck in the snow:

- Clear away snow from around the base of your vehicle, especially any that is blocking the exhaust pipe.
- Check again from time to time to be sure snow does not collect there.

CAUTION: (Continued)

CAUTION: (Continued)

- Open a window about two inches (5 cm) on the side of the vehicle that is away from the wind to bring in fresh air.
- Fully open the air outlets on or under the instrument panel.
- Adjust the Climate Control system to a setting that circulates the air inside the vehicle and set the fan speed to the highest setting. See Climate Control System in the Index.

For more information about carbon monoxide, see *Engine Exhaust on page 2-32*.

Snow can trap exhaust gases under your vehicle. This can cause deadly CO (carbon monoxide) gas to get inside. CO could overcome you and kill you. You cannot see it or smell it, so you might not know it is in your vehicle. Clear away snow from around the base of your vehicle, especially any that is blocking the exhaust.

Run the engine for short periods only as needed to keep warm, but be careful.

To save fuel, run the engine for only short periods as needed to warm the vehicle and then shut the engine off and close the window most of the way to save heat. Repeat this until help arrives but only when you feel really uncomfortable from the cold. Moving about to keep warm also helps.

If it takes some time for help to arrive, now and then when you run the engine, push the accelerator pedal slightly so the engine runs faster than the idle speed. This keeps the battery charged to restart the vehicle and to signal for help with the headlamps. Do this as little as possible to save fuel.

If Your Vehicle is Stuck in Sand, Mud, Ice, or Snow

Slowly and cautiously spin the wheels to free the vehicle when stuck in sand, mud, ice, or snow. See *Rocking Your Vehicle to Get It Out on page 4-16*.

⚠ CAUTION:

If you let your vehicle's tires spin at high speed, they can explode, and you or others could be injured. The vehicle can overheat, causing an engine compartment fire or other damage. Spin the wheels as little as possible and avoid going above 35 mph (55 km/h) as shown on the speedometer.

For information about using tire chains on the vehicle, see *Tire Chains on page 5-68*.

Rocking Your Vehicle to Get It Out

Turn the steering wheel left and right to clear the area around the front wheels. Shift back and forth between R (Reverse) and a forward gear, or with a manual transmission, between 1 (First) or 2 (Second) and R (Reverse), spinning the wheels as little as possible. To prevent transmission wear, wait until the wheels stop spinning before shifting gears. Release the accelerator pedal while shifting, and press lightly on the accelerator pedal when the transmission is in gear. Slowly spinning the wheels in the forward and reverse directions causes a rocking motion that could free the vehicle. If that does not get the vehicle out after a few tries, it might need to be towed out. If the vehicle does need to be towed out, see *Towing Your Vehicle on page 4-24*.

Loading the Vehicle

It is very important to know how much weight your vehicle can carry. This weight is called the vehicle capacity weight or maximum load amount and includes the weight of all occupants, cargo, and all nonfactory-installed options. Two labels on your vehicle show how much weight it may properly carry, the Tire and Loading Information label and the Certification label.

⚠ CAUTION:

Do not load the vehicle any heavier than the Gross Vehicle Weight Rating (GVWR), or either the maximum front or rear Gross Axle Weight Rating (GAWR). If you do, parts on the vehicle can break, and it can change the way your vehicle handles. These could cause you to lose control and crash. Also, overloading can shorten the life of the vehicle.

Tire and Loading Information Label - United States

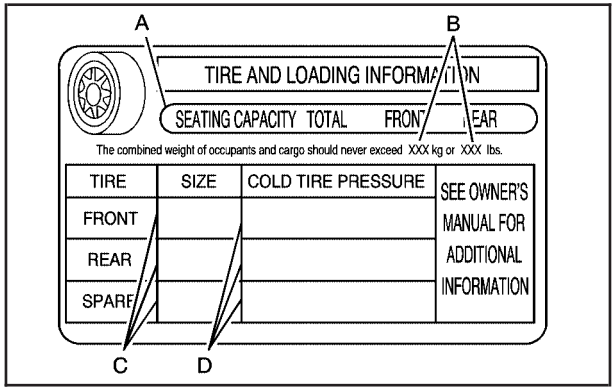

Label Example

A vehicle specific Tire and Loading Information label is attached to the vehicle's center pillar (B-pillar). With the driver's door open, you will find the label attached below the door lock post (striker).

The Tire and Loading Information label shows the number of occupant seating positions (A), and the maximum vehicle capacity weight (B) in kilograms and pounds.

The Tire and Loading Information label also shows the tire size of the original equipment tires (C) and the recommended cold tire inflation pressures (D). For more information on tires and inflation see *Tires on page 5-51* and *Inflation - Tire Pressure on page 5-57*.

There is also important loading information on the Certification label. See "Certification Label" later in this section.

Steps for Determining Correct Load Limit

1. Locate the statement ''The combined weight of occupants and cargo should never exceed XXX kg or XXX lbs'' on your vehicle's placard.
2. Determine the combined weight of the driver and passengers that will be riding in your vehicle.
3. Subtract the combined weight of the driver and passengers from XXX kg or XXX lbs.

4. The resulting figure equals the available amount of cargo and luggage load capacity. For example, if the “XXX” amount equals 1400 lbs and there will be five 150 lb passengers in your vehicle, the amount of available cargo and luggage load capacity is 650 lbs (1400 - 750 (5 x 150) = 650 lbs).
5. Determine the combined weight of luggage and cargo being loaded on the vehicle. That weight may not safely exceed the available cargo and luggage load capacity calculated in Step 4.
6. If your vehicle will be towing a trailer, the load from your trailer will be transferred to your vehicle. Consult this manual to determine how this reduces the available cargo and luggage load capacity of your vehicle.

Your vehicle is neither designed nor intended to tow a trailer.

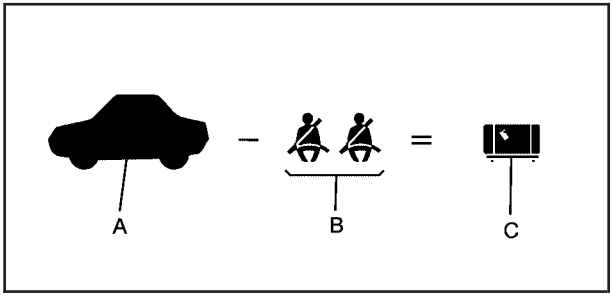

Example 1

Item	Description	Total
A	Vehicle Capacity Weight for Example 1 =	1,000 lbs (453 kg)
B	Subtract Occupant Weight 150 lbs (68 kg) × 2 =	300 lbs (136 kg)
C	Available Occupant and Cargo Weight =	700 lbs (317 kg)

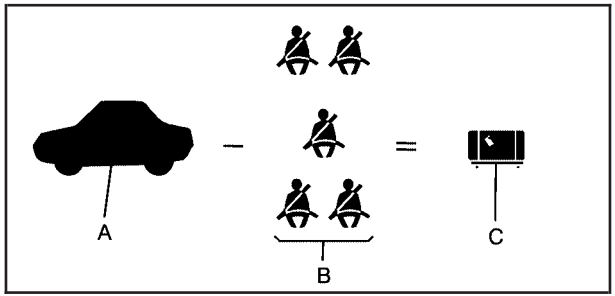

Example 2

Item	Description	Total
A	Vehicle Capacity Weight for Example 2 =	1,000 lbs (453 kg)
B	Subtract Occupant Weight 150 lbs (68 kg) × 5 =	750 lbs (340 kg)
C	Available Cargo Weight =	250 lbs (113 kg)

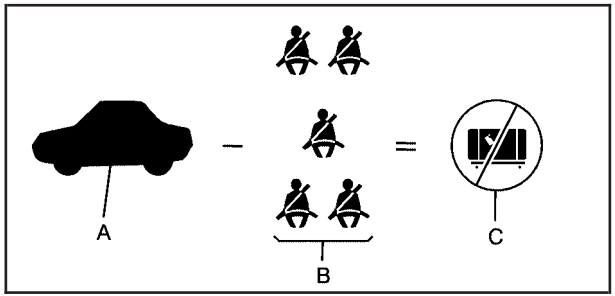

Example 3

Item	Description	Total
A	Vehicle Capacity Weight for Example 3 =	1,000 lbs (453 kg)
B	Subtract Occupant Weight 200 lbs (91 kg) × 5 =	1,000 lbs (453 kg)
C	Available Cargo Weight =	0 lbs (0 kg)

Refer to your vehicle's tire and loading information label for specific information about your vehicle's capacity weight and seating positions. The combined weight of the driver, passenger, and cargo should never exceed your vehicle's capacity weight.

Tire and Loading Information Label - Canada

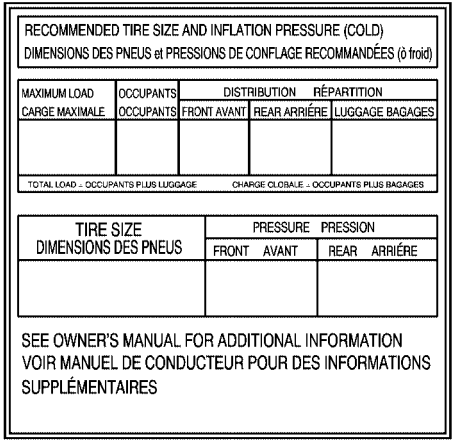

RECOMMENDED TIRE SIZE AND INFLATION PRESSURE (COLD) DIMENSIONS DES PNEUS et PRESSIONS DE CONFLAGE RECOMMANDÉES (ò froid)				
MAXIMUM LOAD CARGE MAXIMALE	OCCUPANTS OCCUPANTS	DISTRIBUTION RÉPARTITION		
		FRONT AVANT	REAR ARRIÉRE	LUGGAGE BAGAGES
TOTAL LOAD = OCCUPANTS PLUS LUGGAGE CHARGE GLOBALE = OCCUPANTS PLUS BAGAGES				

TIRE SIZE DIMENSIONS DES PNEUS	PRESSURE PRESSION	
	FRONT AVANT	REAR ARRIÉRE

SEE OWNER'S MANUAL FOR ADDITIONAL INFORMATION
VOIR MANUEL DE CONDUCTEUR POUR DES INFORMATIONS SUPPLÉMENTAIRES

Label Example

A vehicle specific Tire and Loading Information label is attached to the driver's side, center pillar (B-pillar). This label shows the Maximum Load amount, the number of occupant seating positions, the original equipment tires, and the recommended cold tire inflation pressure.
For more information on tires and inflation see *Tires on page 5-51* and *Inflation - Tire Pressure on page 5-57*.

There is also important loading information on the Certification label. See "Certification Label" later in this section.

Steps for Determining Correct Load Limit

1. Locate the "Maximum Load" amount.
2. Determine the combined weight of the driver and passengers that will be riding in your vehicle.
3. Subtract the combined weight of the driver and passengers from the Maximum Load amount.
4. The resulting figure equals the available amount of cargo and luggage load capacity. For example, if the Maximum Load amount equals 1400 lbs (635 kg) and there will be five 150 lb (68 kg) passengers in your vehicle, the amount of available cargo and luggage load capacity is 650 lbs (295 kg).

5. Determine the combined weight of luggage and cargo being loaded on the vehicle. That weight may not safely exceed the available cargo and luggage load capacity calculated in Step 4.
6. If your vehicle will be towing a trailer, the load from your trailer will be transferred to your vehicle. Consult this manual to determine how this reduces the available cargo and luggage load capacity of your vehicle.

Your vehicle is not designed nor intended to tow a trailer.

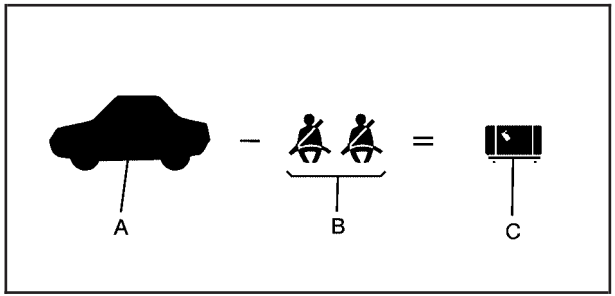

Example 1

Item	Description	Total
A	Vehicle Capacity Weight or Maximum Load for Example 1 =	1,000 lbs (453 kg)
B	Subtract Occupant Weight 150 lbs (68 kg) × 2 =	300 lbs (136 kg)
C	Available Occupant and Cargo Weight =	700 lbs (317 kg)

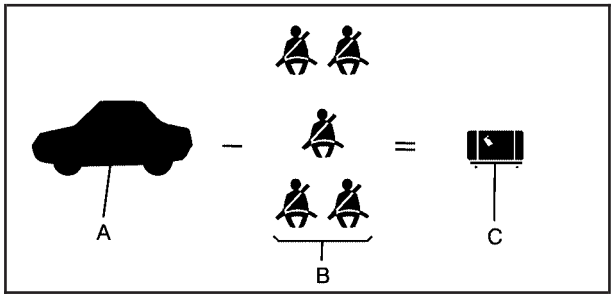

Example 2

Item	Description	Total
A	Vehicle Capacity Weight or Maximum Load for Example 2 =	1,000 lbs (453 kg)
B	Subtract Occupant Weight 150 lbs (68 kg) × 5 =	750 lbs (340 kg)
C	Available Cargo Weight =	250 lbs (113 kg)

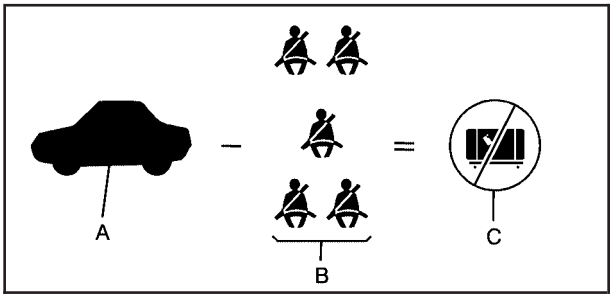

Example 3

Item	Description	Total
A	Vehicle Capacity Weight or Maximum Load for Example 3 =	1,000 lbs (453 kg)
B	Subtract Occupant Weight 200 lbs (91kg) × 5 =	1,000 lbs (453 kg)
C	Available Cargo Weight =	0 lbs (0 kg)

Refer to your vehicle's Tire and Loading Information label for specific information about your vehicle's capacity weight and seating positions. The combined weight of the driver, passengers, and cargo should never exceed your vehicle's maximum load weight.

Certification Label

MFD. BY GM DAEWOO Auto & Technology Company
REPUBLIC OF KOREA
DATE GVWR GAWR FRT GAWR RR

THIS VEHICLE CONFORMS TO ALL APPLICABLE FEDERAL MOTOR VEHICLE SAFETY, BUMPER, AND THEFT PREVENTION STANDARDS IN EFFECT ON THE DATE OF MANUFACTURE SHOWN ABOVE

Label Example - United States

MANUFACTURED BY GM DAEWOO AUTO & TECHNOLOGY COMPANY
FABRIQUE PAR GM DAEWOO AUTO TECHNOLOGY COMPANY
DATE GVWR / PNBV GAWR FRT / PNBE AV. GAWR RR / PNBE ARR

EC

CANADA CMVSS NSVAC 985 TRANSPORT

Label Example - Canada

A vehicle specific Certification label is attached to the center pillar (B-pillar), below the driver's door latch. This label tells you the gross weight capacity of your vehicle, called the Gross Vehicle Weight Rating (GVWR). The GVWR includes the weight of the vehicle, all occupants, fuel and cargo. Never exceed the GVWR for your vehicle, or the Gross Axle Weight Rating (GAWR) for either the front or rear axle.

And, if you do have a heavy load, you should spread it out. See "Steps for Determining Correct Load Limit" earlier in this section.

⚠ CAUTION:

Do not load the vehicle any heavier than the Gross Vehicle Weight Rating (GVWR), or either the maximum front or rear Gross Axle Weight Rating (GAWR). If you do, parts on the vehicle can break, and it can change the way your vehicle handles. These could cause you to lose control and crash. Also, overloading can shorten the life of the vehicle.

Notice: **Overloading your vehicle may cause damage. Repairs would not be covered by your warranty. Do not overload your vehicle.**

If you put things inside your vehicle — like suitcases, tools, packages, or anything else — they will go as fast as the vehicle goes. If you have to stop or turn quickly, or if there is a crash, they will keep going.

⚠ CAUTION:

Things you put inside your vehicle can strike and injure people in a sudden stop or turn, or in a crash.

- Put things in the cargo area of your vehicle. Try to spread the weight evenly.
- Never stack heavier things, like suitcases, inside the vehicle so that some of them are above the tops of the seats.
- Do not leave an unsecured child restraint in your vehicle.
- When you carry something inside the vehicle, secure it whenever you can.
- Do not leave a seat folded down unless you need to.

Towing

Towing Your Vehicle

To avoid damage, the disabled vehicle should be towed with all four wheels off the ground. Consult your dealer/retailer or a professional towing service if the disabled vehicle must be towed. See *Roadside Assistance Program on page 7-7*.

To tow the vehicle behind another vehicle for recreational purposes, such as behind a motorhome, see “Recreational Vehicle Towing” following.

Recreational Vehicle Towing

Recreational vehicle towing means towing the vehicle behind another vehicle – such as behind a motorhome. The two most common types of recreational vehicle towing are known as dinghy towing and dolly towing. Dinghy towing is towing the vehicle with all four wheels on the ground. Dolly towing is towing the vehicle with two wheels on the ground and two wheels up on a device known as a dolly.

Here are some important things to consider before recreational vehicle towing:

- What is the towing capacity of the towing vehicle? Be sure to read the tow vehicle manufacturer's recommendations.
- What is the distance that will be travelled? Some vehicles have restrictions on how far and how long they can tow.
- Is the proper towing equipment going to be used? See your dealer/retailer or trailering professional for additional advice and equipment recommendations.
- Is the vehicle ready to be towed? Just as preparing the vehicle for a long trip, make sure the vehicle is prepared to be towed. See *Before Leaving on a Long Trip on page 4-11*.

Dinghy Towing

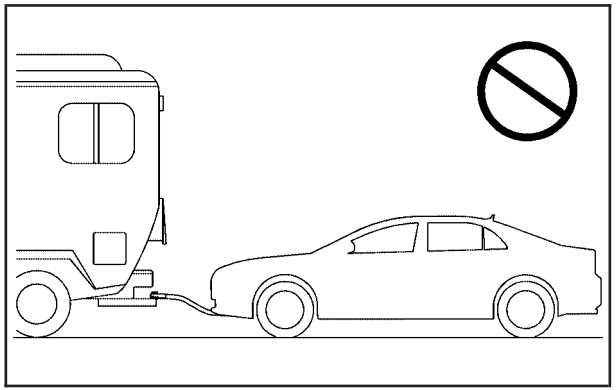

Notice: **If the vehicle is towed with all four wheels on the ground, the drivetrain components could be damaged. The repairs would not be covered by the vehicle warranty. Do not tow the vehicle with all four wheels on the ground.**

The vehicle was not designed to be towed with all four wheels on the ground. If the vehicle must be towed, a dolly should be used. See "Dolly Towing" that follows for more information.

Dolly Towing From the Front

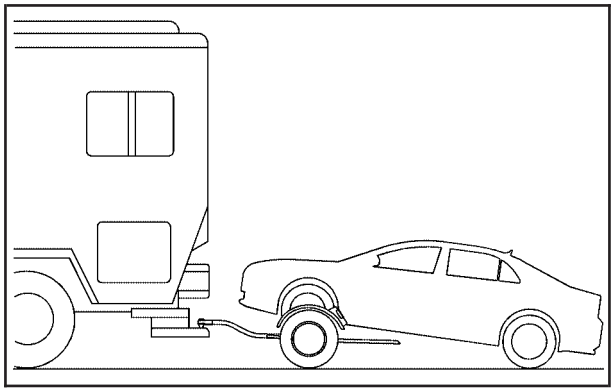

The vehicle can be towed from the front using a dolly. To tow the vehicle using a dolly, follow these steps:

1. Attach the dolly to the tow vehicle following the dolly manufacturer's instructions.
2. Drive the front wheels onto the dolly.
3. Put an automatic transmission in P (Park) or a manual transmission in N (Neutral).
4. Set the parking brake and remove the key.
5. For an automatic transmission, insert the key into the shift-lock release slot and shift to N (Neutral). See *Shifting Out of Park on page 2-30*.
6. Clamp the steering wheel in a straight-ahead position with a clamping device designed for towing.
7. Release the parking brake.

Dolly Towing From the Rear

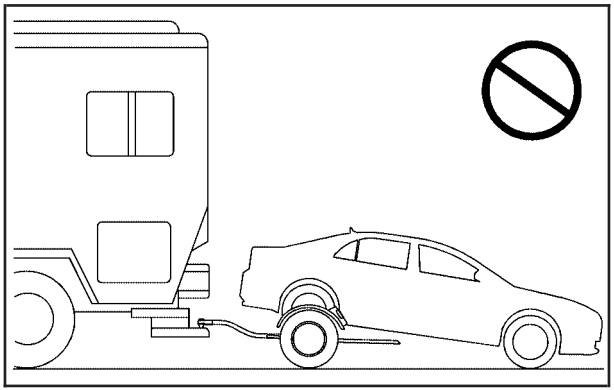

Notice: **Towing the vehicle from the rear with the front wheels on the ground could cause transmission damage. Do not tow the vehicle from the rear with the front wheels on the ground.**

Towing a Trailer

The vehicle is neither designed nor intended to tow a trailer.

✍ NOTES

Section 5 Service and Appearance Care

Service 5-3
Accessories and Modifications 5-3
California Proposition 65 Warning 5-4
California Perchlorate Materials Requirements 5-4
Doing Your Own Service Work 5-4
Adding Equipment to the Outside of the Vehicle 5-5

Fuel 5-5
Gasoline Octane 5-5
Gasoline Specifications 5-5
California Fuel 5-6
Additives 5-6
Fuels in Foreign Countries 5-7
Filling the Tank 5-8
Filling a Portable Fuel Container 5-11

Checking Things Under the Hood 5-11
Hood Release 5-12
Engine Compartment Overview 5-14
Engine Oil 5-16
Engine Oil Life System 5-18
Engine Air Cleaner/Filter 5-19
Automatic Transmission Fluid 5-21
Manual Transmission Fluid 5-23
Hydraulic Clutch 5-23
Cooling System 5-24
Engine Coolant 5-25
Engine Overheating 5-30
Power Steering Fluid 5-32
Windshield Washer Fluid 5-33
Brakes 5-34
Battery 5-37
Jump Starting 5-38

Headlamp Aiming 5-43

Bulb Replacement 5-43
Halogen Bulbs 5-43
Headlamps 5-44
Front Turn Signal, Sidemarker and Parking Lamps 5-45
Center High-Mounted Stoplamp (CHMSL) (Hatchback) 5-47
Center High-Mounted Stoplamp (CHMSL) (Sedan) 5-47
Taillamps, Turn Signal, Sidemarker, Stoplamps and Back-up Lamps 5-48
License Plate Lamp 5-49
Replacement Bulbs 5-49

Windshield Wiper Blade Replacement 5-50

Tires 5-51
Tire Sidewall Labeling 5-52
Tire Terminology and Definitions 5-54
Inflation - Tire Pressure 5-57
Tire Pressure Monitor System 5-59

Section 5 Service and Appearance Care

Tire Pressure Monitor Operation 5-60
Tire Inspection and Rotation 5-62
When It Is Time for New Tires 5-63
Buying New Tires 5-64
Different Size Tires and Wheels 5-65
Uniform Tire Quality Grading 5-66
Wheel Alignment and Tire Balance 5-67
Wheel Replacement 5-67
Tire Chains 5-68
If a Tire Goes Flat 5-69
Changing a Flat Tire 5-70
Removing the Spare Tire and Tools 5-71
Removing the Flat Tire and Installing the Spare Tire 5-73
Storing a Flat or Spare Tire and Tools 5-78
Compact Spare Tire 5-78

Appearance Care 5-79
Interior Cleaning 5-79
Fabric/Carpet 5-80
Leather 5-81
Instrument Panel, Vinyl, and Other Plastic Surfaces 5-81
Care of Safety Belts 5-82
Weatherstrips 5-82
Washing Your Vehicle 5-82
Cleaning Exterior Lamps/Lenses 5-83
Finish Care 5-83
Windshield and Wiper Blades 5-84
Aluminum Wheels 5-84
Tires 5-85
Sheet Metal Damage 5-85
Finish Damage 5-85
Underbody Maintenance 5-85
Chemical Paint Spotting 5-85

Vehicle Identification 5-86
Vehicle Identification Number (VIN) 5-86
Service Parts Identification Label 5-86

Electrical System 5-86
Add-On Electrical Equipment 5-86
Headlamp Wiring 5-87
Windshield Wiper Fuses 5-87
Power Windows and Other Power Options 5-87
Fuses and Circuit Breakers 5-87
Instrument Panel Fuse Block 5-88
Engine Compartment Fuse Block 5-89

Capacities and Specifications 5-93

Service

For service and parts needs, visit your dealer/retailer. You will receive genuine GM parts and GM-trained and supported service people.

Genuine GM parts have one of these marks:

Accessories and Modifications

When non-dealer/non-retailer accessories are added to the vehicle, they can affect vehicle performance and safety, including such things as airbags, braking, stability, ride and handling, emissions systems, aerodynamics, durability, and electronic systems like antilock brakes, traction control, and stability control. Some of these accessories could even cause malfunction or damage not covered by the vehicle warranty.

Damage to vehicle components resulting from the installation or use of non-GM certified parts, including control module modifications, are not covered under the terms of the vehicle warranty and may affect remaining warranty coverage for affected parts.

GM Accessories are designed to complement and function with other systems on the vehicle. Your GM dealer/retailer can accessorize the vehicle using genuine GM Accessories. When you go to your GM dealer/retailer and ask for GM Accessories, you will know that GM-trained and supported service technicians will perform the work using genuine GM Accessories.

Also, see *Adding Equipment to Your Airbag-Equipped Vehicle on page 1-74*.

California Proposition 65 Warning

Most motor vehicles, including this one, contain and/or emit chemicals known to the State of California to cause cancer and birth defects or other reproductive harm. Engine exhaust, many parts and systems (including some inside the vehicle), many fluids, and some component wear by-products contain and/or emit these chemicals.

California Perchlorate Materials Requirements

Certain types of automotive applications, such as airbag initiators, seat belt pretensioners, and lithium batteries contained in remote keyless transmitters, may contain perchlorate materials. Special handling may be necessary. For additional information, see www.dtsc.ca.gov/hazardouswaste/perchlorate.

Doing Your Own Service Work

⚠ CAUTION:

You can be injured and the vehicle could be damaged if you try to do service work on a vehicle without knowing enough about it.

- Be sure you have sufficient knowledge, experience, the proper replacement parts, and tools before attempting any vehicle maintenance task.
- Be sure to use the proper nuts, bolts, and other fasteners. English and metric fasteners can be easily confused. If the wrong fasteners are used, parts can later break or fall off. You could be hurt.

If doing some of your own service work, use the proper service manual. It tells you much more about how to service the vehicle than this manual can. To order the proper service manual, see *Service Publications Ordering Information on page 7-17*.

This vehicle has an airbag system. Before attempting to do your own service work, see *Servicing Your Airbag-Equipped Vehicle on page 1-73*.

Keep a record with all parts receipts and list the mileage and the date of any service work performed. See *Maintenance Record on page 6-17*.

Adding Equipment to the Outside of the Vehicle

Things added to the outside of the vehicle can affect the airflow around it. This can cause wind noise and can affect fuel economy and windshield washer performance. Check with your dealer/retailer before adding equipment to the outside of the vehicle.

Fuel

Use of the recommended fuel is an important part of the proper maintenance of this vehicle. To help keep the engine clean and maintain optimum vehicle performance, we recommend the use of gasoline advertised as TOP TIER Detergent Gasoline.

Gasoline Octane

Use regular unleaded gasoline with a posted octane rating of 87 or higher. If the octane rating is less than 87, you might notice an audible knocking noise when you drive, commonly referred to as spark knock. If this occurs, use a gasoline rated at 87 octane or higher as soon as possible. If you are using gasoline rated at 87 octane or higher and you hear heavy knocking, the engine needs service.

Gasoline Specifications

At a minimum, gasoline should meet ASTM specification D 4814 in the United States or CAN/CGSB-3.5 or 3.511 in Canada. Some gasolines contain an octane-enhancing additive called methylcyclopentadienyl manganese tricarbonyl (MMT). We recommend against the use of gasolines containing MMT. See *Additives on page 5-6* for additional information.

California Fuel

If the vehicle is certified to meet California Emissions Standards, it is designed to operate on fuels that meet California specifications. See the underhood emission control label. If this fuel is not available in states adopting California emissions standards, the vehicle will operate satisfactorily on fuels meeting federal specifications, but emission control system performance might be affected. The malfunction indicator lamp could turn on and the vehicle might fail a smog-check test. See *Malfunction Indicator Lamp on page 3-32*. If this occurs, return to your authorized dealer/retailer for diagnosis. If it is determined that the condition is caused by the type of fuel used, repairs might not be covered by the vehicle warranty.

Additives

To provide cleaner air, all gasolines in the United States are now required to contain additives that help prevent engine and fuel system deposits from forming, allowing the emission control system to work properly. In most cases, you should not have to add anything to the fuel. However, some gasolines contain only the minimum amount of additive required to meet U.S. Environmental Protection Agency regulations. To help keep fuel injectors and intake valves clean, or if the vehicle experiences problems due to dirty injectors or valves, look for gasoline that is advertised as TOP TIER Detergent Gasoline.

For customers who do not use TOP TIER Detergent Gasoline regularly, one bottle of GM Fuel System Treatment PLUS, added to the fuel tank at every engine oil change, can help clean deposits from fuel injectors and intake valves. GM Fuel System Treatment PLUS is the only gasoline additive recommended by General Motors.

Also, your dealer/retailer has additives that will help correct and prevent most deposit-related problems.

Gasolines containing oxygenates, such as ethers and ethanol, and reformulated gasolines might be available in your area. We recommend that you use these gasolines, if they comply with the specifications described earlier. However, E85 (85% ethanol) and other fuels containing more than 10% ethanol must not be used in vehicles that were not designed for those fuels.

Notice: **This vehicle was not designed for fuel that contains methanol. Do not use fuel containing methanol. It can corrode metal parts in the fuel system and also damage plastic and rubber parts. That damage would not be covered under the vehicle warranty.**

Some gasolines that are not reformulated for low emissions can contain an octane-enhancing additive called methylcyclopentadienyl manganese tricarbonyl (MMT); ask the attendant where you buy gasoline whether the fuel contains MMT. We recommend against the use of such gasolines. Fuels containing MMT can reduce the life of spark plugs and the performance of the emission control system could be affected. The malfunction indicator lamp might turn on. If this occurs, return to your dealer/retailer for service.

Fuels in Foreign Countries

If you plan on driving in another country outside the United States or Canada, the proper fuel might be hard to find. Never use leaded gasoline or any other fuel not recommended in the previous text on fuel. Costly repairs caused by use of improper fuel would not be covered by the vehicle warranty.

To check the fuel availability, ask an auto club, or contact a major oil company that does business in the country where you will be driving.

Filling the Tank

⚠ CAUTION:

Fuel vapor burns violently and a fuel fire can cause bad injuries. To help avoid injuries to you and others, read and follow all the instructions on the pump island. Turn off the engine when you are refueling. Do not smoke if you are near fuel or refueling the vehicle. Do not use cellular phones. Keep sparks, flames, and smoking materials away from fuel. Do not leave the fuel pump unattended when refueling the vehicle. This is against the law in some places. Do not re-enter the vehicle while pumping fuel. Keep children away from the fuel pump; never let children pump fuel.

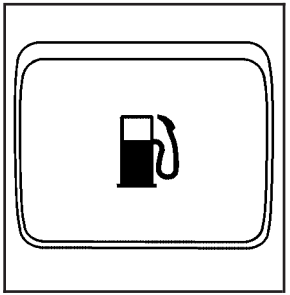

To open the fuel filler door, pull up on the release lever with this symbol on it. It is located on the floor on the outboard side of the driver seat.

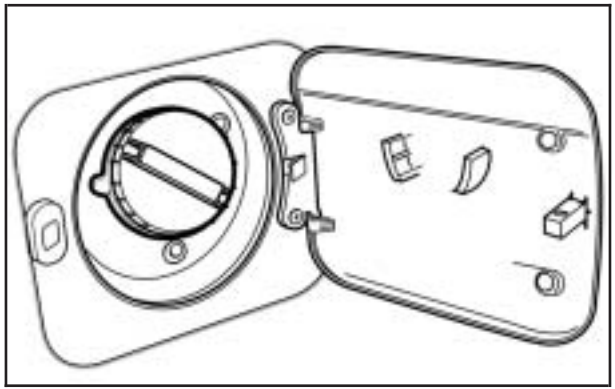

Hatchback shown. Sedan similar

The tethered fuel cap is located behind a hinged fuel door on the passenger side of the vehicle.

To remove the fuel cap, turn it slowly counterclockwise. The fuel cap has a spring in it; if the cap is released too soon, it will spring back to the right.

⚠ CAUTION:

Fuel can spray out on you if you open the fuel cap too quickly. If you spill fuel and then something ignites it, you could be badly burned. This spray can happen if the tank is nearly full, and is more likely in hot weather. Open the fuel cap slowly and wait for any hiss noise to stop. Then unscrew the cap all the way.

Be careful not to spill fuel. Do not top off or overfill the tank and wait a few seconds after you have finished pumping before removing the nozzle. Clean fuel from painted surfaces as soon as possible. See *Washing Your Vehicle on page 5-82*.

When replacing the fuel cap, turn it clockwise until it clicks. Make sure the cap is fully installed. The diagnostic system can determine if the fuel cap has been left off or improperly installed. This would allow fuel to evaporate into the atmosphere. See *Malfunction Indicator Lamp on page 3-32*.

⚠ CAUTION:

If a fire starts while you are refueling, do not remove the nozzle. Shut off the flow of fuel by shutting off the pump or by notifying the station attendant. Leave the area immediately.

Notice: **If a new fuel cap is needed, be sure to get the right type. Your dealer/retailer can get one for you. The wrong type might not fit properly. This can cause the malfunction indicator lamp to light and can damage the fuel tank and emissions system. See *Malfunction Indicator Lamp on page 3-32*.**

Filling a Portable Fuel Container

⚠ CAUTION:

Never fill a portable fuel container while it is in the vehicle. Static electricity discharge from the container can ignite the fuel vapor. You can be badly burned and the vehicle damaged if this occurs. To help avoid injury to you and others:

- Dispense fuel only into approved containers.
- Do not fill a container while it is inside a vehicle, in a vehicle's trunk, pickup bed, or on any surface other than the ground.
- Bring the fill nozzle in contact with the inside of the fill opening before operating the nozzle. Contact should be maintained until the filling is complete.
- Do not smoke while pumping fuel.
- Do not use a cellular phone while pumping fuel.

Checking Things Under the Hood

⚠ CAUTION:

An electric fan under the hood can start up and injure you even when the engine is not running. Keep hands, clothing, and tools away from any underhood electric fan.

⚠ CAUTION:

Things that burn can get on hot engine parts and start a fire. These include liquids like fuel, oil, coolant, brake fluid, windshield washer and other fluids, and plastic or rubber. You or others could be burned. Be careful not to drop or spill things that will burn onto a hot engine.

Hood Release

To open the hood:

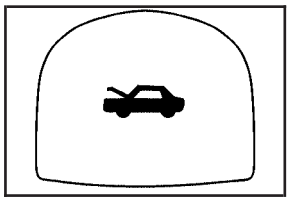

1. Pull the hood release handle inside the vehicle. It is located on the lower left side of the instrument panel.

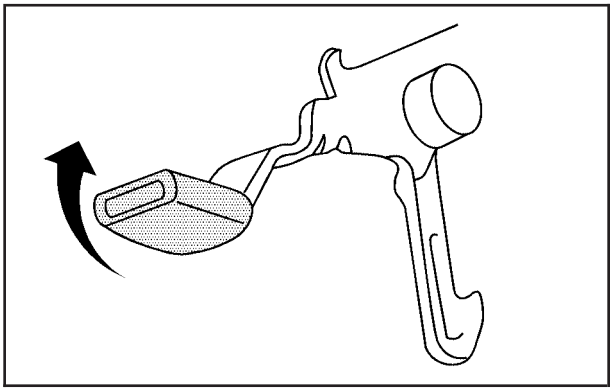

2. Then go to the front of the vehicle and lift up on the secondary hood release lever, located under the front center of the hood.
3. Lift the hood and release the hood prop from its retainer located on the underside of the hood.

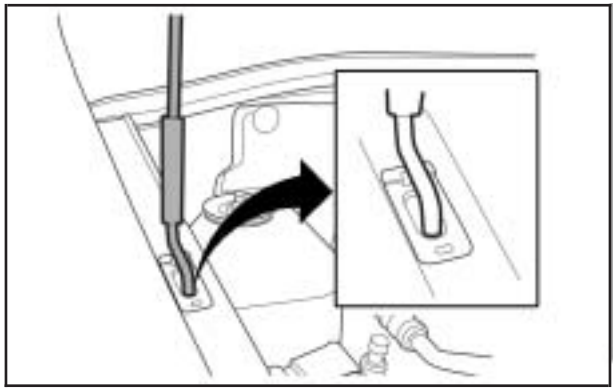

4. Securely place the hood prop into the slot on the inner fender.

Before closing the hood, be sure all the filler caps are on properly. Then lift the hood to relieve pressure on the hood prop. Remove the hood prop from the slot in the inner fender and return the prop to its retainer. Lower the hood 12 inches (30 cm) above the vehicle and release it so it fully latches. Check to make sure the hood is closed and repeat the process if necessary.

Engine Compartment Overview

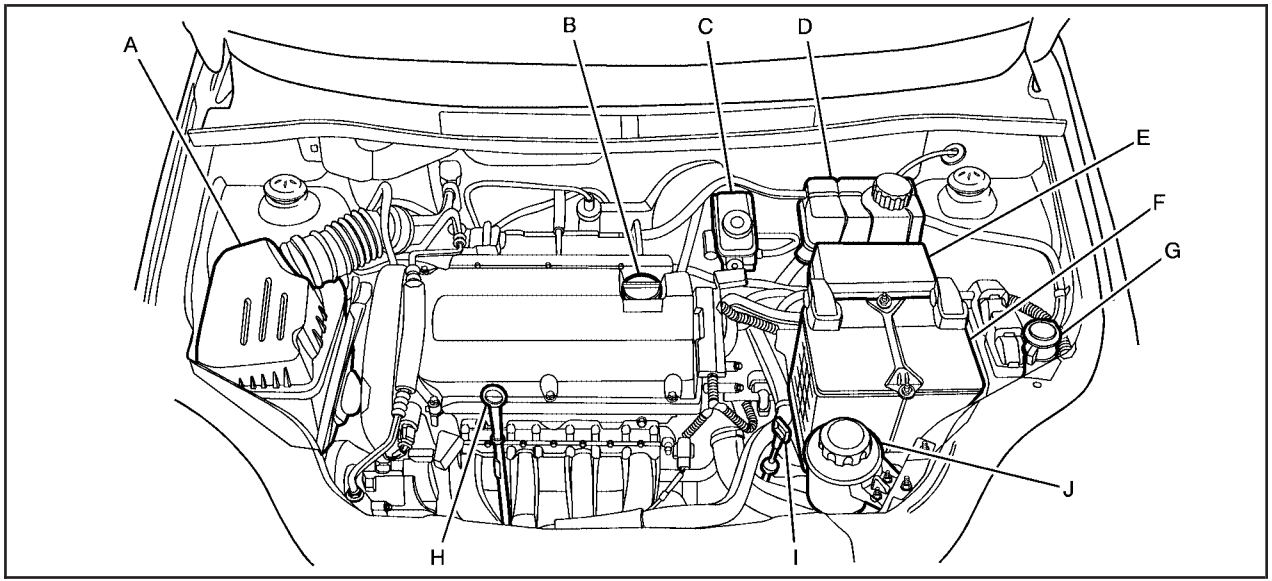

Automatic Transmission shown, Manual Transmission similar

A. *Engine Air Cleaner/Filter on page 5-19*.

B. Engine Oil Fill Cap. See “When to Add Engine Oil” under *Engine Oil on page 5-16*.

C. Brake/Clutch Fluid Reservoir. See “Brake Fluid” under *Brakes on page 5-34* and *Hydraulic Clutch on page 5-23*.

D. Engine Coolant Surge Tank. See *Cooling System on page 5-24*.

E. *Engine Compartment Fuse Block on page 5-89*.

F. *Battery on page 5-37*.

G. Windshield Washer Fluid Reservoir. See “Adding Washer Fluid” under *Windshield Washer Fluid on page 5-33*.

H. Engine Oil Dipstick. See “Checking Engine Oil” under *Engine Oil on page 5-16*.

I. Automatic Transmission Dipstick. See *Automatic Transmission Fluid on page 5-21*.

J. Power Steering Fluid Reservoir. See *Power Steering Fluid on page 5-32*.

Engine Oil

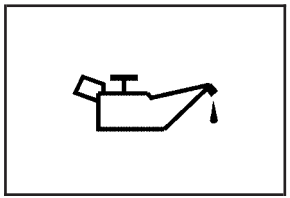

If the engine oil pressure light comes on, check the engine oil level right away.

The oil pressure light is on the instrument panel cluster. See *Oil Pressure Light on page 3-34*. Check the engine oil level regularly; this is an added reminder.

Checking Engine Oil

It is a good idea to check the engine oil level at each fuel fill. In order to get an accurate reading, the oil must be warm and the vehicle must be on level ground.

The engine oil dipstick handle is a yellow loop. See *Engine Compartment Overview on page 5-14* for the location of the engine oil dipstick.

1. Turn off the engine and give the oil several minutes to drain back into the oil pan. If this is not done, the oil dipstick might not show the actual level.
2. Pull the dipstick and clean it with a paper towel or cloth, then push it back in all the way. Remove it again, keeping the tip down and check the level.

When to Add Engine Oil

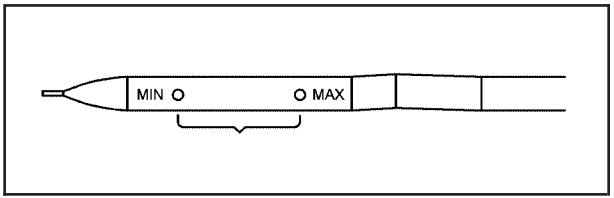

If the oil is below the MIN (minimum) mark on the dipstick, add at least one quart/liter of the recommended oil. This section explains what kind of oil to use. For engine oil crankcase capacity, see *Capacities and Specifications on page 5-93*.

Notice: **Do not add too much oil. If the engine has so much oil that the oil level gets above the upper mark that shows the proper operating range, the engine could be damaged.**

See *Engine Compartment Overview on page 5-14* for the location of the engine oil fill cap.

Add enough oil to put the level somewhere in the proper operating range. Push the dipstick all the way back in when through.

What Kind of Engine Oil to Use

Look for three things:

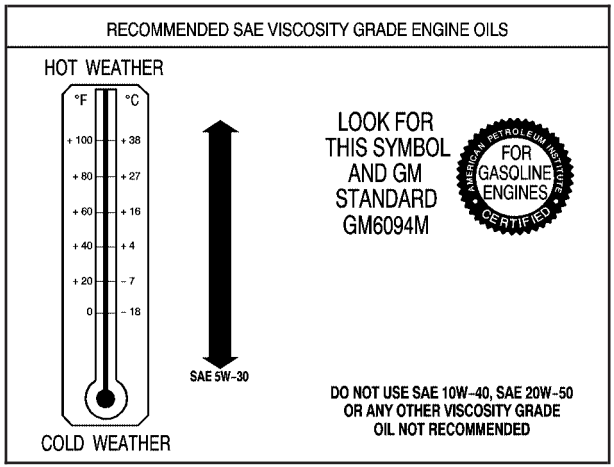

- GM6094M

  Use only an oil that meets GM Standard GM6094M.

- SAE 5W-30

  SAE 5W-30 is best for the vehicle. These numbers on an oil container show its viscosity, or thickness. Do not use other viscosity oils such as SAE 20W-50.

- American Petroleum Institute (API) starburst symbol

Oils meeting these requirements should have the starburst symbol on the container. This symbol indicates that the oil has been certified by the American Petroleum Institute (API).

Notice: **Use only engine oil identified as meeting GM Standard GM6094M and showing the American Petroleum Institute Certified For Gasoline Engines starburst symbol. Failure to use the recommended oil can result in engine damage not covered by the vehicle warranty.**

Cold Temperature Operation

If in an area of extreme cold, where the temperature falls below –20°F (–29°C), use either an SAE 5W-30 synthetic oil or an SAE 0W-30 engine oil. Both provide easier cold starting for the engine at extremely low temperatures. Always use an oil that meets the required specification, GM6094M. See “What Kind of Engine Oil to Use” for more information.

Engine Oil Additives / Engine Oil Flushes

Do not add anything to the oil. The recommended oils with the starburst symbol that meet GM Standard GM6094M are all that is needed for good performance and engine protection.

Engine oil system flushes are not recommended and could cause engine damage not covered by the vehicle warranty.

Engine Oil Life System

When to Change Engine Oil

This vehicle has the Engine Oil Life System, a computer system that indicates when to change the engine oil and filter. This is based on engine revolutions and engine temperature, and not on mileage. Based on driving conditions, the mileage at which an oil change is indicated can vary considerably. For the oil life system to work properly, the system must be reset every time the oil is changed.

When the system has calculated that oil life has been diminished, it indicates that an oil change is necessary. A change engine oil light displays. Change the oil as soon as possible within the next 600 miles (1 000 km).

It is possible that, if driving under the best conditions, the oil life system might not indicate that an oil change is necessary for over a year. However, the engine oil and filter must be changed at least once a year and at this time the system must be reset. Your dealer/retailer has trained service people who will perform this work using genuine parts and reset the system. It is also important to check the oil regularly and keep it at the proper level.

If the system is ever reset accidentally, the oil must be changed at 3,000 miles (5 000 km) since the last oil change. Remember to reset the oil life system whenever the oil is changed.

How to Reset the Engine Oil Life System

The Engine Oil Life System calculates when to change your engine oil and filter based on vehicle use. Whenever the oil is changed, reset the system so it can calculate when the next oil change is required. If a situation occurs where the oil is changed prior to a change engine oil light being turned on, reset the system.

After changing the engine oil, the system must be reset:

1. With the engine off, turn the ignition key to ON/RUN.
2. Fully press and release the accelerator pedal slowly three times within five seconds.
3. Turn the key to LOCK/OFF, then start the vehicle.

If the change engine oil light comes back on when the vehicle is started, the engine oil life system has not reset. Repeat the reset procedure.

What to Do with Used Oil

Used engine oil contains certain elements that can be unhealthy for your skin and could even cause cancer. Do not let used oil stay on your skin for very long. Clean your skin and nails with soap and water, or a good hand cleaner. Wash or properly dispose of clothing or rags containing used engine oil. See the manufacturer's warnings about the use and disposal of oil products.

Used oil can be a threat to the environment. If you change your own oil, be sure to drain all the oil from the filter before disposal. Never dispose of oil by putting it in the trash, pouring it on the ground, into sewers, or into streams or bodies of water. Recycle it by taking it to a place that collects used oil.

Engine Air Cleaner/Filter

The engine air cleaner/filter is located in the engine compartment on the passenger side of the vehicle. See *Engine Compartment Overview on page 5-14* for more information on location.

When to Inspect the Engine Air Cleaner/Filter

Inspect the air cleaner/filter at the Maintenance II intervals and replace it at the first oil change after each 50,000 mile (80 000 km) interval. See *Scheduled Maintenance on page 6-4* for more information. If you are driving in dusty/dirty conditions, inspect the filter at each engine oil change.

How to Inspect the Engine Air Cleaner/Filter

To inspect the engine air cleaner/filter, remove the filter from the vehicle and lightly shake the filter to release loose dust and dirt. If the filter remains caked with dirt, a new filter is required.

To inspect or replace the air cleaner/filter:

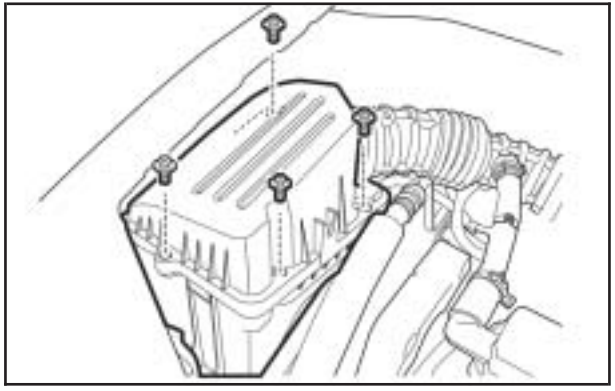

1. Remove the screws and lift off the cover.
2. Inspect or replace the engine air cleaner/filter.
3. Put the cover back on tightly and tighten the screws.

See *Additional Required Services on page 6-6* for replacement intervals.

⚠ CAUTION:

Operating the engine with the air cleaner/filter off can cause you or others to be burned. The air cleaner not only cleans the air; it helps to stop flames if the engine backfires. If it is not there and the engine backfires, you could be burned. Do not drive with it off, and be careful working on the engine with the air cleaner/filter off.

Notice: **If the air cleaner/filter is off, a backfire can cause a damaging engine fire. And, dirt can easily get into the engine, which will damage it. Always have the air cleaner/filter in place when you are driving.**

Automatic Transmission Fluid

When to Check Automatic Transmission Fluid

Check the automatic transmission fluid level at least twice a year. Add fluid if needed. See *Scheduled Maintenance on page 6-4*.

How to Check Automatic Transmission Fluid

Because this operation can be a little difficult, you may choose to have this done at the dealer/retailer service department.

If you do it yourself, be sure to follow all the instructions here, or you could get a false reading on the dipstick.

Notice: **Too much or too little fluid can damage your transmission. Too much can mean that some of the fluid could come out and fall on hot engine parts or exhaust system parts, starting a fire. Too little fluid could cause the transmission to overheat. Be sure to get an accurate reading if you check your transmission fluid.**

Wait at least 30 minutes before checking the transmission fluid level if you have been driving:

- When outside temperatures are above 90°F (32°C).
- At high speed for quite a while.
- In heavy traffic — especially in hot weather.

To get the right reading, the fluid should be at normal operating temperature, which is 158°F to 176°F (70°C to 80°C).

Get the vehicle warmed up by driving about 15 miles (24 km) when outside temperatures are above 50°F (10°C). If it is colder than 50°F (10°C), you may have to drive longer.

Checking the Fluid Level

Prepare the vehicle as follows:

1. Park the vehicle on a level place. Keep the engine running.
2. With the parking brake applied, place the shift lever in P (Park).
3. With your foot on the brake pedal, move the shift lever through each gear range, pausing for about three seconds in each range. Then, position the shift lever in P (Park).
4. Let the engine run at idle for three to five minutes.

Then, without shutting off the engine, follow these steps:

1. Locate the automatic transmission dipstick which is located toward the front of the engine compartment, near the power steering fluid reservoir.

   See *Engine Compartment Overview on page 5-14* for more information on location.

2. Pull out the dipstick and wipe it with a clean rag or paper towel.
3. Push the dipstick back in all the way, wait three seconds, and then pull it back out again.

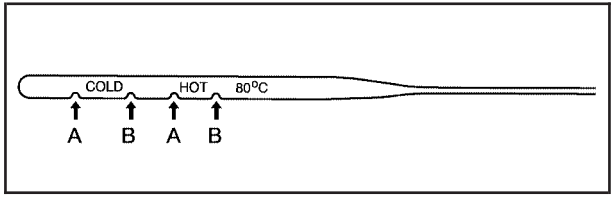

4. Check both sides of the dipstick. The fluid should be between MIN (A) and MAX (B) mark of the hot area of the dipstick.
5. If the fluid level is in the acceptable range, push the dipstick back in all the way.

How to Add Automatic Transmission Fluid

Refer to the Maintenance Schedule to determine what kind of transmission fluid to use. See *Recommended Fluids and Lubricants on page 6-13*.

If the fluid level is low, add only enough of the proper fluid to bring the level into the area between the two dimples in the hot range on the dipstick.

1. Pull out the dipstick.
2. Using a long-neck funnel, add enough fluid at the dipstick hole to bring it to the proper level.

   It does not take much fluid, generally less than one pint (0.5 L). Do not overfill.

Notice: **Use of the incorrect automatic transmission fluid may damage the vehicle, and the damages may not be covered by the vehicle's warranty. Always use the automatic transmission fluid listed in *Recommended Fluids and Lubricants on page 6-13*.**

3. After adding fluid, recheck the fluid level as described under "How to Check Automatic Transmission Fluid" earlier in this section.
4. When the correct fluid level is obtained, push the dipstick back in all the way.

Manual Transmission Fluid

It is not necessary to check the transmission fluid level. A transmission fluid leak is the only reason for fluid loss. If a leak occurs, take the vehicle to the dealer/retailer service department and have it repaired as soon as possible. See *Recommended Fluids and Lubricants on page 6-13* for the proper fluid to use.

Hydraulic Clutch

There is one reservoir for both the brake and the hydraulic clutch fluid. See *Brakes on page 5-34* for more information.

The hydraulic clutch linkage in the vehicle is self-adjusting. The master cylinder reservoir is filled with hydraulic fluid.

A fluid loss in this system could indicate a problem. Have the system inspected and repaired.

When to Check and What to Use

Refer to the Maintenance Schedule to determine how often to check the fluid level in the master cylinder reservoir and for the proper fluid. See *Owner Checks and Services on page 6-9* and *Recommended Fluids and Lubricants on page 6-13*.

How to Check and Add Fluid

The reservoir is located near the back of the engine compartment on the driver side of the vehicle. See *Engine Compartment Overview on page 5-14* for more information on location.

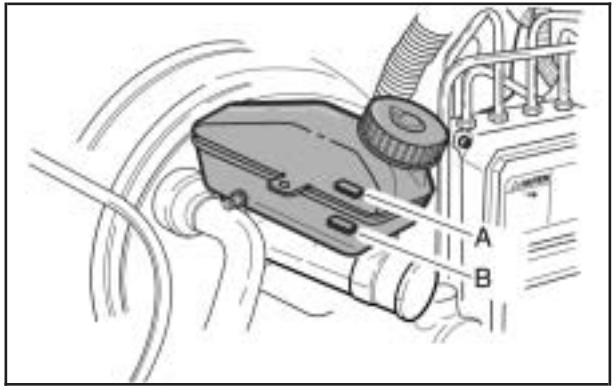

To check the fluid level, look on the side of the reservoir. If the fluid reaches the MAX (A) mark on the reservoir, the fluid level is correct. If the fluid does not reach the MIN (B) mark on the reservoir, then fluid needs to be added.

Cooling System

The cooling system allows the engine to maintain the correct working temperature.

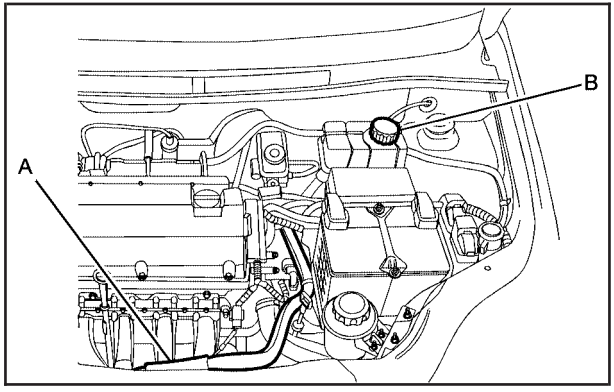

A. Electric Engine Cooling Fan

B. Coolant Surge Tank with Pressure Cap

⚠ CAUTION:

An electric engine cooling fan under the hood can start up even when the engine is not running and can cause injury. Keep hands, clothing, and tools away from any underhood electric fan.

⚠ CAUTION:

Heater and radiator hoses, and other engine parts, can be very hot. Do not touch them. If you do, you can be burned.

Do not run the engine if there is a leak. If you run the engine, it could lose all coolant. That could cause an engine fire, and you could be burned. Get any leak fixed before you drive the vehicle.

Notice: **Using coolant other than DEX-COOL® can cause premature engine, heater core, or radiator corrosion. In addition, the engine coolant may require changing sooner, at the first maintenance service after each 30,000 miles (50 000 km) or 24 months, whichever occurs first. Any repairs would not be covered by the vehicle warranty. Always use DEX-COOL® (silicate-free) coolant in the vehicle.**

Engine Coolant

The cooling system in the vehicle is filled with DEX-COOL® engine coolant. This coolant is designed to remain in the vehicle for five years or 150,000 miles (240 000 km), whichever occurs first.

The following explains the cooling system and how to check and add coolant when it is low. If there is a problem with engine overheating, see *Engine Overheating on page 5-30*.

What to Use

⚠ CAUTION:

Adding only plain water to the cooling system can be dangerous. Plain water, or some other liquid such as alcohol, can boil before the proper coolant mixture will. The vehicle's coolant warning system is set for the proper coolant mixture. With plain water or the wrong mixture, the engine could get too hot but you would not get the overheat warning. The engine could catch fire and you or others could be burned. Use a 50/50 mixture of clean, drinkable water and DEX-COOL® coolant.

Use a 50/50 mixture of clean, drinkable water and DEX-COOL® coolant. If using this mixture, nothing else needs to be added. This mixture:

- Gives freezing protection down to –34°F (–37°C), outside temperature.
- Gives boiling protection up to 265°F (129°C), engine temperature.
- Protects against rust and corrosion.
- Will not damage aluminum parts.
- Helps keep the proper engine temperature.

Notice: **If an improper coolant mixture is used, the engine could overheat and be badly damaged. The repair cost would not be covered by the vehicle warranty. Too much water in the mixture can freeze and crack the engine, radiator, heater core, and other parts.**

Notice: **If extra inhibitors and/or additives are used in the vehicle's cooling system, the vehicle could be damaged. Use only the proper mixture of the engine coolant listed in this manual for the cooling system. See *Recommended Fluids and Lubricants on page 6-13* for more information.**

Checking Coolant

The vehicle must be on a level surface when checking the coolant level.

Check to see if coolant is visible in the coolant surge tank. If the coolant inside the coolant surge tank is boiling, do not do anything else until it cools down. If coolant is visible but the coolant level is not between the Minimum and Maximum marks, add a 50/50 mixture of clean, drinkable water and DEX-COOL® coolant at the coolant surge tank, but be sure the cooling system is cool before this is done. See *Engine Coolant on page 5-25* for more information.

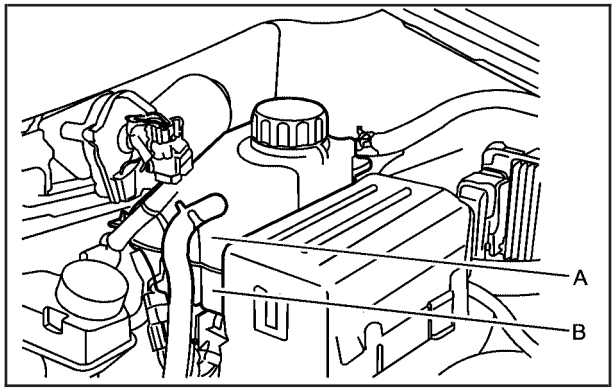

The engine coolant surge tank is located in the rear of the engine compartment on the driver side of the vehicle. See *Engine Compartment Overview on page 5-14* for more information on location.

⚠ CAUTION:

Turning the surge tank pressure cap when the engine and radiator are hot can allow steam and scalding liquids to blow out and burn you badly. Never turn the surge tank pressure cap — even a little — when the engine and radiator are hot.

When the engine is cold, the coolant level should be between the Maximum (A) and Minimum (B) marks on the coolant surge tank. The level rises at engine operation temperature and drops again when the engine cools down.

The coolant should be between the Maximum (A) and Minimum (B) marks, when the engine is cold. If it is not, there could be a leak in the cooling system.

How to Add Coolant to the Coolant Surge Tank

⚠ CAUTION:

You can be burned if you spill coolant on hot engine parts. Coolant contains ethylene glycol and it will burn if the engine parts are hot enough. Do not spill coolant on a hot engine.

Notice: **This vehicle has a specific coolant fill procedure. Failure to follow this procedure could cause the engine to overheat and be severely damaged.**

⚠ CAUTION:

An electric engine cooling fan under the hood can start up even when the engine is not running and can cause injury. Keep hands, clothing, and tools away from any underhood electric fan.

⚠ CAUTION:

Steam and scalding liquids from a hot cooling system can blow out and burn you badly. They are under pressure, and if you turn the surge tank pressure cap — even a little — they can come out at high speed. Never turn the cap when the cooling system, including the surge tank pressure cap, is hot. Wait for the cooling system and surge tank pressure cap to cool if you ever have to turn the pressure cap.

If no coolant is visible in the surge tank, add coolant as follows:

1. Remove the coolant surge tank pressure cap when the cooling system, including the coolant surge tank pressure cap and upper radiator hose, is no longer hot. Turn the pressure cap slowly counterclockwise about two or two and one-half turns.

   If you hear a hiss, wait for that to stop. This will allow any pressure still left to be vented out the discharge hose.

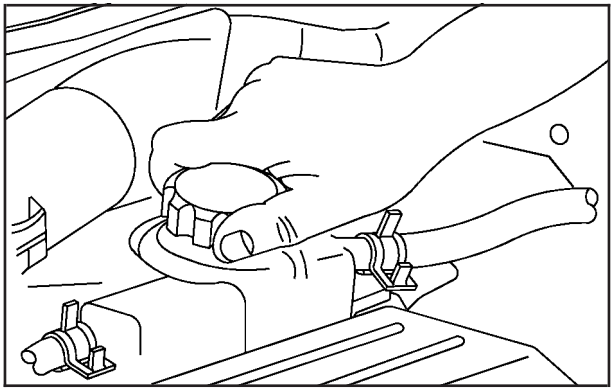

2. Then keep turning the pressure cap slowly and remove it.

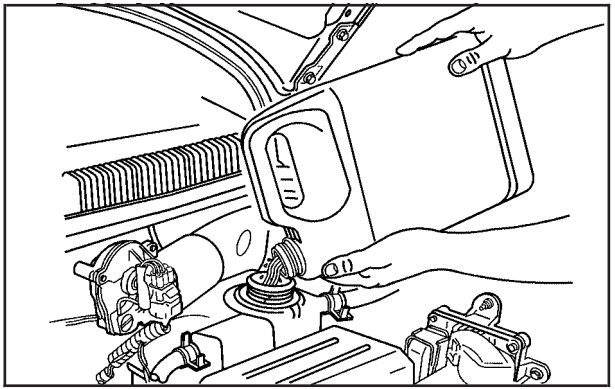

3. Fill the coolant surge tank with the proper mixture to the Maximum mark on the coolant surge tank. Wait about five minutes, then check to see if the level is below the mark. If the level is below the Maximum mark, add additional coolant to bring the level up to the mark.

   Repeat this procedure until the level remains constant at the Maximum mark for at least five minutes.

4. With the coolant surge tank pressure cap off, start the engine and let it run until you can feel the upper radiator hose getting hot. Watch out for the engine cooling fan.

   By this time, the coolant level inside the coolant surge tank may be lower. If the level is lower than the Maximum mark, add more of the proper mixture to the coolant surge tank until the level reaches the mark.

5. Replace the pressure cap. Be sure the pressure cap is hand-tight and fully seated.

Notice: **If the pressure cap is not tightly installed, coolant loss and possible engine damage may occur. Be sure the cap is properly and tightly secured.**

Engine Overheating

The vehicle has an indicator to warn of the engine overheating.

There is a coolant temperature gage on the instrument panel cluster. See *Engine Coolant Temperature Gage on page 3-31*.

You may decide not to lift the hood when this warning appears, but instead get service help right away. See *Roadside Assistance Program on page 7-7*.

If you do decide to lift the hood, make sure the vehicle is parked on a level surface.

Then check to see if the engine cooling fan is running. If the engine is overheating, the fan should be running. If it is not, do not continue to run the engine and have the vehicle serviced.

Notice: **Engine damage from running the engine without coolant is not covered by the warranty.**

Notice: **If the engine catches fire because of being driven with no coolant, your vehicle can be badly damaged. The costly repairs would not be covered by the vehicle warranty.**

If Steam Is Coming From The Engine Compartment

⚠ CAUTION:

Steam from an overheated engine can burn you badly, even if you just open the hood. Stay away from the engine if you see or hear steam coming from it. Just turn it off and get everyone away from the vehicle until it cools down. Wait until there is no sign of steam or coolant before you open the hood.

If you keep driving when your engine is overheated, the liquids in it can catch fire. You or others could be badly burned. Stop your engine if it overheats, and get out of the vehicle until the engine is cool.

If No Steam Is Coming From The Engine Compartment

If an engine overheat warning is displayed but no steam can be seen or heard, the problem may not be too serious. Sometimes the engine can get a little too hot when the vehicle:

- Climbs a long hill on a hot day.
- Stops after high-speed driving.
- Idles for long periods in traffic.

If the overheat warning is displayed with no sign of steam:

1. Turn the air conditioning off.
2. Turn the heater on to the highest temperature and to the highest fan speed. Open the windows as necessary.
3. If in a traffic jam, let the engine idle in N (Neutral) while stopped. If it is safe to do so, pull off the road, shift to P (Park) or N (Neutral) and let the engine idle.

If the temperature overheat gage is no longer in the overheat zone or an overheat warning no longer displays, the vehicle can be driven. Continue to drive the vehicle slow for about 10 minutes. Keep a safe vehicle distance from the car in front of you. If the warning does not come back on, continue to drive normally.

If the warning continues, pull over, stop, and park the vehicle right away.

If there is no sign of steam, idle the engine for three minutes while parked. If the warning is still displayed, turn off the engine until it cools down.

Power Steering Fluid

When to Check Power Steering Fluid

The power steering fluid reservoir is located toward the front of the engine compartment on the driver's side of the vehicle. See *Engine Compartment Overview on page 5-14* for reservoir location.

It is not necessary to regularly check power steering fluid unless you suspect there is a leak in the system or you hear an unusual noise. A fluid loss in this system could indicate a problem. Have the system inspected and repaired.

How to Check Power Steering Fluid

Turn the key off and let the engine compartment cool down.

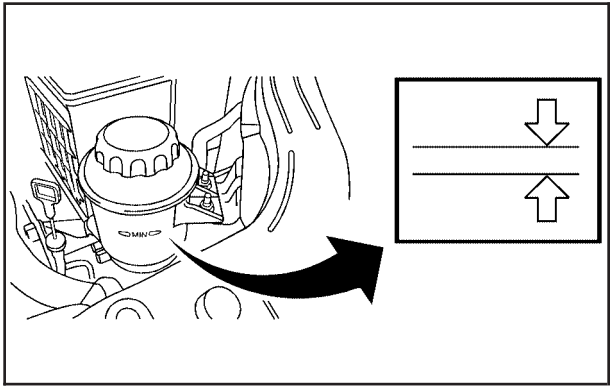

The level should be between the MIN (B) and MAX (A) marks on the reservoir. If the level drops below the MIN (B) mark, add power steering fluid. Do not overfill the reservoir and remember to replace the cap tightly when you are finished and clean up any spilled fluid.

What to Use

To determine what kind of fluid to use, see *Recommended Fluids and Lubricants on page 6-13*. Always use the proper fluid. Failure to use the proper fluid can cause leaks and damage hoses and seals.

Windshield Washer Fluid

What to Use

When you need windshield washer fluid, be sure to read the manufacturer's instructions before use. If you will be operating your vehicle in an area where the temperature may fall below freezing, use a fluid that has sufficient protection against freezing.

Adding Washer Fluid

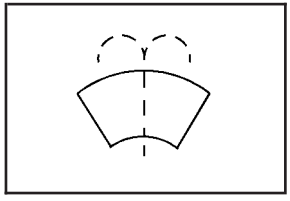

Open the cap with the washer symbol on it. Add washer fluid until the tank is full. See *Engine Compartment Overview on page 5-14* for reservoir location.

Notice:

- **When using concentrated washer fluid, follow the manufacturer's instructions for adding water.**
- **Do not mix water with ready-to-use washer fluid. Water can cause the solution to freeze and damage your washer fluid tank and other parts of the washer system. Also, water does not clean as well as washer fluid.**
- **Fill the washer fluid tank only three-quarters full when it is very cold. This allows for fluid expansion if freezing occurs, which could damage the tank if it is completely full.**
- **Do not use engine coolant (antifreeze) in your windshield washer. It can damage the vehicle's windshield washer system and paint.**

Brakes

Brake Fluid

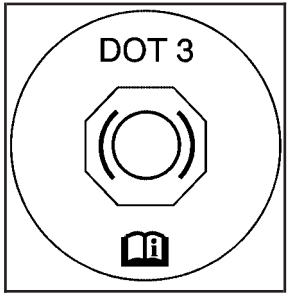

The vehicle has one reservoir for both the brake and clutch hydraulic systems. It is filled with DOT-3 brake fluid.

See *Engine Compartment Overview on page 5-14* for the location of the reservoir.

There are only two reasons why the brake fluid level in the reservoir might go down:

- The brake fluid level goes down because of normal brake lining wear. When new linings are installed, the fluid level goes back up.
- A fluid leak in the brake or clutch hydraulic system can also cause a low fluid level. Have the brake or clutch hydraulic system fixed, since a leak means that sooner or later the brakes will not work well.

Do not top off the brake fluid. Adding brake fluid does not correct a leak. If fluid is added when the linings are worn, there will be too much fluid when new brake linings are installed. Add or remove fluid, as necessary, only when work is done on the brake or clutch hydraulic system.

⚠ CAUTION:

If too much brake fluid is added, it can spill on the engine and burn, if the engine is hot enough. You or others could be burned, and the vehicle could be damaged. Add brake fluid only when work is done on the brake and/or clutch hydraulic system.

When the brake fluid falls to a low level, the brake warning light comes on. See *Brake System Warning Light on page 3-28*.

What to Add

Use only new DOT-3 brake fluid from a sealed container. See *Recommended Fluids and Lubricants on page 6-13*.

Always clean the brake fluid reservoir cap and the area around the cap before removing it. This helps keep dirt from entering the reservoir.

⚠ CAUTION:

With the wrong kind of fluid in the brake or clutch hydraulic system, the brakes or clutch might not work well. This could cause a crash. Always use the proper brake fluid.

Notice:

- **Using the wrong fluid can badly damage brake or clutch hydraulic system parts. For example, just a few drops of mineral-based oil, such as engine oil, in the brake or clutch hydraulic system can damage brake or clutch hydraulic system parts so badly that they will have to be replaced. Do not let someone put in the wrong kind of fluid.**
- **If brake fluid is spilled on the vehicle's painted surfaces, the paint finish can be damaged. Be careful not to spill brake fluid on the vehicle. If you do, wash it off immediately. See *Washing Your Vehicle on page 5-82*.**

Brake Wear

This vehicle has front disc brakes and could have rear drum brakes or rear disc brakes.

Disc brake pads have built-in wear indicators that make a high-pitched warning sound when the brake pads are worn and new pads are needed. The sound can come and go or be heard all the time the vehicle is moving, except when applying the brake pedal firmly.

⚠ CAUTION:

The brake wear warning sound means that soon the brakes will not work well. That could lead to an accident. When the brake wear warning sound is heard, have the vehicle serviced.

Notice: **Continuing to drive with worn-out brake pads could result in costly brake repair.**

Some driving conditions or climates can cause a brake squeal when the brakes are first applied or lightly applied. This does not mean something is wrong with the brakes.

Properly torqued wheel nuts are necessary to help prevent brake pulsation. When tires are rotated, inspect brake pads for wear and evenly tighten wheel nuts in the proper sequence to torque specifications in *Capacities and Specifications on page 5-93*.

If the vehicle has rear drum brakes, they do not have wear indicators, but if a rear brake rubbing noise is heard, have the rear brake linings inspected immediately. Rear brake drums should be removed and inspected each time the tires are removed for rotation or changing. When the front brake pads are replaced, have the rear brakes inspected, too.

Brake linings should always be replaced as complete axle sets.

Brake Pedal Travel

See your dealer/retailer if the brake pedal does not return to normal height, or if there is a rapid increase in pedal travel. This could be a sign that brake service might be required.

Brake Adjustment

Every moderate brake stop, the disc brakes adjust for wear. If rarely making moderate or heavier brake stops, the brakes might not adjust correctly. Very carefully making a few moderate brake stops about every 1,000 miles (1 600 km) will adjust the brakes properly.

If the vehicle has rear drum brakes and the brake pedal goes down farther than normal, the rear drum brakes might need adjustment. Adjust them by backing up and firmly applying the brakes a few times.

Replacing Brake System Parts

The braking system on a vehicle is complex. Its many parts have to be of top quality and work well together if the vehicle is to have really good braking. The vehicle was designed and tested with top-quality brake parts. When parts of the braking system are replaced — for example, when the brake linings wear down and new ones are installed — be sure to get new approved replacement parts. If this is not done, the brakes might not work properly. For example, if someone puts in brake linings that are wrong for the vehicle, the balance between the front and rear brakes can change — for the worse. The braking performance expected can change in many other ways if the wrong replacement brake parts are installed.

Battery

This vehicle has a maintenance free battery. When it is time for a new battery, see your dealer/retailer for one that has the replacement number shown on the original battery's label. See *Engine Compartment Overview on page 5-14* for battery location.

Warning: Battery posts, terminals, and related accessories contain lead and lead compounds, chemicals known to the State of California to cause cancer and reproductive harm. Wash hands after handling.

Vehicle Storage

⚠ CAUTION:

Batteries have acid that can burn you and gas that can explode. You can be badly hurt if you are not careful. See *Jump Starting on page 5-38* for tips on working around a battery without getting hurt.

Infrequent Usage: If the vehicle is driven infrequently, remove the black, negative (–) cable from the battery. This helps keep the battery from running down.

Extended Storage: For extended storage of the vehicle, remove the black, negative (–) cable from the battery or use a battery trickle charger. This helps maintain the charge of the battery over an extended period of time.

Jump Starting

If the vehicle's battery has run down, you may want to use another vehicle and some jumper cables to start your vehicle. Be sure to use the following steps to do it safely.

⚠ CAUTION:

Batteries can hurt you. They can be dangerous because:

- They contain acid that can burn you.
- They contain gas that can explode or ignite.
- They contain enough electricity to burn you.

If you do not follow these steps exactly, some or all of these things can hurt you.

Notice: **Ignoring these steps could result in costly damage to the vehicle that would not be covered by the warranty.**

Trying to start the vehicle by pushing or pulling it will not work, and it could damage the vehicle.

1. Check the other vehicle. It must have a 12-volt battery with a negative ground system.

Notice: **If the other vehicle's system is not a 12-volt system with a negative ground, both vehicles can be damaged. Only use vehicles with 12-volt systems with negative grounds to jump start your vehicle.**

2. Get the vehicles close enough so the jumper cables can reach, but be sure the vehicles are not touching each other. If they are, it could cause a ground connection you do not want. You would not be able to start your vehicle, and the bad grounding could damage the electrical systems.

   To avoid the possibility of the vehicles rolling, set the parking brake firmly on both vehicles involved in the jump start procedure. Put an automatic transmission in P (Park) or a manual transmission in N (Neutral) before setting the parking brake.

Notice: **If you leave the radio or other accessories on during the jump starting procedure, they could be damaged. The repairs would not be covered by the warranty. Always turn off the radio and other accessories when jump starting the vehicle.**

3. Turn off the ignition on both vehicles. Unplug unnecessary accessories plugged into the cigarette lighter or the accessory power outlet. Turn off the radio and all lamps that are not needed. This will avoid sparks and help save both batteries. And it could save the radio!
4. Open the hoods and locate the batteries. Find the positive (+) and negative (–) terminal locations on each vehicle. See *Engine Compartment Overview on page 5-14* for more information on location.

⚠ CAUTION:

An electric fan can start up even when the engine is not running and can injure you. Keep hands, clothing and tools away from any underhood electric fan.

⚠ CAUTION:

Using a match near a battery can cause battery gas to explode. People have been hurt doing this, and some have been blinded. Use a flashlight if you need more light.

Be sure the battery has enough water. You do not need to add water to the battery installed in your new vehicle. But if a battery has filler caps, be sure the right amount of fluid is there. If it is low, add water to take care of that first. If you don't, explosive gas could be present.

Battery fluid contains acid that can burn you. Do not get it on you. If you accidentally get it in your eyes or on your skin, flush the place with water and get medical help immediately.

⚠ CAUTION:

Fans or other moving engine parts can injure you badly. Keep your hands away from moving parts once the engine is running.

5. Check that the jumper cables do not have loose or missing insulation. If they do, you could get a shock. The vehicles could be damaged too.

   Before you connect the cables, here are some things you should know. Positive (+) will go to positive (+) or to a remote positive (+) terminal if the vehicle has one. Negative (–) will go to a heavy, unpainted metal engine part or to a remote negative (–) terminal if the vehicle has one.

   Do not connect positive (+) to negative (–) or you will get a short that would damage the battery and maybe other parts too. And do not connect the negative (–) cable to the negative (–) terminal on the dead battery because this can cause sparks.

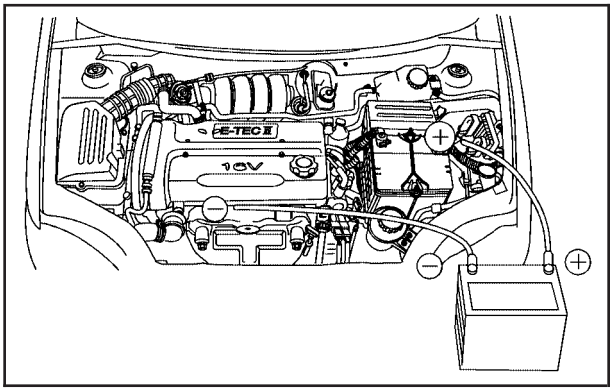

6. Connect the red positive (+) cable to the positive (+) terminal of the dead battery. Use a remote positive (+) terminal if the vehicle has one.

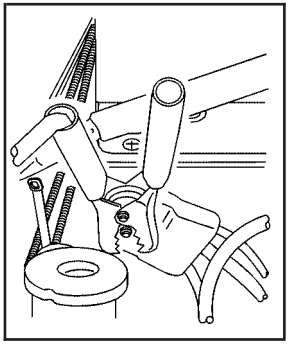

7. Do not let the other end touch metal. Connect it to the positive (+) terminal of the good battery. Use a remote positive (+) terminal if the vehicle has one.

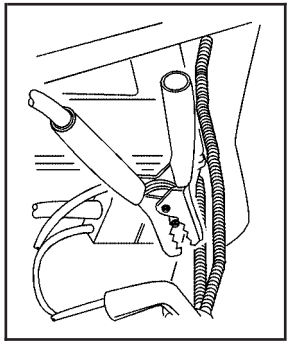

8. Now connect the black negative (–) cable to the negative (–) terminal of the good battery. Use a remote negative (–) terminal if the vehicle has one.

   Do not let the other end touch anything until the next step. The other end of the negative (–) cable *does not* go to the dead battery. It goes to a heavy, unpainted metal engine part or to a remote negative (–) terminal on the vehicle with the dead battery.

9. Connect the other end of the negative (–) cable at least 18 inches (45 cm) away from the dead battery, but not near engine parts that move.

   The electrical connection is just as good there, and the chance of sparks getting back to the battery is much less.

10. Now start the vehicle with the good battery and run the engine for a while.

11. Try to start the vehicle that had the dead battery. If it will not start after a few tries, it probably needs service.

Notice: **If the jumper cables are connected or removed in the wrong order, electrical shorting may occur and damage the vehicle. The repairs would not be covered by the vehicle warranty. Always connect and remove the jumper cables in the correct order, making sure that the cables do not touch each other or other metal.**

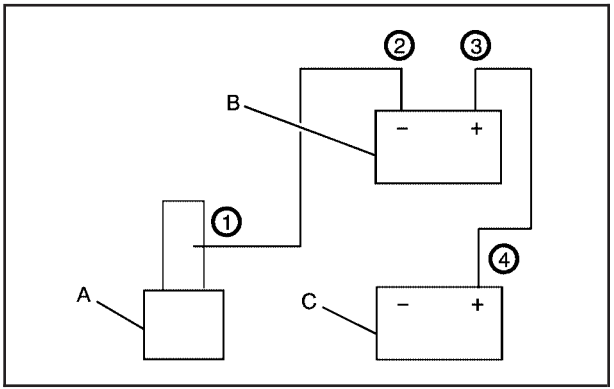

Jumper Cable Removal

A. Heavy, Unpainted Metal Engine Part or Remote Negative (–) Terminal

B. Good Battery or Remote Positive (+) and Remote Negative (–) Terminals

C. Dead Battery or Remote Positive (+) Terminal

To disconnect the jumper cables from both vehicles, do the following:

1. Disconnect the black negative (–) cable from the vehicle that had the dead battery.
2. Disconnect the black negative (–) cable from the vehicle with the good battery.
3. Disconnect the red positive (+) cable from the vehicle with the good battery.
4. Disconnect the red positive (+) cable from the other vehicle.

Headlamp Aiming

Headlamp aim has been preset at the factory and should need no further adjustment.

However, if your vehicle is damaged in a crash, the headlamp aim may be affected. Aim adjustment to the low-beam headlamps may be necessary if oncoming drivers flash their high-beam headlamps at you (for vertical aim).

If the headlamps need to be re-aimed, it is recommended that you take the vehicle to your dealer/retailer for service.

Bulb Replacement

For the proper type of replacement bulbs, see *Replacement Bulbs on page 5-49*.

For any bulb changing procedure not listed in this section, contact your dealer/retailer.

Halogen Bulbs

⚠ CAUTION:

Halogen bulbs have pressurized gas inside and can burst if you drop or scratch the bulb. You or others could be injured. Be sure to read and follow the instructions on the bulb package.

Headlamps

To replace a headlamp bulb:

1. Open the hood. See *Hood Release on page 5-12*.

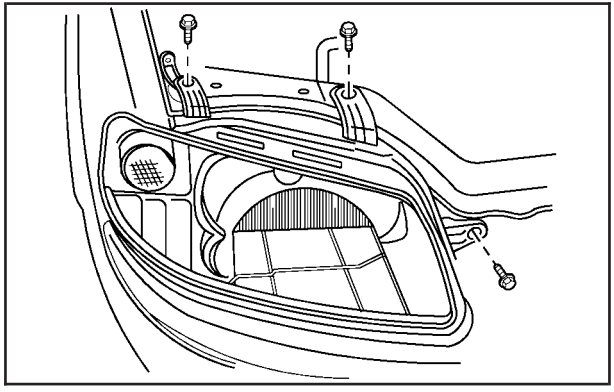

2. Remove the three bolts to remove the headlamp assembly.
3. Disconnect the wiring harness connector from the rear of the bulb.

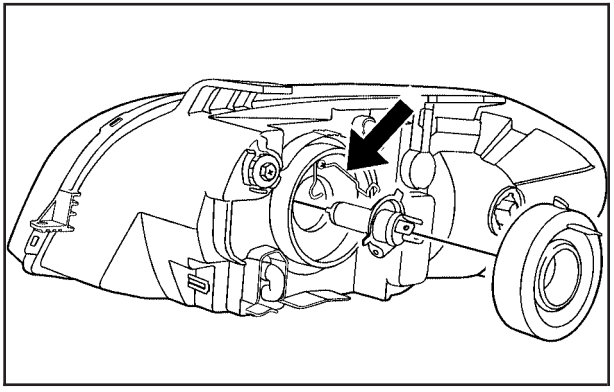

4. Remove the headlamp cap.
5. Release the spring that retains the bulb by loosening the screw.
6. Remove the old bulb and install the new bulb.
7. Install the bulb retaining spring and tighten the screw.
8. Reinstall the headlamp cap.
9. Reconnect the wiring harness at the rear of the bulb.

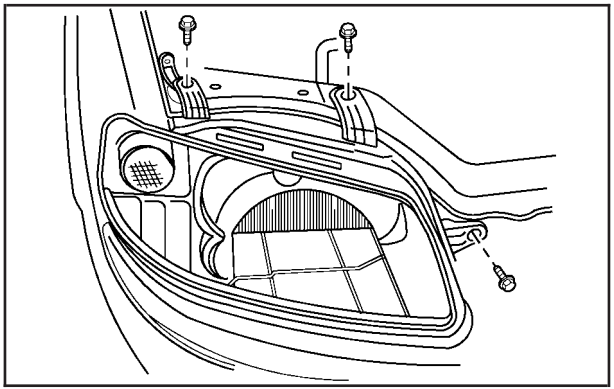

10. Reinstall the headlamp assembly using the three bolts.

Front Turn Signal, Sidemarker and Parking Lamps

To replace a front turn signal or parking lamp bulb:

1. Open the hood. See *Hood Release on page 5-12* for more information.

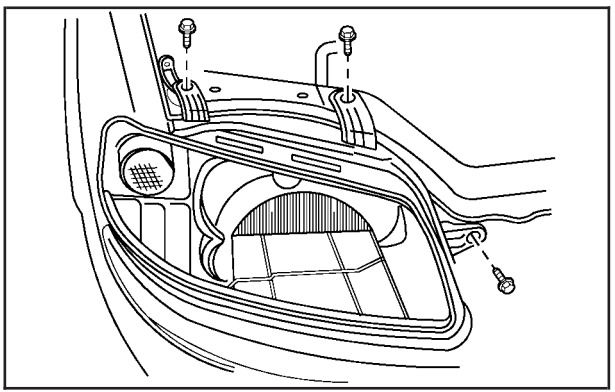

2. Remove the three bolts to remove the headlamp assembly.
3. Disconnect the wiring harness connector from the rear of the bulb.

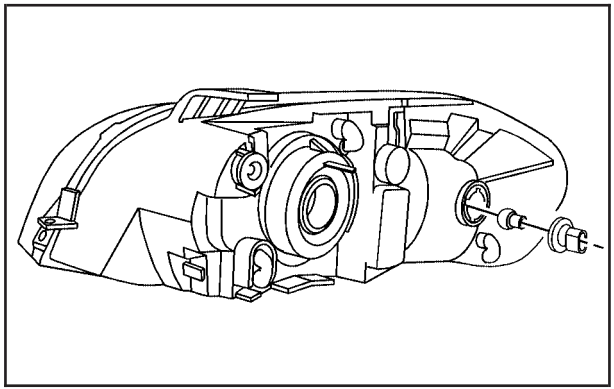

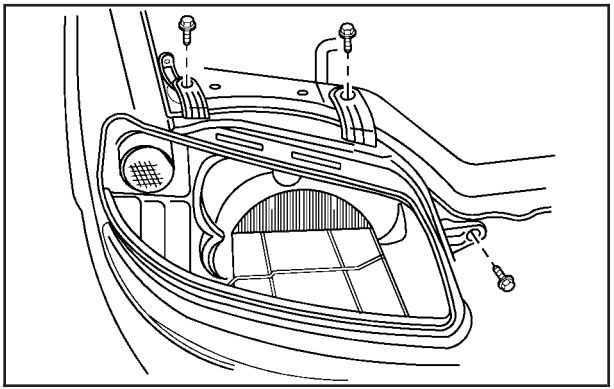

4. Turn the front turn signal bulb socket counterclockwise.
5. Pull the front turn signal bulb socket out of the lamp housing.
6. Press the bulb inward and turn it counterclockwise to remove it from the bulb socket.
7. Install the new bulb into the socket by pressing it in and turning it clockwise.
8. Install the socket into the lamp housing by turning it clockwise.
9. Reconnect the wiring harness connector at the rear of the bulb.
10. Reinstall the headlamp assembly using the three bolts.

Center High-Mounted Stoplamp (CHMSL) (Hatchback)

To replace a CHMSL bulb on the hatchback:

1. Open the liftgate. See *Liftgate (Hatchback) on page 2-10* for more information.

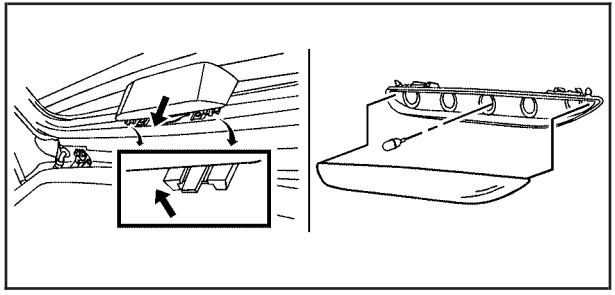

2. Pull down on the lamp assembly while holding the end of the bracket.
3. Remove the lens cover using a flat head screwdriver.
4. Remove the bulb by pulling it straight out of the bulb holder.
5. Install the new bulb.
6. Reverse Steps 1 through 3 to reinstall.

Center High-Mounted Stoplamp (CHMSL) (Sedan)

To replace a CHMSL bulb on the sedan:

1. Open the trunk. See *Trunk (Sedan) on page 2-8* for more information.
2. Remove the two screws and the lamp housing. Disconnect the wiring harness connector before removing the lamp housing.

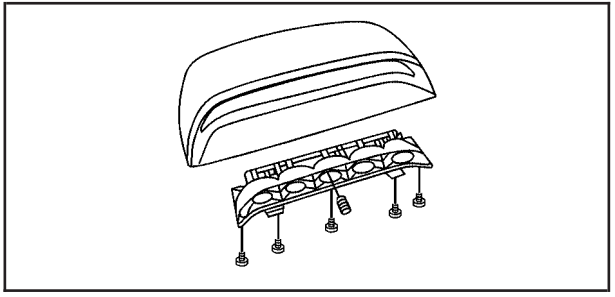

3. Remove the five screws and the reflector assembly.
4. Remove the bulb by pulling it straight out of the bulb holder.
5. Install the new bulb.
6. Reverse Steps 1 through 3 to reinstall.

Taillamps, Turn Signal, Sidemarker, Stoplamps and Back-up Lamps

To replace a taillamp, turn signal lamp, stoplamp, or back-up bulb:

1. Open the liftgate or trunk. See *Liftgate (Hatchback) on page 2-10* or *Trunk (Sedan) on page 2-8*.

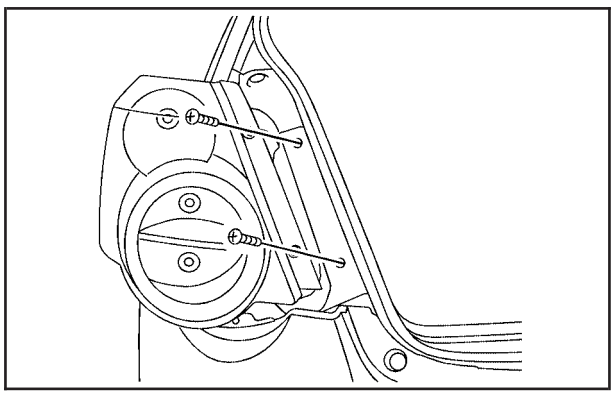

Hatchback

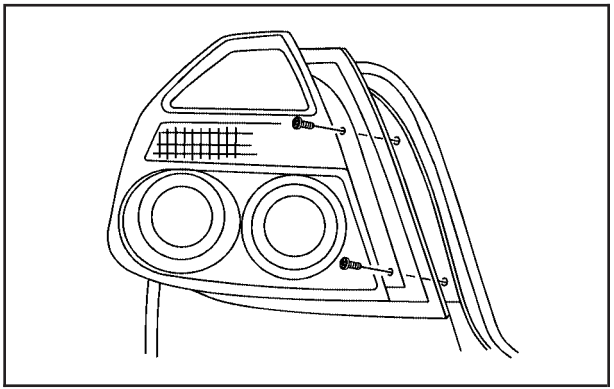

Sedan

2. Remove the two screws and the lamp assembly.
3. Turn the bulb socket counterclockwise and remove the socket.
4. Press the bulb in and turn counterclockwise to remove from the socket.
5. Press the new bulb in and turn clockwise to install the bulb into the socket.
6. Turn the bulb socket clockwise to reinstall.
7. Reinstall the lamp assembly and two screws.

License Plate Lamp

To replace one of these bulbs:

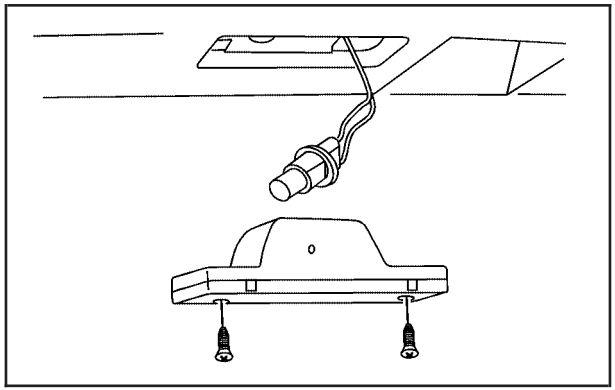

1. Remove the two screws holding each of the license plate lamps.
2. Turn and pull the license plate lamp toward you through the opening.
3. Turn the bulb socket counterclockwise and pull the bulb straight out of the socket.
4. Install the new bulb.
5. Push the bulb straight into the socket and turn clockwise to reinstall.
6. Push and turn the license plate lamp away from you through the opening.
7. Reinstall the two screws holding the license plate lamp.

Replacement Bulbs

Exterior Lamp	Bulb Number
Back-Up Lamps	94535571
Center High-Mounted Stoplamp (CHMSL)	94535587
Front Parking/Turn Signal Lamps	94535578
Front Sidemarker Lamps	94535578
Headlamps	94535548
License Plate Lamp	94535587
Rear Sidemarker Lamps	94535577
Rear Turn Signal Lamps	94535572
Stoplamp/Taillamps	94535577

For replacement bulbs not listed here, contact your dealer/retailer.

Windshield Wiper Blade Replacement

Windshield wiper blades should be inspected for wear or cracking. See “Wiper Blade Check” for more information.

Replacement blades come in different types and are removed in different ways. For the proper type, see *Maintenance Replacement Parts on page 6-15*.

Here is how to remove and replace the windshield wiper blade:

1. Pull the windshield wiper arm away from the windshield.

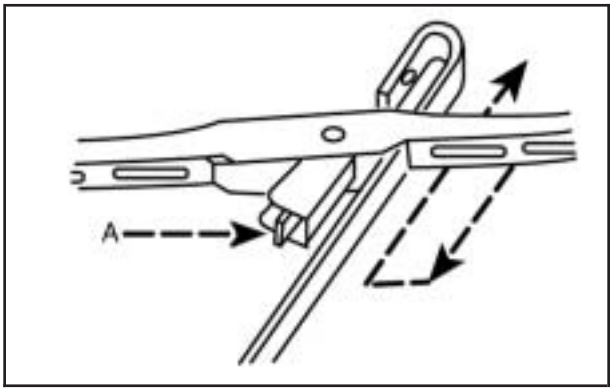

2. Press the retaining clip (A) and pull the wiper blade off the arm.
3. Install a new blade by reversing Steps 1 and 2.

Tires

Your new vehicle comes with high-quality tires made by a leading tire manufacturer. If you ever have questions about your tire warranty and where to obtain service, see your vehicle Warranty booklet for details. For additional information refer to the tire manufacturer.

⚠ CAUTION:

Poorly maintained and improperly used tires are dangerous.

- Overloading your vehicle's tires can cause overheating as a result of too much flexing. You could have an air-out and a serious accident. See *Loading the Vehicle on page 4-16*.

CAUTION: (Continued)

CAUTION: (Continued)

- Underinflated tires pose the same danger as overloaded tires. The resulting accident could cause serious injury. Check all tires frequently to maintain the recommended pressure. Tire pressure should be checked when your vehicle's tires are cold. See *Inflation - Tire Pressure on page 5-57*.
- Overinflated tires are more likely to be cut, punctured, or broken by a sudden impact — such as when you hit a pothole. Keep tires at the recommended pressure.
- Worn, old tires can cause accidents. If the tire's tread is badly worn, or if your vehicle's tires have been damaged, replace them.

Tire Sidewall Labeling

Usefulinformation about a tire is molded into its sidewall. The examples below show a typical passenger car tire and a compact spare tire sidewall.

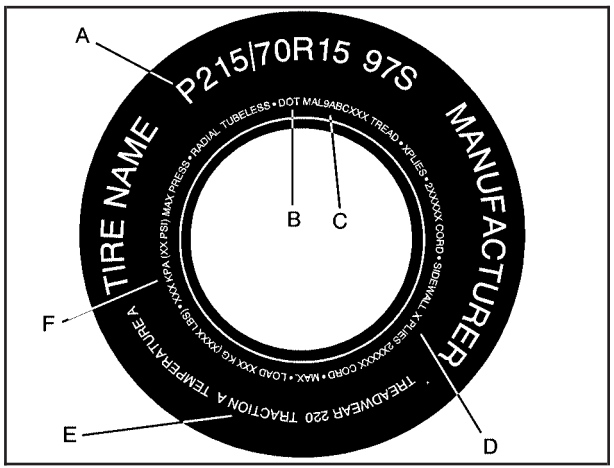

Passenger Car Tire Example

(A) Tire Size: The tire size is a combination of letters and numbers used to define a particular tire's width, height, aspect ratio, construction type and service description. See the "Tire Size" illustration later in this section for more detail.

(B) DOT (Department of Transportation): The Department of Transportation (DOT) code indicates that the tire is in compliance with the U.S. Department of Transportation Motor Vehicle Safety Standards.

(C) Tire Identification Number (TIN): The letters and numbers following DOT code are the Tire Identification Number (TIN). The TIN shows the manufacturer and plant code, tire size, and date the tire was manufactured. The TIN is molded onto both sides of the tire, although only one side may have the date of manufacture.

(D) Tire Ply Material: The type of cord and number of plies in the sidewall and under the tread.

(E) Uniform Tire Quality Grading (UTQG): Tire manufacturers are required to grade tires based on three performance factors: treadwear, traction and temperature resistance. For more information see *Uniform Tire Quality Grading on page 5-66*.

(F) Maximum Cold Inflation Load Limit: Maximum load that can be carried and the maximum pressure needed to support that load. For information on recommended tire pressure see *Inflation - Tire Pressure on page 5-57* and *Loading the Vehicle on page 4-16*.

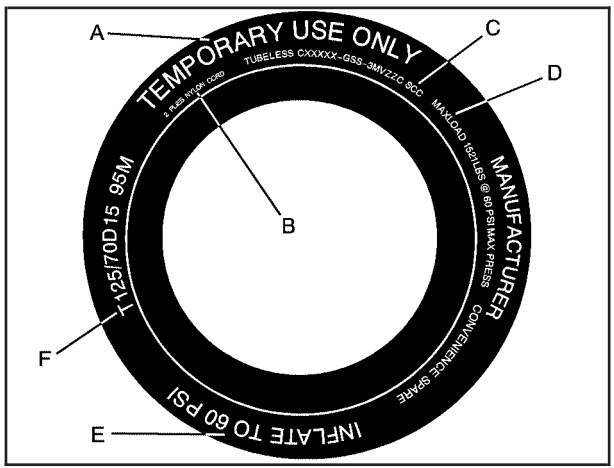

Compact Spare Tire Example

(A) Temporary Use Only: The compact spare tire or temporary use tire has a tread life of approximately 3,000 miles (5 000 km) and should not be driven at speeds over 65 mph (105 km/h).

The compact spare tire is for emergency use when a regular road tire has lost air and gone flat. See *Compact Spare Tire on page 5-78* and *If a Tire Goes Flat on page 5-69*.

(B) Tire Ply Material: The type of cord and number of plies in the sidewall and under the tread.

(C) Tire Identification Number (TIN): The Tire Identification Number (TIN). The TIN shows the manufacturer and plant code, tire size, and date the tire was manufactured. The TIN is molded onto both sides of the tire, although only one side may have the date of manufacture.

(D) Maximum Cold Inflation Load Limit: Maximum load that can be carried and the maximum pressure needed to support that load. See *Compact Spare Tire on page 5-78* and *Loading the Vehicle on page 4-16*.

(E) Tire Inflation: The temporary use tire or compact spare tire should be inflated to 60 psi (420 kPa). For more information on tire pressure and inflation see *Inflation - Tire Pressure on page 5-57*.

(F) Tire Size : A combination of letters and numbers define a tire's width, height, aspect ratio, construction type and service description. The letter T as the first character in the tire size means the tire is for temporary use only.

Tire Size

The following illustration shows an example of a typical passenger car tire size.

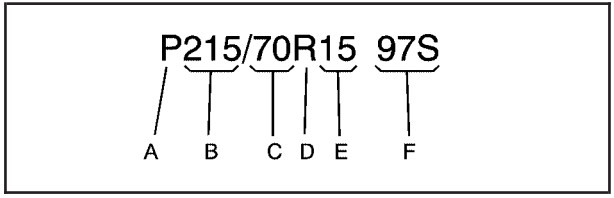

(A) Passenger (P-Metric) Tire: The United States version of a metric tire sizing system. The letter P as the first character in the tire size means a passenger vehicle tire engineered to standards set by the U. S. Tire and Rim Association.

(B) Tire Width: The three-digit number indicates the tire section width in millimeters from sidewall to sidewall.

(C) Aspect Ratio: A two-digit number that indicates the tire height-to-width measurements. For example, if the tire size aspect ratio is 70, as shown in item C of the illustration, it would mean that the tire's sidewall is 70% as high as it is wide.

(D) Construction Code: A letter code is used to indicate the type of ply construction in the tire. The letter R means radial ply construction; the letter D means diagonal or bias ply construction; and the letter B means belted-bias ply construction.

(E) Rim Diameter: Diameter of the wheel in inches.

(F) Service Description: These characters represent the load index and speed rating of the tire. The load index represents the load carry capacity a tire is certified to carry. The speed rating is the maximum speed a tire is certified to carry a load.

Tire Terminology and Definitions

Air Pressure: The amount of air inside the tire pressing outward on each square inch of the tire. Air pressure is expressed in pounds per square inch (psi) or kilopascal (kPa).

Accessory Weight: This means the combined weight of optional accessories. Some examples of optional accessories are, automatic transmission, power steering, power brakes, power windows, power seats, and air conditioning.

Aspect Ratio: The relationship of a tire's height to its width.

Belt: A rubber coated layer of cords that is located between the plies and the tread. Cords may be made from steel or other reinforcing materials.

Bead: The tire bead contains steel wires wrapped by steel cords that hold the tire onto the rim.

Bias Ply Tire: A pneumatic tire in which the plies are laid at alternate angles less than 90 degrees to the centerline of the tread.

Cold Tire Pressure: The amount of air pressure in a tire, measured in pounds per square inch (psi) or kilopascals (kPa) before a tire has built up heat from driving. See *Inflation - Tire Pressure on page 5-57*.

Curb Weight: The weight of a motor vehicle with standard and optional equipment including the maximum capacity of fuel, oil, and coolant, but without passengers and cargo.

DOT Markings: A code molded into the sidewall of a tire signifying that the tire is in compliance with the U.S. Department of Transportation (DOT) motor vehicle safety standards. The DOT code includes the Tire Identification Number (TIN), an alphanumeric designator which can also identify the tire manufacturer, production plant, brand, and date of production.

GVWR: Gross Vehicle Weight Rating. See *Loading the Vehicle on page 4-16*.

GAWR FRT: Gross Axle Weight Rating for the front axle. See *Loading the Vehicle on page 4-16*.

GAWR RR: Gross Axle Weight Rating for the rear axle. See *Loading the Vehicle on page 4-16*.

Intended Outboard Sidewall: The side of an asymmetrical tire, that must always face outward when mounted on a vehicle.

Kilopascal (kPa): The metric unit for air pressure.

Light Truck (LT-Metric) Tire: A tire used on light duty trucks and some multipurpose passenger vehicles.

Load Index: An assigned number ranging from 1 to 279 that corresponds to the load carrying capacity of a tire.

Maximum Inflation Pressure: The maximum air pressure to which a cold tire can be inflated. The maximum air pressure is molded onto the sidewall.

Maximum Load Rating: The load rating for a tire at the maximum permissible inflation pressure for that tire.

Maximum Loaded Vehicle Weight: The sum of curb weight, accessory weight, vehicle capacity weight, and production options weight.

Normal Occupant Weight: The number of occupants a vehicle is designed to seat multiplied by 150 lbs (68 kg). See *Loading the Vehicle on page 4-16*.

Occupant Distribution: Designated seating positions.

Outward Facing Sidewall: The side of an asymmetrical tire that has a particular side that faces outward when mounted on a vehicle. The side of the tire that contains a whitewall, bears white lettering, or bears manufacturer, brand, and/or model name molding that is higher or deeper than the same moldings on the other sidewall of the tire.

Passenger (P-Metric) Tire: A tire used on passenger cars and some light duty trucks and multipurpose vehicles.

Recommended Inflation Pressure: Vehicle manufacturer's recommended tire inflation pressure as shown on the tire placard. See *Inflation - Tire Pressure on page 5-57* and *Loading the Vehicle on page 4-16*.

Radial Ply Tire: A pneumatic tire in which the ply cords that extend to the beads are laid at 90 degrees to the centerline of the tread.

Rim: A metal support for a tire and upon which the tire beads are seated.

Sidewall: The portion of a tire between the tread and the bead.

Speed Rating: An alphanumeric code assigned to a tire indicating the maximum speed at which a tire can operate.

Traction: The friction between the tire and the road surface. The amount of grip provided.

Tread: The portion of a tire that comes into contact with the road.

Treadwear Indicators: Narrow bands, sometimes called wear bars, that show across the tread of a tire when only 1/16 inch (1.6 mm) of tread remains. See *When It Is Time for New Tires on page 5-63*.

UTQGS (Uniform Tire Quality Grading Standards): A tire information system that provides consumers with ratings for a tire's traction, temperature, and treadwear. Ratings are determined by tire manufacturers using government testing procedures. The ratings are molded into the sidewall of the tire. See *Uniform Tire Quality Grading on page 5-66*.

Vehicle Capacity Weight: The number of designated seating positions multiplied by 150 lbs (68 kg) plus the rated cargo load. See *Loading the Vehicle on page 4-16*.

Vehicle Maximum Load on the Tire: Load on an individual tire due to curb weight, accessory weight, occupant weight, and cargo weight.

Vehicle Placard: A label permanently attached to a vehicle showing the vehicle's capacity weight and the original equipment tire size and recommended inflation pressure. See "Tire and Loading Information Label" under *Loading the Vehicle on page 4-16*.

Inflation - Tire Pressure

Tires need the correct amount of air pressure to operate effectively.

Notice: **Do not let anyone tell you that under-inflation or over-inflation is all right. It is not. If your tires do not have enough air (under-inflation), you can get the following:**

- **Too much flexing**
- **Too much heat**
- **Tire overloading**
- **Premature or irregular wear**
- **Poor handling**
- **Reduced fuel economy**

If your tires have too much air (over-inflation), you can get the following:

- **Unusual wear**
- **Poor handling**
- **Rough ride**
- **Needless damage from road hazards**

A vehicle specific Tire and Loading Information label is attached to your vehicle. This label shows your vehicle's original equipment tires and the correct inflation pressures for your tires when they are cold.

The recommended cold tire inflation pressure, shown on the label, is the minimum amount of air pressure needed to support your vehicle's maximum load carrying capacity.

For additional information regarding how much weight your vehicle can carry, and an example of the Tire and Loading Information label, see *Loading the Vehicle on page 4-16*. How you load your vehicle affects vehicle handling and ride comfort. Never load your vehicle with more weight than it was designed to carry.

When to Check

Check your tires once a month or more. Do not forget to check the compact spare tire, it should be at 60 psi (420 kPa). For additional information regarding the compact spare tire, see *Compact Spare Tire on page 5-78*.

How to Check

Use a good quality pocket-type gage to check tire pressure. You cannot tell if your tires are properly inflated simply by looking at them. Radial tires may look properly inflated even when they are under-inflated. Check the tire's inflation pressure when the tires are cold. Cold means your vehicle has been sitting for at least three hours or driven no more than 1 mile (1.6 km).

Remove the valve cap from the tire valve stem. Press the tire gage firmly onto the valve to get a pressure measurement. If the cold tire inflation pressure matches the recommended pressure on the Tire and Loading Information label, no further adjustment is necessary. If the inflation pressure is low, add air until you reach the recommended amount.

If you overfill the tire, release air by pushing on the metal stem in the center of the tire valve. Re-check the tire pressure with the tire gage.

Be sure to put the valve caps back on the valve stems. They help prevent leaks by keeping out dirt and moisture.

Tire Pressure Monitor System

The Tire Pressure Monitor System (TPMS) uses radio and sensor technology to check tire pressure levels. The TPMS sensors monitor the air pressure in your vehicle's tires and transmit tire pressure readings to a receiver located in the vehicle.

Each tire, including the spare (if provided), should be checked monthly when cold and inflated to the inflation pressure recommended by the vehicle manufacturer on the vehicle placard or tire inflation pressure label. (If your vehicle has tires of a different size than the size indicated on the vehicle placard or tire inflation pressure label, you should determine the proper tire inflation pressure for those tires.)

As an added safety feature, your vehicle has been equipped with a tire pressure monitoring system (TPMS) that illuminates a low tire pressure telltale when one or more of your tires is significantly under-inflated.

Accordingly, when the low tire pressure telltale illuminates, you should stop and check your tires as soon as possible, and inflate them to the proper pressure. Driving on a significantly under-inflated tire causes the tire to overheat and can lead to tire failure. Under-inflation also reduces fuel efficiency and tire tread life, and may affect the vehicle's handling and stopping ability.

Please note that the TPMS is not a substitute for proper tire maintenance, and it is the driver's responsibility to maintain correct tire pressure, even if under-inflation has not reached the level to trigger illumination of the TPMS low tire pressure telltale.

Your vehicle has also been equipped with a TPMS malfunction indicator to indicate when the system is not operating properly. The TPMS malfunction indicator is combined with the low tire pressure telltale. When the system detects a malfunction, the telltale will flash for approximately one minute and then remain continuously illuminated. This sequence will continue upon subsequent vehicle start-ups as long as the malfunction exists.

When the malfunction indicator is illuminated, the system may not be able to detect or signal low tire pressure as intended. TPMS malfunctions may occur for a variety of reasons, including the installation of replacement or alternate tires or wheels on the vehicle that prevent the TPMS from functioning properly. Always check the TPMS malfunction telltale after replacing one or more tires or wheels on your vehicle to ensure that the replacement or alternate tires and wheels allow the TPMS to continue to function properly.

See *Tire Pressure Monitor Operation on page 5-60* for additional information.

Federal Communications Commission (FCC) and Industry and Science Canada

The Tire Pressure Monitor System (TPMS) operates on a radio frequency and complies with Part 15 of the FCC Rules. Operation is subject to the following two conditions:

1. This device may not cause harmful interference.
2. This device must accept any interference received, including interference that may cause undesired operation.

Vehicles with TPMS operate on a radio frequency and comply with RSS-210 of Industry and Science Canada. Operation is subject to the following two conditions:

1. This device may not cause interference.
2. This device must accept any interference received, including interference that may cause undesired operation of the device.

Changes or modifications to this system by other than an authorized service facility could void authorization to use this equipment.

Tire Pressure Monitor Operation

This vehicle may have a Tire Pressure Monitor System (TPMS). The TPMS is designed to warn the driver when a low tire pressure condition exists. If your vehicle has this feature, the TPMS sensors are mounted onto each tire and wheel assembly, excluding the spare tire and wheel assembly. The TPMS sensors monitor the air pressure in your vehicle's tires and transmit tire pressure readings to a receiver located in the vehicle.

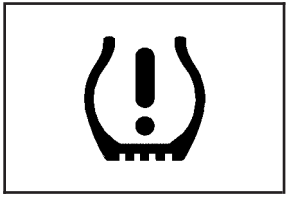

When a low tire pressure condition is detected, the TPMS illuminates the low tire pressure warning light on the instrument panel cluster.

The low tire pressure warning light comes on at each ignition cycle until the tires are inflated to the correct inflation pressure.

The tire pressure warning light may come on in cool weather when the vehicle is first started, and then turn off as you start to drive. This could be an early indicator that the tire pressures are getting low and need to be inflated to the proper pressure.

A Tire and Loading Information label, attached to your vehicle, shows the size of your vehicle's original equipment tires and the correct inflation pressure for your vehicle's tires when they are cold. See *Loading the Vehicle on page 4-16*, for an example of the tire information label and its location on your vehicle. Also see *Inflation - Tire Pressure on page 5-57*.

Your vehicle's TPMS system can warn you about a low tire pressure condition but it does not replace normal tire maintenance. See *Tire Inspection and Rotation on page 5-62* and *Tires on page 5-51*.

Notice: **Liquid tire sealants could damage the Tire Pressure Monitor System (TPMS) sensors. Sensor damage caused by using a tire sealant is not covered by your warranty. Do not use liquid tire sealants.**

TPMS Malfunction Light

The TPMS will not function properly if one or more of the TPMS sensors are missing or inoperable. When the system detects a malfunction, the low tire warning light flashes for about one minute and then stays on for the remainder of the ignition cycle. The low tire warning light comes on at each ignition cycle until the problem is corrected. Some of the conditions that can cause the malfunction light to come on are:

- One of the road tires has been replaced with the spare tire. The spare tire does not have a TPMS sensor. The TPMS malfunction light and DIC message should go off once you re-install the road tire containing the TPMS sensor.
- One or more TPMS sensors are missing or damaged. The TPMS malfunction light should go off when the TPMS sensors are installed and the sensor matching process is performed successfully. See your dealer/retailer for service.
- Replacement tires or wheels do not match your vehicle's original equipment tires or wheels. Tires and wheels other than those recommended for your vehicle could prevent the TPMS from functioning properly. See *Buying New Tires on page 5-64*.
- Operating electronic devices or being near facilities using radio wave frequencies similar to the TPMS could cause the TPMS sensors to malfunction.

If the TPMS is not functioning it cannot detect or signal a low tire condition. See your dealer/retailer for service if the TPMS malfunction light and DIC message comes on and stays on.

TPMS Sensor Identification Codes

Each TPMS sensor has a unique identification code. Any time you replace one or more of the TPMS sensors, or rotate the vehicle's tires, the identification codes need to be matched to the new tire/wheel position. The sensors are matched, to the tire/wheel positions, in the following order: driver side front tire, passenger side front tire, passenger side rear tire, and driver side rear tire using a TPMS diagnostic tool. See your dealer/retailer for service.

Tire Inspection and Rotation

We recommend that you regularly inspect your vehicle's tires, including the spare tire, for signs of wear or damage. See *When It Is Time for New Tires on page 5-63* for more information.

Tires should be rotated every 5,000 to 8,000 miles (8 000 to 13 000 km). See *Additional Required Services on page 6-6*.

The purpose of a regular tire rotation is to achieve a uniform wear for all tires on the vehicle. This will ensure that your vehicle continues to perform most like it did when the tires were new.

Any time you notice unusual wear, rotate your tires as soon as possible and check wheel alignment. Also check for damaged tires or wheels. See *When It Is Time for New Tires on page 5-63* and *Wheel Replacement on page 5-67* for more information.

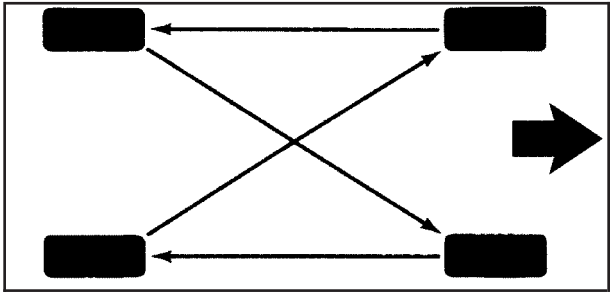

When rotating your tires, always use the correct rotation pattern shown here.

Do not include the compact spare tire in the tire rotation.

After the tires have been rotated, adjust the front and rear inflation pressures as shown on the tire and loading information label. See *Loading the Vehicle on page 4-16* for an example of the tire and loading information label and where it is located on your vehicle. Make certain that all wheel nuts are properly tightened. See “Wheel Nut Torque” under *Capacities and Specifications on page 5-93*.

⚠ CAUTION:

Rust or dirt on a wheel, or on the parts to which it is fastened, can make wheel nuts become loose after time. The wheel could come off and cause an accident. When you change a wheel, remove any rust or dirt from places where the wheel attaches to the vehicle. In an emergency, you can use a cloth or a paper towel to do this; but be sure to use a scraper or wire brush later, if needed, to get all the rust or dirt off. See *Changing a Flat Tire on page 5-70*.

When It Is Time for New Tires

Various factors, such as maintenance, temperatures, driving speeds, vehicle loading, and road conditions influence when you need new tires.

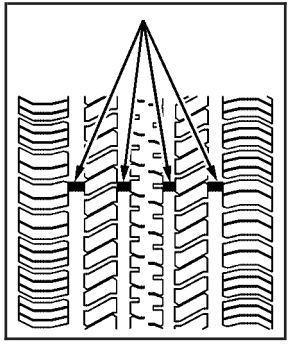

One way to tell when it is time for new tires is to check the treadwear indicators, which will appear when your tires have only 1/16 inch (1.6 mm) or less of tread remaining.

You need new tires if any of the following statements are true:

- You can see the indicators at three or more places around the tire.
- You can see cord or fabric showing through the tire’s rubber.
- The tread or sidewall is cracked, cut, or snagged deep enough to show cord or fabric.

- The tire has a bump, bulge, or split.
- The tire has a puncture, cut, or other damage that cannot be repaired well because of the size or location of the damage.

The rubber in tires degrades over time, even if they are not being used. This is also true for the spare tire, if your vehicle has one. Multiple conditions affect how fast this aging takes place, including temperatures, loading conditions, and inflation pressure maintenance. With proper care and maintenance tires will typically wear out before they degrade due to age. If you are unsure about the need to replace your tires as they get older, consult the tire manufacturer for more information.

Buying New Tires

GM has developed and matched specific tires for your vehicle. If you need replacement tires, GM strongly recommends that you get tires that are the same size, brand, load range, speed rating, and construction type (radial and bias-belted tires) as your vehicle's original tires. This way, your vehicle will continue to have tires that are designed to give the same performance and vehicle safety, during normal use, as the original tires. See *Tire Sidewall Labeling on page 5-52* for additional information.

GM recommends replacing tires in sets of four. This is because uniform tread depth on all tires will help keep your vehicle performing most like it did when the tires were new. Replacing less than a full set of tires can affect the braking and handling performance of your vehicle. See *Tire Inspection and Rotation on page 5-62*.

⚠ CAUTION:

Mixing tires could cause you to lose control while driving. If you mix tires of different sizes, brands, or types (radial and bias-belted tires), the vehicle may not handle properly, and you could have a crash. Using tires of different sizes, brands, or types may also cause damage to your vehicle. Be sure to use the correct size, brand, and type of tires on all wheels. It is all right to drive with your compact spare temporarily, as it was developed for use on your vehicle. See *Compact Spare Tire on page 5-78*.

⚠ CAUTION:

If you use bias-ply tires on the vehicle, the wheel rim flanges could develop cracks after many miles of driving. A tire and/or wheel could fail suddenly, causing a crash. Use only radial-ply tires with the wheels on the vehicle.

Vehicles that have a tire pressure monitoring system could give an inaccurate low-pressure warning if tires not recommended for your vehicle are installed. Tires that do not match the original equipment tires could give a low-pressure warning that is higher or lower than the proper warning level you would get with original equipment tires. See *Tire Pressure Monitor System on page 5-59*.

Your vehicle's original equipment tires are listed on the Tire and Loading Information Label. See *Loading the Vehicle on page 4-16*, for more information about the Tire and Loading Information label and its location on your vehicle.

Different Size Tires and Wheels

If you add wheels or tires that are a different size than your original equipment wheels and tires, this may affect the way your vehicle performs, including its braking, ride and handling characteristics, stability, and resistance to rollover. Additionally, if your vehicle has electronic systems such as, antilock brakes, traction control, and electronic stability control, the performance of these systems can be affected.

⚠ CAUTION:

If you add different sized wheels, your vehicle may not provide an acceptable level of performance and safety if tires not recommended for those wheels are selected. You may increase the chance that you will crash and suffer serious injury. Only use GM specific wheel and tire systems developed for your vehicle, and have them properly installed by a GM certified technician.

See *Buying New Tires on page 5-64* and *Accessories and Modifications on page 5-3* for additional information.

Uniform Tire Quality Grading

Quality grades can be found where applicable on the tire sidewall between tread shoulder and maximum selection width. For example:

Treadwear 200 Traction AA Temperature A

The following information relates to the system developed by the Unites States National Highway Traffic Safety Administration (NHTSA), which grades tires by treadwear, traction, and temperature performance. This applies only to vehicles sold in the United States. The grades are molded on the sidewalls of most passenger car tires. The Uniform Tire Quality Grading (UTQG) system does not apply to deep tread, winter-type snow tires, space-saver, or temporary use spare tires, tires with nominal rim diameters of 10 to 12 inches (25 to 30 cm), or to some limited-production tires.

While the tires available on General Motors passenger cars and light trucks may vary with respect to these grades, they must also conform to federal safety requirements.

Treadwear

The treadwear grade is a comparative rating based on the wear rate of the tire when tested under controlled conditions on a specified government test course. For example, a tire graded 150 would wear one and a half (1½) times as well on the government course as a tire graded 100. The relative performance of tires depends upon the actual conditions of their use, however, and may depart significantly from the norm due to variations in driving habits, service practices, and differences in road characteristics and climate.

Traction — AA, A, B, C

The traction grades, from highest to lowest, are AA, A, B, and C. Those grades represent the tire's ability to stop on wet pavement as measured under controlled conditions on specified government test surfaces of asphalt and concrete. A tire marked C may have poor traction performance.

Temperature — A, B, C

The temperature grades are A (the highest), B, and C, representing the tire's resistance to the generation of heat and its ability to dissipate heat when tested under controlled conditions on a specified indoor laboratory test wheel. Sustained high temperature can cause the material of the tire to degenerate and reduce tire life, and excessive temperature can lead to sudden tire failure. The grade C corresponds to a level of performance which all passenger car tires must meet under the Federal Motor Vehicle Safety Standard No. 109. Grades B and A represent higher levels of performance on the laboratory test wheel than the minimum required by law. It should be noted that the temperature grade for this tire is established for a tire that is properly inflated and not overloaded. Excessive speed, underinflation, or excessive loading, either separately or in combination, can cause heat buildup and possible tire failure.

Wheel Alignment and Tire Balance

The tires and wheels on your vehicle were aligned and balanced carefully at the factory to give you the longest tire life and best overall performance. Adjustments to wheel alignment and tire balancing will not be necessary on a regular basis. However, if you notice unusual tire wear or your vehicle pulling to one side or the other, the alignment might need to be checked. If you notice your vehicle vibrating when driving on a smooth road, the tires and wheels might need to be rebalanced. See your dealer/retailer for proper diagnosis.

Wheel Replacement

Replace any wheel that is bent, cracked, or badly rusted or corroded. If wheel nuts keep coming loose, the wheel, wheel bolts, and wheel nuts should be replaced. If the wheel leaks air, replace it (except some aluminum wheels, which can sometimes be repaired). See your dealer/retailer if any of these conditions exist.

Your dealer/retailer will know the kind of wheel you need.

Each new wheel should have the same load-carrying capacity, diameter, width, offset, and be mounted the same way as the one it replaces.

If you need to replace any of your wheels, wheel bolts, wheel nuts, or Tire Pressure Monitor System (TPMS) sensors, replace them only with new GM original equipment parts. This way, you will be sure to have the right wheel, wheel bolts, wheel nuts, and TPMS sensors for your vehicle.

⚠ CAUTION:

Using the wrong replacement wheels, wheel bolts, or wheel nuts on your vehicle can be dangerous. It could affect the braking and handling of your vehicle, make your tires lose air and make you lose control. You could have a collision in which you or others could be injured. Always use the correct wheel, wheel bolts, and wheel nuts for replacement.

Notice: **The wrong wheel can also cause problems with bearing life, brake cooling, speedometer or odometer calibration, headlamp aim, bumper height, vehicle ground clearance, and tire or tire chain clearance to the body and chassis.**

See *Changing a Flat Tire on page 5-70* for more information.

Used Replacement Wheels

⚠ CAUTION:

Putting a used wheel on the vehicle is dangerous. You cannot know how it has been used or how far it has been driven. It could fail suddenly and cause a crash. If you have to replace a wheel, use a new GM original equipment wheel.

Tire Chains

Notice: **Use tire chains only where legal and only when you must. Use only SAE Class “S” type chains that are the proper size for your tires. Install them on the front tires and tighten them as tightly as possible with the ends securely fastened. Drive slowly and follow the chain manufacturer’s instructions. If you can hear the chains contacting your vehicle, stop and retighten them. If the contact continues, slow down until it stops. Driving too fast or spinning the wheels with chains on will damage your vehicle.**

If a Tire Goes Flat

It is unusual for a tire to blowout while you are driving, especially if you maintain your vehicle's tires properly. If air goes out of a tire, it is much more likely to leak out slowly. But if you should ever have a blowout, here are a few tips about what to expect and what to do:

If a front tire fails, the flat tire creates a drag that pulls the vehicle toward that side. Take your foot off the accelerator pedal and grip the steering wheel firmly. Steer to maintain lane position, and then gently brake to a stop well out of the traffic lane.

A rear blowout, particularly on a curve, acts much like a skid and may require the same correction you would use in a skid. In any rear blowout remove your foot from the accelerator pedal. Get the vehicle under control by steering the way you want the vehicle to go. It may be very bumpy and noisy, but you can still steer. Gently brake to a stop, well off the road if possible.

⚠ CAUTION:

Lifting a vehicle and getting under it to do maintenance or repairs is dangerous without the appropriate safety equipment and training. If a jack is provided with the vehicle, it is designed only for changing a flat tire. If it is used for anything else, you or others could be badly injured or killed if the vehicle slips off the jack. If a jack is provided with the vehicle, only use it for changing a flat tire.

If a tire goes flat, the next part shows how to use the jacking equipment to change a flat tire safely.

Changing a Flat Tire

If a tire goes flat, avoid further tire and wheel damage by driving slowly to a level place. Turn on the hazard warning flashers. See *Hazard Warning Flashers on page 3-6*.

⚠ CAUTION:

Changing a tire can be dangerous. The vehicle can slip off the jack and roll over or fall on you or other people. You and they could be badly injured or even killed. Find a level place to change your tire. To help prevent the vehicle from moving:

1. Set the parking brake firmly.
2. Put an automatic transmission shift lever in P (Park), or shift a manual transmission to 1 (First) or R (Reverse).

CAUTION: (Continued)

CAUTION: (Continued)

3. Turn off the engine and do not restart while the vehicle is raised.
4. Do not allow passengers to remain in the vehicle.

To be even more certain the vehicle will not move, you should put blocks at the front and rear of the tire farthest away from the one being changed. That would be the tire on the other side, at the opposite end of the vehicle.

When the vehicle has a flat tire (B), use the following example as a guide to assist you in the placement of wheel blocks (A).

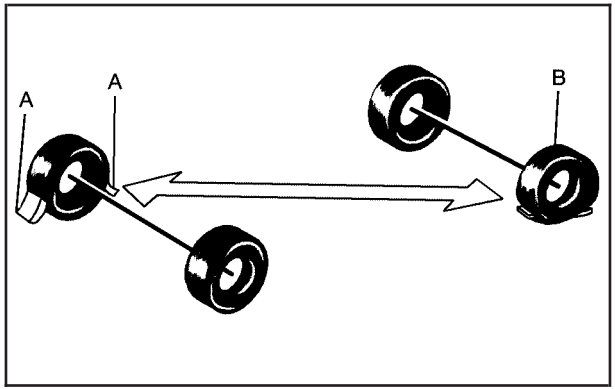

A. Wheel Block

B. Flat Tire

The following information explains how to use the jack and change a tire.

Removing the Spare Tire and Tools

The compact spare tire and tools you will need are located in the trunk.

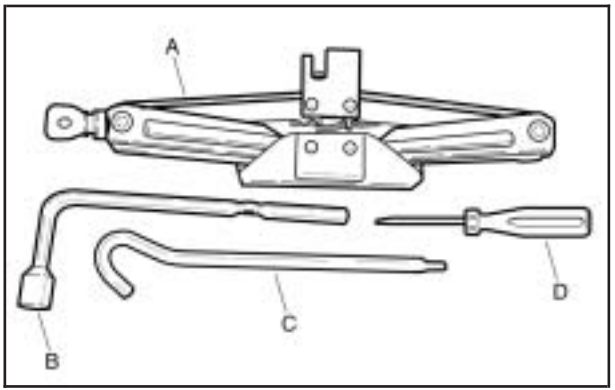

A. Jack
B. Wheel Wrench
C. Jack Handle
D. Screwdriver (if equipped)

1. Open the trunk or liftgate. See *Trunk (Sedan) on page 2-8* or *Liftgate (Hatchback) on page 2-10*.
2. Lift the trim cover.

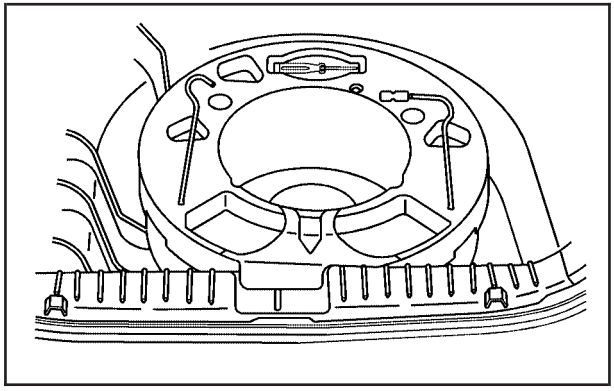

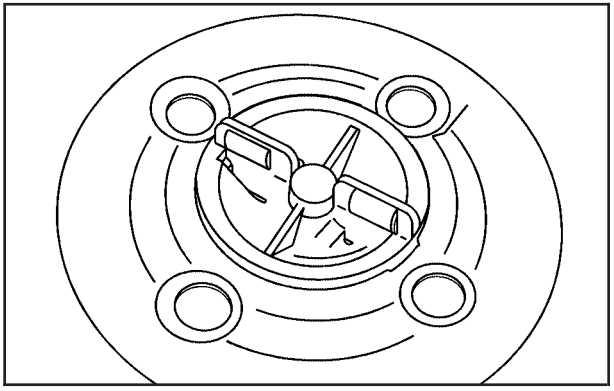

3. Remove the foam tray.
4. Remove the jack, the jack handle and the wheel wrench from the foam tray.
5. Turn the retainer counterclockwise and remove it from the compact spare.
6. Remove the compact spare tire. See *Compact Spare Tire on page 5-78* for more information.

Removing the Flat Tire and Installing the Spare Tire

1. Do a safety check before proceeding. See *Changing a Flat Tire on page 5-70*.
2. If your vehicle has wheel covers, turn the four plastic caps counterclockwise by hand or by using the wheel wrench. The plastic nuts do not come off of the cover.
3. Remove the wheel cover using the flat end of the jack handle. Pry along the edge of the wheel cover until it comes off.

   Store the wheel cover in the cargo area until you have the flat tire repaired or replaced.

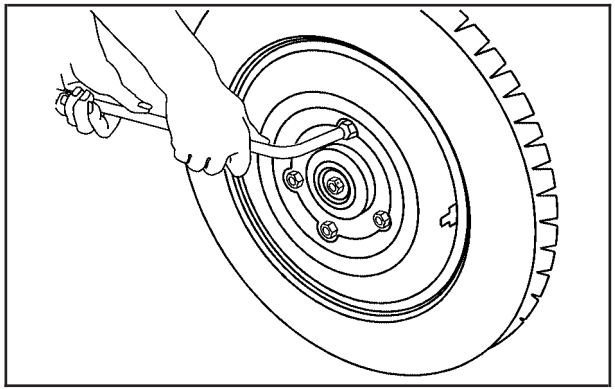

4. Turn the wheel nuts counterclockwise to loosen them. Do not remove them yet.

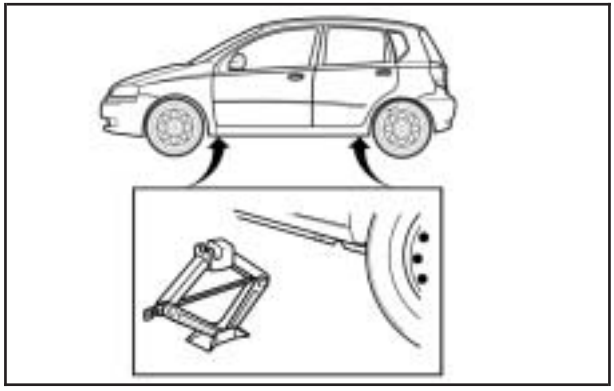

Hatchback

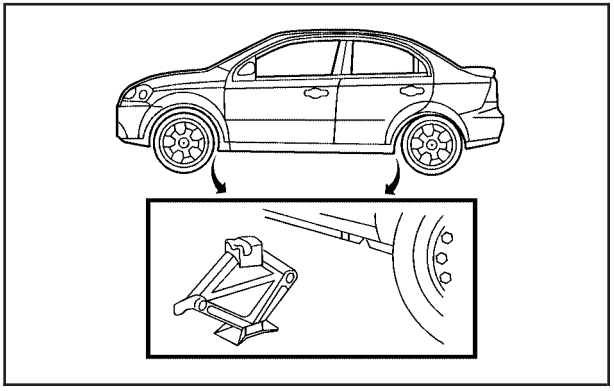

Sedan

5. Locate the notch in the frame near each wheel which the jack head fits in.
6. Position the jack and raise the jack head until it fits firmly into the notch in the vehicle's frame nearest the flat tire.
7. Put the compact spare tire near you.

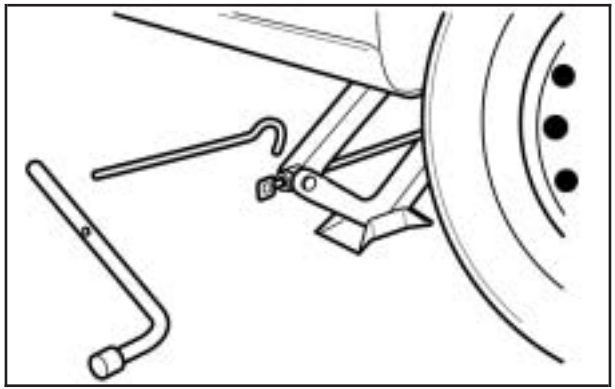

8. Insert the jack handle into the jack and the wheel wrench onto the end of the jack handle.

⚠ CAUTION:

Getting under a vehicle when it is jacked up is dangerous. If the vehicle slips off the jack, you could be badly injured or killed. Never get under a vehicle when it is supported only by a jack.

⚠ CAUTION:

Raising your vehicle with the jack improperly positioned can damage the vehicle and even make the vehicle fall. To help avoid personal injury and vehicle damage, be sure to fit the jack lift head into the proper location before raising the vehicle.

9. Turn the wheel wrench clockwise to raise the vehicle. Raise the vehicle far enough off the ground so there is enough room for the compact spare tire to fit underneath the wheel well.
10. Turn the wheel nuts counterclockwise to remove them.
11. Remove the flat tire.

⚠ CAUTION:

Rust or dirt on a wheel, or on the parts to which it is fastened, can make wheel nuts become loose after time. The wheel could come off and cause an accident. When changing a wheel, remove any rust or dirt from places where the wheel attaches to the vehicle. In an emergency, use a cloth or a paper towel to do this; but be sure to use a scraper or wire brush later, if needed, to get all the rust or dirt off. See *Changing a Flat Tire on page 5-70*.

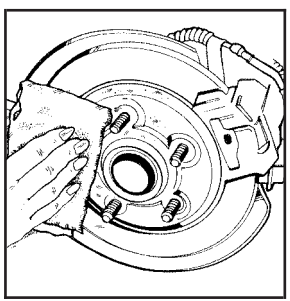

12. Remove any rust or dirt from the wheel bolts, mounting surfaces and spare wheel.

13. Place the compact spare tire on the wheel-mounting surface.

⚠ CAUTION:

Never use oil or grease on bolts or nuts because the nuts might come loose. The vehicle's wheel could fall off, causing a crash.

14. Install the wheel nuts with the rounded end of the nuts toward the wheel. Tighten each nut by hand clockwise until the wheel is held against the hub.
15. Lower the vehicle by turning the wheel wrench counterclockwise. Lower the jack completely.

⚠ CAUTION:

Wheel nuts that are improperly or incorrectly tightened can cause the wheels to become loose or come off. The wheel nuts should be tightened with a torque wrench to the proper torque specification after replacing. Follow the torque specification supplied by the aftermarket manufacturer when using accessory locking wheel nuts. See *Capacities and Specifications on page 5-93* for original equipment wheel nut torque specifications.

Notice: **Improperly tightened wheel nuts can lead to brake pulsation and rotor damage. To avoid expensive brake repairs, evenly tighten the wheel nuts in the proper sequence and to the proper torque specification. See *Capacities and Specifications on page 5-93* for the wheel nut torque specification.**

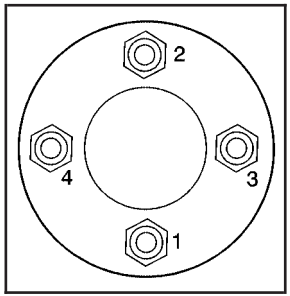

16. Tighten the wheel nuts firmly in a crisscross sequence, as shown.

Notice: **Wheel covers will not fit on your vehicle's compact spare. If you try to put a wheel cover on the compact spare, the cover or the spare could be damaged.**

Storing a Flat or Spare Tire and Tools

⚠ CAUTION:

Storing a jack, a tire, or other equipment in the passenger compartment of the vehicle could cause injury. In a sudden stop or collision, loose equipment could strike someone. Store all these in the proper place.

To store a flat or compact spare tire and tools:

1. Store the flat tire or the compact spare in the compact spare tire compartment.
2. Secure the retainer.
3. Store the tools securely in the foam tray and place the tray back in the cargo area.
4. Replace the trim cover.

The compact spare tire is for temporary use only. Replace the compact spare tire with a full-size tire as soon as you can. See *Compact Spare Tire on page 5-78*.

Compact Spare Tire

⚠ CAUTION:

Driving with more than one compact spare tire at a time could result in loss of braking and handling. This could lead to a crash and you or others could be injured. Use only one compact spare tire at a time.

The compact spare tire was fully inflated when the vehicle was new, it can lose air after a time. Check the inflation pressure regularly. It should be 60 psi (414 kPa).

After installing the compact spare on your vehicle, you should stop as soon as possible and make sure your spare tire is correctly inflated. The compact spare is intended to perform well at speeds up to 50 mph (80 km/h), so you can finish your trip and have your full-size tire repaired or replaced where you want. Replace your spare with a full-size tire as soon as you can.

Notice: **When the compact spare is installed, do not take the vehicle through an automatic car wash with guide rails. The compact spare can get caught on the rails which can damage the tire, wheel and other parts of the vehicle.**

Do not use your compact spare on other vehicles.

Do not mix your compact spare tire or wheel with other wheels or tires. Keep your spare tire and its wheel together.

Notice: **Tire chains will not fit the compact spare. Using them can damage the vehicle and can damage the chains too. Do not use tire chains on the compact spare.**

Appearance Care

Interior Cleaning

The vehicle's interior will continue to look its best if it is cleaned often. Although not always visible, dust and dirt can accumulate on the upholstery. Dirt can damage carpet, fabric, leather, and plastic surfaces. Regular vacuuming is recommended to remove particles from the upholstery.

It is important to keep the upholstery from becoming and remaining heavily soiled. Soils should be removed as quickly as possible. The vehicle's interior may experience extremes of heat that could cause stains to set rapidly.

Lighter colored interiors may require more frequent cleaning. Use care because newspapers and garments that transfer color to home furnishings may also transfer color to the vehicle's interior.

When cleaning the vehicle's interior, only use cleaners specifically designed for the surfaces being cleaned. Permanent damage may result from using cleaners on surfaces for which they were not intended. Use glass cleaner only on glass. Remove any accidental over-spray from other surfaces immediately. To prevent over-spray, apply cleaner directly to the cleaning cloth.

Notice: **Using abrasive cleaners when cleaning glass surfaces on the vehicle, could scratch the glass and/or cause damage to the rear window defogger. When cleaning the glass on the vehicle, use only a soft cloth and glass cleaner.**

Many cleaners contain solvents that may become concentrated in the vehicle's breathing space. Before using cleaners, read and adhere to all safety instructions on the label. While cleaning the vehicle's interior, maintain adequate ventilation by opening the vehicle's doors and windows.

Dust may be removed from small buttons and knobs using a small brush with soft bristles.

Products that remove odors from the vehicle's upholstery and clean the vehicle's glass can be obtained from your dealer/retailer.

Do not clean the vehicle using:

- A knife or any other sharp object to remove a soil from any interior surface.
- A stiff brush. It can cause damage to the vehicle's interior surfaces.
- Heavy pressure or aggressive rubbing with a cleaning cloth. Use of heavy pressure can damage the interior and does not improve the effectiveness of soil removal.
- Laundry detergents or dishwashing soaps with degreasers can leave residue that streaks and attracts dirt. For liquid cleaners, about 20 drops per gallon (3.78 L) of water is a good guide. Use only mild, neutral-pH soaps.
- Too much cleaner that saturates the upholstery.
- Organic solvents such as naptha, alcohol, etc. that can damage the vehicle's interior.

Fabric/Carpet

Use a vacuum cleaner with a soft brush attachment frequently to remove dust and loose dirt. A canister vacuum with a beater bar in the nozzle may only be used on floor carpet and carpeted floor mats. For any soil, always try to remove it first with plain water or club soda. Before cleaning, gently remove as much of the soil as possible using one of the following techniques:

- For liquids: gently blot the remaining soil with a paper towel. Allow the soil to absorb into the paper towel until no more can be removed.
- For solid dry soils: remove as much as possible and then vacuum.

To clean:

1. Saturate a lint-free, clean white cloth with water or club soda.
2. Wring the cloth to remove excess moisture.
3. Start on the outside edge of the soil and gently rub toward the center. Continue cleaning, using a clean area of the cloth each time it becomes soiled.
4. Continue to gently rub the soiled area until the cleaning cloth remains clean.
5. If the soil is not completely removed, use a mild soap solution and repeat the cleaning process that was used with plain water.

If any of the soil remains, a commercial fabric cleaner or spot lifter may be necessary. When a commercial upholstery cleaner or spot lifter is to be used, test a small hidden area for colorfastness first. If the locally cleaned area gives any impression that a ring formation may result, clean the entire surface.

After the cleaning process has been completed, a paper towel can be used to blot excess moisture from the fabric or carpet.

Leather

A soft cloth dampened with water can be used to remove dust. If a more thorough cleaning is necessary, a soft cloth dampened with a mild soap solution can be used. Allow the leather to dry naturally. Do not use heat to dry. Never use steam to clean leather. Never use spot lifters or spot removers on leather. Many commercial leather cleaners and coatings that are sold to preserve and protect leather may permanently change the appearance and feel of the leather and are not recommended. Do not use silicone or wax-based products, or those containing organic solvents to clean the vehicle's interior because they can alter the appearance by increasing the gloss in a non-uniform manner. Never use shoe polish on leather.

Instrument Panel, Vinyl, and Other Plastic Surfaces

A soft cloth dampened with water may be used to remove dust. If a more thorough cleaning is necessary, a clean soft cloth dampened with a mild soap solution can be used to gently remove dust and dirt. Never use spot lifters or removers on plastic surfaces. Many commercial cleaners and coatings that are sold to preserve and protect soft plastic surfaces may permanently change the appearance and feel of the interior and are not recommended. Do not use silicone or wax-based products, or those containing organic solvents to clean the vehicle's interior because they can alter the appearance by increasing the gloss in a non-uniform manner.

Some commercial products may increase gloss on the instrument panel. The increase in gloss may cause annoying reflections in the windshield and even make it difficult to see through the windshield under certain conditions.

Care of Safety Belts

Keep belts clean and dry.

> **⚠ CAUTION:**
>
> Do not bleach or dye safety belts. It may severely weaken them. In a crash, they might not be able to provide adequate protection. Clean safety belts only with mild soap and lukewarm water.

Weatherstrips

Silicone grease on weatherstrips will make them last longer, seal better, and not stick or squeak. Apply silicone grease with a clean cloth. During very cold, damp weather frequent application may be required.

Washing Your Vehicle

The best way to preserve the vehicle's finish is to keep it clean by washing it often.

Notice: **Certain cleaners contain chemicals that can damage the emblems or nameplates on the vehicle. Check the cleaning product label. If it states that it should not be used on plastic parts, do not use it on the vehicle or damage may occur and it would not be covered by the warranty.**

Do not wash the vehicle in direct sunlight. Use a car washing soap. Do not use cleaning agents that are petroleum based or that contain acid or abrasives, as they can damage the paint, metal or plastic on the vehicle. Approved cleaning products can be obtained from your dealer/retailer. Follow all manufacturers' directions regarding correct product usage, necessary safety precautions and appropriate disposal of any vehicle care product.

Rinse the vehicle well, before washing and after to remove all cleaning agents completely. If they are allowed to dry on the surface, they could stain.

Dry the finish with a soft, clean chamois or an all-cotton towel to avoid surface scratches and water spotting.

High pressure car washes may cause water to enter the vehicle. Avoid using high pressure washes closer than 12 inches (30 cm) to the surface of the vehicle. Use of power washers exceeding 1,200 psi (8 274 kPa) can result in damage or removal of paint and decals.

Cleaning Exterior Lamps/Lenses

Use only lukewarm or cold water, a soft cloth and a car washing soap to clean exterior lamps and lenses. Follow instructions under *Washing Your Vehicle on page 5-82*.

Finish Care

Occasional waxing or mild polishing of the vehicle by hand may be necessary to remove residue from the paint finish. Approved cleaning products can be obtained from your dealer/retailer.

If the vehicle has a basecoat/clearcoat paint finish, the clearcoat gives more depth and gloss to the colored basecoat. Always use waxes and polishes that are non-abrasive and made for a basecoat/clearcoat paint finish.

Notice: **Machine compounding or aggressive polishing on a basecoat/clearcoat paint finish may damage it. Use only non-abrasive waxes and polishes that are made for a basecoat/clearcoat paint finish on the vehicle.**

Foreign materials such as calcium chloride and other salts, ice melting agents, road oil and tar, tree sap, bird droppings, chemicals from industrial chimneys, etc., can damage the vehicle's finish if they remain on painted surfaces. Wash the vehicle as soon as possible. If necessary, use non-abrasive cleaners that are marked safe for painted surfaces to remove foreign matter.

Exterior painted surfaces are subject to aging, weather and chemical fallout that can take their toll over a period of years. To help keep the paint finish looking new, keep the vehicle garaged or covered whenever possible.

Protecting Exterior Bright Metal Parts

Bright metal parts should be cleaned regularly to keep their luster. Washing with water is all that is usually needed. However, chrome polish may be used on chrome or stainless steel trim, if necessary.

Use special care with aluminum trim. To avoid damaging protective trim, never use auto or chrome polish, steam or caustic soap to clean aluminum. A coating of wax, rubbed to high polish, is recommended for all bright metal parts.

Windshield and Wiper Blades

Clean the outside of the windshield with glass cleaner.

Clean the rubber blades using a lint free cloth or paper towel soaked with windshield washer fluid or a mild detergent. Wash the windshield thoroughly when cleaning the blades. Bugs, road grime, sap, and a buildup of vehicle wash/wax treatments may cause wiper streaking. Replace the wiper blades if they are worn or damaged.

Wipers can be damaged by:

- Extreme dusty conditions
- Sand and salt
- Heat and sun
- Snow and ice, without proper removal

Aluminum Wheels

Notice: **Using strong soaps, chemicals, abrasive polishes, cleaners, brushes, or cleaners that contain acid on aluminum or chrome-plated wheels, could damage the surface of the wheel(s). The repairs would not be covered by the warranty. Use only approved cleaners on aluminum or chrome-plated wheels.**

Keep the wheels clean using a soft clean cloth with mild soap and water. Rinse with clean water. After rinsing thoroughly, dry with a soft clean towel. A wax may then be applied.

Notice: **Using chrome polish on aluminum wheels could damage the wheels. The repairs would not be covered by the warranty. Use chrome polish on chrome wheels only.**

The surface of these wheels is similar to the painted surface of the vehicle. Do not use strong soaps, chemicals, abrasive polishes, abrasive cleaners, cleaners with acid, or abrasive cleaning brushes on them because the surface could be damaged. Do not use chrome polish on aluminum wheels.

Notice: **Driving the vehicle through an automatic car wash that has silicone carbide tire cleaning brushes, could damage the aluminum or chrome-plated wheels. The repairs would not be covered by the warranty. Never drive a vehicle equipped with aluminum or chrome-plated wheels through an automatic car wash that uses silicone carbide tire cleaning brushes.**

Tires

To clean the tires, use a stiff brush with tire cleaner.

Notice: **Using petroleum-based tire dressing products on the vehicle may damage the paint finish and/or tires. When applying a tire dressing, always wipe off any overspray from all painted surfaces on the vehicle.**

Sheet Metal Damage

If the vehicle is damaged and requires sheet metal repair or replacement, make sure the body repair shop applies anti-corrosion material to parts repaired or replaced to restore corrosion protection.

Original manufacturer replacement parts will provide the corrosion protection while maintaining the vehicle warranty.

Finish Damage

Any stone chips, fractures or deep scratches in the finish should be repaired right away. Bare metal will corrode quickly and may develop into major repair expense.

Minor chips and scratches can be repaired with touch-up materials available from your dealer/retailer. Larger areas of finish damage can be corrected in your dealer's/retailer's body and paint shop.

Underbody Maintenance

Chemicals used for ice and snow removal and dust control can collect on the underbody. If these are not removed, corrosion and rust can develop on the underbody parts such as fuel lines, frame, floor pan, and exhaust system even though they have corrosion protection.

At least every spring, flush these materials from the underbody with plain water. Clean any areas where mud and debris can collect. Dirt packed in close areas of the frame should be loosened before being flushed. Your dealer/retailer or an underbody car washing system can do this.

Chemical Paint Spotting

Some weather and atmospheric conditions can create a chemical fallout. Airborne pollutants can fall upon and attack painted surfaces on the vehicle. This damage can take two forms: blotchy, ring-shaped discolorations, and small, irregular dark spots etched into the paint surface.

Although no defect in the paint job causes this, we will repair, at no charge to the owner, the surfaces of new vehicles damaged by this fallout condition within 12 months or 12,000 miles (20 000 km) of purchase, whichever occurs first.

Vehicle Identification

Vehicle Identification Number (VIN)

This is the legal identifier for the vehicle. It appears on a plate in the front corner of the instrument panel, on the driver side. It can be seen through the windshield from outside the vehicle. The VIN also appears on the Vehicle Certification and Service Parts labels and the certificates of title and registration.

Engine Identification

The eighth character in the VIN is the engine code. This code helps identify the vehicle's engine, specifications, and replacement parts. See "Engine Specifications" under *Capacities and Specifications on page 5-93* for the vehicle's engine code.

Service Parts Identification Label

This label is on the inside of the glove box. It is very helpful if parts need to be ordered. The label has the following information:

- Vehicle Identification Number (VIN)
- Model designation
- Paint information
- Production options and special equipment

Do not remove this label from the vehicle.

Electrical System

Add-On Electrical Equipment

Notice: **Do not add anything electrical to the vehicle unless you check with your dealer/retailer first. Some electrical equipment can damage the vehicle and the damage would not be covered by the vehicle's warranty. Some add-on electrical equipment can keep other components from working as they should.**

Add-on equipment can drain the vehicle battery, even if the vehicle is not operating.

The vehicle has an airbag system. Before attempting to add anything electrical to the vehicle, see *Servicing Your Airbag-Equipped Vehicle on page 1-73*.

Headlamp Wiring

The headlamp wiring is protected by fuses in the fuse block. An electrical overload will cause the lamps to turn off. If this happens, have the headlamp wiring checked right away.

Windshield Wiper Fuses

The windshield wiper motor is protected by a circuit breaker and a fuse. If the motor overheats due to heavy snow, etc., the wiper will stop until the motor cools. If the overload is caused by some electrical problem, have it fixed.

Power Windows and Other Power Options

Circuit breakers in the fuse block protect the power windows and other power accessories. When the current load is too heavy, the circuit breaker opens and closes, protecting the circuit until the problem is fixed or goes away.

Fuses and Circuit Breakers

The wiring circuits in the vehicle are protected from short circuits by a combination of fuses, circuit breakers and fusible thermal links. This greatly reduces the chance of fires caused by electrical problems.

Look at the silver-colored band inside the fuse. If the band is broken or melted, replace the fuse. Be sure you replace a bad fuse with a new one of the identical size and rating.

Fuses of the same amperage can be temporarily borrowed from another fuse location, if a fuse goes out. Replace the fuse as soon as you can.

Instrument Panel Fuse Block

The instrument panel fuse block is located on the end of the instrument panel on the driver side of the vehicle.

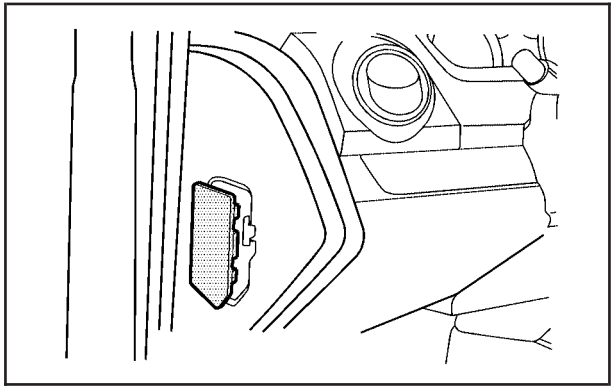

To access the fuses, open the fuse panel door by pulling the door out.

To reinstall the door, first insert the rear edge of the fuse panel door, then push the front of the door into the end of the instrument panel to secure it.

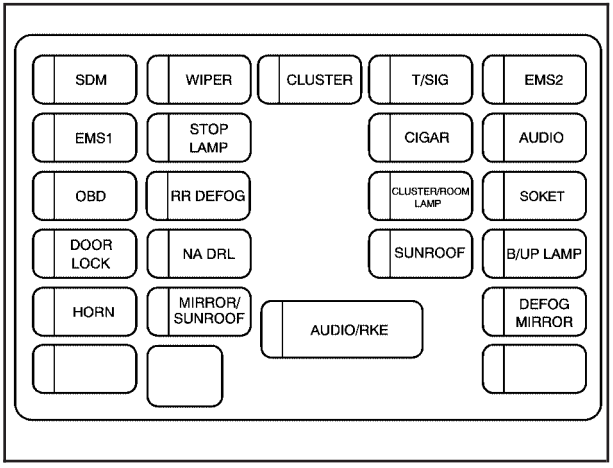

Fuses	Usage
AUDIO	Audio, Clock, Immobilizer
AUDIO/RKE	A/C Switch, Clock, Power Mirror Unit, Audio, Anti-Theft Module, TPMS
B/UP LAMP	PNP Switch, Reverse Lamp Switch
BLANK	Not Used
BLANK	Not Used
BLANK	Not Used
BLANK	Not Used

Fuses	Usage
CIGAR	Cigar Lighter
CLUSTER	Brake Switch, TPMS, Anti-Theft Module
DEFOG MIRROR	Power Mirror Unit, A/C Switch
RR DEFOG	Rear Defog
DOOR LOCK	Door Lock
NA DRL	NA DRL Circuit
MIRROR/ SUNROOF	Mirror Control Switch, Room Lamp, A/C Switch
EMS 1	Engine Room Fuse Block, TCM, VSS, Fuel Pump
EMS 2	Stoplamp Switch
HORN	Horn
OBD	DLC, Immobilizer
CLUSTER/ ROOM LAMP	Trunk Room Lamp, Trunk Open Switch, IPC, Room Lamp
SDM	Sensing and Diagnostic Module
SOKET	Power Jack

Fuses	Usage
STOP LAMP	Brake Switch
SUNROOF	Sunroof Module (Option)
T/SIG	Hazard Switch
WIPER	Wiper Switch, Wiper Motor

Engine Compartment Fuse Block

The engine compartment fuse block is located on the driver side of the vehicle, near the battery. See *Engine Compartment Overview on page 5-14* for more information on location.

Notice: **Spilling liquid on any electrical components on the vehicle may damage it. Always keep the covers on any electrical component.**

To access the fuses, press in the side flaps to release the cover. To reinstall the cover, push the cover until it is secure.

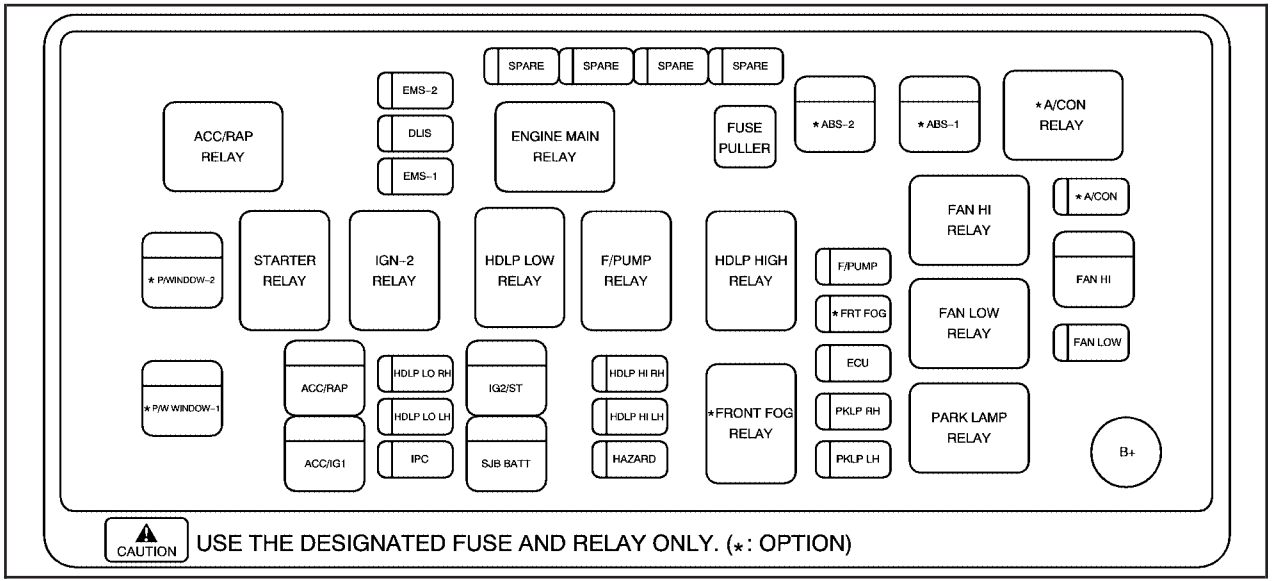

Fuses	Usage
FAN HI	Cooling Fan HI Relay
ABS-1	EBCM
ABS-2	EBCM

Fuses	Usage
SJB BATT	Instrument Panel Fuse Block
ACC/IG1	IGN1 Relay
IG2/ST	IGN2 Relay, Starter Relay

Fuses	Usage
ACC/RAP	Instrument Panel Fuse Block
P/WINDOW-2	Power Window Switch
P/W WINDOW-1	Power Window Switch
FAN LOW	Cooling Fan LOW Relay
A/CON	A/C Compressor Relay
PKLP LH	Tail Lamp (LH), Side Marker (LH), Turn Signal & Parking Lamp (LH), License Lamp
PKLP RH	Tail Lamp (RH), Side Marker (RH), Turn Signal & Parking Lamp (RH), License Lamp, I/P Fuse Block
ECU	ECM, TCM
FRT FOG	Front Fog Lamp Relay
F/PUMP	Fuel Pump Relay

Fuses	Usage
HAZARD	Hazard Switch, Hood Contact Switch
HDLP HI LH	Head Lamp (LH), IPC
HDLP HI RH	Head Lamp (RH)
IPC	IPC
HDLP LO LH	Head Lamp (LH), I/P Fuse Block
HDLP LO RH	Head Lamp (RH)
EMS-1	ECM, Injector
DLIS	Ignition Switch
EMS-2	EVAP Canister Purge Solenoid, Thermostat Heater, HO2S, MAF Sensor
SPARE	Not Used

Relays	Usage
F/PUMP RELAY	Fuel Pump
STARTER RELAY	Starter
PARK LAMP RELAY	Park Lamp
FRONT FOG RELAY	Fog Lamp
HDLP HIGH RELAY	Head Lamp High
HDLP LOW RELAY	Head Lamp Low

Relays	Usage
FAN HIGH RELAY	Cooling Fan High
FAN LOW RELAY	Cooling Fan Low
A/CON RELAY	Air Conditioner
ENGINE MAIN RELAY	Main Power
ACC/RAP RELAY	I/P Fuse Block
IGN-2 RELAY	Ignition

Misc.	Usage
FUSE PULLER	Fuse Puller

Capacities and Specifications

The following approximate capacities are given in English and metric conversions. See *Recommended Fluids and Lubricants on page 6-13* for more information.

Application	Capacities	
	English	Metric
Air Conditioning Refrigerant R134a	For the air conditioning system refrigerant charge amount, see the refrigerant caution label located under the hood. See your dealer/retailer for more information.	
Cooling System	6.7 qt	6.3 L
Engine Oil with Filter	4.8 qt	4.5 L
Fuel Tank	11.9 gal	45.0 L
Transmission, Automatic	6.2 qt	5.87 L
Transmission, Manual	1.9 qt	1.8 L
Wheel Nut Torque	81 lb ft	110 N•m
All capacities are approximate. When adding, be sure to fill to the approximate level, as recommended in this manual. Recheck fluid level after filling.		

Engine Specifications

Engine	VIN Code	Transmission	Spark Plug Gap
1.6L L4	6	Automatic and Manual	0.039-0.043 inch (1.0-1.1 mm)

✍ NOTES

Section 6 Maintenance Schedule

Maintenance Schedule 6-2
Introduction 6-2
Maintenance Requirements 6-2
Your Vehicle and the Environment 6-2
Using the Maintenance Schedule 6-2
Scheduled Maintenance 6-4
Additional Required Services 6-6
Maintenance Footnotes 6-8
Owner Checks and Services 6-9
At Each Fuel Fill 6-10
At Least Once a Month 6-10
At Least Once a Year 6-11
Recommended Fluids and Lubricants 6-13
Maintenance Replacement Parts 6-15
Engine Drive Belt Routing 6-16
Maintenance Record 6-17

Maintenance Schedule

Introduction

Important: Keep engine oil at the proper level and change as recommended.

Have you purchased the GM Protection Plan? The Plan supplements the vehicle warranties. See the Warranty and Owner Assistance booklet or your dealer/retailer for details.

Maintenance Requirements

Notice: **Maintenance intervals, checks, inspections, replacement parts, and recommended fluids and lubricants as prescribed in this manual are necessary to keep this vehicle in good working condition. Any damage caused by failure to follow scheduled maintenance might not be covered by the vehicle warranty.**

Your Vehicle and the Environment

Proper vehicle maintenance not only helps to keep the vehicle in good working condition, but also helps the environment. All recommended maintenance is important. Improper vehicle maintenance can even affect the quality of the air we breathe. Improper fluid levels or the wrong tire inflation can increase the level of emissions from the vehicle. To help protect the environment, and to keep the vehicle in good condition, be sure to maintain the vehicle properly.

Using the Maintenance Schedule

We want to help keep this vehicle in good working condition. But we do not know exactly how you will drive it. You might drive very short distances only a few times a week. Or you might drive long distances all the time in very hot, dusty weather. You might use the vehicle in making deliveries. Or you might drive it to work, to do errands, or in many other ways.

Because of all the different ways people use their vehicles, maintenance needs vary. You might need more frequent checks and replacements. So please read the following and note how you drive. If you have any questions on how to keep the vehicle in good condition, see your dealer/retailer.

This schedule is for vehicles that:

- carry passengers and cargo within recommended limits on the Tire and Loading Information label. See *Loading the Vehicle on page 4-16*.
- are driven on reasonable road surfaces within legal driving limits.
- use the recommended fuel. See *Gasoline Octane on page 5-5*.

The services in *Scheduled Maintenance on page 6-4* should be performed when indicated. See *Additional Required Services on page 6-6* and *Maintenance Footnotes on page 6-8* for further information.

⚠ CAUTION:

Performing maintenance work on a vehicle can be dangerous. In trying to do some jobs, you can be seriously injured. Do your own maintenance work only if you have the required know-how and the proper tools and equipment for the job. If you have any doubt, see your dealer/retailer to have a qualified technician do the work. See *Doing Your Own Service Work on page 5-4*.

Some maintenance services can be complex. So, unless you are technically qualified and have the necessary equipment, have your dealer/retailer do these jobs.

When you go to your dealer/retailer for service, trained and supported service technicians will perform the work using genuine parts.

To purchase service information, see *Service Publications Ordering Information on page 7-17*.

Owner Checks and Services on page 6-9 tells what should be checked, when to check it, and what can easily be done to help keep the vehicle in good condition.

The proper replacement parts, fluids, and lubricants to use are listed in *Recommended Fluids and Lubricants on page 6-13* and *Maintenance Replacement Parts on page 6-15*. When the vehicle is serviced, make sure these are used. All parts should be replaced and all necessary repairs done before you or anyone else drives the vehicle. We recommend the use of genuine parts from your dealer/retailer.

Scheduled Maintenance

When the change engine oil light displays, service is required for the vehicle. Have the vehicle serviced as soon as possible within the next 600 miles (1 000 km). It is possible that, if driving under the best conditions, the engine oil life system may not indicate that vehicle service is necessary for over a year. However, the engine oil and filter must be changed at least once a year and at this time the system must be reset. Your dealer/retailer has trained service technicians who will perform this work using genuine parts and reset the system.

If the engine oil life system is ever reset accidentally, service the vehicle within 3,000 miles (5 000 km) since the last service. Remember to reset the oil life system whenever the oil is changed. See for information on the Engine Oil Life System and resetting the system.

When the change engine oil light displays, certain services, checks, and inspections are required. Required services are described in the following for "Maintenance I" and "Maintenance II." Generally, it is recommended that the first service be Maintenance I, the second service be Maintenance II, and then alternate Maintenance I and Maintenance II thereafter. However, in some cases, Maintenance II may be required more often.

Maintenance I — Use Maintenance I if the change engine oil light displays within 10 months since the vehicle was purchased or Maintenance II was performed.

Maintenance II — Use Maintenance II if the previous service performed was Maintenance I. Always use Maintenance II whenever the change engine oil light displays 10 months or more since the last service or if the message has not come on at all for one year.

Scheduled Maintenance

Service	Maintenance I	Maintenance II
Change engine oil and filter. See *Engine Oil on page 5-16*. Reset oil life system. See *Engine Oil Life System on page 5-18*. *An Emission Control Service.*	•	•
Visually check for any leaks or damage. *See footnote (j).*	•	•
Inspect engine air cleaner filter. If necessary, replace filter. See *Engine Air Cleaner/Filter on page 5-19*. *See footnote (k).*		•
Rotate tires and check inflation pressures and wear. See *Tire Inspection and Rotation on page 5-62* and “Tire Wear Inspection” in *At Least Once a Month on page 6-10*.	•	•
Inspect brake system. *See footnote (a).*	•	•
Check engine coolant and windshield washer fluid levels. Add fluid as needed.	•	•
Perform any needed additional services. See “Additional Required Services” in this section.	•	•
Inspect suspension and steering components. *See footnote (b).*		•
Inspect engine cooling system. *See footnote (c).*		•
Inspect wiper blades. *See footnote (d).*		•
Inspect restraint system components. *See footnote (e).*		•
Lubricate body components. *See footnote (f).*		•
Inspect PCV system. *An Emission Control Service. See footnote †.*		•
Replace passenger compartment air filter. *See footnote (l).*		•
Check automatic transmission fluid level and add fluid as needed.		•

Additional Required Services

The following services should be performed at the first maintenance service (I or II) after the indicated miles (kilometers) shown for each item.

Additional Required Services

Service and Miles (Kilometers)	25,000 (40 000)	50,000 (80 000)	75,000 (120 000)	100,000 (160 000)	125,000 (200 000)	150,000 (240 000)
Inspect fuel system for damage or leaks.	•	•	•	•	•	•
Inspect exhaust system for loose or damaged components.	•	•	•	•	•	•
Replace engine air cleaner filter. See *Engine Air Cleaner/Filter on page 5-19*.	•	•	•	•	•	•
Change automatic transmission fluid and filter (severe service only). *See footnote (h).*		•		•		•
Replace spark plugs. *An Emission Control Service.* Not to exceed 37,500 miles (60 000 km).	•	•	•	•	•	•

Additional Required Services (cont'd)

Service and Miles (Kilometers)	25,000 (40 000)	50,000 (80 000)	75,000 (120 000)	100,000 (160 000)	125,000 (200 000)	150,000 (240 000)
Inspect EVAP canister and vapor lines. Replace EVAP vent solenoid valve. *An Emission Control Service. See footnote †.*		•		•		•
Engine cooling system service (or every five years, whichever occurs first). *An Emission Control Service. See footnote (i).*						•
Inspect engine accessory drive belts. *An Emission Control Service. See footnote (g).*	•	•	•	•	•	•
Replace timing belt.				•		
Replace fuel filter. *An Emission Control Service. See footnote †.*			•			
Replace power steering pump accessory drive belt.		•		•		•

Maintenance Footnotes

† *The U.S. Environmental Protection Agency or the California Air Resources Board has determined that the failure to perform this maintenance item will not nullify the emission warranty or limit recall liability prior to the completion of the vehicle's useful life. We, however, urge that all recommended maintenance services be performed at the indicated intervals and the maintenance be recorded.*

(a) *Visually inspect brake lines and hoses for proper hook-up, binding, leaks, cracks, chafing, etc. Inspect disc brake pads for wear and rotors for surface condition. Inspect drum brake linings/shoes for wear or cracks. Inspect other brake parts, including drums, wheel cylinders, calipers, parking brake, etc.*

(b) *Visually inspect front and rear suspension and steering system for damaged, loose, or missing parts or signs of wear. Inspect power steering cables for proper hook-up, binding, cracks, chafing, etc.*

(c) *Visually inspect hoses and have them replaced if they are cracked, swollen, or deteriorated. Inspect all pipes, fittings and clamps; replace with genuine parts as needed. To help ensure proper operation, a pressure test of the cooling system and pressure cap and cleaning the outside of the radiator and air conditioning condenser is recommended at least once a year.*

(d) *Inspect wiper blades for wear, cracking, or contamination. Clean the windshield and wiper blades, if contaminated. Replace wiper blades that are worn or damaged. See Windshield Wiper Blade Replacement on page 5-50 and Windshield and Wiper Blades on page 5-84 for more information.*

(e) *Make sure the safety belt reminder light and safety belt assemblies are working properly. Look for any other loose or damaged safety belt system parts. If you see anything that might keep a safety belt system from doing its job, have it repaired. Have any torn or frayed safety belts replaced. Also see Checking the Restraint Systems on page 1-75.*

(f) *Lubricate all key lock cylinders, door hinges and latches, hood hinges and latches, and trunk lid hinges and latches. More frequent lubrication may be required when exposed to a corrosive environment. Applying silicone grease on weatherstrips with a clean cloth will make them last longer, seal better, and not stick or squeak.*

(g) *Visually inspect belt for fraying, excessive cracks, or obvious damage. Replace belt if necessary.*

(h) *Change automatic transmission fluid and filter if the vehicle is mainly driven under one or more of these conditions:*

- *In heavy city traffic where the outside temperature regularly reaches 90°F (32°C) or higher.*
- *In hilly or mountainous terrain.*
- *When doing frequent trailer towing.*
- *Uses such as found in taxi, police, or delivery service.*

If the vehicle is not used under any of these conditions, the fluid and filter do not require changing.

(i) *Drain, flush, and refill cooling system. This service can be complex; you should have your dealer/retailer perform this service. See Engine Coolant on page 5-25 for what to use. Inspect hoses. Clean radiator, condenser, pressure cap, and filler neck. Pressure test the cooling system and pressure cap.*

(j) *A fluid loss in any vehicle system could indicate a problem. Have the system inspected and repaired and the fluid level checked. Add fluid if needed.*

(k) *If driving regularly under dusty conditions, inspect the filter at each engine oil change.*

(l) *If driving regularly under dusty conditions, the filter may require replacement more often.*

Owner Checks and Services

These owner checks and services should be performed at the intervals specified to help ensure vehicle safety, dependability, and emission control performance. Your dealer/retailer can assist with these checks and services.

Be sure any necessary repairs are completed at once. Whenever any fluids or lubricants are added to the vehicle, make sure they are the proper ones, as shown in *Recommended Fluids and Lubricants on page 6-13*.

At Each Fuel Fill

It is important to perform these underhood checks at each fuel fill.

Engine Oil Level Check

Notice: **It is important to check the engine oil regularly and keep it at the proper level. Failure to keep the engine oil at the proper level can cause damage to the engine not covered by the vehicle warranty.**

Check the engine oil level and add the proper oil if necessary. See *Engine Oil on page 5-16*.

Engine Coolant Level Check

Check the engine coolant level and add DEX-COOL® coolant mixture if necessary. See *Engine Coolant on page 5-25*.

Windshield Washer Fluid Level Check

Check the windshield washer fluid level in the windshield washer fluid reservoir and add the proper fluid if necessary.

At Least Once a Month

Tire Inflation Check

Inspect the vehicle's tires and make sure they are inflated to the correct pressures. Do not forget to check the spare tire, if the vehicle has one. See *Inflation - Tire Pressure on page 5-57*. If the vehicle has a spare tire, check to make sure it is stored securely. See *Changing a Flat Tire on page 5-70*.

Tire Wear Inspection

Tire rotation may be required for high mileage highway drivers prior to the Engine Oil Life System service notification. Check the tires for wear and, if necessary, rotate the tires. See *Tire Inspection and Rotation on page 5-62*.

At Least Once a Year

Starter Switch Check

⚠ CAUTION:

When you are doing this inspection, the vehicle could move suddenly. If the vehicle moves, you or others could be injured.

1. Before starting this check, be sure there is enough room around the vehicle.
2. Firmly apply both the parking brake and the regular brake. See *Parking Brake on page 2-28* if necessary.

   Do not use the accelerator pedal, and be ready to turn off the engine immediately if it starts.
3. For automatic transmission vehicles, try to start the engine in each gear. The starter should work only in P (Park) or N (Neutral). If the starter works in any other position, your vehicle needs service.

   For manual transmission vehicles, put the shift lever in Neutral, push the clutch pedal down halfway, and try to start the engine. The starter should work only when the clutch pedal is pushed down all the way to the floor. If the starter works when the clutch pedal is not pushed all the way down, your vehicle needs service.

Automatic Transmission Shift Lock Control System Check

⚠ CAUTION:

When you are doing this inspection, the vehicle could move suddenly. If the vehicle moves, you or others could be injured.

1. Before starting this check, be sure there is enough room around the vehicle. It should be parked on a level surface.
2. Firmly apply the parking brake. See *Parking Brake on page 2-28* if necessary.

   Be ready to apply the regular brake immediately if the vehicle begins to move.
3. With the engine off, turn the ignition to ON/RUN, but do not start the engine. Without applying the regular brake, try to move the shift lever out of P (Park) with normal effort. If the shift lever moves out of P (Park), your vehicle needs service.

Ignition Transmission Lock Check

While parked, and with the parking brake set, try to turn the ignition to LOCK/OFF in each shift lever position.

- For automatic transmission vehicles, the ignition should turn to LOCK/OFF only when the shift lever is in P (Park).
- For manual transmission vehicles, the ignition should turn to LOCK/OFF only when you press the key release button.

On all vehicles, the ignition key should come out only in LOCK/OFF.

Turn the steering wheel to the left and to the right. It should only lock when turned to the right.

Parking Brake and Automatic Transmission P (Park) Mechanism Check

⚠ CAUTION:

When you are doing this check, the vehicle could begin to move. You or others could be injured and property could be damaged. Make sure there is room in front of the vehicle in case it begins to roll. Be ready to apply the regular brake at once should the vehicle begin to move.

Park on a fairly steep hill, with the vehicle facing downhill. Keeping your foot on the regular brake, set the parking brake.

- To check the parking brake's holding ability: With the engine running and transmission in N (Neutral), slowly remove foot pressure from the regular brake pedal. Do this until the vehicle is held by the parking brake only.
- To check the P (Park) mechanism's holding ability: With the engine running, shift to P (Park). Then release the parking brake followed by the regular brake.

Underbody Flushing Service

At least every spring, use plain water to flush any corrosive materials from the underbody. Take care to clean thoroughly any areas where mud and other debris can collect.

Recommended Fluids and Lubricants

Fluids and lubricants identified below by name, part number, or specification can be obtained from your dealer/retailer.

Usage	Fluid/Lubricant
Engine Oil	Engine oil which meets GM Standard GM6094M and displays the American Petroleum Institute Certified for Gasoline Engines starburst symbol. To determine the proper viscosity for your vehicle's engine, see *Engine Oil on page 5-16*.
Engine Coolant	50/50 mixture of clean, drinkable water and use only DEX-COOL® Coolant. See *Engine Coolant on page 5-25.*
Hydraulic Brake System	Delco® Supreme 11 Brake Fluid or equivalent DOT-3 brake fluid.

Usage	Fluid/Lubricant
Windshield Washer Solvent	Optikleen® Washer Solvent.
Power Steering System	DEXRON®-VI Automatic Transmission Fluid.
Automatic Transmission	Use only T-IV Automatic Transmission Fluid (GM Part No. U.S. 88900925, in Canada 22689186).
Manual Transmission	Manual Transmission Fluid (GM Part No. U.S. 89021806, in Canada 89021807).
Key Lock Cylinders	Multi-Purpose Lubricant, Superlube (GM Part No. U.S. 12346241, in Canada 10953474).
Manual Transmission Shift Linkage	Chassis Lubricant (GM Part No. U.S. 12377985, in Canada 88901242) or lubricant meeting requirements of NLGI #2, Category LB or GC-LB.

Usage	Fluid/Lubricant
Chassis Lubrication	Chassis Lubricant (GM Part No. U.S. 12377985, in Canada 88901242) or lubricant meeting requirements of NLGI #2, Category LB or GC-LB.
Hood Latch Assembly, Secondary Latch, Pivots, Spring Anchor, and Release Pawl	Lubriplate Lubricant Aerosol (GM Part No. U.S. 12346293, in Canada 992723) or lubricant meeting requirements of NLGI #2, Category LB or GC-LB.
Hood and Door Hinges	Multi-Purpose Lubricant, Superlube (GM Part No. U.S. 12346241, in Canada 10953474).
Weatherstrip Conditioning	Weatherstrip Lubricant (GM Part No. U.S. 3634770, in Canada 10953518) or Dielectric Silicone Grease (GM Part No. U.S. 12345579, in Canada 992887).

Maintenance Replacement Parts

Replacement parts identified below by name, part number, or specification can be obtained from your dealer/retailer.

Maintenance Replacement Parts

Part	GM Part Number	ACDelco Part Number
Engine Air Cleaner/Filter	96536696	A3081C
Engine Oil Filter	93185674	—
Passenger Compartment Air Filter	96962173	—
Spark Plugs	96476119	—
Wiper Blades - Hatchback		
Driver Side	96476652	—
Passenger Side	96476656	—
Rear	96301840	—
Wiper Blades - Sedan		
Driver Side	96476652	—
Passenger Side	96476656	—

Engine Drive Belt Routing

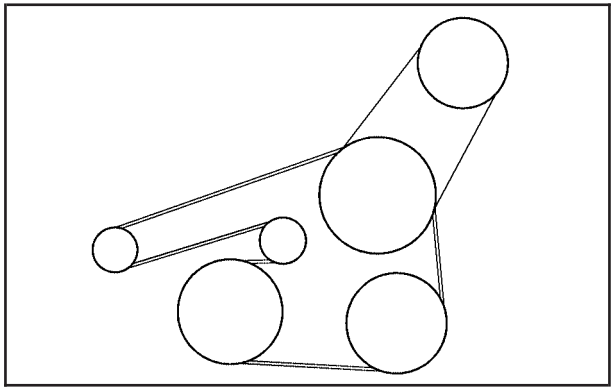

Maintenance Record

After the scheduled services are performed, record the date, odometer reading, who performed the service, and the type of services performed in the boxes provided. See *Maintenance Requirements on page 6-2*. Any additional information from *Owner Checks and Services on page 6-9* can be added on the following record pages. You should retain all maintenance receipts.

Maintenance Record

Date	Odometer Reading	Serviced By	Maintenance I or Maintenance II	Services Performed

Maintenance Record (cont'd)

Date	Odometer Reading	Serviced By	Maintenance I or Maintenance II	Services Performed

Maintenance Record (cont'd)

Date	Odometer Reading	Serviced By	Maintenance I or Maintenance II	Services Performed

Maintenance Record (cont'd)

Date	Odometer Reading	Serviced By	Maintenance I or Maintenance II	Services Performed

Section 7 Customer Assistance Information

Customer Assistance and Information 7-2
Customer Satisfaction Procedure 7-2
Online Owner Center 7-5
Customer Assistance for Text Telephone (TTY) Users 7-6
Customer Assistance Offices 7-6
GM Mobility Reimbursement Program 7-7
Roadside Assistance Program 7-7
Scheduling Service Appointments 7-11
Courtesy Transportation 7-11
Collision Damage Repair 7-13

Reporting Safety Defects 7-16
Reporting Safety Defects to the United States Government 7-16
Reporting Safety Defects to the Canadian Government 7-17
Reporting Safety Defects to General Motors 7-17
Service Publications Ordering Information 7-17

Vehicle Data Recording and Privacy 7-18
Event Data Recorders 7-19
OnStar® 7-20
Navigation System 7-20
Radio Frequency Identification (RFID) 7-20

Customer Assistance and Information

Customer Satisfaction Procedure

Your satisfaction and goodwill are important to your dealer and to Chevrolet. Normally, any concerns with the sales transaction or the operation of the vehicle will be resolved by the dealer's sales or service departments. Sometimes, however, despite the best intentions of all concerned, misunderstandings can occur. If your concern has not been resolved to your satisfaction, the following steps should be taken:

STEP ONE: Discuss your concern with a member of dealership management. Normally, concerns can be quickly resolved at that level. If the matter has already been reviewed with the sales, service, or parts manager, contact the owner of the dealership or the general manager.

STEP TWO: If after contacting a member of dealership management, it appears your concern cannot be resolved by the dealership without further help, in the U.S., call the Chevrolet Customer Assistance Center at 1-800-222-1020. In Canada, call General Motors of Canada Customer Communication Centre at 1-800-263-3777 (English), or 1-800-263-7854 (French).

We encourage you to call the toll-free number in order to give your inquiry prompt attention. Have the following information available to give the Customer Assistance Representative:

- Vehicle Identification Number (VIN). This is available from the vehicle registration or title, or the plate at the top left of the instrument panel and visible through the windshield.
- Dealership name and location.
- Vehicle delivery date and present mileage.

When contacting Chevrolet, remember that your concern will likely be resolved at a dealer's facility. That is why we suggest following Step One first.

STEP THREE — U.S. Owners: Both General Motors and your dealer are committed to making sure you are completely satisfied with your new vehicle. However, if you continue to remain unsatisfied after following the procedure outlined in Steps One and Two, you can file with the Better Business Bureau (BBB) Auto Line Program to enforce your rights.

The BBB Auto Line Program is an out of court program administered by the Council of Better Business Bureaus to settle automotive disputes regarding vehicle repairs or the interpretation of the New Vehicle Limited Warranty. Although you may be required to resort to this informal dispute resolution program prior to filing a court action, use of the program is free of charge and your case will generally be heard within 40 days. If you do not agree with the decision given in your case, you may reject it and proceed with any other venue for relief available to you.

You may contact the BBB Auto Line Program using the toll-free telephone number or write them at the following address:

BBB Auto Line Program
Council of Better Business Bureaus, Inc.
4200 Wilson Boulevard
Suite 800
Arlington, VA 22203-1838

Telephone : 1-800-955-5100
dr.bbb.org/goauto

This program is available in all 50 states and the District of Columbia. Eligibility is limited by vehicle age, mileage, and other factors. General Motors reserves the right to change eligibility limitations and/or discontinue its participation in this program.

STEP THREE — Canadian Owners: In the event that you do not feel your concerns have been addressed after following the procedure outlined in Steps 1 and 2, General Motors of Canada Limited wants you to be aware of its participation in a no-charge Mediation/Arbitration Program. General Motors of Canada Limited has committed to binding arbitration of owner disputes involving factory-related vehicle service claims. The program provides for the review of the facts involved by an impartial third party arbiter, and may include an informal hearing before the arbiter. The program is designed so that the entire dispute settlement process, from the time you file your complaint to the final decision, should be completed in about 70 days. We believe our impartial program offers advantages over courts in most jurisdictions because it is informal, quick, and free of charge.

For further information concerning eligibility in the Canadian Motor Vehicle Arbitration Plan (CAMVAP), call toll-free 1-800-207-0685, or call the General Motors Customer Communication Centre, 1-800-263-3777 (English), 1-800-263-7854 (French), or write to:

The Mediation/Arbitration Program
c/o Customer Communication Centre
General Motors of Canada Limited
Mail Code: CA1-163-005
1908 Colonel Sam Drive
Oshawa, Ontario L1H 8P7

Your inquiry should be accompanied by the Vehicle Identification Number (VIN).

Online Owner Center

Online Owner Center (U.S.) — www.gmownercenter.com/chevrolet

Information and services customized for your specific vehicle — all in one convenient place.

- Digital owner manual, warranty information, and more
- Online service and maintenance records
- Find Chevrolet dealers for service nationwide
- Exclusive privileges and offers
- Recall notices for your specific vehicle
- OnStar® and GM Cardmember Services Earnings summaries

Other Helpful Links:

Chevrolet — www.chevrolet.com

Chevrolet Merchandise — www.chevymall.com

Help Center — www.chevrolet.com/helpcenter

- FAQ
- Contact Us

My GM Canada (Canada) — www.gm.ca

My GM Canada is a password-protected section of www.gm.ca where you can save information on GM vehicles, get personalized offers, and use handy tools and forms with greater ease.

Here are a few of the valuable tools and services you will have access to:

- My Showroom: Find and save information on vehicles and current offers in your area.
- My Dealers/Retailers: Save details such as address and phone number for each of your preferred GM dealers/retailers.
- My Driveway: Access quick links to parts and service estimates, check trade-in values, or schedule a service appointment by adding the vehicles you own to your driveway profile.
- My Preferences: Manage your profile and use tools and forms with greater ease.

To sign up, visit the My GM Canada section within www.gm.ca.

Customer Assistance for Text Telephone (TTY) Users

To assist customers who are deaf, hard of hearing, or speech-impaired and who use Text Telephones (TTYs), Chevrolet has TTY equipment available at its Customer Assistance Center. Any TTY user in the U.S. can communicate with Chevrolet by dialing: 1-800-833-CHEV (2438). (TTY users in Canada can dial 1-800-263-3830.)

Customer Assistance Offices

Chevrolet encourages customers to call the toll-free number for assistance. However, if a customer wishes to write or e-mail Chevrolet, the letter should be addressed to:

United States — Customer Assistance

Chevrolet Motor Division
Chevrolet Customer Assistance Center
P.O. Box 33170
Detroit, MI 48232-5170

Chevrolet.com
1-800-222-1020
1-800-833-2438 (For Text Telephone devices (TTYs))
Roadside Assistance: 1-800-CHEV-USA (243-8872)

From Puerto Rico:
1-800-496-9992 (English)
1-800-496-9993 (Spanish)

From U.S. Virgin Islands:
1-800-496-9994

Canada — Customer Assistance

General Motors of Canada Limited
Customer Communication Centre, CA1-163-005
1908 Colonel Sam Drive
Oshawa, Ontario L1H 8P7

gmcanada.com
1-800-263-3777 (English)
1-800-263-7854 (French)
1-800-263-3830 (For Text Telephone devices (TTYs))
Roadside Assistance: 1-800-268-6800

Overseas — Customer Assistance

Please contact the local General Motors Business Unit.

Mexico, Central America and Caribbean Islands/Countries (Except Puerto Rico and U.S. Virgin Islands) — Customer Assistance

General Motors de Mexico, S. de R.L. de C.V.
Customer Assistance Center
Paseo de la Reforma # 2740
Col. Lomas de Bezares
C.P. 11910, Mexico, D.F.
01-800-508-0000
Long Distance: 011-52-53 29 0 800

GM Mobility Reimbursement Program

GM MOBILITY℠

This program, available to qualified applicants, can reimburse you up to $1,000 of the cost of eligible aftermarket adaptive equipment required for your vehicle, such as hand controls or a wheelchair/scooter lift.

The offer is available for a very limited period of time from the date of vehicle purchase/lease. For more details, or to determine your vehicle's eligibility, visit gmmobility.com or call the GM Mobility Assistance Center at 1-800-323-9935. Text telephone (TTY) users, call 1-800-833-9935.

General Motors of Canada also has a Mobility Program. Call 1-800-GM-DRIVE (463-7483) for details. TTY users call 1-800-263-3830.

Roadside Assistance Program

For U.S. purchased vehicles, call **1-800-CHEV-USA (1-800-243-8872); (Text telephone (TTY): 1-888-889-2438)**.

For Canadian purchased vehicles, call **1-800-268-6800**.

Service is available 24 hours a day, 365 days a year.

Calling for Assistance

When calling Roadside Assistance, have the following information ready:

- Your name, home address, and home telephone number
- Telephone number of your location
- Location of the vehicle
- Model, year, color, and license plate number of the vehicle
- Odometer reading, Vehicle Identification Number (VIN), and delivery date of the vehicle
- Description of the problem

Coverage

Services are provided up to 5 years/100,000 miles (160 000 km), whichever comes first.

In the U.S., anyone driving the vehicle is covered. In Canada, a person driving the vehicle without permission from the owner is not covered.

Roadside Assistance is not a part of the New Vehicle Limited Warranty. Chevrolet and General Motors of Canada Limited reserve the right to make any changes or discontinue the Roadside Assistance program at any time without notification.

Chevrolet and General Motors of Canada Limited reserve the right to limit services or payment to an owner or driver if they decide the claims are made too often, or the same type of claim is made many times.

Services Provided

- **Emergency Fuel Delivery:** Delivery of enough fuel for the vehicle to get to the nearest service station.
- **Lock-Out Service:** Service is provided to unlock the vehicle if you are locked out. A remote unlock may be available if you have OnStar®. For security reasons, the driver must present identification before this service is given.
- **Emergency Tow From a Public Road or Highway:** Tow to the nearest Chevrolet dealer for warranty service, or if the vehicle was in a crash and cannot be driven. Assistance is also given when the vehicle is stuck in the sand, mud, or snow.
- **Flat Tire Change:** Service is provided to change a flat tire with the spare tire. The spare tire, if equipped, must be in good condition and properly inflated. It is the owner's responsibility for the repair or replacement of the tire if it is not covered by the warranty.
- **Battery Jump Start:** Service is provided to jump start a dead battery.
- **Trip Interruption Benefits and Assistance:** If your trip is interrupted due to a warranty failure, incidental expenses may be reimbursed during the 5 years/ 100,000 miles (160 000 km) Powertrain warranty period. Items considered are hotel, meals, and rental car.

Services Not Included in Roadside Assistance

- Impound towing caused by violation of any laws.
- Legal fines.
- Mounting, dismounting or changing of snow tires, chains, or other traction devices.
- Towing or services for vehicles driven on a non-public road or highway.

Services Specific to Canadian Purchased Vehicles

- **Fuel delivery:** Reimbursement is approximately $5 Canadian. Diesel fuel delivery may be restricted. Propane and other fuels are not provided through this service.
- **Lock-Out Service:** Vehicle registration is required.
- **Trip Routing Service:** Detailed maps of North America are provided when requested either with the most direct route or the most scenic route. There is a limit of six requests per year. Additional travel information is also available. Allow three weeks for delivery.
- **Trip Interruption Benefits and Assistance:** Must be over 250 kilometres from where your trip was started to qualify. General Motors of Canada Limited requires pre-authorization, original detailed receipts, and a copy of the repair orders. Once authorization has been received, the Roadside Assistance advisor will help you make arrangements and explain how to receive payment.
- **Alternative Service:** If assistance cannot be provided right away, the Roadside Assistance advisor may give you permission to get local emergency road service. You will receive payment, up to $100, after sending the original receipt to Roadside Assistance. Mechanical failures may be covered, however any cost for parts and labor for repairs not covered by the warranty are the owner responsibility.

Scheduling Service Appointments

When your vehicle requires warranty service, contact your dealer/retailer and request an appointment. By scheduling a service appointment and advising your service consultant of your transportation needs, your dealer/retailer can help minimize your inconvenience.

If your vehicle cannot be scheduled into the service department immediately, keep driving it until it can be scheduled for service, unless, of course, the problem is safety-related. If it is, please call your dealership/retailer, let them know this, and ask for instructions.

If the dealer/retailer requests you to bring the vehicle for service, you are urged to do so as early in the work day as possible to allow for the same day repair.

Courtesy Transportation

To enhance your ownership experience, we and our participating dealers are proud to offer Courtesy Transportation, a customer support program for vehicles with the Bumper to Bumper (Base Warranty Coverage period in Canada) and extended powertrain, and hybrid specific warranty in both the U.S. and Canada.

Several courtesy transportation options are available to assist in reducing your inconvenience when warranty repairs are required.

Courtesy Transportation is not a part of the New Vehicle Limited Warranty. A separate booklet entitled “Warranty and Owner Assistance Information” furnished with each new vehicle provides detailed warranty coverage information.

Transportation Options

Warranty service can generally be completed while you wait. However, if you are unable to wait, GM helps to minimize your inconvenience by providing several transportation options. Depending on the circumstances, your dealer can offer you one of the following:

Shuttle Service

Shuttle service is the preferred means of offering Courtesy Transportation. Dealers may provide you with shuttle service to get you to your destination with minimal interruption of your daily schedule. This includes one-way or round trip shuttle service within reasonable time and distance parameters of the dealer's area.

Public Transportation or Fuel Reimbursement

If your vehicle requires overnight warranty repairs, and public transportation is used instead of the dealer's shuttle service, the expense must be supported by original receipts and can only be up to the maximum amount allowed by GM for shuttle service. In addition, for U.S. customers, should you arrange transportation through a friend or relative, limited reimbursement for reasonable fuel expenses may be available. Claim amounts should reflect actual costs and be supported by original receipts. See your dealer for information regarding the allowance amounts for reimbursement of fuel or other transportation costs.

Courtesy Rental Vehicle

Your dealer may arrange to provide you with a courtesy rental vehicle or reimburse you for a rental vehicle that you obtain if your vehicle is kept for an overnight warranty repair. Rental reimbursement will be limited and must be supported by original receipts. This requires that you sign and complete a rental agreement and meet state/provincial, local, and rental vehicle provider requirements. Requirements vary and may include minimum age requirements, insurance coverage, credit card, etc. You are responsible for fuel usage charges and may also be responsible for taxes, levies, usage fees, excessive mileage, or rental usage beyond the completion of the repair.

It may not be possible to provide a like-vehicle as a courtesy rental.

Additional Program Information

All program options, such as shuttle service, may not be available at every dealer. Please contact your dealer for specific information about availability. All Courtesy Transportation arrangements will be administered by appropriate dealer personnel.

General Motors reserves the right to unilaterally modify, change or discontinue Courtesy Transportation at any time and to resolve all questions of claim eligibility pursuant to the terms and conditions described herein at its sole discretion.

Collision Damage Repair

If your vehicle is involved in a collision and it is damaged, have the damage repaired by a qualified technician using the proper equipment and quality replacement parts. Poorly performed collision repairs diminish your vehicle's resale value, and safety performance can be compromised in subsequent collisions.

Collision Parts

Genuine GM Collision parts are new parts made with the same materials and construction methods as the parts with which your vehicle was originally built. Genuine GM Collision parts are your best choice to ensure that your vehicle's designed appearance, durability, and safety are preserved. The use of Genuine GM parts can help maintain your GM New Vehicle Warranty.

Recycled original equipment parts may also be used for repair. These parts are typically removed from vehicles that were total losses in prior crashes. In most cases, the parts being recycled are from undamaged sections of the vehicle. A recycled original equipment GM part, may be an acceptable choice to maintain your vehicle's originally designed appearance and safety performance, however, the history of these parts is not known. Such parts are not covered by your GM New Vehicle Limited Warranty, and any related failures are not covered by that warranty.

Aftermarket collision parts are also available. These are made by companies other than GM and may not have been tested for your vehicle. As a result, these parts may fit poorly, exhibit premature durability/corrosion problems, and may not perform properly in subsequent collisions. Aftermarket parts are not covered by your GM New Vehicle Limited Warranty, and any vehicle failure related to such parts are not covered by that warranty.

Repair Facility

We recommend that you choose a collision repair facility that meets your needs before you ever need collision repairs. Your dealer/retailer may have a collision repair center with GM-trained technicians and state of the art equipment, or be able to recommend a collision repair center that has GM-trained technicians and comparable equipment.

Insuring Your Vehicle

Protect your investment in your GM vehicle with comprehensive and collision insurance coverage. There are significant differences in the quality of coverage afforded by various insurance policy terms. Many insurance policies provide reduced protection to your GM vehicle by limiting compensation for damage repairs by using aftermarket collision parts. Some insurance companies will not specify aftermarket collision parts. When purchasing insurance, we recommend that you assure your vehicle will be repaired with GM original equipment collision parts. If such insurance coverage is not available from your current insurance carrier, consider switching to another insurance carrier.

If your vehicle is leased, the leasing company may require you to have insurance that assures repairs with Genuine GM Original Equipment Manufacturer (OEM) parts or Genuine Manufacturer replacement parts. Read your lease carefully, as you may be charged at the end of your lease for poor quality repairs.

If a Crash Occurs

Here is what to do if you are involved in a crash.

- Check to make sure that you are all right. If you are uninjured, make sure that no one else in your vehicle, or the other vehicle, is injured.
- If there has been an injury, call emergency services for help. Do not leave the scene of a crash until all matters have been taken care of. Move your vehicle only if its position puts you in danger or you are instructed to move it by a police officer.
- Give only the necessary and requested information to police and other parties involved in the crash. Do not discuss your personal condition, mental frame of mind, or anything unrelated to the crash. This will help guard against post-crash legal action.
- If you need roadside assistance, call GM Roadside Assistance. See *Roadside Assistance Program on page 7-7* for more information.

- If your vehicle cannot be driven, know where the towing service will be taking it. Get a card from the tow truck operator or write down the driver's name, the service's name, and the phone number.
- Remove any valuables from your vehicle before it is towed away. Make sure this includes your insurance information and registration if you keep these items in your vehicle.
- Gather the important information you will need from the other driver. Things like name, address, phone number, driver's license number, vehicle license plate, vehicle make, model and model year, Vehicle Identification Number (VIN), insurance company and policy number, and a general description of the damage to the other vehicle.
- If possible, call your insurance company from the scene of the crash. They will walk you through the information they will need. If they ask for a police report, phone or go to the police department headquarters the next day and you can get a copy of the report for a nominal fee. In some states/provinces with "no fault" insurance laws, a report may not be necessary. This is especially true if there are no injuries and both vehicles are driveable.
- Choose a reputable collision repair facility for your vehicle. Whether you select a dealer/retailer or a private collision repair facility to fix the damage, make sure you are comfortable with them. Remember, you will have to feel comfortable with their work for a long time.
- Once you have an estimate, read it carefully and make sure you understand what work will be performed on your vehicle. If you have a question, ask for an explanation. Reputable shops welcome this opportunity.

Managing the Vehicle Damage Repair Process

In the event that your vehicle requires damage repairs, GM recommends that you take an active role in its repair. If you have a pre-determined repair facility of choice, take your vehicle there, or have it towed there. Specify to the facility that any required replacement collision parts be original equipment parts, either new Genuine GM parts or recycled original GM parts. Remember, recycled parts will not be covered by your GM vehicle warranty.

Insurance pays the bill for the repair, but you must live with the repair. Depending on your policy limits, your insurance company may initially value the repair using aftermarket parts. Discuss this with your repair professional, and insist on Genuine GM parts. Remember if your vehicle is leased you may be obligated to have the vehicle repaired with Genuine GM parts, even if your insurance coverage does not pay the full cost.

If another party's insurance company is paying for the repairs, you are not obligated to accept a repair valuation based on that insurance company's collision policy repair limits, as you have no contractual limits with that company. In such cases, you can have control of the repair and parts choices as long as cost stays within reasonable limits.

Reporting Safety Defects

Reporting Safety Defects to the United States Government

If you believe that your vehicle has a defect which could cause a crash or could cause injury or death, you should immediately inform the National Highway Traffic Safety Administration (NHTSA) in addition to notifying General Motors.

If NHTSA receives similar complaints, it may open an investigation, and if it finds that a safety defect exists in a group of vehicles, it may order a recall and remedy campaign. However, NHTSA cannot become involved in individual problems between you, your dealer/retailer, or General Motors.

To contact NHTSA, you may call the Vehicle Safety Hotline toll-free at 1-888-327-4236 (TTY: 1-800-424-9153); go to safercar.gov; or write to:

Administrator, NHTSA
1200 New Jersey Avenue, S.E.
Washington D.C., 20590

You can also obtain other information about motor vehicle safety from safercar.gov.

Reporting Safety Defects to the Canadian Government

If you live in Canada, and you believe that your vehicle has a safety defect, notify Transport Canada immediately, in addition to notifying General Motors of Canada Limited. Call them at 1-800-333-0510 or write to:

Transport Canada
Road Safety Branch
2780 Sheffield Road
Ottawa, Ontario K1B 3V9

Reporting Safety Defects to General Motors

In addition to notifying NHTSA (or Transport Canada) in a situation like this, please notify General Motors.

Call 1-800-222-1020, or write:

Chevrolet Motor Division
Chevrolet Customer Assistance Center
P.O. Box 33170
Detroit, MI 48232-5170

In Canada, call 1-800-263-3777 (English) or 1-800-263-7854 (French), or write:

General Motors of Canada Limited
Customer Communication Centre, CA1-163-005
1908 Colonel Sam Drive
Oshawa, Ontario L1H 8P7

Service Publications Ordering Information

Service Manuals

Service Manuals have the diagnosis and repair information on engines, transmission, axle suspension, brakes, electrical, steering, body, etc.

Service Bulletins

Service Bulletins give additional technical service information needed to knowledgeably service General Motors cars and trucks. Each bulletin contains instructions to assist in the diagnosis and service of your vehicle.

Owner Information

Owner publications are written specifically for owners and intended to provide basic operational information about the vehicle. The owner manual includes the Maintenance Schedule for all models.

In-Portfolio: Includes a Portfolio, Owner Manual, and Warranty Booklet.

RETAIL SELL PRICE: $35.00 (U.S.) plus processing fee

Without Portfolio: Owner Manual only.

RETAIL SELL PRICE: $25.00 (U.S.) plus processing fee

Current and Past Model Order Forms

Technical Service Bulletins and Manuals are available for current and past model GM vehicles. To request an order form, specify year and model name of the vehicle.

ORDER TOLL FREE: 1-800-551-4123 Monday-Friday 8:00 AM - 6:00 PM Eastern Time

For Credit Card Orders Only (VISA-MasterCard-Discover), visit Helm, Inc. on the World Wide Web at: helminc.com

Or you can write to:

Helm, Incorporated
P.O. Box 07130
Detroit, MI 48207

Prices are subject to change without notice and without incurring obligation. Allow ample time for delivery.

Note to Canadian Customers: All listed prices are quoted in U.S. funds. Canadian residents are to make checks payable in U.S. funds.

Vehicle Data Recording and Privacy

Your GM vehicle has a number of sophisticated computers that record information about the vehicle's performance and how it is driven. For example, your vehicle uses computer modules to monitor and control engine and transmission performance, to monitor the conditions for airbag deployment and deploy airbags in a crash and, if so equipped, to provide antilock braking to help the driver control the vehicle. These modules may store data to help your dealer/retailer technician service your vehicle. Some modules may also store data about how you operate the vehicle, such as rate of fuel consumption or average speed. These modules may also retain the owner's personal preferences, such as radio pre-sets, seat positions, and temperature settings.

Event Data Recorders

This vehicle has an Event Data Recorder (EDR). The main purpose of an EDR is to record, in certain crash or near crash-like situations, such as an airbag deployment or hitting a road obstacle, data that will assist in understanding how a vehicle's systems performed. The EDR is designed to record data related to vehicle dynamics and safety systems for a short period of time, typically 30 seconds or less. The EDR in this vehicle is designed to record such data as:

- How various systems in your vehicle were operating
- Whether or not the driver and passenger safety belts were buckled/fastened
- How far, if at all, the driver was pressing the accelerator and/or brake pedal
- How fast the vehicle was traveling

This data can help provide a better understanding of the circumstances in which crashes and injuries occur.

Important: EDR data is recorded by your vehicle only if a non-trivial crash situation occurs; no data is recorded by the EDR under normal driving conditions and no personal data (e.g., name, gender, age, and crash location) is recorded. However, other parties, such as law enforcement, could combine the EDR data with the type of personally identifying data routinely acquired during a crash investigation.

To read data recorded by an EDR, special equipment is required, and access to the vehicle or the EDR is needed. In addition to the vehicle manufacturer, other parties, such as law enforcement, that have the special equipment, can read the information if they have access to the vehicle or the EDR.

GM will not access this data or share it with others except: with the consent of the vehicle owner or, if the vehicle is leased, with the consent of the lessee; in response to an official request of police or similar government office; as part of GM's defense of litigation through the discovery process; or, as required by law. Data that GM collects or receives may also be used for GM research needs or may be made available to others for research purposes, where a need is shown and the data is not tied to a specific vehicle or vehicle owner.

OnStar®

If your vehicle has OnStar and you subscribe to the OnStar services, please refer to the OnStar Terms and Conditions for information on data collection and use.

Navigation System

If your vehicle has a navigation system, use of the system may result in the storage of destinations, addresses, telephone numbers, and other trip information. Refer to the navigation system operating manual for information on stored data and for deletion instructions.

Radio Frequency Identification (RFID)

RFID technology is used in some vehicles for functions such as tire pressure monitoring and ignition system security, as well as in connection with conveniences such as key fobs for remote door locking/unlocking and starting, and in-vehicle transmitters for garage door openers. RFID technology in GM vehicles does not use or record personal information or link with any other GM system containing personal information.

A

Accessories and Modifications 5-3
Accessory Power Outlets 3-16
Adding Equipment to Your Airbag-Equipped
  Vehicle 1-74
Additives, Fuel 5-6
Add-On Electrical Equipment 5-86
Air Cleaner/Filter, Engine 5-19
Air Conditioning 3-18
Airbag
  Passenger Status Indicator 3-27
  Readiness Light 3-26
Airbag System 1-60
  Adding Equipment to Your Airbag-Equipped
    Vehicle 1-74
  How Does an Airbag Restrain? 1-65
  Passenger Sensing System 1-67
  Servicing Your Airbag-Equipped Vehicle 1-73
  What Makes an Airbag Inflate? 1-65
  What Will You See After an Airbag Inflates? 1-66
  When Should an Airbag Inflate? 1-64
  Where Are the Airbags? 1-62
AM-FM Radio 3-41
Antenna, Backglass 3-59
Antenna, Fixed Mast 3-58
Antilock Brake System (ABS) 4-5
Antilock Brake, System Warning Light 3-30
Appearance Care
  Aluminum Wheels 5-84
  Care of Safety Belts 5-82
  Chemical Paint Spotting 5-85
  Cleaning Exterior Lamps/Lenses 5-83
  Fabric/Carpet 5-80
  Finish Care 5-83
  Finish Damage 5-85
  Instrument Panel, Vinyl, and Other
    Plastic Surfaces 5-81
  Interior Cleaning 5-79
  Leather 5-81
  Sheet Metal Damage 5-85
  Tires 5-85
  Underbody Maintenance 5-85
  Washing Your Vehicle 5-82
  Weatherstrips 5-82
  Windshield and Wiper Blades 5-84
Appointments, Scheduling Service 7-11
Ashtray 3-17
Audio System 3-40
  AM-FM Radio 3-41
  Audio Steering Wheel Controls 3-57
  Backglass Antenna 3-59

Audio System (cont.)
Fixed Mast Antenna 3-58
Radio Reception 3-58
Radio with CD 3-46
Automatic Transmission
Fluid 5-21
Operation 2-22

B

Backglass Antenna 3-59
Battery 5-37
Inadvertent Power Saver 3-16
Brake
Emergencies 4-6
Brake Fluid 5-34
Brakes 5-34
System Warning Light 3-28
Braking 4-4
Braking in Emergencies 4-6
Break-In, New Vehicle 2-18
Bulb Replacement
Center High-Mounted Stoplamp (CHMSL) 5-47
Daytime Running Lamp 3-14
Fog Lamp 3-15
Front Turn Signal, Sidemarker and
Parking Lamps 5-45
Bulb Replacement (cont.)
Halogen Bulbs 5-43
Headlamp Aiming 5-43
Headlamps 5-43, 5-44
License Plate Lamps 5-49
Replacement Bulbs 5-49
Taillamps, Turn Signal, Sidemarker,
Stoplamps, and Back-Up Lamps 5-48
Buying New Tires 5-64

C

California Fuel 5-6
California Perchlorate Materials Requirements 5-4
California Proposition 65 Warning 5-4
Canadian Owners ii
Capacities and Specifications 5-93
Carbon Monoxide 2-8, 2-32, 4-13
Care of
Safety Belts 5-82
CD, MP3 3-54
Center High-Mounted Stoplamp (CHMSL) 5-47
Chains, Tire 5-68
Charging System Light 3-28
Check
Engine Lamp 3-32
Checking Things Under the Hood 5-11

Chemical Paint Spotting 5-85
Child Restraints
Child Restraint Systems 1-41
Infants and Young Children 1-38
Lower Anchors and Tethers for Children 1-46
Older Children 1-34
Securing a Child Restraint in a Rear Seat Position 1-53
Securing a Child Restraint in the Right Front Seat Position 1-56
Where to Put the Restraint 1-44
Cigarette Lighter 3-17
Cleaning
Aluminum Wheels 5-84
Exterior Lamps/Lenses 5-83
Fabric/Carpet 5-80
Finish Care 5-83
Instrument Panel, Vinyl, and Other Plastic Surfaces 5-81
Interior 5-79
Leather 5-81
Tires 5-85
Underbody Maintenance 5-85
Washing Your Vehicle 5-82
Weatherstrips 5-82
Windshield and Wiper Blades 5-84
Climate Control System 3-18
Air Filter, Passenger Compartment 3-22
Outlet Adjustment 3-21
Clock 3-17
Clutch, Hydraulic 5-23
Collision Damage Repair 7-13
Compact Spare Tire 5-78
Content Theft-Deterrent 2-16
Control of a Vehicle 4-3
Coolant
Engine 5-25
Engine Temperature Gage 3-31
Cooling System 5-24
Courtesy Transporation 7-11
Cruise Control 3-10
Cruise Control Light 3-36
Cupholders 2-39
Customer Information
Courtesy Transportation 7-11
Customer Assistance for Text Telephone (TTY) Users 7-6
Customer Assistance Offices 7-6
Customer Satisfaction Procedure 7-2
GM Mobility Reimbursement Program 7-7
Online Owner Center 7-5
Reporting Safety Defects to General Motors 7-17
Reporting Safety Defects to the Canadian Government 7-17
Reporting Safety Defects to the United States Government 7-16
Roadside Assistance Program 7-7
Service Publications Ordering Information 7-17

D

Daytime Running Lamps Indicator Light 3-36
Defensive Driving 4-2
Disc, MP3 3-54
Doing Your Own Service Work 5-4
Dome Lamp 3-16
Door
  Ajar Light 3-36
  Central Door Unlocking System 2-7
  Door Ajar Reminder 2-7
  Locks 2-6
  Rear Door Security Locks 2-7
Driver
  Seat Height Adjuster 1-5
Driving
  At Night 4-10
  Before a Long Trip 4-11
  Defensive 4-2
  Drunken 4-3
  Highway Hypnosis 4-12
  Hill and Mountain Roads 4-12
  In Rain and on Wet Roads 4-10
  Rocking Your Vehicle to Get it Out 4-16
  Winter 4-13
Driving for Better Fuel Economy 4-2

E

EDR 7-18
Electrical System
  Add-On Equipment 5-86
  Engine Compartment Fuse Block 5-89
  Fuses and Circuit Breakers 5-87
  Headlamp Wiring 5-87
  Instrument Panel Fuse Block 5-88
  Power Windows and Other Power Options 5-87
  Windshield Wiper Fuses 5-87
Engine
  Air Cleaner/Filter 5-19
  Change Engine Oil Light 3-35
  Check and Service Engine Soon Lamp 3-32
  Coolant 5-25
  Coolant Temperature Gage 3-31
  Drive Belt Routing 6-16
  Engine Compartment Overview 5-14
  Exhaust 2-32
  Oil 5-16
  Oil Life System 5-18
  Overheating 5-30
  Starting 2-19
Engine Heater 2-21
Event Data Recorders 7-19
Extender, Safety Belt 1-34
Exterior Lamps 3-13

F

Filter
Engine Air Cleaner 5-19
Finish Damage 5-85
Fixed Mast Antenna 3-58
Flashers, Hazard Warning 3-6
Flash-to-Pass 3-8
Flat Tire 5-69
Flat Tire, Changing 5-70
Flat Tire, Storing 5-78
Fluid
Automatic Transmission 5-21
Power Steering 5-32
Windshield Washer 5-33
Fog Lamp
Fog 3-15
Fog Lamp Light 3-35
Fuel 5-5
Additives 5-6
California Fuel 5-6
Driving for Better Economy 4-2
Filling a Portable Fuel Container 5-11
Filling the Tank 5-8
Fuels in Foreign Countries 5-7
Gage 3-37
Gasoline Octane 5-5
Gasoline Specifications 5-5
Low Warning Light 3-38
Fuses
Engine Compartment Fuse Block 5-89
Fuses and Circuit Breakers 5-87
Instrument Panel Fuse Block 5-88
Windshield Wiper 5-87

G

Gage
Engine Coolant Temperature 3-31
Fuel 3-37
Speedometer 3-25
Tachometer 3-25
Gasoline
Octane 5-5
Specifications 5-5
Glove Box 2-39
GM Mobility Reimbursement Program 7-7

H

Hazard Warning Flashers 3-6
Head Restraints 1-2
Headlamp
Aiming 5-43
Headlamp Wiring 5-87

Headlamps 5-44
Bulb Replacement 5-43
Daytime Running Lamp 3-14
Exterior Lamps 3-13
Flash-to-Pass 3-8
Front Turn Signal, Sidemarker and Parking Lamps 5-45
Halogen Bulbs 5-43
High/Low Beam Changer 3-8
Heater 3-18
Engine 2-21
Height Adjuster, Driver Seat 1-5
Highbeam On Light 3-36
Highway Hypnosis 4-12
Hill and Mountain Roads 4-12
Hold Mode Light 3-30
Hood
Checking Things Under 5-11
Release 5-12
Horn 3-6
How to Wear Safety Belts Properly 1-21
Hydraulic Clutch 5-23

I

Ignition Positions 2-18
Immobilizer 2-14
Immobilizer Operation 2-15
Inadvertent Power Battery Saver 3-16
Infants and Young Children, Restraints 1-38
Inflation - Tire Pressure 5-57
Instrument Panel
Brightness 3-15
Cluster 3-24
Overview 3-4

J

Jump Starting 5-38

K

Keyless Entry System 2-3
Keys 2-2

L

Labeling, Tire Sidewall 5-52
Lamp
Malfunction Indicator 3-32
Lamps
Dome 3-16
Inadvertent Power Battery Saver 3-16
Lap-Shoulder Belt 1-30
LATCH System for Child Restraints 1-46
License Plate Lamps 5-49

Liftgate
Carbon Monoxide 2-10
Light
Airbag Readiness 3-26
Antilock Brake System (ABS) Warning 3-30
Brake System Warning 3-28
Change Engine Oil 3-35
Charging System 3-28
Cruise Control 3-36
Daytime Running Lamps Indicator 3-36
Door Ajar 3-36
Fog Lamp 3-35
Highbeam On 3-36
Hold Mode 3-30
Low Fuel Warning 3-38
Oil Pressure 3-34
Passenger Airbag Status Indicator 3-27
Safety Belt Reminders 3-26
Tire Pressure 3-31
Up-Shift 3-28
Lights
Exterior Lamps 3-13
Flash-to-Pass 3-8
High/Low Beam Changer 3-8
Loading Your Vehicle 4-16
Locks
Central Door Unlocking System 2-7
Door 2-6
Rear Door Security Locks 2-7
Loss of Control 4-8
Low Fuel Warning Light 3-38
Lower Anchors and Tethers for Children 1-46
Lumbar
Manual Controls 1-5

M

Maintenance Schedule
Additional Required Services 6-6
At Each Fuel Fill 6-10
At Least Once a Month 6-10
At Least Once a Year 6-11
Introduction 6-2
Maintenance Footnotes 6-8
Maintenance Record 6-17
Maintenance Replacement Parts 6-15
Maintenance Requirements 6-2
Owner Checks and Services 6-9
Recommended Fluids and Lubricants 6-13
Scheduled Maintenance 6-4
Using 6-2
Your Vehicle and the Environment 6-2
Malfunction Indicator Lamp 3-32
Manual Lumbar Controls 1-5
Manual Seats 1-4
Manual Transmission
Fluid 5-23
Operation 2-26
Manual Windows 2-12

Mirrors
Manual Rearview Mirror 2-34
Outside Convex Mirror 2-35
Outside Heated Mirrors 2-35
Outside Manual Mirrors 2-34
Outside Power Mirrors 2-35
MP3 3-54
MyGMLink.com 7-5

N

Navigation System, Privacy 7-20
New Vehicle Break-In 2-18

O

Odometer 3-25
Odometer, Trip 3-25
Off-Road Recovery 4-8
Oil
Change Engine Oil Light 3-35
Engine 5-16
Pressure Light 3-34
Oil, Engine Oil Life System 5-18
Older Children, Restraints 1-34
OnStar, Privacy 7-20
OnStar® System, see OnStar® Manual 2-36
Outlet Adjustment 3-21
Outlets
Accessory Power 3-16
Outside
Convex Mirror 2-35
Heated Mirrors 2-35
Manual Mirrors 2-34
Power Mirrors 2-35
Owner Checks and Services 6-9
Owners, Canadian ii

P

Paint, Damage 5-85
Park
Shifting Into 2-29
Shifting Out of 2-30
Park Brake 2-28
Parking
Over Things That Burn 2-32
Parking Your Vehicle 2-31
Passenger Airbag Status Indicator 3-27
Passenger Compartment Air Filter 3-22
Passenger Sensing System 1-67
Passing 4-8
Perchlorate Materials Requirements, California 5-4

Power
Electrical System 5-87
Inadvertent Battery Saver 3-16
Steering Fluid 5-32
Windows 2-13
Privacy 7-18
Event Data Recorders 7-19
Navigation System 7-20
OnStar 7-20
Radio Frequency Identification 7-20

R

Radio Frequency Identification (RFID), Privacy 7-20
Radios
AM-FM Radio 3-41
Radio with CD 3-46
Reception 3-58
Rear Door Security Locks 2-7
Rear Seat Operation 1-9, 1-12
Rear Windshield Washer/Wiper 3-10
Rearview Mirrors 2-34
Reclining Seatbacks 1-6
Recommended Fluids and Lubricants 6-13
Recreational Vehicle Towing 4-24
Remote Keyless Entry (RKE) System 2-3
Remote Keyless Entry (RKE) System,
Operation 2-4
Removing the Flat Tire and Installing the
Spare Tire 5-73
Removing the Spare Tire and Tools 5-71
Replacement Bulbs 5-49
Replacement Parts, Maintenance 6-15
Reporting Safety Defects
Canadian Government 7-17
General Motors 7-17
United States Government 7-16
Restraint System Check
Checking the Restraint Systems 1-75
Replacing Restraint System Parts
After a Crash 1-76
Roadside
Assistance Program 7-7
Rocking Your Vehicle to Get it Out 4-16
Routing, Engine Drive Belt 6-16
Running the Vehicle While Parked 2-33

S

Safety Belt Reminders 3-26
Safety Belts
Care of 5-82
How to Wear Safety Belts Properly 1-21
Lap-Shoulder Belt 1-30

Safety Belts (cont.)
Safety Belt Extender 1-34
Safety Belt Use During Pregnancy 1-33
Safety Belts Are for Everyone 1-16
Safety Warnings and Symbols iii
Scheduled Maintenance 6-4
Seats
Driver Seat Height Adjuster 1-5
Head Restraints 1-2
Manual Lumbar 1-5
Rear Seat Operation 1-9, 1-12
Reclining Seatbacks 1-6
Securing a Child Restraint
Rear Seat Position 1-53
Right Front Seat Position 1-56
Service 5-3
Accessories and Modifications 5-3
Adding Equipment to the Outside of the Vehicle 5-5
California Perchlorate Materials Requirements 5-4
California Proposition 65 Warning 5-4
Doing Your Own Work 5-4
Engine Soon Lamp 3-32
Publications Ordering Information 7-17
Service, Scheduling Appointments 7-11
Servicing Your Airbag-Equipped Vehicle 1-73
Sheet Metal Damage 5-85
Shifting
Out of Park 2-30
Shift Lock Manual Release 2-30
Shifting Into Park 2-29
Signals, Turn and Lane-Change 3-7
Spare Tire
Compact 5-78
Installing 5-73
Removing 5-71
Storing 5-78
Specifications, Capacities 5-93
Speedometer 3-25
Starting the Engine 2-19
Steering 4-6
Steering Wheel Controls, Audio 3-57
Steering Wheel, Tilt Wheel 3-6
Storage Areas 2-39
Cupholders 2-39
Glove Box 2-39
Sunglasses Storage Compartment 2-40
Stuck in Sand, Mud, Ice, or Snow 4-15
Sun Visors 2-14
Sunroof 2-40

T

Tachometer 3-25
Taillamps
  Turn Signal, Sidemarker, Stoplamps, and
    Back-Up Lamps 5-48
Theft-Deterrent Systems 2-14
  Content Theft-Deterrent 2-16
  Immobilizer 2-14
  Immobilizer Operation 2-15
Tilt Wheel 3-6
Time 3-17
Tire
  Pressure Light 3-31
Tires 5-51
  Aluminum Wheels, Cleaning 5-84
  Buying New Tires 5-64
  Chains 5-68
  Changing a Flat Tire 5-70
  Cleaning 5-85
  Compact Spare Tire 5-78
  Different Size 5-65
  If a Tire Goes Flat 5-69
  Inflation - Tire Pressure 5-57
  Inspection and Rotation 5-62
  Installing the Spare Tire 5-73
  Pressure Monitor Operation 5-60
Tires (cont.)
  Pressure Monitor System 5-59
  Removing the Flat Tire 5-73
  Removing the Spare Tire and Tools 5-71
  Storing a Flat or Spare Tire and Tools 5-78
  Tire Sidewall Labeling 5-52
  Tire Terminology and Definitions 5-54
  Uniform Tire Quality Grading 5-66
  Wheel Alignment and Tire Balance 5-67
  Wheel Replacement 5-67
  When It Is Time for New Tires 5-63
Towing
  Recreational Vehicle 4-24
  Towing a Trailer 4-27
  Your Vehicle 4-24
Transmission
  Fluid, Automatic 5-21
  Fluid, Manual 5-23
  Up-Shift Light 3-28
Transmission Operation, Automatic 2-22
Transmission Operation, Manual 2-26
Trip Computer 3-38
Trip Odometer 3-25
Trunk 2-8
Turn and Lane-Change Signals 3-7
Turn Signal/Multifunction Lever 3-7

U

Uniform Tire Quality Grading 5-66
Up-Shift Light 3-28

V

Vehicle
  Control 4-3
  Loading 4-16
  Parking Your 2-31
  Running While Parked 2-33
  Symbols iii
Vehicle Data Recording and Privacy 7-18
Vehicle Identification
  Number (VIN) 5-86
  Service Parts Identification Label 5-86
Ventilation Adjustment 3-21
Visors 2-14

W

Warning Lights, Gages, and Indicators 3-23
Warnings
  Hazard Warning Flashers 3-6
  Safety and Symbols iii
Wheels
  Alignment and Tire Balance 5-67
  Different Size 5-65
  Replacement 5-67
Where to Put the Restraint 1-44
Windows 2-12
  Manual 2-12
  Power 2-13
Windshield
  Washer 3-9
  Washer Fluid 5-33
  Wiper Blade Replacement 5-50
  Wiper Blades, Cleaning 5-84
  Wiper Fuses 5-87
  Wipers 3-8
Windshield, Rear Washer/Wiper 3-10
Winter Driving 4-13

X

XM Radio Messages 3-56

Y

Your Vehicle and the Environment 6-2