BODY & TRIM

SECTION BT

CONTENTS

PRECAUTIONS 3
Service Notice....3
Supplemental Restraint System (SRS) "AIR BAG" and "SEAT BELT PRE-TENSIONER"....3
CLIP AND FASTENER....4
Description....4
CHASSIS AND BODY MAINTENANCE (FOR EUROPE)....6
Checking Body Corrosion....6
BODY FRONT END....7
Removal and Installation....7
FRONT BUMPER ASSEMBLY....7
BODY REAR END AND OPENER....10
Removal and Installation (Sedan)....10
REAR BUMPER ASSEMBLY....10
Removal and Installation (Hatchback)....13
REAR BUMPER ASSEMBLY....13
DOOR....16
Adjustment....16
STRIKER ADJUSTMENT....16
Front Door Glass....17
FRONT DOOR GLASS AND REGULATOR....17
Rear Door Glass....18
REAR DOOR GLASS AND REGULATOR....19
Front Door Lock....21
BELL CRANK ADJUSTMENT....21
OUTSIDE HANDLE ROD ADJUSTMENT....21
REMOVAL....22
Rear Door Lock....23
OUTSIDE HANDLE ROD ADJUSTMENT....23
REMOVAL....24
INSTRUMENT PANEL ASSEMBLY....25
Removal and Installation....25
SIDE AND FLOOR TRIM....31
Removal and Installation....31
SEDAN....31
3-DOOR HATCHBACK....34
5-DOOR HATCHBACK....36
DOOR TRIM....39
Removal and Installation....39
ROOF TRIM....43
Removal and Installation....43
TRUNK ROOM TRIM....45
Removal and Installation....45
SEDAN....45
BACK DOOR TRIM....46
Removal and Installation....46
3-DOOR AND 5-DOOR HATCHBACK....46
EXTERIOR....47
Removal and Installation....47
FRONT SEAT....56
Removal and Installation....56
MANUAL SEAT (SEDAN)....57
MANUAL SEAT (HATCHBACK)....58
Heated Seat....59
Active Head Restraint....59
OPERATION OUTLINE....59
REAR SEAT....60
Removal and Installation....60
SEDAN....60
SEDAN (FOR EUROPE)....61
HATCHBACK....62
SUNROOF....63
Adjustment....63
Removal....63
Trouble Diagnoses....67
DIAGNOSTIC TABLE....67
WIND DEFLECTOR....67
ADJUSTMENT....68
DRAIN HOSES....69
WEATHERSTRIP....69
LINK AND WIRE ASSEMBLY....70
WINDSHIELD AND WINDOWS....71
Removal and Installation....71
REMOVAL....71
INSTALLATION....71
WINDSHIELD....72
SIDE WINDOW....73
BACK DOOR WINDOW....74
DOOR MIRROR....75

CONTENTS (Cont'd)

Removal and Installation 75
REAR VIEW MIRROR 76
Removal and Installation 76
REMOVAL.....76
INSTALLATION.....76
BODY (ALIGNMENT) 77
Alignment.....77
ENGINE COMPARTMENT.....78
UNDERBODY.....80

Service Notice

NJBT0001

- When removing or installing various parts, place a cloth or padding onto the vehicle body to prevent scratches.
- Handle trim, molding, instruments, grille, etc. carefully during removing or installing. Be careful not to oil or damage them.
- Apply sealing compound where necessary when installing parts.
- When applying sealing compound, be careful that the sealing compound does not protrude from parts.
- When replacing any metal parts (for example body outer panel, members, etc.), be sure to take rust prevention measures.

Supplemental Restraint System (SRS) “AIR BAG” and “SEAT BELT PRE-TENSIONER”

NJBT0002

The Supplemental Restraint System such as “AIR BAG” and “SEAT BELT PRE-TENSIONER” used along with a seat belt, helps to reduce the risk or severity of injury to the driver and front passenger for certain types of collision. The SRS system composition which is available to NISSAN MODEL N16 is as follows (The composition varies according to the destination and optional equipment.):

- For a frontal collision
  The Supplemental Restraint System consists of driver air bag module (located in the center of the steering wheel), front passenger air bag module (located on the instrument panel on passenger side), front seat belt pre-tensioners, a diagnosis sensor unit, warning lamp, wiring harness and spiral cable.
- For a side collision
  The Supplemental Restraint System consists of front side air bag module (located in the outer side of front seat), side air bag (satellite) sensor, diagnosis sensor unit (one of components of air bags for a frontal collision), wiring harness, warning lamp (one of components of air bags for a frontal collision).

Information necessary to service the system safely is included in the **RS section** of this Service Manual.

WARNING:

- **To avoid rendering the SRS inoperative, which could increase the risk of personal injury or death in the event of a collision which would result in air bag inflation, all maintenance should be performed by an authorized NISSAN dealer.**
- **Improper maintenance, including incorrect removal and installation of the SRS, can lead to personal injury caused by unintentional activation of the system. For removal of Spiral Cable and Air Bag Module, see the RS section.**
- **Do not use electrical test equipment on any circuit related to the SRS unless instructed to in this Service Manual. SRS wiring harnesses can be identified by yellow harness connector.**

Description

NJBT0003

- Clips and fasteners in BT section correspond to the following numbers and symbols.
- Replace any clips and/or fasteners which are damaged during removal or installation.

Symbol No.	Shapes	Removal & Installation
C101	SBF302H	**Removal:** Remove by bending up with flat-bladed screwdrivers or clip remover. SBF367BA
C103	SBT095	**Removal:** Remove with a clip remover. SBF423H
C203	SBF258G	Push center pin to catching position. (Do not remove center pin by hitting it.) Push **Installation:** Push SBF708E
C205	MBT080A	**Removal:** Flat-bladed screwdriver Clip Finisher SBF638CA
C206	MBF519B	MBF520B

Symbol No.	Shapes	Removal & Installation
CE103	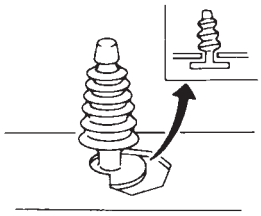 SBF104B	**Removal:** 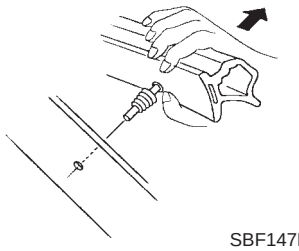 SBF147B
CF110	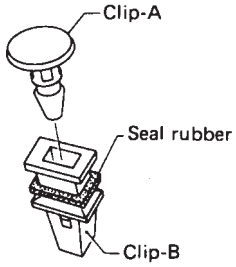 SBF648B	**Removal:** 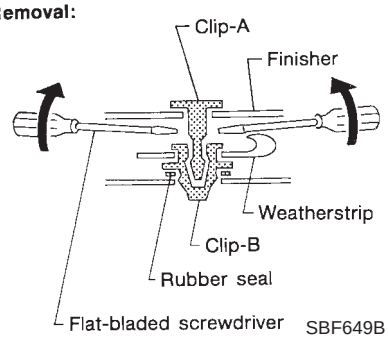 SBF649B
CF118	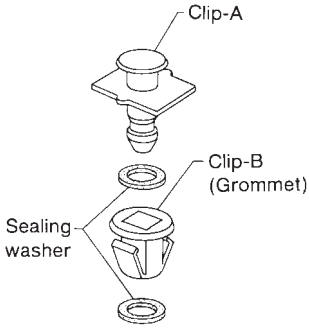 SBF151D	**Removal:** 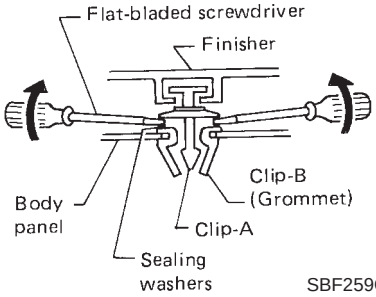 SBF259G
CR103	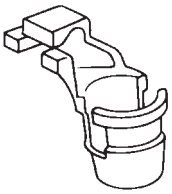 SBF768B	**Removal:** Holder portion of clip must be spread out to remove rod. 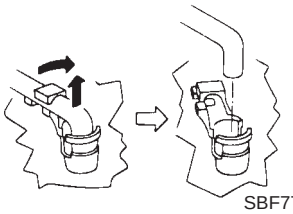 SBF770B

Checking Body Corrosion

NJBT0033

Visually check the body sheet metal panel for corrosion, paint damage (scratches, chipping, rubbing, etc.) or damage to the anti-corrosion materials. In particular, check the following locations.

Hemmed portion

Hood front end, door lower end, trunk lid rear end, etc.

Panel joint

Side sill of rear fender and center pillar, rear wheel housing of rear fender, around strut tower in engine compartment, etc.

Panel edge

Trunk lid opening, sunroof opening, fender wheelarch flange, fuel filler lid flange, around holes in panel, etc.

Parts contact

Waist molding, windshield molding, bumper, etc.

Protectors

Damage or condition of mudguard, fender protector, chipping protector, etc.

Anti-corrosion materials

Damage or separation of anti-corrosion materials under the body.

Drain holes

Condition of drain holes at door and side sill.

When repairing corroded areas, refer to the Corrosion Repair Manual.

Removal and Installation

NJBT0004

- When removing or installing hood, place a cloth or other padding on hood. This prevents vehicle body from being scratched.
- Bumper fascia is made of plastic. Do not use excessive force and be sure to keep oil away from it.
- Hood adjustment: Adjust at hinge portion.
- Hood lock adjustment: After adjusting, check hood lock control operation. Apply a coat of grease to hood locks engaging mechanism.
- Hood opener: Do not attempt to bend cable forcibly. Doing so increases effort required to unlock hood.

FRONT BUMPER ASSEMBLY

NJBT0004S01

1. Remove clips securing front grille, then remove front grille. A
2. Remove front turn signal lamp, then disconnect harness connectors. B
3. Remove clips and screws securing left and right sides of fender protectors. C
4. Remove clips and screws securing left and right sides of fender protectors in wheelhoulse. D
5. Remove screws securing left and right front fenders to bumper fascia. E
6. Remove screws securing left and right radiator core support side to bumper fascia. F
7. Remove bolts securing radiator core support lower to bumper fascia. G
8. Remove clips securing radiator core support upper to bumper fascia. H
9. Extract bumper fascia assembly. Then disconnect harness connectors. (Models with fog lamp assembly)
10. Remove energy absorber. (Where fitted)
11. Remove bolts and hooks securing the headlamp assembly, then disconnect harness connectors. J
12. Remove nuts securing bumper reinforcement to left and right bumper stays. K (Where fitted)
13. Extract bumper reinforcement. (Where fitted)
14. Remove bolts securing bumper upper retainer, then remove bumper upper retainer. L
15. Remove bolts securing bumper stays, then remove the bumper stays. M

Fog lamp assembly (Models with fog lamp assembly)

16. Remove bolt securing fog lamp assembly. N
17. Extract fog lamp assembly.

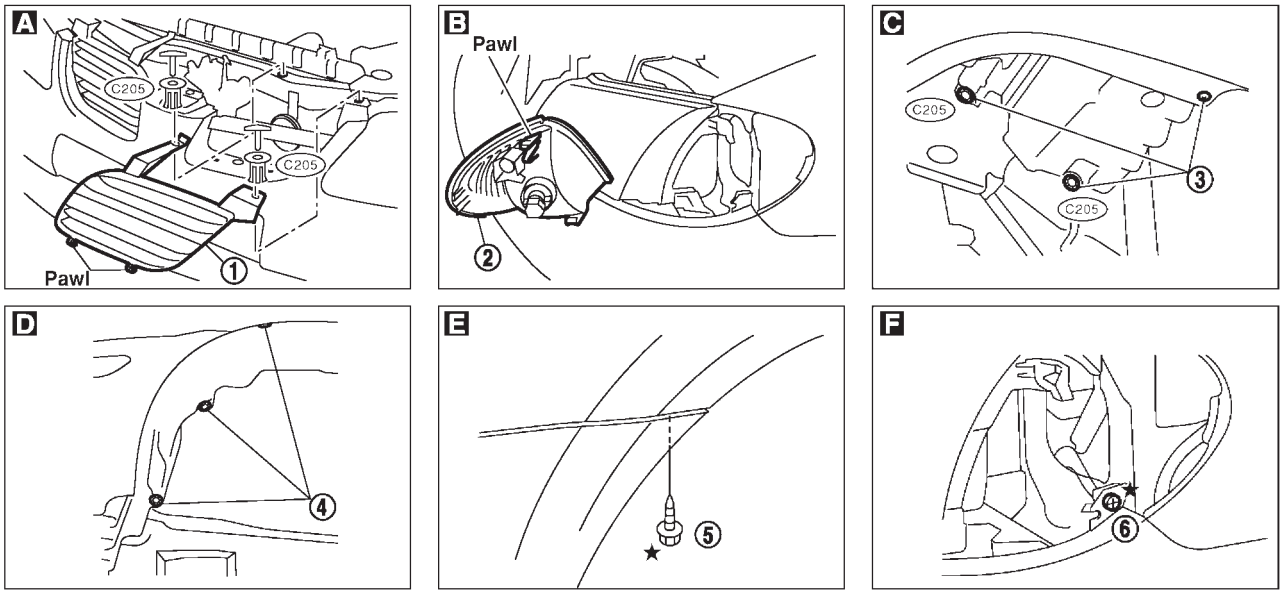

★ : Bumper assembly mounting screws

NBT182

The number of screws and clips may not be the same as shown in the figure.

SEC. 260•261•262•620•630•650

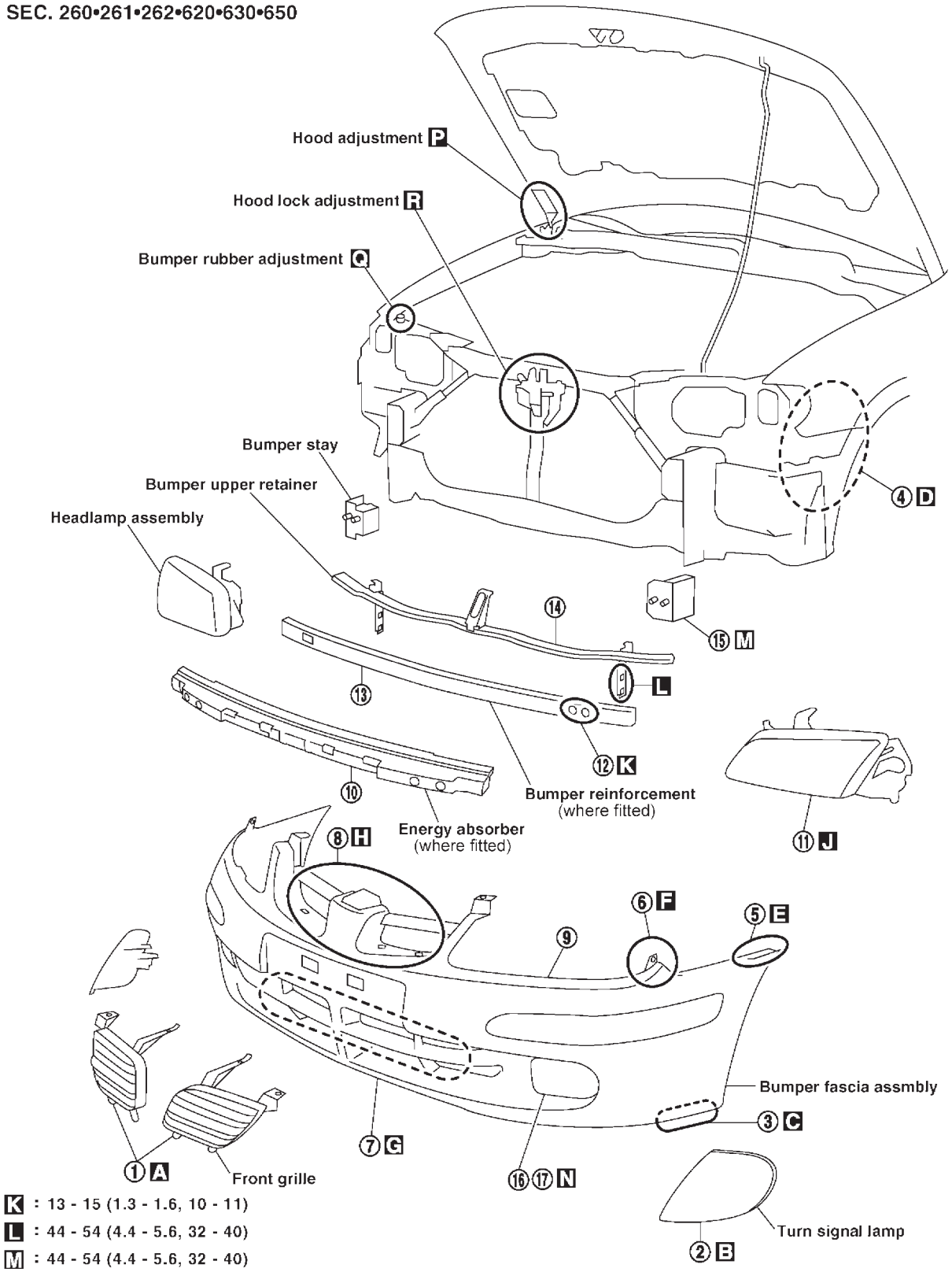

K : 13 - 15 (1.3 - 1.6, 10 - 11)
L : 44 - 54 (4.4 - 5.6, 32 - 40)
M : 44 - 54 (4.4 - 5.6, 32 - 40)
P : 11 - 14 (1.1 - 1.5, 8 - 10)
R : 21 - 26 (2.1 - 2.7, 16 - 19)
: N•m (kg-m, ft-lb)

NBT192

G

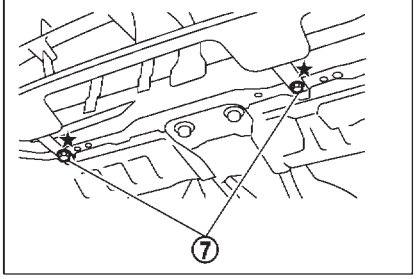

H

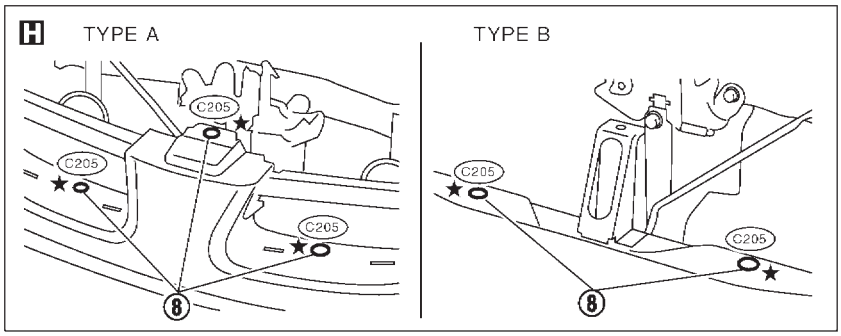

J

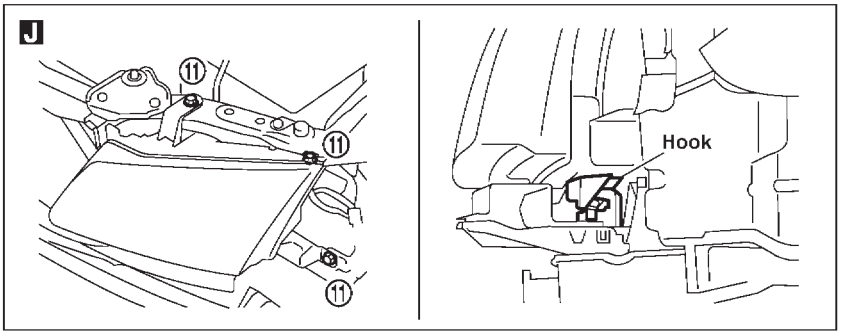

K

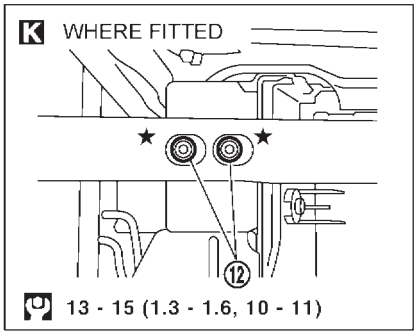

L

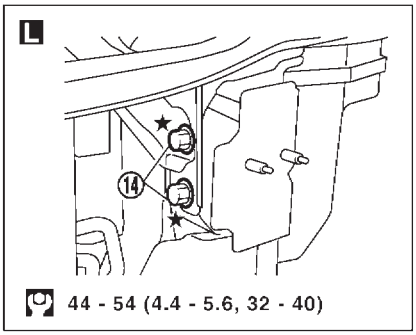

M

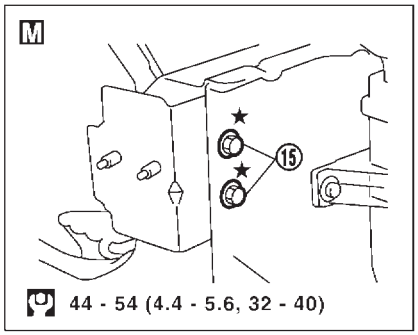

N

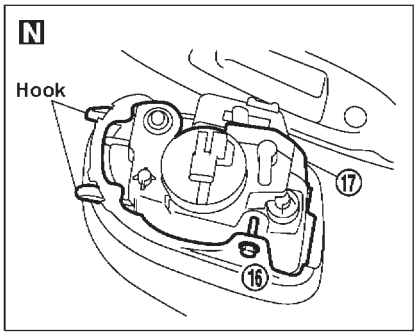

P

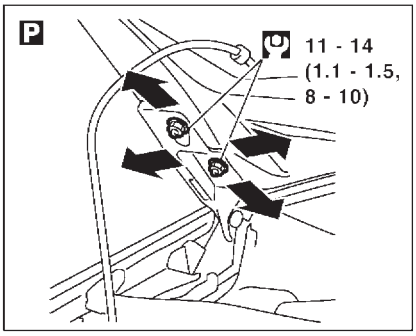

Q

Bumper rubber adjustment

- Remove hood lock. Rotate bumper rubber so that hood is 1 to 1.5 mm (0.039 to 0.059 in) lower than fender.
- Temporarily tighten hood lock. After marking sure that There is no striker free play, tighten hood lock securing bolts to specified torque.
- Adjust bumper rubber so that hood is flush with fender, or the surface difference between the two is 0 mm (0 in).

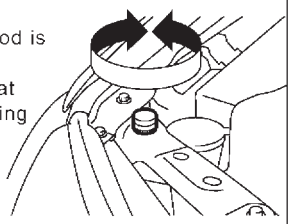

R

Hood lock adjustment

- Move hood lock either to the left or right so that striker center is vertically aligned with hood lock center (when viewed from vehicle front).
- Allow hood to close under its own weight from a height of approximately 200 mm (7.87 in) or push it down with a force of approximatery 29 N (3 kg, 7 lb). Make sure that secondary latch properly engages with secondary striker when hood is lowered all the way.

  CAUTION: Do not allow hood to close from a height of more than 300 mm (11.81 in).
- Close hood. Move hood lock up or down as required so that striker properly engages with hood lock.
- After adjusting hood lock, tighten hood lock securing bolts to specified torque.

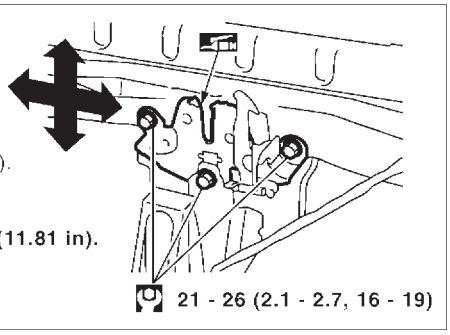

★: Bumper assembly mounting bolts, nuts and clips : N•m (kg-m, ft-lb)

NBT194

The number of bolts, nuts and clips may not be the same as shown in the figure.

Removal and Installation (Sedan)

NJBT0005

- When removing or installing trunk lid, place a cloth or other padding on trunk lid. This prevents vehicle body from being scratched.
- Bumper fascia is made of plastic. Do not use excessive force and be sure to keep oil away from it.
- Trunk lid adjustment: Adjust at hinge-trunk lid portion for proper trunk lid fit.
- Trunk lid lock system adjustment: Adjust striker so that it is in the center of the lock. After adjustment, check trunk lid lock operation.
- After installation, make sure that trunk lid and fuel filler lid open smoothly.

★ For Wiring Diagram, refer to EL-297, “TRUNK LID OPENER”.

REAR BUMPER ASSEMBLY

NJBT0005S01

1. Remove clips and screws securing left and right chipping protectors. A
2. Remove screws securing left and right rear fenders to bumper fascia. B
3. Remove bolts securing bumper fascia assembly. C
4. Remove clips securing bumper fascia assembly. D
5. Open the bumper fascia side outward to disengage from side clips. E
6. Extract bumper fascia assembly.
7. Remove bolts securing bumper stays, then remove the bumper stays. F

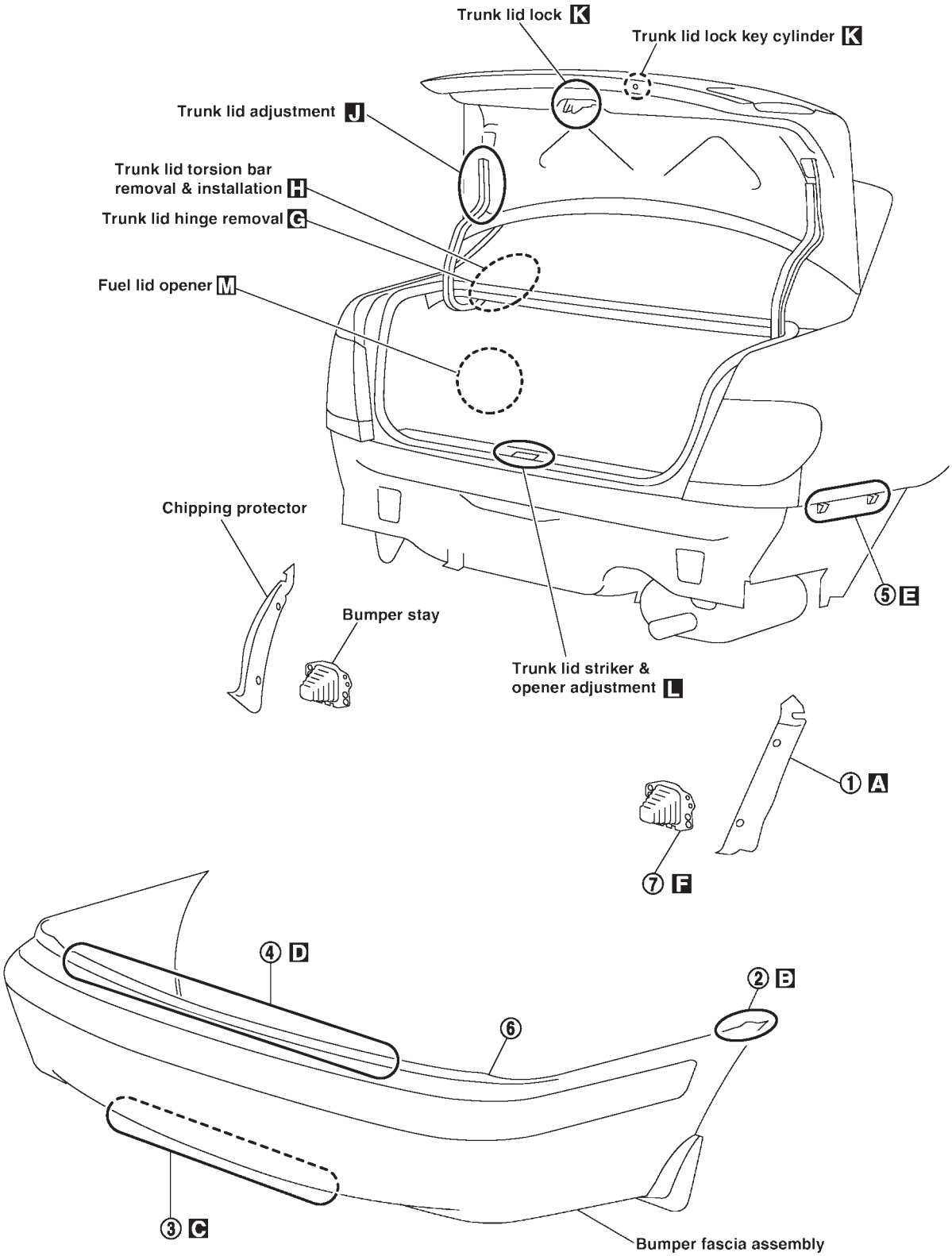

F : 13 - 16 N•m (1.3 - 1.7 kg-m, 10 - 12 ft-lb)

J : 5.0 - 6.4 N•m (0.51 - 0.66 kg-m, 45 - 57 in-lb)

SBT960

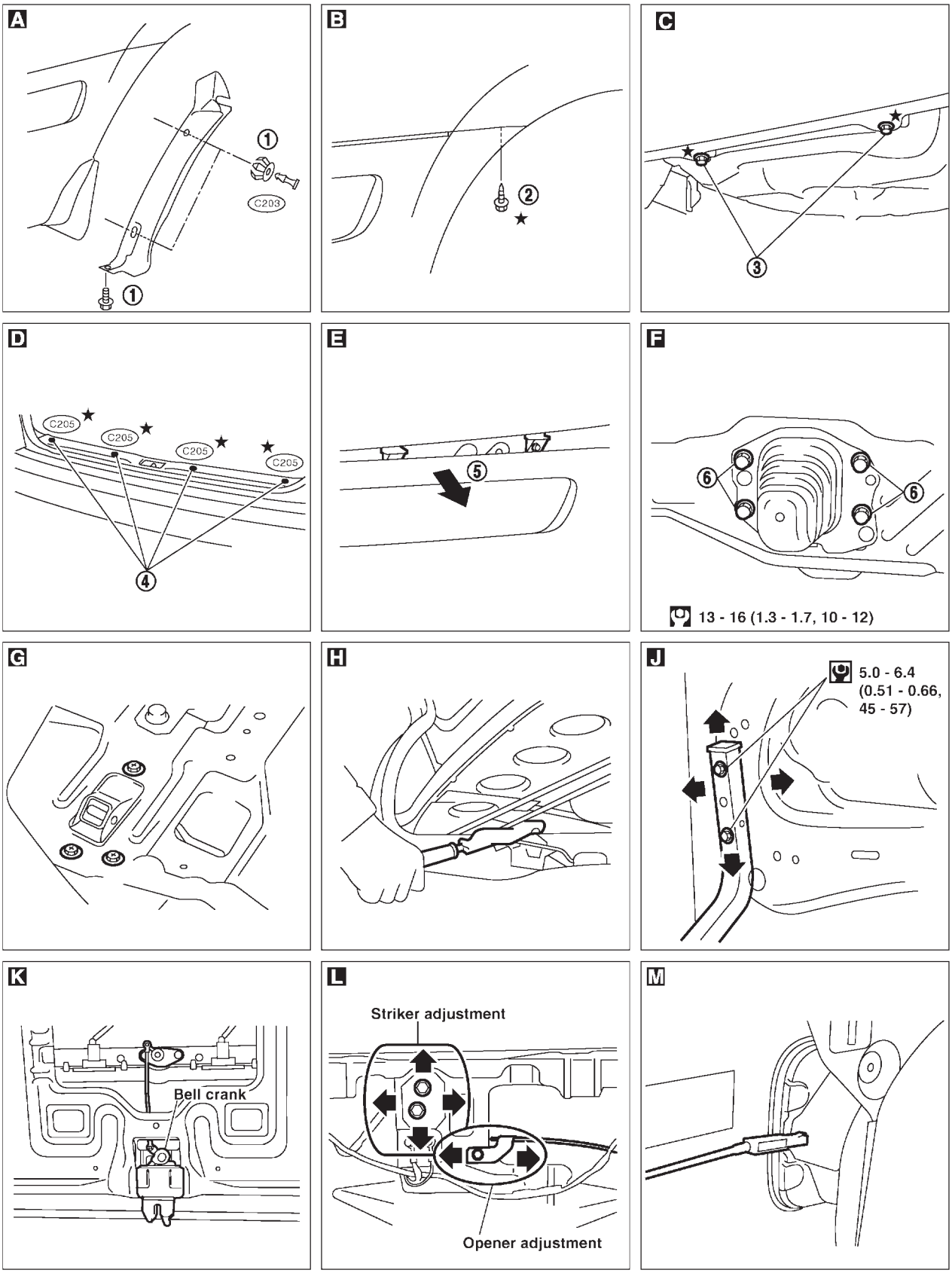

★ : Bumper assembly mounting bolts, screws and clips : N•m (kg-m, ft-lb) : N•m (kg-m, in-lb)

SBT961

Removal and Installation (Hatchback)

NJBT0034

- When removing or installing back door, place a cloth or other padding on back door. This prevents vehicle body from being scratched.
- Bumper fascia is made of plastic. Do not use excessive force and be sure to keep oil away from it.
- Back door adjustment: Adjust at hinge-back door portion for proper back door fit.
- Back door lock system adjustment: Adjust striker so that it is in the center of the lock. After adjustment, check back door lock operation.
- After installation, make sure that back door and fuel filler lid open smoothly.

★ **For Wiring Diagram, refer to EL-297, “TRUNK LID OPENER”.**

REAR BUMPER ASSEMBLY

NJBT0034S01

1. Remove clips securing left and right chipping protectors. A
2. Remove screws securing left and right rear fenders to bumper fascia. B
3. Remove bolts securing bumper facia assembly. C
4. Remove clips securing bumper fascia assembly. D
5. Remove clips securing bumper fascia assembly. E
6. Open the bumper fascia side outward to disengage from side clips. F
7. Extract bumper fascia assembly.
8. Remove bolts securing bumper stays, then remove the bumper stays. G

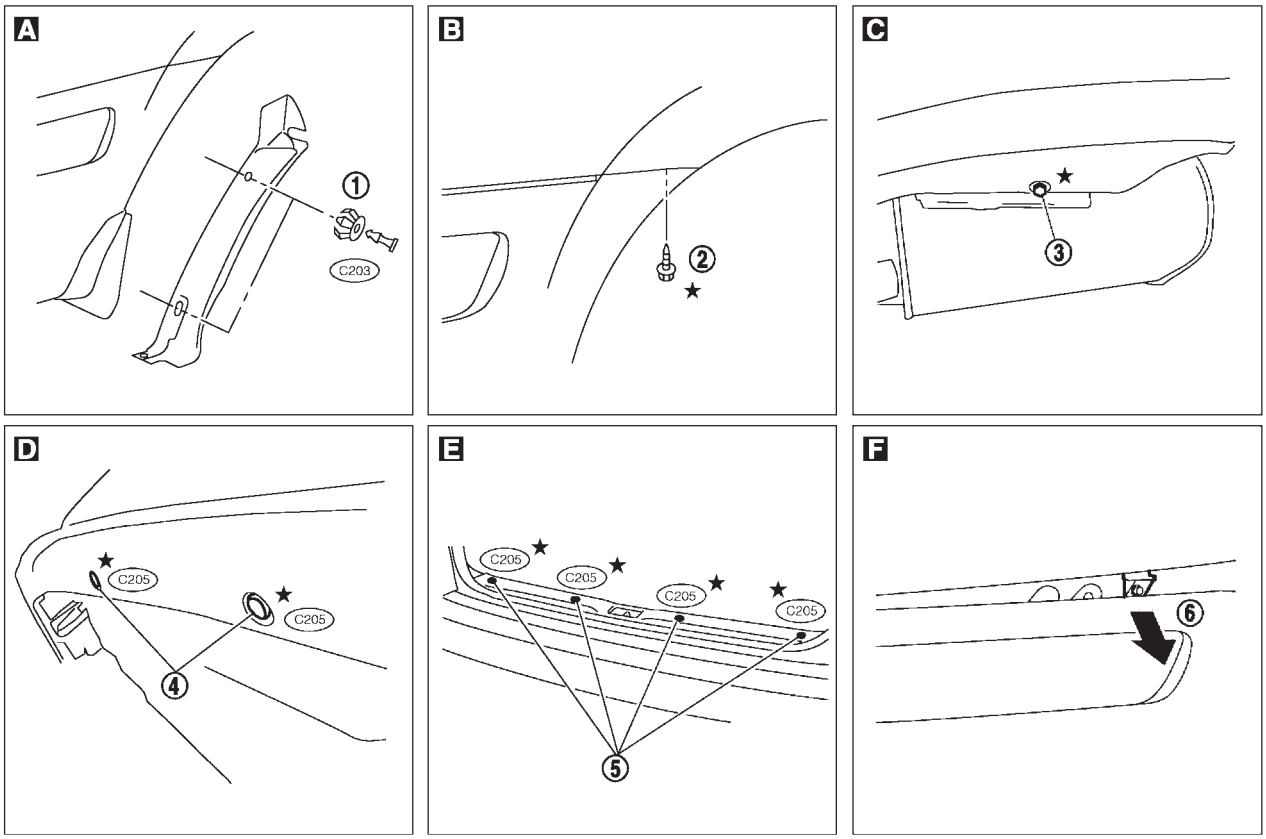

★: Bumper assembly mounting screws and clips

The number of bolts, screws and clips may not be the same as shown in the figure.

NBT184

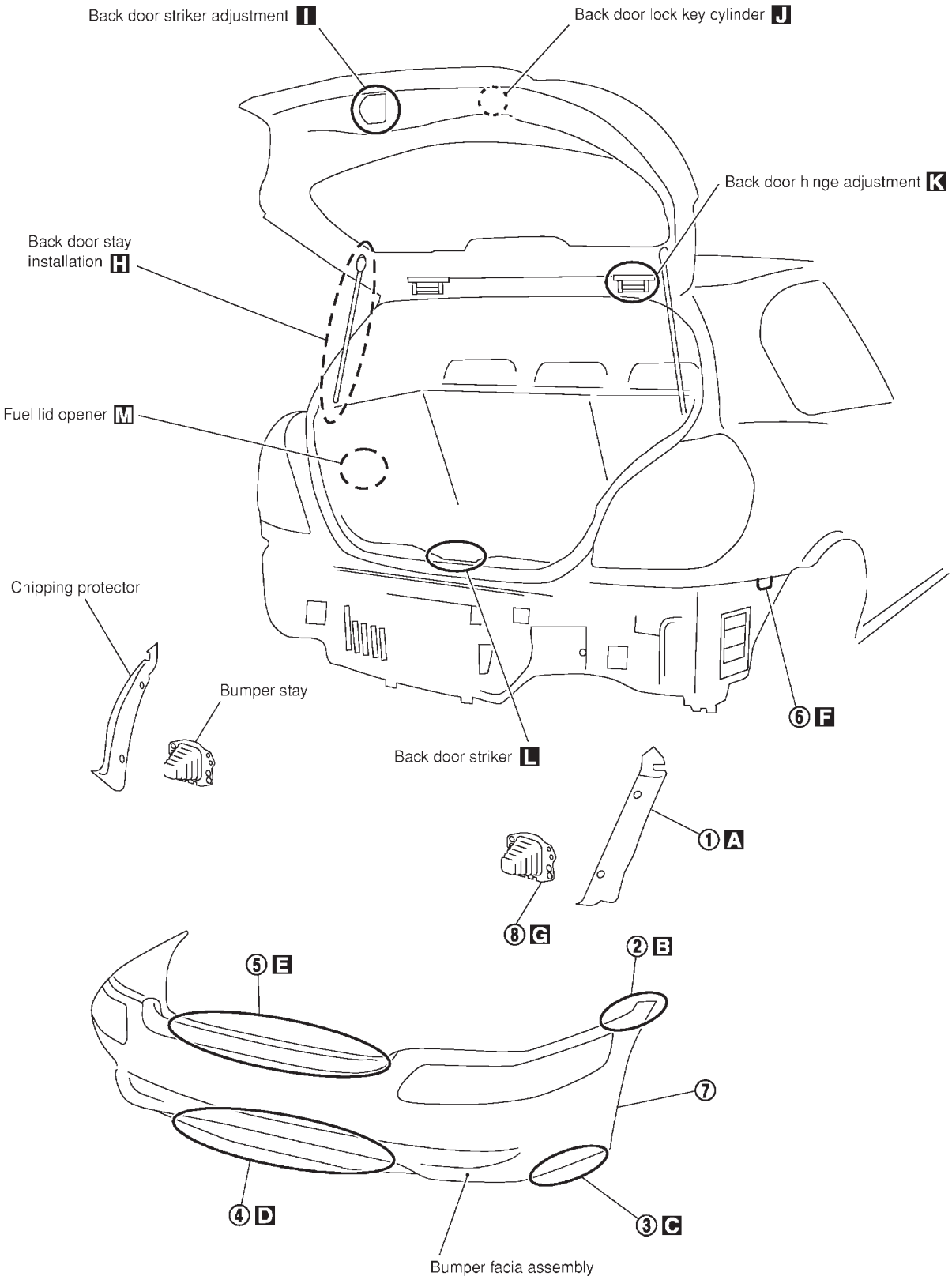

13 - 16 N• m (1.3 - 1.7 kg-m, 10 - 12 ft-lb)

NBT062

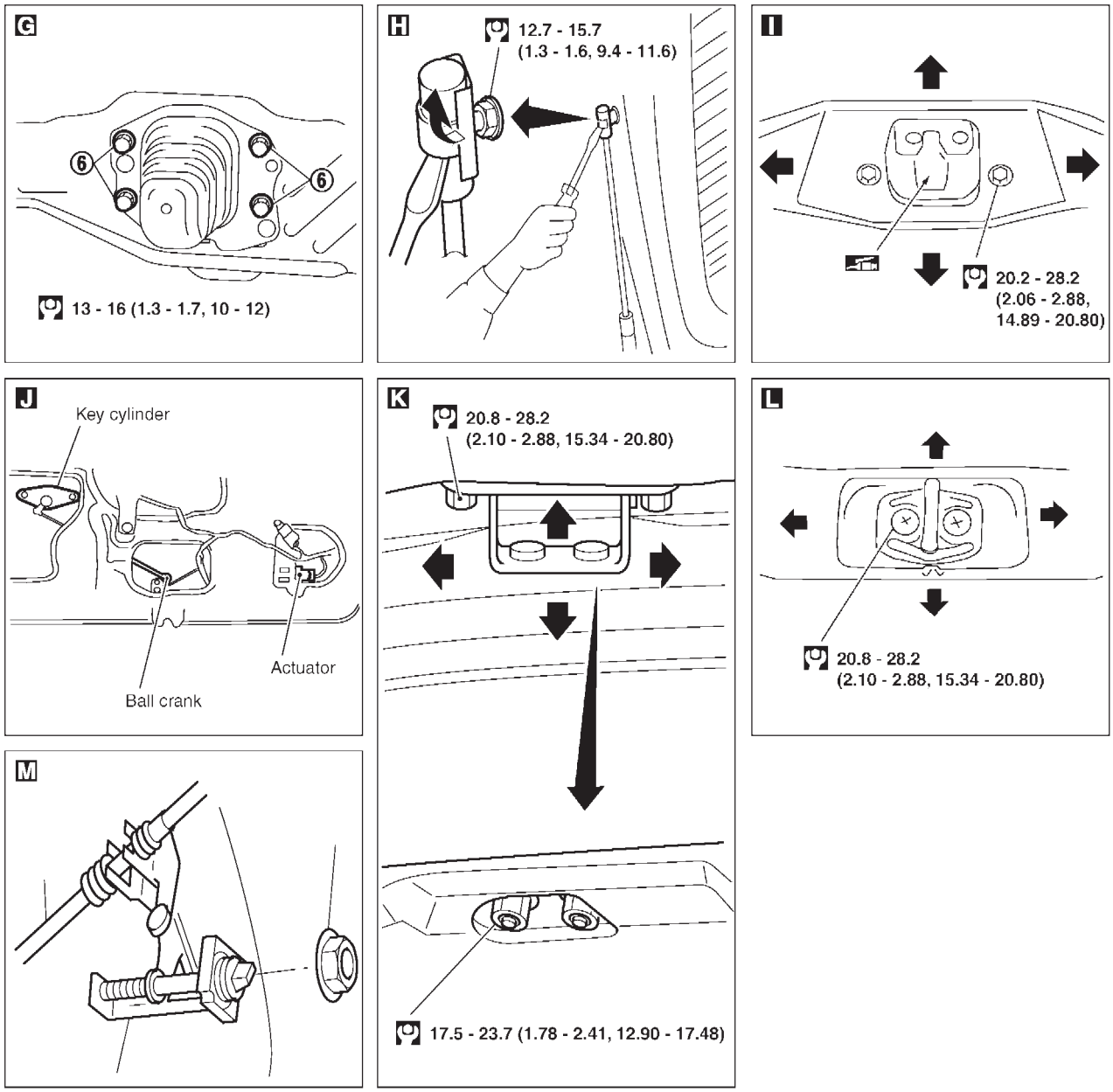

: N•m (kg-m, ft-lb)

The number of bolts may not be the same as shown in the figure.

NBT185

Adjustment

NJBT0006

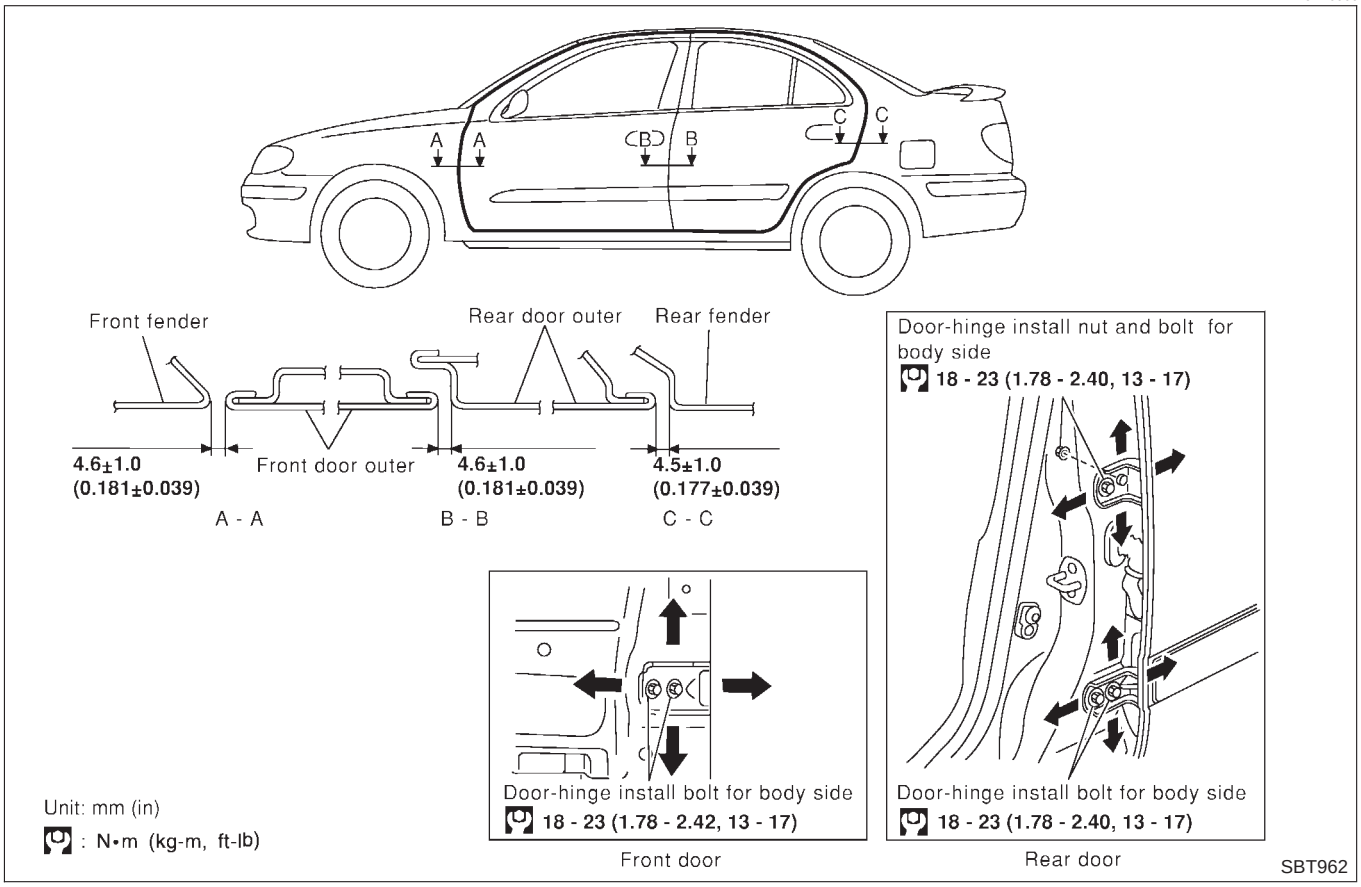

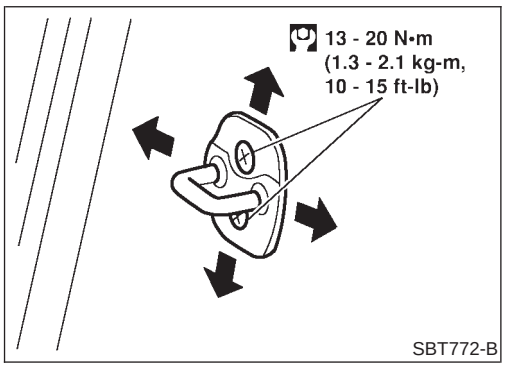

STRIKER ADJUSTMENT

NJBT0006S01

Adjust striker so that it is parallel with advancing direction of door lock.

Front Door Glass

=NJBT0007

- Make sure that door glass is positioned in glass run groove.
- Make sure that there is no abnormality when door glass is raised or lowered.

FRONT DOOR GLASS AND REGULATOR

NJBT0007S01

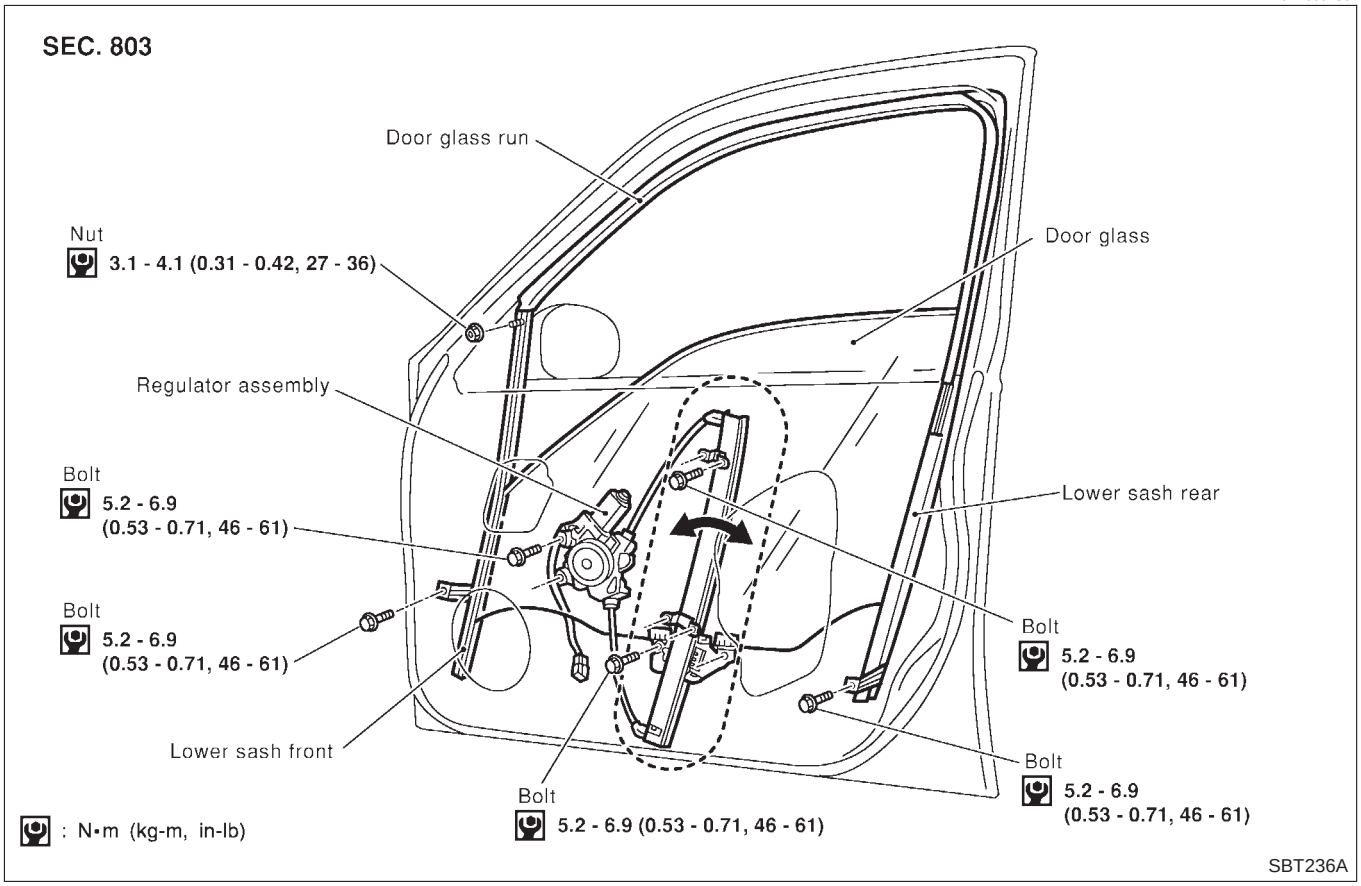

- For removal of front door finisher, refer to “DOOR TRIM”, BT-39.
- Remove sealing screen.

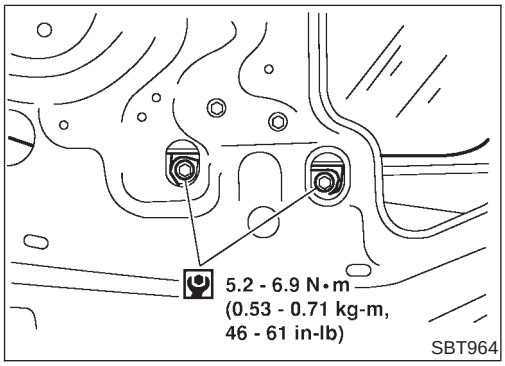

1. Using power window main switch, raise or lower door glass until carrier plate securing bolts are visible.
2. Remove bolts securing carrier plate.

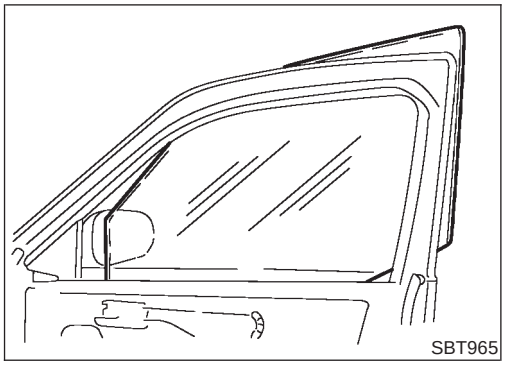

3. Hold door glass with both hands. While raising rear end of door glass, remove door glass from sash and away from outside the door.

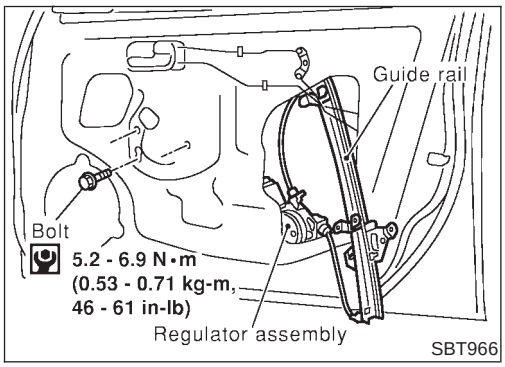

4. Disconnect regulator assembly connector.
5. Remove bolts securing regulator assembly and guide rail, then remove regulator assembly and guide rail.

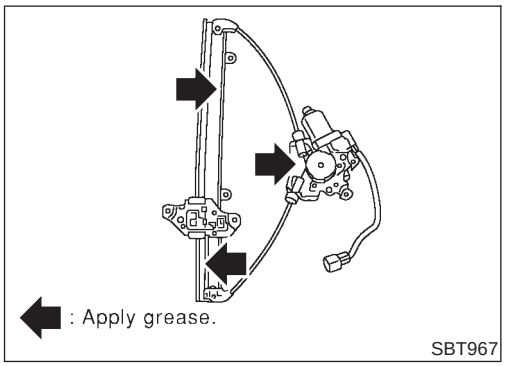

Inspection

NJBT0007S0101

Check regulator assembly for the following parts. Replace faulty parts with new ones.

- Wire for wear
- Regulator for deformation
- Sliding parts for lubrication

Rear Door Glass

NJBT0009

- Make sure that door glass is positioned in glass run groove.
- Make sure that there is no abnormality when door glass is raised or lowered.

REAR DOOR GLASS AND REGULATOR

NJBT0009S01

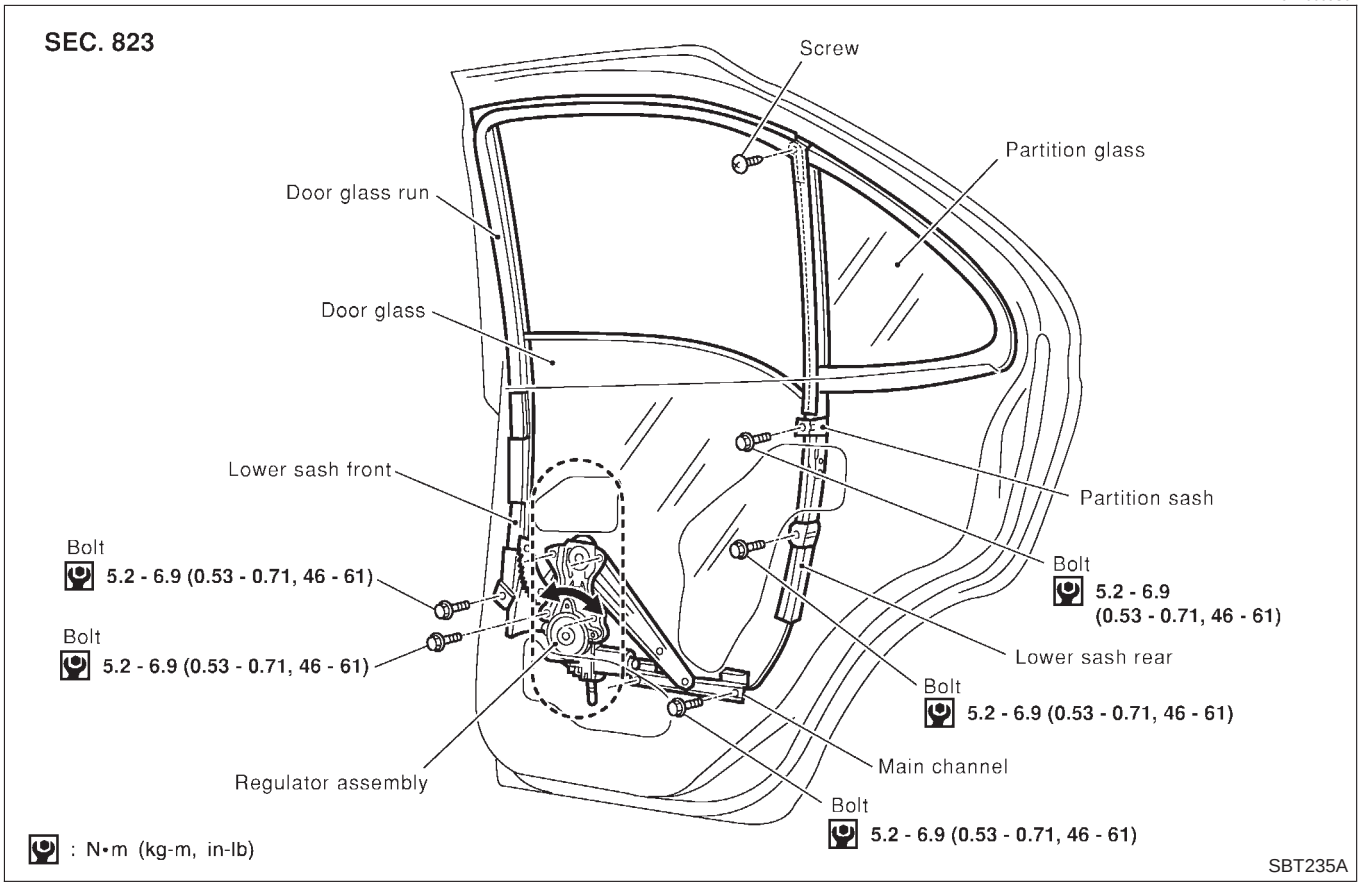

- For removal of rear door finisher, refer to "DOOR TRIM", BT-39.
- For removal of door outside molding, refer to "EXTERIOR", BT-47.
- Remove sealing screen.

1. Remove bolts securing lower sash rear, then remove lower sash rear.
2. Using power window main switch, raise or lower door glass until carrier plate securing bolts are visible.
3. Remove bolts securing main channel.

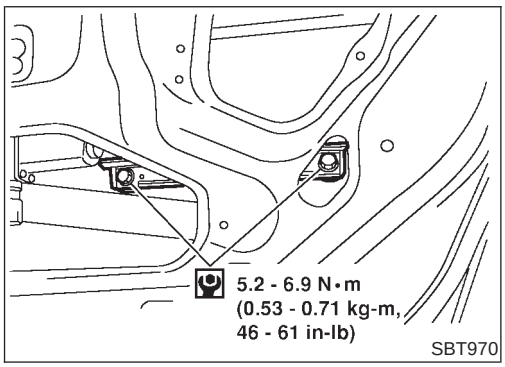

4. Lower the door glass to the full-open position. Then remove the glass from the partition sash and glass run.
5. Insert the glass between the partition sash and door outer panel, and pull the glass out to the outside of door.

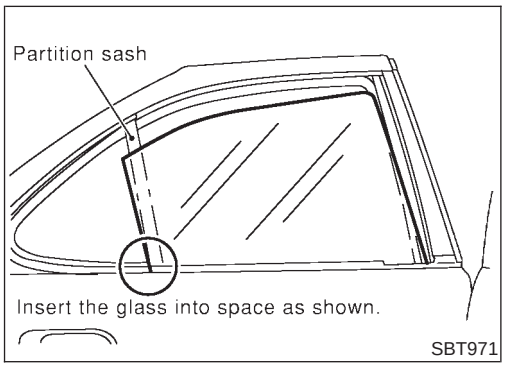

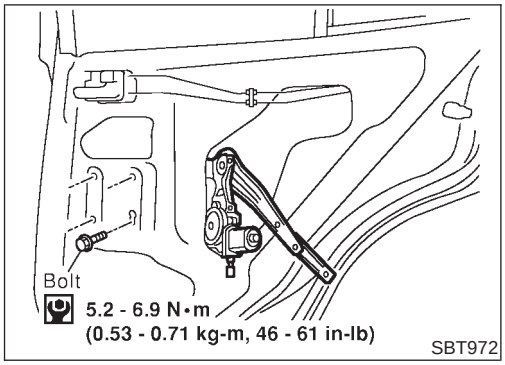

6. Disconnect regulator assembly connector.
7. Remove bolts securing regulator assembly, then remove regulator assembly.

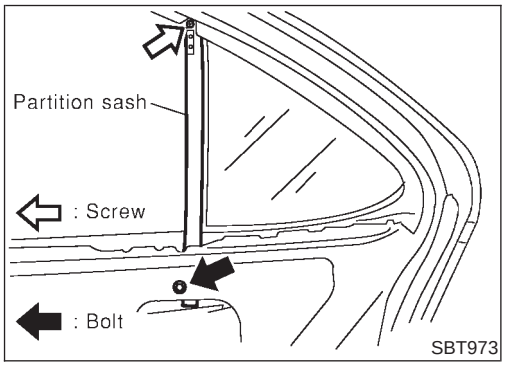

8. Remove partition sash at glass run.
9. Remove bolts and screw securing partition sash.

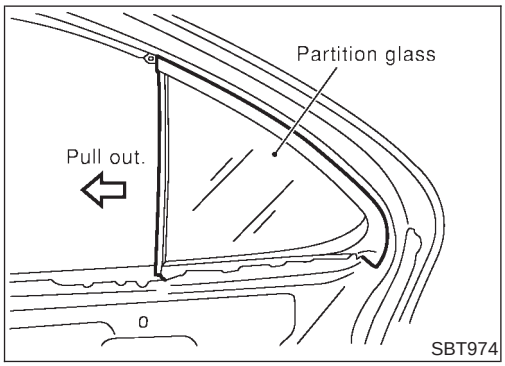

10. Remove partition glass.

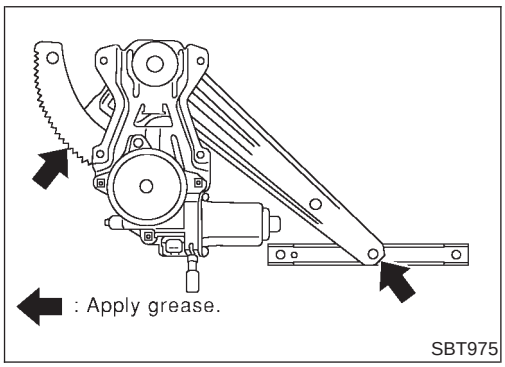

Inspection

NJBT0009S0101

Check regulator assembly for the following parts. Replace faulty parts with new ones.

- Gear for wear
- Regulator for deformation
- Spring for damage
- Sliding parts for lubrication

Front Door Lock

NJBT0010

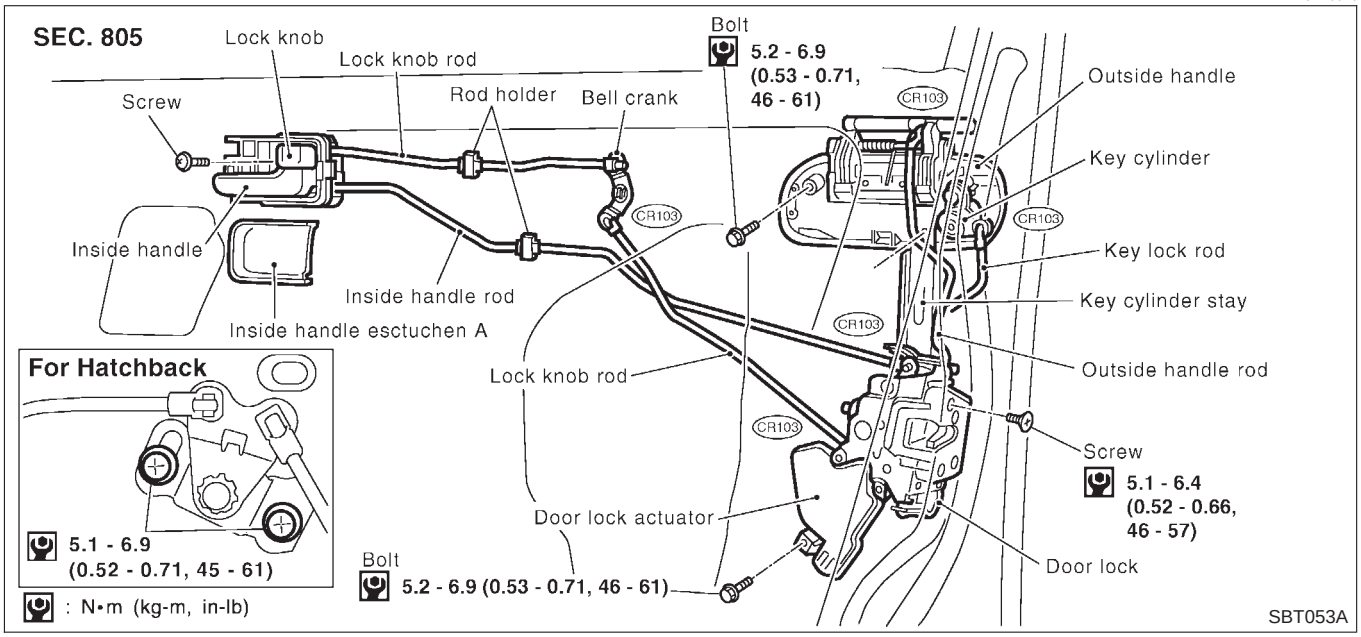

- For removal of front door finisher, refer to “DOOR TRIM”, BT-39.
- Remove sealing screen.

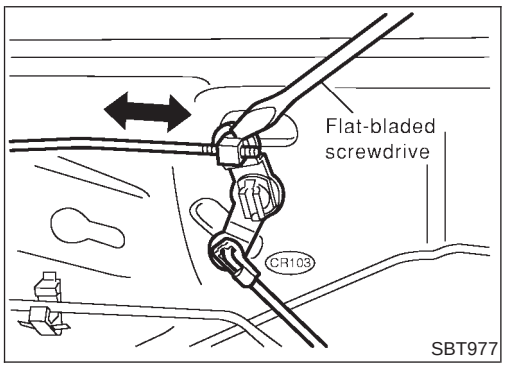

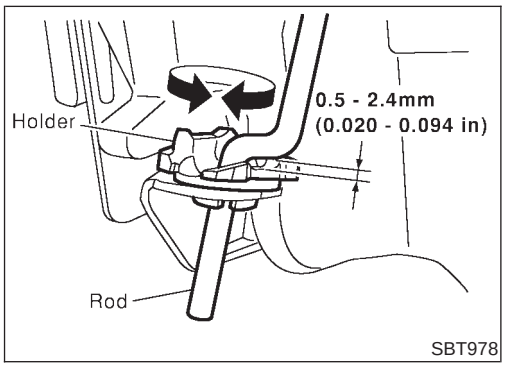

BELL CRANK ADJUSTMENT

NJBT0010S01

CAUTION:

Before adjusting bell crank, make sure that rod is installed to inside handle.

After installing door lock and inside handle, set them in the lock position. Using a flat-bladed screwdriver, expand rod holder. Remove rod free play at joining area and set rod in position.

After adjusting bell crank adjustments have been made, operate door lock knob, door lock switch and door key to make sure that they lock and unlock properly.

OUTSIDE HANDLE ROD ADJUSTMENT

NJBT0010S02

Rotate rod holder so that rod-to-holder clearance is adjusted as shown in the figure at left.

CAUTION:

Make sure that rod-to-holder clearance is not “0” mm (0 in), and that rod is not held pressed.

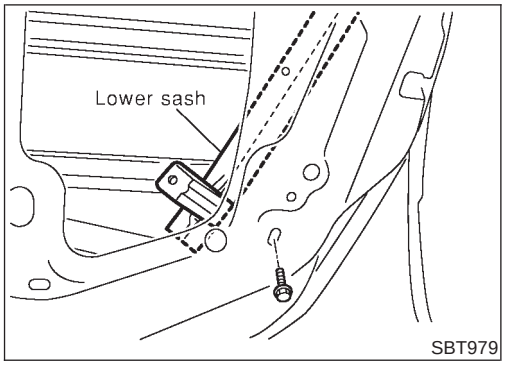

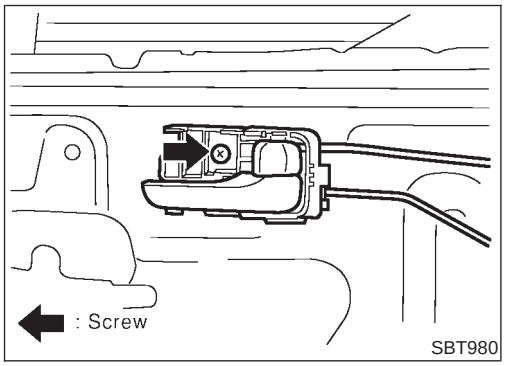

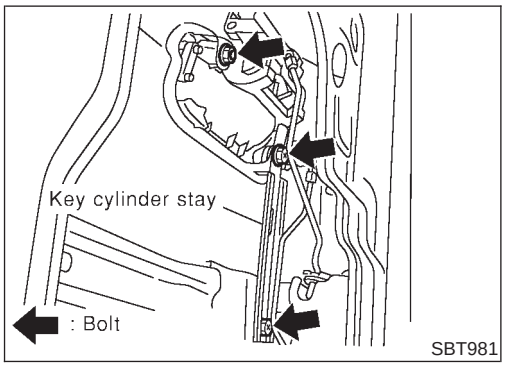

REMOVAL

NJBT0010S03

- For removal of front door finisher, refer to "DOOR TRIM", BT-39.
- Remove sealing screen.
- For removal of front door glass, refer to "Front Door Glass", BT-17.

1. Remove lower rear sash (unitized with glass run) securing bolts. Remove lower rear sash from door panel and away from door lock.
2. Remove inside handle escutcheon A.
3. Remove screw securing inside handle.
4. Detach bell crank at lock knob joining area.
5. Detach inside handle rod on the door lock assembly side.
6. Slide inside handle backward and remove inside handle.
7. Remove rod from inside handle.
8. Detach key lock rod and outside handle rod at joining area (on the outside handle side).
9. Disconnect door lock actuator connector.
10. Remove screws securing door lock assembly, then remove door lock assembly.
11. Remove bolts securing outside handle, then remove outside handle assembly.

Rear Door Lock

=NJBT0011

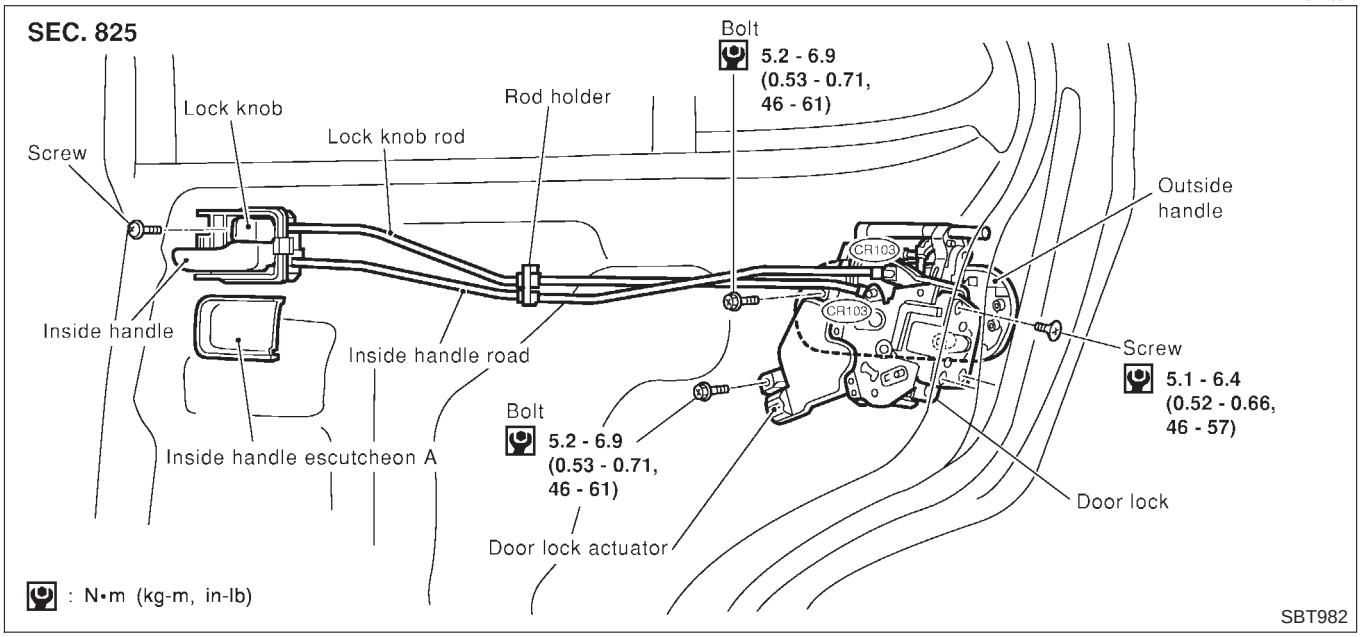

- For removal of rear door finisher, refer to “DOOR TRIM”, BT-39.
- Remove sealing screen.

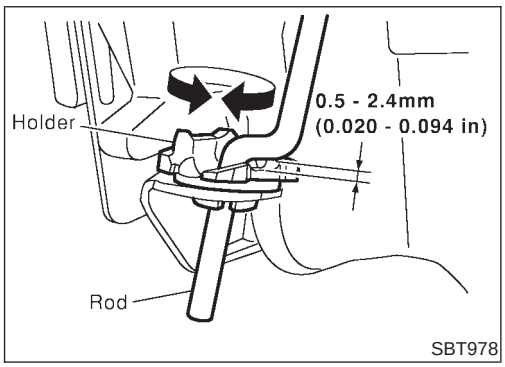

OUTSIDE HANDLE ROD ADJUSTMENT

NJBT0011S01

Rotate rod holder so that rod-to-holder clearance is adjusted as shown in the figure at left.

CAUTION:

Make sure that rod-to-holder clearance is not “0” mm (0 in), and that rod is not held pressed.

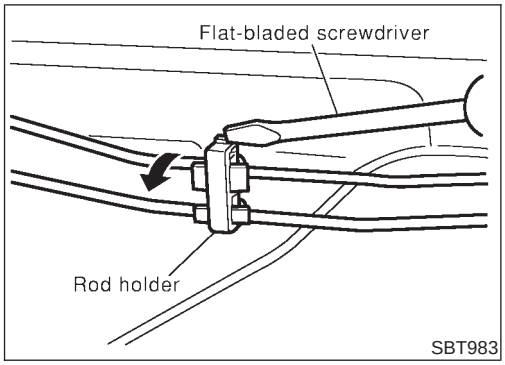

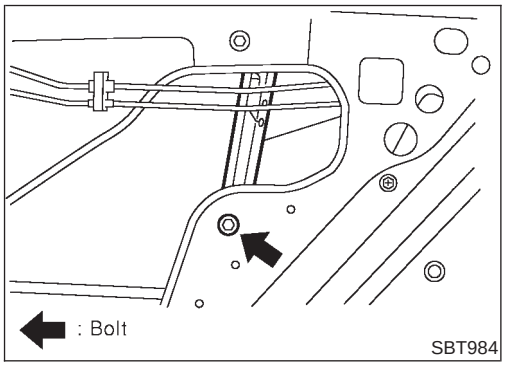

REMOVAL

=NJBT0011S02

- For removal of rear door finisher, refer to "DOOR TRIM", BT-39.
- Remove sealing screen.
- Set the door glass in the full-close position.

1. Remove inside handle escutcheon A.
2. Remove screw securing inside handle.
3. Detach inside handle rod on the door lock assembly side.
4. Detach lock knob rod (on the door lock assembly side).
5. Using a flat-bladed screwdriver, expand rod holder. Remove rod from rod holder.
6. Slide inside handle backward and remove inside handle.
7. Remove rod from inside handle.
8. Remove bolts securing lower sash rear, then remove lower sash rear.
9. Disconnect door lock actuator connector.
10. Remove screws securing door lock assembly, then remove door lock assembly.
11. Remove bolts securing outside handle, then remove outside handle.

Removal and Installation

NJBT0012

CAUTION:

- **Disconnect ground terminal from battery in advance.**
- **Disconnect air bag system line in advance.**
- **Never tamper with or force air bag lid open, as this may adversely affect air bag performance.**
- **Be careful not to scratch pad and other parts.**

Removal and Installation (Cont'd)

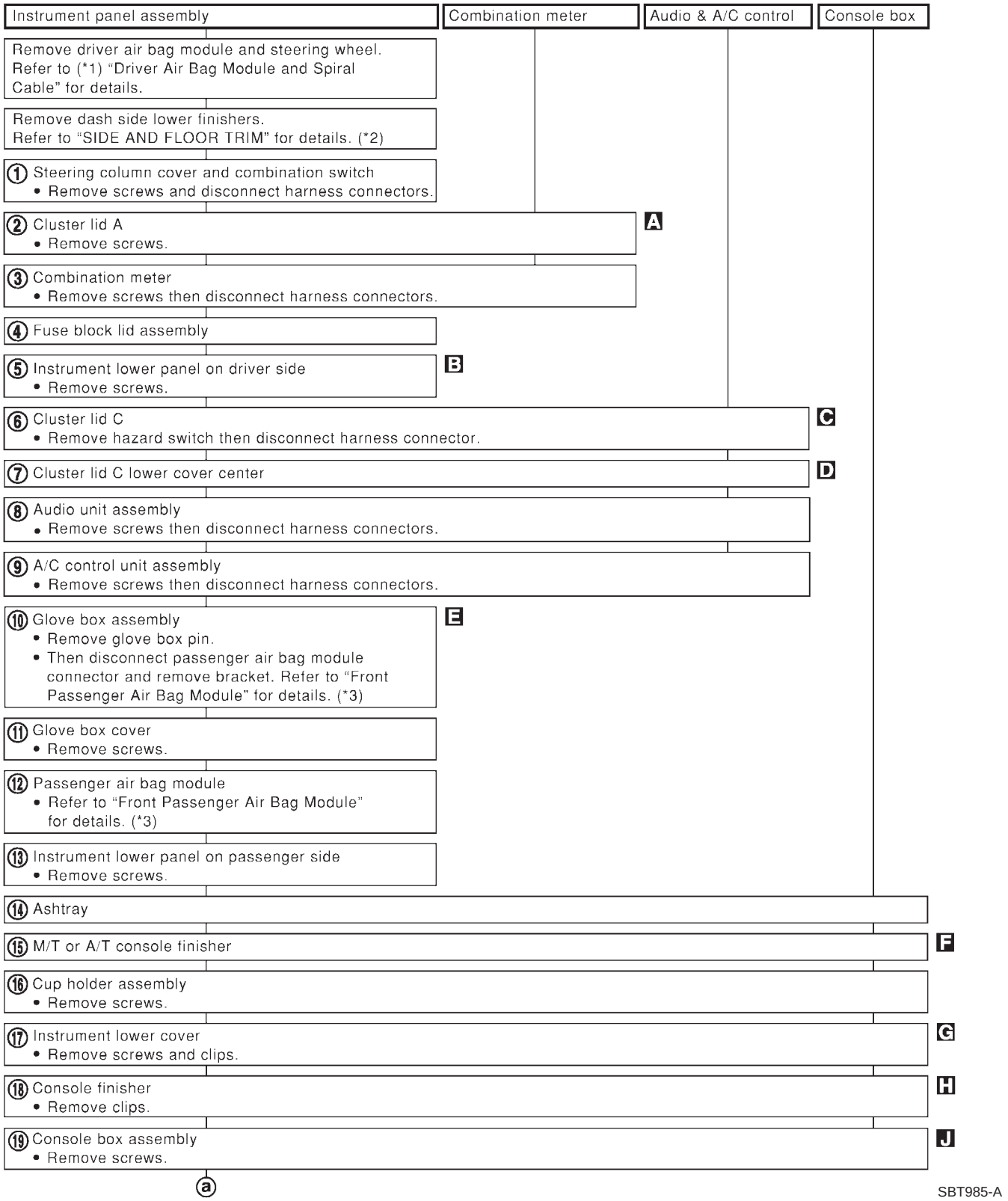

*1 RS-29 *2 BT-31 *3 RS-35

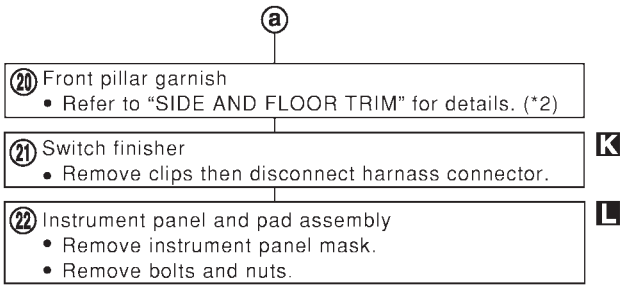

SBT986

*2 BT-31

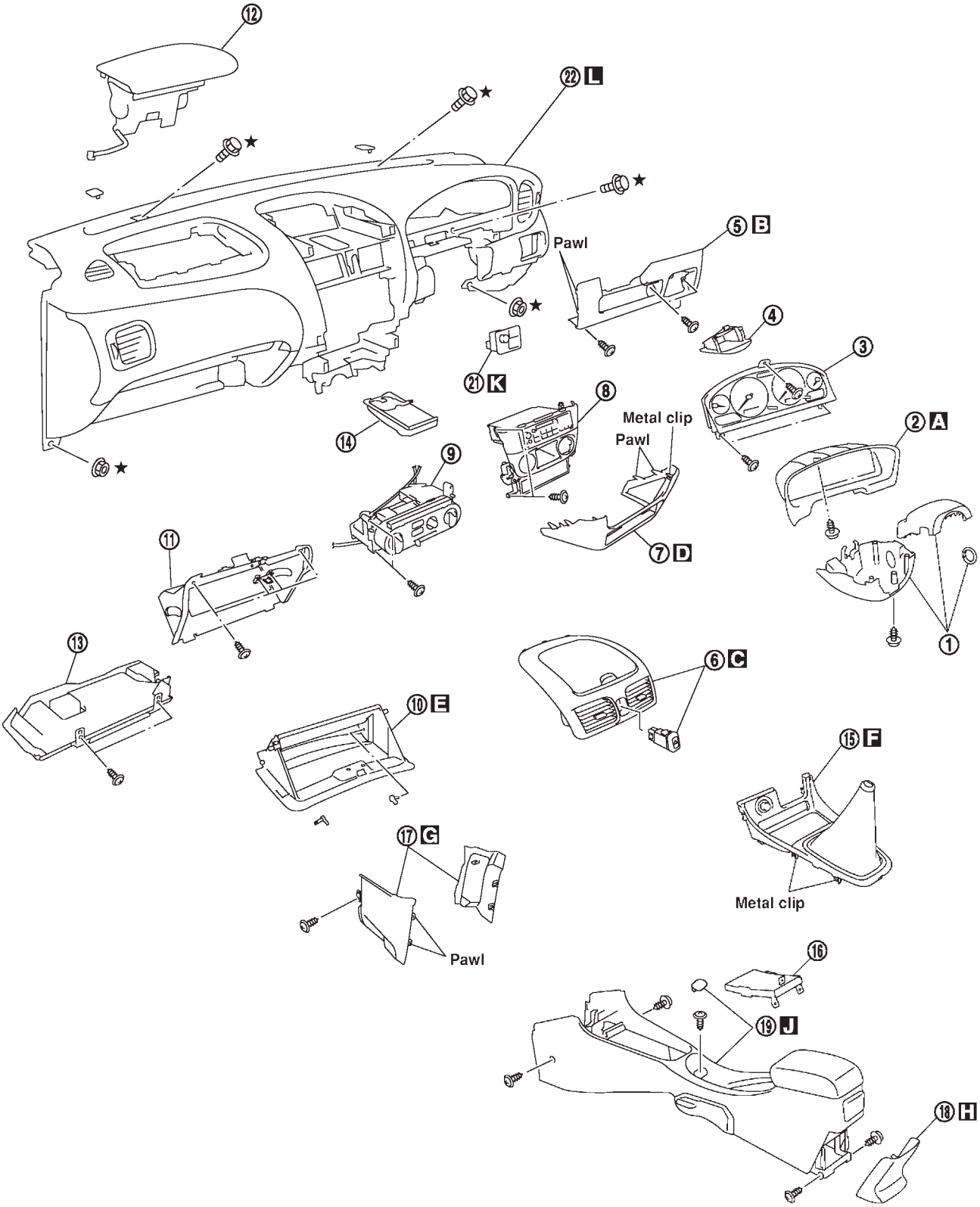

★ : Instrument panel assembly mounting bolts and nuts

The number of bolts, screws, nuts and clips may not be the same as shown in the figure.

NBT186

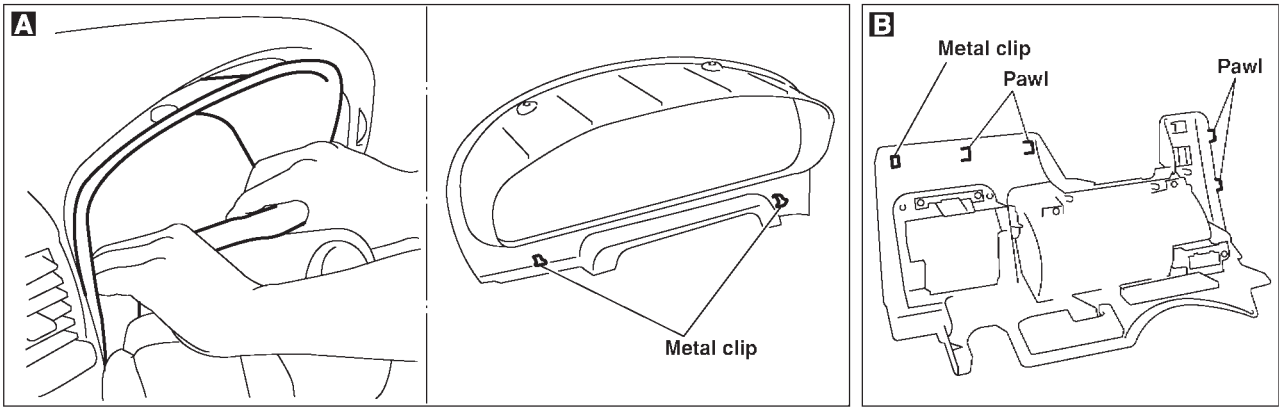

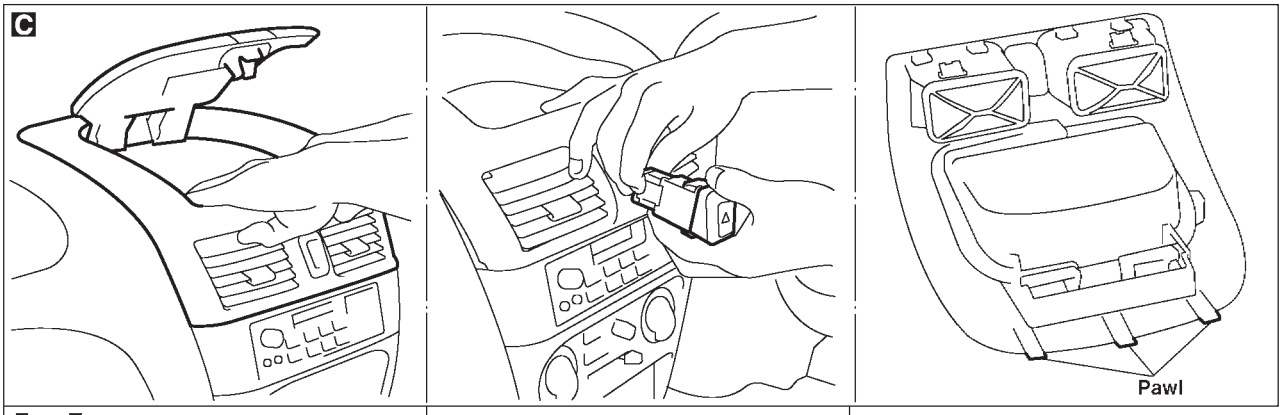

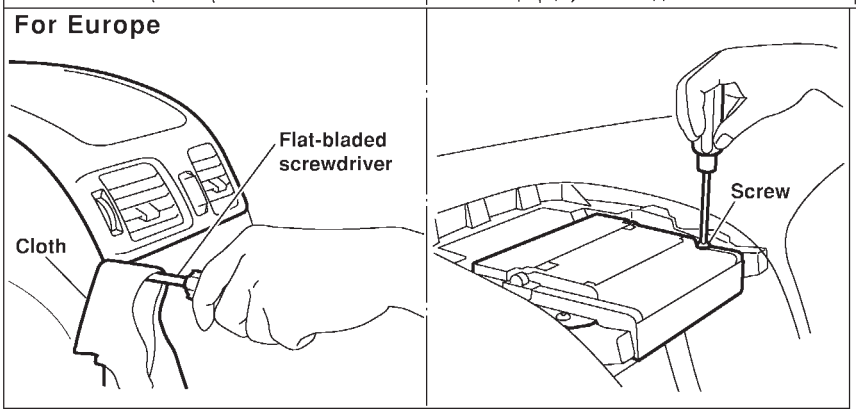

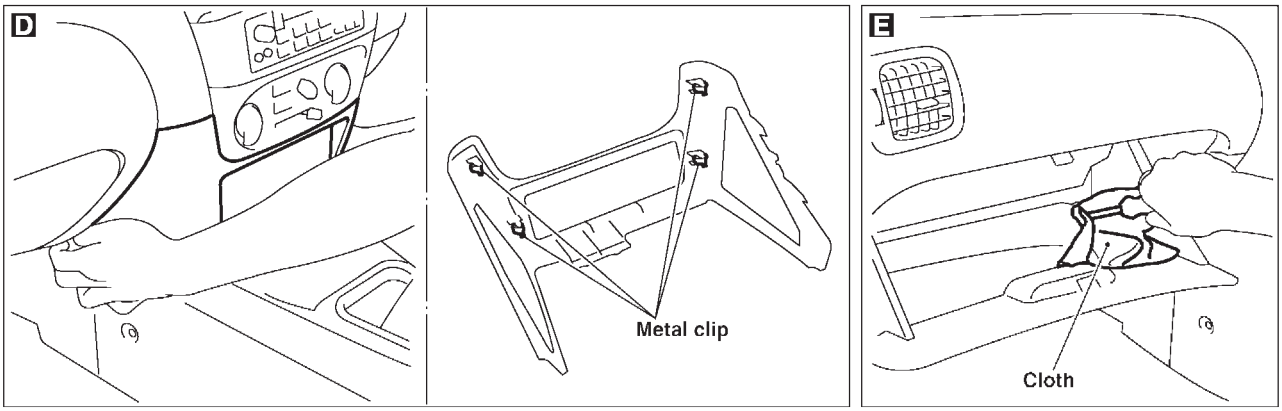

The number of clips may not be the same as shown in the figure.

NBT187

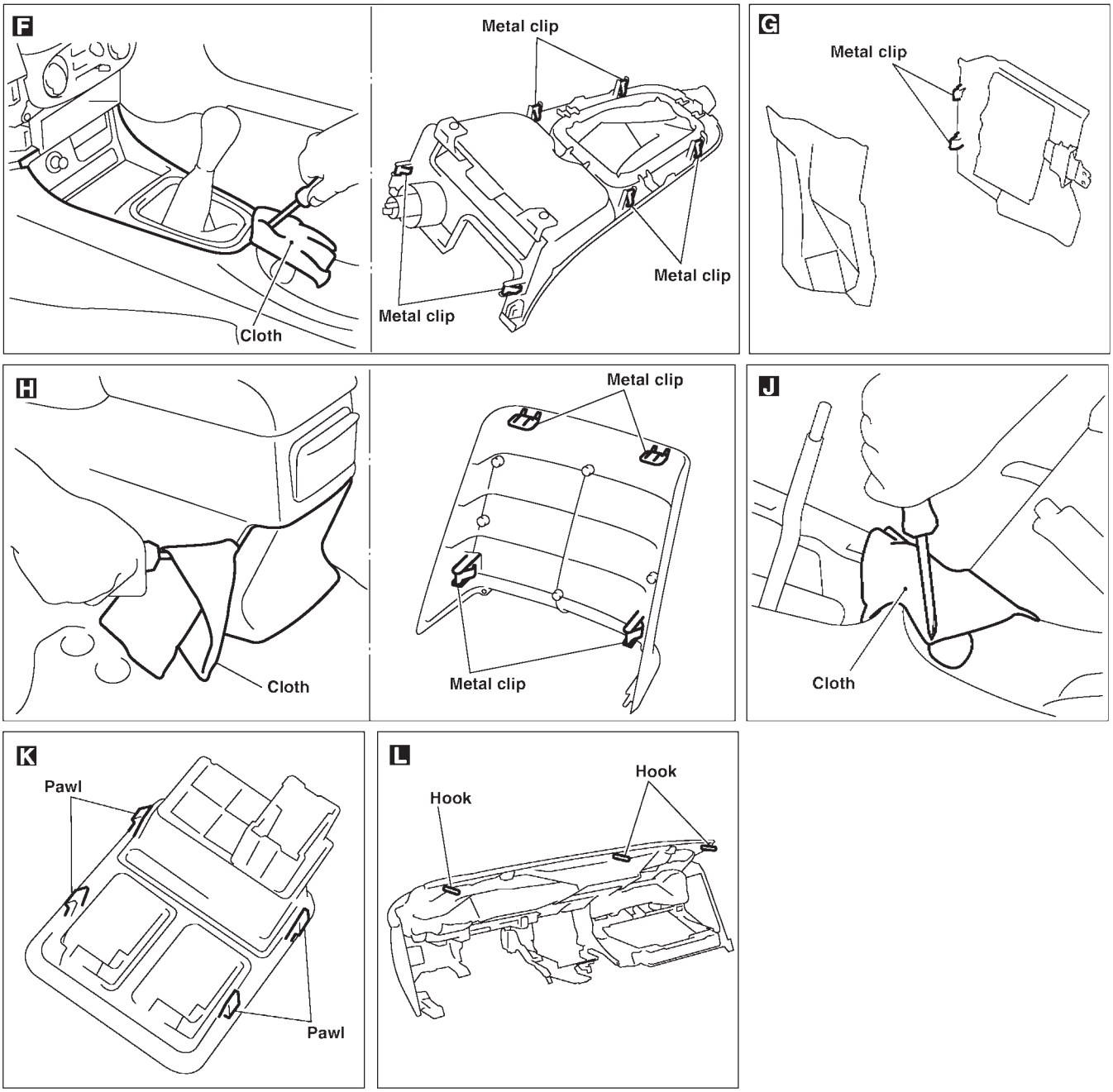

The number of clips may not be the same as shown in the figure.

NBT188

Removal and Installation

NJBT0013

SEDAN

NJBT0013S01

CAUTION:

- **Wrap the tip of flat-bladed screwdriver with a cloth when removing metal clips from garnishes.**

1. Remove front and rear seats. Refer to “FRONT SEAT” and “REAR SEAT” for details, BT-56 and BT-60.
2. Remove front and rear seat belts. Refer to RS-5 and RS-11, “Front Seat Belt” and “Rear Seat Belt” for details.
3. Remove front and rear outer kicking plates. B C
4. Remove front and rear inner kicking plates.
5. Remove dash side finishers. D
6. Remove front and rear body side welts.
7. Remove front pillar garnishes. E
8. Remove center pillar lower garnishes. F
9. Remove center pillar upper garnishes. F G
10. Remove rear seat back finishers. H
11. Remove rear pillar finishers. J
12. Remove high-mounted stop lamp. (Models without rear air spoiler) K
13. Remove seat back center and side finishers. (For Europe)
14. Remove rear parcel shelf finisher. L
15. Remove hoot rest.
16. Remove floor carpet.

SEC. 678•749•769•799

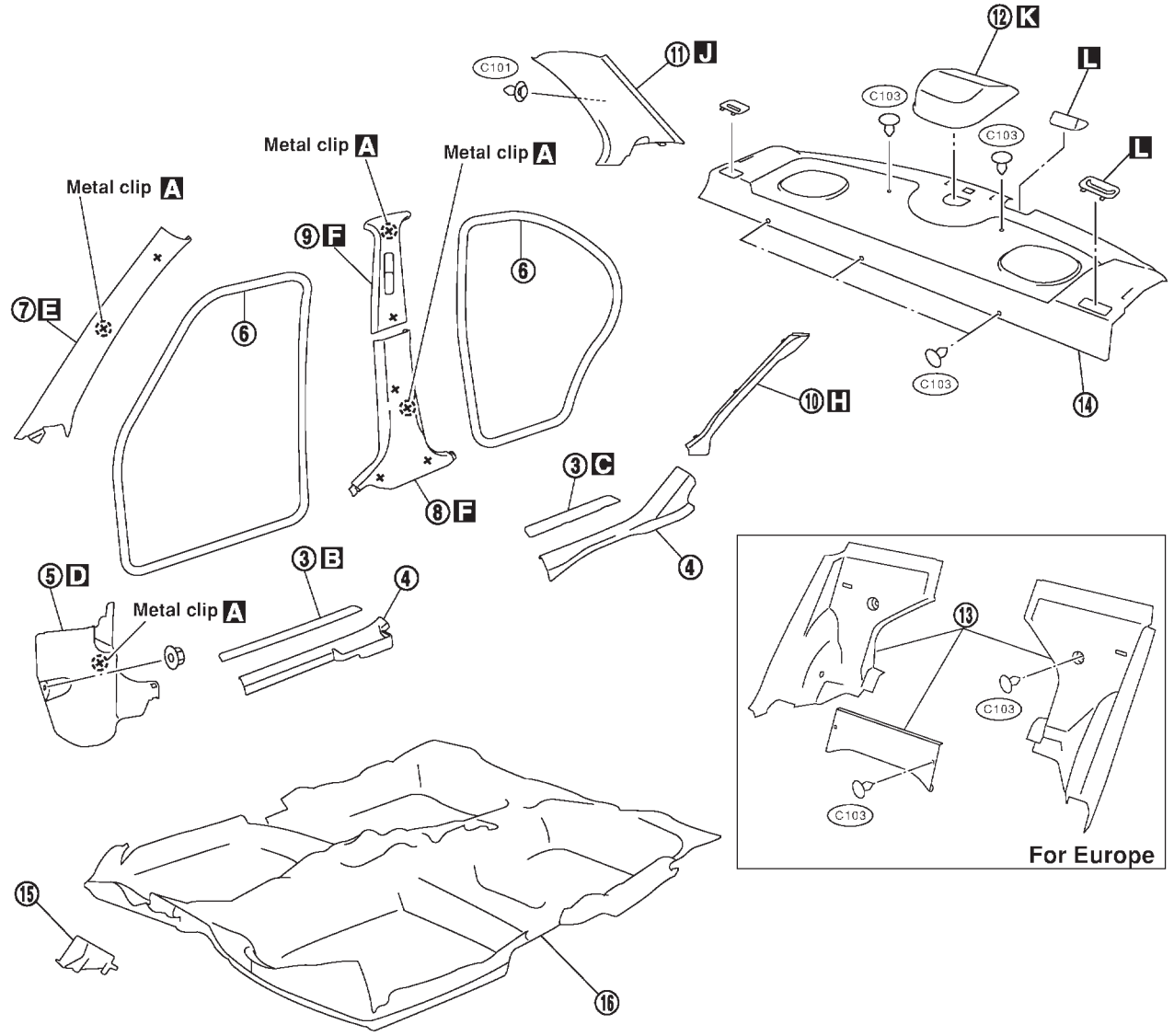

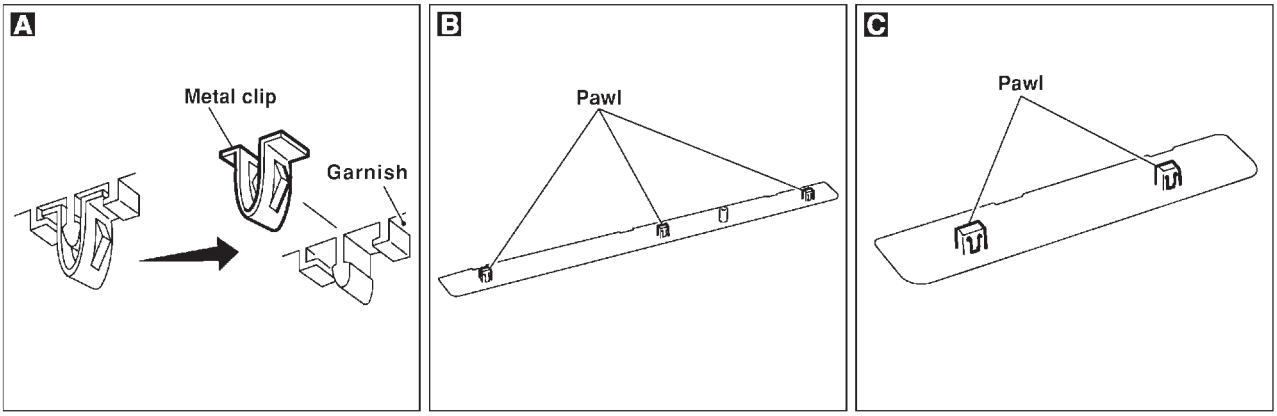

SBT988

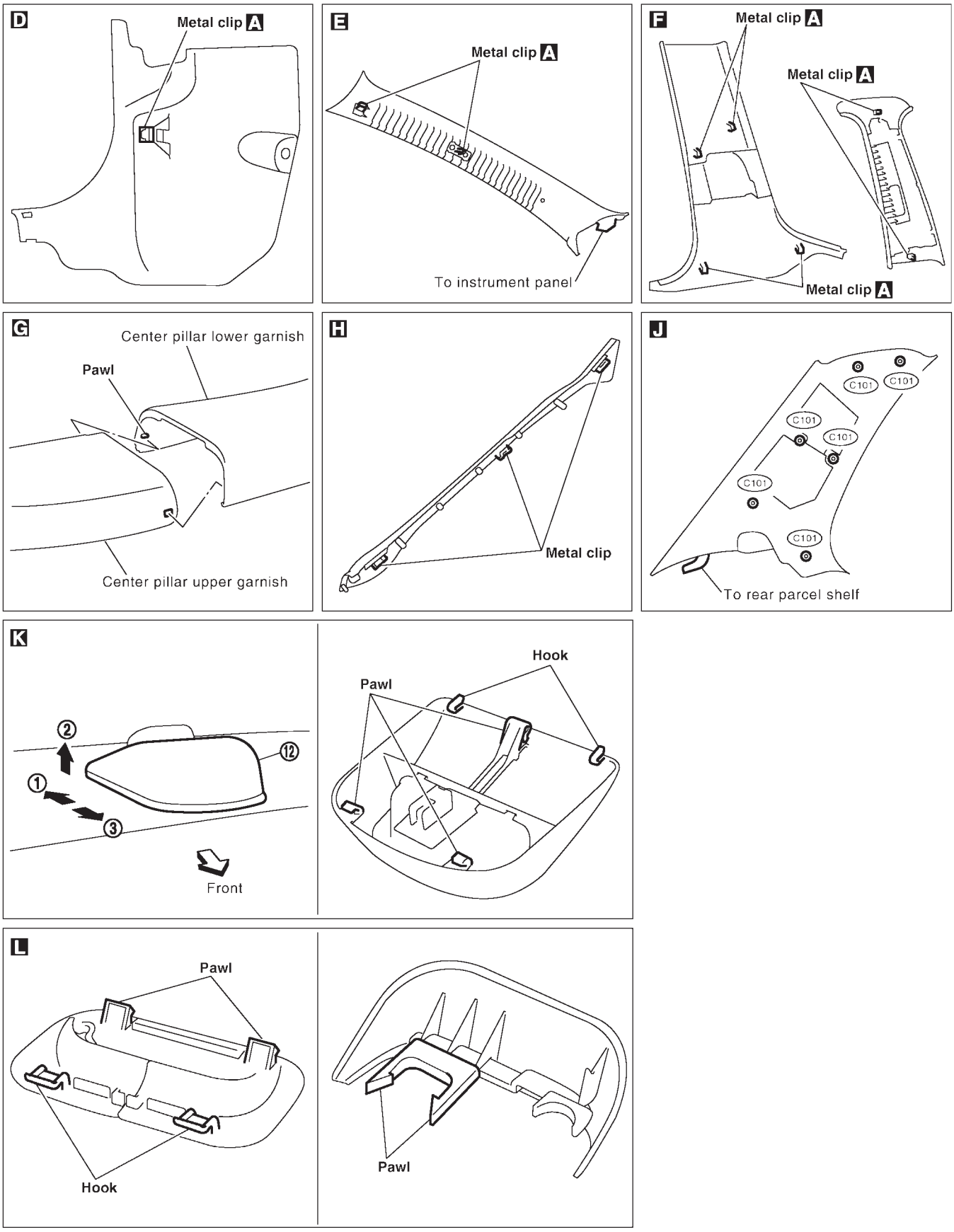
D
Metal clip A
E
Metal clip A
To instrument panel
F
Metal clip A
Metal clip A
Metal clip A
G
Center pillar lower garnish
Pawl
Center pillar upper garnish
H
Metal clip
J
C101
C101
C101
C101
C101
C101
To rear parcel shelf
K
②
⑫
①
③
Front
Hook
Pawl
L
Pawl
Hook
Pawl

SBT989

3-DOOR HATCHBACK

NJBT0013S02

CAUTION:

- **Wrap the tip of flat-bladed screwdriver with a cloth when removing metal clips from garnishes.**

1. Remove front and rear seats. Refer to "FRONT SEAT" and "REAR SEAT" for details, BT-56 and BT-60.
2. Remove front and rear seat belts. Refer to RS-9 and RS-15, "Front Seat Belt" and "Rear Seat Belt" for details.
3. Remove outer kicking plates. B
4. Remove inner kicking plates.
5. Remove dash side finishers. D
6. Remove body side welts.
7. Remove front pillar garnishes. E
8. Remove rear parcel shelf side finish.
9. Remove rear wheelhouse finish.
10. Remove rear side finish. F
11. Remove rear pillar garnish. G
12. Remove luggage room rear plate. H
13. Remove luggage room rear finish.
14. Remove luggage room rear side lower finish.
15. Remove front and rear room carpet.
16. Remove luggage room carpet.

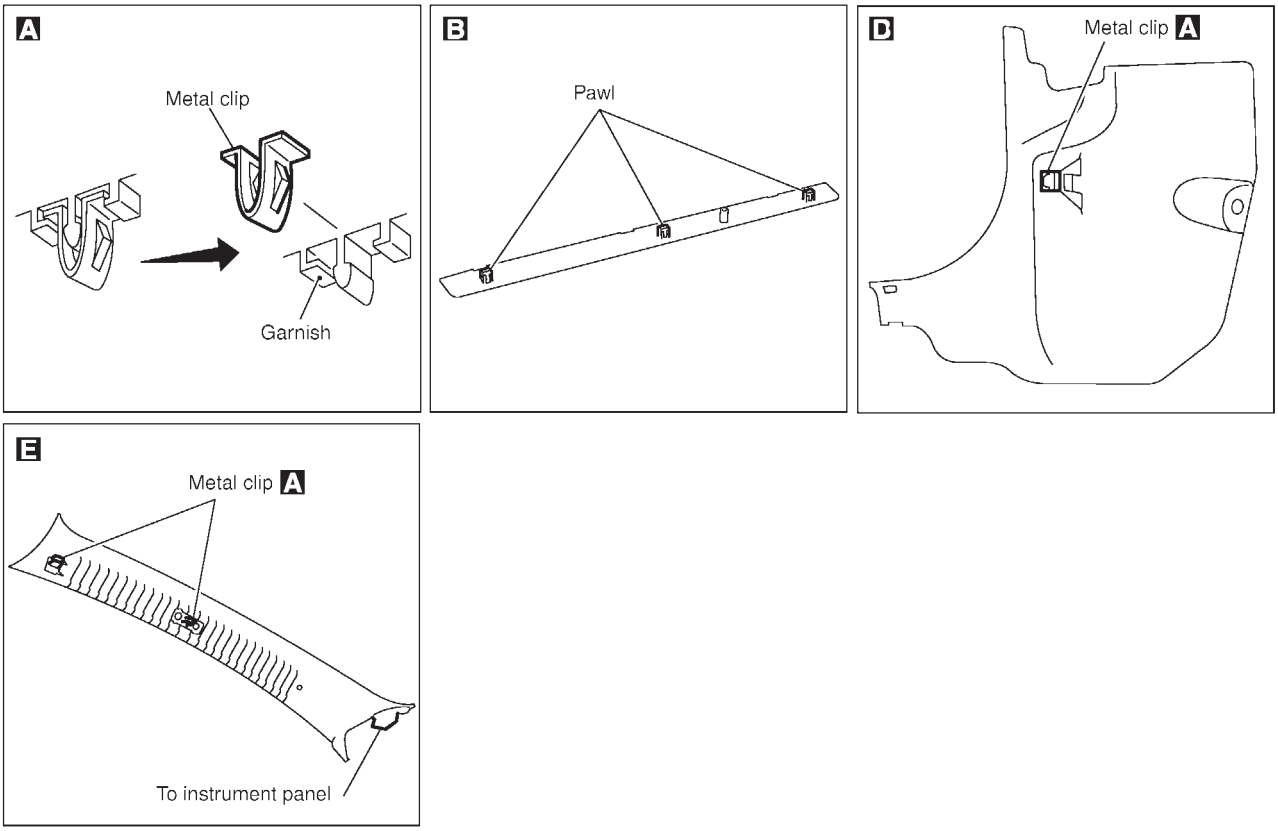

NBT065

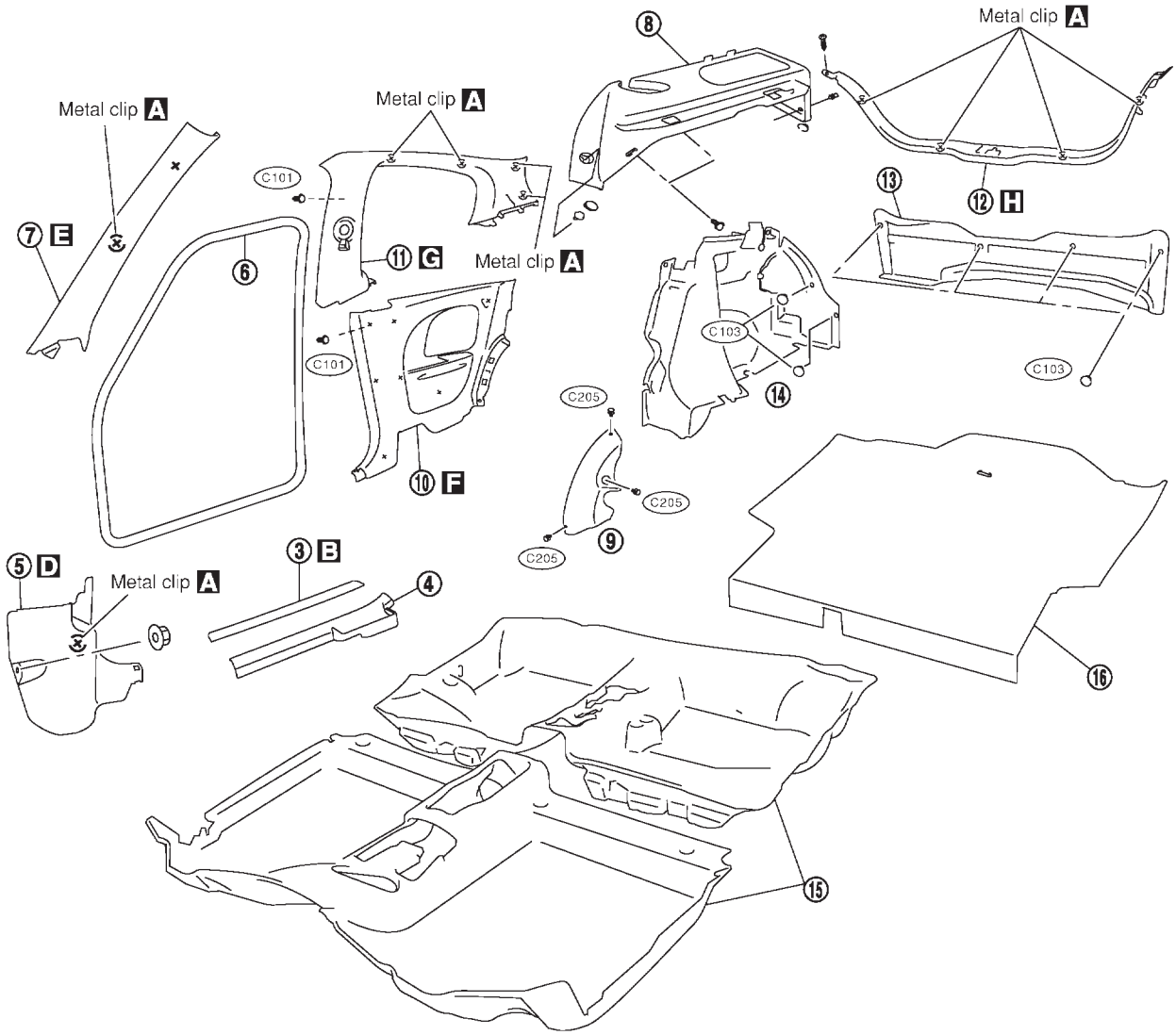
Metal clip A
Metal clip A
Metal clip A
Metal clip A
Metal clip A
Metal clip A
⑦ E
⑥
C101
C101
⑪ G
⑧
⑬
⑫ H
C103
C103
⑭
C205
C205
C205
⑨
⑩ F
⑤ D
③ B
④
⑯
⑮

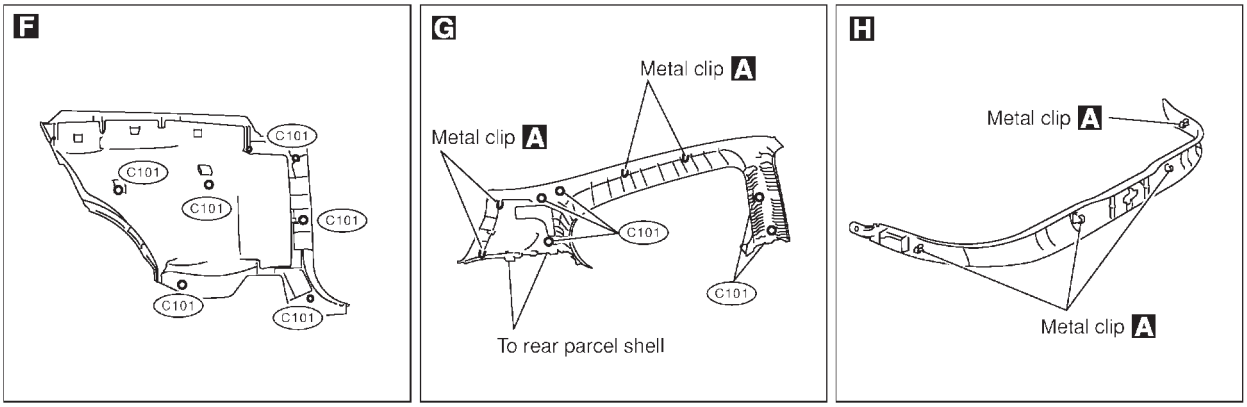
F
C101
C101
C101
C101
C101
C101
G
Metal clip A
Metal clip A
C101
C101
To rear parcel shell
H
Metal clip A
Metal clip A

NBT064

5-DOOR HATCHBACK

NJBT0013S03

CAUTION:

- **Wrap the tip of flat-bladed screwdriver with a cloth when removing metal clips from garnishes.**

1. Remove front and rear seats. Refer to "FRONT SEAT" and "REAR SEAT" for details, BT-56 and BT-60.
2. Remove front and rear seat belts. Refer to RS-7 and RS-15, "Front Seat Belt" and "Rear Seat Belt" for details.
3. Remove front and rear outer kicking plates. B C
4. Remove front and rear inner kicking plates.
5. Remove dash side finishers. D
6. Remove front and rear body side welts.
7. Remove front pillar garnishes. E
8. Remove center pillar lower garnishes. F
9. Remove center pillar upper garnishes. F G
10. Remove rear parcel shelf side finish.
11. Remove rear pillar garnish. H
12. Remove rear wheelhouse finish.
13. Remove luggage room rear plate. I
14. Remove luggage room rear finish.
15. Remove luggage room rear side lower finish.
16. Remove front and rear room carpet.
17. Remove luggage room carpet.

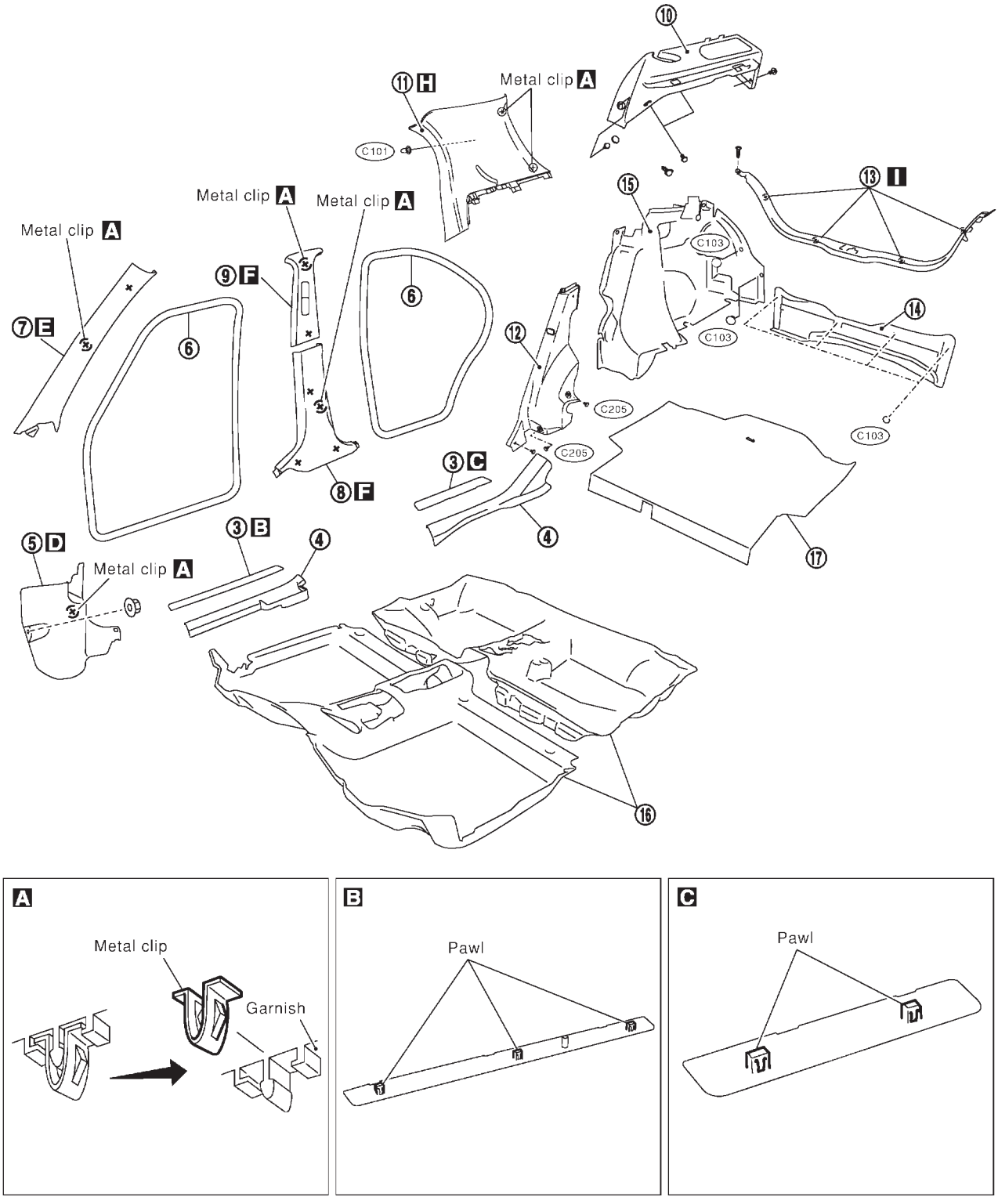
⑩
⑪ H
Metal clip A
C101
⑬ I
⑮
Metal clip A
Metal clip A
Metal clip A
C103
⑨ F
⑥
⑭
⑦ E
⑥
⑫
C103
C205
C205
C103
③ C
⑧ F
④
⑤ D
③ B
④
Metal clip A
⑰
⑯
A
Metal clip
Garnish
B
Pawl
C
Pawl

NBT068

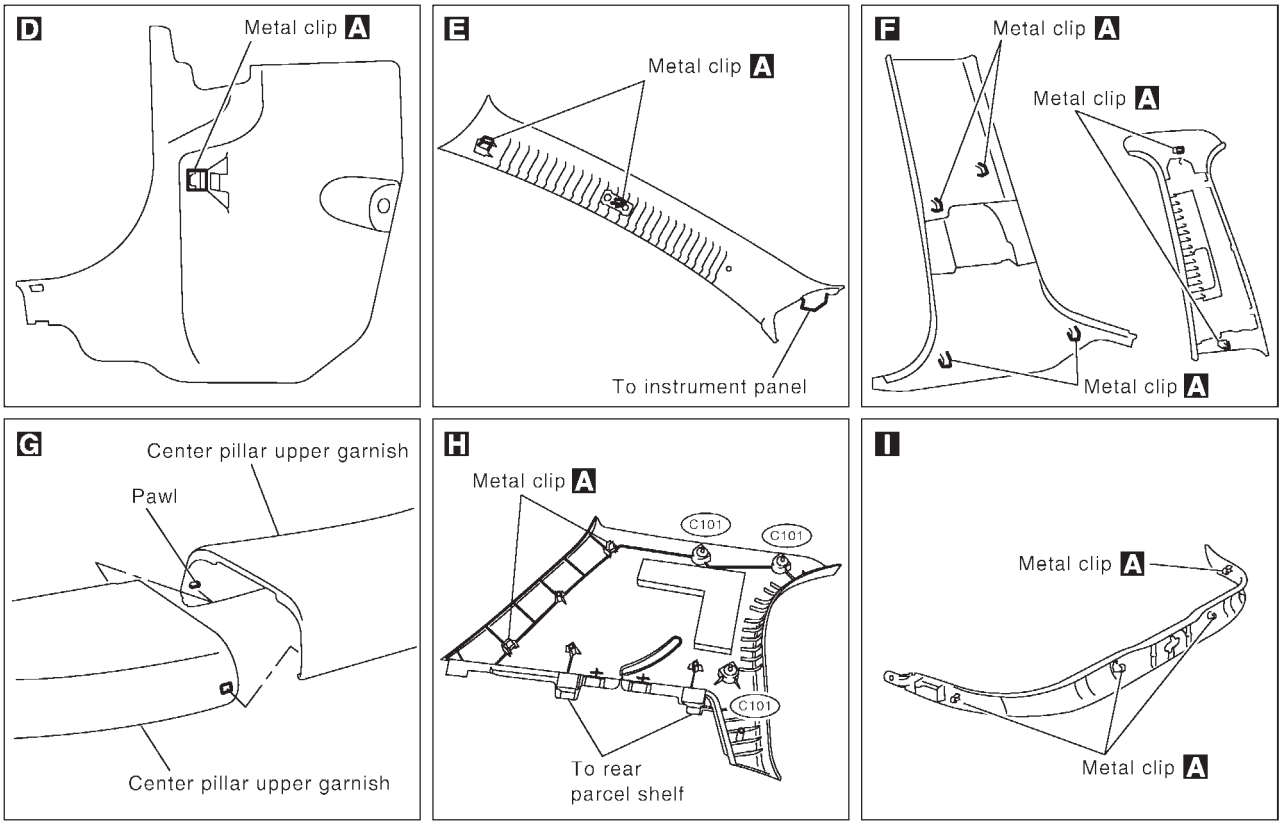
D
Metal clip A
E
Metal clip A
To instrument panel
F
Metal clip A
Metal clip A
Metal clip A
G
Center pillar upper garnish
Pawl
Center pillar upper garnish
H
Metal clip A
C101
C101
C101
To rear
parcel shelf
I
Metal clip A
Metal clip A

NBT069

Removal and Installation

NJBT0014

Front door finisher

1. Remove inside handle escutcheon. A
2. Remove door armrest. B
3. Remove window regulator handle. (Manual models)
4. Remove power window switch finisher, then disconnect the connectors. C
5. Remove bolts, screw and clip securing door finisher.
6. Remove clips securing front door finisher.
7. Lift out front door finisher. D

Rear door finisher

8. Remove inside handle escutcheon. E
9. Remove door armrest. F
10. Remove power window switch finisher, then disconnect the connector. G
11. Remove bolts and clips securing door finisher.
12. Remove clips securing rear door finisher.
13. Lift out rear door finisher. H

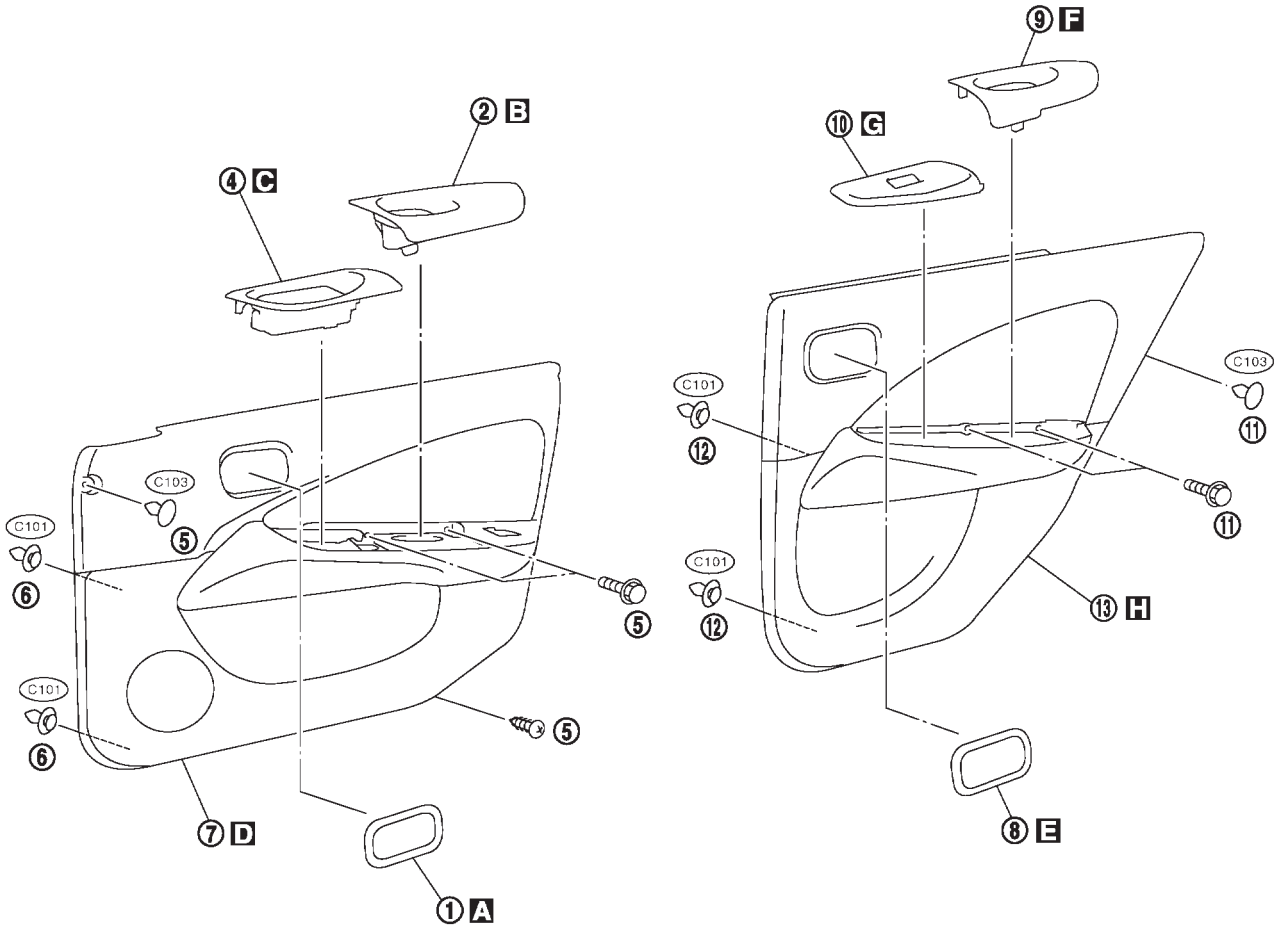

M/T model

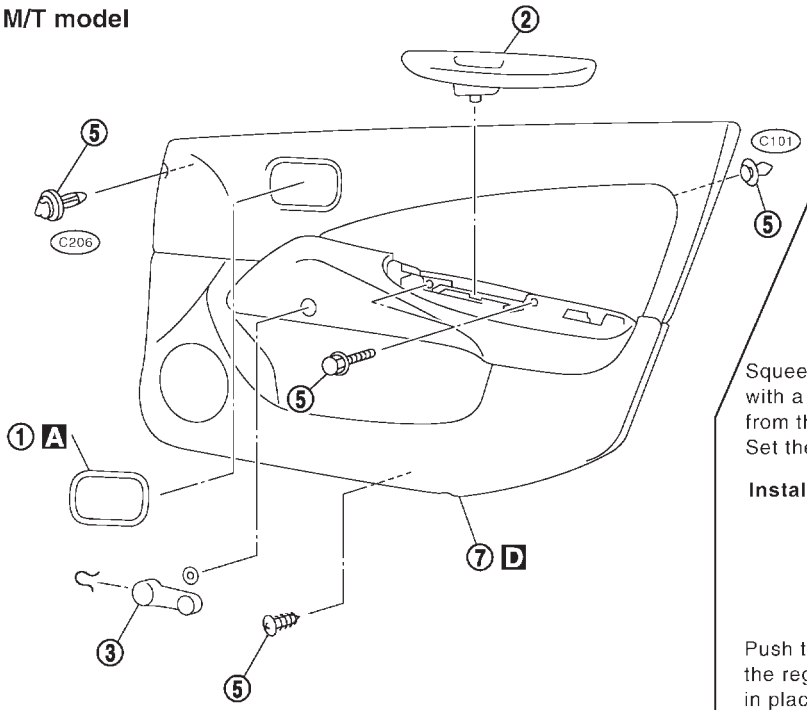

Manual window regulator handle

Remove

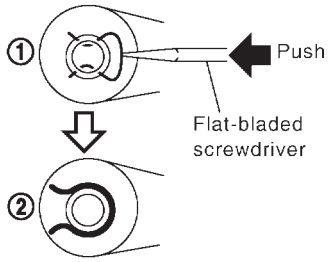

Squeeze the regulator handle clip in place with a screwdriver and remove the regulator handle from the regulator shaft.
Set the regulator handle clip as shown in figure ①.

Installation

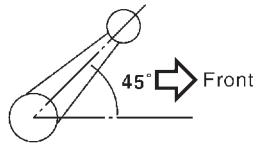

Push the regulator handle to install it into the regulator shaft. Install the regulator handle in place as shown in the figure with the window completely closed.

SBT054A

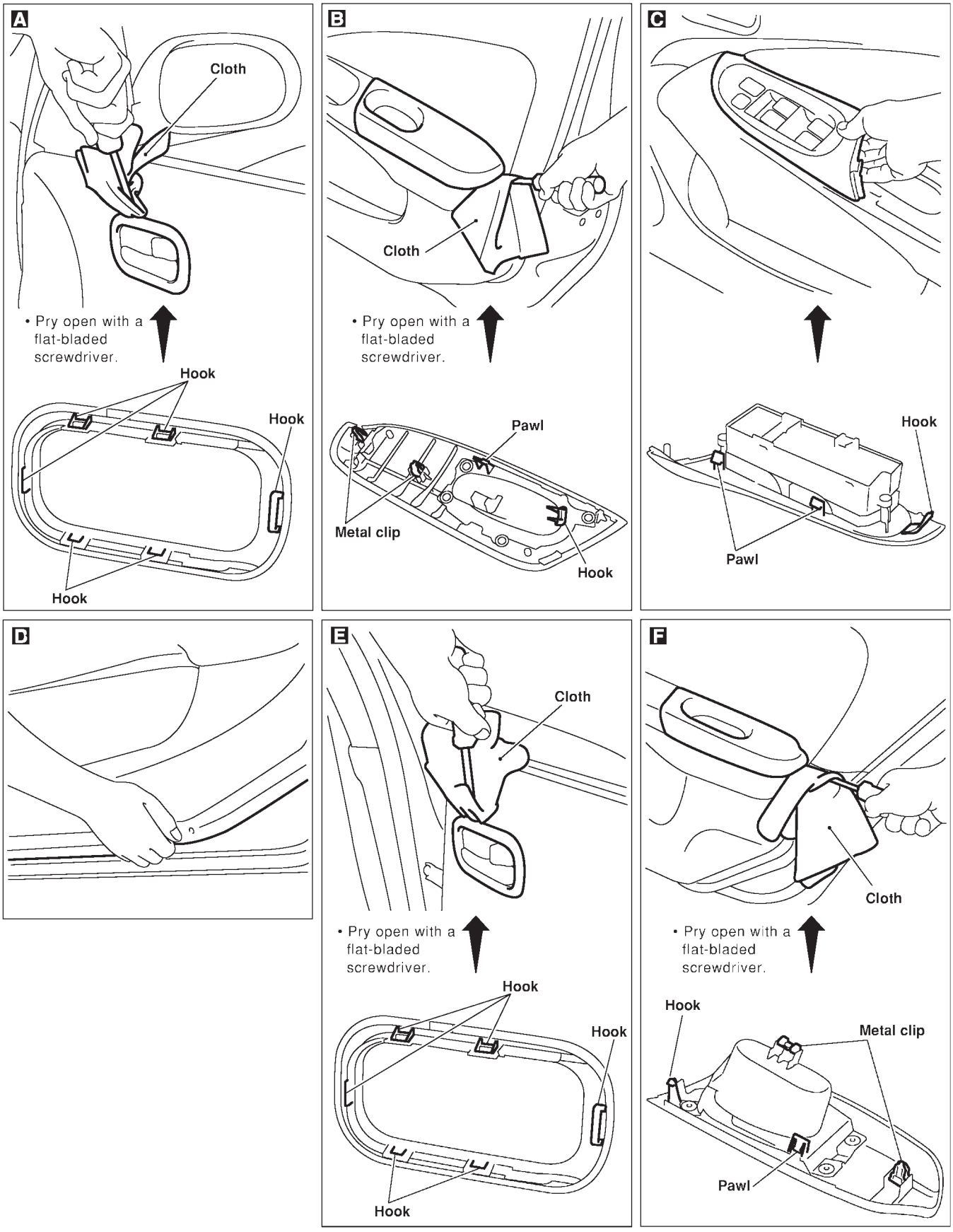
A
Cloth
• Pry open with a flat-bladed screwdriver.
Hook
Hook
Hook
B
Cloth
• Pry open with a flat-bladed screwdriver.
Pawl
Metal clip
Hook
C
Hook
Pawl
D
E
Cloth
• Pry open with a flat-bladed screwdriver.
Hook
Hook
Hook
F
Cloth
• Pry open with a flat-bladed screwdriver.
Hook
Metal clip
Pawl

SBT991

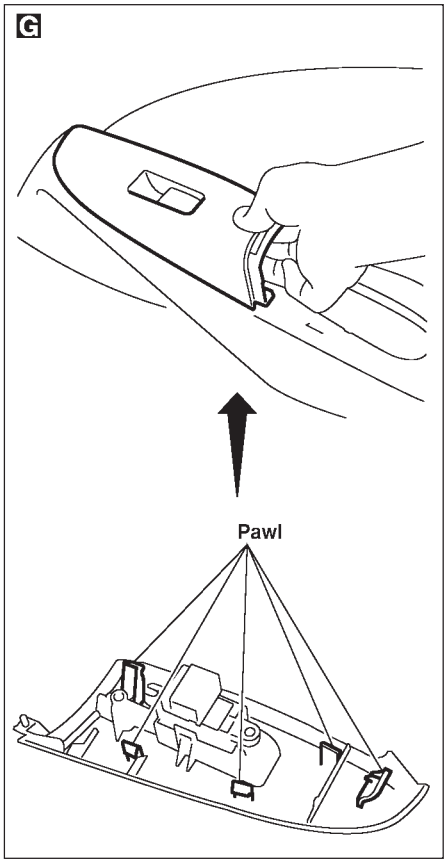

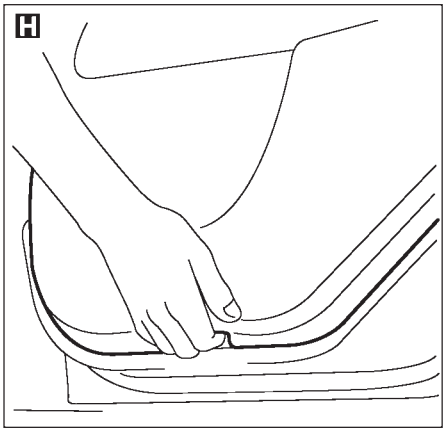

SBT015A

Removal and Installation

NJBT0015

1. Remove rear seat. Refer to “REAR SEAT” for details, BT-60.
2. Remove shoulder anchor bolts. Refer to RS-5, “Front Seat Belt” for details.
3. Remove front pillar garnishes, center pillar upper garnishes, center pillar lower garnishes and rear pillar garnishes. Refer to “SIDE AND FLOOR TRIM” for details, BT-31.
4. Push back the front seat back.
5. Remove sunroof and spot lamp switch, then disconnect connectors. (Model with sunroof) A
6. Remove sunroof welt. (Model with sunroof)
7. Remove interior lamp assembly, then disconnect connectors. B
8. Remove rear interior lamp assembly, then disconnect connector. C (For Hatchback)
9. Remove rear seat belt center finisher. D (For Hatchback)
10. Remove sun visors.
11. Remove assist grips.
12. Remove clips securing headlining, then remove headlining from vehicle through front passenger side.

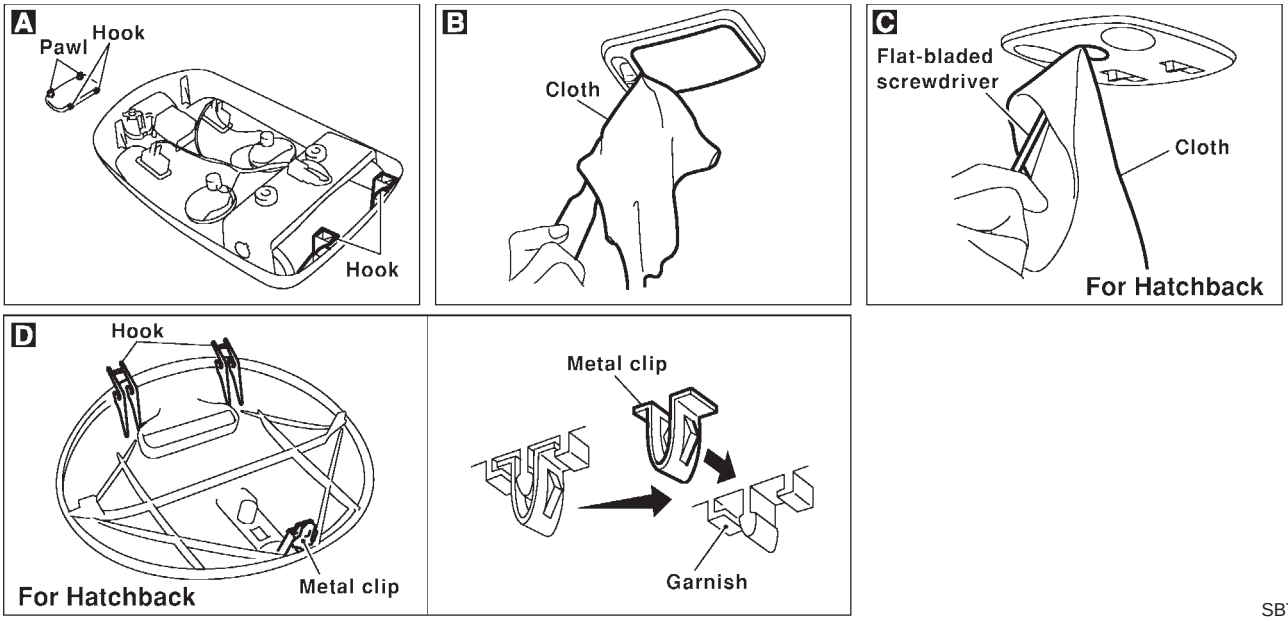

SBT055A

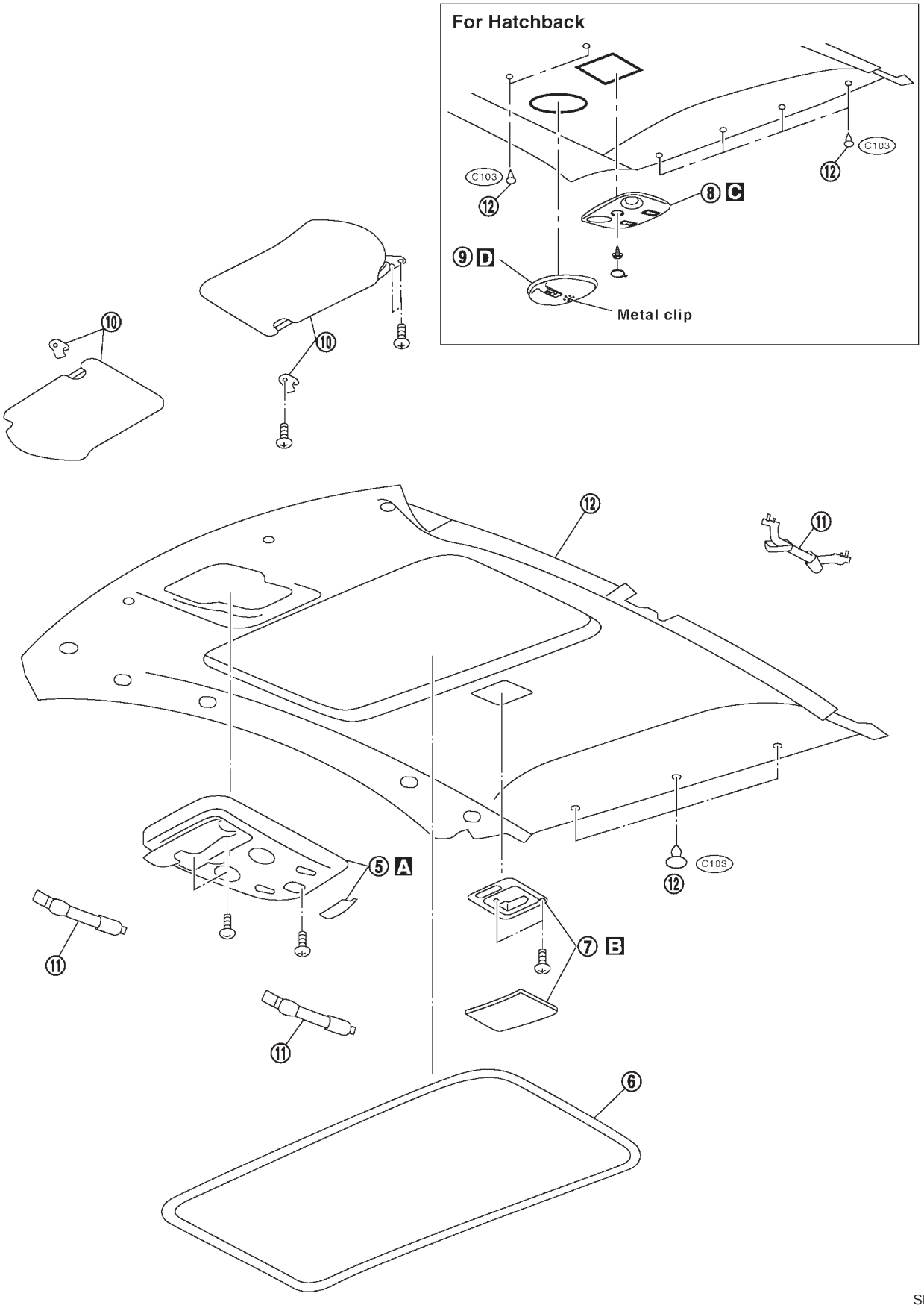
For Hatchback
C103
12
C103
12
8 C
9 D
Metal clip
10
10
12
11
5 A
C103
12
11
7 B
11
6

SBT056A

Removal and Installation

NJBT0016

SEDAN

NJBT0016S01

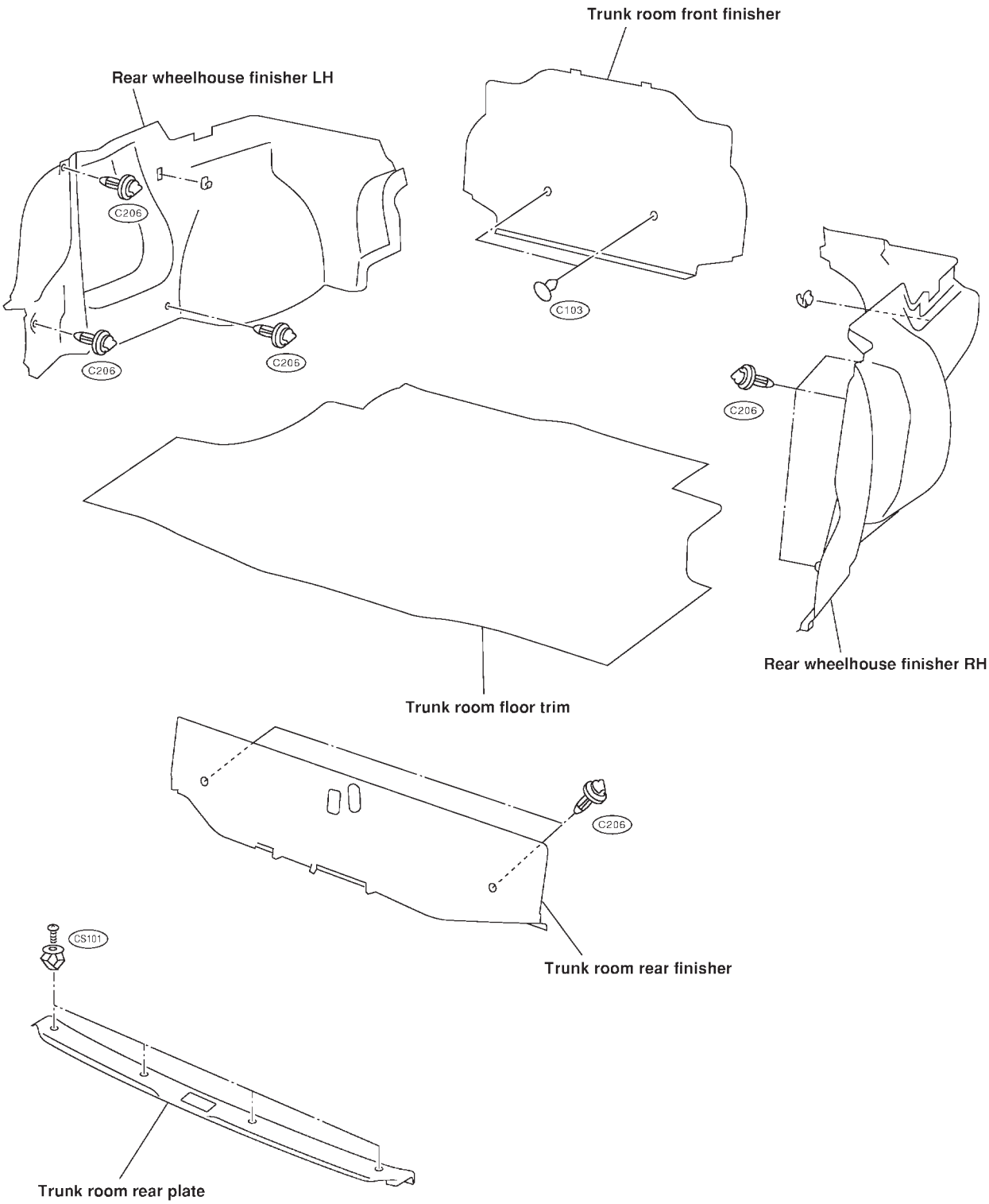

SBT994

Removal and Installation

NJBT0035

3-DOOR AND 5-DOOR HATCHBACK

NJBT0035S01

1. Remove back door upper finisher.
2. Remove high-mounted stop lamp.
3. Remove back door finisher. B
4. Remove back door side finisher.

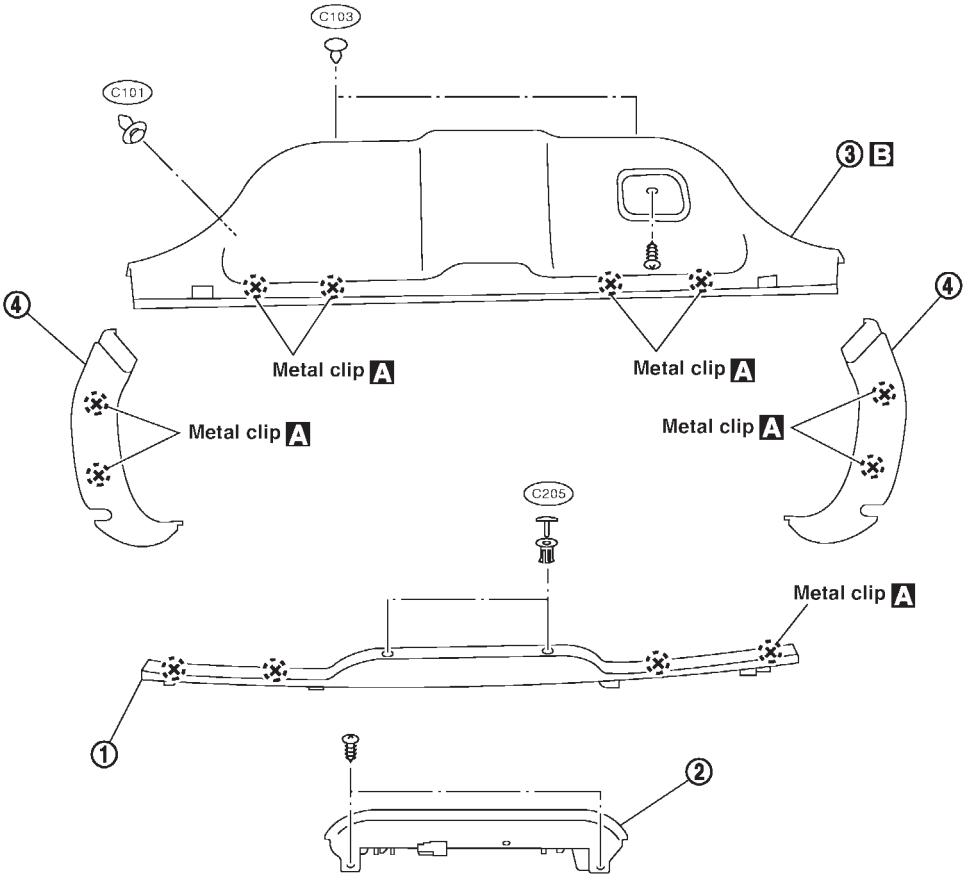

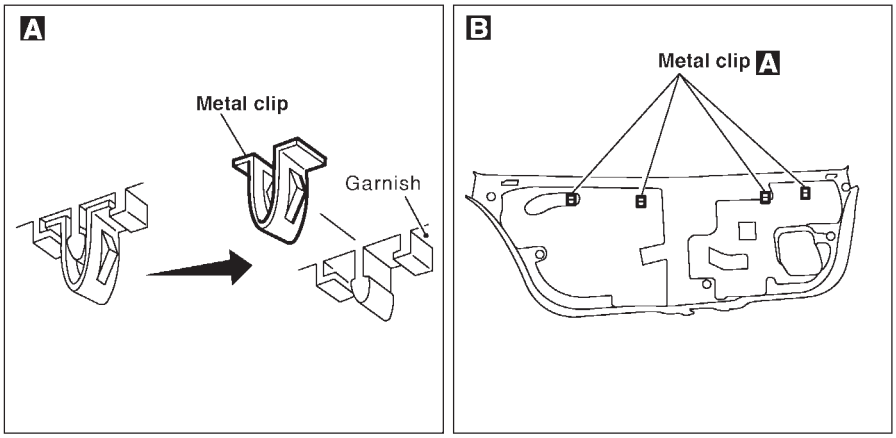

NBT072

Removal and Installation

NJBT0017

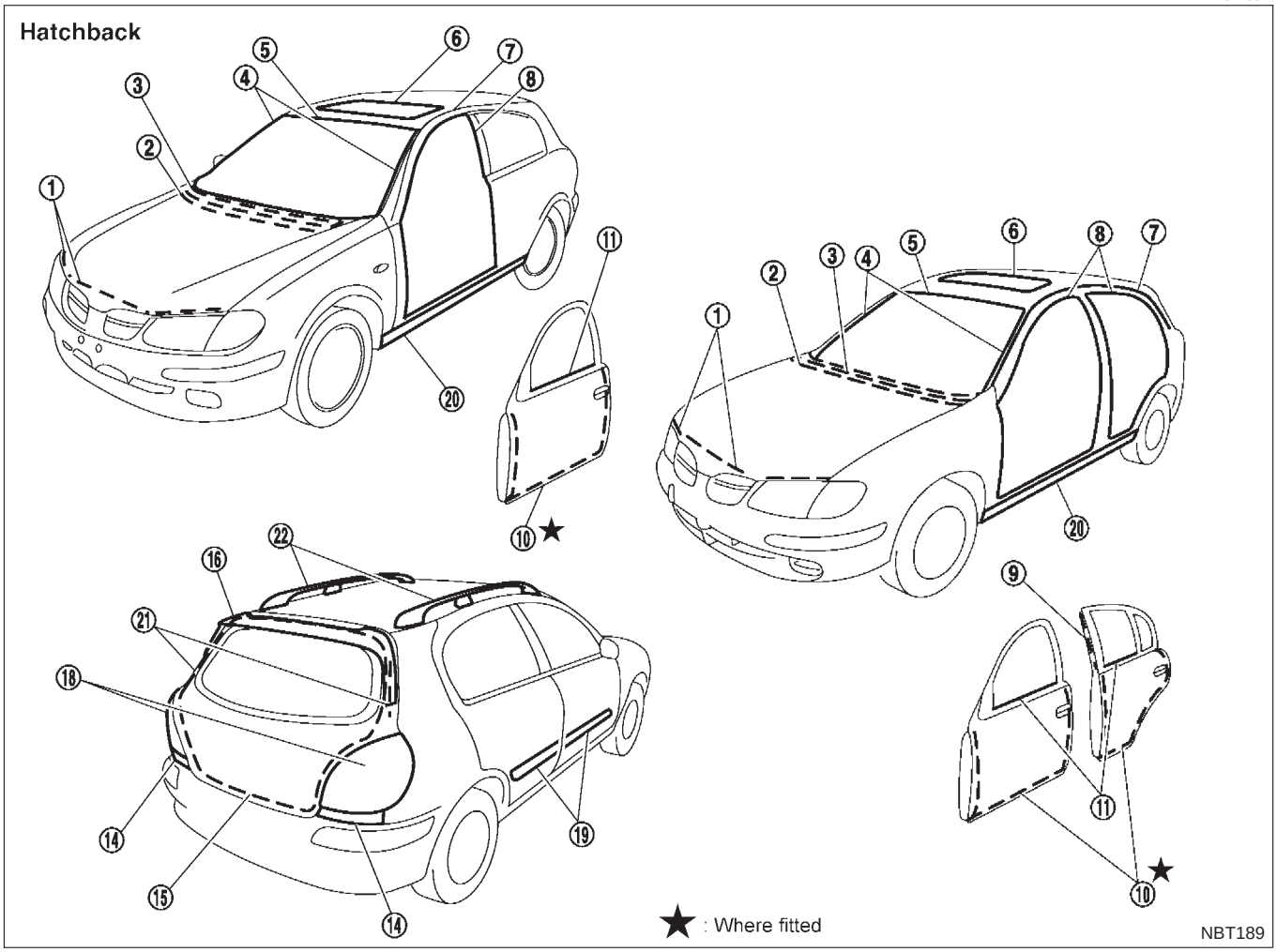

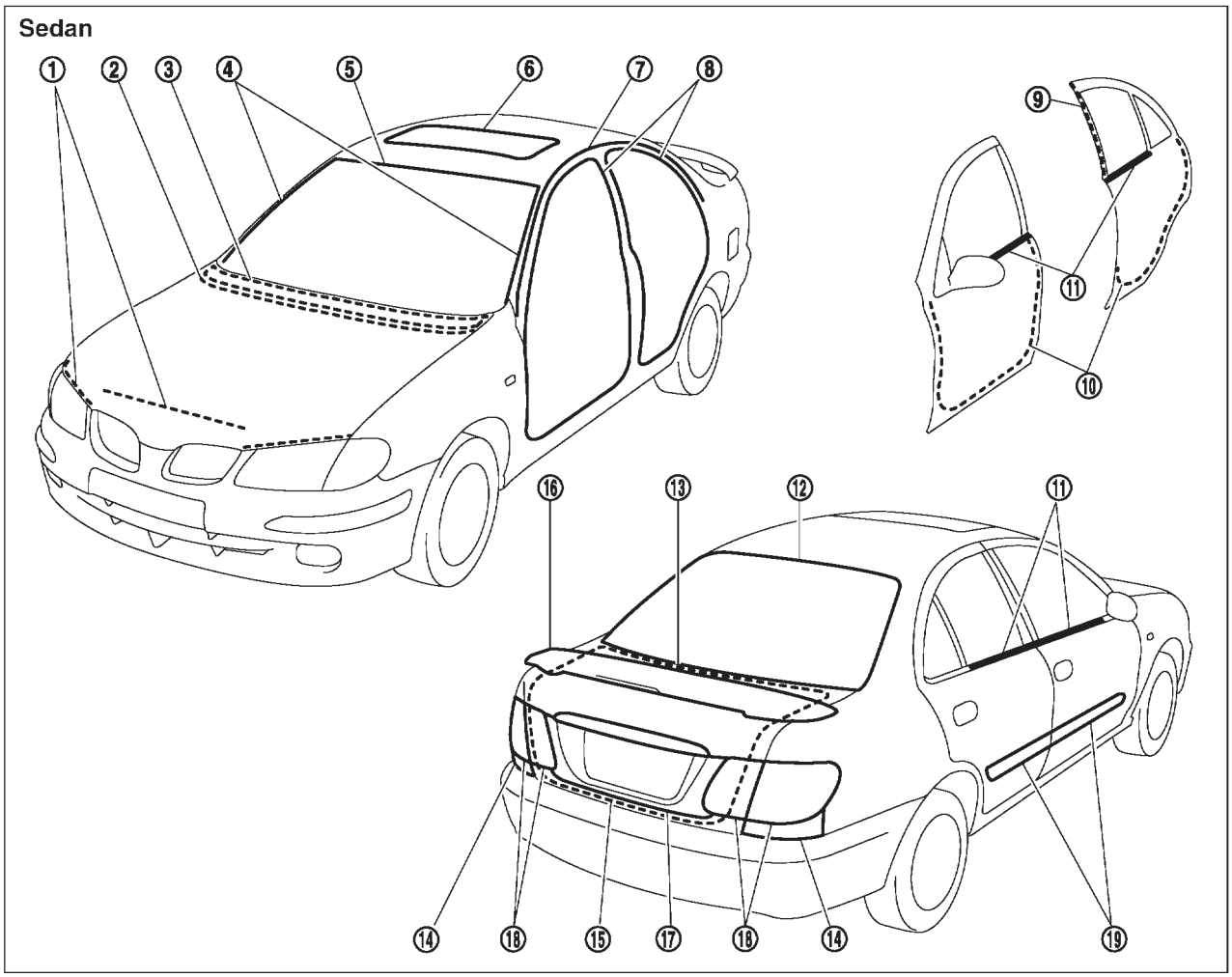

① Radiator core support sealing rubber

② ③ Cowl top seal and cowl top grille

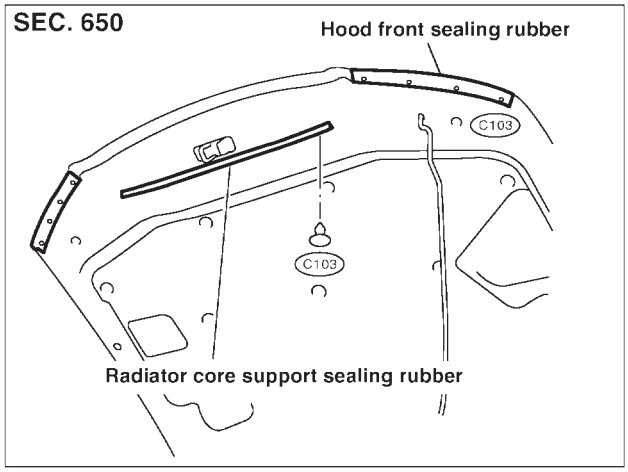

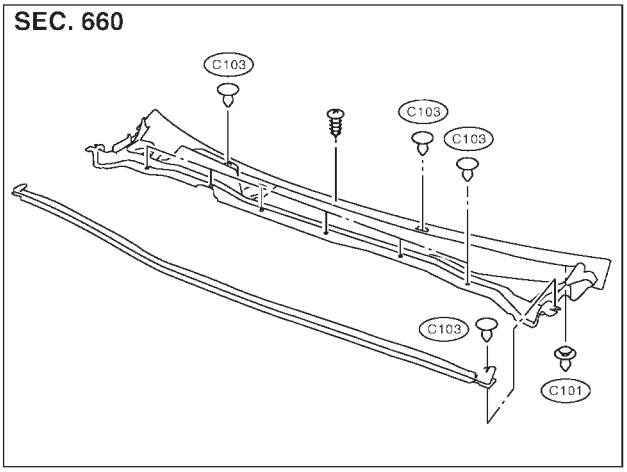

④ Windshield side molding

Mounted with screws.

SBT995-A

⑤ Windshield upper molding

SEC. 720

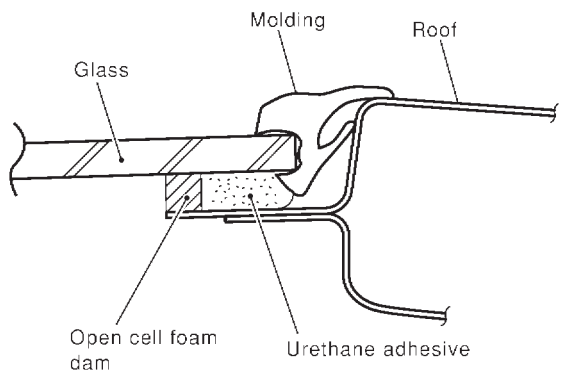

⑥ Sunroof lid weatherstrip

SEC. 736

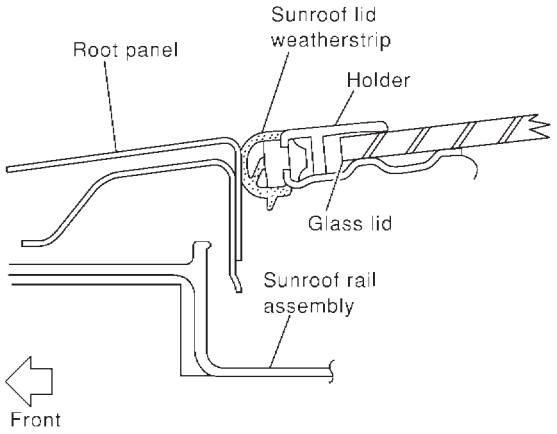

⑦ Drip weatherstrip

SEC. 767

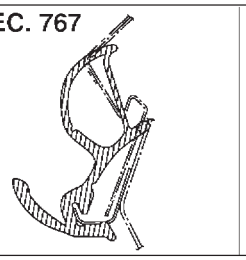

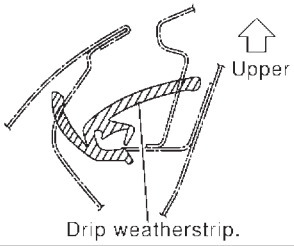

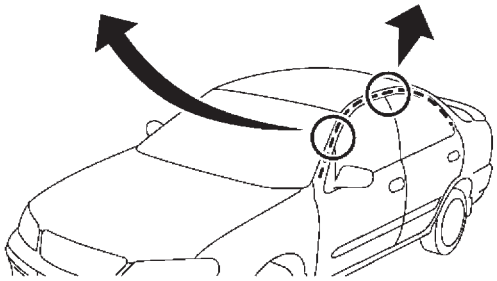

⑧ Body side welt

SEC. 767

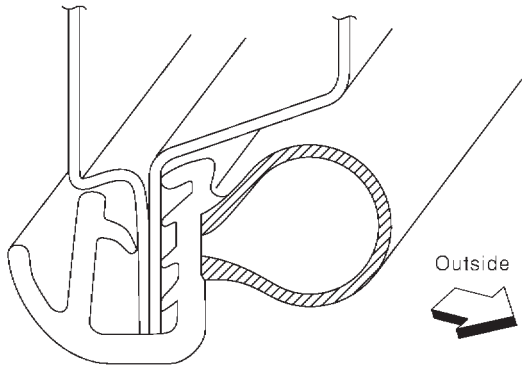

⑨ Front door parting seal

SEC. 800

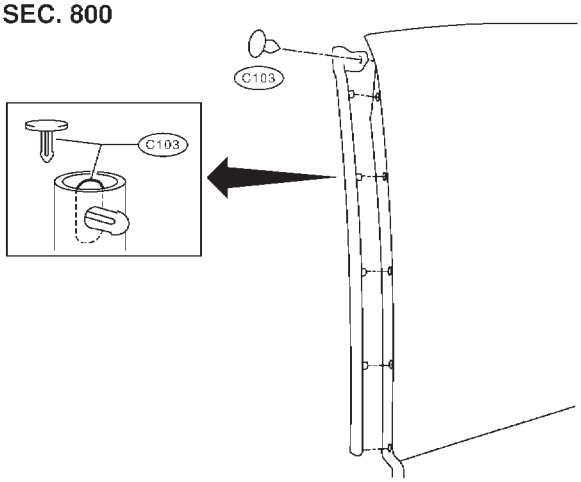

⑩ Door weatherstrip (where fitted)

SEC. 800•820

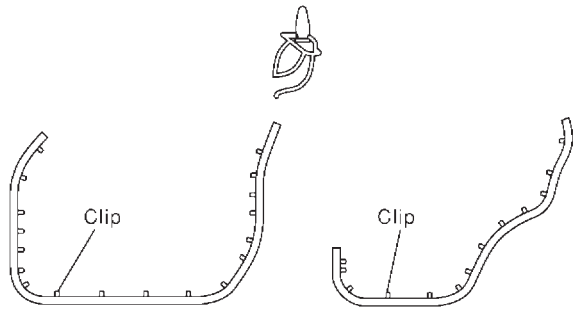

NBT190

⑪ Door outside moiding

Front door
SEC. 800

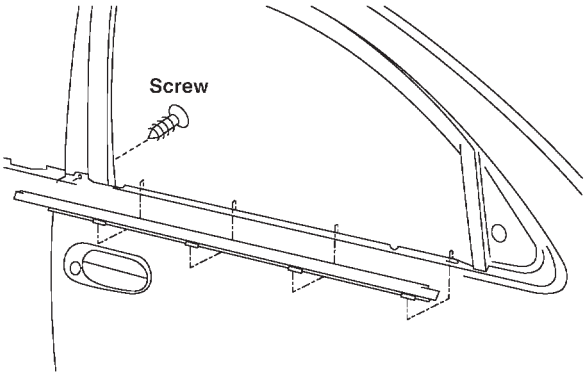

Rear door
SEC. 820

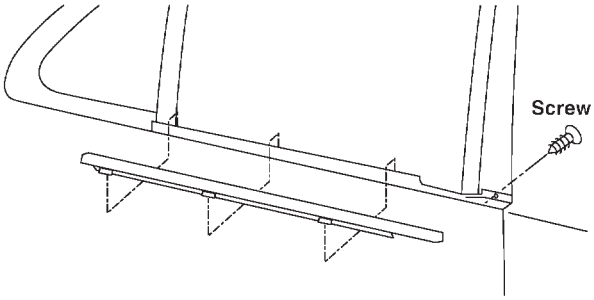

⑫ Rear window upper molding and side molding

SEC. 797

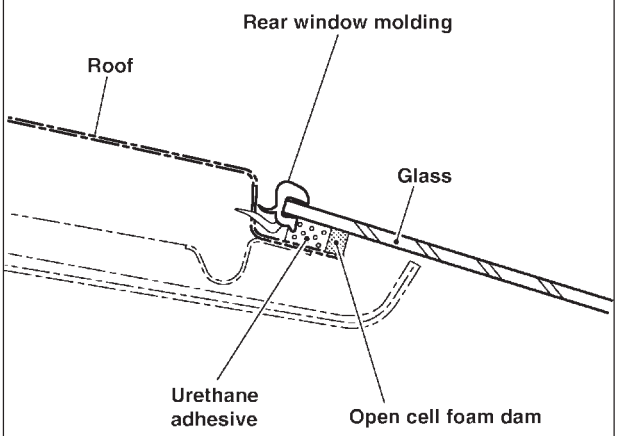

⑬ Rear window lower molding

SEC. 797

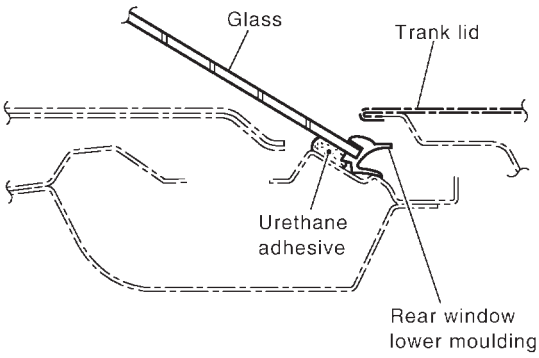

⑭ Rear fender cover

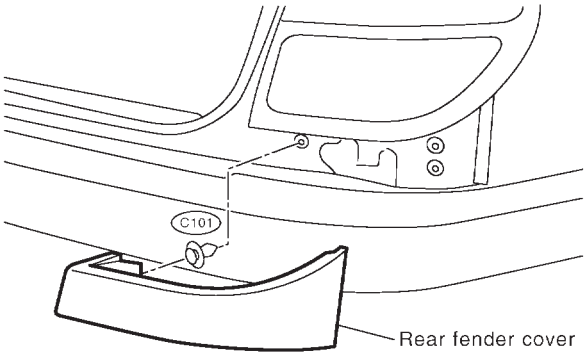

⑮ Trunk lid weatherstrip

SEC. 843

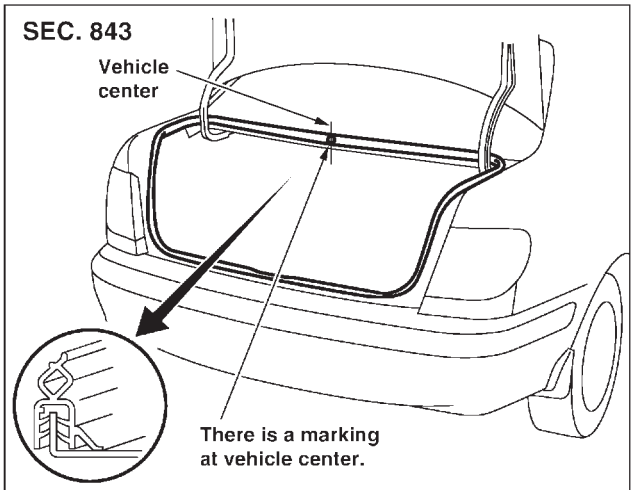

SBT997

⑮ Back door weatherstrip

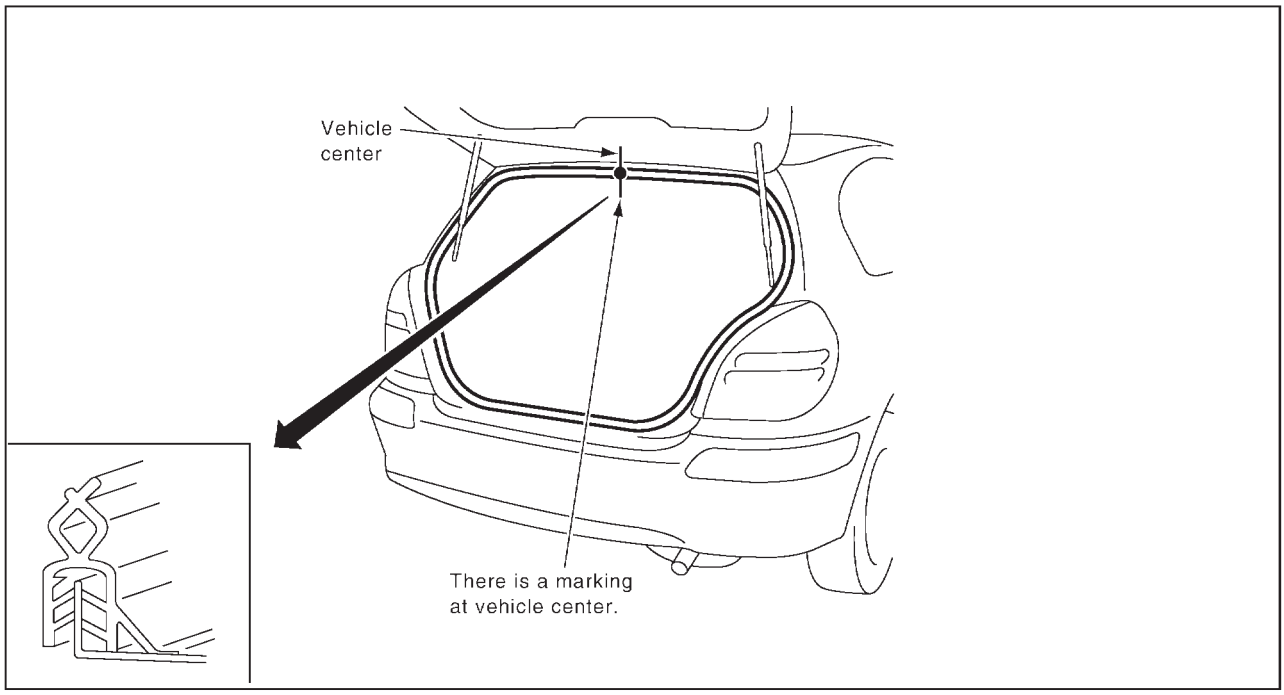

⑯ Rear air spoiler

- When removing, first disconnect high-mounted stop lamp connector located on the back of trunk lid, then remove air spoiler taking care the stop lamp harness does not get caught.
- When installing, make sure that there are not gaps or waves at ends of air spoiler.
- Before installing spoiler, clean and remove oil from suface where spoiler will be mounted.

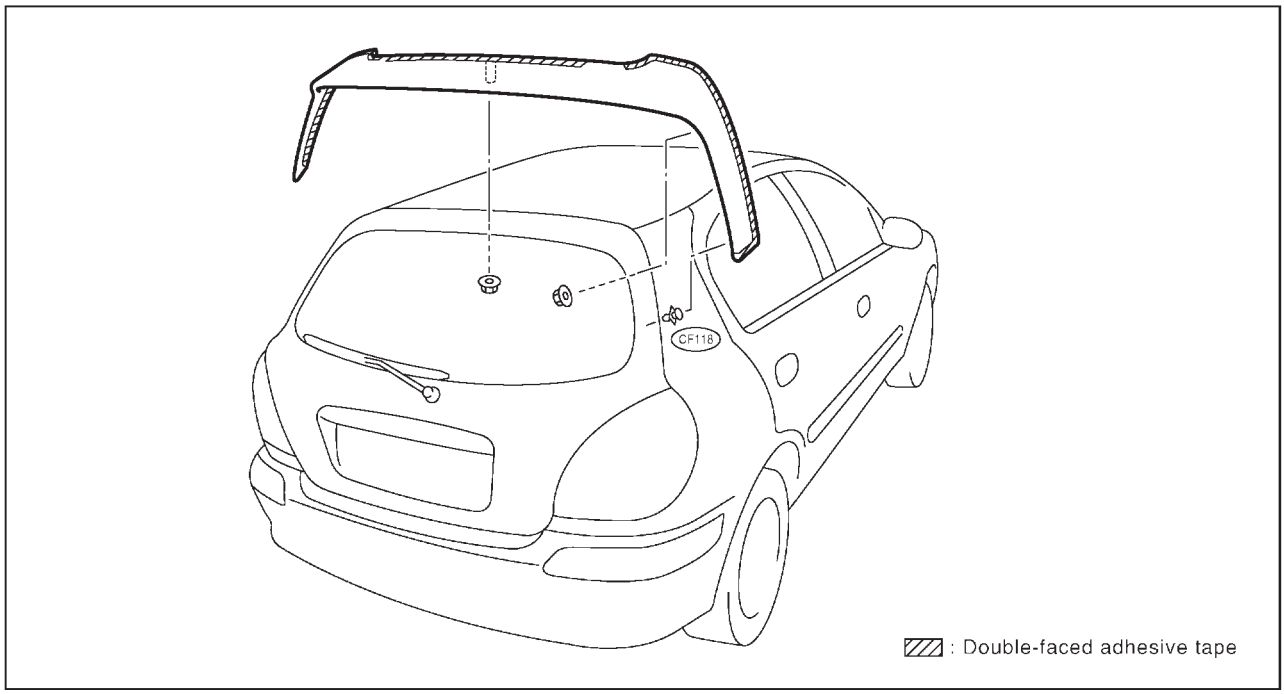

SBT057A

⑯ Rear air spoiler

- When removing, first disconnect high-mounted stop lamp connector located on the back of trunk lid, then remove air spoiler taking care the stop lamp harness does not get caught.
- When installing, make sure that threr are not gaps or waves at ends of air spoiler.
- Before installing spoiler, clean and remove oil from suface where spoiler will be mounted.

SEC. 960

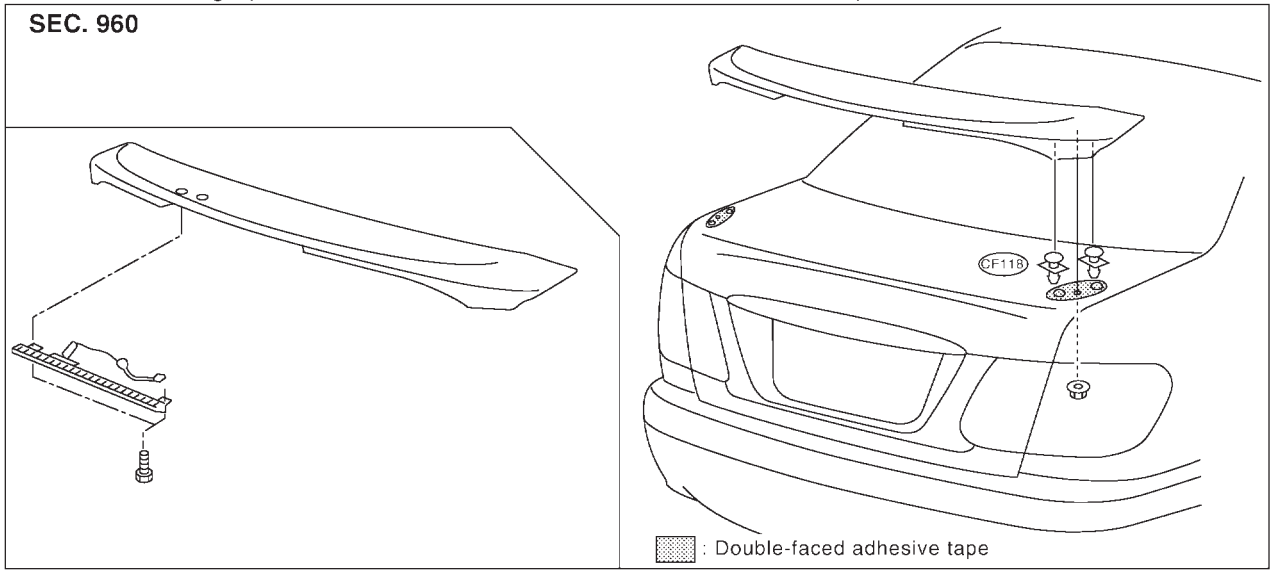

⑰ Licence plate finisher

SEC. 900

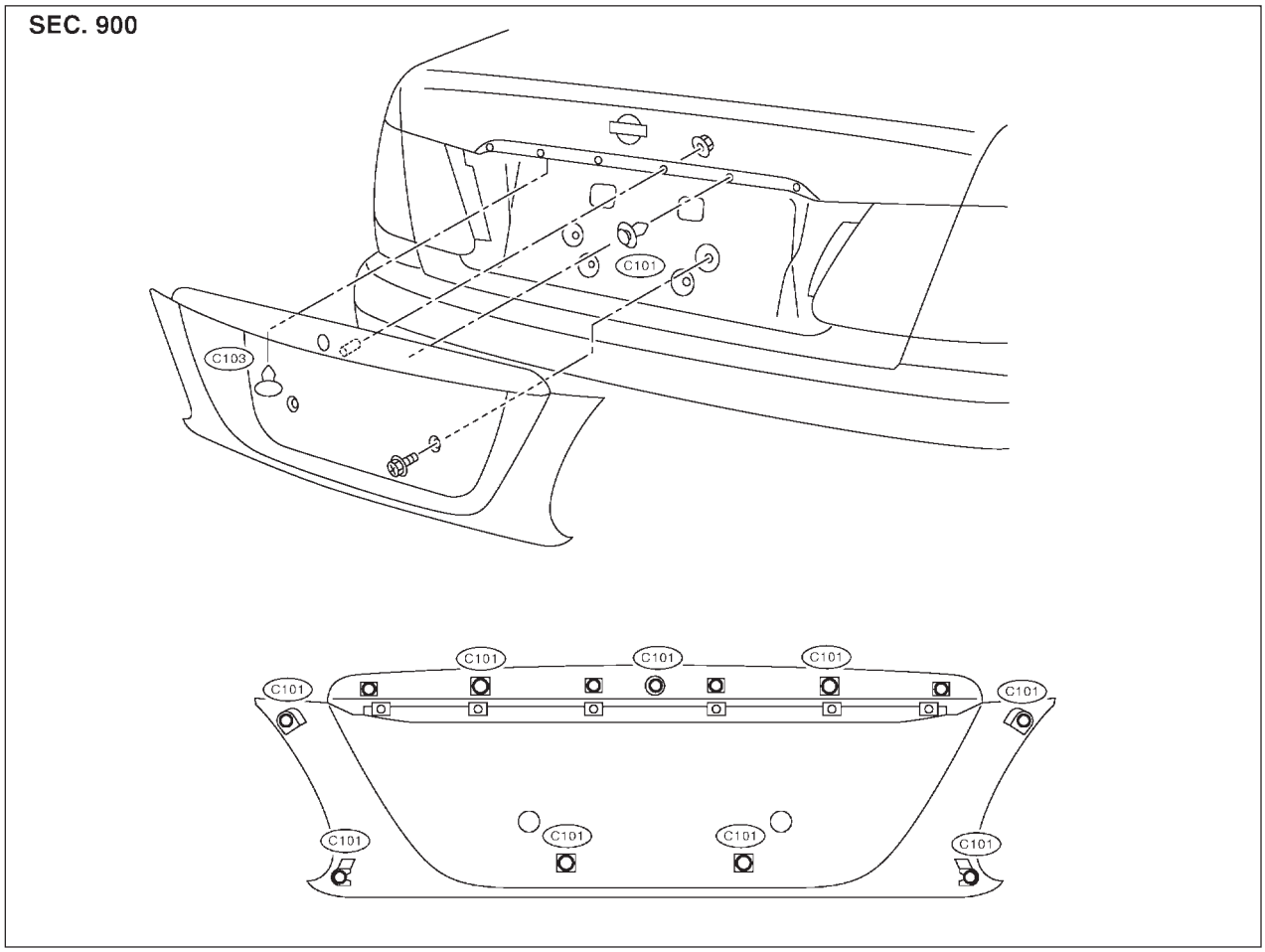

SBT998

⑱ Rear combination lamp

- Rear combination lamps are installed with nuts and butyl seal.

SEC. 265

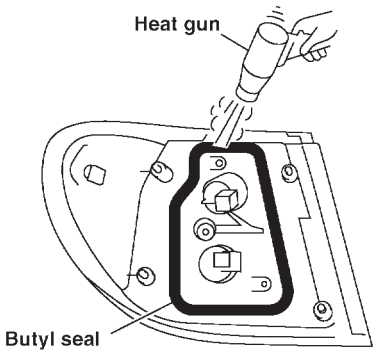

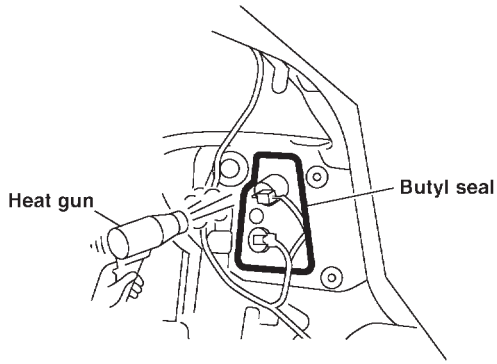

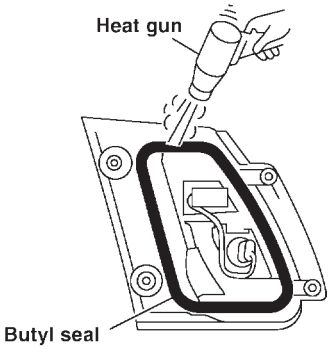

- Warm up lamp assembly area to a temperature of a little below 60°C (140°F).

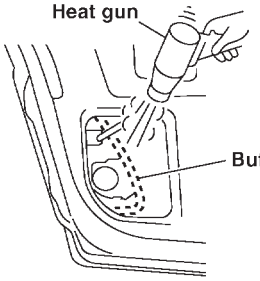

- Apply butyl seal evenly as it tends to become thin in the corners.
- Warm up lamp assembly area to a temperature of a little below 60°C (140°F).

⑲ Side guard molding

SEC. 766

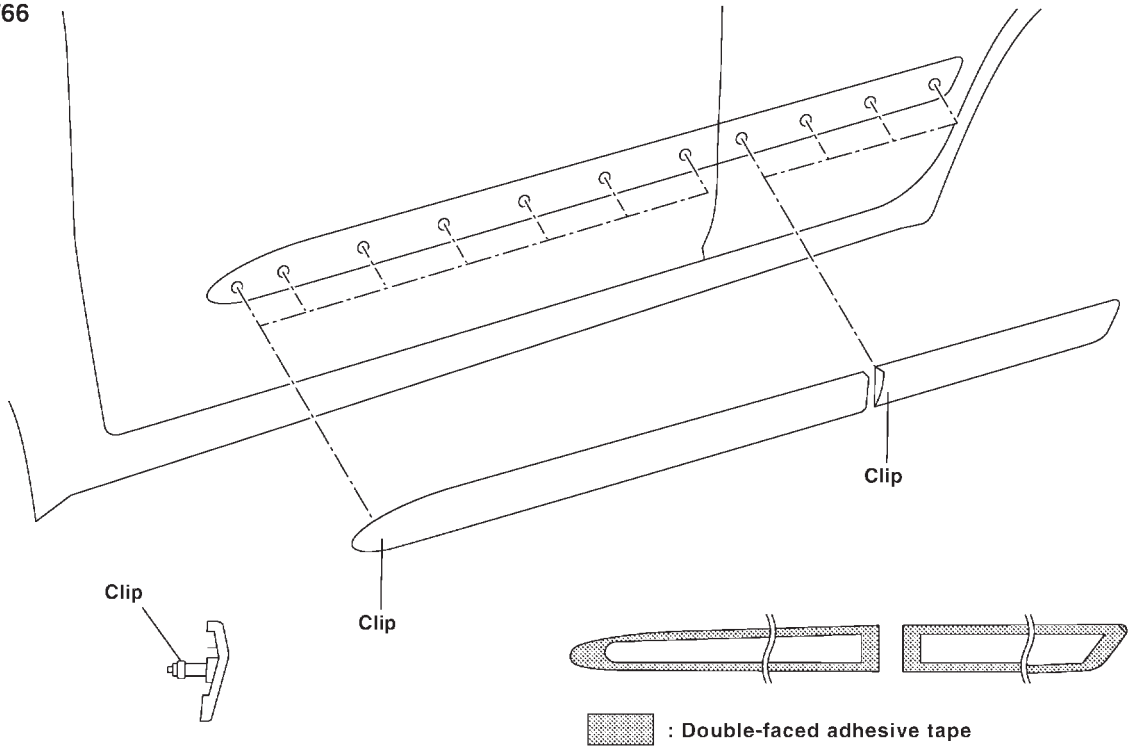

SBT999

⑳ Center mud guard

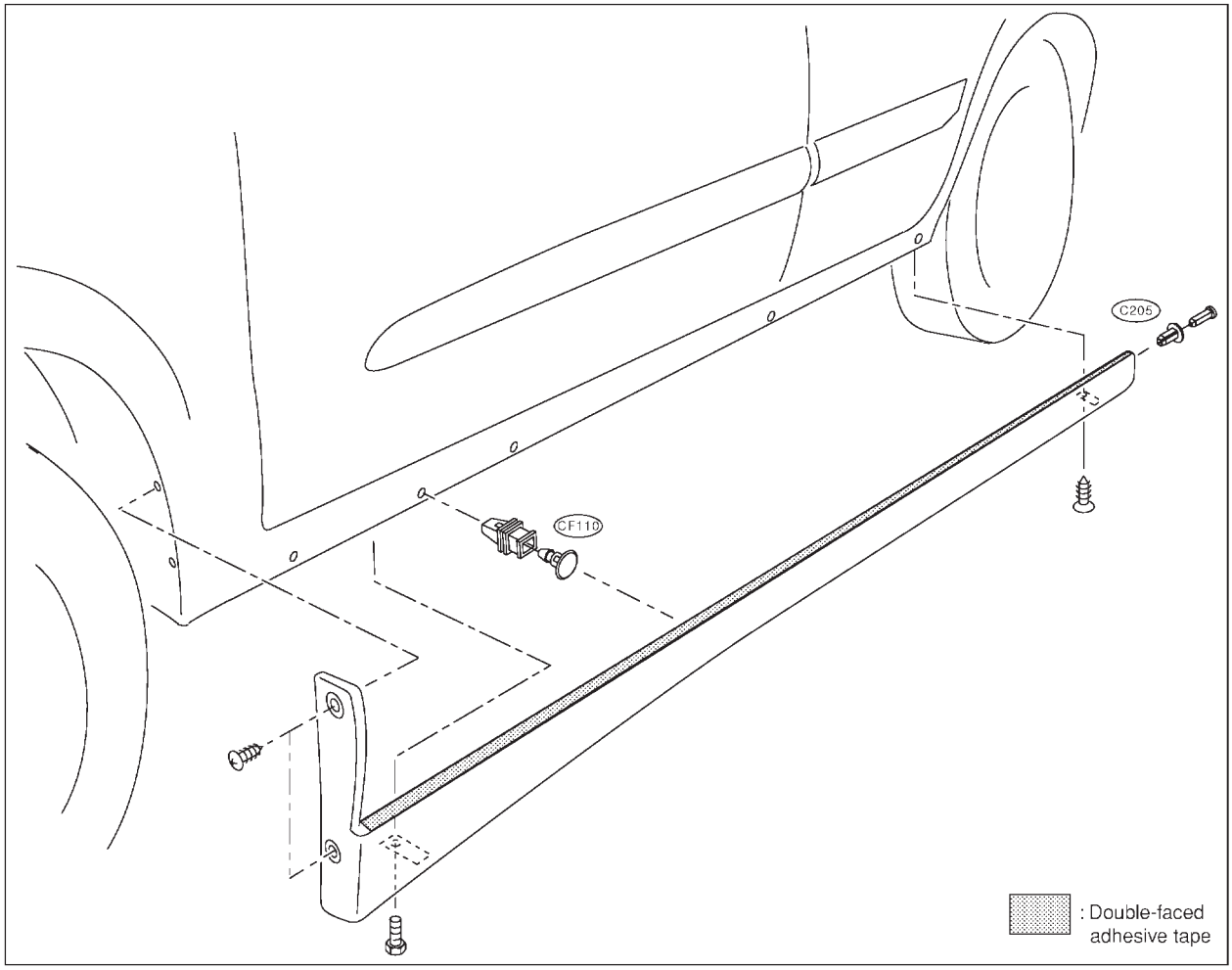

SBT059A

㉑ Back door side sealing rubber

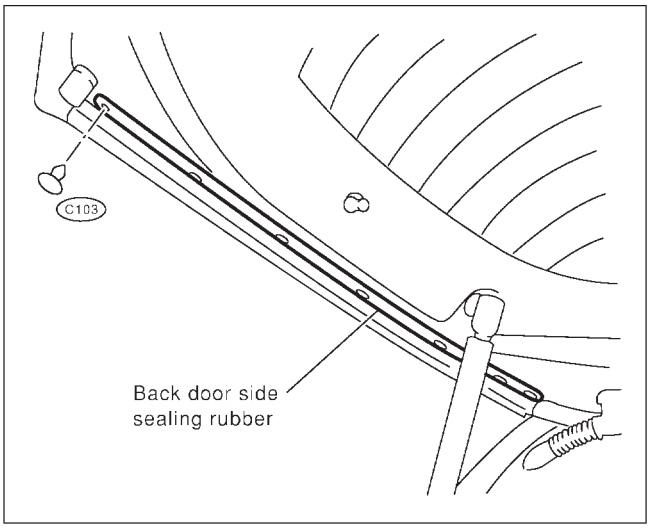

㉒ Roof rail

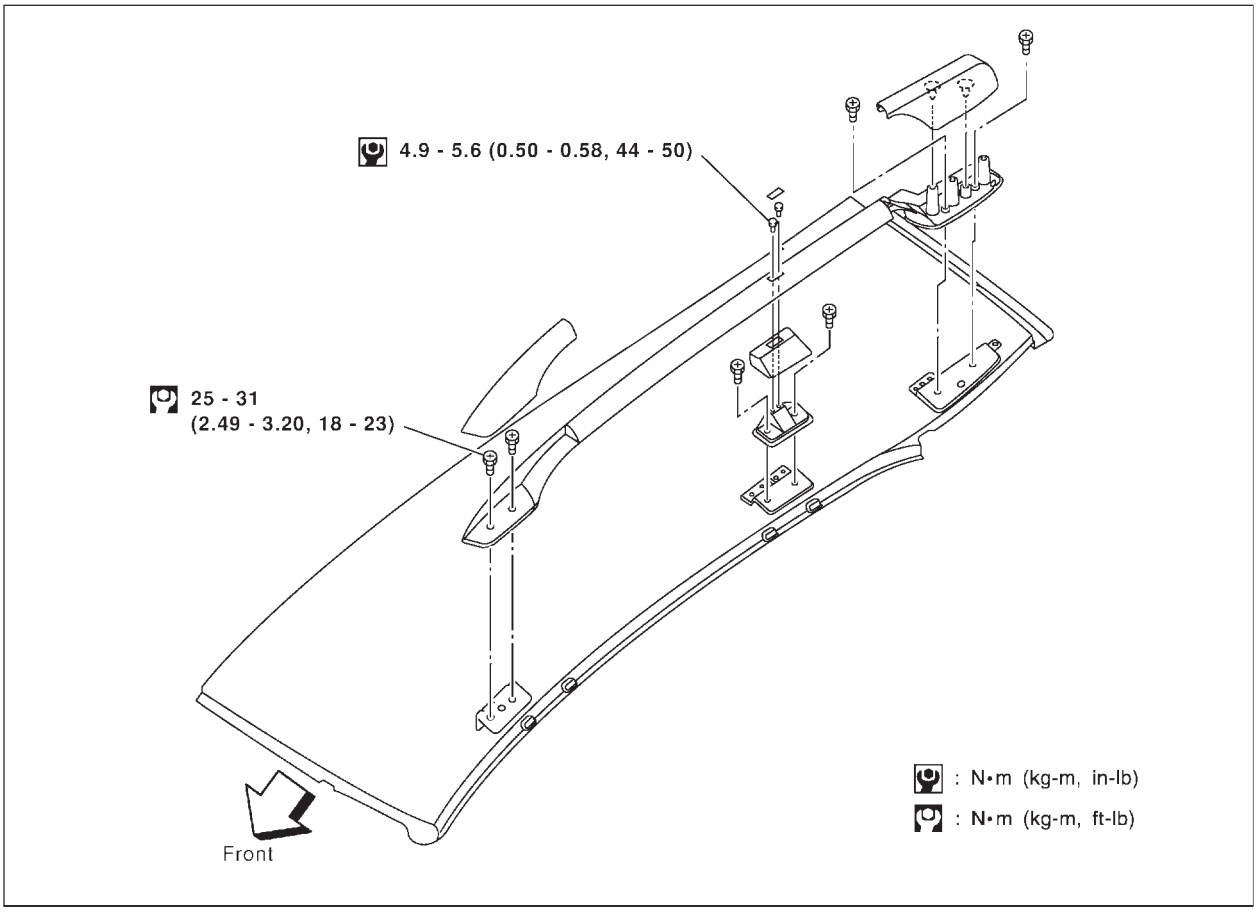

SBT060A

Removal and Installation

NJBT0018

- When removing or installing the seat trim, carefully handle it to keep dirt out and avoid damage.

★ **For Wiring Diagram, refer to EL-288, “Wiring Diagram — HEATED SEAT —”.**

CAUTION:

- **Before removing the front seat, turn the ignition switch off, disconnect both battery cables and wait at least 3 minutes.**
- **Do not drop, tilt, or bump the side air bag module installed in the seat. Always handle it with care.**
- **Disconnect the side air bag harness connector and heated seat harness connector from under the seat before removing the seat.**
- **Disconnect the side air bag harness connector before removing the seat back. Refer to RS-36, “Front Side Air Bag Module” for details.**

MANUAL SEAT (SEDAN)

NJBT0018S06

SEC. 868•870

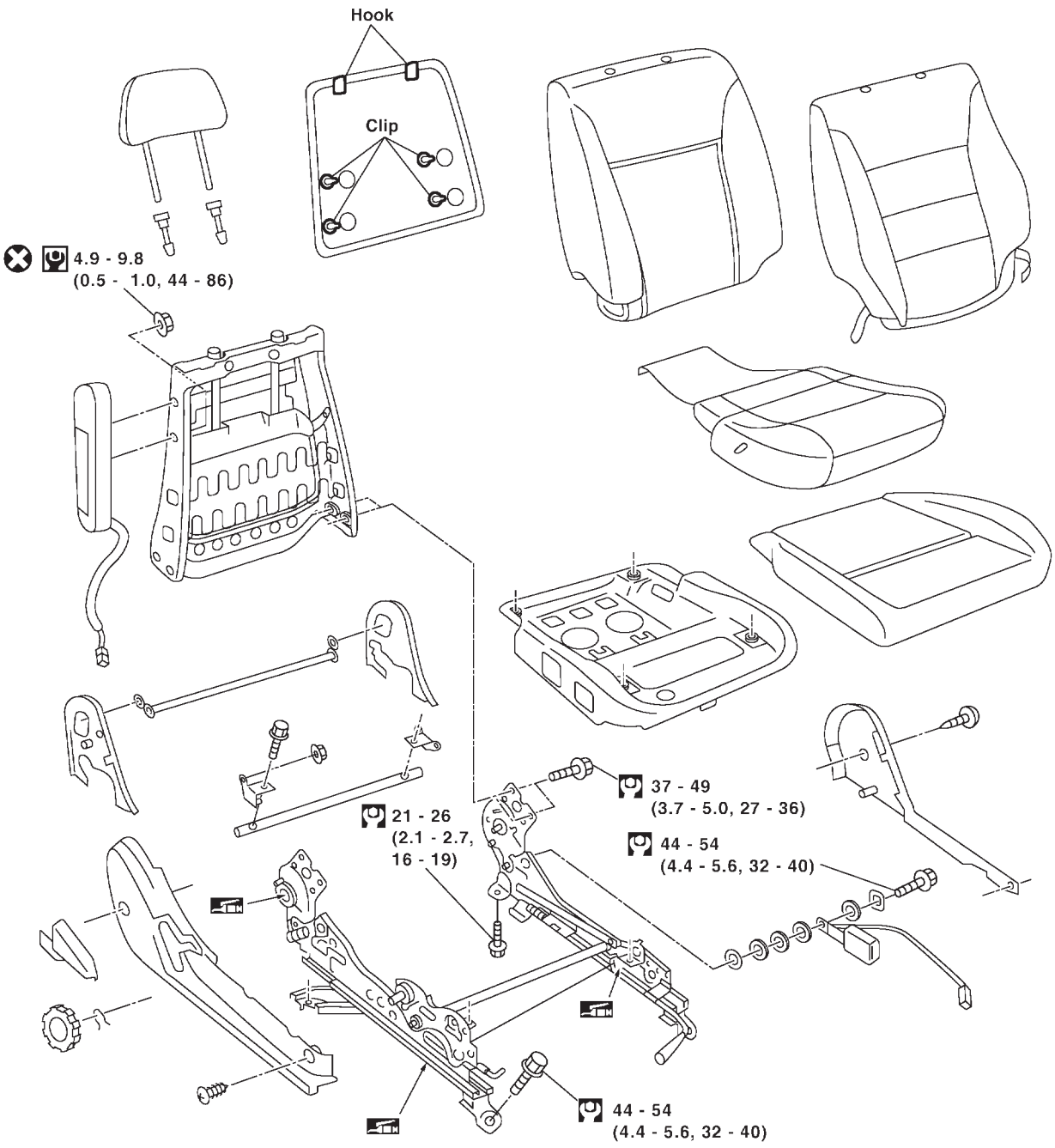

: N•m (kg-m, in-lb)

: N•m (kg-m, ft-lb)

SBT002AA

MANUAL SEAT (HATCHBACK)

NJBT0018S07

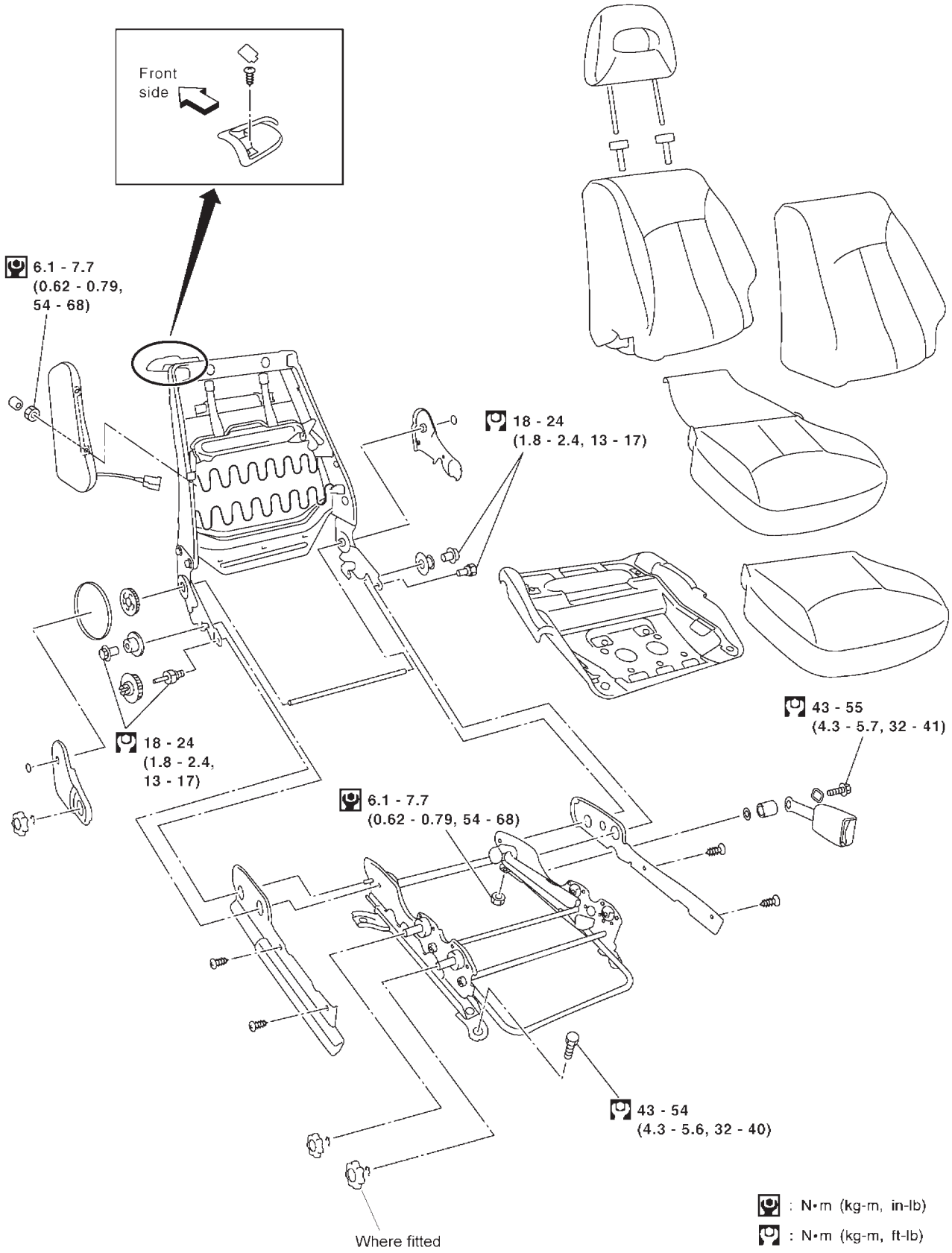

NBT191

Heated Seat

NJBT0036

★ For Wiring Diagram, refer to EL-288, “HEATED SEAT” for details.

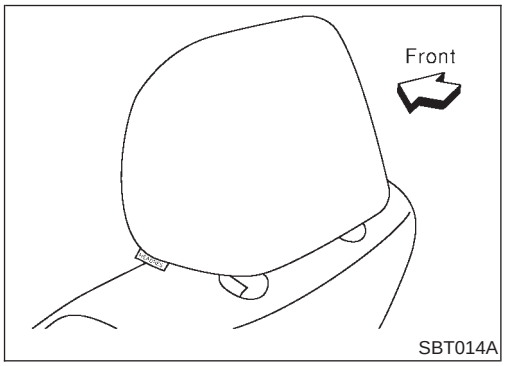

Active Head Restraint

NJBT0032

The active head restraint system is designed so that the headrest instantaneously moves towards the front upper direction by utilizing the force at the seatback during a rear-end collision.
As a result, the occupant’s head is protected from being overextended, reducing the chance for neck injury as much as possible.
Seat with active head restraint have the labels shown in figures at left.

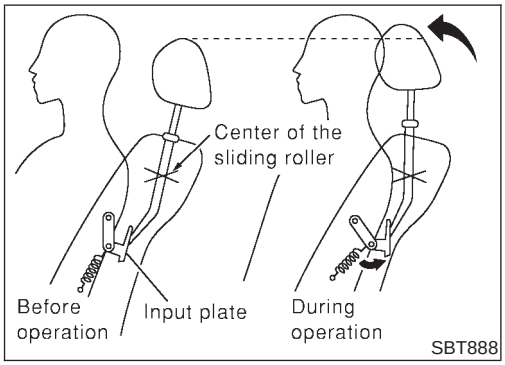

OPERATION OUTLINE

NJBT0032S01

When the seatback receives a sharp backward force during a rear-end collision, the input plate moves with the link rotating center as a pivot. The headrest will then move towards the front upper direction with the center of the sliding roller as a pivot.
As the backward force on the seat back is eliminated, spring tension returns the headrest to its original position.

Removal and Installation

NJBT0019

SEDAN

NJBT0019S01

SEC. 880

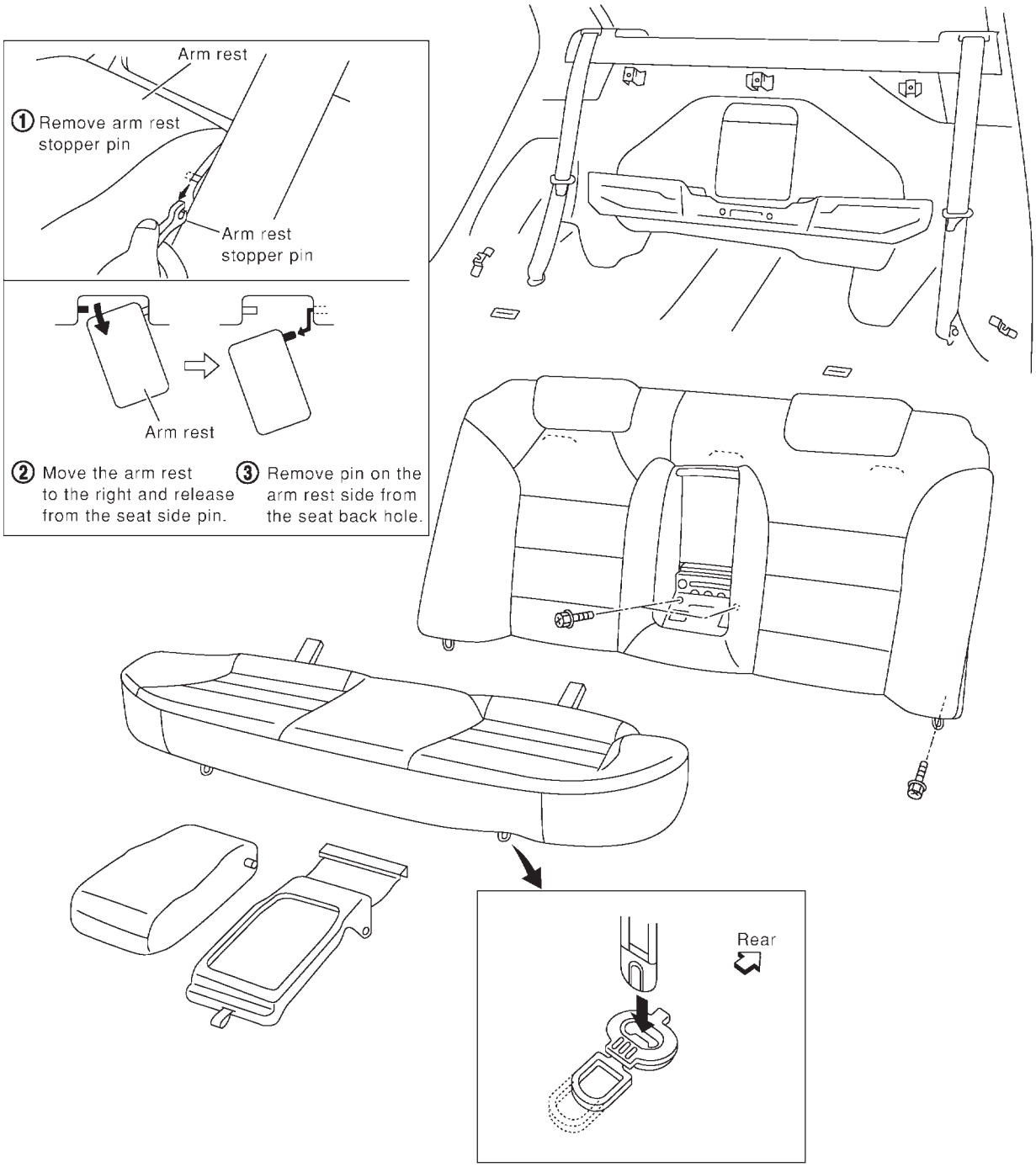

SBT003A

SEDAN (FOR EUROPE)

NJBT0019S02

SEC. 880
For Europe models

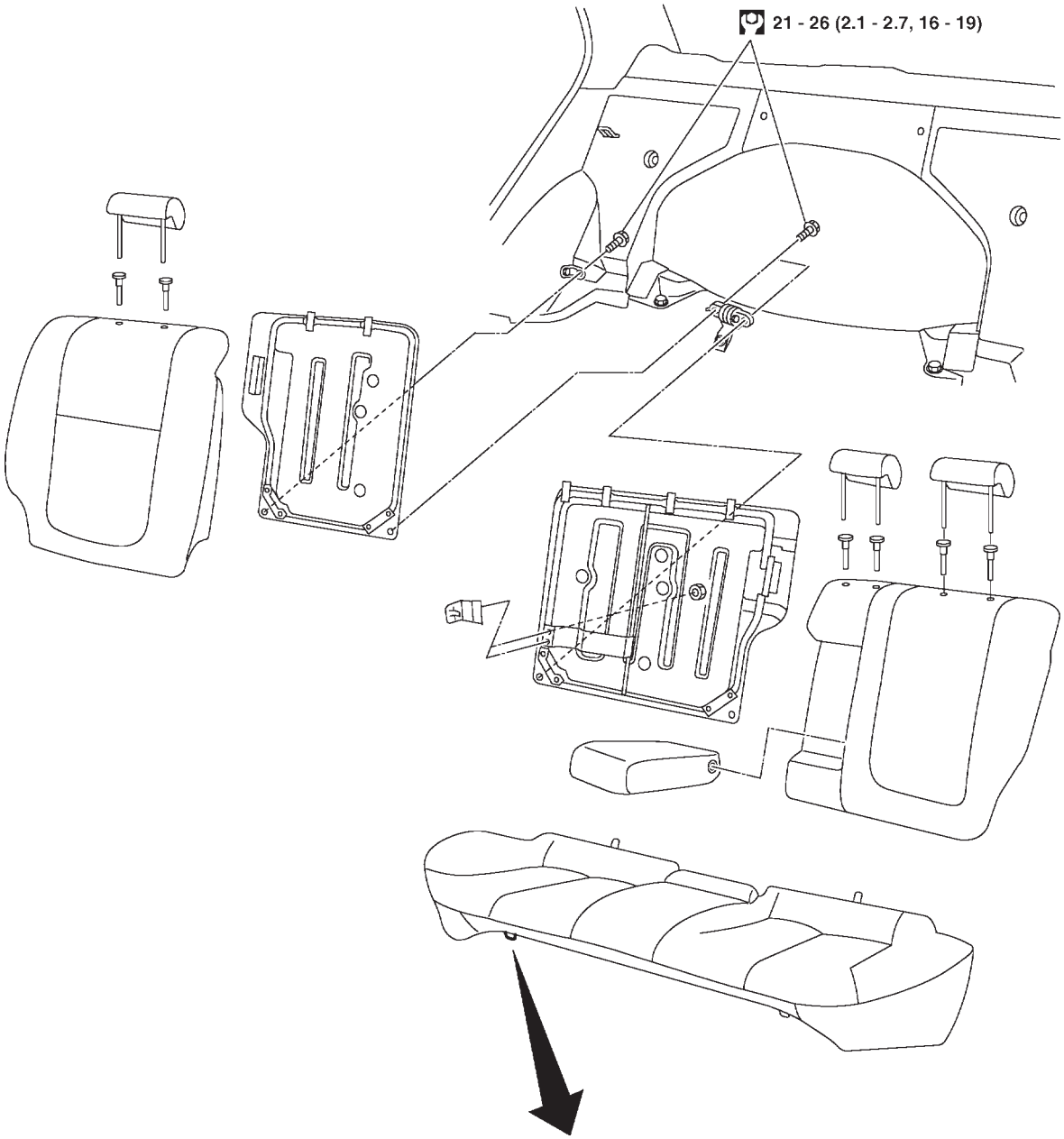

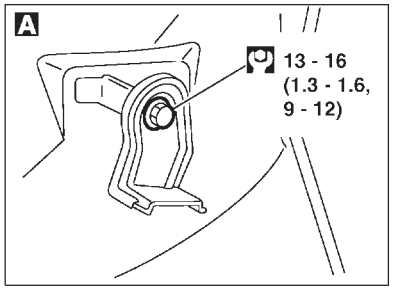

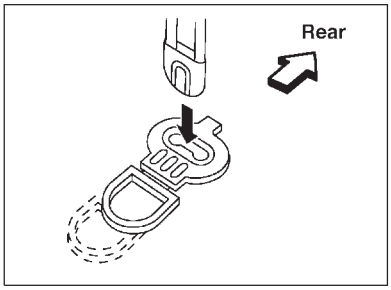

: N•m (kg-m, ft-lb)

SBT018A

HATCHBACK

NJBT0019S03

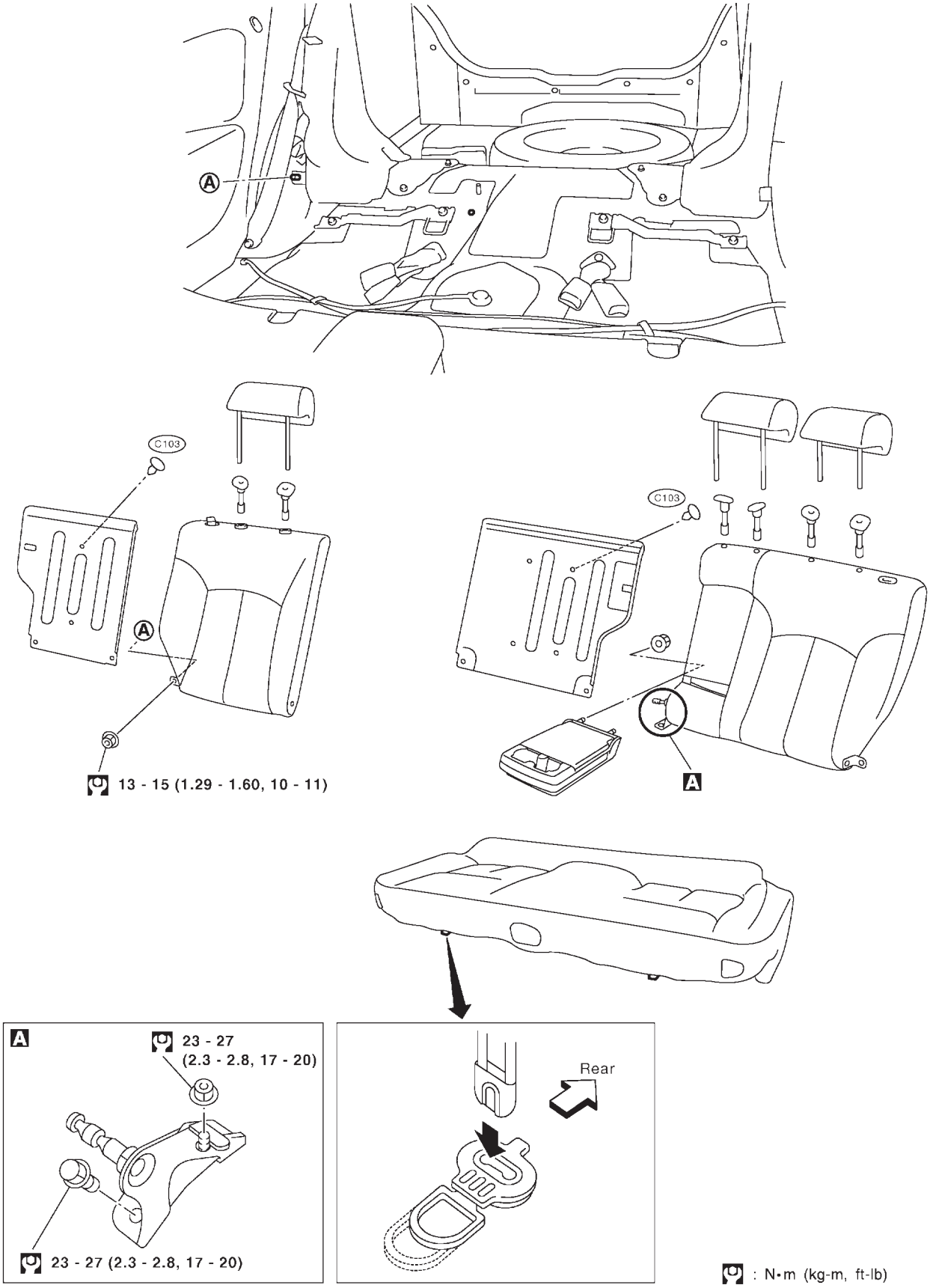

SBT062A

Adjustment

NJBT0020

Install motor & limit SW assembly and sunroof rail assembly in the following sequence:

1. Arrange equal lengths of link and wire assemblies on both sides of sunroof opening.
2. Connect sunroof connector to sunroof switch and positive (+) power supply.
3. Set lid assembly to fully closed position **A** by operating OPEN switch and TILT switch.
4. Fit outer side of lid assembly to the surface of roof on body outer panel.
5. Remove motor, and keep OPEN switch pressed until motor pinion gear reaches the end of its rotating range.
6. Install motor.
7. Check that motor drive gear fits properly in wires.
8. Press TILT-UP switch to check lid assembly for normal tilting.
9. Check sunroof lid assembly for normal operations (tilt-up, tilt-down, open, and close).

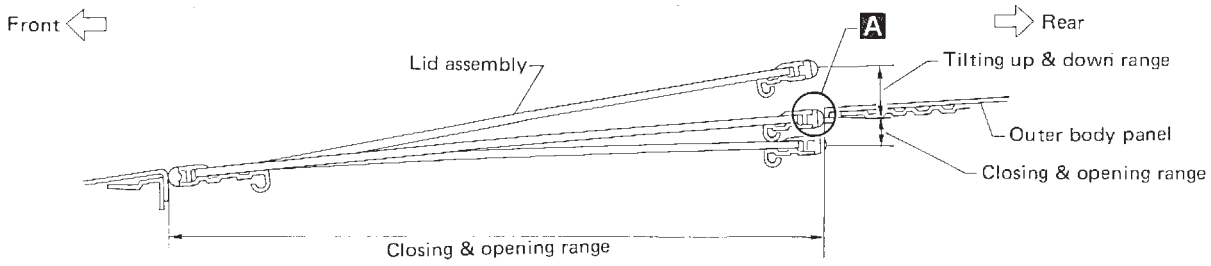

SBF920F

Removal

NJBT0021

- After any adjustment, check sunroof operation and lid alignment.
- Handle finisher plate and glass lid with care so not to cause damage.
- It is desirable for easy installation to mark each point before removal.

CAUTION:
Always work with a helper.

Removal (Cont'd)

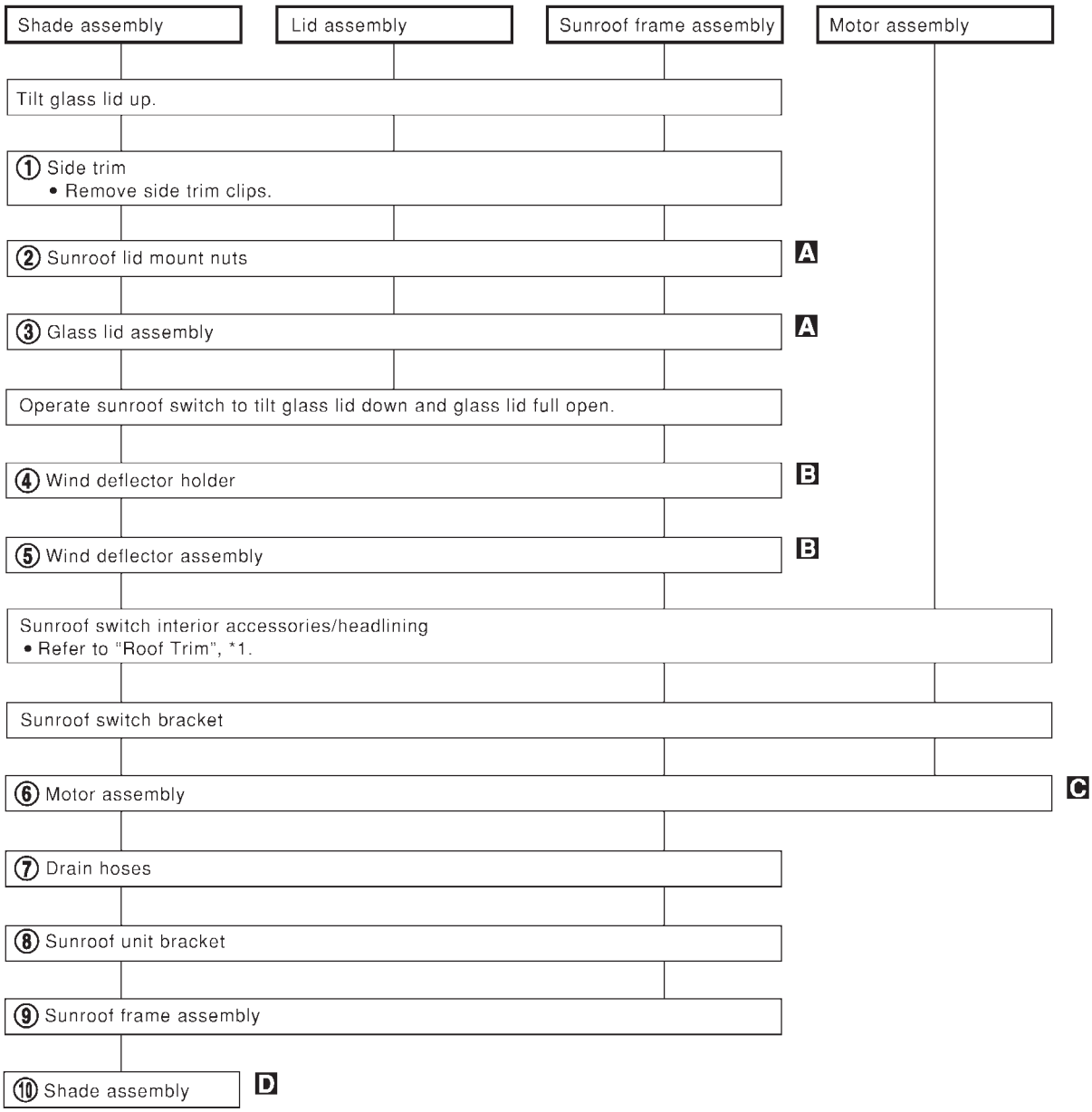

★ For Wiring Diagram, refer to (*2), "POWER SUNROOF" for details.

SBT838

*1 BT-43

*2 EL-292

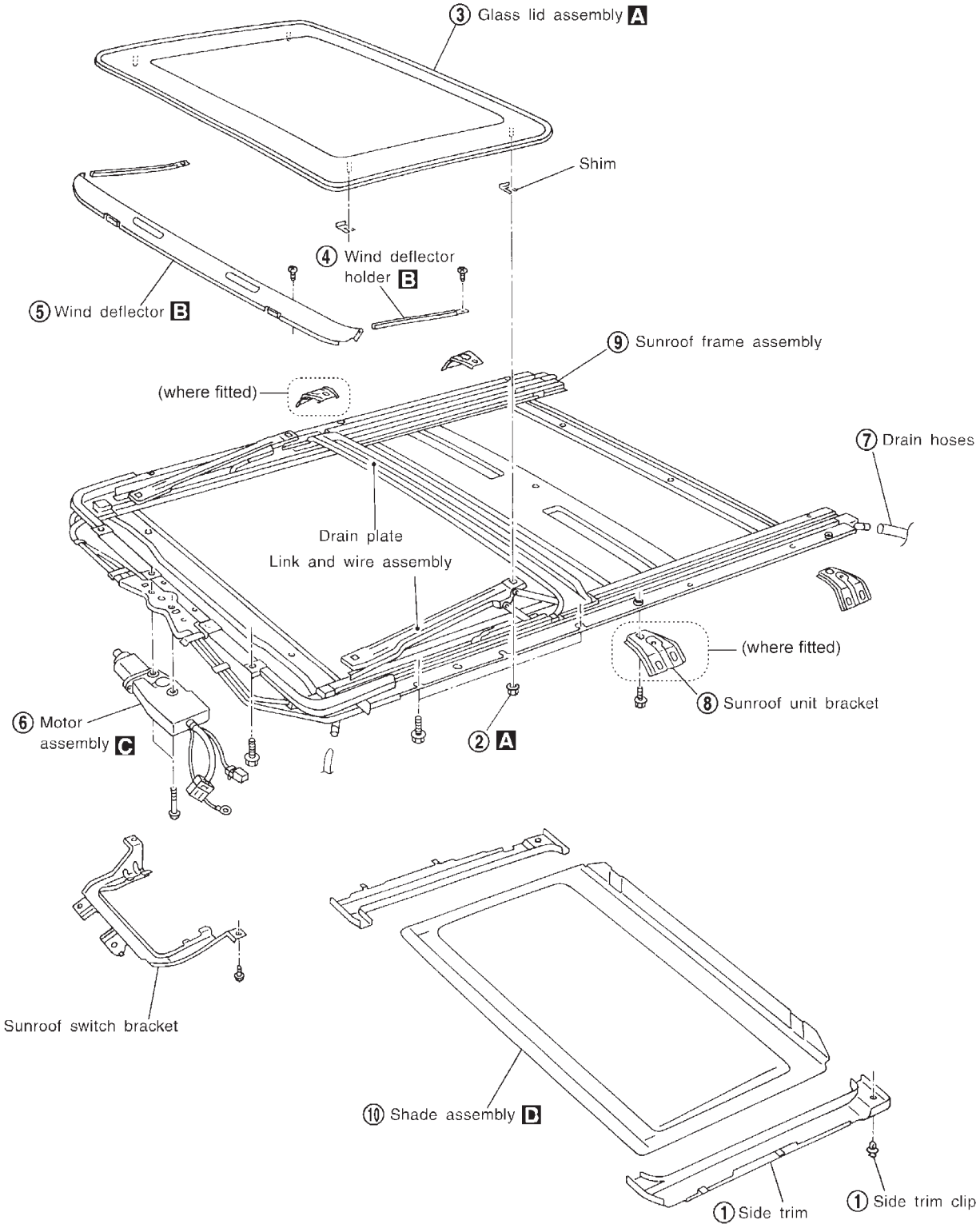
③ Glass lid assembly A
Shim
④ Wind deflector holder B
⑤ Wind deflector B
⑨ Sunroof frame assembly
(where fitted)
⑦ Drain hoses
Drain plate
Link and wire assembly
(where fitted)
⑧ Sunroof unit bracket
⑥ Motor assembly C
② A
Sunroof switch bracket
⑩ Shade assembly D
① Side trim
① Side trim clip

NBT193

Removal (Cont'd)

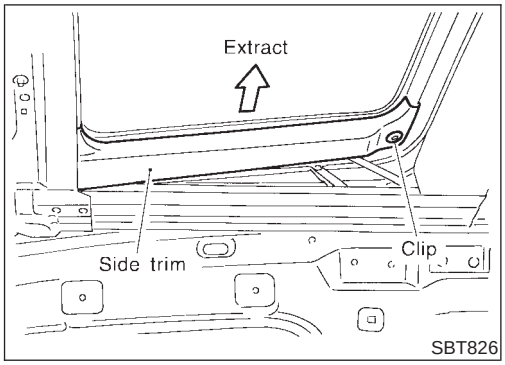

A Record the number of shims placed between glass lid assembly and link and wire assembly. Remove securing nuts and glass lid assembly.

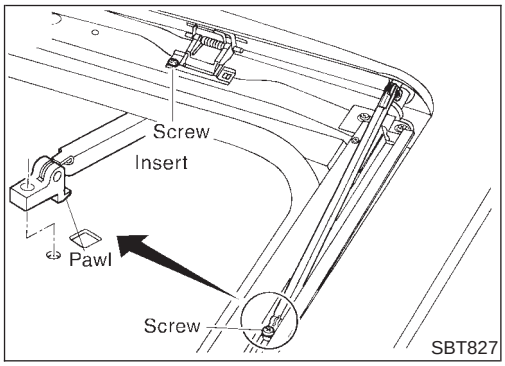

B Remove screws from left and right sides of each wind deflector holder. Extract pawls through rail holes, then remove left and right sides of wind deflector holder. Remove screws from front end of sunroof unit. Extract pawls through frame holes, then remove wind deflector from frame assembly.

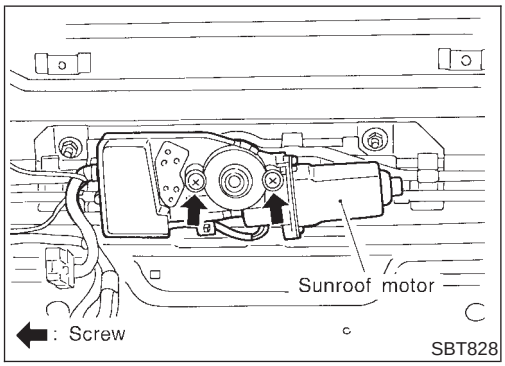

C

CAUTION:

- **Before removing sunroof motor, make sure that sunroof is fully closed.**
- **After removing sunroof motor, never attempt to rotate sunroof motor as a single unit.**

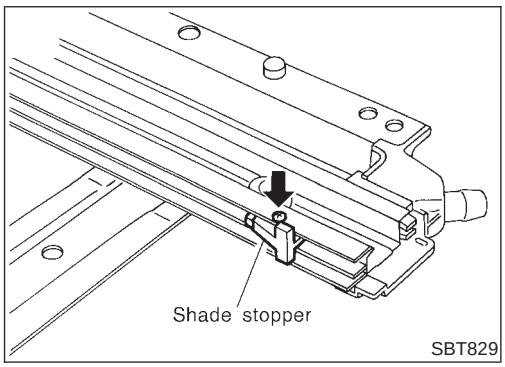

D Remove shade stoppers (2 points) from rear end of sunroof frame assembly. Remove sun shade from rear end of sunroof frame assembly.

Trouble Diagnoses

=NJBT0022

DIAGNOSTIC TABLE

NJBT0022S01

NOTE:

For diagnosing electric problem, refer to “ELECTRIC SUNROOF” in EL section.

		Check items (Components)				
		Wind deflector	Adjustment	Drain hoses	Weatherstrip	Link and wire assembly
	Reference page	BT-67	BT-68	BT-69	BT-69	BT-70
Symptom	Excessive wind noise	1	2		3	
	Water leaks		1	2	3	
	Sunroof rattles		1	4	2	3
	Excessive operation noise		1		2	3

The numbers in this table mean checking order.

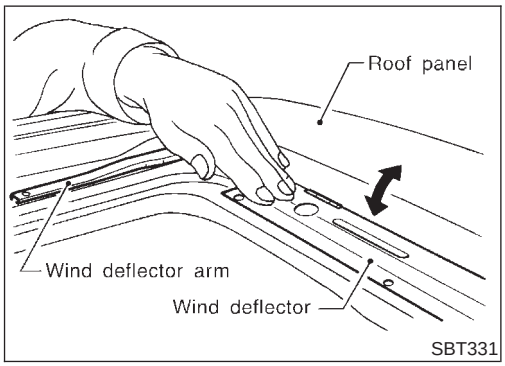

SBT331

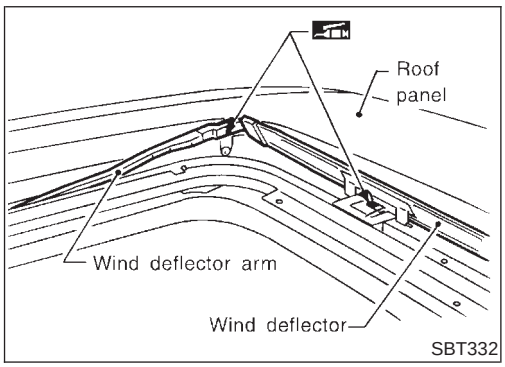

SBT332

WIND DEFLECTOR

NJBT0022S02

1. Open lid.
2. Check visually for proper installation.
3. Check to ensure a proper amount of petroleum jelly has been applied to wind deflector connection points; apply if necessary.
4. Check that wind deflector is properly retracted by hand. If it is not, remove and visually check condition. (Refer to removal procedures, BT-63.) If wind deflector is damaged, replace with new one. If wind deflector is not damaged, re-install properly.

ADJUSTMENT

NJBT0022S03

SEC. 736

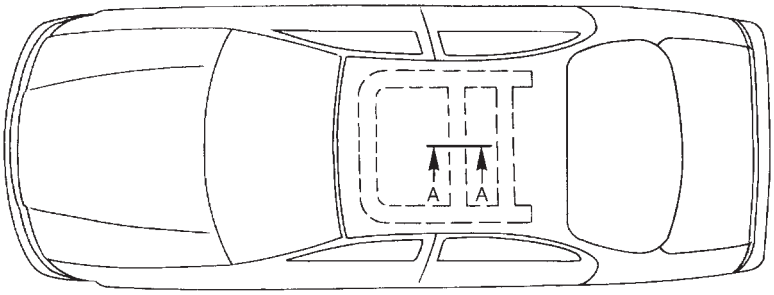

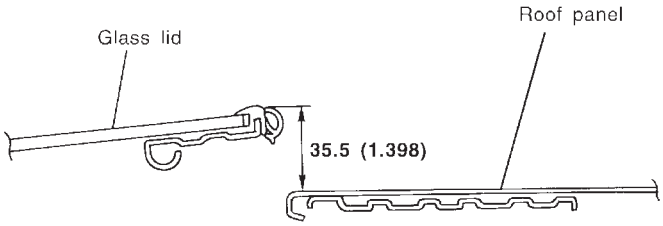

A - A (When sunroof is tilted up)

Unit: mm (in)

SBT004A

If any height difference between glass lid and roof is found, check glass lid fit and adjust as follows:

Height Difference Adjustment

NJBT0022S0302

1. Tilt glass lid up and down.
2. Check height difference between roof panel and glass lid to see if it is as "A-A" as shown in the figure above.
3. If necessary, adjust it by using one of following procedures.

- Adjust by adding or removing adjustment shim(s) between glass lid and link assembly.
- If glass lid protrudes above roof panel, add shim(s) or plain washer(s) at sunroof mounting bracket or stud bolt locations to adjust sunroof installation as required.

DRAIN HOSES

NJBT0022S04

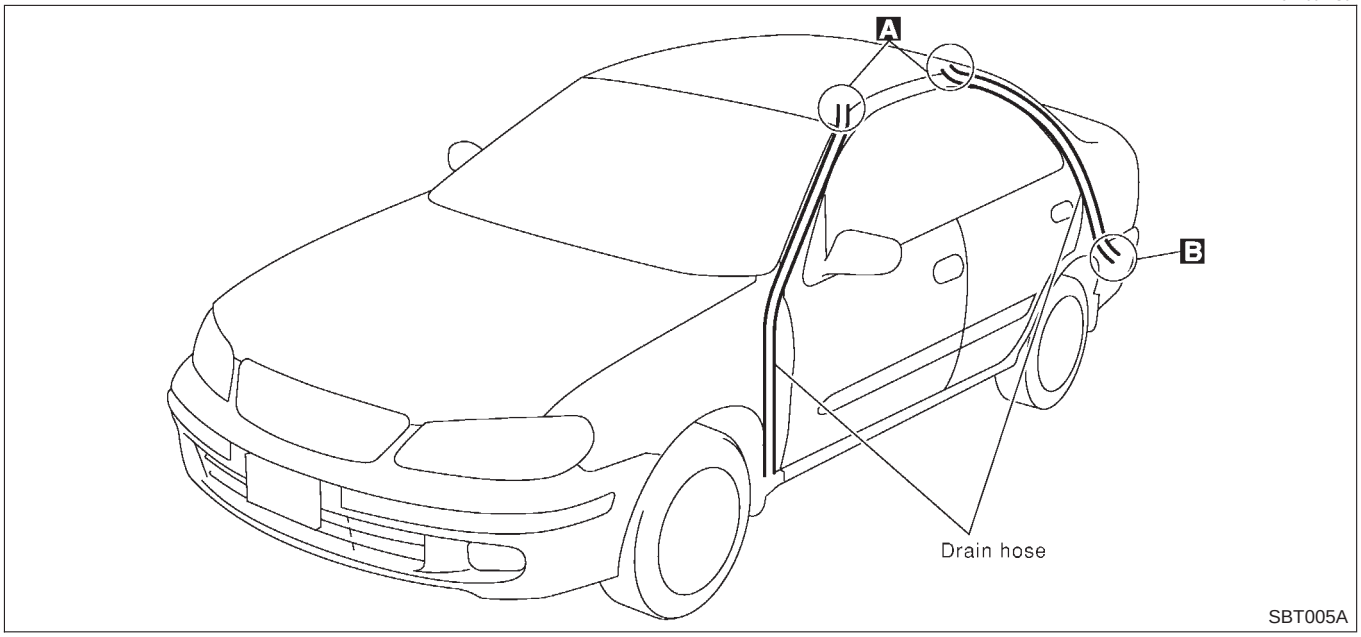

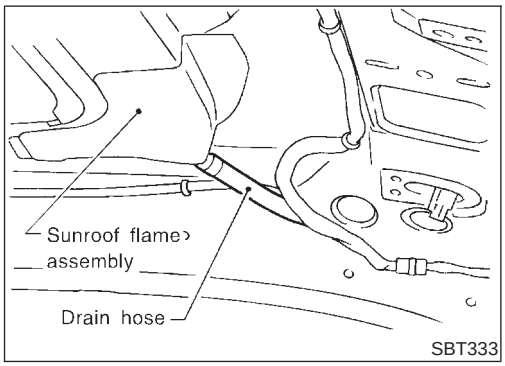

1. Remove headlining to access drain hose connections. (Refer to "ROOF TRIM", BT-43, for detail.)
2. Check visually for proper connections, damage or deterioration. **A** (The figure shows only the front side.)

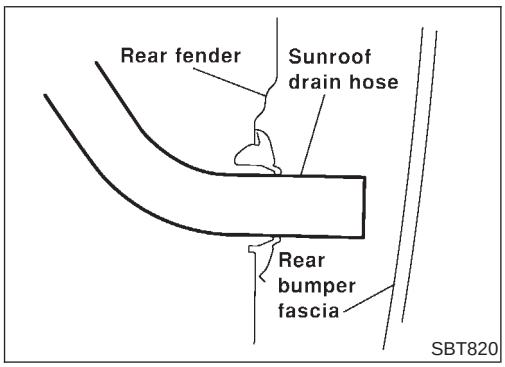

3. If leakage occurs around luggage room, remove luggage room side trim and check connecting area. Check for proper connection, damage or tear. **B**
4. Remove drain hoses and check visually for any damage, cracks, or deterioration.
5. Pour water into drain hoses and find damaged portion.

- If any damaged portion is found at each step, replace the damaged part.

WEATHERSTRIP

NJBT0022S05

- In the case of leakage around glass lid, close glass lid and pour water over glass lid to find damaged or gap portion.

1. Remove glass lid assembly. (Refer to removal procedures, BT-63, for details.)
2. Visually check weatherstrip for proper installation. If a gap exists between glass lid and weatherstrip, check for sufficient amount of butyl seal. If required, remove weatherstrip and apply butyl seal.
   Refer to "EXTERIOR", BT-47, for details.

3. Check weatherstrip visually for any damage, deterioration, or flattening.

- If any damage is found, replace weatherstrip.

CAUTION:
Do not remove weatherstrip except when replacing, or filling up butyl seal.

LINK AND WIRE ASSEMBLY

NJBT0022S06

NOTE:
Before replacing a suspect part, carefully ensure it is the source of noise being experienced.

1. Check link to determine if coating film has peeled off to such an extent that substrate is visible. Check also to determine if link is the source of noise. If it is, replace it.
2. Visually check to determine if a sufficient amount of petroleum jelly has been applied to wire or rail groove. If not, add petroleum jelly as required.
3. Check wire for any damage or deterioration. If any damage is found, remove rear guide (refer to removal procedures, BT-63, for details), then replace wire.

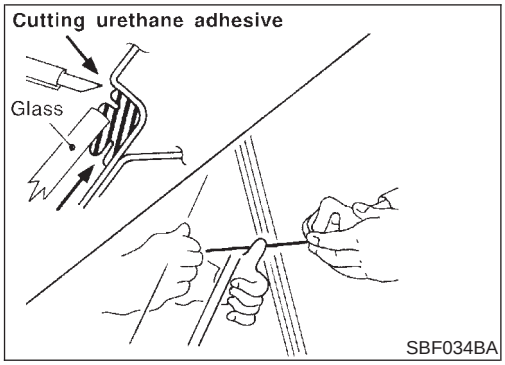

Removal and Installation

NJBT0023

REMOVAL

NJBT0023S01

After removing moldings, remove glass using piano wire or power cutting tool and an inflatable pump bag.

WARNING:

When cutting the glass from the vehicle, always wear safety glasses and heavy gloves to help prevent glass splinters from entering your eyes or cutting your hands.

CAUTION:

- **Be careful not to scratch the glass when removing.**
- **Do not set or stand the glass on its edge. Small chips may develop into cracks.**

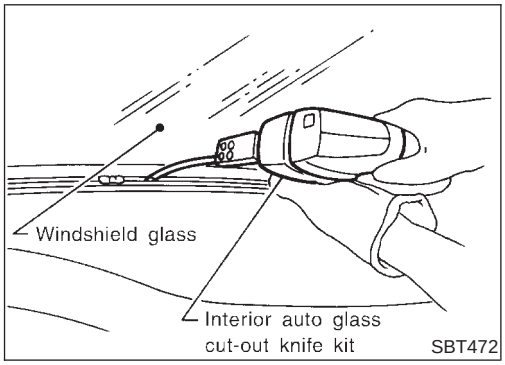

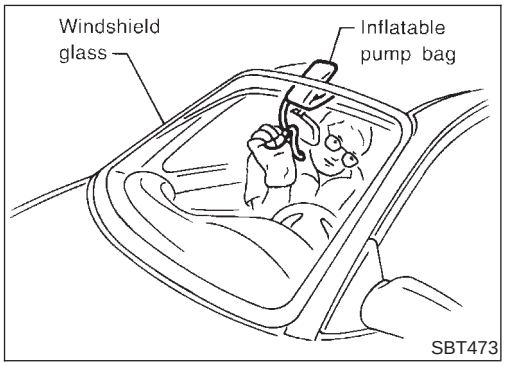

INSTALLATION

NJBT0023S02

- **Use a genuine Nissan Urethane Adhesive Kit or equivalent and follow the instructions furnished with it.**
- **While the urethane adhesive is curing, open a door window. This will prevent the glass from being forced out by passenger compartment air pressure when a door is closed.**
- **The molding must be installed securely so that it is in position and leaves no gap.**
- **Inform the customer that the vehicle should remain stationary until the urethane adhesive has completely cured (preferably 24 hours). Curing time varies with temperature and humidity.**

WARNING:

- **Keep heat and open flames away as primers and adhesive are flammable.**
- **The materials contained in the kit are harmful if swallowed, and may irritate skin and eyes. Avoid contact with the skin and eyes.**
- **Use in an open, well ventilated location. Avoid breathing the vapors. They can be harmful if inhaled. If affected by vapor inhalation, immediately move to an area with fresh air.**
- **Driving the vehicle before the urethane adhesive has completely cured may affect the performance of the windshield in case of an accident.**

CAUTION:

- **Do not use an adhesive which is past its usable term. Shelf life of this product is limited to six months after the date of manufacture. Carefully adhere to the expiration or manufacture date printed on the box.**
- **Keep primers and adhesive in a cool, dry place. Ideally, they should be stored in a refrigerator.**

- **Do not leave primers or adhesive cartridge unattended with their caps open or off.**
- **The vehicle should not be driven for at least 24 hours or until the urethane adhesive has completely cured. Curing time varies depending on temperature and humidities. The curing time will increase under higher temperatures and lower humidities.**

WINDSHIELD

NJBT0023S03

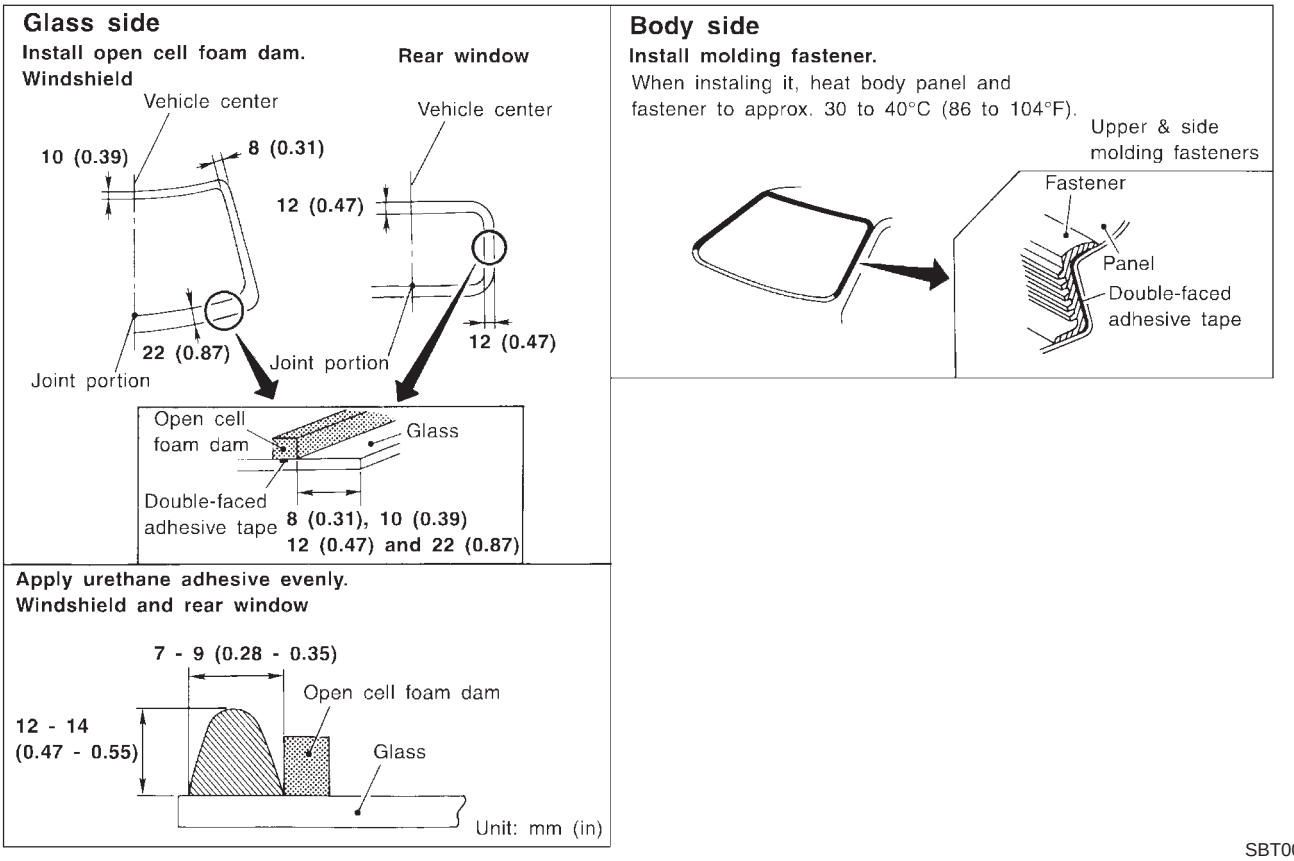

SBT006AA

Repairing Water Leaks for Windshield

NJBT0023S0301

Leaks can be repaired without removing and reinstalling glass.

If water is leaking between the urethane adhesive material and body or glass, determine the extent of leakage. This can be done by applying water to the windshield area while pushing glass outward.

To stop the leak, apply primer (if necessary) and then urethane adhesive to the leak point.

SIDE WINDOW

NJBT0023S04

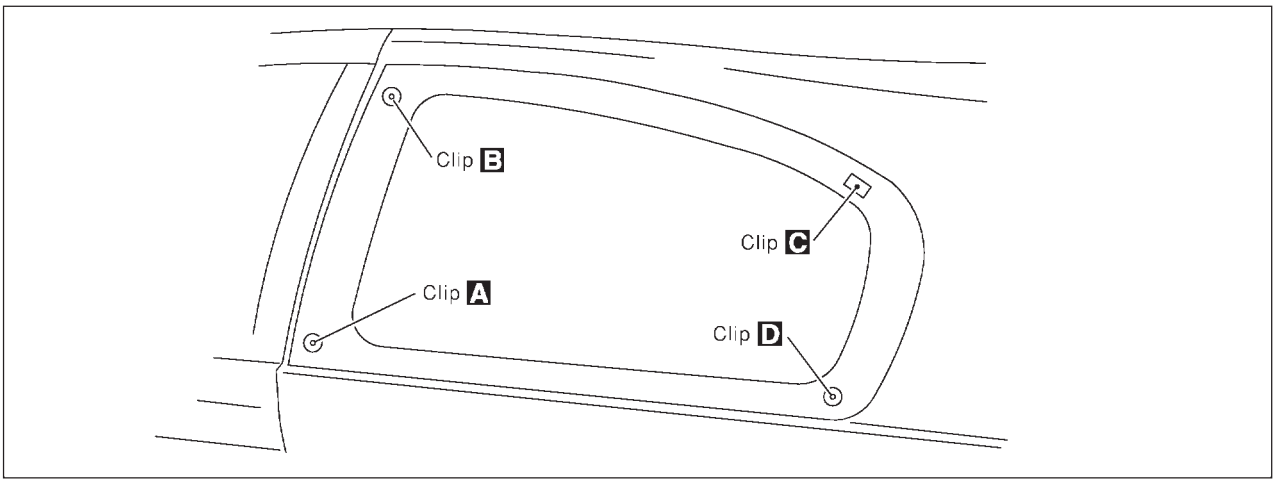

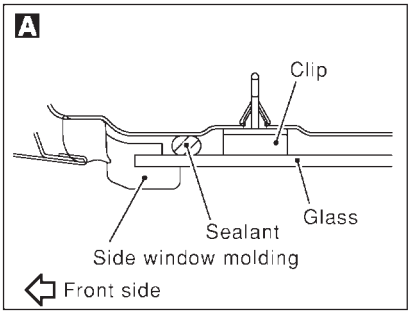

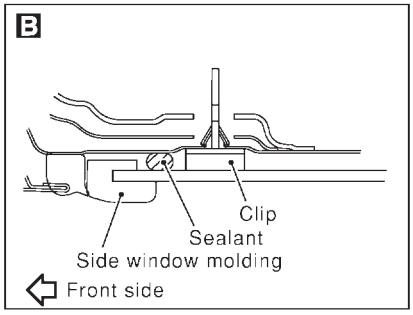

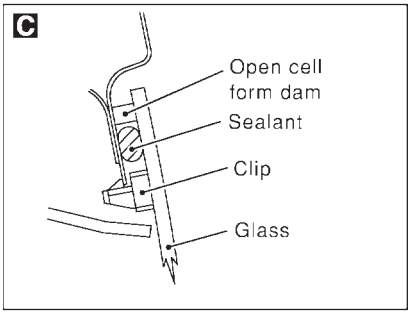

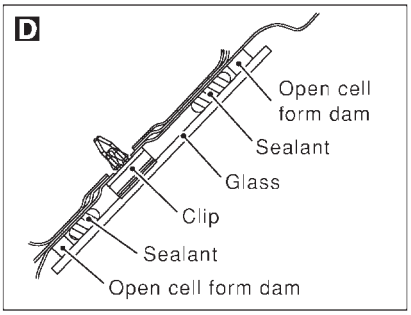

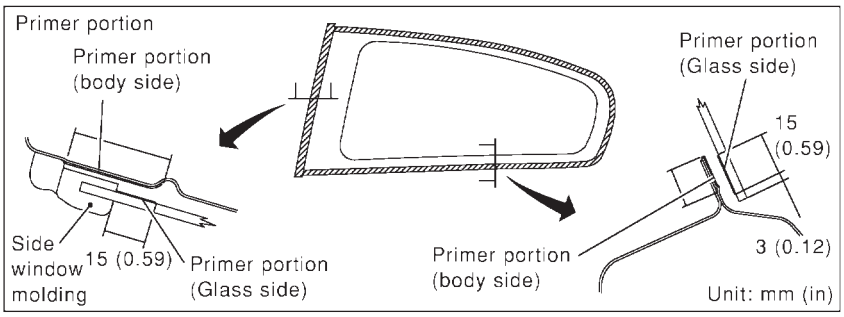

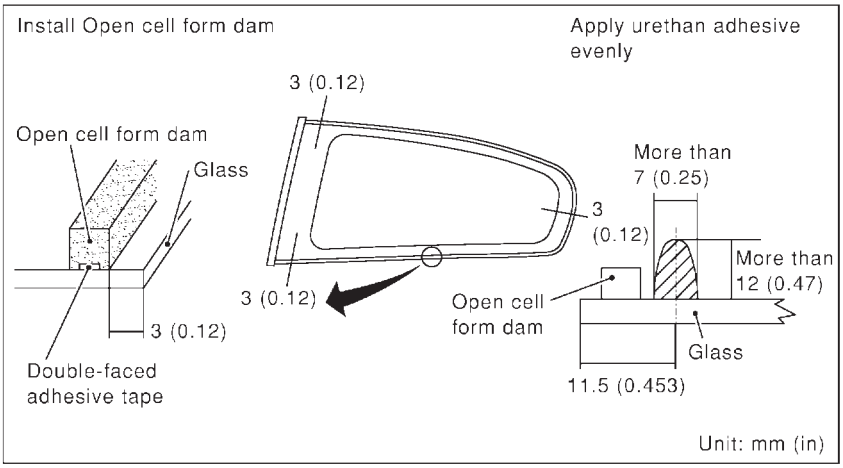

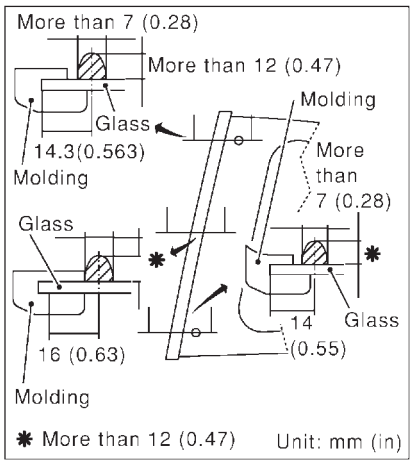

NBT067

BACK DOOR WINDOW

NJBT0023S05

- Structure and removal/reinstallation method of back door window are basically the same as for the windshield.

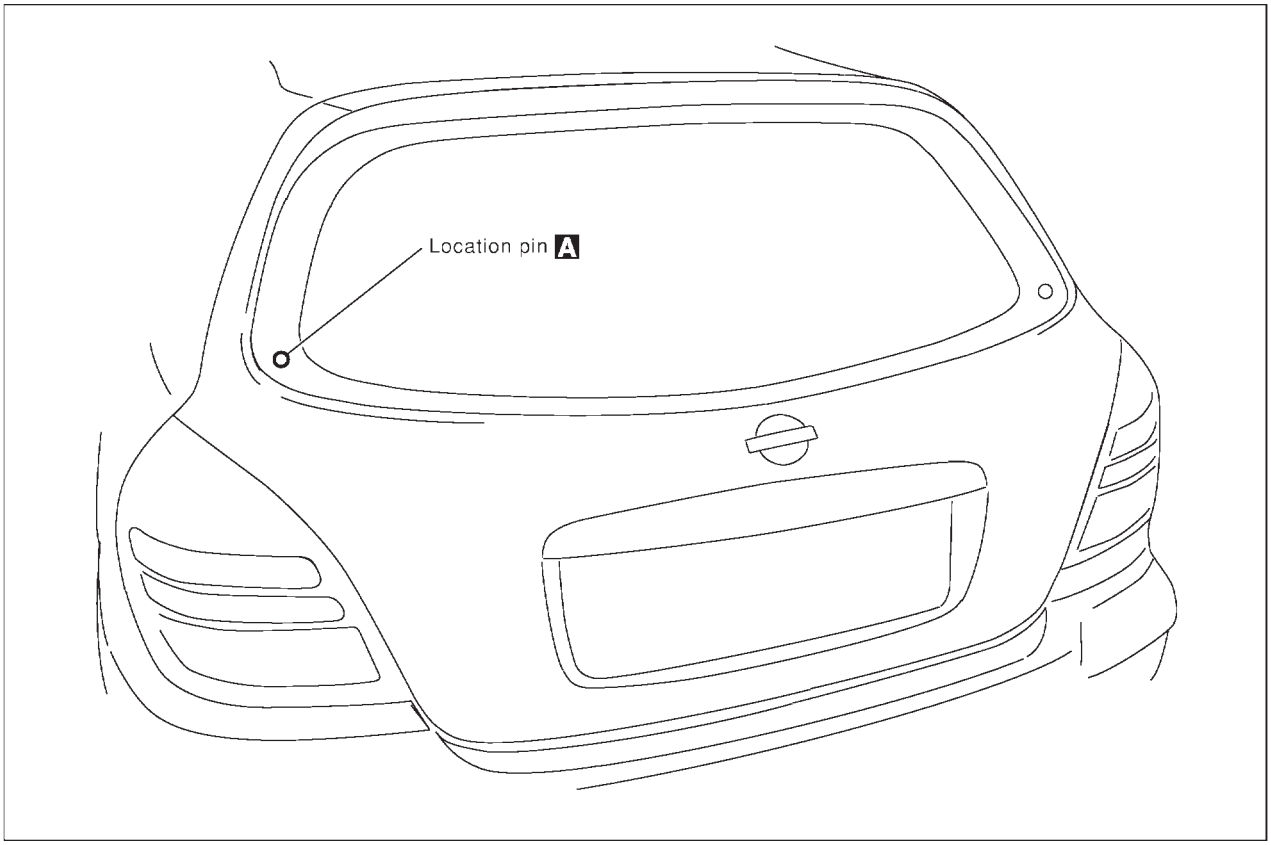

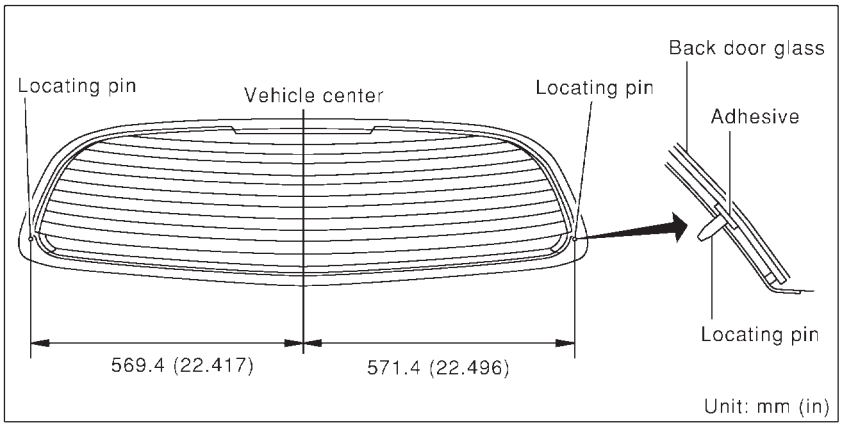

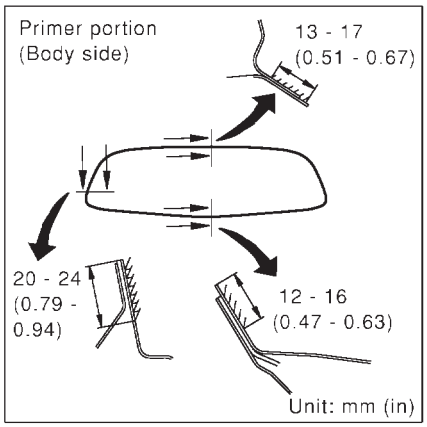

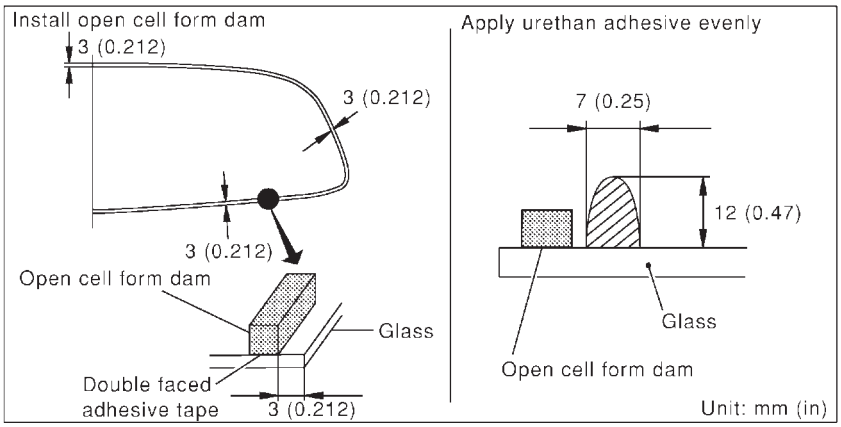

NBT066

Removal and Installation

NJBT0024

CAUTION:

Be careful not to scratch door rearview mirror body.

★ For Wiring Diagram, refer to EL-294, "DOOR MIRROR" for details.

1. Remove front corner of door inner cover.
2. Disconnect door mirror harness connector.
3. Remove bolts securing door mirror assembly.
4. Remove the mirror glass. Do not insert flat-bladed screwdriver too far.

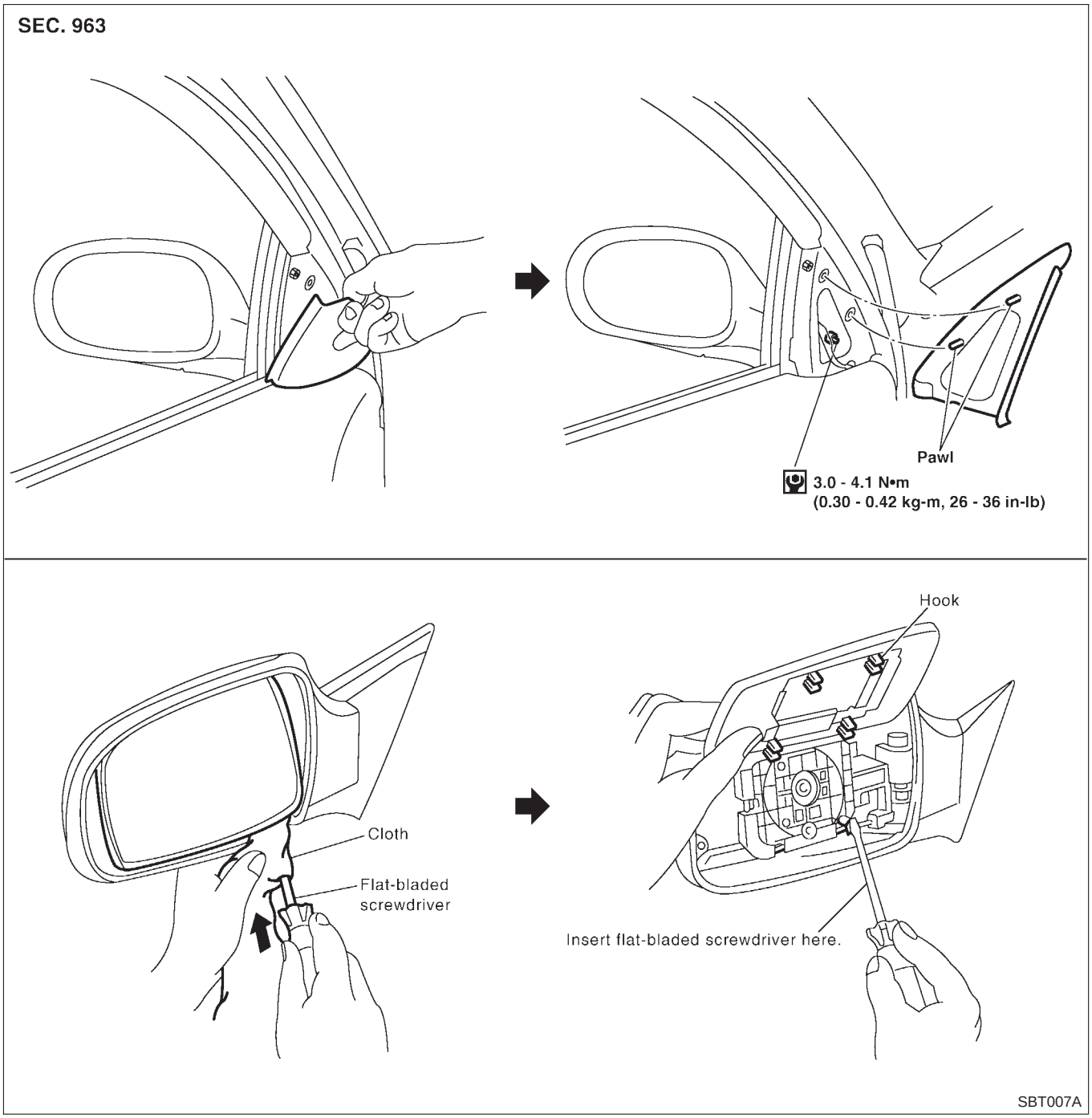

Removal and Installation

NJBT0025

REMOVAL

NJBT0025S01

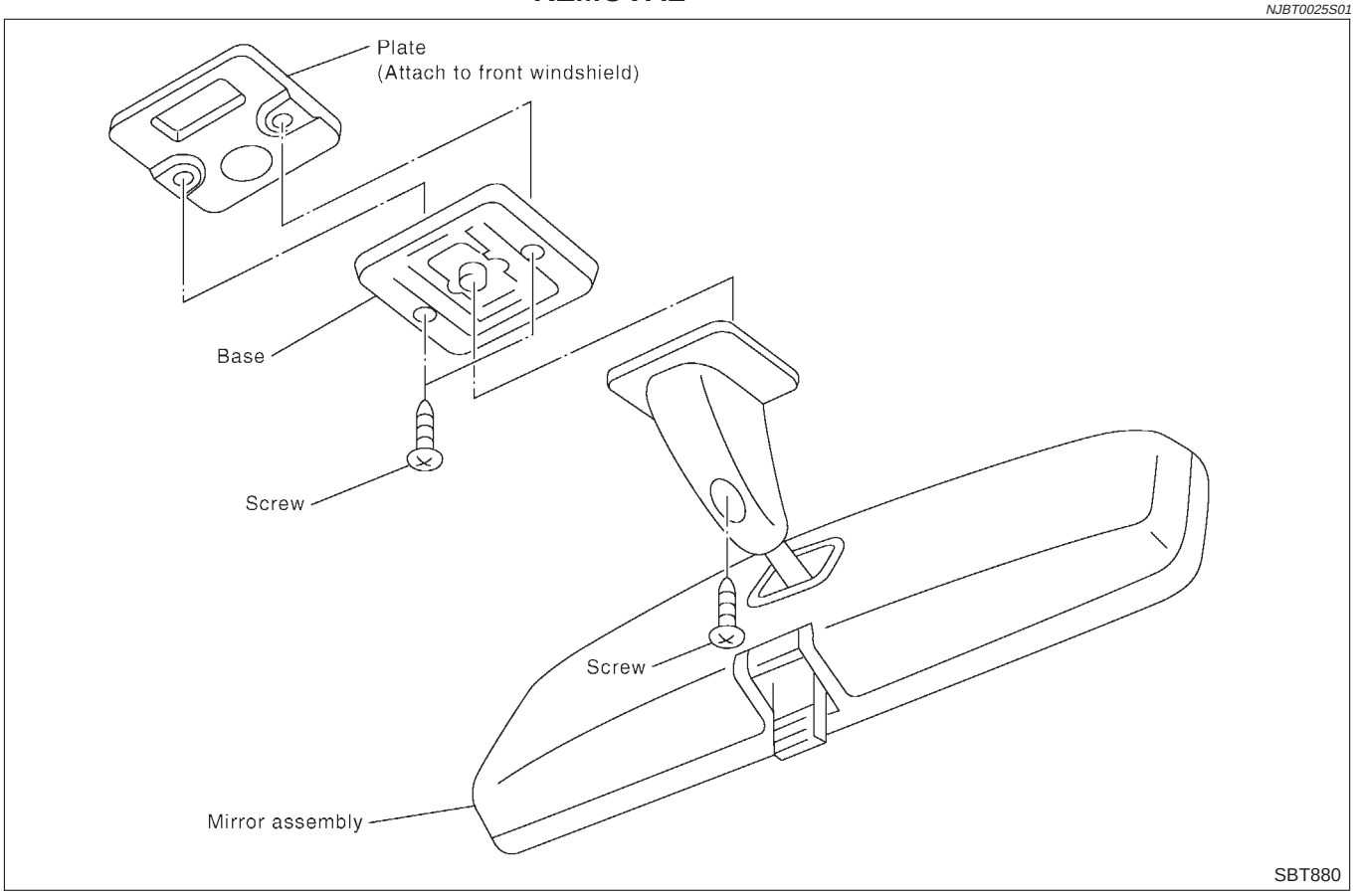

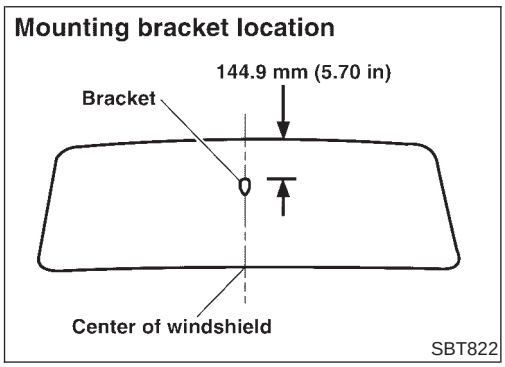

INSTALLATION

NJBT0025S02

1. Install mirror base as follows:
   a. Determine mirror base position on windshield by measuring from top of windshield to top of mirror base as shown in the figure.
   b. Mark location on outside of windshield with wax pencil or equivalent.
   c. Clean attaching point on inside of windshield with an alcohol-saturated panel towel.
   d. Sand bonding surface of mirror base with sandpaper (No. 320 or No. 360).
   e. Clean bonding surface of mirror base with an alcohol-saturated paper towel.
   f. Apply Loctite Adhesive 11067-2 or equivalent to bonding surface of mirror base.
   g. Install mirror base at premarked position and press mirror base against glass for 30 to 60 seconds.
   h. After five minutes, wipe off excess adhesive with an alcohol-moistened paper towel.
2. Install rearview mirror.

Alignment

NJBT0026

- All dimensions indicated in figures are actual ones.
- When using a tracking gauge, adjust both pointers to equal length. Then check the pointers and gauge itself to make sure there is no free play.
- When a measuring tape is used, check to be sure there is no elongation, twisting or bending.
- Measurements should be taken at the center of the mounting holes.
- An asterisk (*) following the value at the measuring point indicates that the measuring point on the other side is symmetrically the same value.
- The coordinates of the measurement points are the distances measured from the standard line of “X”, “Y” and “Z”.

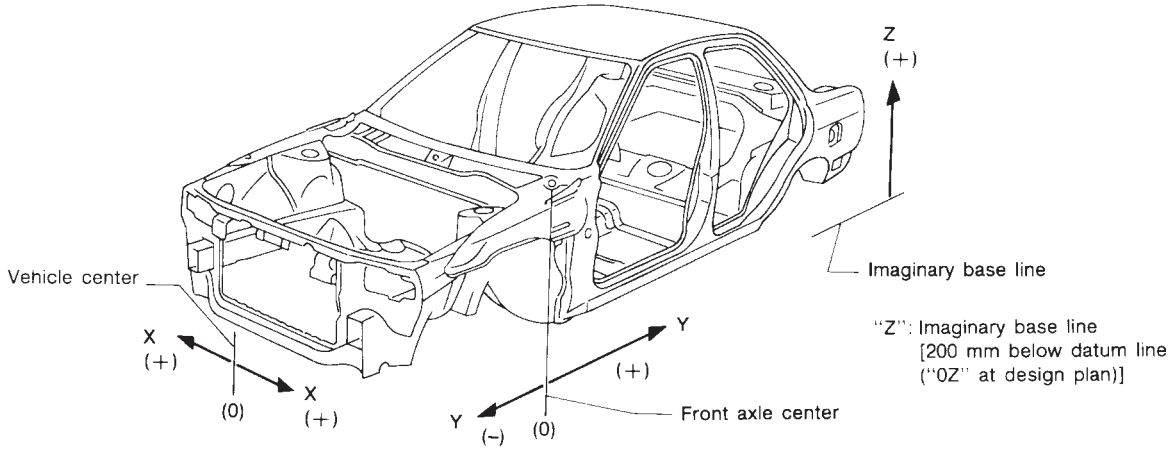

SBF874GB

ENGINE COMPARTMENT

Measurement

NJBT0026S01

NJBT0026S0101

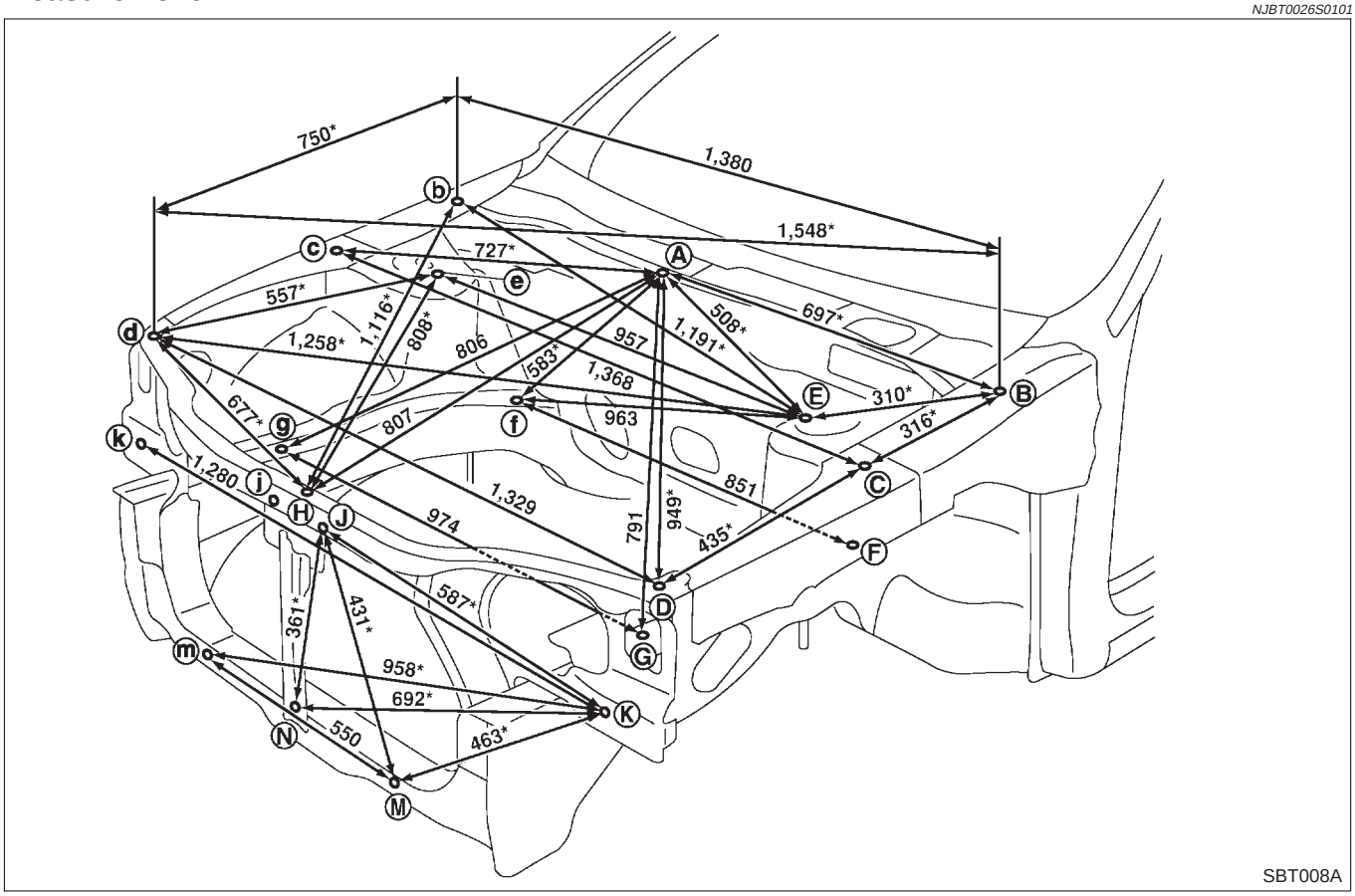

SBT008A

Measurement Points

NJBT0026S0102

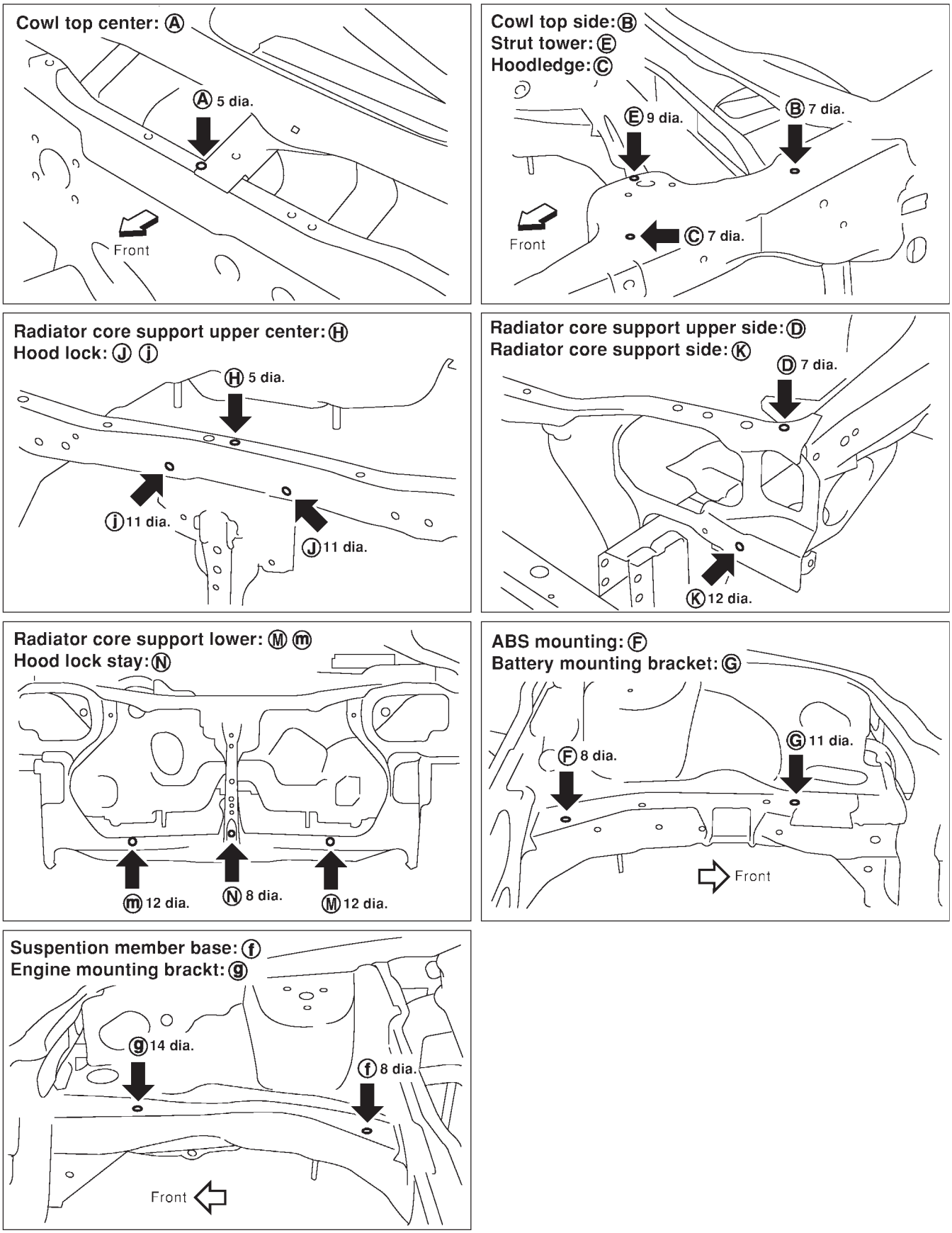

SBT009A

UNDERBODY
Measurement

NJBT0026S02

NJBT0026S0201

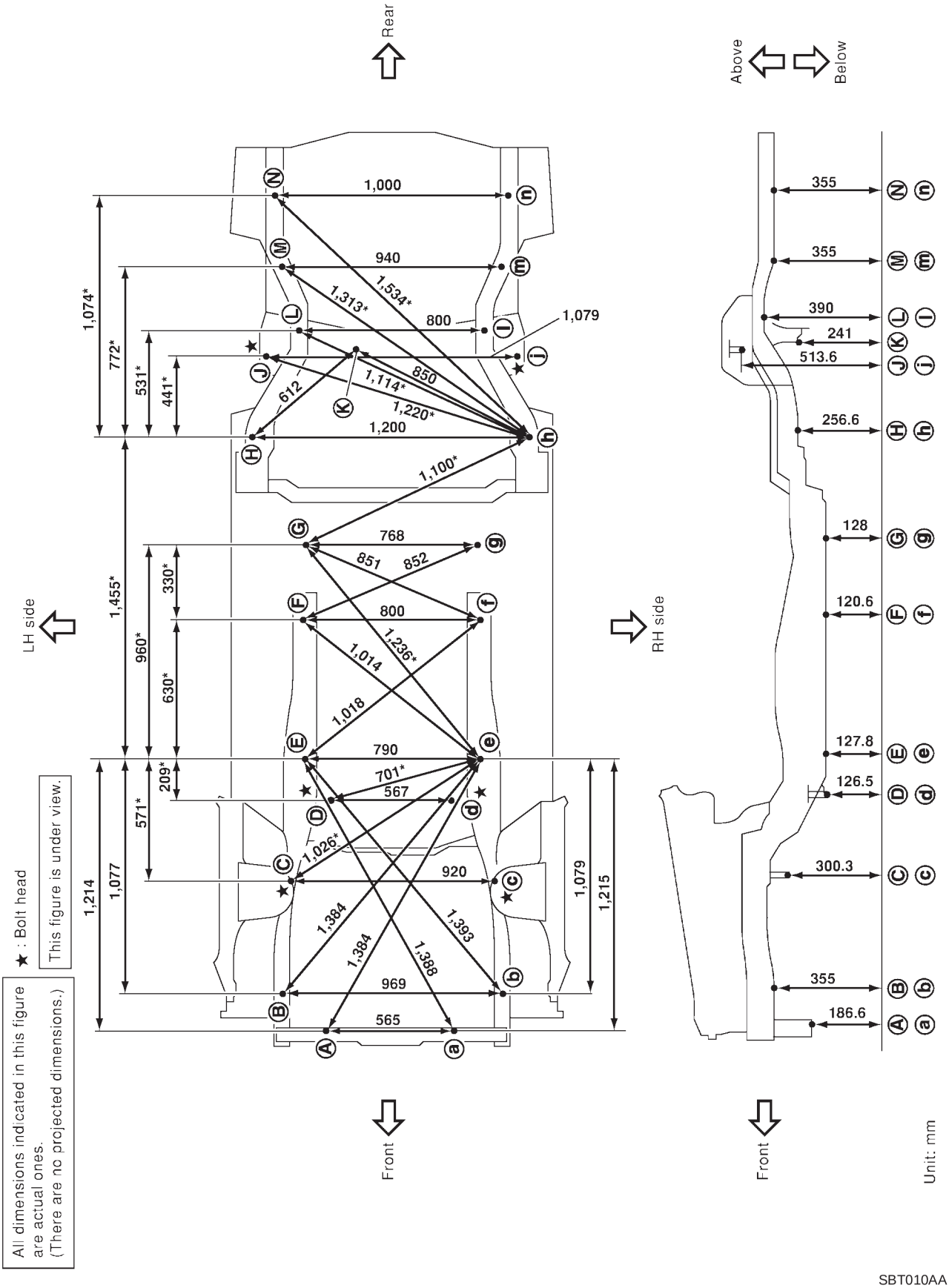

★ : Bolt head

This figure is under view.

All dimensions indicated in this figure are actual ones.
(There are no projected dimensions.)

SBT010AA

Measurement Points

NJBT0026S0202

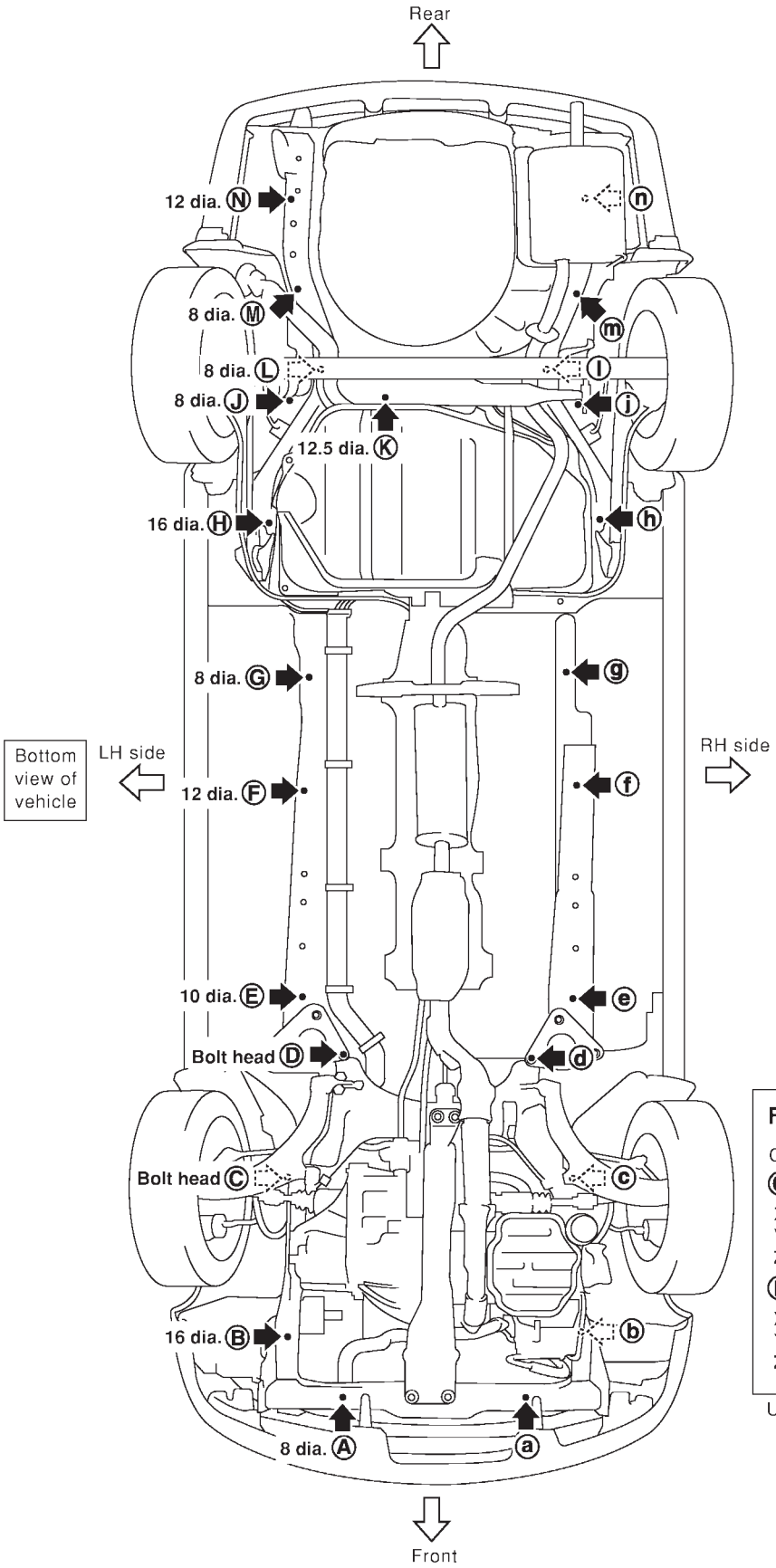

Coordinates

Ⓐ X: 280 Y: –607 Z: 186.8	Ⓖ, ⓖ X: 384 Y: 1,560 Z: 128
ⓐ X: 285 Y: –609 Z: 186.8	Ⓗ, ⓗ X: 600 Y: 2,035 Z: 256.6
Ⓑ X: 477 Y: –450 Z: 355	Ⓙ, ⓙ X: 540 Y: 2,393 Z: 306.2
ⓑ X: 492 Y: –450 Z: 355	Ⓚ X: 145 Y: 2,444.5 Z: 241
Ⓒ, ⓒ X: 460 Y: 60 Z: 300.3	Ⓛ, ⓛ X: 400 Y: 2,509 Z: 390
Ⓓ, ⓓ X: 283.5 Y: 423 Z: 126.5	Ⓜ, ⓜ X: 470 Y: 2,790 Z: 355
Ⓔ, ⓔ X: 395 Y: 600 Z: 127.8	Ⓝ, ⓝ X: 500 Y: 3,100 Z: 355
Ⓕ X: 400 Y: 1,230 Z: 120.6	
ⓕ X: 405 Y: 1,230 Z: 120.6	

Front and rear strut tower centers

Coordinates:

Ⓞ, ⓞ
X: 528
Y: 17.8
Z: 764.3

Ⓟ, ⓟ
X: 488.3
Y: 2,467.8
Z: 520.6

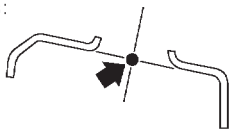

Front: Ⓞ, ⓞ 30 dia.
Rear: Ⓟ, ⓟ 68 dia.

Unit: mm

SBT011AA