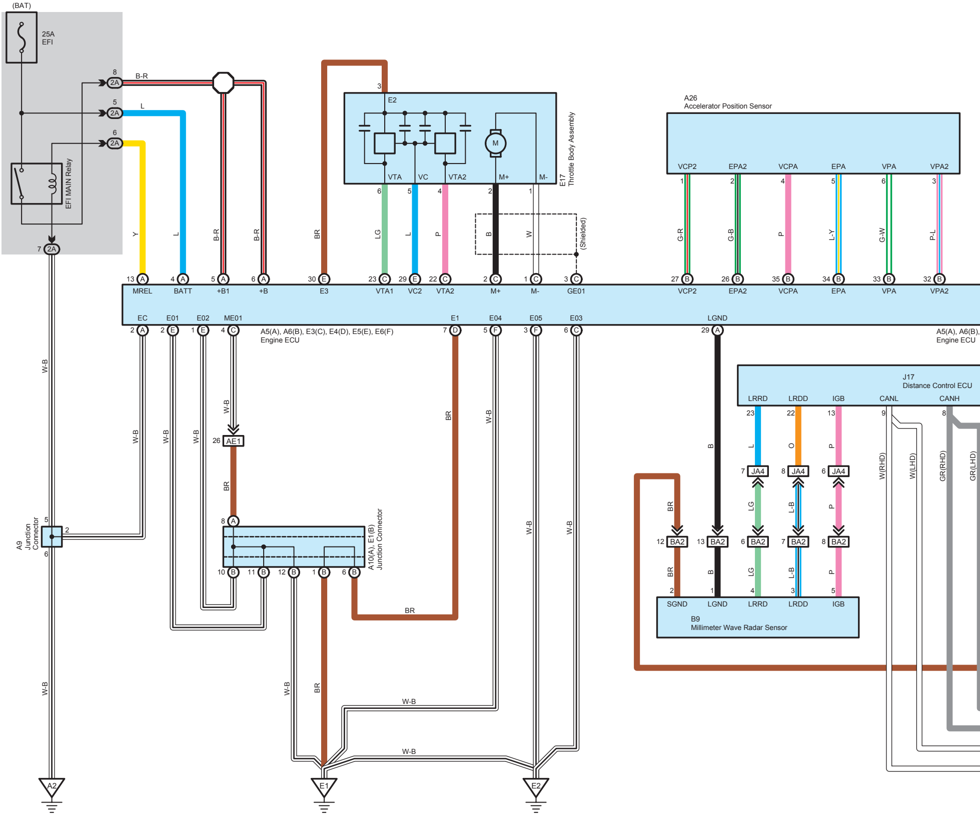
(BAT)
25A
EFI
EFI MAIN Relay
8 2A B-R
5 2A L
6 2A Y
7 2A
E2
E17
Throttle Body Assembly
VTA
VC
VTA2
M+
M-
M
(Shielded)
A26
Accelerator Position Sensor
VCP2
EPA2
VCPA
EPA
VPA
VPA2
G-R
G-B
P
L-Y
G-W
P-L
BR
LG
B
W
MREL
BATT
+B1
+B
E3
VTA1
VC2
VTA2
M+
M-
GE01
EC
E01
E02
ME01
E1
E04
E05
E03
LGND
A5(A), A6(B), E3(C), E4(D), E5(E), E6(F)
Engine ECU
A5(A), A6(B),
Engine ECU
W-B
AE1
A9
Junction
Connector
A10(A), E1(B)
Junction Connector
J17
Distance Control ECU
LRRD
LRDD
IGB
CANL
CANH
JA4
BA2
O
L-B
W(RHD)
W(LHD)
GR(RHD)
GR(LHD)
SGND
LGND
LRRD
LRDD
IGB
B9
Millimeter Wave Radar Sensor
A2
E1
E2

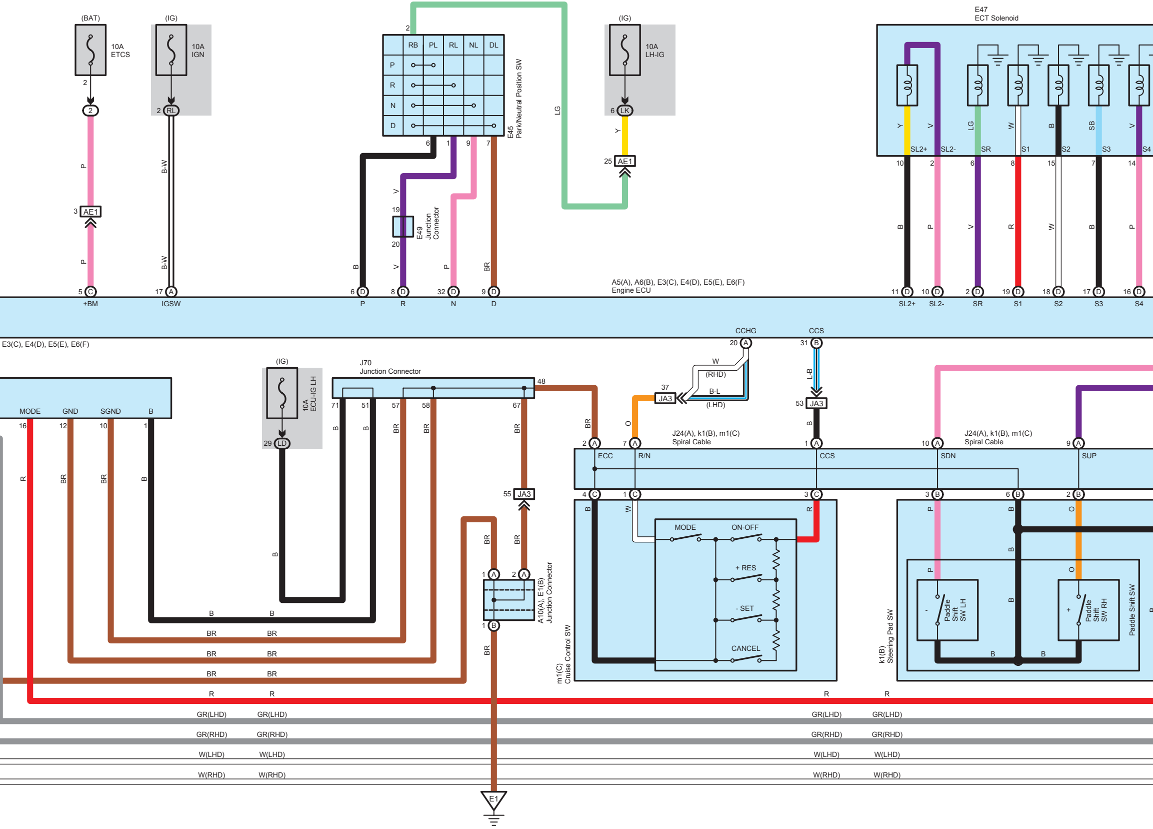
(BAT)
10A ETCS
(IG)
10A IGN
E45 Park/Neutral Position SW
RB PL RL NL DL
P R N D
E49 Junction Connector
LG
(IG)
10A LH-IG
6 LK
25 AE1
3 AE1
2 RL
E47 ECT Solenoid
SL2+ SL2- SR S1 S2 S3 S4
A5(A), A6(B), E3(C), E4(D), E5(E), E6(F)
Engine ECU
+BM
IGSW
P R N D
SL2+ SL2- SR S1 S2 S3 S4
CCHG
CCS
E3(C), E4(D), E5(E), E6(F)
MODE GND SGND B
(IG)
10A ECU-IG LH
29 LD
J70 Junction Connector
55 JA3
37 JA3
53 JA3
W (RHD) B-L (LHD)
J24(A), k1(B), m1(C) Spiral Cable
ECC R/N CCS SDN SUP
A10(A), E1(B) Junction Connector
m1(C) Cruise Control SW
MODE ON-OFF
+ RES
- SET
CANCEL
k1(B) Steering Pad SW
Paddle Shift SW
Paddle Shift SW LH
Paddle Shift SW RH
E1
R
GR(LHD)
GR(RHD)
W(LHD)
W(RHD)
BR
B

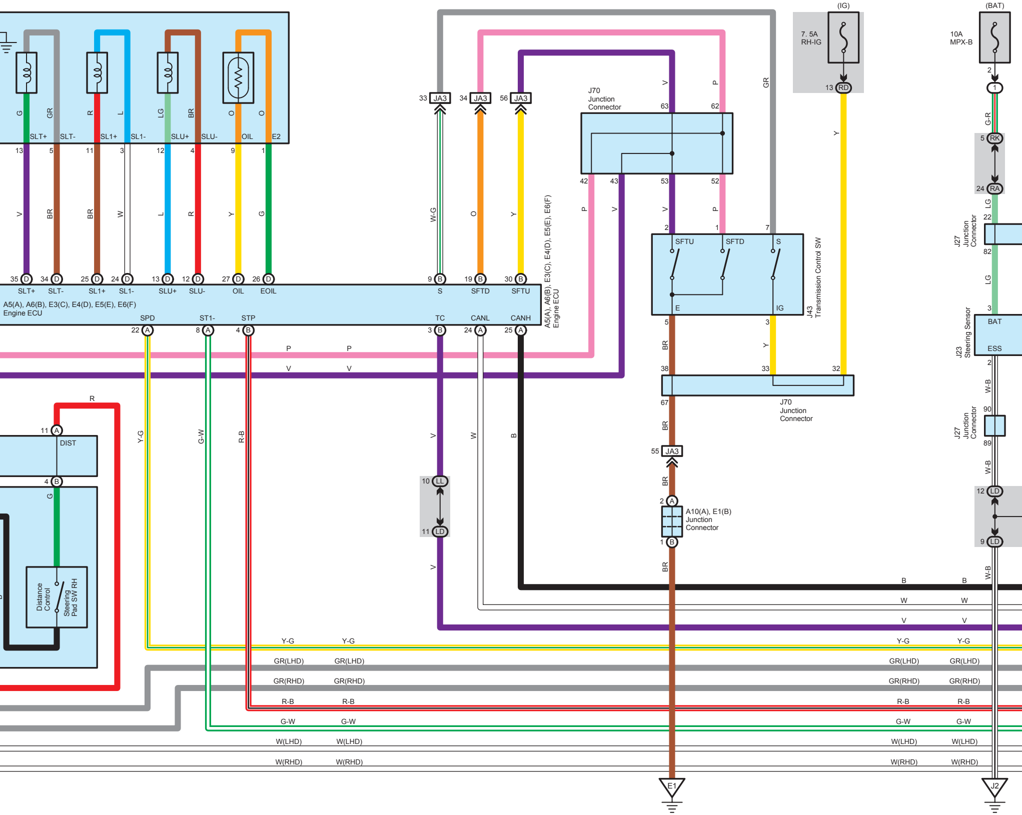

SLT+
SLT-
SL1+
SL1-
SLU+
SLU-
OIL
E2
G
GR
R
L
LG
BR
O
O
13
5
11
3
12
4
9
1
V
BR
BR
W
L
R
Y
G
35 D
34 D
25 D
24 D
13 D
12 D
27 D
26 D
SLT+
SLT-
SL1+
SL1-
SLU+
SLU-
OIL
EOIL
A5(A), A6(B), E3(C), E4(D), E5(E), E6(F)
Engine ECU
SPD
ST1-
STP
22 A
8 A
4 B
P
P
V
V
33 JA3
34 JA3
56 JA3
W-G
O
Y
9 B
19 B
30 B
S
SFTD
SFTU
TC
CANL
CANH
3 B
24 A
25 A
A5(A), A6(B), E3(C), E4(D), E5(E), E6(F)
Engine ECU
J70
Junction
Connector
V
P
63
62
42
43
53
52
P
V
V
P
GR
2
1
7
SFTU
SFTD
S
E
IG
J43
Transmission Control SW
5
3
BR
Y
38
33
32
J70
Junction
Connector
67
BR
55 JA3
BR
2 A
A10(A), E1(B)
Junction
Connector
1 B
BR
E1
(IG)
7. 5A
RH-IG
13 RD
Y
(BAT)
10A
MPX-B
2
1
G-R
5 RK
24 RA
LG
22
J27
Junction
Connector
82
LG
3
BAT
ESS
J23
Steering Sensor
2
W-B
90
J27
Junction
Connector
89
W-B
12 LD
9 LD
W-B
J2
R
11 A
DIST
4 B
G
Distance
Control
Steering
Pad SW RH
Y-G
G-W
R-B
V
W
B
10 LL
11 LD
V
B
B
W
W
V
V
Y-G
Y-G
Y-G
Y-G
GR(LHD)
GR(LHD)
GR(LHD)
GR(LHD)
GR(RHD)
GR(RHD)
GR(RHD)
GR(RHD)
R-B
R-B
R-B
R-B
G-W
G-W
G-W
G-W
W(LHD)
W(LHD)
W(LHD)
W(LHD)
W(RHD)
W(RHD)
W(RHD)
W(RHD)

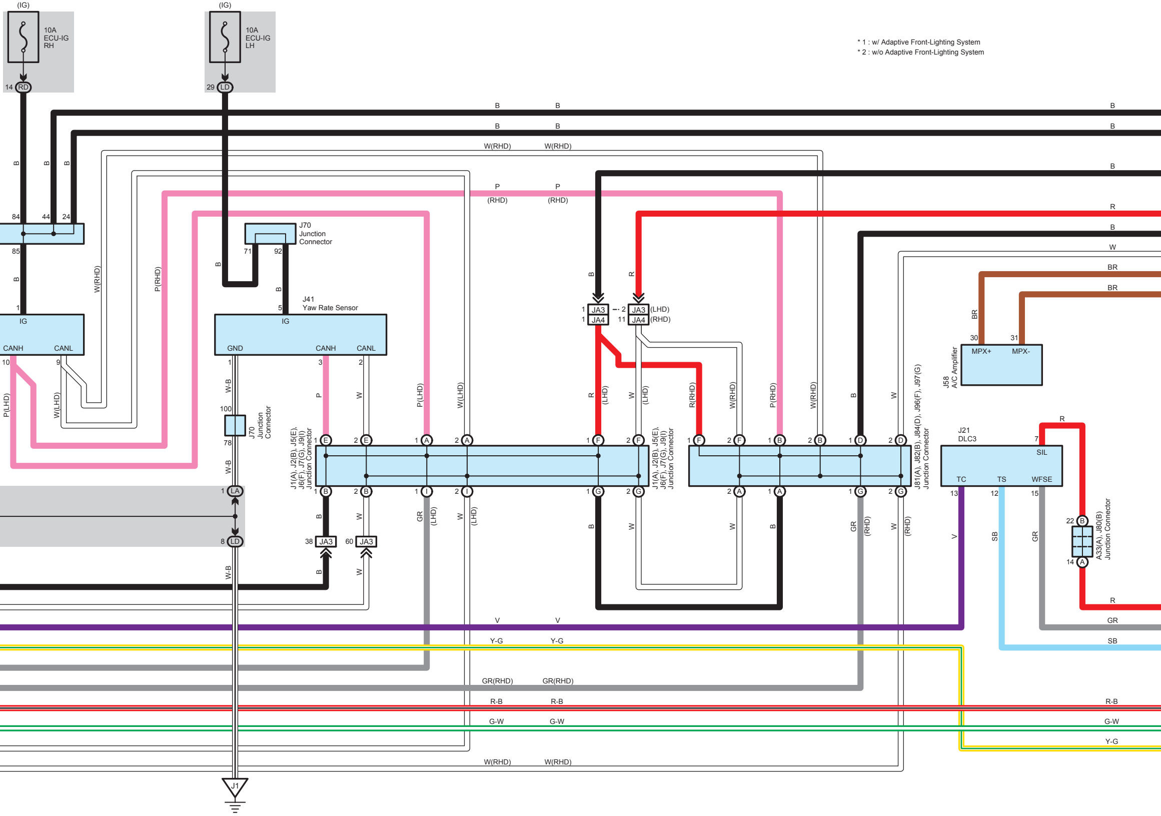
(IG)
10A
ECU-IG
RH
14
RD
(IG)
10A
ECU-IG
LH
29
LD
B
W(RHD)
P
(RHD)
R
W
BR
84
44
24
85
1
IG
CANH
CANL
10
9
P(LHD)
W(LHD)
W(RHD)
P(RHD)
J70
Junction
Connector
71
92
5
J41
Yaw Rate Sensor
GND
3
2
W-B
100
78
J70
Junction
Connector
LA
8
LD
J1
J1(A), J2(B), J5(E),
J6(F), J7(G), J9(I)
Junction Connector
E
A
B
I
G
F
D
38
JA3
60
GR
(LHD)
JA4
(LHD)
(RHD)
11
R(RHD)
W(RHD)
P(RHD)
J81(A), J82(B), J84(D), J96(F), J97(G)
Junction Connector
(RHD)
J58
A/C Amplifier
30
31
MPX+
MPX-
J21
DLC3
7
SIL
TC
TS
WFSE
13
12
15
V
SB
22
14
A33(A), J80(B)
Junction Connector
Y-G
GR(RHD)
R-B
G-W

* 1 : w/ Adaptive Front-Lighting System
* 2 : w/o Adaptive Front-Lighting System

* 3 : w/ Auto Wiper
* 4 : w/o Auto Wiper
* 5 : LHD, RHD Light Control SW LH Side Type
* 6 : RHD Light Control SW RH Side Type

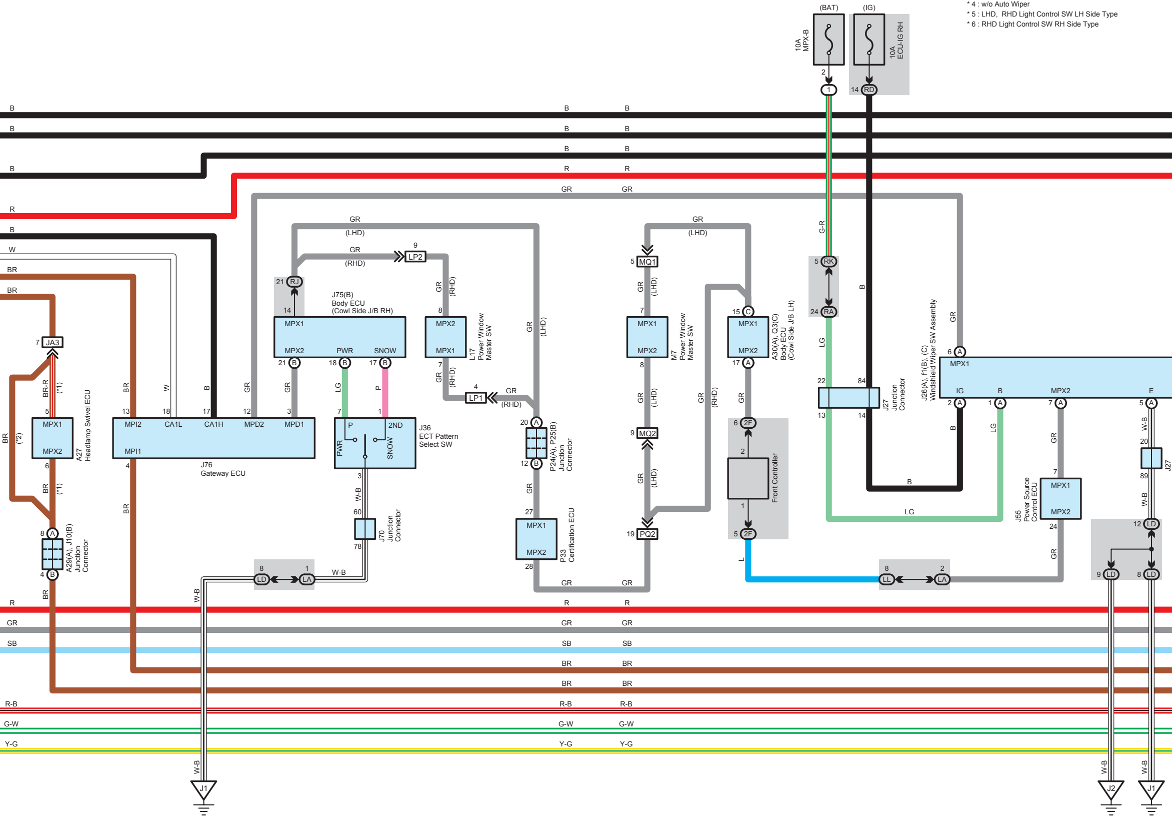

(BAT)
(IG)
10A MPX-B
10A ECU-IG RH
A27 Headlamp Swivel ECU
A29(A), J10(B) Junction Connector
JA3
J76 Gateway ECU
MPI2
CA1L
CA1H
MPD2
MPD1
MPI1
J75(B) Body ECU (Cowl Side J/B RH)
MPX1
MPX2
PWR
SNOW
RJ
L17 Power Window Master SW
LP2
LP1
J36 ECT Pattern Select SW
P
2ND
J70 Junction Connector
P24(A), P25(B) Junction Connector
P33 Certification ECU
M7 Power Window Master SW
MQ1
MQ2
PQ2
A30(A), Q3(C) Body ECU (Cowl Side J/B LH)
Front Controller
2F
RK
RA
J27 Junction Connector
J26(A), f1(B), (C) Windshield Wiper SW Assembly
IG
B
E
J55 Power Source Control ECU
LD
LA
LL
J1
J2
J27
(LHD)
(RHD)
(*1)
(*2)
B
R
GR
W
BR
BR-R
LG
P
W-B
G-R
L
SB
R-B
G-W
Y-G

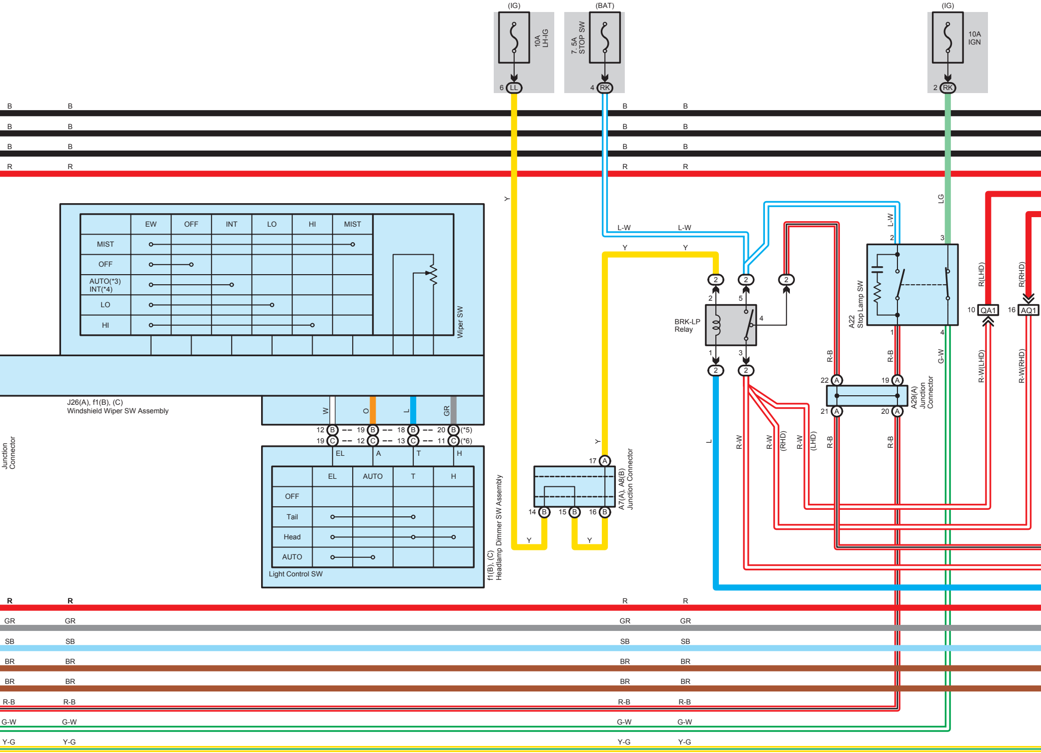
(IG)
10A LH-IG
6 LL
(BAT)
7.5A STOP SW
4 RK
(IG)
10A IGN
2 RK
B
R
Y
L-W
LG
EW
OFF
INT
LO
HI
MIST
AUTO(*3)
INT(*4)
Wiper SW
J26(A), f1(B), (C)
Windshield Wiper SW Assembly
W
O
L
GR
12 B
19 B
18 B
20 B (*5)
19 C
12 C
13 C
11 C (*6)
EL
A
T
H
AUTO
Tail
Head
Light Control SW
f1(B), (C)
Headlamp Dimmer SW Assembly
Junction Connector
17 A
14 B
15 B
16 B
A7(A), A8(B)
Junction Connector
BRK-LP Relay
2
5
4
1
3
A22
Stop Lamp SW
R(LHD)
R(RHD)
10 QA1
16 AQ1
R-W(LHD)
R-W(RHD)
22 A
19 A
21 A
20 A
A29(A)
Junction Connector
R-B
G-W
R-W
(RHD)
(LHD)
GR
SB
BR
Y-G

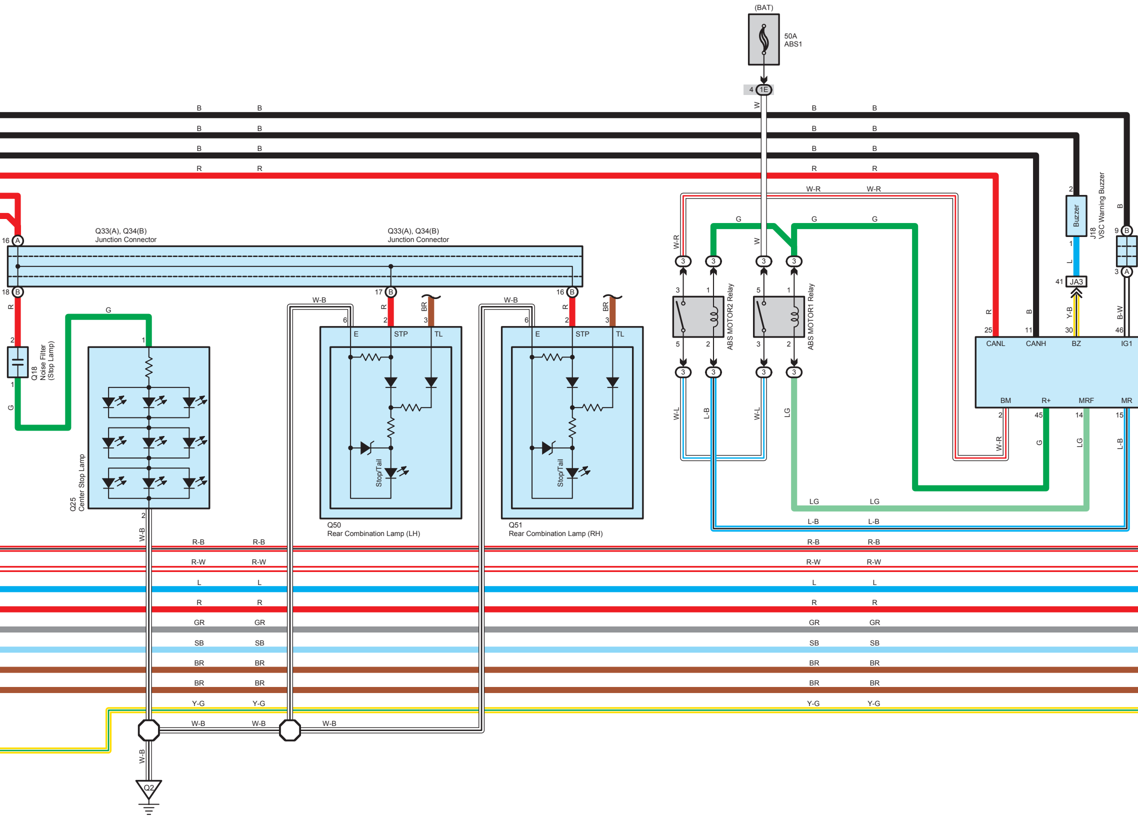
(BAT)
50A
ABS1
4
1E
W
B
R
W-R
G
Q33(A), Q34(B)
Junction Connector
16
A
18
B
17
16
R
G
BR
W-B
2
1
Q18
Noise Filter
(Stop Lamp)
Q25
Center Stop Lamp
6
3
E
STP
TL
Stop/Tail
Q50
Rear Combination Lamp (LH)
Q51
Rear Combination Lamp (RH)
ABS MOTOR2 Relay
ABS MOTOR1 Relay
5
W-L
L-B
LG
Buzzer
J18
VSC Warning Buzzer
L
41
JA3
Y-B
B-W
9
25
11
30
46
CANL
CANH
BZ
IG1
BM
R+
MRF
MR
45
14
15
R-B
R-W
GR
SB
Y-G
Q2

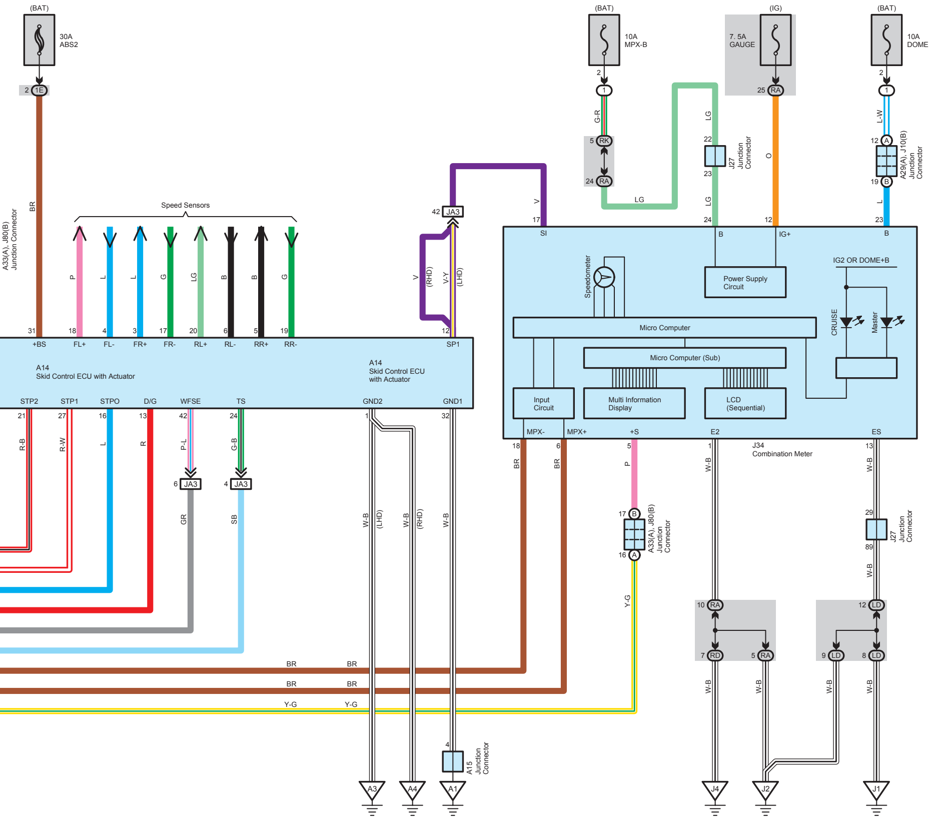
(BAT)
30A
ABS2
2 1E
BR
A33(A), J80(B)
Junction Connector
Speed Sensors
P
L
L
G
LG
B
B
G
31 +BS
18 FL+
4 FL-
3 FR+
17 FR-
20 RL+
6 RL-
5 RR+
19 RR-
12 SP1
A14
Skid Control ECU with Actuator
A14
Skid Control ECU
with Actuator
STP2
STP1
STPO
D/G
WFSE
TS
GND2
GND1
21
27
16
13
42
24
1
32
R-B
R-W
L
R
P-L
G-B
6 JA3
4 JA3
GR
SB
W-B
(LHD)
W-B
(RHD)
W-B
42 JA3
V
(RHD)
V-Y
(LHD)
V
17 SI
(BAT)
10A
MPX-B
2
1
G-R
5 RK
24 RA
LG
LG
22
23
J27
Junction
Connector
LG
24 B
(IG)
7. 5A
GAUGE
25 RA
O
12 IG+
(BAT)
10A
DOME
2
1
L-W
12 A
19 B
A29(A), J10(B)
Junction
Connector
L
23 B
Speedometer
Power Supply
Circuit
IG2 OR DOME+B
CRUISE
Master
Micro Computer
Micro Computer (Sub)
Input
Circuit
Multi Information
Display
LCD
(Sequential)
MPX-
MPX+
+S
E2
ES
18
6
5
1
13
J34
Combination Meter
BR
BR
P
W-B
W-B
17 B
16 A
A33(A), J80(B)
Junction
Connector
Y-G
29
89
J27
Junction
Connector
W-B
10 RA
7 RD
5 RA
12 LD
9 LD
8 LD
W-B
W-B
W-B
W-B
BR
BR
BR
BR
Y-G
Y-G
4
A15
Junction
Connector
A3
A4
A1
J4
J2
J1