# AUTOMATIC TRANSMISSION SYSTEM

## OPERATION

AT0HY–01

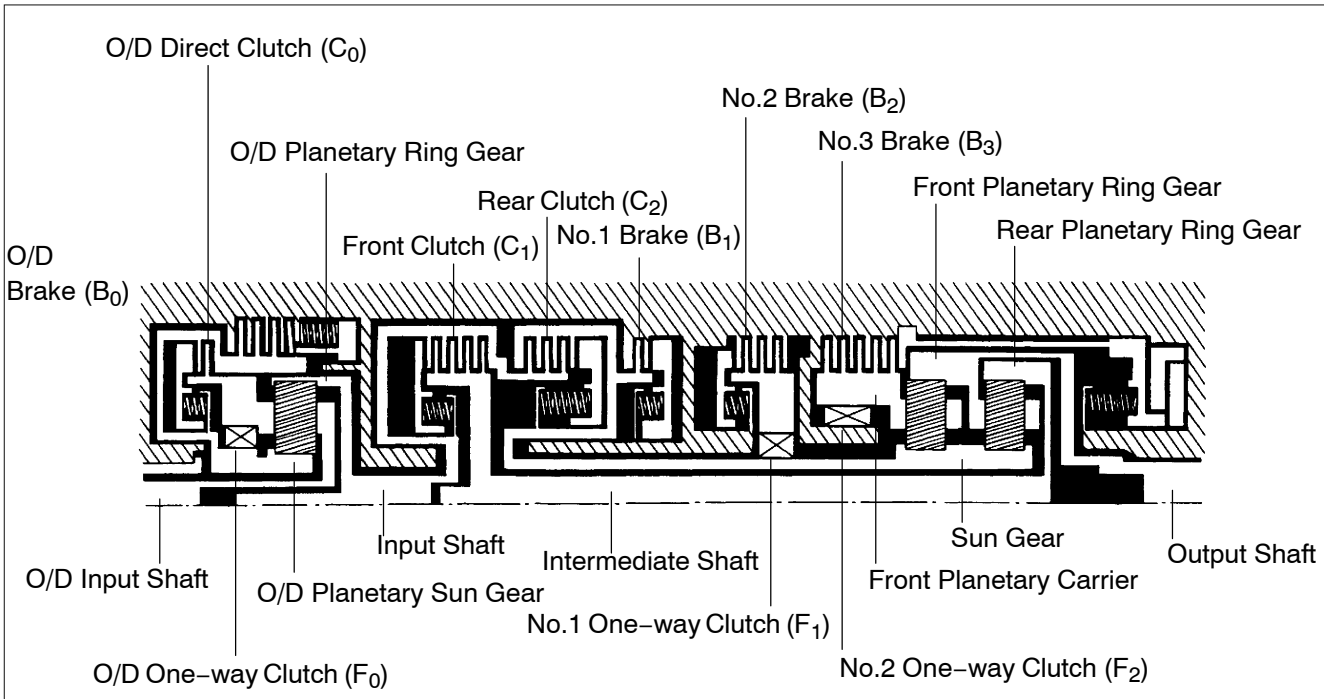


○..... Operating

| Shift lever range | Gear position | $C_0$ | $C_1$ | $C_2$ | | $B_0$ | $B_1$ | $B_2$ | $B_3$ | | $F_0$ | $F_1$ | $F_2$ |
|---|---|---|---|---|---|---|---|---|---|---|---|---|---|
| | | | | I.P. | O.P. | | | | I.P. | O.P. | | | |
| P | Parking | ○ | | | | | | | | | | | |
| R | Reverse | ○ | | ○ | ○ | | | | ○ | ○ | ○ | | |
| N | Neutral | ○ | | | | | | | | | | | |
| D | 1st | ○ | ○ | | | | | | | | ○ | | ○ |
| | 2nd | ○ | ○ | | | | | ○ | | | ○ | ○ | |
| | 3rd | ○ | ○ | ○ | | | | ○ | | | ○ | | |
| | 4th | | ○ | ○ | | ○ | | ○ | | | | | |
| 2 | 1st | ○ | ○ | | | | | | | | ○ | | ○ |
| | 2nd | ○ | ○ | | | | ○ | ○ | | | ○ | ○ | |
| L | 1st | ○ | ○ | | | | | | ○ | ○ | ○ | | ○ |

I.P.: Inner Piston
O.P.: Outer Piston

D00790

## FUNCTION OF COMPONENTS

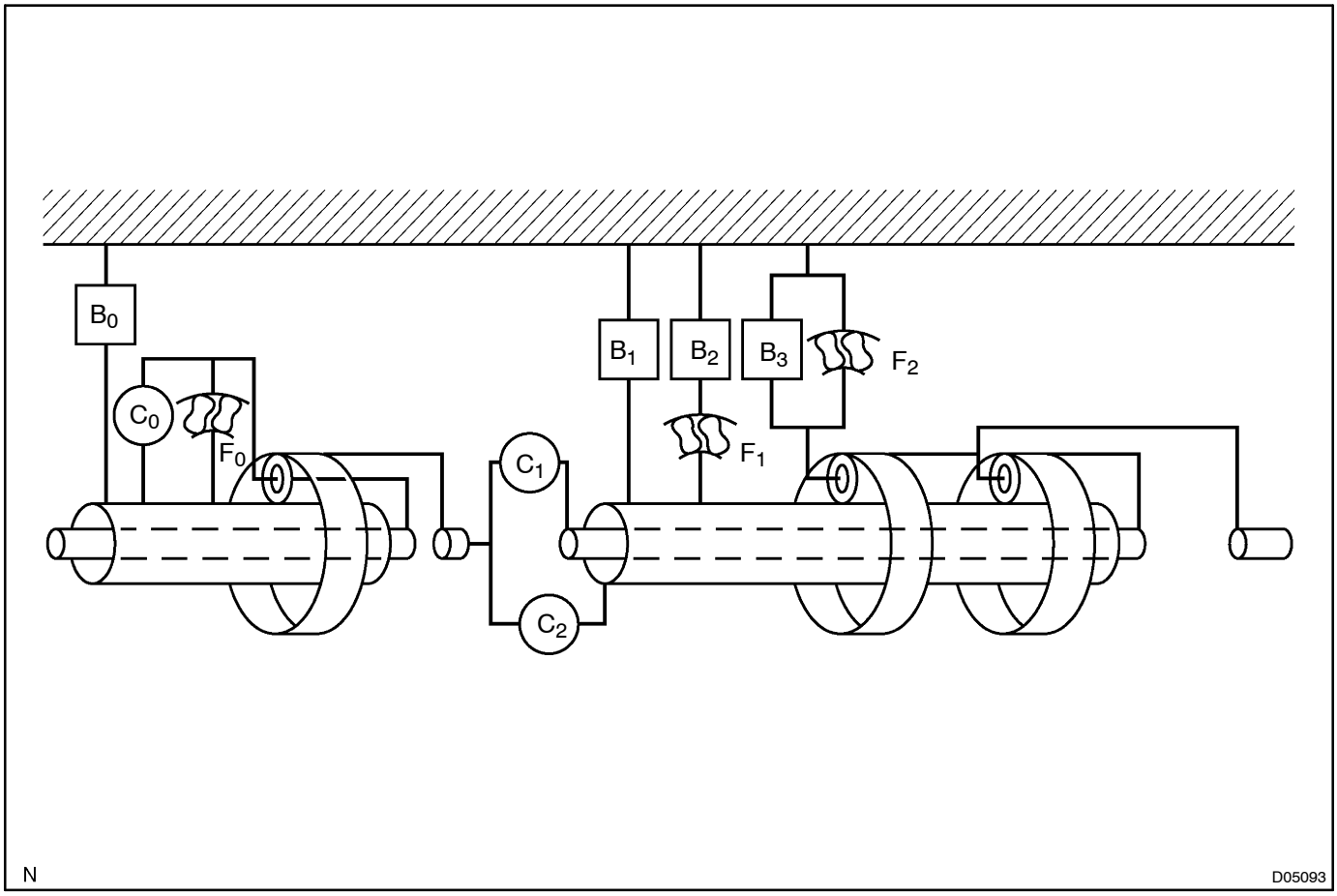


| Component | | Function |
|---|---|---|
| $C_0$ | O/D Direct Clutch | Connects O/D sun gear & O/D planetary carrier. |
| $C_1$ | Forward Clutch | Connects input shaft and intermediate shaft. |
| $C_2$ | Direct Clutch | Connects input shaft and front & rear planetary sun gear. |
| $B_0$ | O/D Brake | Prevents O/D sun gear from turning either clockwise or counterclockwise. |
| $B_1$ | 2nd Coast Brake | Prevents front & rear planetary sun gear from turning either clockwise or counterclockwise. |
| $B_2$ | 2nd Brake | Prevents outer race of $F_1$ from turning either clockwise or counterclockwise thus preventing the front & rear planetary sun gear from turning counterclockwise. |
| $B_3$ | 1st & Reverse Brake | Prevents from planetary carrier from turning either clockwise or counterclockwise. |
| $F_0$ | O/D One−way Clutch | When the transmission is being driven by the engine, this clutch connects the O/D sun gear and O/D planetary carrier. |
| $F_1$ | No. 1 One−way Clutch | When $B_2$ is operating, this clutch prevents the front & rear planetary sun gear from turning counterclockwise. |
| $F_2$ | No. 2 One−way Clutch | Prevents from planetary carrier from turning counterclockwise. |

# COMPONENT PARTS

## COMPONENTS

AT0HZ–01

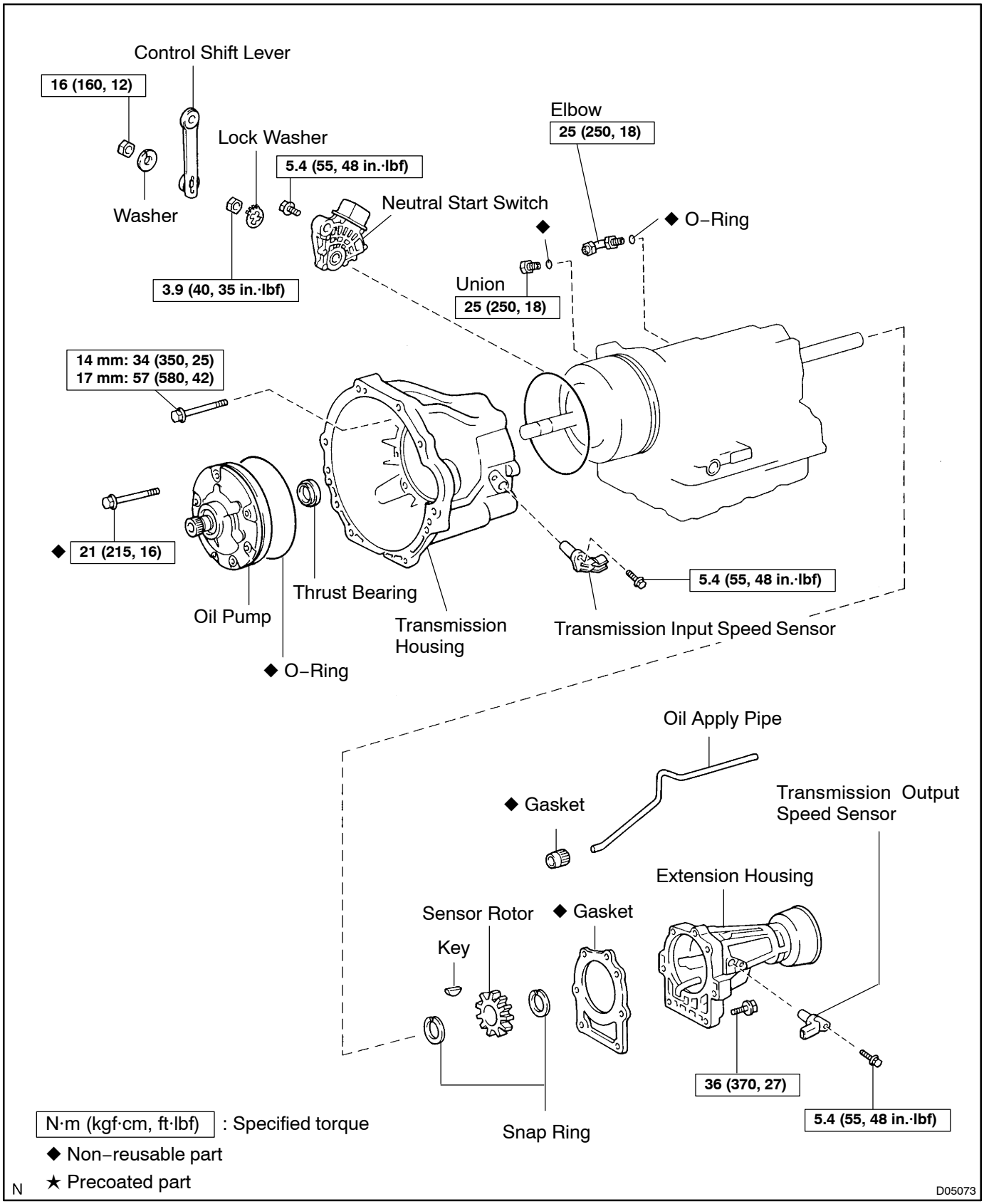

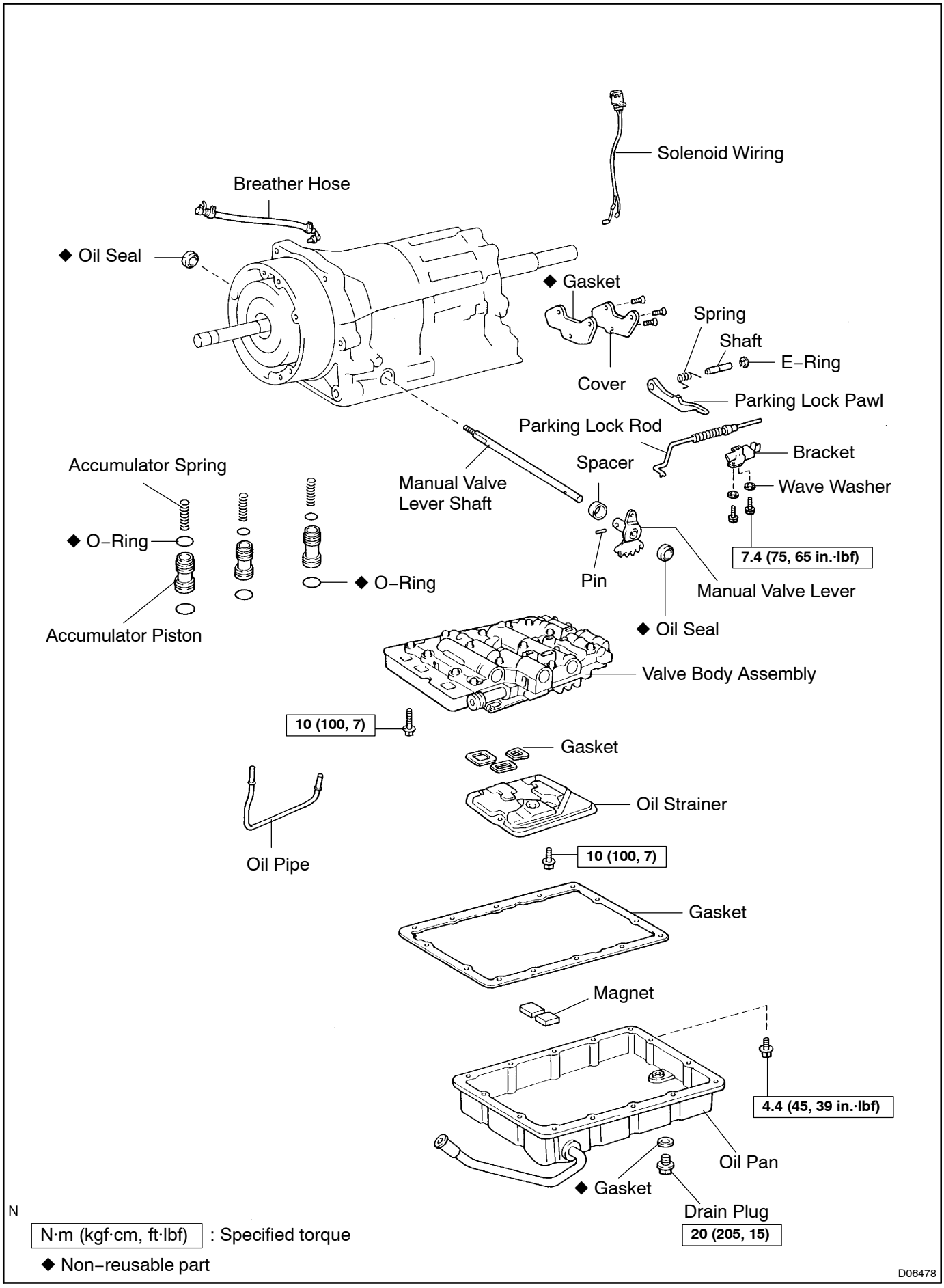
Solenoid Wiring
Breather Hose
◆ Oil Seal
◆ Gasket
Spring
Shaft
E–Ring
Cover
Parking Lock Pawl
Parking Lock Rod
Bracket
Spacer
Wave Washer
Accumulator Spring
Manual Valve
Lever Shaft
◆ O–Ring
7.4 (75, 65 in.·lbf)
Pin
Manual Valve Lever
◆ O–Ring
Accumulator Piston
◆ Oil Seal
Valve Body Assembly
10 (100, 7)
Gasket
Oil Strainer
Oil Pipe
10 (100, 7)
Gasket
Magnet
4.4 (45, 39 in.·lbf)
Oil Pan
◆ Gasket
Drain Plug
20 (205, 15)
N
N·m (kgf·cm, ft·lbf) : Specified torque
◆ Non–reusable part
D06478

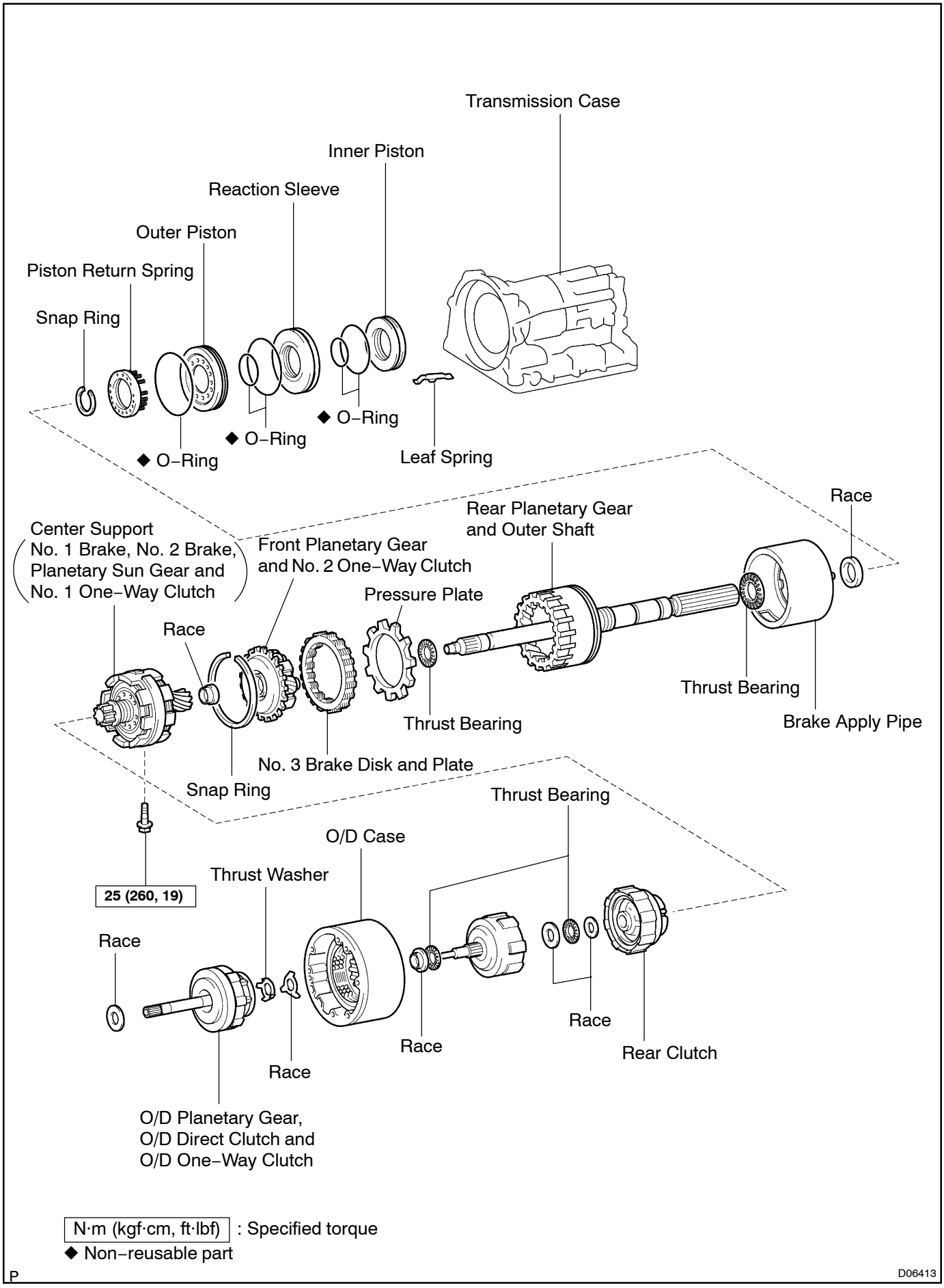
Transmission Case
Inner Piston
Reaction Sleeve
Outer Piston
Piston Return Spring
Snap Ring
◆ O–Ring
◆ O–Ring
◆ O–Ring
Leaf Spring
Race
Rear Planetary Gear and Outer Shaft
Center Support No. 1 Brake, No. 2 Brake, Planetary Sun Gear and No. 1 One–Way Clutch
Front Planetary Gear and No. 2 One–Way Clutch
Pressure Plate
Race
Thrust Bearing
Thrust Bearing
Brake Apply Pipe
No. 3 Brake Disk and Plate
Snap Ring
Thrust Bearing
O/D Case
Thrust Washer
25 (260, 19)
Race
Race
Race
Race
Rear Clutch
O/D Planetary Gear, O/D Direct Clutch and O/D One–Way Clutch
N·m (kgf·cm, ft·lbf) : Specified torque
◆ Non–reusable part
P
D06413

AT0I0–01

# DISASSEMBLY

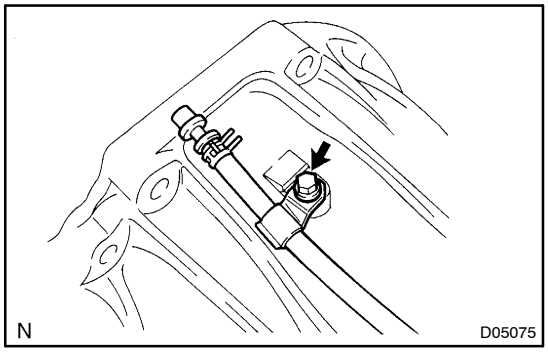


**1. REMOVE BREATHER HOSE**

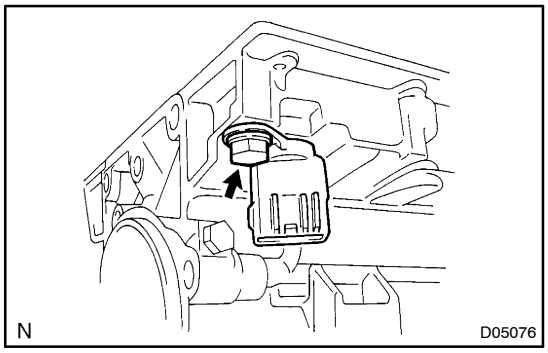


**2. REMOVE SOLENOID WIRE RETAINING BOLT**

**NOTICE:**

**Remove the bolt only and do not remove the solenoid wire.**

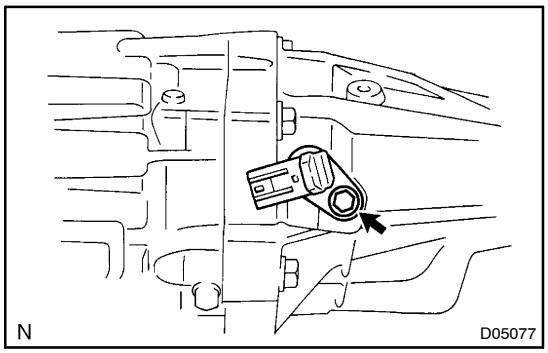


**3. REMOVE TRANSMISSION OUTPUT SPEED SENSOR**

(a) Remove the bolt and transmission output speed sensor.

(b) Remove the O–ring from the sensor.

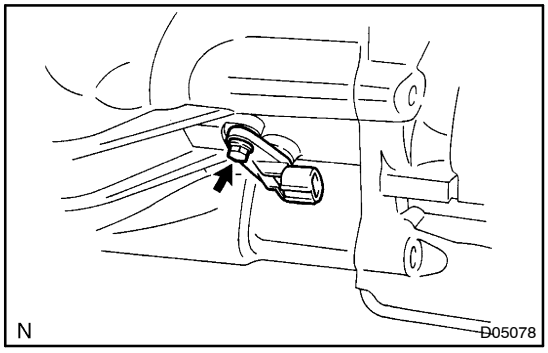


**4. REMOVE TRANSMISSION INPUT SPEED SENSOR**

(a) Remove the bolt and transmission input speed sensor.

(b) Remove the O–ring from the sensor.

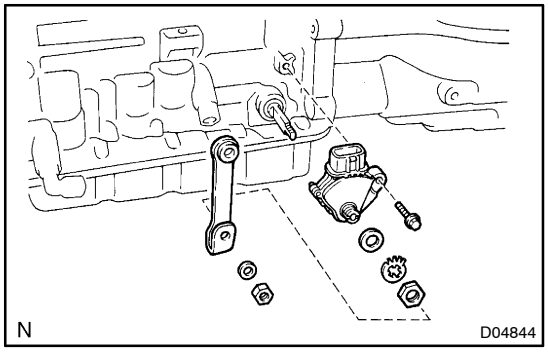


**5. REMOVE TRANSMISSION CONTROL SHIFT LEVER**

Remove the nut and washer.

**6. REMOVE NEUTRAL START SWITCH**

(a) Unstake the lock washer.

(b) Remove the lock washer.

(c) Remove the nut and bolt, and then remove the neutral start switch.

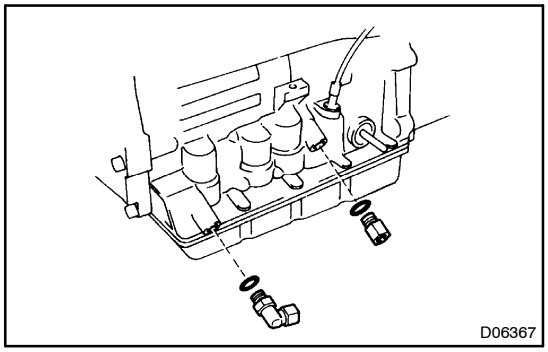


**7. REMOVE UNION AND ELBOW**

(a) Remove the union and elbow.

(b) Remove the 2 O–rings from the union and elbow.

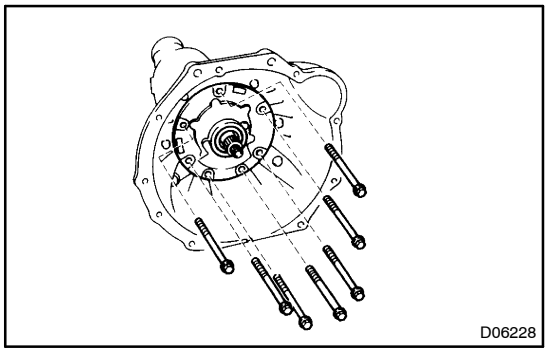


**8. REMOVE OIL PUMP**

(a) Remove the 7 bolts holding the oil pump to the transmission case.

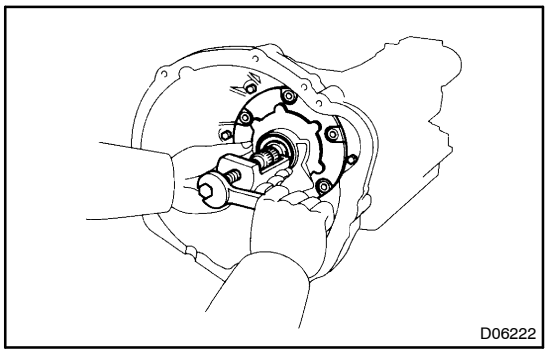


(b) Using SST, remove the oil pump.
SST 09610–20012

**NOTICE:**

**Do not damage the stator shaft busing surface.**

(c) Grasp the front pump stator shaft and pull the pump from the case.

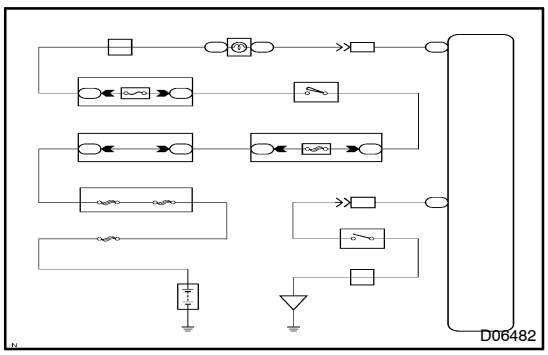


**9. REMOVE ASSEMBLED BEARING AND RACE FROM OIL PUMP**

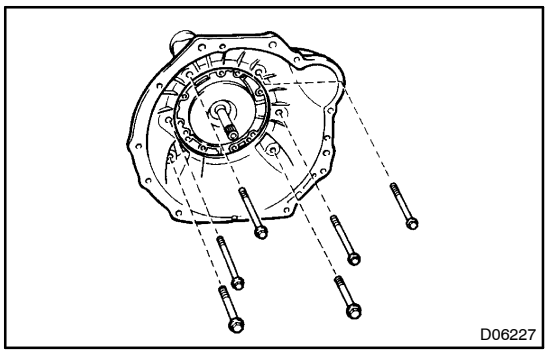


**10. REMOVE TRANSMISSION HOUSING**

(a) Remove the 6 bolts.

(b) While holding the input shaft, remove the transmission housing.

(c) Remove the O–ring from the O/D case.

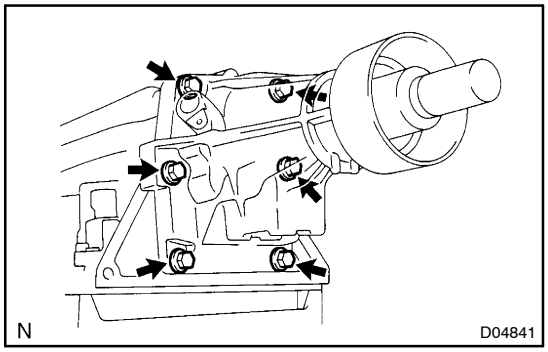


**11. REMOVE EXTENSION HOUSING AND GASKET**

(a) Remove the 6 bolts and extension housing.

(b) Remove the gasket.

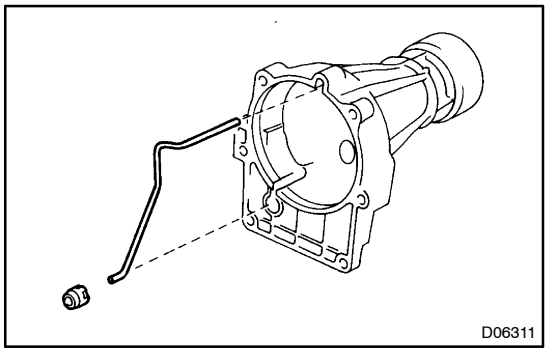


(c) Remove the gasket and oil apply pipe from the extension housing.

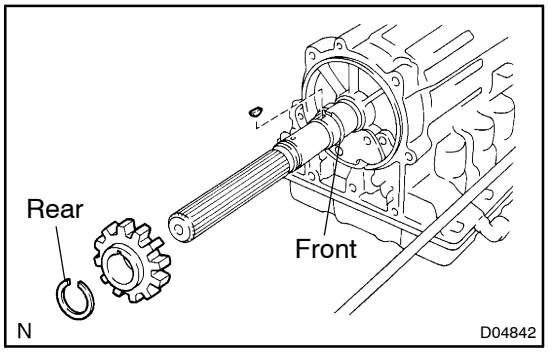


**12. REMOVE SENSOR ROTOR AND KEY**

(a) Using a snap ring expander, remove the rear side snap ring.

(b) Remove the sensor rotor and key.

(c) Using a snap ring expander, remove the front side snap ring.

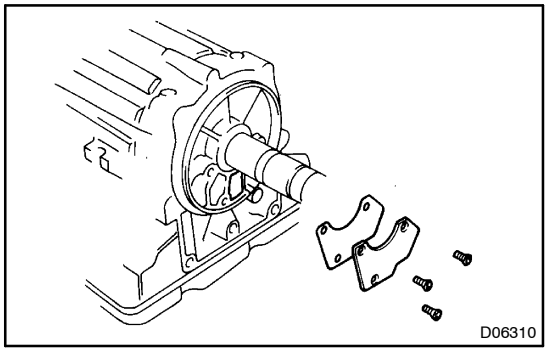


**13. REMOVE GOVERNOR OIL STRAINER**

(a) Remove the 3 screws, cover and gasket.

(b) Remove the governor oil strainer from the transmission case.

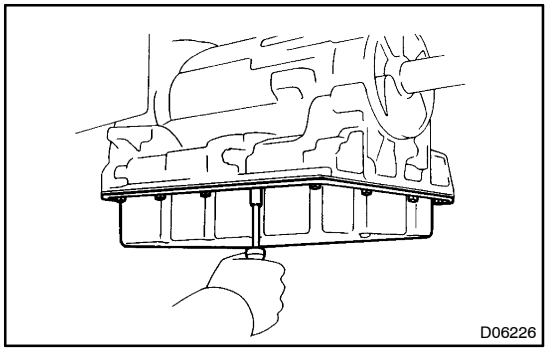


**14. REMOVE OIL PAN**

**NOTICE:**

**Do not turn the transmission over as this will contaminate the valve body with any foreign matter at the bottom on the pan.**

(a) Remove the 14 bolts.

(b) Remove the pan by lifting the transmission case.

(c) Remove the oil pan gasket.

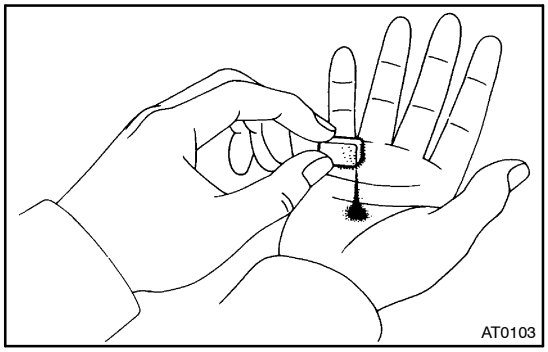


**15. EXAMINE PARTICLES IN PAN**

Remove the magnets and use then to collect any steel chips. Look carefully at the chips and particles in the pan and the magnet to anticipate what type of wear you will fine in the transmission.

Steel (magnetic): bearing, gear and plate wear

Brass (non–magnetic): bushing wear

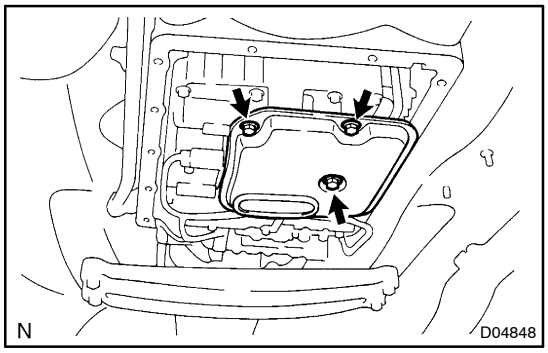


**16. REMOVE OIL STRAINER**

(a) Remove the 3 bolts and oil strainer.

(b) Remove the 3 gaskets.

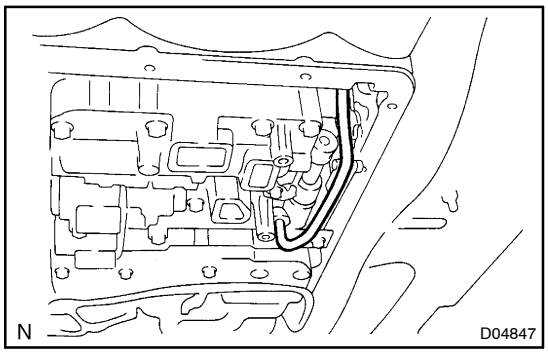


**17. REMOVE OIL PIPE**

Pry up both oil pipe ends with a large screwdriver and remove the oil pipe.

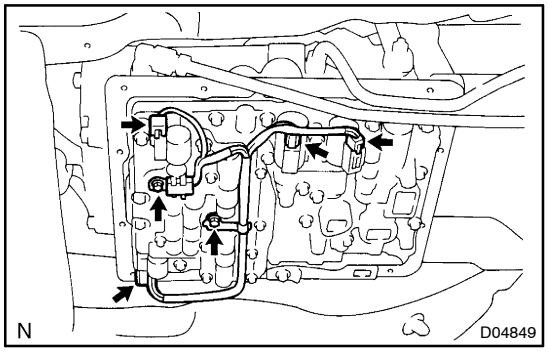


**18. REMOVE SOLENOID WIRING WITH ATF TEMPERATURE SENSOR**

(a) Remove the bolt and disconnect the ATF temperature sensor.

(b) Remove the bolt and clamp.

(c) Disconnect the 4 connectors from the solenoid.

(d) Remove the clamp from the ATF temperature sensor.

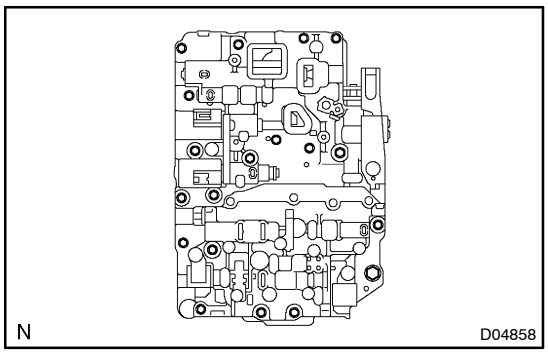


**19. REMOVE VALVE BODY**

(a) Remove the 17 bolts.

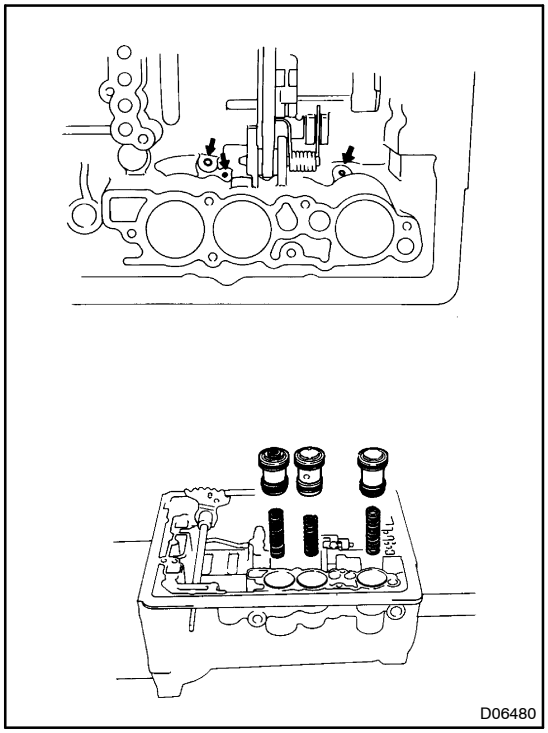


**20. REMOVE ACCUMULATOR PISTON AND SPRING**

**CAUTION:**

**Keep face away to avoid injury. Do not use regular high−pressure air.**

(a) Position a rag to catch each piston.

(b) Applying compressed air to the oil holes shown, and remove the 3 pistons and springs.

(c) Remove the 2 O−rings from each piston.

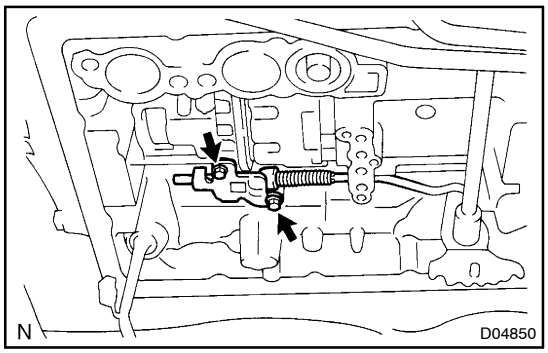


**21. REMOVE PARKING LOCK PAWL BRACKET**

Remove the 2 bolts and parking lock pawl bracket.

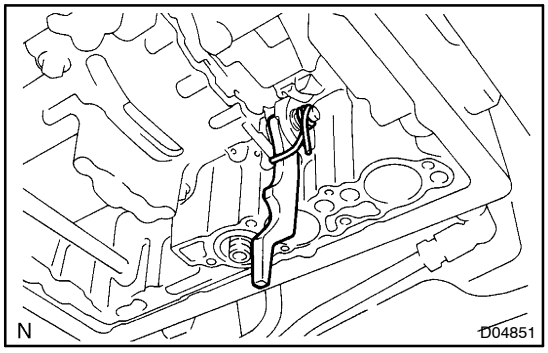


**22. REMOVE SPRING, PARKING LOCK PAWL PIN AND PARKING LOCK PAWL**

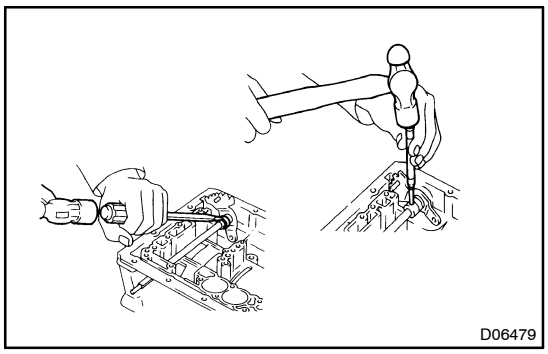


**23. REMOVE MANUAL VALVE LEVER SHAFT**

(a) Using a hammer and screwdriver, pry and shift the spacer.

(b) Using a hammer and pin punch, drive out the pin.

(c) Slide the manual valve lever shaft out case and remove the manual valve lever and spacer.

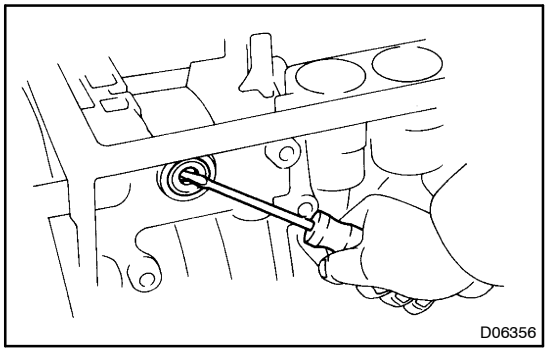


(d) Using a screwdriver, remove the 2 oil seals.

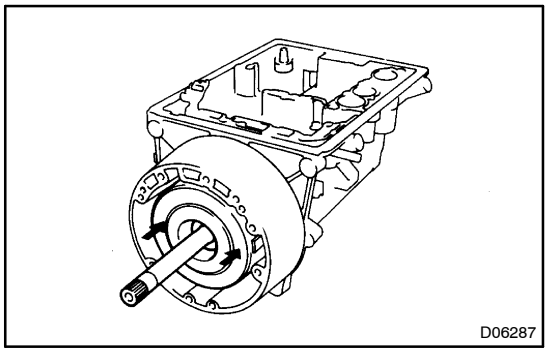


**24. MEASURE INSTALLATION DISTANCE OF O/D DIRECT CLUTCH**

(a) Push the input shaft and drum toward the rear to make sure the O/D direct clutch is installed correctly.

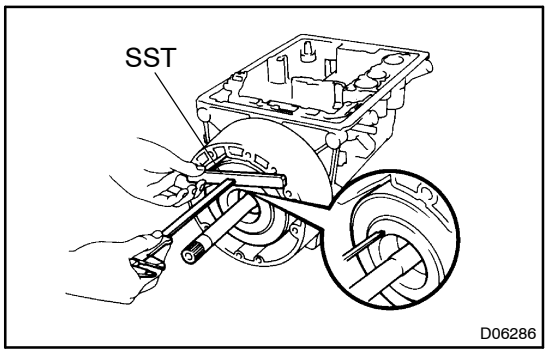


(b) Place SST on the O/D case.
SST 09350–20015 (09370–12010)

(c) Using calipers, measure distance between the tops of SST and clutch drum.

HINT:
Make a note of the measurement for the reference at assembly.

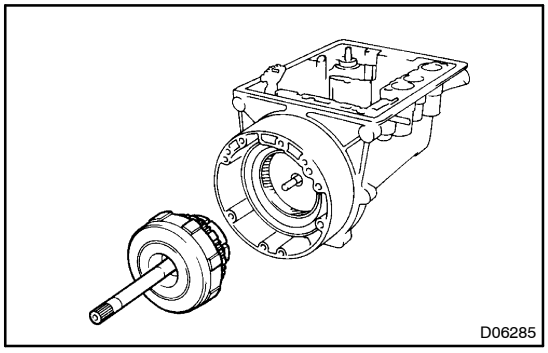


**25. REMOVE O/D PLANETARY GEAR UNIT WITH O/D DIRECT CLUTCH AND ONE–WAY CLUTCH**

(a) Remove the O/D planetary gear with the O/D direct clutch and one–way clutch from the O/D case.

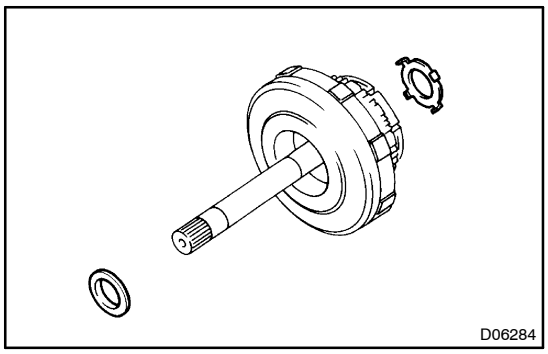


(b) Remove the race and thrust washer.

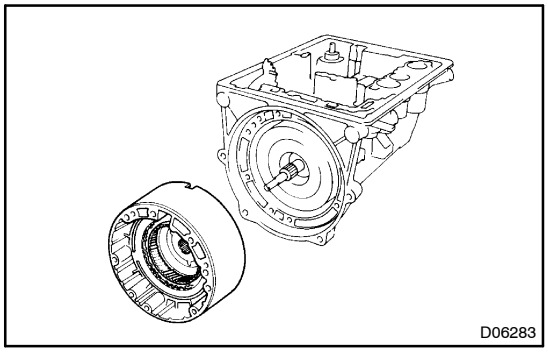


**26. REMOVE O/D CASE**

(a) Remove the O/D case from the transmission case.

HINT:

When the O/D case is removed, the front clutch sometimes adheres to it.

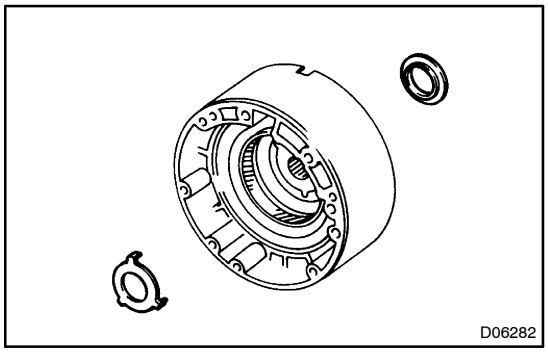


(b) Remove the 2 races.

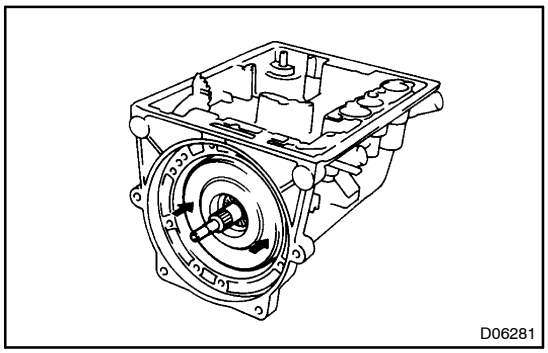


**27. MEASURE INSTALLATION DISTANCE OF FRONT CLUTCH**

(a) Push the input shaft and drum toward the rear to make sure the front clutch is installed correctly.

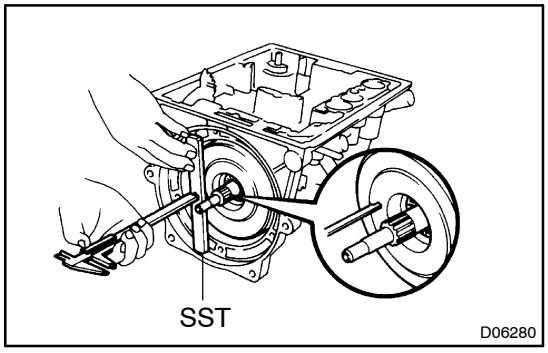


(b) Place SST on the transmission case.
SST 09350–20015 (09370–12010)

(c) Using calipers, measure distance between the tops of SST and clutch drum.

HINT:

Make a note of the measurement for the reference at assembly.

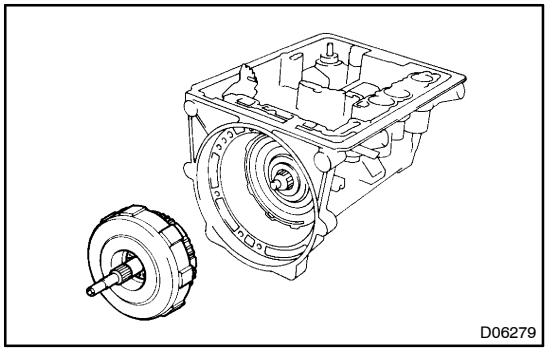


**28. REMOVE FRONT CLUTCH**

(a) Remove the front clutch from the transmission case.

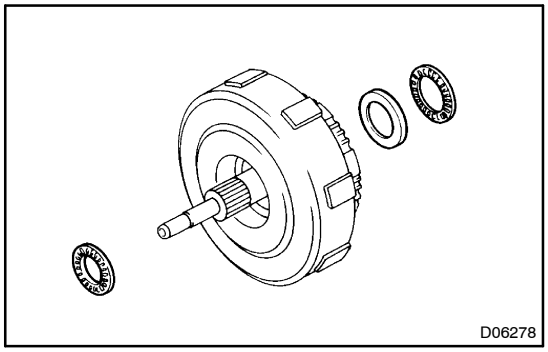


(b) Remove the 2 bearings and race.

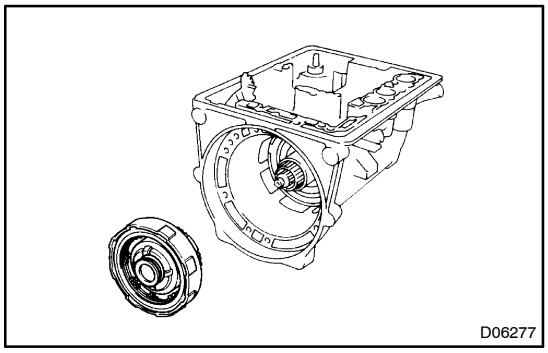


**29. REMOVE REAR CLUTCH**

(a) Remove the rear clutch from the transmission case.

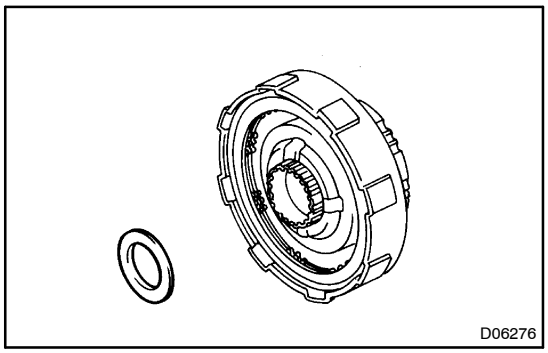


(b) Remove the race.

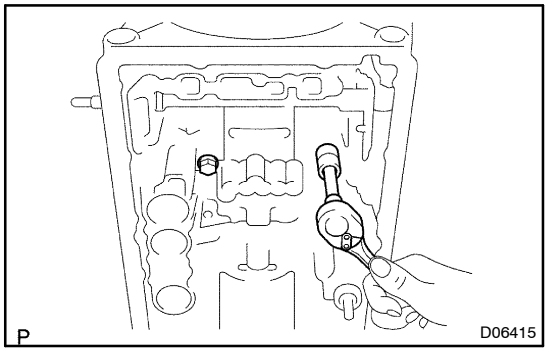


**30. REMOVE CENTER SUPPORT**

(a) Remove the 2 center support bolts and wave washers.

HINT:

After removing 1 bolt, the other 1 will be loose.

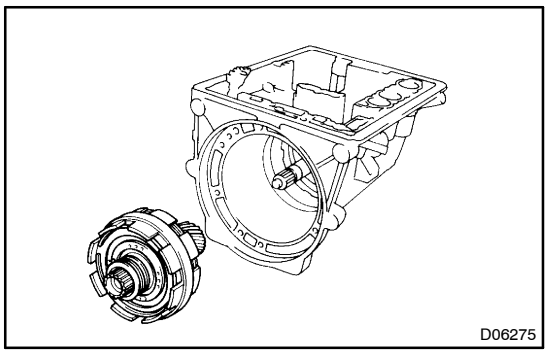


(b) Remove the center support form the transmission case.

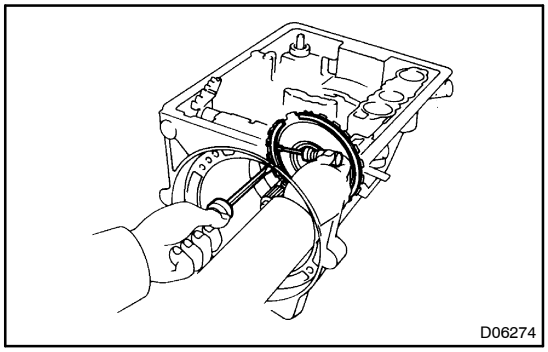


**31. REMOVE FRONT PLANETARY GEAR UNIT**

(a) Using 2 screwdrivers, remove the snap ring.

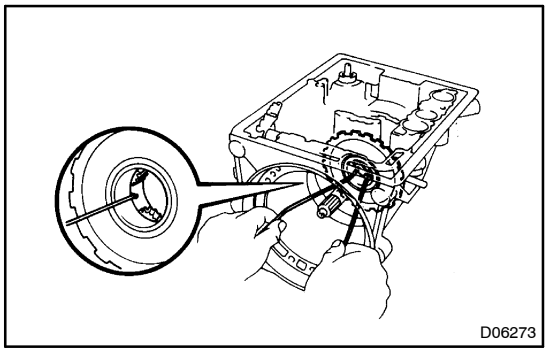


(b) Insert the 2 wires into the planetary gear nd remove it.

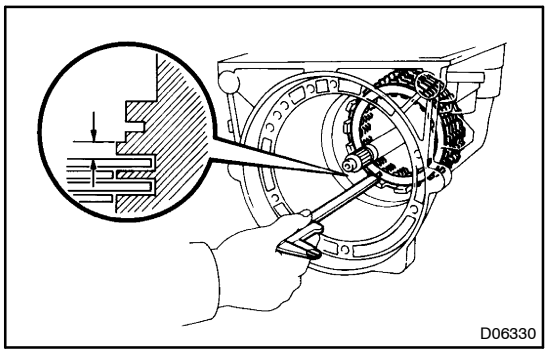


**32. CHECK PACK CLEARANCE OF NO. 3 BRAKE**

Using calipers, measure the clearance between the disc and transmission case, as shown.

**Clearance:**

**0.52 – 1.27 mm (0.0205 – 0.0500 in.)**

If the values are non–standard, inspect the discs (See page AT–78).

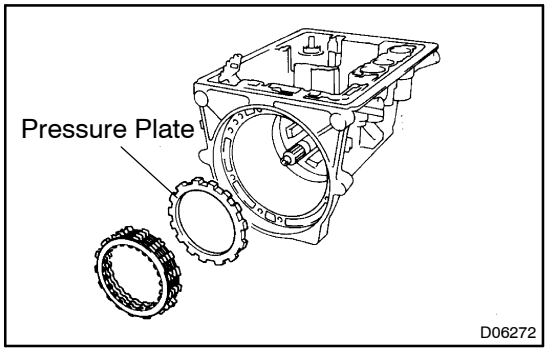


**33. REMOVE NO. 3 BRAKE PACK AND PRESSURE PLATE**

(a) Remove the 5 discs and 4 plates.

(b) Remove the pressure plate.

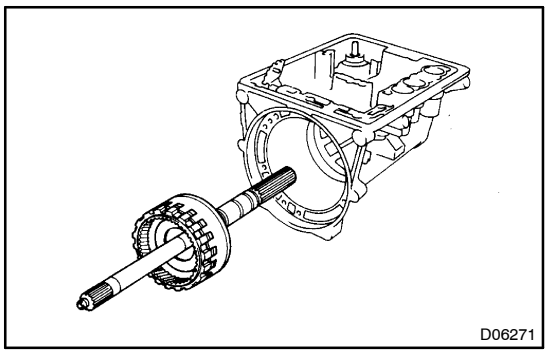


**34. REMOVE REAR PLANETARY GEAR UNIT AND OUTPUT SHAFT**

(a) Remove the rear planetary gear unit and output shaft.

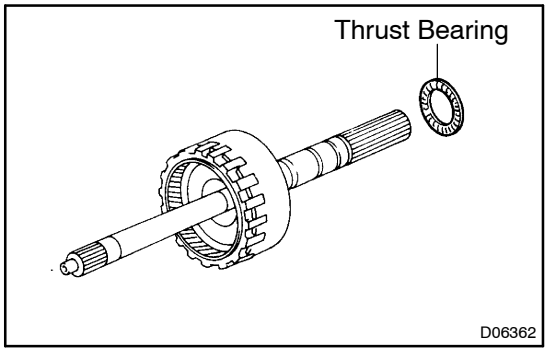


(b) Remove the bearing.

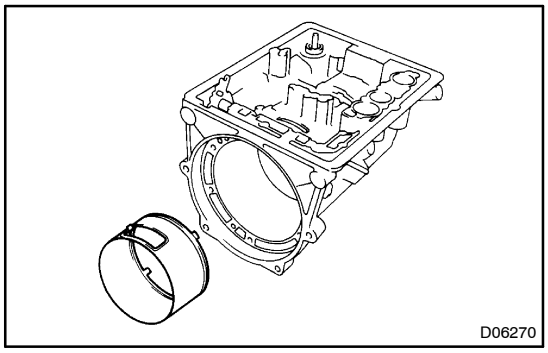


**35. REMOVE BRAKE APPLY PIPE**

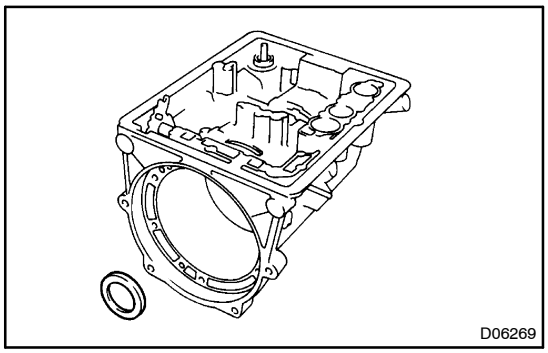


**36. REMOVE RACE**

Remove the race from the transmission case.

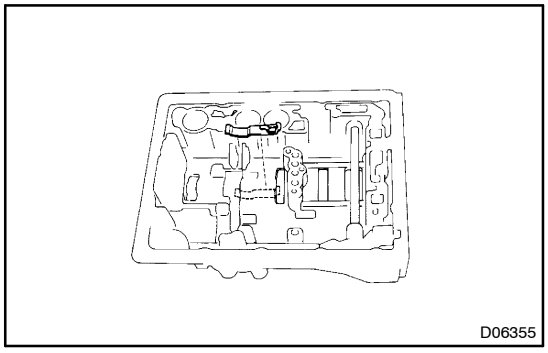


**37. REMOVE LEAF SPRING**

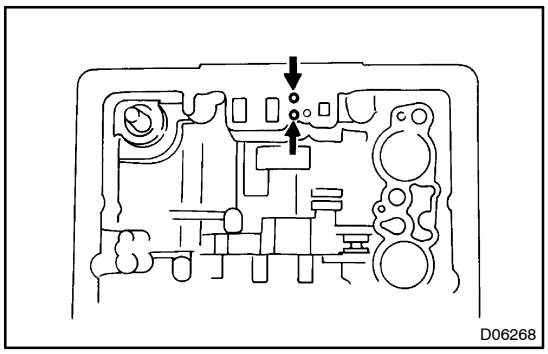


**38. CHECK NO. 3 BRAKE PISTON MOVING**

Make sure the No. 3 brake pistons move smoothly when applying and releasing the compressed air into the transmission case.

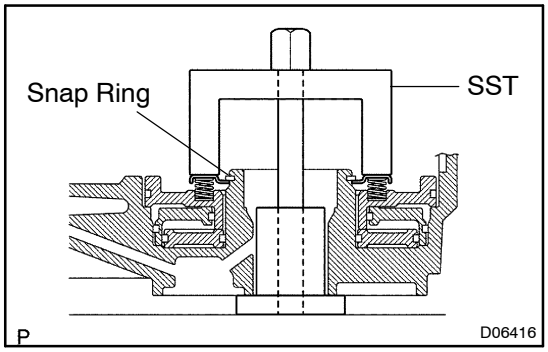


**39. REMOVE COMPONENTS OF NO. 3 BRAKE PISTON**

(a) Set SST on the spring retainer, and compress the return springs.
SST 09350−20015 (09369−20040)

(b) Using a snap ring expander, remove the snap ring.

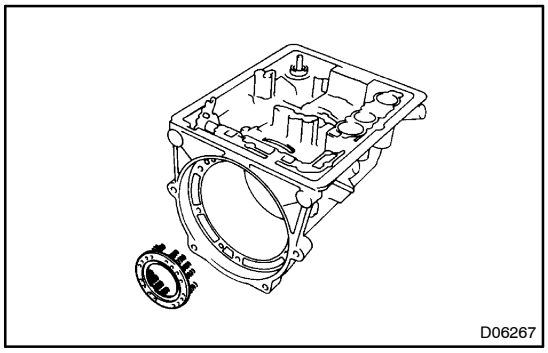


(c) Remove the piston return spring.

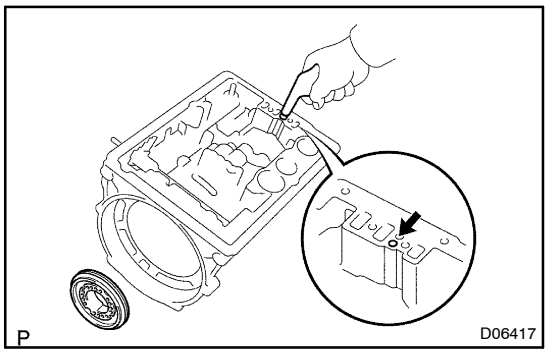


(d) Hold outer piston with hand, apply compressed air to the transmission case to remove the outer piston.

If the piston does not pop out with compressed air, lift the piston out with needle−nose pliers.

(e) Remove the O−ring from the outer piston.

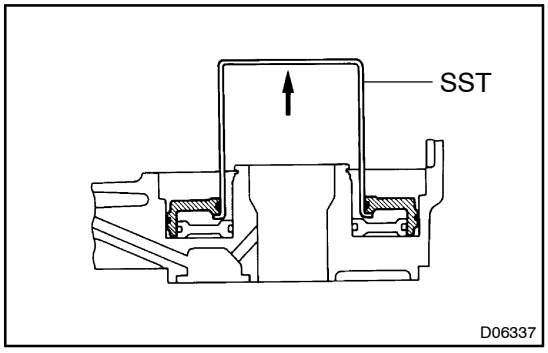


(f) Insert SST behind the reaction sleeve and gradually lift it out of the transmission case.
SST 09350−30020 (09350−07080)

(g) Remove the 2 O−rings from the reaction sleeve.

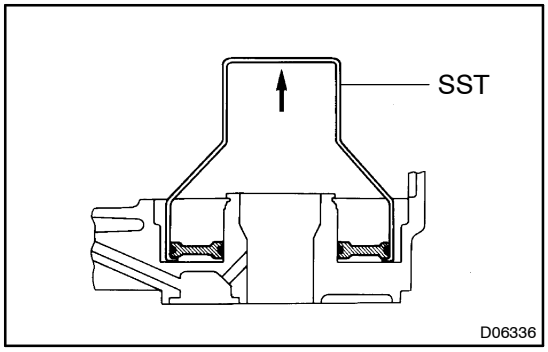


(h) Insert SST behind the inner piston and gradually lift it out of the transmission case.
SST 09350−30020 (09350−07090)

(i) Remove the 2 O−rings from the inner piston.

AT0I1−01

# REASSEMBLY

**NOTICE:**

- **The automatic transmission is composed of highly precision−finished parts, necessitating careful inspection before reassembly because even a small nick could cause fluid leakage or affect the performance. The instructions here are organized so that you work on only one component group at a time. This will help avoid confusion from similar−looking parts of different sub−assemblies being on your workbench at the same time. The component groups are inspected and repaired from the converter housing side. As much as possible, complete the inspection, repair and reassembly before proceeding to the next component group. If a defect is found in a certain component group during reassembly, inspect and repair this group immediately. If a component group cannot be assembled because parts are being ordered, be sure to keep all parts of the group in a separate container while proceeding with disassembly, inspection, repair and reassembly of other component groups.**
  **Recommended ATF: TYPE T−IV or equivalent**
- **All disassembled parts should be washed clean and any fluid passages and holes should be blown through with compressed air.**
- **Dry all parts with compressed air−never use shop rags.**
- **When using compressed air, always aim away from yourself to prevent accidentally spraying ATF or kerosene on your face.**
- **The recommended automatic transaxle fluid or kerosene should be used for cleaning.**
- **After cleaning, the parts should be arranged in the correct order for efficient inspection, repairs, and reassembly.**
- **When disassembling a valve body, be sure to match each valve together with the corresponding spring.**
- **New discs for the brakes and clutches that are to be used for replacement must be soaked in ATF for at least 15 minutes before reassembly.**
- **All oil seal rings, clutch discs, clutch plates, rotating parts, and sliding surfaces should be coated with ATF prior to reassembly.**
- **All gaskets and rubber O−rings should be replaced.**
- **Do not apply adhesive cements to gaskets and similar parts.**
- **Make sure that the ends of a snap ring are not aligned with one of the cutouts and are installed in the groove correctly.**
- **If a worn bushing is to be replaced, the sub−assembly containing the bushing must also be replaced.**
- **Check thrust bearings and races for wear or damage. Replace if necessary.**
- **Use petroleum jelly to keep parts in place.**
- **When working with FIPG material, you must observe the following.**
  **Using a razor blade and a gasket scraper, remove all the old packing (FIPG) material from the gasket surface.**
  **Thoroughly clean all components to remove all the loose material.**
  **Clean both sealing surfaces with a non−residue solvent.**
  **Parts must be reassembled within 10 minutes of application. Otherwise, the packing (FIPG) material must be removed and reapplied.**

## BEARING AND RACES INSTALLATION POSITION AND DIRECTION

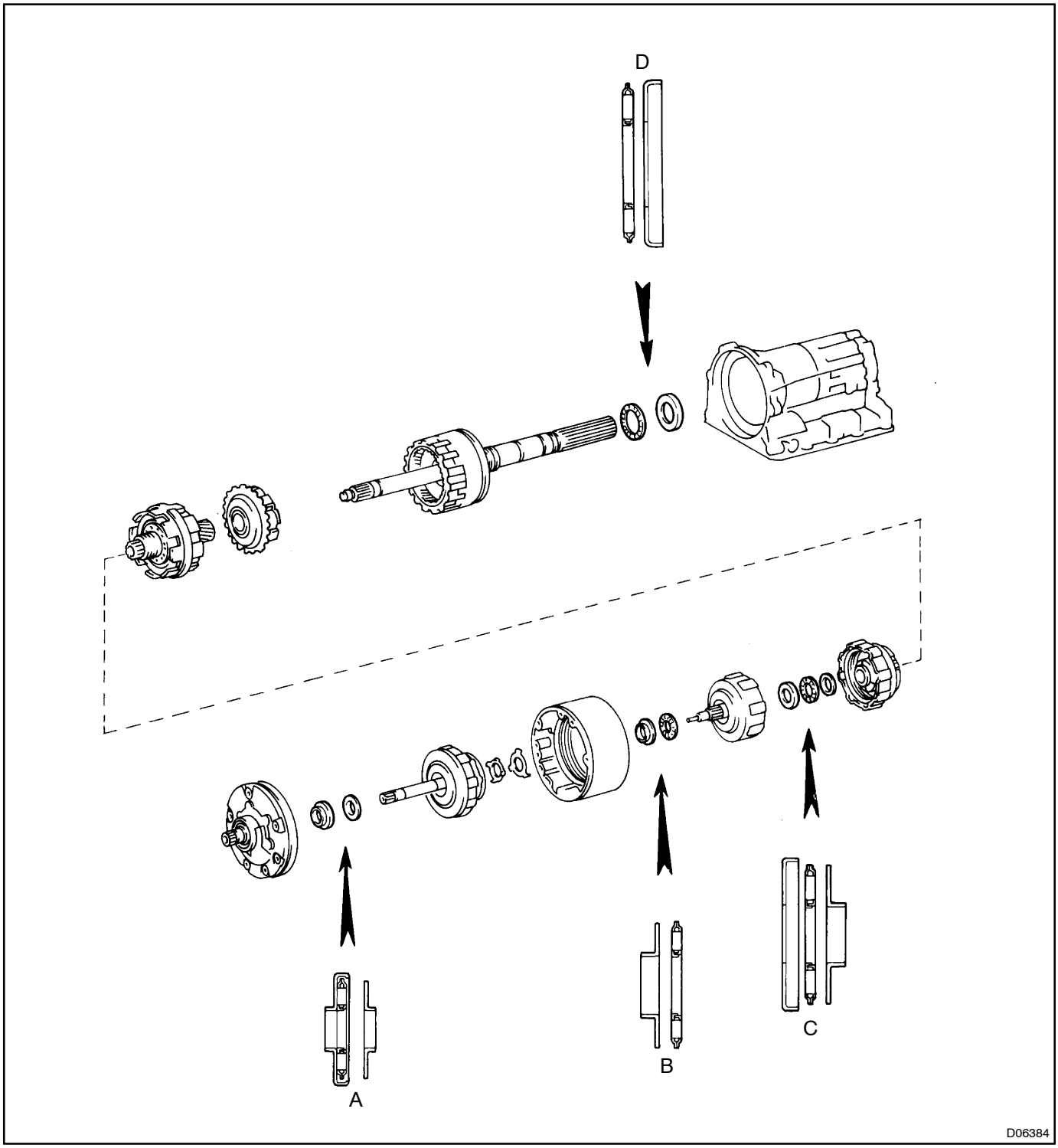


| Mark | Front Race Diameter<br>Inside / Outside mm (in.) | Thrust Bearing Diameter<br>Inside / Outside mm (in.) | Rear Race Diameter<br>Inside / Outside mm (in.) |
|---|---|---|---|
| A | – | 24.3 (0.957) / 43.2 (1.701) | 24.3 (0.957) / 39.1 (1.539) |
| B | 24.1 (0.949) / 37.3 (1.469) | 23.4 (0.921) / 37.5 (1.476) | – |
| C | 30.1 (1.185) / 48.5 (1.909) | 28.4 (1.118) / 46.4 (1.827) | 27.6 (1.087) / 44.5 (1.752) |
| D | – | 38.2 (1.504) / 55.2 (2.173) | 39.2 (1.543) / 57.5 (2.264) |

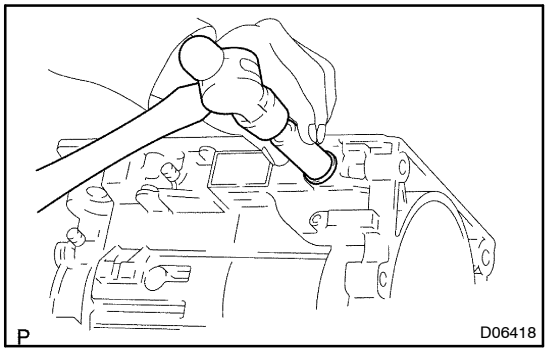


**1. INSTALL MANUAL VALVE LEVER, SHAFT AND OIL SEAL**

(a) Using SST, drive in 2 new oil seals as far as they will go.
SST 09350–20015 (09361–30011)

(b) Coat the oil seal lips with MP grease.

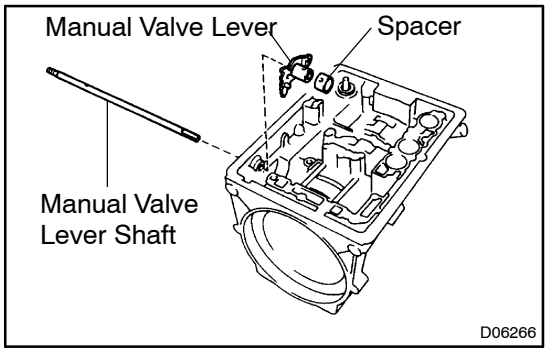


(c) Assembled a new spacer to the manual valve lever.

(d) Install the manual valve lever shaft to the transmission case through the manual valve lever.

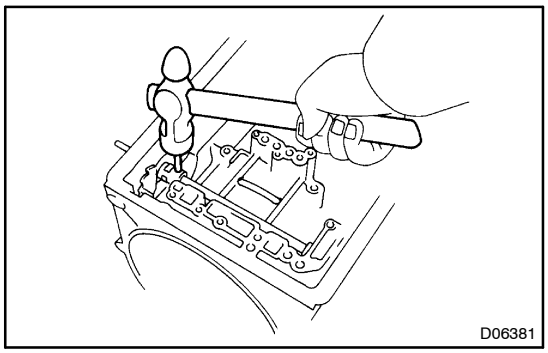


(e) Drive in the pin to the shaft.

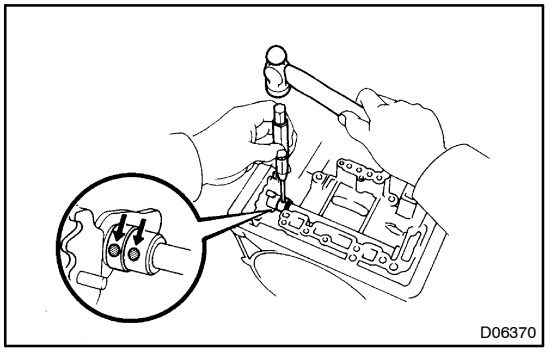


(f) Match the spacer hole to the lever calking hollow and calk the spacer to the lever.

(g) Make sure that the manual valve lever shaft turns smoothly.

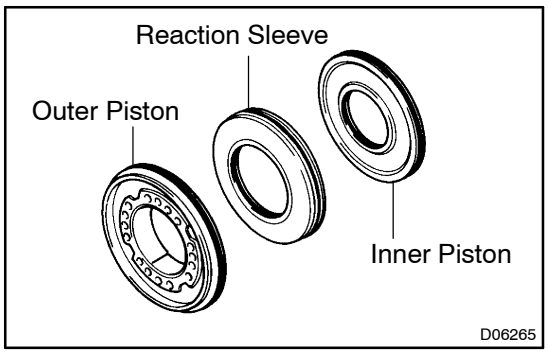


**2. INSTALL COMPONENTS OF NO. 3 BRAKE PISTON**

(a) Coat 5 new O–rings to the inner piston, reaction sleeve and outer piston.

**NOTICE:**

**The thinner O–ring goes on the outside of the reaction sleeve.**

(b) Assemble the inner piston, reaction sleeve and outer piston.

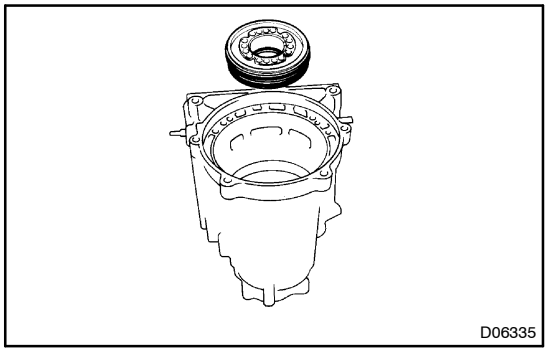


(c) Stand up the transmission case.
(d) Being careful not to damage the O−rings, press in the assembled pistons into the transmission case with hand.

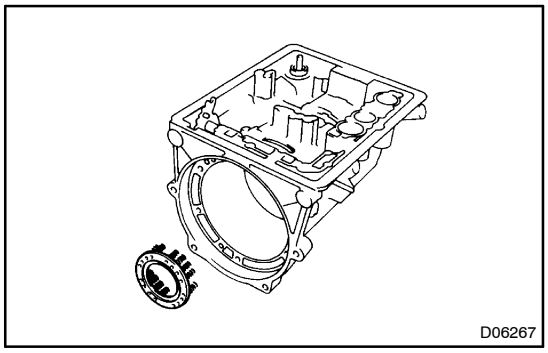


(e) Place the piston return spring onto the outer piston.

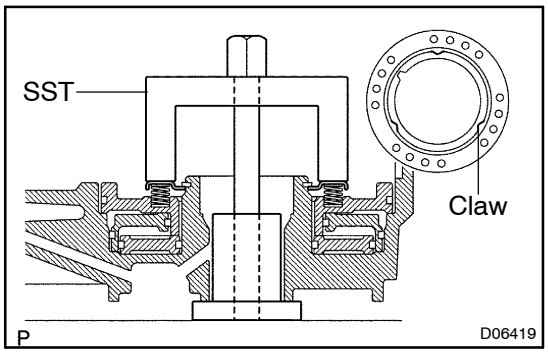


(f) Set SST as shown, and compress the return springs with SST.
SST 09350−20015 (09369−20040)
(g) Install the snap ring with a snap ring expander. Be sure that the end gap of the snap ring is not aligned with the spring seat claw.

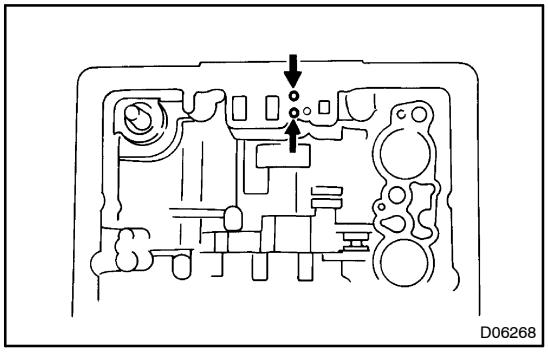


**3. CHECK NO. 3 BRAKE PISTONS MOVING**

Make sure that the No. 3 brake pistons move smoothly when applying and releasing the compressed air into the transmission case.

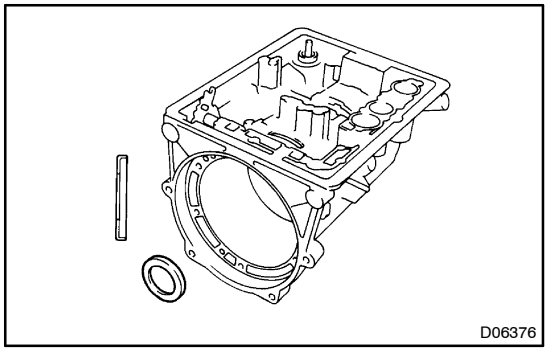


**4. INSTALL RACE**

Coat the race with petroleum jelly and install it onto the transmission case.

**Race diameter:**

| | Inside mm (in.) | Outside mm (in.) |
|---|---|---|
| Race | 39.2 (1.543) | 57.5 (2.264) |

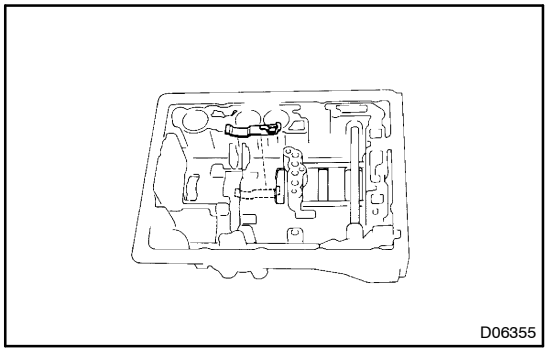


**5. INSTALL LEAF SPRING**

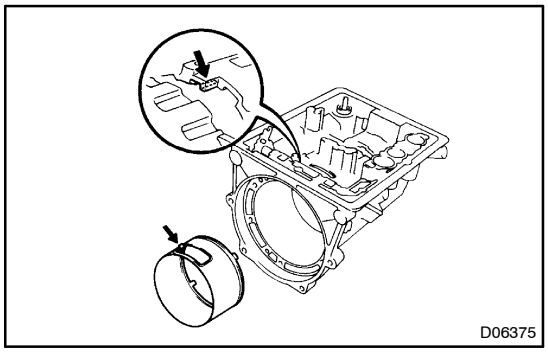


**6. INSTALL BREAK APPLY PIPE**

Install the pipe, aligning its locking tab with the cutout of the case.

HINT:

Make sure that the lips of the pipe end are completely inserted into the outer piston.

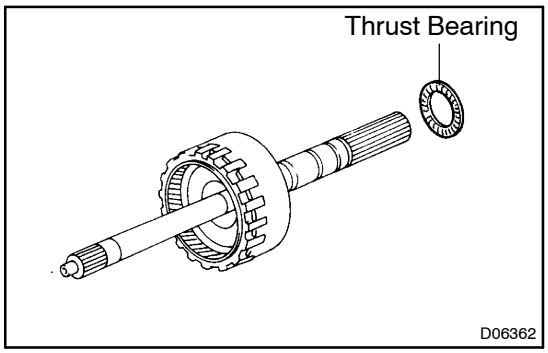


**7. INSTALL REAR PLANETARY GEAR UNIT AND OUTPUT SHAFT**

(a) Coat the bearing with petroleum jelly and install them onto the rear planetary gear unit.

**Bearing diameter:**

| | Inside mm (in.) | Outside mm (in.) |
|---|---|---|
| Bearing | 38.2 (1.504) | 55.2 (2.173) |

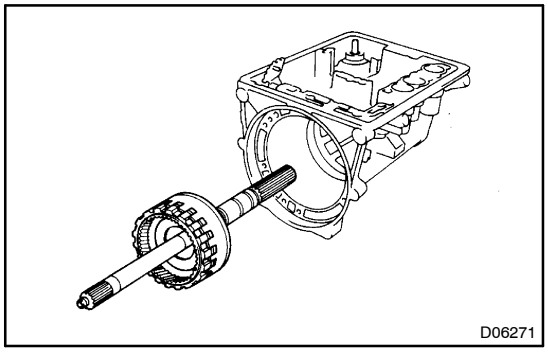


(b) Install the rear planetary gear unit to the transmission case.

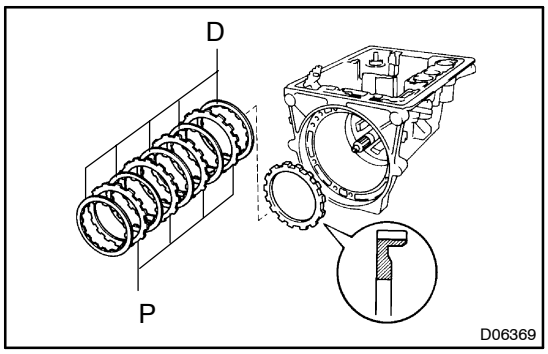


**8. INSTALL PRESSURE PLATE, DISC AND PLATE**

(a) Install the pressure plate, the flat surface facing forward.

(b) Install the 5 discs and 4 plates.

**Install in order: P = Plate D = Disc**

**D – P – D – P – D – P – D – P – D**

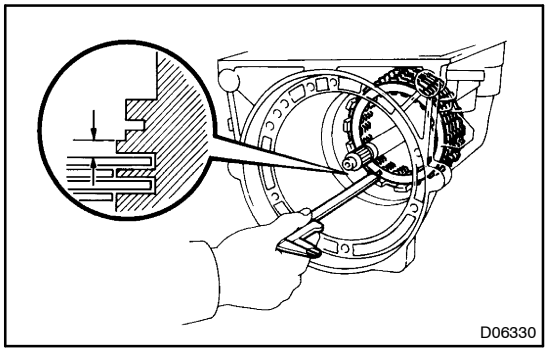


**9. CHECK PACK CLEARANCE OF NO. 3 BRAKE**

Using calipers, measure the clearance between the disc and transmission case, as shown.

**Clearance:**
**0.52 – 1.27 mm (0.0205 – 0.0500 in.)**

If the values are non–standard, select another flange.

HINT:

There are 6 different thickness for the flange.

**Flange thickness:**

| No. | Thickness mm (in.) | No. | Thickness mm (in.) |
|---|---|---|---|
| – | 3.00 (0.1181) | 375 | 3.75 (0.1477) |
| 325 | 3.25 (0.1280) | 400 | 4.00 (0.1575) |
| 350 | 3.50 (0.1378) | 425 | 4.25 (0.1674) |

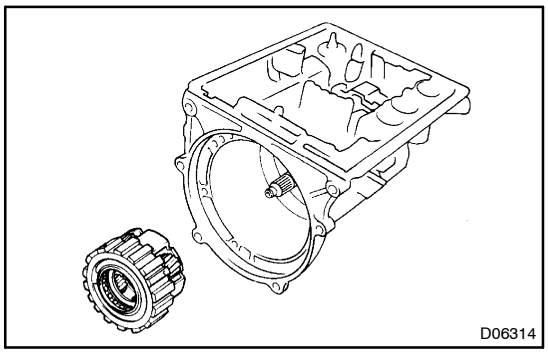


**10. INSTALL FRONT PLANETARY GEAR UNIT**

(a) Remove the one–way clutch inner race from the planetary gear unit.

(b) Install the front planetary gear unit.

HINT:

Mesh the splines of the planetary gear with the flukes of the discs by rotating and pushing the planetary gear.

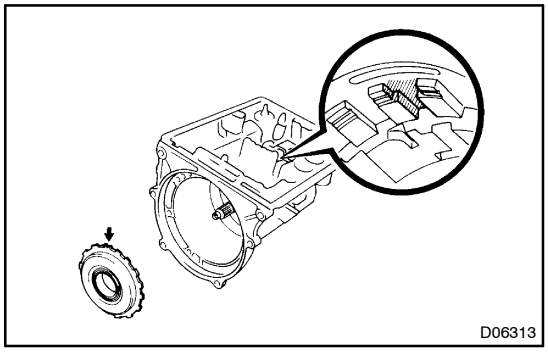


(c) Position the notched tooth of the inner race toward the valve body side of the case. Push it into place.

HINT:

The inner race is correctly installed if the snap rings groove is fully visible.

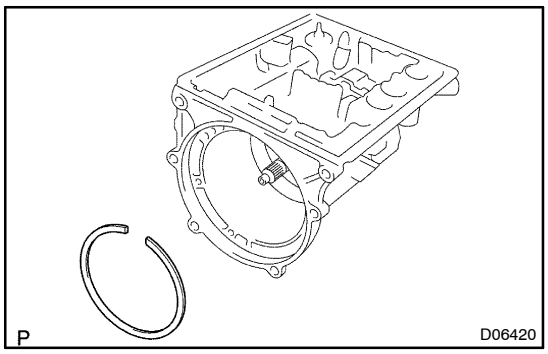


(d) Using a screwdriver, install the snap ring.

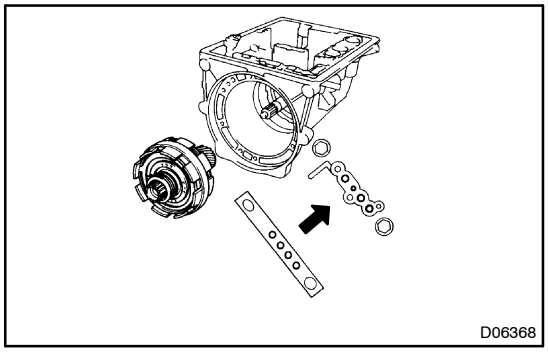


**11. INSTALL CENTER SUPPORT**

(a) Aim the bolt and oil holes of the center support toward the valve body side, and align them with the bolt and oil holes of the transmission case and insert.

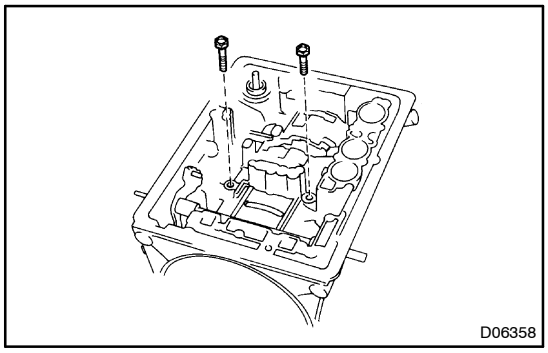


(b) Install the 2 wave washers and bolts.

HINT:

First tighten the accumulator piston side.

**Torque: 25 N·m (260 kgf·cm, 19 ft·lbf)**

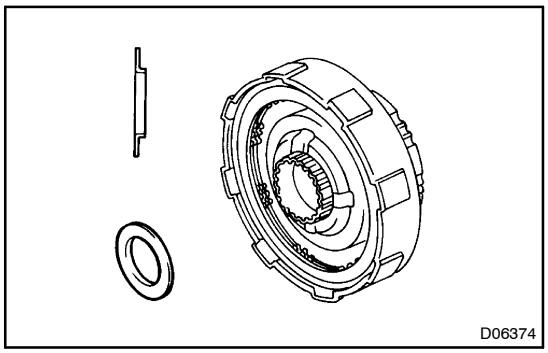


**12. INSTALL REAR CLUTCH**

(a) Coat the race with petroleum jelly and install it onto the rear clutch.

**Race diameter:**

| | Inside mm (in.) | Outside mm (in.) |
|---|---|---|
| Race | 27.6 (1.087) | 44.5 (1.752) |

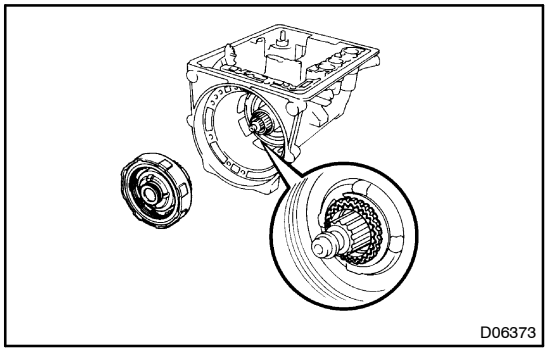


(b) Install the rear clutch.

HINT:

- Mesh the splines of the rear clutch with the flukes of the disc by rotating and pushing the rear clutch.
- If the rear clutch is fully meshed with the center support, the splined center of the clutch will be flush with the end of the sun gear shaft.

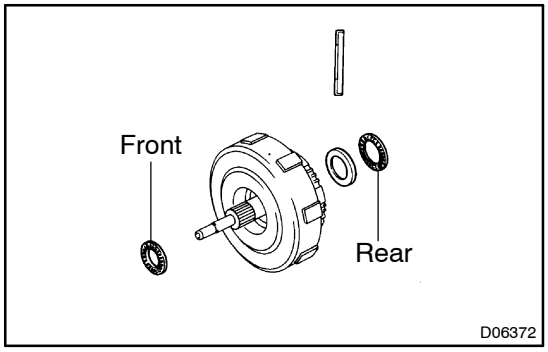


**13. INSTALL FRONT CLUTCH**

(a) Coat the bearings and race with petroleum jelly and install them onto the front clutch.

**Bearing and race diameter:**

| | Inside mm (in.) | Outside mm (in.) |
|---|---|---|
| Bearing (Front) | 23.4 (0.921) | 37.5 (1.476) |
| Race | 30.1 (1.185) | 48.5 (1.909) |
| Bearing (Rear) | 28.4 (1.118) | 46.4 (1.827) |

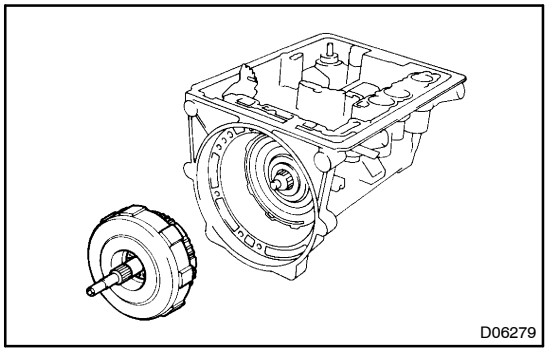


(b) Install the front clutch.

HINT:

Mesh the splines of the front clutch with the flukes of the discs by rotating and pushing the front clutch.

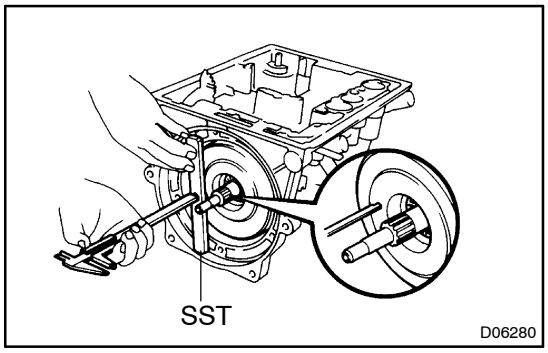


**14. MEASURE INSTALLATION DISTANCE OF FRONT CLUTCH**

(a) Place SST on the transmission case.
SST 09350–20015 (09370–12010)

(b) Using calipers, measure the distance between the tops of SST and the clutch drum.

If the distance corresponds to that during disassembly, the front clutch is installed correctly.

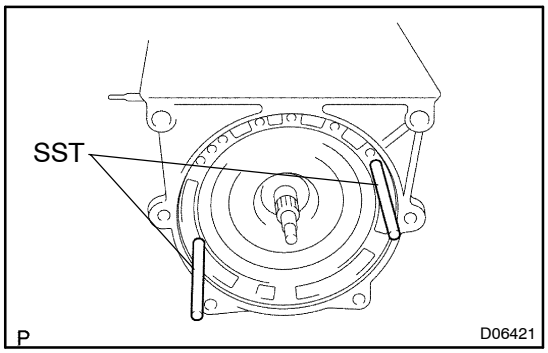


**15. INSTALL O/D CASE**

(a) Temporarily install 2 SSTs on the transmission case.
SST 09350–20015 (09362–30011)

HINT:

Remove the SST after installation of the oil pump.

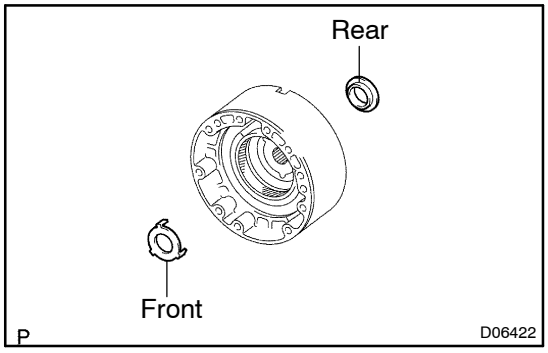


(b) Coat the races with petroleum jelly and install them onto the O/D case.

**Races diameter:**

| | Inside mm (in.) | Outside mm (in.) |
|---|---|---|
| Race (Front) | 23.0 (0.906) | 48.0 (1.890) |
| Race (Rear) | 24.1 (0.946) | 37.3 (1.469) |

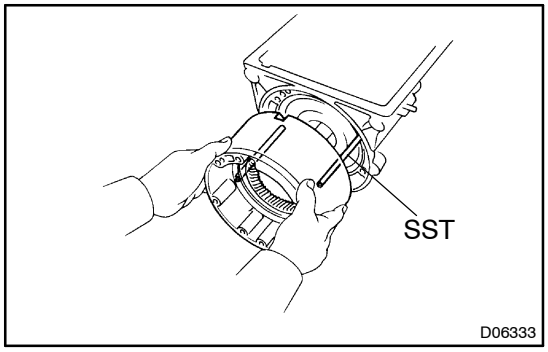


(c) Insert the O/D case gently through the 2 guide bolts (SST) with cutout portion of the case facing the valve body side.

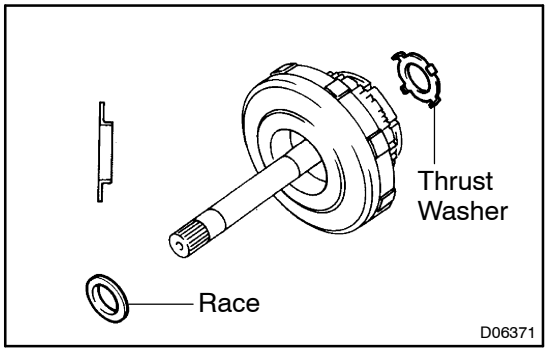


**16. INSTALL O/D PLANETARY GEAR UNIT WITH O/D DIRECT CLUTCH AND ONE–WAY CLUTCH**

(a) Coat the thrust washer with petroleum jelly and install it onto the O/D planetary gear.

(b) Coat the race with petroleum jelly and install it onto the O/D planetary gear.

**Race diameter:**

| | Inside mm (in.) | Outside mm (in.) |
|---|---|---|
| Race | 24.3 (0.957) | 39.1 (1.539) |

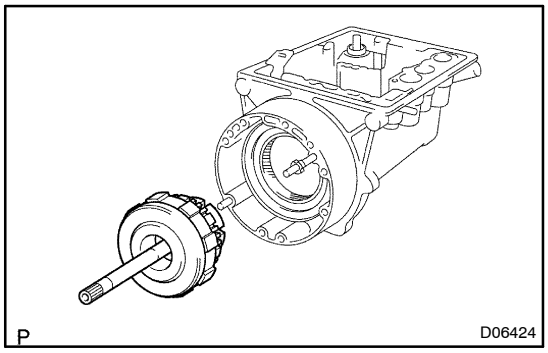


(c) Install the O/D planetary gear with the O/D direct clutch and one–way clutch.

HINT:

Mesh the splines of the O/D planetary gear with the flukes of the discs by rotating and pushing the O/D planetary gear.

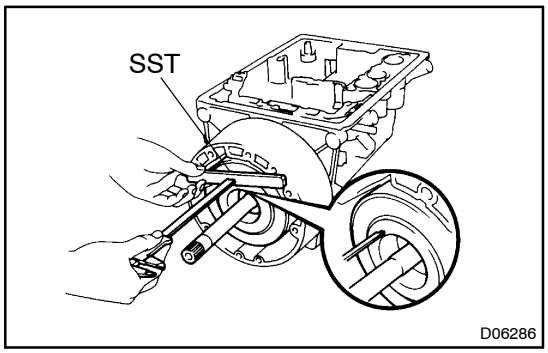


**17. MEASURE INSTALLATION DISTANCE OF O/D DIRECT CLUTCH**

(a) Place SST on the O/D case.
SST 09350–20015 (09370–12010)

(b) Using calipers, measure distance between the tops of SST and the clutch drum.

If the distance corresponds to that during disassembly, the O/D direct clutch is installed correctly.

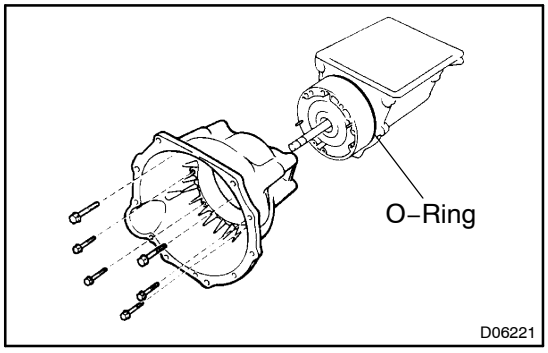


**18. INSTALL TRANSMISSION HOUSING**

(a) Coat a new O–ring with ATF and install it around the O/D case.

(b) Install the transmission housing and 6 bolts.

(c) Tighten the bolts.
**Torque:**
**10 mm bolt: 34 N·m (345 kgf·cm, 25 ft·lbf)**
**12 mm bolt: 57 N·m (580 kgf·cm, 42 ft·lbf)**

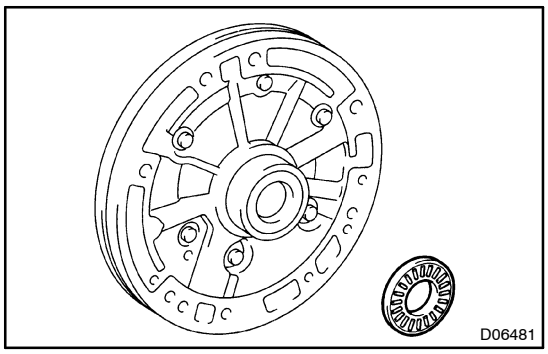


**19. INSTALL OIL PUMP**

(a) Coat the assembled bearing and race with petroleum jelly and install it onto the oil pump.

**Assembled bearing and race diameter:**

| | Inside mm (in.) | Outside mm (in.) |
|---|---|---|
| Bearing and race | 24.3 (0.957) | 43.2 (1.701) |

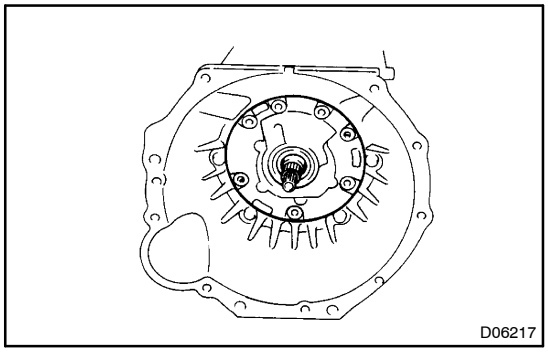


(b) Coat a new O−ring with ATF and install it around the pump body.

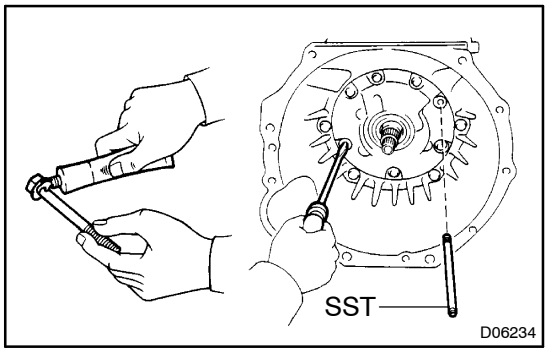


(c) Install the oil pump gently through the 2 guide bolts (SST).
(d) Apply sealant to the bolt heads.
**FIPG: Part No. 08833−00080, THREE BOND 1344, LOCTITE 242 or equivalent**
(e) Temporarily install the 5 bolts.
(f) Using a screwdriver, remove the 2 SSTs.

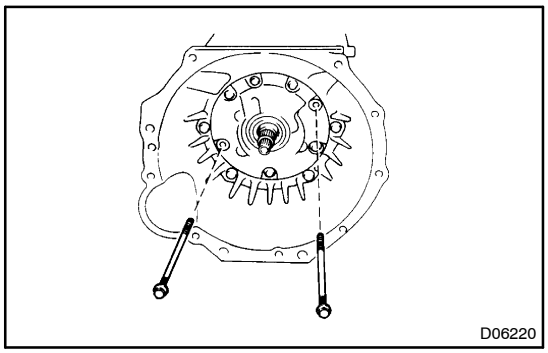


(g) Temporarily install the 2 bolts.
(h) Tighten the all bolts.
**Torque: 21 N·m (215 kgf·cm, 16 ft·lbf)**

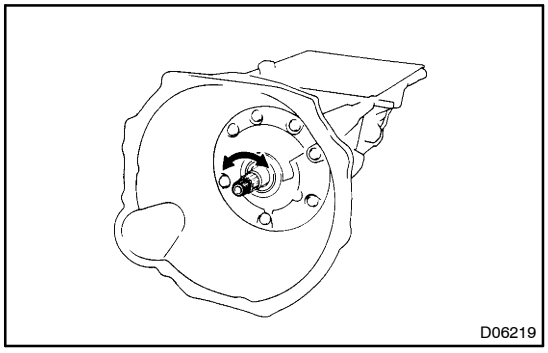


**20. CHECK INPUT SHAFT ROTATION**
Make sure the input shaft rotates smoothly.

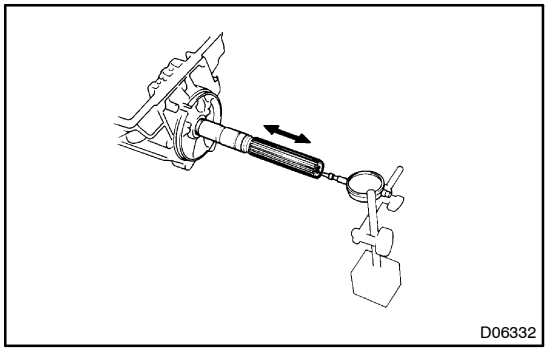


**21. CHECK OUTPUT SHAFT**
(a) Using a dial indicator, measure the end play of the output shaft with hand.
**End play: 0.3 − 0.9 mm (0.012 − 0.035 in.)**
If the values are non−standard, check for an improper installation.
(b) Check to see that output shaft rotates smoothly.

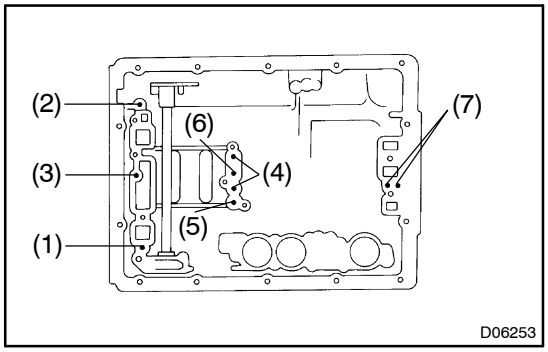


**22. INDIVIDUAL PISTON OPERATION INSPECTION**

Check for the sound of operation while applying compressed air into the oil holes indicated in the illustration.

(1) O/D direct clutch
(2) O/D brake
(3) Rear clutch
(4) Front clutch
(5) No. 1 brake
(6) No. 2 brake
(7) No. 3 brake

If there is no noise, disassembled and check the installation condition of the parts.

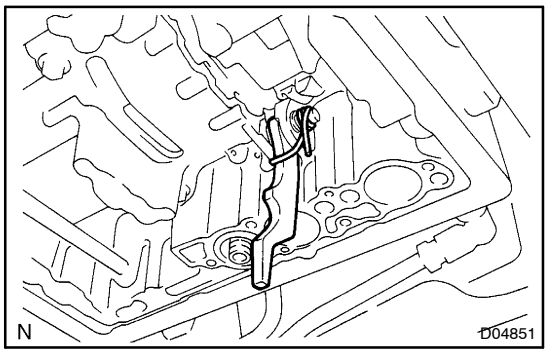


**23. INSTALL PARKING LOCK PAWL AND ROD**

(a) Install the E–ring to the shaft.
(b) Install the parking lock pawl, shaft and spring.

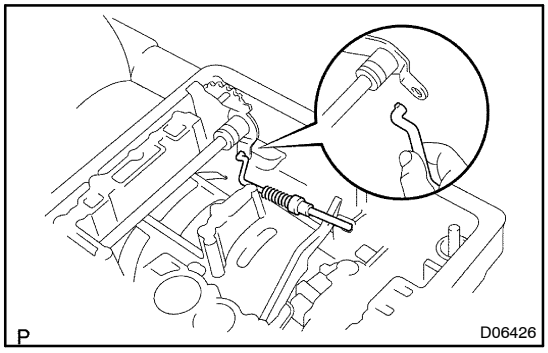


(c) Connect the parking lock rod to the manual valve lever.

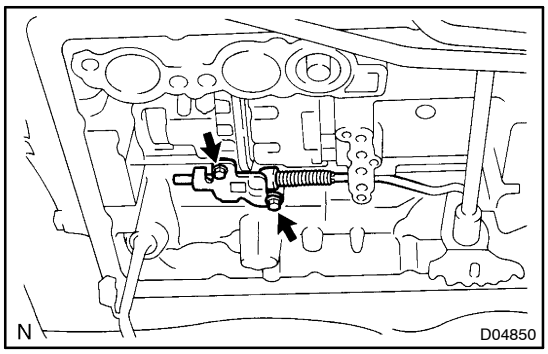


(d) Install the parking lock pawl bracket.
(e) Install the 2 bolts with the wave washer.
**Torque: 7.4 N·m (75 kgf·cm, 65 in.·lbf)**

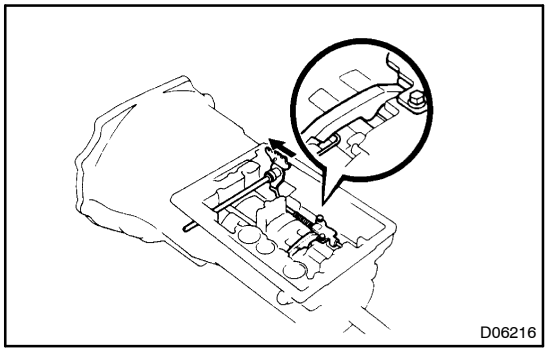


(f) Shift the manual valve lever to the P range, and confirm the planetary ring gear is correctly locked up by the lock pawl.

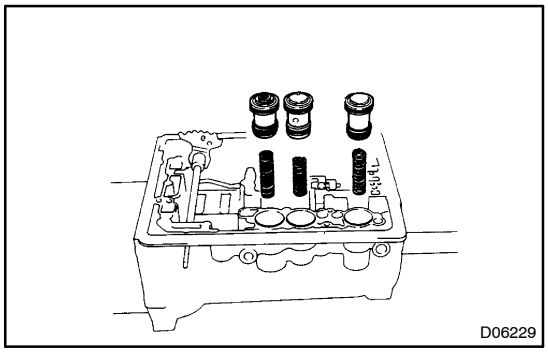


**24. INSTALL ACCUMULATOR SPRING AND PISTON**

(a) Coat new O–rings with ATF and install them to the pistons.

(b) Install the 3 springs and 3 accumulator pistons to the bore, as shown.

**Piston**

| Piston | Outer diameter mm (in.) |
|---|---|
| $C_1$ | 31.8 (1.252) |
| $C_2$ | 31.8 (1.252) |
| $B_2$ | 34.8 (1.370) |

**Spring**

| Spring (Color) | Free length mm (in.) | Outer diameter mm (in.) |
|---|---|---|
| $C_1$ (White or Blue) | 75.03 (2.9540) | 17.00 (0.6693) |
| $C_2$ (White or Purple) | 57.74 (2.2732) | 16.54 (0.6512) |
| $B_2$ (Green) | 56.40 (2.2205) | 18.79 (0.7398) |

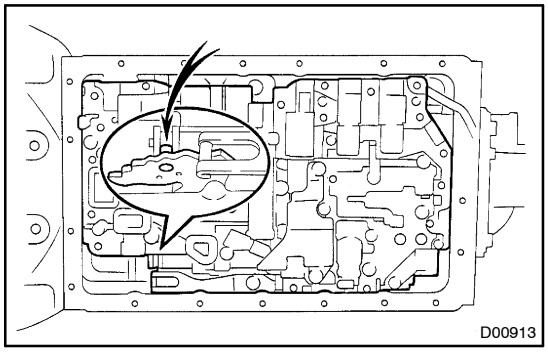


**25. INSTALL VALVE BODY**

(a) Align the groove of the manual valve to the pin of the lever.

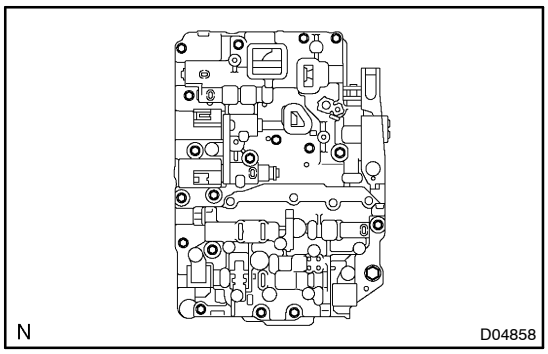


(b) Install the 17 bolts.
**Torque: 10 N·m (100 kgf·cm, 7 ft·lbf)**

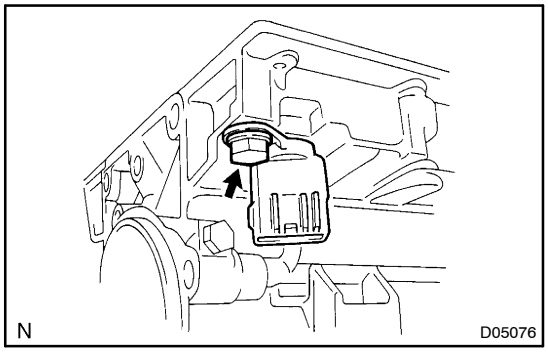


**26. INSTALL SOLENOID WIRE**

Install the solenoid wire retaining bolt with the bolt.

**Torque: 5.4 N·m (55 kgf·cm, 48 in.·lbf)**

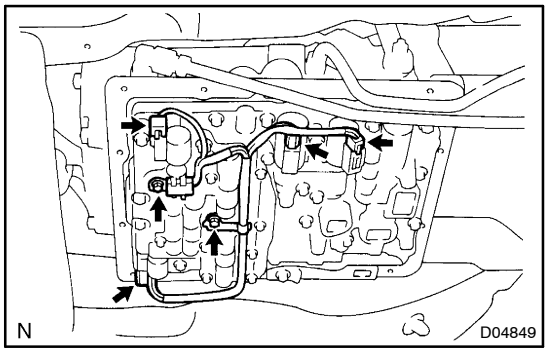


**27. INSTALL SOLENOID WIRING WITH ATF TEMPERATURE SENSOR**

(a) Install the clamp to the ATF temperature sensor.
(b) Connect the 4 connectors to the solenoid.
(c) Install the clamp and bolt.
**Torque: 10 N·m (100 kgf·cm, 7 ft·lbf)**
(d) Install the ATF temperature sensor with the bolt.
**Torque: 10 N·m (100 kgf·cm, 7 ft·lbf)**

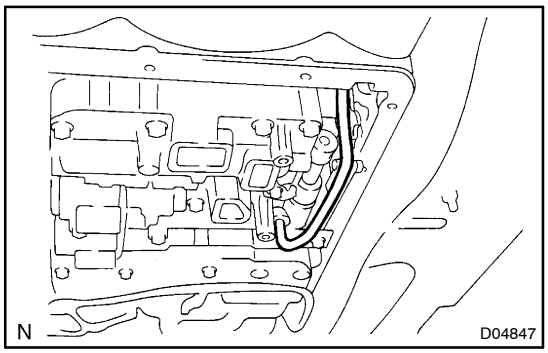


**28. INSTALL OIL PIPE**

Using a plastic hammer, install the oil pipe into position.

**NOTICE:**

**Be careful not to bend or damage the pipe.**

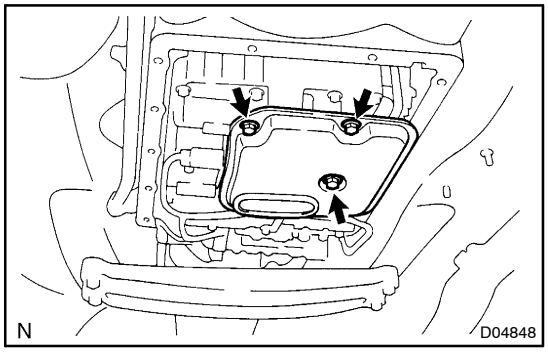


**29. INSTALL OIL STRAINER**

(a) Install a new gasket to the oil strainer.
(b) Install the oil strainer, oil stainer cover and 6 bolts.
**Torque: 10 N·m (100 kgf·cm, 7 ft·lbf)**

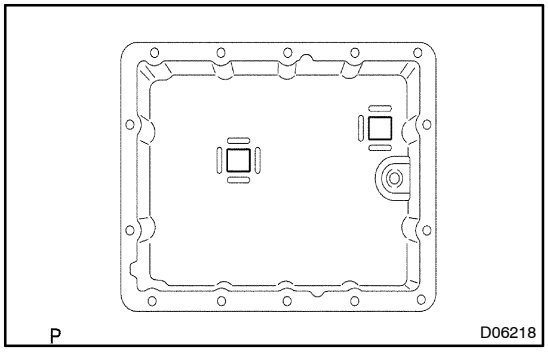


**30. INSTALL OIL PAN**

(a) Install the 2 magnets in the oil pan.

**NOTICE:**

**Make sure that the magnets do not interfere with the oil pipes.**

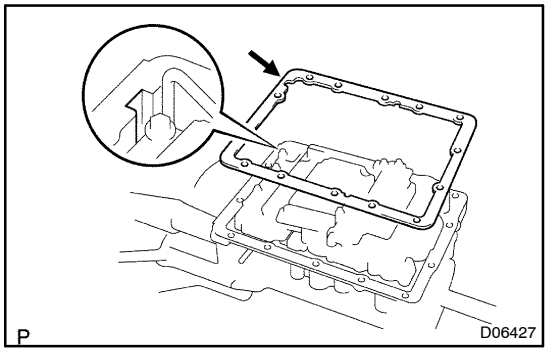


(b) Install a new gasket to the transmission case.

HINT:

Align the cut part of the gasket and case.

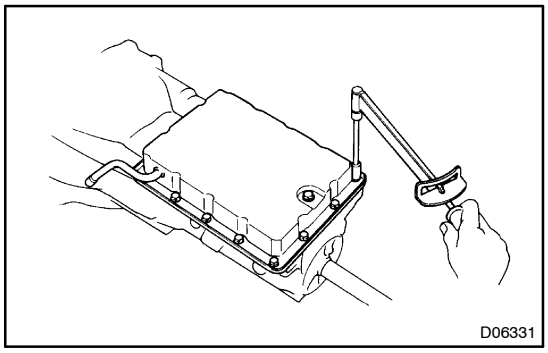


(c) Install the 14 bolts.
**Torque: 4.4 N·m (45 kgf·cm, 39 in.·lbf)**

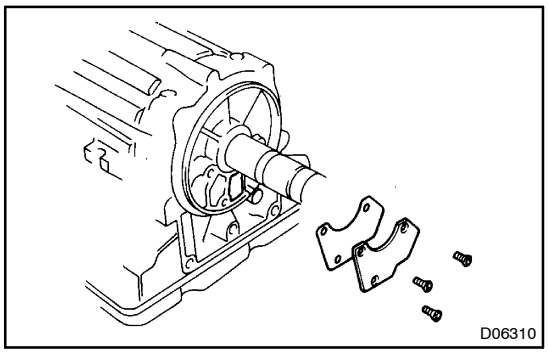


**31. INSTALL GOVERNOR OIL STRAINER**

(a) Insert the governor oil strainer into the transmission case.
(b) Install a new gasket and cover.
(c) Install the 3 screws.
**Torque: 7.5 N·m (75 kgf·cm, 65 in.·lbf)**

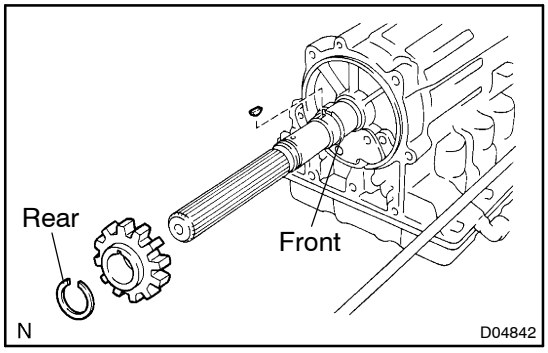


**32. INSTALL KEY AND SENSOR ROTOR**

(a) Using a snap ring expander, install the front side snap ring.
(b) Install the key and sensor rotor.
(c) Using a snap ring expander, install the rear side snap ring.

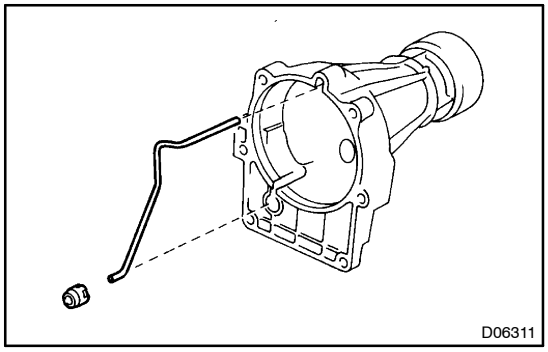


**33. INSTALL EXTENSION HOUSING**

(a) Install the oil apply pipe and a new gasket to the extension housing.

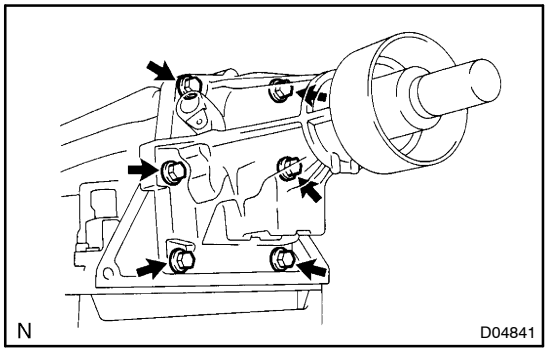


(b) Install the extension housing with a new gasket to the case.

(c) Apply sealant to the bolt A.
**FIPG: Part No. 08833–00080, THREE BOND 1344, LOCTITE 242 or equivalent**

(d) Install the 6 bolts.

HINT:
The 2 lower bolts are shorter.
**Torque: 36 N·m (370 kgf·cm, 27 ft·lbf)**
**Bolt length:**
**Bolt A: 45 mm (1.77 in.)**
**Bolt B: 35 mm (1.38 in.)**

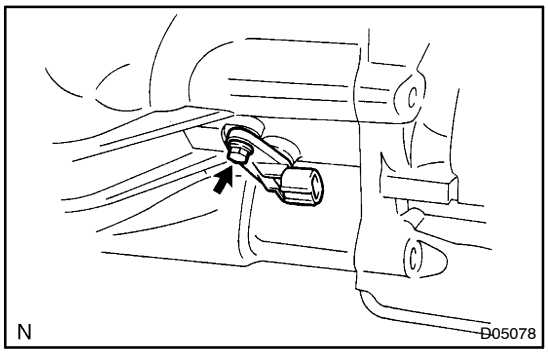


**34. INSTALL TRANSMISSION INPUT SPEED SENSOR**

(a) Coat a new O–ring with ATF and install it to the transmission input speed sensor.

(b) Install the transmission input speed sensor and bolt.
**Torque: 5.4 N·m (55 kgf·cm, 48 in.·lbf)**

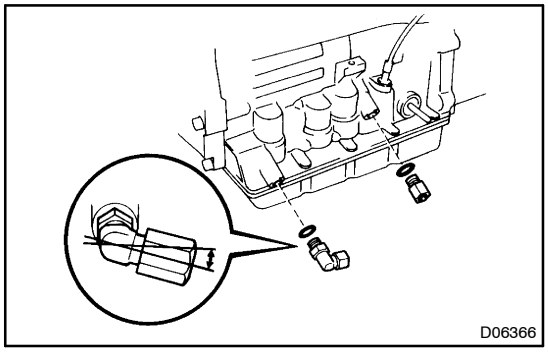


**35. INSTALL UNION AND ELBOW**

(a) Coat new 2 O–rings with ATF and install them to union and elbow.

(b) Install the union and elbow.
**Torque: 25 N·m (250 kgf·cm, 18 ft·lbf)**

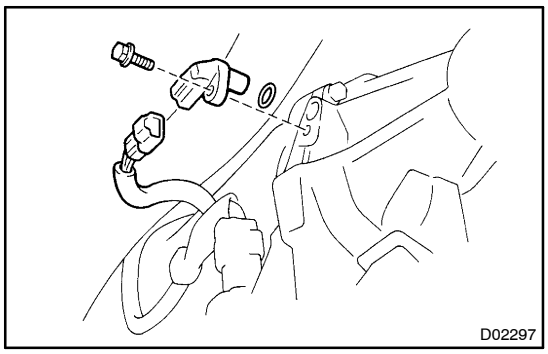


**36. INSTALL TRANSMISSION OUTPUT SPEED SENSOR**

(a) Coat a new O–ring with ATF and install it to the transmission output speed sensor.

(b) Install the transmission output speed sensor and bolt.
**Torque: 5.4 N·m (55 kgf·cm, 48 in.·lbf)**

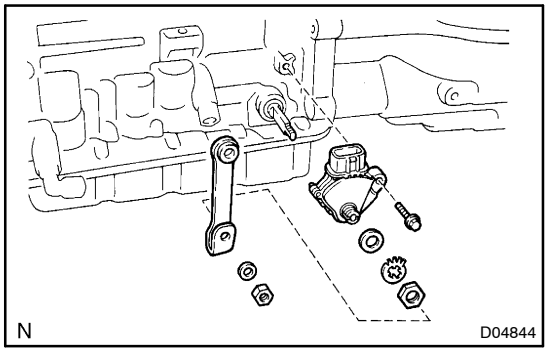


**37. INSTALL NEUTRAL START SWITCH**

(a) Insert the neutral start switch onto the manual valve lever shaft and temporarily install the adjusting bolt.

(b) Install a new lock washer.

(c) Install and tighten the nut.
**Torque: 5.4 N·m (55 kgf·cm, 48 in.·lbf)**

(d) Using the control shaft leer, fully turn the manual valve lever shaft back and return 2 notches. It is now in neutral.

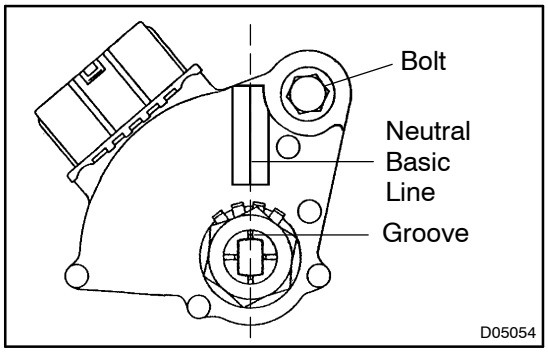


(e) Align the neutral basic line and the switch groove, and tighten the adjusting bolt.
**Torque: 5.4 N·m (55 kgf·cm, 48 in.·lbf)**

(f) Bend the tabs of the lock washer.

HINT:

Bend at least 2 of the lock washer tabs.

**38. INSTALL CONTROL SHAFT LEVER**

(a) Install the control shaft lever with the spring washer and nut.

(b) Tighten the nut.
**Torque: 6.9 N·m (70 kgf·cm, 61 in.·lbf)**

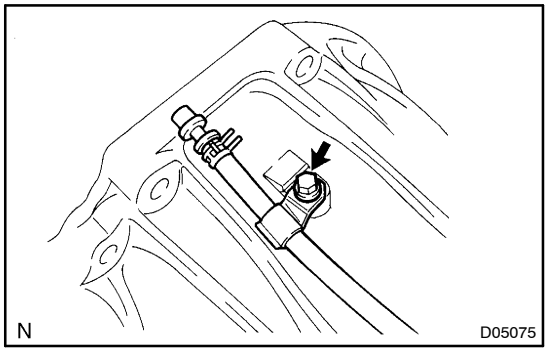


**39. INSTALL BREATHER HOSE**

Install the breather hose with the bolt.
**Torque: 7.5 N·m (75 kgf·cm, 65 in.·lbf)**

# OIL PUMP

## COMPONENTS

AT0I2–01

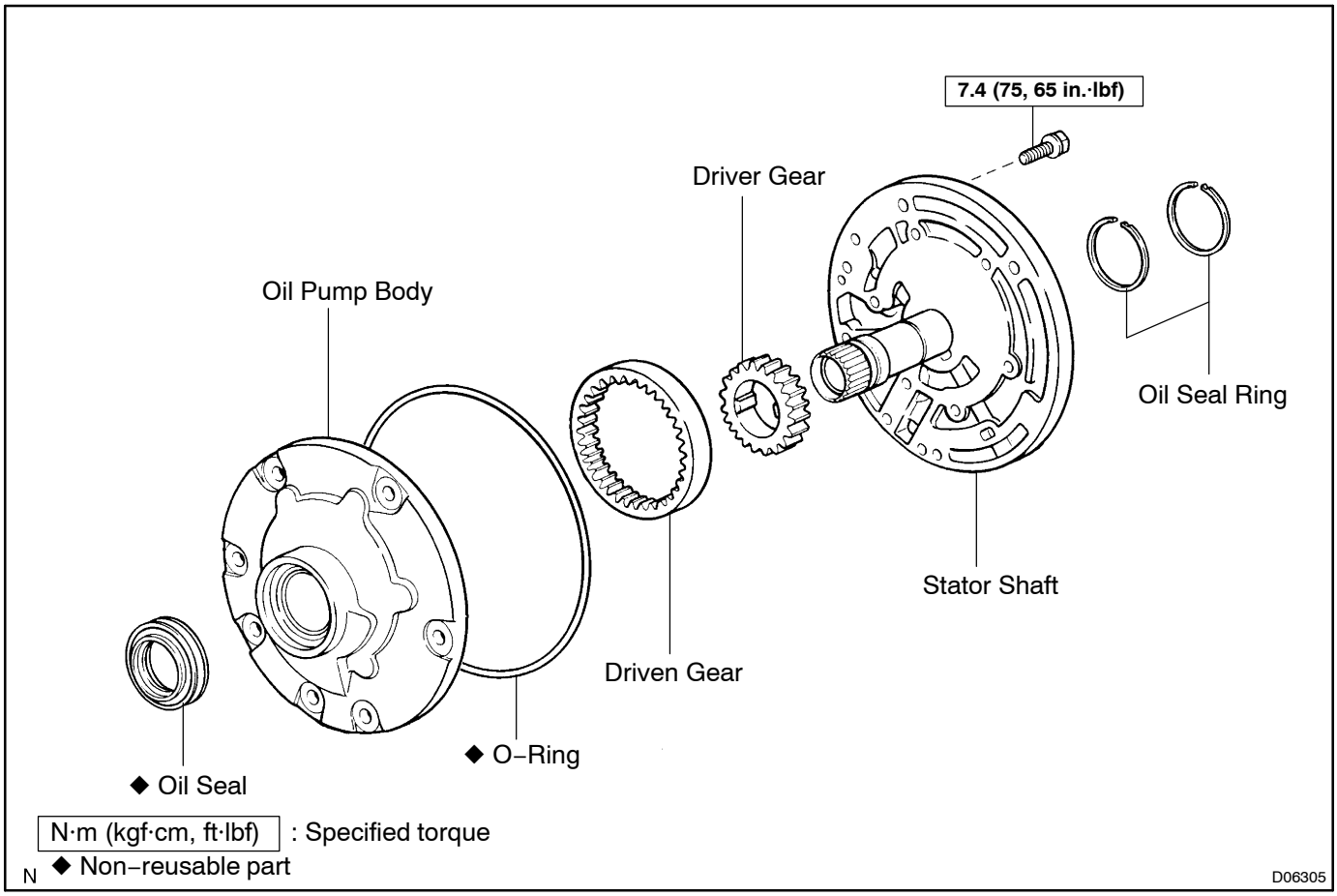

AT0I3−01

# DISASSEMBLY

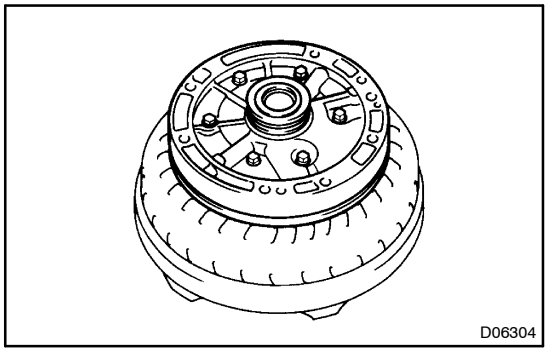


**1. USE TORQUE CONVERTER AS WORK STAND**

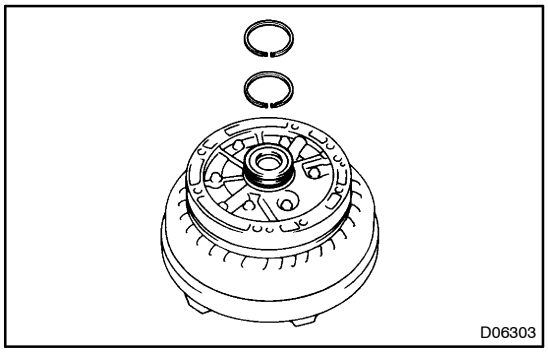


**2. REMOVE OIL SEAL RING**

Remove the 2 oil seal rings.

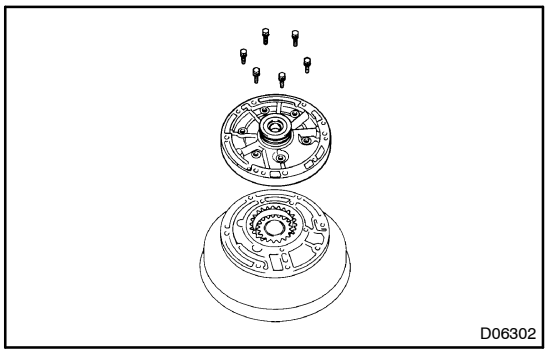


**3. REMOVE STATOR SHAFT**

(a) Remove the 6 bolts, and then remove the stator shaft from the oil pump body.

(b) Remove the O−ring from the oil pump body.

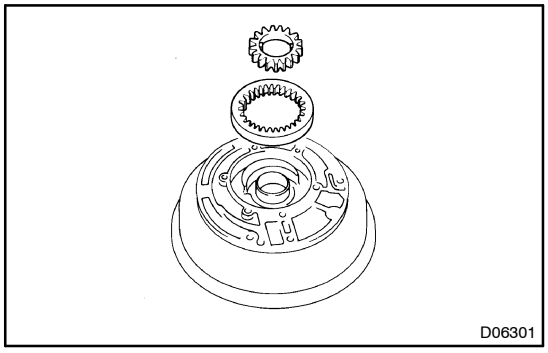


**4. REMOVE OIL PUMP DRIVE GEAR AND DRIVEN GEAR**

AT0I4–01

# INSPECTION

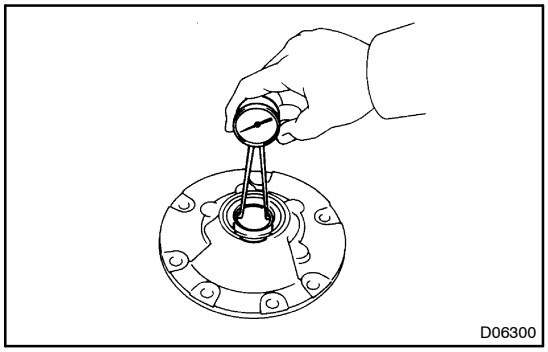


**1. CHECK OIL PUMP BODY BUSHING**

Using a dial indicator, measure the inside diameter of the oil pump body bushing.

**Maximum inside diameter: 38.19 mm (1.5035 in.)**

If the inside diameter is greater than the maximun, replace the oil pump body.

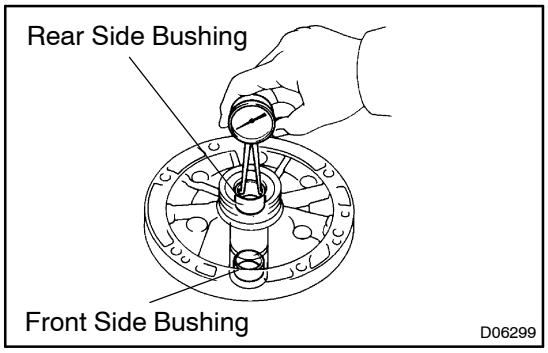


**2. CHECK STATOR SHAFT BUSHING**

Using a dial indicator, measure the inside diameter of the stator shaft bushings.

**Maximum inside diameter:**
**Front and Rear side: 23.11 mm (0.9098 in.)**

If the inside diameter is greater than the maximun, replace the stator shaft.

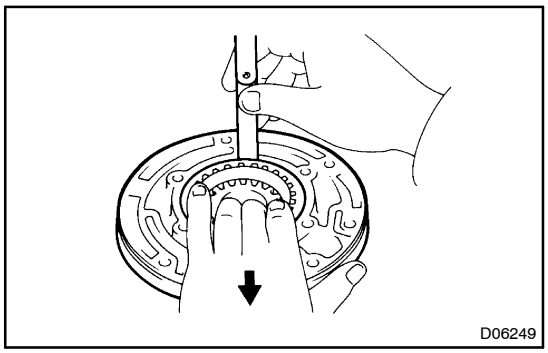


**3. CHECK BODY CLEARANCE OF DRIVEN GEAR**

Push the driven gear to one side of the body.
Using a feeler gauge, measure the clearance.

**Standard body clearance:**
**0.07 – 0.15 mm (0.0028 – 0.0059 in.)**
**Maximum body clearance: 0.3 mm (0.012 in.)**

If the body clearance is greater than the maximun, replace the drive gear, driven gear or pump body.

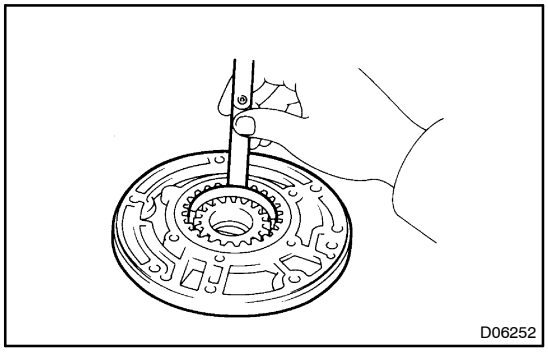


**4. CHECK TIP CLEARANCE OF DRIVEN GEAR**

Measure between the driven gear teeth and the crescent shaped part of the pump body.

**Standard tip clearance:**
**0.11 – 0.14 mm (0.0043 – 0.0055 in.)**
**Maximum tip clearance: 0.3 mm (0.012 in.)**

If the tip clearance is greater than the maximun, replace the drive gear, driven gear or pump body.

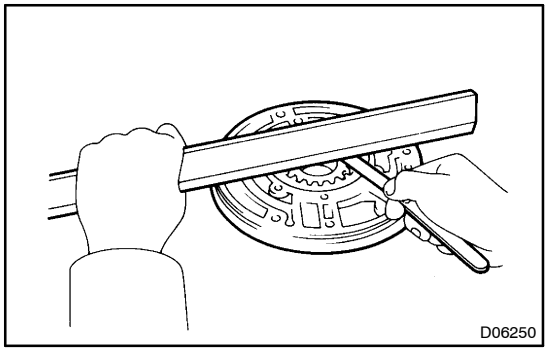


**5. CHECK SIDE CLEARANCE OF BOTH GEARS**

Using a steel straight edge and a feeler gauge, measure the side clearance of both gears.

**Standard side clearance:**
**0.02 – 0.05 mm (0.0008 – 0.0020 in.)**
**Maximum side clearance: 0.1 mm (0.004 in.)**

There are 5 different thicknesses for drive and driven gears.

**Drive and driven gear thickness:**

| Mark | Thickness mm (in.) |
|---|---|
| 1 | 17.235 − 17.244 (0.6785 − 0.6789) |
| 2 | 17.245 − 17.254 (0.6789 − 0.6793) |
| 3 | 17.255 − 17.265 (0.6793 − 0.6797) |
| 4 | 17.266 − 17.275 (0.6798 − 0.6801) |
| 5 | 17.276 − 17.285 (0.6802 − 0.6805) |

If the side clearance is greater than the maximun, replace the drive gear, driven gear or pump body.

**6. IF NECESSARY, REPLACE OIL SEAL**

(a) Using a screwdriver, pry off the oil seal.

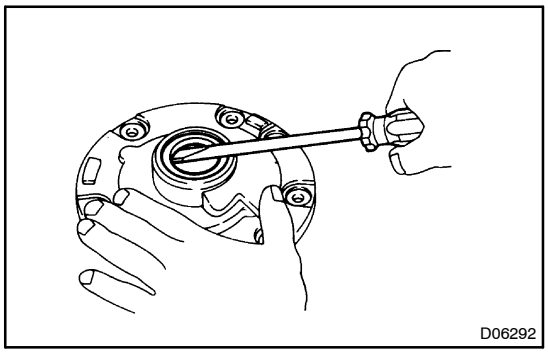


(b) Using SST and a hammer, install a new oil seal.
The oil seal end should be flushed with the outer edge of the pump body.
SST 09350−20015 (09388−20010)

(c) Coat the oil seal lip with MP grease.

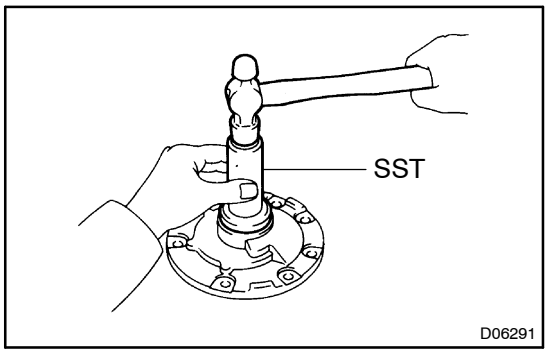

AT0I5–01

# REASSEMBLY

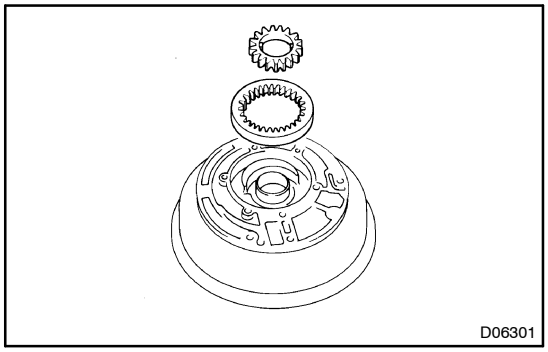


**1. INSTALL DRIVEN GEAR AND DRIVE GEAR TO OIL PUMP BODY**

(a) Install a new O–ring to the oil pump body.
(b) Place the oil pump body on the torque converter.
(c) Coat the drive gear and drive gear with ATF.
(d) Install the driven gear and drive gear.

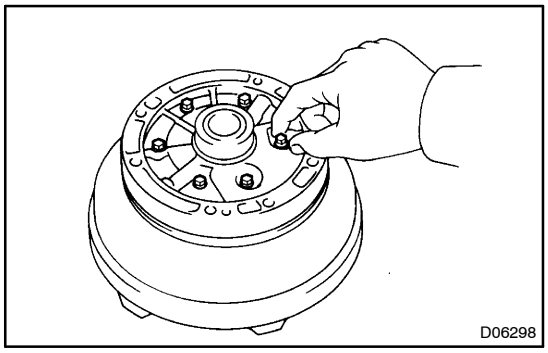


**2. INSTALL STATOR SHAFT TO OIL PUMP BODY**

(a) Align the stator shaft with each bolt bole.
(b) Temporarily install the 6 bolts.

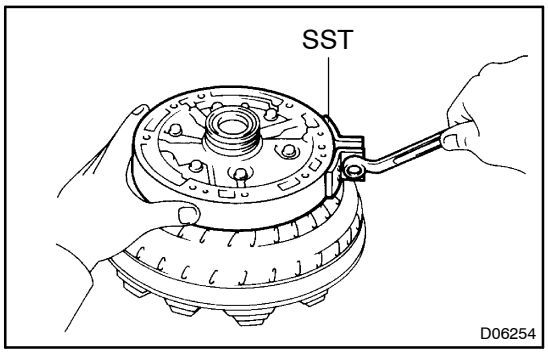


(c) Install SST around the pump body and stator shaft.
SST 09350–20015 (09363–20010)
(d) Tighten SST to align the pump body and stator shaft.

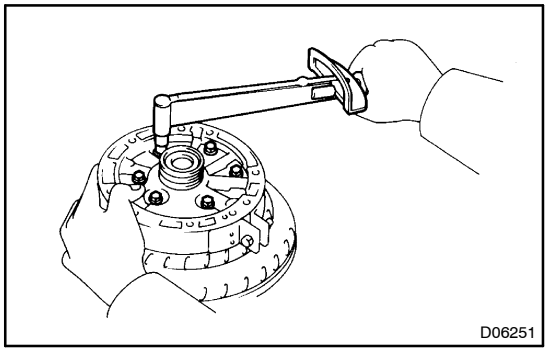


(e) Tighten the 6 bolts.
**Torque: 7.4 N·m (75 kgf·cm, 65 in.·lbf)**
(f) Remove SST.

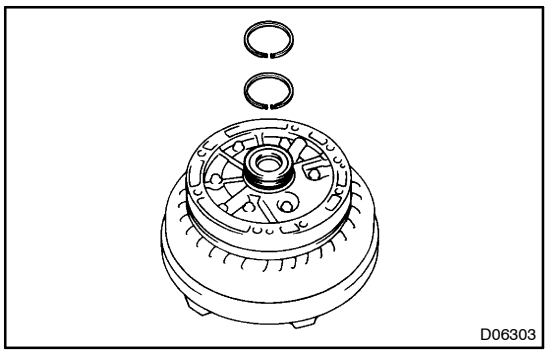


**3. INSTALL OIL SEAL RING**

(a) Coat the 2 oil seal rings with ATF.
(b) Contract the oil seal rings and install them onto the stator shaft.

**NOTICE:**
**Do not spread the ring ends too much.**
HINT:
After installing the oil seal rings, check that they rotate smoothly.

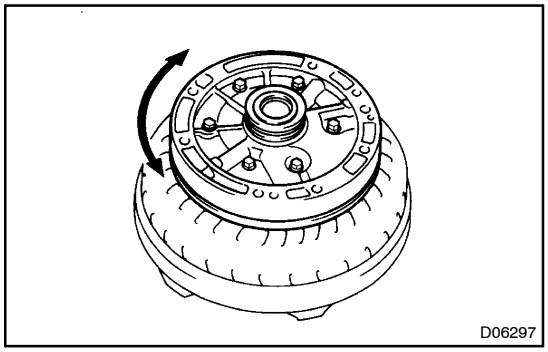


**4. CHECK OIL PUMP DRIVE GEAR ROTATION**

Make sure the drive gear rotates smoothly.

# OVERDRIVE BRAKE

## COMPONENTS

AT0I6–01

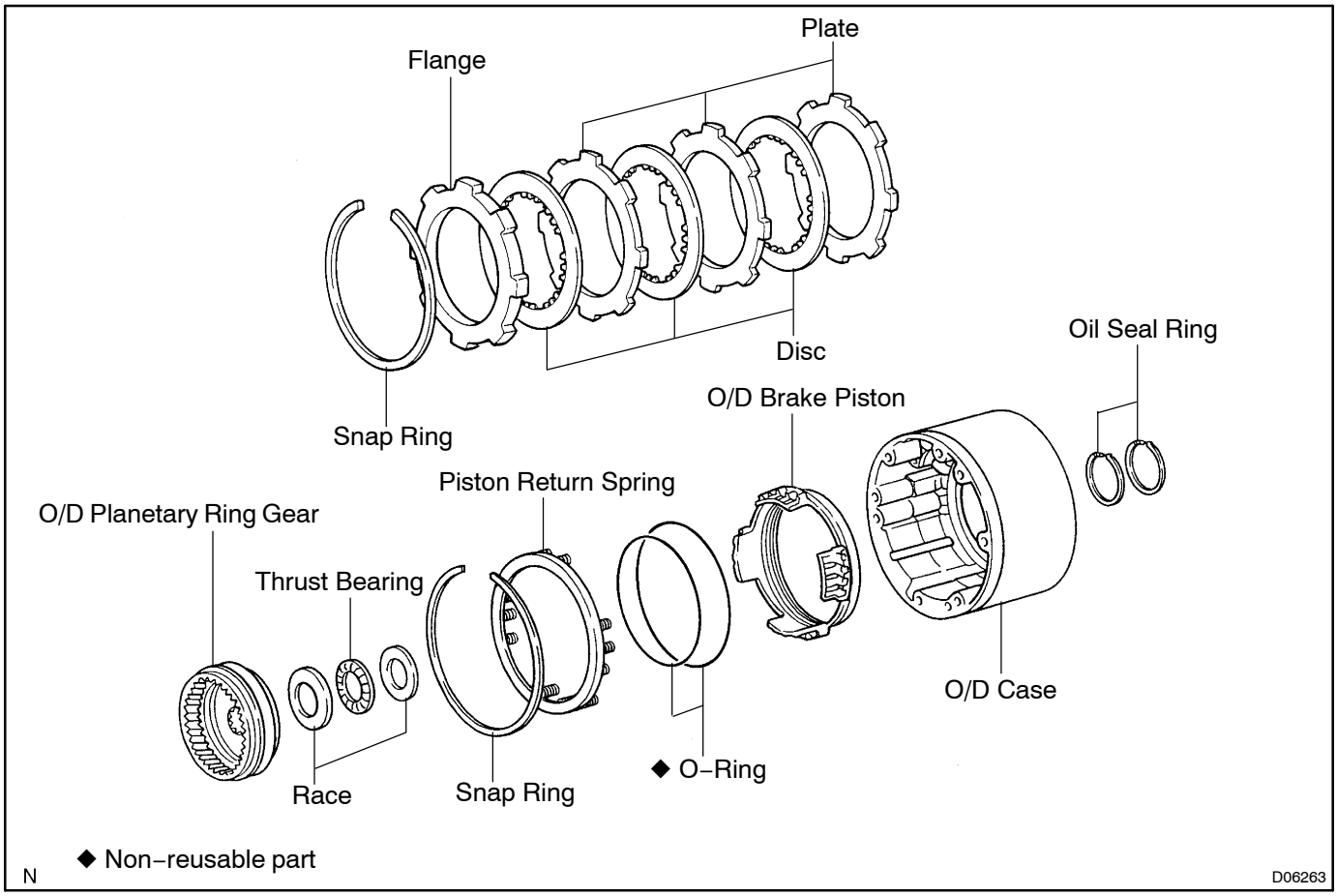

AT0I7–01

# DISASSEMBLY

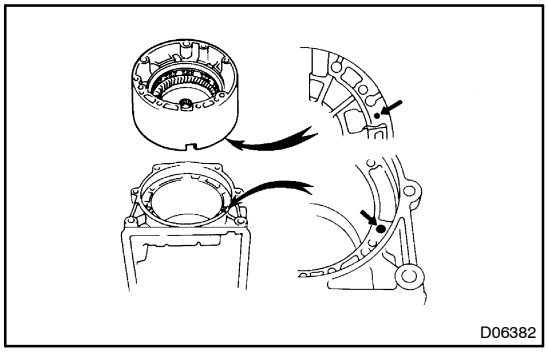


**1. CHECK PACK CLEARANCE OF O/D BRAKE**

(a) Place the O/D case assembly onto the transmission case, facing the cutout portion of the O/D case to the down side of the transmission case.

HINT:
Make sure that the oil hole of the O/D case is aligned with the oil hole of the transmission case.

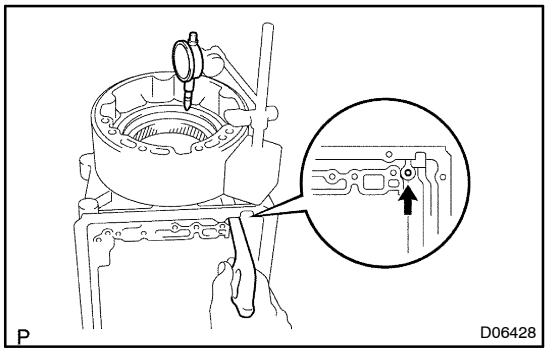


(b) Using a dial indicator, measure the O/D brake pack clearance applying and releasing the compressed air (392 – 785 kPa, 4 – 8 kgf/cm$^2$, 57–114 psi), as shown.
**Pack clearance:**
**0.75 – 1.25 mm (0.0295 – 0.0492 in.)**

If the values are nonstandard, inspect the discs.

(c) Remove the O/D case from the transmission case.

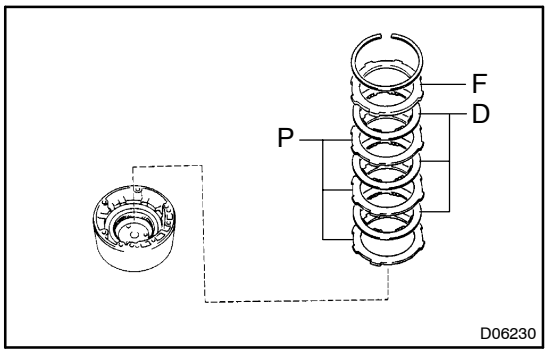


**2. REMOVE FLANGE, DISC AND PLATE**

(a) Using a screwdriver, remove the snap ring.

(b) Remove the flange, 3 discs and 3 plates.

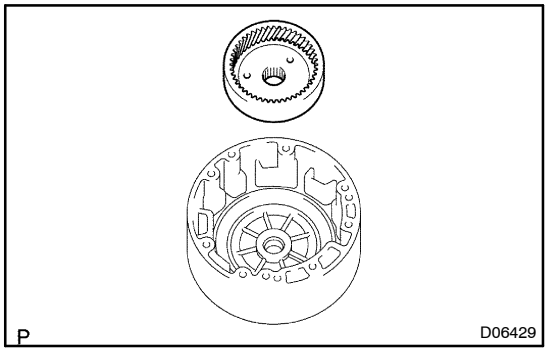


**3. REMOVE O/D PLANETARY RING GEAR**

(a) Remove the O/D planetary ring gear.

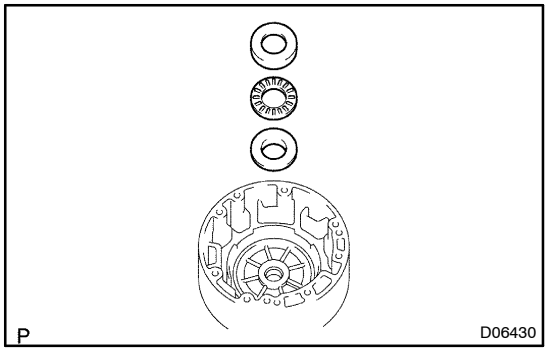


(b) Remove the bearing and 2 races.

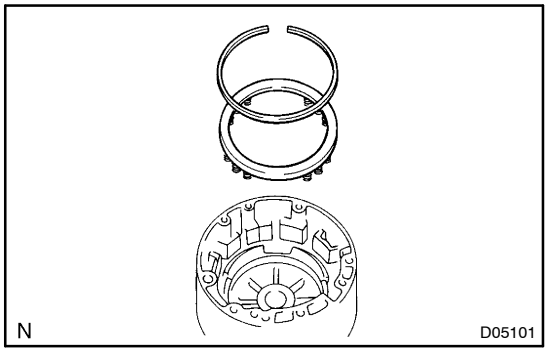


**4. REMOVE PISTON RETURN SPRING**

(a) Using a screwdriver, remove the snap ring.

(b) Remove the piston return spring.

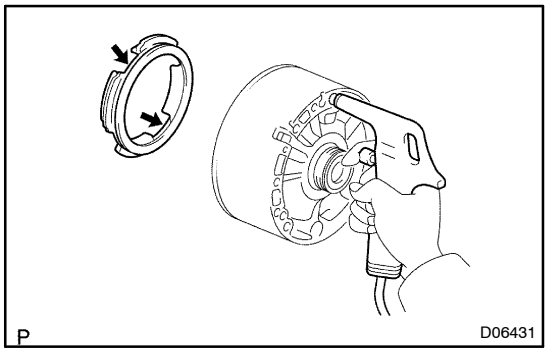


**5. REMOVE O/D BRAKE PISTON**

(a) Hold the O/D brake piston with hand, apply compressed air into the passage to remove the O/D brake piston.

(b) Remove the 2 O–rings from the piston.

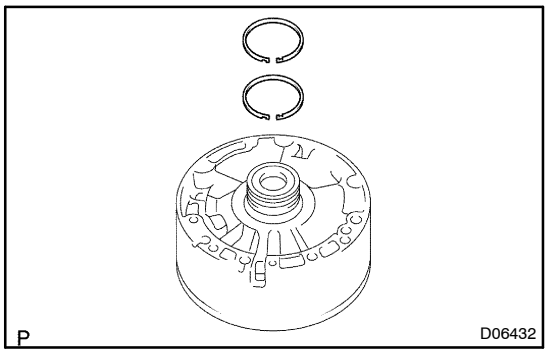


**6. REMOVE OIL SEAL RING**

Remove the 2 oil seal rings.

AT0I8−01

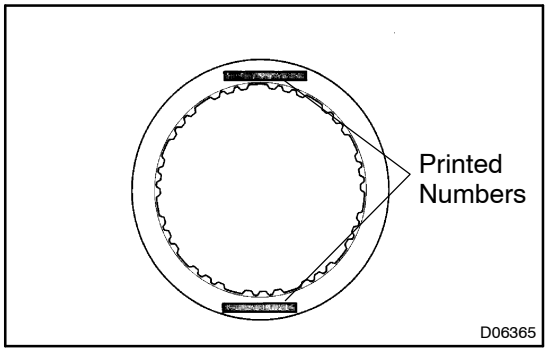


# INSPECTION

## 1. INSPECT DISC, PLATE AND FLANGE

Check to see if the sliding surface of the disc, plate and flange are worn or burnt. If necessary, replace them.

HINT:

- If the lining of the disc is peeling off or discolored, or even if parts of the printed numbers are defaced, replace all discs.
- Before assembling new discs, soak them in ATF for at least 15 minutes.

AT0I9−01

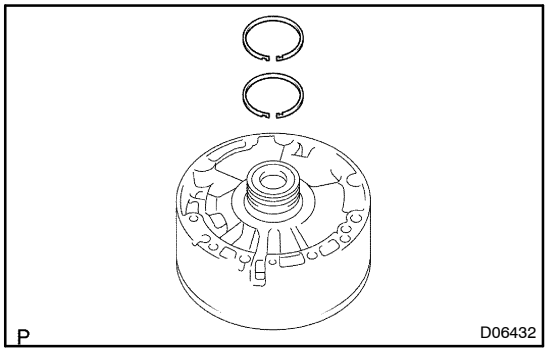


# REASSEMBLY

**1. INSTALL OIL SEAL RING**

(a) Coat the 2 oil seal rings with ATF.

(b) Contact the oil seal rings and install them onto the O/D case.

**NOTICE:**

**Do not spread the ring ends more than necessary.**

HINT:

After installing the oil seal rings, check that they rotate smoothly.

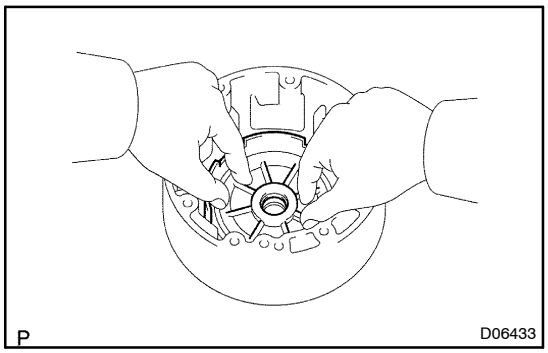


**2. INSTALL O/D BRAKE PISTON**

(a) Coat 2 new O−rings with ATF and install them on the O/D brake piston.

(b) Being careful not to damage the O−rings, press in the brake piston into the O/D case with both hands.

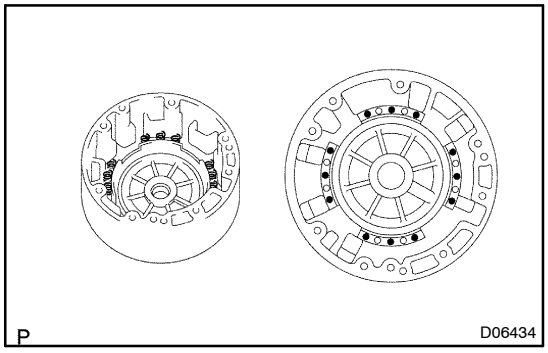


**3. INSTALL PISTON RETURN SPRING**

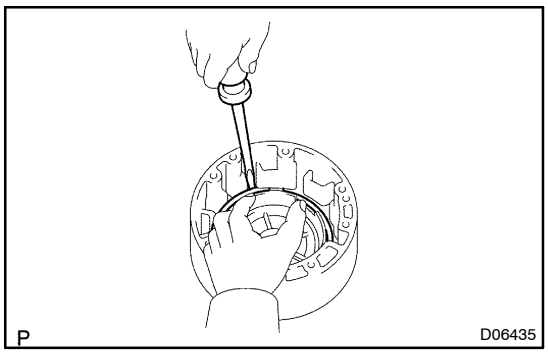


(a) Pushing the piston return spring and using a screwdriver, install the snap ring. Be sure the end gap of the snap ring is not aligned with the cutout portion of the O/D case.

HINT:

Make sure that the snap ring is inserted into its groove.

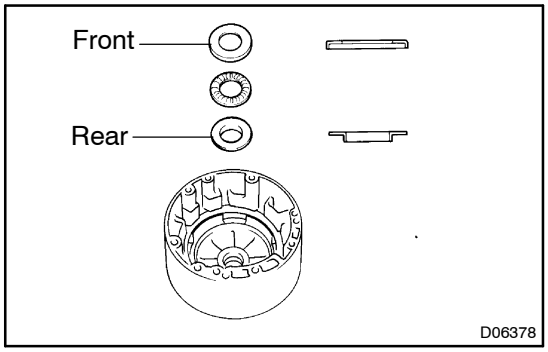


**4. INSTALL O/D PLANETARY RING GEAR**

(a) Coat the bearing and races with petroleum jelly and install them onto the O/D case.

**Bearing and races diameter:**

| | Inside mm (in.) | Outside mm (in.) |
|---|---|---|
| Race (Front) | 30.1 (1.185) | 48.5 (1.909) |
| Bearing | 28.4 (1.118) | 46.4 (1.827) |
| Race (Rear) | 27.6 (1.087) | 44.5 (1.752) |

(b) Install the O/D planetary ring gear.

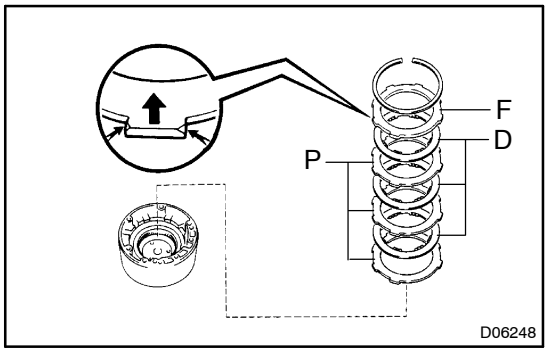


**5. INSTALL FLANGE AND DISC AND PLATE**

(a) Install the 3 plates and 3 discs.
**Install in order: P = Plate D = Disc**
**P – D – P – D – P – D**

(b) Install the flange, the rounded edge facing upward.

(c) Using a screwdriver, install the snap ring. Be sure the end gap of the snap ring is not aligned with the cutout portion of the O/D case.

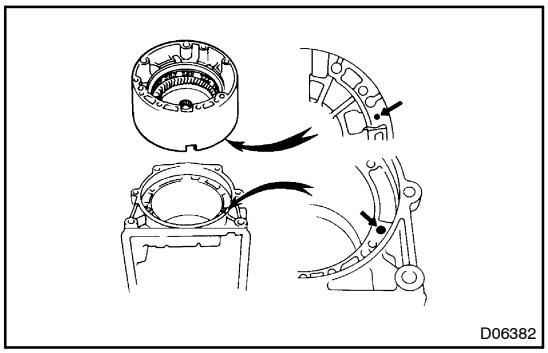


**6. CHECK PACK CLEARANCE OF O/D BRAKE**

(a) Place the O/D case assembly onto the transmission case, facing the cutout portion of the O/D case to the down side of the transmission case.

HINT:
Make sure that the oil hole of the O/D case is aligned with the oil hole of the transmission case.

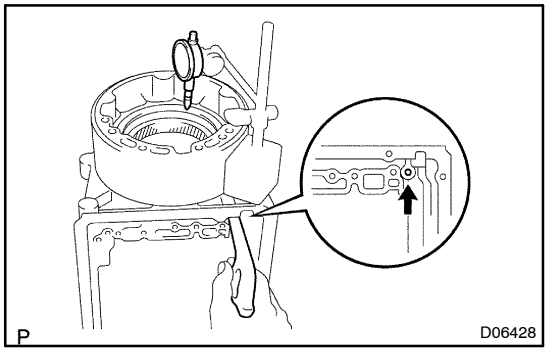


(b) Using a dial indicator, measure the O/D brake pack clearance applying and releasing the compressed air (392 – 785 kPa, 4 – 8 kgf/cm$^2$, 57 – 114 psi), as shown.
**Pack clearance:**
**0.75 – 1.25 mm (0.0295 – 0.0492 in.)**

If the pack clearance is less than the limit, parts may have been assembled incorrectly, check and reassemble again.
If the piston is nonstandard, select another plate.
HINT:
There are 2 different thickness for the plate.

**Plate thickness:**

| | |
|---|---|
| 2.0 mm (0.079 in.) | 2.3 mm (0.091 in.) |

# OVERDRIVE DIRECT CLUTCH

## COMPONENTS

AT0IA–01

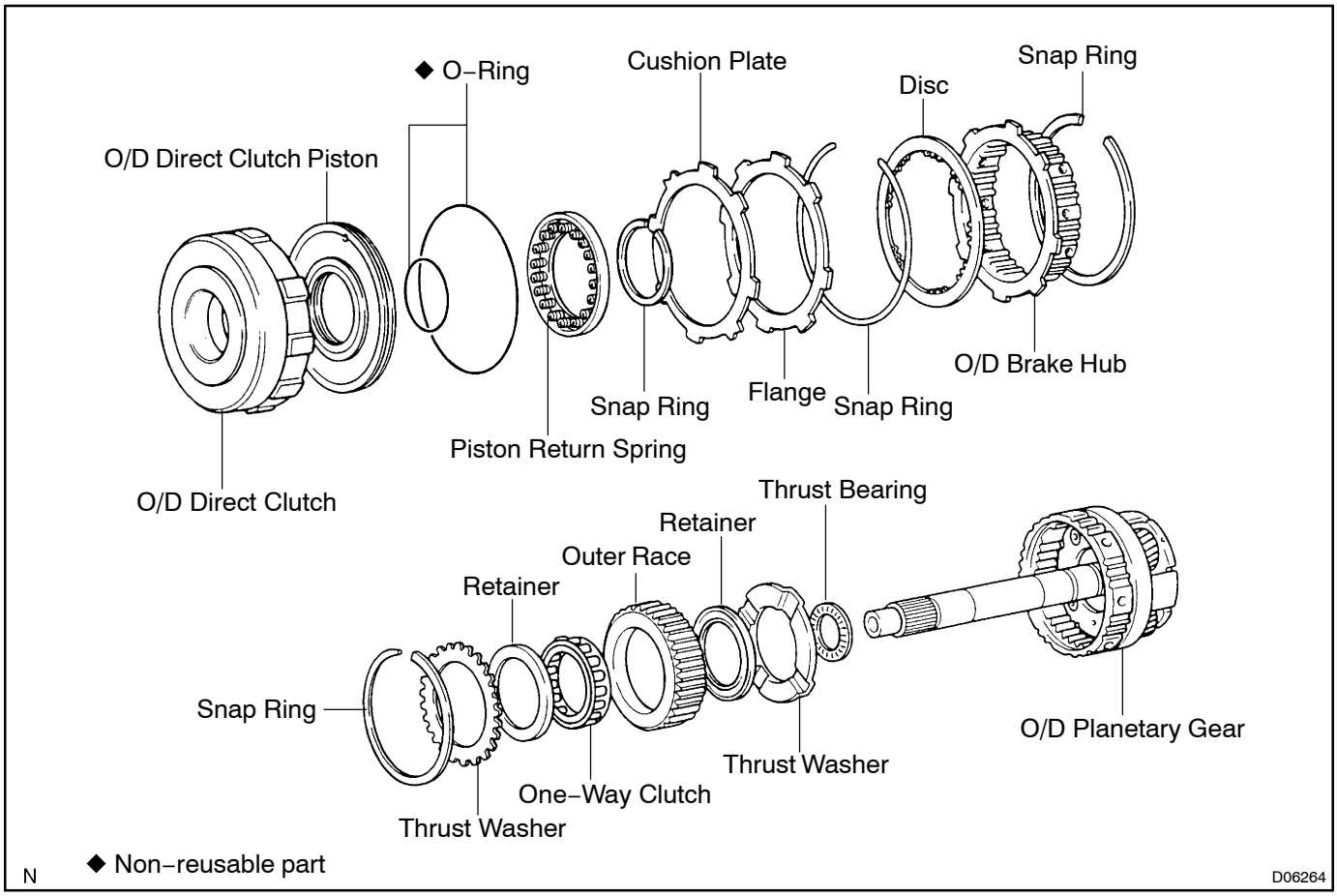

AT0IB–01

# DISASSEMBLY

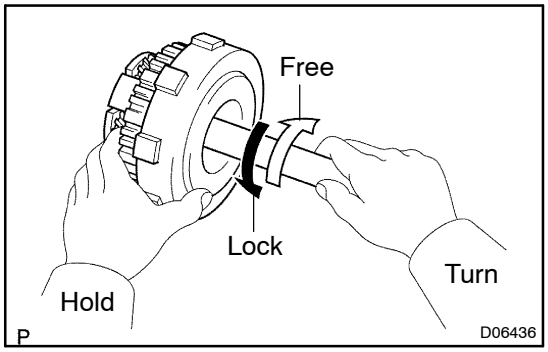


**1. CHECK OPERATION OF ONE–WAY CLUTCH**

Hold the O/D direct clutch drum and turn the input shaft. The input shaft turns freely clockwise and locks counterclockwise.

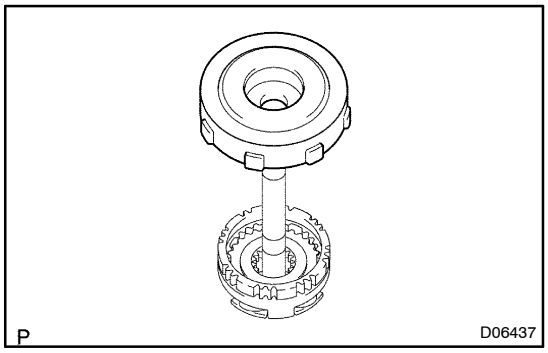


**2. REMOVE O/D DIRECT CLUTCH ASSEMBLY FROM O/D PLANETARY GEAR**

Remove the O/D direct clutch from the O/D planetary gear.

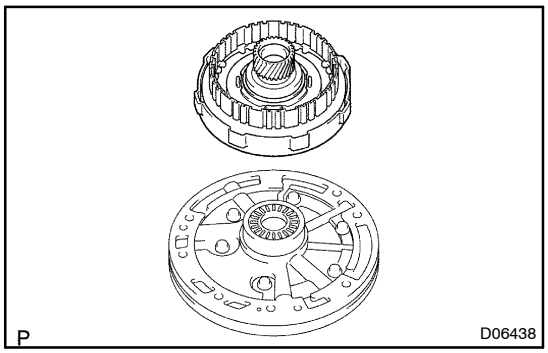


**3. CHECK PISTON STROKE OF O/D DIRECT CLUTCH**

(a) Place the O/D direct clutch assembly onto the oil pump.

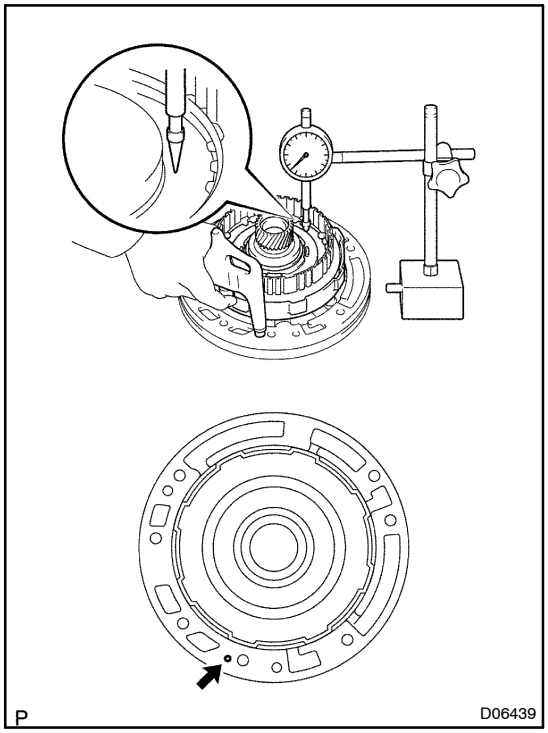


(b) Using a dial indicator, measure the O/D direct clutch piston stroke applying and releasing the compressed air (392 – 785 kPa, 4 – 8 kgf/cm$^2$, 57 – 114 psi), as shown.
**Piston stroke: 1.74 – 2.44 mm (0.0685 – 0.0961 in.)**

If the values are non–standard, inspect the discs.

(c) Remove the O/D direct clutch assembly from the oil pump.

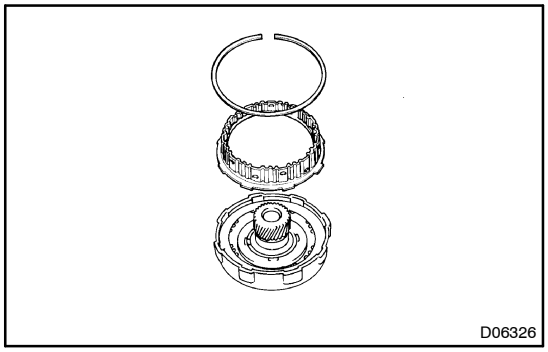


**4. REMOVE O/D BRAKE HUB**

(a) Using a screwdriver, remove the snap ring.

(b) Remove the O/D brake hub.

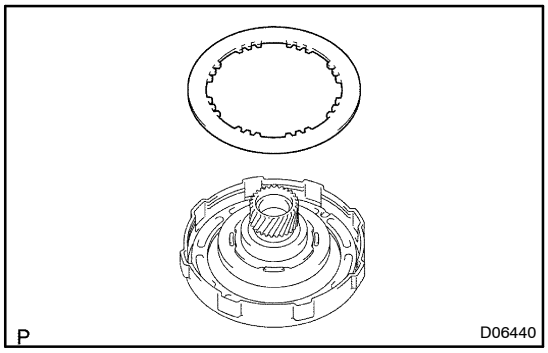


**5. REMOVE DISC**

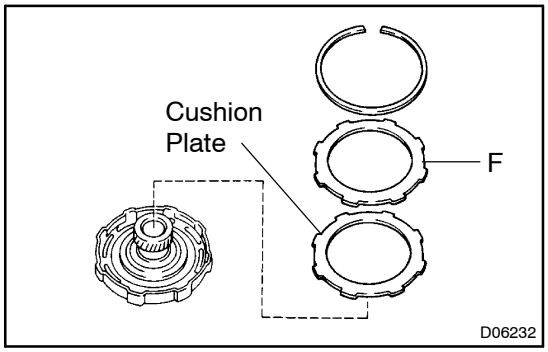


**6. REMOVE FLANGE AND CUSHION PLATE**

(a) Using a screwdriver, remove the snap ring.

(b) Remove the flange and cushion plate.

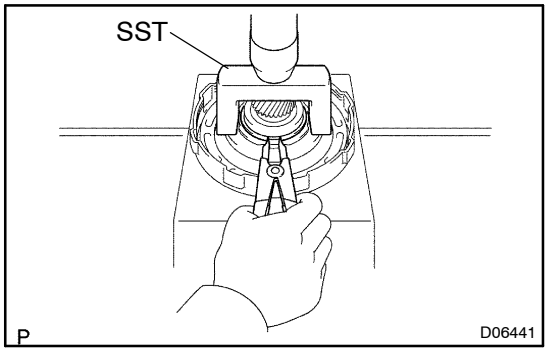


**7. REMOVE PISTON RETURN SPRING**

(a) Place SST on the piston return spring and compress the piston return spring with a shop press.
SST 09350–20015 (09369–20040)

(b) Using a snap ring expander, remove the snap ring.

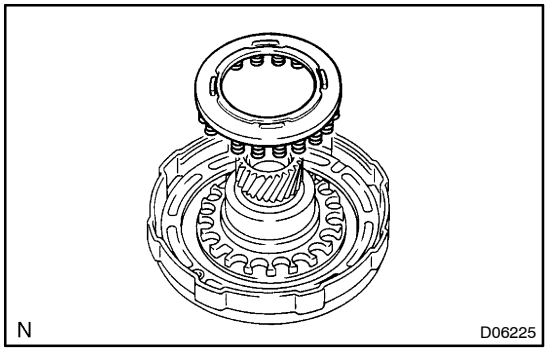


(c) Remove the piston return spring.

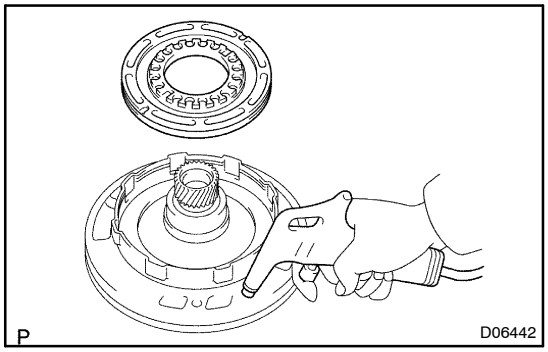


**8. REMOVE O/D DIRECT CLUTCH PISTON**

(a) Place the O/D direct clutch onto the oil pump.

(b) Hold the O/D direct clutch piston and apply compressed air to the oil pump to remove the O/D direct clutch piston.

(c) Remove the 2 O−rings from the piston.

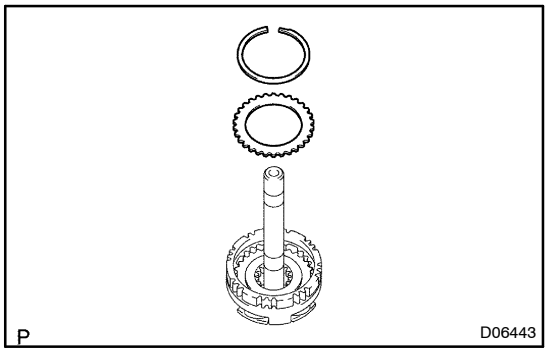


**9. REMOVE THRUST WASHER**

(a) Using a screwdriver, remove the snap ring.

(b) Remove the thrust washer.

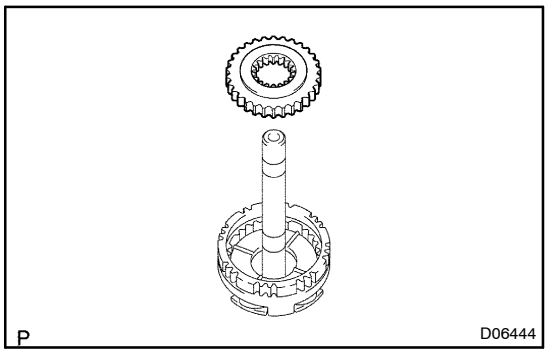


**10. REMOVE ONE−WAY CLUTCH ASSEMBLY**

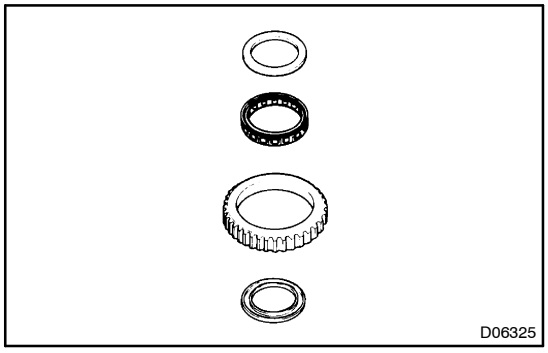


**11. DISASSEMBLE ONE−WAY CLUTCH**

(a) Remove the 2 retainers from the both sides.

(b) Remove the one−way clutch from the outer race.

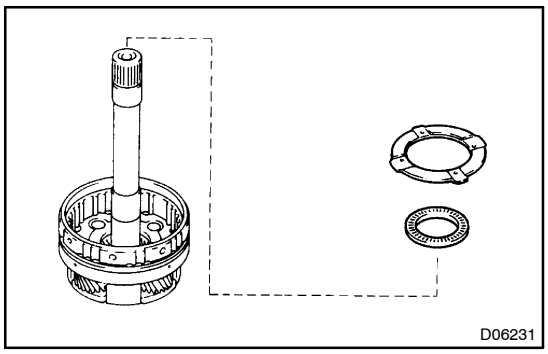


**12. REMOVE THRUST WASHER**

**13. REMOVE ASSEMBLED BEARING AND RACE**

AT0IC–01

# INSPECTION

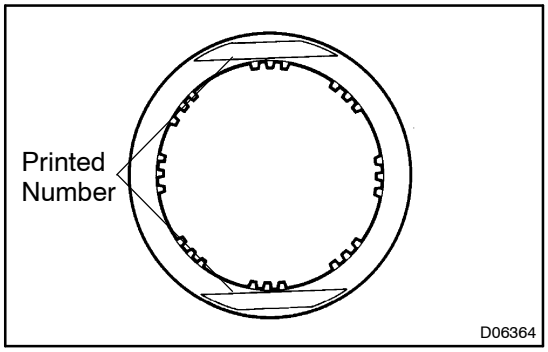


## 1. INSPECT DISC AND FLANGE

Check to see if the sliding surface of the disc and flange are worn or burnt. If necessary, replace them.

HINT:

- If the lining of the disc is peeling off or discolored, or even if parts of the printed numbers are defaced, replace disc.
- Before assembling new disc, soak it in ATF for at least 15 minutes.

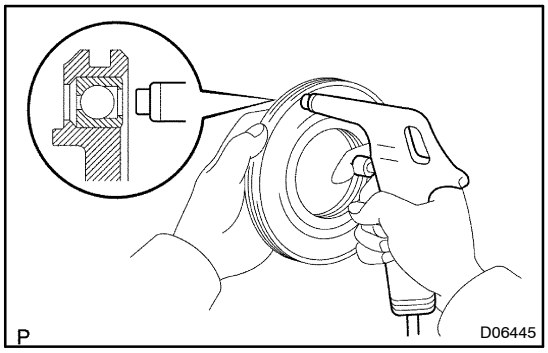


## 2. CHECK O/D DIRECT CLUTCH PISTON

(a) Check that check ball is free by shaking the piston.

(b) Check that the valve does not leak by applying low–pressure compressed air.

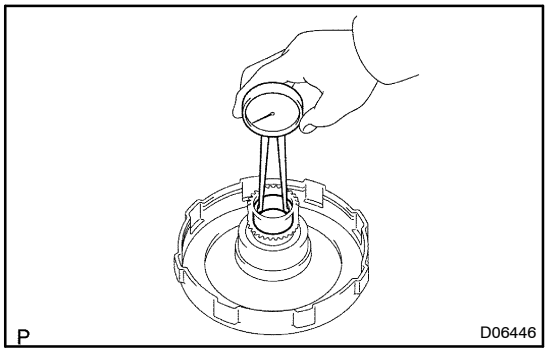


## 3. CHECK O/D DIRECT CLUTCH DRUM BUSHING

Using a dial indicator, measure the inside diameter of the clutch drum bushings.

**Maximum inside diameter: 23.14 mm (0.9110 in.)**

If the inside diameter is greater than the maximum, replace the clutch drum.

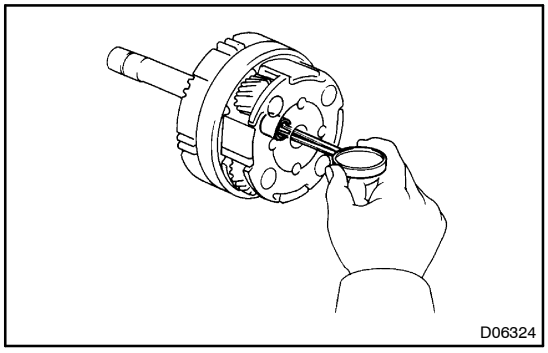


## 4. CHECK O/D PLANETARY GEAR BUSHING

Using a dial indicator, measure the inside diameter of the planetary gear bushing.

**Maximum inside diameter: 11.27 mm (0.4437 in.)**

If the inside diameter is greater than the maximum, replace the planetary gear.

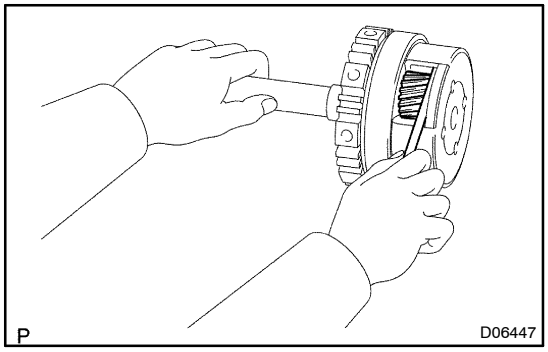


## 5. MEASURE PLANETARY PINION GEAR THRUST CLEARANCE

Using a feeler gauge, measure the planetary pinion gear thrust clearance.

**Standard clearance:**
**0.20 – 0.50 mm (0.0079 – 0.0197 in.)**

If the clearance is non–standard, inspect the planetary gear thrust washer. If necessary, replace the planetary gear assembly.

AT0ID–01

# REASSEMBLY

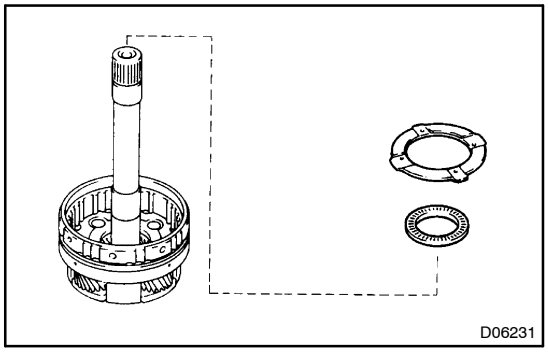


### 1. INSTALL ASSEMBLED BEARING AND RACE

Coat the assembled bearing and race with petroleum jelly and install it onto the O/D planetary gear.

**Assembled bearing and race diameter:**

| | Inside mm (in.) | Outside mm (in.) |
|---|---|---|
| Assembled bearing and race | 37.3 (1.469) | 52.5 (2.067) |

### 2. INSTALL THRUST WASHER

Install the thrust washer to the O/D planetary gear, the grooved side facing upward.

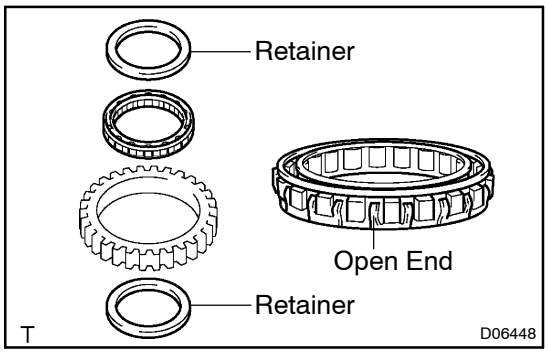


### 3. ASSEMBLE ONE–WAY CLUTCH

(a) Install the one–way clutch into the outer race, the open end of the retainers facing upward.

(b) Install the 2 retainers to both sides.

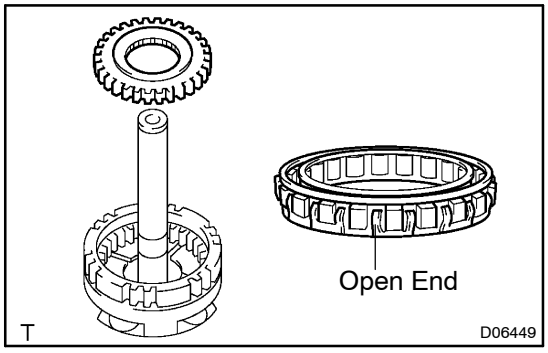


### 4. INSTALL ONE–WAY CLUTCH ASSEMBLY

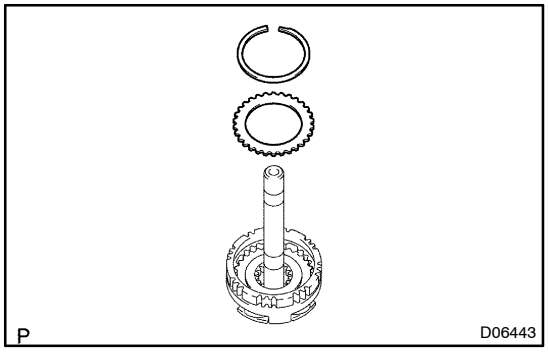


### 5. INSTALL THRUST WASHER

(a) Install the thrust washer.

(b) Using a screwdriver, install the snap ring.

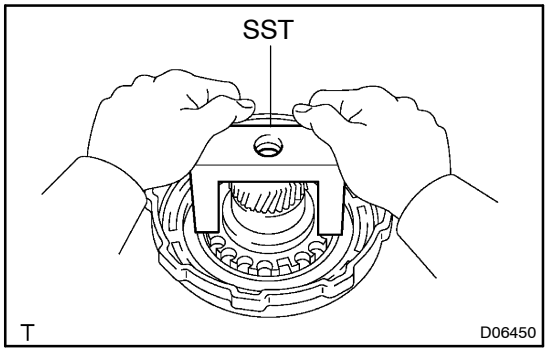


**6. INSTALL O/D DIRECT CLUTCH PISTON**

(a) Coat new O–rings with ATF and install them on the O/D direct clutch piston.

(b) Place SST on the direct clutch piston.
SST 09350–20015 (09369–20040)

(c) Being careful not to damage the O–rings, press in the direct clutch piston onto the clutch drum with both hands.

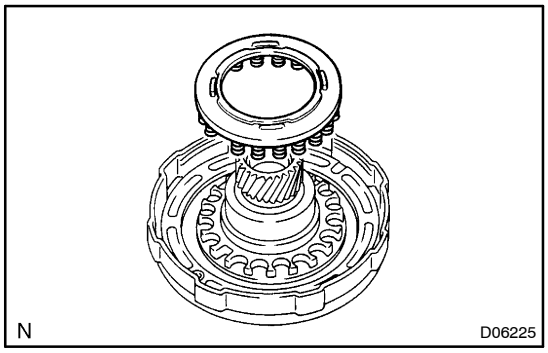


**7. INSTALL PISTON RETURN SPRING**

(a) Install the piston return spring.

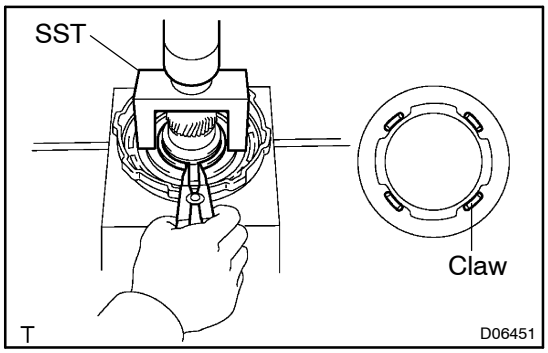


(b) Place SST on the piston return spring, and compress the piston return spring with a shop press.
SST 09350–20015 (09369–20040)

(c) Install the snap ring with a snap ring expander. Be sure the end gap of the snap ring is not aligned with the spring seat claw.

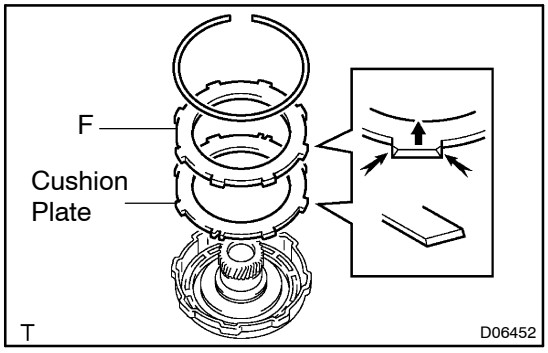


**8. INSTALL CUSHION PLATE AND FLANGE**

(a) Install the cushion plate.

(b) Install flange, the rounded edge facing upward.

(c) Using a screwdriver, install the snap ring. Be sure the end gap of the snap ring is not aligned with the cutout portion of the drum.

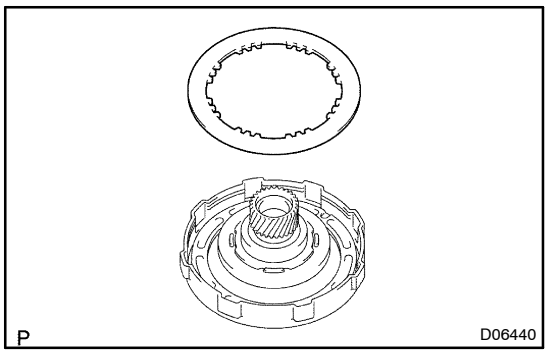


**9. INSTALL DISC**

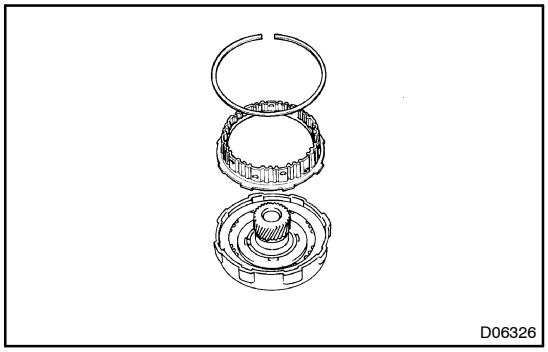


**10. INSTALL O/D BRAKE HUB**

(a) Install the O/D brake hub.

(b) Using a screwdriver, install the snap ring. Be sure the end gap of the snap ring is not aligned with the cutout portion of the drum.

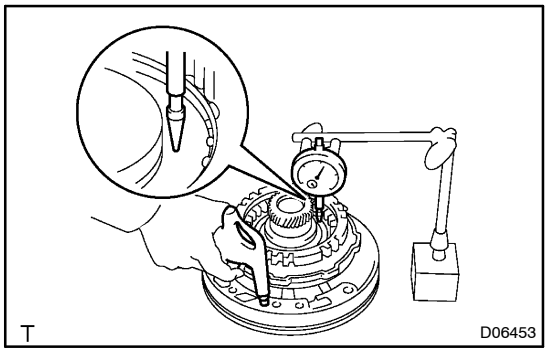


**11. CHECK PISTON STROKE OF O/D DIRECT CLUTCH**

(a) Place the O/D direct clutch assembly onto the oil pump.

(b) Using dial indicator, measure the O/D direct clutch piston stroke applying and releasing the compressed air (392 – 785 kPa, 4 – 8 kgf/cm$^2$, 57 – 114 psi), as shown.

**Piston stroke: 1.74 – 2.44 mm (0.0685 – 0.0961 in.)**

If the piston stroke is less than the limit, parts may have been assembled incorrectly, check and reassemble again.

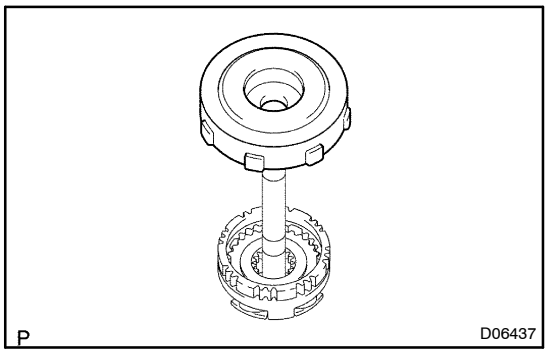


**12. INSTALL O/D DIRECT CLUTCH ASSEMBLY**

Install the direct clutch assembly onto the O/D planetary gear.

HINT:

Mesh the splines of the O/D planetary gear with the flukes of the disc by rotating and pushing the O/D planetary gear.

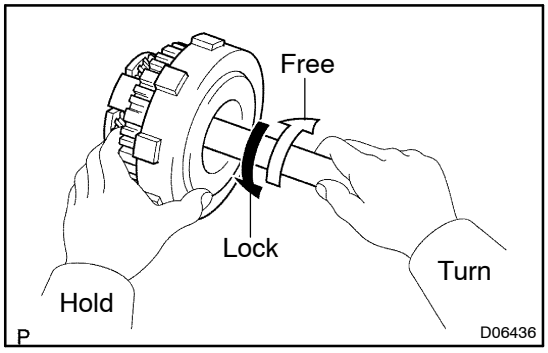


**13. CHECK OPERATION OF ONE–WAY CLUTCH**

Hold the O/D direct clutch drum and turn the input shaft. The input shaft turns freely clockwise and locks counterclockwise.

# FRONT CLUTCH

## COMPONENTS

AT0IE–01

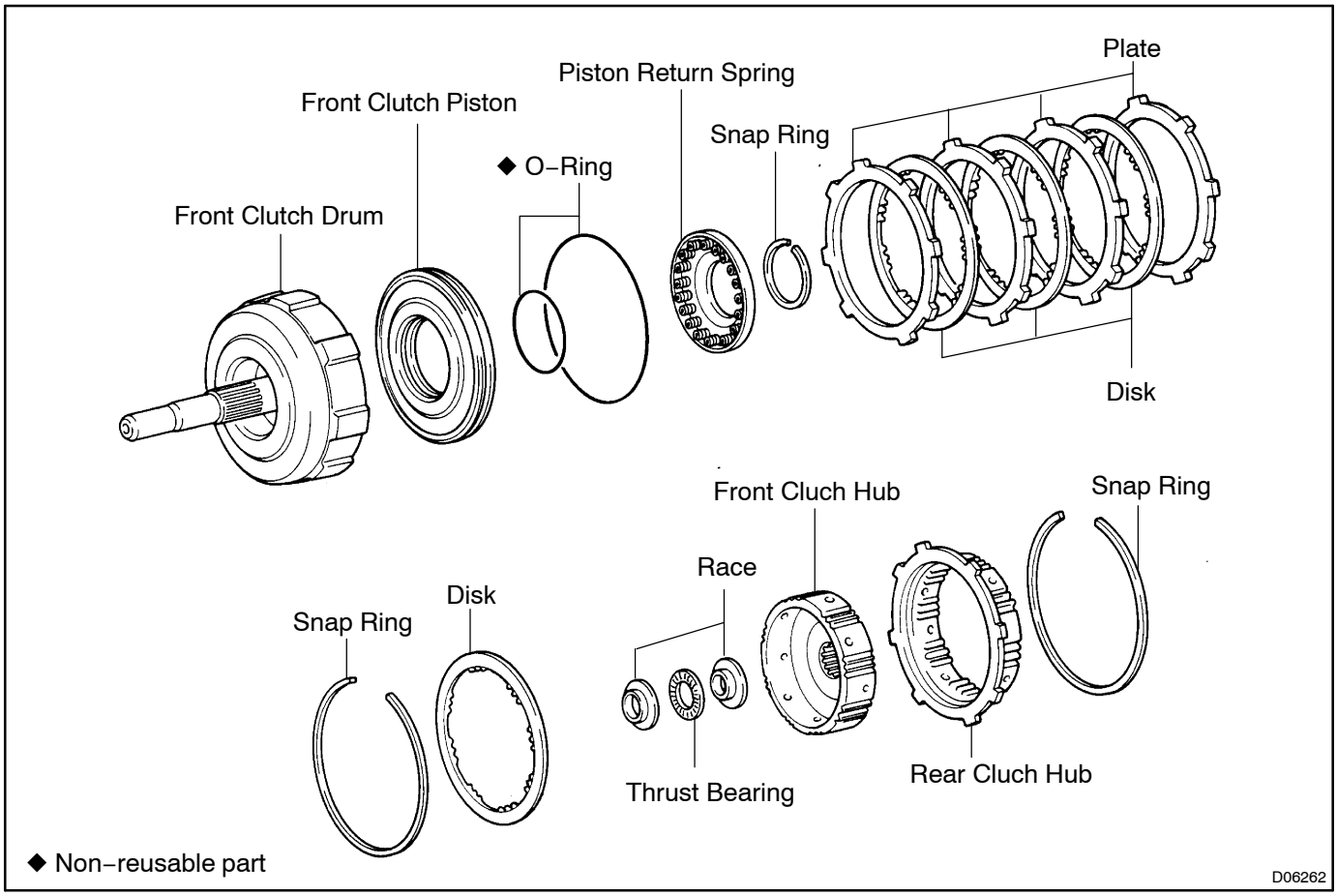

AT0IF–01

# DISASSEMBLY

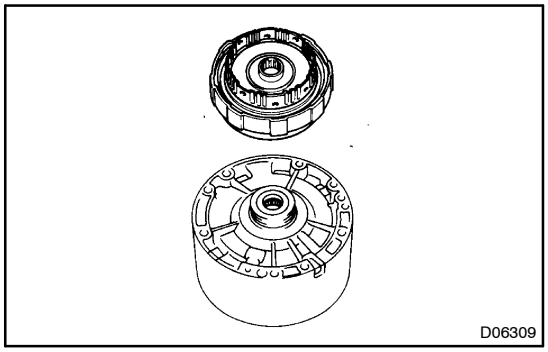


**1. INSTALL FRONT CLUTCH ASSEMBLY TO O/D CASE**

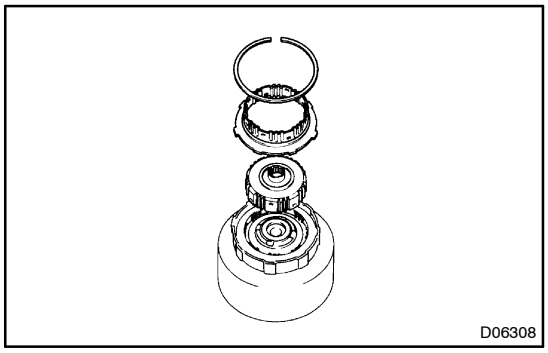


**2. REMOVE REAR CLUTCH HUB AND FRONT CLUTCH HUB**

(a) Using a screwdriver, remove the snap ring.

(b) Remove the rear clutch hub and front clutch hub.

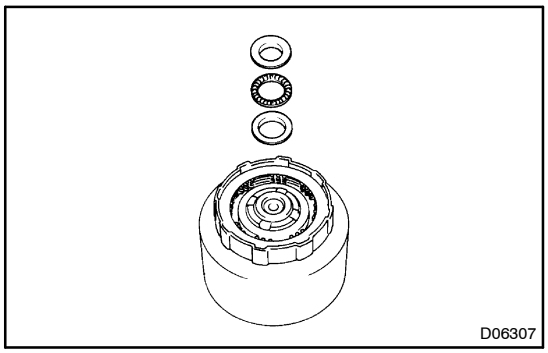


(c) Remove the bearing and 2 races.

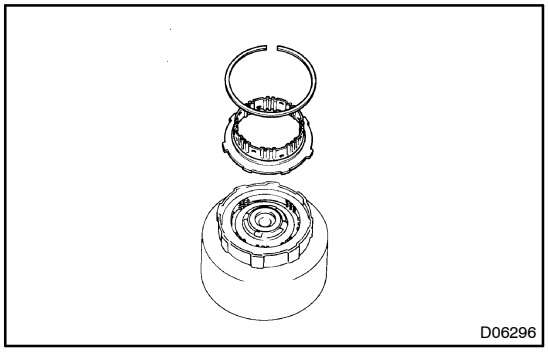


**3. CHECK PISTON STROKE OF FRONT CLUTCH**

(a) For check of piston stroke, install the rear clutch hub.

(b) Install the snap ring.

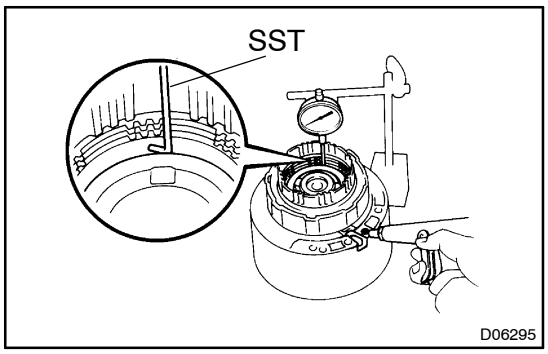


(c) Using SST and a dial indicator, measure the front clutch piston stroke applying and releasing the compressed air (392 – 785 kPa, 4 – 8 kgf/cm$^2$, 57 – 114 psi), as shown.
SST 09350–20015
**Piston stroke:**
**1.40 – 1.60 mm (0.0551 – 0.0630 in.)**

If the values are non–standard, inspect the discs.

(d) Remove the snap ring and rear clutch hub.

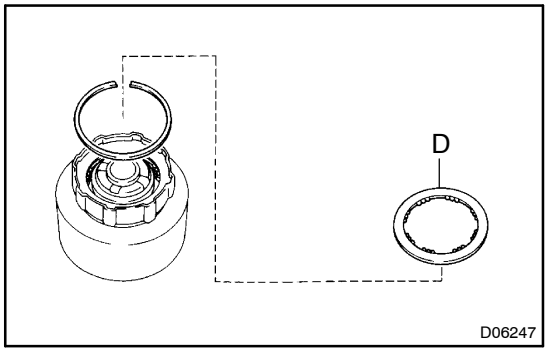


**4. REMOVE PLATE AND DISC**

(a) Remove the disc.

(b) Using a screwdriver, remove the snap ring.

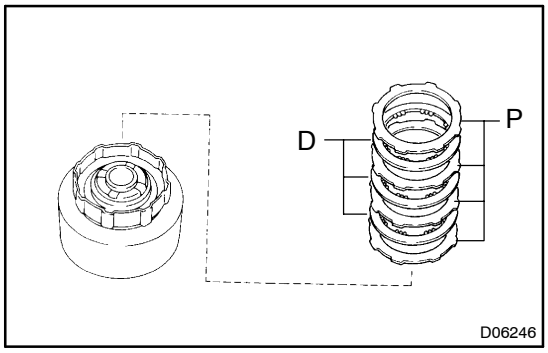


(c) Remove the 4 plates and 3 discs.

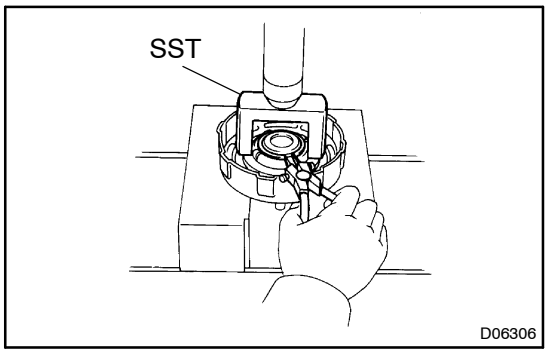


**5. REMOVE PISTON RETURN SPRING**

(a) Place SST on the spring seat and compress the return springs with a shop press.
SST 09350–20015 (09369–20040)

(b) Using a snap ring expander, remove the snap ring.

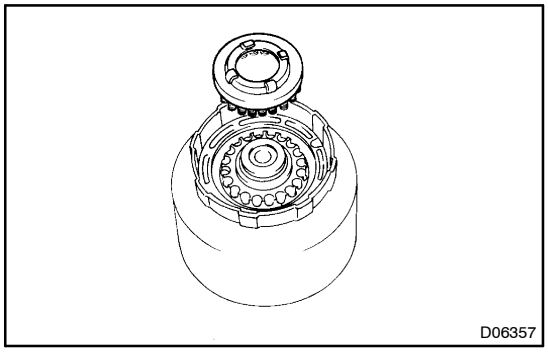


(c) Remove the piston return spring.

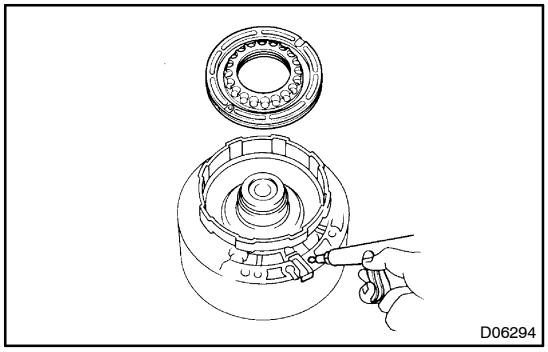


**6. REMOVE FRONT CLUTCH PISTON**

(a) Place the front clutch drum onto the O/D case.

(b) Hole the front clutch piston with hand, apply compressed air to the O/D case to remove the front clutch piston.

(c) Remove the 2 O–rings from the piston.

AT0IG–01

# INSPECTION

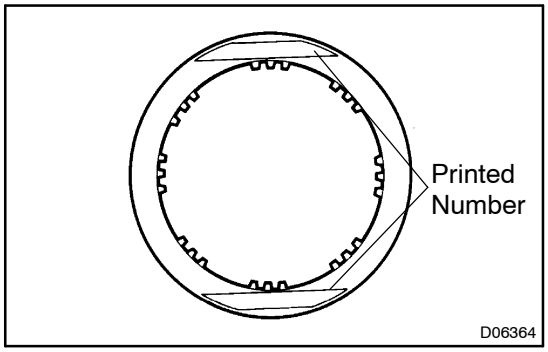


## 1. INSPECT DISC AND PLATE

Check to see if the sliding surface of the disc and plate are worn or burnt.

If necessary, replace them.

HINT:

- If the lining of the disc is peeling off or discolored, or even if parts of the printed numbers are defaced, replace all discs.
- Before assembling new discs soak them in ATF for at least 15 mionutes.

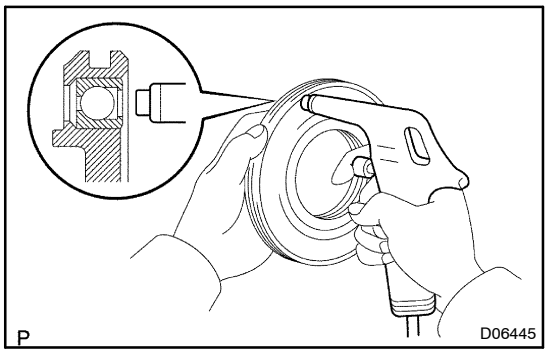


## 2. CHECK FRONT CLUTCH PISTON

(a) Check that check ball is free by shaking the piston.

(b) Check that the valve does not leak by applying low pressure compressed air.

AT0IH–01

# REASSEMBLY

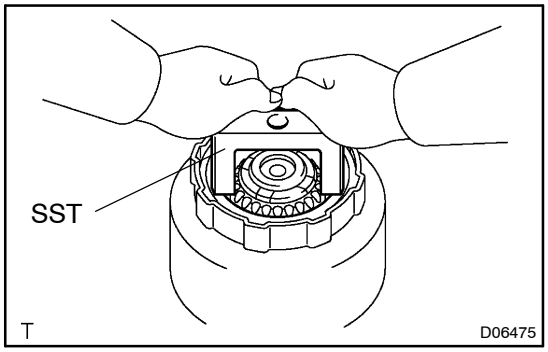


**1. INSTALL FRONT CLUTCH PISTON**

(a) Coat new O–rings with ATF and install them on the front clutch piston.

(b) Place SST on the front clutch piston.
SST 09350–20015 (09369–20040)

(c) Being careful not to damage the O–rings, press the clutch piston into the front clutch drum with both hands.

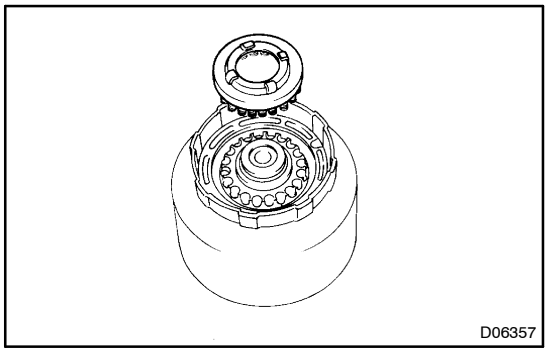


**2. INSTALL PISTON RETURN SPRING**

(a) Install the piston return spring.

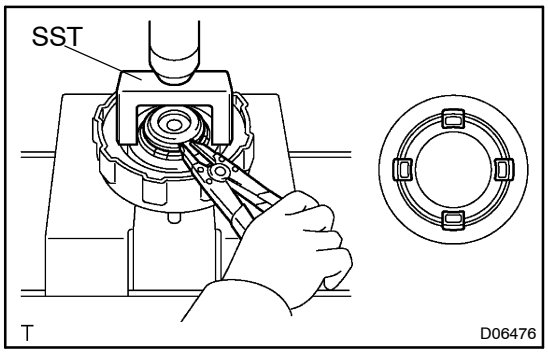


(b) Place SST on the spring seat, and compress the return spring with a shop press.
SST 09350–20015 (09369–20040)

(c) Install the snap ring with a snap ring expander. Be sure the end gap of the snap ring is not aligned with the spring seat claw.

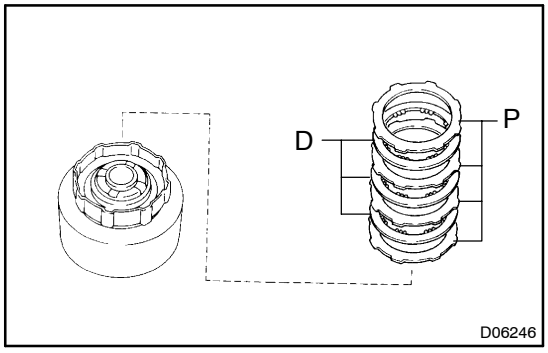


**3. INSTALL PLATE AND DISC**

(a) Install the 4 plates and 3 discs.
**Install in order: P = Plate D = Disc**
**P – D – P – D – P – D – P**

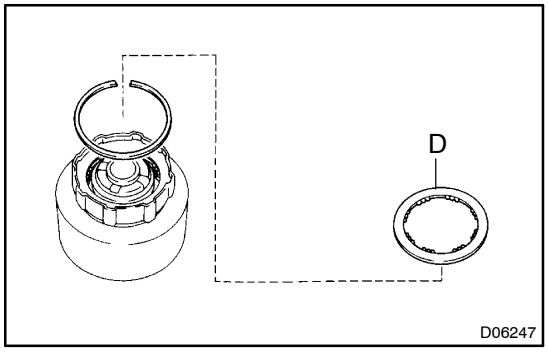


(b) Install the snap ring. Be sure the end gap of the snap ring is not aligned with the cutout portion of the front clutch drum.

(c) Install the disc.

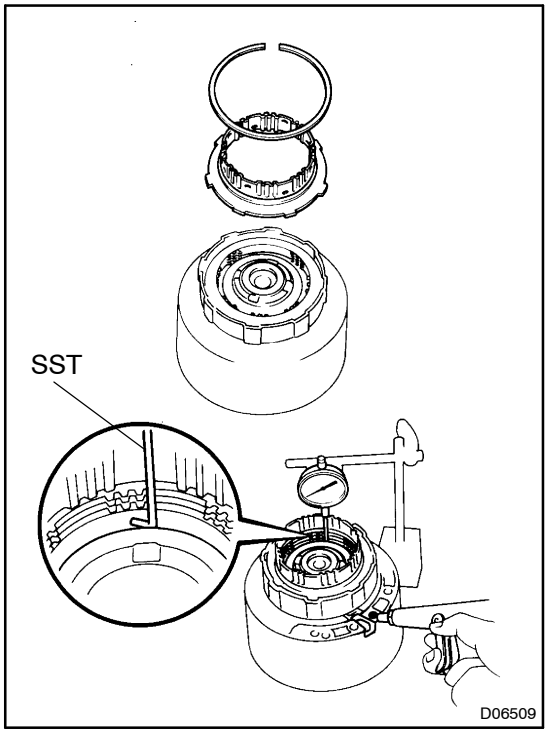


**4. CHECK PISTON STROKE OF FRONT CLUTCH**

(a) For check of piston stroke, install the rear clutch hub.

(b) Install the snap ring.

(c) Using SST and a dial indicator, measure the front clutch piston stroke applying and releasing the compressed air (392 – 785 kPa, 4 – 8 kgf/cm$^2$, 57 – 114 psi), as shown.
SST 09350–20015 (09350–06120)
**Piston stroke:**
**1.40 – 1.60 mm (0.0551 – 0.0630 in.)**

If the piston stroke is less than the limit, parts may have been assembled incorrectly, check and reassemble again.
If the piston stroke is non–standard, select another plate.
HINT:
Thre are 2 different thicknesses for the plate.
**Plate thickness:**

| | |
|---|---|
| 1.8 mm (0.071 in.) | 2.0 mm (0.079 in.) |

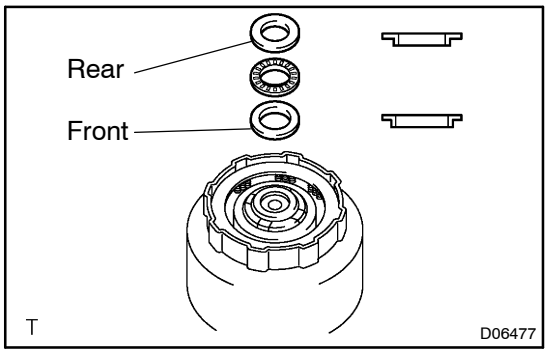


(d) Remove the snap ring and rear clutch hub.

**5. INSTALL FRONT CLUTCH HUB**

(a) Coat the bearing and races with petroleum jelly and install them onto the front clutch drum.

**Bearing and races diameter:**

| | Inside mm (in.) | Outside mm (in.) |
|---|---|---|
| Race (Rear) | 21.4 (0.843) | 37.3 (1.469) |
| Bearing | 23.4 (0.921) | 37.5 (1.476) |
| Race (Front) | 24.1 (0.949) | 37.3 (1.469) |

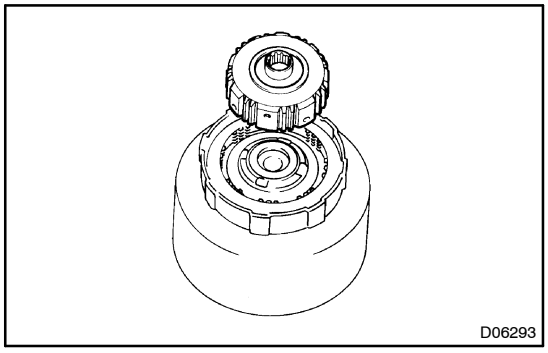


(b) Install the front clutch hub into the front clutch drum.

HINT:
Mesh the splines of the front clutch hub with the flukes of the discs by rotating and pushing the front clutch hub.

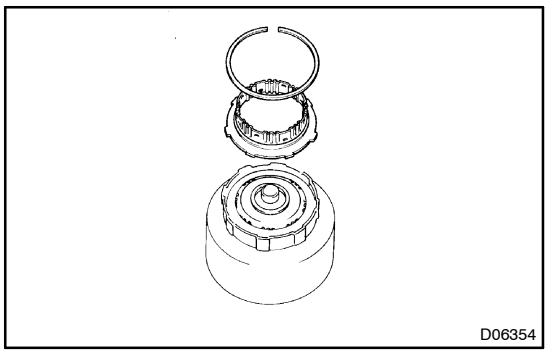


**6. INSTALL REAR CLUTCH HUB**

(a) Install the rear clutch hub.

(b) Install the snap ring. Be sure the end gap of the snap ring is not aligned with the cutout portion of the front clutch drum.

# REAR CLUTCH

## COMPONENTS

AT0II−01

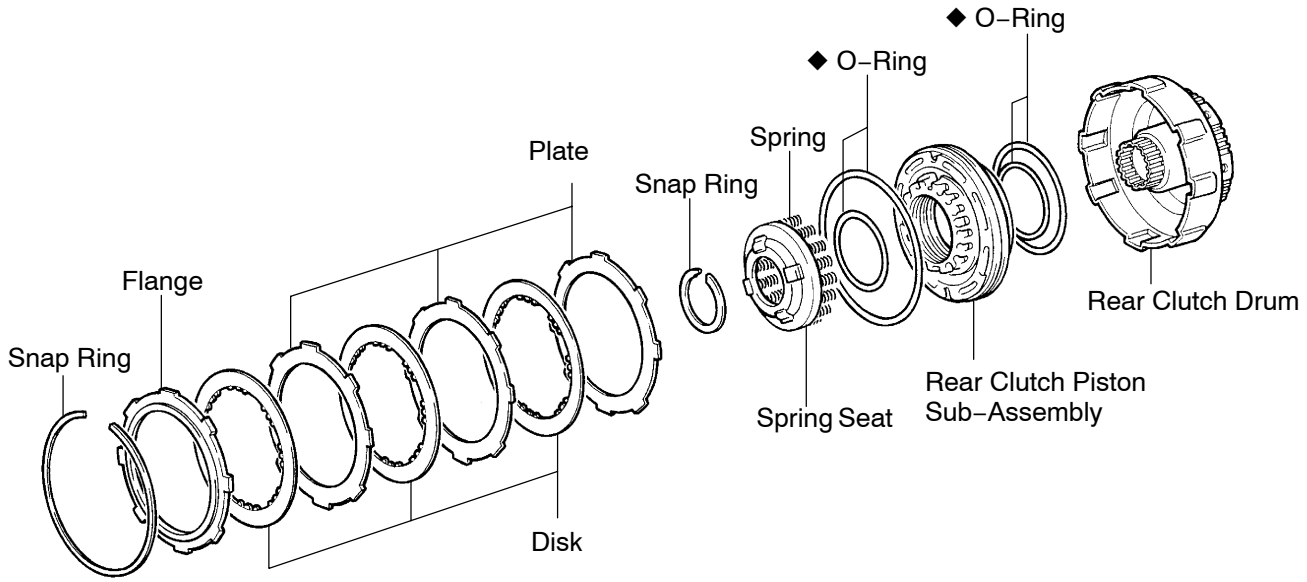


◆ Non−reusable part

N

D06261

AT0IJ–01

# DISASSEMBLY

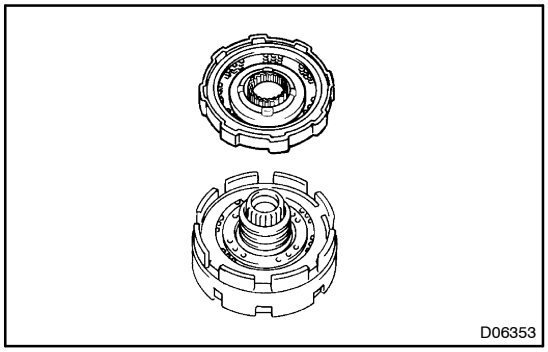


**1. CHECK PISTON STROKE OF REAR CLUTCH**

(a) Place the rear clutch assembly onto the center support.

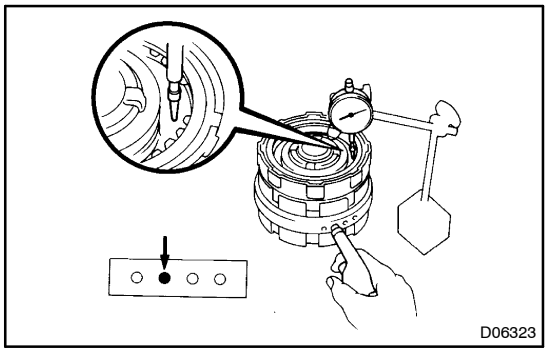


(b) Using a dial indicator, measure the rear clutch piston stroke applying and releasing the compressed air (392 – 785 kPa, 4 – 8 kgf/cm$^2$, 57 – 114 psi), as shown.
**Piston stroke:**
**0.90 – 1.30 mm (0.0354 – 0.0512 in.)**

If the values are non–standard, inspect the discs.

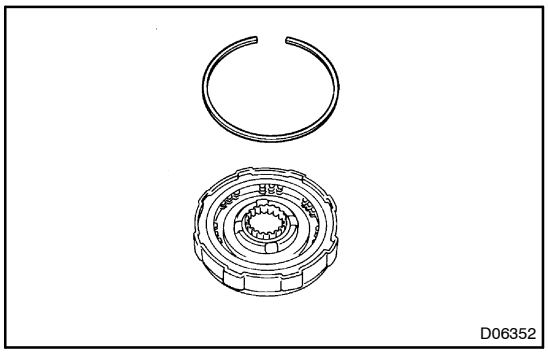


**2. REMOVE FLANGE**

(a) Using a screwdriver, remove the snap ring.

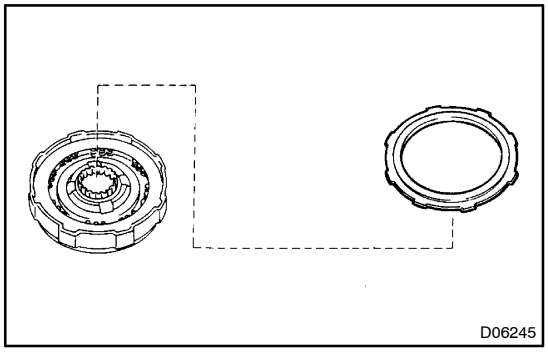


(b) Remove the flange.

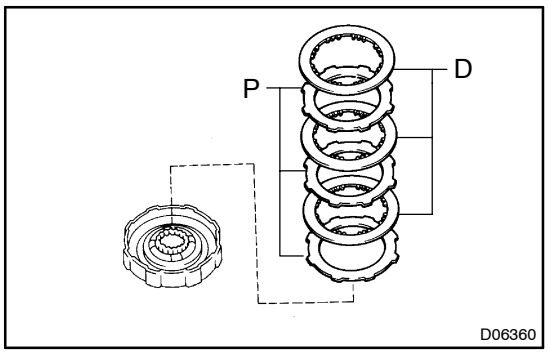


**3. REMOVE DISC AND PLATE**

Remove the 3 discs and 3 plates.

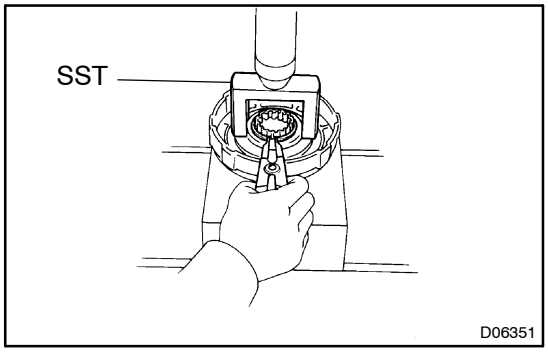


**4. REMOVE PISTON RETURN SPRING**

(a) Place SST on the piston return spring and compress the piston return spring with a shop press.
SST 09350–20015 (09369–20040)

(b) Using a snap ring expander, remove the snap ring.

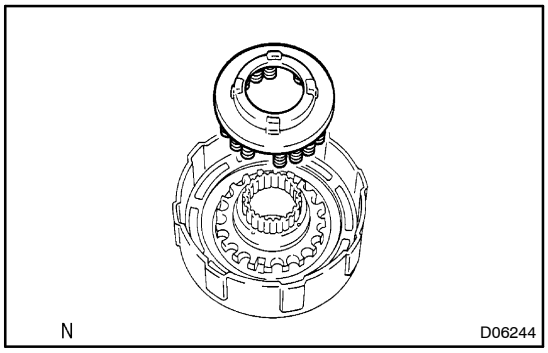


(c) Remove the piston return spring.

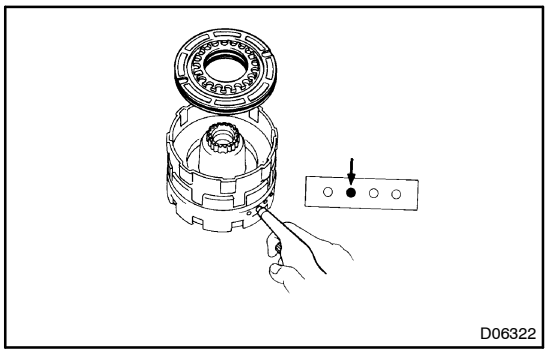


**5. REMOVE REAR CLUTCH PISTON**

(a) Place the rear clutch drum onto the center support.

(b) Hold the rear clutch piston with hand, apply compressed air to the center support to remove the rear clutch piston.

(c) Remove the 4 O–rings from the piston.

AT0IK−01

# INSPECTION

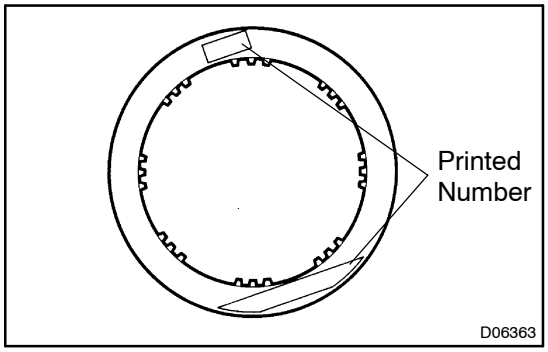


**1. INSPECT DISC, PLATE AND FLANGE**

Check to see if the sliding surface of the disc, plate and flange are worn or burnt.

If necessary, replace them.

HINT:

- If the lining of the disc is peeling off or discolored, or even if parts of the printed numbers are defaced, replace all discs.
- Before assembling new discs, soak them in ATF for at least 15 minutes.

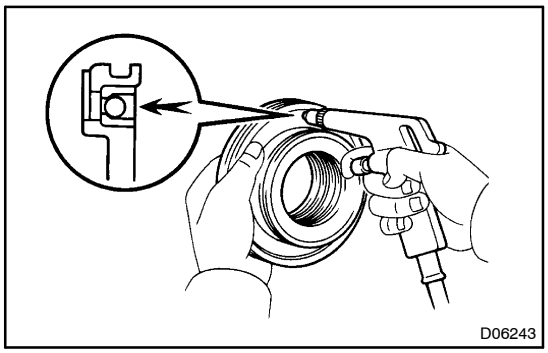


**2. CHECK REAR CLUTCH PISTON**

(a) Check that the check ball is free by shaking the piston.

(b) Check that the valve does not leak by applying low−pressure compressed air.

AT0IL–01

# REASSEMBLY

**1. INSTALL REAR CLUTCH PISTON**

(a) Coat new O–rings with ATF and install them on the rear clutch piston.

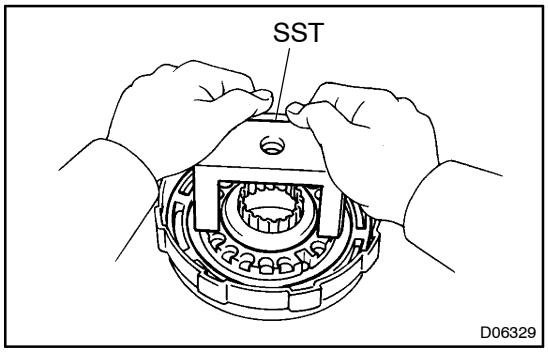


(b) Install the rear clutch piston.

(c) Place SST on the rear clutch piston.
SST 09350–20015 (09369–20040)

(d) Being careful not to damage the O–rings, press in the rear clutch piston into the clutch drum with both hands.

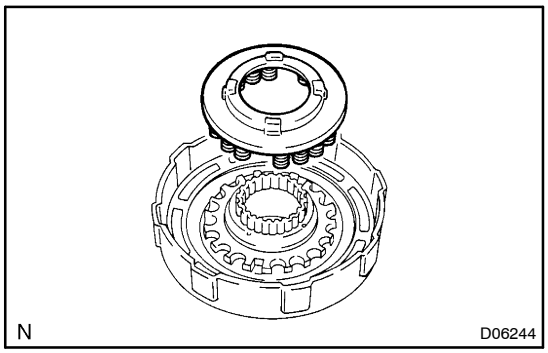


**2. INSTALL PISTON RETURN SPRING**

(a) Install the piston return spring.

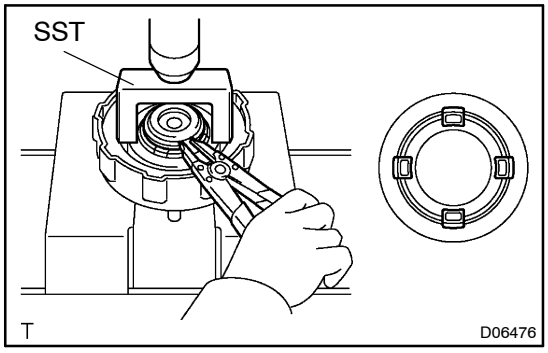


(b) Place SST on the piston return spring, and compress the piston return spring with a shop press.
SST 09350–20015 (09369–20040)

(c) Install the snap ring with a snap ring expander. Be sure the end gap of the snap ring is not aligned with the spring seat claw.

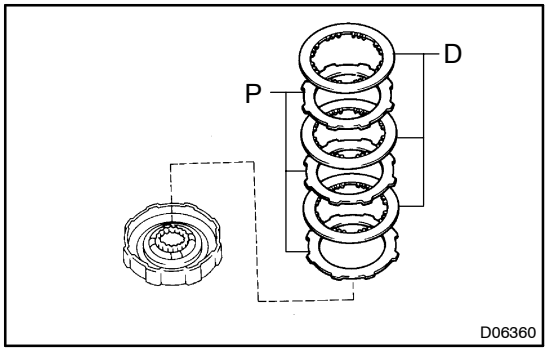


**3. INSTALL PLATE AND DISC**

Install the 3 plates and 3 discs.

**Install in order: P = Plate D = Disc**
**P – D – P – D – P – D**

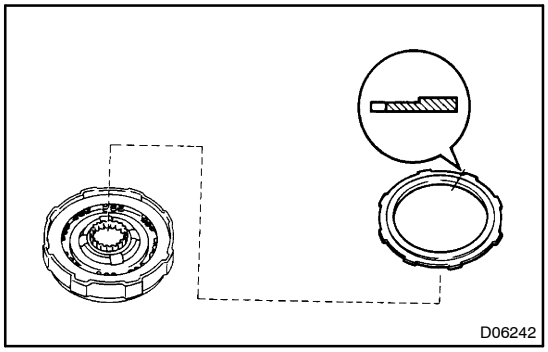


**4. INSTALL FLANGE**

(a) Install the flange, the flat end facing downward.

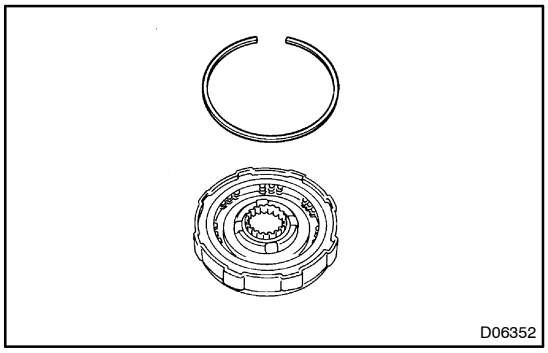


(b) Using a screwdriver, install the snap ring. Be sure the end gap of the snap ring is not aligned with the cutout portion of the rear clutch drum.

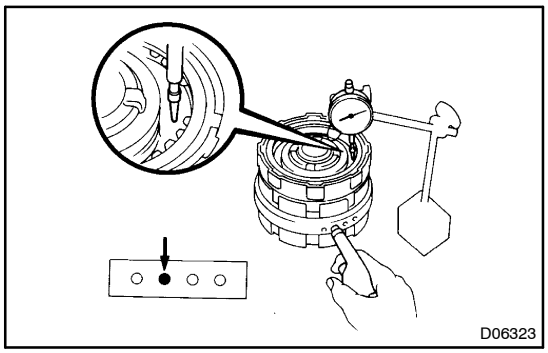


**5. CHECK PISTON STROKE OF REAR CLUTCH**

(a) Plate the rear clutch assembly onto the center support.

(b) Using a dial indicator, measure the rear clutch piston stroke applying and releasing the compressed air (392 – 785 kPa, 4 – 8 kgf/cm$^2$, 57 – 114 psi), as shown.

**Piston stroke:**

**0.90 – 1.30 mm (0.0354 – 0.0512 in.)**

If the piston stroke is less than the limit, parts may have been assembled incorrectly, check and reassemble again.

If the piston stroke is nonstandard, select another flange.

HINT:

There are 3 different thickness for thee flange.

**Flange thickness:**

| | |
|---|---|
| 3.55mm (0.1398 in.) | 4.00mm (0.1575 in.) |
| 3.75mm (0.1477 in.) | – |

# NO.1 BRAKE

## COMPONENTS

AT0IM–01

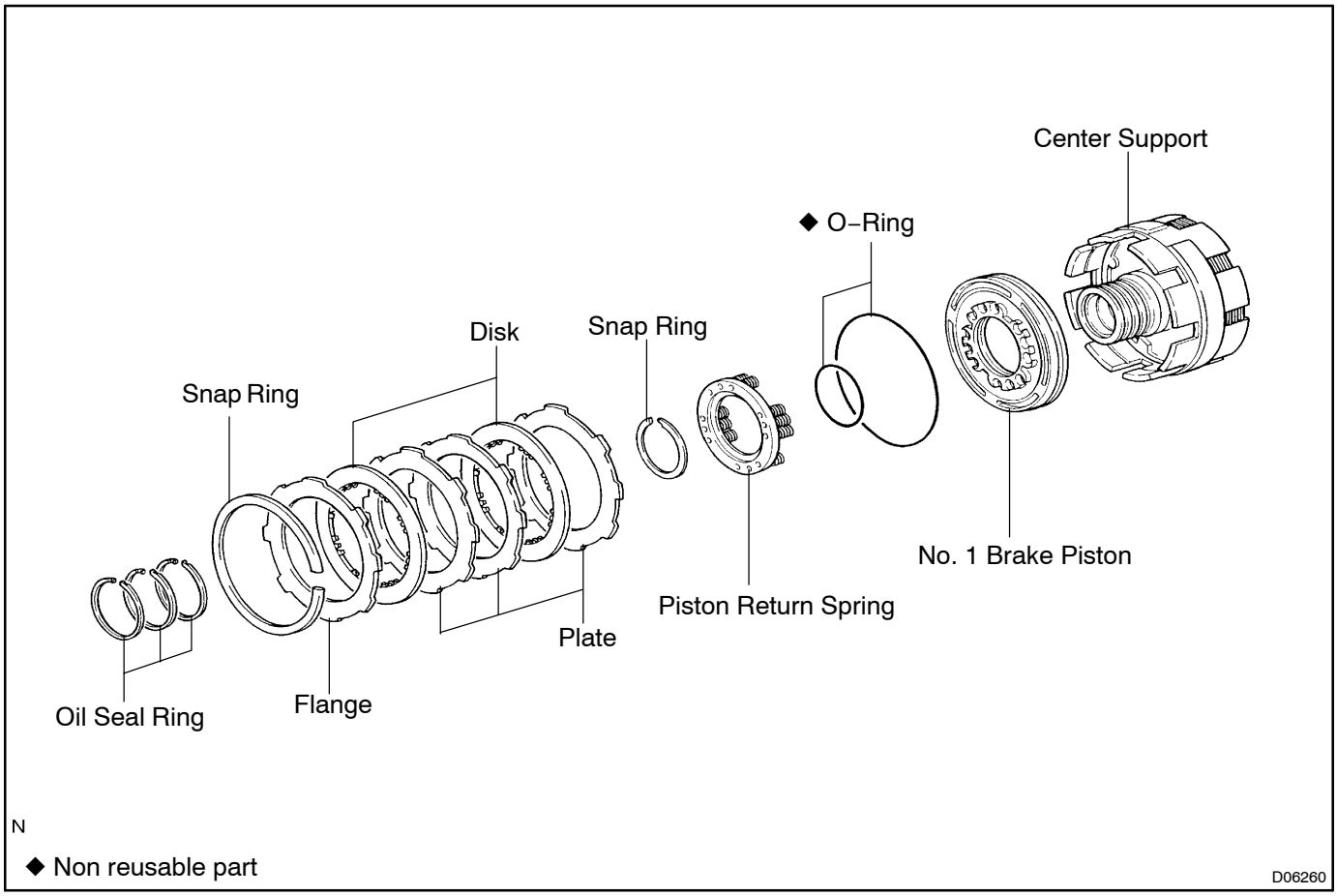

AT0IN–01

# DISASSEMBLY

**1. REMOVE PLANETARY SUN GEAR AND NO. 1 ONE–WAY CLUTCH**

(a) Using a snap ring expander, remove the snap ring.

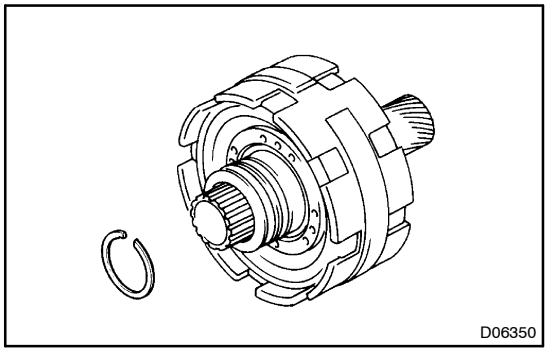


(b) Remove the planetary sun gear with the No. 1 one–way clutch.

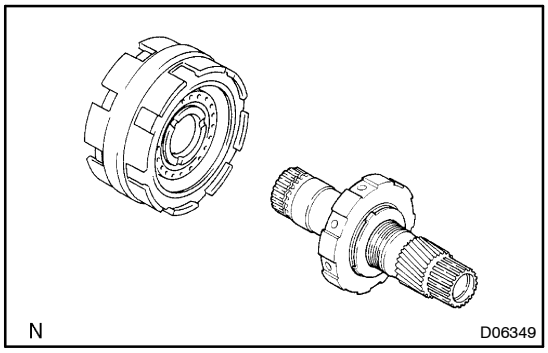


**2. CHECK PISTON STROKE OF NO. 1 BRAKE**

Using a dial indicator, measure the No. 1 brake piston stroke applying and releasing the compressed air (392 – 785 kPa, 4 – 8 kgf/cm$^2$, 57 – 114 psi), as shown.

**Piston stroke: 0.75 – 1.35 mm (0.0295 – 0.0531 in.)**

If the values are non–standard, inspect the disc.

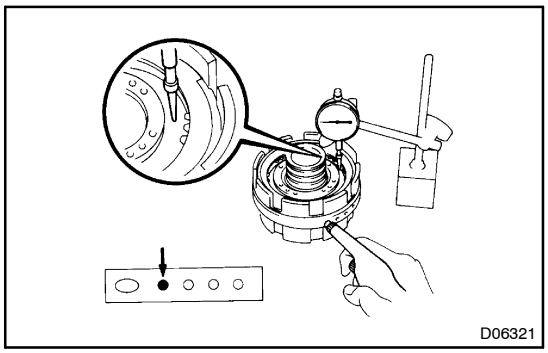


**3. REMOVE FLANGE**

(a) Using a screwdriver, remove the snap ring.

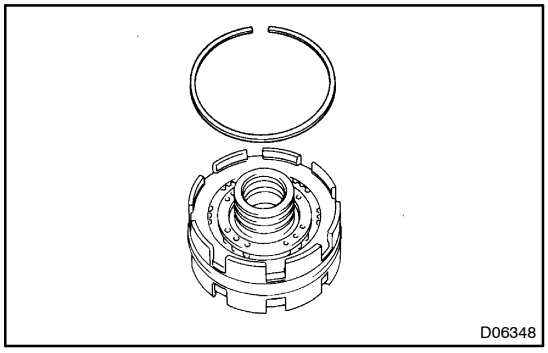


(b) Remove the flange.

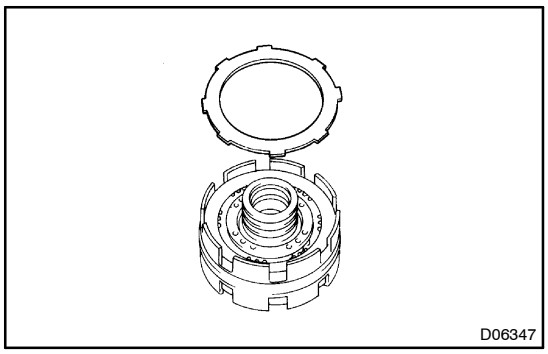

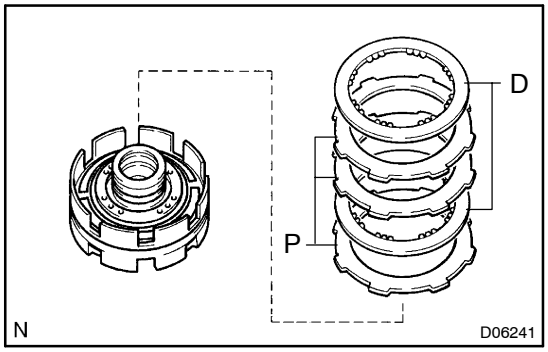


**4. REMOVE DISC AND PLATE**

Remove the 2 discs and 3 plates.

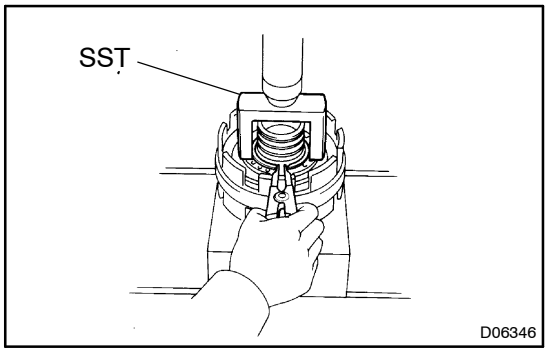


**5. REMOVE PISTON RETURN SPRING**

(a) Place SST on the spring seat and compress the return springs with a shop press.
SST 09350–20015 (09369–20040)

(b) Using a snap ring expander, remove the snap ring.

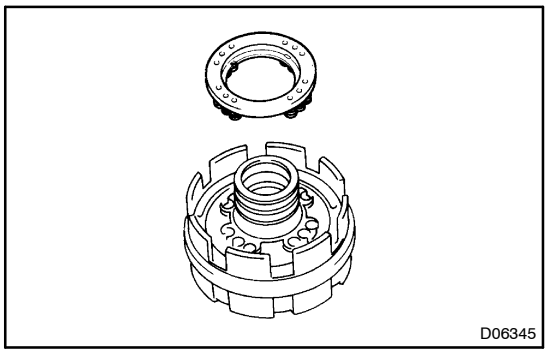


(c) Remove the piston return spring.

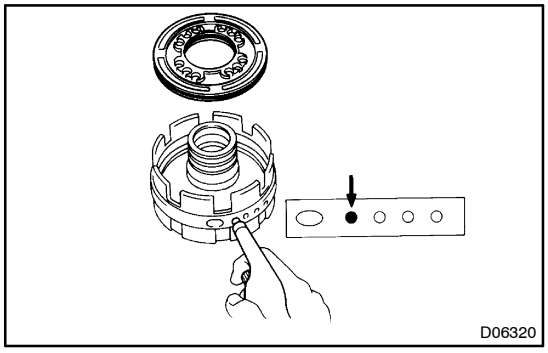


**6. REMOVE NO. 1 BRAKE PISTON**

(a) Hole the No. 1 brake piston with hand, apply compressed air to the center support to remove the No. 1 brake piston.

(b) Remove the 2 O–rings from the piston.

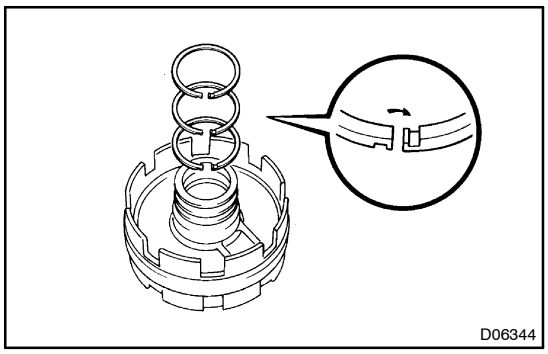


**7. REMOVE OIL SEAL RING**

Remove the 3 oil seal rings.

AT0IO–01

# INSPECTION

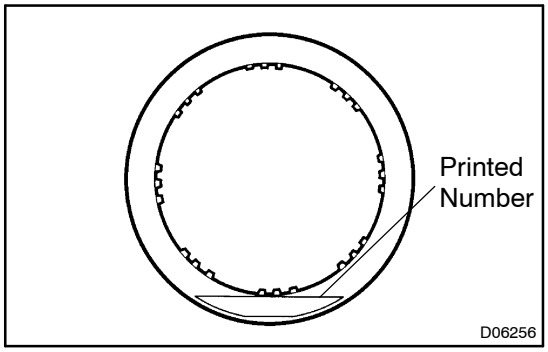


## 1. INSPECT DISC, PLATE AND FLANGE

Check to see if the sliding surface of the disc, plate and flange are worn or burnt.

If necessary, replace them.

HINT:

- If the lining of the disc is peeling off or discolored, or even if parts of the printed numbers are defaced, replace disc.
- Before assembling new disc, soak it in ATF for at least 15 minutes.

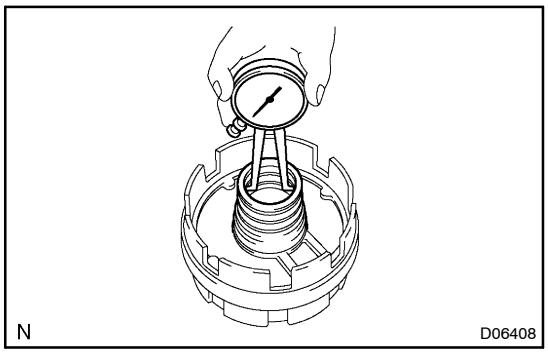


## 2. CHECK CENTER SUPPORT BUSHING

Using a dial indicator, measure the inside diameter of the center support bushing.

**Maximum inside diameter: 36.46 mm (1.4354 in.)**

If the inside diameter is greater than the maximum, replace the center support.

AT0IP−01

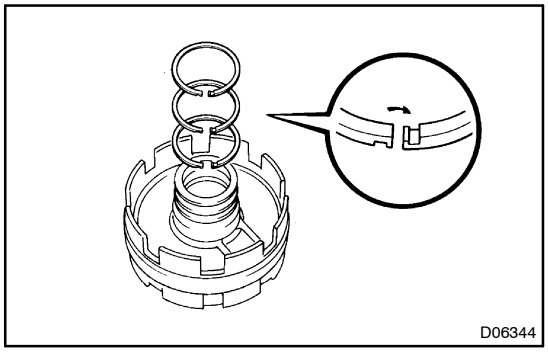


# REASSEMBLY

**1. INSTALL OIL SEAL RING**

(a) Coat the 3 oil seal rings with ATF.

(b) Contract the oil seal rings and install them onto the center support.

**NOTICE:**

**Donot spread the ring ends too much.**

HINT:

After installing the oil seal rings, check that they rotate smoothly.

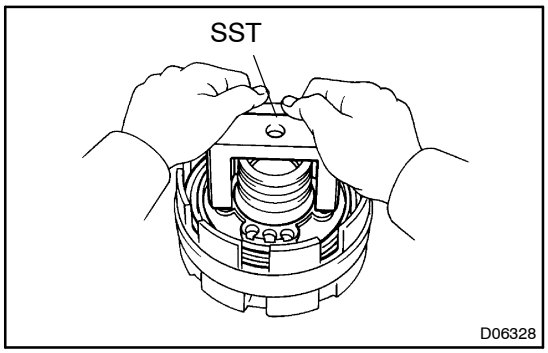


**2. INSTALL NO. 1 BRAKE PISTON**

(a) Coat new O−rings with ATF and install them on the No. 1 brake piston.

(b) Place SST on the No. 1 brake piston.
SST 09350−20015 (09369−20040)

(c) Being careful not to damage the O−rings, press in the No. 1 brake piston into the center support with both hands.

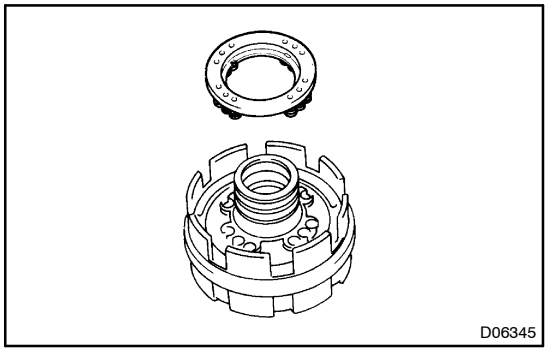


**3. INSTQALL PISTON RETURN SPRING**

(a) Install the piston return spring.

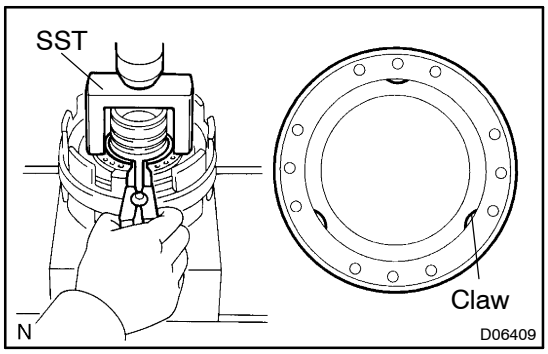


(b) Place SST on the spring seat, and compress the return springs with a shop press.
SST 09350−20015 (09369−20040)

(c) Install the snap ring with a snap ring expander. Be sure the end gap of the snap ring is not aligned with the spring seat clow.

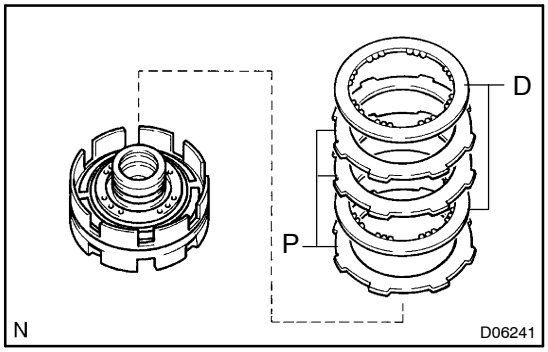


**4. INSTALL PLATE AND DISC**

Install the 3 plates and 2 discs.

**Install in order: P = Plate D = Disc**
**P – D – P – P – D**

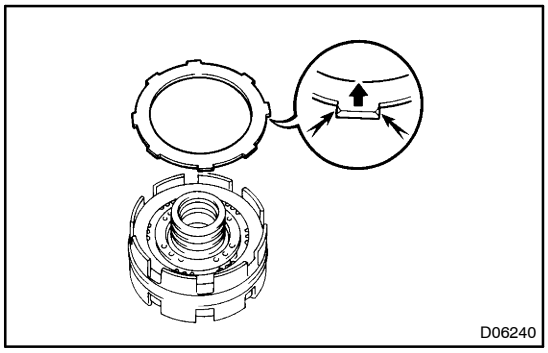


**5. INSTALL FLANGE**

(a) Install the flange, the rounded edge facing upward.

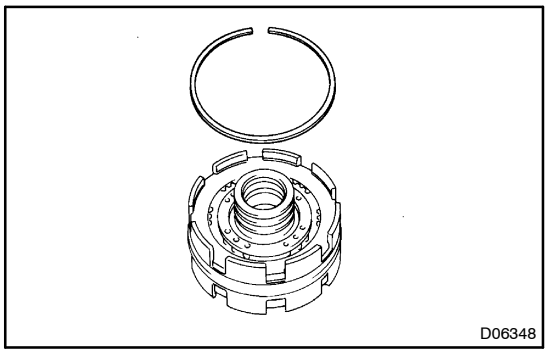


(b) Using a screwdriver, install the snap ring. Be sure the end gap of the snap ring is not aligned with the cutout portion of the center support.

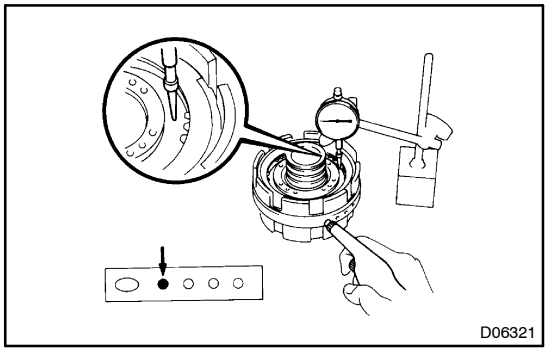


**6. CHECK PISTON STROKE OF NO. 1 BRAKE**

Using a dial indicator, measure the No. 1 brake piston stroke applying and releasing the compressed air (392 – 785 kPa, 4 – 8 kgf/cm$^2$, 57 – 114 psi), as shown.

**Piston stroke: 0.97 – 1.64 mm (0.03892 – 0.0646 in.)**

If the piston stroke is less than the limit, parts may have been assembled incorrectly, check and reassemble again.

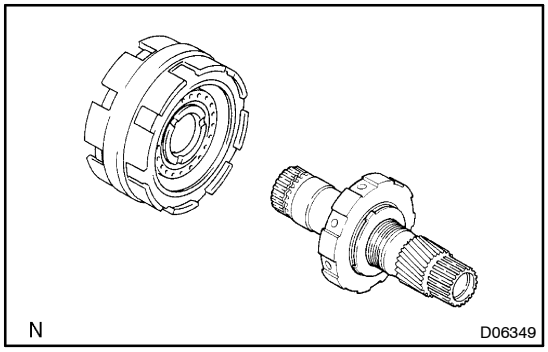


**7. INSTALL PLANETARY SUN GEAR AND NO. 1 ONE–WAY CLUTCH**

(a) While turning the one–way clutch, install the planetary sun gear.

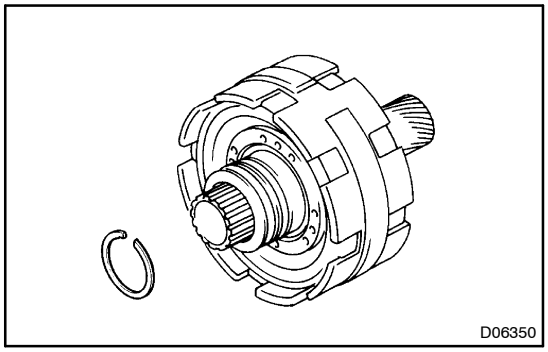


(b) Using a snap ring expander, install the snap ring.

# NO.2 BRAKE

## COMPONENTS

AT0IQ–01

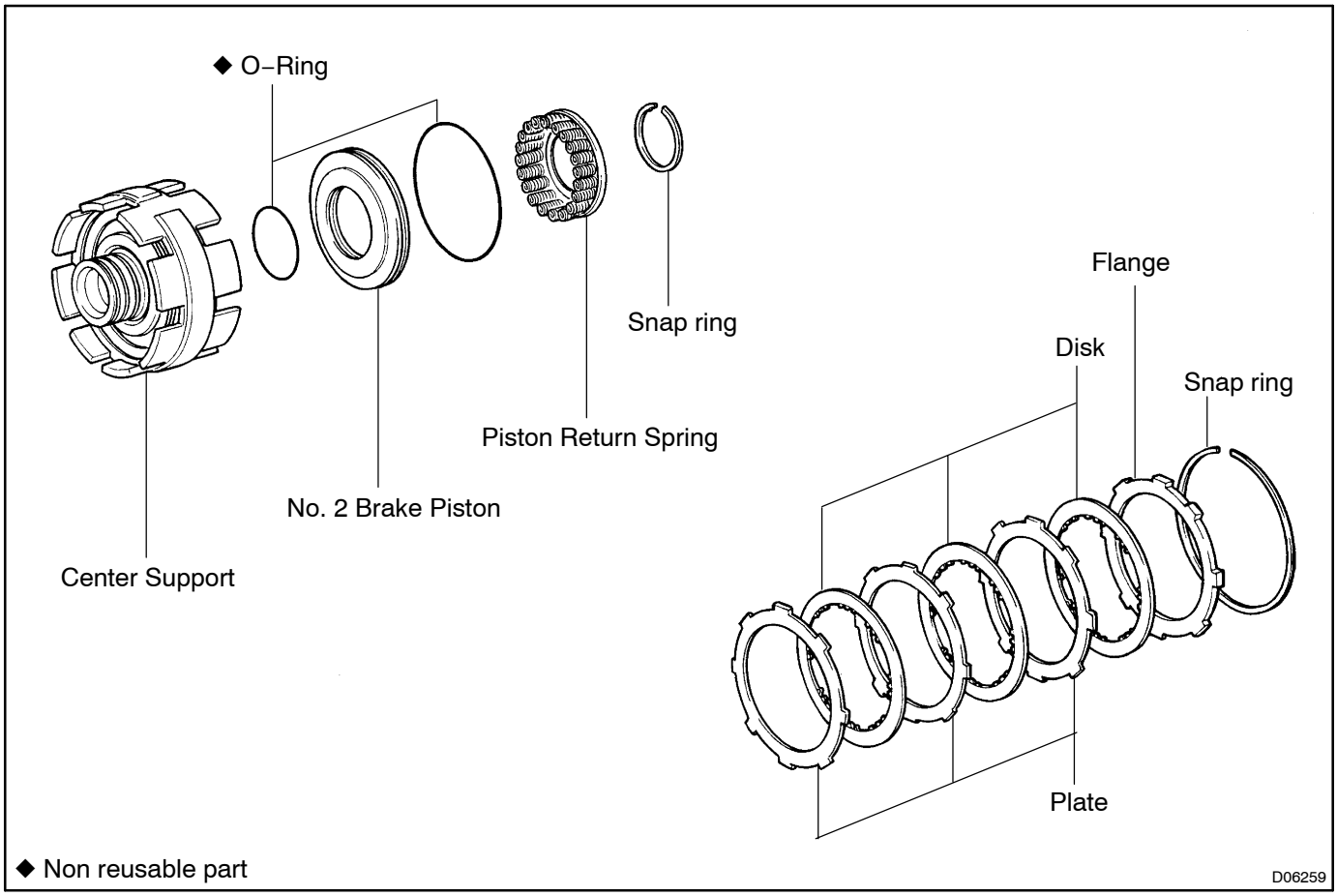

AT0IR–01

# DISASSEMBLY

**1. REMOVE PLANETARY SUN GEAR AND NO. 1 ONE–WAY CLUTCH (See page AT–66)**

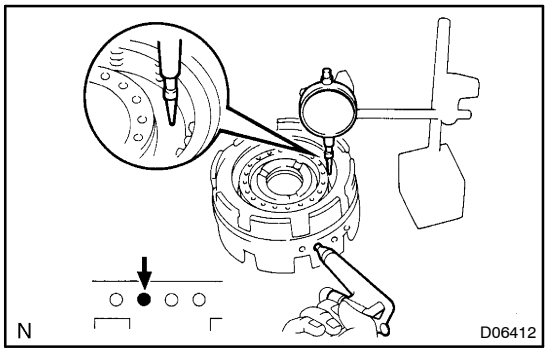


**2. CHECK PISTON STROKE OF NO. 2 BRAKE**

Using dial indicator, measure the No.2 brake piston stroke applying and releasing the compressed air (392 – 785 kPa, 4 – 8 kgf/cm$^2$, 57 – 114 psi), as shown.

**Piston stroke:**

**0.98 – 1.71 mm (0.03860 – 0.0673 in.)**

If the values are non–standard, inspect the discs.

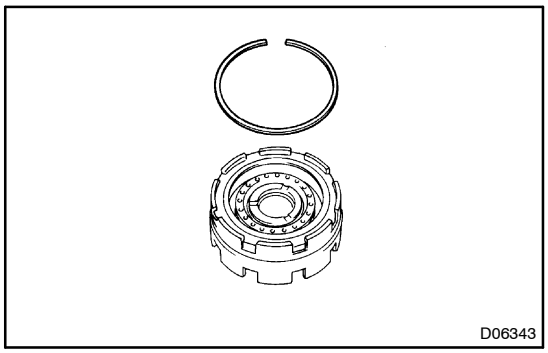


**3. REMOVE FLANGE**

(a) Using a screwdriver, remove the snap ring.

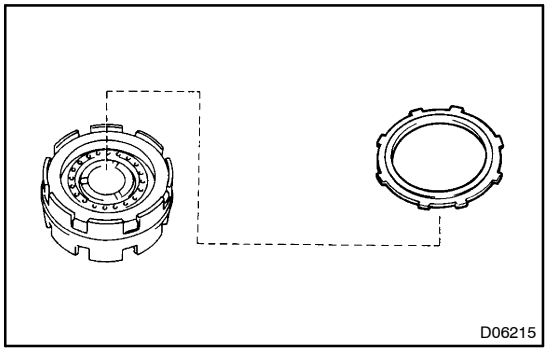


(b) Remove the flange.

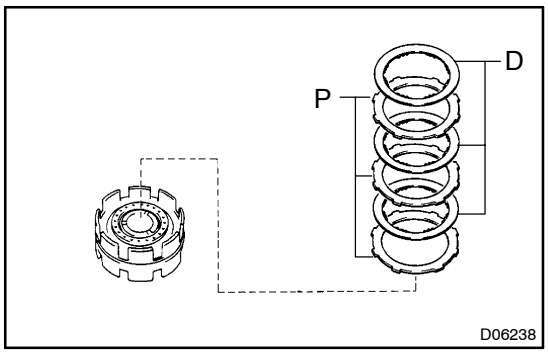


**4. REMOVE DISC AND PLATE**

Remove the 3 discs and 3 plates.

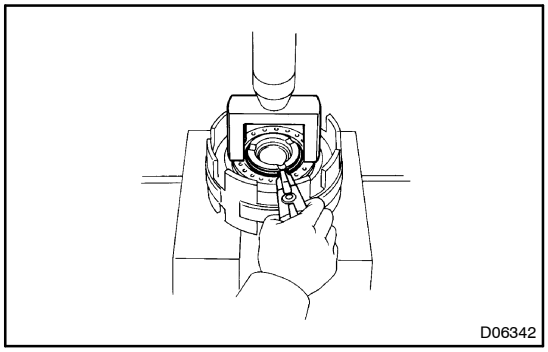


**5. REMOVE PISTON RETURN SPRING**

(a) Place SST on the spring seat and compress the return springs with a shop press.
SST 09350−20015 (09369−20040)

(b) Using a snap expander, remove the snap ring.

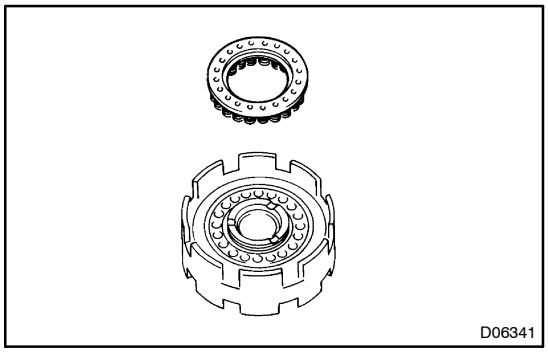


(c) Remove the piston return spring.

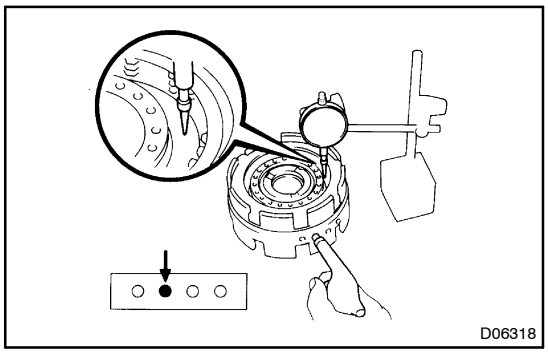


**6. REMOVE NO. 2 BRAKE PISTON**

(a) Hold the No. 2 brake piston with hand, apply compressed air to the center support to remove the No. 2 brake piston.

(b) Remove the O−ring from piston.

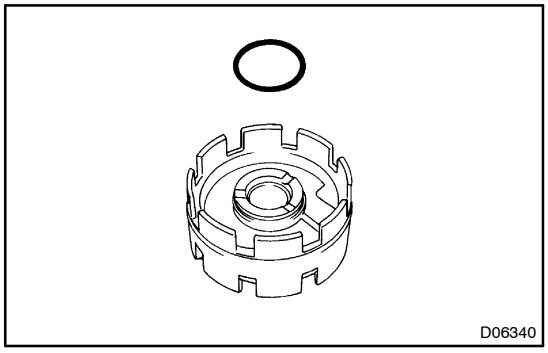


(c) Remove the O−ring from the center support.

AT0IS–01

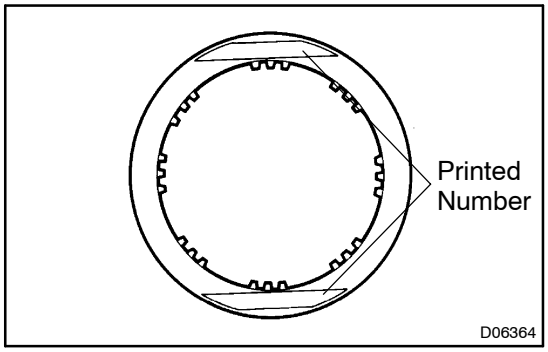


# INSPECTION

## 1. INSPECT DISC, PLATE AND FLANGE

Check to see if the sliding surface of the disc, plate and flange are worn or burnt. If necessary, replace them.

HINT:

- If the lining of the disc is peeling off or discolored, or even if parts of the printer numbers are defaced, replace all discs.
- Before assembling new discs, soak them in ATF for at least 15 minutes.

AT0IT−01

# REASSEMBLY

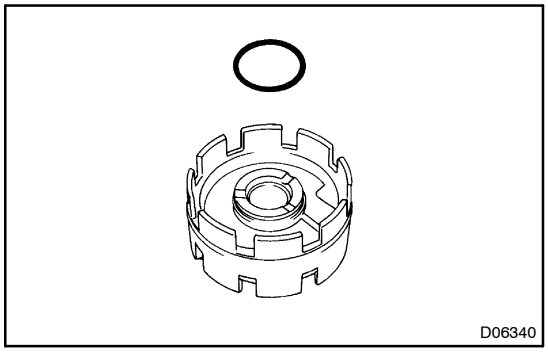


**1. INSTALL NO. 2 BRAKE PISTON**

(a) Coat new O−ring with ATF and install it on the center support.

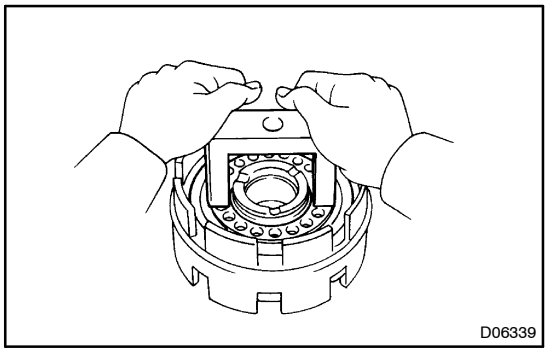


(b) Coat a new O¯ring with ATF and install it on the No. 2 brake piston.

(c) Place SST on the No. 2 brake piston.
SST 09350−20015 (09369−20040)

(d) Being careful not damage the O−rings, press in the No. 2 brake piston into the center support with both hands.

(e) Install the thrust washer into the front planetary gear.

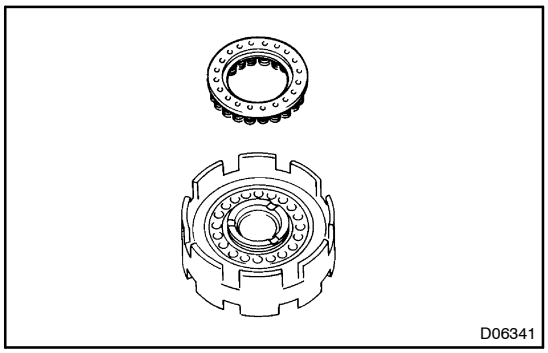


**2. INSTALL PISTON RETURN SPRING**

(a) Install the piston return spring.

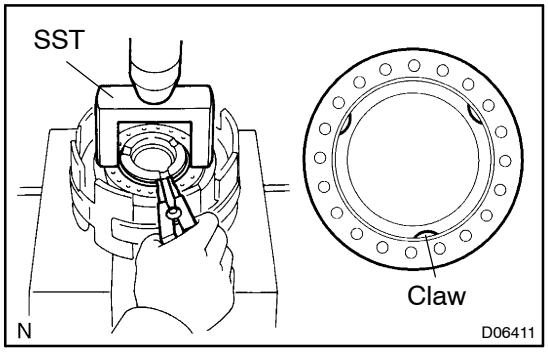


(b) Place SST on the spring seat, and compress the return springs with a shop press.
SST 09350−20015 (09369−20040)

(c) Install the snap ring with a snap ring expander. Be sure the end gap of the snap ring is not aligned with the spring seat claw.

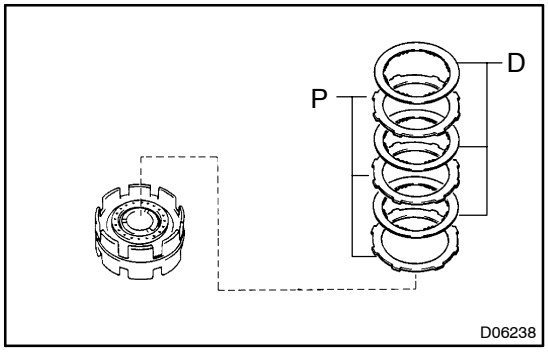


**3. INSTALL PLATE AND DISC**

Install the 3 plates and 3 discs.

**Install in order: P = Plate D = Disc**
**P − D − P − D − P − D**

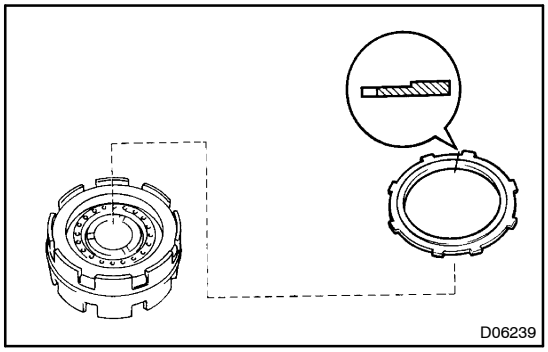


**4. INSTALL FLANGE**

(a) Install the flange, the flat end facing downward.

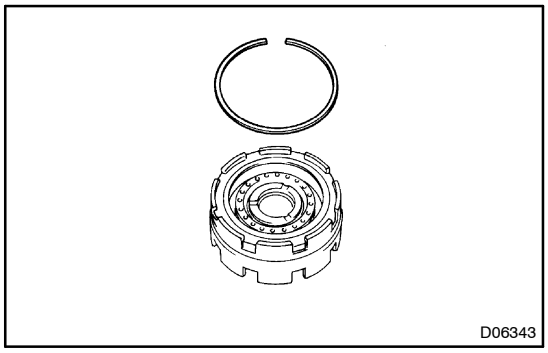


(b) Using a screwdriver, install the snap ring. Be sure the end gap of the snap ring is not aligned with the cutout portion of the center support.

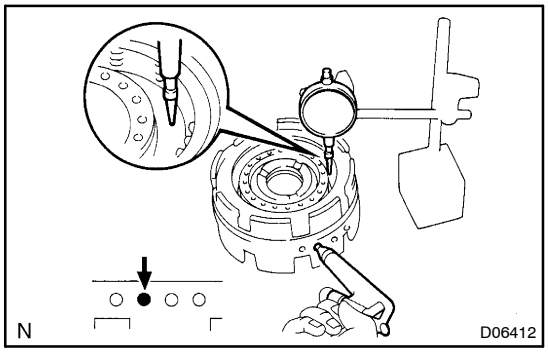


**5. CHECK PISTON STROKE OF NO. 2 BRAKE**

Using a dial indicator, measure the No. 2 brake piston stroke applying and releasing the compressed air (392 – 785 kPa, 4 – 8 kgf/cm², 57 – 144 psi), as shown.

**Piston stroke:**

**0.98 – 1.71 mm (0,0386 – 0.0673 in.)**

If the piston stroke is less than the limit, parts may have been assembled incorrectly, check and reassemble again.

**6. INSTALL PLANETARY SUN GEAR AND NO. 1 ONE-WAY CLUTCH (See page AT–69)**

# NO.3 BRAKE

## COMPONENTS

AT0IU–01

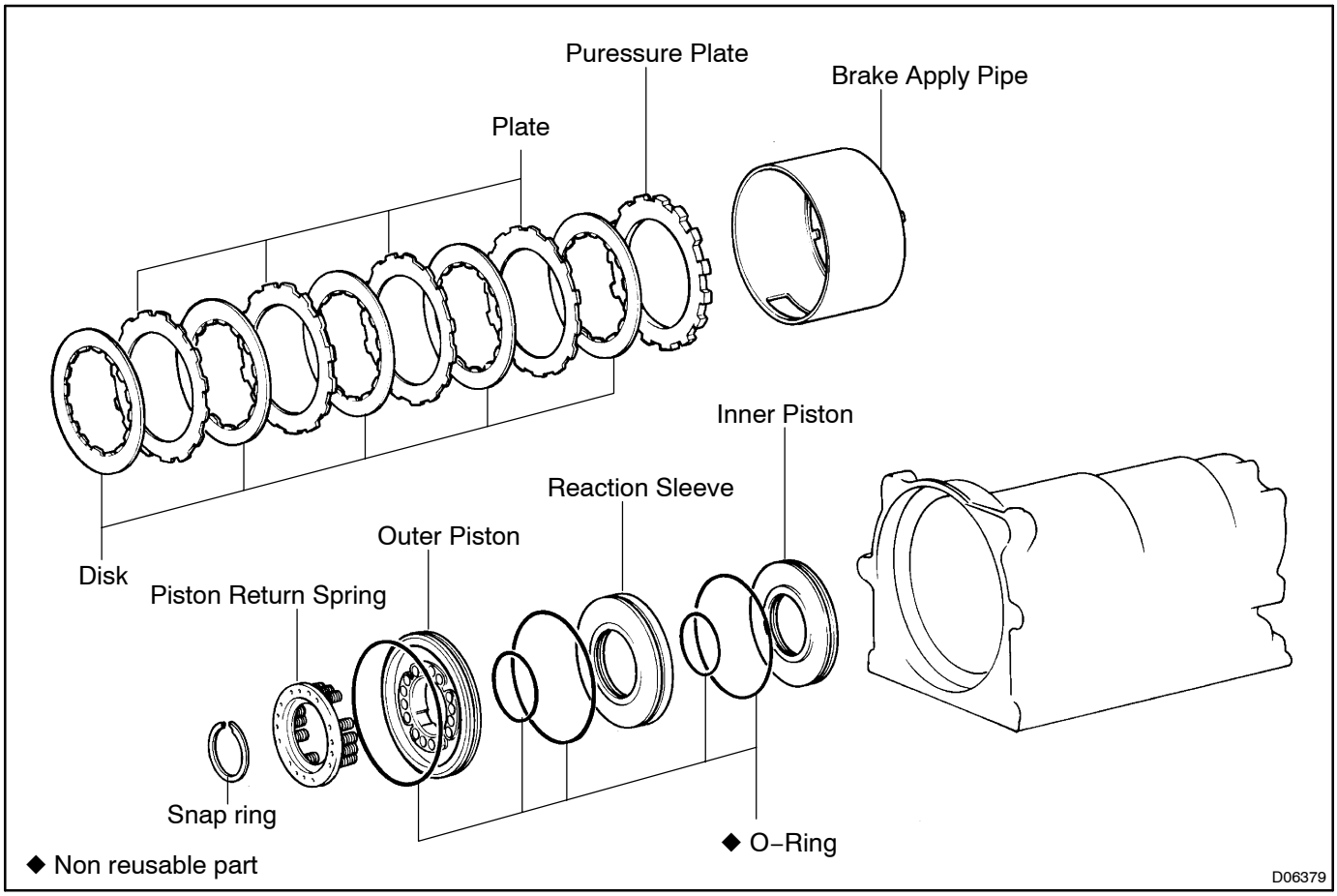

AT0IV–01

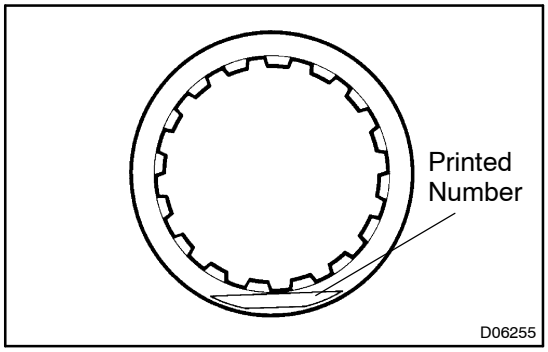


# INSPECTION

## 1. INSPECT DISC AND PLATE

Check to see if the sliding surface of the disc and plate are worn or burnt. If necessary, replace them.

HINT:

- If the lining of the disc is peeling off or discolored, or even if parts of the printed numbers are defaced, replace all discs.
- Before assembling new discs, soak them in ATF for at least 15 minutes.

# FRONT PLANETARY GEAR

## COMPONENTS

AT0IW–01

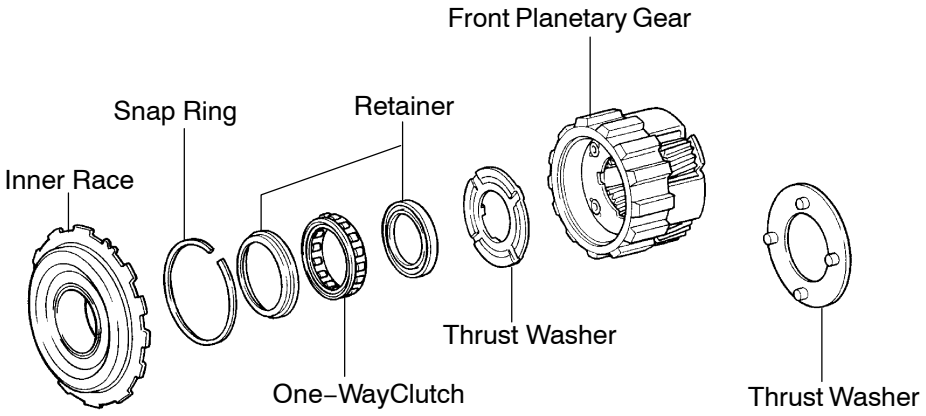

AT0IX–01

# DISASSEMBLY

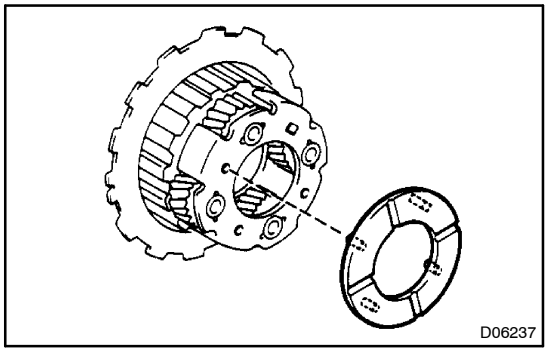


**1. REMOVE THRUST WASHER FROM FRONT PLANETARY CARRIER**

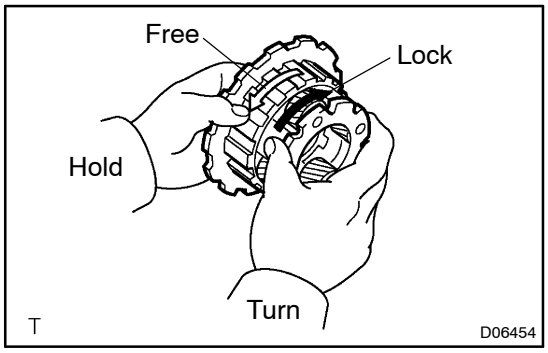


**2. CHECK OPERATION OF NO. 2 ONE–WAY CLUTCH**

Hold the one–way clutch inner race and turn the planetary gear. The planetary gear turns freely counterclockwise and locks clockwise.

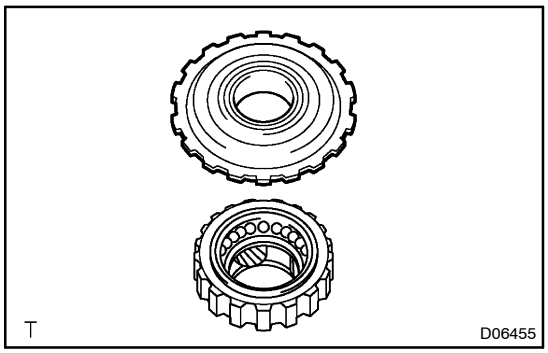


**3. REMOVE ONE–WAY CLUTCH INNER RACE**

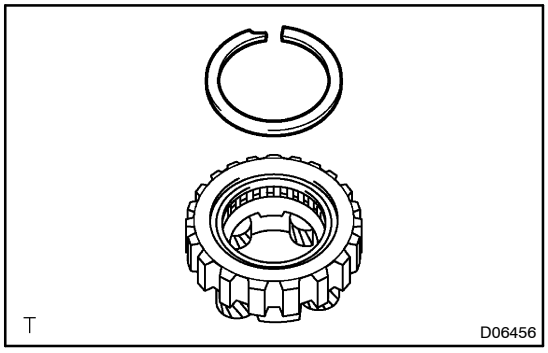


**4. REMOVE NO. 2 ONE–WAY CLUTCH**

(a) Using a screwdriver, remove the snap ring.

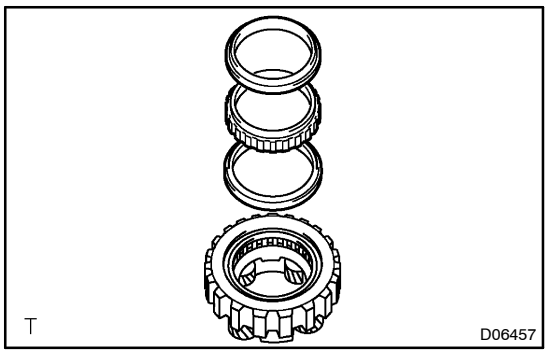


(b) Remove the one–way clutch and 2 retainers from the planetary gear.

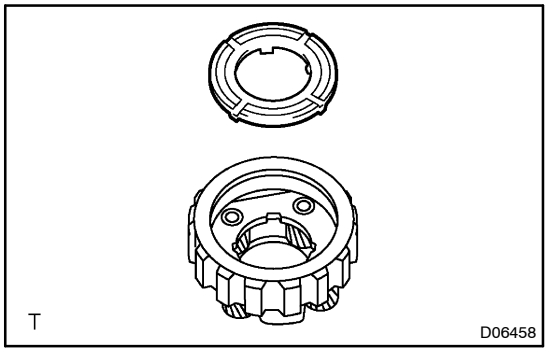


## 5. REMOVE THRUST WASHER

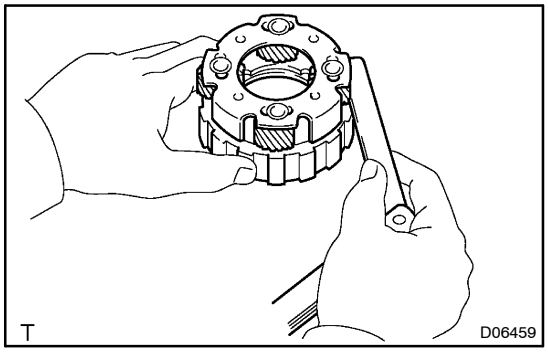


AT0IY–01

# INSPECTION

## 1. MEASURE PLANETARY PINION GEAR THRUST CLEARANCE

Using a feeler gauge, measure the planetary pinion gear thrust clearance.

**Standard clearance:**
**0.20 – 0.50 mm (0.0079 – 0.0197 in.)**

If the clearance is non–standard, inspect the planetary gear thrust washer. If necessary, replace the planetary gear assembly.

AT0IZ−01

# REASSEMBLY

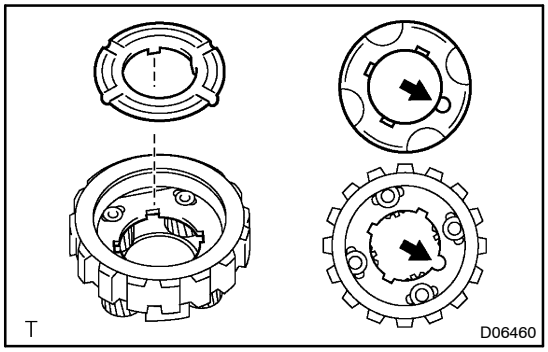


**1. INSTALL THRUST WASHER**

(a) Coat the thrust washer with petroleum jelly.

(b) Install the thrust washer into the front planetary gear.

HINT:

Make sure that the lug shapes match the cutout portions on the front planetary gear.

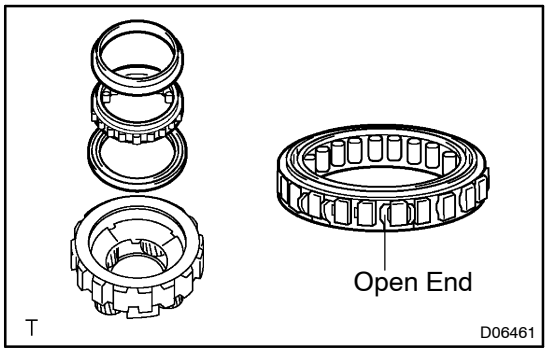


**2. INSTALL NO. 2 ONE−WAY CLUTCH**

(a) Install the one−way clutch and 2 retainers into the front planetary gear, as shown.

HINT:

Make sure that the open end of the retainers on the one−way clutch are faced upward.

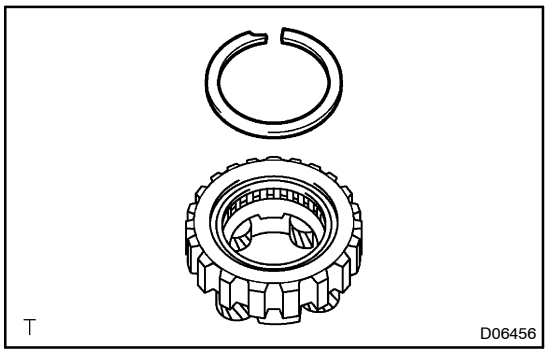


(b) Using a screwdriver, install the snap ring.

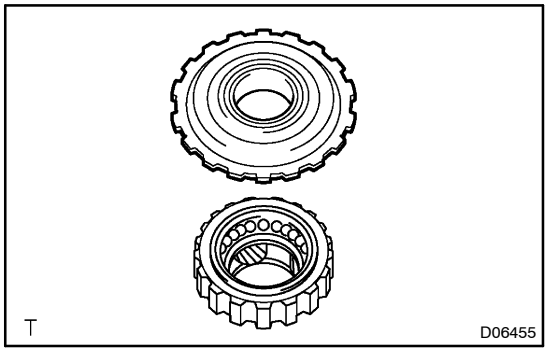


**3. INSTALL ONE−WAY CLUTCH INNER RACE**

Install the inner race while turning it counterclockwise.

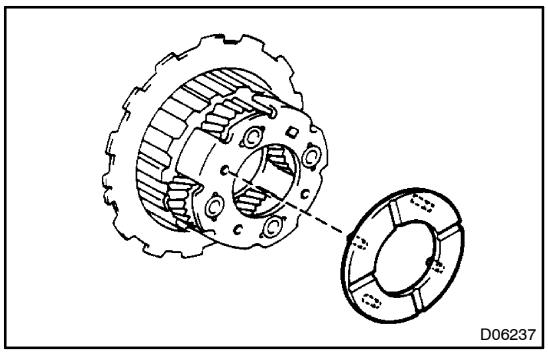


**4. INSTALL THRUST WASHER**

(a) Coat the thrust washer with petroleum jelly.

(b) Install thrust washer onto the front planetary gear.

HINT:

Make sure that the lug shapes match the holes on the front planetary gear.

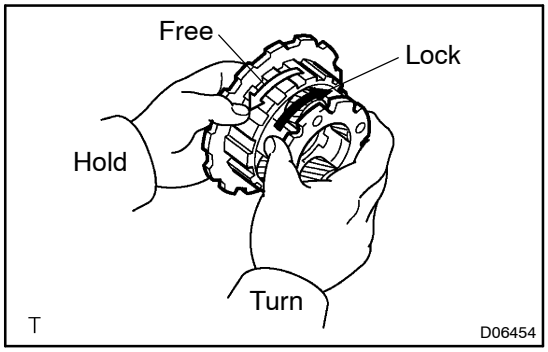


**5. CHECK OPERATION OF NO. 2 ONE–WAY CLUTCH**

Hold the one– way clutch inner race and turn the planetary gear. The planetary gear turns freely counterclockwise and locks clockwise.

# REAR PLANETARY GEAR

## COMPONENTS

AT0J0–01

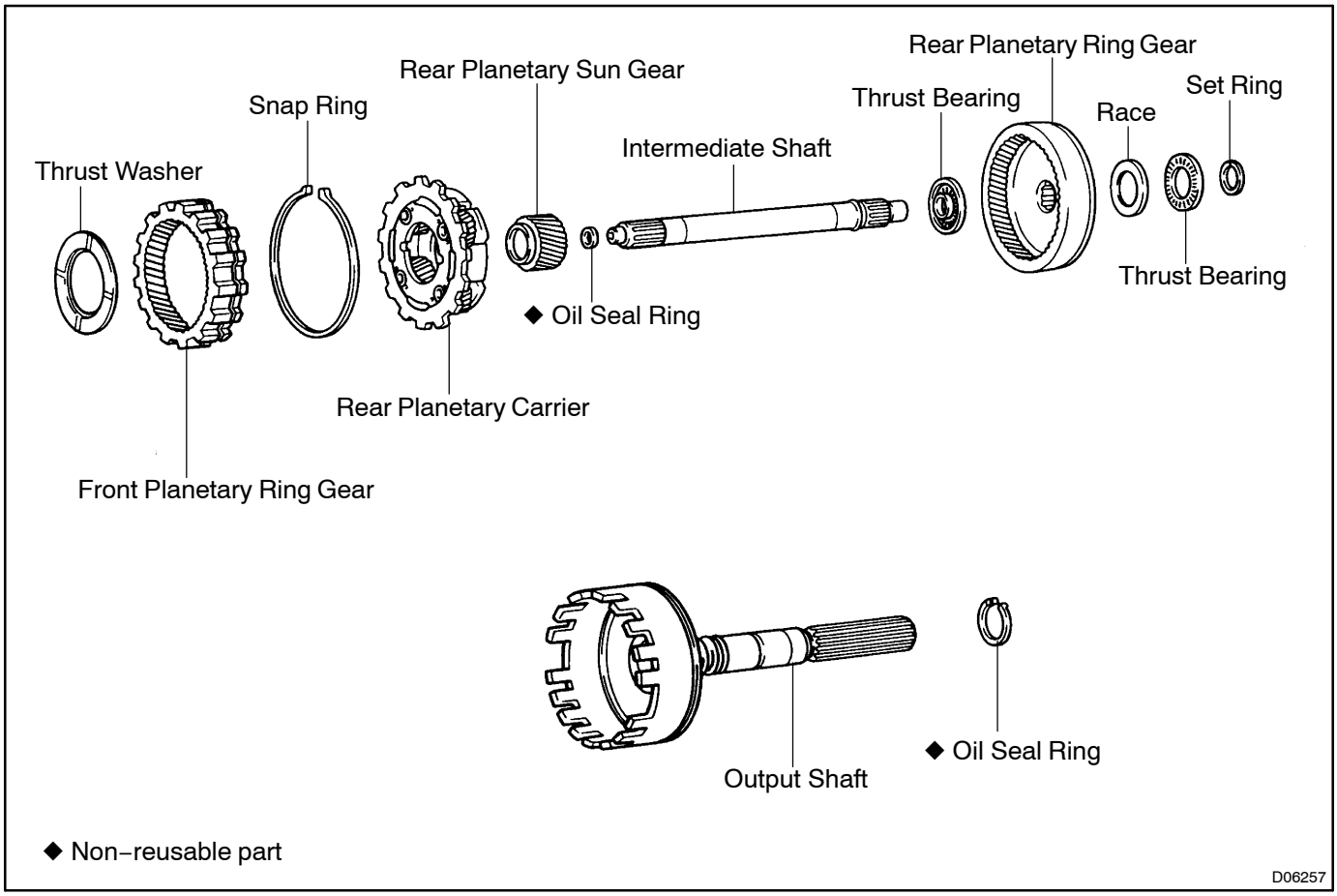

AT0J1–01

# DISASSEMBLY

**1. REMOVE THRUST WASHER FROM FRONT PLANETARY RING GEAR**

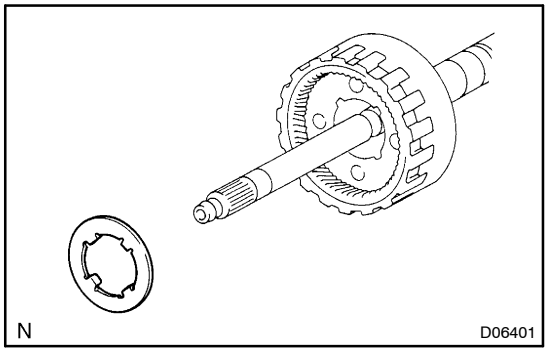


**2. REMOVE FRONT PLANETARY RING GEAR**

(a) Using a snap ring expander, pull out the ring gear while compressing the snap ring.

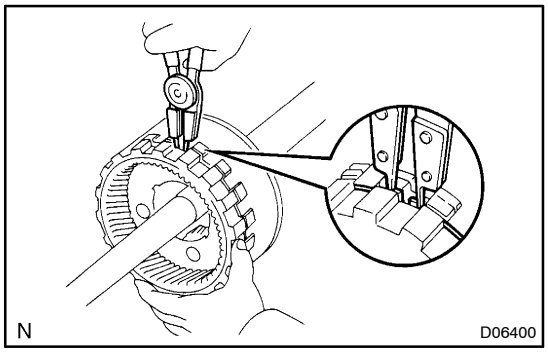


(b) Using a screwdriver, remove the snap ring from the ring gear.

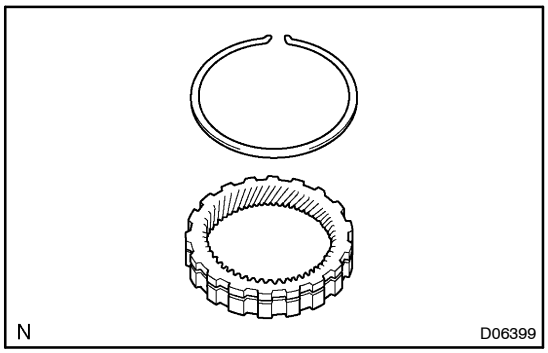


**3. REMOVE REAR PLANETARY GEAR ASSEMBLY FROM OUTPUT SHAFT**

(a) Pull out the rear planetary gear assembly.

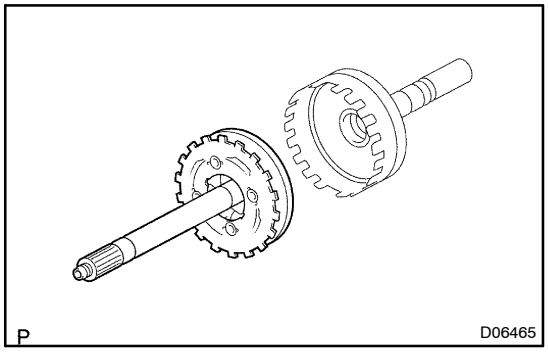


(b) Remove the bearing and race.

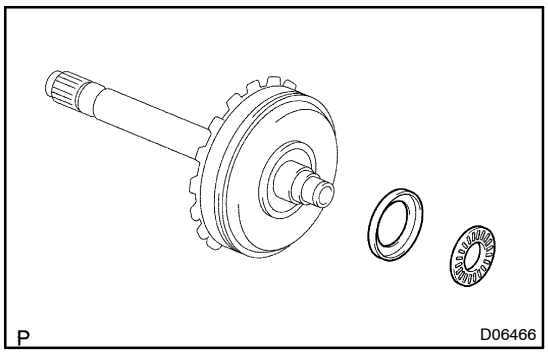

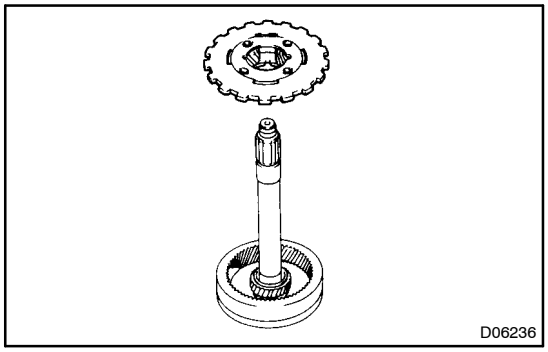


**4. REMOVE REAR PLANETARY CARRIER FROM PLANETARY RING GEAR**

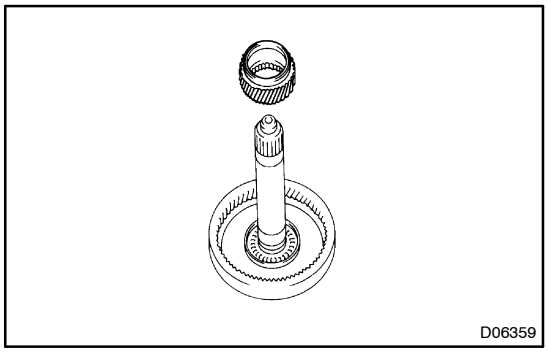


**5. REMOVE PLANETARY SUN GEAR FROM PLANETARY RING GEAR**

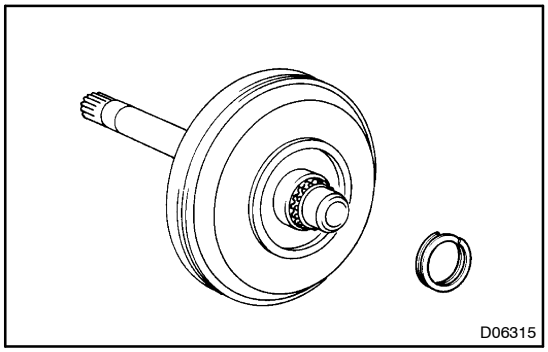


**6. REMOVE PLANETARY RING GEAR**

(a) Using a screwdriver, remove the set ring.

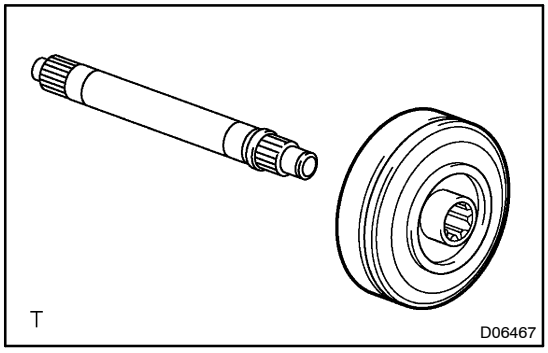


(b) Remove the planetary ring gear.

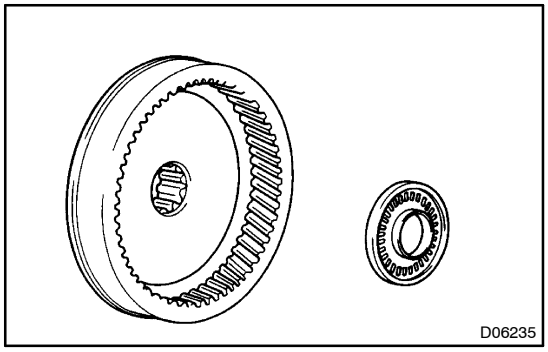


(c) Remove the assembled bearing from the ring gear.

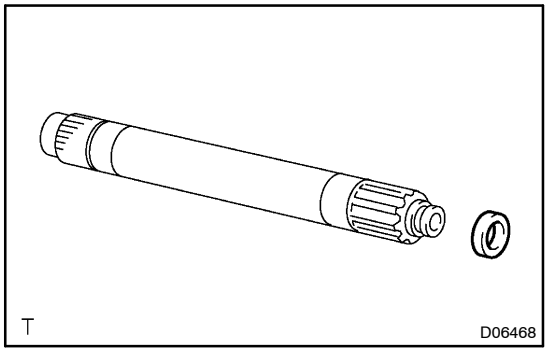


**7. REMOVE OIL SEAL RING FROM INTERMEDIATE SHAFT**

Using a screwdriver, remove the oil seal ring.

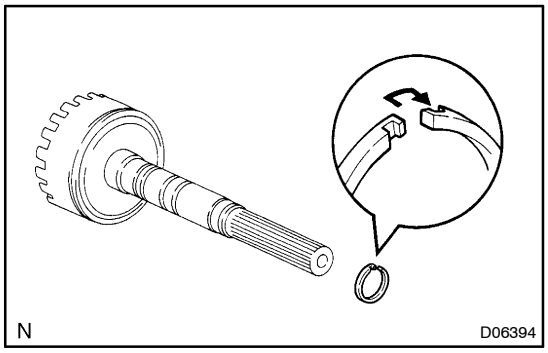


**8. REMOVE OIL SEAL RING FROM OUTPUT SHAFT**

Remove the oil seal ring.

AT0J2−01

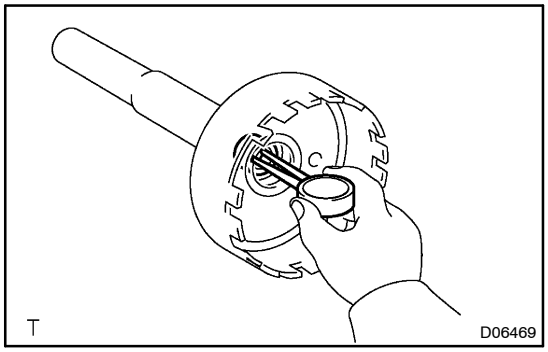


# INSPECTION

## 1. CHECK OUTPUT SHAFT BUSHING

Using a dial indicator, measure the inside diameter of the output shaft bushing.

**Maximum inside diameter: 18.08 mm (0.7118 in.)**

If the inside diameter is greater than the maximum, replace the output shaft.

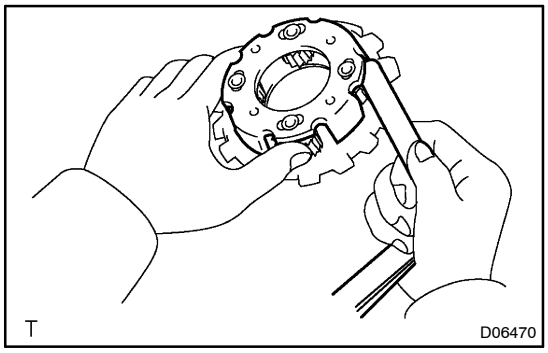


## 2. MEASURE PLANETARY PINION GEAR THRUST CLEARANCE

Using a feeler gauge, measure the planetary pinion gear thrust clearance.

**Standard clearance:**
**0.20 − 0.50 mm (0.0079 − 0.0197 in.)**

If the clearance is non−standard, inspect the planetary gear thrust washer.

If necessary, replace the planetary gear assembly.

AT0J3–01

# REASSEMBLY

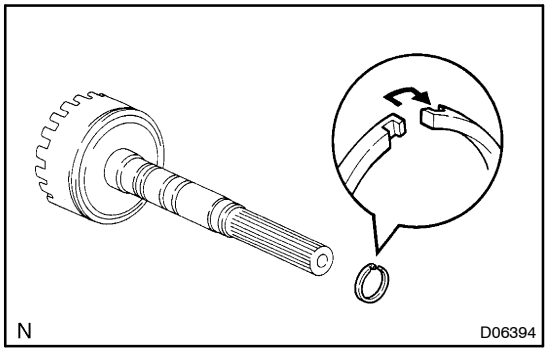


**1. INSTALL OIL SEAL RING**

(a) Coat the oil seal ring with ATF.

(b) Contract the oil seal rings, and install them onto the output shaft.

**NOTICE:**

**Do not spread the ring ends too much.**

HINT:

After installing the oil seal rings, check that they rotate smoothly.

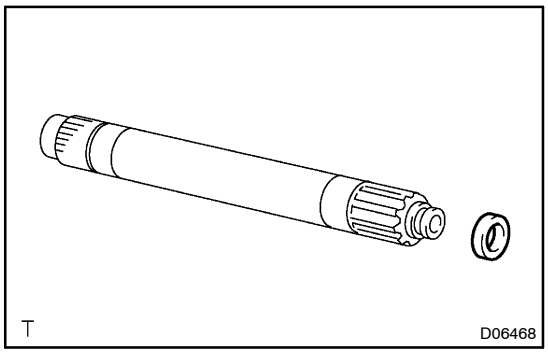


**2. INSTALL NEW OIL SEAL RING**

Coat a new oil seal ring with ATF and install it to the intermediate shaft.

**NOTICE:**

**Do not spread the ring too much.**

HINT:

After installing the oil seal ring, check that it rotates smoothly.

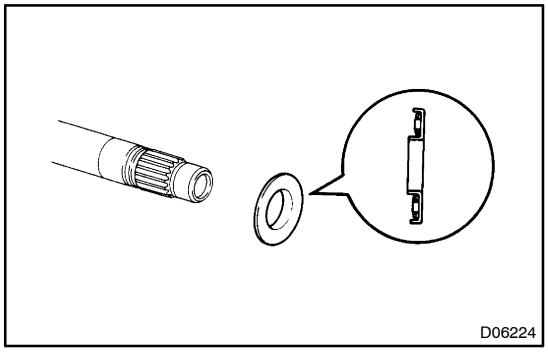


**3. INSTALL PLANETARY RING GEAR**

(a) Coat the assembled bearing and race with petroleum jelly and install it onto the ring gear.

**Assembled bearing and race diameter:**

| | Inside mm (in.) | Outside mm (in.) |
|---|---|---|
| Assembled bearing and race | 21.4 (0.843) | 47.3 (1.862) |

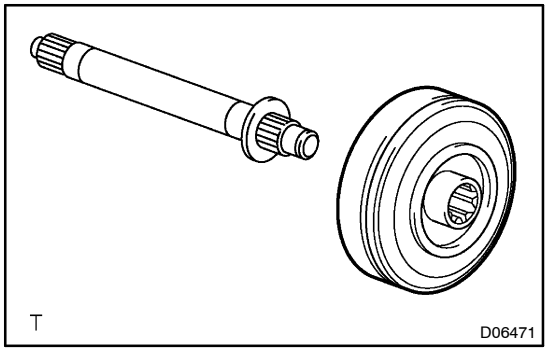


(b) Install the ring gear to the intermediate shaft.

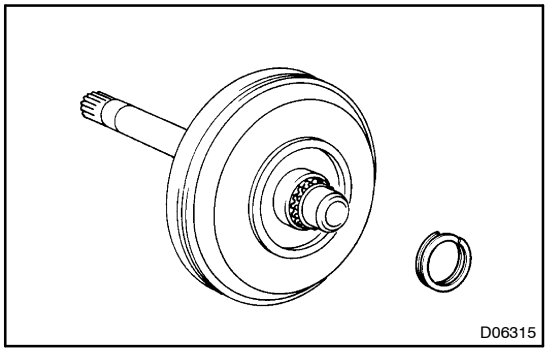


(c) Install the set ring.

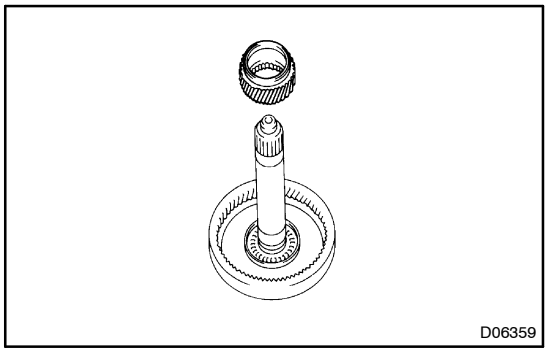


**4. INSTALL PLANETARY SUN GEAR TO PLANETARY RING GEAR**

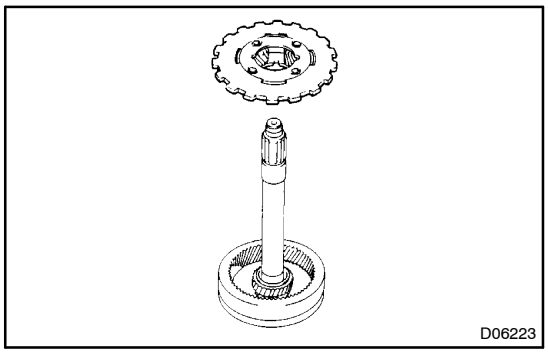


**5. INSTALL REAR PLANETARY CARRIER TO PLANETARY RING GEAR**

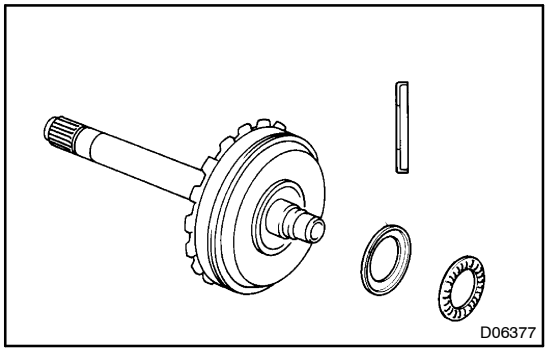


**6. INSTALL REAR PLANETARY GEAR ASSEMBLY TO OUTPUT SHAFT**

(a) Coat the bearing and race with petroleum jelly and install them onto the ring gear.

**Bearing and race diameter:**

| | Inside mm (in.) | Outside mm (in.) |
|---|---|---|
| Race | 30.1 (1.185) | 48.5 (1.909) |
| Bearing | 28.4 (1.118) | 46.3 (1.823) |

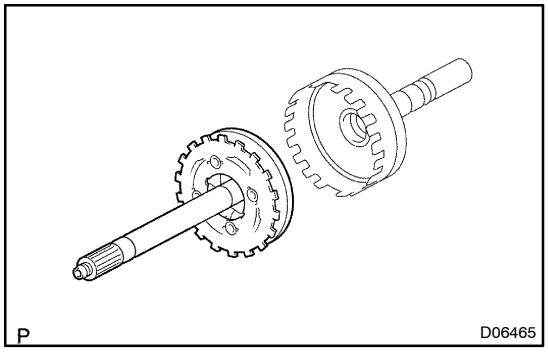


(b) Instal the rear planetary gear assembly to the output shaft.

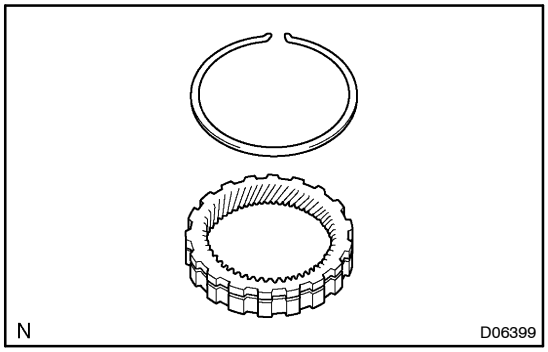


**7. INSTALL FRONT PLANETARY RING GEAR**

(a) Install the snap ring.

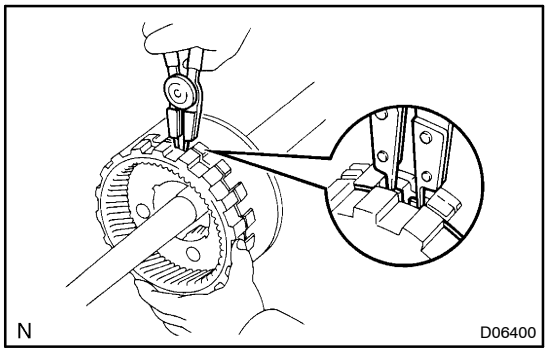


(b) Align the snap ring end with the wide cutout portion of the output shaft.

(c) Using a snap ring expander, install the ring gear while compressing the snap ring.

(d) Check that the snap ring is installed into the groove of the output shaft.

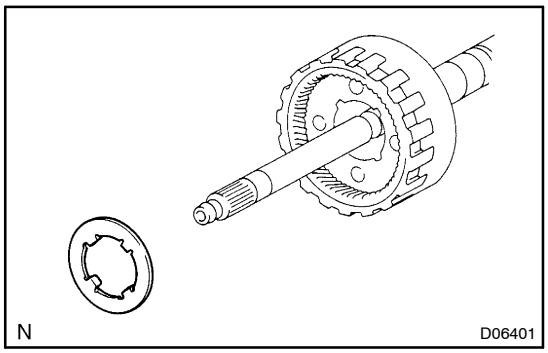


**8. INSTALL THRUST WASHER**

(a) Coat the thrust washer with petroleum jelly.

(b) Install the thrust washer onto the rear planetary carrier.

HINT:

Make sure that the lug shapes match the cutout portions on the rear planetary carrier.

# PLANETARY SUN GEAR

AT0J4–01

## COMPONENTS

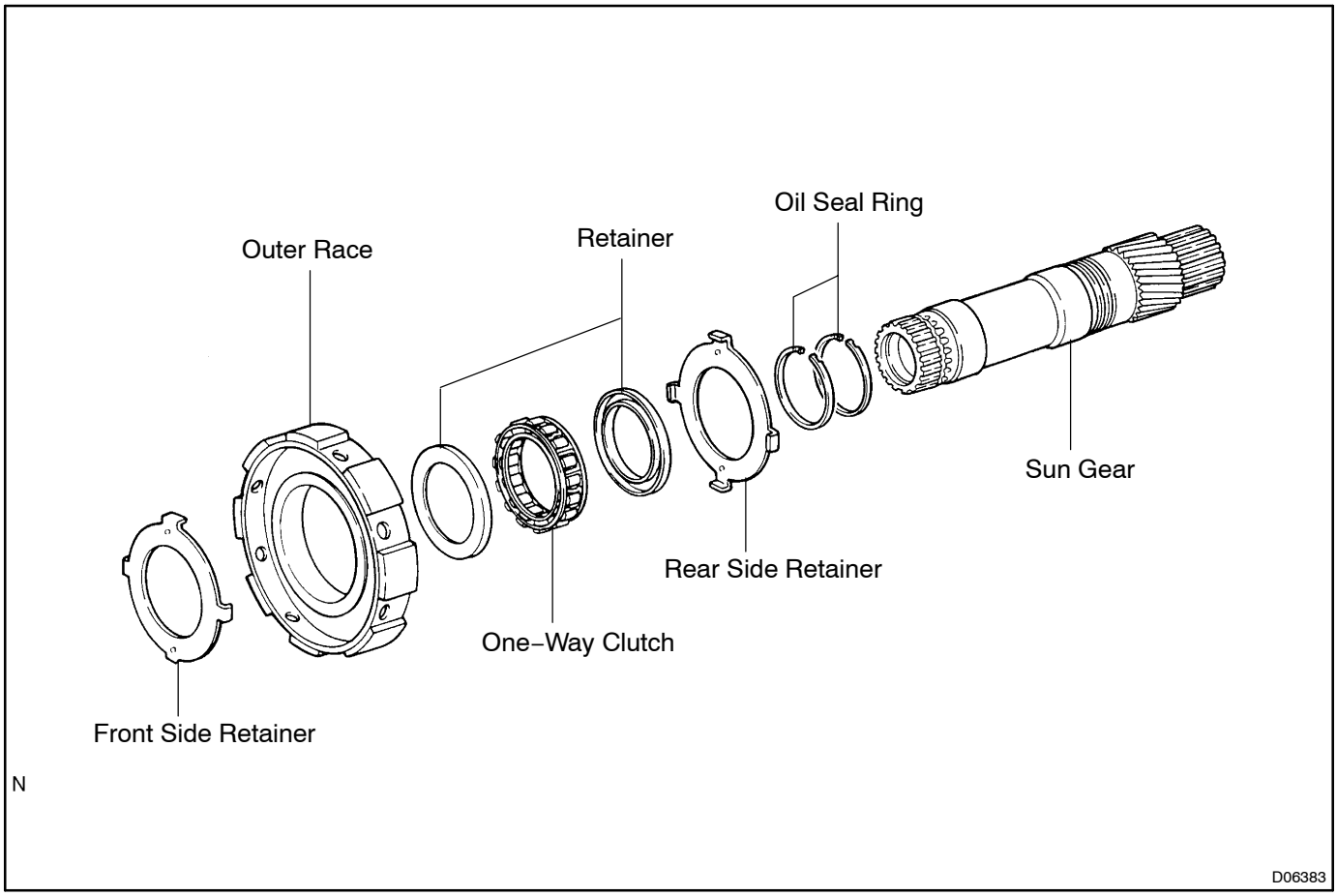

AT0J5–01

# DISASSEMBLY

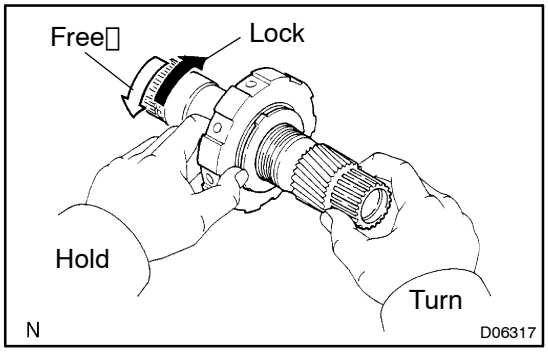


**1. REMOVE PLANETARY SUN GEAR AND NO. 1 ONE–WAY CLUTCH (See page AT–65)**

**2. CHECK OPERATION OF NO. 1 ONE–WAY CLUTCH**

Hold No. 1 one–way clutch and turn the planetary sun gear. The planetary sun gear turns freely counterclockwise and locks clockwise.

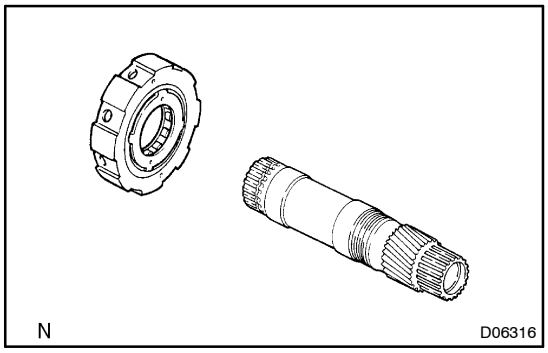


**3. REMOVE NO. 1 ONE–WAY CLUTCH FROM PLANETARY SUN GEAR**

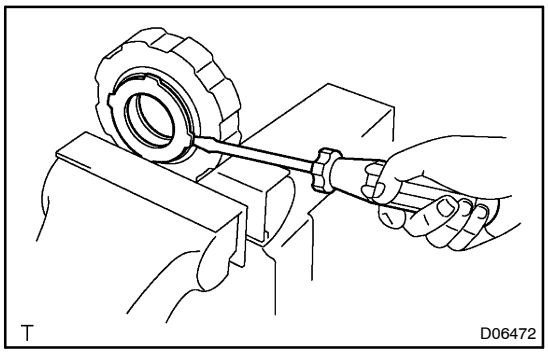


**4. DISASSEMBLE NO. 1 ONE–WAY CLUTCH**

(a) Using a screwdriver, loosen the staked parts of the rear side retainer.

(b) Remove the retainer.

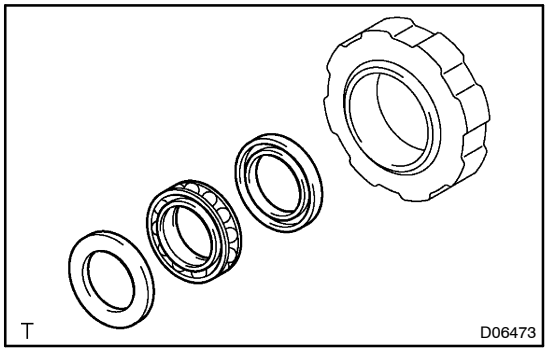


(c) Remove the one–way clutch and 2 retainers from the outer race.

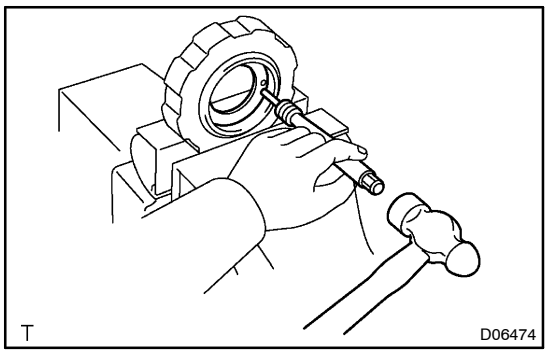


(d) Using a pin punch and hammer, remove the front side retainer.

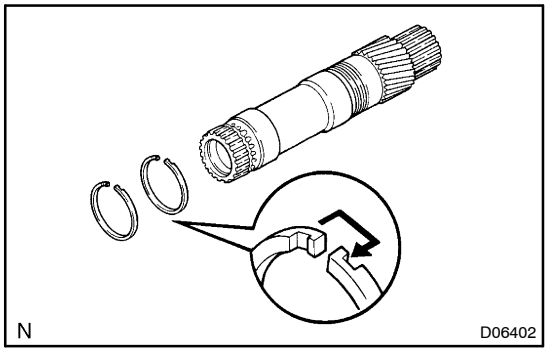


**5. REMOVE OIL SEAL RING**

Remove the 2 oil seal rings.

AT0J6–01

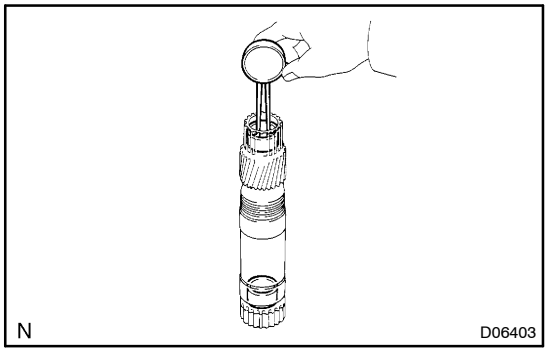


# INSPECTION

## CHECK PLANETARY SUN GEAR BUSHING

Using a dial indicator, measure the inside diameter of the planetary sun gear bushings.

**Maximum inside diameter: 21.58 mm (0.896 in.)**

If the inside diameter is greater than the maximum, replace the planetary sun gear.

AT0J7−01

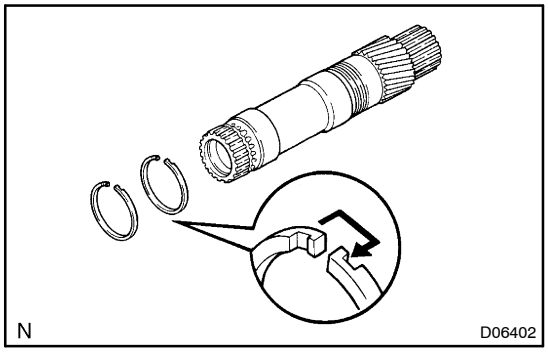


# REASSEMBLY

**1. INSTALL OIL SEAL RING**

(a) Coat the 2 oil seal rings with ATF.

(b) Contract the oil seal rings, and install them into the planetary sung gear.

**NOTICE:**

**Do not spread the ring ends too much.**

HINT:

After installing the oil seal rings, check that they rotate smoothly.

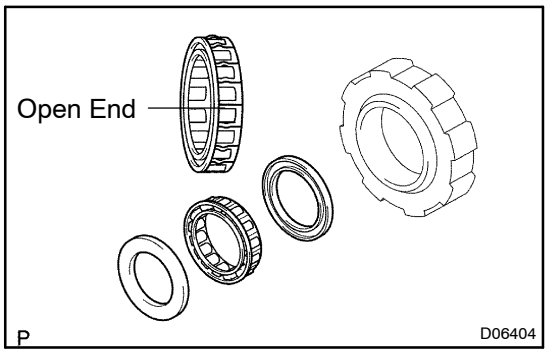


**2. ASSEMBLE NO. 1 ONE−WAY CLUTCH**

(a) Install the one−way clutch into the outer race, the open end of the retainers facing rearward.

(b) Install the 2 retainers into both sides.

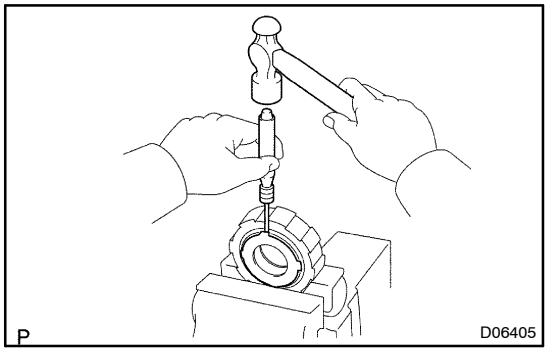


(c) Install 2 new retainers to the outer race.

(d) Using a pin punch and hammer, stake the claws.

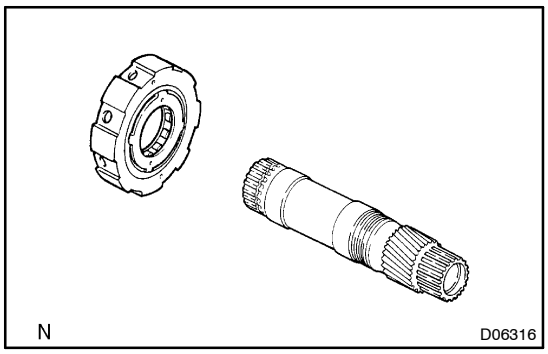


**3. INSTALL NO. 1 ONE−WAY CLUTCH TO PLANETARY SUN GEAR**

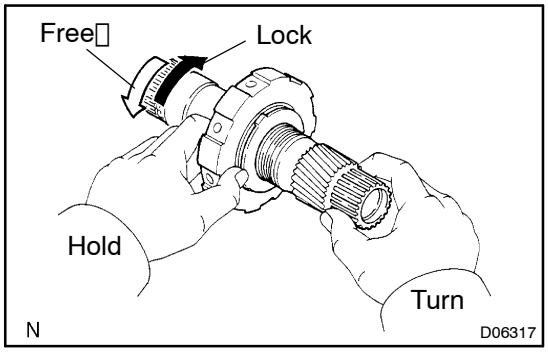


**4. CHECK OPERATION OF NO. 1 ONE–WAY CLUTCH**

Hold No. 1 one–way clutch and turn the planetary sun gear. The planetary sun gear turns freely counterclockwise and locks clockwise.

**5. INSTALL PLANETARY SUN GEAR AND NO. 1 ONE–WAY CLUTCH (See page AT–65)**

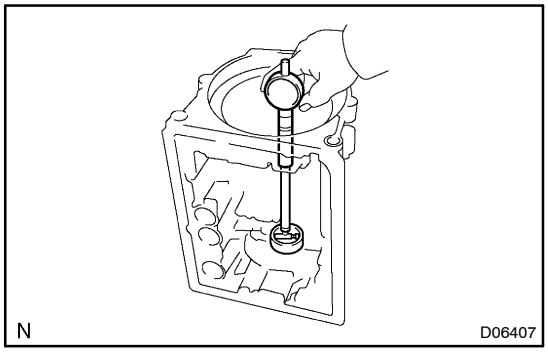


# TRANSMISSION CASE

AT0J8−01

## INSPECTION

### INSPECT TRANSMISSION CASE BUSHING

Using a cylinder gauge, measure the inside diameter of the transmission case rear bushing.

**Maximum inside diameter: 38.19 mm (1.5035 in.)**

If the inside diameter is greater than the maximum, replace the transmission case.

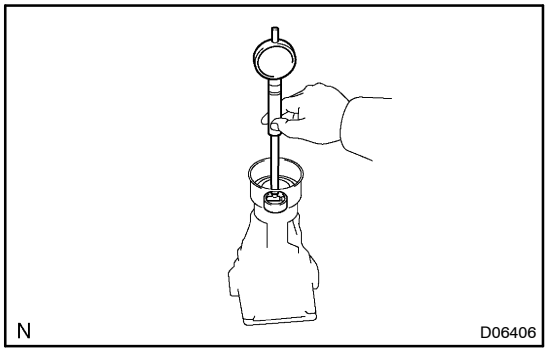


# EXTENSION HOUSING

AT0J9–01

## INSPECTION

### INSPECT EXTENSION HOUSING BUSHING

Using a cylinder gauge, measure the inside diameter of the extension housing bushing.

**Maximum inside diameter: 38.09 mm (1.4996 in.)**

If the inside diameter is greater than the maximum, replace the extension housing.

# VALVE BODY

## COMPONENTS

AT0JA–01

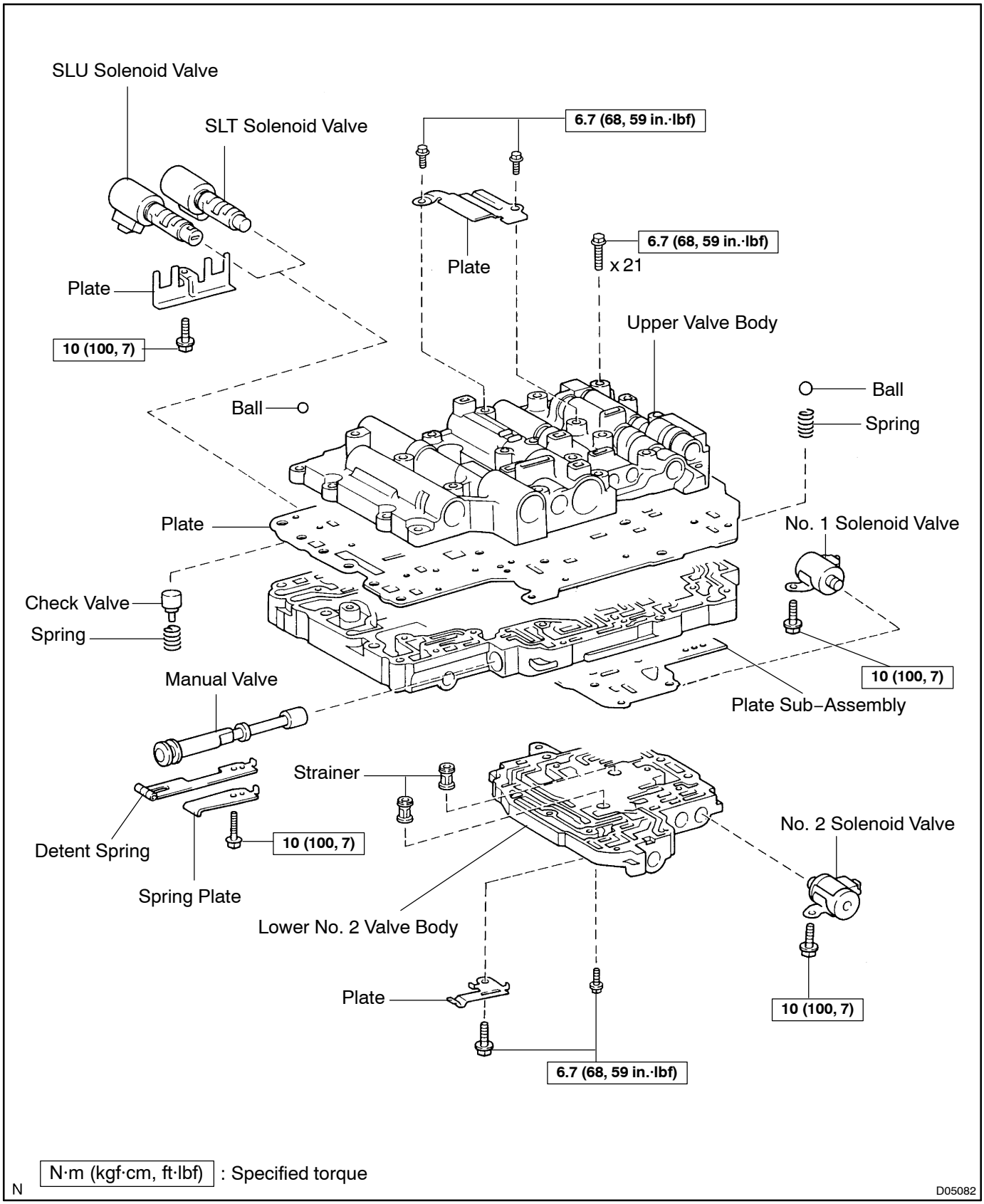


N·m (kgf·cm, ft·lbf) : Specified torque

AT0JB–01

# DISASSEMBLY

**NOTICE:**

- **Disassembling and reassembling should be conducted on a clean vinyl sheet or mat, or aluminum tray.**
- **Make the valve slide through the valve hole by its own weight. Do not forcibly pull out the valve using needle nose pliers. When having difficulty in removing it, slant and shake the valve body or use a magnet hand.**
- **Do not place the disassembled parts directly on metal work bench or waste cloth.**

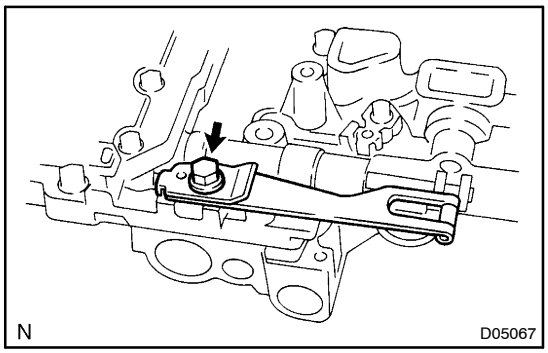


**1. REMOVE DETENT SPRING AND SPRING PLATE**

Remove the bolt, detent spring and spring plate.

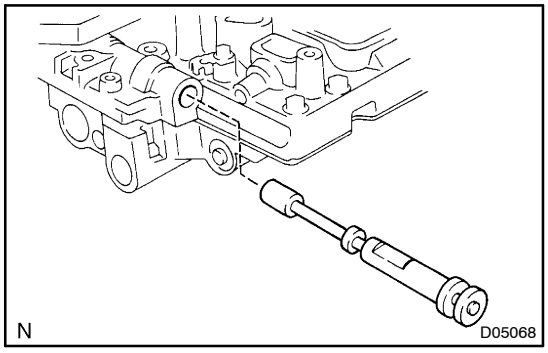


**2. REMOVE MANUAL VALVE**

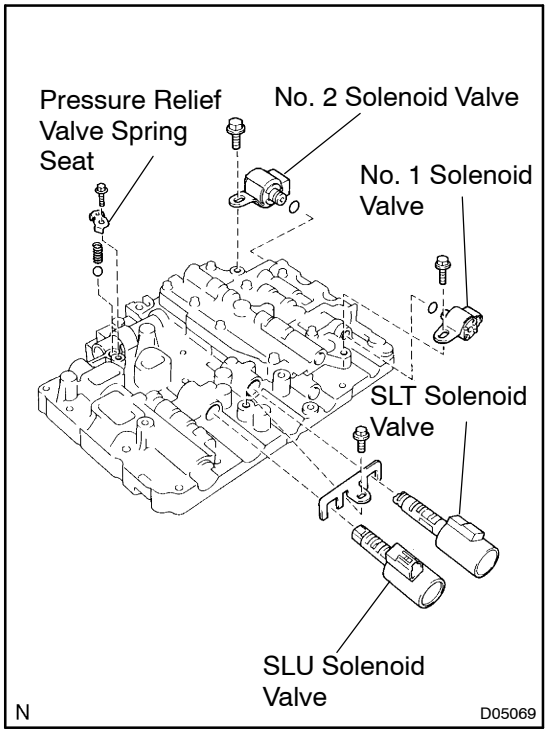


**3. REMOVE 4 SOLENOIDS**

(a) Remove the bolt and No. 1 solenoid valve.
(b) Remove the bolt and No. 2 solenoid valve.
(c) Remove the bolt, lock plate and SLU, SLT solenoid valves.
(d) Remove the 2 O–rings from the No. 1, No. 2 solenoid valves.
(e) Remove the bolt, pressure relief valve spring seat, spring and ball.

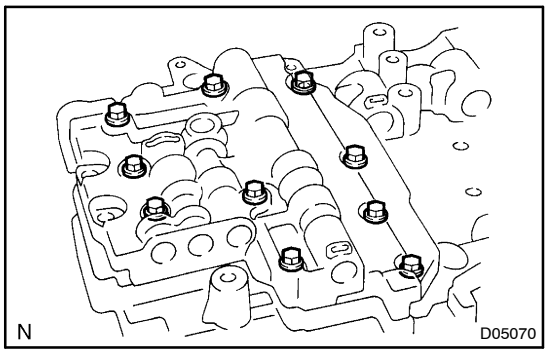


**4. REMOVE LOWER NO. 2 VALVE BODY**

(a) Remove the 10 bolts.
(b) Remove the lower No. 2 valve body.
(c) Remove the plate sub assembly.

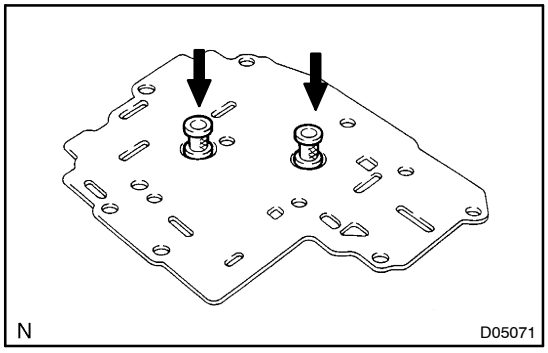


(d) Remove the 2 strainers from the plate sub assembly.

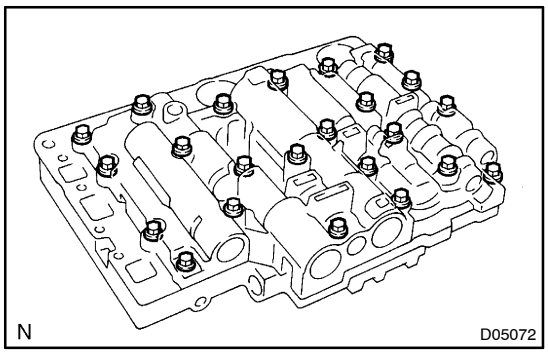


**5. REMOVE UPPER VALVE BODY**

(a) Turn over assembly and remove the 23 bolts.
(b) Remove the plate from the upper valve body.
(c) Remove the upper valve body with the plate sub–assembly.
(d) Turn over upper valve body, remove the plate sub–assembly.

**NOTICE:**

**Be careful that the check balls do not fall out.**

(e) Remove the check valve and spring.

(f) Remove the ball and spring.
(g) Remove the check balls.

AT0JC−01

# REASSEMBLY

**NOTICE:**

- **Do not use dropped parts.**
- **Make sure that no burr is identified before assembling.**

**1. INSTALL UPPER VALVE BODY**

(a) Install the check balls to the upper valve body.

(b) Install the spring and ball to the lower No. 1 valve body.

(c) Install the spring and check valve the lower No. 1 valve body.

(d) Place a new No. 1 plate sub−assembly on the upper valve body.

(e) Turn over the upper valve body with the plate together, and place them on the lower No. 1 valve body.

**NOTICE:**

**Be careful that the plates and check balls do not fall out.**

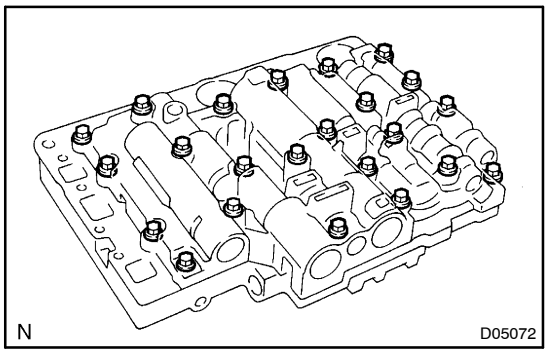


(f) Install the plate and 23 bolts.
**Torque: 6.7 N·m (68 kgf·cm, 59 in.·lbf)**

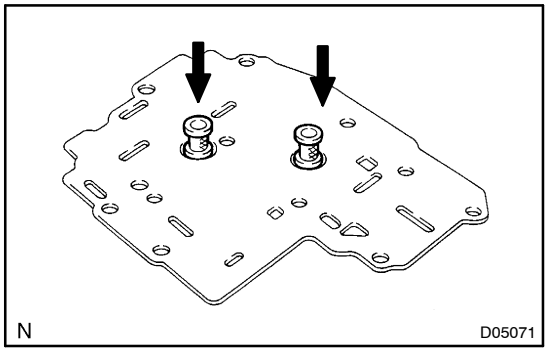


**2. INSTALL LOWER NO. 2 VALVE BODY**

(a) Install the 2 strainers to No. 2 plate sub−assembly.

(b) Align the each hole in the lower No. 2 valve body and No. 2 plate sub−assembly.

(c) Place lower No. 2 valve body and No. 2 plate sub−assembly on the lower No. 1 valve body.

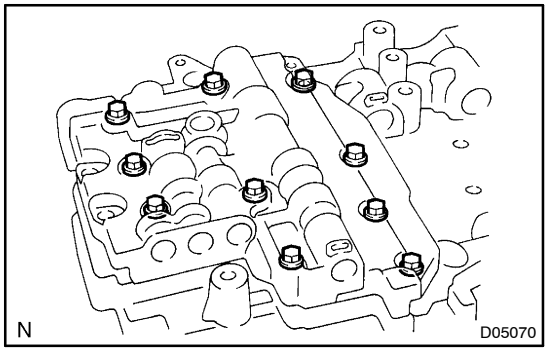


(d) Install the 10 bolts.
**Torque: 6.7 N·m (68 kgf·cm, 59 in.·lbf)**

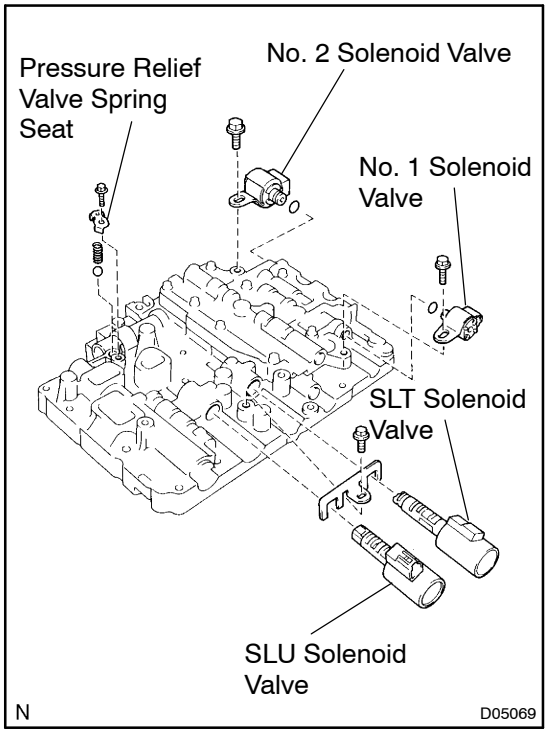


**3. INSTALL 4 SOLENOIDS**

(a) Install the ball, spring and pressure relief valve spring seat with the bolt.
**Torque: 6.7 N·m (68 kgf·cm, 59 in.·lbf)**

(b) Install the 2 new O–rings to the No. 1, No. 2 solenoid valves.

(c) Install the No. 1 solenoid valve with the bolt.
**Torque: 10 N·m (100 kgf·cm, 7 ft·lbf)**

(d) Install the No. 2 solenoid valve with the bolt.
**Torque: 10 N·m (100 kgf·cm, 7 ft·lbf)**

(e) Install the SLU, SLT solenoid valves with the plate and bolt.
**Torque: 10 N·m (100 kgf·cm, 7 ft·lbf)**

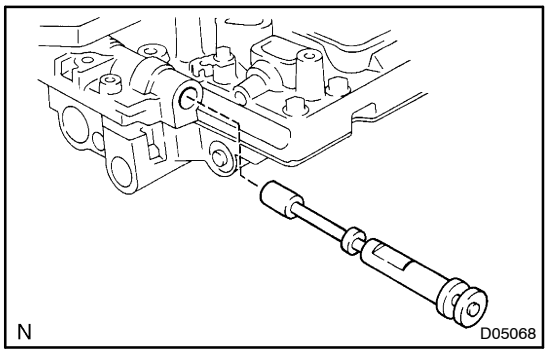


**4. INSTALL MANUAL VALVE**

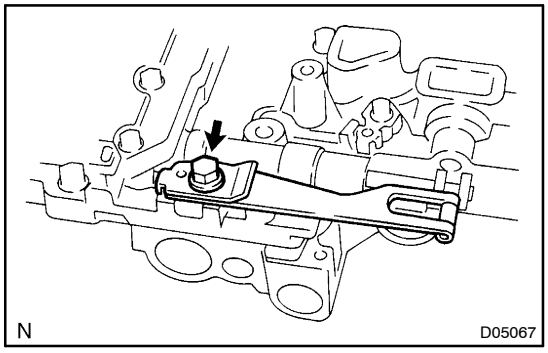


**5. INSTALL DETENT SPRING AND SPRING PLATE**

Install the detent spring and spring plate with the bolt.
**Torque: 10 N·m (100 kgf·cm, 7 ft·lbf)**

# UPPER VALVE BODY

AT0JD–01

## LOCATION

### COMPONENTS

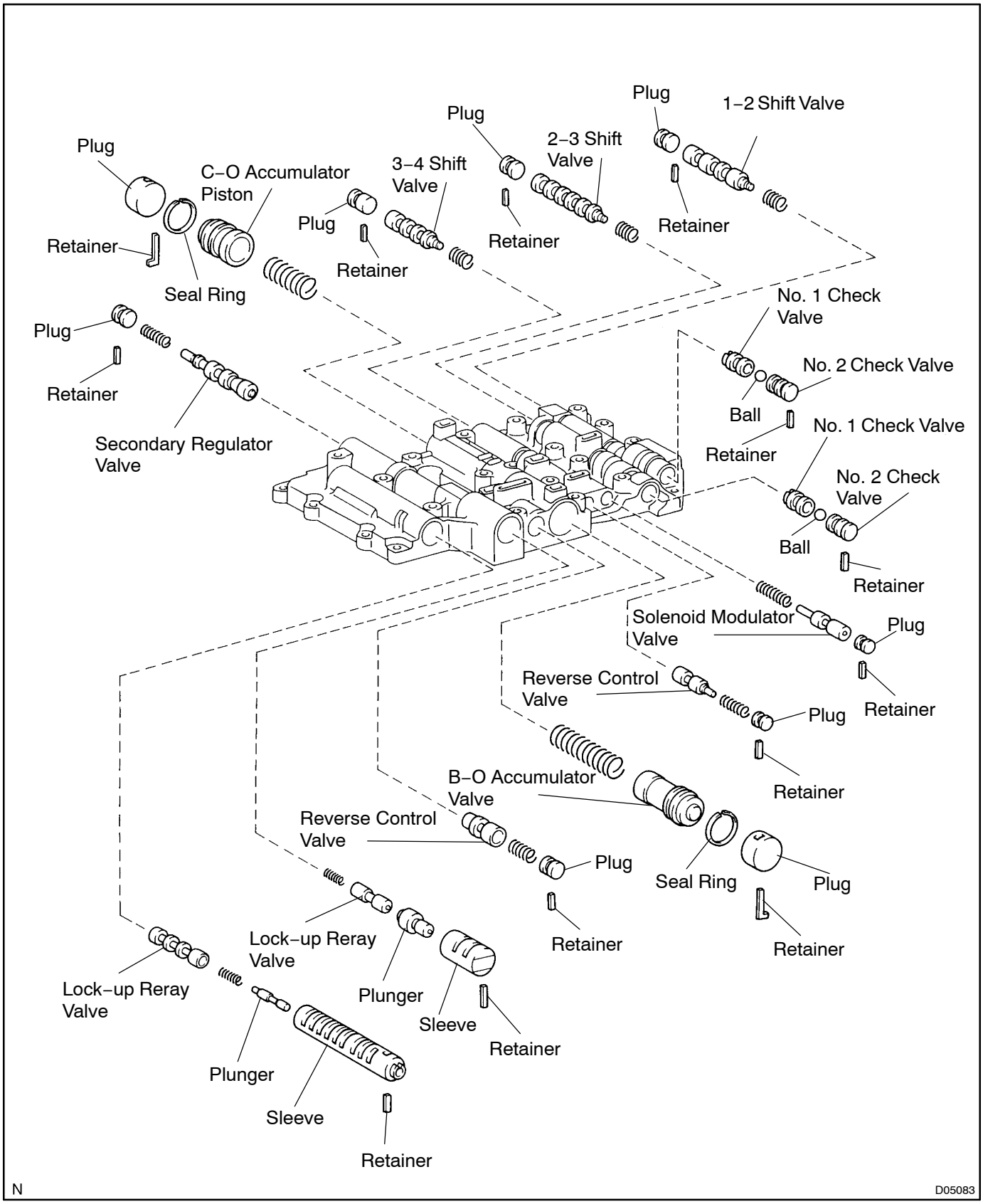

## SPRING

HINT:

During reassembly, please refer to the spring specifications below to help you differentiate among the different springs.

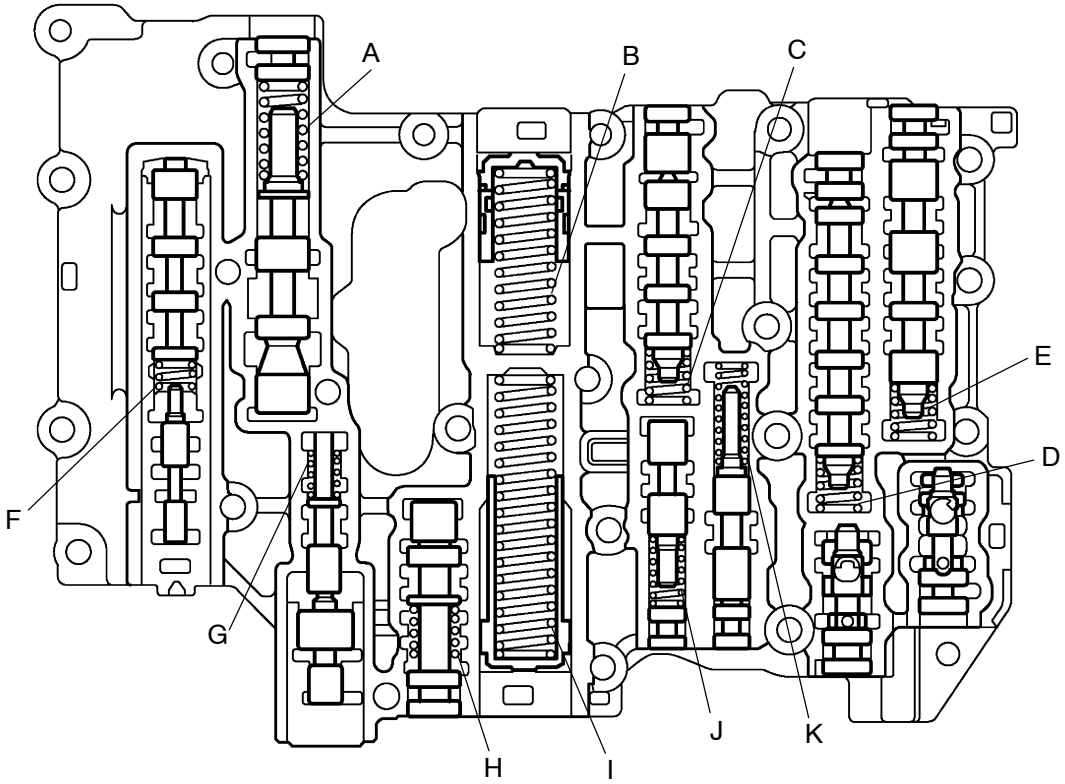


N D05088

| Mark | Name (Color) | Free lenger / Outer diameter mm (in.) | Total No. of coils |
|---|---|---|---|
| A | Secondary Regulator Valve (Purple) | 32.88 (1.2944) / 10.60 (0.4173) | 9.13 |
| B | C – O Accumulator Piston (White or Pink) | 54.41 (2.1421) / 15.00 (0.5906) | 13.26 |
| C | 3 – 4 Shift Valve (Red) | 25.50 (1.0039) / 9.73 (0.3831) | 7.75 |
| D | 2 – 3 Shift Valve (Red) | 25.50 (1.0039) / 9.73 (0.3831) | 7.75 |
| E | 1 – 2 Shift Valve (Red) | 25.50 (1.0039) / 9.73 (0.3831) | 7.75 |
| F | Lock–up Relay Valve (Red) | 23.42 (0.9220) / 5.86 (0.2307) | 12.25 |
| G | Lock–up Control Valve (Yellow) | 20.87 (0.8217) /5.55 (0.2185) | 11.15 |
| H | Reverse Control Valve (None) | 25.85 (1.0071) / 8.64 (0.3402) | 8.75 |
| I | B – O Accumulator Valve (White or Red) | 71.50 (2.8150) / 14.00 (0.5512) | 19.81 |
| J | Reverse Sequence Valve (Light blue) | 26.73 (1.0523) / 8.20 (0.33228) | 10.22 |
| K | Solenoid Modulator Valve (Yellow) | 32.13 (1.2649) / 8.00 (0.3150) | 15.75 |

## RETAINER

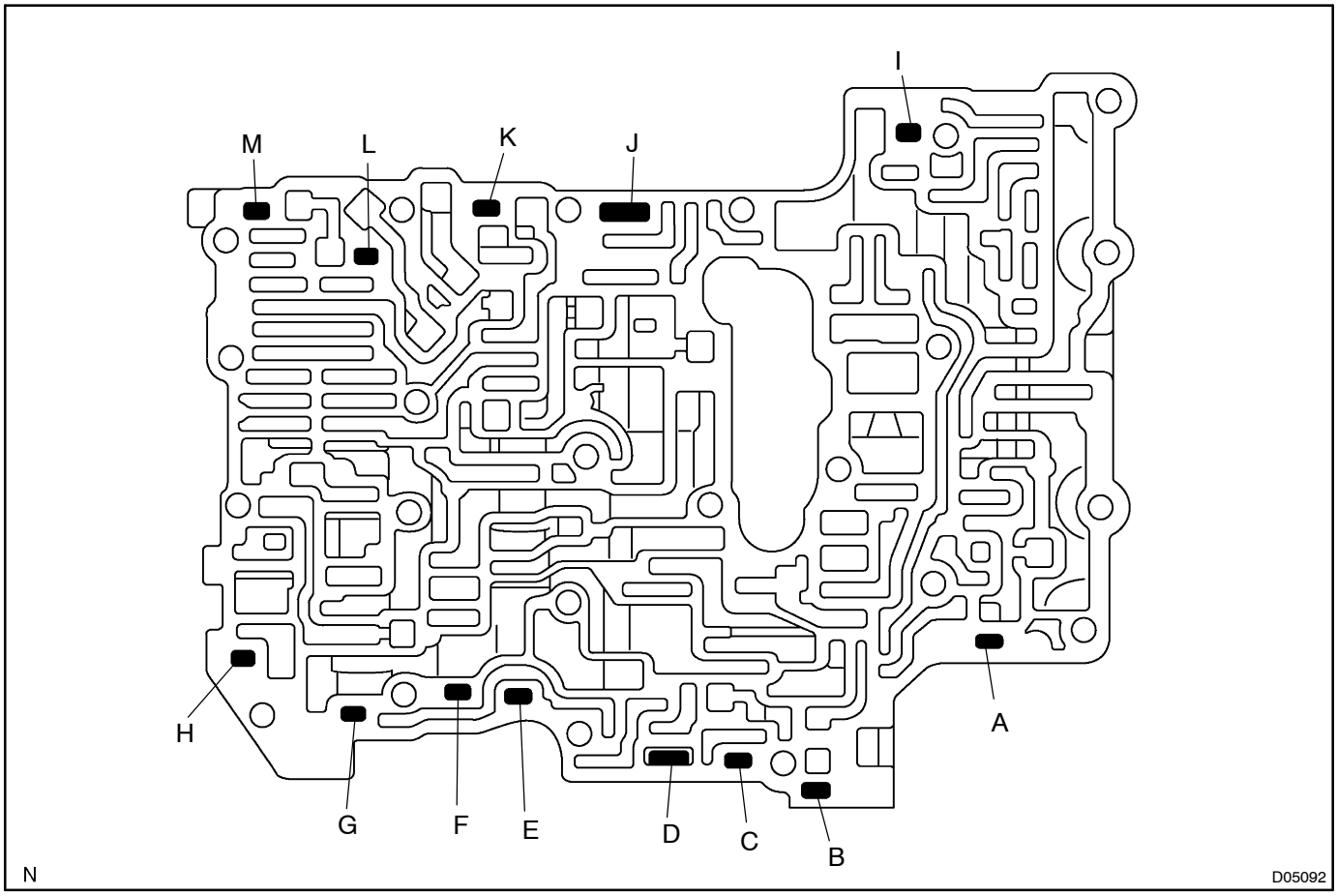


| Mark | Retainer | Height / Width / Thickness mm (in.) |
|---|---|---|
| A | Lock−up Relay Valve | 12.5 (0.492) / 5.0 (0.197) / 3.2 (0.126) |
| B | Lock−up Control Valve | 19.0 (0.748) / 5.0 (0.197) / 3.2 (0.126) |
| C | Reverse Control Valve | 14.0 (0.551) / 5.0 (0.197) / 3.2 (0.126) |
| D | B − O Accumulator Valve | 36.5 (1.437) / − / 4.0 (0.157) |
| E | Reverse Sequence Valve | 10.0 (0.397) / 5.0 (0.197) / 3.2 (0.126) |
| F | Solenoid Modulator Valve | 10.0 (0.397) / 5.0 (0.197) / 3.2 (0.126) |
| G | No. 2 Check Valve | 10.0 (0.397) / 5.0 (0.197) / 3.2 (0.126) |
| H | No. 2 Check Valve | 21.2 (0.835) / 5.0 (0.197) / 3.2 (0.126) |
| I | Secondary Regulator Valve | 19.0 (0.748) / 5.0 (0.197) / 3.2 (0.126) |
| J | C − O Accumulator Valve | 36.5 (1.437) / − / 4.0 (0.157) |
| K | 3 − 4 Shift Valve | 21.2 (0.835) / 5.0 (0.197) / 3.2 (0.126) |
| L | 2 − 3 Shift Valve | 21.2 (0.835) / 5.0 (0.197) / 3.2 (0.126) |
| M | 1 − 2 Shift Valve | 21.2 (0.835) / 5.0 (0.197) / 3.2 (0.126) |

## CHECK BALL

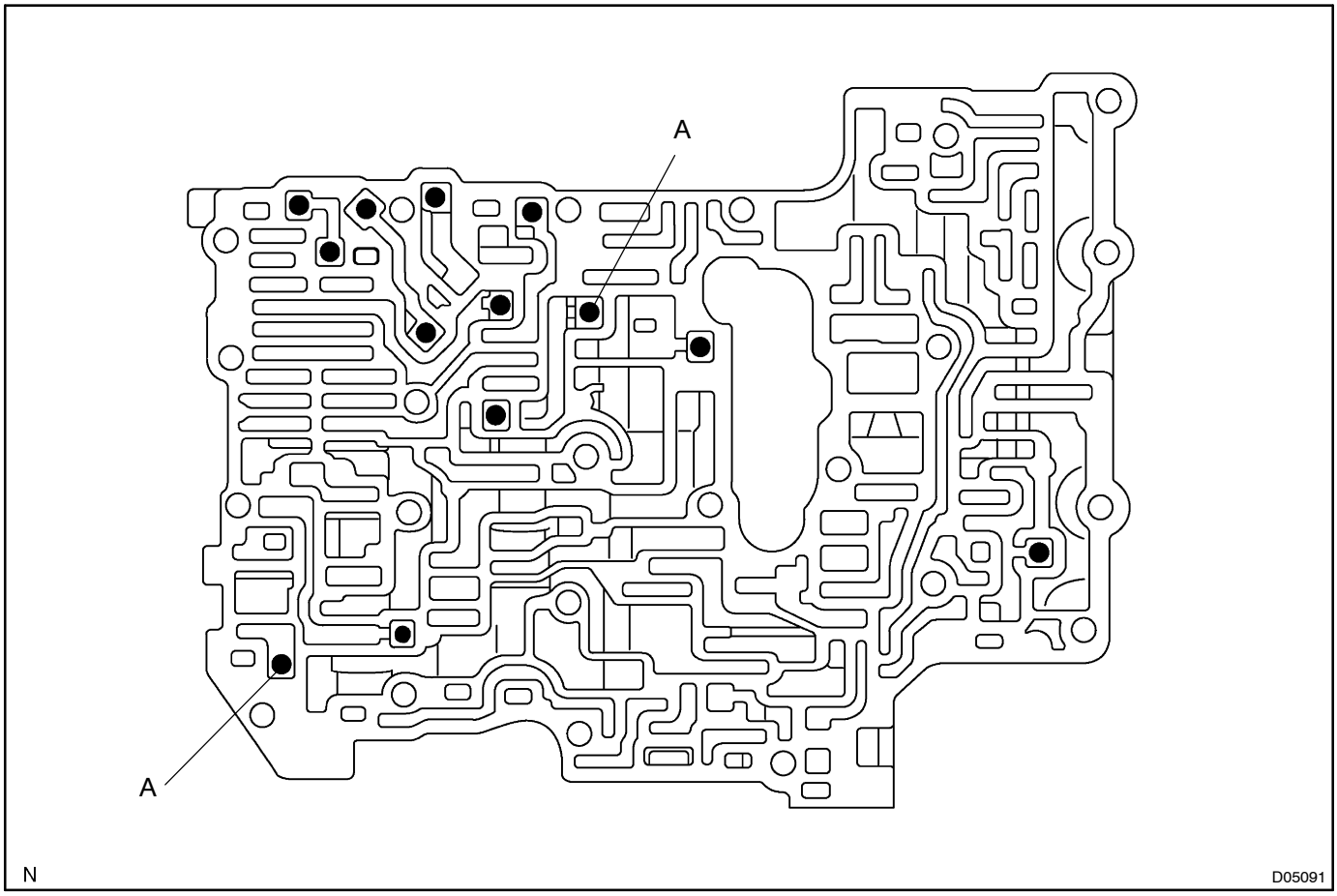


| Mark | Check ball | Diameter mm (in.) |
|---|---|---|
| A | Rubber ball | 6.35 (0.2500) |
| Except A | Rubber ball | 5.54 (0.2181) |

# LOWER NO.1 VALVE BODY

AT0JF–01

## LOCATION

### COMPONENTS

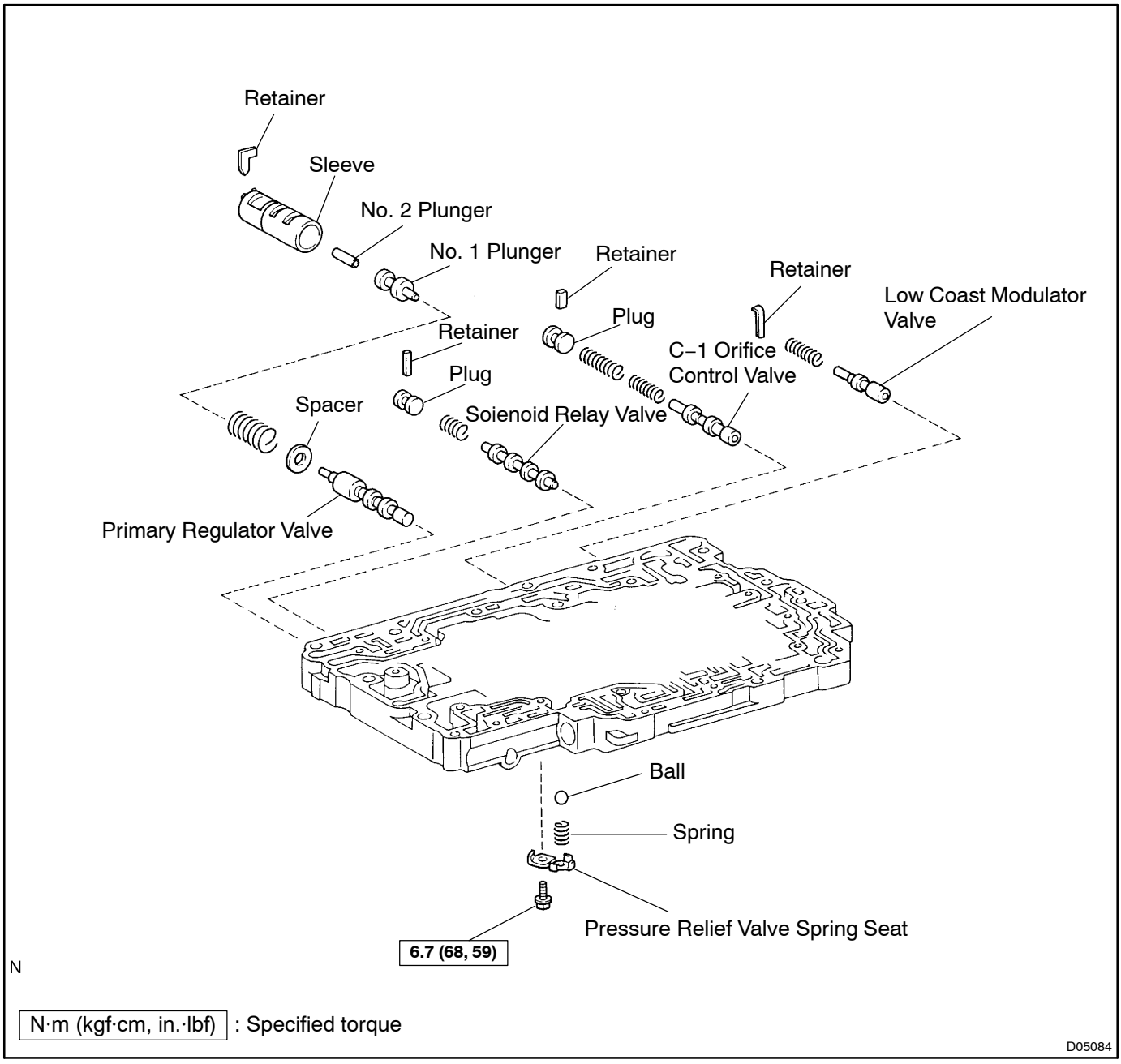

## SPRING

HINT:

During reassembly, please refer to the spring specifications below to help you differentiate among the different springs.

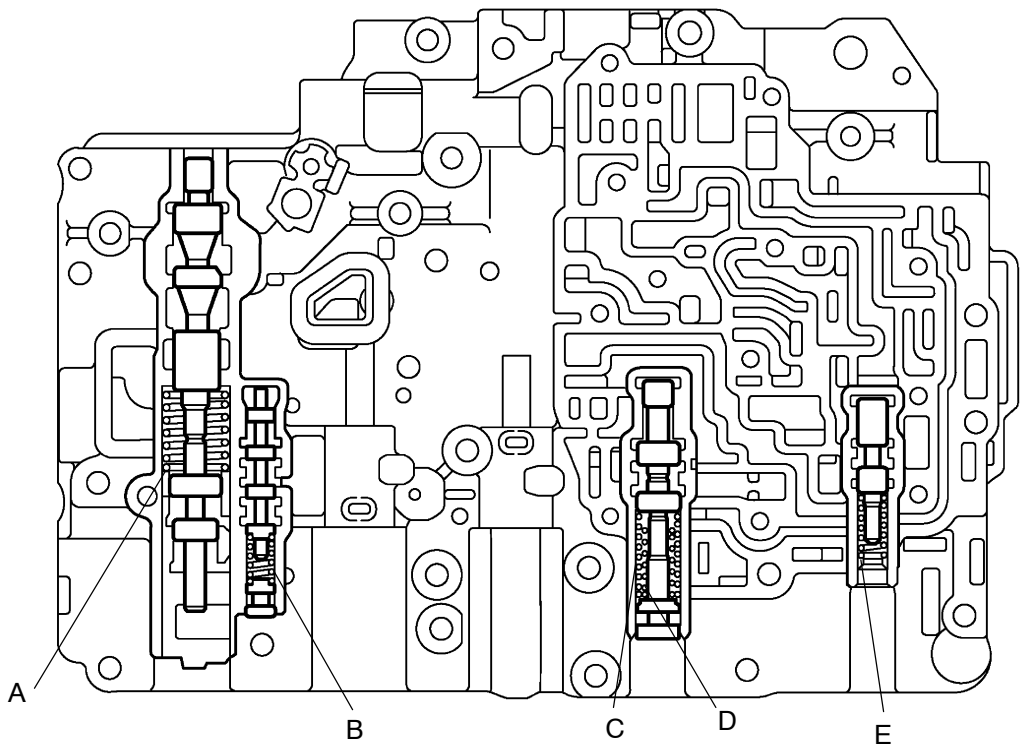


N D05086

| Mark | Name (Color) | Free length / Outer diameter mm (in.) | Total No. of coils |
|---|---|---|---|
| A | Primary Regulator Valve (Light blue) | 37.38 (1.4717) / 18.88 (0.7433) | 7.17 |
| B | Cut Back Valve (None) | 18.80 (0.7402) / 7.48 (0.2944) | 7.50 |
| C | C – 1 Orifice Control Valve (White) | 37.13 (1.4618) / 11.14 (0.4386) | 11.25 |
| D | C – 1 Orifice Control Valve (Yellow) | 19.77 (0.7783) / 7.76 (0.3055) | 11.50 |
| E | Low Coast Modulator Valve (Blue) | 26.43 (1.0405) / 8.26 (0.3252) | 10.51 |

## RETAINER

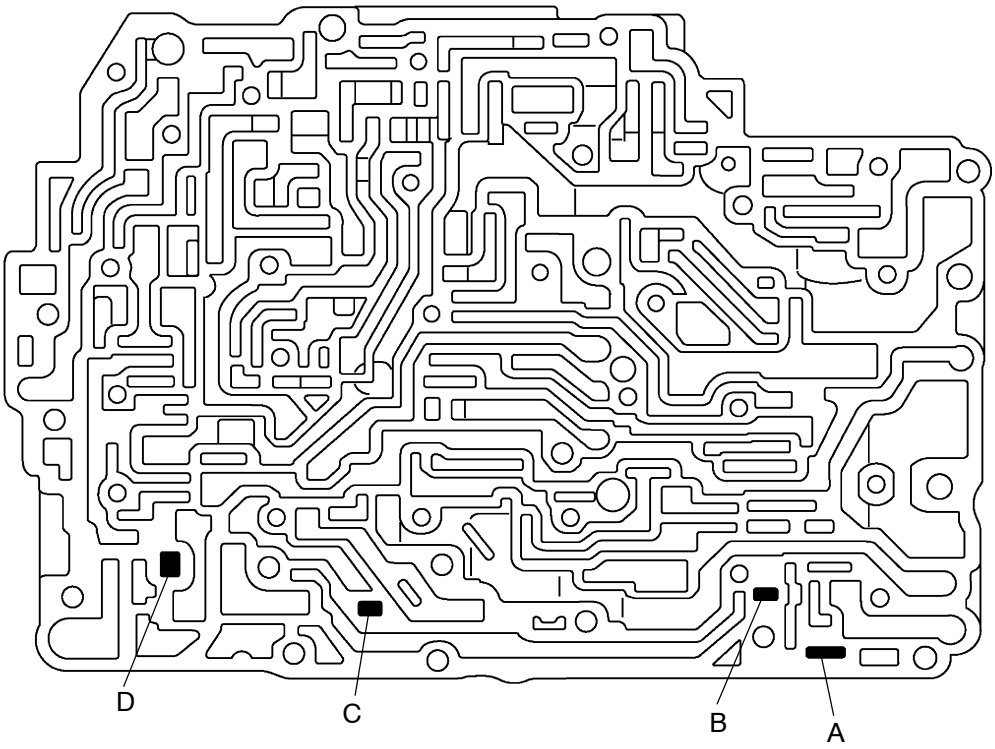


N D05089

| Mark | Retainer | Height / Width / Thickness mm (in.) |
|---|---|---|
| A | Primary Regulator Valve | 13.0 (0.512) / − / 3.2 (0.126) |
| B | Cut Back Valve | 19.0 (0.748) / 5.0 (0.197) / 3.2 (0.126) |
| C | C − 1 Orifice Control Valve | 10.0 (0.394) / 5.0 (0.197) / 3.2 (0.126) |
| D | Low Coast Modulator Valve | 21.5 (0.846) / − / 1.4 (0.055) |

# LOWER NO.2 VALVE BODY

AT0JH–01

## LOCATION

### COMPONENTS

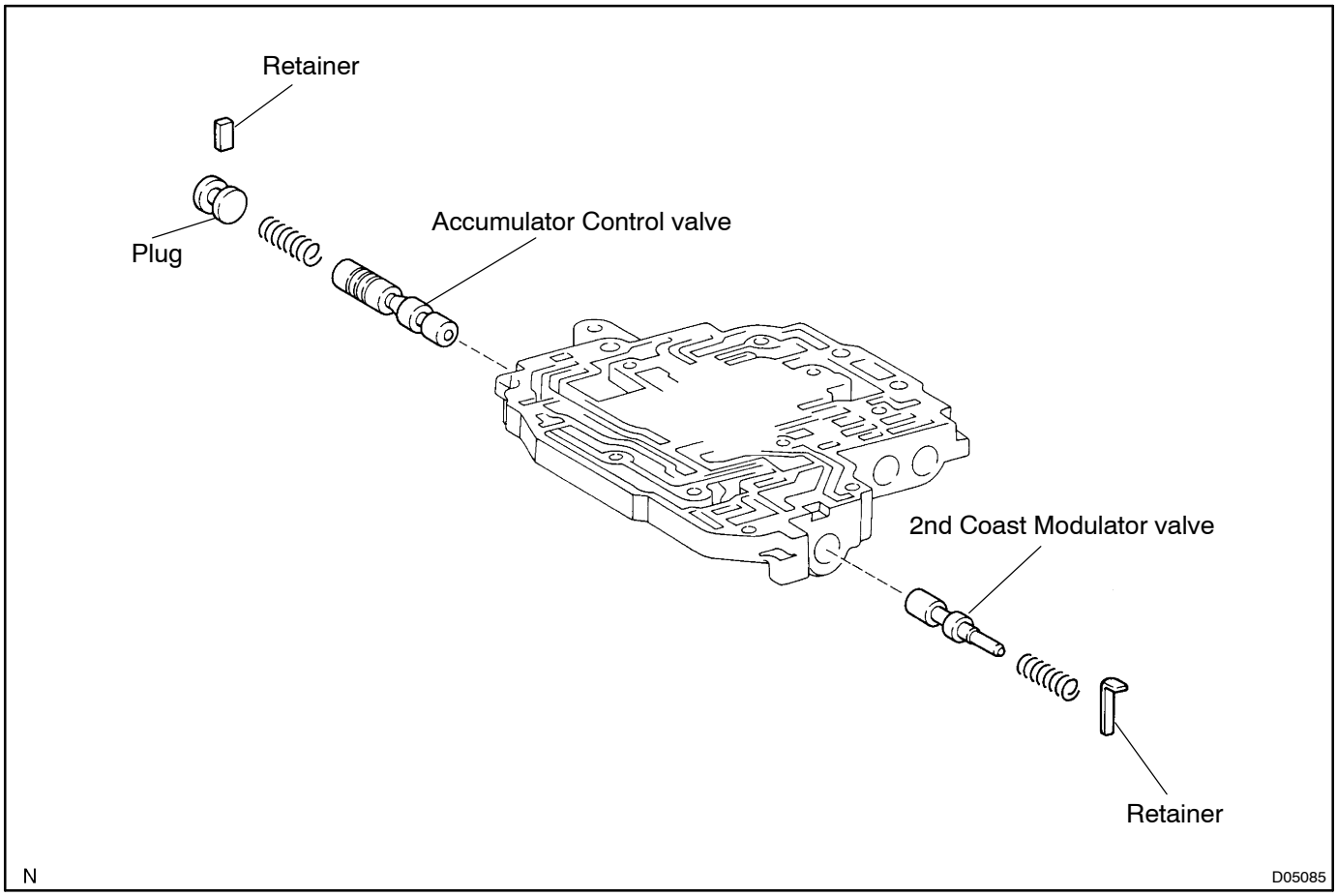

## SPRING

HINT:

During reassembly, please refer to the spring specifications below to help you differentiate among the different springs.

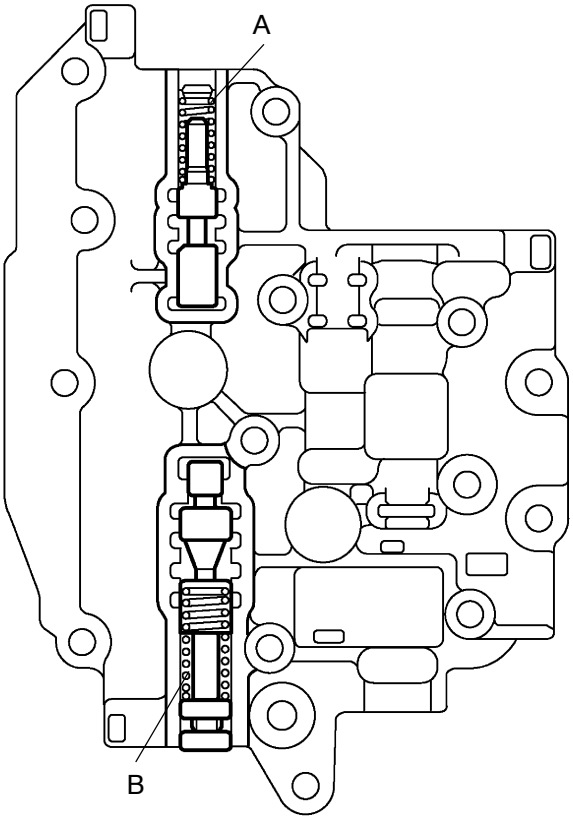


| Mark | Name (Color) | Free length / Outer diameter mm (in.) | Total No. of coils |
|---|---|---|---|
| A | 2nd Coast Modulator Valve (Blue) | 32.31 (1.2720) / 8.30 (0.3268) | 12.60 |
| B | Accumulator Control Valve (White) | 24.88 (0.9795) / 8.00 (0.3150) | 14.34 |

## RETAINER

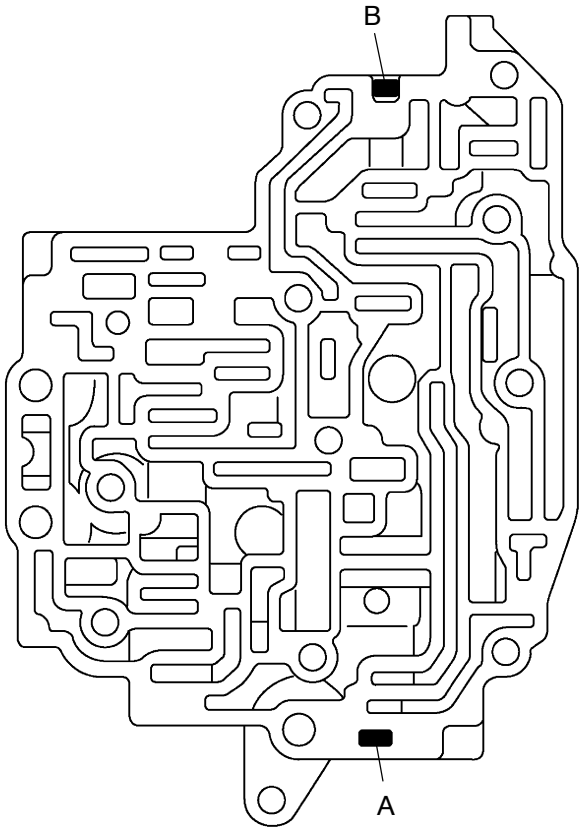


| Mark | Retainer | Height / Width / Thickness mm (in.) |
|---|---|---|
| A | Accumulator Control Valve | 8.5 (0.335) / 5.0 (0.197) / 3.2 (0.126) |
| B | 2nd Coast Modulator Valve | 21.5 (0.846) / – / 1.4 (0.55) |