SECTION LT
LIGHTING SYSTEM

CONTENTS

PRECAUTIONS 4
Precautions for Supplemental Restraint System (SRS) “AIR BAG” and “SEAT BELT PRE-TENSIONER” 4
General precautions for service operations 4
HEADLAMP (FOR USA) 5
Component Parts and Harness Connector Location 5
System Description 5
OUTLINE 5
BATTERY SAVER CONTROL 6
AUTO LIGHT OPERATION 6
XENON HEADLAMP (IF EQUIPPED) 6
CAN Communication System Description 7
Wiring Diagram — H/LAMP — 8
HALOGEN 8
XENON 10
Terminals and Reference Values for BCM 12
Terminals and Reference Values for IPDM E/R 13
How to Proceed With Trouble Diagnosis 13
Preliminary Check 13
CHECK POWER SUPPLY AND GROUND CIRCUIT 13
CONSULT-II Function (BCM) 15
CONSULT-II OPERATION 15
DATA MONITOR 16
ACTIVE TEST 16
CONSULT-II Function (IPDM E/R) 17
CONSULT-II OPERATION 17
DATA MONITOR 18
ACTIVE TEST 18
Headlamp HI Does Not Illuminate (Both Sides) 19
Headlamp HI Does Not Illuminate (One Side) 21
High-Beam Indicator Lamp Does Not Illuminate 22
Headlamp LO Does Not Illuminate (Both Sides) 22
Headlamp LO Does Not Illuminate (One Side) 24
Headlamps Do Not Turn OFF 25
One Xenon Headlamp Does Not Illuminate At Full Brightness 26
One Xenon Headlamp Flickers 26
Aiming Adjustment 27
HEADLAMP AIMING 27
AIMING ADJUSTMENT 28
Bulb Replacement 28
HEADLAMP 28
FRONT TURN SIGNAL LAMP 29
Removal and Installation 29
COMBINATION LAMP 29
Disassembly and Assembly 30
COMBINATION LAMP - XENON TYPE 30
HEADLAMP (FOR CANADA) - DAYTIME LIGHT SYSTEM - 32
Component Parts and Harness Connector Location 32
System Description 32
HEADLAMP OPERATION 33
BATTERY SAVER CONTROL 34
AUTO LIGHT OPERATION 34
DAYTIME LIGHT OPERATION 34
XENON HEADLAMP (IF EQUIPPED) 34
OPERATION 34
CAN Communication System Description 35
Schematic 36
Wiring Diagram — DTRL — 37
How to Proceed With Trouble Diagnosis 40
Preliminary Check 40
CHECK BCM CONFIGURATION 40
Trouble Diagnosis 41
Aiming Adjustment 42
Bulb Replacement 42
Disassembly and Assembly 42
Removal and Installation 42
DAYTIME LIGHT CONTROL UNIT 42
AUTO LIGHT SYSTEM 43
Component Parts and Harness Connector Location 43
System Description 43
OUTLINE 43
BATTERY SAVER CONTROL 44
SHUT OFF DELAY 44
CAN Communication System Description 44
Major Components and Functions 44
Wiring Diagram — AUTO/L — 45

Terminals and Reference Values for BCM 47
Terminals and Reference Values for IPDM E/R 48
How to Proceed With Trouble Diagnosis 49
Preliminary Check 49
SETTING CHANGE FUNCTIONS 49
CHECK BCM CONFIGURATION 49
CHECK POWER SUPPLY AND GROUND CIRCUIT 49
CONSULT-II Function (BCM) 51
CONSULT-II OPERATION 51
WORK SUPPORT 52
DATA MONITOR 52
ACTIVE TEST 53
CONSULT-II Function (IPDM E/R) 54
CONSULT-II OPERATION 54
DATA MONITOR 55
ACTIVE TEST 55
Trouble Diagnosis Chart by Symptom 56
Lighting Switch Inspection 56
Auto Light Sensor System Inspection 57
FRONT FOG LAMP 59
Component Parts and Harness Connector Location 59
System Description 59
OUTLINE 59
BATTERY SAVER CONTROL 60
CAN Communication System Description 60
Wiring Diagram — F/FOG — 61
Terminals and Reference Values for BCM 62
Terminals and Reference Values for IPDM E/R 63
How to Proceed With Trouble Diagnosis 63
Preliminary Check 64
CHECK POWER SUPPLY AND GROUND CIRCUIT 64
CONSULT-II Function 65
Front Fog Lamps Do Not Illuminate (Both Sides) 65
Front Fog Lamp Does Not Illuminate (One Side) 66
Aiming Adjustment 67
ALL EXCEPT SE-R MODELS 67
SE-R MODELS 67
Bulb Replacement 69
ALL EXCEPT SE-R MODELS 69
SE-R MODELS 69
Removal and Installation 69
ALL EXCEPT SE-R MODELS 69
SE-R MODELS 70
TURN SIGNAL AND HAZARD WARNING LAMPS 71
Component Parts and Harness Connector Location 71
System Description 71
TURN SIGNAL OPERATION 71
HAZARD LAMP OPERATION 72
REMOTE KEYLESS ENTRY SYSTEM OPERATION 73
CAN Communication System Description 73
Schematic 74
Wiring Diagram — TURN — 75
Terminals and Reference Values for BCM 78
How to Proceed With Trouble Diagnosis 79
Preliminary Check 80
CHECK POWER SUPPLY AND GROUND CIRCUIT 80
CONSULT-II Function (BCM) 81
CONSULT-II OPERATION 81
DATA MONITOR 82
ACTIVE TEST 82
Turn Signal Lamp Does Not Operate 82
Hazard Warning Lamp Does Not Operate But Turn Signal Lamps Operate 84
Turn Signal Indicator Lamp Does Not Operate 85
Bulb Replacement 85
FRONT TURN SIGNAL LAMP 85
REAR TURN SIGNAL LAMP 85
Removal and Installation 85
FRONT TURN SIGNAL LAMP 85
REAR TURN SIGNAL LAMP 85
LIGHTING AND TURN SIGNAL SWITCH 86
Removal and Installation 86
REMOVAL 86
Switch Circuit Inspection 86
HAZARD SWITCH 87
Removal and Installation 87
REMOVAL 87
COMBINATION SWITCH 88
Wiring Diagram — COMBSW — 88
Combination Switch Reading Function 89
CONSULT-II Function (BCM) 89
CONSULT-II OPERATION 89
DATA MONITOR 90
Combination Switch Inspection 91
Removal and Installation 93
Switch Circuit Inspection 93
STOP LAMP 94
Wiring Diagram — STOP/L — 94
Bulb Replacement 96
HIGH MOUNTED STOP LAMP 96
WITHOUT REAR AIR SPOILER 96
STOP LAMP 96
Removal and Installation 96
HIGH-MOUNTED STOP LAMP 96
WITH REAR AIR SPOILER EXCEPT SE-R 96
WITHOUT REAR AIR SPOILER 96
REAR COMBINATION LAMP 96
BACK-UP LAMP 97
Wiring Diagram — BACK/L — 97
Bulb Replacement 98
REMOVAL 98
INSTALLATION 98
Removal and Installation 98
PARKING, LICENSE PLATE AND TAIL LAMPS 99
Component Parts and Harness Connector Location 99
System Description 99
OPERATION BY LIGHTING SWITCH 99
BATTERY SAVER CONTROL 100
CAN Communication System Description 100
Schematic 101
Wiring Diagram — TAIL/L — 102
Terminals and Reference Values for BCM 105
Terminals and Reference Values for IPDM E/R 106
How to Proceed With Trouble Diagnosis 106

Preliminary Check 107
CHECK POWER SUPPLY AND GROUND CIRCUIT 107
CONSULT-II Functions 108
Parking, License Plate and/or Tail Lamps Do Not Illuminate 108
Parking, License Plate and Tail Lamps Do Not Turn OFF (After Approx. 10 Minutes) 112
Bulb Replacement 113
LICENSE PLATE LAMP 113
FRONT TURN SIGNAL (PARKING) LAMP 113
TAIL LAMP 113
Removal and Installation 113
LICENSE PLATE LAMP 113
FRONT TURN SIGNAL (PARKING) LAMP 113
REAR COMBINATION LAMP 113
INTERIOR ROOM LAMP 114
Component Parts and Harness Connector Location 114
System Description 114
POWER SUPPLY AND GROUND 114
SWITCH OPERATION 115
ROOM LAMP TIMER OPERATION 116
INTERIOR LAMP BATTERY SAVER CONTROL 117
Schematic 118
Wiring Diagram — INT/L — 119
Models With Vanity Lamps 122
Terminals and Reference Values for BCM 123
How to Proceed With Trouble Diagnosis 124
Preliminary Check 124
INSPECTION FOR POWER SUPPLY AND GROUND CIRCUIT 124
CONSULT-II Function (BCM) 125
CONSULT-II OPERATION 125
WORK SUPPORT 126
DATA MONITOR 126
ACTIVE TEST 127
Interior Room Lamp Control Does Not Operate 128
Ignition Keyhole Illumination Control Does Not Operate 129
All Step Lamps Do Not Operate 131
All Interior Room Lamps Do Not Operate 132
Bulb Replacement 132
ROOM OR SPOT LAMP 132
STEP LAMP 132
VANITY MIRROR LAMP 132
TRUNK ROOM LAMP 133
Removal and Installation 133
IGNITION KEYHOLE ILLUMINATION LAMP 133
ROOM LAMP 133
STEP LAMP 133
TRUNK ROOM LAMP 134
ILLUMINATION 135
Component Parts and Harness Connector Location 135
System Description 135
ILLUMINATION OPERATION BY LIGHTING SWITCH 136
BATTERY SAVER CONTROL 137
CAN Communication System Description 137
Schematic 138
Wiring Diagram — ILL — 139
Bulb Replacement 143
GLOVE BOX LAMP 143
Removal and Installation 143
ILLUMINATION CONTROL SWITCH 143
BULB SPECIFICATIONS 144
Headlamp 144
Exterior Lamp 144
Interior Lamp/Illumination 144

PRECAUTIONS

PFP:00011

Precautions for Supplemental Restraint System (SRS) “AIR BAG” and “SEAT BELT PRE-TENSIONER”

EKS008LD

The Supplemental Restraint System such as “AIR BAG” and “SEAT BELT PRE-TENSIONER”, used along with a front seat belt, helps to reduce the risk or severity of injury to the driver and front passenger for certain types of collision. This system includes seat belt switch inputs and dual stage front air bag modules. The SRS system uses the seat belt switches to determine the front air bag deployment, and may only deploy one front air bag, depending on the severity of a collision and whether the front occupants are belted or unbelted.
Information necessary to service the system safely is included in the SRS and SB section of this Service Manual.

WARNING:

- **To avoid rendering the SRS inoperative, which could increase the risk of personal injury or death in the event of a collision which would result in air bag inflation, all maintenance must be performed by an authorized NISSAN/INFINITI dealer.**
- **Improper maintenance, including incorrect removal and installation of the SRS, can lead to personal injury caused by unintentional activation of the system. For removal of Spiral Cable and Air Bag Module, see the SRS section.**
- **Do not use electrical test equipment on any circuit related to the SRS unless instructed to in this Service Manual. SRS wiring harnesses can be identified by yellow and/or orange harnesses or harness connectors.**

General precautions for service operations

EKS008LE

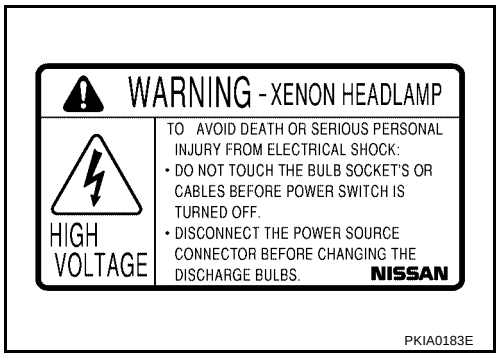

PKIA0183E

- Never work with wet hands.
- The xenon headlamp system includes a high voltage generating part. Be sure to disconnect battery negative cable (negative terminal) or power fuse before removing, installing, or touching the xenon headlamp (including lamp bulb).
- Turn the lighting switch OFF before disconnecting and connecting the connector.
- When turning the xenon headlamp on and while it is illuminated, never touch the harness, bulb, and socket of the headlamp.
- When checking the headlamp on/off operation, check it on vehicle and with the power connected to the vehicle-side connector.
- Do not touch the headlamp bulb glass surface with bare hands or allow oil or grease to get on it. Do not touch the headlamp bulb just after the headlamp is turned off, because it is very hot.

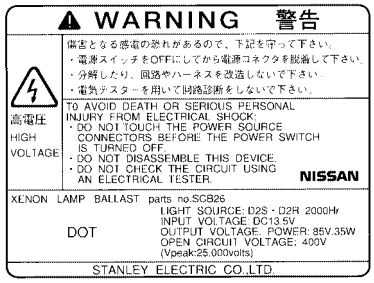

EL-3422D

- Install the xenon headlamp bulb socket correctly. If it is installed improperly, high-voltage leak or corona discharge may occur that can melt the bulb, connector, and housing. Do not illuminate the xenon headlamp bulb out of the headlamp housing. Doing so can cause fire and harm your eyes.
- When the bulb has burned out, wrap it in a thick vinyl bag and discard. Do not break the bulb.
- Leaving the bulb removed from the headlamp housing for a long period of time can deteriorate the performance of the lens and reflector (dirt, clouding). Always prepare a new bulb and have it on hand when replacing the bulb.
- When adjusting the headlamp aiming, turn the aiming adjustment screw only in the tightening direction. (If it is necessary to loosen the screw, first fully loosen the screw, and then turn it in the tightening direction.)
- Do not use organic solvent (paint thinner or gasoline) to clean lamps and to remove old sealant.

HEADLAMP (FOR USA)

PFP:26010

Component Parts and Harness Connector Location

EKS008LG

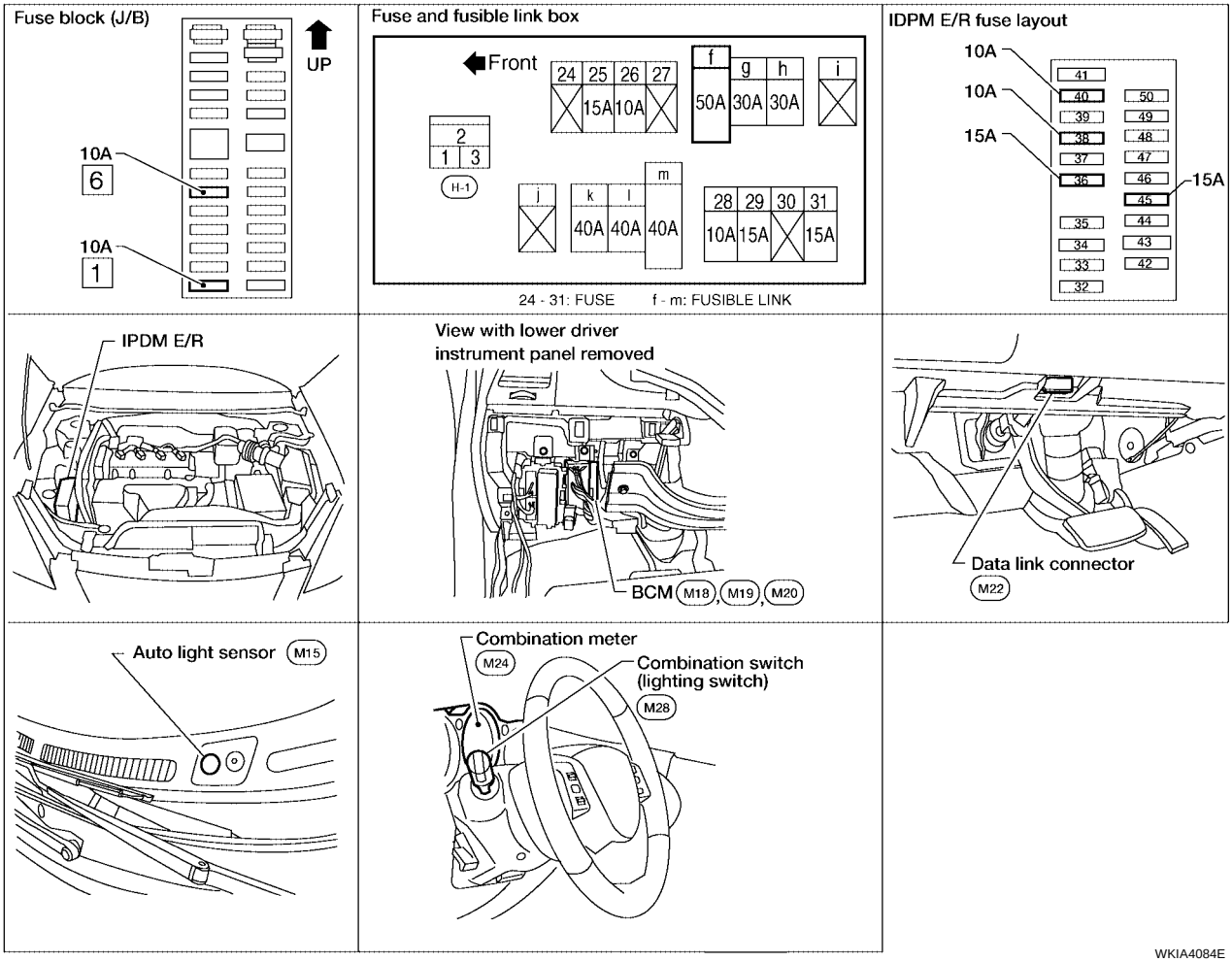

WKIA4084E

System Description

EKS008LH

Control of the headlamp system operation is dependent upon the position of the combination switch (lighting switch). When the lighting switch is placed in the 2ND position, the BCM (body control module) receives input requesting the headlamps (and tail lamps) to illuminate. This input is communicated to the IPDM E/R (intelligent power distribution module engine room) across the CAN communication lines. The CPU (central processing unit) of the IPDM E/R controls the headlamp high and headlamp low relay coils. When energized, these relays direct power to the respective headlamps, which then illuminate.

OUTLINE

Power is supplied at all times

- to headlamp high relay, located in the IPDM E/R, and
- to headlamp low relay, located in the IPDM E/R, and
- through 50A fusible link (letter **f** , located in the fuse and fusible link box)
- to BCM terminal 70.

With the ignition switch in the ON or START position, power is supplied

- through 10A fuse [No. 1, located in the fuse block (J/B)]
- to BCM terminal 38.

With the ignition switch in the ACC or ON position, power is supplied

- through 10A fuse [No. 6, located in the fuse block (J/B)]
- to BCM terminal 11.

Ground is supplied

- to BCM terminal 67
- through grounds F14, M57 and M61.

Low Beam Operation

With the lighting switch in 2ND position, the BCM receives input requesting the headlamps to illuminate. This input is communicated to the IPDM E/R across the CAN communication lines. The CPU of the IPDM E/R controls the headlamp low relay coil. When energized, this relay directs power

- through 15A fuse (No. 36, located in the IPDM E/R)
- through IPDM E/R terminal 20
- to headlamp RH terminal 1, and
- through 15A fuse (No. 45, located in the IPDM E/R)
- through IPDM E/R terminal 30
- to headlamp LH terminal 1.

Ground is supplied

- to headlamp RH terminal 2
- to headlamp LH terminal 2
- through grounds E15 and E24.

With power and ground supplied, low beam headlamps illuminate.

High Beam Operation/Flash-to-Pass Operation

With the lighting switch in 2ND position and placed in HIGH or PASS position, the BCM receives input requesting the headlamp high beams to illuminate. This input is communicated to the IPDM E/R across the CAN communication lines. The CPU of the combination meter controls the ON/OFF status of the HIGH BEAM indicator. The CPU of the IPDM E/R controls the headlamp high relay coil. When energized, this relay directs power

- through 10A fuse (No. 40, located in the IPDM E/R)
- through IPDM E/R terminal 27
- to headlamp RH terminal 1, and
- through 10A fuse (No. 38, located in the IPDM E/R)
- through IPDM E/R terminal 28
- to headlamp LH terminal 1.

Ground is supplied

- to headlamp RH terminal 2
- to headlamp LH terminal 2
- through grounds E15 and E24.

With power and ground supplied, the high beam headlamps illuminate.

BATTERY SAVER CONTROL

When the combination switch (lighting switch) is in the 2ND position (ON) and the ignition switch is turned from ON or ACC to OFF, the battery saver control feature is activated.
Under this condition, the headlamps remain illuminated for 5 minutes, unless the combination switch (lighting switch) position is changed. If the combination switch (lighting switch) position is changed, then the headlamps are turned off.

AUTO LIGHT OPERATION

Refer to LT-43, "System Description" for auto light operation.

XENON HEADLAMP (IF EQUIPPED)

The low beam headlamps may be equipped with xenon type bulbs. Xenon bulbs do not use a filament. Instead, they produce light when a high voltage current is passed between two tungsten electrodes through a mixture of xenon (an inert gas) and certain other metal halides. In addition to added lighting power, electronic control of the power supply gives the headlamps stable quality and tone color.
Following are some of the advantages of the xenon type headlamp.

- The light produced by the headlamps is a white color comparable to sunlight that is easy on the eyes.
- Light output is nearly double that of halogen headlamps, affording increased area of illumination.

- The light features a high relative spectral distribution at wavelengths to which the human eye is most sensitive. This means that even in the rain, more light is reflected back from the road surface toward the vehicle for added visibility.
- Power consumption is approximately 25 percent less than halogen headlamps, reducing battery load.

CAN Communication System Description

EKS008LI

Refer to LAN-20, "CAN COMMUNICATION" .

Wiring Diagram — H/LAMP —
HALOGEN

EKS008LJ

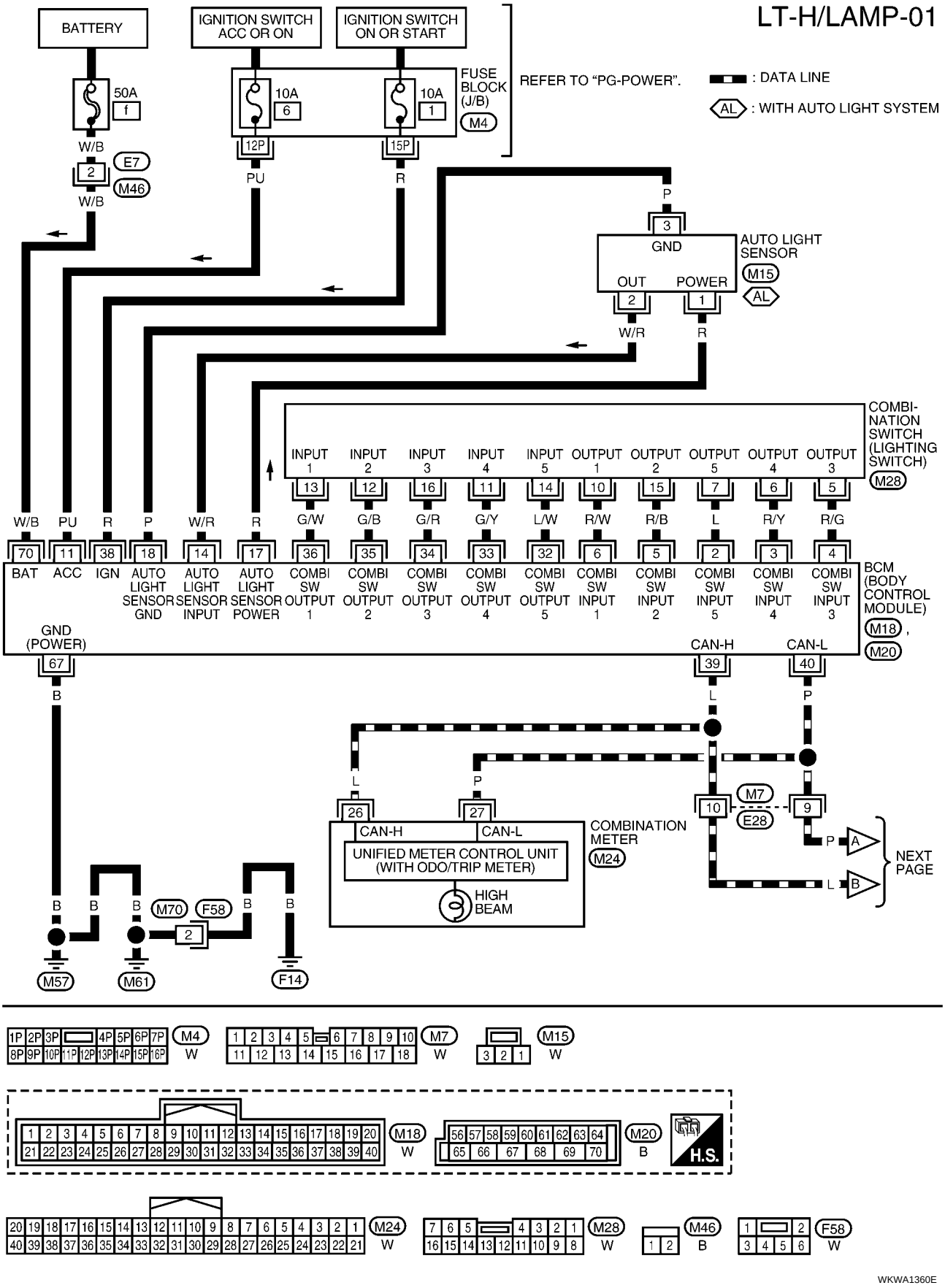

LT-H/LAMP-02

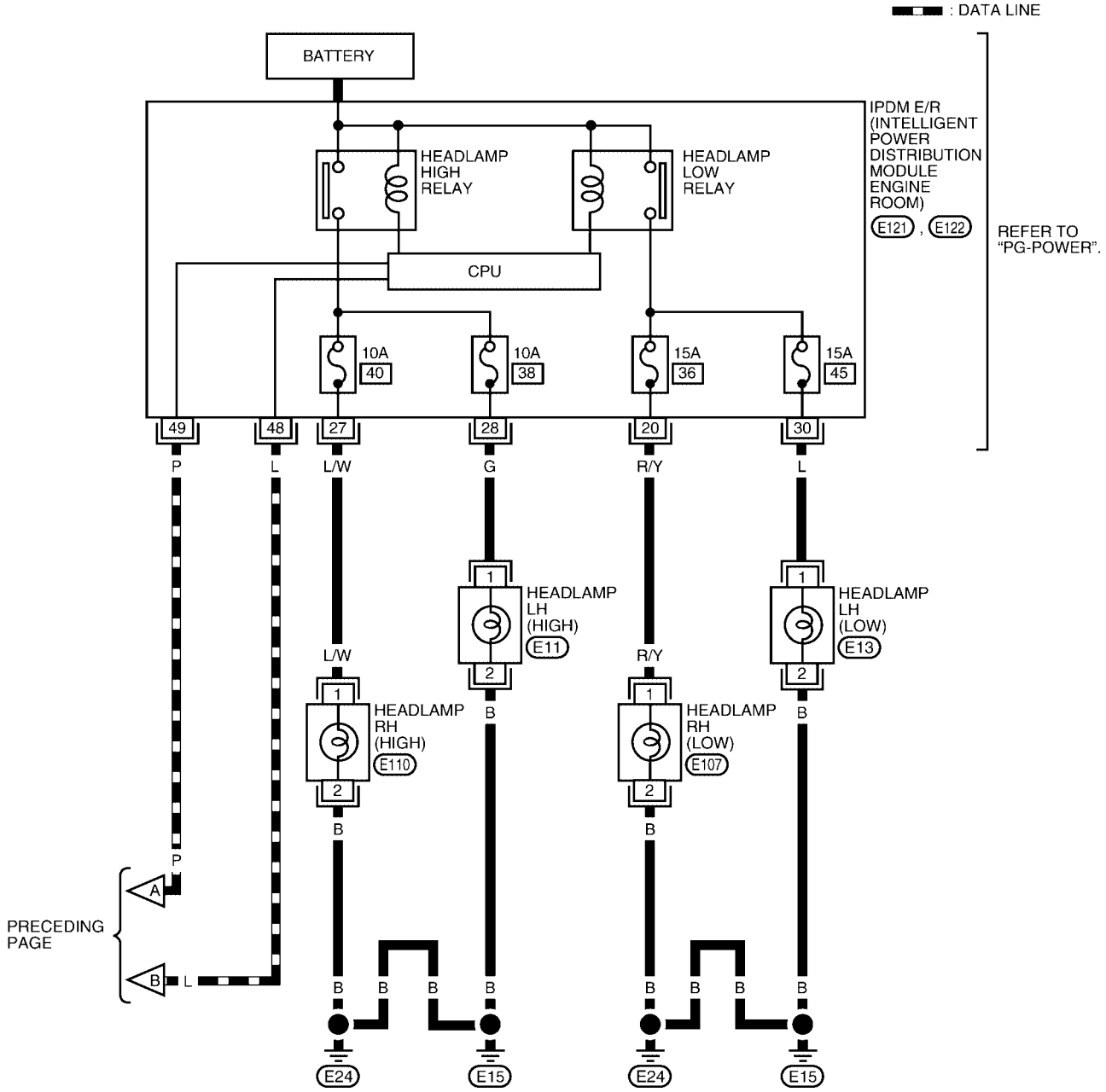

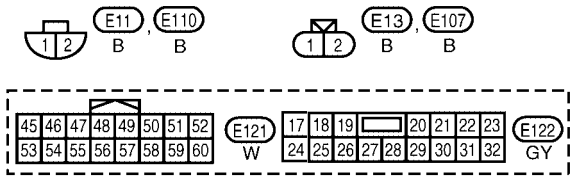

WKWA1361E

XENON

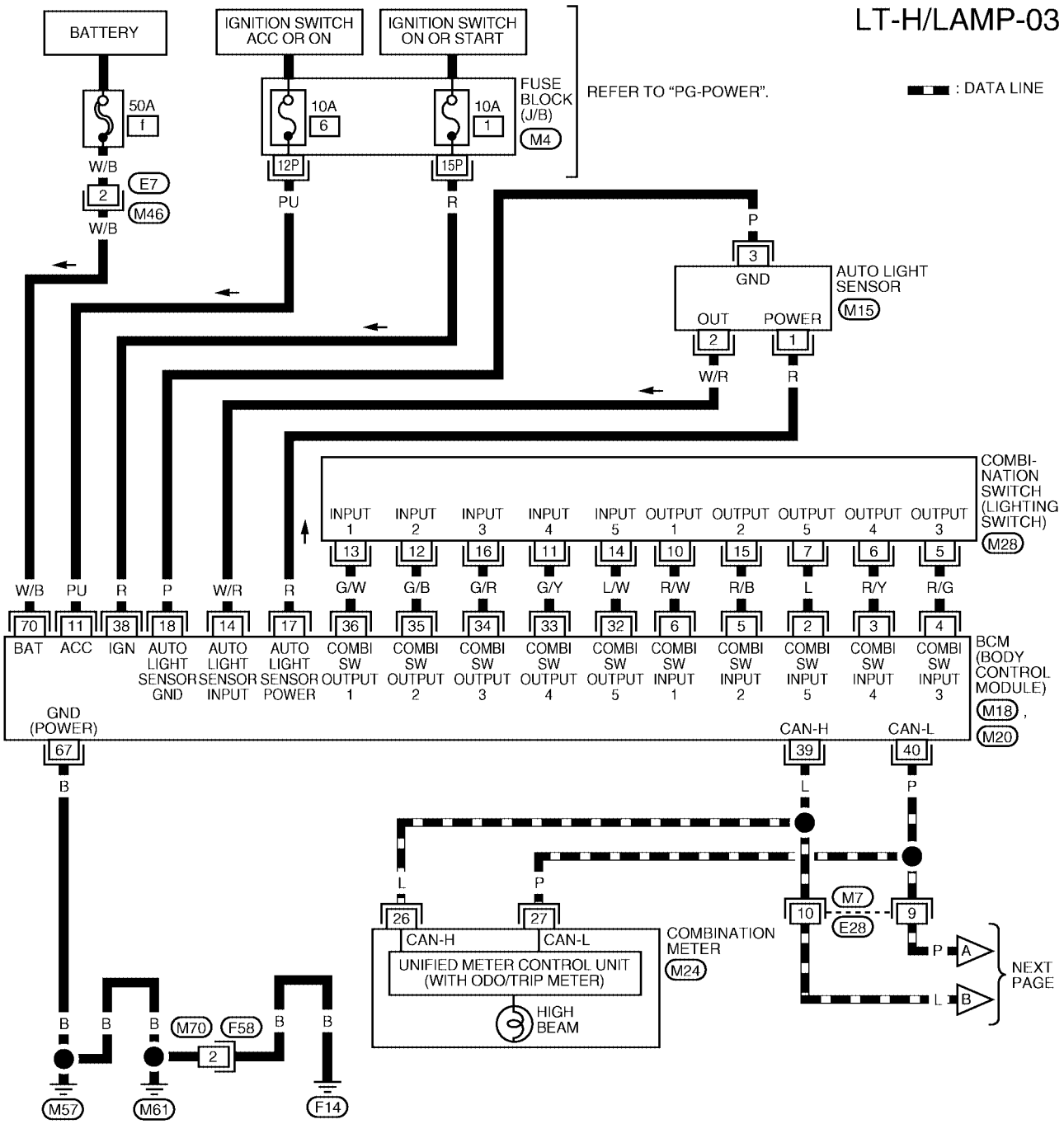
LT-H/LAMP-03
BATTERY
IGNITION SWITCH ACC OR ON
IGNITION SWITCH ON OR START
FUSE BLOCK (J/B)
M4
REFER TO "PG-POWER".
: DATA LINE
50A
f
10A
6
10A
1
12P
15P
W/B
E7
2
M46
W/B
PU
R
P
3
GND
AUTO LIGHT SENSOR
M15
OUT
POWER
2
1
W/R
R
COMBI-NATION SWITCH (LIGHTING SWITCH)
M28
INPUT 1
INPUT 2
INPUT 3
INPUT 4
INPUT 5
OUTPUT 1
OUTPUT 2
OUTPUT 5
OUTPUT 4
OUTPUT 3
13
12
16
11
14
10
15
7
6
5
W/B
PU
R
P
W/R
R
G/W
G/B
G/R
G/Y
L/W
R/W
R/B
L
R/Y
R/G
70
11
38
18
14
17
36
35
34
33
32
6
5
2
3
4
BAT
ACC
IGN
AUTO LIGHT SENSOR GND
AUTO LIGHT SENSOR INPUT
AUTO LIGHT SENSOR POWER
COMBI SW OUTPUT 1
COMBI SW OUTPUT 2
COMBI SW OUTPUT 3
COMBI SW OUTPUT 4
COMBI SW OUTPUT 5
COMBI SW INPUT 1
COMBI SW INPUT 2
COMBI SW INPUT 5
COMBI SW INPUT 4
COMBI SW INPUT 3
BCM (BODY CONTROL MODULE)
M18
M20
GND (POWER)
CAN-H
CAN-L
67
39
40
B
L
P
L
P
26
27
CAN-H
CAN-L
UNIFIED METER CONTROL UNIT (WITH ODO/TRIP METER)
HIGH BEAM
COMBINATION METER
M24
10
M7
E28
9
P
A
L
B
NEXT PAGE
B
B
B
M70
F58
2
B
B
M57
M61
F14
M4
W
M7
W
M15
W
M18
W
M20
B
H.S.
M24
W
M28
W
M46
B
F58
W
WKWA1301E

LT-H/LAMP-04

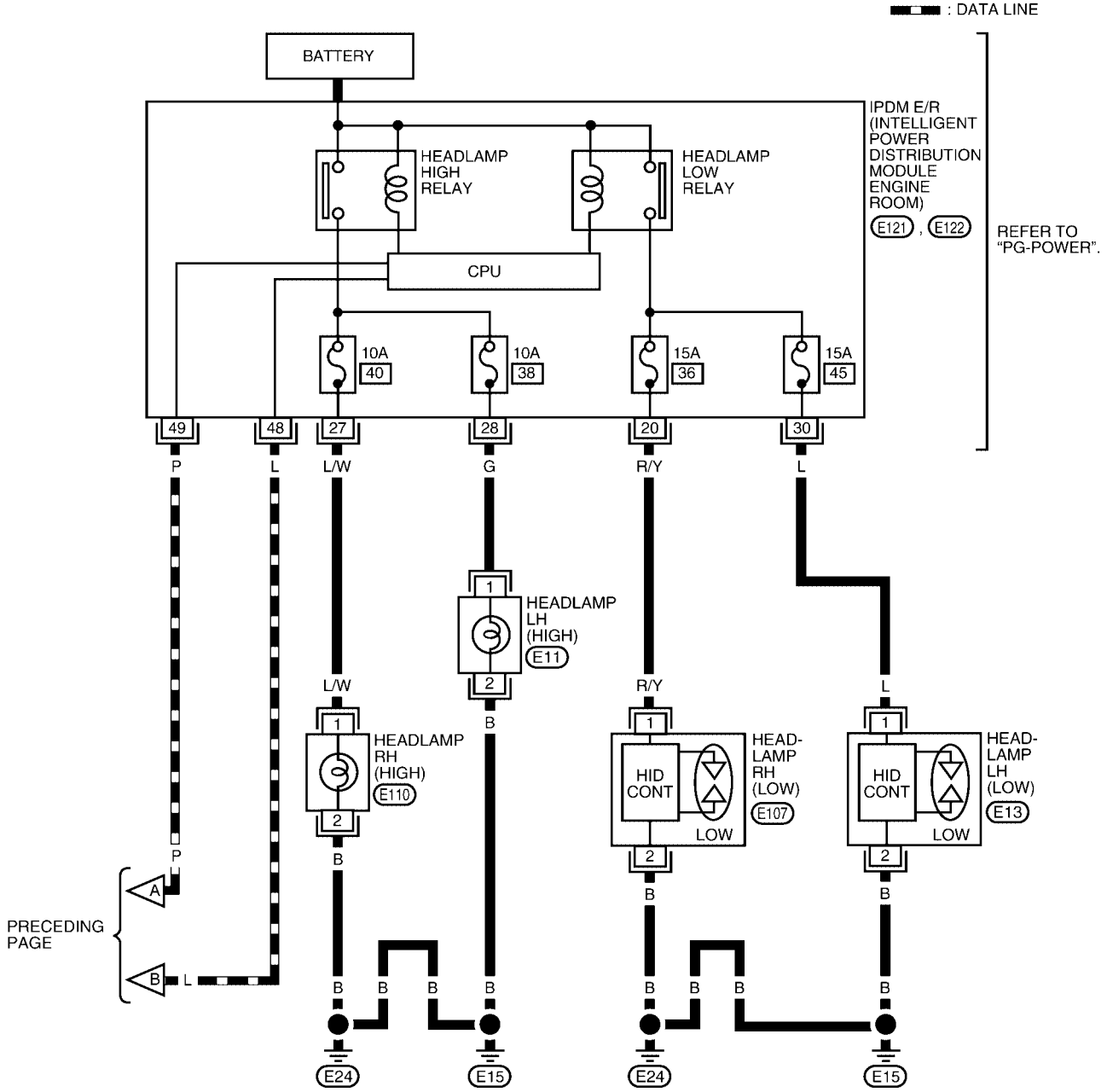

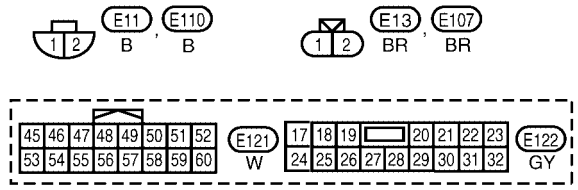

WKWA1362E

Terminals and Reference Values for BCM

EKS008LK

Terminal No.	Wire color	Signal name	Measuring condition		Reference value (Approx.)
			Ignition switch	Operation or condition	
2	L	Combination switch input 5	ON	Lighting, turn, wiper OFF Wiper dial position 4	 SKIA5291E
3	R/Y	Combination switch input 4	ON	Lighting, turn, wiper OFF Wiper dial position 4	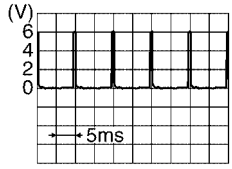 SKIA5292E
4	R/G	Combination switch input 3	ON	Lighting, turn, wiper OFF Wiper dial position 4	 SKIA5291E
5	R/B	Combination switch input 2	ON	Lighting, turn, wiper OFF Wiper dial position 4	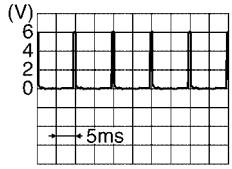 SKIA5292E
6	R/W	Combination switch input 1			
11	PU	Ignition switch (ACC)	ACC	—	Battery voltage
32	L/W	Combination switch output 5	ON	Lighting, turn, wiper OFF Wiper dial position 4	 SKIA5291E
33	G/Y	Combination switch output 4	ON	Lighting, turn, wiper OFF Wiper dial position 4	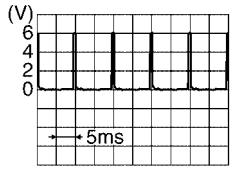 SKIA5292E
34	G/R	Combination switch output 3	ON	Lighting, turn, wiper OFF Wiper dial position 4	 SKIA5291E

Terminal No.	Wire color	Signal name	Measuring condition		Reference value (Approx.)
			Ignition switch	Operation or condition	
35	G/B	Combination switch output 2	ON	Lighting, turn, wiper OFF Wiper dial position 4	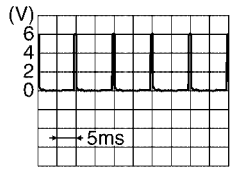 SKIA5292E
36	G/W	Combination switch output 1			
38	R	Ignition switch (ON)	ON	—	Battery voltage
39	L	CAN-H	—	—	—
40	P	CAN-L	—	—	—
67	B	Ground	ON	—	0V
70	W/B	Battery power supply (fusible link)	OFF	—	Battery voltage

Terminals and Reference Values for IPDM E/R

EKS008LL

Terminal No.	Wire color	Signal name	Measuring condition			Reference value (Approx.)
			Ignition switch	Operation or condition		
20	R/Y	Headlamp low (RH)	ON	Lighting switch 2ND position	OFF	0V
					ON	Battery voltage
27	L/W	Headlamp high (RH)	ON	Lighting switch HIGH or PASS position	OFF	0V
					ON	Battery voltage
28	G	Headlamp high (LH)	ON	Lighting switch HIGH or PASS position	OFF	0V
					ON	Battery voltage
30	L	Headlamp low (LH)	ON	Lighting switch 2ND position	OFF	0V
					ON	Battery voltage
48	L	CAN-H	—	—		—
49	P	CAN-L	—	—		—

How to Proceed With Trouble Diagnosis

EKS008LM

1. Confirm the symptom or customer complaint.
2. Understand operation description and function description. Refer to LT-5, "System Description" .
3. Perform the Preliminary Check. Refer to LT-13, "Preliminary Check" .
4. Check symptom and repair or replace the cause of malfunction.
5. Do the headlamps operate normally? If YES: GO TO 6. If NO: GO TO 4.
6. Inspection End.

Preliminary Check

EKS008LN

CHECK POWER SUPPLY AND GROUND CIRCUIT

1. CHECK FUSES AND FUSIBLE LINK

Check for blown fuses or fusible link.

Unit	Power source	Fuse and fusible link No.
BCM	Battery	f
	Ignition switch ACC or ON position	6
	Ignition switch ON or START position	1

Unit	Power source	Fuse and fusible link No.
IPDM E/R	Battery	36
		38
		40
		45

Refer to LT-8, "Wiring Diagram — H/LAMP —" .

OK or NG

OK >> GO TO 2.
NG >> If fuse or fusible link is blown, be sure to eliminate cause of malfunction before installing new fuse or fusible link. Refer to PG-4, "POWER SUPPLY ROUTING CIRCUIT" .

2. CHECK POWER SUPPLY CIRCUIT

1. Disconnect BCM connectors.
2. Check voltage between BCM harness connector terminals and ground.

BCM (+) Connector	BCM (+) Terminal	(–)	Ignition switch position: OFF	ACC	ON
M18	11	Ground	0V	Battery voltage	Battery voltage
	38		0V	0V	Battery voltage
M20	70		Battery voltage	Battery voltage	Battery voltage

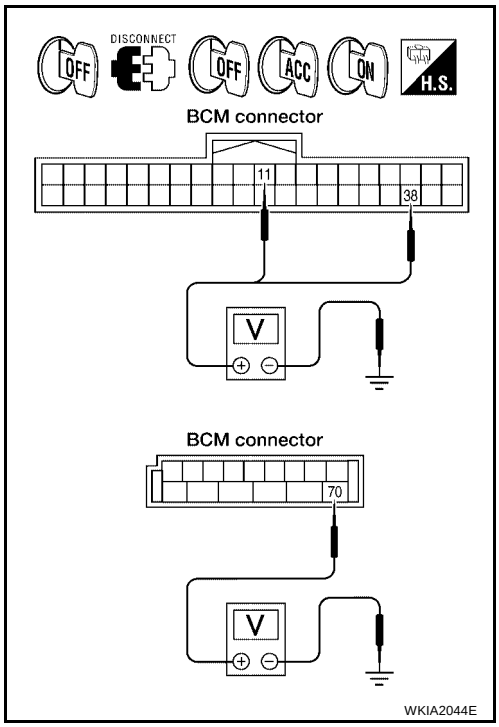

OK or NG

OK >> GO TO 3.
NG >> Check harness for open between BCM and fuse or fusible link.

3. CHECK GROUND CIRCUIT

Check continuity between BCM harness connector terminal and ground.

BCM Connector	BCM Terminal		Continuity
M20	67	Ground	Yes

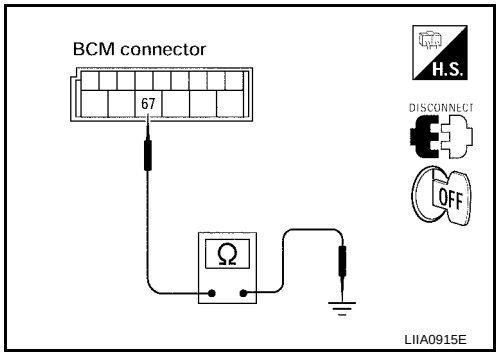

OK or NG

OK >> Inspection End.
NG >> Check ground circuit harness.

CONSULT-II Function (BCM)

EKS008LO

CONSULT-II can display each diagnostic item using the diagnostic test modes shown following.

BCM diagnostic test item	Diagnostic mode	Description
Inspection by part	WORK SUPPORT	Supports inspections and adjustments. Commands are transmitted to the BCM for setting the status suitable for required operation, input/output signals are received from the BCM and received data is displayed.
	DATA MONITOR	Displays BCM input/output data in real time.
	ACTIVE TEST	Operation of electrical loads can be checked by sending drive signal to them.
	SELF-DIAG RESULTS	Displays BCM self-diagnosis results.
	CAN DIAG SUPPORT MNTR	The result of transmit/receive diagnosis of CAN communication can be read.
	ECU PART NUMBER	BCM part number can be read.
	CONFIGURATION	Performs BCM configuration read/write functions.

CONSULT-II OPERATION

CAUTION:

If CONSULT-II is used with no connection of CONSULT-II CONVERTER, malfunctions might be detected in self-diagnosis depending on control unit which carries out CAN communication.

1. With the ignition switch OFF, connect CONSULT-II and CONSULT-II CONVERTER to the data link connector, then turn ignition switch ON.

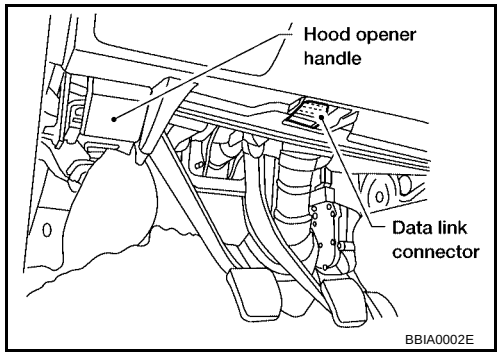

2. Touch "START (NISSAN BASED VHCL)".

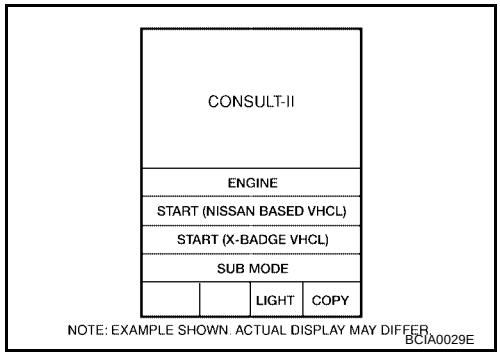

3. Touch "BCM" on "SELECT SYSTEM" screen.
If "BCM" is not indicated, go to GI-39, "Consult-II Data Link Connector (DLC) Circuit" .

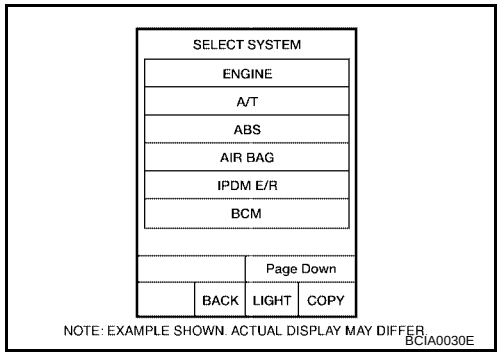

4. Select the desired part to be diagnosed on the "SELECT TEST ITEM" screen.

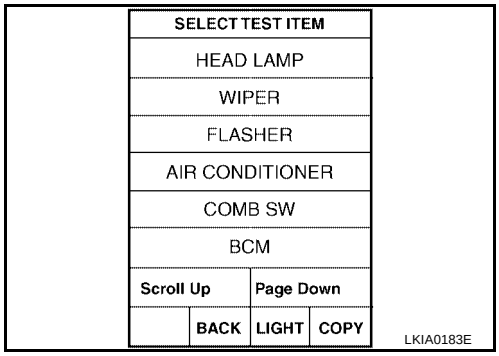

DATA MONITOR

Operation Procedure

1. Touch "HEAD LAMP" on "SELECT TEST ITEM" screen.
2. Touch "DATA MONITOR" on "SELECT DIAG MODE" screen.
3. Touch either "ALL SIGNALS" or "SELECTION FROM MENU" on the "SELECT MONITOR ITEM" screen.

ALL SIGNALS	Monitors all the signals.
SELECTION FROM MENU	Selects and monitors individual signal.

4. Touch "START".
5. When "SELECTION FROM MENU" is selected, touch individual items to be monitored. When "ALL SIGNALS" is selected, all the items will be monitored.
6. Touch "RECORD" while monitoring, then the status of the monitored item can be recorded. To stop recording, touch "STOP".

Display Item List

Monitor item name "OPERATION OR UNIT"		Contents
IGN ON SW	"ON/OFF"	Displays "IGN position (ON)/OFF, ACC position (OFF)" judged from the ignition switch signal.
ACC ON SW	"ON/OFF"	Displays "ACC (ON)/OFF, Ignition OFF (OFF)" status judged from ignition switch signal.
HI BEAM SW	"ON/OFF"	Displays status (high beam switch: ON/Others: OFF) of high beam switch judged from lighting switch signal.
HEAD LAMP SW 1	"ON/OFF"	Displays status (headlamp switch: ON/Others: OFF) of headlamp switch judged from lighting switch signal.
HEAD LAMP SW 2	"ON/OFF"	Displays status (headlamp switch 2: ON/Others: OFF) of headlamp switch 2 judged from lighting switch signal.
LIGHT SW 1ST	"ON/OFF"	Displays status (lighting switch 1st position: ON/Others: OFF) of light switch judged from lighting switch signal.
PASSING SW	"ON/OFF"	Displays status (flash-to-pass switch: ON/Others: OFF) of flash-to-pass switch judged from lighting switch signal.

ACTIVE TEST

Operation Procedure

1. Touch "HEAD LAMP" on "SELECT TEST ITEM" screen.
2. Touch "ACTIVE TEST" on "SELECT DIAG MODE" screen.
3. Touch item to be tested and check operation of the selected item.
4. During the operation check, touching "BACK" deactivates the operation.

Display Item List

Test item	Display on CONSULT-II screen	Description
Tail light relay output	TAIL LAMP	Allows tail light relay to operate by switching ON-OFF at your option.

Test item	Display on CONSULT-II screen	Description
Headlamp relay output	HEAD LAMP	Allows headlamp relay to operate by switching ON-OFF at your option.
Front fog lamp relay output	FR FOG LAMP	Allows fog lamp relay to operate by switching ON-OFF at your option.

CONSULT-II Function (IPDM E/R)

EKS008LP

CONSULT-II can display each diagnostic item using the diagnostic test modes shown following.

IPDM E/R diagnostic Mode	Description
SELF-DIAG RESULTS	Displays IPDM E/R self-diagnosis results.
DATA MONITOR	Displays IPDM E/R input/output data in real time.
CAN DIAG SUPPORT MNTR	The result of transmit/receive diagnosis of CAN communication can be read.
ACTIVE TEST	Operation of electrical loads can be checked by sending drive signal to them.

CONSULT-II OPERATION

CAUTION:

If CONSULT-II is used with no connection of CONSULT-II CONVERTER, malfunctions might be detected in self-diagnosis depending on control unit which carries out CAN communication.

1. With the ignition switch OFF, connect CONSULT-II and CONSULT-II CONVERTER to the data link connector, then turn the ignition switch ON.

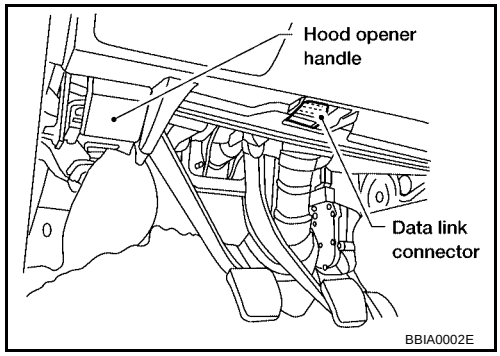

2. Touch "START (NISSAN BASED VHCL)".

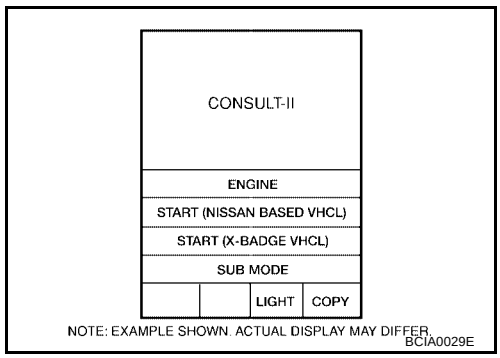

3. Touch "IPDM E/R" on "SELECT SYSTEM" screen.
If "IPDM E/R" is not displayed, go to GI-39, "Consult-II Data Link Connector (DLC) Circuit" .

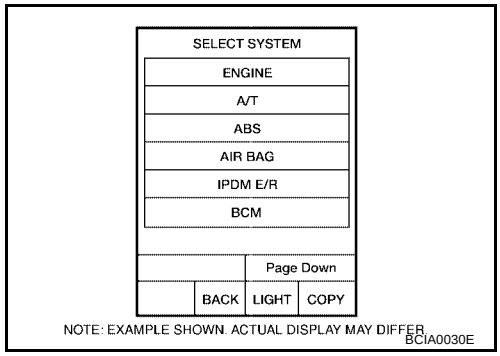

4. Select the desired part to be diagnosed on the "SELECT DIAG MODE" screen.

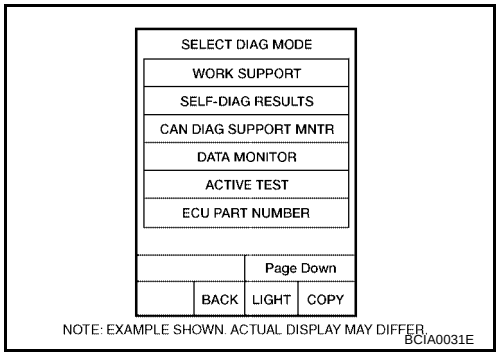

DATA MONITOR

Operation Procedure

1. Touch "DATA MONITOR" on "SELECT DIAG MODE" screen.
2. Touch "ALL SIGNALS", "MAIN SIGNALS" or "SELECTION FROM MENU" on the "SELECT MONITOR ITEM" screen.

ALL SIGNALS	All items will be monitored.
MAIN SIGNALS	Monitor the predetermined item.
SELECTION FROM MENU	Select any item for monitoring.

3. Touch "START".
4. Touch the required monitoring item on "SELECTION FROM MENU". In "ALL SIGNALS", all items are monitored. In "MAIN SIGNALS", predetermined items are monitored.
5. Touch "RECORD" while monitoring to record the status of the item being monitored. To stop recording, touch "STOP".

All Items, Main Items, Select Item Menu

Item name	CONSULT-II screen display	Display or unit	Monitor item selection			Description
			ALL SIGNALS	MAIN SIGNALS	SELECTION FROM MENU	
Parking, license plate and tail lamps request	TAIL&CLR REQ	ON/OFF	×	×	×	Signal status input from BCM
Headlamp low beam request	HL LO REQ	ON/OFF	×	×	×	Signal status input from BCM
Headlamp high beam request	HL HI REQ	ON/OFF	×	×	×	Signal status input from BCM
Front fog lamps request	FR FOG REQ	ON/OFF	×	×	×	Signal status input from BCM

NOTE:
Perform monitoring of IPDM E/R data with the ignition switch ON. When the ignition switch is at ACC, the display may not be correct.

ACTIVE TEST

Operation Procedure

1. Touch "ACTIVE TEST" on "SELECT DIAG MODE" screen.
2. Touch item to be tested, and check operation.
3. Touch "START".
4. Touch "STOP" while testing to stop the operation.

Test item	CONSULT-II screen display	Description
Tail lamp relay output	TAIL LAMP	Allows tail lamp relay to operate by switching operation ON-OFF at your option

Test item	CONSULT-II screen display	Description
Headlamp relay (HI, LO) output	LAMPS	Allows headlamp relay (HI, LO) to operate by switching operation (OFF, HI, LO) at your option (Head lamp high beam repeats ON-OFF every 1 second).
Front fog lamp relay (FOG) output		Allows fog lamp relay (FOG) to operate by switching operation ON-OFF at your option

Headlamp HI Does Not Illuminate (Both Sides)

EKS008LQ

1. HEADLAMP ACTIVE TEST

1. Select "IPDM E/R" on CONSULT-II, and select "ACTIVE TEST" on "SELECT DIAG MODE" screen.
2. Select "LAMPS" on "SELECT TEST ITEM" screen.
3. Touch “HI” on "ACTIVE TEST" screen.
4. Make sure HI beam headlamps operate.

HI beam headlamps should operate.

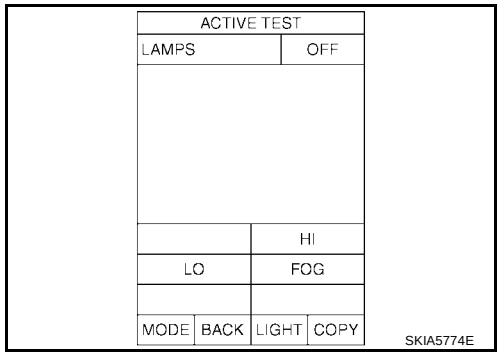

OK or NG

OK >> GO TO 2.
NG >> GO TO 4.

2. INSPECTION 1 BETWEEN COMBINATION SWITCH AND BCM

Select "BCM" on CONSULT-II. Carry out BCM self-diagnosis.

Displayed results of self-diagnosis

NO MALFUNCTION DETECTED>> GO TO 3.
CAN COMMUNICATION OR CAN SYSTEM>> Inspect the BCM CAN communications system. Refer to LAN-20, "CAN COMMUNICATION" .
OPEN DETECT 1 - 5>> Inspect combination switch system. Refer to LT-91, "Combination Switch Inspection" .

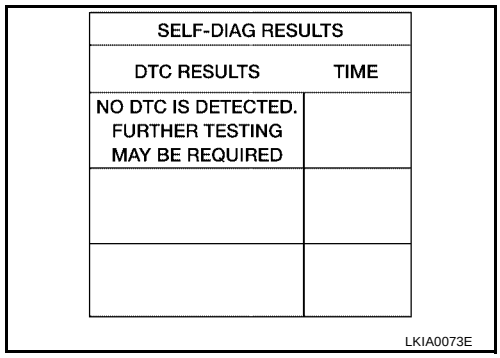

3. INSPECTION 2 BETWEEN COMBINATION SWITCH AND BCM

Select “BCM” on CONSULT-II. With “HEAD LAMP” data monitor, make sure “HI BEAM SW” turns ON-OFF linked with operation of lighting switch.

When lighting switch is in HIGH position : HI BEAM SW ON

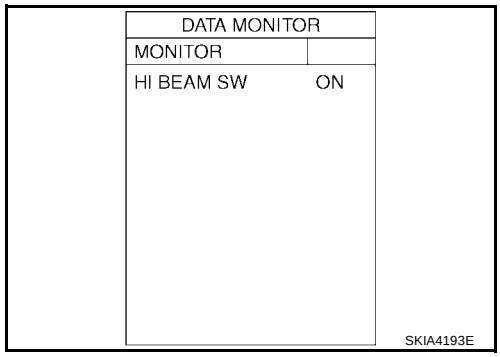

OK or NG

OK >> Replace BCM. Refer to BCS-20, "Removal and Installation of BCM" .
NG >> Replace lighting switch. Refer to LT-86, "Removal and Installation" .

4. CHECK HEADLAMP INPUT SIGNAL

1. Turn ignition switch OFF.
2. Disconnect headlamp RH and LH (high) connectors.
3. Turn ignition switch ON.
4. Select “IPDM E/R” on CONSULT-II, and select “ACTIVE TEST” on “SELECT DIAG MODE” screen.
5. Select “LAMPS” on “SELECT TEST ITEM” screen.
6. Touch “HI” on "ACTIVE TEST" screen.
7. When headlamp high beam is operating, check voltage between headlamp RH and LH (high) harness connector terminals and ground.

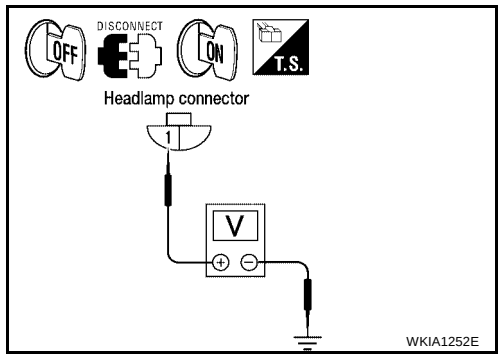

Headlamp (high)			(–)	Voltage (Approx.)
(+)				
Connector		Terminal		
RH	E110	1	Ground	Battery voltage
LH	E11			

OK or NG

OK >> GO TO 6.
NG >> GO TO 5.

5. CHECK HEADLAMP CIRCUIT

1. Turn ignition switch OFF.
2. Disconnect IPDM E/R connector.
3. Check continuity between IPDM E/R harness connector terminals and headlamp RH and LH (high) harness connector terminals.

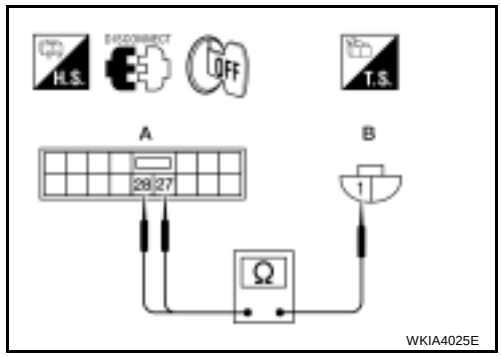

A		B			Continuity
IPDM E/R connector	Terminal	Headlamp (high) connector		Terminal	
E122	27	RH	E110	1	Yes
	28	LH	E11		

OK or NG

OK >> Replace IPDM E/R. Refer to PG-28, "Removal and Installation of IPDM E/R" .
NG >> Repair harness or connector.

6. CHECK HEADLAMP GROUND

1. Turn ignition switch OFF.
2. Check continuity between headlamp RH (high) harness connector E110 terminal 2 and ground.

   2 - Ground : Continuity should exist.

3. Check continuity between headlamp LH (high) harness connector E11 terminal 2 and ground.

   2 - Ground : Continuity should exist.

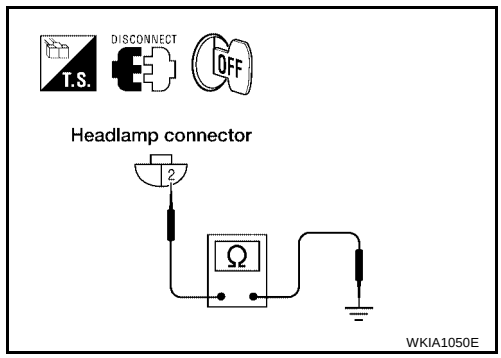

OK or NG

OK >> Check headlamp connector for damage or poor connection. Repair as necessary.
NG >> Repair harness or connector.

Headlamp HI Does Not Illuminate (One Side)

EKS008LR

1. BULB INSPECTION

Inspect inoperative headlamp bulb.

OK or NG

OK >> GO TO 2.
NG >> Replace headlamp bulb. Refer to LT-28, "HEADLAMP" .

2. CHECK POWER TO HEADLAMP

1. Disconnect inoperative headlamp (high) connector.
2. Turn the high beam headlamps ON.
3. Check voltage between inoperative headlamp (high) connector terminal and ground.

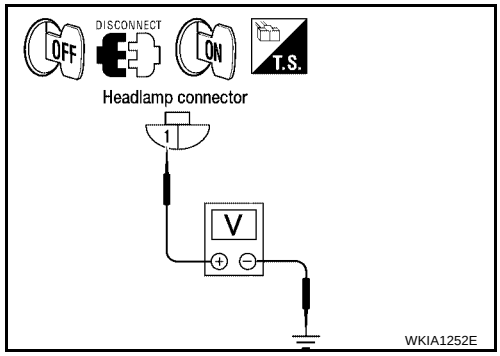

Headlamp (high)			(–)	Voltage (Approx.)
(+)				
Connector		Terminal		
RH	E110	1	Ground	Battery voltage
LH	E11			

OK or NG

OK >> GO TO 3.
NG >> GO TO 4.

3. CHECK HEADLAMP GROUND

1. Turn the high beam headlamps OFF.
2. Check continuity between inoperative headlamp (high) connector terminal and ground.

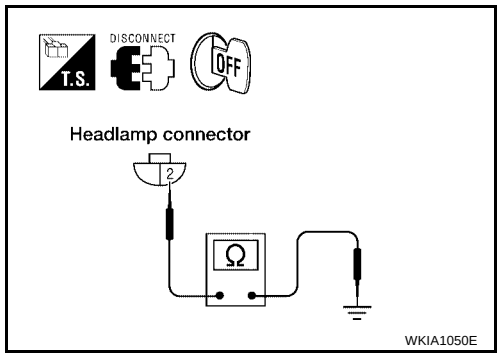

Headlamp (high)				Continuity
Connector		Terminal		
RH	E110	2	Ground	Yes
LH	E11			

OK or NG

OK >> Check headlamp (high) connector for damage or poor connection. Repair as necessary.
NG >> Repair open circuit in harness between inoperative headlamp and ground.

4. INSPECTION BETWEEN IPDM E/R AND HEADLAMPS

1. Disconnect IPDM E/R connector and headlamp connector.
2. Check continuity between IPDM E/R harness connector terminals and inoperative headlamp harness connector terminals.

A		B			Continuity
IPDM E/R connector	Terminal	Headlamp (high) connector		Terminal	
E122	27	RH	E110	1	Yes
	28	LH	E11		

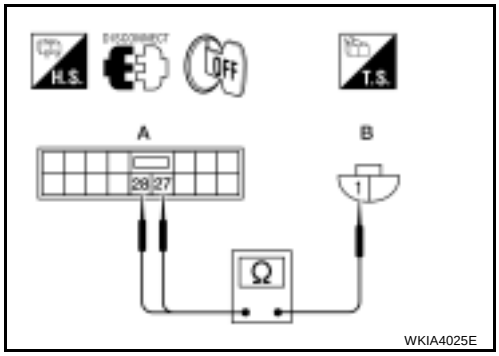

OK or NG

OK >> Replace IPDM E/R. Refer to PG-28, "Removal and Installation of IPDM E/R" .

NG >> Check for short circuits and open circuits in harness between IPDM E/R and headlamps. Repair as necessary.

High-Beam Indicator Lamp Does Not Illuminate

EKS008LS

1. BULB INSPECTION

Inspect CAN communication system. Refer to LAN-20, "CAN COMMUNICATION" .

OK or NG

OK >> Replace combination meter. Refer to IP-13, "COMBINATION METER" .

NG >> Repair as necessary.

Headlamp LO Does Not Illuminate (Both Sides)

EKS008LT

1. HEADLAMP ACTIVE TEST

1. Select “IPDM E/R” on CONSULT-II, and select “ACTIVE TEST” on “SELECT DIAG MODE” screen.
2. Select “LAMPS” on “SELECT TEST ITEM” screen.
3. Touch “LO” on "ACTIVE TEST" screen.
4. Make sure low beam headlamps operate.

Low beam headlamps should operate.

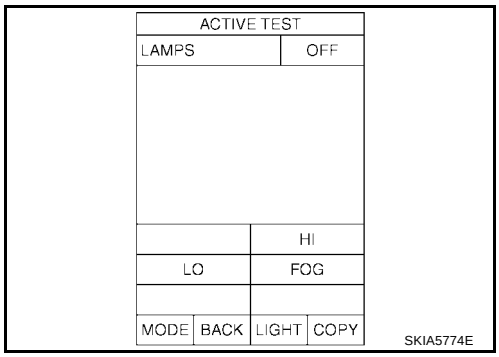

OK or NG

OK >> GO TO 2.

NG >> GO TO 4.

2. INSPECTION 1 BETWEEN COMBINATION SWITCH AND BCM

Select "BCM" on CONSULT-II. Carry out BCM self-diagnosis.

Displayed results of self-diagnosis

NO MALFUNCTION DETECTED>> GO TO 3.

CAN COMMUNICATION OR CAN SYSTEM>> Inspect the BCM CAN communications system. Refer to LAN-20, "CAN COMMUNICATION" .

OPEN DETECT 1 - 5>> Inspect combination switch system. Refer to LT-89, "Combination Switch Reading Function" .

HEAD LAMP 1 SW or HEAD LAMP 2 SW>> Replace combination switch. Refer to LT-93, "Removal and Installation" .

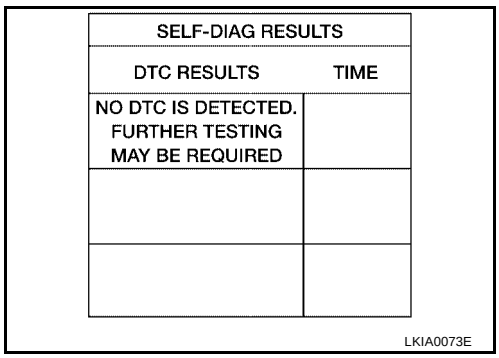

3. INSPECTION 2 BETWEEN COMBINATION SWITCH AND BCM

Select “BCM” on CONSULT-II. With “HEAD LAMP” data monitor, make sure “HEAD LAMP SW 1” and "HEAD LAMP SW 2" turns ON-OFF linked with operation of lighting switch.

When lighting switch is in 2ND position : HEAD LAMP SW 1 ON
: HEAD LAMP SW 2 ON

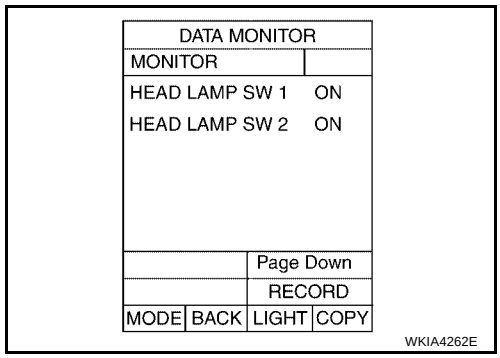

OK or NG

OK >> Replace BCM. Refer to BCS-20, "Removal and Installation of BCM" .

NG >> Replace combination switch. Refer to LT-93, "Removal and Installation" .

4. CHECK HEADLAMP INPUT SIGNAL

1. Turn ignition switch OFF.
2. Disconnect headlamp RH and LH (low) connectors.
3. Turn ignition switch ON.
4. Select “IPDM E/R” on CONSULT-II, and select “ACTIVE TEST” on “SELECT DIAG MODE” screen.
5. Select “LAMPS” on “SELECT TEST ITEM” screen.
6. Touch “LO” on "ACTIVE TEST" screen.
7. When headlamp low beam is operating, check voltage between headlamp RH and LH (low) harness connector terminals and ground.

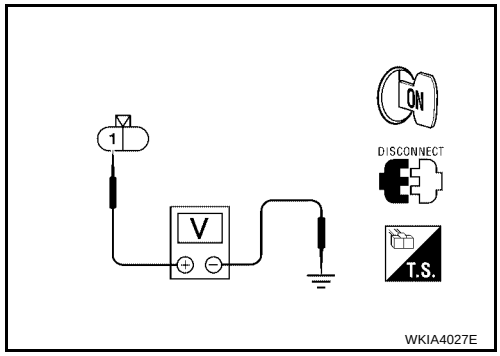

Terminals				Voltage (Approx.)
(+)			(–)	
Headlamp (low) connector		Terminal		
RH	E107	1	Ground	Battery voltage
LH	E13			

OK or NG

OK >> GO TO 6.

NG >> GO TO 5.

5. CHECK HEADLAMP CIRCUIT

1. Turn ignition switch OFF.
2. Disconnect IPDM E/R connector.
3. Check continuity between IPDM E/R harness connector terminals and headlamp RH and LH (low) harness connector terminals.

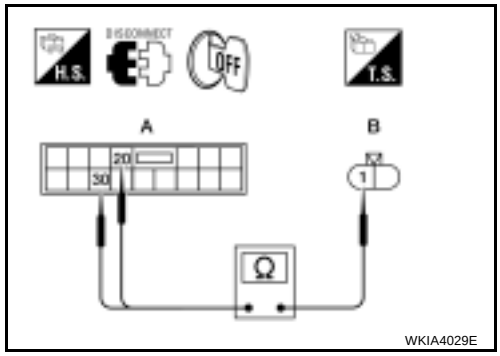

A		B			Continuity
IPDM E/R connector	Terminal	Headlamp (low) connector		Terminal	
E122	20	RH	E107	1	Yes
	30	LH	E13		

OK or NG

OK >> Replace IPDM E/R. Refer to PG-28, "Removal and Installation of IPDM E/R" .

NG >> Repair harness or connector.

6. CHECK HEADLAMP GROUND

1. Turn ignition switch OFF.
2. Check continuity between headlamp RH and LH (low) harness connector terminals and ground.

Terminals				Continuity
Headlamp (low) connector		Terminal		
RH	E107	2	Ground	Yes
LH	E13			

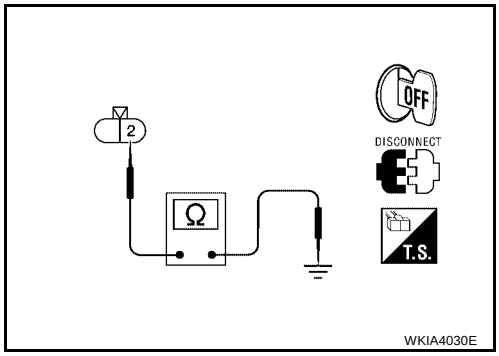

OK or NG

OK >> Check headlamp connector for damage or poor connection. Repair as necessary.
NG >> Repair harness or connector.

Headlamp LO Does Not Illuminate (One Side)

EKS008LU

1. BULB INSPECTION

Inspect inoperative headlamp bulb.

OK or NG

OK >> GO TO 2.
NG >> Replace headlamp bulb. Refer to LT-28, "HEADLAMP" .

2. CHECK POWER TO HEADLAMP

1. Disconnect inoperative headlamp (low) connector.
2. Turn the low beam headlamps ON.
3. Check voltage between inoperative headlamp (low) connector terminal and ground.

Terminals				Voltage (Approx.)
(+)			(–)	
Headlamp (low) connector		Terminal		
RH	E107	1	Ground	Battery voltage
LH	E13			

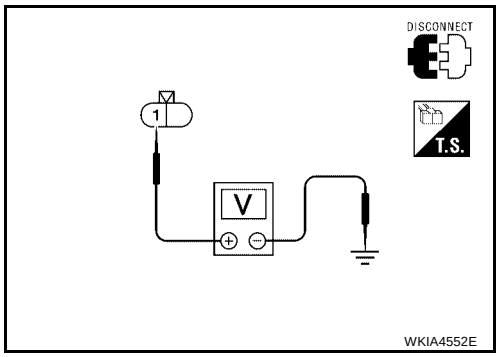

OK or NG

OK >> GO TO 3.
NG >> GO TO 4.

3. CHECK HEADLAMP GROUND

1. Turn the low beam headlamps OFF.
2. Check continuity between inoperative headlamp (low) connector terminal and ground.

Terminals				Continuity
Headlamp (low) connector		Terminal		
RH	E107	2	Ground	Yes
LH	E13			

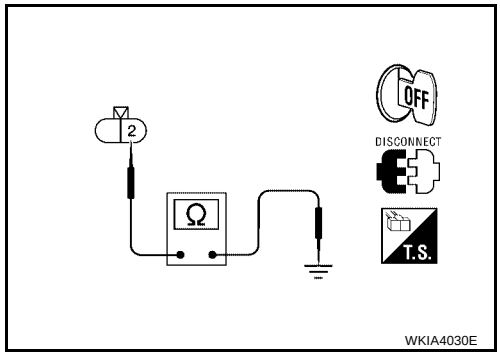

OK or NG

OK >> Check headlamp (low) and IPDM E/R connector. Repair as necessary.

NG >> Repair open circuit in harness between inoperative headlamp and ground.

4. INSPECTION BETWEEN IPDM E/R AND HEADLAMPS

1. Disconnect IPDM E/R connector.
2. Check continuity between IPDM E/R harness connector terminal and inoperative headlamp (low) harness connector terminal.

A		B			Continuity
IPDM E/R connector	Terminal	Headlamp (low) connector		Terminal	
E122	20	RH	E107	1	Yes
	30	LH	E13		

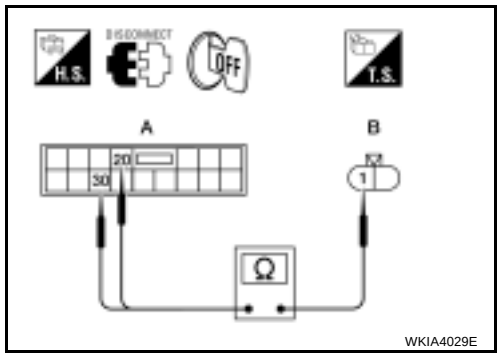

OK or NG

OK >> Replace IPDM E/R. Refer to PG-28, "Removal and Installation of IPDM E/R" .

NG >> Check for short circuits and open circuits in harness between IPDM E/R and headlamps. Repair as necessary.

Headlamps Do Not Turn OFF

EKS008LV

1. CHECK COMBINATION SWITCH INPUT SIGNAL

Select “BCM" on CONSULT-II. With “HEAD LAMP” data monitor, make sure “HEAD LAMP SW 1” and “HEAD LAMP SW 2” turns ON-OFF linked with operation of lighting switch.

When lighting switch is in OFF position : HEAD LAMP SW 1 OFF
: HEAD LAMP SW 2 OFF

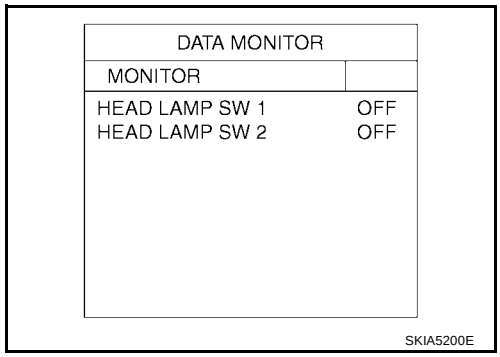

OK or NG

OK >> Replace IPDM E/R. Refer to PG-28, "Removal and Installation of IPDM E/R" .

NG >> GO TO 2.

2. CHECK LIGHTING SWITCH

Check lighting switch. Refer to LT-89, "Combination Switch Reading Function" .

OK or NG

OK >> GO TO 3.

NG >> Replace lighting switch. Refer to LT-93, "Removal and Installation" .

3. CHECKING CAN COMMUNICATIONS BETWEEN BCM AND IPDM E/R

Select “BCM” on CONSULT-II and perform self-diagnosis for BCM.

Display of self-diagnosis results

NO DTC>> Replace IPDM E/R. Refer to PG-28, "Removal and Installation of IPDM E/R" .

CAN COMM CIRCUIT>> Refer to LAN-20, "CAN COMMUNICATION" .

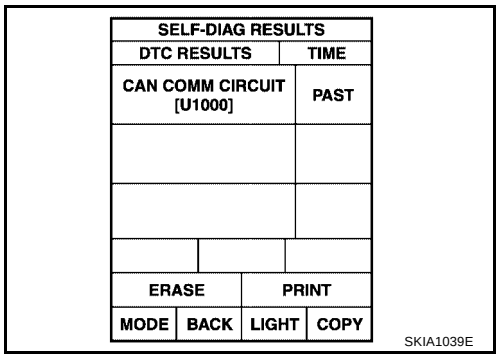

One Xenon Headlamp Does Not Illuminate At Full Brightness

EKS008LW

1. COMPONENT INSPECTION

Check the inoperative headlamp subharness for open or short circuits.

OK or NG

OK >> Replace headlamp bulb. Refer to LT-28, "Bulb Replacement" . Check operation of headlamp. If headlamp still does not illuminate at full brightness, replace ballast and check operation. Refer to LT-30, "Disassembly and Assembly" . If headlamp still does not illuminate at full brightness, replace ignitor. Refer to LT-30, "Disassembly and Assembly" .

NG >> Replace headlamp subharness.

One Xenon Headlamp Flickers

EKS008LX

1. CHECK SYSTEM OPERATION

Turn the low beam headlamps ON and check operation.

NOTE:

Xenon headlamps may flicker momentarily when the headlamps are turned ON. This is normal and does not indicate a fault. Diagnosis of flickering headlamps should only be performed if the headlamps continue to flicker for more than 3 seconds after turning headlamps ON.

OK or NG

OK >> System is operating correctly.

NG >> GO TO 2.

2. COMPONENT INSPECTION

Check the inoperative headlamp subharness for open or short circuits.

OK or NG

OK >> Replace ballast. Refer to LT-30, "Disassembly and Assembly" . Check operation of headlamp. If headlamp still flickers, replace igniter and check operation. If headlamp still flickers, replace headlamp bulb. Refer to LT-28, "Bulb Replacement" .

NG >> Replace headlamp subharness.

Aiming Adjustment

EKS008LY

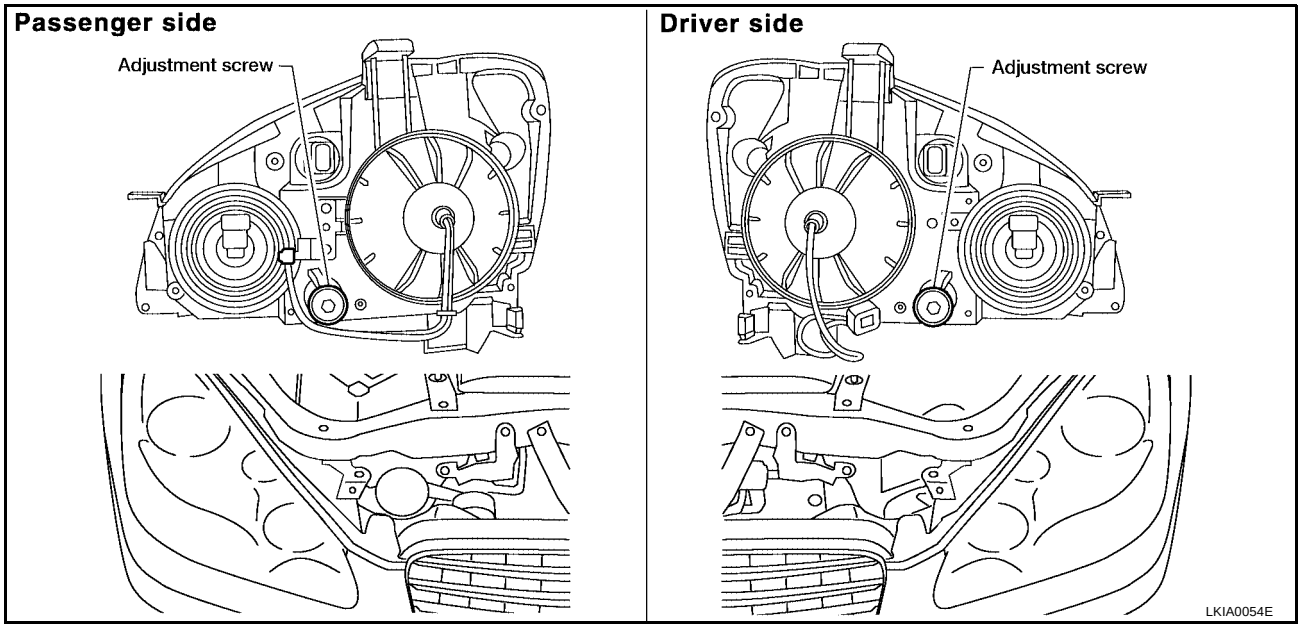

For details, refer to the regulations in your area.

HEADLAMP AIMING

NOTE:

- If the vehicle front body has been repaired and/or the headlamp assembly has been replaced, check headlamp aiming.
- Before performing headlamp aiming adjustment, check the following:
  - Confirm which type of headlamp is in vehicle.
  - Ensure all tires are inflated to correct pressure.
  - Place vehicle and screen on level surface.
  - Ensure there is no load in vehicle other than the driver (or equivalent weight placed in driver's position).
  - Ensure engine coolant and engine oil are filled to correct level and fuel tank is full.
  - Confirm spare tire, jack and tools are properly stowed.

AIMING ADJUSTMENT

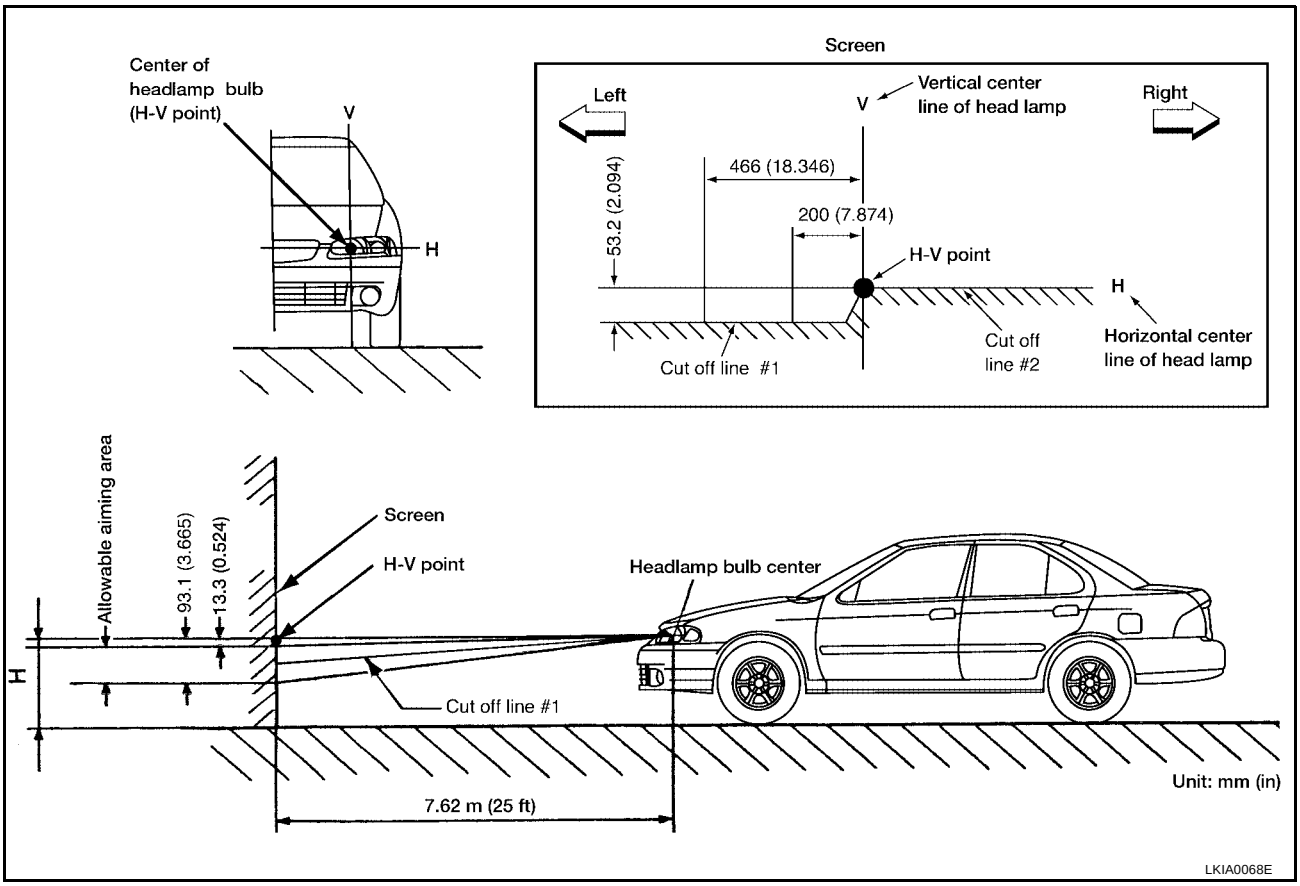

- **Basic illuminating area for adjustment should be within the range shown on the aiming chart. Adjust headlamps accordingly.**
- **First loosen the adjusting screw all the way and then make adjustment by tightening the screw.**

1. Turn headlamp low beam on.
2. Use adjusting screws to perform aiming adjustment.

Bulb Replacement

EKS008LZ

HEADLAMP

CAUTION:

- **Do not touch the glass of bulb directly by hand. Keep grease and other oily substances away from bulb. Do not touch bulb by hand while it is lit or right after being turned off, burning may result.**
- **Do not leave bulb out of fog lamp reflector for a long time, dust, moisture, and smoke may affect performance of fog lamp.**

Removal

1. Disconnect negative battery cable.
2. Turn the headlamp bulb plastic cap counterclockwise to unlock and remove it.
3. Turn the bulb socket counterclockwise to unlock and remove it (xenon).
4. Disconnect the electrical connectors from the bulb terminals (halogen).
5. Unlock the retaining springs and remove the bulb.
6. Release the ignitor and remove from the plastic cap (xenon).
7. Turn the high beam lamp socket counterclockwise to unlock and remove it.

Installation

CAUTION:

After installing the bulb, be sure to install the plastic cap securely to ensure watertightness.

Installation is in the reverse order of removal.

FRONT TURN SIGNAL LAMP

Removal

1. Turn the bulb socket counterclockwise to unlock it.
2. Pull the bulb to remove it.

Installation

Installation is in the reverse order of removal.

CAUTION:

After installing a headlamp bulb, be sure to install the bulb socket securely to ensure watertightness.

Removal and Installation

EKS008M0

COMBINATION LAMP

Removal

1. Disconnect battery negative terminal.
2. Remove the front fascia. Refer to EI-14, "FRONT BUMPER" .
3. Ensure lighting switch is OFF.
4. Disconnect the negative battery cable (xenon only).
5. Remove the headlamp mounting bolts.
6. Pull the headlamp toward the front of the vehicle, disconnect connectors and remove from vehicle.

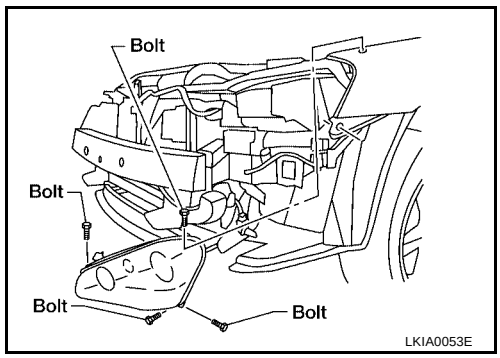

Installation

Installation is in the reverse order of removal.

NOTE:

Confirm headlamp aiming adjustment. Refer to LT-27, "Aiming Adjustment" .

Disassembly and Assembly

EKS008M1

COMBINATION LAMP - XENON TYPE

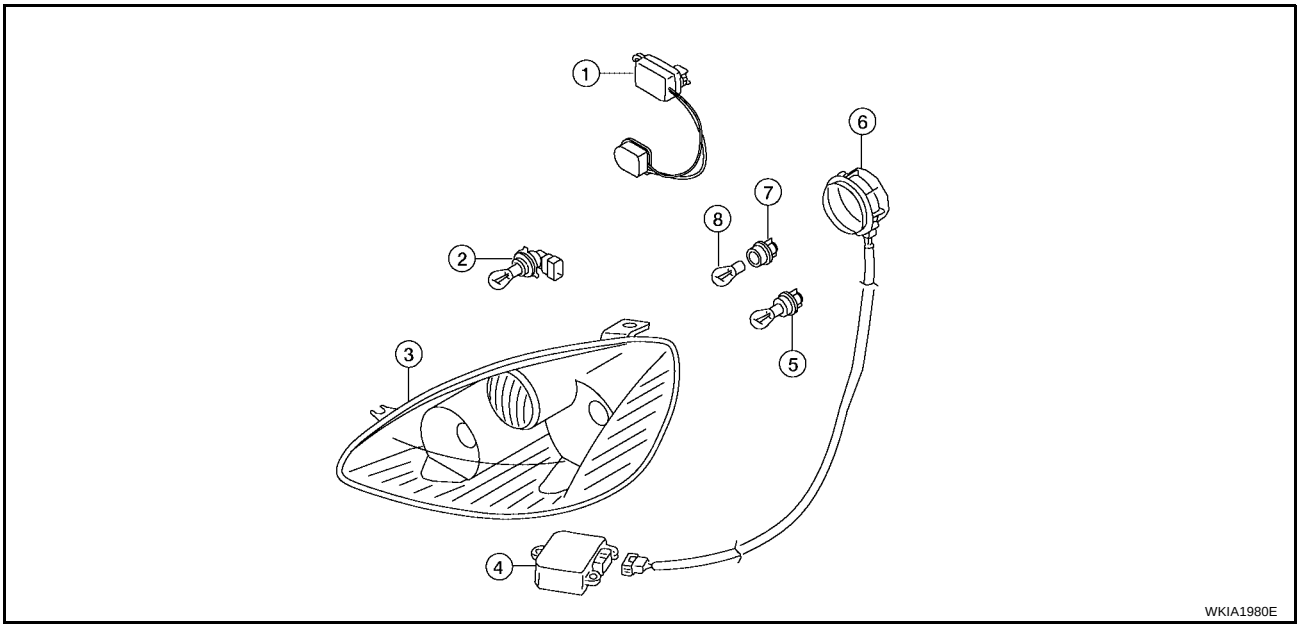

1.	Ignitor	2.	Halogen bulb (high beam)	3.	Headlamp assembly
4.	Ballast	5.	Xenon bulb (low beam)	6.	Plastic cap
7.	Turn/park bulb socket	8.	Park/turn bulb		

Disassembly

1. Turn the low beam plastic cap counterclockwise to unlock and remove it.
2. Turn the bulb socket counterclockwise to unlock and remove it.
3. Unlock the retaining springs and remove the low beam bulb.
4. Release the ignitor and remove from the plastic cap.
5. Turn the high beam lamp socket counterclockwise to unlock and remove it.
6. Turn the front turn signal lamp bulb socket counterclockwise and unlock it.
7. Remove the front turn signal lamp bulb from its socket.

Assembly

Assembly is in the reverse order of disassembly.

CAUTION:

- **After installing the xenon bulb, be sure to install the bulb socket and plastic cap securely to ensure watertightness.**

COMBINATION LAMP - HALOGEN

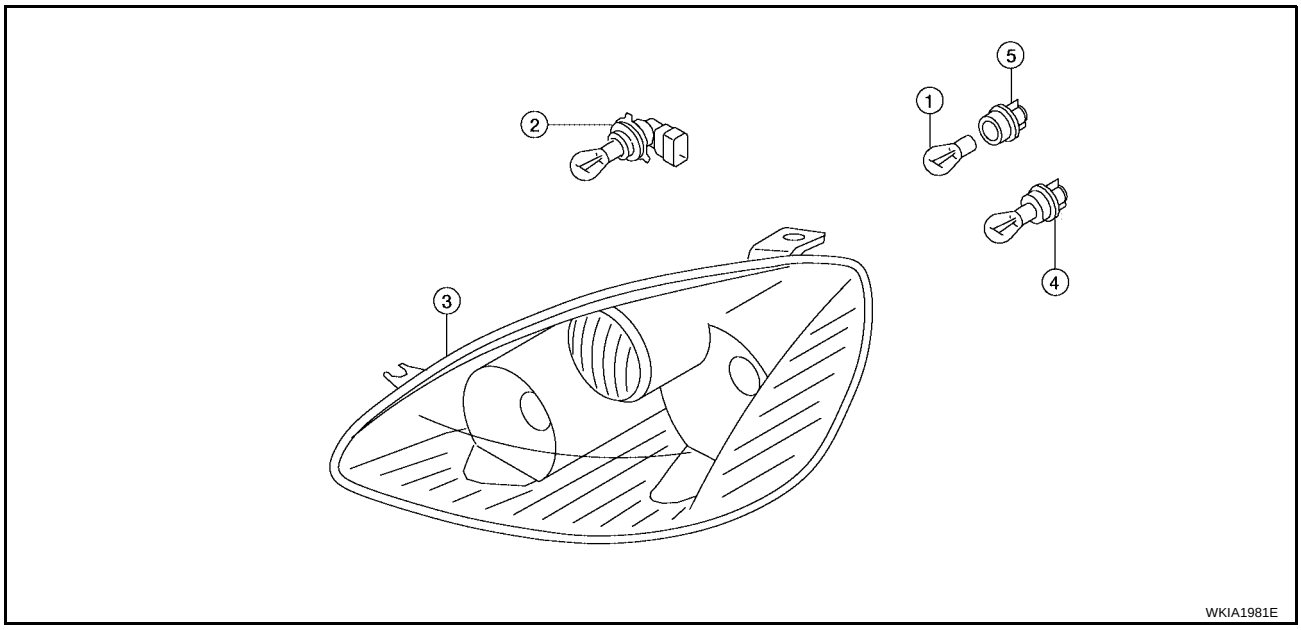

1. Turn/park bulb
2. Halogen bulb (high beam)
3. Headlamp assembly
4. Halogen bulb (low beam)
5. Turn/park bulb socket

Disassembly

1. Turn the low beam plastic cap counterclockwise to unlock and remove it.
2. Disconnect the electrical connectors from the bulb terminals.
3. Unlock the retaining springs and remove the low beam bulb.
4. Turn the high beam lamp socket counterclockwise to unlock and remove it.
5. Turn the front turn signal lamp bulb socket counterclockwise and unlock it.
6. Remove the front turn signal lamp bulb from its socket.

Assembly

Assembly is in the reverse order of disassembly.

CAUTION:

- **After installing the xenon bulb, be sure to install the bulb socket and plastic cap securely to ensure watertightness.**

HEADLAMP (FOR CANADA) - DAYTIME LIGHT SYSTEM -

PFP:26010

Component Parts and Harness Connector Location

EKS008M2

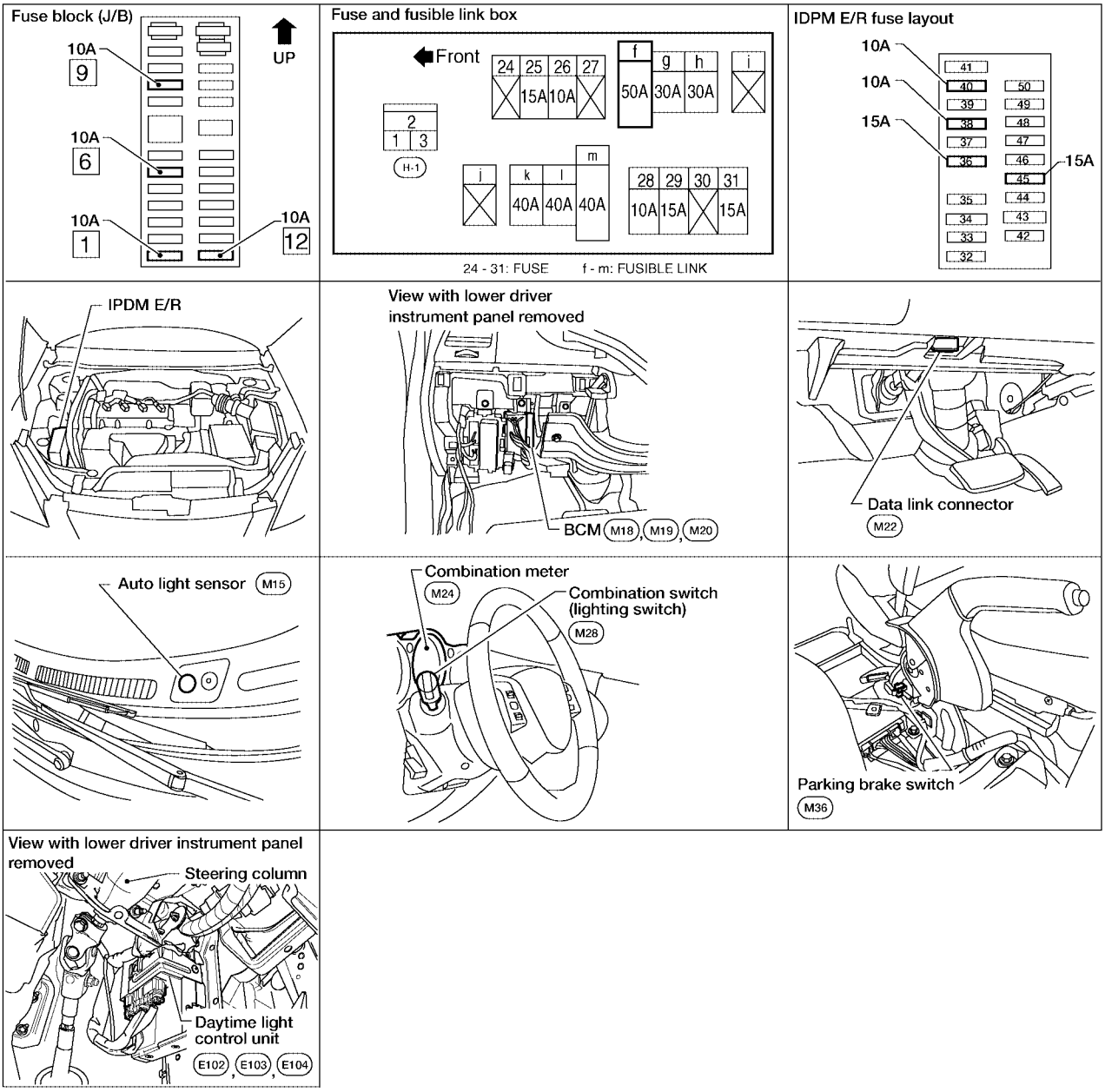

WKIA4085E

System Description

EKS008M3

The headlamp system for Canada vehicles is equipped with a daytime light control unit that activates the high beam headlamps at approximately half illumination whenever the engine is running. If the parking brake is applied before the engine is started the daytime lights will not be illuminated. The daytime lights will illuminate once the parking brake is released. Thereafter, the daytime lights will continue to operate when the parking brake is applied.

Battery saver system is controlled by the BCM (body control module).

Power is supplied at all times

- to headlamp high relay located in the IPDM E/R (intelligent power distribution module engine room), and
- through 50A fusible link (letter **f** , located in the fuse and fusible link box)
- to BCM terminal 70.

With the ignition switch in the ON or START position, power is supplied
- through 10A fuse [No. 12, located in the fuse block (J/B)]
- to daytime light control unit terminal 3, and
- through 10A fuse [No. 1, located in the fuse block (J/B)]
- to BCM terminal 38.

With the ignition switch in the ACC or ON position, power is supplied
- through 10A fuse [No. 6, located in the fuse block (J/B)]
- to BCM terminal 11.

With the ignition switch in the START position, power is supplied
- through 10A fuse [No. 9, located in the fuse block (J/B)]
- to daytime light control unit terminal 2.

Ground is supplied
- to daytime light control unit terminals 13, 14 and 16
- through grounds E15 and E24, and
- to BCM terminal 67
- through grounds F14, M57 and M61.

HEADLAMP OPERATION

Low Beam Operation

With the lighting switch in 2ND position, the BCM receives input requesting the headlamps to illuminate. This input is communicated to the IPDM E/R across the CAN communication lines. The CPU (central processing unit) of the IPDM E/R controls the headlamp low relay coil. When energized, this relay directs power
- through 15A fuse (No. 36, located in the IPDM E/R)
- through IPDM E/R terminal 20
- to RH headlamp terminal 1, and
- through 15A fuse (No. 45, located in the IPDM E/R)
- through IPDM E/R terminal 30
- to LH headlamp terminal 1.

Ground is supplied
- to RH headlamp terminal 2
- to LH headlamp terminal 2
- through grounds E15 and E24.

With power and ground supplied, low beam headlamps illuminate.

High Beam Operation/Flash-to-Pass Operation

With the lighting switch in 2ND position and placed in HIGH or PASS position, the BCM receives input requesting the headlamp high beams to illuminate. This input is communicated to the IPDM E/R across the CAN communication lines. The CPU of the combination meter controls the ON/OFF status of the HIGH BEAM indicator. The CPU of the IPDM E/R controls the headlamp high relay coil. When energized, this relay directs power
- through 10A fuse (No. 40, located in the IPDM E/R)
- through IPDM E/R terminal 27
- to daytime light control unit terminal 4
- through daytime light control unit terminal 7
- to RH headlamp terminal 1, and
- through 10A fuse (No. 38, located in the IPDM E/R)
- through IPDM E/R terminal 28
- to daytime light control unit terminal 5
- through daytime light control unit terminal 6
- to LH headlamp terminal 1.

Ground is supplied
- to RH headlamp terminal 2

- to daytime light control unit terminal 9
- through daytime light control unit terminal 14
- through grounds E15 and E24, and
- to LH headlamp terminal 2
- to daytime light control unit terminal 10
- through daytime light control unit terminal 13
- through grounds E15 and E24.

With power and ground supplied, the high beam headlamps illuminate.

BATTERY SAVER CONTROL

With the combination switch (lighting switch) is in the 2ND position (ON) and the ignition switch is turned from ON or ACC to OFF, the battery saver control feature is activated.
Under this condition, the headlamps remain illuminated for 5 minutes unless the combination switch (lighting switch) position is changed. If the combination switch (lighting switch) position is changed, then the headlamps are turned off.

AUTO LIGHT OPERATION

For auto light operation, refer to LT-43, "System Description" .

DAYTIME LIGHT OPERATION

With the engine running, the lighting switch in the OFF or 1ST position and parking brake released, power is supplied

- through daytime light control unit terminal 7
- to RH headlamp terminal 1
- through RH headlamp terminal 2
- to daytime light control unit terminal 9, and
- through daytime light control unit terminal 6
- to LH headlamp terminal 1
- through LH headlamp terminal 2
- to daytime light control unit terminal 10.

Ground is supplied

- to daytime light control unit terminals 13, 14 and 16
- through grounds E15 and E24.

Because the high beam headlamps are now wired in series, they operate at half illumination.

XENON HEADLAMP (IF EQUIPPED)

The low beam headlamps may be equipped with xenon type bulbs. Xenon bulbs do not use a filament. Instead, they produce light when a high voltage current is passed between two tungsten electrodes through a mixture of xenon (an inert gas) and certain other metal halides. In addition to added lighting power, electronic control of the power supply gives the headlamps stable quality and tone color.
Following are some of the advantages of the xenon type headlamp.

- The light produced by the headlamps is a white color comparable to sunlight that is easy on the eyes.
- Light output is nearly double that of halogen headlamps, affording increased area of illumination.
- The light features a high relative spectral distribution at wavelengths to which the human eye is most sensitive. This means that even in the rain, more light is reflected back from the road surface toward the vehicle for added visibility.
- Power consumption is approximately 25 percent less than halogen headlamps, reducing battery load.

OPERATION

After starting the engine with the lighting switch in the "OFF" or 1ST position, the headlamp high beam automatically turns on. Lighting switch operations other than the above are the same as conventional light systems.

Engine		With engine stopped									With engine running								
Lighting switch		OFF			1ST			2ND			OFF			1ST			2ND		
		Hi	Lo	P	Hi	Lo	P	Hi	Lo	P	Hi	Lo	P	Hi	Lo	P	Hi	Lo	P
Headlamp	High beam	–	–	–	–	–	×	×	–	×	●*	●*	×	●*	●*	×	×	–	×
	Low beam	–	–	–	–	–	×	×	×	×	–	–	×	–	–	×	×	×	×
Tail lamp		–	–	–	×	×	×	×	×	×	–	–	–	×	×	×	×	×	×
License and instrument illumination lamp		–	–	–	×	×	×	×	×	×	–	–	–	×	×	×	×	×	×

- Hi: "HIGH BEAM" position
- Lo: "LOW BEAM" position
- P: "FLASH TO PASS" position
- ×: Lamp "ON"
- –: Lamp "OFF"
- ●: Lamp dims. (Added functions)
- *: When starting the engine with the parking brake released, the daytime lights will operate. When starting the engine with the parking brake pulled, the daytime lights will not operate.

CAN Communication System Description

EKS008M4

Refer to LAN-20, "CAN COMMUNICATION" .

Schematic

EKS008M5

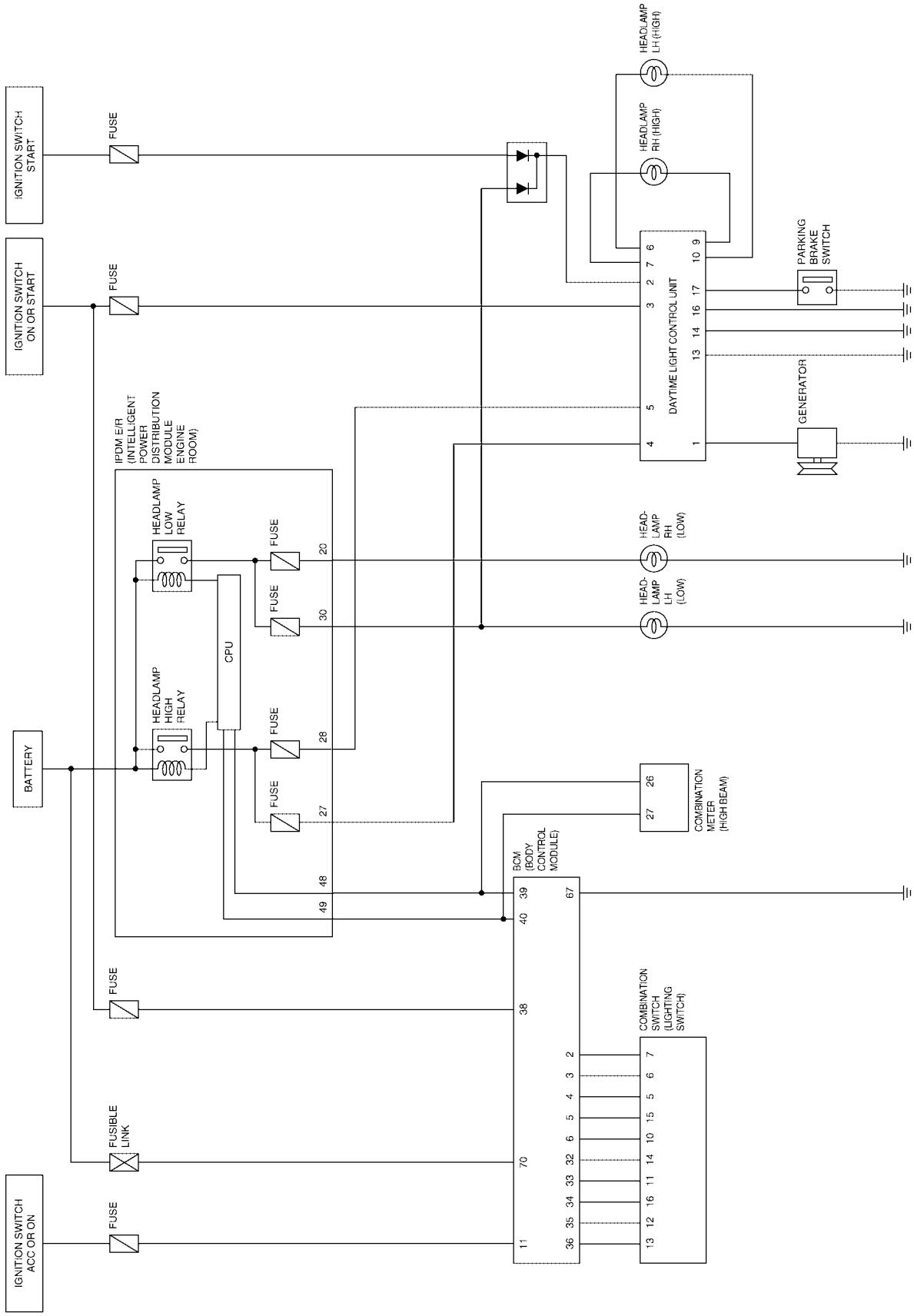

Wiring Diagram — DTRL —

EKS008M6

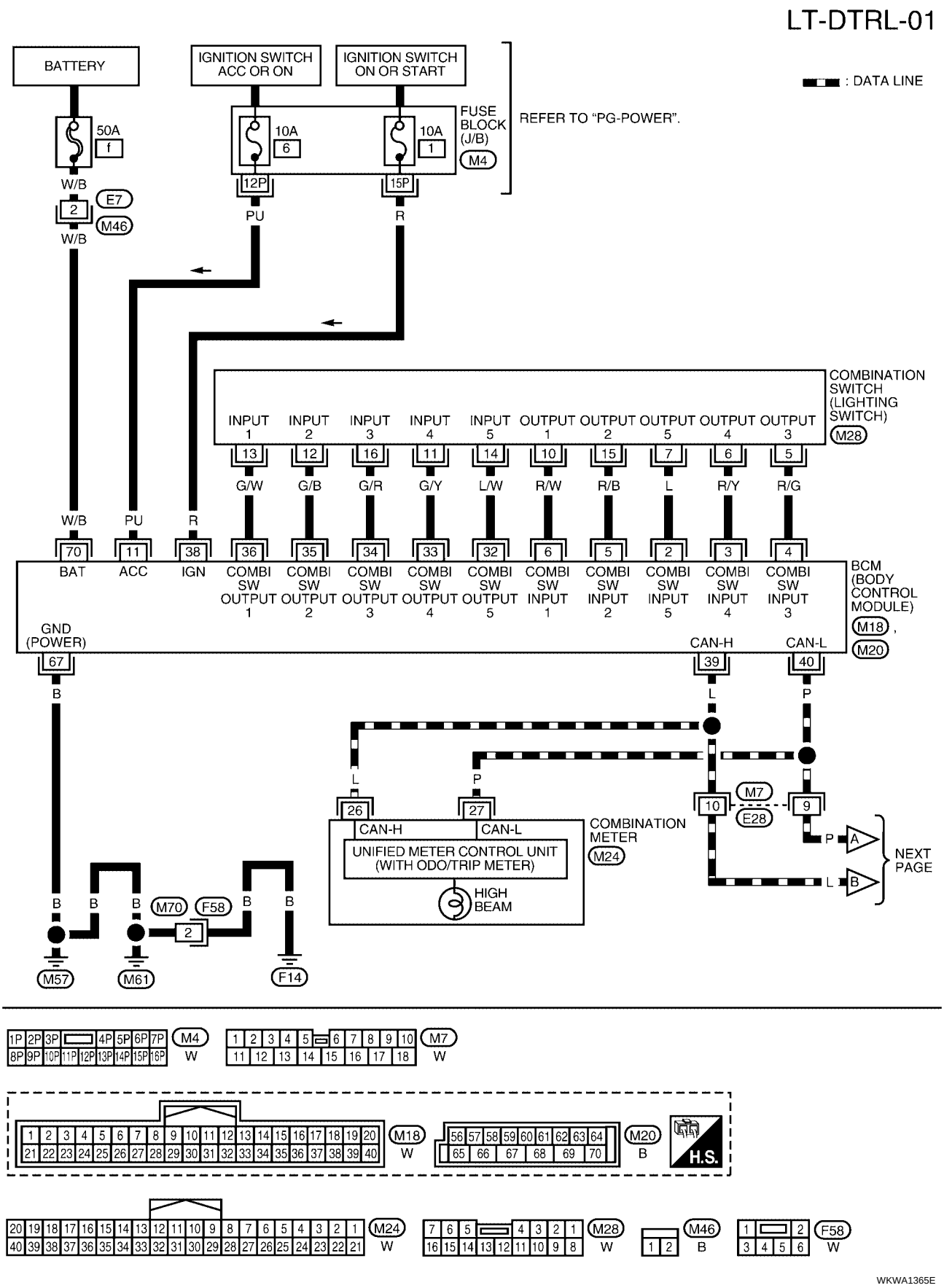

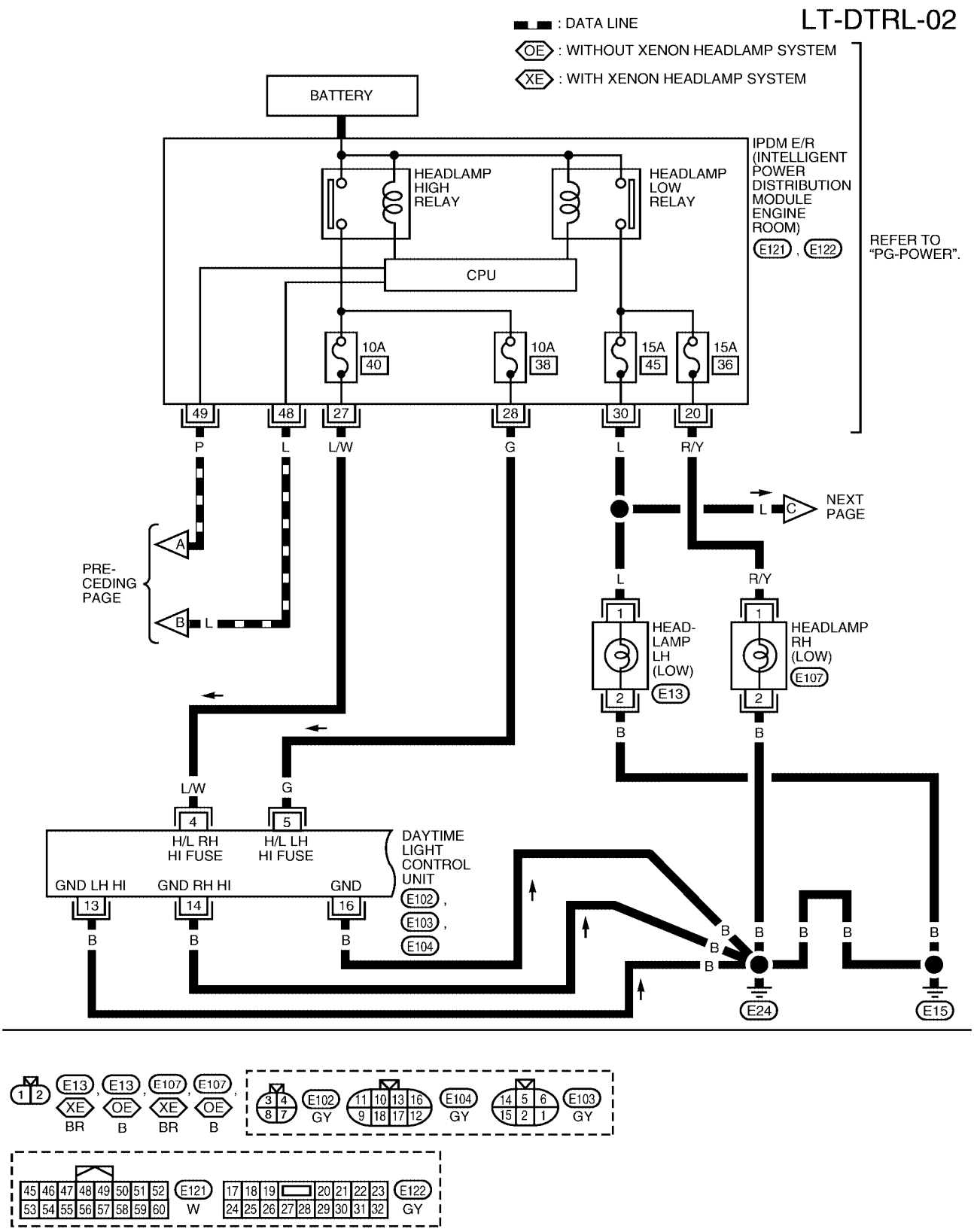
LT-DTRL-02
: DATA LINE
OE : WITHOUT XENON HEADLAMP SYSTEM
XE : WITH XENON HEADLAMP SYSTEM
BATTERY
IPDM E/R (INTELLIGENT POWER DISTRIBUTION MODULE ENGINE ROOM)
E121 , E122
REFER TO "PG-POWER".
HEADLAMP HIGH RELAY
HEADLAMP LOW RELAY
CPU
10A 40
10A 38
15A 45
15A 36
49 48 27 28 30 20
P L L/W G L R/Y
NEXT PAGE
PRE-CEDING PAGE
HEAD-LAMP LH (LOW)
E13
HEADLAMP RH (LOW)
E107
L/W G
4 5
H/L RH HI FUSE
H/L LH HI FUSE
DAYTIME LIGHT CONTROL UNIT
E102 , E103 , E104
GND LH HI
GND RH HI
GND
13 14 16
E24
E15
E13 XE BR
E13 OE B
E107 XE BR
E107 OE B
E102 GY
E104 GY
E103 GY
E121 W
E122 GY
WKWA2971E

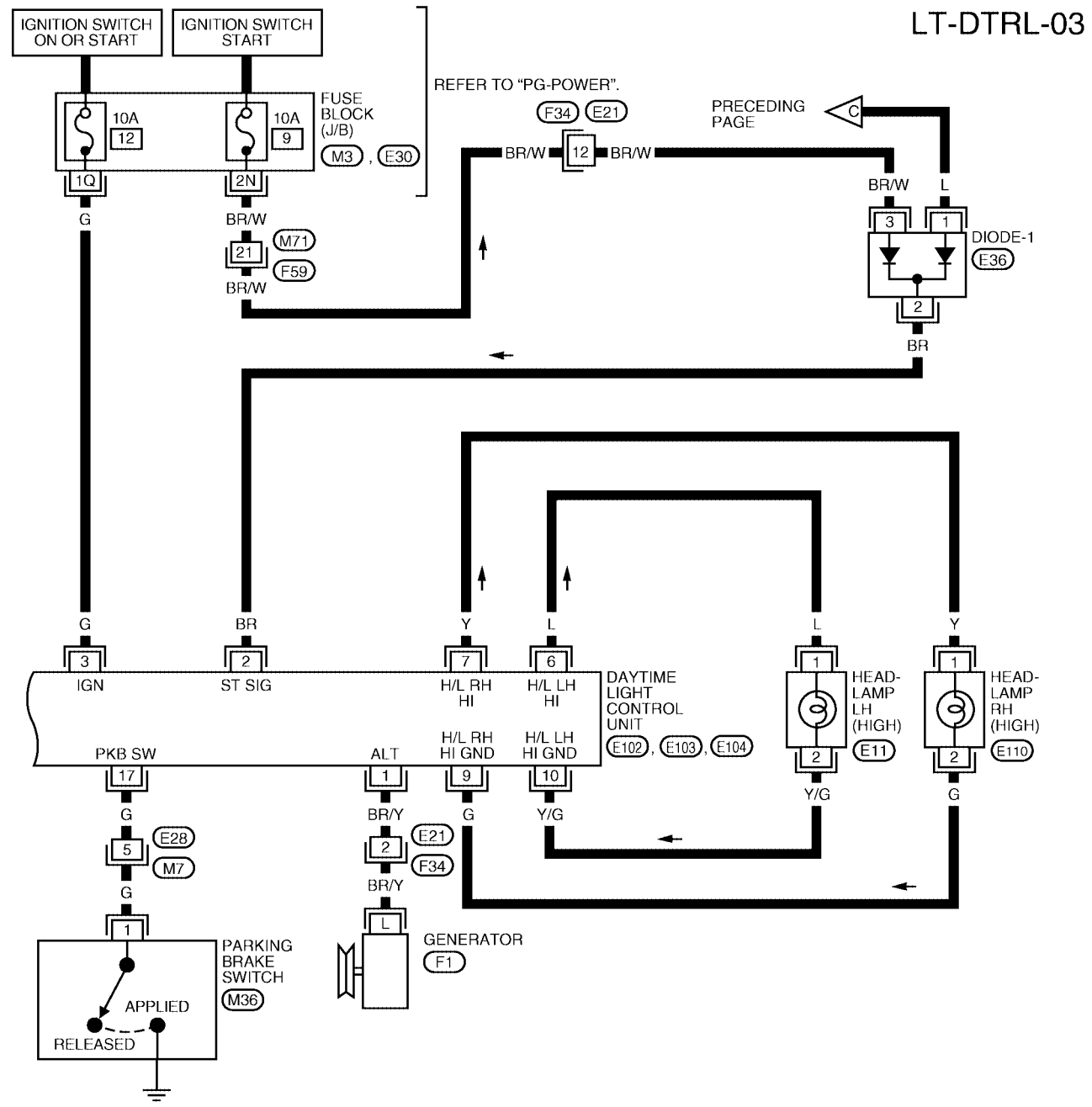
LT-DTRL-03
IGNITION SWITCH ON OR START
IGNITION SWITCH START
FUSE BLOCK (J/B)
M3, E30
10A 12
10A 9
1Q
2N
G
BR/W
M71
21
F59
BR/W
REFER TO "PG-POWER".
F34 E21
BR/W 12 BR/W
PRECEDING PAGE
C
BR/W L
3 1
DIODE-1
E36
2
BR
G BR Y L L Y
3 2 7 6
IGN
ST SIG
H/L RH HI
H/L LH HI
DAYTIME LIGHT CONTROL UNIT
E102, E103, E104
PKB SW
ALT
H/L RH HI GND
H/L LH HI GND
17 1 9 10
G BR/Y G Y/G
1 1
HEAD-LAMP LH (HIGH)
E11
2
Y/G
HEAD-LAMP RH (HIGH)
E110
2
G
5 E28
M7
G
2 E21
F34
BR/Y
1
PARKING BRAKE SWITCH
M36
APPLIED
RELEASED
L
GENERATOR
F1

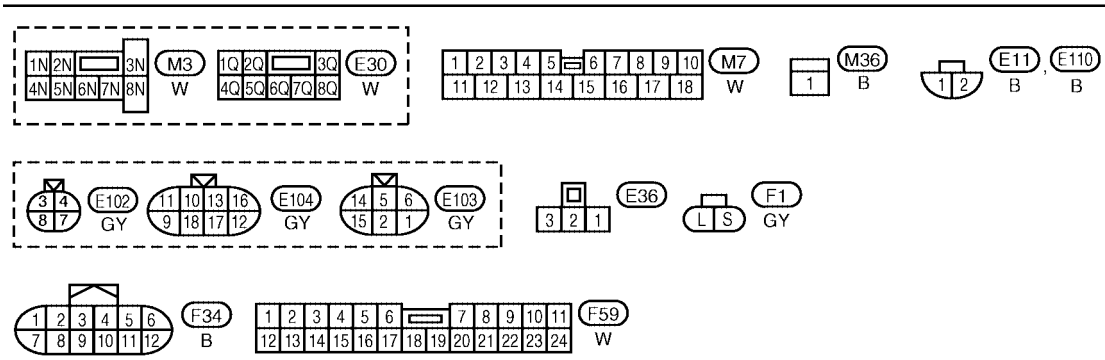
1N 2N 3N 4N 5N 6N 7N 8N M3 W
1Q 2Q 3Q 4Q 5Q 6Q 7Q 8Q E30 W
1 2 3 4 5 6 7 8 9 10 11 12 13 14 15 16 17 18 M7 W
1 M36 B
1 2 E11 B, E110 B
3 4 8 7 E102 GY
11 10 13 16 9 18 17 12 E104 GY
14 5 6 15 2 1 E103 GY
3 2 1 E36
L S F1 GY
1 2 3 4 5 6 7 8 9 10 11 12 F34 B
1 2 3 4 5 6 7 8 9 10 11 12 13 14 15 16 17 18 19 20 21 22 23 24 F59 W

WKWA1367E

How to Proceed With Trouble Diagnosis

EKS008M7

1. Confirm the symptom or customer complaint.
2. Understand operation description and function description. Refer to LT-32, "System Description" .
3. Perform the Preliminary Check. Refer to LT-40, "Preliminary Check" .
4. Check symptom and repair or replace the cause of malfunction.
5. Does the daytime light system operate normally? If YES: GO TO 6. If NO: GO TO 4.
6. Inspection End.

Preliminary Check

EKS008M8

CHECK BCM CONFIGURATION

1. CHECK BCM CONFIGURATION

Confirm BCM configuration for "DTRL" is set to "WITH". Refer to BCS-14, "READ CONFIGURATION PROCEDURE" .

OK or NG

OK >> GO TO Trouble Diagnosis. Refer to LT-41, "Trouble Diagnosis" .

NG >> Change BCM configuration for "DTRL" to "WITH". Refer to BCS-16, "WRITE CONFIGURATION PROCEDURE" .

Trouble Diagnosis

EKS008M9

TERMINALS AND REFERENCE VALUE FOR DAYTIME LIGHT CONTROL UNIT

Terminal No.	Wire color	Item	Condition	Voltage (Approx.)
1	BR/Y	Generator	When turning ignition switch to "ON"	Less than 1V
			When engine is running	Battery voltage
			When turning ignition switch to "OFF"	Less than 1V
2	BR	Start signal	When turning ignition switch to "START"	Battery voltage
			When turning ignition switch to "ON" from "START"	Less than 1V
			When turning ignition switch to "OFF"	Less than 1V
3	G	Power source	When turning ignition switch to "ON"	Battery voltage
			When turning ignition switch to "START"	Battery voltage
			When turning ignition switch to "OFF"	Less than 1V
4	L/W	LH HI fuse	When lighting switch is turned to the 2ND position with "HI BEAM" or "FLASH TO PASS" position	Battery voltage
			When lighting switch is turned to "FLASH TO PASS" position with ignition switch "ON" position	Battery voltage
5	G	RH HI fuse	When lighting switch is turned to the 2ND position with "HI BEAM" or "FLASH TO PASS" position	Battery voltage
			When lighting switch is turned to "FLASH TO PASS" position with ignition switch "ON" position	Battery voltage
6	L	LH HI beam	When lighting switch is turned to the 2ND position with "HI BEAM" or "FLASH TO PASS" position	Battery voltage
			When releasing parking brake with engine running and turning lighting switch to "OFF" (daytime light operation) **CAUTION:** **Block wheels and ensure selector lever is in N or P position.**	Half battery voltage
7	Y	RH HI beam	When lighting switch is turned to the 2ND position with "HI BEAM" or "FLASH TO PASS" position	Battery voltage
			When releasing parking brake with engine running and turning lighting switch to "OFF" (daytime light operation) **CAUTION:** **Block wheels and ensure selector lever is in N or P position.**	Battery voltage
9	G	RH HI beam (ground)	When turning lighting switch to the 2ND position with "HI BEAM" or "FLASH TO PASS" position	Less than 1V
			When releasing parking brake with engine running and turning lighting switch to "OFF" (daytime light operation) **CAUTION:** **Block wheels and ensure selector lever is in N or P position.**	Half battery voltage
10	Y/G	LH HI beam (ground)	When turning lighting switch to the 2ND position with "HI BEAM" or "FLASH TO PASS" position	Less than 1V
			When releasing parking brake with engine running and turning lighting switch to "OFF" (daytime light operation) **CAUTION:** **Block wheels and ensure selector lever is in N or P position.**	Less than 1V
13	B	Ground (LH HI)	—	—
14	B	Ground (RH HI)	—	—
16	B	Ground	—	—

Terminal No.	Wire color	Item	Condition	Voltage (Approx.)
17	G	Parking brake switch	When parking brake is released	Battery voltage
			When parking brake is set	Less than 1V

Aiming Adjustment

EKS00GAE

Refer to LT-27, "Aiming Adjustment" .

Bulb Replacement

EKS00GAF

Refer to LT-28, "Bulb Replacement" .

Disassembly and Assembly

EKS00GAG

Refer to LT-30, "Disassembly and Assembly" .

Removal and Installation

EKS00GAH

Refer to LT-29, "Removal and Installation" .

DAYTIME LIGHT CONTROL UNIT

Removal

1. Remove instrument lower cover LH. Refer to IP-13, "INSTRUMENT LOWER COVER LH" .
2. Remove daytime light control unit screw.
3. Disconnect electrical connectors.
4. Remove daytime light control unit.

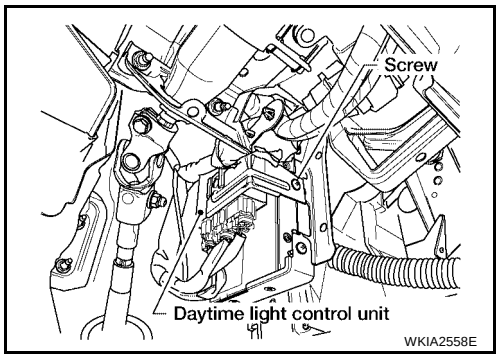

Installation

Installation is in the reverse order of removal.

AUTO LIGHT SYSTEM

PFP:28491

Component Parts and Harness Connector Location

EKS008MB

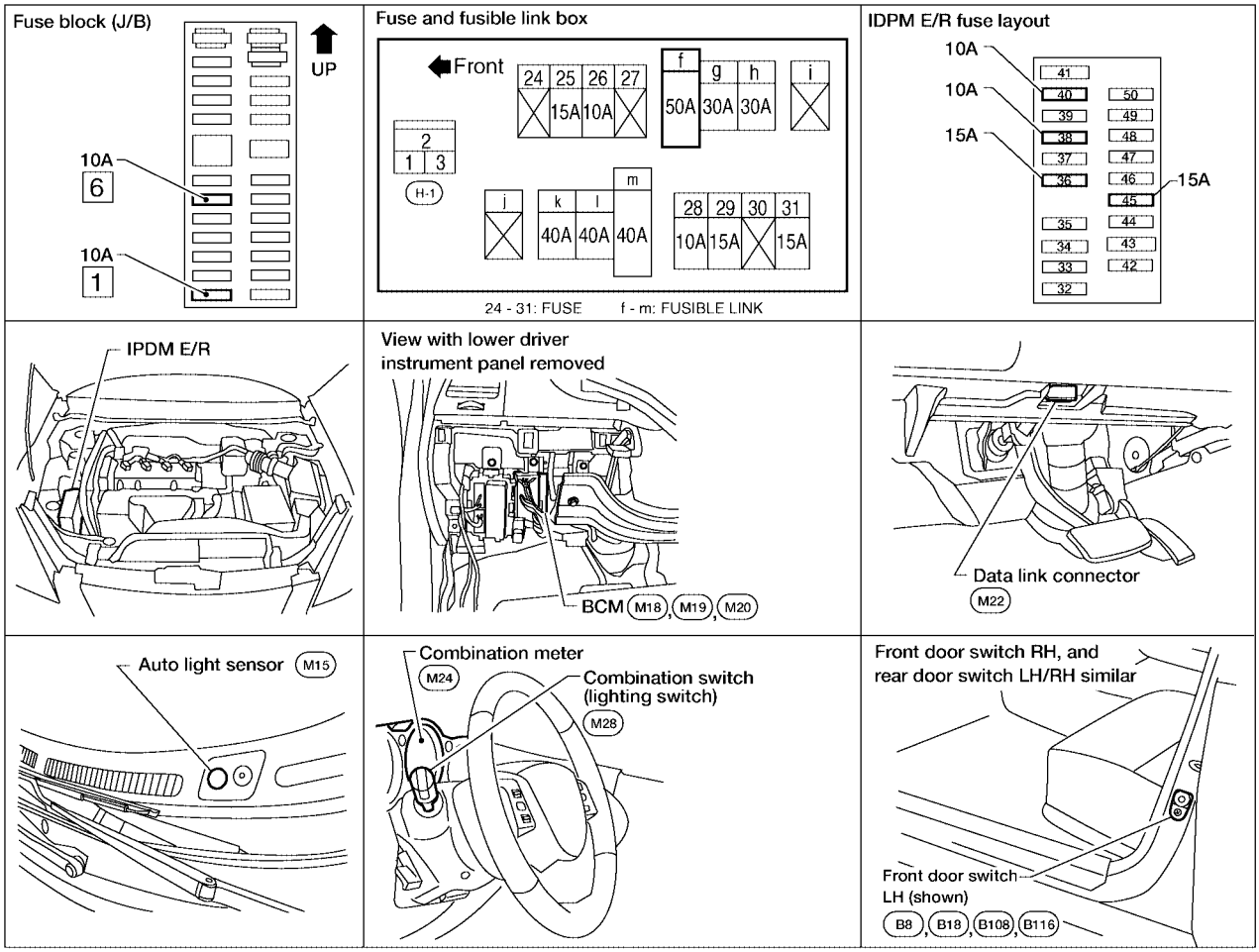

WKIA4086E

System Description

EKS008MC

This system automatically turns the parking lamps and the headlamps on and off in accordance with ambient light.
Timing for when the lamps turn on/off can be selected using four modes.

OUTLINE

The auto light control system uses an optical sensor that detects the brightness of outside light.
When the lighting switch is in AUTO position, it automatically turns on/off the parking lamps and the headlamps (and fog lamps, if equipped) in accordance with the ambient light. Sensitivity can be adjusted in four steps. For the details of the setting, refer to LT-49, "SETTING CHANGE FUNCTIONS" .
When the lighting switch is in "AUTO" position, power is supplied

- through BCM (body control module) terminal 17
- to auto light sensor terminal 1.

When lighting switch is in "AUTO" position, ground is supplied

- to auto light sensor terminal 3
- through BCM terminal 18.

When ignition switch is turned to "ON" or "START" position and when outside brightness is darker than prescribed level, input is supplied

- through auto light sensor terminal 2
- to BCM terminal 14.

The headlamps will then illuminate. For a description of headlamp operation, refer to LT-5, "System Description" .

BATTERY SAVER CONTROL

When the combination switch (lighting switch) is in the AUTO position, and the ignition switch is turned from ON or ACC to OFF, and one of the doors is opened, the battery saver feature is activated.
Under this condition, the headlamps remain illuminated for 5 minutes, unless the combination switch (lighting switch) position is changed. If the combination switch (lighting switch) position is changed, then the headlamps are turned off.

SHUT OFF DELAY

When the ignition switch is turned from ON to OFF while the auto light system is activated and the headlamps are illuminated, the shut off delay feature is activated. Under this condition, the BCM no longer receives a voltage signal at terminal 38 and this starts the auto light shut off delay timer. The shut off delay timer is active until one of the doors is opened or the combination switch (lighting switch) position is changed. If one of the doors is opened, the shut off delay feature is deactivated and the battery saver control feature is activated. If the combination switch (lighting switch) position is changed, the headlamps are turned off.

CAN Communication System Description

EKS008MD

Refer to LAN-20, "CAN COMMUNICATION" .

Major Components and Functions

EKS008ME

Components	Functions
BCM	● Turns on/off circuits of tail light and headlamp according to signals from light sensor, lighting switch (AUTO), front door switch LH, ignition switch (ON, OFF), and vehicle signal from combination meter.
Auto light sensor	● Converts ambient light (lux) to voltage and sends it to BCM. (Detects light from 50 to 1,300 lux)
Combination meter	● Sends vehicle signal to BCM via CAN communication line.

Wiring Diagram — AUTO/L —

EKS008MF

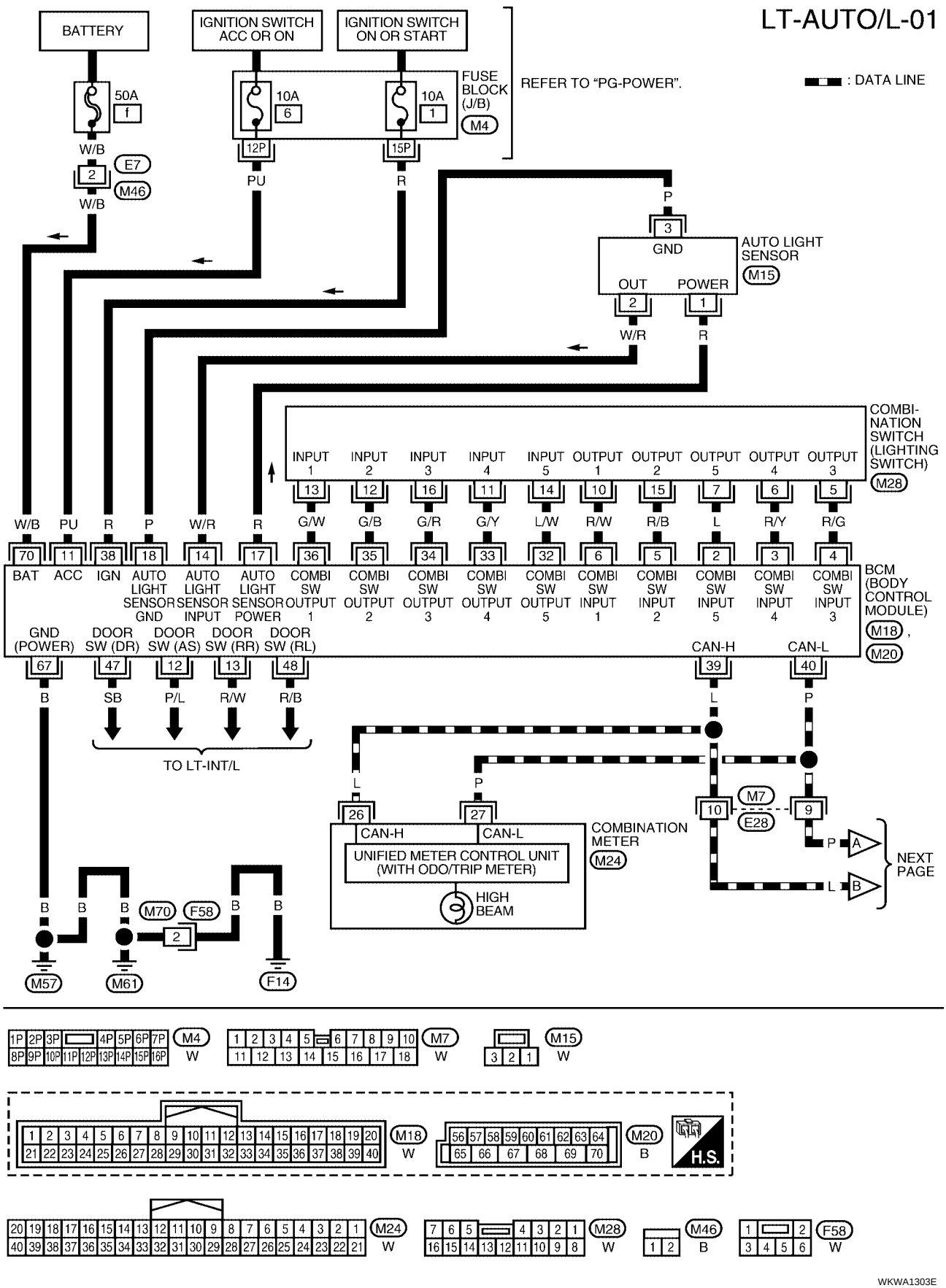

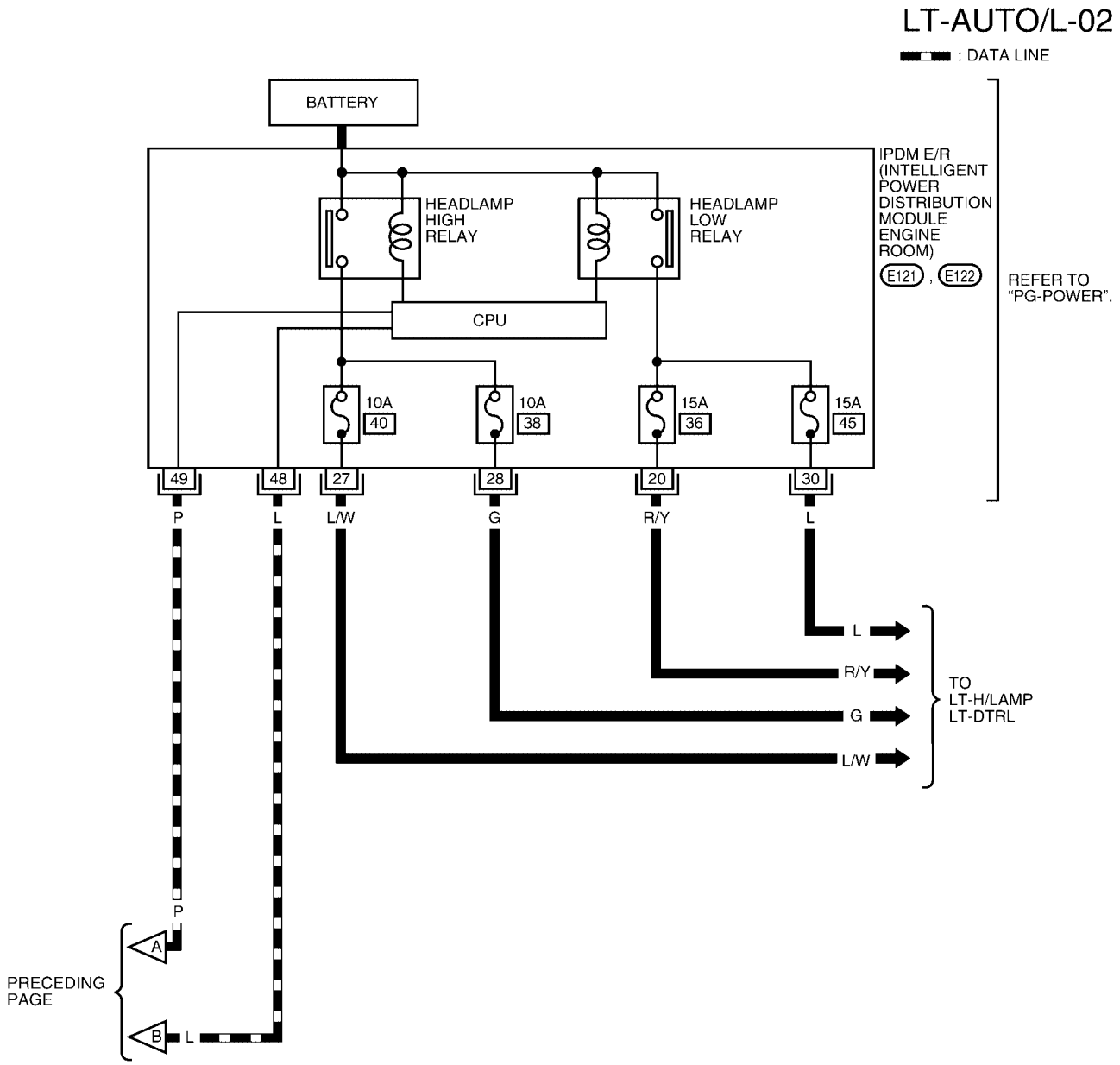
LT-AUTO/L-02
: DATA LINE
BATTERY
IPDM E/R
(INTELLIGENT
POWER
DISTRIBUTION
MODULE
ENGINE
ROOM)
E121 , E122
REFER TO
"PG-POWER".
HEADLAMP
HIGH
RELAY
HEADLAMP
LOW
RELAY
CPU
10A
40
10A
38
15A
36
15A
45
49
48
27
28
20
30
P
L
L/W
G
R/Y
L
L
R/Y
G
L/W
TO
LT-H/LAMP
LT-DTRL
P
A
PRECEDING
PAGE
B
L

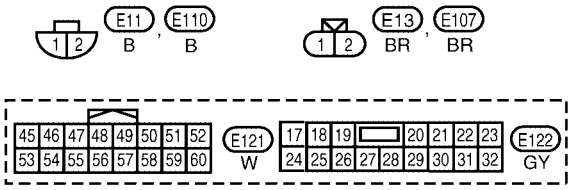
E11 , E110
B B
E13 , E107
BR BR
45 46 47 48 49 50 51 52
53 54 55 56 57 58 59 60
E121
W
17 18 19 20 21 22 23
24 25 26 27 28 29 30 31 32
E122
GY

WKWA1368E

Terminals and Reference Values for BCM

EKS008MG

Terminal No.	Wire color	Signal name	Measuring condition			Reference value (Approx.)
			Ignition switch	Operation or condition		
2	L	Combination switch input 5	ON	Lighting, turn, wiper OFF Wiper dial position 4		 SKIA5291E
3	R/Y	Combination switch input 4	ON	Lighting, turn, wiper OFF Wiper dial position 4		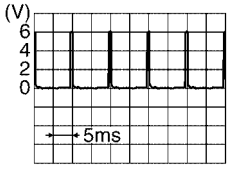 SKIA5292E
4	R/G	Combination switch input 3	ON	Lighting, turn, wiper OFF Wiper dial position 4		 SKIA5291E
5	R/B	Combination switch input 2	ON	Lighting, turn, wiper OFF Wiper dial position 4		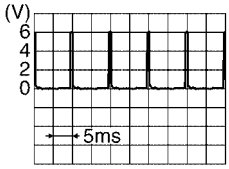 SKIA5292E
6	R/W	Combination switch input 1				
11	PU	Ignition switch (ACC)	ACC	—		Battery voltage
12	P/L	Front door switch RH signal	OFF	Front door switch RH	ON (open)	0V
					OFF (closed)	Battery voltage
13	R/W	Rear door switch RH signal	OFF	Rear door switch RH	ON (open)	0V
					OFF (closed)	Battery voltage
14	W/R	Auto light sensor signal	ON	When auto light sensor is illuminated		3.1 V or more[Note]
				When auto light sensor is not illuminated		0.6 V or less
17	R	Auto light sensor power supply	ON	—		5V
18	P	Sensor ground	ON	—		0V
32	L/W	Combination switch output 5	ON	Lighting, turn, wiper OFF Wiper dial position 4		 SKIA5291E

Terminal No.	Wire color	Signal name	Measuring condition			Reference value (Approx.)
			Ignition switch	Operation or condition		
33	G/Y	Combination switch output 4	ON	Lighting, turn, wiper OFF Wiper dial position 4		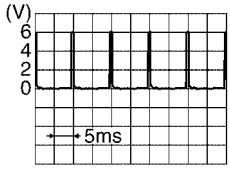 SKIA5292E
34	G/R	Combination switch output 3	ON	Lighting, turn, wiper OFF Wiper dial position 4		 SKIA5291E
35	G/B	Combination switch output 2	ON	Lighting, turn, wiper OFF Wiper dial position 4		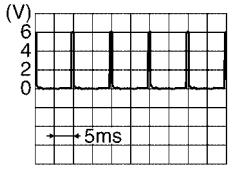 SKIA5292E
36	G/W	Combination switch output 1				
38	R	Ignition switch (ON)	ON	—		Battery voltage
39	L	CAN-H	—	—		—
40	P	CAN-L	—	—		—
47	SB	Front door switch LH signal	OFF	Front door switch LH	ON (open)	0V
					OFF (closed)	Battery voltage
48	R/B	Rear door switch LH signal	OFF	Rear door switch LH	ON (open)	0V
					OFF (closed)	Battery voltage
67	B	Ground	ON	—		0V
70	W/B	Battery power supply (fusible link)	OFF	—		Battery voltage

NOTE:
Optical sensor must be completely subjected to work lamp light. If the optical sensor is insufficiently illuminated, the measured value may not satisfy standard.

Terminals and Reference Values for IPDM E/R

EKS008MH

Terminal No.	Wire color	Signal name	Measuring condition			Reference value (Approx.)
			Ignition switch	Operation or condition		
20	R/Y	Headlamp low (RH)	ON	Lighting switch 2ND position	OFF	0V
					ON	Battery voltage
27	L/W	Headlamp high (RH)	ON	Lighting switch HIGH or PASS position	OFF	0V
					ON	Battery voltage
28	G	Headlamp high (LH)	ON	Lighting switch HIGH or PASS position	OFF	0V
					ON	Battery voltage

Terminal No.	Wire color	Signal name	Measuring condition			Reference value (Approx.)
			Ignition switch	Operation or condition		
30	L	Headlamp low (LH)	ON	Lighting switch 2ND position	OFF	0V
					ON	Battery voltage
48	L	CAN-H	—	—		—
49	P	CAN-L	—	—		—

How to Proceed With Trouble Diagnosis

EKS008MI

1. Confirm the symptom or customer complaint.
2. Understand operation description and function description. Refer to LT-43, "System Description" .
3. Carry out the Preliminary Check. Refer to LT-49, "Preliminary Check" .
4. Check symptom and repair or replace the cause of malfunction. Refer to LT-56, "Trouble Diagnosis Chart by Symptom" .
5. Does the auto light system operate normally? If YES: GO TO 6. If NO: GO TO 4.
6. Inspection End.

Preliminary Check

EKS008MJ

SETTING CHANGE FUNCTIONS

- Sensitivity of auto light system can be adjusted using CONSULT-II. Refer to LT-52, "WORK SUPPORT" .

CHECK BCM CONFIGURATION

1. CHECK BCM CONFIGURATION

Confirm BCM configuration for "AUTO LIGHT" is set to "WITH". Refer to BCS-14, "READ CONFIGURATION PROCEDURE" .

OK or NG

OK >> Continue preliminary check. Refer to LT-49, "CHECK POWER SUPPLY AND GROUND CIRCUIT" .

NG >> Change BCM configuration for "AUTO LIGHT" to "WITH". Refer to BCS-16, "WRITE CONFIGURATION PROCEDURE" .

CHECK POWER SUPPLY AND GROUND CIRCUIT

1. CHECK FUSES OR FUSIBLE LINK

Check for blown fuses or fusible link.

Unit	Power source	Fuse and fusible link No.
BCM	Battery	f
	Ignition switch ACC or ON position	6
	Ignition switch ON or START position	1
IPDM E/R	Battery	36
		38
		40
		45

Refer to LT-45, "Wiring Diagram — AUTO/L —" .

OK or NG

OK >> GO TO 2.

NG >> If fuse or fusible link is blown, be sure to eliminate cause of malfunction before installing new fuse or fusible link. Refer to PG-4, "POWER SUPPLY ROUTING CIRCUIT" .

2. CHECK POWER SUPPLY CIRCUIT

1. Disconnect BCM connectors.
2. Check voltage between BCM harness connector terminals and ground.

BCM		(–)	Ignition switch position		
(+)			OFF	ACC	ON
Connector	Terminal				
M18	11	Ground	0V	Battery voltage	Battery voltage
	38		0V	0V	Battery voltage
M20	70		Battery voltage	Battery voltage	Battery voltage

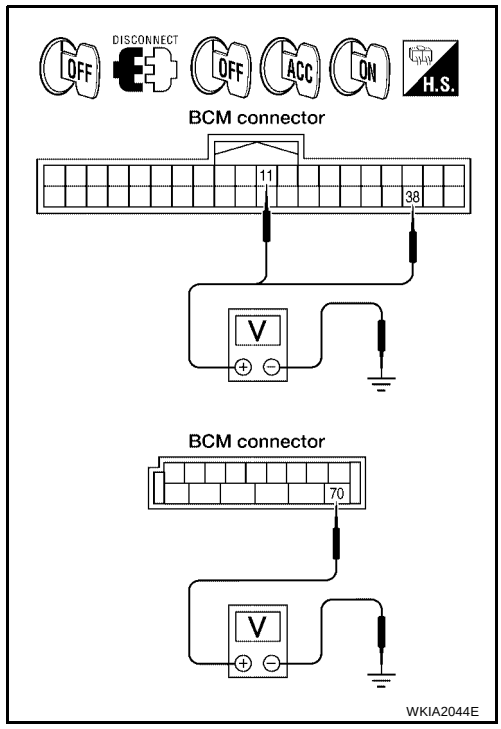

OK or NG

OK >> GO TO 3.
NG >> Check harness for open between BCM and fuse or fusible link.

3. CHECK GROUND CIRCUIT

Check continuity between BCM harness connector terminal and ground.

BCM			Continuity
Connector	Terminal		
M20	67	Ground	Yes

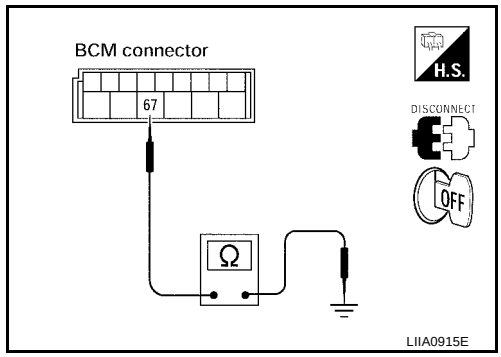

OK or NG

OK >> Inspection End.
NG >> Check ground circuit harness.

CONSULT-II Function (BCM)

EKS008MK

CONSULT-II can display each diagnostic item using the diagnostic test modes shown following.

BCM diagnostic test item	Diagnostic mode	Description
Inspection by part	WORK SUPPORT	Supports inspections and adjustments. Commands are transmitted to the BCM for setting the status suitable for required operation, input/output signals are received from the BCM and received data is displayed.
	DATA MONITOR	Displays BCM input/output data in real time.
	ACTIVE TEST	Operation of electrical loads can be checked by sending drive signal to them.
	SELF-DIAG RESULTS	Displays BCM self-diagnosis results.
	CAN DIAG SUPPORT MNTR	The result of transmit/receive diagnosis of CAN communication can be read.
	ECU PART NUMBER	BCM part number can be read.
	CONFIGURATION	Performs BCM configuration read/write functions.

CONSULT-II OPERATION

CAUTION:

If CONSULT-II is used with no connection of CONSULT-II CONVERTER, malfunctions might be detected in self-diagnosis depending on control unit which carries out CAN communication.

1. With the ignition switch OFF, connect CONSULT-II and CONSULT-II CONVERTER to the data link connector, then turn ignition switch ON.

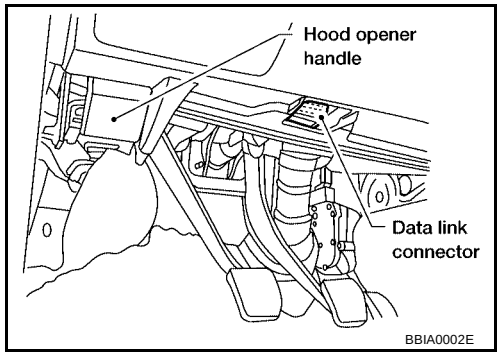

2. Touch "START (NISSAN BASED VHCL)".

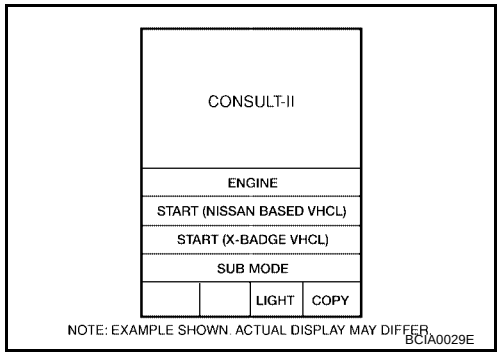

3. Touch "BCM" on "SELECT SYSTEM" screen.
If "BCM" is not indicated, go to GI-39, "Consult-II Data Link Connector (DLC) Circuit" .

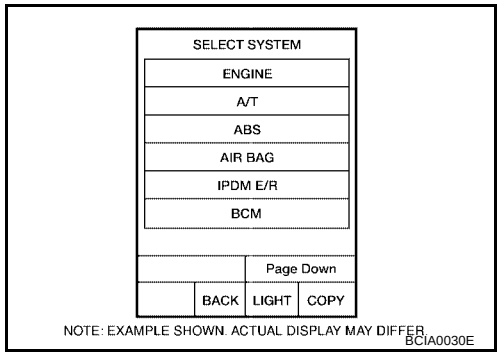

4. Select the desired part to be diagnosed on the "SELECT TEST ITEM" screen.

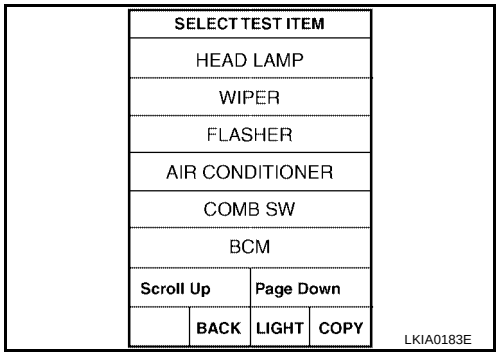

WORK SUPPORT

Operation Procedure

1. Touch "HEAD LAMP" on "SELECT TEST ITEM" screen.
2. Touch "WORK SUPPORT" on "SELECT DIAG MODE" screen.
3. Touch item setting to be changed on "SELECT WORK ITEM" screen.
4. Touch "START".
5. Touch the item setting desired.
6. Touch "CHANGE SETT".
7. The setting will be changed and "CUSTOMIZING COMPLETED" will be displayed.
8. Touch "END".

Work Support Setting Item

Work Support item	Description	Mode	Setting status
BATTERY SAVER SET	Function is not enabled, battery saver operation cannot be changed.	On	Function is not enabled, battery saver operation cannot be changed.
		Off	
CUSTOM A/LIGHT SETTING	Sensitivity of auto light can be selected and set from four modes.	Mode1	Factory setting
		Mode 2	More sensitive setting compared to factory setting (The time required for lamp light-up is shorter than "Normal").
		Mode 3	Less sensitive setting compared to factory setting (The time required for lamp light-up is longer than "Normal").
		Mode 4	Less sensitive setting compared to Mode 3 (The time required for lamp light-up is longer than Mode 3).
ILL DELAY SET	The timer that turns off the headlamps (and fog lamps, if turned on) after the last door is closed can be selected and set from 8 modes.	Mode 1	45 seconds (Factory setting)
		Mode 2	0 seconds (immediate shutoff)
		Mode 3	30 seconds
		Mode 4	60 seconds
		Mode 5	90 seconds
		Mode 6	120 seconds
		Mode 7	150 seconds
		Mode 8	180 seconds

DATA MONITOR

Operation Procedure

1. Touch "HEAD LAMP" on "SELECT TEST ITEM" screen.
2. Touch "DATA MONITOR" on "SELECT DIAG MODE" screen.
3. Touch either "ALL SIGNALS" or "SELECTION FROM MENU" on "SELECT MONITOR ITEM" screen.

ALL SIGNALS	Monitors all the signals.
SELECTION FROM MENU	Selects and monitors individual signal.

4. Touch "START".
5. When "SELECTION FROM MENU" is selected, touch items to be monitored. When "ALL SIGNALS" is selected, all the signals will be monitored.
6. Touch "RECORD" while monitoring, then the status of the monitored item can be recorded. To stop recording, touch "STOP".

Display Item List

Monitor item name "OPERATION OR UNIT"		Contents
IGN ON SW	"ON/OFF"	Displays "IGN position (ON)/OFF, ACC position (OFF)" judged from the ignition switch signal.
ACC ON SW	“ON/OFF”	Displays "ACC (ON)/OFF, Ignition OFF (OFF)" status judged from ignition switch signal.
HI BEAM SW	"ON/OFF"	Displays status (high beam switch: ON/Others: OFF) of high beam switch judged from lighting switch signal.
HEAD LAMP SW 1	"ON/OFF"	Displays status (headlamp switch: ON/Others: OFF) of headlamp switch judged from lighting switch signal.
HEAD LAMP SW 2	"ON/OFF"	Displays status (headlamp switch 2: ON/Others: OFF) of headlamp switch 2 judged from lighting switch signal.
LIGHT SW 1ST	"ON/OFF"	Displays status (lighting switch 1st position: ON/Others: OFF) of light switch judged from lighting switch signal.
AUTO LIGHT SW	"ON/OFF"	Displays status of the lighting switch as judged from the lighting switch signal. (AUTO position: ON/Other than AUTO position: OFF)
PASSING SW	"ON/OFF"	Displays status (flash-to-pass switch: ON/Others: OFF) of flash-to-pass switch judged from lighting switch signal.
DOOR SW-DR	"ON/OFF"	Displays status of the front door LH as judged from the front door switch LH signal. (Door is open: ON/Door is closed: OFF)
DOOR SW-AS	"ON/OFF"	Displays status of the front door RH as judged from the front door switch RH signal. (Door is open: ON/Door is closed: OFF)
DOOR SW-RR	"ON/OFF”	Displays status of the rear door RH as judged from the rear door switch RH signal. (Door is open: ON/Door is closed: OFF)
DOOR SW-RL	“ON/OFF"	Displays status of the rear door LH as judged from the rear door switch LH signal. (Door is open: ON/Door is closed: OFF)
OPTICAL SENSOR	[0 - 5V]	Displays "ambient light (close to 5V when light/close to 0V when dark)" judged from auto light sensor signal.

ACTIVE TEST

Operation Procedure

1. Touch "HEAD LAMP" on "SELECT TEST ITEM" screen.
2. Touch "ACTIVE TEST" on "SELECT DIAG MODE" screen.
3. Touch item to be tested and check operation of the selected item.
4. During the operation check, touching "BACK" deactivates the operation.

Display Item List

Test item	Display on CONSULT-II screen	Description
Headlamp relay output	HEAD LAMP	Allows headlamp relay to operate by switching ON-OFF at your option.

CONSULT-II Function (IPDM E/R)

EKS008ML

CONSULT-II can display each diagnostic item using the diagnostic test modes shown following.

IPDM E/R diagnostic Mode	Description
SELF-DIAG RESULTS	Displays IPDM E/R self-diagnosis results.
DATA MONITOR	Displays IPDM E/R input/output data in real time.
CAN DIAG SUPPORT MNTR	The result of transmit/receive diagnosis of CAN communication can be read.
ACTIVE TEST	Operation of electrical loads can be checked by sending drive signal to them.

CONSULT-II OPERATION

CAUTION:

If CONSULT-II is used with no connection of CONSULT-II CONVERTER, malfunctions might be detected in self-diagnosis depending on control unit which carries out CAN communication.

1. With the ignition switch OFF, connect CONSULT-II and CONSULT-II CONVERTER to the data link connector, then turn the ignition switch ON.

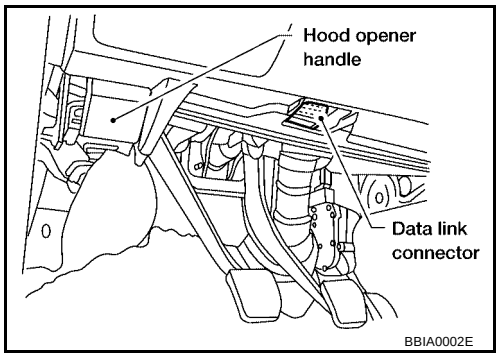

2. Touch "START (NISSAN BASED VHCL)".

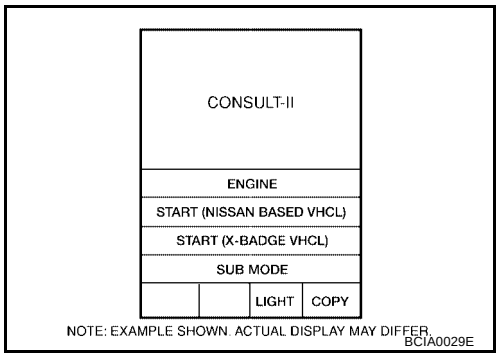

3. Touch "IPDM E/R" on "SELECT SYSTEM" screen.
   If "IPDM E/R" is not displayed, go to GI-39, "Consult-II Data Link Connector (DLC) Circuit" .

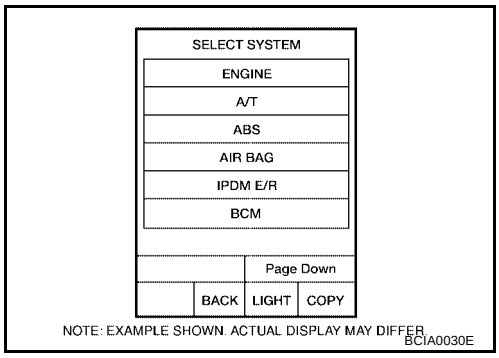

4. Select the desired part to be diagnosed on the "SELECT DIAG MODE" screen.

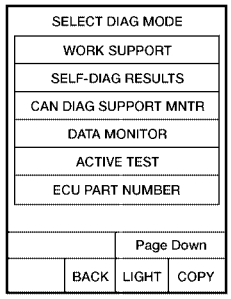

NOTE: EXAMPLE SHOWN. ACTUAL DISPLAY MAY DIFFER.
BCIA0031E

DATA MONITOR

Operation Procedure

1. Touch "DATA MONITOR" on "SELECT DIAG MODE" screen.
2. Touch "ALL SIGNALS", "MAIN SIGNALS" or "SELECTION FROM MENU" on the "SELECT MONITOR ITEM" screen.

ALL SIGNALS	All items will be monitored.
MAIN SIGNALS	Monitor the predetermined item.
SELECTION FROM MENU	Select any item for monitoring.

3. Touch "START".
4. Touch the required monitoring item on "SELECTION FROM MENU". In "ALL SIGNALS", all items are monitored. In "MAIN SIGNALS", predetermined items are monitored.
5. Touch "RECORD" while monitoring to record the status of the item being monitored. To stop recording, touch "STOP".

All Items, Main Items, Select Item Menu

Item name	CONSULT-II screen display	Display or unit	Monitor item selection			Description
			ALL SIGNALS	MAIN SIGNALS	SELECTION FROM MENU	
Parking, license plate and tail lamps request	TAIL&CLR REQ	ON/OFF	×	×	×	Signal status input from BCM
Headlamp low beam request	HL LO REQ	ON/OFF	×	×	×	Signal status input from BCM
Headlamp high beam request	HL HI REQ	ON/OFF	×	×	×	Signal status input from BCM

NOTE:
Perform monitoring of IPDM E/R data with the ignition switch ON. When the ignition switch is at ACC, the display may not be correct.

ACTIVE TEST

Operation Procedure

1. Touch "ACTIVE TEST" on "SELECT DIAG MODE" screen.
2. Touch item to be tested, and check operation.
3. Touch "START".
4. Touch "STOP" while testing to stop the operation.

Test item	CONSULT-II screen display	Description
Headlamp relay (HI, LO) output	LAMPS	Allows headlamp relay (HI, LO) to operate by switching operation (OFF, HI, LO) at your option (Headlamp high beam repeats ON-OFF every 1 second).
Front fog lamp relay output		Allows fog lamp relay to operate by switching operation ON-OFF at your option.

Trouble Diagnosis Chart by Symptom

EKS008MM

Trouble phenomenon	Malfunction system and reference
● Parking lamps and headlamps will not illuminate when outside of the vehicle becomes dark. (Lighting switch 1st position and 2nd position operate normally.) ● Parking lamps and headlamp will not go out when outside of the vehicle becomes light. (Lighting switch 1st position and 2nd position operate normally.) ● Headlamps go out when outside of the vehicle becomes light, but parking lamps stay on.	● Refer to LT-52, "WORK SUPPORT" . ● Refer to LT-56, "Lighting Switch Inspection" . ● Refer to LT-57, "Auto Light Sensor System Inspection" . If above systems are normal, replace BCM. Refer to BCS-20, "Removal and Installation of BCM" .
Parking lamps illuminate when outside of the vehicle becomes dark, but headlamps stay off. (Lighting switch 1st position and 2nd position operate normally.)	● Refer to LT-52, "WORK SUPPORT" . ● Refer to LT-57, "Auto Light Sensor System Inspection" . If above systems are normal, replace BCM. Refer to BCS-20, "Removal and Installation of BCM" .
Auto light adjustment system will not operate. (Lighting switch AUTO, 1st position and 2nd position operate normally.)	● Refer to LT-57, "Auto Light Sensor System Inspection" . If above system is normal, replace BCM. Refer to BCS-20, "Removal and Installation of BCM" .
Auto light adjustment system will not operate.	● CAN communication line to BCM inspection. Refer to LAN-20, "CAN COMMUNICATION" .
Shut off delay feature will not operate.	● CAN communication line to BCM inspection. Refer to LAN-20, "CAN COMMUNICATION" . ● Refer to BL-31, "Door Switch Check" . If above system is normal, replace BCM. Refer to BCS-20, "Removal and Installation of BCM" .

Lighting Switch Inspection

EKS008MN

1. CHECK LIGHTING SWITCH INPUT SIGNAL

With CONSULT-II

Select "BCM" on CONSULT-II. With "HEAD LAMP" data monitor, make sure "AUTO LIGHT SW" turns ON-OFF linked with operation of lighting switch.

When lighting switch is in AUTO position **: AUTO LIGHT SW ON**

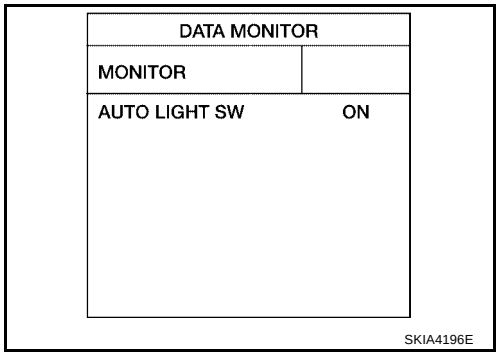

Without CONSULT-II

Refer to LT-91, "Combination Switch Inspection" .

OK or NG

OK >> Inspection End.

NG >> Check lighting switch. Refer to LT-91, "Combination Switch Inspection" .

Auto Light Sensor System Inspection

EKS008MO

1. OUTPUT SIGNAL INSPECTION

With CONSULT-II

Select "BCM" in CONSULT-II. Using "OPTICAL SENSOR" data from "DATA MONITOR", check difference in the voltage when the auto light sensor is illuminated and not illuminated.

Light sensor illuminated	**: 3.1V or more**
Light sensor not illuminated	**: 0.6V or less**

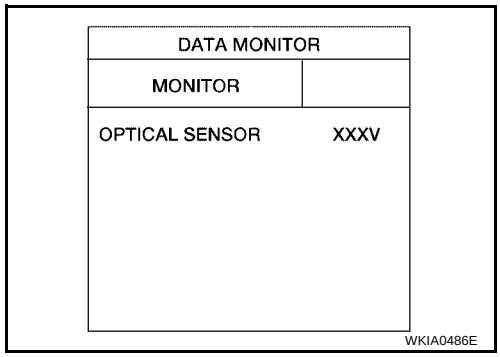

NOTE:

If the auto light sensor is insufficiently illuminated, the measured value may not satisfy the standard.

Without CONSULT-II

GO TO 2.

OK or NG

OK >> Inspection End.

NG >> GO TO 2.

2. POWER SUPPLY CIRCUIT CONTINUITY INSPECTION

1. Turn ignition switch OFF.
2. Disconnect BCM and auto light sensor connectors.
3. Check continuity between BCM harness connector M18 terminal 17 and auto light sensor harness connector M15 terminal 1.

17 - 1	**: Continuity should exist.**

4. Check continuity between BCM harness connector M18 terminal 17 and ground.

17 - Ground	**: Continuity should not exist.**

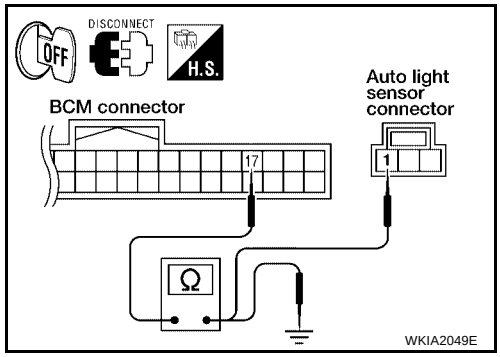

OK or NG

OK >> GO TO 3.

NG >> Repair harness or connector.

3. OUTPUT CIRCUIT CONTINUITY INSPECTION

1. Check continuity between BCM harness connector M18 terminal 14 and auto light sensor harness connector M15 terminal 2.

14 - 2	**: Continuity should exist.**

2. Check continuity between BCM harness connector M18 terminal 14 and ground.

14 - Ground	**: Continuity should not exist.**

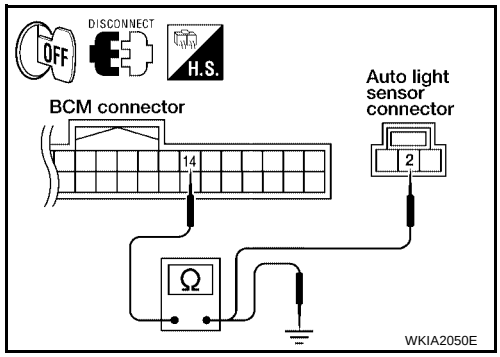

OK or NG

OK >> GO TO 4.

NG >> Repair harness or connector.

4. GROUND CIRCUIT CONTINUITY INSPECTION

1. Check continuity between BCM harness connector M18 terminal 18 and auto light sensor harness connector M15 terminal 3.

   18 - 3 : Continuity should exist.

2. Check continuity between BCM harness connector M18 terminal 18 and ground.

   18 - Ground : Continuity should not exist.

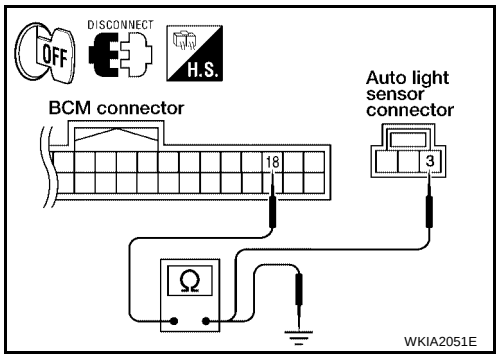

OK or NG

OK >> GO TO 5.
NG >> Repair harness or connector.

5. SENSOR VOLTAGE INSPECTION

1. Connect BCM connector.
2. Turn ignition switch ON.
3. Check voltage between BCM harness connector M18 terminal 17 and ground.

   17 - Ground : Should be approx. 5V.

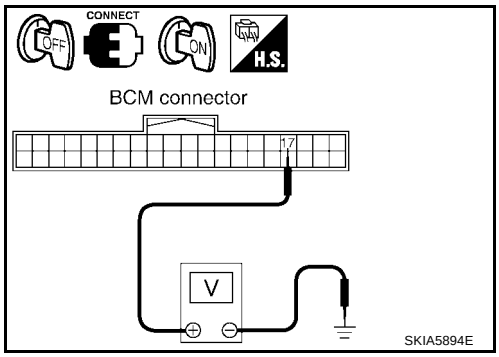

OK or NG

OK >> Replace the auto light sensor.
NG >> Replace BCM. Refer to BCS-20, "Removal and Installation of BCM" .

FRONT FOG LAMP

PFP:26150

Component Parts and Harness Connector Location

EKS00A85

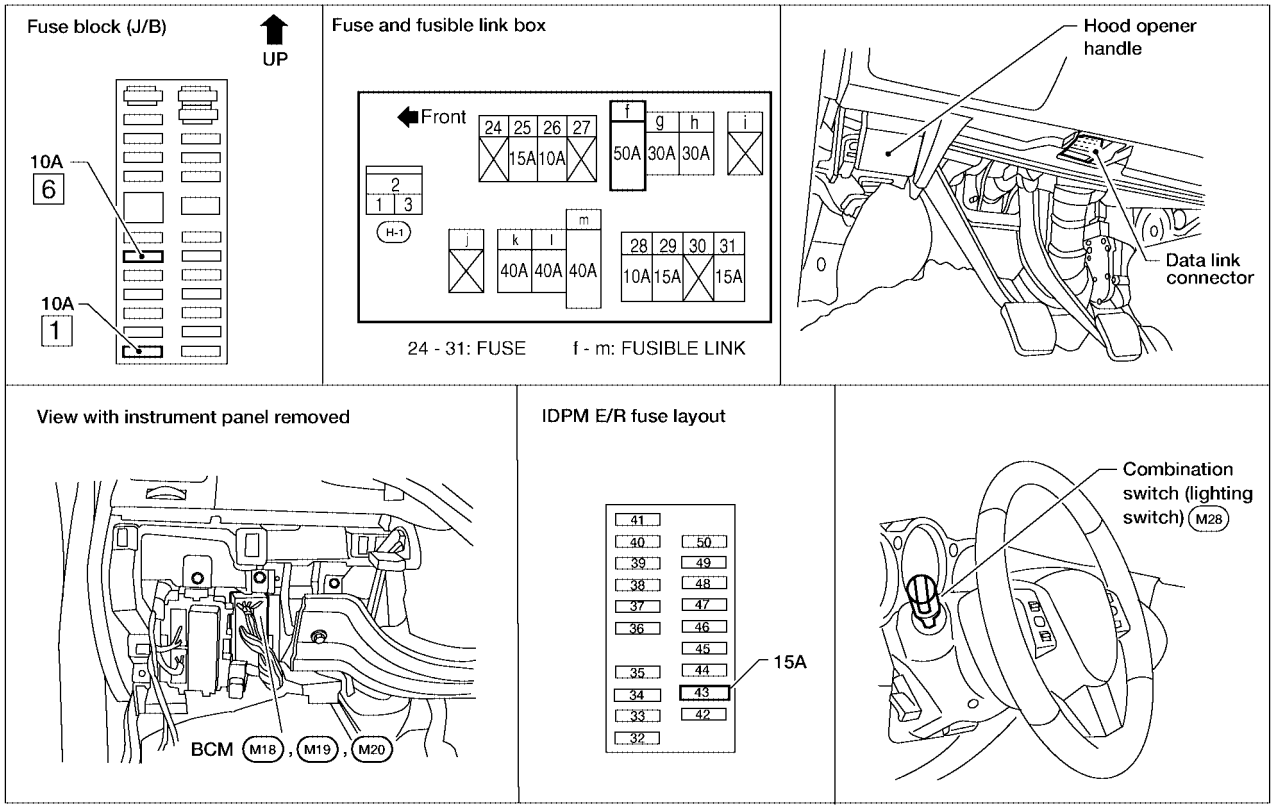

WKIA4087E

System Description

EKS008MP

Control of the fog lamps is dependent upon the position of the combination switch (lighting switch). The lighting switch must be in the AUTO position (with auto light system) or headlamps position (LOW beam is ON) for front fog lamp operation. When the lighting switch is placed in the fog lamp position, the BCM (body control module) receives input requesting the fog lamps to illuminate. This input is communicated to the IPDM E/R (intelligent power distribution module engine room) across the CAN communication lines. The CPU (central processing unit) of the IPDM E/R controls the front fog lamp relay coil. When energized, this relay directs power to the front fog lamps.

OUTLINE

Power is supplied at all times

- through 15A fuse (No. 43, located in the IPDM E/R)
- to front fog lamp relay, located in the IPDM E/R, and
- through 50A fusible link (letter **f,** located in the fuse and fusible link box)
- to BCM terminal 70.

When the ignition switch is in ON or START position, power is supplied

- through 10A fuse [No. 1, located in the fuse block (J/B)]
- to BCM terminal 38.

When the ignition switch is in ACC or ON position, power is supplied

- through 10A fuse [No. 6, located in the fuse block (J/B)]
- to BCM terminal 11.

Ground is supplied

- to BCM terminal 67
- through grounds F14, M57 and M61.

FOG LAMP OPERATION

The fog lamp switch is built into the combination switch. The lighting switch can only be in AUTO position (with auto light system) or headlamps position (low beam is ON) and the fog lamp switch must be ON for fog lamp operation.
With the fog lamp switch in the ON position, the CPU of the IPDM E/R grounds the coil side of the fog lamp relay. The fog lamp relay then directs power

- through IPDM E/R terminal 37
- to front fog lamp LH terminal 1, and
- through IPDM E/R terminal 36
- to front fog lamp RH terminal 1.

Ground is supplied

- to front fog lamp LH terminal 2
- through grounds E15 and E24, and
- to front fog lamp RH terminal 2
- through grounds E15 and E24.

With power and grounds supplied, the front fog lamps illuminate.

BATTERY SAVER CONTROL

When the fog lamp switch is ON and the ignition switch is turned from ON to ACC or OFF, or if the ignition switch is in the OFF position when the fog lamp switch is turned ON, the battery saver control feature is activated.
Under this condition, the fog lamps (and headlamps) remain illuminated for 5 minutes, unless the combination switch (lighting switch) position is changed. If the combination switch (lighting switch) position is changed, then the fog lamps (and headlamps) are turned off.

CAN Communication System Description

EKS008MQ

Refer to LAN-20, "CAN COMMUNICATION" .

Wiring Diagram — F/FOG —

EKS008MR

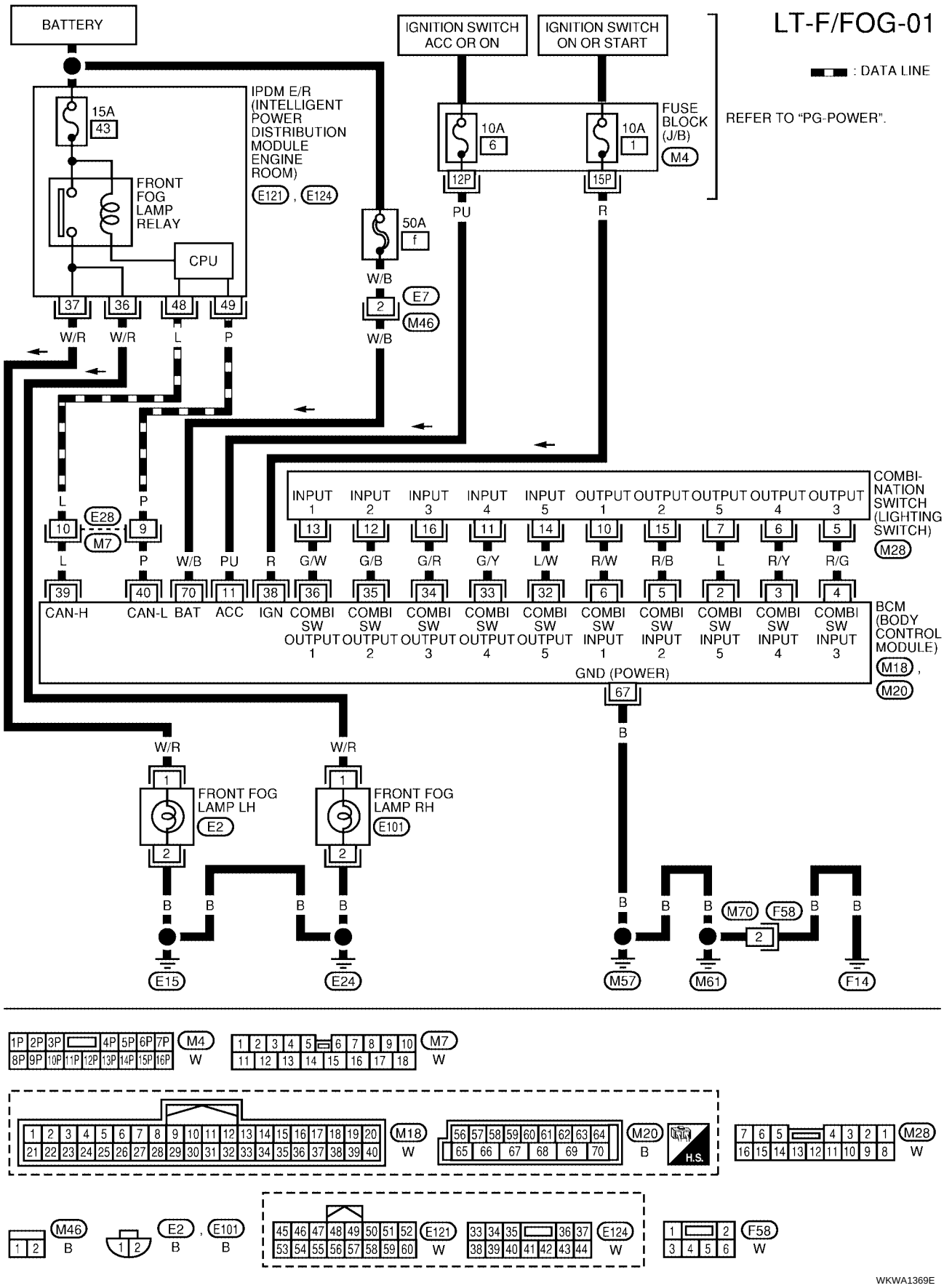

Terminals and Reference Values for BCM

EKS008MS

Terminal No.	Wire color	Signal name	Measuring condition		Reference value (Approx.)
			Ignition switch	Operation or condition	
2	L	Combination switch input 5	ON	Lighting, turn, wiper OFF Wiper dial position 4	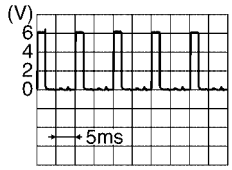 SKIA5291E
3	R/Y	Combination switch input 4	ON	Lighting, turn, wiper OFF Wiper dial position 4	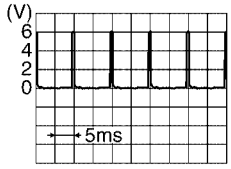 SKIA5292E
4	R/G	Combination switch input 3	ON	Lighting, turn, wiper OFF Wiper dial position 4	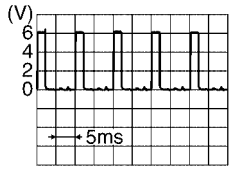 SKIA5291E
5	R/B	Combination switch input 2	ON	Lighting, turn, wiper OFF Wiper dial position 4	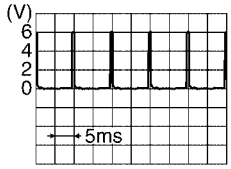 SKIA5292E
6	R/W	Combination switch input 1			
11	PU	Ignition switch (ACC)	ACC	—	Battery voltage
32	L/W	Combination switch output 5	ON	Lighting, turn, wiper OFF Wiper dial position 4	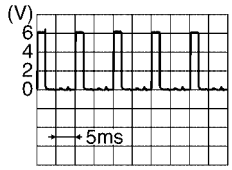 SKIA5291E
33	G/Y	Combination switch output 4	ON	Lighting, turn, wiper OFF Wiper dial position 4	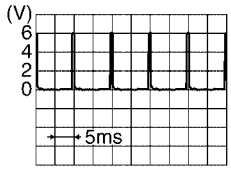 SKIA5292E
34	G/R	Combination switch output 3	ON	Lighting, turn, wiper OFF Wiper dial position 4	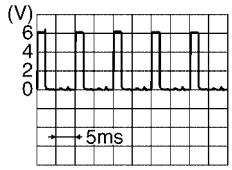 SKIA5291E

Terminal No.	Wire color	Signal name	Measuring condition		Reference value (Approx.)
			Ignition switch	Operation or condition	
35	G/B	Combination switch output 2	ON	Lighting, turn, wiper OFF Wiper dial position 4	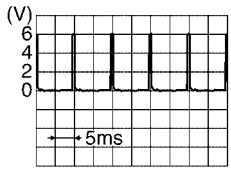 SKIA5292E
36	G/W	Combination switch output 1			
38	R	Ignition switch (ON)	ON	—	Battery voltage
39	L	CAN-H	—	—	—
40	P	CAN-L	—	—	—
67	B	Ground	ON	—	0V
70	W/B	Battery power supply (fusible link)	OFF	—	Battery voltage

Terminals and Reference Values for IPDM E/R

EKS008MT

Terminal No.	Wire color	Signal name	Measuring condition			Reference value (Approx.)
			Ignition switch	Operation or condition		
36	W/R	Front fog lamp (RH)	ON	Lighting switch must be in the 2ND position or AUTO position (LOW beam is ON) and the front fog lamp switch must be ON	OFF	0V
					ON	Battery voltage
37	W/R	Front fog lamp (LH)	ON	Lighting switch must be in the 2ND position or AUTO position (LOW beam is ON) and the front fog lamp switch must be ON	OFF	0V
					ON	Battery voltage
48	L	CAN-H	—	—		—
49	P	CAN-L	—	—		—

How to Proceed With Trouble Diagnosis

EKS008MU

1. Confirm the symptom or customer complaint.
2. Understand operation description and function description. Refer to LT-59, "System Description" .
3. Perform the Preliminary Check. Refer to LT-64, "Preliminary Check" .
4. Check symptom and repair or replace the cause of malfunction.
5. Do the front fog lamps operate normally? If YES: GO TO 6. If NO: GO TO 4.
6. Inspection End.

Preliminary Check

EKS008MV

CHECK POWER SUPPLY AND GROUND CIRCUIT

1. CHECK FUSES OR FUSIBLE LINK

Check for blown fuses or fusible link.

Unit	Power source	Fuse and fusible link No.
BCM	Battery	f
	Ignition switch ACC or ON position	6
	Ignition switch ON or START position	1
IPDM E/R	Battery	43

Refer to LT-61, "Wiring Diagram — F/FOG —" .

OK or NG

OK >> GO TO 2.

NG >> If fuse or fusible link is blown, be sure to eliminate cause of malfunction before installing new fuse or fusible link. Refer to PG-4, "POWER SUPPLY ROUTING CIRCUIT" .

2. CHECK POWER SUPPLY CIRCUIT

1. Disconnect BCM connectors.
2. Check voltage between BCM harness connector terminals and ground.

BCM (+) Connector	BCM (+) Terminal	(–)	Ignition switch position: OFF	ACC	ON
M18	11	Ground	0V	Battery voltage	Battery voltage
	38		0V	0V	Battery voltage
M20	70		Battery voltage	Battery voltage	Battery voltage

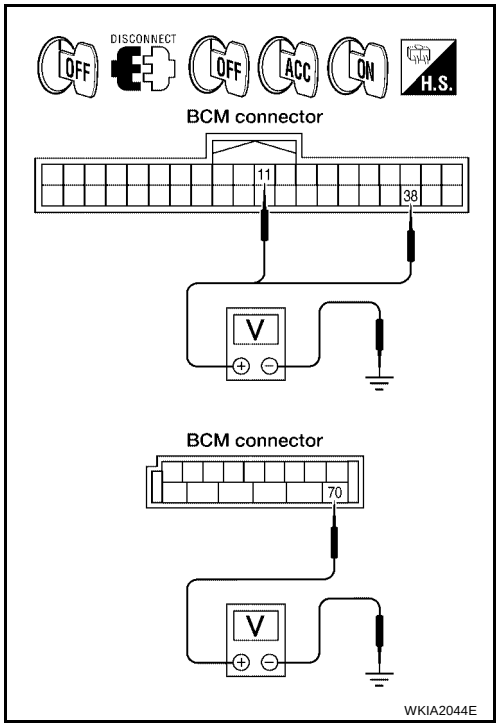

OK or NG

OK >> GO TO 3.

NG >> Check harness for open between BCM and fuse or fusible link.

3. CHECK GROUND CIRCUIT

Check continuity between BCM harness connector terminal and ground.

BCM Connector	BCM Terminal		Continuity
M20	67	Ground	Yes

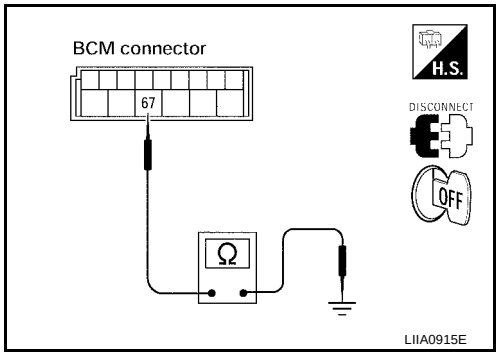

OK or NG

OK >> Inspection End.

NG >> Check ground circuit harness.

CONSULT-II Function

EKS008MW

Refer to LT-15, "CONSULT-II Function (BCM)" in HEADLAMP (FOR USA).
Refer to LT-17, "CONSULT-II Function (IPDM E/R)" in HEADLAMP (FOR USA).

Front Fog Lamps Do Not Illuminate (Both Sides)

EKS008MX

1. FOG LAMP ACTIVE TEST

1. Select "IPDM E/R" on CONSULT-II, and select "ACTIVE TEST" on "SELECT DIAG MODE" screen.
2. Select "LAMPS" on "SELECT TEST ITEM" screen.
3. Touch "FOG" on "ACTIVE TEST" screen.
4. Make sure fog lamps operate.

Fog lamps should operate.

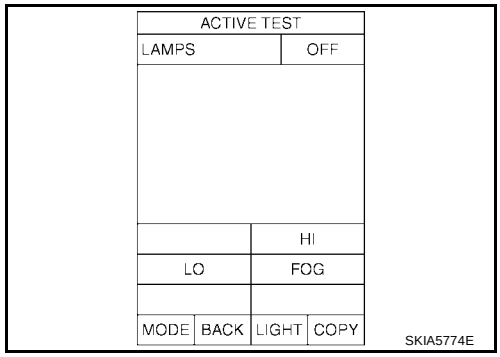

OK or NG

OK >> GO TO 2.
NG >> GO TO 4.

2. INSPECTION 1 BETWEEN COMBINATION SWITCH AND BCM

Select "BCM" on CONSULT-II. Carry out BCM self-diagnosis.

Displayed results of self-diagnosis

NO MALFUNCTION DETECTED>> GO TO 3.
CAN COMMUNICATION OR CAN SYSTEM>> Inspect the BCM CAN communications system. Refer to LAN-20, "CAN COMMUNICATION" .
OPEN DETECT 1 - 5>> Inspect combination switch system. Refer to LT-91, "Combination Switch Inspection" .

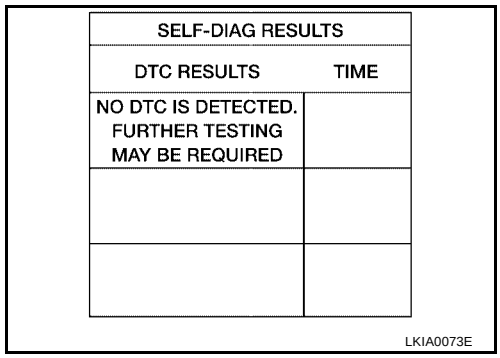

3. INSPECTION 2 BETWEEN COMBINATION SWITCH AND BCM

Select "BCM" on CONSULT-II. With "HEAD LAMP" data monitor, make sure "FR FOG SW" turns ON-OFF linked with operation of lighting switch.

When lighting switch is in FOG position : FR FOG SW ON

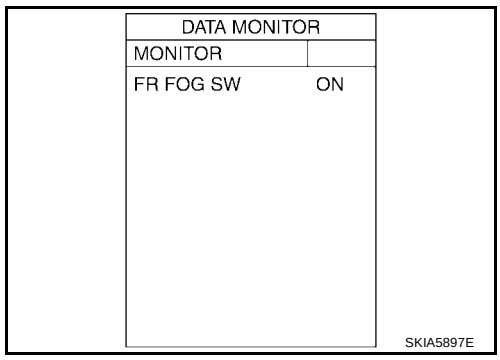

OK or NG

OK >> Replace BCM. Refer to BCS-20, "Removal and Installation of BCM" .
NG >> Replace lighting switch. Refer to LT-86, "Removal and Installation" .

4. IPDM E/R INSPECTION

1. Turn ignition switch OFF.
2. Disconnect front fog lamp left/right harness connector.
3. Start auto active test. Refer to PG-22, "Auto Active Test" .
4. When front fog lamp relay is operating, check voltage between left/right front fog lamp connector terminals and ground.

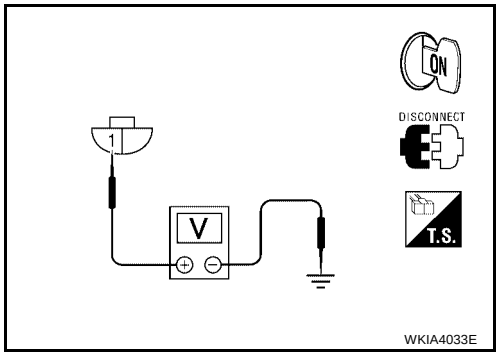

Terminals				Voltage (Approx.)
(+)			(–)	
Front fog lamp connector		Terminal		
RH	E101	1	Ground	Battery voltage
LH	E2			

OK or NG

OK >> Check front fog lamp bulbs and replace as necessary.
NG >> Replace IPDM E/R. Refer to PG-28, "Removal and Installation of IPDM E/R" .

Front Fog Lamp Does Not Illuminate (One Side)

EKS008MY

1. BULB INSPECTION

Inspect bulb of lamp which does not illuminate.

OK or NG

OK >> GO TO 2.
NG >> Replace front fog lamp bulb. Refer to LT-69, "Bulb Replacement" .

2. INSPECTION BETWEEN IPDM E/R AND FRONT FOG LAMPS

1. Disconnect IPDM E/R connector and inoperative front fog lamp connector.
2. Check continuity between harness connector terminals of IPDM E/R and harness connector terminal of front fog lamps.

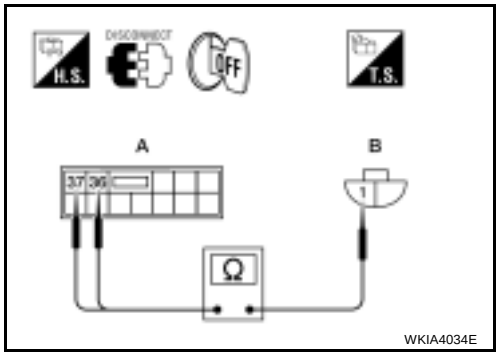

A		B			Continuity
IPDM E/R connector	Terminal	Front fog lamp connector		Terminal	
E124	36	RH	E101	1	Yes
	37	LH	E2		

OK or NG

OK >> Check ground circuit. If OK, replace IPDM E/R. Refer to PG-28, "Removal and Installation of IPDM E/R" . If NG, repair harness or connector.
NG >> Check for short circuits and open circuits in harness between IPDM E/R and front fog lamps.

Aiming Adjustment

EKS008MZ

ALL EXCEPT SE-R MODELS

The fog lamp is a semi-sealed beam type which uses a replaceable halogen bulb. Before performing aiming adjustment, make sure of the following.

- Keep all tires inflated to correct pressure.
- Place vehicle on level ground.
- See that vehicle is unloaded (except for full levels of coolant, engine oil and fuel, and spare tire, jack, and tools). Have the driver or equivalent weight placed in driver seat.

Adjust aiming in the vertical direction by turning the adjusting screw.

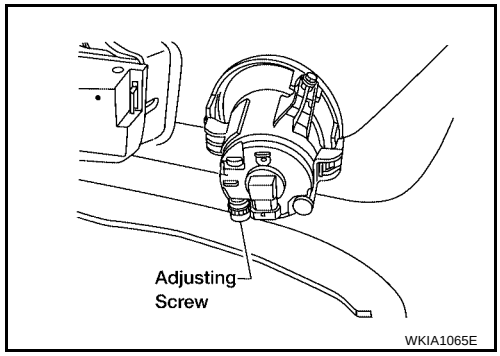

1. Set the distance between the screen and the center of the fog lamp lens as shown.
2. Turn front fog lamps ON.

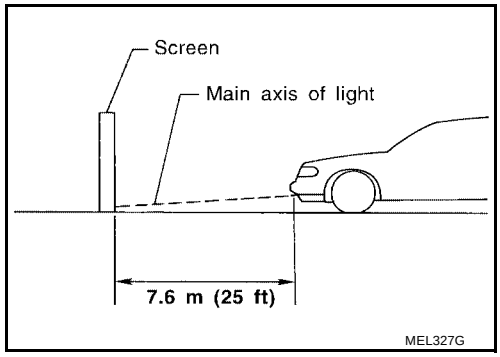

3. Adjust front fog lamps using adjusting screw so that the top edge of the high intensity zone is 100 mm (4 in) below the height of the fog lamp centers as shown.

- When performing adjustment, if necessary, cover the headlamps and opposite fog lamp.

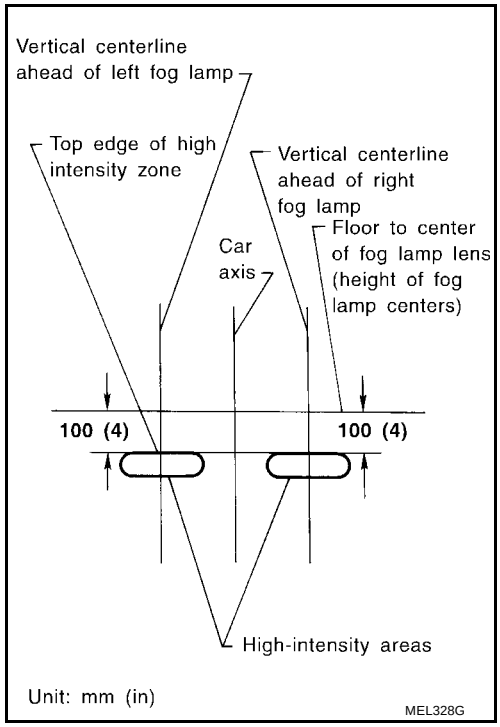

SE-R MODELS

The fog lamp is a semi-sealed beam type which uses a replaceable halogen bulb. Before performing aiming adjustment, make sure of the following.

- Keep all tires inflated to correct pressure.

- Place vehicle on level ground.
- See that vehicle is unloaded (except for full levels of coolant, engine oil and fuel, and spare tire, jack, and tools). Have the driver or equivalent weight placed in driver seat.

Adjust aiming in the vertical direction by turning the adjusting screw.

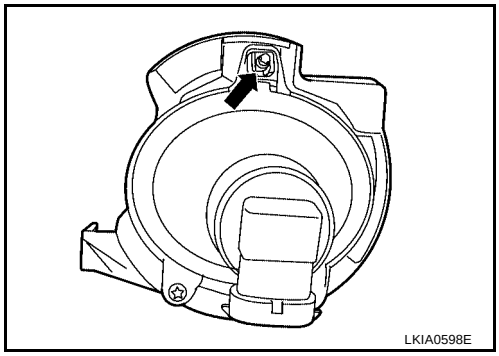

1. Set the distance between the screen and the center of the fog lamp lens as shown.
2. Turn front fog lamps ON.

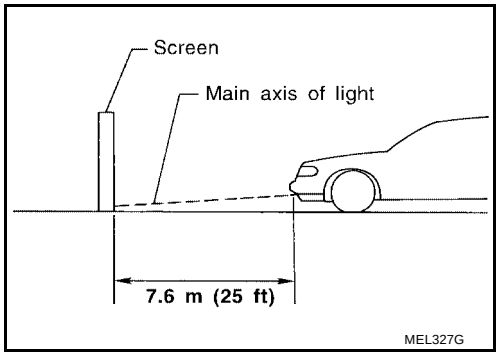

3. Adjust front fog lamps using adjusting screw so that the top edge of the high intensity zone is 100 mm (4 in) below the height of the fog lamp centers as shown.

- When performing adjustment, if necessary, cover the headlamps and opposite fog lamp.

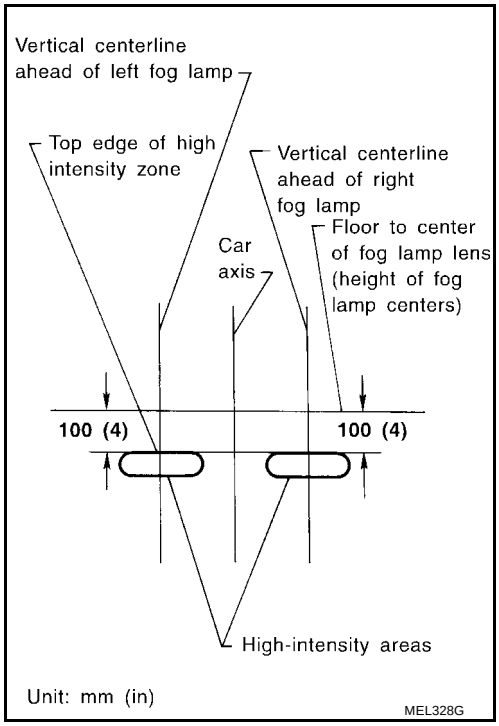

Bulb Replacement

EKS008N0

ALL EXCEPT SE-R MODELS

Removal

The fog lamp is a semi-sealed beam type which uses a replaceable halogen bulb.

CAUTION:

- **Do not touch the glass of bulb directly by hand. Keep grease and other oily substances away from it. Do not touch bulb by hand while it is lit or right after being turned off. Burning may result.**
- **Do not leave bulb out of fog lamp reflector for a long time because dust, moisture smoke, etc. may affect the performance of fog lamp. When replacing bulb, be sure to replace it with new one.**

1. Position the front fender protector aside. Refer to EI-20, "Removal and Installation" .
2. Disconnect electrical connector.
3. Turn the bulb counterclockwise to remove it.

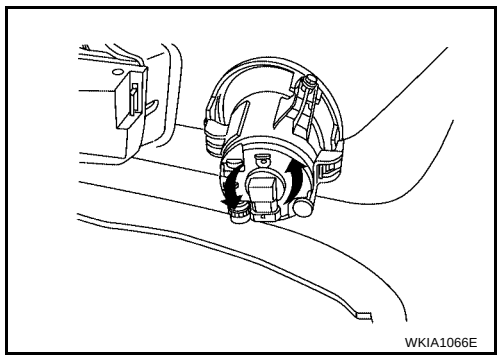
WKIA1066E

Installation

Installation is in the reverse order of removal.

SE-R MODELS

Removal

The fog lamp is a semi-sealed beam type which uses a replaceable halogen bulb.

CAUTION:

- **Do not touch the glass of bulb directly by hand. Keep grease and other oily substances away from it. Do not touch bulb by hand while it is lit or right after being turned off. Burning may result.**
- **Do not leave bulb out of fog lamp reflector for a long time because dust, moisture smoke, etc. may affect the performance of fog lamp. When replacing bulb, be sure to replace it with new one.**

1. Remove the engine undercover using power tools.
2. Disconnect electrical connector.
3. Turn the bulb counterclockwise to remove it.

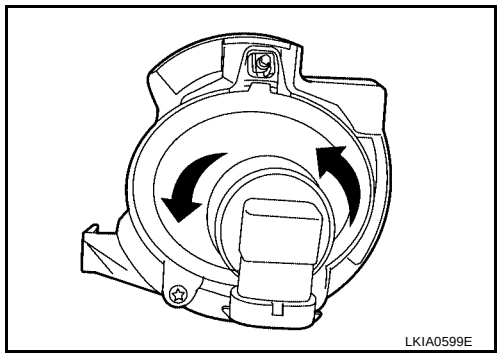
LKIA0599E

Installation

Installation is in the reverse order of removal.

Removal and Installation

EKS008N1

ALL EXCEPT SE-R MODELS

Removal

The fog lamp is a semi-sealed beam type which uses a replaceable halogen bulb.

CAUTION:

- **Do not leave fog lamp assembly without bulb for a long period of time. Dust, moisture, smoke, etc. entering the fog lamp body may affect the performance. Remove the bulb from the headlamp assembly just before replacement bulb is installed.**
- **Grasp only the plastic base when handling the bulb. Never touch the glass envelope. Touching the glass could significantly affect the bulb life and/or fog lamp performance.**

1. Remove inner splash shield.
2. Position the fender protector aside. Refer to EI-20, "Removal and Installation" .
3. Disconnect electrical connector.
4. Remove bolt from top of fog lamp.
5. Remove fog lamp.

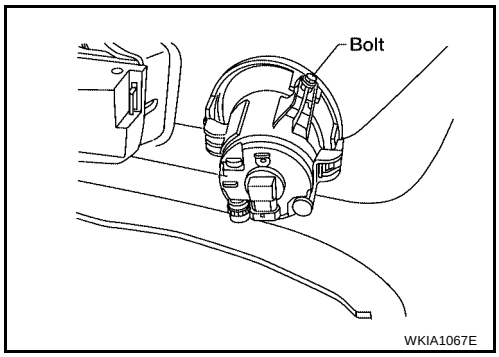

Installation

Installation is in the reverse order of removal.
Confirm fog lamp aiming adjustment. Refer to LT-67, "Aiming Adjustment" .

SE-R MODELS

Removal

1. Remove the engine under cover using power tools.
2. Disconnect electrical connector.
3. Remove the fog lamp bolts from top and bottom of fog lamp.
4. Remove fog lamp.

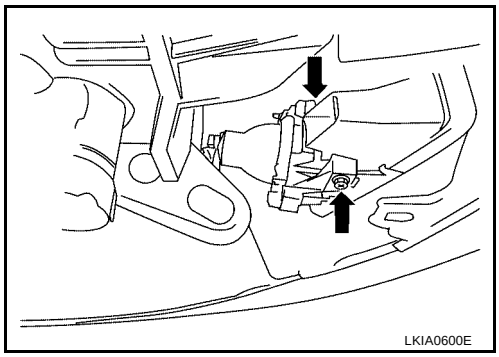

Installation

Installation is in the reverse order of removal.
Confirm fog lamp aiming adjustment. Refer to LT-67, "Aiming Adjustment" .

TURN SIGNAL AND HAZARD WARNING LAMPS

PFP:26120

Component Parts and Harness Connector Location

EKS00A86

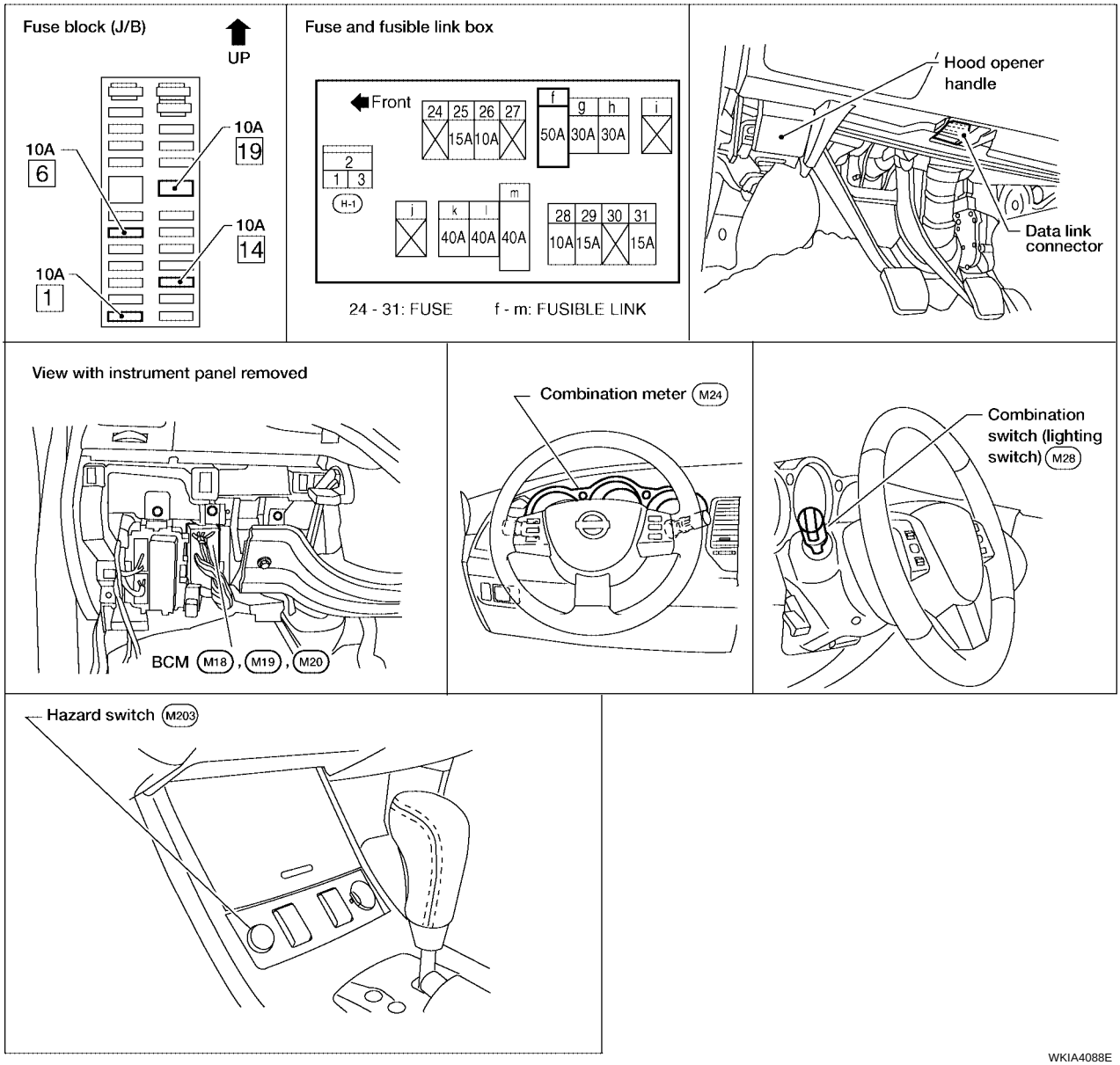

WKIA4088E

System Description

EKS008N2

TURN SIGNAL OPERATION

When the ignition switch is in the ON or START position, power is supplied

- through 10A fuse [No. 1, located in the fuse block (J/B)]
- to BCM (body control module) terminal 38, and
- through 10A fuse [No. 14, located in the fuse block (J/B)]
- to combination meter terminal 22.

Ground is supplied

- to BCM terminal 67 and
- to combination meter terminals 23, 25 and 28
- through grounds F14, M57 and M61.

LH Turn

When the turn signal switch (combination switch) is moved to the L position, the BCM receives input requesting the left turn signals to flash. The BCM then supplies power

- to front turn signal lamp LH terminal 3
- to rear turn signal lamp LH (part of the rear combination lamp LH) terminal 3.

Ground is supplied

- to front turn signal lamp LH terminal 2
- through grounds E15 and E24, and
- to rear turn signal lamp LH terminal 5
- through grounds B7 and B19.

The BCM sends a signal to combination meter across the CAN communication lines. This input is processed by the CPU (central processing unit) of the combination meter, which in turn supplies ground to the left turn signal indicator lamp.
With power and ground supplied, the BCM controls the flashing of the LH turn signal lamps.

RH Turn

When the turn signal switch (combination switch) is moved to the R position, the BCM receives input requesting the right turn signals to flash. The BCM then supplies power

- to front turn signal lamp RH terminal 3
- to rear turn signal lamp RH (part of the rear combination lamp RH) terminal 3.

Ground is supplied

- to front turn signal lamp RH terminal 2
- through grounds E15 and E24, and
- to rear turn signal lamp RH terminal 5
- through grounds B7 and B19.

The BCM sends a signal to combination meter across the CAN communication lines. This input is processed by the CPU of the combination meter, which in turn supplies ground to the right turn signal indicator lamp.
With power and ground supplied, the BCM controls the flashing of the RH turn signal lamps.

HAZARD LAMP OPERATION

Power is supplied at all times

- through 50A fusible link (letter **f** , located in the fuse and fusible link box)
- to BCM terminal 70, and
- through 10A fuse [No. 19, located in the fuse block (J/B)]
- to combination meter terminal 21.

Ground is supplied

- to hazard switch terminal 3
- to BCM terminal 67
- to combination meter terminals 23, 25 and 28
- through grounds F14, M57 and M61.

When the hazard switch is depressed, ground is supplied

- to BCM terminal 29
- through hazard lamp switch terminal 2.

The BCM then supplies power

- to front turn signal lamp LH terminal 3
- to front turn signal lamp RH terminal 3
- to rear turn signal lamp LH terminal 3
- to rear turn signal lamp RH terminal 3.

Ground is supplied

- to front turn signal lamp LH terminal 2
- to front turn signal lamp RH terminal 2
- through grounds E15 and E24, and
- to rear turn signal lamp LH terminal 5
- to rear turn signal lamp RH terminal 5

- through grounds B7 and B19.

The BCM sends a signal to combination meter across the CAN communication lines. This input is processed by the CPU of the combination meter, which in turn supplies ground to the left and right turn signal indicator lamps.
With power and ground supplied, the BCM controls the flashing of the hazard warning lamps.

REMOTE KEYLESS ENTRY SYSTEM OPERATION

Power is supplied at all times

- through 50A fusible link (letter **f** , located in the fuse and fusible link box)
- to BCM terminal 70, and
- through 10A fuse [No. 19, located in the fuse block (J/B)]
- to combination meter terminal 21.

Ground is supplied

- to BCM terminal 67 and
- to combination meter terminals 23, 25 and 28
- through grounds F14, M57 and M61.

When the remote keyless entry system is triggered by input from the keyfob, the BCM supplies power

- to front turn signal lamp LH terminal 3
- to front turn signal lamp RH terminal 3
- to rear turn signal lamp LH terminal 3
- to rear turn signal lamp RH terminal 3.

Ground is supplied

- to front turn signal lamp LH terminal 2
- to front turn signal lamp RH terminal 2
- through grounds E15 and E24, and
- to rear turn signal lamp LH terminal 5
- to rear turn signal lamp RH terminal 5
- through grounds B7 and B19.

The BCM sends a signal to combination meter across the CAN communication lines. This input is processed by the CPU of the combination meter, which in turn supplies ground to the left and right turn signal indicator lamps.
With power and ground supplied, the BCM controls the flashing of the hazard warning lamps when keyfob is used to activate the remote keyless entry system.

CAN Communication System Description

EKS008N3

Refer to LAN-20, "CAN COMMUNICATION" .

Schematic

EKS008N4

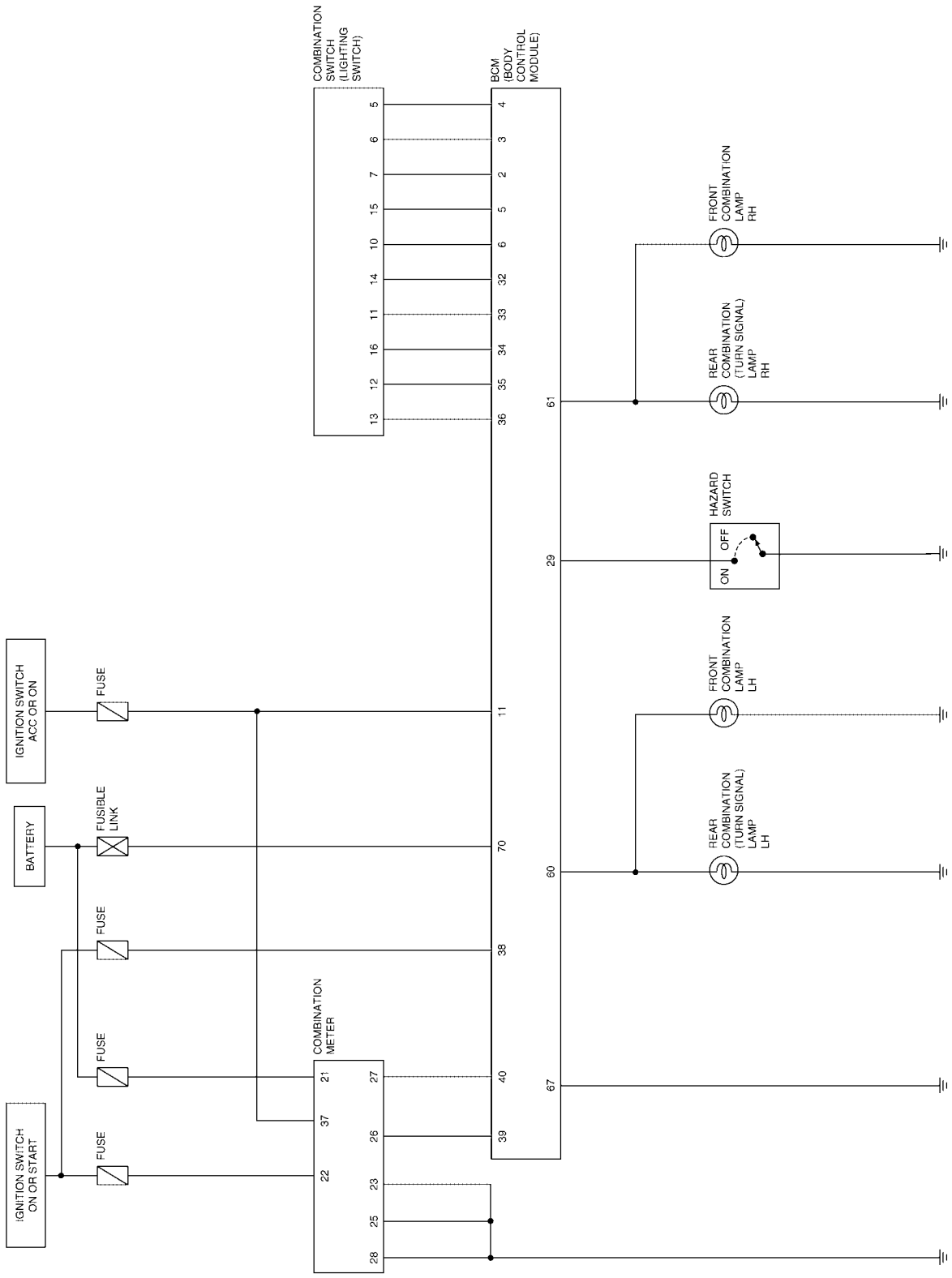

WKWA1370E

Wiring Diagram — TURN —

EKS008N5

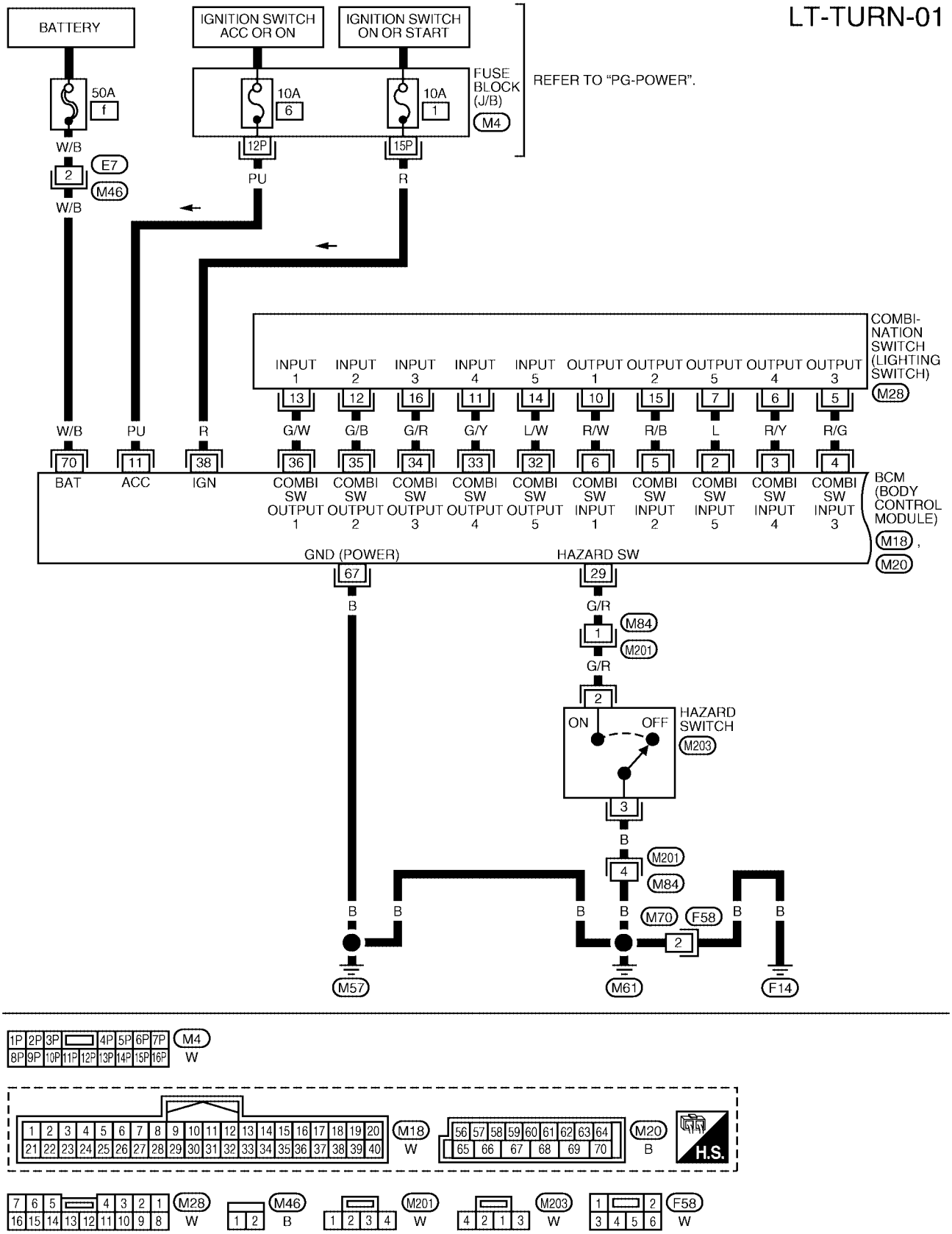

WKWA1537E

LT-TURN-02

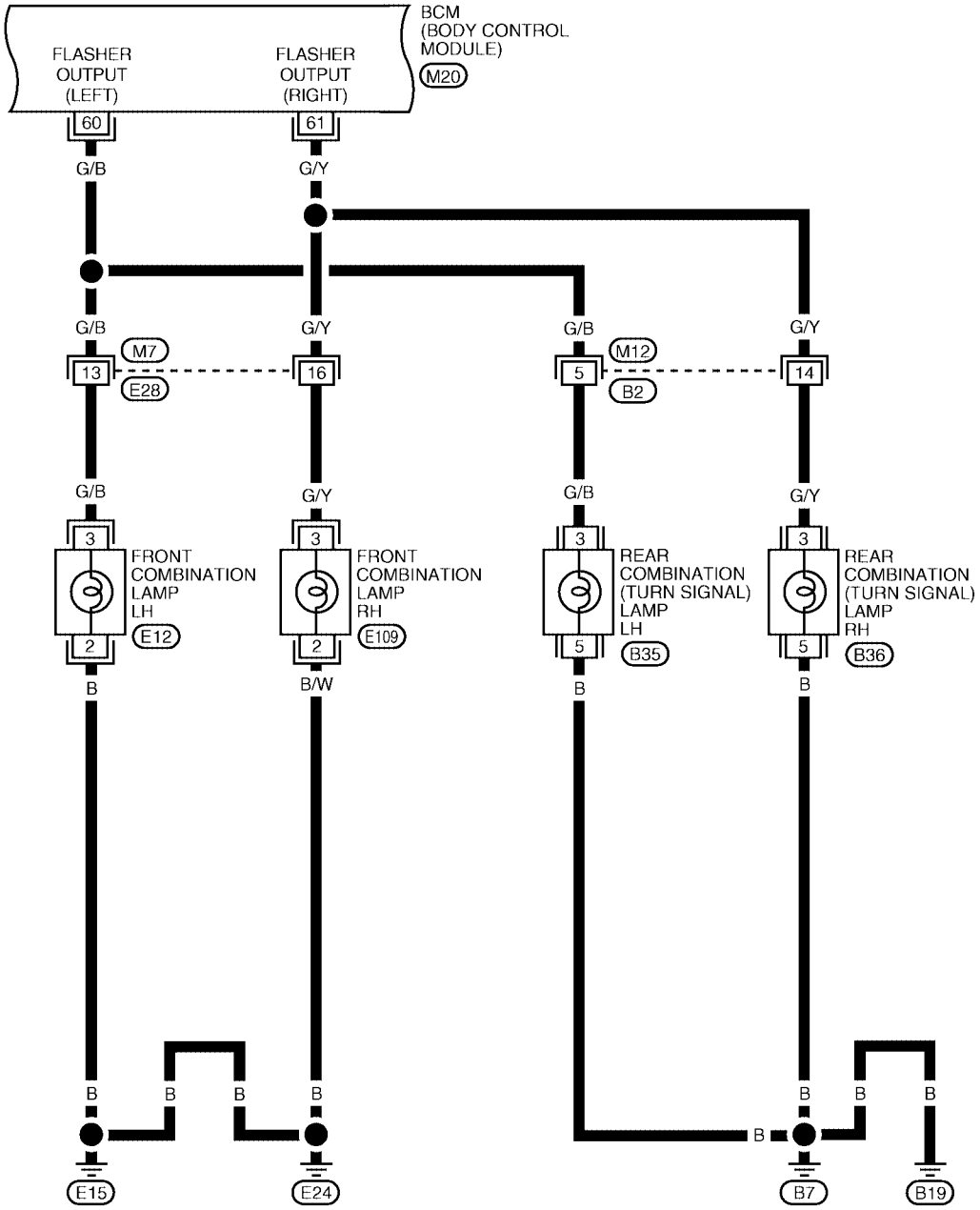

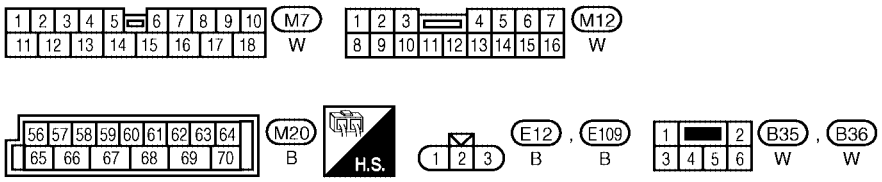

WKWA1538E

LT-TURN-03

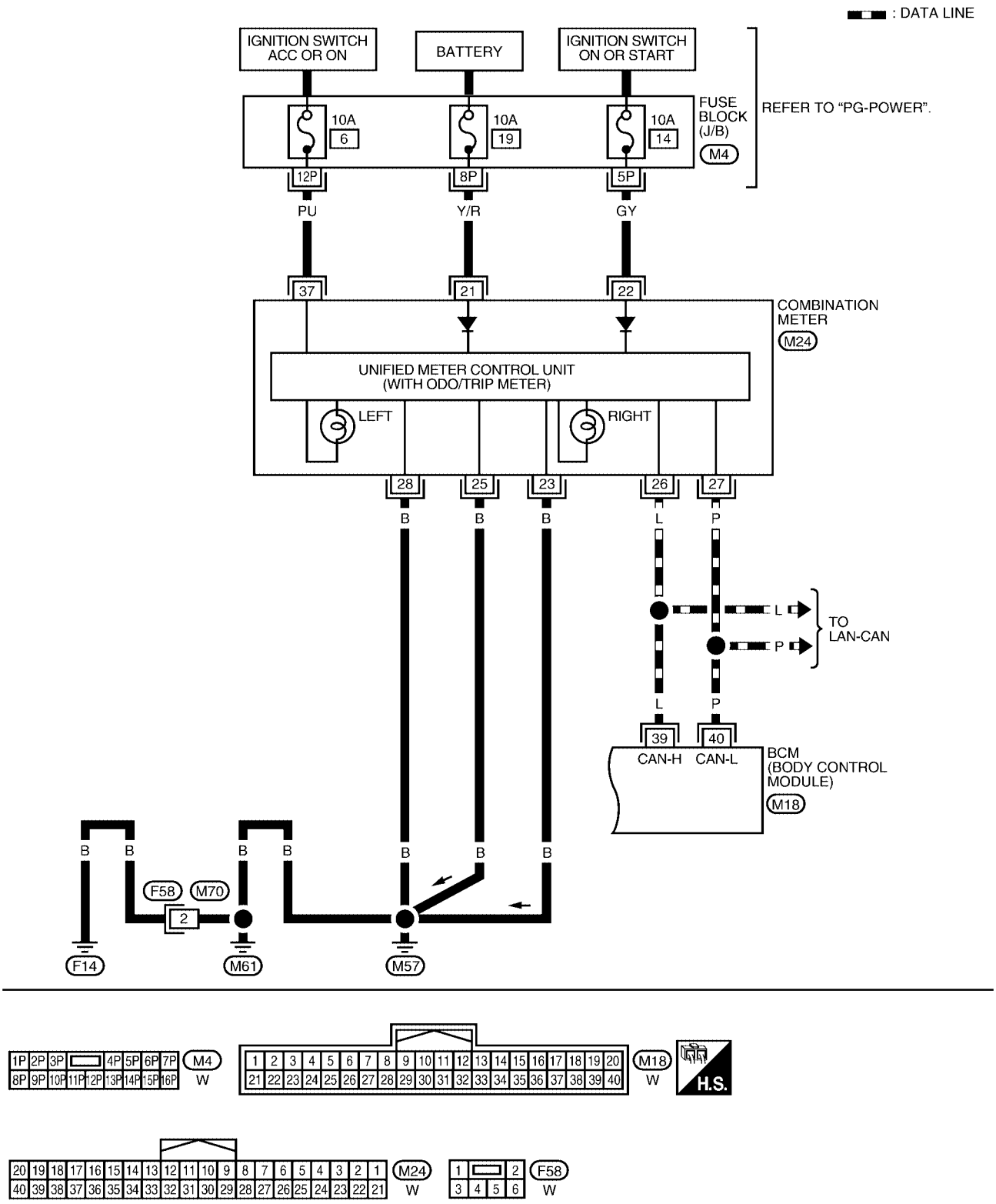

WKWA2972E

Terminals and Reference Values for BCM

EKS008N6

Terminal No.	Wire color	Signal name	Measuring condition			Reference value (Approx.)
			Ignition switch	Operation or condition		
2	L	Combination switch input 5	ON	Lighting, turn, wiper OFF Wiper dial position 4		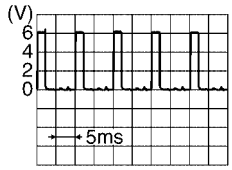 SKIA5291E
3	R/Y	Combination switch input 4	ON	Lighting, turn, wiper OFF Wiper dial position 4		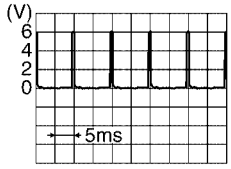 SKIA5292E
4	R/G	Combination switch input 3	ON	Lighting, turn, wiper OFF Wiper dial position 4		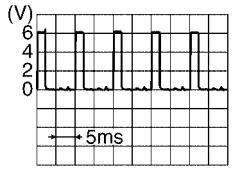 SKIA5291E
5	R/B	Combination switch input 2	ON	Lighting, turn, wiper OFF Wiper dial position 4		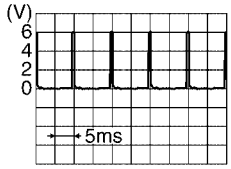 SKIA5292E
6	R/W	Combination switch input 1				
11	PU	Ignition switch (ACC)	ACC	—		Battery voltage
29	G/R	Hazard switch signal	OFF	Hazard switch	ON	0V
					OFF	5V
32	L/W	Combination switch output 5	ON	Lighting, turn, wiper OFF Wiper dial position 4		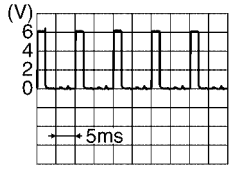 SKIA5291E
33	G/Y	Combination switch output 4	ON	Lighting, turn, wiper OFF Wiper dial position 4		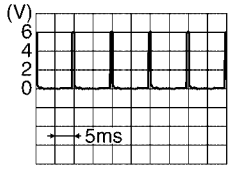 SKIA5292E

Terminal No.	Wire color	Signal name	Measuring condition		Reference value (Approx.)
			Ignition switch	Operation or condition	
34	G/R	Combination switch output 3	ON	Lighting, turn, wiper OFF Wiper dial position 4	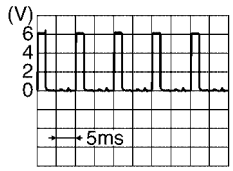 SKIA5291E
35	G/B	Combination switch output 2	ON	Lighting, turn, wiper OFF Wiper dial position 4	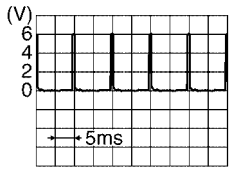 SKIA5292E
36	G/W	Combination switch output 1			
38	R	Ignition switch (ON)	ON	—	Battery voltage
39	L	CAN-H	—	—	—
40	P	CAN-L	—	—	—
60	G/B	Flasher output (left)	ON	Combination switch: Turn left ON	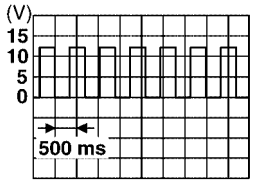 SKIA3009J
61	G/Y	Flasher output (right)	ON	Combination switch: Turn right ON	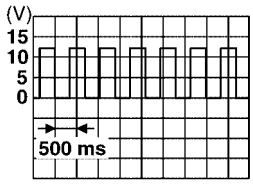 SKIA3009J
67	B	Ground	ON	—	0V
70	W/B	Battery power supply (fusible link)	OFF	—	Battery voltage

How to Proceed With Trouble Diagnosis

EKS008N7

1. Confirm the symptom or customer complaint.
2. Understand operation description and function description. Refer to LT-71, "System Description" .
3. Perform the Preliminary Check. Refer to LT-80, "Preliminary Check" .
4. Check symptom and repair or replace the cause of malfunction.
5. Do the turn signal and hazard warning lamps operate normally? If YES: GO TO 6. If NO: GO TO 4.
6. Inspection End.

Preliminary Check

EKS008N8

CHECK POWER SUPPLY AND GROUND CIRCUIT

1. CHECK FUSES OR FUSIBLE LINK

Check for blown fuses or fusible link.

Unit	Power source	Fuse and fusible link No.
BCM	Battery	f
	Ignition switch ACC or ON	6
	Ignition switch ON or START position	1

Refer to LT-75, "Wiring Diagram — TURN —" .

OK or NG

OK >> GO TO 2.

NG >> If fuse or fusible link is blown, be sure to eliminate cause of malfunction before installing new fuse or fusible link. Refer to PG-4, "POWER SUPPLY ROUTING CIRCUIT" .

2. CHECK POWER SUPPLY CIRCUIT

1. Disconnect BCM connectors.
2. Check voltage between BCM harness connector terminals and ground.

BCM (+) Connector	BCM (+) Terminal	(–)	Ignition switch position: OFF	ACC	ON
M18	11	Ground	0V	Battery voltage	Battery voltage
	38		0V	0V	Battery voltage
M20	70		Battery voltage	Battery voltage	Battery voltage

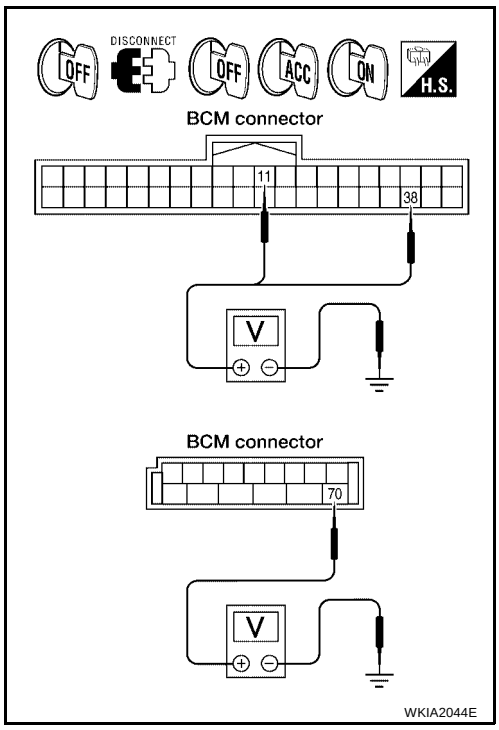

OK or NG

OK >> GO TO 3.

NG >> Check harness for open between BCM and fuse or fusible link.

3. CHECK GROUND CIRCUIT

Check continuity between BCM harness connector terminal and ground.

BCM Connector	BCM Terminal		Continuity
M20	67	Ground	Yes

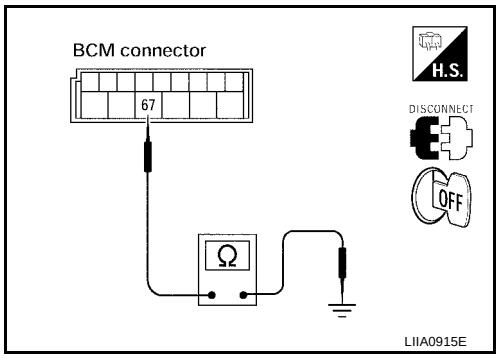

OK or NG

OK >> Inspection End.

NG >> Check ground circuit harness.

CONSULT-II Function (BCM)

EKS008N9

CONSULT-II can display each diagnostic item using the diagnostic test modes shown following.

BCM diagnostic test item	Diagnostic mode	Description
Inspection by part	WORK SUPPORT	Supports inspections and adjustments. Commands are transmitted to the BCM for setting the status suitable for required operation, input/output signals are received from the BCM and received data is displayed.
	DATA MONITOR	Displays BCM input/output data in real time.
	ACTIVE TEST	Operation of electrical loads can be checked by sending drive signal to them.
	SELF-DIAG RESULTS	Displays BCM self-diagnosis results.
	CAN DIAG SUPPORT MNTR	The result of transmit/receive diagnosis of CAN communication can be read.
	ECU PART NUMBER	BCM part number can be read.
	CONFIGURATION	Performs BCM configuration read/write functions.

CONSULT-II OPERATION

CAUTION:

If CONSULT-II is used with no connection of CONSULT-II CONVERTER, malfunctions might be detected in self-diagnosis depending on control unit which carries out CAN communication.

1. With the ignition switch OFF, connect CONSULT-II and CONSULT-II CONVERTER to the data link connector, then turn ignition switch ON.

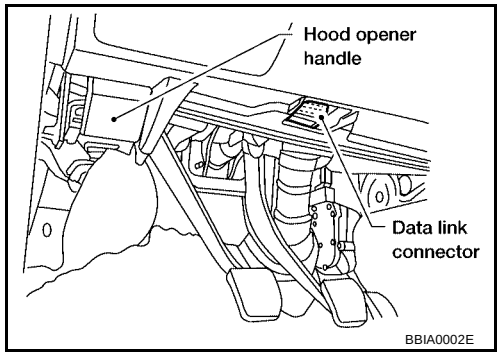

2. Touch "START (NISSAN BASED VHCL)".

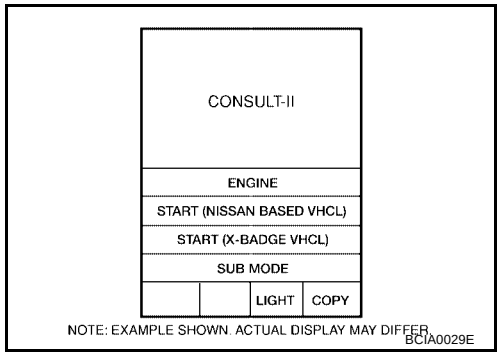

3. Touch "BCM" on "SELECT SYSTEM" screen.
   If "BCM" is not indicated, go to GI-39, "Consult-II Data Link Connector (DLC) Circuit" .

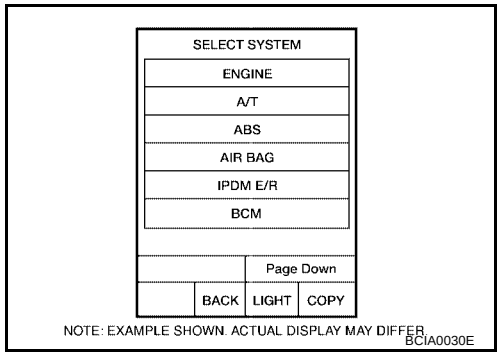

4. Select the desired part to be diagnosed on the "SELECT TEST ITEM" screen.

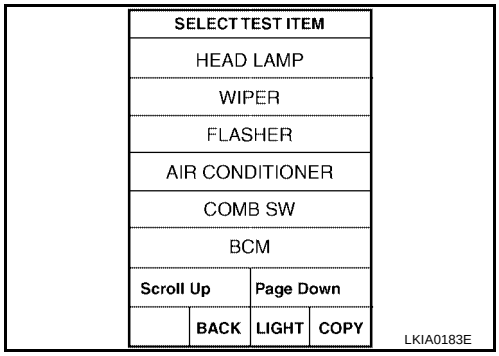

DATA MONITOR

Operation Procedure

1. Touch "FLASHER" on "SELECT TEST ITEM" screen.
2. Touch "DATA MONITOR" on "SELECT DIAG MODE" screen.
3. Touch either "ALL SIGNALS" or "SELECTION FROM MENU" on the "SELECT MONITOR ITEM" screen.

ALL SIGNALS	Monitors all the signals.
SELECTION FROM MENU	Selects and monitors the individual signal.

4. Touch "START".
5. When "SELECTION FROM MENU" is selected, touch items to be monitored. When "ALL SIGNALS" is selected, all the items will be monitored.
6. Touch "RECORD" while monitoring, then the status of the monitored item can be recorded. To stop recording, touch "STOP".

Display Item List

Monitor item name "OPERATION OR UNIT"		Contents
IGN ON SW	"ON/OFF"	Displays "IGN position (ON)/OFF, ACC position (OFF)" judged from the ignition switch signal.
HAZARD SW	"ON/OFF"	Displays "Hazard ON (ON)/Hazard OFF (OFF)" status, determined from hazard switch signal.
TURN SIGNAL R	"ON/OFF"	Displays "Turn right (ON)/Other (OFF)" status, determined from lighting switch signal.
TURN SIGNAL L	"ON/OFF"	Displays "Turn left (ON)/Other (OFF)" status, determined from lighting switch signal.

ACTIVE TEST

Operation Procedure

1. Touch "FLASHER" on "SELECT TEST ITEM" screen.
2. Touch "ACTIVE TEST" on "SELECT DIAG MODE" screen.
3. Touch item to be tested and check operation of the selected item.
4. During the operation check, touching "BACK" deactivates the operation.

Display Item List

Test item	Description
FLASHER (RH)	Turn signal lamp (right) can be operated by any ON-OFF operations.
FLASHER (LH)	Turn signal lamp (left) can be operated by any ON-OFF operations.

Turn Signal Lamp Does Not Operate

EKS008NA

1. BULB INSPECTION

Check each turn signal lamp bulb to make sure correct bulbs are installed. Refer to LT-144, "Exterior Lamp" .

OK or NG

OK >> GO TO 2.
NG >> Replace bulb. Refer to LT-29, "FRONT TURN SIGNAL LAMP" or LT-113, "TAIL LAMP" .

2. INSPECTION 1 BETWEEN COMBINATION SWITCH AND BCM

Select "BCM" on CONSULT-II. Carry out BCM self-diagnosis.

Displayed results of self-diagnosis

Diagnosis system 1 - 5>> Combination switch system malfunction. Refer to LT-91, "Combination Switch Inspection" .

No malfunction detected>> GO TO 3.

SELF-DIAG RESULTS	
DTC RESULTS	TIME
NO DTC IS DETECTED. FURTHER TESTING MAY BE REQUIRED	

LKIA0073E

3. INSPECTION 2 BETWEEN COMBINATION SWITCH AND BCM

Select "BCM" on CONSULT-II. With "FLASHER" data monitor, check that "TURN SIGNAL R" and "TURN SIGNAL L" turn ON-OFF according to operation of turn signal switch.

OK or NG

OK >> GO TO 4.

NG >> Replace lighting switch. Refer to LT-86, "Removal and Installation" .

DATA MONITOR	
MONITOR	
IGN ON SW	ON
HAZARD SW	ON
TURN SIGNAL R	OFF
TURN SIGNAL L	OFF

LKIA0083E

4. INSPECTION 1 BETWEEN BCM AND TURN SIGNAL LAMPS

1. Select "BCM" on CONSULT-II. Select "FLASHER" active test.
2. Check that "FLASHER RH" and "FLASHER LH" operate.

OK or NG

OK >> Replace BCM. Refer to BCS-20, "Removal and Installation of BCM" .

NG >> GO TO 5.

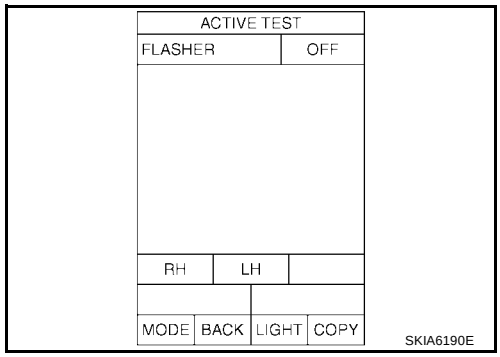

SKIA6190E

5. INSPECTION 2 BETWEEN BCM AND TURN SIGNAL LAMPS

1. Disconnect BCM connector and all turn signal lamp connectors.
2. Check continuity between BCM harness connector terminals and ground.

BCM				Continuity
Connector		Terminal		
LH	M20	60	Ground	No
RH		61		

OK or NG

OK >> Replace BCM. Refer to BCS-20, "Removal and Installation of BCM" .

NG >> Check for short circuit in harnesses between BCM and each turn signal and repair as necessary.

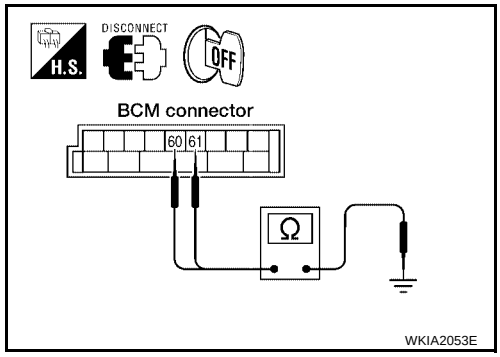

WKIA2053E

Hazard Warning Lamp Does Not Operate But Turn Signal Lamps Operate

EKS008NB

1. CHECK BULB

Make sure bulb standard of each turn signal lamp is correct. Refer to LT-144, "Exterior Lamp" .

OK or NG

OK >> GO TO 2.

NG >> Replace turn signal lamp bulb. Refer to LT-29, "FRONT TURN SIGNAL LAMP" or LT-113, "TAIL LAMP" .

2. CHECK HAZARD SWITCH INPUT SIGNAL

With CONSULT-II

Select "BCM" on CONSULT-II. With "FLASHER" data monitor, make sure "HAZARD SW" turns ON-OFF linked with operation of hazard switch.

When hazard switch is in ON position : HAZARD SW ON

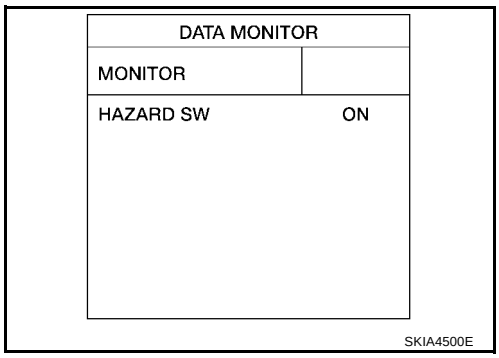

Without CONSULT-II

Check voltage between BCM harness connector terminal 29 and ground.

BCM (+) Connector	BCM (+) Terminal	(–)	Condition	Voltage (Approx.)
M18	29	Ground	Hazard switch is ON	0V
			Hazard switch is OFF	5V

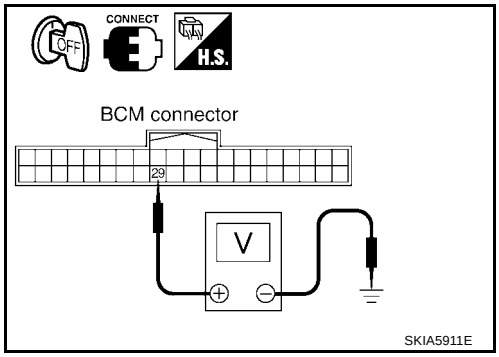

OK or NG

OK >> Replace BCM. Refer to BCS-20, "Removal and Installation of BCM" .

NG >> GO TO 3.

3. CHECK HAZARD SWITCH CIRCUIT

1. Turn ignition switch OFF.
2. Disconnect BCM connector and hazard switch connector.
3. Check continuity between BCM harness connector M18 terminal 29 and hazard switch harness connector M203 terminal 2.

29 - 2 : Continuity should exist.

OK or NG

OK >> GO TO 4.

NG >> Repair harness or connector.

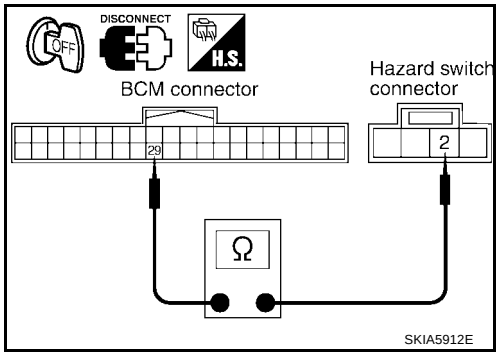

4. CHECK GROUND

Check continuity between hazard switch harness connector M203 terminal 1 and ground.

1 - Ground : Continuity should exist.

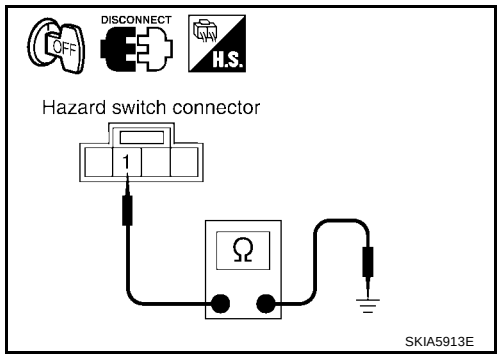

OK or NG

OK >> GO TO 5.
NG >> Repair harness or connector.

5. CHECK HAZARD SWITCH

Check continuity of hazard switch.

Hazard switch Terminal		Condition	Continuity
1	2	Hazard switch is ON	Yes
		Hazard switch is OFF	No

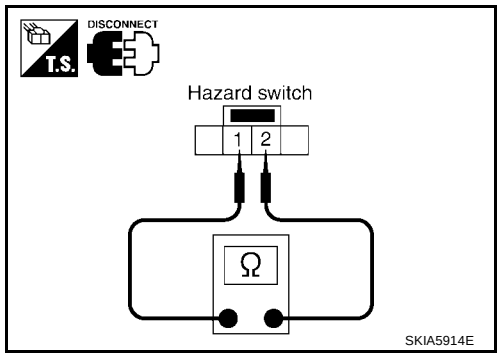

OK or NG

OK >> Replace BCM if turn signal lamps does not work after setting the connector again. Refer to BCS-20, "Removal and Installation of BCM" .
NG >> Replace hazard switch. Refer to LT-87, "Removal and Installation" .

Turn Signal Indicator Lamp Does Not Operate

EKS008NC

1. CAN COMMUNICATION INSPECTION

Check CAN communication. Refer to LAN-20, "CAN COMMUNICATION" .

OK or NG

OK >> Replace combination meter. Refer to IP-13, "COMBINATION METER" .
NG >> Repair as necessary.

Bulb Replacement

EKS008ND

FRONT TURN SIGNAL LAMP

Refer to LT-29, "FRONT TURN SIGNAL LAMP" .

REAR TURN SIGNAL LAMP

Refer to LT-113, "TAIL LAMP" .

Removal and Installation

EKS008NE

FRONT TURN SIGNAL LAMP

Refer to LT-29, "Removal and Installation" .

REAR TURN SIGNAL LAMP

Refer to LT-113, "REAR COMBINATION LAMP" .

LIGHTING AND TURN SIGNAL SWITCH

PFP:25540

Removal and Installation

EKS008NF

REMOVAL

1. Remove the steering column cover. Refer to PS-10, "STEERING COLUMN"
2. Pinch tabs and slide out lighting and turn signal switch (combination switch).

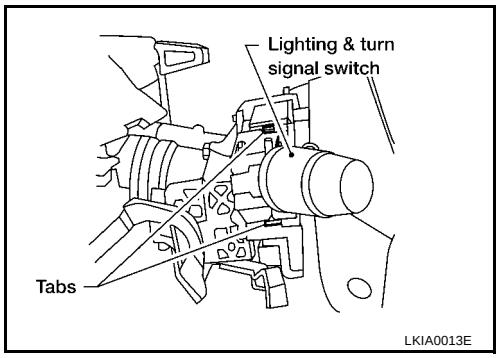

Installation

Installation is in the reverse order of removal.

Switch Circuit Inspection

EKS008NG

Refer to LT-91, "Combination Switch Inspection" .

HAZARD SWITCH

PFP:25290

Removal and Installation

EKS008NH

REMOVAL

1. Remove front air control finisher. Refer to IP-10, "INSTRUMENT PANEL ASSEMBLY" .
2. Remove A/T finisher or M/T finisher. Refer to IP-14, "A/T FINISHER" or IP-14, "M/T FINISHER" .
3. Remove hazard switch screws.
4. Remove hazard switch.

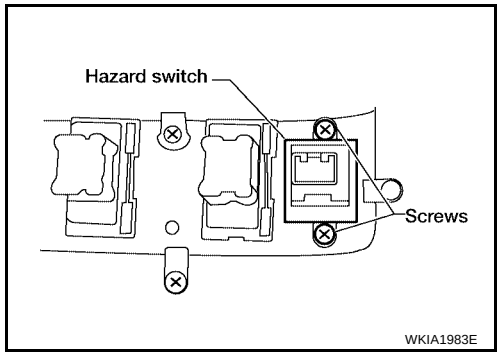

Installation

Installation is in the reverse order of removal.

COMBINATION SWITCH

PFP:25567

Wiring Diagram — COMBSW —

EKS008NI

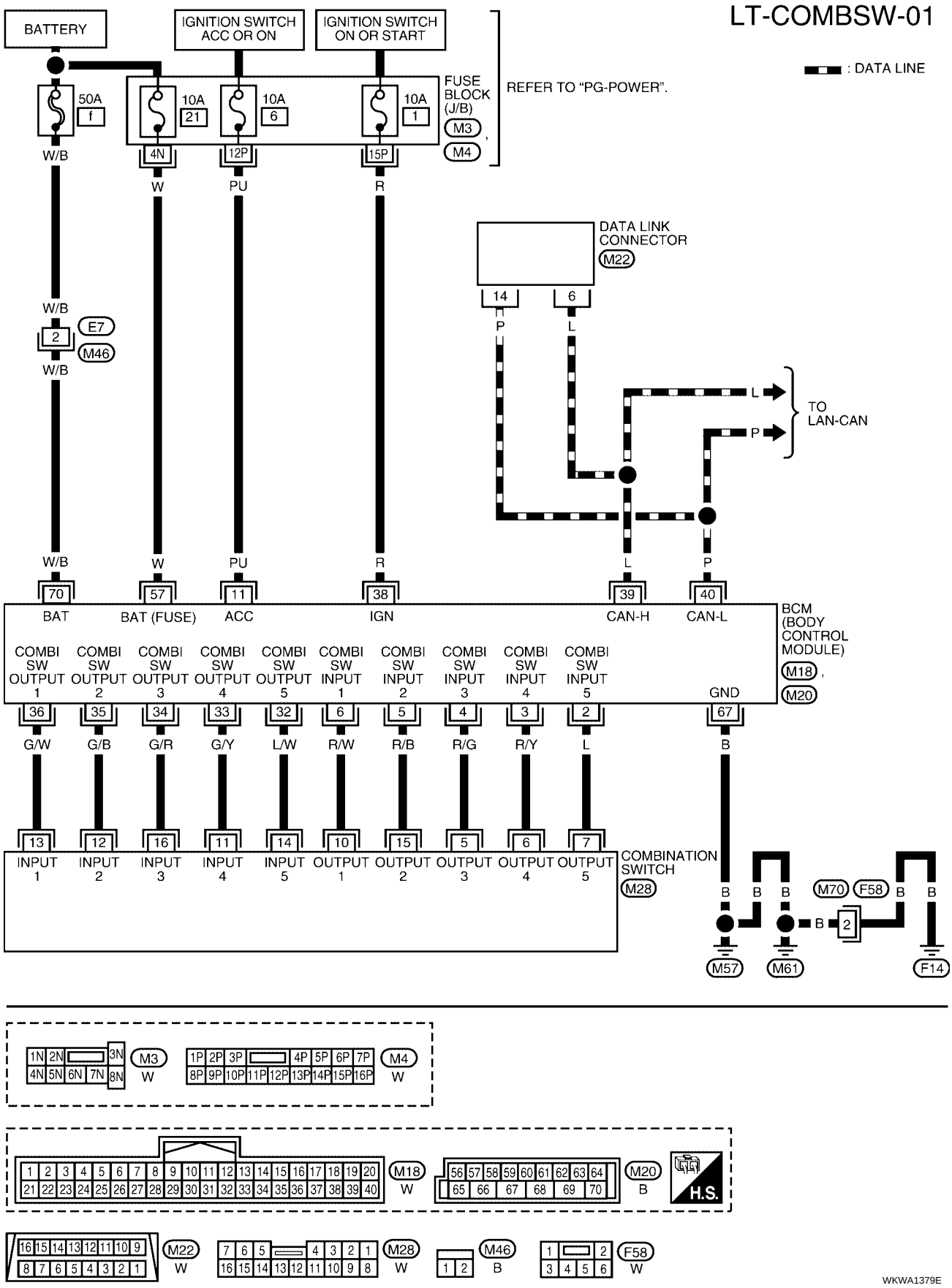

Combination Switch Reading Function

EKS008NJ

Refer to BCS-3, "COMBINATION SWITCH READING FUNCTION" .

CONSULT-II Function (BCM)

EKS008NK

CONSULT-II can display each diagnostic item using the diagnostic test modes shown following.

BCM diagnostic test item	Diagnostic mode	Description
Inspection by part	WORK SUPPORT	Supports inspections and adjustments. Commands are transmitted to the BCM for setting the status suitable for required operation, input/output signals are received from the BCM and received data is displayed.
	DATA MONITOR	Displays BCM input/output data in real time.
	ACTIVE TEST	Operation of electrical loads can be checked by sending drive signal to them.
	SELF-DIAG RESULTS	Displays BCM self-diagnosis results.
	CAN DIAG SUPPORT MNTR	The result of transmit/receive diagnosis of CAN communication can be read.
	ECU PART NUMBER	BCM part number can be read.
	CONFIGURATION	Performs BCM configuration read/write functions.

CONSULT-II OPERATION

CAUTION:

If CONSULT-II is used with no connection of CONSULT-II CONVERTER, malfunctions might be detected in self-diagnosis depending on control unit which carries out CAN communication.

1. With the ignition switch OFF, connect CONSULT-II and CONSULT-II CONVERTER to the data link connector, then turn ignition switch ON.

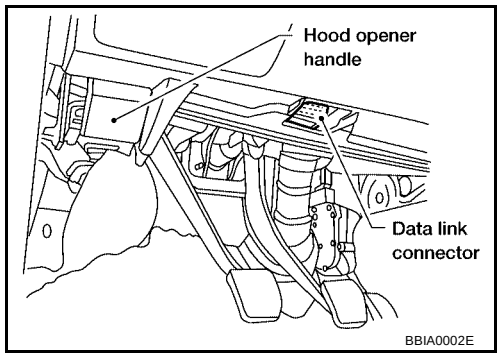

2. Touch "START (NISSAN BASED VHCL)".

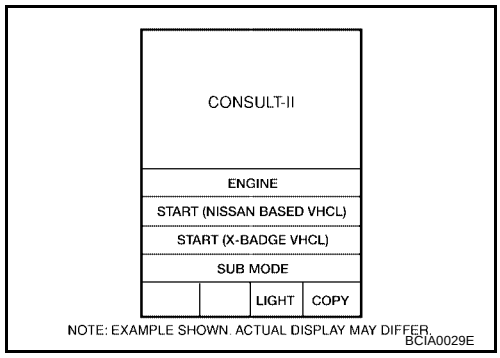

3. Touch "BCM" on "SELECT SYSTEM" screen.
If "BCM" is not indicated, go to GI-39, "Consult-II Data Link Connector (DLC) Circuit" .

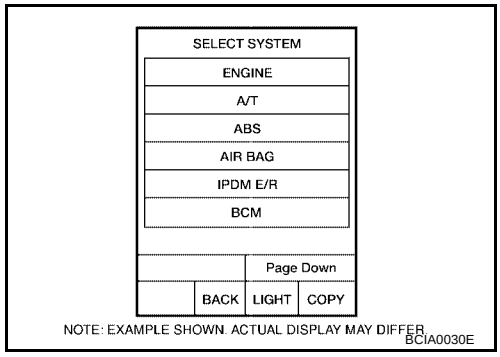

4. Touch "COMB SW" on "SELECT TEST ITEM" screen.

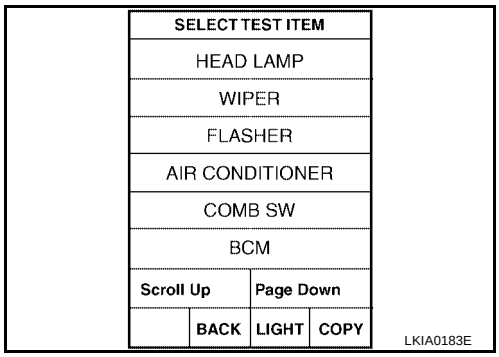

DATA MONITOR

Operation Procedure

1. Touch "COMB SW" on "SELECT TEST ITEM" screen.
2. Touch "DATA MONITOR" on "SELECT DIAG MODE" screen.
3. Touch either "ALL SIGNALS" or "SELECTION FROM MENU" on "SELECT MONITOR ITEM" screen.

ALL SIGNALS	Monitors all the signals.
SELECTION FROM MENU	Selects and monitors individual signal.

4. Touch "START".
5. When "SELECTION FROM MENU" is selected, touch items to be monitored. When "ALL SIGNALS" is selected, all the signals will be monitored.
6. Touch "RECORD" while monitoring, then the status of the monitored item can be recorded. To stop recording, touch "STOP".

Display Item List

Monitor item name "OPERATION OR UNIT"		Contents
TURN SIGNAL R	"ON/OFF"	Displays "Turn Right (ON)/Other (OFF)" status, determined from lighting switch signal.
TURN SIGNAL L	“ON/OFF”	Displays "Turn Left (ON)/Other (OFF)" status, determined from lighting switch signal.
HI BEAM SW	"ON/OFF"	Displays status (high beam switch: ON/Others: OFF) of high beam switch judged from lighting switch signal.
HEAD LAMP SW 1	"ON/OFF"	Displays "Headlamp switch 1 (ON)/Other (OFF)" status, determined from lighting switch signal.
HEAD LAMP SW 2	"ON/OFF"	Displays status (headlamp switch 2: ON/Others: OFF) of headlamp switch 2 judged from lighting switch signal.
LIGHT SW 1ST	"ON/OFF"	Displays status (lighting switch 1st position: ON/Others: OFF) of lighting switch judged from lighting switch signal.
PASSING SW	"ON/OFF"	Displays status (flash-to-pass switch: ON/Others: OFF) of flash-to-pass switch judged from lighting switch signal.
AUTO LIGHT SW	"ON/OFF"	Displays "Auto light switch (ON)/Other (OFF)" status, determined from lighting switch signal.
FR FOG SW	"ON/OFF"	Displays "Front fog lamp switch (ON)/Other (OFF)" status, determined from lighting switch signal.
FR WIPER HI	"ON/OFF"	Displays "Front Wiper HI (ON)/Other (OFF)" status, determined from wiper switch signal.
FR WIPER LOW	"ON/OFF"	Displays "Front Wiper LOW (ON)/Other (OFF)" status, determined from wiper switch signal.
FR WIPER INT	"ON/OFF"	Displays "Front Wiper INT (ON)/Other (OFF)" status, determined from wiper switch signal.
FR WASHER SW	"ON/OFF"	Displays "Front Washer Switch (ON)/Other (OFF)" status, determined from wiper switch signal.
INT VOLUME	[1 - 7]	Displays intermittent operation knob setting (1 - 7), determined from wiper switch signal.

Combination Switch Inspection

EKS008NL

1. SYSTEM CHECK

Referring to table below, check to which system the malfunctioning switch belongs.

System 1	System 2	System 3	System 4	System 5
—	FR WASHER	FR WIPER LO	TURN LH	TURN RH
FR WIPER HI	—	FR WIPER INT	PASSING	HEAD LAMP1
INT VOLUME 1	—	—	HEAD LAMP2	HI BEAM
—	INT VOLUME 3	AUTO LIGHT	—	TAIL LAMP
INT VOLUME 2	—	—	FR FOG	—

>> GO TO 2.

2. SYSTEM CHECK

With CONSULT-II

CAUTION:

If CONSULT-II is used with no connection of CONSULT-II CONVERTER, malfunctions might be detected in self-diagnosis depending on control unit which carries out CAN communication.

1. Connect CONSULT-II and select "COMB SW" on "SELECT TEST ITEM" screen.
2. Select "DATA MONITOR".
3. Select "START" and confirm that other switches in malfunctioning system operate normally.
   Example: When auto light switch is malfunctioning, confirm that "FRONT WIPER LOW" and "FRONT WIPER INT" in System 3, to which the auto light switch belongs, turn ON-OFF normally.

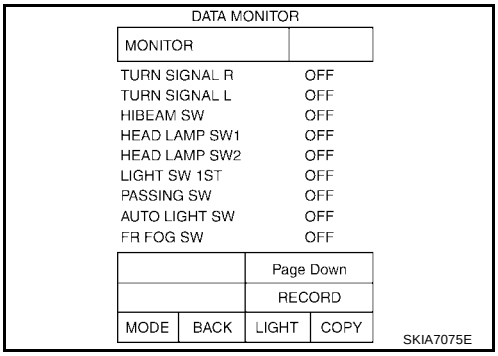

Without CONSULT-II

Operate combination switch and confirm that other switches in malfunctioning system operate normally.
Example: When auto light switch is malfunctioning, confirm that "FRONT WIPER LOW" and "FRONT WIPER INT" in System 3, to which the auto light switch belongs, operate normally.

Check results

Other switches in malfunctioning system operate normally.>> Replace lighting switch or wiper switch. Refer to LT-86, "Removal and Installation" (for lighting switch) or WW-29, "Removal and Installation" .

Other switches in malfunctioning system do not operate normally.>> GO TO 3.

3. HARNESS INSPECTION

1. Turn ignition switch OFF.
2. Disconnect BCM and combination switch connectors.
3. Check continuity between BCM harness connector of the suspect system and the corresponding combination switch connector terminals.

Suspect system	BCM			Combination switch		Continuity
	Connector	Terminal		Connector	Terminal	
1	M18	Input 1	6	M28	10	Yes
		Output 1	36		13	
2		Input 2	5		15	
		Output 2	35		12	
3		Input 3	4		5	
		Output 3	34		16	
4		Input 4	3		6	
		Output 4	33		11	
5		Input 5	2		7	
		Output 5	32		14	

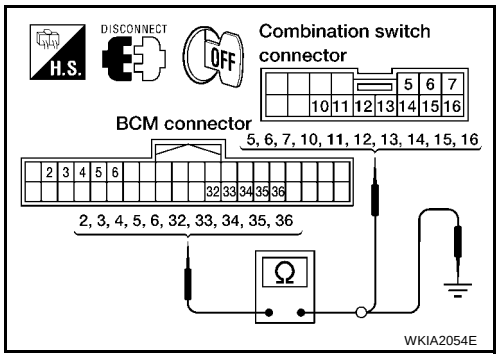

4. Check for continuity between each terminal of BCM harness connector in suspect malfunctioning system and ground.

Suspect system	BCM				Continuity
	Connector	Terminal			
1	M18	Input 1	6	Ground	No
		Output 1	36		
2		Input 2	5		
		Output 2	35		
3		Input 3	4		
		Output 3	34		
4		Input 4	3		
		Output 4	33		
5		Input 5	2		
		Output 5	32		

OK or NG

OK >> GO TO 4.
NG >> Check harness between BCM and combination switch for open or short circuit.

4. BCM OUTPUT TERMINAL INSPECTION

1. Turn lighting switch and wiper switch to OFF.
2. Set wiper dial to position 4.
3. Connect BCM and combination switch connectors.
4. Turn ignition switch ON, and check combination switch input (BCM output) terminal voltage waveform of suspect malfunctioning system.

Suspect system	Combination switch			(–)
	(+)			
	Connector	Terminal		
1	M28	Input 1	10	Ground
2		Input 2	15	
3		Input 3	5	
4		Input 4	6	
5		Input 5	7	

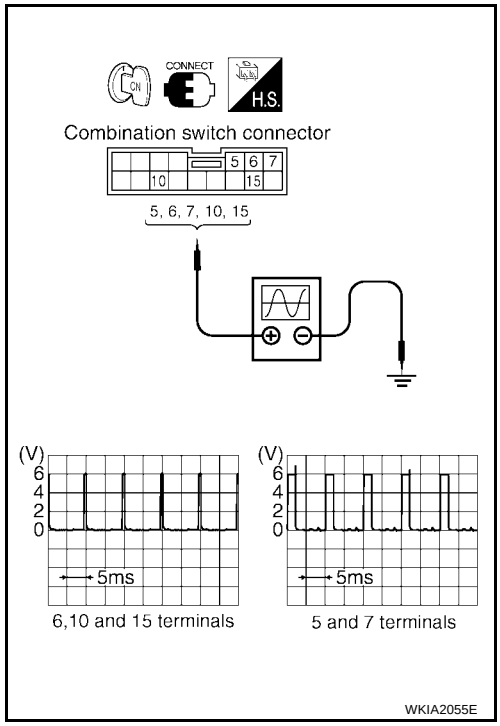

OK or NG

OK >> Open circuit in combination switch, GO TO 5.
NG >> Replace BCM. Refer to BCS-20, "Removal and Installation of BCM" .

5. COMBINATION SWITCH INSPECTION

Referring to table below, perform combination switch inspection.

Procedure									
1	2		3	4		5	6		7
Replace lighting switch.	Confirm check results.	OK	Inspection End	Confirm check results.	OK	Inspection End	Confirm check results.	OK	Inspection End
		NG	Replace wiper switch.		NG	Replace switch base.		NG	Confirm symptom again.

>> Inspection End.

Removal and Installation

EKS008NM

For details, refer to LT-86, "Removal and Installation" .

Switch Circuit Inspection

EKS008NN

For details, refer to LT-91, "Combination Switch Inspection" .

STOP LAMP

PFP:26550

Wiring Diagram — STOP/L —

EKS008NO

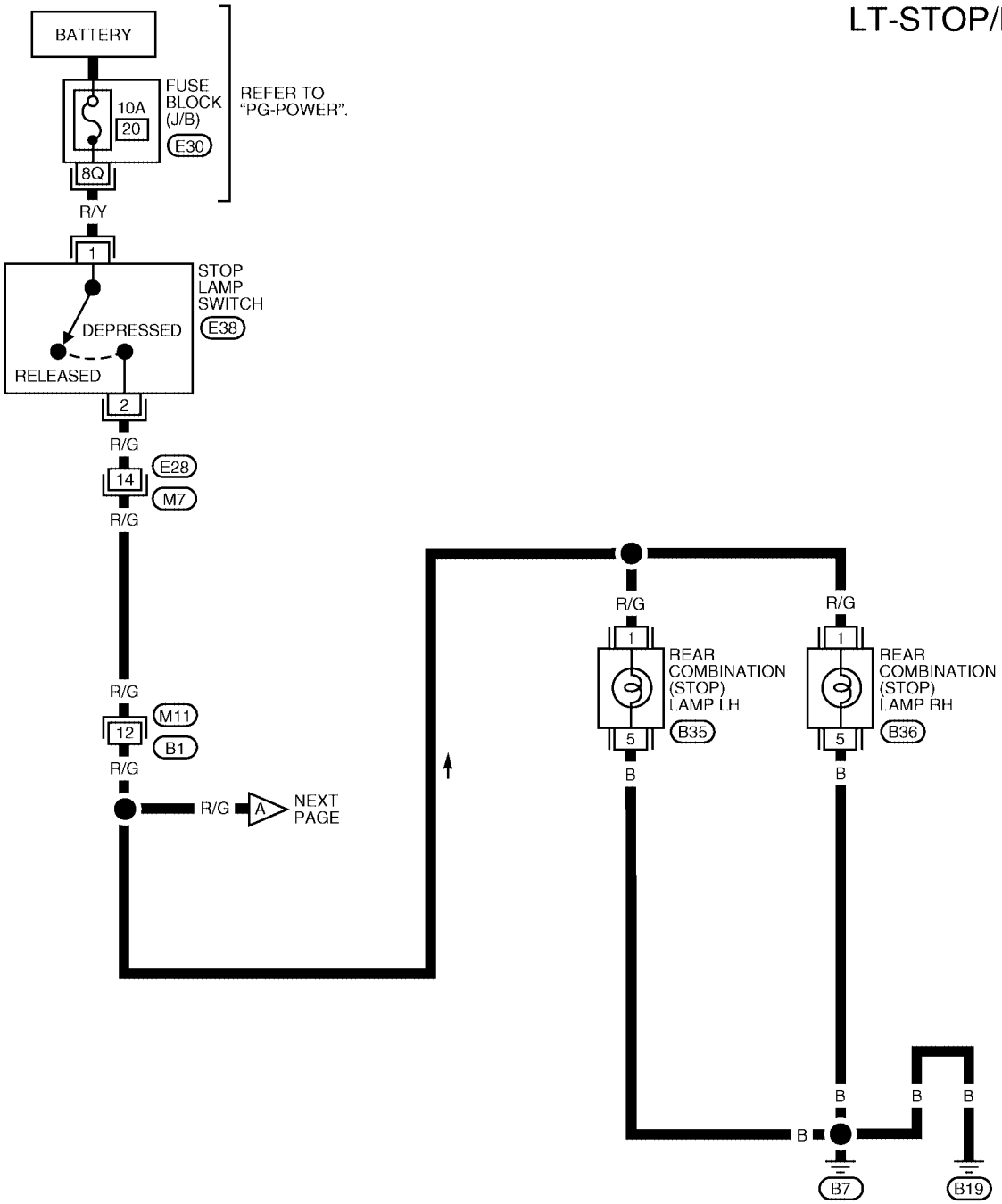

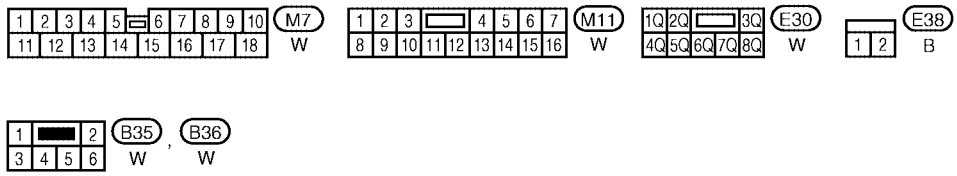

WKWA1539E

LT-STOP/L-02

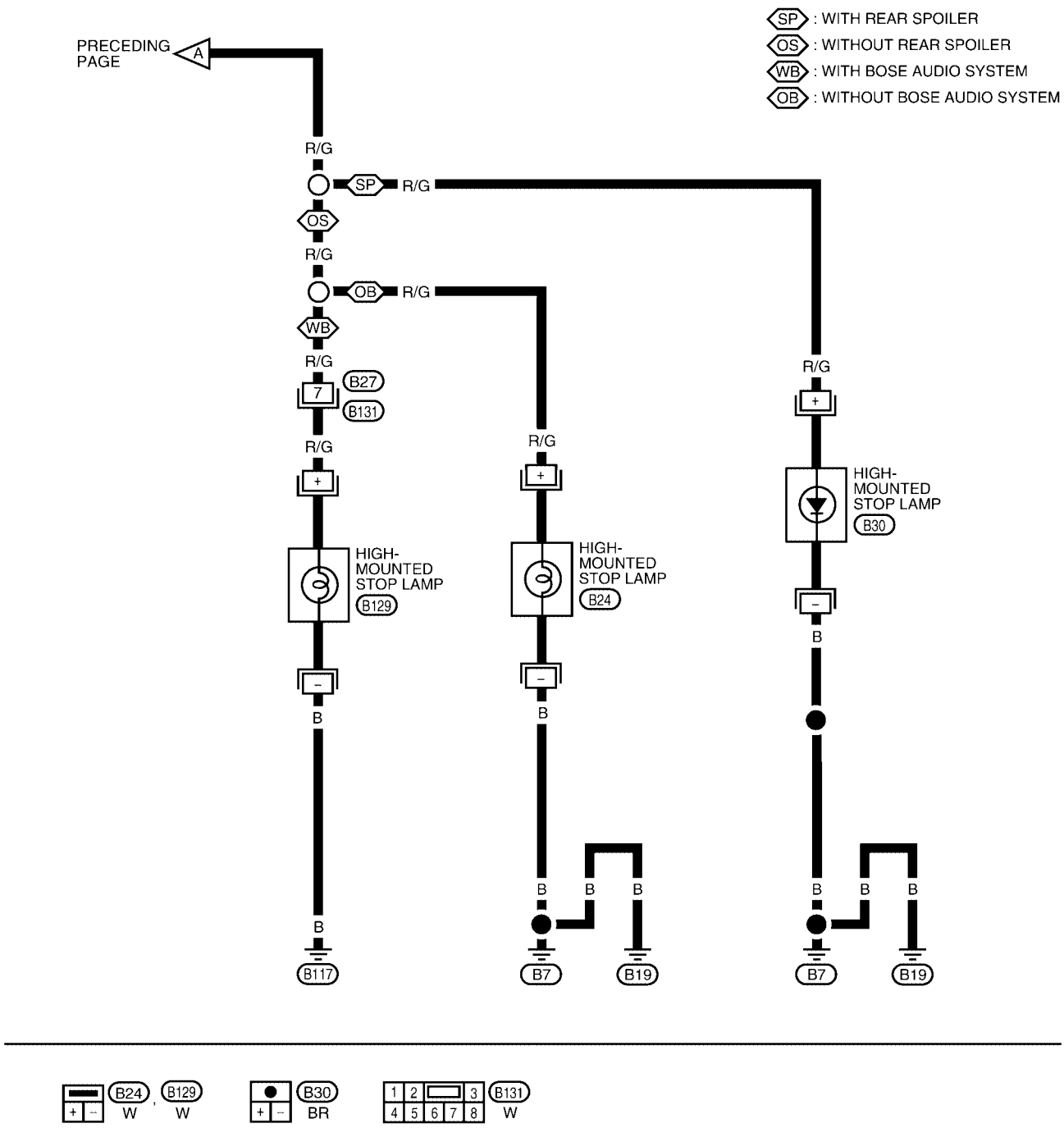

WKWA1372E

Bulb Replacement

EKS008NP

HIGH MOUNTED STOP LAMP

With Rear Air Spoiler

When this vehicle is equipped with a rear air spoiler, the high-mounted stop lamp uses an LED circuit board instead of a bulb. The LED circuit board is not serviceable and must be replaced as an assembly.

WITHOUT REAR AIR SPOILER

Removal

1. Remove high-mounted stop lamp assembly. Refer to LT-96, "Removal and Installation" .
2. Turn bulb socket counterclockwise to unlock and remove from lamp assembly.
3. Turn bulb counterclockwise to remove from socket.

Installation

Installation is in the reverse order of removal.

STOP LAMP

Removal

1. Remove rear combination lamp. Refer to LT-96, "REAR COMBINATION LAMP" .
2. Turn bulb socket counterclockwise to unlock and remove from combination lamp assembly.
3. Turn bulb counterclockwise to remove from bulb socket.

Installation

Installation is in the reverse order of removal.

Removal and Installation

EKS008NR

HIGH-MOUNTED STOP LAMP

With Rear Air Spoiler SE-R

The high-mounted stop lamp is part of the rear air spoiler. Refer to EI-23, "REAR AIR SPOILER" .

WITH REAR AIR SPOILER EXCEPT SE-R

For rear air spoiler removal and installation procedures, refer to EI-23, "Removal and Installation" .

WITHOUT REAR AIR SPOILER

Removal

1. Slide high-mounted stop lamp assembly rearward on parcel shelf to give clearance to front tabs.
2. Lift front of lamp assembly up and bring forward to give clearance to rear tabs.
3. Disconnect connector, and remove from vehicle.

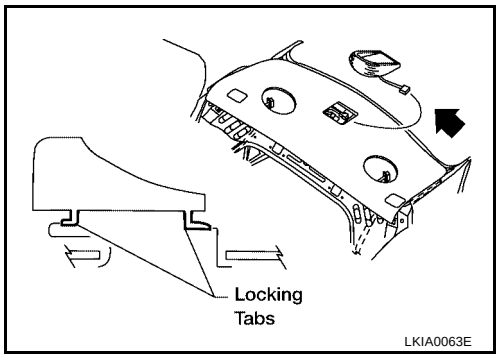

Installation

Installation is in the reverse order of removal.

REAR COMBINATION LAMP

Removal

1. Displace trunk room trim as needed. Refer to EI-37, "Removal and Installation" .
2. From trunk, remove nuts securing rear combination lamp assembly.
3. Disconnect connectors and remove assembly.

Installation

Installation is in the reverse order of removal.

BACK-UP LAMP

PFP:26550

Wiring Diagram — BACK/L —

EKS008NT

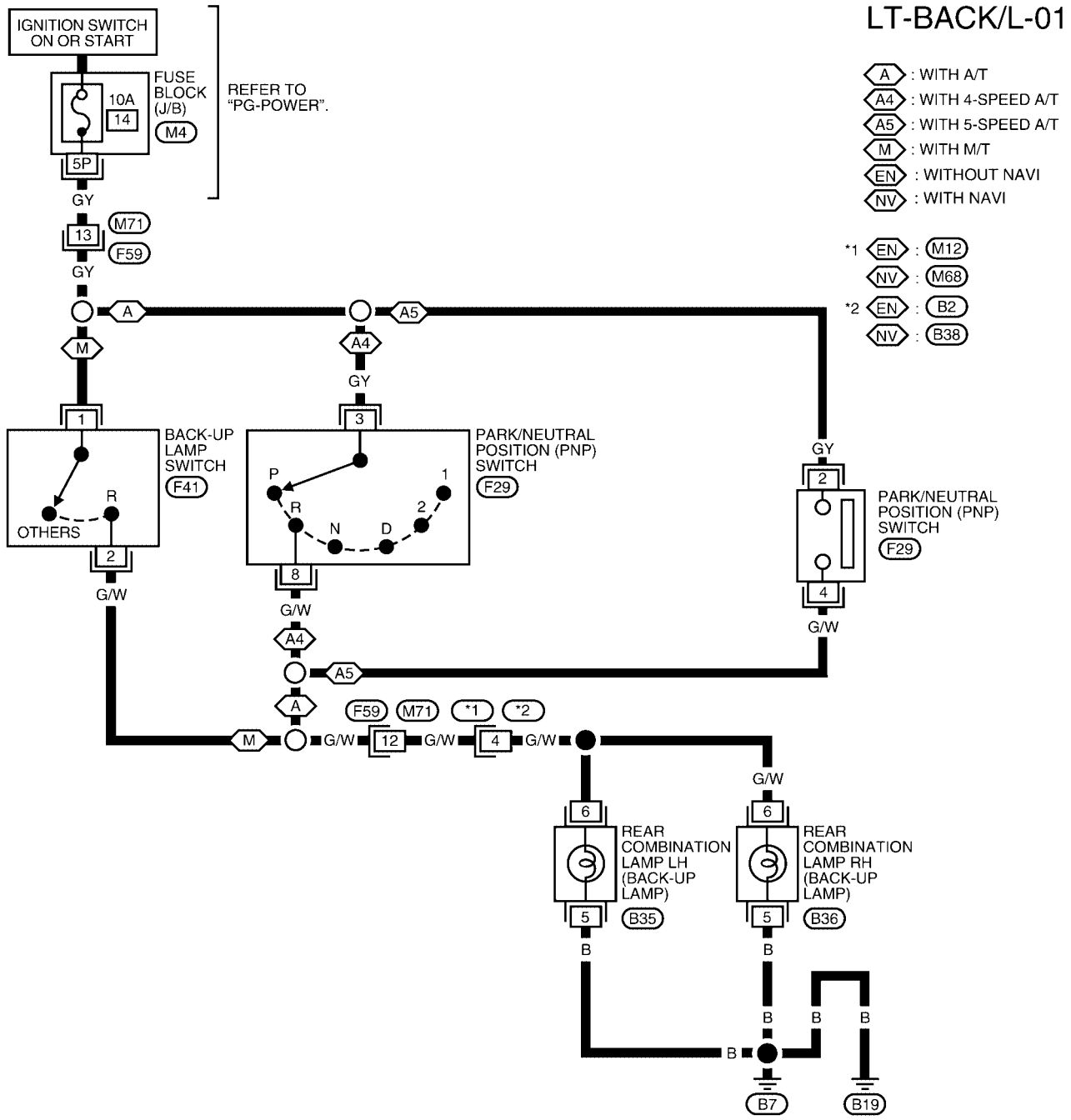

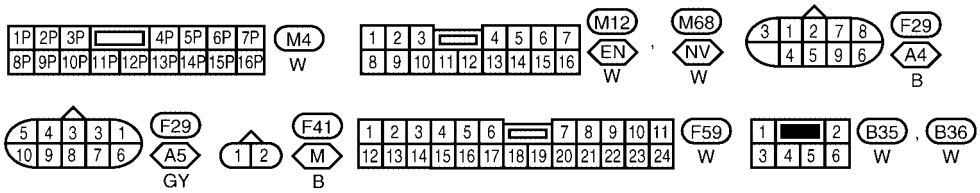

WKWA1373E

Bulb Replacement

EKS008NU

REMOVAL

1. Remove rear combination lamp. Refer to LT-96, "REAR COMBINATION LAMP" .
2. Turn bulb socket counterclockwise to unlock and remove.
3. Pull bulb from socket to remove.

INSTALLATION

Installation is in the reverse order of removal.

Removal and Installation

EKS008NV

Refer to LT-96, "REAR COMBINATION LAMP" .

PARKING, LICENSE PLATE AND TAIL LAMPS

PFP:26550

Component Parts and Harness Connector Location

EKS00A88

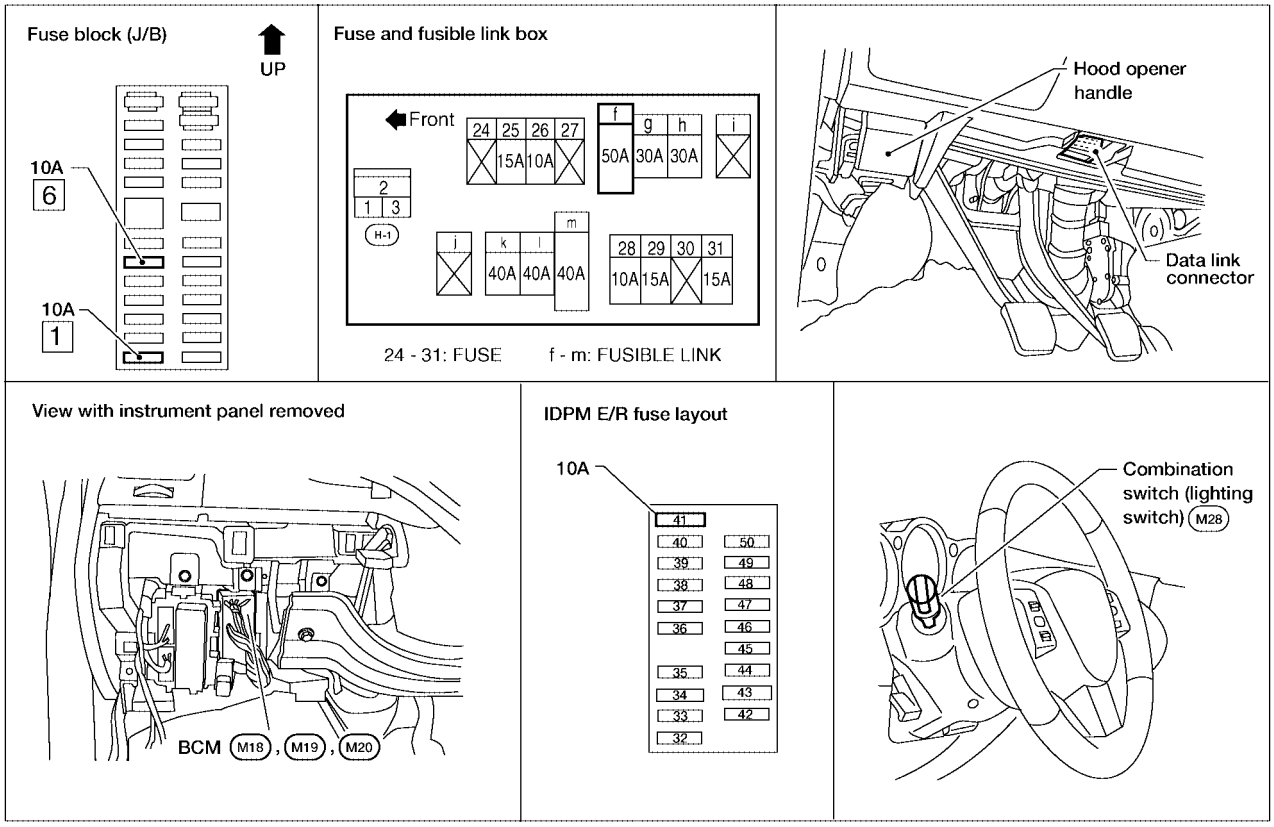

WKIA4089E

System Description

EKS008NW

Control of the parking, license plate, and tail lamp operation is dependent upon the position of the lighting switch (combination switch). When the lighting switch is placed in the 1ST position, the BCM (body control module) receives input signal requesting the parking, license plate, and tail lamps to illuminate. This input signal is communicated to the IPDM E/R (intelligent power distribution module engine room) across the CAN communication lines. The CPU (central processing unit) of the IPDM E/R controls the tail lamp relay coil. When energized, this relay directs power to the parking, license plate, and tail lamps, which then illuminate.

Power is supplied at all times

- through 10A fuse (No. 41, located in the IPDM E/R)
- to tail lamp relay, located in the IPDM E/R, and
- through 50A fusible link (letter **f** , located in the fuse and fusible link box)
- to BCM terminal 70.

With the ignition switch in the ON or START position, power is supplied

- through 10A fuse [No. 1, located in the fuse block (J/B)]
- to BCM terminal 38.

With the ignition switch in the ACC or ON position, power is supplied

- through 10A fuse [No. 6, located in the fuse block (J/B)]
- to BCM terminal 11.

Ground is supplied

- to BCM terminal 67
- through grounds F14, M57 and M61.

OPERATION BY LIGHTING SWITCH

With the lighting switch in the 1st or 2nd position (or if the auto light system is activated), the BCM receives input signal requesting the parking, license plate, and tail lamps to illuminate. This input signal is communi-

cated to the IPDM E/R across the CAN communication lines. The CPU of the IPDM E/R controls the tail lamp relay coil. When energized, this relay directs power

- through terminal 22 of the IPDM E/R
- to front combination lamp LH terminal 1
- to front combination lamp RH terminal 1
- to rear combination lamp LH terminal 2
- to rear combination lamp RH terminal 2
- to license lamp LH terminal +
- to license lamp RH terminal +.

Ground is supplied

- to front combination lamp LH terminal 2
- to front combination lamp RH terminal 2
- through grounds E15 and E24, and
- to rear combination lamp LH terminal 5
- to rear combination lamp RH terminal 5
- to license lamp LH terminal –
- to license lamp RH terminal –
- through grounds B7 and B19.

With power and ground supplied, the parking, license and tail lamps illuminate.

BATTERY SAVER CONTROL

When the combination switch (lighting switch) is in the 1ST (or 2ND) position and the ignition switch is turned from ON or ACC to OFF, the battery saver control feature is activated.
Under this condition, the parking, license plate, and tail lamps remain illuminated for 5 minutes, unless the combination switch (lighting switch) position is changed. If the combination switch (lighting switch) position is changed, then the parking, license plate and tail lamps are turned off.

CAN Communication System Description

EKS008NX

Refer to LAN-20, "CAN COMMUNICATION" .

Schematic

EKS008NY

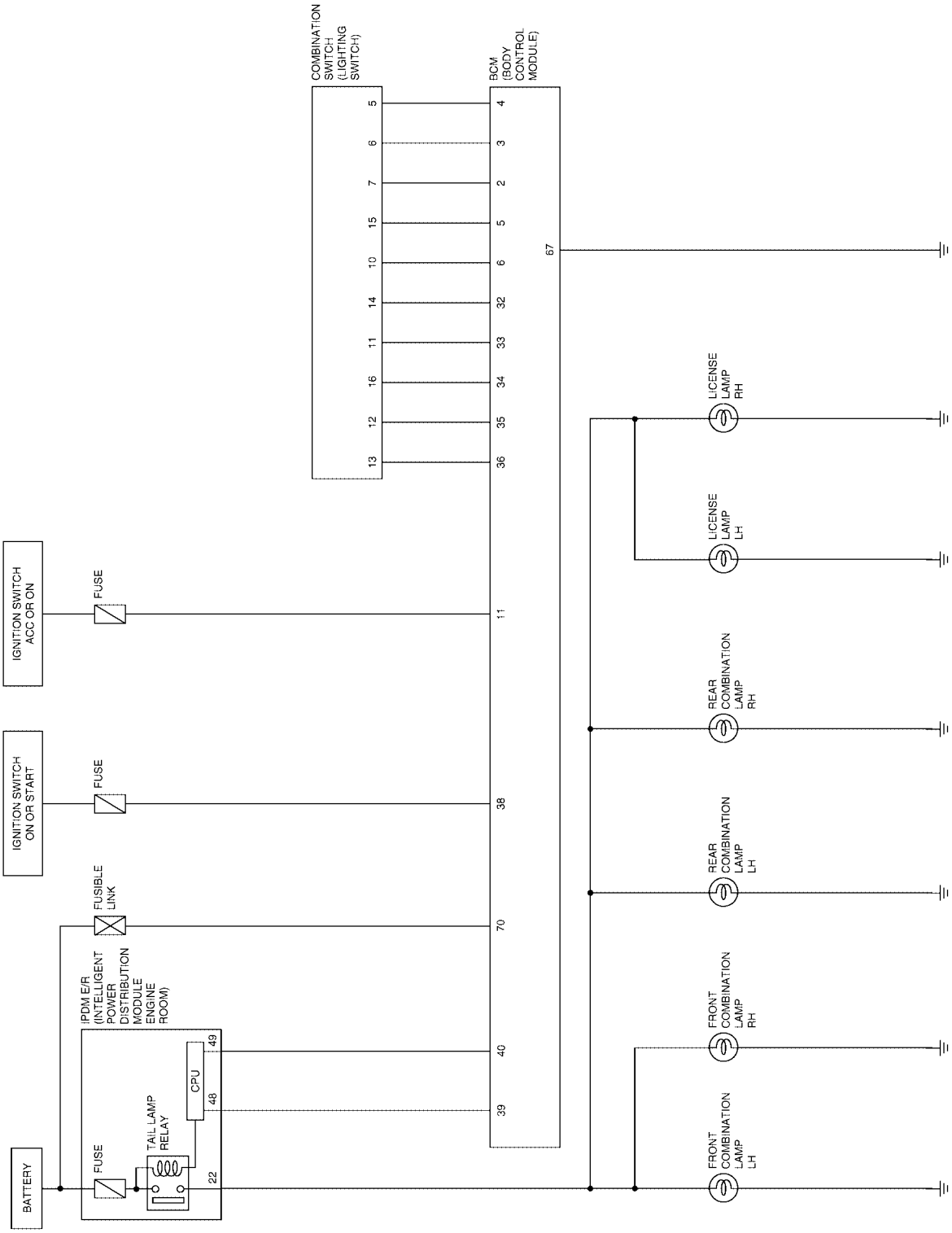

WKWA2973E

Wiring Diagram — TAIL/L —

EKS008NZ

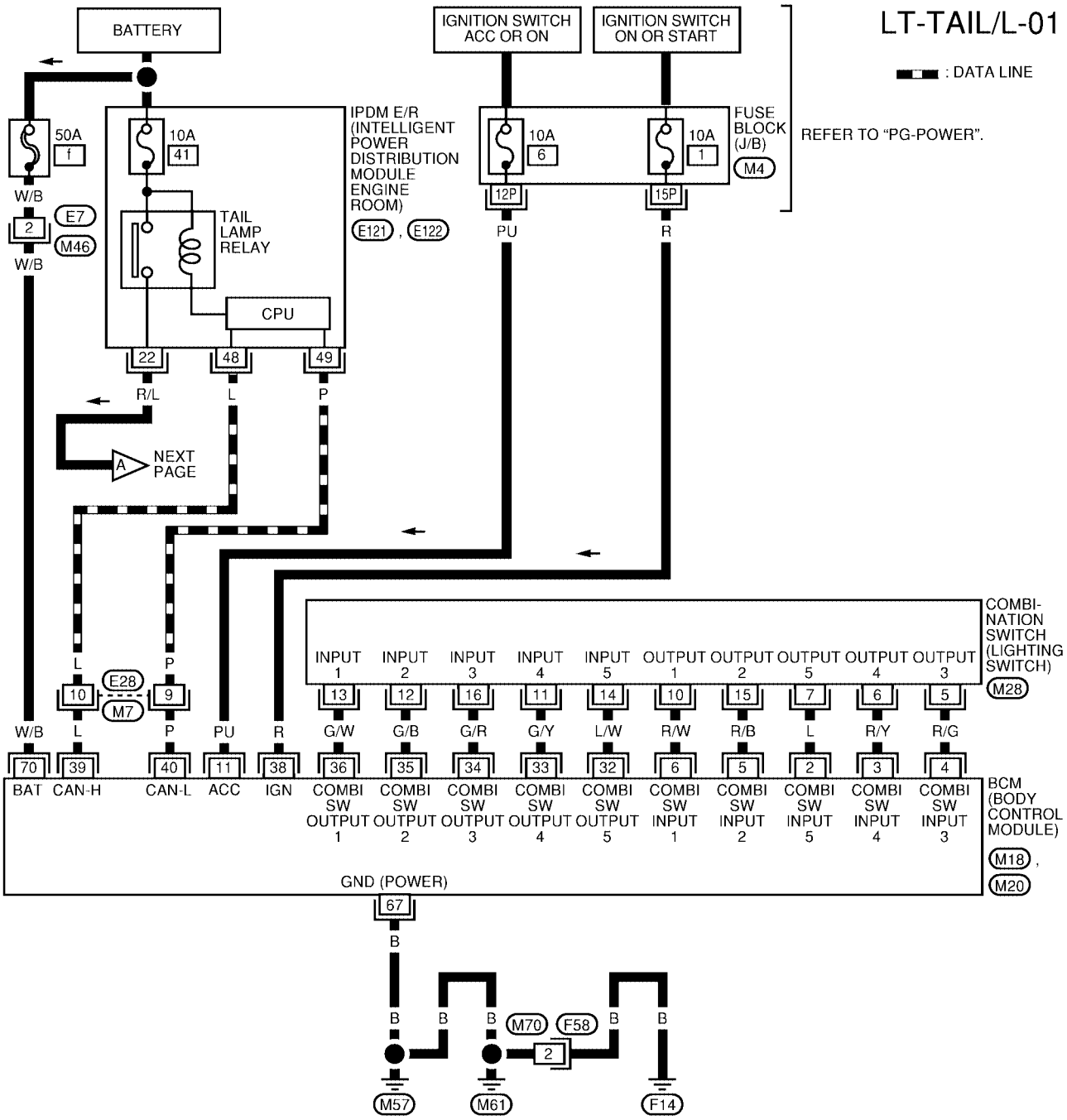

LT-TAIL/L-02

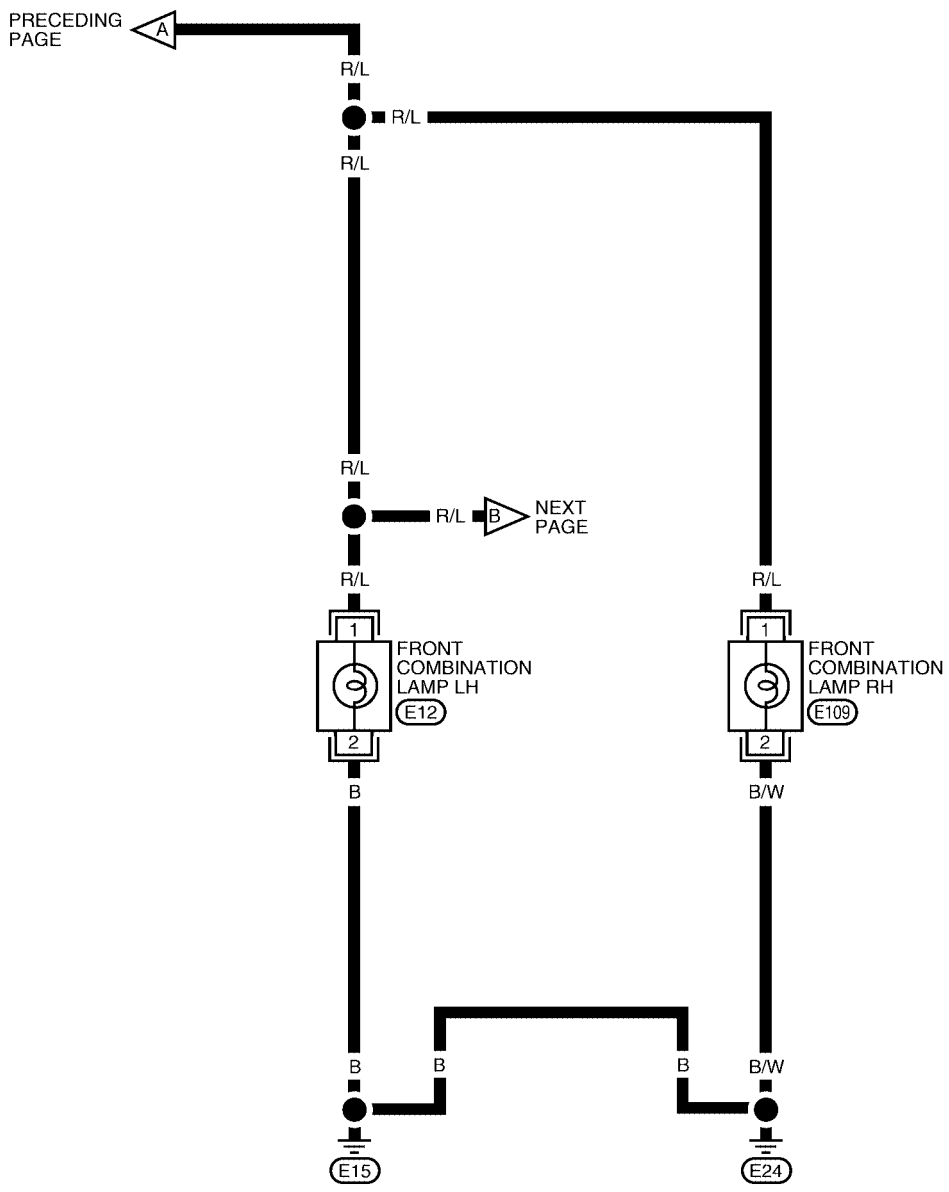

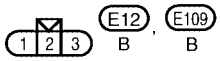

WKWA0193E

LT-TAIL/L-03

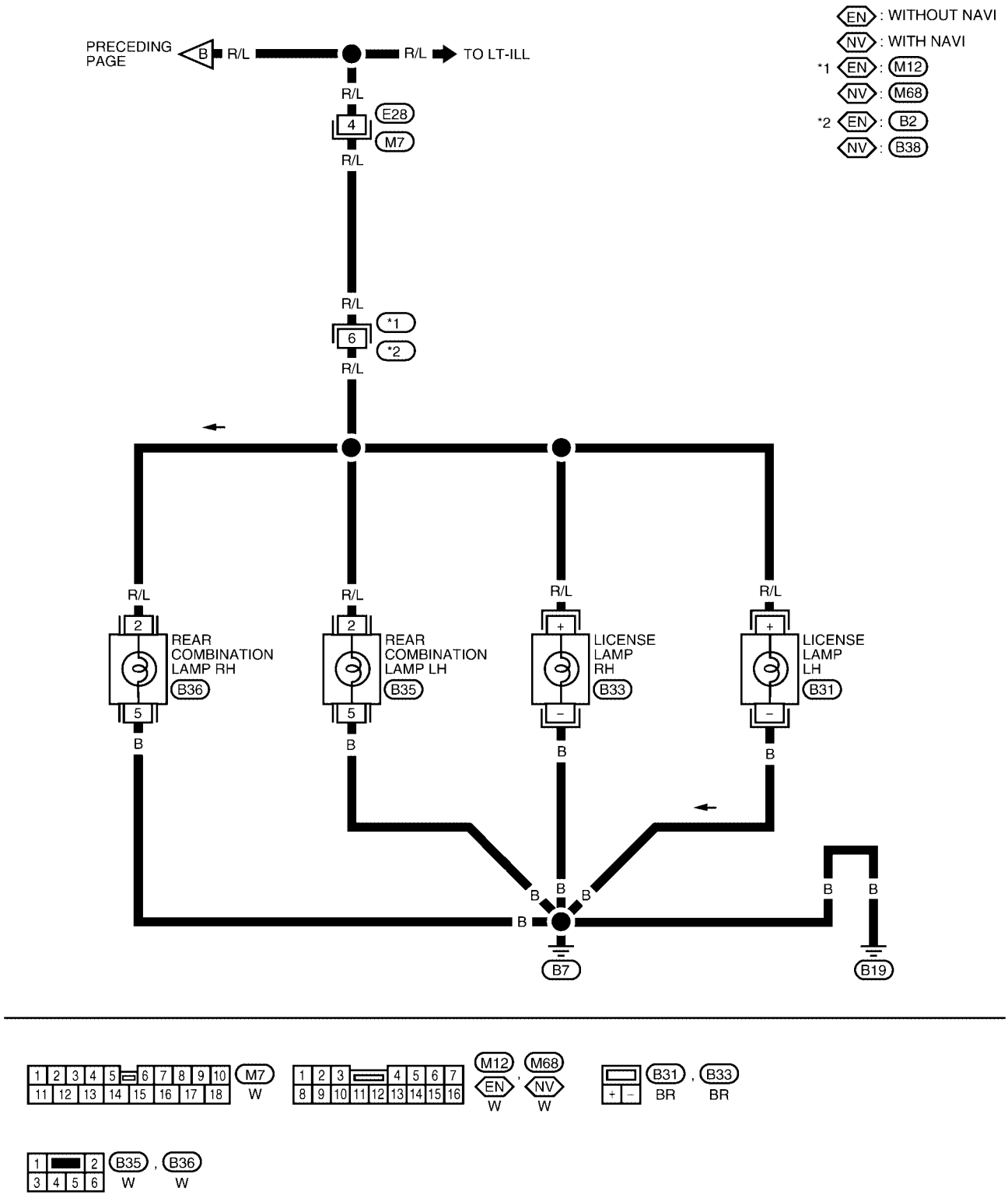
EN : WITHOUT NAVI
NV : WITH NAVI
*1 EN : M12
NV : M68
*2 EN : B2
NV : B38
PRECEDING PAGE
B
R/L
R/L
TO LT-ILL
R/L
4
E28
M7
R/L
R/L
6
*1
*2
R/L
R/L
2
5
REAR COMBINATION LAMP RH
B36
B
R/L
2
5
REAR COMBINATION LAMP LH
B35
B
R/L
+
−
LICENSE LAMP RH
B33
B
R/L
+
−
LICENSE LAMP LH
B31
B
B
B
B
B
B
B
B7
B19
1 2 3 4 5 6 7 8 9 10
11 12 13 14 15 16 17 18
M7
W
1 2 3 4 5 6 7
8 9 10 11 12 13 14 15 16
M12
EN
W
M68
NV
W
+ −
B31
BR
B33
BR
1 2
3 4 5 6
B35
W
B36
W
WKWA1374E

Terminals and Reference Values for BCM

EKS008O0

Terminal No.	Wire color	Signal name	Measuring condition		Reference value (Approx.)
			Ignition switch	Operation or condition	
2	L	Combination switch input 5	ON	Lighting, turn, wiper OFF Wiper dial position 4	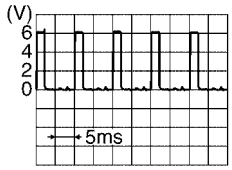 SKIA5291E
3	R/Y	Combination switch input 4	ON	Lighting, turn, wiper OFF Wiper dial position 4	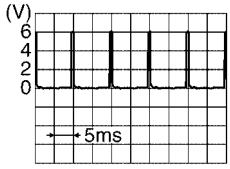 SKIA5292E
4	R/G	Combination switch input 3	ON	Lighting, turn, wiper OFF Wiper dial position 4	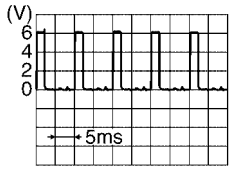 SKIA5291E
5	R/B	Combination switch input 2	ON	Lighting, turn, wiper OFF Wiper dial position 4	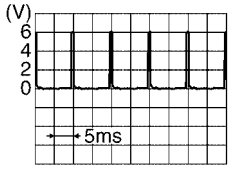 SKIA5292E
6	R/W	Combination switch input 1			
11	PU	Ignition switch (ACC)	ACC	—	Battery voltage
32	L/W	Combination switch output 5	ON	Lighting, turn, wiper OFF Wiper dial position 4	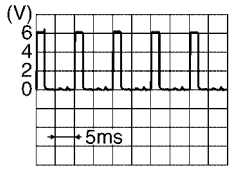 SKIA5291E
33	G/Y	Combination switch output 4	ON	Lighting, turn, wiper OFF Wiper dial position 4	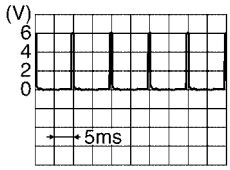 SKIA5292E
34	G/R	Combination switch output 3	ON	Lighting, turn, wiper OFF Wiper dial position 4	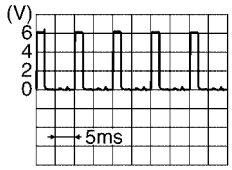 SKIA5291E

Terminal No.	Wire color	Signal name	Measuring condition		Reference value (Approx.)
			Ignition switch	Operation or condition	
35	G/B	Combination switch output 2	ON	Lighting, turn, wiper OFF Wiper dial position 4	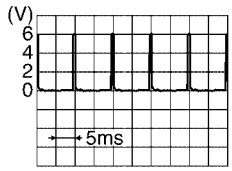 SKIA5292E
36	G/W	Combination switch output 1			
38	R	Ignition switch (ON)	ON	—	Battery voltage
39	L	CAN-H	—	—	—
40	P	CAN-L	—	—	—
67	B	Ground	ON	—	0V
70	W/B	Battery power supply (fusible link)	OFF	—	Battery voltage

Terminals and Reference Values for IPDM E/R

EKS008O1

Terminal No.	Wire color	Signal name	Measuring condition			Reference value (Approx.)
			Ignition switch	Operation or condition		
22	R/L	Parking, license, and tail lamp	ON	Lighting switch 1ST position	OFF	0V
					ON	Battery voltage
48	L	CAN-H	—	—		—
49	P	CAN-L	—	—		—

How to Proceed With Trouble Diagnosis

EKS008O2

1. Confirm the symptom or customer complaint.
2. Understand operation description and function description. Refer to LT-99, "System Description" .
3. Perform the Preliminary Check. Refer to LT-107, "Preliminary Check" .
4. Check symptom and repair or replace the cause of malfunction.
5. Do the parking, license plate and tail lamps operate normally? If YES: GO TO 6. If NO: GO TO 4.
6. Inspection End.

Preliminary Check

EKS008O3

CHECK POWER SUPPLY AND GROUND CIRCUIT

1. CHECK FUSES OR FUSIBLE LINK

Check for blown fuses or fusible link.

Unit	Power source	Fuse and fusible link No.
BCM	Battery	f
	Ignition switch ACC or ON	6
	Ignition switch ON or START position	1
IPDM E/R	Battery	41

Refer to LT-102, "Wiring Diagram — TAIL/L —" .

OK or NG

OK >> GO TO 2.

NG >> If fuse or fusible link is blown, be sure to eliminate cause of malfunction before installing new fuse or fusible link. Refer to PG-4, "POWER SUPPLY ROUTING CIRCUIT" .

2. CHECK POWER SUPPLY CIRCUIT

1. Disconnect BCM connectors.
2. Check voltage between BCM harness connector terminals and ground.

BCM (+) Connector	BCM (+) Terminal	(–)	Ignition switch position: OFF	ACC	ON
M18	11	Ground	0V	Battery voltage	Battery voltage
	38		0V	0V	Battery voltage
M20	70		Battery voltage	Battery voltage	Battery voltage

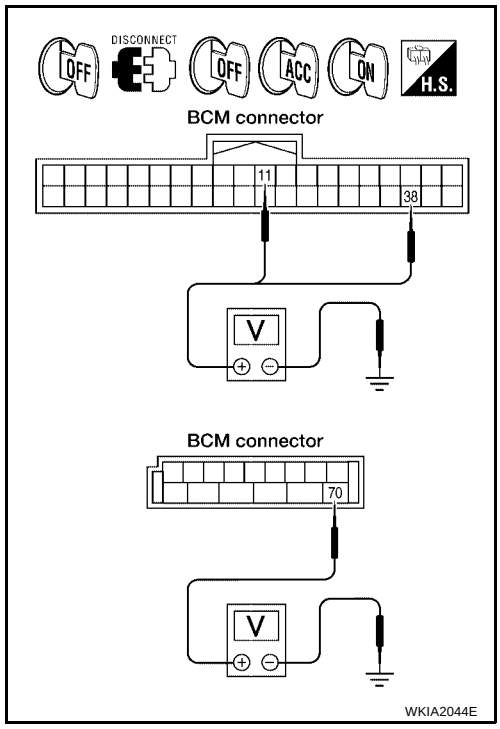

OK or NG

OK >> GO TO 3.

NG >> Check harness for open between BCM and fuse or fusible link.

3. CHECK GROUND CIRCUIT

Check continuity between BCM harness connector terminal and ground.

BCM Connector	BCM Terminal		Continuity
M20	67	Ground	Yes

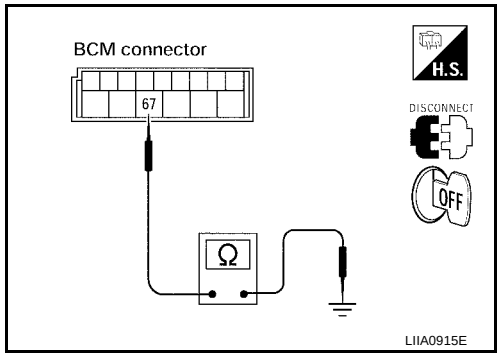

OK or NG

OK >> Inspection End.

NG >> Check ground circuit harness.

CONSULT-II Functions

EKS008O4

Refer to LT-15, "CONSULT-II Function (BCM)" in HEADLAMP (FOR USA).
Refer to LT-17, "CONSULT-II Function (IPDM E/R)" in HEADLAMP (FOR USA).

Parking, License Plate and/or Tail Lamps Do Not Illuminate

EKS008O5

1. CHECK COMBINATION SWITCH INPUT SIGNAL

With CONSULT-II

Select "BCM" on CONSULT-II. With "HEAD LAMP" data monitor, make sure "LIGHT SW 1ST" turns ON-OFF linked with operation of lighting switch.

When lighting switch is in 1ST position	**: LIGHT SW 1ST ON**

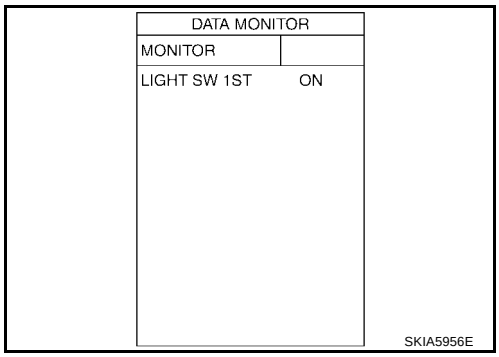

Without CONSULT-II

Refer to LT-91, "Combination Switch Inspection" .

OK or NG

OK >> GO TO 2.
NG >> Check lighting switch. Refer to LT-91, "Combination Switch Inspection" .

2. ACTIVE TEST

With CONSULT-II

1. Select "IPDM E/R" on CONSULT-II, and select "ACTIVE TEST" on "SELECT DIAG MODE" screen.
2. Select "TAIL LAMP" on "SELECT TEST ITEM" screen.
3. Touch "ON" on "ACTIVE TEST" screen.
4. Make sure parking, license plate, side marker and tail lamp operation.

Parking, license plate, side marker and tail lamp should operate.

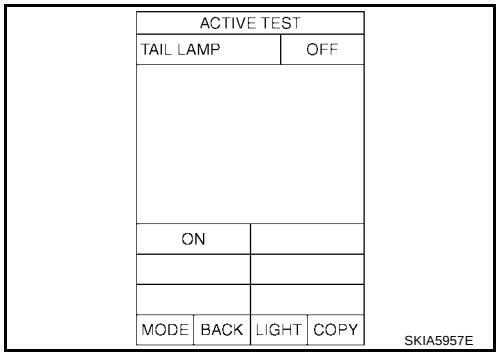

Without CONSULT-II

1. Start auto active test. Refer to PG-22, "Auto Active Test" .
2. Make sure parking, license plate, side marker and tail lamps operate.

Parking, license plate, side marker and tail lamp should operate.

OK or NG

OK >> GO TO 3.
NG >> GO TO 4.

3. CHECK IPDM E/R

1. Select "IPDM E/R" on CONSULT-II, and select "DATA MONITOR" on "SELECT DIAG MODE" screen.
2. Make sure "TAIL&CLR REQ" turns ON when lighting switch is in 1ST position.

When lighting switch is in 1ST position : TAIL&CLR REQ ON

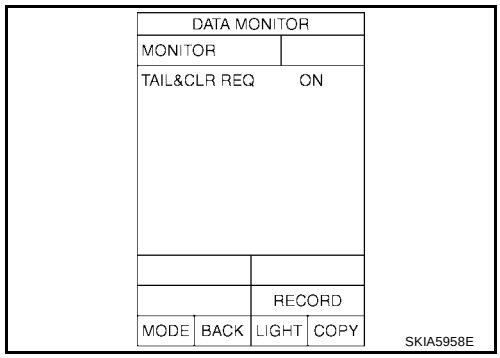

OK or NG

OK >> Replace IPDM E/R. Refer to PG-28, "Removal and Installation of IPDM E/R" .

NG >> Replace BCM. Refer to BCS-20, "Removal and Installation of BCM" .

4. CHECK INPUT SIGNAL

With CONSULT-II

1. Turn ignition switch OFF.
2. Disconnect front combination lamp, license plate lamp and rear combination lamp connectors.
3. Turn ignition switch ON.
4. Select "IPDM E/R" on CONSULT-II, and select "ACTIVE TEST" on "SELECT DIAG MODE" screen.
5. Select "TAIL LAMP" on "SELECT TEST ITEM" screen.
6. Touch "ON" on "ACTIVE TEST" screen.
7. When tail lamp is operating, check voltage between front combination lamp, license plate lamp, rear combination lamp harness connector and ground.

Without CONSULT-II

1. Turn ignition switch OFF.
2. Disconnect front combination lamp, license plate lamp and rear combination lamp connectors.
3. Start auto active test. Refer to PG-22, "Auto Active Test" .
4. When tail lamp is operating, check voltage between front combination lamp, license plate lamp, rear combination lamp harness connector and ground.

Terminals				Voltage (Approx.)
(+)			(–)	
Front combination lamp connector		Terminal		
RH	E109	1	Ground	Battery voltage
LH	E12			

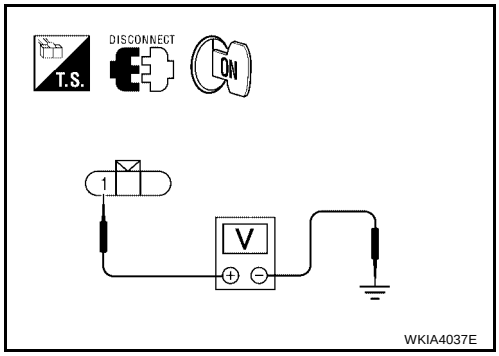

License plate lamp			(–)	Voltage (Approx.)
(+)				
Connector		Terminal		
RH	B33	+	Ground	Battery voltage
LH	B31			

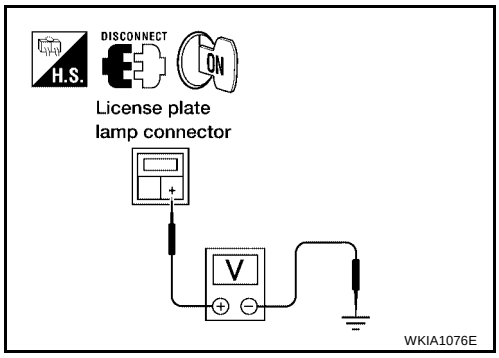

Terminals				Voltage (Approx.)
(+)			(–)	
Rear combination lamp connector		Terminal		
RH	B36	2	Ground	Battery voltage
LH	B35			

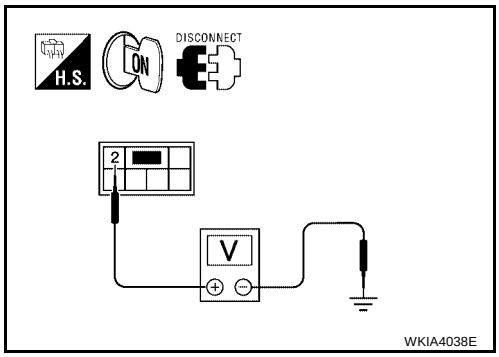

OK or NG

OK >> GO TO 6.
NG >> GO TO 5.

5. CHECK PARKING, LICENSE PLATE, SIDE MARKER AND TAIL LAMP CIRCUIT

1. Turn ignition switch OFF.
2. Disconnect IPDM E/R connector.
3. Check continuity between IPDM E/R harness connector and front combination lamp harness connector.

A		B			Continuity
IPDM E/R connector	Terminal	Front combination lamp connector		Terminal	
E122	22	RH	E109	1	Yes
		LH	E12		

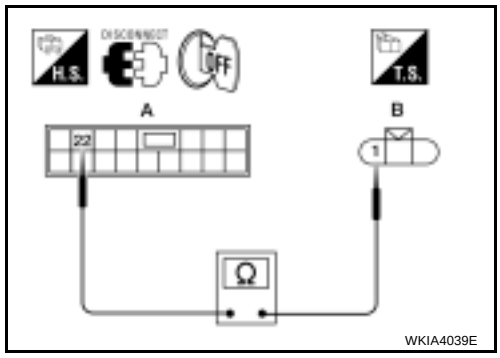

4. Check continuity between IPDM E/R harness connector and license plate lamp harness connector.

IPDM E/R		License plate lamp			Continuity
Connector	Terminal	Connector		Terminal	
E122	22	RH	B33	+	Yes
		LH	B31		

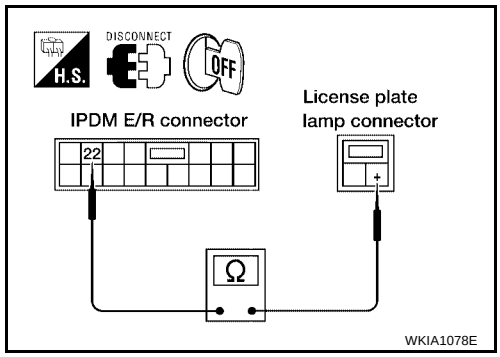

5. Check continuity between IPDM E/R harness connector and rear combination lamp harness connector.

IPDM E/R		Rear combination lamp			Continuity
Connector	Terminal	Connector		Terminal	
E122	22	RH	B36	2	Yes
		LH	B35		

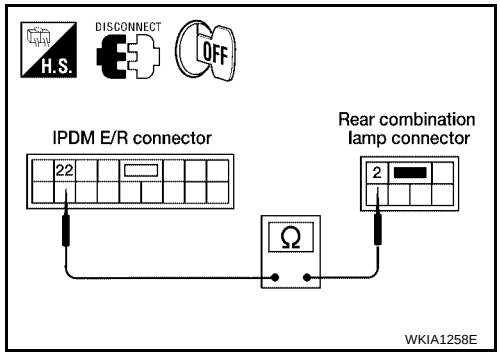

OK or NG

OK >> Replace IPDM E/R. Refer to PG-28, "Removal and Installation of IPDM E/R" .

NG >> Repair harness or connector.

6. CHECK GROUND

1. Turn ignition switch OFF.
2. Check continuity between front combination lamp harness connector and ground.

Terminals				Continuity
Front combination lamp connector		Terminal		
RH	E109	2	Ground	Yes
LH	E12			

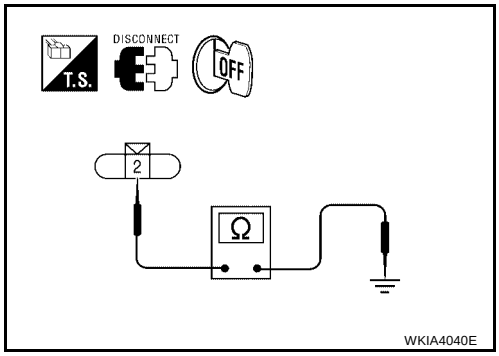

3. Check continuity between license lamp plate harness connector and ground.

License plate lamp				Continuity
Connector		Terminal		
RH	B33	–	Ground	Yes
LH	B31			

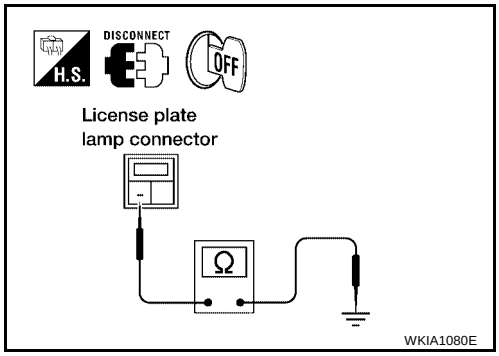

4. Check continuity between rear combination lamp harness connector and ground.

Rear combination lamp				Continuity
Connector		Terminal		
RH	B36	5	Ground	Yes
LH	B35			

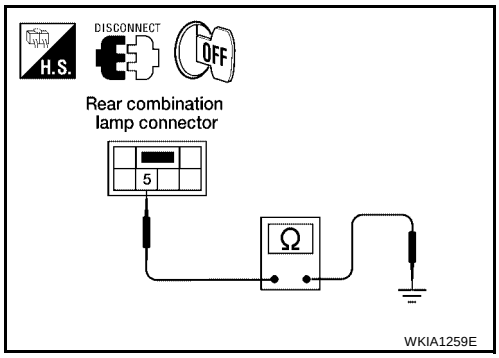

OK or NG

OK >> Check bulbs.
NG >> Repair harness or connector.

Parking, License Plate and Tail Lamps Do Not Turn OFF (After Approx. 10 Minutes)

EKS008O6

1. CHECK IPDM E/R

1. Turn ignition switch ON. Turn the combination switch (lighting switch) to the OFF position. Turn ignition switch OFF.
2. Verify that the parking, license plate, and tail lamps turn on and off after approximately 10 minutes.

OK or NG

OK >> Ignition relay malfunction. Refer to PG-17, "Function of Detecting Ignition Relay Malfunction" .
NG >> Inspection End.

Bulb Replacement

EKS008O7

LICENSE PLATE LAMP

Removal

1. Position trunk lid finisher aside.
2. Turn bulb socket counterclockwise to unlock and remove.
3. Pull bulb to remove from socket.

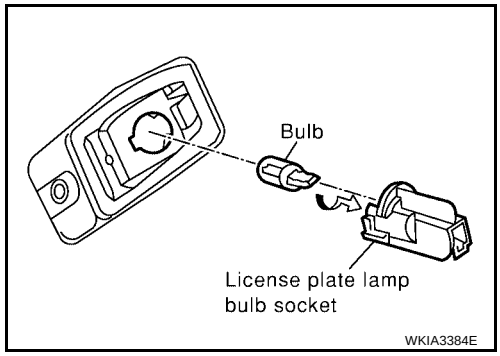

Installation

Installation is in the reverse order of removal.

FRONT TURN SIGNAL (PARKING) LAMP

For bulb replacement, refer to LT-85, "FRONT TURN SIGNAL LAMP" .

TAIL LAMP

Removal

1. Remove rear combination lamp. Refer to LT-96, "REAR COMBINATION LAMP" .
2. Turn bulb socket counterclockwise to unlock and remove.
3. Pull bulb to remove from socket.

Installation

Installation is in the reverse order of removal.

Removal and Installation

EKS008O8

LICENSE PLATE LAMP

Removal

1. Remove the license plate finisher. Refer to EI-22, "Removal and Installation" .
2. Disconnect the license plate lamp connector.
3. Remove the license plate lamp mounting screw and remove the license plate lamp from the vehicle.

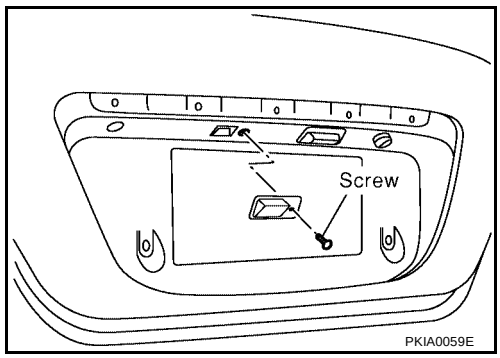

Installation

Installation is in the reverse order of removal.

FRONT TURN SIGNAL (PARKING) LAMP

For front turn signal (parking) lamp removal and installation procedures, refer to LT-29, "Removal and Installation" .

REAR COMBINATION LAMP

For rear combination lamp removal and installation procedures, refer to LT-96, "REAR COMBINATION LAMP" .

INTERIOR ROOM LAMP

PFP:26410

Component Parts and Harness Connector Location

EKS008O9

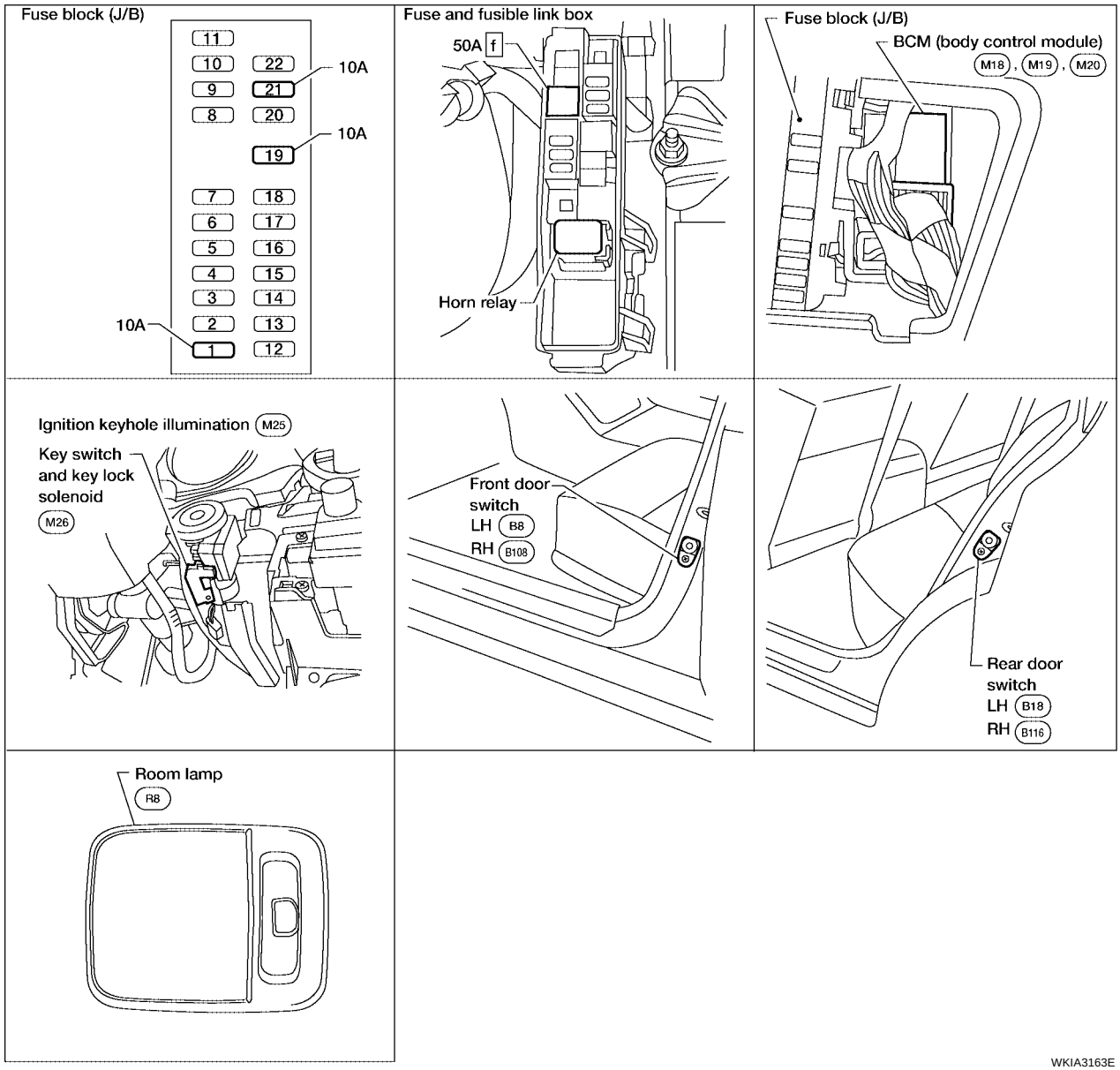

WKIA3163E

System Description

EKS008OA

When room lamp switch is in DOOR position, room lamp ON/OFF is controlled by timer according to signals from switches including key switch and key lock solenoid, front door switch LH, unlock signal from keyfob (with remote keyless entry system), door lock/unlock switch, front door lock assembly LH (key cylinder switch), and ignition switch.
When room lamp turns ON, there is a gradual brightening over 1 second. When room lamp turns OFF, there is a gradual dimming over 1 second.
The room lamp timer is controlled by the BCM (body control module).
Room lamp timer control settings can be changed with CONSULT-II.
Ignition keyhole illumination turns ON when front door LH is opened (door switch ON) or key is removed from key cylinder. Illumination turns OFF when the ignition switch is turned ON or by room lamp timer.
Step lamp turns ON when a front or rear door is opened (door switch ON). Lamp turns OFF when front and rear doors are closed (all door switches OFF).

POWER SUPPLY AND GROUND

Power is supplied at all times

- through 10A fuse [No. 21, located in the fuse block (J/B)]

- to key switch and key lock solenoid terminal 3
- to BCM terminal 57, and
- through 50A fusible link (letter **f** , located in the fuse and fusible link box)
- to BCM terminal 70.

When the key is inserted in ignition switch, power is supplied

- through the key switch and key lock solenoid terminal 4
- to BCM terminal 37.

With the ignition switch in the ON or START position, power is supplied

- through 10A fuse [No. 1, located in the fuse block (J/B)]
- to BCM terminal 38.

Ground is supplied

- to BCM terminal 67
- through grounds F14, M57 and M61.

When the front door LH is opened, ground is supplied

- to BCM terminal 47
- through case ground of front door switch LH.

When the front door RH is opened, ground is supplied

- to BCM terminal 12
- through case ground of front door switch RH.

When the rear door LH is opened, ground is supplied

- to BCM terminal 48
- through case ground of rear door switch LH.

When the rear door RH is opened, ground is supplied

- to BCM terminal 13
- through case ground of rear door switch RH.

The BCM also receives a ground signal when

- either front door is unlocked with the lock/unlock switch
- the doors are unlocked with keyfob (with remote keyless entry system)
- the front door LH is unlocked with key (key cylinder unlock signal).

When a signal, or combination of signals is received by BCM, ground is supplied

- to interior room lamp terminal 2
- through BCM terminal 63, and
- to trunk room lamp terminal –
- through BCM terminal 49, and
- to step lamp RH and LH terminal –
- through BCM terminal 62, and
- to ignition keyhole illumination lamp terminal +
- through BCM terminal 1.

With power and ground supplied, the lamps illuminate.

SWITCH OPERATION

When front door switch LH is ON (door is opened), ground is supplied

- to ignition keyhole illumination terminal +
- through BCM terminal 1.

And power is supplied

- through BCM terminal 56
- to ignition keyhole illumination terminal –.

When any door switch is ON (door is opened), ground is supplied

- to front step lamp LH and RH terminal –

- through BCM terminal 62.

And power is supplied

- through BCM terminal 56
- to step lamp LH and RH terminal +.

When spot lamp switch is ON, ground is supplied

- to spot lamp terminal –
- through grounds F14, M57 and M61.

And power is supplied

- through BCM terminal 56
- to spot lamp terminal +.

When vanity mirror lamp (LH or RH) is ON, ground is supplied

- to vanity mirror lamp (LH and RH) terminal 2
- through grounds F14, M57 and M61.

And power is supplied

- through 10A fuse [No. 19, located in the fuse block (J/B)]
- to vanity mirror lamp (LH and RH) terminal 1.

When trunk room lamp is ON, ground is supplied

- to trunk room lamp terminal –
- through BCM terminal 49.

And power is supplied

- through BCM terminal 56
- to trunk room lamp terminal +.

ROOM LAMP TIMER OPERATION

When interior room lamp switch is in DOOR position and when all conditions below are met, BCM performs timer control (maximum 30 seconds) for interior room lamp ON/OFF.
Power is supplied

- through 10A fuse [No. 21, located in the fuse block (J/B)]
- to key switch and key lock solenoid terminal 3.

Key is removed from ignition key cylinder (key switch OFF), power will not be supplied to BCM terminal 37.
Ground is supplied

- to BCM terminal 22 (with left and right front power window anti-pinch system) or terminals 7, 8, 45 and 46 (with left front only power window anti-pinch system)
- through main power window and door lock/unlock switch, power window and door lock/unlock switch RH and front door lock assembly (key cylinder switch).

At the time that either front door is opened, BCM detects that door is unlocked. It determines that interior room lamp timer operation conditions are met and turns the interior room lamp ON for 30 seconds.
When key is in ignition key cylinder (key switch ON), power is supplied

- through key switch and key lock solenoid terminal 4
- to BCM terminal 37.

When key is removed from key switch (key switch OFF), power supply to BCM terminal 37 is terminated. BCM detects that key has been removed, determines that interior room lamp timer conditions are met and turns the interior room lamp ON for 30 seconds.
When front door LH opens → closes and the key is not inserted in the key switch (key switch OFF), BCM terminal 47 changes between 0V (door open) → 12V (door closed). The BCM determines that conditions for interior room lamp operation are met and turns the interior room lamp ON for 30 seconds.
Timer control is canceled under the following conditions.

- Front door LH is locked [when locked with keyfob, main power window and door lock/unlock switch, or front door lock assembly (key cylinder switch)]
- Front door LH is opened (front door switch LH turns ON)
- Ignition switch ON.

INTERIOR LAMP BATTERY SAVER CONTROL

If interior lamp is left ON, it will not be turned out even when door is closed.
BCM turns off interior lamp automatically to save battery 30 minutes after ignition switch is turned OFF.
BCM controls interior lamps listed below:

- Step lamp
- Spot lamp
- Trunk room lamp
- Interior room lamp
- Ignition keyhole illumination lamp

After lamps turn OFF by the battery saver system, the lamps illuminate again when

- signal received from keyfob or main power window and door lock/unlock switch, or front door lock assembly (key cylinder switch) is locked or unlocked
- door is opened or closed
- key is removed from or inserted in ignition key cylinder.

Interior lamp battery saver control period can be changed by the function setting of CONSULT-II.

Schematic

EKS008OB

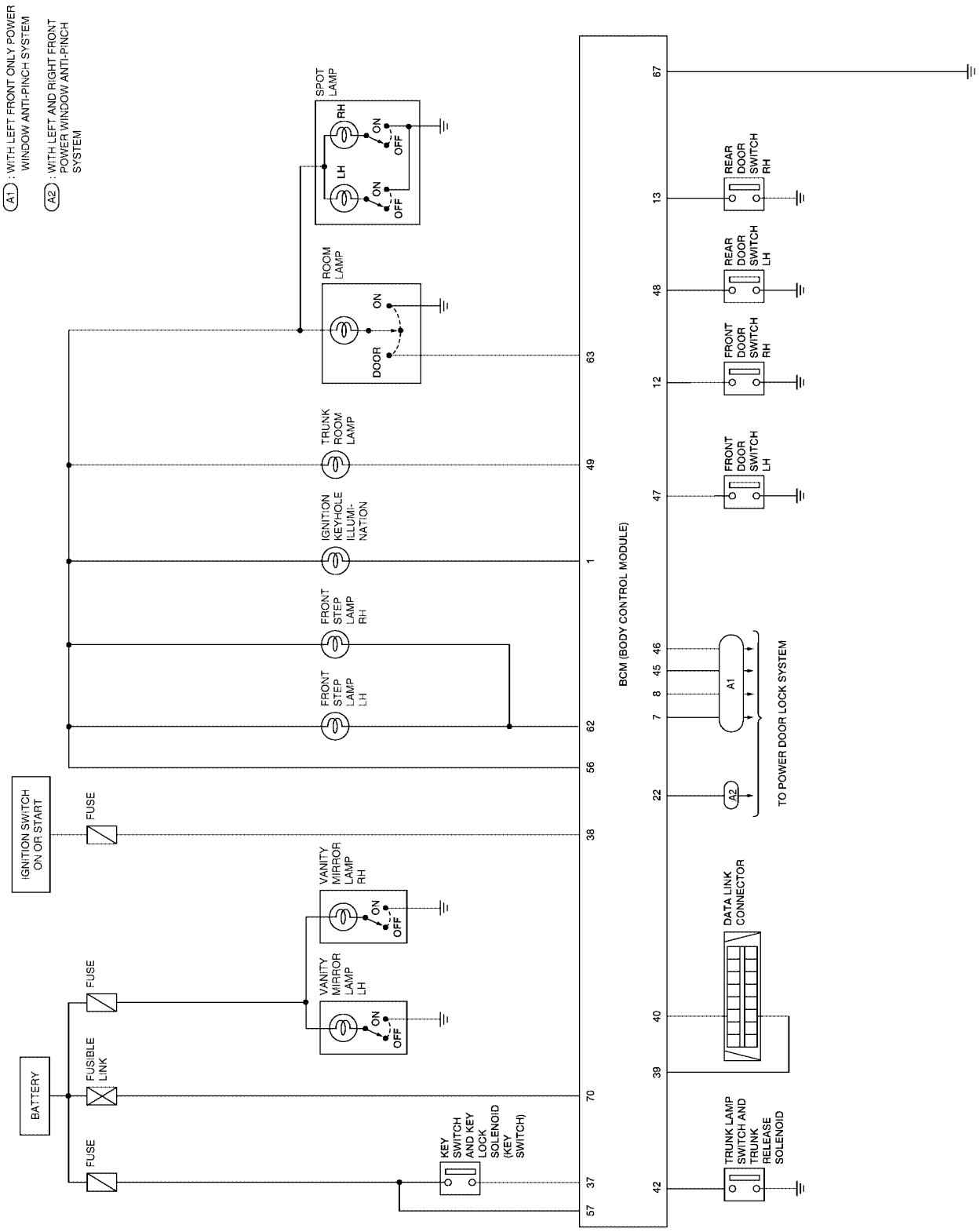

WKWA1393E

Wiring Diagram — INT/L —

EKS008OC

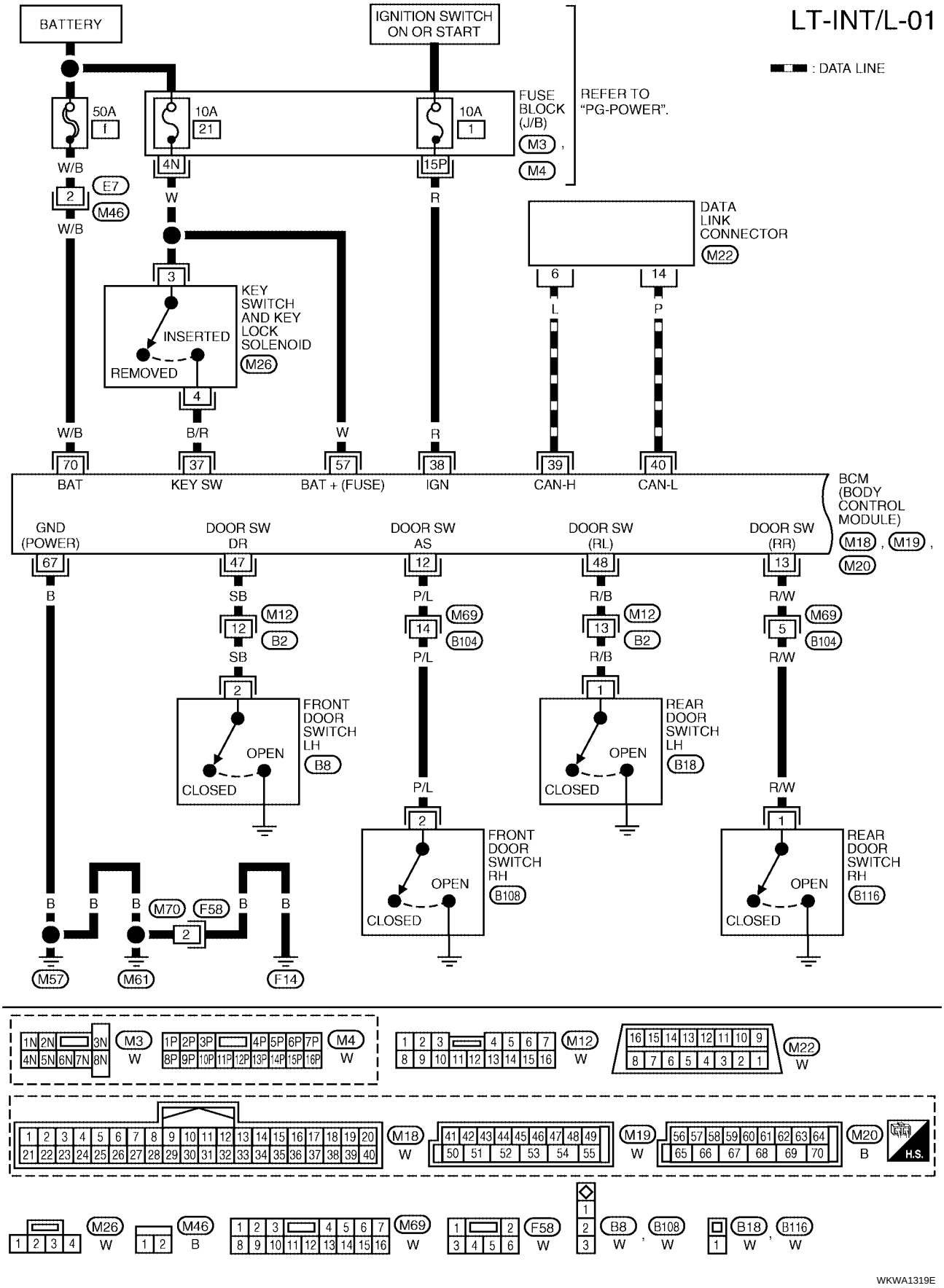

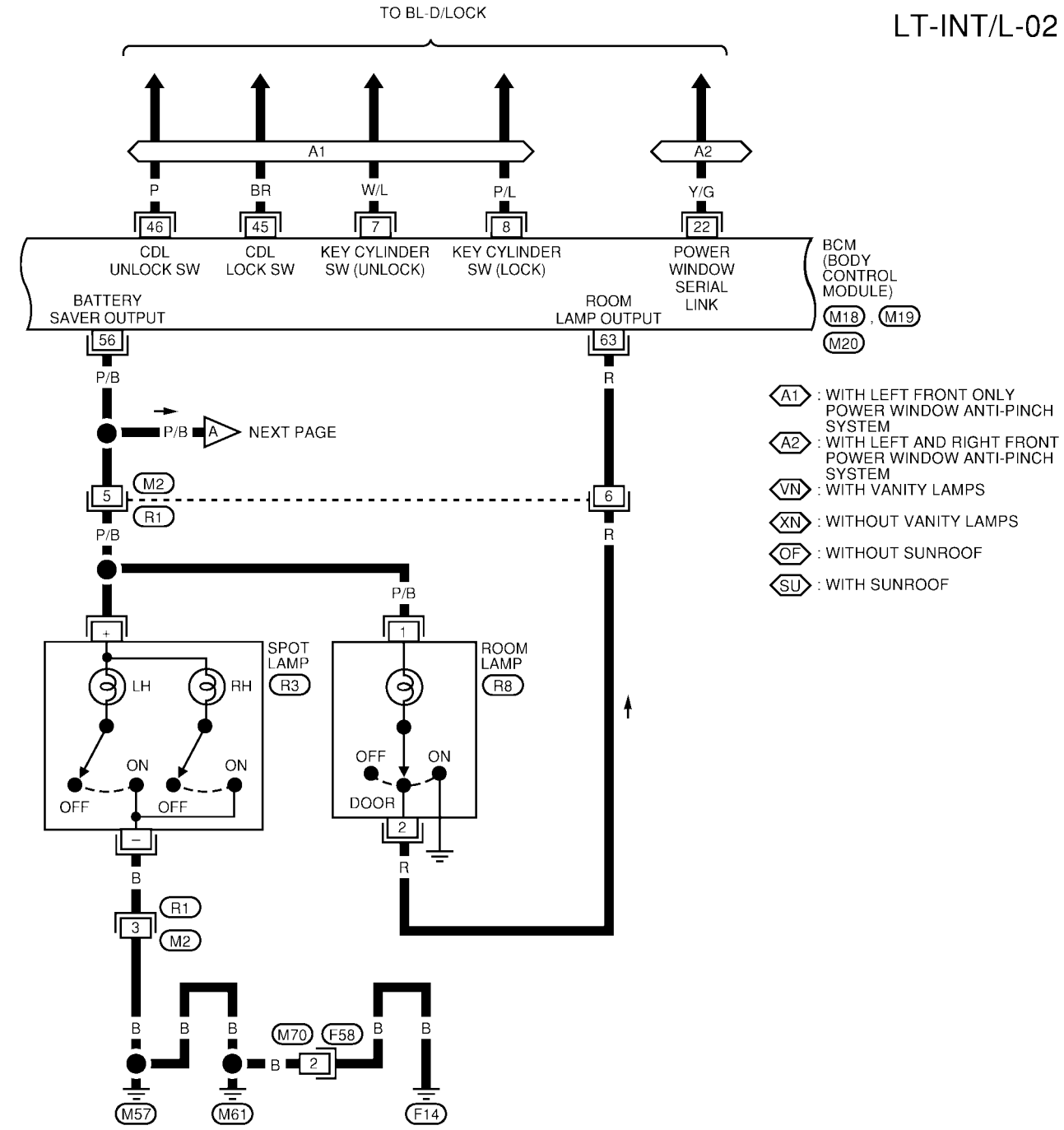
LT-INT/L-02
TO BL-D/LOCK
A1
A2
P
BR
W/L
P/L
Y/G
46
45
7
8
22
CDL UNLOCK SW
CDL LOCK SW
KEY CYLINDER SW (UNLOCK)
KEY CYLINDER SW (LOCK)
POWER WINDOW SERIAL LINK
BCM (BODY CONTROL MODULE)
BATTERY SAVER OUTPUT
ROOM LAMP OUTPUT
M18 , M19
M20
56
63
P/B
R
P/B A NEXT PAGE
A1 : WITH LEFT FRONT ONLY POWER WINDOW ANTI-PINCH SYSTEM
A2 : WITH LEFT AND RIGHT FRONT POWER WINDOW ANTI-PINCH SYSTEM
VN : WITH VANITY LAMPS
XN : WITHOUT VANITY LAMPS
OF : WITHOUT SUNROOF
SU : WITH SUNROOF
M2
R1
5
6
SPOT LAMP
R3
LH
RH
ON
OFF
ROOM LAMP
R8
DOOR
B
3
M70
F58
2
M57
M61
F14

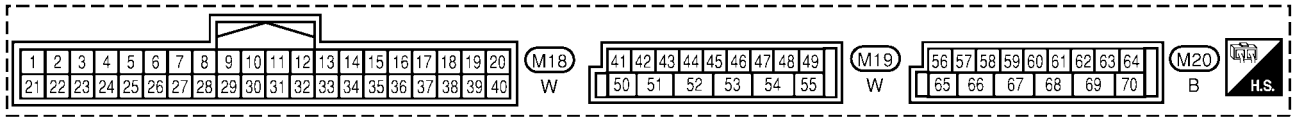
M18
W
M19
W
M20
B
H.S.

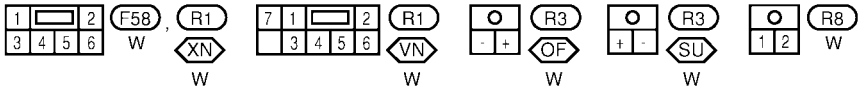
F58 , R1
W
XN
W
R1
VN
W
R3
OF
W
R3
SU
W
R8
W

WKWA1394E

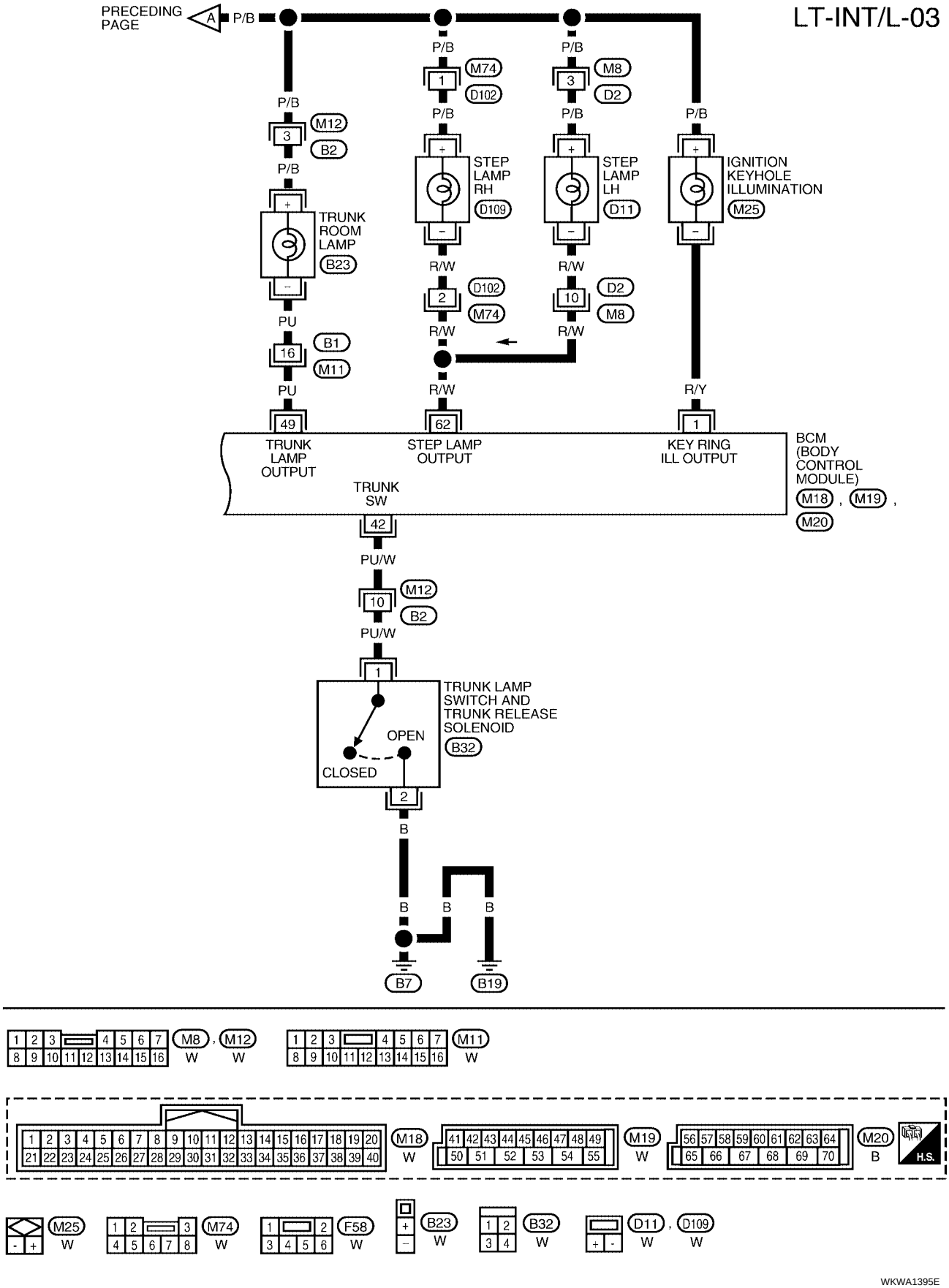
LT-INT/L-03
PRECEDING PAGE
A
P/B
M74
D102
M8
D2
M12
B2
TRUNK ROOM LAMP
B23
STEP LAMP RH
D109
STEP LAMP LH
D11
IGNITION KEYHOLE ILLUMINATION
M25
R/W
PU
B1
M11
R/Y
TRUNK LAMP OUTPUT
STEP LAMP OUTPUT
KEY RING ILL OUTPUT
BCM (BODY CONTROL MODULE)
M18 , M19 , M20
TRUNK SW
PU/W
TRUNK LAMP SWITCH AND TRUNK RELEASE SOLENOID
B32
OPEN
CLOSED
B
B7
B19
M8 , M12
W
M11
M18
M19
M20
B
H.S.
M25
M74
F58
B23
B32
D11 , D109
WKWA1395E

Models With Vanity Lamps

EKS009Y8

LT-INT/L-04

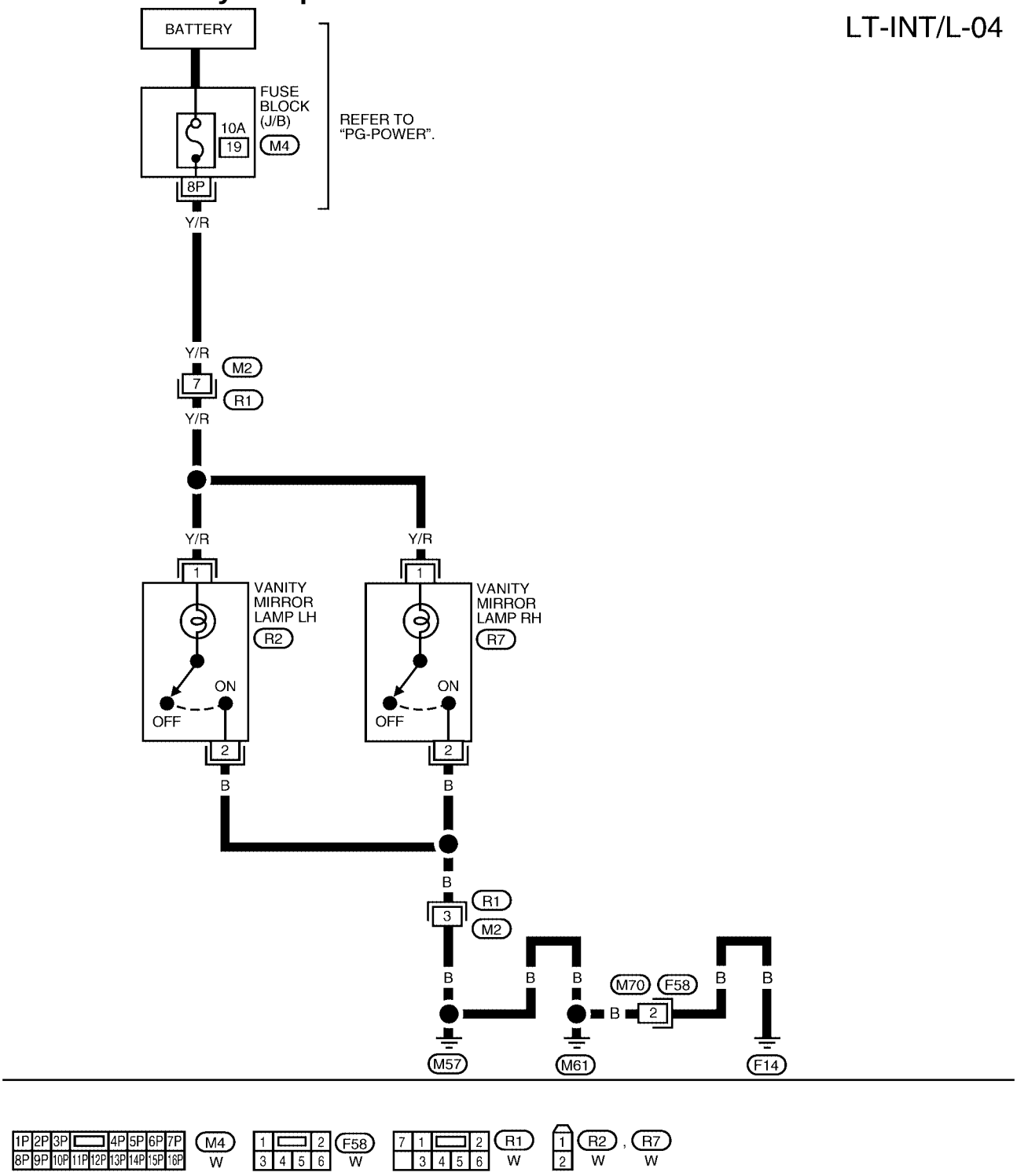

WKWA2974E

Terminals and Reference Values for BCM

EKS008OD

Terminal No.	Wire color	Signal name	Measuring condition: Ignition switch	Measuring condition: Operation or condition		Reference value (Approx.)
1	R/Y	Ignition keyhole illumination signal	OFF	Door is locked. (SW OFF)		Battery voltage
				Door is unlocked. (SW ON)		0V
7	W/L	Front door key cylinder switch LH (unlock)	OFF	OFF (neutral position)		5V
				ON (unlocked position)		0V
8	P/L	Front door key cylinder switch LH (lock)	OFF	OFF (neutral position)		5V
				ON (locked position)		0V
12	P/L	Front door switch RH signal	OFF	Front door switch RH	ON (open)	0V
					OFF (closed)	Battery voltage
13	R/W	Rear door switch RH signal	OFF	Rear door switch RH	ON (open)	0V
					OFF (closed)	Battery voltage
22	Y/G	Power window switch serial link	—	When ignition switch ON or power window timer operates		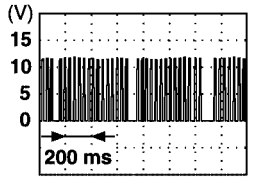 PIIA2344J
37	B/R	Key-in switch detection signal	OFF	Vehicle key is removed.		0V
				Vehicle key is inserted.		Battery voltage
38	R	Ignition power supply	ON	—		Battery voltage
39	L	CAN-H	—	—		—
40	P	CAN-L	—	—		—
42	PU/W	Trunk lamp switch signal	OFF	Trunk lid	ON (open)	0V
					OFF (closed)	Battery voltage
45	BR	Lock switch signal	OFF	Door lock and unlock switch	OFF (neutral position)	Battery voltage
					ON (locked position)	0V
46	P	Unlock switch signal	OFF	Door lock and unlock switch	OFF (neutral position)	Battery voltage
					ON (unlocked position)	0V
47	SB	Front door switch LH signal	OFF	Front door switch LH	ON (open)	0V
					OFF (closed)	Battery voltage
48	R/B	Rear door switch LH signal	OFF	Rear door switch LH	ON (open)	0V
					OFF (closed)	Battery voltage
49	PU	Trunk room lamp signal	OFF	Trunk lid is open (ON)		0V
				Trunk lid is closed (OFF)		Battery voltage
56	P/B	Battery saver output signal	OFF	30 minutes after ignition switch is turned to OFF		0V
			ON	—		Battery voltage
57	W	Battery power supply (fuse)	OFF	—		Battery voltage
62	R/W	Step lamp signal	OFF	Any door is open (ON)		0V
				All doors are closed (OFF)		Battery voltage

Terminal No.	Wire color	Signal name	Measuring condition				Reference value (Approx.)
			Igni-tion switch	Operation or condition			
63	R	Interior room lamp output signal	OFF	Interior room lamp switch: DOOR posi-tion	Any door switch	ON (open)	0V
						OFF (closed)	Battery voltage
67	B	Ground	ON	—			0V
70	W/B	Battery power supply (fusible link)	OFF	—			Battery voltage

How to Proceed With Trouble Diagnosis

EKS008OE

1. Confirm the symptom or customer complaint.
2. Understand operation description and function description. Refer to LT-114, "System Description" .
3. Carry out the Preliminary Check. Refer to LT-124, "Preliminary Check" .
4. Check symptom and repair or replace the cause of malfunction.
5. Does the interior room lamp operate normally? If YES: GO TO 6. If NO: GO TO 4.
6. Inspection End.

Preliminary Check

EKS008OF

INSPECTION FOR POWER SUPPLY AND GROUND CIRCUIT

1. CHECK FUSES AND FUSIBLE LINK

Check for blown BCM fuses or fusible link.

Unit	Power source	Fuse and fusible link No.
BCM	Battery	f
		21
	Ignition switch ON or START position	1

Refer to LT-119, "Wiring Diagram — INT/L —" .

OK or NG

OK >> GO TO 2.

NG >> If fuse or fusible link is blown, be sure to eliminate cause of malfunction before installing new fuse or fusible link. Refer to PG-4, "POWER SUPPLY ROUTING CIRCUIT" .

2. CHECK POWER SUPPLY CIRCUIT

1. Disconnect BCM connectors.
2. Check voltage between BCM connector terminals and ground.

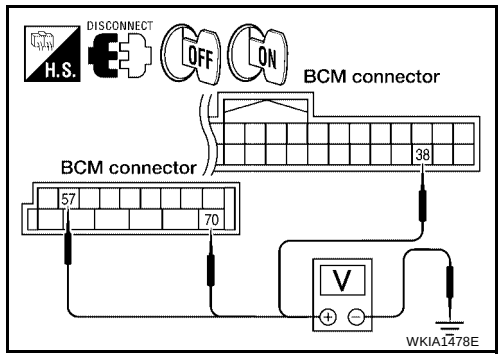

BCM		(–)	Ignition switch position	
(+)			OFF	ON
Connector	Terminal			
M18	38	Ground	0V	Battery voltage
M20	57		Battery voltage	Battery voltage
	70		Battery voltage	Battery voltage

OK or NG

OK >> GO TO 3.

NG >> Check harness for open between BCM and fuse or fusible link.

3. CHECK GROUND CIRCUIT

Check continuity between BCM connector terminal and ground.

BCM			Continuity
Connector	Terminal		
M19	67	Ground	Yes

OK or NG

OK >> Inspection End.
NG >> Check harness ground circuit.

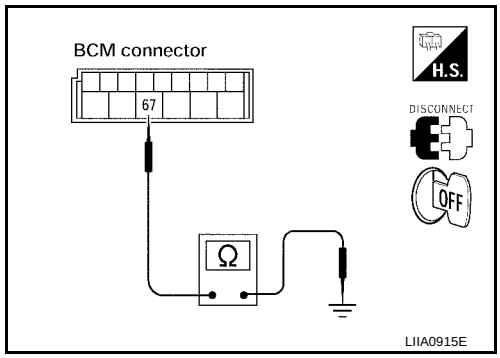

CONSULT-II Function (BCM)

EKS008OG

CONSULT-II can display each diagnostic item using the diagnostic test modes shown following.

BCM diagnostic test item	Diagnostic mode	Description
Inspection by part	WORK SUPPORT	Supports inspections and adjustments. Commands are transmitted to the BCM for setting the status suitable for required operation, input/output signals are received from the BCM and received data is displayed.
	DATA MONITOR	Displays BCM input/output data in real time.
	ACTIVE TEST	Operation of electrical loads can be checked by sending drive signal to them.
	SELF-DIAG RESULTS	Displays BCM self-diagnosis results.
	CAN DIAG SUPPORT MNTR	The result of transmit/receive diagnosis of CAN communication can be read.
	ECU PART NUMBER	BCM part number can be read.
	CONFIGURATION	Performs BCM configuration read/write functions.

CONSULT-II OPERATION

CAUTION:

If CONSULT-II is used with no connection of CONSULT-II CONVERTER, malfunctions might be detected in self-diagnosis depending on control unit which carries out CAN communication.

1. With the ignition switch OFF, connect CONSULT-II and CONSULT-II CONVERTER to the data link connector, then turn ignition switch ON.

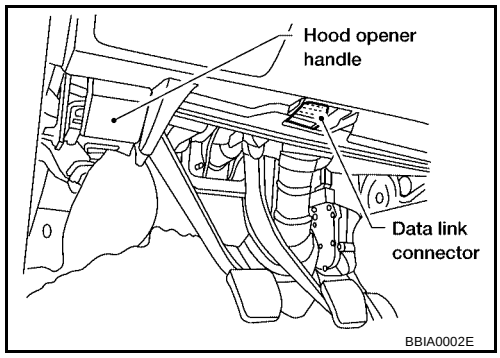

2. Touch "START (NISSAN BASED VHCL)".

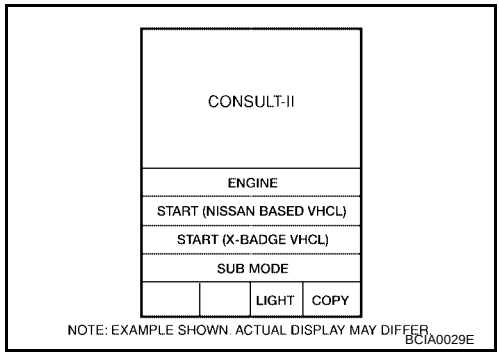

3. Touch "BCM" on "SELECT SYSTEM" screen.
   If "BCM" is not indicated, go to GI-39, "Consult-II Data Link Connector (DLC) Circuit" .

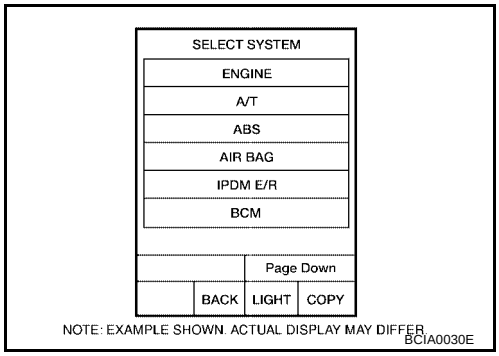

4. Select the desired part to be diagnosed on the "SELECT TEST ITEM" screen.

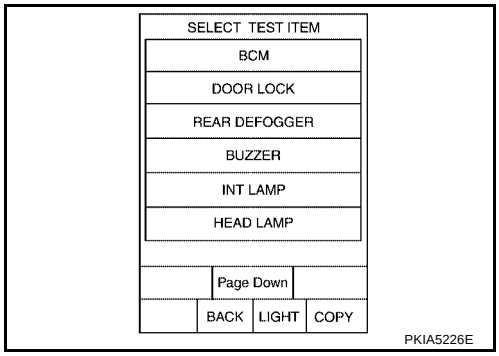

WORK SUPPORT

Operation Procedure

1. Touch "INT LAMP" on "SELECT TEST ITEM" screen.
2. Touch "WORK SUPPORT" on "SELECT DIAG MODE" screen.
3. Touch "SET I/L D-UNLCK INTCON", "ROOM LAMP ON TIME SET" or "ROOM LAMP OFF TIME SET" on "SELECT WORK ITEM" screen.
4. Touch "START".
5. Touch "CHANGE SETT".
6. The setting will be changed and "CUSTOMIZING COMPLETED" will be displayed.
7. Touch "END".

Display Item List

Item	Description	CONSULT-II
SET I/L D-UNLCK INTCON	The 30 seconds glowing function the interior room lamps and the ignition keyhole illumination can be selected when front door LH is released (unlocked).	ON/OFF
ROOM LAMP ON TIME SET	The time in order to escalate illumination can be adjusted when the interior room lamps and the ignition keyhole illumination is turned on.	MODE 1 - 7
ROOM LAMP OFF TIME SET	The time in order to diminish illumination can be adjusted when the interior room lamps and the ignition keyhole illumination is turned off.	MODE 1 - 7

Reference between "MODE" and "TIME" for "TURN ON/OFF".

MODE	1	2	3	4	5	6	7
Time (sec.)	0.5	1	2	3	4	5	0

DATA MONITOR

Operation Procedure

1. Touch "INT LAMP" on "SELECT TEST ITEM" screen.
2. Touch "DATA MONITOR" on "SELECT DIAG MODE" screen.
3. Touch either "ALL SIGNALS" or "SELECTION FROM MENU" on "SELECT MONITOR ITEM" screen.

ALL SIGNALS	Monitors all the signals.
SELECTION FROM MENU	Selects and monitors the individual signal.

4. Touch "START".
5. When "SELECTION FROM MENU" is selected, touch items to be monitored. When "ALL SIGNALS" is selected, all the items will be monitored.
6. Touch "RECORD" while monitoring, then the status of the monitored item can be recorded. To stop recording, touch "STOP".

Display Item List

Monitor item		Contents
IGN ON SW	"ON/OFF"	Displays "IGN position (ON)/OFF, ACC position (OFF)" judged from the ignition switch signal.
KEY ON SW	"ON/OFF"	Displays "Key inserted (ON)/key removed (OFF)" status judged from the key switch signal.
DOOR SW-DR	"ON/OFF"	Displays status of the front door LH as judged from the front door switch LH signal. (Door is open: ON/Door is closed: OFF)
DOOR SW-AS	"ON/OFF"	Displays "Door open (ON)/Door closed (OFF)" status, determined from front door switch RH signal.
DOOR SW-RR	"ON/OFF"	Displays "Door open (ON)/Door closed (OFF)" status, determined from rear door switch RH signal.
DOOR SW-RL	"ON/OFF"	Displays "Door open (ON)/Door closed (OFF)" status, determined from rear door switch LH signal.
BACK DOOR SW	"ON/OFF"	Displays "Door open (ON)/Door closed (OFF)" status, determined from back door switch signal.
KEY CYL LK-SW	"ON/OFF"	Displays "Door locked (ON)" status, determined from key cylinder lock switch in front door LH.
KEY CYL UN-SW	"ON/OFF"	Displays "Door unlocked (OFF)" status, determined from key cylinder lock switch in front door LH.
CDL LOCK SW	"ON/OFF"	Displays "Door locked (ON)/Door unlocked (OFF)" status, determined from locking detection switch in front door LH.
CDL UNLOCK SW	"ON/OFF"	Displays "Door unlocked (OFF)" status, determined from locking detection switch in front door RH.
KEYLESS LOCK	"ON/OFF"	Displays "Locked (ON)/Other (OFF)" status, determined from lock signal.
KEYLESS UNLOCK	"ON/OFF"	Displays "Unlocked (ON)/Other (OFF)" status, determined from unlock signal.

ACTIVE TEST

Operation Procedure

1. Touch "INT LAMP" on "SELECT TEST ITEM" screen.
2. Touch "ACTIVE TEST" on "SELECT DIAG MODE" screen.
3. Touch item to be tested and check operation of the selected item.
4. During the operation check, touching "BACK" deactivates the operation.

Display Item List

Test item	Description
INT LAMP	Interior room lamp can be operated by any ON-OFF operations.
IGN ILLUM	Ignition keyhole illumination can be operated by ON-OFF operation.
STEP LAMP TEST	Step lamp can be operated by ON-OFF operation.
LUGGAGE LAMP TEST	Trunk room lamp can be operated by ON-OFF operation.

Interior Room Lamp Control Does Not Operate

EKS008OH

1. CHECK EACH SWITCH

Select "BCM" on CONSULT-II. With "INT LAMP" data monitor, make sure switches listed in display item list turn ON-OFF linked with switch operation. Refer to LT-127, "Display Item List" for switches and their functions.

OK or NG

OK >> GO TO 2.
NG >> Inspect malfunctioning switch system.

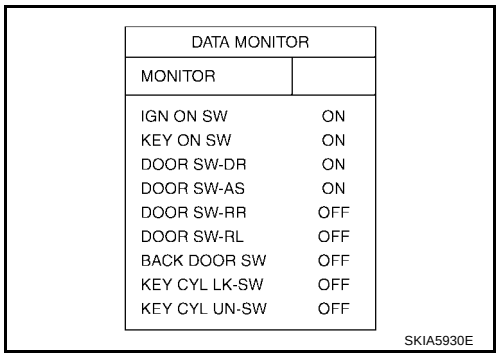

DATA MONITOR	
MONITOR	
IGN ON SW	ON
KEY ON SW	ON
DOOR SW-DR	ON
DOOR SW-AS	ON
DOOR SW-RR	OFF
DOOR SW-RL	OFF
BACK DOOR SW	OFF
KEY CYL LK-SW	OFF
KEY CYL UN-SW	OFF

SKIA5930E

2. ACTIVE TEST

1. Select "BCM" on CONSULT-II. Select "INT LAMP" active test.
2. When room lamp switch is in DOOR position, use active test to make sure room lamp operates.

OK or NG

OK >> Replace BCM. Refer to BCS-20, "Removal and Installation of BCM" .
NG >> GO TO 3.

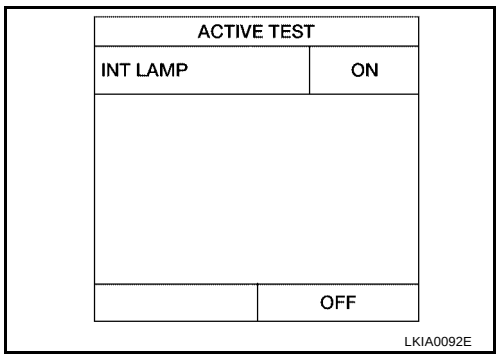

ACTIVE TEST	
INT LAMP	ON
	OFF

LKIA0092E

3. CHECK ROOM LAMP INPUT

1. Turn ignition switch OFF.
2. Check voltage between room lamp harness connector R8 terminal 1 and ground.

1 - Ground : Battery voltage should exist.

OK or NG

OK >> GO TO 4.
NG >> GO TO 6.

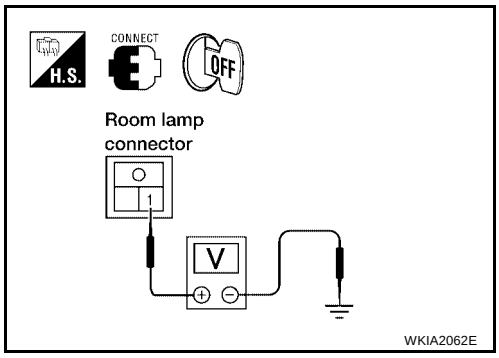

WKIA2062E

4. CHECK ROOM LAMP

1. Disconnect room lamp connector.
2. Check continuity between room lamp terminals.

Room lamp Terminal		Condition	Continuity
1	2	Room lamp switch is DOOR	Yes
		Room lamp switch is OFF	No

OK or NG

OK >> GO TO 5.
NG >> Replace room lamp. Refer to LT-132, "ROOM OR SPOT LAMP" .

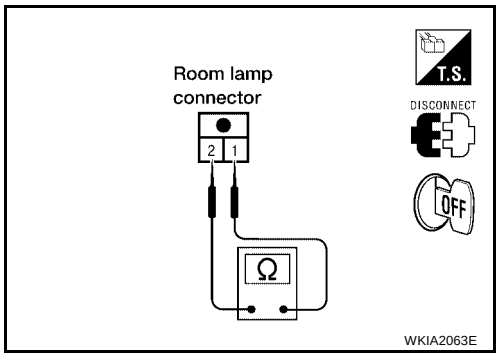

WKIA2063E

5. CHECK ROOM LAMP CIRCUIT

1. Disconnect BCM connector.
2. Check continuity between BCM harness connector M20 terminal 56 and room lamp harness connector R8 terminal 1.

56 - 1 : Continuity should exist.

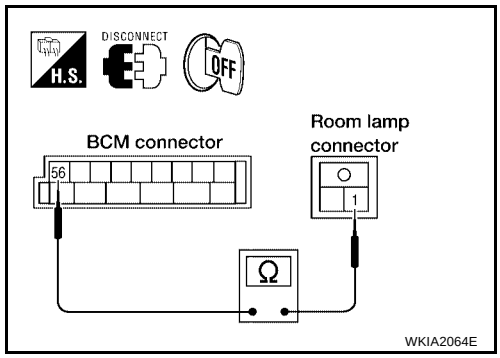

OK or NG

OK >> Replace BCM if interior lamp does not work after setting the connector again. Refer to BCS-20, "Removal and Installation of BCM" .

NG >> Repair harness or connector.

6. CHECK ROOM LAMP CIRCUIT

1. Disconnect BCM connector and room lamp connector.
2. Check continuity between BCM harness connector M20 terminal 63 and room lamp harness connector R8 terminal 2.

63 - 2 : Continuity should exist.

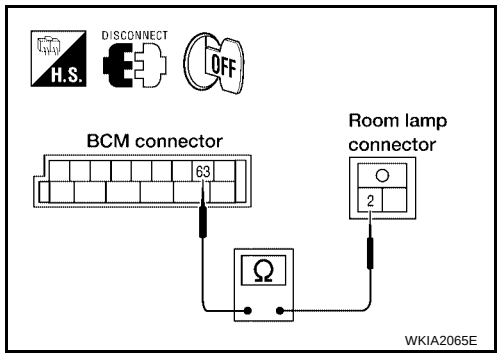

OK or NG

OK >> Replace BCM if interior lamp does not work after setting the connector again. Refer to BCS-20, "Removal and Installation of BCM" .

NG >> Repair harness or connector.

Ignition Keyhole Illumination Control Does Not Operate

EKS008OI

1. CHECK EACH SWITCH

Select "BCM" on CONSULT-II. With "INT LAMP" data monitor, make sure switches listed in display item list turn ON-OFF linked with switch operation. Refer to LT-127, "Display Item List" for switches and their functions.

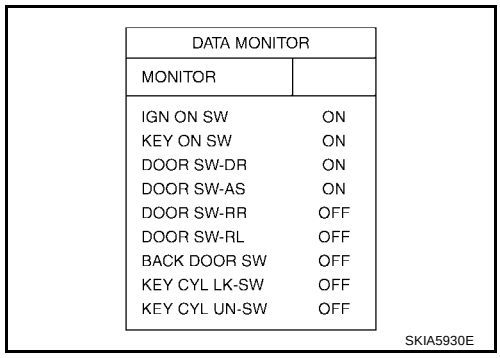

DATA MONITOR	
MONITOR	
IGN ON SW	ON
KEY ON SW	ON
DOOR SW-DR	ON
DOOR SW-AS	ON
DOOR SW-RR	OFF
DOOR SW-RL	OFF
BACK DOOR SW	OFF
KEY CYL LK-SW	OFF
KEY CYL UN-SW	OFF

SKIA5930E

OK or NG

OK >> GO TO 2.

NG >> Inspect malfunctioning switch system.

2. ACTIVE TEST

1. Select "BCM" on CONSULT-II. Select "INT LAMP".
2. Select "IGN ILLUM" active test to make sure lamp operates.

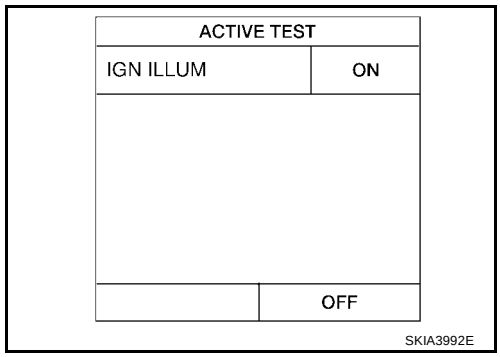

ACTIVE TEST	
IGN ILLUM	ON
	OFF

SKIA3992E

OK or NG

OK >> Replace BCM. Refer to BCS-20, "Removal and Installation of BCM" .

NG >> GO TO 3.

3. CHECK IGNITION KEYHOLE ILLUMINATION INPUT

1. Turn ignition switch OFF.
2. Check voltage between ignition keyhole illumination harness connector M25 terminal + and ground.

+ - Ground : Battery voltage should exist.

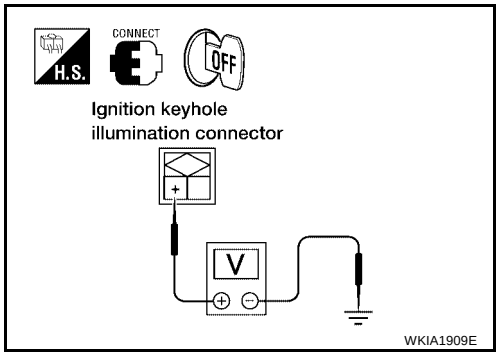

OK or NG

OK >> GO TO 4.
NG >> GO TO 6.

4. CHECK IGNITION KEYHOLE ILLUMINATION BULB

1. Disconnect ignition keyhole illumination connector.
2. Check continuity between ignition keyhole illumination terminals + and –.

+ - – : Continuity should exist.

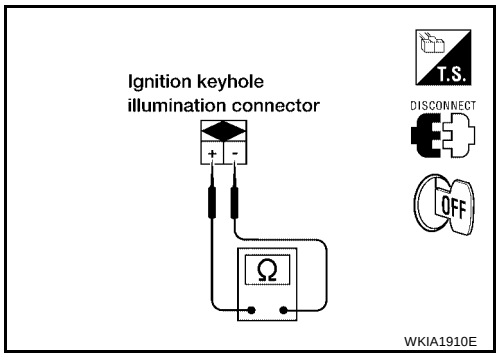

OK or NG

OK >> GO TO 5.
NG >> Replace ignition keyhole illumination bulb. Refer to LT-133, "IGNITION KEYHOLE ILLUMINATION LAMP" .

5. CHECK IGNITION KEYHOLE ILLUMINATION CIRCUIT

1. Disconnect BCM connector.
2. Check continuity between BCM harness connector M18 terminal 1 and ignition keyhole illumination harness connector M25 terminal –.

– - 1 : Continuity should exist.

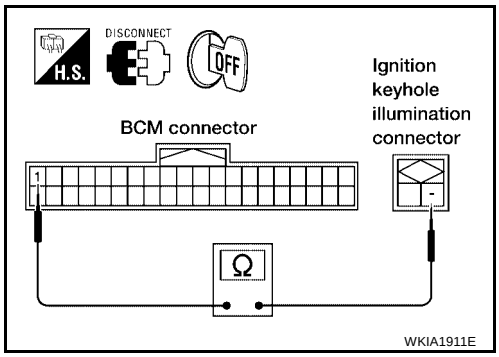

OK or NG

OK >> Replace BCM if ignition keyhole illumination does not work after setting the connector again. Refer to BCS-20, "Removal and Installation of BCM" .
NG >> Repair harness or connector.

6. CHECK IGNITION KEYHOLE ILLUMINATION CIRCUIT

1. Disconnect BCM connector and ignition keyhole illumination connector.
2. Check continuity between BCM harness connector M20 terminal 56 and ignition keyhole illumination harness connector M25 terminal +.

+ - 56 : Continuity should exist.

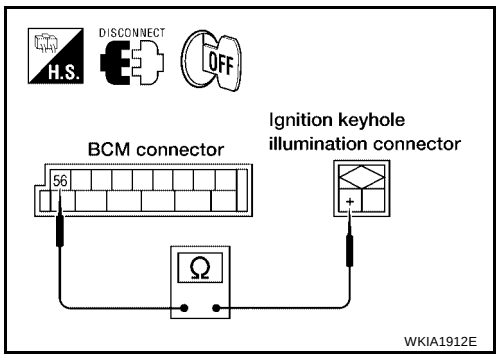

OK or NG

OK >> Replace BCM if ignition keyhole illumination does not work after setting the connector again. Refer to BCS-20, "Removal and Installation of BCM" .
NG >> Repair harness or connector.

All Step Lamps Do Not Operate

EKS008OJ

1. CHECK EACH DOOR SWITCH

Select "BCM" on CONSULT-II. With "INT LAMP" data monitor, make sure switches listed below turn ON-OFF linked with switch operation.

Switch name	CONSULT screen
Front door switch LH	DOOR SW-DR
Front door switch RH	DOOR SW-AS
Rear door switch RH	DOOR SW-RR
Rear door switch LH	DOOR SW-RL

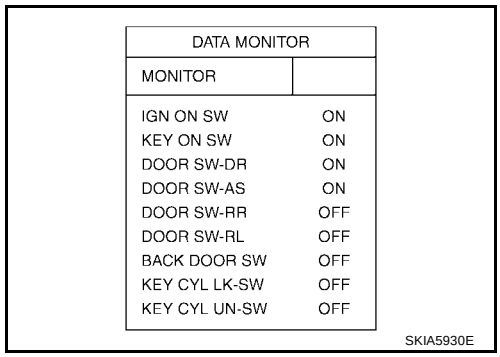

DATA MONITOR	
MONITOR	
IGN ON SW	ON
KEY ON SW	ON
DOOR SW-DR	ON
DOOR SW-AS	ON
DOOR SW-RR	OFF
DOOR SW-RL	OFF
BACK DOOR SW	OFF
KEY CYL LK-SW	OFF
KEY CYL UN-SW	OFF

SKIA5930E

OK or NG

OK >> GO TO 2.
NG >> Inspect malfunctioning switch system.

2. CHECK STEP LAMP INPUT

1. Turn ignition switch OFF.
2. Check voltage between step lamp LH harness connector D11 terminal + and ground.

+ - Ground : Battery voltage should exist.

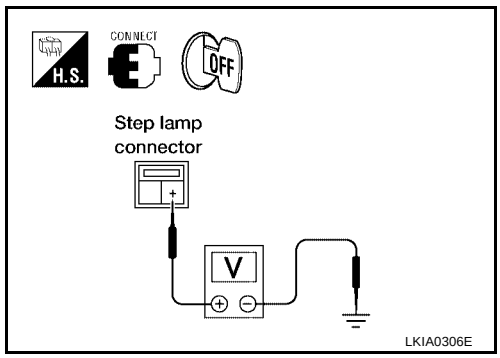

LKIA0306E

OK or NG

OK >> GO TO 3.
NG >> GO TO 4.

3. CHECK STEP LAMP CIRCUIT

1. Disconnect BCM connector and step lamp LH connector.
2. Check continuity between BCM harness connector M20 terminal 62 and step lamp LH harness connector D11 terminal –.

– - 62 : Continuity should exist.

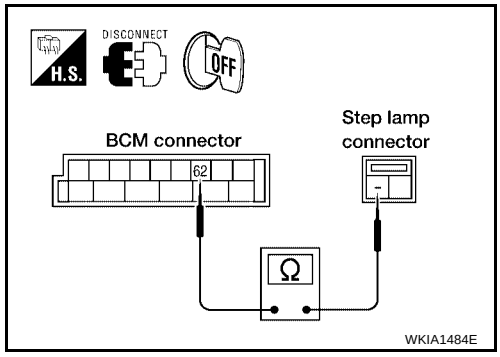

WKIA1484E

OK or NG

OK >> Replace BCM if step lamp does not work after setting the connector again. Refer to BCS-20, "Removal and Installation of BCM" .
NG >> Repair harness or connector.

4. CHECK STEP LAMP CIRCUIT

1. Disconnect BCM connector and step lamp LH connector.
2. Check continuity between BCM harness connector M20 terminal 56 and step lamp LH harness connector D11 terminal +.

+ - 56 : Continuity should exist.

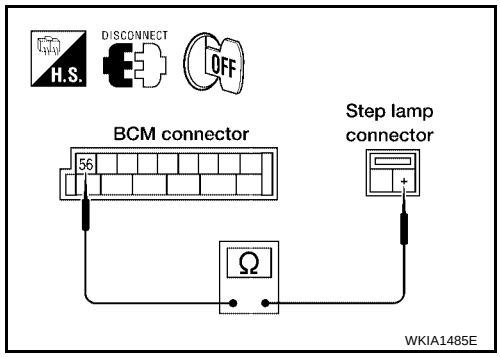

WKIA1485E

OK or NG

OK >> Replace BCM if step lamp does not work after setting the connector again. Refer to BCS-20, "Removal and Installation of BCM" .
NG >> Repair harness or connector.

All Interior Room Lamps Do Not Operate

EKS008OK

1. CHECK POWER SUPPLY CIRCUIT

1. All interior room lamps switch are OFF.
2. Turn ignition switch ON.
3. Check voltage between BCM harness connector M20 terminal 56 and ground.

56 - Ground : Battery voltage should exist.

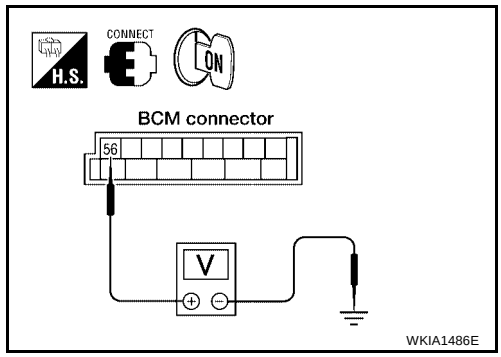

OK or NG

OK >> Repair harness or connector. To prevent making a short circuit, be sure to disconnect battery negative cable after repairing harness, and then reconnect.

NG >> Replace BCM. Refer to BCS-20, "Removal and Installation of BCM" .

Bulb Replacement

EKS008OL

ROOM OR SPOT LAMP

Removal

1. Insert a thin screwdriver in the notch and carefully remove the lens.
2. Remove the bulb.

Installation

Installation is in the reverse order of removal.

STEP LAMP

Removal

1. Carefully remove lamp assembly from door finisher.
2. Remove the bulb.

Installation

Installation is in the reverse order of removal.

VANITY MIRROR LAMP

Removal

1. Insert a thin screwdriver in the notch and carefully remove the lens.
2. Remove the bulb.

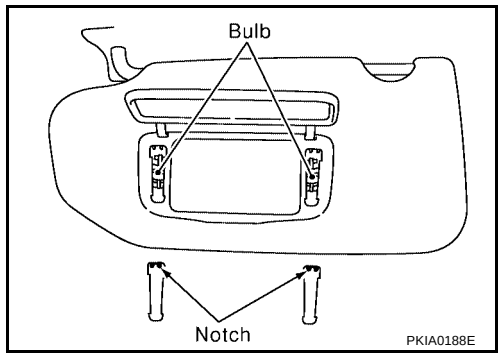

Installation

Installation is in the reverse order of removal.

TRUNK ROOM LAMP

Removal

1. Unfold tab A and open the lens.
2. Remove the bulb.

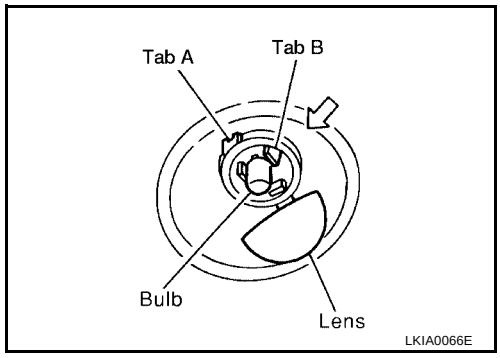

Installation

Installation is in the reverse order of removal.

Removal and Installation

EKS008OM

IGNITION KEYHOLE ILLUMINATION LAMP

Removal

1. Remove the instrument lower cover LH. Refer to IP-13, "INSTRUMENT LOWER COVER LH" .
2. Turn the bulb socket counterclockwise and unlock it.

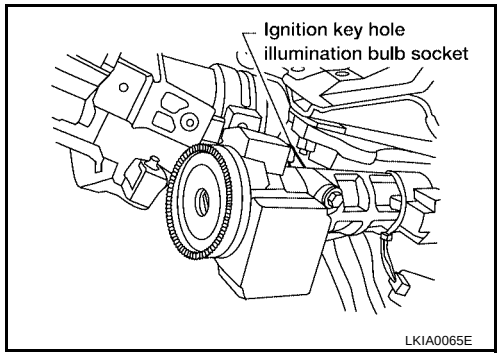

Installation

Installation is in the reverse order of removal.

ROOM LAMP

Removal

1. Carefully remove the lens.
2. Remove the screws.
3. Disconnect the connector and remove the room lamp.

Installation

Installation is in the reverse order of removal.

STEP LAMP

Removal

1. Carefully remove lamp assembly from door finisher.
2. Disconnect electrical connector.

Installation

Installation is in the reverse order of removal.

TRUNK ROOM LAMP

Removal

1. Unfold tab A and open the lens.
2. Remove the trunk room lamp while pressing tab B in the direction of the arrow.
3. Disconnect the trunk room lamp connector.

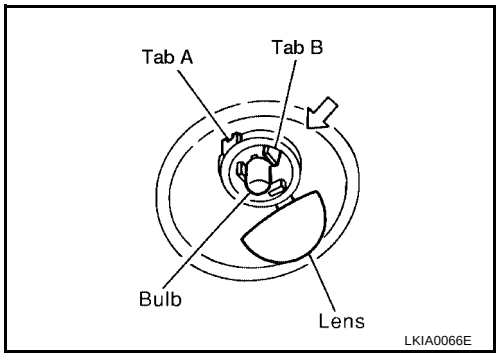

Installation

Installation is in the reverse order of removal.

ILLUMINATION

PFP:27545

Component Parts and Harness Connector Location

EKS00A87

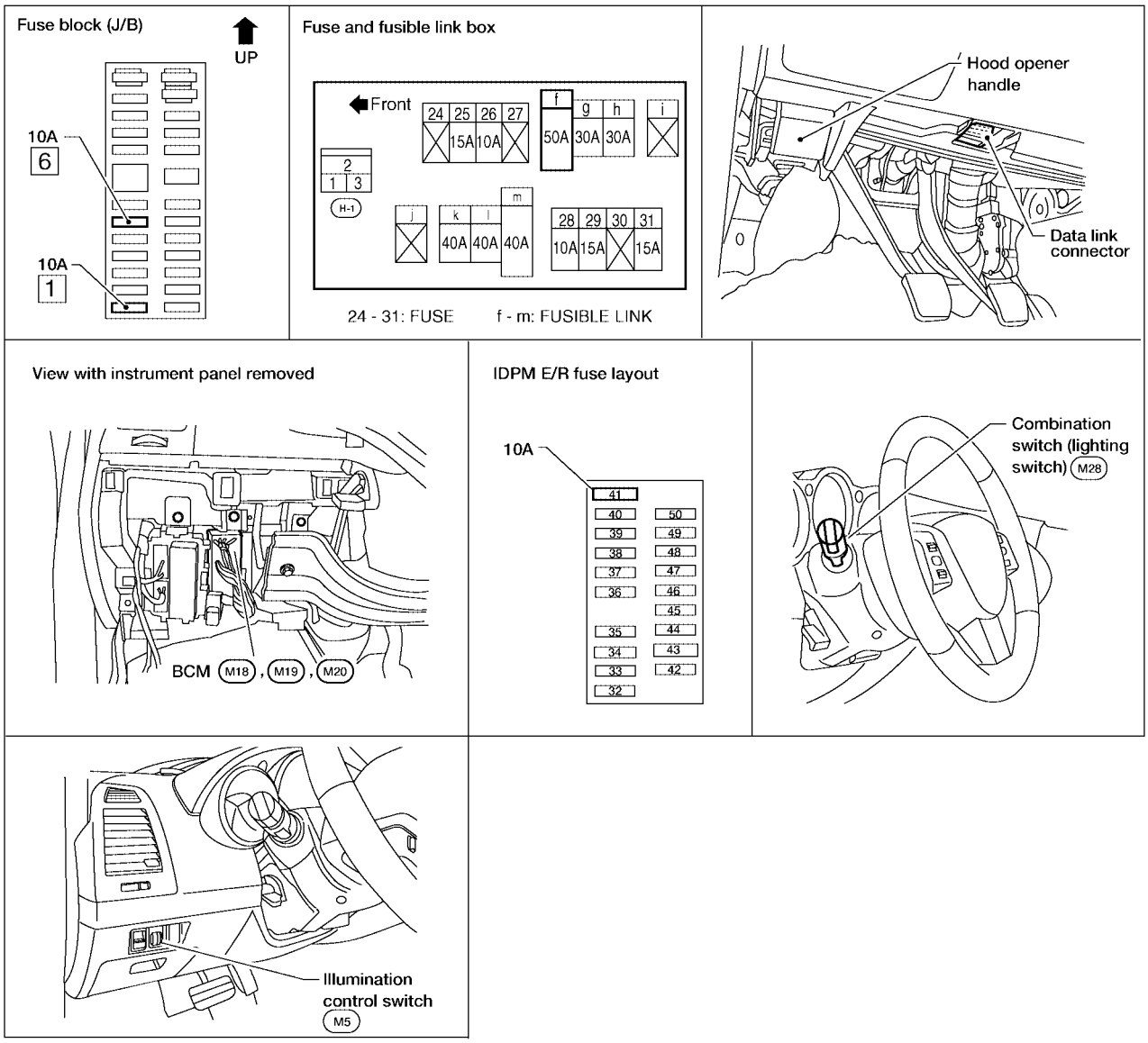

WKIA4090E

System Description

EKS008ON

Control of the illumination lamps operation is dependent upon the position of the lighting switch (combination switch). When the lighting switch is placed in the 1ST or 2ND position (or if the auto light system is activated) the BCM (body control module) receives input requesting the illumination lamps to illuminate. This input is communicated to the IPDM E/R (intelligent power distribution module engine room) across the CAN communication lines. The CPU (central processing unit) of the IPDM E/R controls the tail lamp relay coil. When energized, this relay directs power to the illumination lamps, which then illuminate.

Power is supplied at all times

- through 10A fuse (No. 41, located in the IPDM E/R)
- to tail lamp relay, located in the IPDM E/R, and
- through 50A fusible link (letter **f** , located in the fuse and fusible link box)
- to BCM terminal 70.

With the ignition switch in the ON or START position, power is supplied

- through 10A fuse [No. 1, located in the fuse block (J/B)]
- to BCM terminal 38.

With the ignition switch in the ACC or ON position, power is supplied

- through 10A fuse [No. 6, located in the fuse block (J/B)]
- to BCM terminal 11.

Ground is supplied

- to BCM terminal 67
- through grounds F14, M57 and M61.

ILLUMINATION OPERATION BY LIGHTING SWITCH

With the lighting switch in the 1ST or 2ND position (or if the auto light system is activated), the BCM receives input requesting the illumination lamps to illuminate. This input is communicated to the IPDM E/R across the CAN communication lines. The CPU of the IPDM E/R controls the tail lamp relay coil which, when energized, directs power

- through IPDM E/R terminal 22
- to illumination control switch terminal 1
- to combination meter terminal 31
- to A/T device terminal 15 (with A/T)
- to TCS ON/OFF switch terminal 3 (with TCS)
- to audio unit terminal 8
- to hazard switch terminal 3
- to heated seat switch LH and RH terminal 1 (with heated seats)
- to front air control terminal 12
- to AV switch terminal 3 (with NAVI)
- to NAVI control unit terminal 26 (with NAVI)
- to glove box lamp terminal +.

With the ignition switch in ON or START, power is also supplied

- through BCM terminal 68
- to rear power window switch LH terminal 5
- to rear power window switch RH terminal 5
- to front power window switch RH terminal 5 (with left front only power window anti-pinch system) or terminal 13 (with left and right front power window anti-pinch system)
- to main power window and door lock/unlock switch terminal 12 (with left front only power window anti-pinch system) or terminal 17 (with left and right front power window anti-pinch system).

Ground is supplied

- to illumination control switch terminal 3
- to glove box lamp terminal –
- to combination meter terminal 24
- through grounds F14, M57 and M61, and
- to rear power window switch RH terminal 8
- through ground B117, and
- to rear power window switch LH terminal 8
- to NAVI control unit terminal 30 (with NAVI)
- through grounds B7 and B19.

The main power window and door lock/unlock switch and the front power window switch RH illumination circuits are case grounded.
Controlled ground is supplied

- through illumination control switch terminal 2
- to combination meter terminal 32
- to A/T device terminal 16 (with A/T)
- to TCS ON/OFF switch terminal 4 (with TCS)
- to audio unit terminal 7
- to hazard switch terminal 4

- to heated seat switch LH and RH terminal 2 (with heated seats)
- to front air control terminal 11
- to AV switch terminal 4 (with NAVI).

With power and ground supplied, illumination lamps illuminate.

BATTERY SAVER CONTROL

When the combination switch (lighting switch) is in the 1ST or 2ND position (or if auto light system is activated) and the ignition switch is turned from ON or ACC to OFF, the battery saver control feature is activated.
Under this condition, the illumination lamps remain illuminated for 30 minutes unless the combination switch (lighting switch) position is changed. If the combination switch (lighting switch) position is changed, then the illumination lamps are turned off after a 30 second delay.
When the lighting switch is turned from OFF to 1ST or 2ND position (or if auto light system is activated) after illumination lamps have been turned off by the battery saver control, the illumination lamps illuminate again.

CAN Communication System Description

EKS008OO

Refer to LAN-20, "CAN COMMUNICATION" .

Schematic

EKS008OP

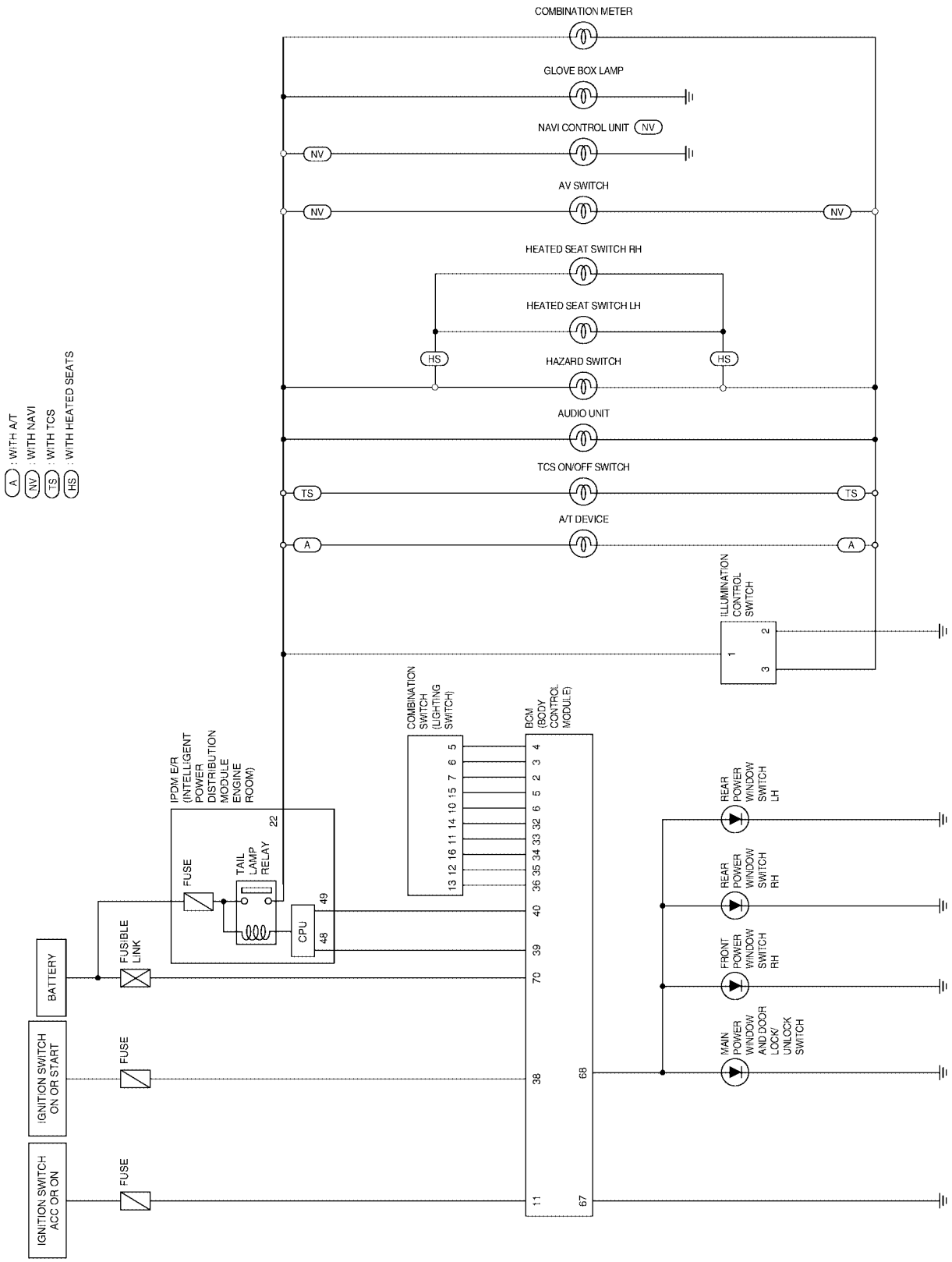

WKWA3565E

Wiring Diagram — ILL —

EKS008OQ

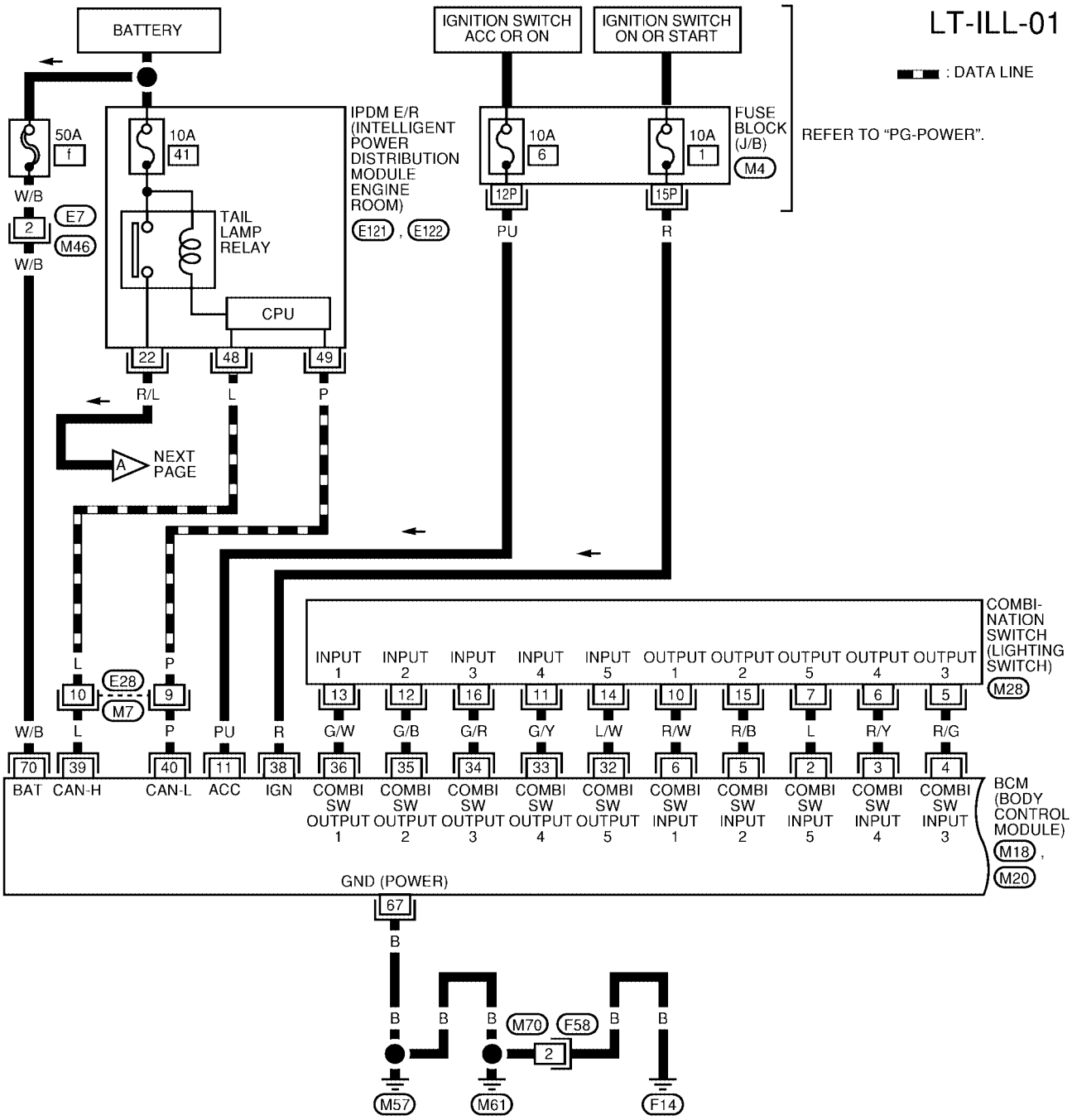

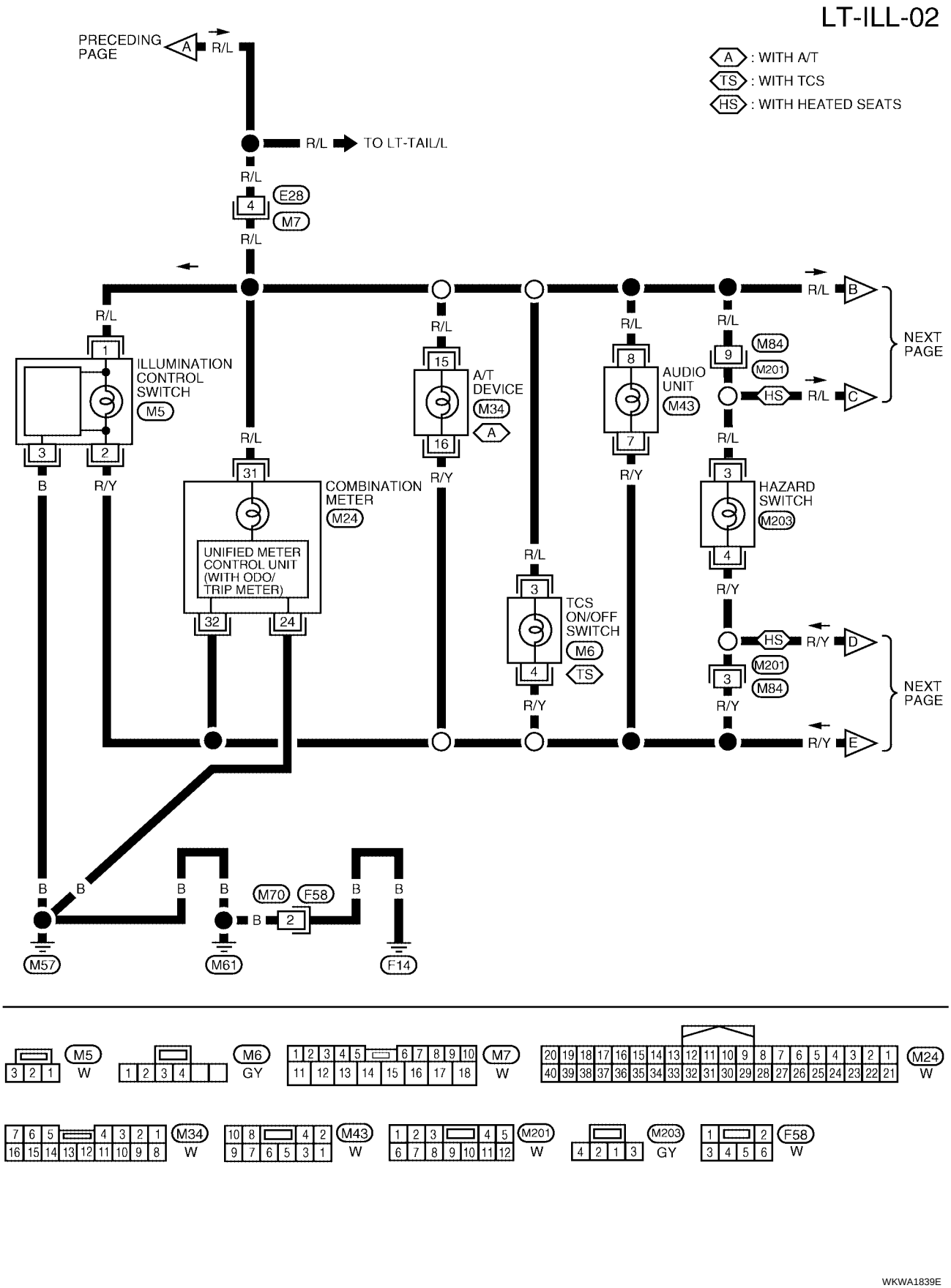
LT-ILL-02
A : WITH A/T
TS : WITH TCS
HS : WITH HEATED SEATS
PRECEDING PAGE
A
R/L
R/L
TO LT-TAIL/L
R/L
E28
4
M7
R/L
R/L
1
ILLUMINATION CONTROL SWITCH
M5
3
2
B
R/Y
R/L
31
COMBINATION METER
M24
UNIFIED METER CONTROL UNIT (WITH ODO/ TRIP METER)
32
24
R/L
15
A/T DEVICE
M34
A
16
R/Y
R/L
3
TCS ON/OFF SWITCH
M6
TS
4
R/Y
R/L
8
AUDIO UNIT
M43
7
R/Y
R/L
9
M84
M201
HS
R/L
C
R/L
3
HAZARD SWITCH
M203
4
R/Y
HS
R/Y
D
M201
M84
3
R/Y
R/L
B
NEXT PAGE
R/Y
E
NEXT PAGE
B
B
B
B
M70
F58
B
B
B
2
M57
M61
F14
M5
W
M6
GY
M7
W
M24
W
M34
W
M43
W
M201
W
M203
GY
F58
W

WKWA1839E

LT-ILL-03

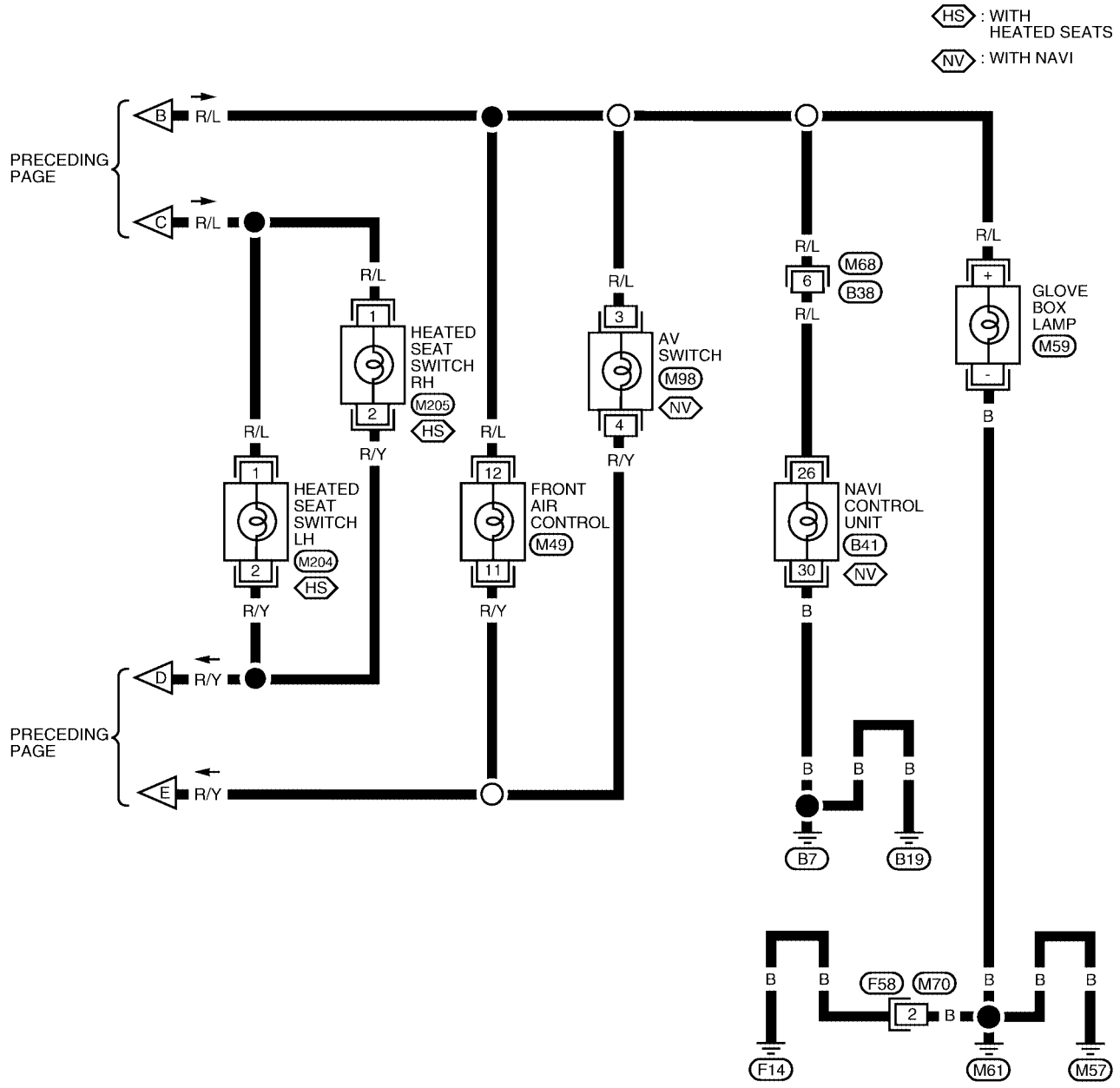

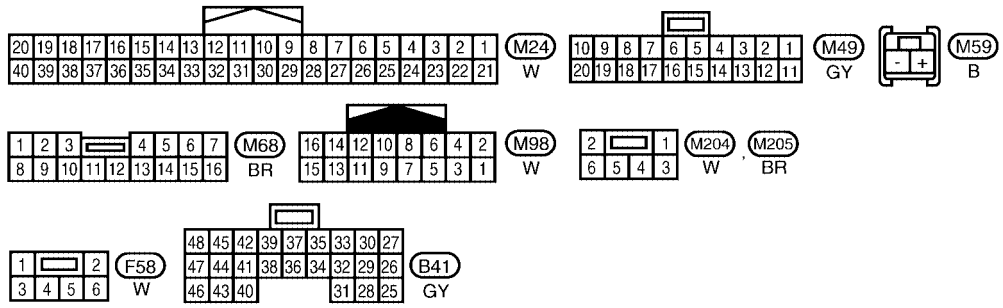

WKWA3566E

LT-ILL-04

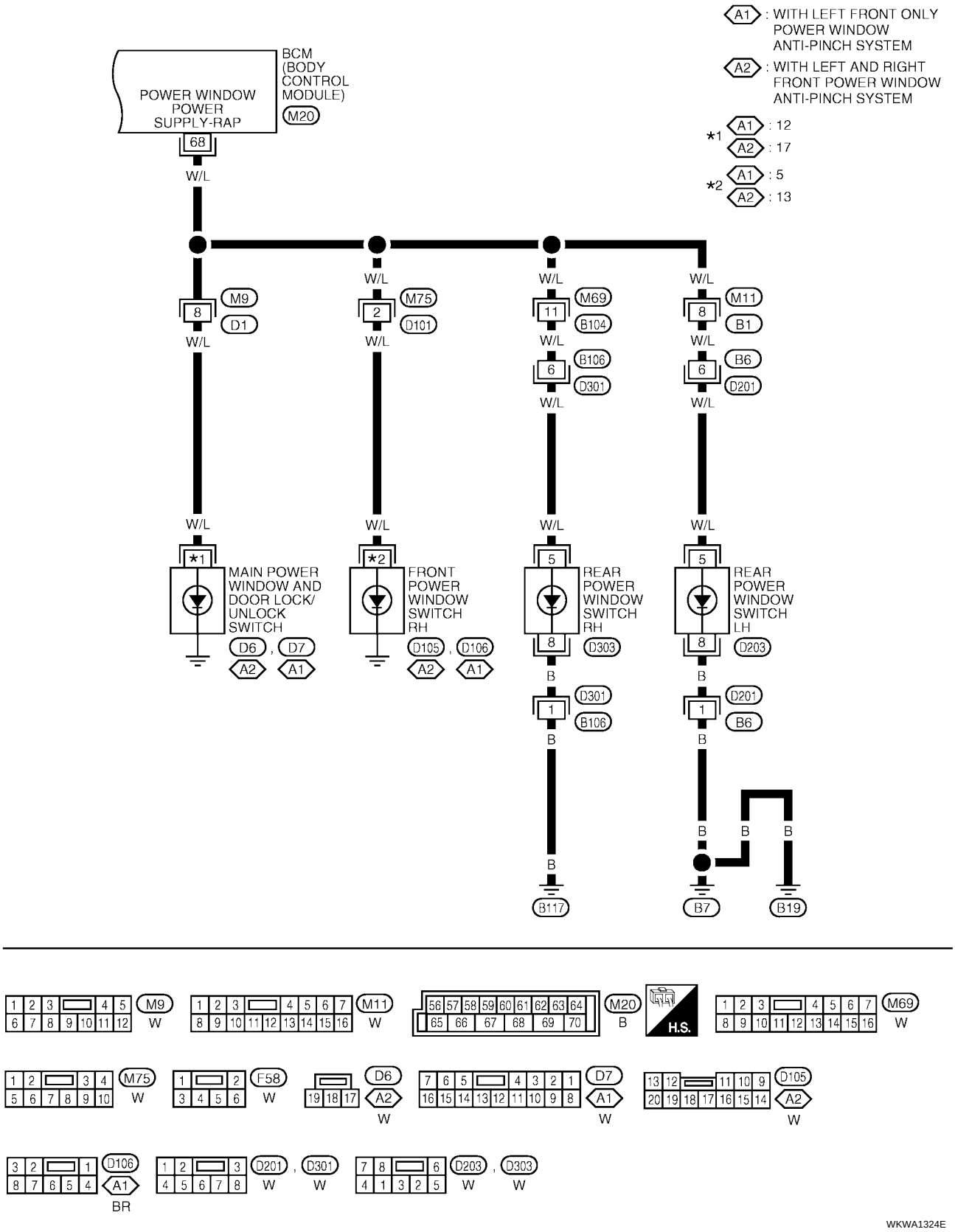
A1 : WITH LEFT FRONT ONLY POWER WINDOW ANTI-PINCH SYSTEM
A2 : WITH LEFT AND RIGHT FRONT POWER WINDOW ANTI-PINCH SYSTEM
*1 A1 : 12 A2 : 17
*2 A1 : 5 A2 : 13
POWER WINDOW POWER SUPPLY-RAP
BCM (BODY CONTROL MODULE)
M20
68
W/L
M9
D1
M75
D101
M69
B104
B106
D301
M11
B1
B6
D201
MAIN POWER WINDOW AND DOOR LOCK/ UNLOCK SWITCH
D6 , D7
FRONT POWER WINDOW SWITCH RH
D105 , D106
REAR POWER WINDOW SWITCH RH
D303
REAR POWER WINDOW SWITCH LH
D203
B
B117
B7
B19
M9 W
M11 W
M20 B
H.S.
M69 W
M75 W
F58 W
D6 A2 W
D7 A1 W
D105 A2 W
D106 A1 BR
D201 , D301 W W
D203 , D303 W W
WKWA1324E

Bulb Replacement

EKS008OR

GLOVE BOX LAMP

Removal

1. Through the passenger air bag connector access in the top of the glove box, remove bulb socket by turning counterclockwise.
2. Pull the bulb from the socket to remove.

Installation

Installation is in the reverse order of removal.

Removal and Installation

EKS00GAI

ILLUMINATION CONTROL SWITCH

Removal

1. Remove instrument lower cover LH. Refer to IP-13, "INSTRUMENT LOWER COVER LH" .
2. Carefully release the illumination control switch retaining tabs and remove the unit from the driver lower instrument panel.

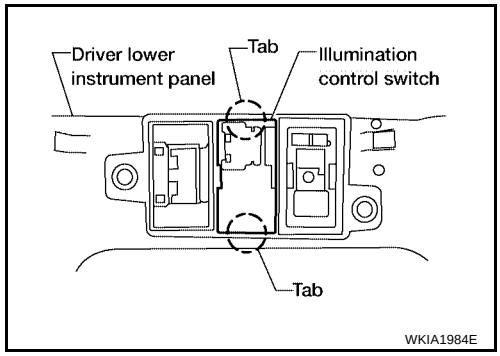

Installation

Installation is in the reverse order of removal.

BULB SPECIFICATIONS

PFP:26297

Headlamp

EKS008OS

Item	Wattage (W)*
Low (halogen)	55 (H1)
Low (xenon)	35 (D2R)
High	60W (HB3)

*: Always check with the Parts Department for the latest parts information.

Exterior Lamp

EKS008OT

Item		Wattage (W)*
Front combination lamp	Turn signal lamp/parking lamp	27/8 (amber)
Rear combination lamp	Stop/Tail lamp	27/8
	Turn signal lamp	27
	Back-up lamp	13
	Side marker lamp	5
Fog lamp		55 (H11)
License plate lamp		5
High-mounted stop lamp (parcel shelf mount)		18
High-mounted stop lamp (rear air spoiler mount)		*

*: Always check with the Parts Department for the latest parts information.

Interior Lamp/Illumination

EKS008OU

Item	Wattage (W)*
Glove box lamp	3.4
Ignition keyhole illumination lamp	0.74*
Spot lamp	10
Room lamp	8
Step lamp	3.8
Trunk room lamp	3.4
Vanity mirror lamp	1.4*

*: Always check with the Parts Department for the latest parts information.