2010 Chevrolet Corvette Owner Manual

In Brief 1-1
Instrument Panel 1-2
Initial Drive Information 1-4
Vehicle Features 1-15
Performance and Maintenance 1-21

Seats and Restraint System 2-1
Front Seats 2-2
Safety Belts 2-9
Child Restraints 2-26
Airbag System 2-44
Restraint System Check 2-60

Features and Controls 3-1
Keys 3-3
Doors and Locks 3-10
Windows 3-16
Theft-Deterrent Systems 3-18
Starting and Operating Your Vehicle 3-21
Mirrors 3-38
Universal Home Remote System 3-41
Storage Areas 3-48
Roof Panel 3-52
Convertible Top 3-56

Instrument Panel 4-1
Instrument Panel Overview 4-3
Climate Controls 4-21
Warning Lights, Gages, and Indicators 4-28
Driver Information Center (DIC) 4-46
Audio System(s) 4-78

Driving Your Vehicle 5-1
Your Driving, the Road, and the Vehicle 5-2
Towing 5-33

Service and Appearance Care 6-1
Service 6-3
Fuel 6-5
Checking Things Under the Hood 6-12
Rear Axle 6-58
Headlamp Aiming 6-58
Bulb Replacement 6-59
Windshield Replacement 6-62
Windshield Wiper Blade Replacement 6-62
Tires 6-64
Appearance Care 6-92
Vehicle Identification 6-101
Electrical System 6-102
Capacities and Specifications 6-112
Maintenance Schedule 7-1
Maintenance Schedule 7-2
Customer Assistance Information 8-1
Customer Assistance and Information 8-2
Reporting Safety Defects 8-16
Vehicle Data Recording and Privacy 8-18
Index 1

GENERAL MOTORS, GM, the GM Emblem, CHEVROLET, the CHEVROLET Emblem, the names CORVETTE, Z06, ZR1, CORVETTE GRAND SPORT and the CORVETTE Emblem are registered trademarks of General Motors Corporation.

This manual describes features that may or may not be on your specific vehicle either because they are options that you did not purchase or due to changes subsequent to the printing of this owner manual. Please refer to the purchase documentation relating to your specific vehicle to confirm each of the features found on your vehicle. For vehicles first sold in Canada, substitute the name “General Motors of Canada Limited” for Chevrolet Motor Division wherever it appears in this manual.

Keep this manual the vehicle for quick reference.

Litho in U.S.A.
Part No. 25895343 A First Printing

Canadian Owners

Propriétaires Canadiens

A French language copy of this manual can be obtained from your dealer/retailer or from:

On peut obtenir un exemplaire de ce guide en français auprès du concessionnaire ou à l’adresse suivante:

Helm, Incorporated
P.O. Box 07130
Detroit, MI 48207

1-800-551-4123

Numéro de poste 6438 de langue française

www.helminc.com

Index

To quickly locate information about the vehicle, use the index in the back of the manual. It is an alphabetical list of what is in the manual and the page number where it can be found.

©2009 General Motors Corporation. All Rights Reserved.

Safety Warnings and Symbols

Warning Messages found on vehicle labels and in this manual describe hazards and what to do to avoid or reduce them.

Danger indicates a hazard with a high level of risk which will result in serious injury or death.

Warning or **Caution** indicates a hazard that could result in injury or death.

⚠ WARNING:

These mean there is something that could hurt you or other people.

Notice: **This means there is something that could result in property or vehicle damage. This would not be covered by the vehicle's warranty.**

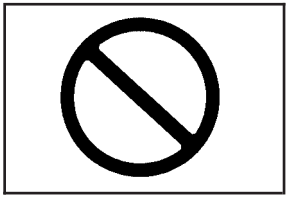

A circle with a slash through it is a safety symbol which means "Do Not," "Do not do this," or "Do not let this happen."

Vehicle Symbols

The vehicle has components and labels that use symbols instead of text. Symbols are shown along with the text describing the operation or information relating to a specific component, control, message, gage, or indicator.

📖 **:** This symbol is shown when you need to see your owner manual for additional instructions or information.

: This symbol is shown when you need to see a service manual for additional instructions or information.

Vehicle Symbol Chart

Here are some additional symbols that may be found on the vehicle and what they mean. For more information on the symbol, refer to the index.

: Airbag Readiness Light

: Air Conditioning

: Antilock Brake System (ABS)

: Audio Steering Wheel Controls or OnStar®

: Brake System Warning Light

: Charging System

: Cruise Control

: Engine Coolant Temperature

: Exterior Lamps

: Fog Lamps

: Fuel Gage

: Fuses

: Headlamp High/Low-Beam Changer

: LATCH System Child Restraints

: Malfunction Indicator Lamp

: Oil Pressure

: Power

: Remote Vehicle Start

: Safety Belt Reminders

: Tire Pressure Monitor

: Traction Control

: Windshield Washer Fluid

✍ NOTES

Section 1 In Brief

Instrument Panel 1-2

Initial Drive Information 1-4
Remote Keyless Entry (RKE) System 1-4
Door Locks 1-5
Trunk Release 1-5
Windows 1-6
Seat Adjustment 1-6
Safety Belt 1-9
Sensing System for Passenger Airbag 1-9
Mirror Adjustment 1-10
Steering Wheel Adjustment 1-11
Interior Lighting 1-12
Exterior Lighting 1-12
Windshield Wiper/Washer 1-13
Climate Controls 1-14
Transmission 1-14

Vehicle Features 1-15
Radio(s) 1-15
Satellite Radio 1-16
Portable Audio Devices 1-17
Steering Wheel Controls 1-17
Bluetooth® 1-17
Navigation System 1-18
Driver Information Center (DIC) 1-18
Cruise Control 1-20
Power Outlets 1-20
Roof Panel 1-20
Convertible 1-21

Performance and Maintenance 1-21
Traction Control System (TCS) 1-21
Towing 1-22
Tire Pressure Monitor 1-22
Z06, Z16, and ZR1 Features 1-22
Engine Oil Life System 1-23
Driving for Better Fuel Economy 1-23
Battery 1-24
Roadside Assistance Program 1-24
OnStar® 1-24

Instrument Panel

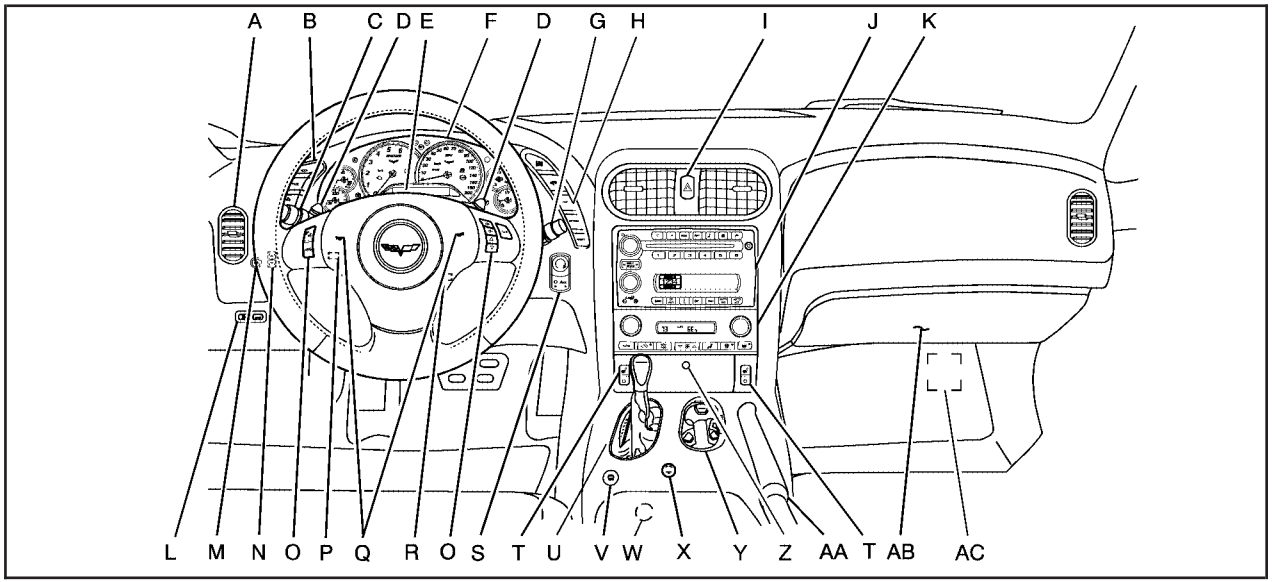

A. *Outlet Adjustment on page 4-26*.

B. *Head-Up Display (HUD) on page 4-16* (If Equipped).

C. *Turn Signal/Multifunction Lever on page 4-4*. *Cruise Control on page 4-7*. *Fog Lamps on page 4-13*. *Exterior Lamps on page 4-11*.

D. Manual Shift Paddles (If Equipped). See *Automatic Transmission Operation on page 3-26*.

E. *Driver Information Center (DIC) on page 4-46*.

F. *Instrument Panel Cluster on page 4-29*.

G. *Windshield Wipers on page 4-6* and *Windshield Washer on page 4-6*.

H. *DIC Operation and Displays on page 4-46*.

I. *Hazard Warning Flashers on page 4-3*.

J. *Audio System(s) on page 4-78*.

K. *Dual Automatic Climate Control System on page 4-21*.

L. Fuel Door Release Button. See *Filling the Tank on page 6-9*. Hatch/Trunk Release Button. See “Hatch/Trunk Lid Release” under *Hatch on page 3-14*.

M. *Instrument Panel Brightness on page 4-15*.

N. Power Folding Top Switch (If Equipped). See *Convertible Top (Manual) on page 3-56* or *Convertible Top (Power) on page 3-63*.

O. *Bluetooth® on page 4-93* (If Equipped). *Audio Steering Wheel Controls on page 4-104* (If Equipped).

P. *Tilt Wheel on page 4-3*.

Q. *Horn on page 4-3*.

R. Telescopic Wheel Button (If Equipped). See *Tilt Wheel on page 4-3*.

S. *Ignition Positions on page 3-22*.

T. *Heated Seats on page 2-4* (If Equipped).

U. Shift Lever (Automatic Shown). See *Automatic Transmission Operation on page 3-26* or *Manual Transmission Operation on page 3-31*.

V. *Active Handling System on page 5-8*.

W. *Accessory Power Outlet(s) on page 4-20*.

X. *Selective Ride Control on page 5-14*.

Y. *Cupholders on page 3-48*.

Z. *Ashtray(s) and Cigarette Lighter on page 4-21*.

AA. *Parking Brake on page 3-33*.

AB. *Glove Box on page 3-48*.

AC. *Instrument Panel Fuse Block on page 6-103*.

Initial Drive Information

This section provides a brief overview about some of the important features that may or may not be on your specific vehicle.

For more detailed information, refer to each of the features which can be found later in this owner manual.

Remote Keyless Entry (RKE) System

The keyless access transmitter is used to lock and unlock the doors from up to 30 m (100 feet) away from the vehicle.

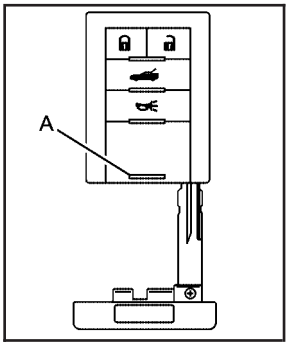

Press to unlock the driver door. Press again within five seconds to unlock both doors.

Press to lock all doors.

Press and hold for approximately one second to open the hatch/trunk.

Press to sound the horn. Press any other button on the keyless access transmitter to stop it.

Press the button (A) to remove the key. The key can be used to lock and unlock the glove box and to open the hatch/trunk lid if power to the vehicle is lost. See *Hatch on page 3-14* for more information.

See *Keys on page 3-3* and *Keyless Access System Operation on page 3-5*.

Door Locks

From the outside, press the 🔒 or 🔓 button on the keyless access transmitter.

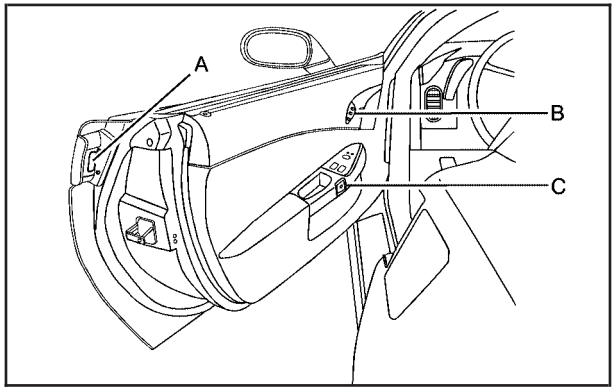

When you have the transmitter with you, you may also unlock and open the door by squeezing the door handle sensor (A).

From the inside, use the power door lock switch (B), located at the top of the door panel, near both windows.

🔓 **(Unlock):** Press to unlock the doors.

🔒 **(Lock):** Press to lock the doors.

To open a door from the inside after it is locked, press the button (C) in front of the door handle and push the door open.

See *Power Door Locks on page 3-12*.

Trunk Release

🚗 **(Hatch/Trunk)**: Press the hatch/trunk lid release button, located on the instrument panel, to the left of the steering wheel. The theft deterrent alarm system must not be armed.

🚗 **(Hatch/Trunk)**: Press the hatch/trunk lid release button on the keyless access transmitter.

For more information see *Hatch on page 3-14*.

Windows

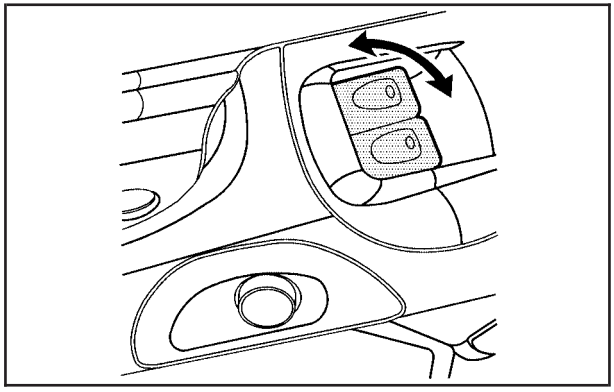

The power window switches are located on each door.

Pull up or press down on the front of the switch to raise or lower the window.

For more information, see *Power Windows on page 3-17*.

Seat Adjustment

Manual Seats

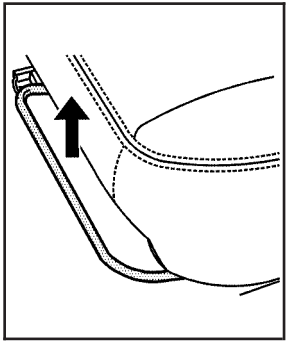

1. Lift the bar to unlock the seat.
2. Slide the seat to the desired position and release the bar.

Try to move the seat to be sure it is locked in place.

See *Manual Seats on page 2-2*.

Power Seats

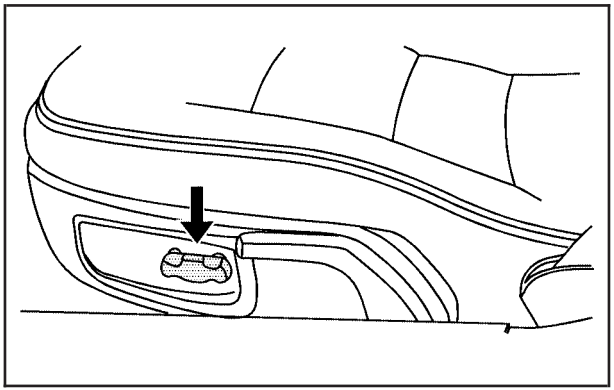

On vehicles with power seats, the control is located on the outboard side of the seat.

- Move the control forward or rearward to adjust the seat location.
- Move the front or rear of the control up or down to adjust the seat cushion height.

See *Power Seats on page 2-3*.

Power Lumbar and Side Bolsters

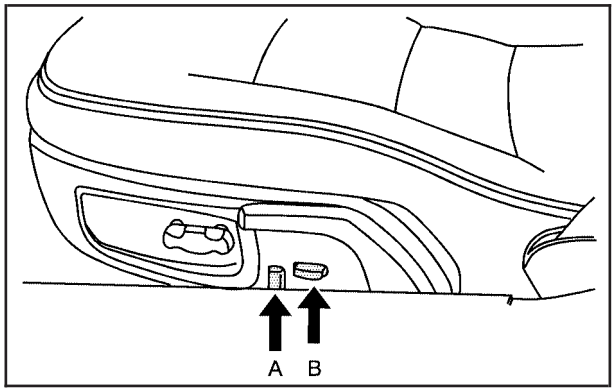

On vehicles with power lumbar and side bolsters:

- Move (A) forward or rearward to adjust lumbar support.
- Move (B) up or down to adjust the side bolsters.

See *Power Lumbar and Side Bolsters on page 2-3*.

Reclining Seatbacks

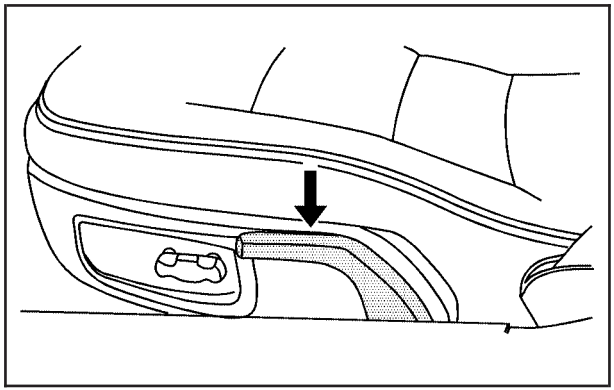

To recline the seatback:

1. Lift the recline lever.
2. Lean back to position the seatback to where you want it.
3. Release the lever to lock the seatback into place.

See *Reclining Seatbacks on page 2-6*.

Heated Seats

On vehicles with heated seats, the buttons are located on the center console. The ignition must be on for this feature to work.

: Press to turn the seat on at the high setting.

Press again to turn it to the low setting

: Press to turn the system off.

Safety Belt

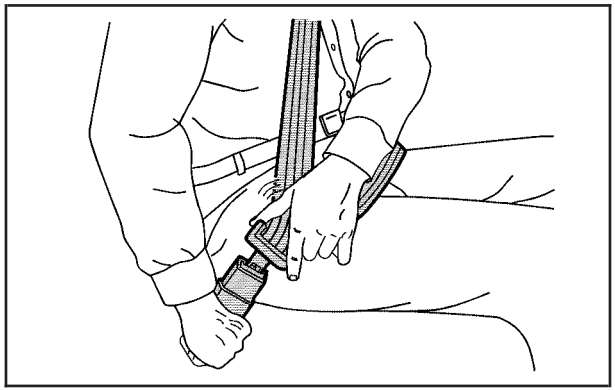

Refer to the following sections for important information on how to use safety belts properly.

- *Safety Belts: They Are for Everyone on page 2-9*.
- *How to Wear Safety Belts Properly on page 2-14*.
- *Lap-Shoulder Belt on page 2-23*.
- *Lower Anchors and Tethers for Children (LATCH) (Coupe and Convertible Models Only) on page 2-35* or *Lower Anchors and Tethers for Children (LATCH) (Z06 and ZR1 Models Only) on page 2-36*.

Sensing System for Passenger Airbag

The passenger sensing system will turn off the right front passenger frontal airbag and seat-mounted side impact airbag under certain conditions. The driver airbags are not affected by this.

The passenger airbag status indicator will be visible in the rearview mirror when the vehicle is started.

United States

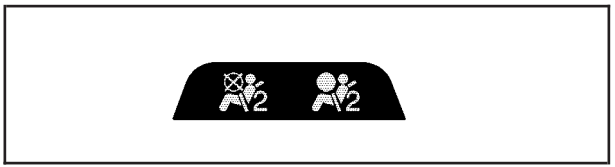

Canada

See *Passenger Sensing System on page 2-52* for important information.

Mirror Adjustment

Exterior Mirrors

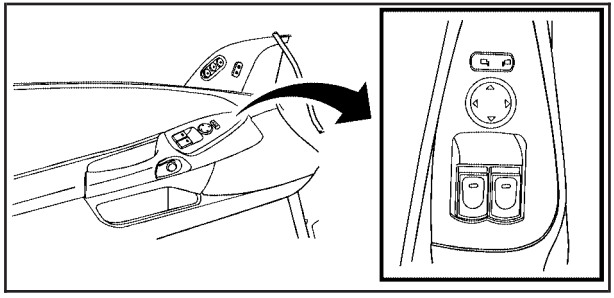

Controls for the outside power mirrors are located on the driver door.

1. Move the top control to the left or right to select either the driver or passenger mirror.
2. Use the arrows located on the four-way control pad to move the mirror in the desired direction.

Keep the control in the center position when not adjusting either outside mirror.

Manually fold the mirrors inward to prevent damage when going through an automatic car wash. To fold, pull the mirror toward the vehicle. Push the mirror outward, to return it to the original position.

Interior Mirror

Vehicles with an automatic dimming rearview mirror will automatically reduce headlamp glare coming from vehicles that are traveling behind you.

See *Automatic Dimming Rearview Mirror on page 3-38*.

Steering Wheel Adjustment

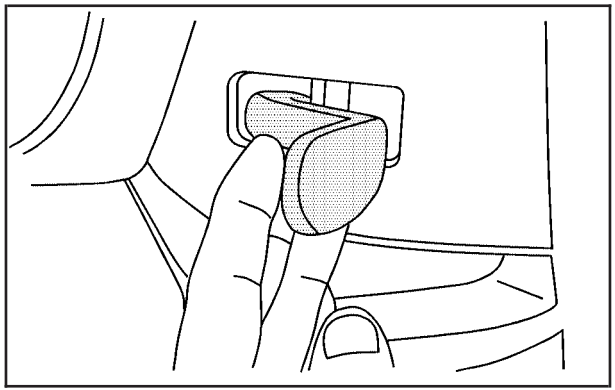

The lever is located on the left side of the steering column. To adjust the steering wheel:

1. Pull the lever toward you.
2. Move the steering wheel up or down into a comfortable position.
3. Release the lever to lock the steering wheel in place.

See *Tilt Wheel on page 4-3*.

Telescopic Steering Column

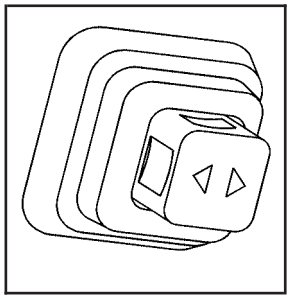

For vehicles with this feature, the telescopic steering column switch is located on the right side of the steering column.

To adjust the telescopic steering column:

1. Push the switch forward to move the wheel away from you.
2. Pull the switch toward you to move the wheel closer to you.

The telescopic steering column position can be stored with your memory settings. See *Memory Seat, Mirrors and Steering Wheel on page 2-4* for more information.

See *Tilt Wheel on page 4-3*.

Interior Lighting

Courtesy Lamps

When any door or the hatch/trunk lid is opened, the interior lamps will go on, unless it is bright outside.

The courtesy lamps can also be turned on and off by pressing the instrument panel brightness knob.

Reading Lamps

The inside rearview mirror includes two reading lamps. The lamps go on when a door is opened. When the doors are closed, press the lamp buttons to turn on each lamp.

For more information on interior lighting, see:

- *Instrument Panel Brightness on page 4-15*.
- *Entry/Exit Lighting on page 4-15*.

Exterior Lighting

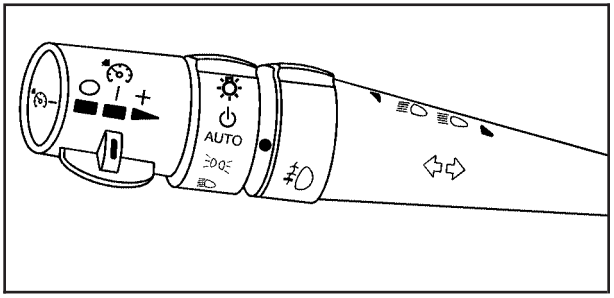

The exterior lamp control is located to the left of the steering wheel, on the multifunction lever.

: Turn the band with this symbol on it to operate the exterior lamps.

: Turns off all lamps.

AUTO: Sets the exterior lamps to automatic mode. AUTO mode turns the exterior lamps on and off depending on how much light is available outside the vehicle.

: Manual operation of the parking lamps and other exterior lamps.

: Manual operation of the headlamps and other exterior lamps.

For more information, see:

- *Exterior Lamps on page 4-11*.

Windshield Wiper/Washer

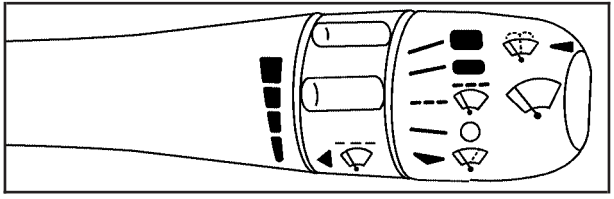

The windshield wiper lever is located on the right side of the steering column.

: Fast wipes.

: Slow wipes.

: Use to set a delay between wipes.

: Use for a delayed wiping cycle. Turn the intermittent adjust band down for a longer delay or up for a shorter delay.

: Turns off the windshield wipers.

: Use for a for a single wiping cycle. For more wipes, hold the band longer.

Windshield Washer: Press the button at the end of the lever until the washers begin.

See *Windshield Wipers on page 4-6* and *Windshield Washer on page 4-6*.

Climate Controls

With this system, the heating, cooling, and ventilation can be controlled.

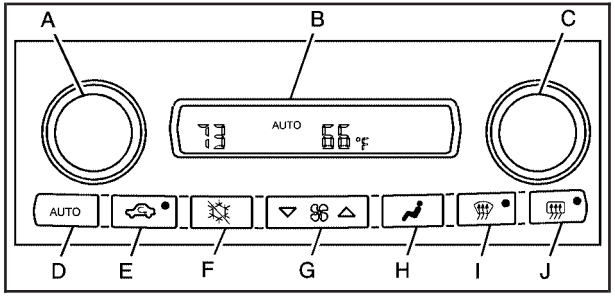

A. Driver Temperature Control
B. Display
C. Passenger Temperature Control
D. AUTO
E. Air Recirculation
F. Air Conditioning
G. Fan Control
H. Air Delivery Mode Control
I. Defrost
J. Rear Window Defogger

See *Dual Automatic Climate Control System on page 4-21*.

Transmission

Manual Paddle Shift (Automatic Transmission)

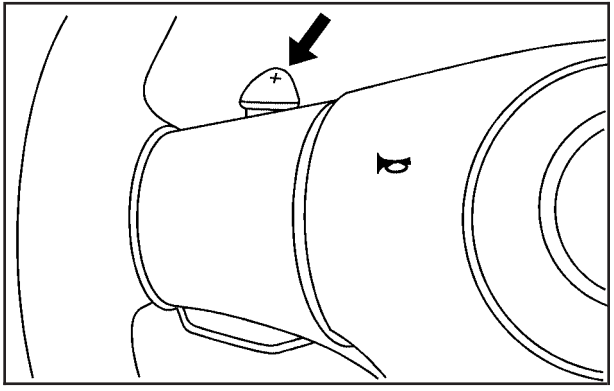

To operate the Manual Paddle Shift system, the automatic transmission shifter must be in S (Sport Mode). The system is activated by pushing the paddle, above the steering wheel spokes, to manually up-shift to the next gear, or pulling on the paddle, behind the steering wheel spokes to manually down-shift. The current gear will be displayed in the Driver Information (DIC), or the Head-Up Display (HUD), if the vehicle has either of these features.

The Manual Paddle Shift system can be deactivated by moving the shifter from S (Sport Mode) back to D (Drive), or by holding the up-shift button for more than one second.

The Manual Paddle Shift system will not allow either an up-shift or a down-shift, if the vehicle speed is too fast or too slow, nor will it allow a start from 4 (Fourth) or higher gear

See *Automatic Transmission Operation on page 3-26*.

One to Four Shift Light (Manual Transmission)

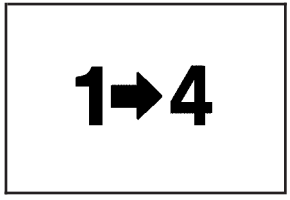

On vehicles with a manual transmission, when this light comes on, you can only shift from 1 (First) to 4 (Fourth) instead of 1 (First) to 2 (Second).

For more information about shifting for the best fuel economy, see *Manual Transmission Operation on page 3-31*.

Vehicle Features

Radio(s)

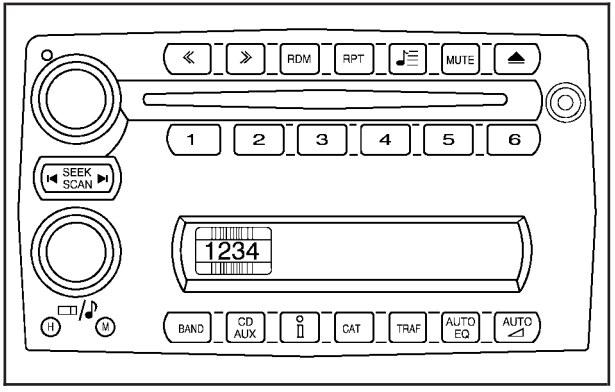

Radio with CD

Top Knob (Power/Volume): Press to turn the system on and off. Turn to increase or decrease the volume.

BAND: Press to switch between FM1, FM2, AM, and if equipped, XM1 and XM2.

: Turn to select radio stations.

|◀ SEEK ▶|: Press to seek stations.

|◀ SCAN ▶|: Press and hold to scan stations.

i : Press to change the information that shows on the display while listening to the radio.

For more information about these and other radio features, see *Audio System(s) on page 4-78* and *Radio(s) on page 4-79*.

Setting Preset Stations

Up to 30 stations (six FM1, six FM2, and six AM, and if equipped, six XM1, and six XM2) can be programmed.

To program presets:

1. Turn the radio on.
2. Press BAND to select FM1, FM2, AM, or XM1 or XM2.
3. Tune in the desired station.
4. Press AUTO EQ to select the equalization.
5. Press and hold one of the six numbered pushbuttons until the radio beeps once.
6. Repeat the steps for each pushbutton.

See *Radio(s) on page 4-79*.

Setting the Clock

To set the clock:

1. Press and hold H until the correct hour displays.
2. Press and hold M until the correct minute displays.

See *Setting the Clock on page 4-78*.

Satellite Radio

XM is a satellite radio service that is based in the 48 contiguous United States and 10 Canadian provinces. XM satellite radio has a wide variety of programming and commercial-free music, coast-to-coast, and in digital-quality sound.

A fee is required to receive the XM service.

For more information, refer to:

- www.xmradio.com or call 1-800-929-2100 (U.S.)
- www.xmradio.ca or call 1-877-438-9677 (Canada)

See “XM Satellite Radio Service” under *Radio(s) on page 4-79*.

Portable Audio Devices

This vehicle may have an auxiliary input jack, located on the audio faceplate. External devices such as iPod®, MP3 players, etc. can be connected to the auxiliary input jack using a 3.5 mm (1/8 in) input jack cable.

See “Using the Auxiliary Input Jack” under *Radio(s) on page 4-79*.

Steering Wheel Controls

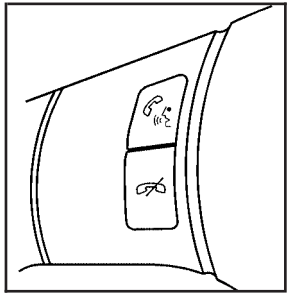

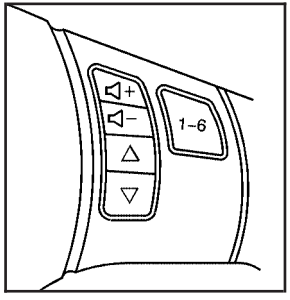

For vehicles with steering wheel controls, some audio controls can be adjusted at the steering wheel.

: Press to turn on and off the vehicle speakers. Press and hold longer than two seconds to interact with the OnStar® or Bluetooth systems.

: Press to reject an incoming call, or to end a call.

+ / –: Increases or decreases volume.

/ : Press to change radio stations or select tracks on a CD.

1 to 6 (Preset Pushbuttons): Press to play stations that are programmed on the radio preset pushbuttons.

For more information, see *Audio Steering Wheel Controls on page 4-104*.

Bluetooth®

For vehicles with an in-vehicle Bluetooth system, it allows users with a Bluetooth enabled cell phone to make and receive hands-free calls using the vehicle’s audio system and controls.

The Bluetooth enabled cell phone must be paired with the in-vehicle Bluetooth system before it can be used in the vehicle. Not all phones will support all functions. For more information visit www.gm.com/bluetooth.

For more information, see *Bluetooth® on page 4-93*.

Navigation System

The vehicle's navigation system provides detailed maps of most major freeways and roads throughout the United States and Canada. After a destination has been set, the system provides turn-by-turn instructions for reaching the destination. In addition, the system can help locate a variety of points of interest (POI), such as banks, airports, restaurants, and more.

See the vehicle's Navigation System manual for more information.

Driver Information Center (DIC)

The DIC display is located at the bottom of the instrument panel cluster. It shows the status of many vehicle systems and enables access to the personalization menu.

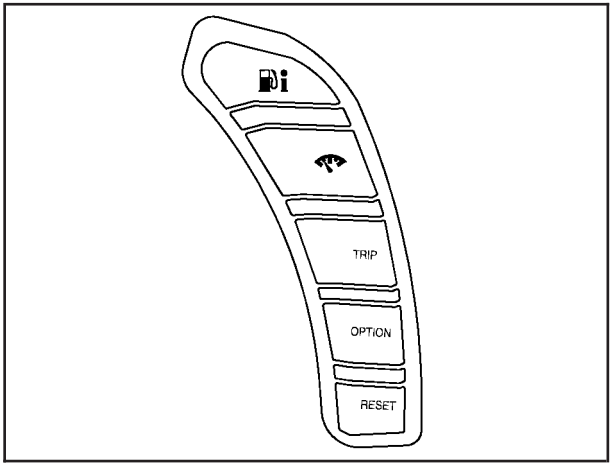

The DIC buttons are located on the instrument panel to the right of the instrument panel cluster.

i: Press to display fuel information such as fuel economy and range.

: Press to display gage information like oil pressure and temperature, coolant temperature, automatic transmission fluid temperature (if equipped), battery voltage, and front/rear tire pressures.

TRIP: Press to display your total and trip distance driven, the elapsed time function, your average speed, and the engine oil life.

OPTION: Press to choose personal options that are available on your vehicle, depending on the options your vehicle is equipped with, such as door locks, easy entry seats, and language.

RESET: Press, along with the other buttons, to reset system functions, select personal options, and turn off or acknowledge messages on the DIC.

For more information, see *Driver Information Center (DIC) on page 4-46*.

Vehicle Personalization

Some vehicle features can be programmed by using the DIC buttons on the left side of the steering wheel. The features that can be programmed include:

- Units
- Memory Features
- Lighting Features
- Lock and Unlock Feedback
- Door Lock and Unlock Settings
- Language
- Personalization Name

See *DIC Vehicle Personalization on page 4-69*.

Cruise Control

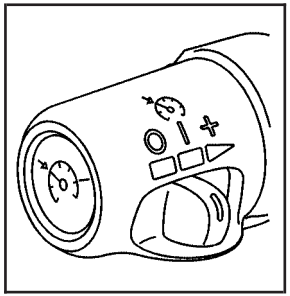

The cruise controls are located at the end of the multifunction lever.

○ **:** Turns the system off.

| **:** Turns the system on.

+: Use to make the vehicle accelerate or resume a previously set speed.

: Press the button at the end of the lever to set the speed.

See *Cruise Control on page 4-7*.

Power Outlets

The accessory power outlet can be used to connect electrical equipment, such as a cellular phone.

The accessory power outlet is located inside the center console storage compartment, on the forward left side.

To use the outlet, remove the tethered cap.

See *Accessory Power Outlet(s) on page 4-20*.

Roof Panel

On vehicles with a removable roof panel, there are two release latches. One is located on the front of the roof panel and the other is located on the back of the roof panel. See *Removing the Roof Panel on page 3-52*.

Until you are sure you can remove the roof panel by yourself, have someone help you. Once removed, the roof panel should always be stored properly in the rear storage compartment.

For more information, see:

- *Storing the Roof Panel on page 3-54*.
- *Installing the Roof Panel on page 3-55*.

Convertible

If equipped, the convertible top can be lowered and stowed under the tonneau cover behind the seats. For step-by-step instructions, see *Convertible Top (Manual) on page 3-56* or *Convertible Top (Power) on page 3-63*.

Performance and Maintenance

Traction Control System (TCS)

The traction control system limits wheel spin. The system turns on automatically every time the vehicle is started.

- To turn off traction control, press and release on the console. illuminates and the appropriate DIC message displays. See *DIC Warnings and Messages on page 4-51*.
- Press and release the button again to turn on traction control.

See *Traction Control System (TCS) on page 5-6*.

The vehicle has an Active Handling System that helps maintain directional control of the vehicle in difficult driving conditions. See *Active Handling System on page 5-8*.

The vehicle may have Competitive Driving Mode (except ZR1), Performance Traction Management (ZR1), and Launch Control systems designed to allow increased performance while accelerating and cornering. See *Competitive Driving Mode on page 5-9*.

Towing

The vehicle was neither designed nor intended to be towed with any of its wheels on the ground.

See *Towing Your Vehicle on page 5-33* and *Recreational Vehicle Towing on page 5-33*.

Tire Pressure Monitor

This vehicle may have a Tire Pressure Monitor System (TPMS).

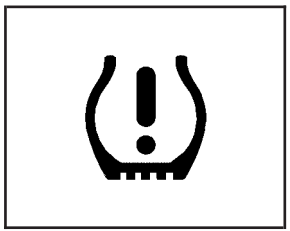

The Tire Pressure Monitor alerts you when a significant reduction in pressure occurs in one or more of the vehicle's tires by illuminating the low tire pressure warning light on the instrument cluster.

The warning light will remain on until the tire pressure is corrected. The proper tire pressures for your vehicle are listed on the Tire and Loading Information label located on the driver side center pillar (B pillar). See *Loading the Vehicle on page 5-28*.

You may notice during cooler conditions that the low tire pressure warning light will appear when the vehicle is first started and then turn off as you drive. This may be an early indicator that your tire pressures are getting low and the tires need to be inflated to the proper pressure.

Note: The Tire Pressure Monitor can alert you about low tire pressure, but it does not replace normal monthly tire maintenance. It is the driver's responsibility to maintain correct tire pressures.

See *Tire Pressure Monitor System on page 6-74* and *Tire Pressure Monitor Operation on page 6-76*.

Z06, Z16, and ZR1 Features

Checking Engine Oil

ZO6, Z16 (Grand Sport), and ZR1 models have a high performance dry sump lubrication system. This system operates differently than a standard engine lubrication system. See *Engine Oil on page 6-20*.

You should check the oil level only after the engine has been thoroughly warmed up and then shut off for at least five minutes. This ensures that the oil level reading obtained will be accurate.

Jump Starting the Battery

The battery of ZO6, Z16 (Grand Sport), and ZR1 models is in the rear of the vehicle. You do not need to access the battery for jump starting. There are remote positive (+) and negative (–) terminals under the hood for this purpose. See *Battery on page 6-52* and *Jump Starting on page 6-53*.

Engine Oil Life System

The engine oil life system calculates engine oil life based on vehicle use and displays a DIC message when it is necessary to change the engine oil and filter. The oil life system should be reset to 100% only following an oil change.

Resetting the Oil Life System

1. Press the TRIP button so the OIL LIFE percentage is displayed.
2. Press RESET and hold for two seconds. OIL LIFE REMAINING 100% will appear.

See *Engine Oil Life System on page 6-27*.

Driving for Better Fuel Economy

Driving habits can affect fuel mileage. Here are some driving tips to get the best fuel economy possible.

- Avoid fast starts and accelerate smoothly.
- Brake gradually and avoid abrupt stops.
- Avoid idling the engine for long periods of time.
- When road and weather conditions are appropriate, use cruise control, if equipped.
- Always follow posted speed limits or drive more slowly when conditions require.
- Keep vehicle tires properly inflated.
- Combine several trips into a single trip.
- Replace the vehicle's tires with the same TPC Spec number molded into the tire's sidewall near the size.
- Follow recommended scheduled maintenance.

Battery

This vehicle has a maintenance free battery. See *Battery on page 6-52* and *Jump Starting on page 6-53*.

For ZO6, ZR1, and Grand Sport models the battery is located in the rear hatch/trunk area. Access to the battery is not necessary to jump start the vehicle. There are positive (+) and negative (–) terminals in the engine compartment.

Roadside Assistance Program

U.S.: **1-800-CHEV-USA (1-800-243-8872)**

TTY Users: **1-888-889-2438**

Canada: **1-800-268-6800**

As the owner of a new Chevrolet, you are automatically enrolled in the Roadside Assistance program. This program provides technically trained advisors who are available 24 hours a day, 365 days a year, minor repair information or towing arrangements.

Roadside Assistance and OnStar

If you have a current OnStar subscription, press the OnStar button and the current GPS location will be sent to an OnStar Advisor who will assess your problem, contact Roadside Assistance, and relay exact location to get you the help you need.

Online Owner Center

The Online Owner Center is a complimentary service that includes online service reminders, vehicle maintenance tips, online owner manual, special privileges and more.

Sign up today at: **www.gmownercenter.com/chevrolet** (U.S.) or **www.gm.ca** (Canada).

OnStar®

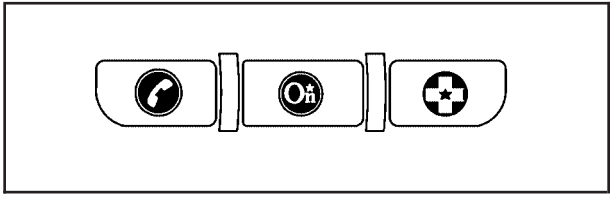

OnStar® uses several innovative technologies and live advisors to provide a wide range of safety, security, navigation, diagnostics, and calling services.

Automatic Crash Response

In a crash, built in sensors can automatically alert an OnStar advisor who is immediately connected to the vehicle to see if you need help.

How OnStar Service Works

: This blue button connects you to a specially trained OnStar advisor to verify your account information and to answer questions.

: Push this red emergency button to get priority help from specially trained OnStar emergency advisors.

: Push this button for hands-free, voice-activated calling and to give voice commands for turn-by-turn navigation.

Crisis Assist, Stolen Vehicle Assistance, Vehicle Diagnostics, Remote Door Unlock, Roadside Assistance, Turn-by-Turn Navigation and Hands-Free Calling are available on most vehicles. Not all OnStar services are available on all vehicles. For more information see the OnStar Owner's Guide or visit www.onstar.com (U.S.) or www.onstar.ca (Canada), contact OnStar at 1-888-4-ONSTAR (1-888-466-7827) or TTY 1-877-248-2080, or press to speak with an OnStar advisor 24 hours a day, 7 days a week.

For a full description of OnStar services and system limitations, see the OnStar Owner's Guide in the glove box.

OnStar service is subject to the OnStar terms and conditions included in the OnStar Subscriber Information.

OnStar service cannot work unless the vehicle is in a place where OnStar has an agreement with a wireless service provider for service in that area. OnStar service also cannot work unless the vehicle is in a place where the wireless service provider OnStar has hired for that area has coverage, network capacity and reception when the service is needed, and technology that is compatible with the OnStar service. Not all services are available everywhere, particularly in remote or enclosed areas, or at all times.

The OnStar system can record and transmit vehicle information. This information is automatically sent to an OnStar call center when is pressed, is pressed, or if the airbags or ACR system deploy. This information usually includes the vehicle's GPS location and, in the event of a crash, additional information regarding the crash that the vehicle was involved in (e.g. the direction from which the vehicle was hit). When the virtual advisor feature of OnStar hands-free calling is used, the vehicle also sends OnStar the vehicle's GPS location so they can provide services where it is located.

Location information about the vehicle is only available if the GPS satellite signals are unobstructed and available.

The vehicle must have a working electrical system, including adequate battery power, for the OnStar equipment to operate. There are other problems OnStar cannot control that may prevent OnStar from providing OnStar service at any particular time or place. Some examples are damage to important parts of the vehicle in a crash, hills, tall buildings, tunnels, weather or wireless phone network congestion.

OnStar Steering Wheel Controls

This vehicle may have a Talk/Mute button that can be used to interact with OnStar hands-free calling. See *Audio Steering Wheel Controls on page 4-104* for more information.

On some vehicles, the mute button can be used to dial numbers into voice mail systems, or to dial phone extensions. See the OnStar Owner's Guide for more information.

Your Responsibility

Increase the volume of the radio if the OnStar advisor cannot be heard.

If the light next to the OnStar buttons is red, the system may not be functioning properly. Press and request a vehicle diagnostic. If the light appears clear (no light is appearing), your OnStar subscription has expired and all services have been deactivated. Press to confirm that the OnStar equipment is active.

Section 2 Seats and Restraint System

Front Seats 2-2
Manual Seats 2-2
Power Seats 2-3
Power Lumbar and Side Bolsters 2-3
Heated Seats 2-4
Memory Seat, Mirrors and Steering Wheel 2-4
Reclining Seatbacks 2-6
Seatback Latches 2-8

Safety Belts 2-9
Safety Belts: They Are for Everyone 2-9
How to Wear Safety Belts Properly 2-14
Lap-Shoulder Belt 2-23
Safety Belt Use During Pregnancy 2-25
Safety Belt Extender 2-26

Child Restraints 2-26
Older Children 2-26
Infants and Young Children 2-29
Child Restraint Systems 2-33
Lower Anchors and Tethers for Children (LATCH) (Coupe and Convertible Models Only) 2-35
Lower Anchors and Tethers for Children (LATCH) (Z06 and ZR1 Models Only) 2-36
Securing a Child Restraint in the Right Front Seat Position 2-40

Airbag System 2-44
Where Are the Airbags? 2-46
When Should an Airbag Inflate? 2-48
What Makes an Airbag Inflate? 2-49
How Does an Airbag Restrain? 2-49
What Will You See After an Airbag Inflates? 2-50
Passenger Sensing System 2-52
Servicing Your Airbag-Equipped Vehicle 2-58
Adding Equipment to Your Airbag-Equipped Vehicle 2-58

Restraint System Check 2-60
Checking the Restraint Systems 2-60
Replacing Restraint System Parts After a Crash 2-61

Front Seats

Manual Seats

⚠ WARNING:

You can lose control of the vehicle if you try to adjust a manual driver's seat while the vehicle is moving. The sudden movement could startle and confuse you, or make you push a pedal when you do not want to. Adjust the driver's seat only when the vehicle is not moving.

If the vehicle has a manual seat, it can be moved forward or rearward.

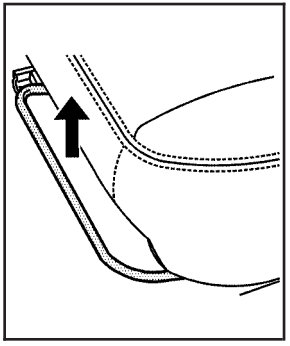

1. Lift the bar to unlock the seat.
2. Slide the seat to the desired position and release the bar.

Try to move the seat with your body to be sure the seat is locked in place.

Power Seats

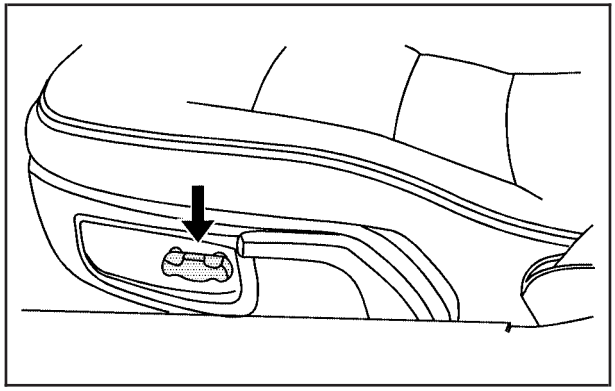

On vehicles with power seats:

- Move the control forward or rearward to adjust the seat location.
- Move the front or rear of the control up or down to adjust the seat cushion height.

Your seat position can be stored and recalled if you have the memory option. See *Memory Seat, Mirrors and Steering Wheel on page 2-4*.

Power Lumbar and Side Bolsters

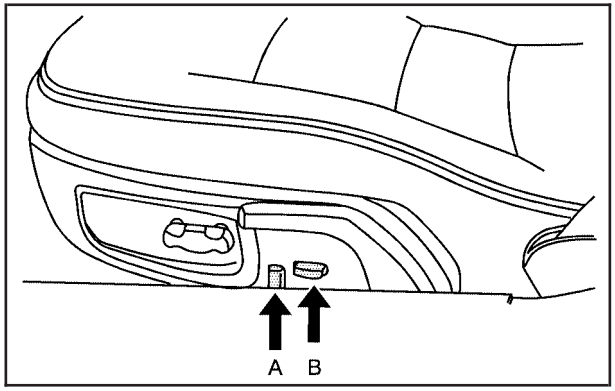

On vehicles with power lumbar and side bolsters:

Move (A) forward or rearward to adjust lumbar support.

Move (B) up or down to adjust the side bolsters.

Heated Seats

On vehicles with heated seats, the buttons are located on the center console.

The ignition must be on for this feature to work.

: Press to turn the seat on at the high setting.

Press again to turn it to the low setting

: Press to turn the system off.

Memory Seat, Mirrors and Steering Wheel

On vehicles with the memory package, the controls are located on the driver's door.

1: Saves the seating position for driver 1.

2: Saves the seating position for driver 2.

: Recalls the easy exit position.

The numbers on the back of the keyless access transmitters correspond to the numbers on the memory buttons.

To save seating positions in the memory:

1. Adjust the driver's seat, both outside mirrors, and the telescopic steering column to a comfortable driving position.
2. Press and hold button 1 until two beeps let you know that the position has been stored in the memory.

A second seating, mirror, and telescopic steering column position can be set by repeating the above steps and pressing button 2.

To recall a memory position:

- On vehicles with an automatic transmission, press and release the desired button.

  If the vehicle is in P (Park), a single beep sounds and the memory position is recalled after a brief delay.

  If the vehicle is not in P (Park), three beeps sound and the memory position is not recalled.

- On vehicles with a manual transmission, when the vehicle is on, the parking brake needs to be set to recall the memory position. Press and release the desired button.

  A single beep sounds and the memory position is recalled after a brief delay.

  If the vehicle is on and the parking brake is not set, three beeps sound and the memory position is not recalled.

For vehicles with the Auto Memory Recall, see “Auto Memory Recall” under *DIC Vehicle Personalization on page 4-69* for more information.

To stop recall movement of the memory feature, press one of the power seat controls, power mirror or memory buttons, or the telescopic steering column switch.

Easy Exit Seat

(Easy Exit Seat): This button is used to program and recall the desired driver’s seat exit position.

To program an exit position:

1. Recall the desired driving position by pressing button 1.
2. Adjust the seat and the telescopic steering column position to a comfortable exit position.
3. Press and hold the exit button until two beeps sound to let you know that the exit position is now programmed.

A second exit position can be programmed by repeating the above steps and pressing button 2.

To recall an exit position:

- On vehicles with an automatic transmission, the vehicle needs to be in P (Park).
- On vehicles with a manual transmission, the parking brake must be set.

: Press to recall an exit position.

One beep will sound and the exit position for the currently identified driver will be recalled.

For vehicles with the Auto Exit Recall, see “Auto Exit Recall” under *DIC Vehicle Personalization on page 4-69* for more information.

Reclining Seatbacks

⚠ WARNING:

You can lose control of the vehicle if you try to adjust a manual driver's seat while the vehicle is moving. The sudden movement could startle and confuse you, or make you push a pedal when you do not want to. Adjust the driver's seat only when the vehicle is not moving.

⚠ WARNING:

If either seatback is not locked, it could move forward in a sudden stop or crash. That could cause injury to the person sitting there. Always push and pull on the seatbacks to be sure they are locked.

The seats have manual reclining seatbacks. The lever used to operate them is located on the outboard side of the seats.

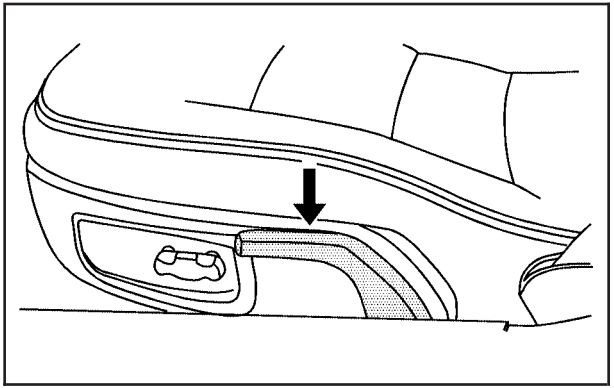

To recline the seatback:

1. Lift the recline lever.
2. Lean back to position the seatback to where you want it.
3. Release the lever to lock the seatback into place.

⚠ WARNING:

Sitting in a reclined position when your vehicle is in motion can be dangerous. Even if you buckle up, your safety belts cannot do their job when you are reclined like this.

The shoulder belt cannot do its job. In a crash, you could go into it, receiving neck or other injuries.

The lap belt cannot do its job either. In a crash the belt could go up over your abdomen. The belt forces would be there, not at your pelvic bones. This could cause serious internal injuries.

For proper protection when the vehicle is in motion, have the seatback upright. Then sit well back in the seat and wear your safety belt properly.

Do not have a seatback reclined if your vehicle is moving.

Seatback Latches

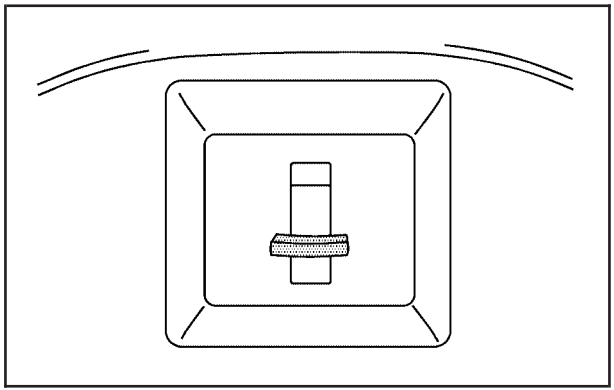

To fold a seatback forward, lift the latch located on top of the backside of the seat. The seatback locks when folded down.

To return the seatback upright, lift up on the latch and push the seatback rearward. The seatback must be locked in place.

⚠ WARNING:

If either seatback is not locked, it could move forward in a sudden stop or crash. That could cause injury to the person sitting there. Always push and pull on the seatbacks to be sure they are locked.

Safety Belts

Safety Belts: They Are for Everyone

This section of the manual describes how to use safety belts properly. It also describes some things not to do with safety belts.

⚠ WARNING:

Do not let anyone ride where a safety belt cannot be worn properly. In a crash, if you or your passenger(s) are not wearing safety belts, the injuries can be much worse. You can hit things inside the vehicle harder or be ejected from the vehicle. You and your passenger(s) can be seriously injured or killed. In the same crash, you might not be, if you are buckled up. Always fasten your safety belt, and check that your passenger(s) are restrained properly too.

⚠ WARNING:

It is extremely dangerous to ride in a cargo area, inside or outside of a vehicle. In a collision, people riding in these areas are more likely to be seriously injured or killed. Do not allow people to ride in any area of your vehicle that is not equipped with seats and safety belts. Be sure everyone in your vehicle is in a seat and using a safety belt properly.

This vehicle has indicators as a reminder to buckle the safety belts. See *Safety Belt Reminders on page 4-31* for additional information.

In most states and in all Canadian provinces, the law requires wearing safety belts. Here is why:

You never know if you will be in a crash. If you do have a crash, you do not know if it will be a serious one.

A few crashes are mild, and some crashes can be so serious that even buckled up, a person would not survive. But most crashes are in between. In many of them, people who buckle up can survive and sometimes walk away. Without safety belts, they could have been badly hurt or killed.

After more than 40 years of safety belts in vehicles, the facts are clear. In most crashes buckling up does matter... a lot!

Why Safety Belts Work

When you ride in or on anything, you go as fast as it goes.

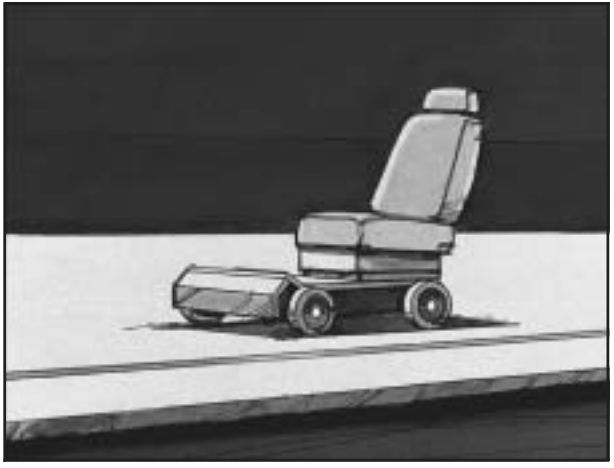

Take the simplest vehicle. Suppose it is just a seat on wheels.

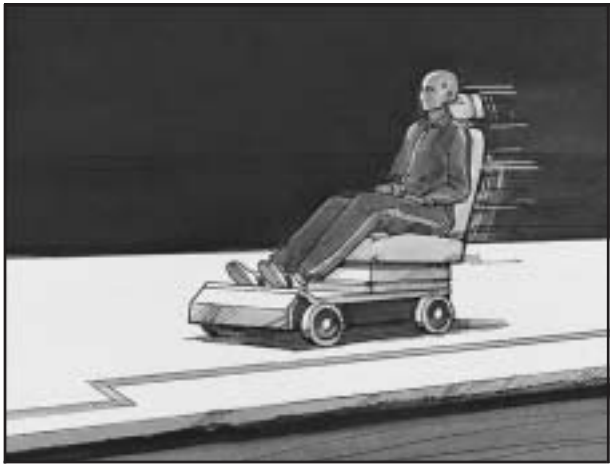

Put someone on it.

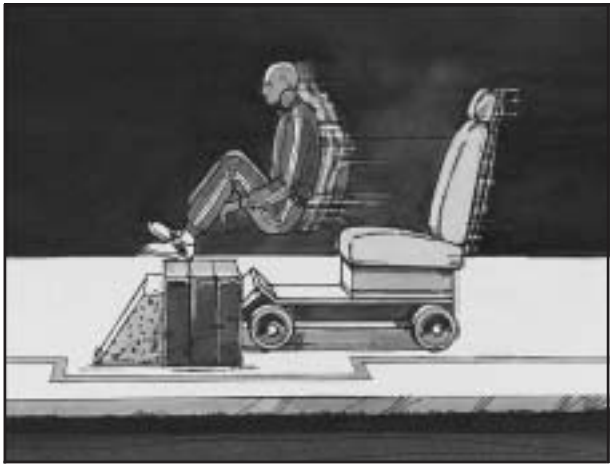

Get it up to speed. Then stop the vehicle. The rider does not stop.

The person keeps going until stopped by something. In a real vehicle, it could be the windshield...

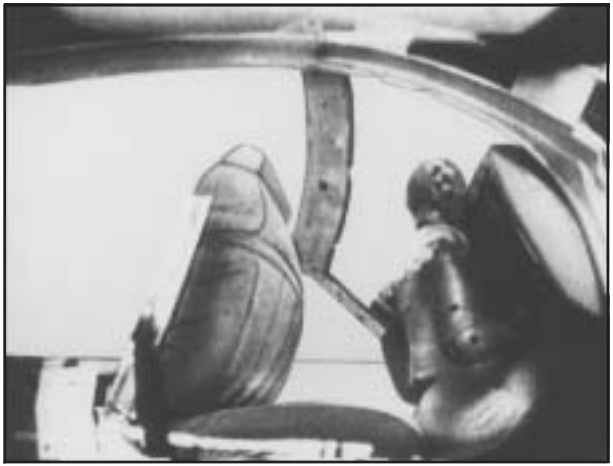

or the instrument panel...

or the safety belts!

With safety belts, you slow down as the vehicle does. You get more time to stop. You stop over more distance, and your strongest bones take the forces. That is why safety belts make such good sense.

Questions and Answers About Safety Belts

Q: Will I be trapped in the vehicle after a crash if I am wearing a safety belt?

A: You *could* be — whether you are wearing a safety belt or not. But your chance of being conscious during and after an accident, so you *can* unbuckle and get out, is *much* greater if you are belted. And you can unbuckle a safety belt, even if you are upside down.

Q: If my vehicle has airbags, why should I have to wear safety belts?

A: Airbags are supplemental systems only; so they work *with* safety belts — not instead of them. Whether or not an airbag is provided, all occupants still have to buckle up to get the most protection. That is true not only in frontal collisions, but especially in side and other collisions.

Q: If I am a good driver, and I never drive far from home, why should I wear safety belts?

A: You may be an excellent driver, but if you are in a crash — even one that is not your fault — you and your passenger(s) can be hurt. Being a good driver does not protect you from things beyond your control, such as bad drivers.

Most accidents occur within 25 miles (40 km) of home. And the greatest number of serious injuries and deaths occur at speeds of less than 40 mph (65 km/h).

Safety belts are for everyone.

How to Wear Safety Belts Properly

This section is only for people of adult size.

Be aware that there are special things to know about safety belts and children. And there are different rules for smaller children and infants. If a child will be riding in the vehicle, see *Older Children on page 2-26* or *Infants and Young Children on page 2-29*. Follow those rules for everyone's protection.

It is very important for all occupants to buckle up. Statistics show that unbelted people are hurt more often in crashes than those who are wearing safety belts.

Occupants who are not buckled up can be thrown out of the vehicle in a crash. And they can strike others in the vehicle who are wearing safety belts.

First, before you or your passenger(s) wear a safety belt, there is important information you should know.

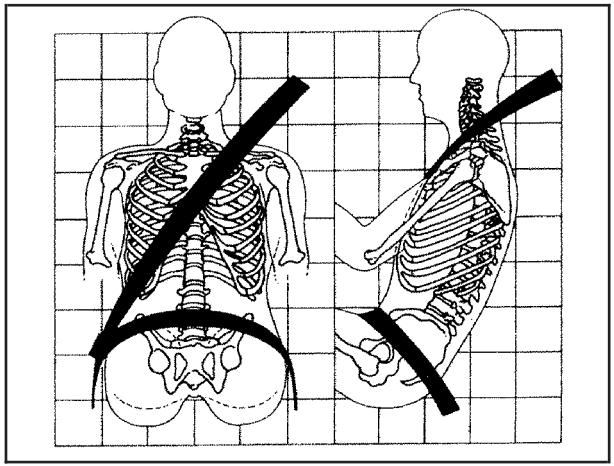

Sit up straight and always keep your feet on the floor in front of you. The lap part of the belt should be worn low and snug on the hips, just touching the thighs.

In a crash, this applies force to the strong pelvic bones and you would be less likely to slide under the lap belt. If you slid under it, the belt would apply force on your abdomen. This could cause serious or even fatal injuries. The shoulder belt should go over the shoulder and across the chest. These parts of the body are best able to take belt restraining forces.

The shoulder belt locks if there is a sudden stop or crash.

Q: What is wrong with this?

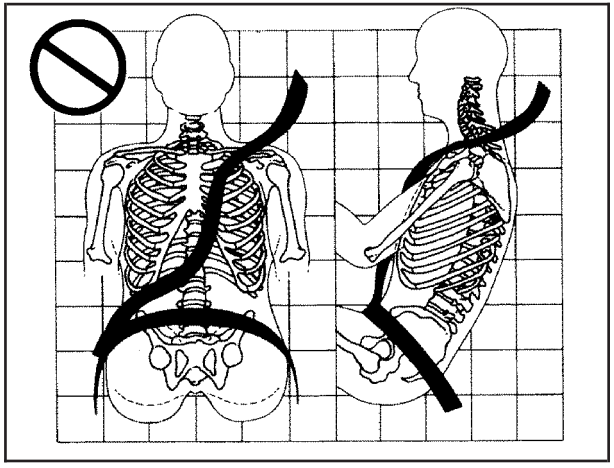

A: The shoulder belt is too loose. It will not give as much protection this way.

⚠ WARNING:

You can be seriously hurt if your shoulder belt is too loose. In a crash, you would move forward too much, which could increase injury. The shoulder belt should fit snugly against your body.

Q: What is wrong with this?

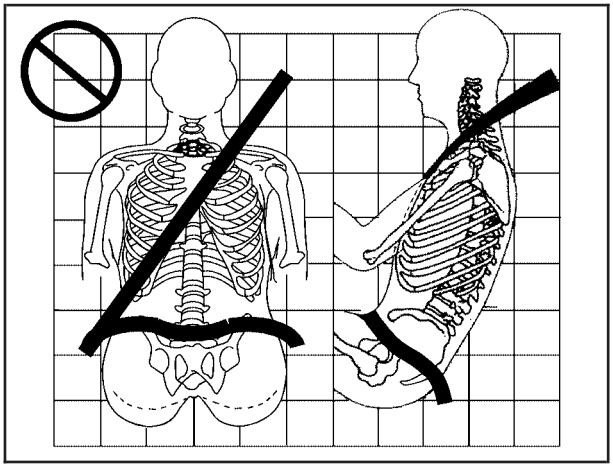

A: The lap belt is too loose. It will not give nearly as much protection this way.

⚠ WARNING:

You can be seriously hurt if your lap belt is too loose. In a crash, you could slide under the lap belt and apply force on your abdomen. This could cause serious or even fatal injuries. The lap belt should be worn low and snug on the hips, just touching the thighs.

Q: What is wrong with this?

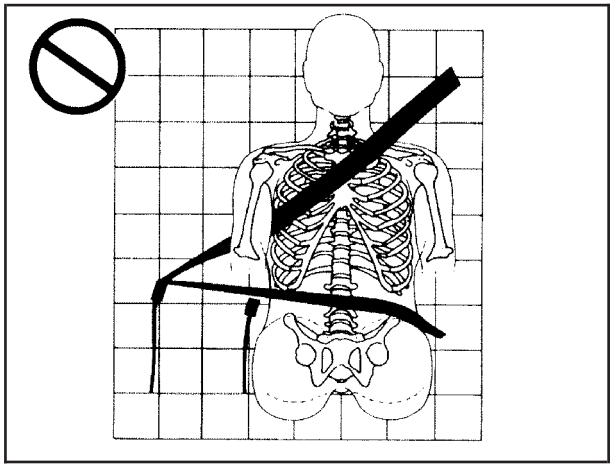

A: The belt is buckled in the wrong buckle.

⚠ WARNING:

You can be seriously injured if your belt is buckled in the wrong place like this. In a crash, the belt would go up over your abdomen. The belt forces would be there, not on the pelvic bones. This could cause serious internal injuries. Always buckle your belt into the buckle nearest you.

Q: What is wrong with this?

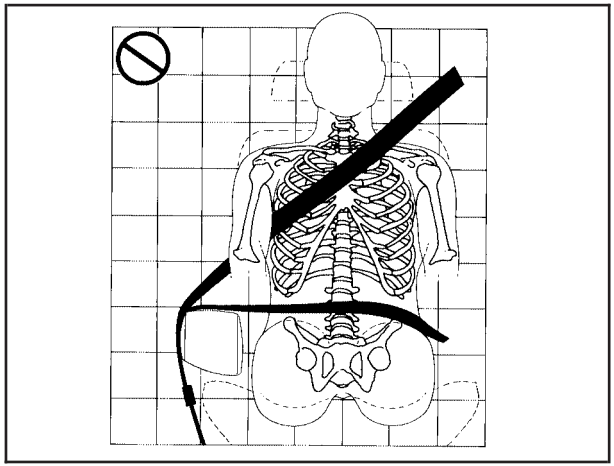

A: The belt is over an armrest.

⚠ WARNING:

You can be seriously injured if your belt goes over an armrest like this. The belt would be much too high. In a crash, you can slide under the belt. The belt force would then be applied on the abdomen, not on the pelvic bones, and that could cause serious or fatal injuries. Be sure the belt goes under the armrests.

Q: What is wrong with this?

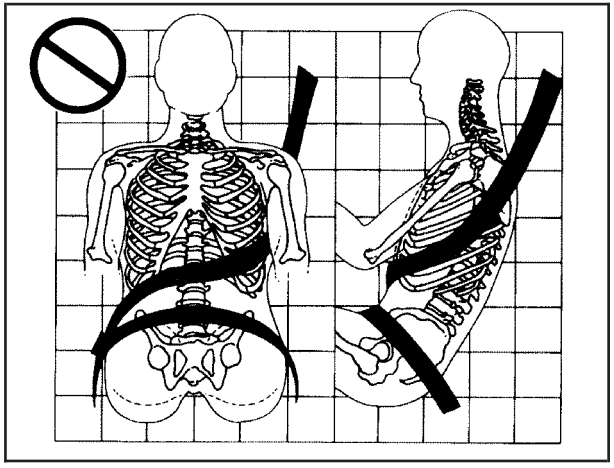

A: The shoulder belt is worn under the arm. It should be worn over the shoulder at all times.

⚠ WARNING:

You can be seriously injured if you wear the shoulder belt under your arm. In a crash, your body would move too far forward, which would increase the chance of head and neck injury. Also, the belt would apply too much force to the ribs, which are not as strong as shoulder bones. You could also severely injure internal organs like your liver or spleen. The shoulder belt should go over the shoulder and across the chest.

Q: What is wrong with this?

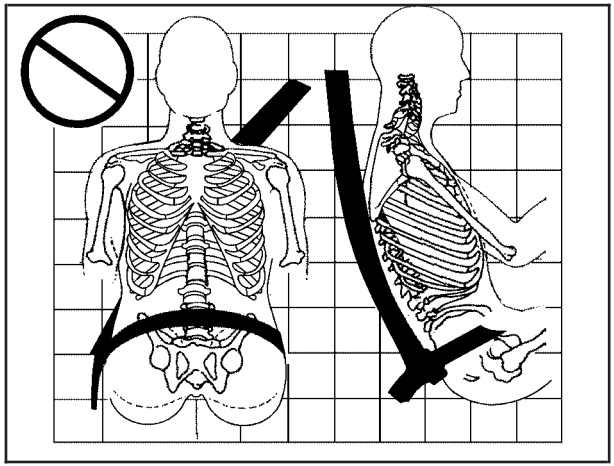

A: The belt is behind the body.

⚠ WARNING:

You can be seriously injured by not wearing the lap-shoulder belt properly. In a crash, you would not be restrained by the shoulder belt. Your body could move too far forward increasing the chance of head and neck injury. You might also slide under the lap belt. The belt force would then be applied right on the abdomen. That could cause serious or fatal injuries. The shoulder belt should go over the shoulder and across the chest.

Q: What is wrong with this?

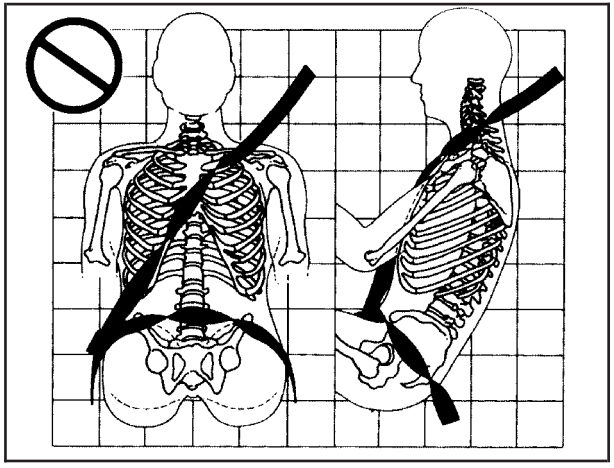

A: The belt is twisted across the body.

⚠ WARNING:

You can be seriously injured by a twisted belt. In a crash, you would not have the full width of the belt to spread impact forces. If a belt is twisted, make it straight so it can work properly, or ask your dealer/retailer to fix it.

Lap-Shoulder Belt

All seating positions in the vehicle have a lap-shoulder belt.

The following instructions explain how to wear a lap-shoulder belt properly.

1. Adjust the seat, if the seat is adjustable, so you can sit up straight. To see how, see “Seats” in the Index.
2. Pick up the latch plate and pull the belt across you. Do not let it get twisted.

   The lap-shoulder belt may lock if you pull the belt across you very quickly. If this happens, let the belt go back slightly to unlock it. Then pull the belt across you more slowly.

   If the shoulder portion of a passenger belt is pulled out all the way, the child restraint locking feature may be engaged. If this happens, let the belt go back all the way and start again.

   Engaging the child restraint locking feature in the right front seating position may affect the passenger sensing system. See *Passenger Sensing System on page 2-52* for more information.

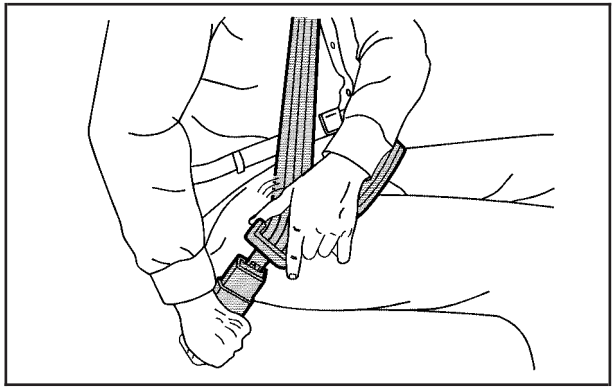

3. Push the latch plate into the buckle until it clicks.

   Pull up on the latch plate to make sure it is secure. If the belt is not long enough, see *Safety Belt Extender on page 2-26*.

   Position the release button on the buckle so that the safety belt could be quickly unbuckled if necessary.

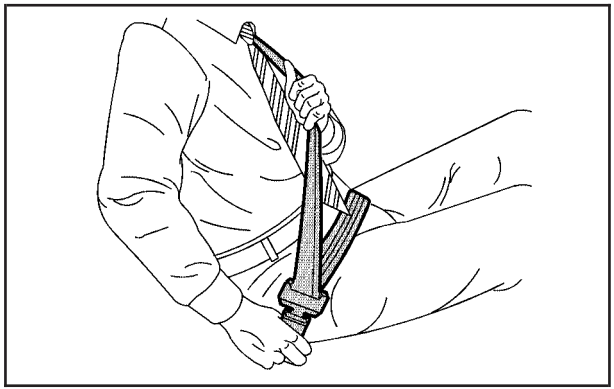

4. To make the lap part tight, pull up on the shoulder belt.

   It may be necessary to pull stitching on the safety belt through the latch plate to fully tighten the lap belt on smaller occupants.

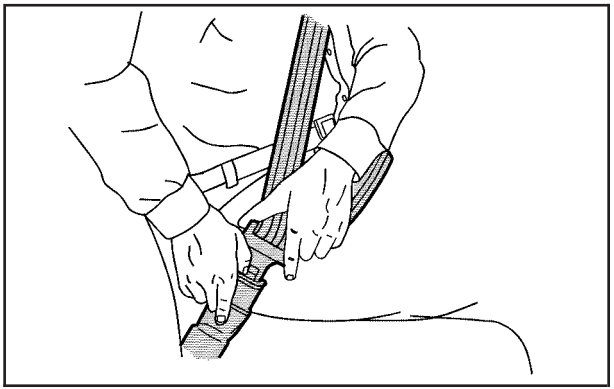

To unlatch the belt, push the button on the buckle. The belt should return to its stowed position.

Before a door is closed, be sure the safety belt is out of the way. If a door is slammed against a safety belt, damage can occur to both the safety belt and the vehicle.

Safety Belt Pretensioners

This vehicle has safety belt pretensioners for the front outboard occupants. Although the safety belt pretensioners cannot be seen, they are part of the safety belt assembly. They can help tighten the safety belts during the early stages of a moderate to severe frontal and near frontal crash if the threshold conditions for pretensioner activation are met. And, for vehicles with side impact airbags, safety belt pretensioners can help tighten the safety belts in a side crash.

Pretensioners work only once. If the pretensioners activate in a crash, they will need to be replaced, and probably other new parts for the vehicle's safety belt system. See *Replacing Restraint System Parts After a Crash on page 2-61*.

Safety Belt Use During Pregnancy

Safety belts work for everyone, including pregnant women. Like all occupants, they are more likely to be seriously injured if they do not wear safety belts.

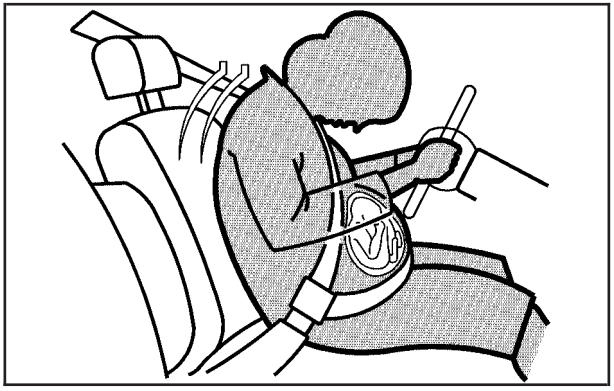

A pregnant woman should wear a lap-shoulder belt, and the lap portion should be worn as low as possible, below the rounding, throughout the pregnancy.

The best way to protect the fetus is to protect the mother. When a safety belt is worn properly, it is more likely that the fetus will not be hurt in a crash. For pregnant women, as for anyone, the key to making safety belts effective is wearing them properly.

Safety Belt Extender

If the vehicle's safety belt will fasten around you, you should use it.

But if a safety belt is not long enough, your dealer/retailer will order you an extender. When you go in to order it, take the heaviest coat you will wear, so the extender will be long enough for you.
To help avoid personal injury, do not let someone else use it, and use it only for the seat it is made to fit.
The extender has been designed for adults. Never use it for securing child seats. To wear it, attach it to the regular safety belt. For more information, see the instruction sheet that comes with the extender.

Child Restraints

Older Children

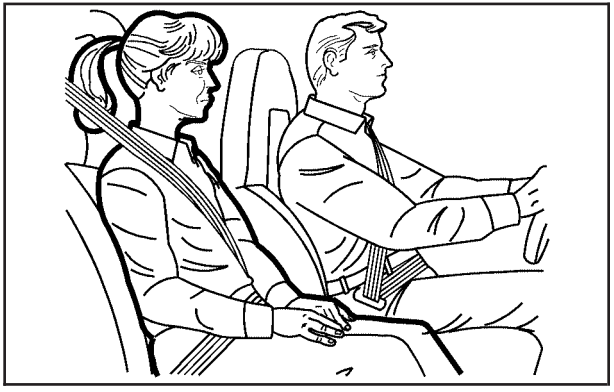

Older children who have outgrown booster seats should wear the vehicle's safety belts.

The manufacturer's instructions that come with the booster seat, state the weight and height limitations for that booster. Use a booster seat with a lap-shoulder belt until the child passes the below fit test:

- Sit all the way back on the seat. Do the knees bend at the seat edge? If yes, continue. If no, return to the booster seat.
- Buckle the lap-shoulder belt. Does the shoulder belt rest on the shoulder? If yes, continue. If no, then return to the booster seat.
- Does the lap belt fit low and snug on the hips, touching the thighs? If yes, continue. If no, return to the booster seat.
- Can proper safety belt fit be maintained for the length of the trip? If yes, continue. If no, return to the booster seat.

Q: What is the proper way to wear safety belts?

A: An older child should wear a lap-shoulder belt and get the additional restraint a shoulder belt can provide. The shoulder belt should not cross the face or neck. The lap belt should fit snugly below the hips, just touching the top of the thighs. This applies belt force to the child's pelvic bones in a crash. It should never be worn over the abdomen, which could cause severe or even fatal internal injuries in a crash.

According to accident statistics, children and infants are safer when properly restrained in rear seating positions than in the front seating positions.

In a crash, children who are not buckled up can strike other people who are buckled up, or can be thrown out of the vehicle. Older children need to use safety belts properly.

⚠ WARNING:

Never do this.

Never allow two children to wear the same safety belt. The safety belt can not properly spread the impact forces. In a crash, the two children can be crushed together and seriously injured. A safety belt must be used by only one person at a time.

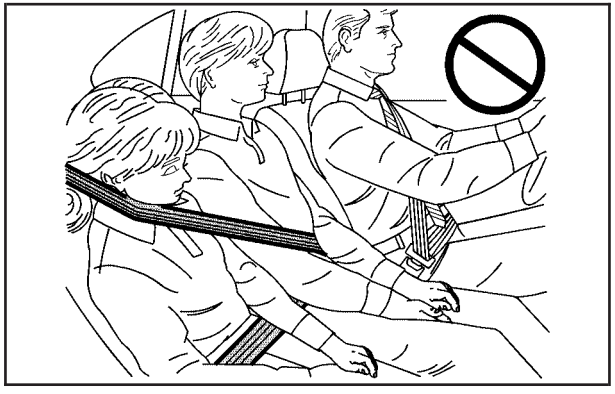

⚠ WARNING:

Never do this.

Never allow a child to wear the safety belt with the shoulder belt behind their back. A child can be seriously injured by not wearing the lap-shoulder belt properly. In a crash, the child would not be restrained by the shoulder belt. The child could move too far forward increasing the chance of head and neck injury. The child might also slide under the lap belt. The belt force would then be applied right on the abdomen. That could cause serious or fatal injuries. The shoulder belt should go over the shoulder and across the chest.

Infants and Young Children

Everyone in a vehicle needs protection! This includes infants and all other children. Neither the distance traveled nor the age and size of the traveler changes the need, for everyone, to use safety restraints. In fact, the law in every state in the United States and in every Canadian province says children up to some age must be restrained while in a vehicle.

⚠ WARNING:

Children can be seriously injured or strangled if a shoulder belt is wrapped around their neck and the safety belt continues to tighten. Never leave children unattended in a vehicle and never allow children to play with the safety belts.

Airbags plus lap-shoulder belts offer protection for adults and older children, but not for young children and infants. Neither the vehicle's safety belt system nor its airbag system is designed for them. Every time infants and young children ride in vehicles, they should have the protection provided by appropriate child restraints.

Children who are not restrained properly can strike other people, or can be thrown out of the vehicle.

⚠ WARNING:

Never do this.

Never hold an infant or a child while riding in a vehicle. Due to crash forces, an infant or a child will become so heavy it is not possible to hold it during a crash. For example, in a crash at only 40 km/h (25 mph), a 5.5 kg (12 lb) infant will suddenly become a 110 kg (240 lb) force on a person's arms. An infant should be secured in an appropriate restraint.

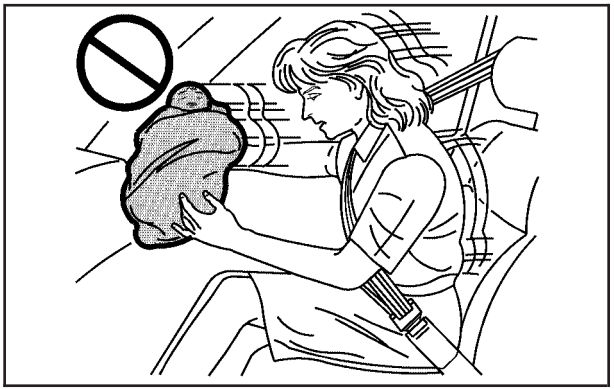

⚠ WARNING:

Never do this.

Children who are up against, or very close to, any airbag when it inflates can be seriously injured or killed. Never put a rear-facing child restraint in the right front seat. Secure a rear-facing child restraint in a rear seat. It is also better to secure a forward-facing child restraint in a rear seat. If you must secure a forward-facing child restraint in the right front seat, always move the front passenger seat as far back as it will go.

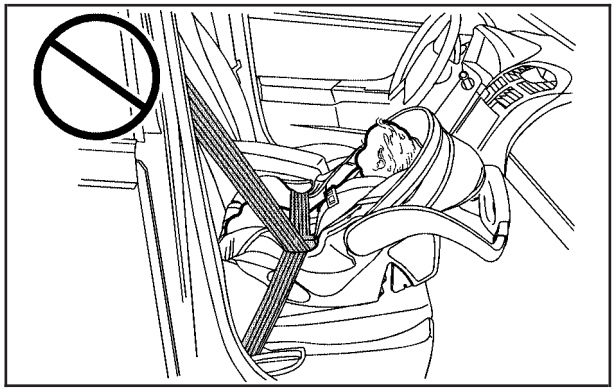

Q: What are the different types of add-on child restraints?

A: Add-on child restraints, which are purchased by the vehicle's owner, are available in four basic types. Selection of a particular restraint should take into consideration not only the child's weight, height, and age but also whether or not the restraint will be compatible with the motor vehicle in which it will be used.

For most basic types of child restraints, there are many different models available. When purchasing a child restraint, be sure it is designed to be used in a motor vehicle. If it is, the restraint will have a label saying that it meets federal motor vehicle safety standards.

The restraint manufacturer's instructions that come with the restraint state the weight and height limitations for a particular child restraint. In addition, there are many kinds of restraints available for children with special needs.

⚠ WARNING:

To reduce the risk of neck and head injury during a crash, infants need complete support. This is because an infant's neck is not fully developed and its head weighs so much compared with the rest of its body. In a crash, an infant in a rear-facing child restraint settles into the restraint, so the crash forces can be distributed across the strongest part of an infant's body, the back and shoulders. Infants should always be secured in rear-facing child restraints.

⚠ WARNING:

A young child's hip bones are still so small that the vehicle's regular safety belt may not remain low on the hip bones, as it should. Instead, it may settle up around the child's abdomen. In a crash, the belt would apply force on a body area that is unprotected by any bony structure. This alone could cause serious or fatal injuries. To reduce the risk of serious or fatal injuries during a crash, young children should always be secured in appropriate child restraints.

Child Restraint Systems

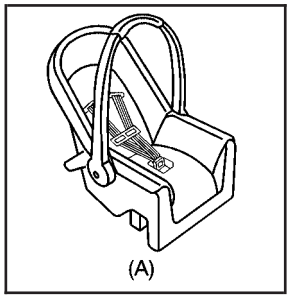

A rear-facing infant seat (A) provides restraint with the seating surface against the back of the infant.

The harness system holds the infant in place and, in a crash, acts to keep the infant positioned in the restraint.

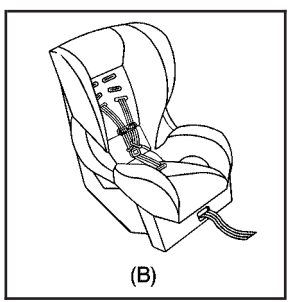

A forward-facing child seat (B) provides restraint for the child's body with the harness.

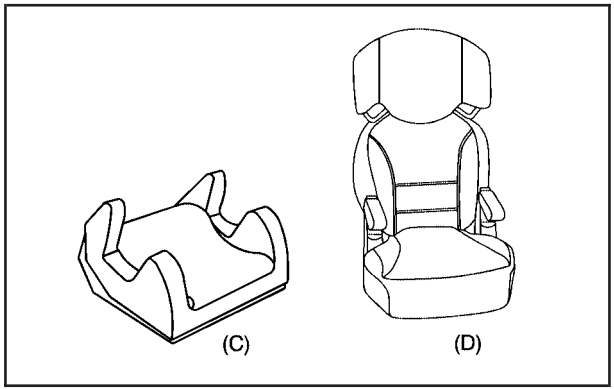

A booster seat (C-D) is a child restraint designed to improve the fit of the vehicle's safety belt system. A booster seat can also help a child to see out the window.

Securing an Add-On Child Restraint in the Vehicle

⚠ WARNING:

A child can be seriously injured or killed in a crash if the child restraint is not properly secured in the vehicle. Secure the child restraint properly in the vehicle using the vehicle's safety belt or LATCH system, following the instructions that came with that child restraint and the instructions in this manual.

To help reduce the chance of injury, the child restraint must be secured in the vehicle. Child restraint systems must be secured in vehicle seats by lap belts or the lap belt portion of a lap-shoulder belt, or by the LATCH system. See *Lower Anchors and Tethers for Children (LATCH) (Coupe and Convertible Models Only) on page 2-35* or *Lower Anchors and Tethers for Children (LATCH) (Z06 and ZR1 Models Only) on page 2-36* for more information. A child can be endangered in a crash if the child restraint is not properly secured in the vehicle.

When securing an add-on child restraint, refer to the instructions that come with the restraint which may be on the restraint itself or in a booklet, or both, and to this manual. The child restraint instructions are important, so if they are not available, obtain a replacement copy from the manufacturer.

Keep in mind that an unsecured child restraint can move around in a collision or sudden stop and injure people in the vehicle. Be sure to properly secure any child restraint in the vehicle — even when no child is in it.

Securing the Child Within the Child Restraint

⚠ WARNING:

A child can be seriously injured or killed in a crash if the child is not properly secured in the child restraint. Secure the child properly following the instructions that came with that child restraint.

Lower Anchors and Tethers for Children (LATCH) (Coupe and Convertible Models Only)

Some child restraints have a LATCH system. As part of the LATCH system, your child restraint may have lower attachments and/or a top tether. The LATCH system can help hold the child restraint in place during driving or in a crash. Some vehicles have lower and/or top tether anchors designed to secure a child restraint with lower attachments and/or a top tether.

Some child restraints with a top tether are designed to be used whether the top tether is anchored or not. Other child restraints require that the top tether be anchored. A national or local law may require that the top tether be anchored.

In Canada, the law requires that forward-facing child restraints have a top tether, and that the tether be attached.

Your vehicle does not have lower anchors or top tether anchors to secure a child restraint with the LATCH system. If a national or local law requires that your top tether be anchored, do not use a child restraint in this vehicle because a top tether cannot be properly anchored. You must use the safety belts to secure your child restraint in this vehicle, unless a national or local law requires that the top tether be anchored. Refer to your child restraint instructions and instructions in this manual for securing a child restraint using the vehicle's safety belts. See *Securing a Child Restraint in the Right Front Seat Position on page 2-40*.

Lower Anchors and Tethers for Children (LATCH) (Z06 and ZR1 Models Only)

Some child restraints have a LATCH system. As part of the LATCH system, your child restraint may have lower attachments and/or a top tether.

The LATCH system can help hold the child restraint in place during driving or in a crash. Some vehicles have lower and/or top tether anchors designed to secure a child restraint with lower attachments and/or a top tether.

Your vehicle does not have lower anchors to accommodate lower attachments. Your vehicle does have a top tether anchor. If your child restraint has a top tether, make sure your child restraint is properly installed using the top tether anchor and the vehicle's safety belt. A child restraint must never be installed using only the top tether and anchor. Refer to your child restraint instructions and see *Securing a Child Restraint in the Right Front Seat Position on page 2-40* for instructions on securing your child restraint using the vehicle's safety belts.

In order to use the top tether anchors in your vehicle, you need a child restraint equipped with a top tether. The child restraint manufacturer will provide you with instructions on how to use the child restraint and its top tether. The following explains how to attach a child restraint with the top tether in your vehicle.

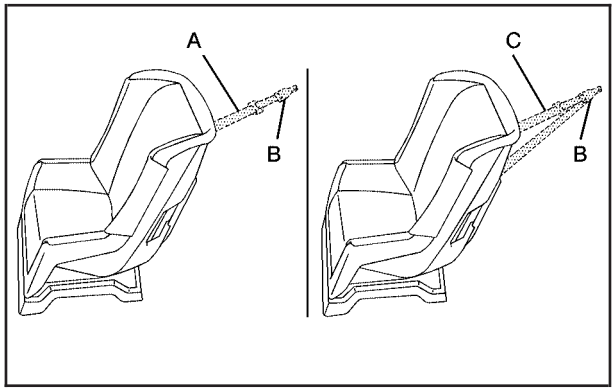

A top tether (A, C) anchors the top of the child restraint to the vehicle. A top tether anchor is built into the vehicle. The top tether attachment (B) on the child restraint connects to the top tether anchor in the vehicle in order to reduce the forward movement and rotation of the child restraint during driving or in a crash.

Your child restraint may have a single tether (A) or a dual tether (C). Either will have a single attachment (B) to secure the top tether to the anchor.

Some top tether-equipped child restraints are designed for use with or without the top tether being attached. Others require the top tether always to be attached. In Canada, the law requires that forward-facing child restraints have a top tether, and that the tether be attached. Be sure to read and follow the instructions for your child restraint.

If the child restraint does not have a top tether, one can be obtained, in kit form, for many child restraints. Ask the child restraint manufacturer whether or not a kit is available.

Top Tether Anchor Locations

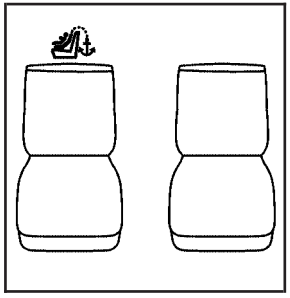

(Top Tether Anchor): Seating positions with top tether anchors.

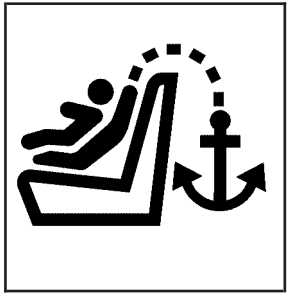

To assist you in locating the top tether anchors, the top tether anchor symbol is located on the trim cover.

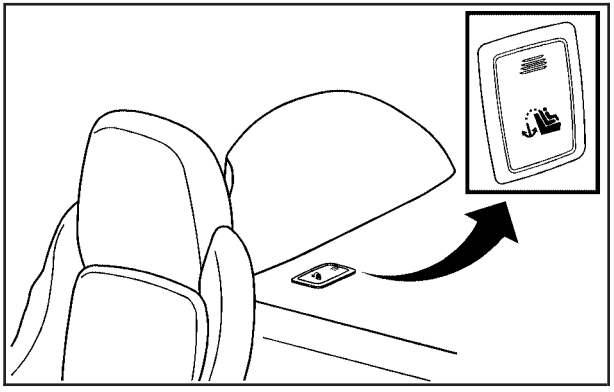

The top tether anchor is located behind the passenger seat.

Securing a Child Restraint with a Top Tether

⚠ WARNING:

If a LATCH-type child restraint is not attached to anchors, the child restraint will not be able to protect the child correctly. In a crash, the child could be seriously injured or killed. Install a LATCH-type child restraint properly using the anchors, or use the vehicle's safety belts to secure the restraint, following the instructions that came with the child restraint and the instructions in this manual.

1. Secure the child restraint using the vehicle's safety belt. See *Securing a Child Restraint in the Right Front Seat Position on page 2-40*.
2. If the child restraint manufacturer recommends that the top tether be attached, attach and tighten the top tether to the top tether anchor, if equipped. Refer to the child restraint instructions and the following steps:
   2.1. Find the top tether anchor.
   2.2. Press the ribbed area of the trim cover to open the cover and expose the anchor.
   2.3. Route, attach and tighten the top tether according to your child restraint instructions and the following instructions:

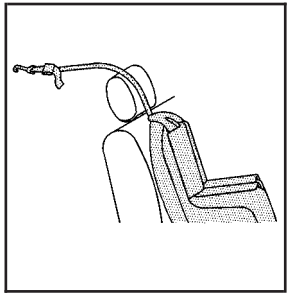

If the position you are using has a fixed headrest or head restraint and you are using a single tether, route the tether over the headrest or head restraint.

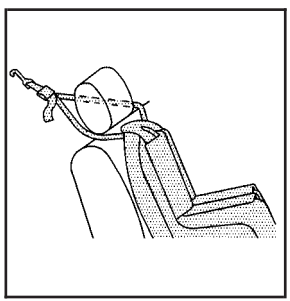

If the position you are using has a fixed headrest or head restraint and you are using a dual tether, route the tether around the headrest or head restraint.

3. Push and pull the child restraint in different directions to be sure it is secure.

Securing a Child Restraint in the Right Front Seat Position

This vehicle has airbags. In addition, the vehicle has a passenger sensing system which is designed to turn off the right front passenger frontal airbag and seat-mounted side impact airbag (if equipped) under certain conditions. See *Passenger Sensing System on page 2-52* and *Passenger Airbag Status Indicator on page 4-33* for more information, including important safety information.

A label on the sun visor says, “Never put a rear-facing child seat in the front.” This is because the risk to the rear-facing child is so great, if the airbag deploys.

⚠ WARNING:

A child in a rear-facing child restraint can be seriously injured or killed if the right front passenger airbag inflates. This is because the back of the rear-facing child restraint would be very close to the inflating airbag. A child in a forward-facing child

WARNING: (Continued)

WARNING: (Continued)

restraint can be seriously injured or killed if the right front passenger airbag inflates and the passenger seat is in a forward position.

Even if the passenger sensing system has turned off the right front passenger frontal airbag, no system is fail-safe. No one can guarantee that an airbag will not deploy under some unusual circumstance, even though it is turned off.

Secure rear-facing child restraints in a rear seat, even if the airbag is off. If you secure a forward-facing child restraint in the right front seat, always move the front passenger seat as far back as it will go. It is better to secure the child restraint in a rear seat.

See *Passenger Sensing System on page 2-52* for additional information.

Rear-facing child restraints should not be installed in the vehicle, even if the airbag(s) are off.

If the child restraint has the LATCH system, see *Lower Anchors and Tethers for Children (LATCH) (Coupe and Convertible Models Only) on page 2-35* or *Lower Anchors and Tethers for Children (LATCH) (Z06 and ZR1 Models Only) on page 2-36* for how and where to install the child restraint using LATCH. If a child restraint is secured using a safety belt and it uses a top tether, see *Lower Anchors and Tethers for Children (LATCH) (Coupe and Convertible Models Only) on page 2-35* or *Lower Anchors and Tethers for Children (LATCH) (Z06 and ZR1 Models Only) on page 2-36* for top tether anchor locations.

Do not secure a child seat in a position without a top tether anchor if a national or local law requires that the top tether be anchored, or if the instructions that come with the child restraint say that the top strap must be anchored.

In Canada, the law requires that forward-facing child restraints have a top tether, and that the tether be attached.

You will be using the lap-shoulder belt to secure the child restraint in this position. Follow the instructions that came with the child restraint.

1. Move the seat as far back as it will go before securing the forward-facing child restraint.

   When the passenger sensing system has turned off the right front passenger frontal airbag and seat-mounted side impact airbag (if equipped), the off indicator on the passenger airbag status indicator should light and stay lit when you start the vehicle. See *Passenger Airbag Status Indicator on page 4-33*.

2. Put the child restraint on the seat.

3. Pick up the latch plate, and run the lap and shoulder portions of the vehicle's safety belt through or around the restraint. The child restraint instructions will show you how.

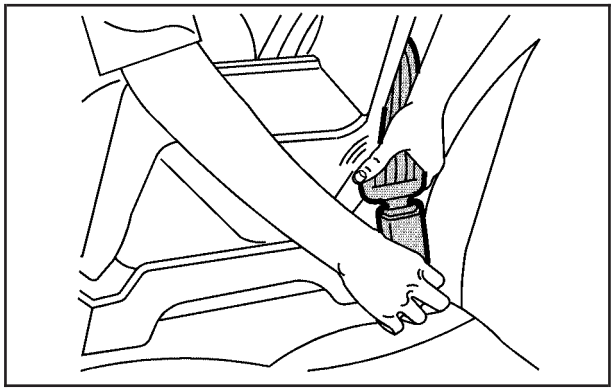

4. Push the latch plate into the buckle until it clicks.

   Position the release button on the buckle so that the safety belt could be quickly unbuckled if necessary.

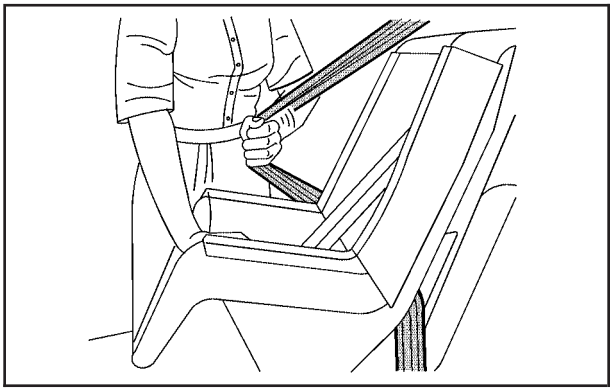

5. Pull the rest of the shoulder belt all the way out of the retractor to set the lock.

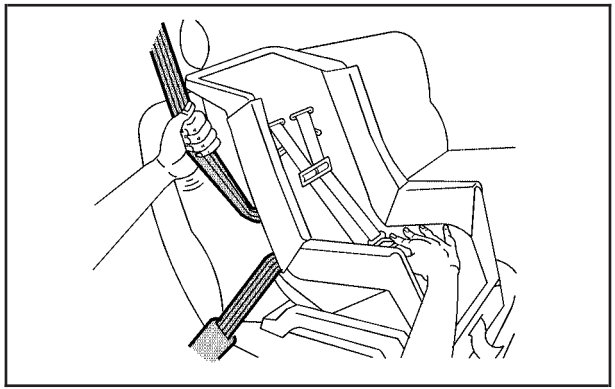

6. To tighten the belt, push down on the child restraint, pull the shoulder portion of the belt to tighten the lap portion of the belt and feed the shoulder belt back into the retractor. When installing a forward-facing child restraint, you may find it helpful to use your knee to push down on the child restraint as you tighten the belt.
7. If the child restraint has a top tether, follow the child restraint manufacturer's instructions regarding the use of the top tether. See *Lower Anchors and Tethers for Children (LATCH) (Coupe and Convertible Models Only) on page 2-35* or *Lower Anchors and Tethers for Children (LATCH) (Z06 and ZR1 Models Only) on page 2-36* for more information.
8. Push and pull the child restraint in different directions to be sure it is secure.

If the airbag or airbags are off, the off indicator in the passenger airbag status indicator will come on and stay on when the vehicle is started.

If a child restraint has been installed and the on indicator is lit, see "If the On Indicator is Lit for a Child Restraint " under *Passenger Sensing System on page 2-52* for more information.

To remove the child restraint, unbuckle the vehicle safety belt and let it return to the stowed position.

Airbag System

The vehicle has the following airbags:

- A frontal airbag for the driver.
- A frontal airbag for the right front passenger.
- A seat-mounted side impact airbag for the driver.
- A seat-mounted side impact airbag for the right front passenger.

All of the airbags in the vehicle will have the word AIRBAG embossed in the trim or on an attached label near the deployment opening.

For frontal airbags, the word AIRBAG will appear on the middle part of the steering wheel for the driver and on the instrument panel for the right front passenger.

With seat-mounted side impact airbags, the word AIRBAG will appear on the side of the seatback closest to the door.

Airbags are designed to supplement the protection provided by safety belts. Even though today's airbags are also designed to help reduce the risk of injury from the force of an inflating bag, all airbags must inflate very quickly to do their job.

Here are the most important things to know about the airbag system:

⚠ WARNING:

You can be severely injured or killed in a crash if you are not wearing your safety belt — even if you have airbags. Airbags are designed to work with safety belts, but do not replace them. Also, airbags are not designed to deploy in every crash. In some crashes safety belts are your only restraint. See *When Should an Airbag Inflate? on page 2-48*.

Wearing your safety belt during a crash helps reduce your chance of hitting things inside the vehicle or being ejected from it. Airbags are "supplemental restraints" to the safety belts. Everyone in your vehicle should wear a safety belt properly — whether or not there is an airbag for that person.

⚠ WARNING:

Airbags inflate with great force, faster than the blink of an eye. Anyone who is up against, or very close to, any airbag when it inflates can be seriously injured or killed. Do not sit unnecessarily close to the airbag, as you would be if you were sitting on the edge of your seat or leaning forward. Safety belts help keep you in position before and during a crash. Always wear your safety belt, even with airbags. The driver should sit as far back as possible while still maintaining control of the vehicle.

Occupants should not lean on or sleep against the door or side windows in seating positions with seat-mounted airbags.

⚠ WARNING:

Children who are up against, or very close to, any airbag when it inflates can be seriously injured or killed. Airbags plus lap-shoulder belts offer

WARNING: (Continued)

WARNING: (Continued)

protection for adults and older children, but not for young children and infants. Neither the vehicle's safety belt system nor its airbag system is designed for them. Young children and infants need the protection that a child restraint system can provide. Always secure children properly in your vehicle. To read how, see *Older Children on page 2-26* or *Infants and Young Children on page 2-29*.

There is an airbag readiness light on the instrument panel, which shows the airbag symbol.

The system checks the airbag electrical system for malfunctions. The light tells you if there is an electrical problem. See *Airbag Readiness Light on page 4-32* for more information.

Where Are the Airbags?

The driver frontal airbag is in the middle of the steering wheel.

The right front passenger frontal airbag is in the instrument panel on the passenger's side.

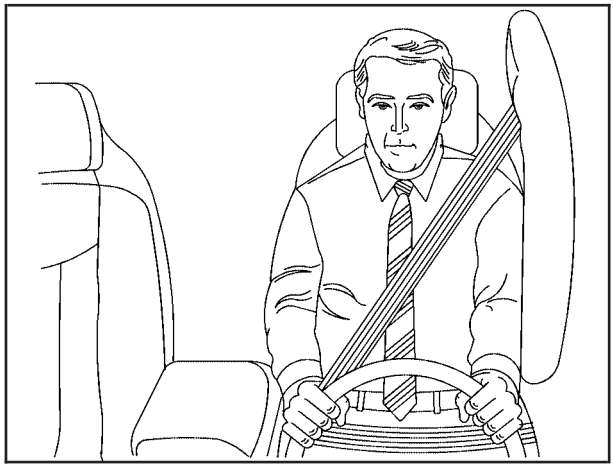

Driver Side shown, Passenger Side similar

The seat-mounted side impact airbags for the driver and right front passenger are in the side of the seatbacks closest to the door.

⚠ WARNING:

If something is between an occupant and an airbag, the airbag might not inflate properly or it might force the object into that person causing severe injury or even death. The path of an inflating airbag must be kept clear. Do not put anything between an occupant and an airbag, and do not attach or put anything on the steering wheel hub or on or near any other airbag covering.

Do not use seat accessories that block the inflation path of a seat-mounted side impact airbag.

When Should an Airbag Inflate?

Frontal airbags are designed to inflate in moderate to severe frontal or near-frontal crashes to help reduce the potential for severe injuries mainly to the driver's or right front passenger's head and chest. However, they are only designed to inflate if the impact exceeds a predetermined deployment threshold. Deployment thresholds are used to predict how severe a crash is likely to be in time for the airbags to inflate and help restrain the occupants.

Whether the frontal airbags will or should deploy is not based on how fast your vehicle is traveling. It depends largely on what you hit, the direction of the impact, and how quickly your vehicle slows down.

Frontal airbags may inflate at different crash speeds. For example:

- If the vehicle hits a stationary object, the airbags could inflate at a different crash speed than if the vehicle hits a moving object.
- If the vehicle hits an object that deforms, the airbags could inflate at a different crash speed than if the vehicle hits an object that does not deform.
- If the vehicle hits a narrow object (like a pole), the airbags could inflate at a different crash speed than if the vehicle hits a wide object (like a wall).
- If the vehicle goes into an object at an angle, the airbags could inflate at a different crash speed than if the vehicle goes straight into the object.

Thresholds can also vary with specific vehicle design.

Frontal airbags are not intended to inflate during vehicle rollovers, rear impacts, or in many side impacts.

In addition, your vehicle has dual-stage frontal airbags. Dual-stage airbags adjust the restraint according to crash severity. Your vehicle has electronic frontal sensors, which help the sensing system distinguish between a moderate frontal impact and a more severe frontal impact. For moderate frontal impacts, dual-stage airbags inflate at a level less than full deployment. For more severe frontal impacts, full deployment occurs.

Your vehicle may have one or two seat position sensors, depending on what model you have. The seat position sensor(s) enable the sensing system to monitor the position of the driver seat (all models except Z06 and ZR1) and the right front passenger seat (all models). Seat position sensor(s) provide information that is used to determine if the airbags should deploy at a reduced level or at full deployment.

Your vehicle may or may not have seat-mounted side impact airbags. See *Airbag System on page 2-44*. Seat-mounted side impact airbags are intended to inflate in moderate to severe side crashes. Seat-mounted side impact airbags will inflate if the crash severity is above the system's designed threshold level. The threshold level can vary with specific vehicle design.

Seat-mounted side impact airbags are not intended to inflate in frontal impacts, near-frontal impacts, rollovers, or rear impacts. A seat-mounted side impact airbag is intended to deploy on the side of the vehicle that is struck.

In any particular crash, no one can say whether an airbag should have inflated simply because of the damage to a vehicle or because of what the repair costs were. For seat-mounted side impact airbags, deployment is determined by the location and severity of the side impact.

What Makes an Airbag Inflate?

In a deployment event, the sensing system sends an electrical signal triggering a release of gas from the inflator. Gas from the inflator fills the airbag causing the bag to break out of the cover and deploy. The inflator, the airbag, and related hardware are all part of the airbag module.

Frontal airbag modules are located inside the steering wheel and instrument panel. For vehicles with seat-mounted side impact airbags, there are airbag modules in the side of the front seatbacks closest to the door.

How Does an Airbag Restrain?

In moderate to severe frontal or near frontal collisions, even belted occupants can contact the steering wheel or the instrument panel. In moderate to severe side collisions, even belted occupants can contact the inside of the vehicle.

Airbags supplement the protection provided by safety belts. Frontal airbags distribute the force of the impact more evenly over the occupant's upper body, stopping the occupant more gradually. Seat-mounted side impact airbags distribute the force of the impact more evenly over the occupant's upper body.

But airbags would not help in many types of collisions, primarily because the occupant's motion is not toward those airbags. See *When Should an Airbag Inflate? on page 2-48* for more information.

Airbags should never be regarded as anything more than a supplement to safety belts.

What Will You See After an Airbag Inflates?

After the frontal and seat-mounted side impact airbags inflate, they quickly deflate, so quickly that some people may not even realize the airbags inflated. Some components of the airbag module may be hot for several minutes. For location of the airbag modules, see *What Makes an Airbag Inflate? on page 2-49*.

The parts of the airbag that come into contact with you may be warm, but not too hot to touch. There may be some smoke and dust coming from the vents in the deflated airbags. Airbag inflation does not prevent the driver from seeing out of the windshield or being able to steer the vehicle, nor does it prevent people from leaving the vehicle.

⚠ WARNING:

When an airbag inflates, there may be dust in the air. This dust could cause breathing problems for people with a history of asthma or other breathing trouble. To avoid this, everyone in the vehicle should get out as soon as it is safe to do so.
If you have breathing problems but cannot get out of the vehicle after an airbag inflates, then get fresh air by opening a window or a door. If you experience breathing problems following an airbag deployment, you should seek medical attention.

The vehicle has a feature that may automatically unlock the doors, turn the interior lamps on, turn on the hazard warning flashers, and shut off the fuel system after the airbags inflate. You can lock the doors, turn the interior lamps off, and turn the hazard warning flashers off by using the controls for those features.

⚠ WARNING:

A crash severe enough to inflate the airbags may have also damaged important functions in the vehicle, such as the fuel system, brake and steering systems, etc. Even if the vehicle appears to be drivable after a moderate crash, there may be concealed damage that could make it difficult to safely operate the vehicle.

Use caution if you should attempt to restart the engine after a crash has occurred.

In many crashes severe enough to inflate the airbag, windshields are broken by vehicle deformation. Additional windshield breakage may also occur from the right front passenger airbag.

- Airbags are designed to inflate only once. After an airbag inflates, you will need some new parts for the airbag system. If you do not get them, the airbag system will not be there to help protect you in another crash. A new system will include airbag modules and possibly other parts. The service manual for your vehicle covers the need to replace other parts.
- The vehicle has a crash sensing and diagnostic module which records information after a crash. See *Vehicle Data Recording and Privacy on page 8-18* and *Event Data Recorders on page 8-19*.
- Let only qualified technicians work on the airbag system. Improper service can mean that the airbag system will not work properly. See your dealer/retailer for service.

Passenger Sensing System

The vehicle has a passenger sensing system for the right front passenger position. The passenger airbag status indicator will be visible in the rearview mirror when the vehicle is started.

United States

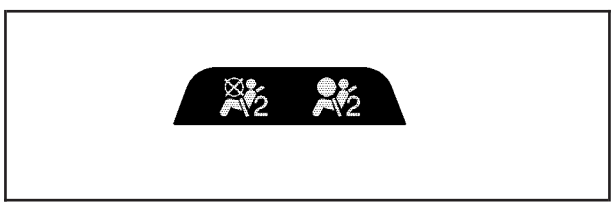

Canada

The words ON and OFF, or the symbol for on and off, will be visible during the system check. When the system check is complete, either the word ON or OFF, or the symbol for on or off, will be visible. See *Passenger Airbag Status Indicator on page 4-33*.

The passenger sensing system will turn off the right front passenger frontal airbag and seat-mounted side impact airbag under certain conditions. The driver airbags are not affected by the passenger sensing system.

The passenger sensing system works with sensors that are part of the right front passenger seat. The sensors are designed to detect the presence of a properly-seated occupant and determine if the right front passenger frontal airbag and seat-mounted side impact airbag should be enabled (may inflate) or not.

According to accident statistics, children are safer when properly secured in a rear seat in the correct child restraint for their weight and size. We recommend that rear-facing child restraints not be transported in the vehicle, even if the airbags are off.

A label on the sun visor says, “Never put a rear-facing child seat in the front.” This is because the risk to the rear-facing child is so great, if the airbag deploys.

⚠ WARNING:

A child in a rear-facing child restraint can be seriously injured or killed if the right front passenger airbag inflates. This is because the back of the rear-facing child restraint would be very close to the inflating airbag. A child in a forward-facing child restraint can be seriously injured or killed if the right front passenger airbag inflates and the passenger seat is in a forward position.

WARNING: (Continued)

WARNING: (Continued)

Even if the passenger sensing system has turned off the right front passenger frontal airbag and seat-mounted side impact airbag (if equipped), no system is fail-safe. No one can guarantee that an airbag will not deploy under some unusual circumstance, even though the airbag(s) are off.

Secure rear-facing child restraints in a rear seat, even if the airbag(s) are off. If you secure a forward-facing child restraint in the right front seat, always move the front passenger seat as far back as it will go. It is better to secure the child restraint in a rear seat.

The passenger sensing system is designed to turn off the right front passenger frontal airbag and seat-mounted side impact airbag if:

- The right front passenger seat is unoccupied.
- The system determines that an infant is present in a rear-facing infant seat.
- The system determines that a small child is present in a child restraint.
- The system determines that a small child is present in a booster seat.
- A right front passenger takes his/her weight off of the seat for a period of time.
- The right front passenger seat is occupied by a smaller person, such as a child who has outgrown child restraints.
- Or, if there is a critical problem with the airbag system or the passenger sensing system.

When the passenger sensing system has turned off the right front passenger frontal airbag and seat-mounted side impact airbag, the off indicator will light and stay lit to remind you that the airbag(s) are off. See *Passenger Airbag Status Indicator on page 4-33*.

The passenger sensing system is designed to turn on (may inflate) the right front passenger frontal airbag and seat-mounted side impact airbag anytime the system senses that a person of adult size is sitting properly in the right front passenger seat.

When the passenger sensing system has allowed the airbag(s) to be enabled, the on indicator will light and stay lit to remind you that the airbag or airbags are active.

For some children who have outgrown child restraints and for very small adults, the passenger sensing system may or may not turn off the right front passenger frontal airbag and seat-mounted side impact airbag, depending upon the person's seating posture and body build. Everyone in the vehicle who has outgrown child restraints should wear a safety belt properly — whether or not there is an airbag for that person.

⚠ WARNING:

If the airbag readiness light ever comes on and stays on, it means that something may be wrong with the airbag system. To help avoid injury to yourself or others, have the vehicle serviced right away. See *Airbag Readiness Light on page 4-32* for more information, including important safety information.

If the On Indicator is Lit for a Child Restraint

If a child restraint has been installed and the on indicator is lit:

1. Turn the vehicle off.
2. Remove the child restraint from the vehicle.
3. Remove any additional items from the seat such as blankets, cushions, seat covers, seat heaters, or seat massagers.
4. Reinstall the child restraint following the directions provided by the child restraint manufacturer and refer to *Securing a Child Restraint in the Right Front Seat Position on page 2-40*.
5. If, after reinstalling the child restraint and restarting the vehicle, the on indicator is still lit, turn the vehicle off. Then slightly recline the vehicle seatback and adjust the seat cushion, if adjustable, to make sure that the vehicle seatback is not pushing the child restraint into the seat cushion.
6. Restart the vehicle.

   If the on indicator is still lit, do not install a child restraint in this vehicle and check with your dealer/retailer.

If the Off Indicator is Lit for an Adult-Size Occupant

If a person of adult-size is sitting in the right front passenger seat, but the off indicator is lit, it could be because that person is not sitting properly in the seat.

If this happens, use the following steps to allow the system to detect that person and enable the right front passenger frontal airbag and seat-mounted side impact airbag:

1. Turn the vehicle off.
2. Remove any additional material from the seat, such as blankets, cushions, seat covers, seat heaters, or seat massagers.
3. Place the seatback in the fully upright position.
4. Have the person sit upright in the seat, centered on the seat cushion, with legs comfortably extended.
5. Restart the vehicle and have the person remain in this position for two to three minutes after the on indicator is lit.

Additional Factors Affecting System Operation

Safety belts help keep the passenger in position on the seat during vehicle maneuvers and braking, which helps the passenger sensing system maintain the passenger airbag status. See “Safety Belts” and “Child Restraints” in the Index for additional information about the importance of proper restraint use.

If the shoulder portion of the belt is pulled out all the way, the child restraint locking feature will be engaged. This may unintentionally cause the passenger sensing system to turn the airbag(s) off for some adult size occupants. If this happens, let the belt go back all the way and start again.

A thick layer of additional material, such as a blanket or cushion, or aftermarket equipment such as seat covers, seat heaters, and seat massagers can affect how well the passenger sensing system operates. We recommend that you not use seat covers or other aftermarket equipment except when approved by GM for your specific vehicle. See *Adding Equipment to Your Airbag-Equipped Vehicle on page 2-58* for more information about modifications that can affect how the system operates.

⚠ WARNING:

Stowing of articles under the passenger seat or between the passenger seat cushion and seatback may interfere with the proper operation of the passenger sensing system.

Servicing Your Airbag-Equipped Vehicle

Airbags affect how the vehicle should be serviced. There are parts of the airbag system in several places around the vehicle. Your dealer/retailer and the service manual have information about servicing the vehicle and the airbag system. To purchase a service manual, see *Service Publications Ordering Information on page 8-17*.

⚠ WARNING:

For up to 10 seconds after the ignition is turned off and the battery is disconnected, an airbag can still inflate during improper service. You can be injured if you are close to an airbag when it inflates. Avoid yellow connectors. They are probably part of the airbag system. Be sure to follow proper service procedures, and make sure the person performing work for you is qualified to do so.

Adding Equipment to Your Airbag-Equipped Vehicle

Q: Is there anything I might add to or change about the vehicle that could keep the airbags from working properly?

A: Yes. If you add things that change your vehicle's frame, bumper system, height, front end or side sheet metal, they may keep the airbag system from working properly. Changing or moving any parts of the front seats, safety belts, the airbag sensing and diagnostic module, steering wheel, instrument panel, the inside review mirror, front sensors, or airbag wiring can affect the operation of the airbag system.

In addition, the vehicle has a passenger sensing system for the right front passenger position, which includes sensors that are part of the passenger seat. The passenger sensing system may not operate properly if the original seat trim is replaced with non-GM covers, upholstery or trim, or with GM covers, upholstery or trim designed for a different vehicle. Any object, such as an aftermarket seat heater or a comfort enhancing pad or device, installed under or on top of the seat fabric, could also interfere with the operation of the passenger sensing system. This could either prevent proper deployment of the passenger airbag(s) or prevent the passenger sensing system from properly turning off the passenger airbag(s). See *Passenger Sensing System on page 2-52*.

If you have any questions about this, you should contact Customer Assistance before you modify your vehicle. The phone numbers and addresses for Customer Assistance are in Step Two of the Customer Satisfaction Procedure in this manual. See *Customer Satisfaction Procedure on page 8-2*.

Q: Because I have a disability, I have to get my vehicle modified. How can I find out whether this will affect my airbag system?

A: If you have questions, call Customer Assistance. The phone numbers and addresses for Customer Assistance are in Step Two of the Customer Satisfaction Procedure in this manual. See *Customer Satisfaction Procedure on page 8-2*.

Your dealer/retailer and the service manual have information about the location of the airbag sensors, sensing and diagnostic module and airbag wiring.

Restraint System Check

Checking the Restraint Systems

Safety Belts

Now and then, check that the safety belt reminder light, safety belts, buckles, latch plates, retractors, and anchorages are all working properly.

Look for any other loose or damaged safety belt system parts that might keep a safety belt system from doing its job. See your dealer/retailer to have it repaired. Torn or frayed safety belts may not protect you in a crash. They can rip apart under impact forces. If a belt is torn or frayed, get a new one right away.

Make sure the safety belt reminder light is working. See *Safety Belt Reminders on page 4-31* for more information.

Keep safety belts clean and dry. See *Care of Safety Belts on page 6-95*.

Airbags

The airbag system does not need regularly scheduled maintenance or replacement. Make sure the airbag readiness light is working. See *Airbag Readiness Light on page 4-32* for more information.

Notice: **If an airbag covering is damaged, opened, or broken, the airbag may not work properly. Do not open or break the airbag coverings. If there are any opened or broken airbag covers, have the airbag covering and/or airbag module replaced. For the location of the airbag modules, see *What Makes an Airbag Inflate? on page 2-49*. See your dealer/retailer for service.**

Replacing Restraint System Parts After a Crash

⚠ WARNING:

A crash can damage the restraint systems in your vehicle. A damaged restraint system may not properly protect the person using it, resulting in serious injury or even death in a crash. To help make sure your restraint systems are working properly after a crash, have them inspected and any necessary replacements made as soon as possible.

If the vehicle has been in a crash, do you need new safety belts or LATCH system (if equipped) parts?

After a very minor crash, nothing may be necessary. But the safety belt assemblies that were used during any crash may have been stressed or damaged. See your dealer/retailer to have the safety belt assemblies inspected or replaced.

If the vehicle has the LATCH system and it was being used during a crash, you may need new LATCH system parts.

New parts and repairs may be necessary even if the safety belt or LATCH system (if equipped), was not being used at the time of the crash.

If an airbag inflates, you will need to replace airbag system parts. See the part on the airbag system earlier in this section.

Have the safety belt pretensioners checked if the vehicle has been in a crash, if the airbag readiness light stays on after the vehicle is started, or while you are driving. See *Airbag Readiness Light on page 4-32*.

✍ NOTES

Section 3 Features and Controls

Keys 3-3
Keyless Access System 3-5
Keyless Access System Operation 3-5

Doors and Locks 3-10
Door Locks 3-10
Power Door Locks 3-12
Automatic Door Lock 3-13
Programmable Automatic Door Unlock 3-13
Lockout Protection 3-13
Hatch 3-14

Windows 3-16
Power Windows 3-17
Sun Visors 3-18

Theft-Deterrent Systems 3-18
Theft-Deterrent System 3-18
Immobilizer 3-20
Immobilizer Operation 3-20

Starting and Operating Your Vehicle 3-21
New Vehicle Break-In 3-21
Front Air Dam 3-22
Ignition Positions 3-22
Retained Accessory Power (RAP) 3-23
Starting the Engine 3-24
Automatic Transmission Operation 3-26
Manual Transmission Operation 3-31
Parking Brake 3-33
Shifting Into Park
(Automatic Transmission) 3-33
Shifting Out of Park 3-35
Parking the Vehicle
(Manual Transmission) 3-35
Parking Over Things That Burn 3-35
Engine Exhaust 3-36
Running the Vehicle While Parked 3-37

Mirrors 3-38
Automatic Dimming Rearview Mirror 3-38
Compass 3-38
Outside Power Mirrors 3-40
Outside Automatic Dimming Mirror 3-40
Outside Convex Mirror 3-40
Outside Heated Mirrors 3-41

Universal Home Remote System 3-41
Universal Home Remote System Operation 3-41

Storage Areas 3-48
Glove Box 3-48
Cupholders 3-48
Center Console Storage 3-48
Floor Mats 3-48
Rear Storage Area 3-49
Convenience Net 3-50
Cargo Cover 3-51

Roof Panel 3-52
Removing the Roof Panel 3-52
Storing the Roof Panel 3-54
Installing the Roof Panel 3-55

Convertible Top 3-56
Convertible Top (Manual) 3-56
Convertible Top (Power) 3-63

Keys

⚠ WARNING:

Leaving children in a vehicle with the keyless access transmitter is dangerous for many reasons, children or others could be badly injured or even killed. They could operate the power windows or other controls or even make the vehicle move. The windows will function with the keyless access transmitter in the vehicle and they could be seriously injured or killed if caught in the path of a closing window. Do not leave the keyless access transmitter in a vehicle with children.

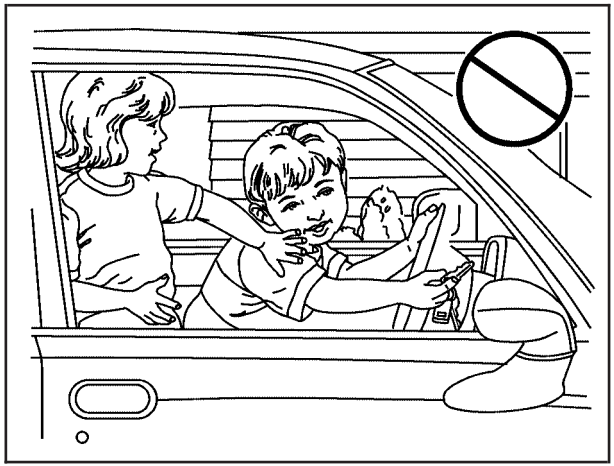

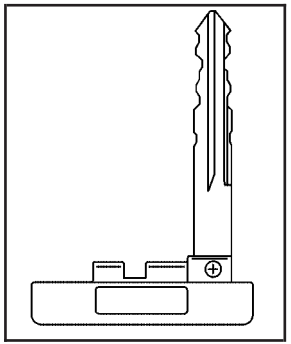

The key, located inside the keyless access transmitter, can be used to lock and unlock the glove box and to open the hatch/trunk lid if power to the vehicle is lost. See *Hatch on page 3-14* for more information.

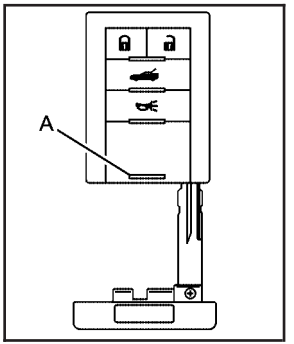

Press the button (A) near the bottom of the keyless access transmitter to remove the key. Never pull the key out without pressing the button.

This vehicle has a keyless access system with pushbutton start. See *Ignition Positions on page 3-22* for information on starting the vehicle.

Notice: **If you ever lose your transmitter(s) and/or key, it could be difficult to get into your vehicle. You may even have to damage your vehicle to get in. Be sure you have a spare transmitter and/or key.**

If you are locked out of the vehicle, contact Roadside Assistance. See *Roadside Assistance Program on page 8-7*.

Keyless Access System

See *Radio Frequency Statement on page 8-20* for information regarding Part 15 of the Federal Communications Commission (FCC) Rules and RSS-210/211 of Industry and Science Canada.

Changes or modifications to this system by other than an authorized service facility could void authorization to use this equipment.

If there is a decrease in the RKE operating range, try this:

- Check the distance. The transmitter may be too far from the vehicle. Stand closer during rainy or snowy weather.
- Check the location. Other vehicles or objects may be blocking the signal. Take a few steps to the left or right, hold the transmitter higher, and try again.
- Check the transmitter's battery. See "Battery Replacement" later in this section.
- If the transmitter is still not working correctly, see your dealer/retailer or a qualified technician for service.

Keyless Access System Operation

The Keyless Access System transmitter functions work up to 30 m (100 feet) away from the vehicle.

Keyless Unlocking

Press the door handle sensor to unlock and open the doors if the keyless access transmitter is within range. See *Door Locks on page 3-10* and "Passive Door Unlock" under *DIC Vehicle Personalization on page 4-69* for additional information.

Keyless Locking

The doors lock after several seconds if all doors are closed and at least one keyless access transmitter has been removed from the interior of the vehicle. To customize whether the doors automatically lock when exiting the vehicle, see "Passive Door Locking" under *DIC Vehicle Personalization on page 4-69* for additional information.

Keyless Trunk Opening

Press the hatch/trunk release button located on the rear of the hatch/trunk lid above the license plate to open the trunk if the keyless access transmitter is within range. See *Hatch on page 3-14* for additional information.

There are other conditions that can affect the performance of the transmitter. See *Keyless Access System on page 3-5* Keyless Access System.

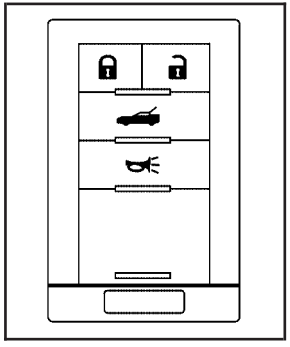

This vehicle comes with two transmitters.

(Lock): Press once to lock the doors. When is pressed twice, the lights flash and the horn sounds to confirm locking.

(Unlock): Press once to unlock only the driver door. Press twice within five seconds to unlock both doors. The interior lamps may come on.

Pressing also recalls the memory settings. See *Memory Seat, Mirrors and Steering Wheel on page 2-4* for more information.

(Hatch/Trunk): Press and hold for about one second to unlock the hatch/trunk. If the engine is running, the shift lever must be in P (Park) for an automatic transmission. For a manual transmission, the shift lever must be in NEUTRAL with the parking brake set.

(Panic): Press to sound the horn. Press any other button on the keyless access transmitter to stop it.

The vehicle comes with two transmitters. Each transmitter will have a number on top of it, “1” or “2”. These numbers correspond to the driver of the vehicle. For example, the memory seat position for driver 1 will be recalled when using the transmitter labeled “1”, if enabled through the DIC. See *Memory Seat, Mirrors and Steering Wheel on page 2-4* and *DIC Vehicle Personalization on page 4-69* for more information.

Programming Transmitters to the Vehicle

Only keyless access transmitters programmed to this vehicle will work. If a transmitter is lost or stolen, a replacement can be purchased and programmed through your dealer/retailer. The vehicle can be reprogrammed so that lost or stolen transmitters no longer work. Each vehicle can have up to four transmitters programmed to it.

Programming with a Recognized Transmitter

A new transmitter can be programmed to the vehicle when there is one recognized transmitter. For vehicles sold in Canada, two recognized transmitters are required to program a new transmitter.

1. The vehicle must be off.
2. Both the recognized and new transmitters must be with you.
3. Insert the vehicle key into the key cylinder located above the license plate.
4. Open the hatch/trunk.
5. Turn the key five times within five seconds.
6. The DIC displays READY FOR FOB #2, 3 or 4.

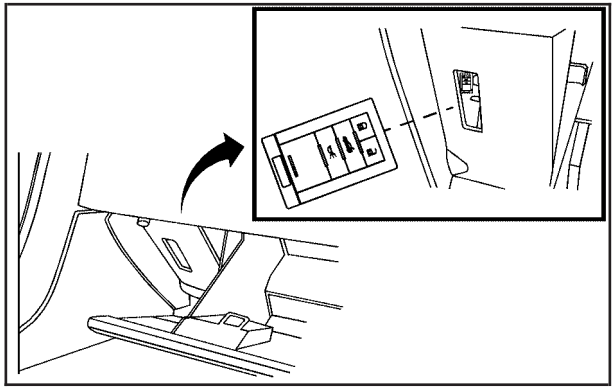

7. Place the new transmitter in the glove box transmitter pocket with the buttons facing the passenger side.
8. A beep sounds once programming in complete. The DIC displays READY FOR #3 or 4, or MAXIMUM NUMBER OF FOBS LEARNED.
9. To program additional transmitters, repeat Step 7. Press Acc. on the ignition switch if programming is complete.
10. Press 🔓 on each newly programmed transmitter to complete the process.

Programming without a Recognized Transmitter

This procedure requires three ten minutes cycles to complete the programming process. United States owners are permitted to program a new transmitter to their vehicle when a recognized transmitter is not available. The Canadian immobilizer standard requires that Canadian owners see their dealer/retailer for programming new transmitters when two recognized transmitters are not available.

1. The vehicle must be off.

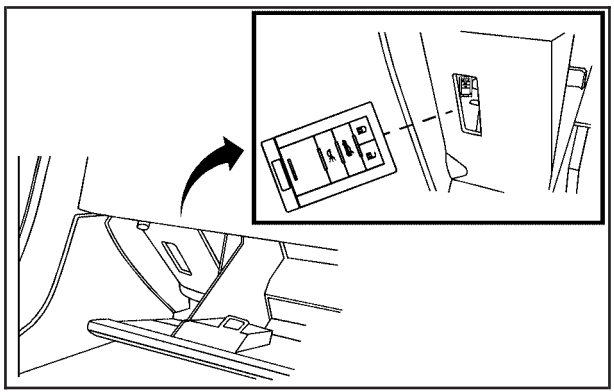

2. Place the new transmitter in the glove box transmitter pocket with the buttons facing the passenger side.
3. Insert the vehicle key into the key cylinder located above the license plate.
4. Open the hatch/trunk.
5. Turn the key five times within five seconds.
6. The DIC message displays OFF-ACCESSORY TO LEARN.
7. Press Acc. on the ignition switch.
8. The DIC reads WAIT 10 MINUTES and counts down to zero.
9. The DIC displays OFF-ACCESSORY TO LEARN again.
10. Press Acc. on the ignition switch.
11. Steps 8, 9 and 10 will be repeated two more times.
12. A beep sounds and the DIC reads READY FOR FOB #1. All previously known transmitter programming has been erased.
13. A beep sounds once programming in complete. The DIC displays READY FOR FOB #2.

    To program additional transmitters, take transmitter 1 out of the transmitter pocket and place transmitter 2 in the pocket. Up to four transmitters can be programmed. The DIC then displays MAXIMUM NUMBER OF FOBS LEARNED and exits the programming mode.

    Press Acc. on the ignition switch to complete the process.

14. Press Acc. on the ignition switch if programming is complete.
15. Press 🔓 on each newly programmed transmitter to complete the process.

Starting the Vehicle with a Low Transmitter Battery

If the transmitter battery is weak, the DIC may display NO FOBS DETECTED when trying to start the vehicle. To start the vehicle, place the transmitter in the glove box transmitter pocket with the buttons facing the passenger side. Then, with the vehicle in P (Park) for an automatic transmission, press the brake pedal and 🔓. If the vehicle has a manual transmission, press the clutch and 🔓. Replace the transmitter battery as soon as possible. Change the transmitter battery if the DIC displays FOB BATTERY LOW.

Battery Replacement

Notice: **When replacing the battery, do not touch any of the circuitry on the transmitter. Static from your body could damage the transmitter.**

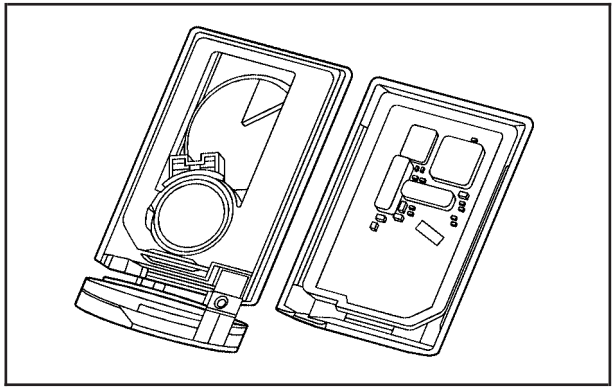

1. Separate the transmitter with a flat, thin object inserted into the slot on the side or back of the transmitter.
2. Remove the old battery. Do not use a metal object.
3. Insert the new battery, positive side facing down. Replace with a CR2032 or equivalent battery.
4. Reassemble the transmitter.

Doors and Locks

Door Locks

⚠ WARNING:

Unlocked doors can be dangerous.

- Passengers — especially children — can easily open the doors and fall out of a moving vehicle. When a door is locked it will not open. You increase the chance of being thrown out of the vehicle in a crash if the doors are not locked. So, wear safety belts properly and lock the doors whenever you drive.

WARNING: (Continued)

WARNING: (Continued)

- Young children who get into unlocked vehicles may be unable to get out. A child can be overcome by extreme heat and can suffer permanent injuries or even death from heat stroke. Always lock your vehicle whenever you leave it.
- Outsiders can easily enter through an unlocked door when you slow down or stop your vehicle. Locking your doors can help prevent this from happening.

There are several ways to lock and unlock your vehicle.

From the outside, press the lock or unlock button on the keyless access transmitter.

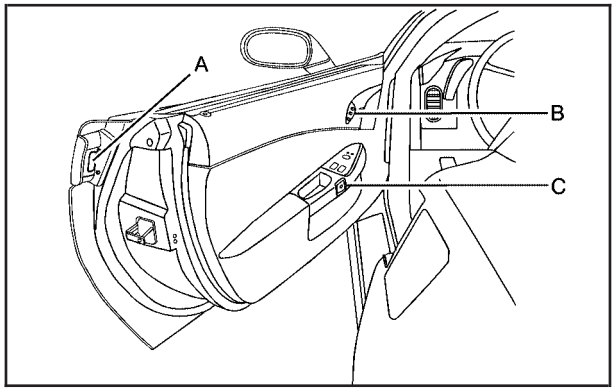

Door Open to Show Location of Door Handle Sensor

When you have the transmitter with you, you may also unlock and open the door by squeezing the door handle sensor (A). You do not have to press the unlock button on the transmitter.

You will be able to open the door when you press the door handle sensor and the vehicle recognizes your keyless access transmitter. When the passenger door is opened first, the driver's door will also unlock.

From the inside, use the power door lock switch (B) located at the top of the door panel near both windows. See *Power Door Locks on page 3-12*.

To open a door from the inside, press the button (C) in front of the door handle and push the door open. You will hear a tone when the button is pressed.

If power to the vehicle or the keyless access transmitter is lost, there are two ways to open the door.

1. From inside the vehicle, use the door release handle located on the floor next to each seat. Pull the handle up to unlock and unlatch the door.

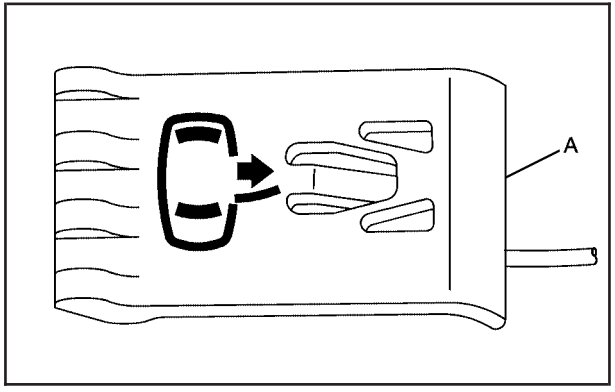

2. From outside the vehicle, use the key in the cylinder above the license plate to open the hatch. Then, use the door release tab (A), located on the carpet inside the hatch on the driver's side of the vehicle. Pull the tab to unlock and unlatch the driver's door. See *Keys on page 3-3* for information on opening the hatch during a loss of power.

Power Door Locks

The power door lock switches are located on the doors.

There is an indicator light on the rear of the door near the window.

(Unlock): Press to unlock the doors.

When pressed, a beep sounds. If the door is closed, the light blinks twice. If the door is open, the light flashes.

(Lock): Press to lock the doors.

When pressed, a beep sounds. If the door is closed when pressed, the light comes on for a few seconds, then turns off. If the door is open when pressed, the light stays on.

Automatic Door Lock

The vehicle is programmed so that, when the doors are closed, the ignition is on and the shift lever is moved out of P (Park) for automatic transmissions, or when vehicle speed becomes faster than 8 mph (13 km/h) for manual transmissions, both doors will lock.

Use the power door unlock switch to unlock the door when the vehicle is not in P (Park). When the door is closed again, the doors will lock either when your foot is removed from the brake or the vehicle speed becomes faster than 8 mph (13 km/h).

Programmable Automatic Door Unlock

The vehicle is programmed so that when the shift lever is moved into P (Park) for automatic transmission vehicles or when the ignition is turned OFF or is in Retained Accessory Power (RAP) for manual transmission vehicles, both doors will unlock.

With the vehicle stopped and the engine running, door unlocking can be programmed through the Driver Information Center (DIC). This allows the driver to choose various unlock settings. For programming information, see *DIC Vehicle Personalization on page 4-69*.

Lockout Protection

Your vehicle can be programmed to sound the horn three times and unlock the driver door when both doors are closed and there is a keyless access transmitter inside the vehicle. When the driver door is opened, a reminder chime will sound continuously. The vehicle will remain locked only when at least one transmitter has been removed from the vehicle and both doors are closed. See *DIC Vehicle Personalization on page 4-69*.

Hatch

⚠ WARNING:

Exhaust gases can enter the vehicle if it is driven with the liftgate, trunk/hatch open, or with any objects that pass through the seal between the body and the trunk/hatch or liftgate. Engine exhaust contains Carbon Monoxide (CO) which cannot be seen or smelled. It can cause unconsciousness and even death.

If the vehicle must be driven with the liftgate, or trunk/hatch open:

- Close all of the windows.
- Fully open the air outlets on or under the instrument panel.

WARNING: (Continued)

WARNING: (Continued)

- Adjust the Climate Control system to a setting that brings in only outside air and set the fan speed to the highest setting. See Climate Control System in the Index.
- If the vehicle is equipped with a power liftgate, disable the power liftgate function.

For more information about carbon monoxide, see *Engine Exhaust on page 3-36*.

Notice: **Closing the hatch/trunk lid forcefully or from the sides can cause damage to the glass, the defogger or the weather stripping. Be sure objects will fit in the hatch/trunk area before closing the hatch/trunk lid. When closing the hatch/trunk lid, gently pull down from the center.**

Notice: **Do not store heavy or sharp objects in the rear storage compartments located in the hatch/trunk area. The objects could damage the underbody.**

Hatch/Trunk Lid Release

There are several ways to release the hatch/trunk lid. If your vehicle has an automatic transmission, the shift lever must be in P (Park). For manual transmission vehicles, the parking brake must be set when the ignition is started for the hatch/trunk release to operate. The parking brake does not need to be set when the ignition is off for the hatch/trunk release to operate. See *Parking Brake on page 3-33*.

(Hatch/Trunk): Press the hatch/trunk lid release button, located on the instrument panel to the left of the steering wheel. The theft-deterrent alarm system must not be armed.

(Hatch/Trunk): Press the hatch/trunk lid release button on the keyless access transmitter. See *Keyless Access System on page 3-5*.

Press the hatch/trunk release button located on the rear of the hatch/trunk lid above the license plate, as long as you have your transmitter with you.

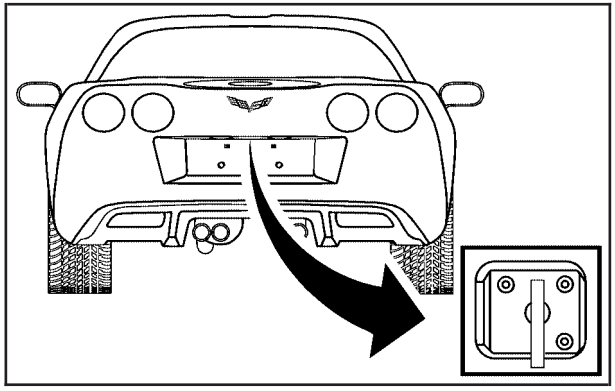

If your vehicle has lost battery power, open the hatch/trunk using the vehicle key. See *Keys on page 3-3* for more information. The key lock cylinder is located on the rear of the hatch/trunk lid above the license plate. Turn the vehicle key clockwise in the lock.

Closing the Rear Compartment (Except Convertible)

To close the rear compartment lid of your coupe, pull down on the rear edge of the lid. Lower it until the power pull down latch feature activates and it will close the rest of the way and latch automatically.

Emergency Trunk Release Handle (Coupe)

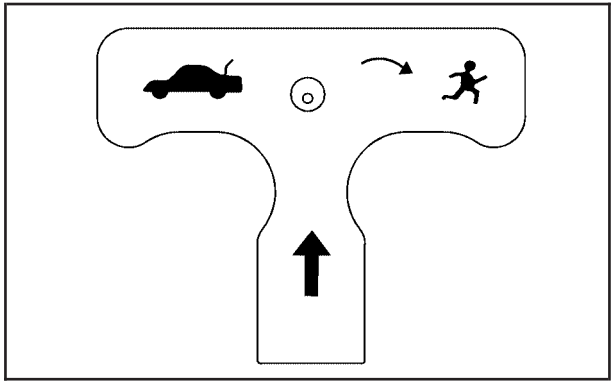

Notice: **Do not use the emergency trunk release handle as a tie-down or anchor point when securing items in the trunk as it could damage the handle. The emergency trunk release handle is only intended to aid a person trapped in a latched trunk, enabling them to open the trunk from the inside.**

There is a glow-in-the-dark emergency trunk release handle located on the rear wall of the trunk below the latch. This handle will glow following exposure to light. Pull the release handle down to open the trunk from the inside.

Windows

⚠ WARNING:

Leaving children, helpless adults, or pets in a vehicle with the windows closed is dangerous. They can be overcome by the extreme heat and suffer permanent injuries or even death from heat stroke. Never leave a child, a helpless adult, or a pet alone in a vehicle, especially with the windows closed in warm or hot weather.

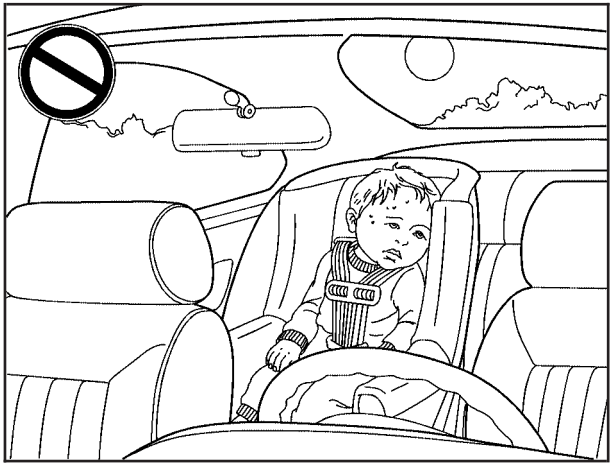

Power Windows

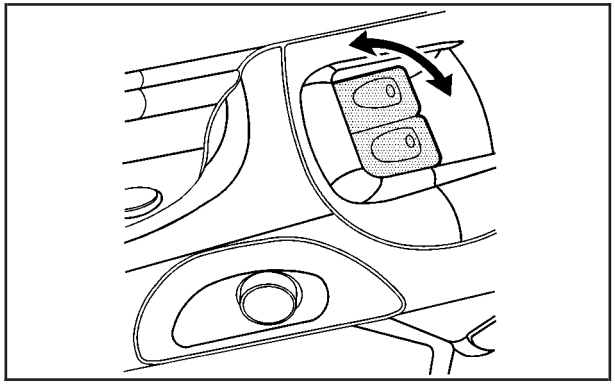

The power window switches are located on each door.

Pull up or press down on the front of the switch to raise or lower the window.

Retained Accessory Power (RAP) allows you to use the power windows when the ignition is off. For more information, see *Retained Accessory Power (RAP) on page 3-23*.

Express-Down Window

Press the front of the switch to the second position to activate the express-down feature. If you want to stop the window as it is lowering, press the switch again.

Window Indexing

This feature automatically lowers the window a small amount when the door is opened. When the door is closed, the window will raise to its full up position. If either window does not index properly, it could be due to loss of power. Before returning to your dealer/retailer for service, perform the power window initialize procedure.

Power Window Initialize

After a power reconnect such as battery replacement, the window index-up feature will not function until the system is initialized.

Once power is restored:

1. Close the door.
2. Raise the window and hold the switch up for three seconds after the window is closed.
3. Release the switch, then hold the switch up again for three seconds and release.

Sun Visors

Pull the visor toward you, or move it to the side to help reduce glare.

To use the lighted mirror, lift the cover.

Theft-Deterrent Systems

Vehicle theft is big business, especially in some cities. This vehicle has theft-deterrent features, however, they do not make it impossible to steal.

Theft-Deterrent System

This vehicle has a theft-deterrent alarm system.

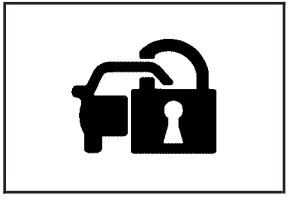

The security light flashes if a door is open and locked with the power door lock switch.

If this light stays on while the engine is running, the vehicle needs service.

Arming the System

To arm the system:

- Press 🔒 on the keyless access transmitter.
- Open the door and lock the door with the power door lock switch. The security light should flash. Remove the keyless access transmitter from inside the vehicle and close the door. The security light stops flashing and stays on. After 30 seconds, the light should turn off.

  The vehicle can be programmed to automatically lock the doors and arm the theft-deterrent system when you exit the vehicle. See *DIC Vehicle Personalization on page 4-69*.

If a door or the hatch/trunk is opened without using the keyless access transmitter, the alarm goes off. The horn sounds for two minutes, then goes off to save battery power. The vehicle will not start without a keyless access transmitter present.

The theft-deterrent system does not arm if the driver door is locked with the power door lock switch after the doors are closed.

If the keyless access transmitter is removed from the vehicle while a passenger is in it, have them lock the doors after they are closed. The alarm will not arm, so the passenger will not set it off.

Testing the Alarm

To test the system:

1. Make sure the trunk lid/hatch is latched.
2. Lower the window on the driver door.
3. Manually arm the system.
4. Close the doors and wait 30 seconds.
5. Reach through the open window and manually pull the release lever on the floor.
6. Press the unlock button on the transmitter to turn off the alarm.

If the alarm does not sound, check to see if the horn works. The horn fuse may be blown. See *Fuses and Circuit Breakers on page 6-103*. If the horn works, but the alarm does not go off, see your dealer/retailer.

Disarming the System

Press the unlock button on the keyless access transmitter or squeeze the door handle sensor while the transmitter is near the vehicle to unlock a door. Unlocking a door any other way sets off the alarm. If the alarm sounds, press the unlock button on the keyless access transmitter to disarm it.

Do not leave the key or device that disarms or deactivates the theft deterrent system in the vehicle.

Immobilizer

See *Radio Frequency Statement on page 8-20* for information regarding Part 15 of the Federal Communications Commission (FCC) Rules and RSS-210/211 of Industry and Science Canada.

Immobilizer Operation

The vehicle has a passive theft-deterrent system.

The system is automatically armed when the ignition is turned off.

The immobilization system is disarmed when the ignition is turned to OFF/ACCESSORY or START and a valid transmitter is found in the vehicle.

You do not have to manually arm or disarm the system.

The security light comes on if there is a problem with arming or disarming the theft-deterrent system.

The system has one or more keyless access transmitters that are matched to an immobilizer control unit in the vehicle. Only a correctly matched keyless access transmitter starts the vehicle. The vehicle may not start if the keyless access transmitter is damaged.

If the engine does not start and the security light comes on, there may be a problem with the immobilizer system. Press the START button again.

If the vehicle does not start and the keyless access transmitter appears to be undamaged, try another keyless access transmitter. Or, place the transmitter in the transmitter pocket. See “NO FOBS DETECTED” under *DIC Warnings and Messages on page 4-51* for additional information. Check the fuse. See *Fuses and Circuit Breakers on page 6-103*. If the engine still does not start with the other transmitter, the vehicle needs service. If the engine does start, the first transmitter may be faulty. See your dealer/retailer or have a new keyless access transmitter programmed to the vehicle.

The immobilizer system can learn new or replacement keyless access transmitters. Up to four keyless access transmitters can be programmed for the vehicle. To program additional transmitters, see “Matching transmitter(s) to Your Vehicle” under *Keyless Access System Operation on page 3-5*.

Do not leave the key or device that disarms or deactivates the theft deterrent system in the vehicle.

Starting and Operating Your Vehicle

New Vehicle Break-In

Follow these recommended guidelines during the first 1,500 miles/2414 km of driving this vehicle. Parts have a break-in period and performance will be better in the long run.

For the first 200 miles/322 km:

- To break in new tires, drive at moderate speeds and avoid hard cornering for the first 200 miles/322 km.
- New brake linings also need a break- in period. Avoid making hard stops during the first 200 miles/322 km. This is recommended every time brake linings are replaced.

For the first 500 miles/805 km:

- Avoid full throttle starts and abrupt stops.
- Do not exceed 4,000 engine rpm.
- Avoid driving at any one constant speed, fast or slow, including the use of cruise control.
- Avoid downshifting to brake or slow the vehicle when the engine speed will exceed 4000 RPM.
- Do not let the engine labor. Never lug the engine in high gear at low speeds. With a manual transmission, shift to the next lower gear. This rule applies at all times, not just during the break-in period.

For the first 1,500 miles/2414 km:

- Do not participate in track events, sport driving schools, or similar activities during the first 1,500 miles/2414 km.
- Check engine oil with every refueling and add if necessary. Oil and fuel consumption may be higher than normal during the first 1,500 miles/2414 km.

Front Air Dam

The vehicle is equipped with a front air dam which has minimal ground clearance.

Vehicles with the ZR-1 package also come with a splitter made from carbon fiber.

⚠ WARNING:

The splitter in the ZR-1 is made from carbon fiber.

When damaged, the exposed edges can be very sharp. A person could be injured by these sharp edges. Use caution when washing the vehicle, coming in contact with, or removing damaged carbon fiber parts. See your dealer/retailer for replacement.

Under normal operation, these components will occasionally contact some road surfaces (speed bumps, driveway ramps, etc.). This can be heard inside the vehicle as a scraping noise. This is normal and does not indicate a problem.

Use care when approaching bumps or objects on road surfaces and avoid them when possible.

Ignition Positions

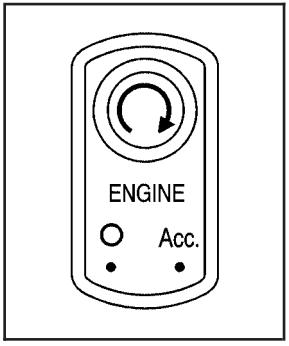

The vehicle has an electronic keyless ignition with a pushbutton start.

In order to shift out of P (Park), the vehicle must be running or in Acc. mode and the regular brake pedal must be applied.

(START): Press this button while your foot is on the brake for an automatic transmission, or while pressing in the clutch for a manual transmission, to start the engine. If the vehicle is in OFF or Retained Accessory Power (RAP) mode, the keyless access transmitter must be inside the vehicle to start the engine.

Acc. (OFF/ACCESSORY): When the engine is on or the vehicle is in accessory power mode, it is recommended that a manual transmission be placed in R (Reverse). An automatic transmission must be placed in P (Park). Then press the Acc. button to turn the engine off and place the vehicle in RAP. See “Retained Accessory Power (RAP)” later for more information. If an automatic vehicle is not correctly placed in P (Park) a SHIFT TO PARK message will display on the Driver Information Center (DIC).

For more information, see *DIC Warnings and Messages on page 4-51*.

When the engine is off, press this button to place the vehicle in accessory mode. ACCESSORY MODE ON will display on the Driver Information Center (DIC). This mode allows you to use things like the radio and the windshield wipers while the engine is off.

Use accessory mode if you must have the vehicle in motion while the engine is off, for example, if the vehicle is being pushed or towed.

After being in accessory mode for about 10 minutes, the vehicle will automatically enter RAP or OFF, depending on if the doors are opened or closed.

Retained Accessory Power (RAP)

These vehicle accessories can be used for up to 10 minutes after the engine is turned off:

- Audio System
- Power Windows

These features continue to work up to 10 minutes after the engine is turned off or until either door is opened. If a door is opened, the power windows and audio system will shut off.

Starting the Engine

Move the shift lever to P (Park) or N (Neutral) for an automatic transmission. For a manual transmission the vehicle can be started in Neutral or any other gear as long as the clutch pedal is pressed. To restart a vehicle with a manual transmission when you are already moving, use the Neutral position only. To restart a vehicle with an automatic transmission when you are already moving, use N (Neutral).

Notice: **Do not try to shift to P (Park) if the vehicle is moving. If you do, you could damage the transmission. Shift to P (Park) only when the vehicle is stopped.**

The keyless access transmitter must be inside the vehicle for the ignition to work.

Cell phone chargers can interfere with the operation of the Keyless Access System. Battery chargers should not be plugged in when starting or turning off the engine.

To start the vehicle, do the following:

1. For vehicles with an automatic transmission, with your foot on the brake pedal, press the START button located on the instrument panel. For vehicles with a manual transmission, you must also press in the clutch pedal while pressing the START button.

   If there is not a keyless access transmitter in the vehicle or if there is something causing interference with it, the DIC will display NO FOBS DETECTED. See *DIC Warnings and Messages on page 4-51* for more information.

2. When the engine begins cranking, let go of the button and the engine cranks automatically until it starts. If the battery in the keyless access transmitter is weak, the DIC displays FOB BATTERY LOW. You can still drive the vehicle.

   See “Battery Replacement” under *Keyless Access System Operation on page 3-5* for more information. If the fob battery is dead, you need to insert the fob into the fob slot to enable engine starting. See “No Fobs Detected” under *DIC Warnings and Messages on page 4-51*.

3. Do not race the engine immediately after starting it. Operate the engine and transmission gently until the oil warms up and lubricates all moving parts.

4. If the engine does not start and no DIC message is displayed, wait 15 seconds before trying again to let the cranking motor cool down.

   If the engine does not start after 5-10 seconds, especially in very cold weather (below –18°C or 0°F), it could be flooded with too much gasoline. Try pushing the accelerator pedal all the way to the floor while cranking for up to 15 seconds maximum. Wait at least 15 seconds between each try, to allow the cranking motor to cool down. When the engine starts, let go of the accelerator. If the vehicle starts briefly but then stops again, repeat these steps. This clears the extra gasoline from the engine.

Notice: **Cranking the engine for long periods of time, by pressing the START button immediately after cranking has ended, can overheat and damage the cranking motor, and drain the battery. Wait at least 15 seconds between each try, to allow the cranking motor to cool down.**

The vehicle has a Computer-Controlled Cranking System. This feature assists in starting the engine and protects components. Once cranking has been initiated, the engine continues cranking for a few seconds or until the vehicle starts. If the engine does not start, cranking automatically stops after 15 seconds to prevent cranking motor damage. To prevent gear damage, this system also prevents cranking if the engine is already running.

Notice: **The engine is designed to work with the electronics in the vehicle. If electrical parts or accessories are added, you could change the way the engine operates. Before adding electrical equipment, check with your dealer/retailer. If you do not, the engine might not perform properly. Any resulting damage would not be covered by the vehicle warranty.**

Stopping the Engine

If the vehicle has an automatic transmission, move the shift lever to P (Park) and press and hold the Acc. (Off/Accessory) button, located on the instrument panel, until the engine shuts off. If the shift lever is not in P (Park), the engine shuts off and the vehicle goes into the Accessory Mode. The DIC displays SHIFT TO PARK. Once the shifter is moved to P (Park), the vehicle turns off. If the vehicle has a manual transmission, it is recommended that you move the shift lever to R (Reverse) and set the parking brake after you turn off the engine by pressing and holding the Acc. (Off/Accessory) button.

If the keyless access transmitter is not detected inside the vehicle when it is turned to off, the DIC displays NO FOB – OFF OR RUN?.

See *DIC Warnings and Messages on page 4-51* for more information.

Automatic Transmission Operation

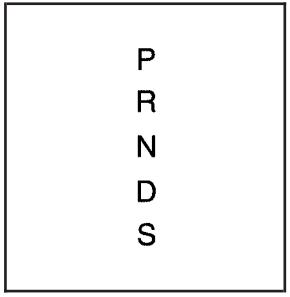

There are several different positions for the shift lever.

P (Park): This position locks the rear wheels. It is the best position to use when starting the engine because the vehicle cannot move easily.

⚠ WARNING:

It is dangerous to get out of the vehicle if the shift lever is not fully in P (Park) with the parking brake firmly set. The vehicle can roll.

Do not leave the vehicle when the engine is running unless you have to. If you have left the engine running, the vehicle can move suddenly. You or others could be injured. To be sure the vehicle will not move, even when you are on fairly level ground, always set the parking brake and move the shift lever to P (Park). See *Shifting Into Park (Automatic Transmission) on page 3-33*.

Be sure the shift lever is fully in P (Park) before starting the engine.

The vehicle has an automatic transmission shift lock control system. You have to fully apply the brakes and then press the shift lever button before you can shift from P (Park) when the vehicle is running. If you cannot shift out of P (Park), ease pressure on the shift lever and push the shift lever all the way into P (Park) as you maintain brake application. Then press the shift lever button and move the shift lever into another gear. See *Shifting Out of Park on page 3-35*.

R (Reverse): Use this gear to back up.

Notice: **Shifting to R (Reverse) while the vehicle is moving forward could damage the transmission. The repairs would not be covered by the vehicle warranty. Shift to R (Reverse) only after the vehicle is stopped.**

To rock the vehicle back and forth to get out of snow, ice, or sand without damaging the transmission, see *If Your Vehicle is Stuck in Sand, Mud, Ice, or Snow on page 5-27*.

N (Neutral): In this position, the engine does not connect with the wheels. To restart the engine when the vehicle is already moving, use N (Neutral) only. If the vehicle needs towing, see *Towing Your Vehicle on page 5-33*.

⚠ WARNING:

Shifting into a drive gear while the engine is running at high speed is dangerous. Unless your foot is firmly on the brake pedal, the vehicle could move very rapidly. You could lose control and hit people or objects. Do not shift into a drive gear while the engine is running at high speed.

Notice: **Shifting out of P (Park) or N (Neutral) with the engine running at high speed may damage the transmission. The repairs would not be covered by the vehicle warranty. Be sure the engine is not running at high speed when shifting the vehicle.**

D (Drive): This position is for normal driving. It provides the best fuel economy. If you need more power for passing, push the pedal down to achieve the desired level of acceleration.

Downshifting the transmission in slippery road conditions could result in skidding, see “Skidding” under *Loss of Control on page 5-18*.

S (Sport Mode): When in S (Sport Mode), the transmission will work as an automatic until you use the Manual Paddle Shift Controls, which activates driver manual gear selection. See Manual Paddle Shift later in this section. While in S (Sport Mode), the transmission will have more noticeable upshifts for sportier vehicle performance.

Manual Paddle Shift

While in S (Sport Mode), the paddles located on the steering wheel can be used to manually up-shift or down-shift the transmission.

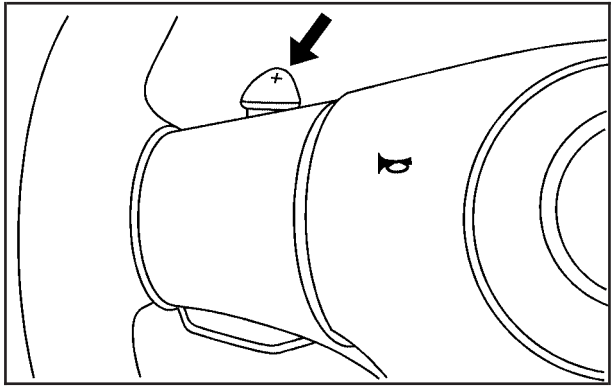

The Manual Paddle Shift system is activated from S (Sport Mode) by pushing the paddle, above the steering wheel spokes, to up-shift to the next gear, or pulling on the paddle, behind the steering wheel spokes, to down-shift to the next gear.

When accelerating the vehicle from a stop in snowy and icy conditions, you may want to shift to 2 (Second) or 3 (Third) gear. A higher gear allows you to gain more traction on slippery surfaces. If traction control is active, upshifts are delayed to increase your control of the vehicle. See *Traction Control System (TCS) on page 5-6*.

The Manual Paddle Shift system can be deactivated by moving the shifter from S (Sport Mode) back to D (Drive), or by holding the up-shift button for more than one second.

While the Manual Paddle Shift gear selection system is active, the transmission will automatically downshift through the gears as the vehicle slows. The transmission will select 2 (Second) gear as the vehicle stops. From a stop, the vehicle will start from and hold 2 (Second) gear unless the driver manually paddle shifts into a different gear or selects D (Drive). The driver can select 1 (First) gear for maximum acceleration from a stop.

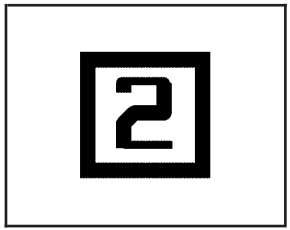

When using the Manual Paddle Shift feature while in S (Sport Mode), the current gear will be displayed in the Driver Information (DIC), or the Head-Up Display (HUD), if the vehicle has either of these features.

If the vehicle has a Navigation system, see “Head-Up Display (HUD)” in the Index of the navigation manual.

The Manual Paddle Shift system will not allow either an up-shift or a down-shift if the vehicle speed is too fast or too slow, nor will it allow a start from 4 (Fourth) or higher gear.

If up-shifting does not occur when needed, vehicle speed will be limited to protect the engine.

When the transmission gear does not respond to a shift change, the DIC will show an X over the gear display.

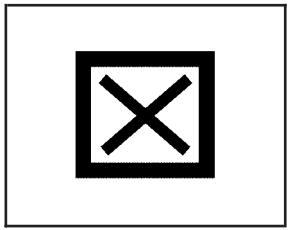

When a requested shift is denied due to the speed restrictions shown, the DIC will momentarily show an X over the gear display and a chime will sound.

If the vehicle has a HUD, and the transmission gear does not respond to a shift change, a chime will sound and the HUD will momentarily show an X over the gear display.

Manual Paddle Shift operation is available for use with Cruise Control. See *Cruise Control on page 4-7* for more information.

The vehicle speeds required for Manual Paddle Shift up-shifts depend on several vehicle inputs, which will vary the allowed up-shift speed by a few mph (km/h).

For vehicles with a 2.56:1 Axle Ratio (RPO GM8)

- Up-shifts to 4 (Fourth) gear require approximately 35 km/h (22 mph).
- Up-shifts to 5 (Fifth) gear require approximately 45 km/h (28 mph).
- Up-shifts to 6 (Sixth) gear require approximately 65 km/h (41 mph).

To prevent damage to the powertrain, Manual Paddle downshifts to a lower gear cannot be done above certain speeds. The maximum speed allowed for downshifting of gears 1 (First) through 4 (Fourth) are:

- Into 4 (Fourth) gear over 250 km/h (155 mph)
- Into 3 (Third) gear over 188 km/h (117 mph)
- Into 2 (Second) gear over 120 km/h (75 mph)
- Into 1 (First) gear over 68 km/h (42 mph).

For vehicles with a 2.73:1 Axle Ratio (RPO GU2)

- Up-shifts to 4 (Fourth) gear require approximately 31 km/h (19 mph).
- Up-shifts to 5 (Fifth) gear require approximately 39 km/h (24 mph).
- Up-shifts to 6 (Sixth) gear require approximately 57 km/h (35 mph).

To prevent damage to the powertrain, Manual Paddle downshifts to a lower gear cannot be done above certain speeds. The maximum speed allowed for downshifting of gears 1 (First) through 4 (Fourth) are:

- Into 4 (Fourth) gear over 234 km/h (145 mph)
- Into 3 (Third) gear over 176 km/h (109 mph)
- Into 2 (Second) gear over 113 km/h (70 mph)
- Into 1 (First) gear over 64 km/h (40 mph).

If the driver does not request an upshift as the engine speed approaches fuel shut off RPM, the engine speed will be limited to protect the engine. See *Tachometer on page 4-31* for more information.

Manual Transmission Operation

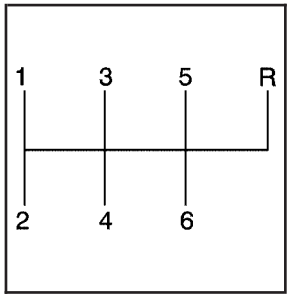

This is the shift pattern for the six-speed manual transmission.

Here is how to operate the transmission:

1 (First): Press the clutch pedal and shift into 1 (First). Then slowly let up on the clutch pedal as you press the accelerator pedal.

You can shift into 1 (First) when you are going less than 40 mph (64 km/h). If you come to a complete stop and it is hard to shift into 1 (First), put the shift lever in Neutral and let up on the clutch. Press the clutch pedal back down. Then shift into 1 (First).

2 (Second): Press the clutch pedal as you let up on the accelerator pedal and shift into 2 (Second). Then, slowly let up on the clutch pedal as you press the accelerator pedal.

3 (Third), 4 (Fourth), 5 (Fifth) and 6 (Sixth): Shift into 3 (Third), 4 (Fourth), 5 (Fifth) and 6 (Sixth) the same way you do for 2 (Second). Slowly let up on the clutch pedal as you press the accelerator pedal.

To stop, let up on the accelerator pedal and press the brake pedal. Just before the vehicle stops, press the clutch pedal and the brake pedal, and shift to Neutral.

Neutral: Use this position when you start or idle the engine. The shift lever is in Neutral when it is centered in the shift pattern, not in any gear.

R (Reverse): To back up, press down the clutch pedal and shift into R (Reverse). Just apply pressure to get the lever past 5 (Fifth) and 6 (Sixth) into R (Reverse). Let up on the clutch pedal slowly while pressing the accelerator pedal.

The six-speed manual transmission has a feature that allows you to safely shift into R (Reverse) while the vehicle is rolling at less than 3 mph (5 km/h). You will be locked out if you try to shift into R (Reverse) while the vehicle is moving faster than 3 mph (5 km/h).

Shift Speeds (Manual Transmission)

⚠ WARNING:

If you skip a gear when you downshift, you could lose control of the vehicle. You could injure yourself or others. Do not shift down more than one gear at a time when you downshift.

This chart shows when to shift to the next higher gear for the best fuel economy.

Manual Transmission Recommended Shift Speeds in mph (km/h)					
Engine	Acceleration Shift Speed				
	1 to 2	2 to 3	3 to 4	4 to 5	5 to 6
All Engines	15 (24)	25 (40)	40 (64)	45 (72)	50 (80)

If the engine speed drops below 900 rpm, or if the engine is not running smoothly, you should downshift to the next lower gear. You may have to downshift two or more gears to keep the engine running smoothly or for good engine performance.

Notice: **When shifting gears, do not move the shift lever around unnecessarily. This may damage the transmission. Shift directly into the next gear.**

One to Four Shift Light (Manual Transmission)

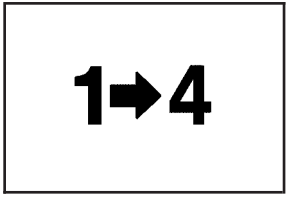

When this light comes on, you can only shift from 1 (First) to 4 (Fourth) instead of 1 (First) to 2 (Second).

See *One-to-Four Shift Light (Manual Transmission) on page 4-35* for more information.

Downshifting (Manual Transmission)

Do not downshift into the gear shown below at a speed greater than shown in the table:

1 (First)	50 mph (80 km/h)
2 (Second)	74 mph (119 km/h)
3 (Third)	101 mph (163 km/h)
4 (Fourth)	130 mph (209 km/h)

Notice: **If you skip more than one gear when you downshift, or if you race the engine when you release the clutch pedal while downshifting, you could damage the engine, clutch, driveshaft or the transmission. Do not skip gears or race the engine when downshifting.**

The six-speed transmission has a spring that centers the shift lever near 3 (Third) and 4 (Fourth). This spring helps you know which gear you are in when you are shifting. Be careful when shifting from 1 (First) to 2 (Second) or downshifting from 6 (Sixth) to 5 (Fifth). The spring will try to pull the shift lever toward 4 (Fourth) and 3 (Third). Make sure you move the lever into 2 (Second) or 5 (Fifth). If you let the shift lever move in the direction of the pulling, you may end up shifting from 1 (First) to 4 (Fourth) or from 6 (Sixth) to 3 (Third).

Parking Brake

The parking brake lever is located to the right of the center console.

To set the parking brake, hold the brake pedal down. Pull the parking brake lever up. If the ignition is on, the brake system warning light will come on.

To release the parking brake, hold the brake pedal down. Then push the release button in as you move the parking brake lever all the way down.

Notice: **Driving with the parking brake on can overheat the brake system and cause premature wear or damage to brake system parts. Make sure that the parking brake is fully released and the brake warning light is off before driving.**

Shifting Into Park (Automatic Transmission)

⚠ WARNING:

It can be dangerous to get out of the vehicle if the shift lever is not fully in P (Park) with the parking brake firmly set. The vehicle can roll. If you have left the engine running, the vehicle can move suddenly. You or others could be injured. To be sure the vehicle will not move, even when you are on fairly level ground, use the steps that follow.

1. Hold the brake pedal set the parking brake.

   See *Parking Brake on page 3-33* for more information.

2. Move the shift lever into P (Park) by holding in the button on the lever and pushing the lever all the way toward the front of the vehicle.
3. Press the Acc. button (ignition switch) to turn the engine off.

Leaving the Vehicle With the Engine Running (Automatic Transmission)

⚠ WARNING:

It can be dangerous to leave the vehicle with the engine running. The vehicle could move suddenly if the shift lever is not fully in P (Park) with the parking brake firmly set. And, if you leave the vehicle with the engine running, it could overheat and even catch fire. You or others could be injured. Do not leave the vehicle with the engine running.

If you have to leave the vehicle with the engine running, be sure the vehicle is in P (Park) and the parking brake is firmly set before you leave it. After you have moved the shift lever into P (Park), hold down the regular brake pedal. See if you can move the shift lever away from P (Park) without first pushing the button on the lever. If you can, it means that the shift lever was not fully locked into P (Park).

Torque Lock (Automatic Transmission)

If you are parking on a hill and you do not shift the transmission into P (Park) properly, the weight of the vehicle may put too much force on the parking pawl in the transmission. You may find it difficult to pull the shift lever out of P (Park). This is called “torque lock.” To prevent torque lock, set the parking brake and then shift into P (Park) properly before you leave the driver seat. To find out how, see “Shifting Into P (Park)” listed previously in this section.

When you are ready to drive, move the shift lever out of P (Park) before you release the parking brake.

If torque lock does occur, you may need to have another vehicle push yours a little uphill to take some of the pressure from the transmission parking pawl, so you can pull the shift lever out of P (Park).

Shifting Out of Park

Shift lock release prevents shifting out of P (Park) unless the vehicle is running or in Accessory mode and the brake pedal is applied.

The shift lock release is always functional except in the case of an uncharged or low voltage (less than 9-volt) battery. See *Jump Starting on page 6-53* for more information.

To shift out of P (Park) use the following:

1. Apply the brake pedal.
2. Press the shift lever button.
3. Move the shift lever to the desired position.

If you still are unable to shift out of P (Park):

1. Fully release the shift lever button.
2. While holding down the brake pedal, press the shift lever button again.
3. Move the shift lever to the desired position.

If you still cannot move the shift lever from P (Park), consult your dealer/retailer or a professional towing service.

Parking the Vehicle (Manual Transmission)

Before you get out of the vehicle, move the shift lever into R (Reverse) and firmly apply the parking brake. Once the shift lever has been placed into R (Reverse) with the clutch pedal pressed in, you can turn the ignition off and release the clutch.

Parking Over Things That Burn

⚠ WARNING:

Things that can burn could touch hot exhaust parts under the vehicle and ignite. Do not park over papers, leaves, dry grass, or other things that can burn.

Engine Exhaust

⚠ WARNING:

Engine exhaust contains Carbon Monoxide (CO) which cannot be seen or smelled. Exposure to CO can cause unconsciousness and even death.

Exhaust may enter the vehicle if:

- The vehicle idles in areas with poor ventilation (parking garages, tunnels, deep snow that may block underbody airflow or tail pipes).
- The exhaust smells or sounds strange or different.
- The exhaust system leaks due to corrosion or damage.

WARNING: (Continued)

WARNING: (Continued)

- The vehicle's exhaust system has been modified, damaged or improperly repaired.
- There are holes or openings in the vehicle body from damage or after-market modifications that are not completely sealed.

If unusual fumes are detected or if it is suspected that exhaust is coming into the vehicle:

- Drive it only with the windows completely down.
- Have the vehicle repaired immediately.

Never park the vehicle with the engine running in an enclosed area such as a garage or a building that has no fresh air ventilation.

Running the Vehicle While Parked

It is better not to park with the engine running. But if you ever have to, here are some things to know.

⚠ WARNING:

Idling a vehicle in an enclosed area with poor ventilation is dangerous. Engine exhaust may enter the vehicle. Engine exhaust contains Carbon Monoxide (CO) which cannot be seen or smelled. It can cause unconsciousness and even death. Never run the engine in an enclosed area that has no fresh air ventilation. For more information, see *Engine Exhaust on page 3-36*.

⚠ WARNING:

It can be dangerous to get out of the vehicle if the automatic transmission shift lever is not fully in P (Park) with the parking brake firmly set. The vehicle can roll. Do not leave the vehicle when the engine is running unless you have to. If you have left the engine running, the vehicle can move suddenly. You or others could be injured. To be sure the vehicle will not move, even when you are on fairly level ground, always set the parking brake and move the shift lever to P (Park).

Follow the proper steps to be sure the vehicle will not move. See *Shifting Into Park (Automatic Transmission) on page 3-33*.

Mirrors

Automatic Dimming Rearview Mirror

The vehicle may have an automatic dimming inside rearview mirror with a compass display and/or map lamps, and OnStar®. The mirror automatically changes to reduce glare from headlamps behind you. A time delay feature prevents rapid changing from the day to night positions while driving under lights and through traffic.

If the vehicle has OnStar, there are three control buttons located at the bottom of the mirror. See the OnStar® owner's guide for more information on the services OnStar® provides.

⏻ **(On/Off):** The automatic dimming feature is activated when the vehicle is started. Press and hold this button for up to six seconds to turn this feature on or off.

(Indicator Light): This light turns on when the automatic dimming feature is active.

Map Lamps

If the mirror has map lamps, they are located at the bottom of the mirror. To manually turn the lamps on or off, press the button next to each lamp.

Cleaning the Mirror

Do not spray glass cleaner directly on the mirror. Use a soft towel dampened with water.

Compass

Compass Operation

With the compass feature on, each time the vehicle is started, the compass will take a few seconds to adjust and display the current compass heading. For example, NE is displayed for north-east.

Compass Calibration

Press ⏻ once to turn the compass display on or off.

If after several seconds the display does not show a compass heading, there may be a strong magnetic field interfering with the compass. Interference can be caused by a magnetic antenna mount, note pad holder or similar object. If the letter C or CAL appears in the compass window, the compass needs calibration.

Depending on the mirror, in order to calibrate, CAL must be displayed in the mirror compass windows. If CAL is not displayed, press ⏻ for several seconds or until CAL is displayed.

If the compass has map lamps, it can be placed in calibration mode by pressing and holding the left map light button until a C appears on the compass display.

The mirror compass can be calibrated by driving the vehicle in circles at 5 mph (8 km/h) or less until the display reads a direction.

Compass Variance

The mirror is set to zone eight. If you do not live in zone eight or drive out of the area, the compass variance needs to be changed to the appropriate zone.

To adjust for compass variance:

1. Find your current location and variance zone number on the zone map that follows.

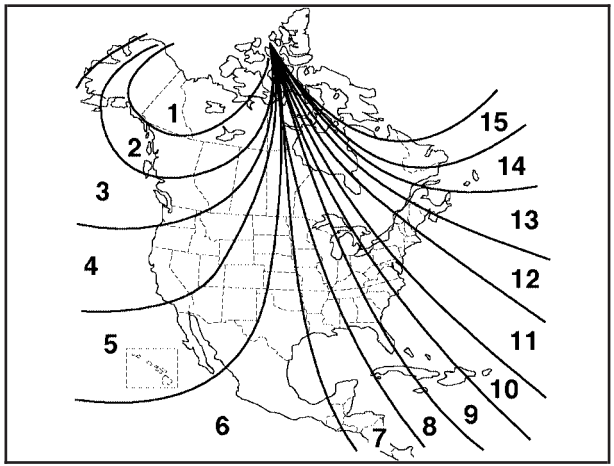

2. Press and hold ⏻ until a Z and a zone number displays. The compass is now in zone mode.
3. Once the zone number displays, press ⏻ repeatedly until you reach the correct zone number. Stop pressing ⏻ and the mirror returns to normal operation.

Outside Power Mirrors

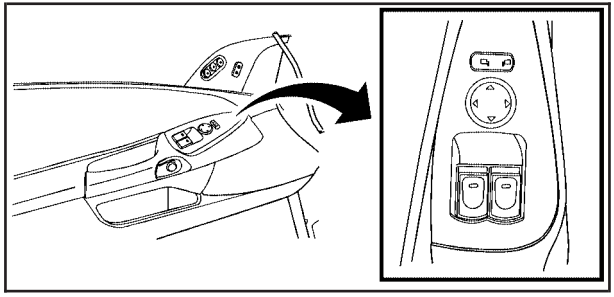

Controls for the outside power mirrors are located on the driver door.

To adjust the mirrors:

1. Move the top selector control to the left or right to select either the driver or passenger mirror.
2. Use the arrows located on the four-way control pad to move the mirror in the desired direction.
3. Adjust each outside mirror so that a little of the vehicle and the area behind it can be seen.

Keep the control in the center position when not adjusting either outside mirror.

If the vehicle has the memory feature, a preferred mirror position can be stored. See *Memory Seat, Mirrors and Steering Wheel on page 2-4*.

Manually fold the mirrors inward to prevent damage when going through an automatic car wash. To fold, pull the mirror toward the vehicle. Push the mirror outward, to return it to the original position.

Outside Automatic Dimming Mirror

If the vehicle has this feature, the driver side outside mirror adjusts for the glare of headlamps behind you. This feature is controlled by the on and off setting on the inside rearview mirror.

Outside Convex Mirror

⚠ WARNING:

A convex mirror can make things, like other vehicles, look farther away than they really are. If you cut too sharply into the right lane, you could hit a vehicle on the right. Check the inside mirror or glance over your shoulder before changing lanes.

The passenger side mirror is convex shaped. A convex mirror's surface is curved so more can be seen from the driver seat.

Outside Heated Mirrors

(Rear Window Defogger): Press to heat the mirrors.

See "Rear Window Defogger" under *Dual Automatic Climate Control System on page 4-21* for more information.

Universal Home Remote System

See *Radio Frequency Statement on page 8-20* for information regarding Part 15 of the Federal Communications Commission (FCC) Rules and RSS-210/211 of Industry and Science Canada.

The FCC Grant of Equipment Authorization Certificate number is KOBGTV 06A.

The Canadian Registration ID number is 3521A-GTV06A.

Universal Home Remote System Operation

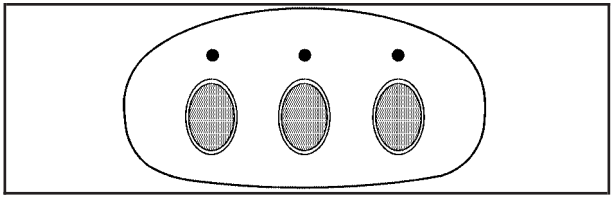

On vehicles with this feature there are three round Light Emitting Diode (LED) indicator lights above the Universal Home Remote buttons, follow the instructions below.

This system provides a way to replace up to three remote control transmitters used to activate devices such as garage door openers, security systems, and home automation devices.

Do not use this system with any garage door opener that does not have the stop and reverse feature. This includes any garage door opener model manufactured before April 1, 1982.

Read the instructions completely before attempting to program the transmitter. Because of the steps involved, it may be helpful to have another person assist with programming the transmitter.

Be sure to keep the original remote control transmitter for use in other vehicles, as well as, for future programming. Only the original remote control transmitter is needed for Fixed Code programming. The programmed buttons should be erased when the vehicle is sold or the lease ends. See “Erasing Universal Home Remote Buttons” later in this section.

Park the vehicle outside of the garage when programming a garage door. Be sure that people and objects are clear of the garage door or gate that is being programmed.

Programming Universal Home Remote — Rolling Code

For questions or help programming the Universal Home Remote System, call 1-866-572-2728 or go to learcar2u.com.

Most garage door openers sold after 1996 are Rolling Code units.

Programming a garage door opener involves time-sensitive actions, so read the entire procedure before starting. Otherwise, the device will time out and the procedure will have to be repeated.

To program up to three devices:

1. Press START or put the vehicle in accessory mode. See *Ignition Positions on page 3-22* for additional information.

   Programming can only occur when the vehicle is running or in accessory mode.

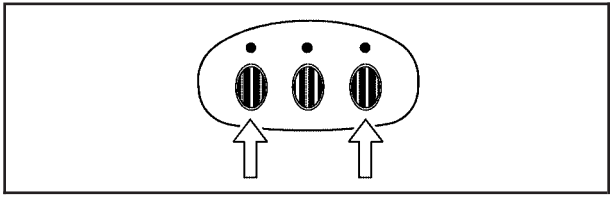

2. From inside the vehicle, press the two outside buttons at the same time for one to two seconds, and immediately release them.

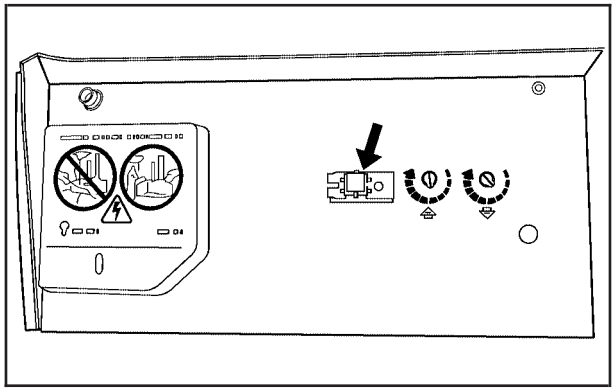

3. Locate in the garage, the garage door opener receiver (motor-head unit). Locate the “Learn” or “Smart” button. It can usually be found where the hanging antenna wire is attached to the motor-head unit and may be a colored button. Press this button. After pressing this button, complete the following steps in less than 30 seconds.
4. Immediately return to the vehicle. Press and hold the Universal Home Remote button that will be used to control the garage door until the garage door moves. The indicator light, above the selected button, should slowly blink. This button may need to be held for up to 20 seconds.
5. Immediately, within one second, release the button when the garage door moves. The indicator light blinks rapidly until programming is complete.
6. Press and release the same button again. The garage door should move, confirming that programming is successful and complete.

To program another Rolling Code device such as an additional garage door opener, a security device, or home automation device, repeat Steps 1-6, choosing a different function button in Step 4 than what was used for the garage door opener.

If these instructions do not work, the garage door opener is probably a Fixed Code unit. Follow the Programming instructions that follow for a Fixed Code garage door opener.

Programming Universal Home Remote — Fixed Code

For questions or help programming the Universal Home Remote System, call 1-866-572-2728 or go to learcar2u.com.

Most garage door openers sold before 1996 are Fixed Code units.

Programming a garage door opener involves time-sensitive actions, so read the entire procedure before starting. Otherwise, the device will time out and the procedure will have to be repeated.

To program up to three devices:

1. Press START or put the vehicle in accessory mode. See *Ignition Positions on page 3-22* for additional information.

   Programming can only occur when the vehicle is running or in accessory mode.

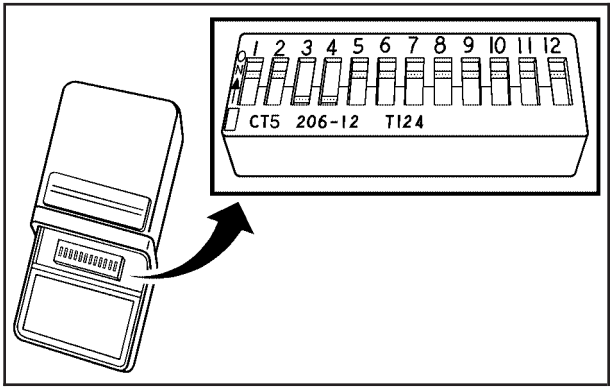

2. To verify that the garage door opener is a Fixed Code unit, remove the battery cover on the hand held transmitter supplied by the manufacturer of the garage door opener motor. If there are a row of dip switches similar to the graphic above, the garage door opener is a Fixed Code unit. If you do not see a row of dip switches, return to the previous section for Programming Universal Home Remote – Rolling Code.

   The hand held transmitter can have between eight to 12 dip switches depending on the brand of transmitter.

The garage door opener receiver (motor head unit) could also have a row of dip switches that can be used when programming the Universal Home Remote. If the total number of switches on the motor head and hand held transmitter are different, or if the dip switch settings are different, use the dip switch settings on the motor head unit to program the Universal Home Remote. The motor head dip switch settings can also be used when the original hand held transmitter is not available.

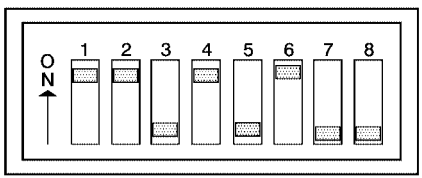

Switch Number	1	2	3	4	5	6	7	8
Switch Position	On	On	Off	On	Off	On	Off	Off
Your Universal Home Remote Button	Left	Left	Right	Left	Right	Left	Right	Right

Example of Eight Dip Switches with Two Positions

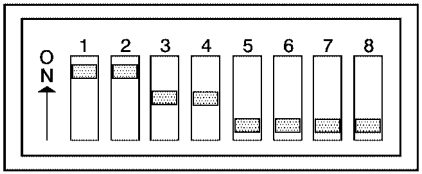

Switch Number	1	2	3	4	5	6	7	8
Switch Position	On	On	Neutral	Neutral	Off	Off	Off	Off
Your Universal Home Remote Button	Left	Left	Middle	Middle	Right	Right	Right	Right

Example of Eight Dip Switches with Three Positions

The panel of switches might not appear exactly as they do in the examples above, but they should be similar.

The switch positions on the hand-held transmitter could be labeled, as follows:

- A switch in the up position could be labeled as “Up,” “+,” or “On.”
- A switch in the down position could be labeled as “Down,” “–,” or “Off.”
- A switch in the middle position could be labeled as “Middle,” “0,” or “Neutral.”

3. Write down the eight to 12 switch settings from left to right as follows:
   - When a switch is in the up position, write “Left.”
   - When a switch is in the down position, write “Right.”
   - If a switch is set between the up and down position, write “Middle.”

     The switch settings written down in Step 3 now become the button strokes to be entered into the Universal Home Remote in Step 5. Be sure to enter the switch settings written down in Step 3, in order from left to right, into the Universal Home Remote, when completing Step 5.
4. From inside the vehicle, first firmly press all three buttons at the same time for about three seconds. Release the buttons to put the Universal Home Remote into programming mode.

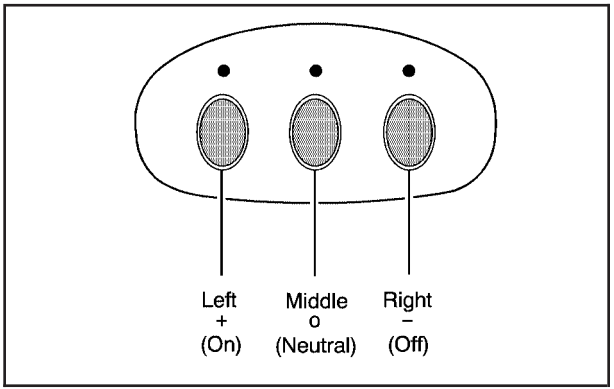

5. The indicator lights blink slowly. Enter each switch setting from Step 3 into the vehicle’s Universal Home Remote. You have two and one-half minutes to complete Step 5. Now press one button on the Universal Home Remote for each switch setting as follows:
   - If you wrote “Left,” press the left button in the vehicle.
   - If you wrote “Right,” press the right button in the vehicle.
   - If you wrote “Middle,” press the middle button in the vehicle.

6. After entering all of the switch positions, again, firmly press and release all three buttons at the same time. The indicator lights turn on.
7. Press and hold the button that will be used to control the garage door until the garage door moves. The indicator light above the selected button should slowly blink. This button may need to be held for up to 55 seconds.
8. Immediately release the button when the garage door moves. The indicator light blinks rapidly until programming is complete.
9. Press and release the same button again. The garage door should move, confirming that programming is successful and complete.

To program another Fixed Code device such as an additional garage door opener, a security device, or home automation device, repeat Steps 1-9, choosing a different button in Step 7 than what was used for the garage door opener.

Using Universal Home Remote

Press and hold the appropriate button for at least half of a second. The indicator light comes on while the signal is being transmitted.

Operation can occur:

- If the vehicle is in accessory mode.
- If the vehicle is in running.
- If the vehicle is in Retained Accessory Mode (RAP). See *Retained Accessory Power (RAP) on page 3-23* for more information.
- Up to an additional 10 minutes after RAP finishes.
- Up to 10 minutes after any door is opened.

Reprogramming Universal Home Remote Buttons

Any of the three buttons can be reprogrammed by repeating the instructions.

Erasing Universal Home Remote Buttons

The programmed buttons should be erased when the vehicle is sold or the lease ends.

To erase either Rolling Code or Fixed Code on the Universal Home Remote device:

1. Press and hold the two outside buttons at the same time for approximately 20 seconds, until the indicator lights, located directly above the buttons, begin to blink rapidly.
2. Once the indicator lights begin to blink, release both buttons. The codes from all buttons are erased.

For help or information on the Universal Home Remote System, call the customer assistance phone number under *Customer Assistance Offices on page 8-6*.

Storage Areas

Glove Box

Open the glove box by lifting up on the lever. Use the key to lock and unlock the lighted glove box.

Cupholders

Two cupholders are located on the center console next to the shift lever. Slide the handle from the left to the right side to access the lid.

Center Console Storage

To use this storage area, pull the cover up on the driver side front edge of the console and swing it to the passenger side.

Floor Mats

The floor mats are specially designed to remain in position under your feet and out of reach of the accelerator pedal. The driver's side floor mat is held in place by two locator hooks and the passenger's side is held in place by one.

Be sure that the driver's side floor mat is properly placed on the floor so that it does not block the movement of the accelerator pedal.

How to Remove and Replace the Floor Mats

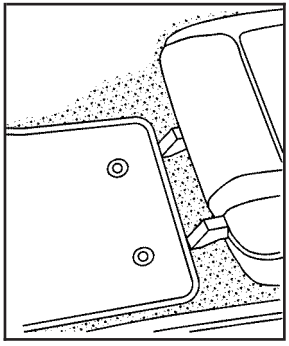

To remove the floor mats, pull up on the rear of the mat to disconnect from the locator hooks.

To reinstall the floor mats, line up the openings in the floor mat over the locator hooks and push down into place.

Rear Storage Area

Two rear storage compartments are located in the floor of the rear hatch/trunk area.

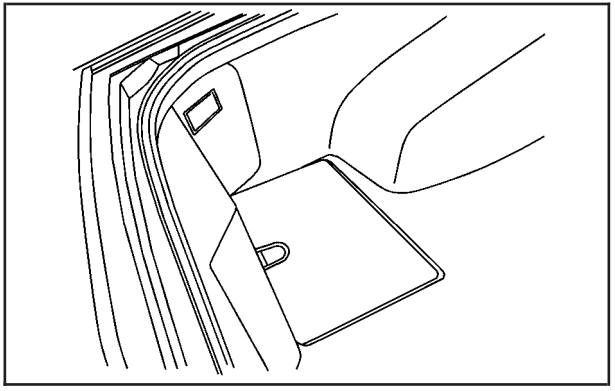

Convertible shown, Coupe similar

To access a storage compartment, pull up to open the cover. The covers cannot be removed.

For Z06, ZR1 and Grand Sport models, the right rear compartment stores the battery and cannot be used for storage.

Notice: **Do not store heavy or sharp objects in the rear storage compartments located in the hatch/trunk area. The objects could damage the underbody.**

Rear Trunk Partition

For vehicles with the power convertible top option only, there is a trunk partition to keep cargo from getting in the way of the convertible top. The trunk partition must be in place for the convertible top to move. If the trunk partition is not properly in place the ATTACH TRUNK PARTITION Driver Information Center (DIC) message displays. See *DIC Warnings and Messages on page 4-51* for more information.

The trunk partition is a flat carpeted board with a horizontal flap that can be attached to the top of the trunk to divide the storage compartment or it stores flat when not in use.

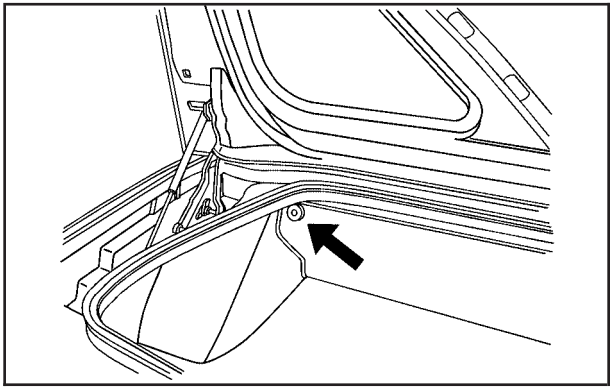

Pull the divider up and snap it onto the snaps on both sides of the trunk.

Convenience Net

Use the convenience net, located in the rear, to store small loads as far forward as possible. The net should not be used to store heavy loads.

Cargo Cover

For vehicles with this feature, the security shade can provide hidden storage in the rear area of the vehicle. The shade is also helpful in blocking the glare from the removable roof when it is stored in the rear compartment.

Using the Cargo Cover

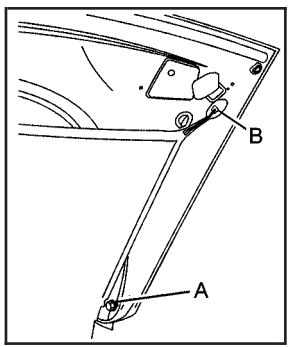

1. Hook the elastic loops on the front corners (A) of the shade to the T-nuts located on the front corners of the rear hatch frame.

2. Hook the elastic loops on the rear corners (B) of the shade to the hooks recessed inside the rear hatch frame, near the rear corners.

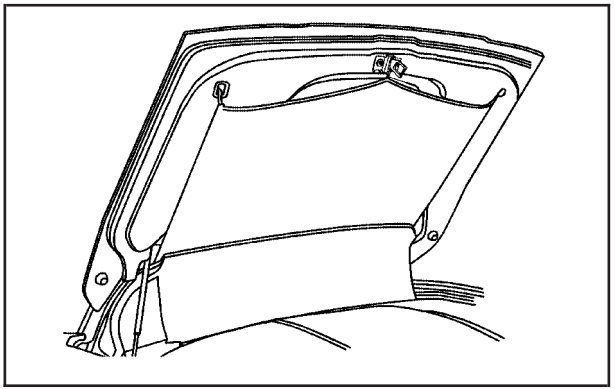

3. Grasp the loop at the rear center of the shade and wrap it around the striker assembly.

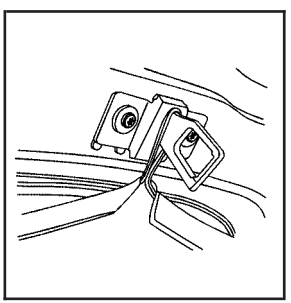

4. Push the loop to the top of the striker (base plate).

Roof Panel

On vehicles with a removable roof panel, follow the procedures when removing or installing it.

Removing the Roof Panel

⚠ WARNING:

Do not try to remove a roof panel while the vehicle is moving. Trying to remove the roof panel while the vehicle is moving could cause an accident. The panel could fall into the vehicle and cause you to lose control, or it could fly off and strike another vehicle. You or others could be injured. Remove the roof panel only when the vehicle is parked.

Until you are sure you can remove the panel alone, have someone help you.

Notice: **If you drop or rest a roof panel on its edges, the roof panel, paint and/or weatherstripping may be damaged. Always place the roof panel in the stowage receivers after removing it from the vehicle.**

1. Park on a level surface and set the parking brake. Shift an automatic transmission into P (Park). Shift a manual transmission into N (Neutral).
2. Make sure the ignition is off.
3. Lower both sun visors.
4. Open the rear hatch and remove any items that may interfere with proper storage of the roof panel.
5. Lower the windows.

   There are two release latches on the front of the roof panel and one rear release latch on the back of the roof panel.

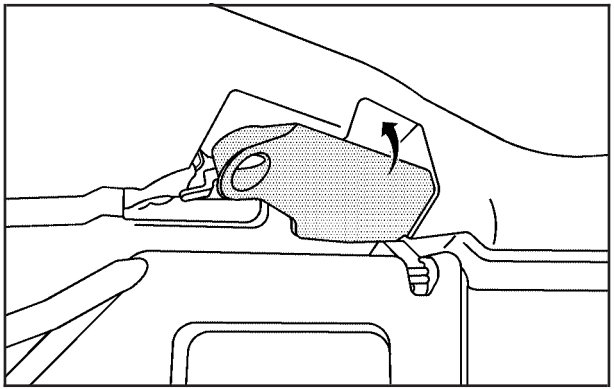

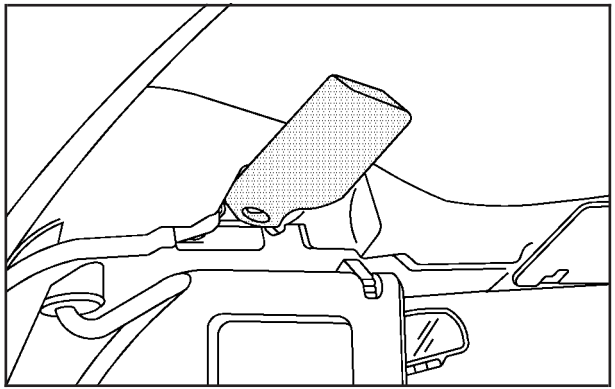

6. To unlock the release latches on the front of the roof panel, grasp each handle and pull it outward.

The driver's side handle moves toward the driver's door. The passenger's side handle moves toward the passenger's door.

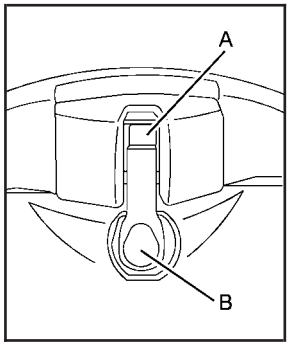

7. To unlock the rear of the roof panel's rear release latch, press the back of the release handle (B). Then press the button on the front of the release handle (A).

Pull down the latch lever.

8. Stand on one side of the vehicle, and if necessary, have someone stand on the other side. Together, carefully lift the front edge of the roof panel up and forward.
9. When the roof panel is loosened from the vehicle, one person should grasp the roof panel as close to the center as possible and lift it away from the vehicle.

Storing the Roof Panel

⚠ WARNING:

If a roof panel is not stored properly, it could be thrown about the vehicle in a crash or sudden maneuver. People in the vehicle could be injured. Whenever you store a roof panel in the vehicle, always be sure that it is stored securely in the proper location.

Notice: **If you drop or rest a roof panel on its edges, the roof panel, paint and/or weatherstripping may be damaged. Always place the roof panel in the stowage receivers after removing it from the vehicle.**

1. Turn the roof panel so that the front edge of the panel is facing the storage area.

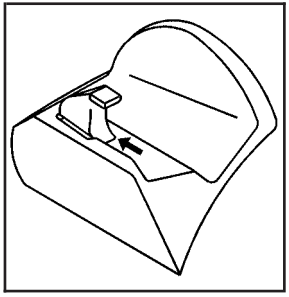

2. Insert the roof panel so that the outside front edges line up between the receiver covers. Push forward on the roof panel until it stops.

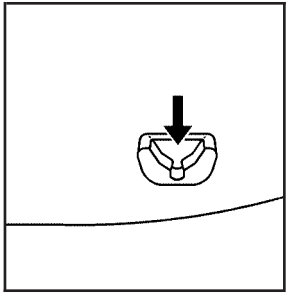

3. Gently place the roof panel down so that the back pins on the roof panel drop into the receivers in the back of the storage area.

Press down firmly to seat the pins in the receivers.

Installing the Roof Panel

⚠ WARNING:

An improperly attached roof panel may fall into or fly off the vehicle. You or others could be injured. After installing the roof panel, always check that it is firmly attached by pushing up on the underside of the panel. Check now and then to be sure the roof panel is firmly in place.

Notice: **If you drop or rest a roof panel on its edges, the roof panel, paint and/or weatherstripping may be damaged. Always place the roof panel in the stowage receivers after removing it from the vehicle.**

In most cases, it makes it easier if two people install the roof panel.

1. Park on a level surface and set the parking brake. Shift an automatic transmission into P (Park). Shift a manual transmission into N (Neutral).
2. Check that the front release latches and the rear release latch on the vehicle's roof opening are in their opened positions before attempting to install the roof panel.

3. To remove the roof panel from the rear storage area of the vehicle, pull up on the rear edge and remove it from the storage area.
4. Carefully place the roof panel over the top of the vehicle.
5. Position the rear edge of the roof panel to the weatherstrip on the back of the roof opening. Then align and fit the pins at the rear of the roof panel inside the openings in the rear overhead weatherstrip. Gently lower the front edge of the roof panel to the front of the roof opening.

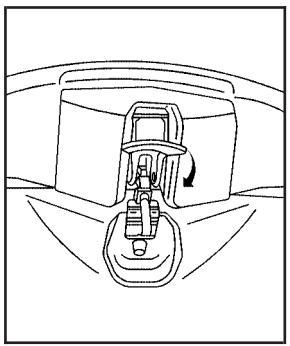

6. Turn the front release handles inward so that they latch to the closed position.
7. Push up on the handle of the rear roof release handle to latch its hook in the closed position.
8. Push and pull the roof panel up and down and side-to-side to ensure the roof panel is securely installed.

Convertible Top

Convertible Top (Manual)

For care and cleaning of the convertible top, see *Convertible Top on page 6-98* under “Service and Appearance Care”. High pressure car washes may cause water to enter the vehicle.

If the vehicle has this feature, the following procedures explain the proper operation of the manual convertible top.

The parts of the manual convertible top that are used when lowering and raising it are:

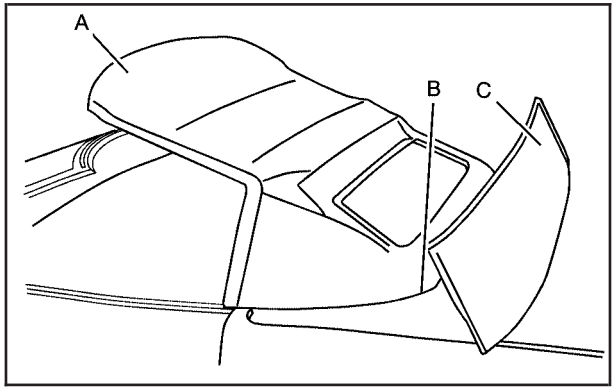

A. Front Edge of the Convertible Top

B. Rear Edge of the Convertible Top

C. Tonneau Cover

Notice: **Leaving the convertible top down and exposing the interior of your vehicle to outdoor conditions may cause damage. Always close the convertible top if leaving your vehicle outdoors.**

Notice: **Lowering the convertible top when there are objects in the storage area could damage it or break the glass rear window. Always verify that no objects are in the storage area before lowering the convertible top.**

Notice: **Lowering the top if it is damp, wet, or dirty can cause stains, mildew, and damage to the inside of your vehicle. Dry off the top before lowering it.**

Notice: **If you lower the top on your vehicle in cold weather (0°F/-18°C or lower), you may damage top components. Do not lower the top in cold weather.**

Notice: **If you raise or lower the convertible top while the vehicle is in motion, you could damage the top or the top mechanism. The repairs would not be covered by your warranty. Always put an automatic transmission in (P) Park or a manual transmission in (N) Neutral before raising or lowering the convertible top.**

Lowering the Manual Convertible Top

1. Park on a level surface. Shift an automatic transmission into P (Park) and set the parking brake. Shift a manual transmission into N (Neutral) and set the parking brake.
2. Make sure the ignition is off.
3. Make sure the trunk is closed.

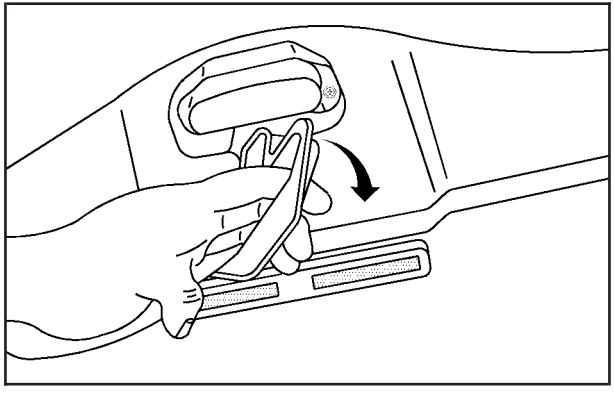

4. The convertible top front latch, located above the inside rearview mirror, must be unlocked. Pull the convertible top front latch down and turn it clockwise to unlock it.

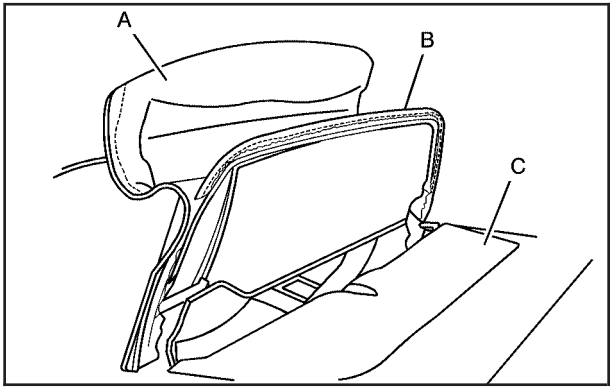

5. Lift upward on the front edge (A) of the convertible top off of the windshield frame. Then lift upward on the rear edge (B) of the convertible top so it is vertical to the tonneau cover (C). The front edge (A) and rear edge (B) should be straight up.

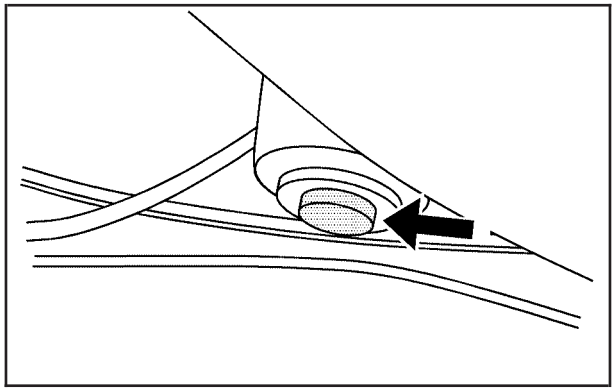

6. Tilt the driver's seatback forward and press the tonneau cover release button located on the underside of the tonneau cover (C) behind the driver's seat. Then raise the tonneau cover (C). If the tonneau cover does not release and three chimes are heard, check to make sure the trunk lid is closed. Also, the cover will not release if the vehicle alarm is armed.

   After pressing the release button, the driver's and passenger's door glass should retract to the full-down position.

   If the vehicle has lost battery power, the tonneau cover (C) can still be opened using the manual release cable.

   The tonneau cover emergency manual release cable is located underneath the carpeting behind the passenger's seat head restraint, on the underside forward edge of the tonneau cover. To access the cable, lift and pull back the carpeting. Also, see *Hatch on page 3-14* for information on the emergency trunk release handle.

Notice: **If you lower the convertible top into the storage compartment and the rear edge of the top is not in the full-down position, you could damage the top. Always verify that the rear edge of the convertible top is in the full-down position before lowering the top into the storage compartment.**

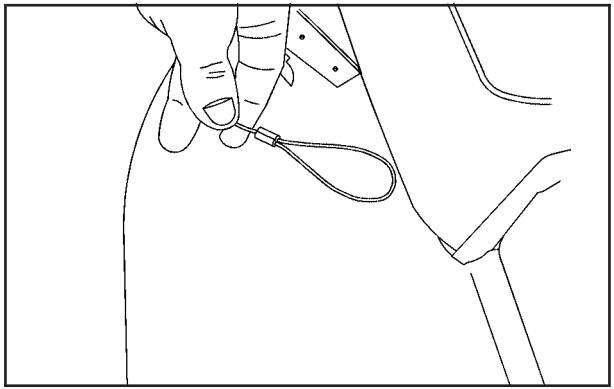

7. Pull the cable to release the tonneau cover.

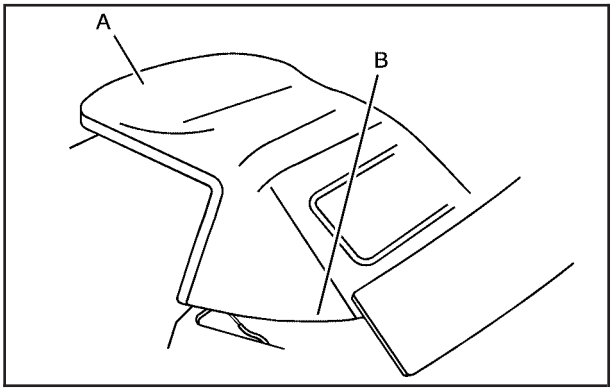

8. Push forward on the front edge (A) of the convertible top to allow the rear edge (B) of the convertible top to be moved to its full-down position.

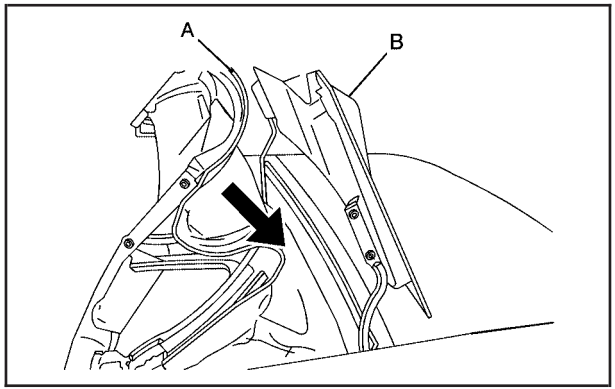

9. Then move the top rearward to its fully-stored position.
10. After the top is stored, apply one even push on the center of the front edge (A) of the convertible top to assure that the top is fully retracted.
11. Close the tonneau cover (B) by pressing down on it with a swift, firm motion.

Raising the Manual Convertible Top

1. Park on a level surface. Shift an automatic transmission into P (Park) and set the parking brake. Shift a manual transmission into N (Neutral) and set the parking brake.
2. Lower both windows.
3. Make sure the ignition is off.
4. Tilt the driver's seat forward and press the tonneau cover release button, or use the manual release cable if battery power has been lost. See Step 6 under "Lowering the Manual Convertible Top" earlier in this section.

   After pressing the release button, the driver's and passenger's door glass should retract to the full-down position, if they have not already been lowered.
5. Lift the tonneau cover.

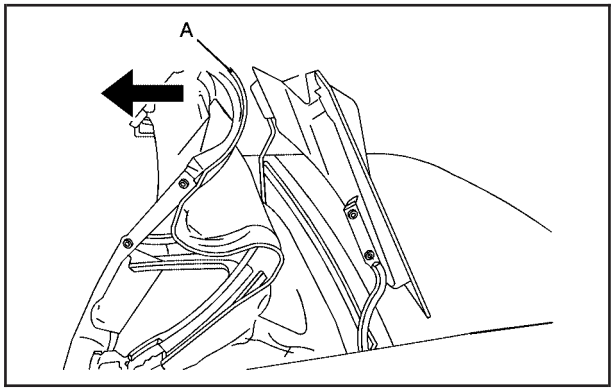

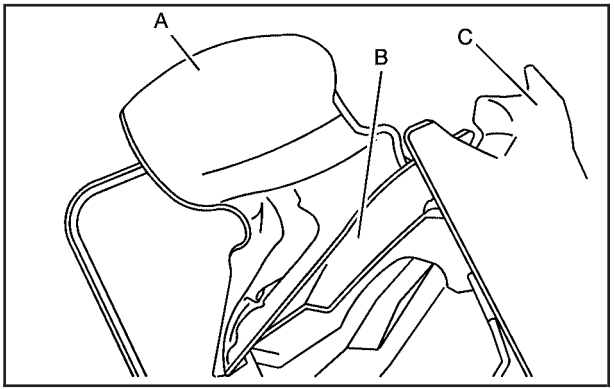

6. Pull the convertible top up by firmly gripping the front edge (A) near the center and applying a brisk upward and forward motion to get the top in the full-up position.

7. Lift the rear edge (B) of the convertible top to its full-up position by first raising the front edge (A).

8. Close the tonneau cover (C) by pushing it down with a swift, firm motion.

9. Lower the rear edge (B) of the convertible top by first slightly pushing the front edge (A) of the convertible top forward.

10. Push the front edge (A) of the convertible top down from the outside of the vehicle, or pull the front edge (A) of the convertible top down from the center pull-down handle located in the inside of the vehicle.

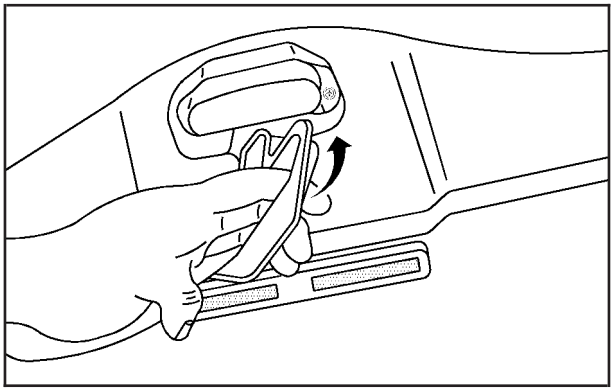

11. Pull the top front latch handle down and turn it counterclockwise to lock the convertible top.

Convertible Top (Power)

For care and cleaning of the convertible top see *Convertible Top on page 6-98* under “Service and Appearance Care”. High pressure car washes may cause water to enter the vehicle.

To operate the power convertible top use the following steps.

Notice: **Leaving the convertible top down and exposing the interior of your vehicle to outdoor conditions may cause damage. Always close the convertible top if leaving your vehicle outdoors.**

Notice: **Lowering the convertible top when there are objects in the storage area could damage it or break the glass rear window. Always verify that no objects are in the storage area before lowering the convertible top.**

Notice: **Lowering the top if it is damp, wet, or dirty can cause stains, mildew, and damage to the inside of your vehicle. Dry off the top before lowering it.**

Notice: **If you lower the top on your vehicle in cold weather (0°F/-18°C or lower), you may damage top components. Do not lower the top in cold weather.**

Notice: **If you raise or lower the convertible top while the vehicle is in motion, you could damage the top or the top mechanism. The repairs would not be covered by your warranty. Always put an automatic transmission in (P) Park or a manual transmission in (N) Neutral before raising or lowering the convertible top.**

Lowering the Power Convertible Top

1. Park on a level surface. Start the engine. Shift an automatic transmission into P (Park) and set the parking brake. Shift a manual transmission into N (Neutral), and set the parking brake.
2. Make sure the trunk is closed and the rear trunk partition in the rear storage area is in the fastened upright position, and that no objects are forward of the divider. See “Rear Trunk Partition” under *Rear Storage Area on page 3-49*.

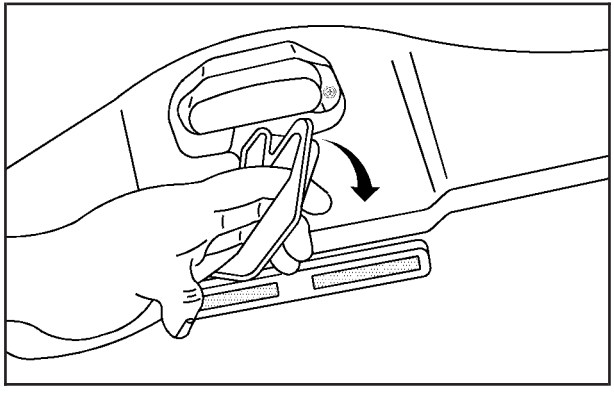

3. Release the convertible top front latch, located above the inside rearview mirror, by pulling and turning it clockwise toward the driver’s door. Push upward on the front edge. The windows will automatically lower.

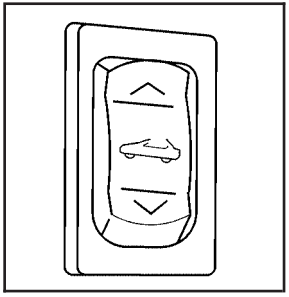

4. Push and hold the bottom of the power convertible top button, located to the left of the steering wheel, on the instrument panel.

The windows will automatically lower and the convertible top will lower into the rear of the vehicle. A chime will sound when the convertible top has lowered completely. If the radio is on the sound may be muted for a brief time due to a new audio system equalization being loaded.

If the convertible top is operated multiple times, the engine should be running to prevent drain on the vehicle’s battery. Under certain conditions, the Driver Information Center (DIC) may display a message regarding the power convertible top. See *DIC Warnings and Messages on page 4-51* for more information.

Raising the Power Convertible Top

Notice: **If you raise or lower the convertible top while the vehicle is in motion, you could damage the top or the top mechanism. The repairs would not be covered by your warranty. Always put an automatic transmission in (P) Park or a manual transmission in (N) Neutral before raising or lowering the convertible top.**

1. Park on a level surface. Start the engine. Shift an automatic transmission into P (Park) and set the parking brake. Shift a manual transmission into N (Neutral) and set the parking brake.
2. Make sure the trunk lid is closed and the rear trunk partition in the rear storage area is in the fastened upright position, and that no objects are forward of the divider. See “Rear Trunk Partition” under *Rear Storage Area on page 3-49*.
3. Push and hold the top of the power convertible top button. The top will raise and the windows will lower if they were in the raised position. A chime will sound when the top is raised completely.
4. After the convertible top is completely raised, release the power convertible top button.
5. Pull the convertible front top latch down and turn it counterclockwise to lock the convertible top.

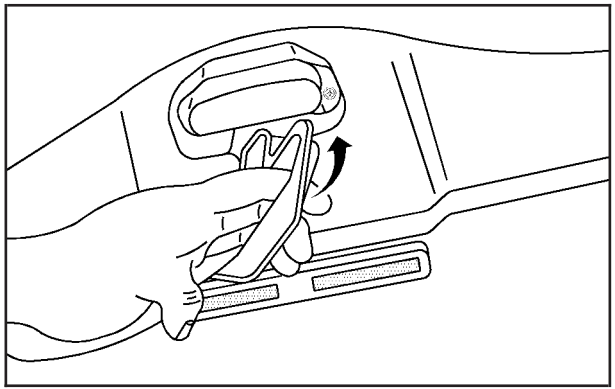

If the radio is on the sound may be muted for a brief time due to a new audio system equalization being loaded.

If the vehicle has lost power, the convertible top can still be raised by releasing pressure on the hydraulic pump, located under the passenger's side of the tonneau cover, by using the following steps. The carpet liner on the passenger's side must be pulled back to access the hydraulic pump.

Manual operation of the power convertible top cannot be attempted for five minutes from the last time the convertible top button was pressed if the top is not completely stowed, with the top down and the tonneau latched, or closed, with the front top latch locked in place, at the time the convertible top button was released.

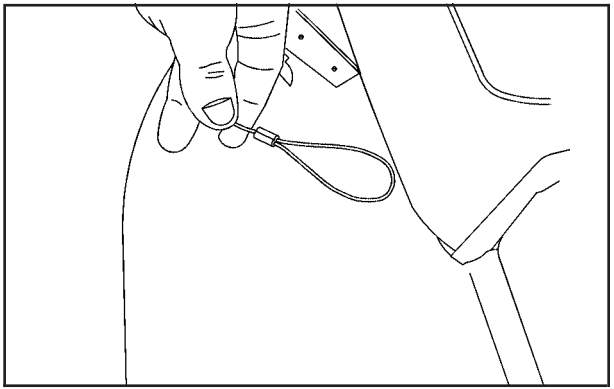

1. Open the tonneau cover by pulling the emergency release cable.

   The tonneau cover emergency release cable is located behind the passenger's seat head restraint, on the underside forward edge of the tonneau cover. Also, see *Hatch on page 3-14* for information on the emergency trunk release handle.

   Be careful when opening the tonneau cover by hand. If the tonneau cover is opened quickly, damage can occur to the hinging mechanism, which can prevent proper operation of the convertible top.

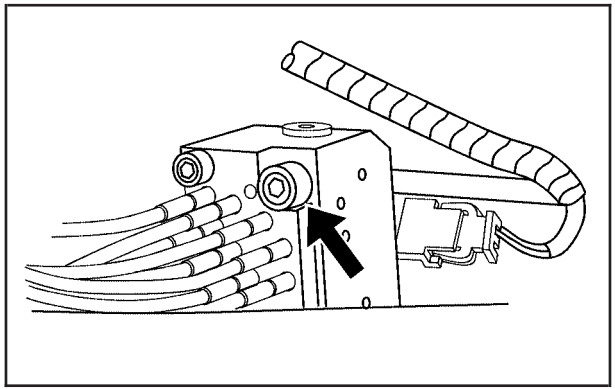

2. Locate the pressure release bolt on the front side of the hydraulic pump.
3. Use the wrench, located in the console, and turn the pressure release bolt counterclockwise one revolution, to relieve pressure to the hydraulic pump. This will allow you to manually raise the convertible top.
4. Then follow the steps under raising the manual convertible top. See “Convertible Top (Manual)” under *Convertible Top (Manual) on page 3-56* or *Convertible Top (Power) on page 3-63.*

When power is restored to the vehicle, the hydraulic bolt must be tightened, by turning it clockwise. The power convertible top button can then be used to lower or raise the convertible top.

If the power convertible top is operated multiple times, the engine should be running to prevent drain on the vehicle’s battery. Under certain conditions, the Driver Information Center (DIC) may display a message regarding the power top. See *DIC Warnings and Messages on page 4-51* for more information.

If the battery has been disconnected, the power windows must be initialized for the power top to operate. See *Power Windows on page 3-17* for more information.

✍ NOTES

Section 4 Instrument Panel

Instrument Panel Overview 4-3
Hazard Warning Flashers 4-3
Horn 4-3
Tilt Wheel 4-3
Turn Signal/Multifunction Lever 4-4
Turn and Lane-Change Signals (Auto Signal) 4-5
Headlamp High/Low-Beam Changer 4-5
Flash-to-Pass 4-5
Windshield Wipers 4-6
Windshield Washer 4-6
Cruise Control 4-7
Exterior Lamps 4-11
Wiper Activated Headlamps 4-12
Headlamps on Reminder 4-12
Daytime Running Lamps (DRL) 4-12
Fog Lamps 4-13
Twilight Sentinel® 4-14
Exterior Lighting Battery Saver 4-15
Instrument Panel Brightness 4-15
Courtesy Lamps 4-15
Entry/Exit Lighting 4-15
Reading Lamps 4-15
Battery Run-Down Protection 4-16
Head-Up Display (HUD) 4-16
Accessory Power Outlet(s) 4-20
Ashtray(s) and Cigarette Lighter 4-21

Climate Controls 4-21
Dual Automatic Climate Control System 4-21
Outlet Adjustment 4-26
Passenger Compartment Air Filter 4-27

Warning Lights, Gages, and Indicators 4-28
Instrument Panel Cluster 4-29
Speedometer and Odometer 4-31
Tachometer 4-31
Safety Belt Reminders 4-31
Airbag Readiness Light 4-32
Passenger Airbag Status Indicator 4-33
Voltmeter Gage 4-34
One-to-Four Shift Light (Manual Transmission) 4-35
Brake System Warning Light 4-35
Antilock Brake System (ABS) Warning Light 4-36
Traction Control System (TCS) Warning Light 4-37
Active Handling System Light 4-38
Engine Coolant Temperature Gage 4-39
Tire Pressure Light 4-39
Malfunction Indicator Lamp 4-40

Section 4 Instrument Panel

Engine Oil Pressure Gage 4-43
Security Light 4-44
Fog Lamp Light 4-44
Lights On Reminder 4-44
Highbeam On Light 4-44
Fuel Gage 4-45
Boost Gage (ZR1 Only) 4-46

Driver Information Center (DIC) 4-46
DIC Operation and Displays 4-46
DIC Warnings and Messages 4-51
Other Messages 4-68
DIC Vehicle Personalization 4-69

Audio System(s) 4-78
Setting the Clock 4-78
Radio(s) 4-79
Using an MP3 4-90
XM Radio Messages 4-92
Navigation/Radio System 4-93
Bluetooth® 4-93
Theft-Deterrent Feature 4-103
Audio Steering Wheel Controls 4-104
Radio Reception 4-105
Diversity Antenna System 4-106
XM™ Satellite Radio Antenna System 4-106

Instrument Panel Overview

Hazard Warning Flashers

The hazard warning flashers warns others that you have a problem. The button is located near the center of the instrument panel.

⚠ **:** Press to make the front and rear turn signal lamps flash on and off. Press again to turn the flashers off.

The hazard warning flashers work no matter what mode the ignition is in, even if the ignition is turned off.

When the hazard warning flashers are on, the turn signals will not work.

Horn

Press near or on the horn symbols on the steering wheel pad to sound the horn.

Tilt Wheel

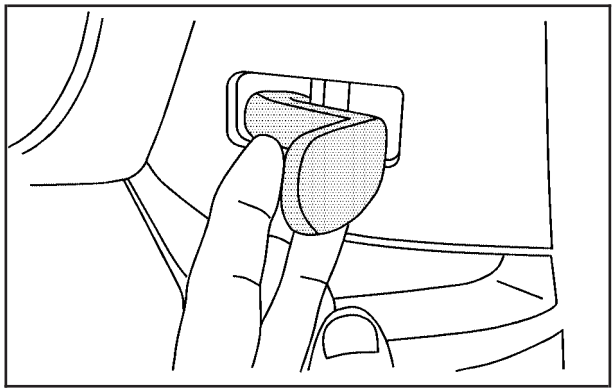

The lever is located on the left side of the steering column. To adjust the steering wheel:

1. Pull the lever toward you.
2. Move the steering wheel up or down into a comfortable position.
3. Release the lever to lock the steering wheel in place.

Telescopic Steering Column

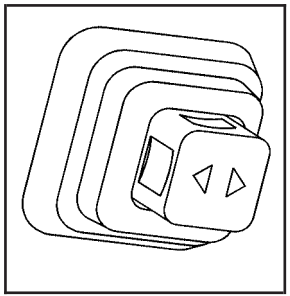

For vehicles with this feature, the telescopic steering column switch is located on the right side of the steering column.

To adjust the telescopic steering column:

1. Push the switch forward to move the wheel away from you.
2. Pull the switch toward you to move the wheel closer to you.

The telescopic steering column position can be stored with your memory settings. See *Memory Seat, Mirrors and Steering Wheel on page 2-4* for more information.

Turn Signal/Multifunction Lever

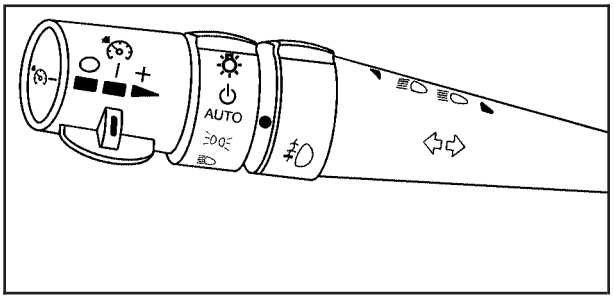

The lever on the left side of the steering column includes the following:

⇦⇨ : Turn and Lane-Change Signals

≣D : Headlamp High/Low-Beam Changer

ǂD : Fog Lamps

: Cruise Control

: Exterior Lamps Control

- Flash-to-Pass Feature. See *Flash-to-Pass on page 4-5*.

Information for these features is on the pages following.

Turn and Lane-Change Signals (Auto Signal)

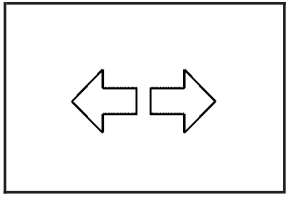

An arrow on the instrument panel cluster flashes in the direction of the turn or lane change.

Move the lever all the way up or down to signal a turn.

Raise or lower the lever until the arrow starts to flash to signal a lane change. Release the lever and the turn signal automatically flashes three times. If more flashes are desired, continue to hold the lever.

The lever returns to its starting position when it is released.

If after signaling a turn or lane change the arrows flash rapidly or do not come on, a signal bulb may be burned out.

Have the bulbs replaced. If the bulb is not burned out, check the fuse. See *Fuses and Circuit Breakers on page 6-103*.

Turn Signal on Chime

A chime sounds if the turn signal has been on for more than three-quarters of a mile (1.2 km) of driving.

If you need to leave the turn signal on for more than three-quarters of a mile (1.2 km), turn off the signal and then turn it back on.

Headlamp High/Low-Beam Changer

To change the headlamps from low beam to high, push the turn signal lever all the way forward. To change from high to low beam, pull the lever rearward.

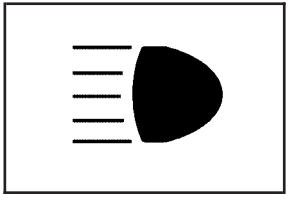

While the high beams are on, this light on the instrument panel cluster will also be lit.

Flash-to-Pass

To use the flash-to-pass feature, briefly pull the turn signal lever toward you. The high-beam indicator flashes to indicate to the other driver that you intend to pass. If the low-beam headlamps are off and the fog lamps are on, the fog lamps flash.

Windshield Wipers

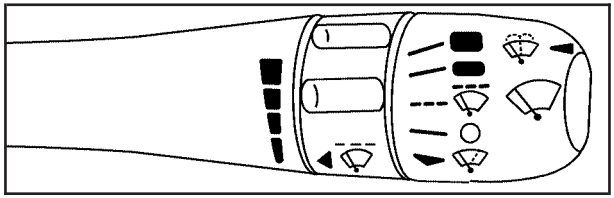

The windshield wiper lever is located on the right side of the steering column.

Move the lever to the following positions:

(High Speed): Fast wipes.

(Low Speed): Slow wipes.

(Delay): Use to set a delay between wipes.

(Delay Adjustment): Use for a delayed wiping cycle. Turn the intermittent adjust band down for a longer delay or up for a shorter delay. The wiper speed can only be manually adjusted when the lever is in this position.

(Off): Turns off the windshield wipers.

(Mist): Move all the way down to mist and release for a single wiping cycle. The windshield wipers will stop after one wipe. Hold the band on mist longer for more wipes.

Heavy snow or ice can overload the wipers. If this occurs, a circuit breaker will stop the wipers until the motor cools. Clear all ice and snow from the wiper blades before using them. If frozen to the windshield, carefully loosen them or thaw them. Damaged wiper blades should be replaced. See *Windshield Wiper Blade Replacement on page 6-62*.

Windshield Washer

The lever on the right side of the steering column also controls the windshield washer. There is a button at the end of the lever. To spray washer fluid on the windshield, press the button and hold it. The washer will spray until you release the button. The wipers will continue to clear the window for about six seconds after the button is released and then stop or return to your preset speed.

⚠ WARNING:

In freezing weather, do not use your washer until the windshield is warmed. Otherwise the washer fluid can form ice on the windshield, blocking your vision.

If the fluid in the windshield washer fluid reservoir is low, the message CHECK WASHER FLUID will appear on the Driver Information Center (DIC) display. It will take 15 seconds after the bottle is refilled for this message to turn off. For information on the correct washer fluid to use, see *Windshield Washer Fluid on page 6-45* and *Recommended Fluids and Lubricants on page 7-9*.

Cruise Control

With cruise control, a speed of about 40 km/h (25 mph) or more can be maintained without keeping your foot on the accelerator. Cruise control does not work at speeds below about 40 km/h (25 mph).

Cruise control will not work if the parking brake is set, or if the master cylinder brake fluid level is low.

⚠ WARNING:

Cruise control can be dangerous where you cannot drive safely at a steady speed. So, do not use the cruise control on winding roads or in heavy traffic.

Cruise control can be dangerous on slippery roads. On such roads, fast changes in tire traction can cause excessive wheel slip, and you could lose control. Do not use cruise control on slippery roads.

If the vehicle is in cruise control, and has the Traction Control System (TCS), and it begins to limit wheel spin, the cruise control automatically disengages. See *Traction Control System (TCS) on page 5-6*. When road conditions allow the cruise control to be safely used again, it can be turned back on.

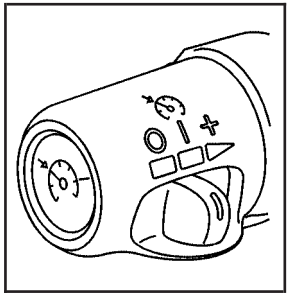

The vehicle has cruise control.

○ **(Off):** Turns the system off.

| **(On):** Turns the system on.

+ (Resume/Accelerate): Use to make the vehicle accelerate or resume a previously set speed.

(Set): Press this button at the end of the lever to set the speed.

Setting Cruise Control

⚠ WARNING:

If you leave your cruise control on when you are not using cruise, you might hit a button and go into cruise when you do not want to. You could be startled and even lose control. Keep the cruise control switch off until you want to use cruise control.

1. Move the cruise control switch to on.
2. Get up to the speed desired.
3. Press at the end of the lever and release it.
4. Take your foot off the accelerator pedal.

When the cruise control is engaged, the CRUISE SET TO XX MPH message displays on the Driver Information Center (DIC). See *Other Messages on page 4-68*.

Resuming a Set Speed

If the cruise control is set at a desired speed and then the brakes are applied, the cruise control is disengaged. But it does not need to be reset.

Once the vehicle is going about 40 km/h (25 mph) or more, you can move the cruise control switch briefly from | to + .

The vehicles goes back up to your chosen speed and stays there.

If the switch is held at resume/accelerate the vehicle keeps going faster until the switch is released or the brake is applied. Do not hold the switch at resume/accelerate, unless you want the vehicle to go faster.

Increasing Speed While Using Cruise Control

There are two ways to go to a higher speed:

- Use the accelerator pedal to get to the higher speed. Press at the end of the lever, then release the button and the accelerator pedal. The vehicle now cruises at the higher speed. If the accelerator pedal is held longer than 60 seconds, cruise control will turn off.
- Move the cruise switch from | to + . Hold it there until desired speed is reached, and then release the switch. To increase the vehicle speed in small amounts, move the switch briefly to + . Each time this is done, the vehicle goes about 1.6 km/h (1 mph) faster.

Reducing Speed While Using Cruise Control

- Press and hold the set button until the lower speed desired is reached, then release it.
- To slow down in small amounts, briefly press . Each time this is done, the vehicle goes about 1.6 km/h (1 mph) slower.

Passing Another Vehicle While Using Cruise Control

Use the accelerator pedal to increase the vehicle's speed. When you take your foot off the pedal, the vehicle slows down to the cruise control speed set earlier.

Using Cruise Control on Hills

How well the cruise control works on hills depends upon the vehicle's speed, load, and the steepness of the hills. When going up steep hills, you might want to step on the accelerator pedal to maintain the vehicle's speed. When going downhill, you might have to brake or shift to a lower gear to keep the vehicle's speed down. When the brakes are applied the cruise control turns off.

Cruise Control in Sport and Manual Paddle Shift Gear Selection

When the vehicle is in S (Sport) and the manual paddle shift controls are not being used, cruise control operates in the same manner as D (Drive).

When the vehicle is in S (Sport) and the manual paddle shift controls are being used, cruise control operates as follows:

- If cruise control is active and a gear is selected with the manual paddle shift controls, the vehicle speed is maintained in the driver selected gear and will not automatically up-shift or down-shift the transmission while the driver's gear selection is active.
- If driving in hilly terrain, cruise control may not be able to maintain vehicle speed if an up-shift or down-shift is not selected by the driver. While driving on hilly terrain and cruise control is active with a manual paddle shift gear selection, the driver must select the proper gear for the terrain or select D (Drive) on the gear range selector for full automatic transmission operation.

Ending Cruise Control

To end a cruise control session, step lightly on the brake pedal. If the vehicle has a manual transmission, lightly tapping the clutch will also end a cruise control session.

Move the cruise control switch to ◯ to turn the system completely off.

When cruise control is disengaged, the CRUISE DISENGAGED message displays on the Driver Information Center (DIC). See *DIC Warnings and Messages on page 4-51*.

Erasing Speed Memory

The cruise control set speed memory is erased when the cruise control or the ignition is turned off.

Exterior Lamps

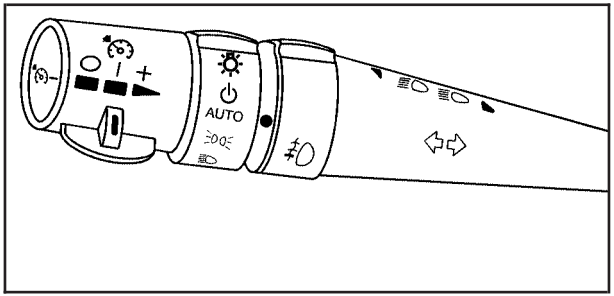

The exterior lamp control is located to the left of the steering wheel on the multifunction lever.

(Exterior Lamp Control): Turn the band with this symbol on it to operate the exterior lamps.

The exterior lamp band has four positions:

(Off): Turns off all lamps.

AUTO (Automatic): Sets the exterior lamps to automatic mode. AUTO mode turns the exterior lamps on and off depending on how much light is available outside the vehicle.

To override AUTO mode, turn the control to off.

To reset to AUTO mode turn the control to exterior lamps and then back to AUTO. Automatic mode also resets when the vehicle is turned off and then back on again if the control is left in the AUTO position.

(Parking Lamp): Turns on the parking lamps together with the following:

- Sidemarker Lamps
- Taillamps
- License Plate Lamps
- Instrument Panel Lights

The parking brake indicator light comes on and stays on when the parking lamps are on with the engine off and the ignition to ACC/ACCESSORY.

(Headlamps): Turns on the headlamps, together with the previously listed lamps and lights.

Wiper Activated Headlamps

This feature activates the headlamps and parking lamps after the windshield wipers have been in use for approximately 15 seconds and deactivates and returns to ambient lighting conditions 15 seconds after the wipers are turned off.

If the exterior lamp control has been turned off or is in the parking lamp position while the wiper control is active in any position, the HEADLAMPS SUGGESTED message appears on the Driver Information Center (DIC). See *DIC Warnings and Messages on page 4-51*.

When the ignition is turned off, the wiper-activated headlamps will immediately turn off.

Headlamps on Reminder

A warning chime will sound if the exterior lamp control is left on in either the headlamp or parking lamp position and the driver's door is opened with the ignition off.

Daytime Running Lamps (DRL)

Daytime Running Lamps (DRL) can make it easier for others to see the front of your vehicle during the day. Fully functional daytime running lamps are required on all vehicles first sold in Canada.

The DRL system makes the front turn signal lamps come on when the following conditions are met:

- It is still daylight and the ignition is on.
- The exterior lamp control is in the AUTO position.
- The transmission is not in P (Park) or the parking brake is off.
- The parking brake is off or the vehicle speed is greater than 8 mph (13 km/h).

When DRL are on, only the front turn signal lamps will be on. The parking lamps, taillamps, instrument panel lights, or other exterior lamps will not be on when the DRL are being used.

When it is dark enough outside, the front turn signal lamps turn off and the normal low-beam headlamps turn on.

When it is bright enough outside, the regular lamps go off, and the front turn signal lamps will take over. If the vehicle is started in a dark garage, the automatic headlamp system comes on immediately. Once the vehicle leaves the garage, it takes approximately one minute for the automatic headlamp system to change to DRL if it is light outside. During that delay, the instrument panel cluster may not be as bright as usual. Make sure the instrument panel brightness knob is in the full bright position. See *Instrument Panel Brightness on page 4-15* for more information.

If it is dark enough outside and the exterior lamp control is off, a HEADLAMPS SUGGESTED message will display on the Driver's Information Center (DIC). See *DIC Warnings and Messages on page 4-51*.

Turning the exterior lamp control to off a second time, or turning on the headlamps will remove the HEADLAMPS SUGGESTED message in the DIC. If the parking lamps or the fog lamps were turned on instead, the HEADLAMPS SUGGESTED message will continue to be displayed.

The regular headlamp system should be turned on when needed.

To turn off the DRL, turn the exterior lamp control to the off position or shift into P (Park). The DRL will stay off until the control is toggled again or the vehicle is shifted out of P (Park).

This procedure applies only to vehicles first sold in the United States.

Fog Lamps

Use fog lamps for better vision in foggy or misty conditions.

The fog lamps control is located on the multifunction lever next to the exterior lamp control.

(Fog Lamps): Turning the band to this position will turn the fog lamps on.

When you turn the fog lamps on, the fog lamp light will appear on the instrument panel cluster to indicate that the fog lamps and the parking lamps are on.

If you turn the high-beam headlamps on, the fog lamps will turn off. They will turn on again when you switch to low-beam headlamps.

The ignition must be on for the fog lamps to operate.

Some localities have laws that require the headlamps to be on along with the fog lamps.

Twilight Sentinel®

Twilight Sentinel® can turn the lamps on and off for you. A light sensor on top of the instrument panel makes the Twilight Sentinel® work, so be sure it is not covered.

With Twilight Sentinel®, the following will happen:

- When it is dark enough outside, the front turn signal lamps (DRL) will go off, and the headlamps and parking lamps will come on. The other lamps that come on with headlamps will also come on.
- When it is bright enough outside, the headlamps will go off, and the front turn signal lamps (DRL) will come on, as long as the exterior lamp switch is in the AUTO position.

If the vehicle is started in a dark garage, the automatic headlamp system come on immediately. Once the vehicle leaves the garage, it takes about one minute for the automatic headlamp system to change to DRL if it is light outside. During that delay, the instrument panel cluster may not be as bright as usual. Make sure the instrument panel brightness control is in full bright position. See *Instrument Panel Brightness on page 4-15*.

You can idle the vehicle with the lamps off, even when it is dark outside.

After starting the vehicle, turn the exterior lamp control band on the multifunction lever to off and then release it. The lamps will remain off until the control band is turned to off again.

Twilight Sentinel® also provides exterior illumination as you leave the vehicle. If Twilight Sentinel® has turned on the lamps when you turn off the ignition, the lamps will remain on until:

- The exterior lamp switch is moved from off to the parking lamp position, or
- A delay time that you select has elapsed.

See “Personal Options” under *DIC Vehicle Personalization on page 4-69* to select the delay time that you want. You can also select no delay time.

If you turn off the ignition with the exterior lamp switch in the parking lamp or headlamp position, the Twilight Sentinel® delay will not occur. The lamps will turn off as soon as the switch is turned off.

The regular headlamp system should be turned on when needed.

Exterior Lighting Battery Saver

If the manual parking lamps or headlamps have been left on, the exterior lamps will turn off as soon as the ignition is turned off or Retained Accessory Power (RAP) is active. This protects against draining the battery in case you have accidentally left the headlamps or parking lamps on. The battery saver does not work if the headlamps are turned on after the ignition switch is turned to off.

If you need to leave the lamps on, use the exterior lamp control to turn the lamps back on.

Instrument Panel Brightness

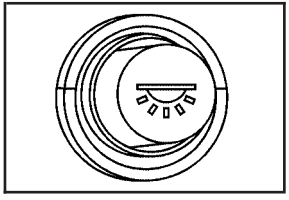

The knob for this feature is located on the left side of the instrument panel.

Push the knob in to turn on the interior lights.

Turn and hold the knob clockwise to brighten the lights or counterclockwise to dim them. During the day, this knob will adjust the instrument panel brightness and at night will adjust all interior lighting.

Be sure not to have this knob turned all the way down with the lamps on during the day. Your Driver Information Center (DIC) may not be visible.

Courtesy Lamps

When any door or the hatch/trunk lid is opened, the interior lamps will go on unless it is bright outside.

You can also turn the courtesy lamps on and off by pressing the instrument panel brightness knob.

Entry/Exit Lighting

With entry lighting, the interior lamps will come on when entering the vehicle. The interior lamps will come on for about 20 seconds when the engine is off.

You can turn exit and entry lighting off by quickly turning the courtesy lamps on and off.

Reading Lamps

The inside rearview mirror includes two reading lamps. The lamps will go on when a door is opened. When the doors are closed, press each lamp switch to turn them on individually.

Battery Run-Down Protection

This vehicle has a feature to help prevent the battery from being drained in case any of the following lamps are left on; the underhood lamp, if your vehicle has this feature, vanity mirror lamps, cargo lamps, reading lamps, console or glove box lamps. If any of these lamps are left on, they will automatically time-out after about 10 minutes. To reset it, all of the above lamps must be turned off or the ignition key on.

Head-Up Display (HUD)

⚠ WARNING:

If the HUD image is too bright, or too high in your field of view, it may take you more time to see things you need to see when it is dark outside. Be sure to keep the HUD image dim and placed low in your field of view.

For vehicles with the Head-Up Display (HUD), you can see some of the driver information that appears on the instrument panel cluster.

The information may be displayed in English or metric units and appears as an image focused out toward the front of the vehicle. The HUD consists of the following information:

- Speedometer
- Turn Signal Indicators
- High-Beam Indicator Symbol
- Tachometer
- Manual Paddle Shift Gear Indicator (If Equipped)

  These displays on the HUD are for use when using the manual paddle shift controls to shift the transmission. See “Manual Paddle Shift” in *Automatic Transmission Operation on page 3-26*.
- Shift Light

  This light is used for performance driving to indicate that the vehicle’s best performance level has been reached to shift the transmission into the next higher gear. An arrow pointing up will light up on the display just prior to reaching the engine fuel cut-off mode. This cut-off is about 6,500 RPM for the LS3 engine, 6,600 RPM for the LS9 & ZR1 engines and 7,000 RPM for the LS7 engine.
- Check Gages Warning
- Engine Coolant Temperature Gage

- Transmission Fluid Temperature Gage, (Automatic Transmission Vehicles Only)
- Engine Oil Temperature Gage
- Engine Oil Pressure Gage
- G-Force Gage
- Boost Gage (If Equipped)
- Audio Functions, Street Mode Only
- Navigation, Only with Navigation Radio, Turn-by-Turn Guidance

There are three HUD modes that can be viewed in the HUD display. Press the MODE button to scroll through these modes in the following order:

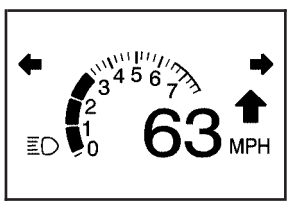

Street Mode supports audio and navigation functions with your choice of tachometer settings.

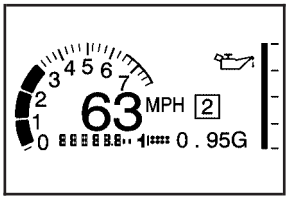

Track Mode 1 supports the G-Force gage and minor gages with a circular tachometer.

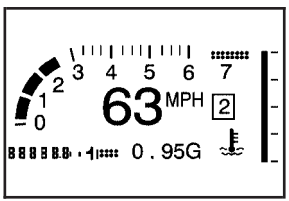

Track Mode 2 supports G-Force gages, boost gage w/ZR1, and minor gages with a linear tachometer.

When the desired HUD display has been selected, release the MODE button.

Within each mode, the display, can be further customized by pressing the PAGE button. Pressing this button in each mode will turn off and on the following:

- Street Mode — No tachometer, circular tachometer, and linear tachometer.
- Track Modes 1 and 2 — No minor gage, coolant temperature, transmission oil temperature, engine oil temperature, engine oil pressure, and boost gage.

While in Track Mode 1 or 2, the maximum G value achieved during the current ignition cycle can be displayed by pressing and holding the PAGE button. The maximum G display will be shown until the PAGE button is released. The maximum G value display will be identical to the normal G value display, except the maximum G gage digits (X.XX G) and corresponding G gage bar will overwrite the current G value.

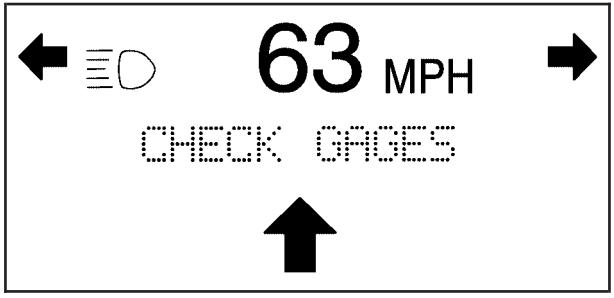

Be sure to continue scanning the displays, controls and driving environment just as you would in a vehicle without HUD. If you never look at the instrument panel cluster, you may miss something important, such as a warning light. Under important warning conditions, the CHECK GAGES warning will illuminate in the HUD. View your Driver Information Center (DIC) for more information.

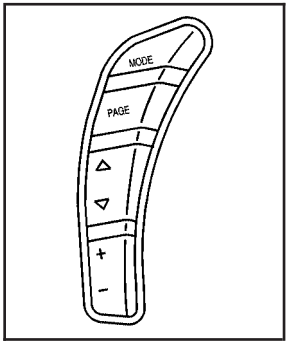

The HUD controls are located to the left of the steering wheel.

To adjust the HUD so it can be seen properly, do the following:

1. Start the engine and press the HUD dimmer control all the way up by pressing the (+) button.

   The brightness of the HUD image is determined by the light conditions in the direction the vehicle is facing and where you have the HUD dimmer control set. If you are facing a dark object or a heavily shaded area, the HUD may anticipate that you are entering a dark area and may begin to dim.

   It is possible for sunlight to enter the HUD making it difficult to see the image. The display will return to normal when the sunlight is no longer entering the HUD.

2. Adjust the seat to a comfortable driving position. If your seat position changes, the HUD may need to be re-adjusted.
3. Press the up or down arrows to center the HUD image in your view.

   The HUD image can only be adjusted up and down, not side-to-side.
4. Press the dimmer control downward until the HUD image is no brighter than necessary.

To turn HUD off, press and hold the (–) button until the HUD display turns off.

If the sun comes out or it becomes cloudy, the HUD brightness may need to be adjusted again using the dimmer control. Polarized sunglasses could make the HUD image harder to see.

The HUD information can be displayed in one of six languages including English, Spanish, French, German, Italian or Japanese. The speedometer can be displayed in either English or Metric units.

To change the language and unit selections, see “OPTION” under *DIC Operation and Displays on page 4-46*.

Clean the inside of the windshield as needed to remove any dirt or film that reduces the sharpness or clarity of the HUD image.

To clean the HUD, spray household glass cleaner on a soft, clean cloth. Wipe the HUD lens gently, then dry it. Do not spray cleaner directly on the lens because the cleaner could leak into the unit.

If the ignition is on and the HUD image cannot be seen, check to see if:

- Something is covering the HUD unit.
- The HUD dimmer control is adjusted properly.
- The HUD image is adjusted to the proper height.
- Ambient light is low, in the direction the vehicle is facing.
- A fuse is blown. See *Fuses and Circuit Breakers on page 6-103*.

Keep in mind that the windshield is part of the HUD system. See *Windshield Replacement on page 6-62*.

Accessory Power Outlet(s)

The accessory power outlet can be used to connect electrical equipment, such as a cellular phone.

The accessory power outlet is located inside the center console storage compartment, on the forward left side.

To use the outlet, remove the tethered cap. When not using it, always cover the outlet with the protective cap.

Notice: **Leaving electrical equipment plugged in for an extended period of time while the vehicle is off will drain the battery. Power is always supplied to the outlets. Always unplug electrical equipment when not in use and do not plug in equipment that exceeds the maximum 20 ampere rating.**

Certain electrical accessories may not be compatible with the accessory power outlet and could result in blown vehicle or adapter fuses. If you experience a problem, see your dealer/retailer for additional information on accessory power outlets.

Notice: **Adding any electrical equipment to the vehicle can damage it or keep other components from working as they should. The repairs would not be covered by the vehicle warranty. Do not use equipment exceeding maximum amperage rating of 20 amperes. Check with your dealer/retailer before adding electrical equipment.**

When adding electrical equipment, be sure to follow the installation instructions included with the equipment.

We recommend that you see a qualified technician or your dealer/retailer for the proper installation of your equipment.

Notice: **Improper use of the power outlet can cause damage not covered by the vehicle warranty. Do not hang any type of accessory or accessory bracket from the plug because the power outlets are designed for accessory power plugs only.**

Ashtray(s) and Cigarette Lighter

The ashtray and cigarette lighter are located on the instrument panel, in front of the shift lever. To use the ashtray, press on the indentation at the top of the door.

Notice: **If papers, pins, or other flammable items are put in the ashtray, hot cigarettes or other smoking materials could ignite them and possibly damage the vehicle. Never put flammable items in the ashtray.**

Loose objects, such as paper clips, can lodge behind and beneath the ashtray lid and prevent movement of the lid. You should avoid putting small, loose objects near the ashtray.

To use the cigarette lighter, push it in all the way and let go. When it is ready, it will pop back out by itself.

Notice: **Holding a cigarette lighter in while it is heating does not let the lighter back away from the heating element when it is hot. Damage from overheating can occur to the lighter or heating element, or a fuse could be blown. Do not hold a cigarette lighter in while it is heating.**

Climate Controls

Dual Automatic Climate Control System

With this system the heating, cooling, and ventilation can be controlled.

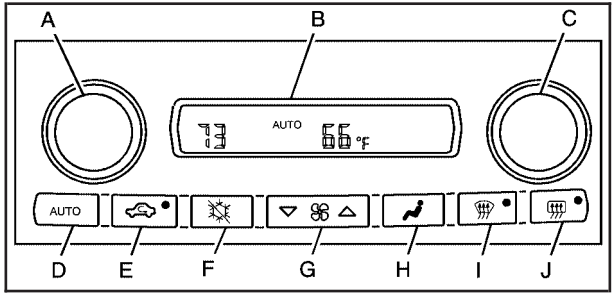

A. Driver Temperature Controls
B. Display
C. Passenger Temperature Control
D. AUTO
E. Recirculation
F. Air Conditioning
G. Fan Control
H. Air Delivery Mode Control
I. Defrost
J. Rear Window Defogger

When the vehicle is first started, the display shows the driver's temperature setting, the outside temperature, the fan speed and the air delivery, for about 10 seconds.

The outside temperature is shown in the center of the display. The digital display will show the readings in Fahrenheit or Celsius. See "Personal Options" under *DIC Vehicle Personalization on page 4-69* for information on changing your display.

Automatic Operation

AUTO (Automatic): Press the AUTO button to place the entire system in the automatic mode. When automatic operation is active, the system automatically controls the inside temperature, the air delivery mode, and the fan speed.

After a ten second display of the current settings, the word AUTO, the driver's temperature setting and the outside temperature will be shown. The system operates to reach the set temperature as quickly as possible. The AUTO control system works best with the windows up and the removable roof installed or the convertible top up.

1. Press the AUTO button.
2. Adjust the temperature to a comfortable setting between 16°C (60°F) and 32°C (90°F). Choosing the coldest or warmest temperature setting will not cause the system to heat or cool any faster. A setting of 23°C (73°F) is suggested.

   In cold weather, the system will start at reduced fan speeds to avoid blowing cold air into your vehicle until warmer air is available. The system starts out blowing air at the floor but may change modes automatically as the vehicle warms up to maintain the chosen temperature setting. The length of time needed for warm up depends on the outside temperature and the length of time that has elapsed since the vehicle was last driven.
3. Wait for the system to regulate. This may take from 10 to 30 minutes. Then adjust the temperature, if necessary.

Do not cover the solar sensor located in the center of the instrument panel, near the windshield. For more information on the solar sensor, see "Sensor" later in this section.

Manual Operation

Driver Power/Temperature: Press the driver temperature knob to turn the climate control system off. This is the only setting that completely shuts off the fan. The digital display shows only the outside temperature. The driver and the passenger set temperature and the air intake mode can still be adjusted when the climate control is off.

Passenger Power/Temperature: Press the passenger temperature knob to turn the passenger's climate control system on or off. Turn the knob to increase or decrease the temperature for the passenger. If the passenger's climate control system is off, the driver's temperature knob will control the temperature for the entire vehicle.

▽ ⊛ △ **(Fan):** Press to increase or decrease the fan speed. The fan speed setting will appear in the display.

Pressing the arrows will delete AUTO from the digital display. The fan graphics with the fan speed bars will be shown. The AUTO button must be pressed to return to the automatic fan control.

If the airflow seems low when the fan speed is at the highest setting, the passenger compartment air filter may need to be replaced. For more information, see *Passenger Compartment Air Filter on page 4-27* and *Scheduled Maintenance on page 7-3*.

(Air Delivery Mode Control): Press this button to manually lock in the current air delivery setting and to stop the automatic mode control. Pressing deletes AUTO from the digital display and the mode graphics will be shown. To change the setting, press again. The AUTO button must be pressed to return to the automatic mode selection.

To change the current mode, select one of the following:

(Vent): Air is directed to the instrument panel outlets, with some air directed to the floor outlets.

(Bi-Level): Air is divided between the instrument panel and floor outlets.

(Floor): Air is directed to the floor outlets, with some air directed to the windshield and side window defogger outlets.

(Floor/Defog): This mode clears the windows of fog or moisture. Air is directed to the windshield and the floor outlets, with a small amount to the side window outlets. In this mode, the system automatically turns off the recirculation and runs the air-conditioning compressor unless the outside temperature is at or below freezing. The recirculation mode cannot be selected while in the defog mode.

(Defrost): This mode clears the windows of fog or frost more quickly. Air is directed to the windshield, with a small amount directed to the side window outlets. The indicator light comes on and the digital display will show the defrost mode symbol and fan speed when the front defrost mode is being used. In this mode, the system automatically turns off the recirculation and runs the air-conditioning compressor, unless the outside temperature is at or below freezing.

Recirculation cannot be selected while in the defrost mode. Pressing again will return the system to the last operating mode.

For severe ice conditions, turn the driver's temperature knob to 32°C (90°F) while in defrost mode.

Do not drive the vehicle until all the windows are clear.

(Air Conditioning Off): Press to turn the air conditioning compressor off. Press AUTO to return to automatic operation. When in AUTO, the air conditioning compressor comes on automatically, as needed.

Air conditioning does not operate at temperatures below about 2°C to 4°C (35°F to 40°F). In temperatures above 4°C (40°F), the air conditioning cannot be turned off in defrost and defog, as it helps to remove moisture from the vehicle. It also helps to keep the windows clear.

You may notice a slight change in engine performance when the air-conditioning compressor shuts off and turns on again. This is normal. The system is designed to make adjustments to help with fuel economy while still maintaining the selected temperature.

On hot days, open the windows to let hot inside air escape; then close them. This helps to reduce the time it takes for the vehicle to cool down. It also helps the system to operate more efficiently.

For quick cool down on hot days press the AUTO button and adjust the temperature to a cool, comfortable setting. To achieve maximum cool down, do the following:

1. Select mode.
2. Press .
3. Select the a/c on.
4. Select the coolest temperature.
5. Select the highest fan speed.

Using these settings together for long periods of time may cause the air inside of your vehicle to become too dry. To prevent this from happening, after the air in the vehicle has cooled, turn the recirculation mode off.

The air conditioning system removes moisture from the air, so a small amount of water might drip under the vehicle while idling or after turning off the engine. This is normal.

(Recirculation): Press to turn the recirculation mode on or off. An indicator light comes on to show that recirculation is on. This mode prevents outside air from entering your vehicle. It can be used to prevent outside air and odors from entering your vehicle and to help cool the air inside your vehicle more quickly. Recirculation mode is not available in defrost or defog mode.

Sensors

The solar sensor on the vehicle monitors the solar heat and uses the information to maintain the selected temperature when operating in AUTO mode by automatically adjusting the temperature, fan speed and air delivery system. The system may also supply cooler air to the side of the vehicle facing the sun. The recirculation mode will also be activated, as necessary. Do not cover the solar sensor located on the top of the instrument panel near the windshield or the system will not work properly.

There is also a sensor located behind the front bumper. This sensor reads the outside air temperature and helps to maintain the temperature inside the vehicle. Any cover on the front of the vehicle could give a false reading in the temperature.

If the outside temperature goes up, the displayed temperature will not change until:

- The vehicle's speed is above 19 km/h (12 mph) for five minutes.
- The vehicle's speed is above 52 km/h (32 mph) for two and a half minutes.

These delays prevent false readings. If the temperature goes down, the outside temperature will be shown when you start the vehicle. If it has been turned off for less than three hours, the temperature will be recalled from the previous vehicle operation.

There is also an inside temperature sensor located to the left of the ignition switch. The automatic climate control system uses this sensor to receive information, so if you block or cover it, the system will not function properly.

Rear Window Defogger

The rear window defogger uses a warming grid to remove fog or frost from the rear window.

The rear window defogger only works when the engine is running.

(Rear Window Defogger): Press to turn the rear window defogger on or off. Be sure to clear as much snow from the rear window as possible. An indicator light comes on to show that the rear window defogger is on.

The rear window defogger turns off about 10 minutes after the button is pressed when traveling less than 48 km/h (30 mph). If turned on again, the defogger only runs for about five minutes before turning off. The defogger can also be turned off by turning off the engine.

The vehicle has heated outside rearview mirrors. The mirrors will heat to help clear fog or frost from the surface of the mirrors when the rear window defogger button is pressed.

For vehicles with a power convertible top, the rear window defogger and heated mirrors are automatically disabled when the power convertible top is moving or down.

Notice: **Do not use anything sharp on the inside of the rear window. If you do, you could cut or damage the warming grid, and the repairs would not be covered by the vehicle warranty. Do not attach a temporary vehicle license, tape, a decal or anything similar to the defogger grid.**

Outlet Adjustment

Use the tab located on the air outlets to change the direction of the airflow.

Operation Tips

- Clear away any ice, snow or leaves from the air inlets at the base of the windshield that may block the flow of air into your vehicle.
- Use of non-GM approved hood deflectors may adversely affect the performance of the system.
- Keep the area around the base of the instrument panel console and air path under the seats clear of objects to help circulate the air inside of your vehicle more effectively.

Passenger Compartment Air Filter

The passenger compartment air filter removes certain particles from the air including pollen and dust particles. Reductions in airflow, which may occur more often in dusty areas, indicate that the filter may need to be replaced. See *Scheduled Maintenance on page 7-3* for information on how often to replace the filter.

Notice: **Driving without a passenger compartment air filter in place can cause water and small particles, like paper and leaves, to be pulled into your climate control system which may cause damage to it. Make sure you always replace the old filter with a new one.**

The passenger compartment air filter is located on the passenger side of the engine compartment near the battery. See *Engine Compartment Overview on page 6-14*.

To check or replace the air filter:

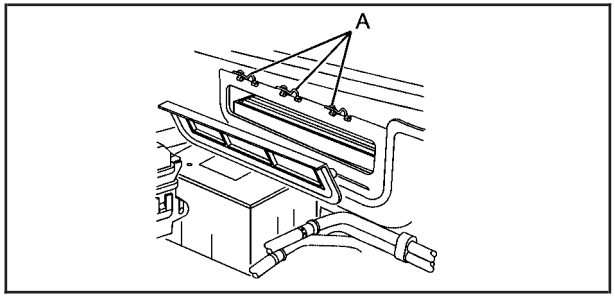

1. Remove the cover retainer clips (A) from the passenger compartment air filter cover.
2. Remove the cover.

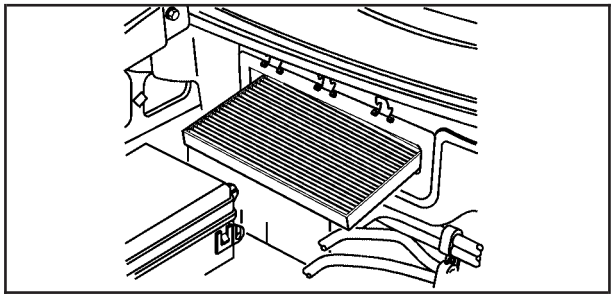

3. Remove the filter and install the new air filter.
4. Replace the filter cover.
5. Attach the retainer clips.

Warning Lights, Gages, and Indicators

Warning lights and gages can signal that something is wrong before it becomes serious enough to cause an expensive repair or replacement. Paying attention to the warning lights and gages could prevent injury.

Warning lights come on when there might be or there is a problem with one of the vehicle's functions. Some warning lights come on briefly when the engine is started to indicate they are working.

Gages can indicate when there might be or there is a problem with one of the vehicle's functions. Often gages and warning lights work together to indicate a problem with the vehicle.

When one of the warning lights comes on and stays on while driving, or when one of the gages shows there could be a problem, check the section that explains what to do. Follow this manual's advice. Waiting to do repairs can be costly and even dangerous.

Instrument Panel Cluster

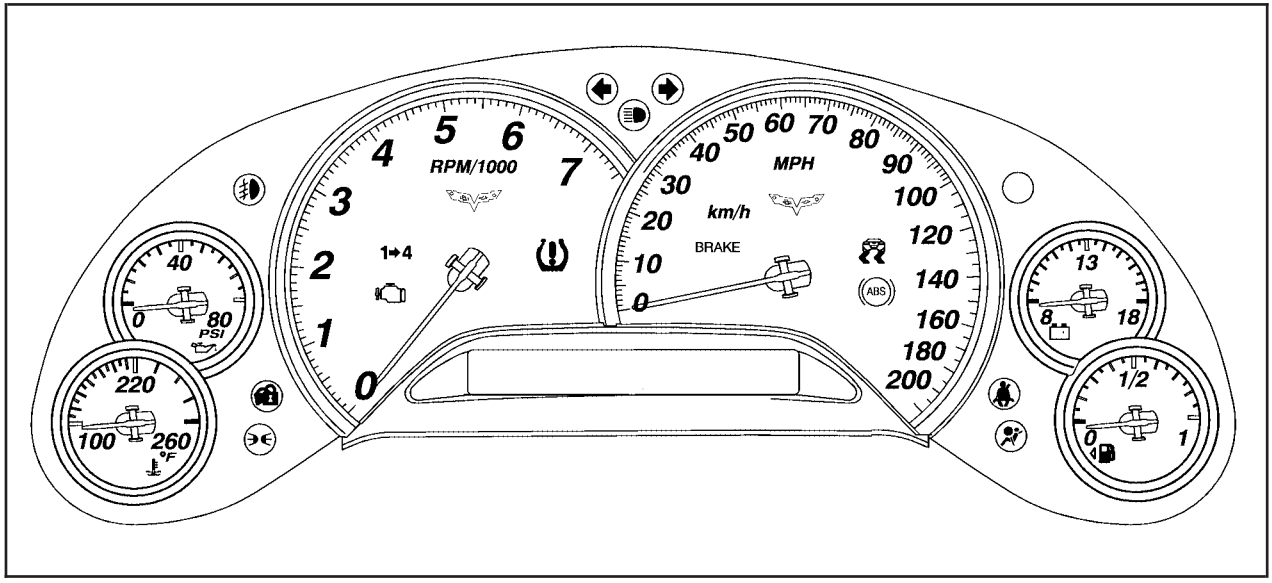

United States Manual Transmission shown, Canada, Automatic Transmission and Z06 Model similar

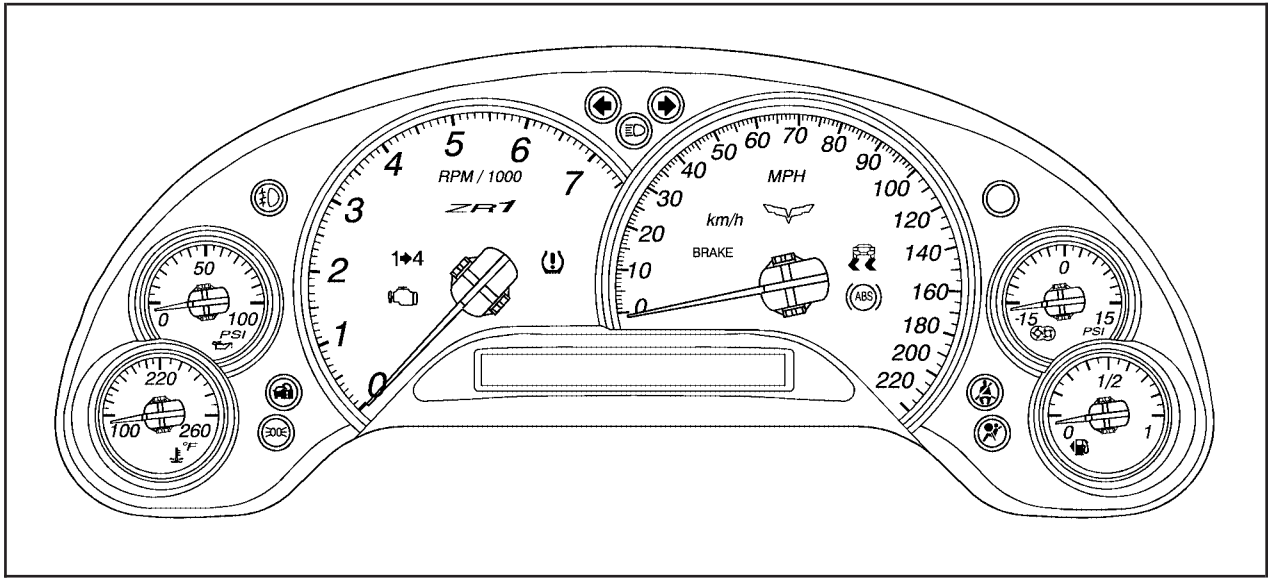

ZR1– United States shown Canada similar

Speedometer and Odometer

The speedometer shows the speed in either kilometers per hour (km/h) or miles per hour (mph). For more information see “Personal Options” under *DIC Vehicle Personalization on page 4-69*.

To read the odometer with the ignition off, turn on the parking lamps.

If the vehicle needs a new odometer installed, the mileage total of the new odometer will be set to the original kilometers (miles) of the old odometer. See your dealer/retailer if the odometer must be replaced in the vehicle.

Tachometer

The tachometer displays the engine speed in thousands of revolutions per minute (rpm).

Notice: **Fuel shuts off at about 6500 rpm for the base model, 7000 rpm for the Z06 model, and 6600 rpm for the ZR1 model. If the vehicle continues to be driven at the fuel shut off rpm, the engine could be damaged. Be sure to operate the vehicle below the fuel shut off rpm or reduce the vehicle’s rpm quickly when the fuel shuts off.**

Safety Belt Reminders

Safety Belt Reminder Light

When the engine is started, a chime sounds for several seconds to remind a driver to fasten the safety belt, unless the driver safety belt is already buckled.

The safety belt light comes on and stays on for several seconds, then flashes for several more.

This chime and light are repeated if the driver remains unbuckled and the vehicle is in motion. If the driver safety belt is already buckled, neither the chime nor the light comes on.

Passenger Safety Belt Reminder Light

Several seconds after the engine is started, a chime sounds for several seconds to remind the front passenger to buckle their safety belt. The passenger safety belt light, located on the instrument panel, comes on and stays on for several seconds and then flashes for several more.

This chime and light are repeated if the passenger remains unbuckled and the vehicle is in motion.

If the passenger safety belt is buckled, neither the chime nor the light comes on.

The front passenger safety belt warning light and chime may turn on if an object is put on the seat such as a briefcase, handbag, grocery bag, laptop or other electronic device. To turn off the warning light and or chime, remove the object from the seat or buckle the safety belt.

Airbag Readiness Light

The system checks the airbag's electrical system for possible malfunctions. If the light stays on it indicates there is an electrical problem. The system check includes the airbag sensor, the pretensioners, the airbag modules, the wiring and the crash sensing and diagnostic module. For more information on the airbag system, see *Airbag System on page 2-44*.

The airbag readiness light flashes for a few seconds when the engine is started. If the light does not come on then, have it fixed immediately.

⚠ WARNING:

If the airbag readiness light stays on after the vehicle is started or comes on while driving, it means the airbag system might not be working properly. The airbags in the vehicle might not inflate in a crash, or they could even inflate without a crash. To help avoid injury, have the vehicle serviced right away.

If there is a problem with the airbag system, an airbag Driver Information Center (DIC) message can also come on. See *DIC Warnings and Messages on page 4-51* for more information.

Passenger Airbag Status Indicator

The vehicle has the passenger sensing system. See *Passenger Sensing System on page 2-52* for important safety information. The rearview mirror has a passenger airbag status indicator.

United States

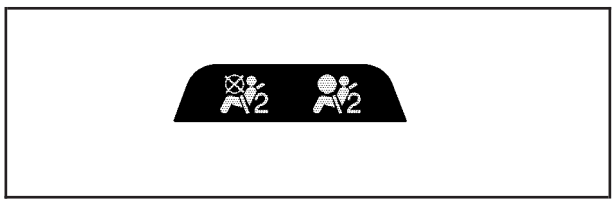

Canada

When the vehicle is started, the passenger airbag status indicator will light ON and OFF, or the symbol for on and off, for several seconds as a system check. Then, after several more seconds, the status indicator will light either ON or OFF, or either the on or off symbol, to let you know the status to let you know the status of the right front passenger frontal and seat-mounted side impact airbags (if equipped).

If the word ON or the on symbol is lit on the passenger airbag status indicator, it means that the right front passenger frontal airbag and seat-mounted side impact airbag (if equipped) are enabled (may inflate).

If the word OFF or the off symbol is lit on the passenger airbag status indicator, it means that the passenger sensing system has turned off the right front passenger frontal airbag and seat-mounted side impact airbag (if equipped). See *Passenger Sensing System on page 2-52* for more on this, including important safety information.

If, after several seconds, both status indicator lights remain on, or if there are no lights at all, there may be a problem with the lights or the passenger sensing system. See your dealer/retailer for service.

⚠ WARNING:

If the airbag readiness light ever comes on and stays on, it means that something may be wrong with the airbag system. To help avoid injury to yourself or others, have the vehicle serviced right away. See *Airbag Readiness Light on page 4-32* for more information, including important safety information.

Voltmeter Gage

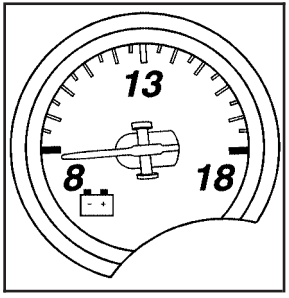

Base and Z06

The voltmeter shows the voltage output of the battery. It shows the voltage output of the charging system while the engine is running.

The reading changes as the rate of charge changes (with engine speed, for example), but if the voltmeter reads at 9 volts or below, the instrument panel cluster and other systems may shut down. The Driver Information Center (DIC) reads BATTERY VOLTAGE LOW when the vehicle is at 10 volts or below. Have it checked right away. Driving with the voltmeter reading at 10 volts or below could drain the battery and disable the vehicle.

One-to-Four Shift Light (Manual Transmission)

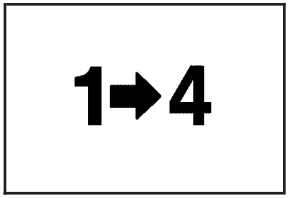

When this light comes on, the vehicle can only be shifted from 1 (First) to 4 (Fourth) instead of 1 (First) to 2 (Second).

The shift must be completed into 4 (Fourth) to turn off this feature. This helps the vehicle get the best possible fuel economy.

After shifting to 4 (Fourth), the vehicle can be downshifted to a lower gear.

Notice: **Forcing the shift lever into any gear except 4 (Fourth) when the 1 TO 4 SHIFT light comes on may damage the transmission. Shift only from 1 (First) to 4 (Fourth) when the light comes on.**

This light comes on when:

- The engine coolant temperature is higher than 169°F (76°C),
- The vehicle is going 15 to 19 mph (24 to 31 km/h) and
- The vehicle 21 percent throttle or less.

Brake System Warning Light

The vehicle's hydraulic brake system is divided into two parts. If one part is not working, the other part can still work and stop the vehicle. For good braking both parts need to be working well.

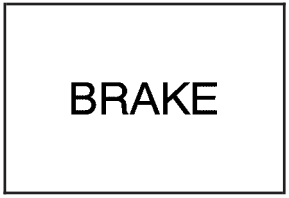

United States

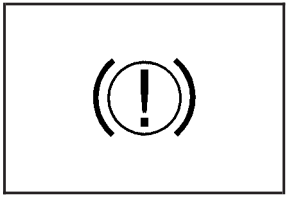

Canada

This light comes on briefly while starting the engine. If it does not come on, have it fixed so it is ready to warn if there is a problem.

⚠ WARNING:

The brake system might not be working properly if the brake system warning light is on. Driving with the brake system warning light on can lead to a crash. If the light is still on after the vehicle has been pulled off the road and carefully stopped, have the vehicle towed for service.

If this warning light stays on after the engine is started, the parking brake may still be set or there could be a brake problem. Refer to *Parking Brake on page 3-33* to see if it is set. If the parking brake is not set, have the brake system inspected right away.

If the light comes on while driving and a CHECK BRAKE FLUID message shows on the DIC, pull off the road and stop carefully. The pedal may be harder to push or the pedal may go closer to the floor. It may take longer to stop. If the light is still on, have the vehicle towed for service. See *Towing Your Vehicle on page 5-33* and *DIC Warnings and Messages on page 4-51* for more information.

Antilock Brake System (ABS) Warning Light

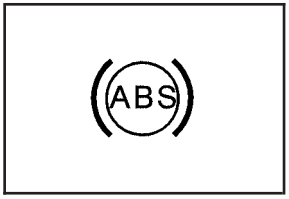

For vehicles with the Antilock Brake System (ABS), this light comes on briefly when the engine is started.

If it does not, have the vehicle serviced by your dealer/retailer. If the system is working normally the indicator light then goes off.

If the ABS light stays on, turn the ignition off. If the light comes on while driving, stop as soon as it is safely possible and turn the ignition off. Then start the engine again to reset the system. If the ABS light stays on, or comes on again while driving, the vehicle needs service. If the regular brake system warning light is not on, the vehicle still has brakes, but not antilock brakes. If the regular brake system warning light is also on, the vehicle does not have antilock brakes and there is a problem with the regular brakes. See *Brake System Warning Light on page 4-35*.

For vehicles with a Driver Information Center (DIC), see *DIC Warnings and Messages on page 4-51* for all brake related DIC messages.

Traction Control System (TCS) Warning Light

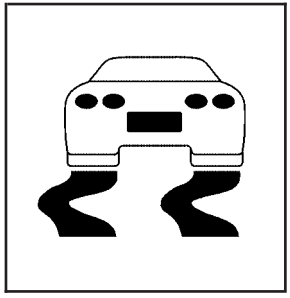

The Traction Control System (TCS) Warning light comes on briefly when the engine is started.

If the light does not, have the vehicle serviced by your dealer/retailer. If the system is working normally the light then goes off.

If the light stays on, or comes on while driving and a SERVICE TRACTION SYSTEM message displays in the Driver Information Center (DIC), the vehicle needs service.

When the TCS is turned off, this light comes on and a TRACTION SYSTEM OFF message displays on the DIC. When this light is on, the TCS system does not limit wheel spin.

When the TCS is turned back on, this light turns off and a TRACTION SYSTEM ON message displays on the DIC

This light also comes on while the vehicle is in the Competitive Driving Mode.

See *Traction Control System (TCS) on page 5-6* and *DIC Warnings and Messages on page 4-51* for more information.

See *Active Handling System on page 5-8* for more information on Competitive Driving Mode and Performance Traction Mode.

Active Handling System Light

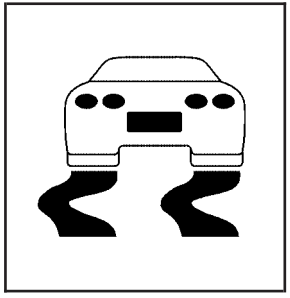

The Active Handling System light comes on briefly as the engine is started. If the light does not, have the vehicle serviced by your dealer/retailer. If the system is working normally the light goes off.

If the light stays on or comes on while driving, a chime sounds and a SERVICE ACTIVE HANDLING SYSTEM message appears on the DIC and the vehicle need service.

This light also comes on while the vehicle is in the Competitive Driving Mode.

For the ZR1 this light comes on when Performance Traction mode is activated, along with DIC messages for the five traction modes.

When the Active Handling System is turned off, the light comes on, a chime sounds, and the TRACTION SYSTEM AND ACTIVE HANDLING – OFF message displays in the DIC. The Traction Control System is off and the Active Handling System does not assist with controlling the vehicle.

When the Active Handling System is turned back on, the light turns off, a chime sounds and the TRACTION SYSTEM AND ACTIVE HANDLING – ON message displays in the DIC.

See *DIC Warnings and Messages on page 4-51* for more information.

Engine Coolant Temperature Gage

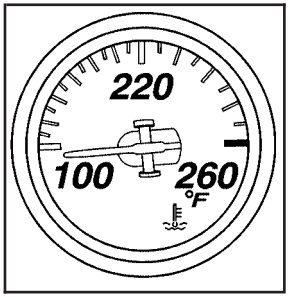

United States

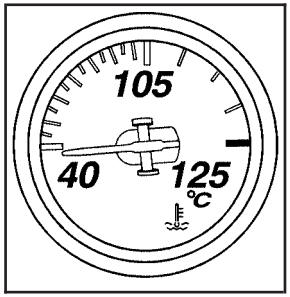

Canada

This gage shows the engine coolant temperature. If the gage pointer moves into the shaded area, the engine is too hot.

This means that the engine coolant has overheated. If the vehicle has been operating under normal driving conditions, pull off the road, stop the vehicle and turn off the engine as soon as possible.

See *Engine Overheating on page 6-41* for more information.

Tire Pressure Light

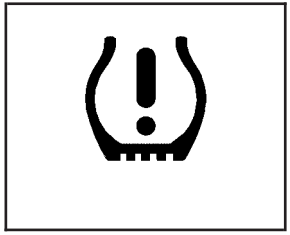

For vehicles with a tire pressure monitoring system, this light comes on briefly when the engine is started. It provides information about tire pressures and the Tire Pressure Monitoring System.

When the Light is On Steady

This indicates that one or more of the tires are significantly underinflated.

A tire pressure message in the Driver Information Center (DIC), can accompany the light. See *Driver Information Center (DIC) on page 4-46* for more information. Stop and check the tires as soon as it is safe to do so. If underinflated, inflate to the proper pressure. See *Inflation - Tire Pressure on page 6-72* for more information.

When the Light Flashes First and Then is On Steady

This indicates that there may be a problem with the Tire Pressure Monitor System. The light flashes for about a minute and stays on steady for the remainder of the ignition cycle. This sequence repeats with every ignition cycle. See *Tire Pressure Monitor Operation on page 6-76* for more information.

Malfunction Indicator Lamp

Check Engine Light

A computer system called OBD II (On-Board Diagnostics-Second Generation) monitors operation of the fuel, ignition, and emission control systems. It makes sure that emissions are at acceptable levels for the life of the vehicle, helping to produce a cleaner environment.

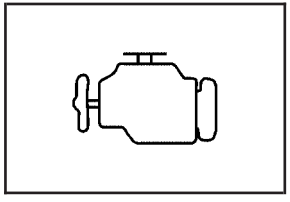

This comes on briefly while starting the engine. If it does not come on, have the vehicle serviced by your dealer/retailer.

If the check engine light comes on and stays on, while the engine is running, this indicates that there is an OBD II problem and service is required.

Malfunctions often are indicated by the system before any problem is apparent. Being aware of the light can prevent more serious damage to the vehicle. This system assists the service technician in correctly diagnosing any malfunction.

Notice: **If the vehicle is continually driven with this light on, after a while, the emission controls might not work as well, the vehicle's fuel economy might not be as good, and the engine might not run as smoothly. This could lead to costly repairs that might not be covered by the vehicle warranty.**

Notice: **Modifications made to the engine, transmission, exhaust, intake, or fuel system of the vehicle or the replacement of the original tires with other than those of the same Tire Performance Criteria (TPC) can affect the vehicle's emission controls and can cause this light to come on. Modifications to these systems could lead to costly repairs not covered by the vehicle warranty. This could also result in a failure to pass a required Emission Inspection/Maintenance test. See *Accessories and Modifications on page 6-3*.**

This light comes on during a malfunction in one of two ways:

Light Flashing: A misfire condition has been detected. A misfire increases vehicle emissions and could damage the emission control system on the vehicle. Diagnosis and service might be required.

The following can prevent more serious damage to the vehicle:

- Reduce vehicle speed.
- Avoid hard accelerations.
- Avoid steep uphill grades.

If the light continues to flash, when it is safe to do so, stop the vehicle. Find a safe place to park the vehicle. Turn off the ignition, wait at least 10 seconds, and restart the engine. If the light is still flashing, follow the previous steps and see your dealer/retailer for service as soon as possible.

Light On Steady: An emission control system malfunction has been detected on the vehicle. Diagnosis and service might be required.

An emission system malfunction might be corrected by doing the following:

- Make sure the fuel cap is fully installed. See *Filling the Tank on page 6-9*. The diagnostic system can determine if the fuel cap has been left off or improperly installed. A loose or missing fuel cap allows fuel to evaporate into the atmosphere. A few driving trips with the cap properly installed should turn the light off.
- If the vehicle has been driven through a deep puddle of water, the vehicle's electrical system might be wet. The condition is usually corrected when the electrical system dries out. A few driving trips should turn the light off.
- Make sure to fuel the vehicle with quality fuel. Poor fuel quality causes the engine not to run as efficiently as designed and may cause: stalling after start-up, stalling when the vehicle is changed into gear, misfiring, hesitation on acceleration, or stumbling on acceleration. These conditions might go away once the engine is warmed up.

  If one or more of these conditions occurs, change the fuel brand used. It will require at least one full tank of the proper fuel to turn the light off.

  See *Gasoline Octane on page 6-6*.

If none of the above have made the light turn off, your dealer/retailer can check the vehicle. The dealer/retailer has the proper test equipment and diagnostic tools to fix any mechanical or electrical problems that might have developed.

Emissions Inspection and Maintenance Programs

Some state/provincial and local governments have or might begin programs to inspect the emission control equipment on the vehicle. Failure to pass this inspection could prevent getting a vehicle registration.

Here are some things to know to help the vehicle pass an inspection:

- The vehicle will not pass this inspection if the check engine light is on with the engine running.

  To perform a check engine light bulb check with the keyless ignition, make sure the transmitter fob is in the passenger compartment. See *Ignition Positions on page 3-22*. Press the bottom of the Acc. button on the instrument panel and hold the button down for five seconds. The instrument panel, including the check engine light, will light up and the ignition will be on, but the engine will not start — press the bottom of the Acc. button only briefly, less than five seconds, the accessory power mode will be turned on, but not the ignition. After the bulb check, press and release the Acc. button again to turn the ignition off and avoid draining the vehicle's battery.

- The vehicle will not pass this inspection if the OBD II (on-board diagnostic) system determines that critical emission control systems have not been completely diagnosed by the system. The vehicle would be considered not ready for inspection. This can happen if the battery has recently been replaced or if the battery has run down. The diagnostic system is designed to evaluate critical emission control systems during normal driving. This can take several days of routine driving. If this has been done and the vehicle still does not pass the inspection for lack of OBD II system readiness, your dealer/retailer can prepare the vehicle for inspection.

Engine Oil Pressure Gage

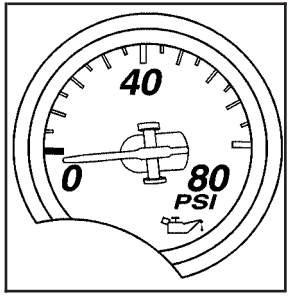

United States

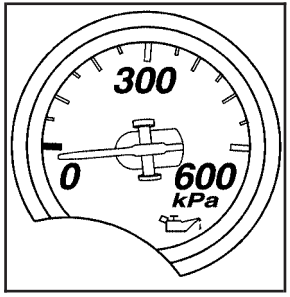

Canada

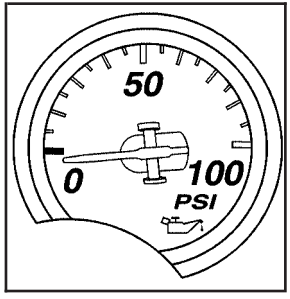

United States — Z06 and ZR1 Models

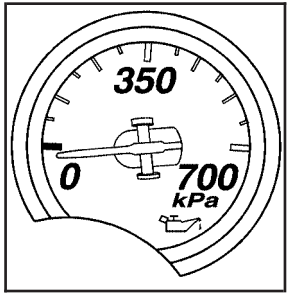

Canada — Z06 and ZR1 Models

⚠ WARNING:

Do not keep driving if the oil pressure is low. The engine can become so hot that it catches fire. Someone could be burned. Check the oil as soon as possible and have the vehicle serviced.

Notice: **Lack of proper engine oil maintenance can damage the engine. The repairs would not be covered by the vehicle warranty. Always follow the maintenance schedule in this manual for changing engine oil.**

The engine oil pressure gage shows the engine oil pressure in psi (pounds per square inch) or kPa (kilopascals) when the engine is running.

Oil pressure should be 140 to 550 kPa (20 to 80 psi). In certain situations such as long, extended idles on hot days, it could read as low as 40 kPa (6 psi) and still be considered normal. It may vary with engine speed, outside temperature and oil viscosity, but readings above the shaded area show the normal operating range. Readings in the shaded area tell you that the engine is low on oil, or that you might have some other oil problem. See *Engine Oil on page 6-20*.

The engine oil pressure can also be displayed using the GAGES button on the Driver Information Center (DIC). See *Driver Information Center (DIC) on page 4-46*.

Security Light

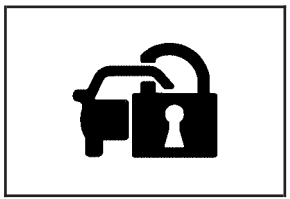

For information regarding this light and the vehicle's security system, see *Theft-Deterrent System on page 3-18*.

Fog Lamp Light

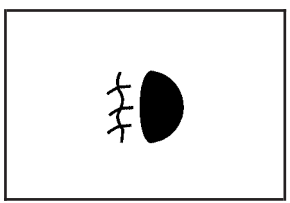

The fog lamp light comes on when the fog lamps are in use.

The light goes out when the fog lamps are turned off. See *Fog Lamps on page 4-13* for more information.

Lights On Reminder

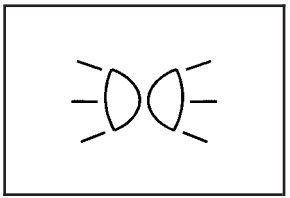

This light comes on whenever the parking lamps are on.

See *Headlamps on Reminder on page 4-12* for more information.

Highbeam On Light

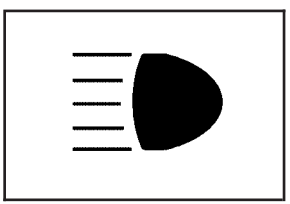

This light comes on when the high-beam headlamps are in use.

See *Headlamp High/Low-Beam Changer on page 4-5* for more information.

Fuel Gage

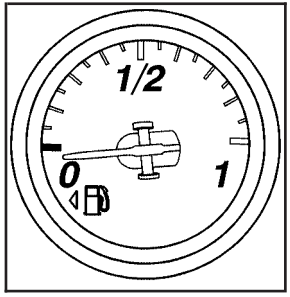

The fuel gage shows how much fuel the vehicle has left while the engine is on.

An arrow on the fuel gage indicates the side of the vehicle the fuel door is on.

When the needle approaches the low fuel symbol, a chime sounds and LOW FUEL appears on the Driver Information Center (DIC) display. There is still a little fuel left, but the vehicle's fuel tank should be filled soon.

Press the RESET button to acknowledge a DIC message(s). Pressing the RESET button also turns off a DIC message but the LOW FUEL message comes on again in 10 minutes if fuel is not added to the vehicle.

Here are five things that some owners ask about. All these things are normal and do not indicate that anything is wrong with the fuel gage.

- At the service station, the gas pump shuts off before the gage reads the full.
- It takes a little more or less fuel to fill up than the gage indicated. For example, the gage may have indicated half full, but it took a little more or less than half of the tank's capacity to fill the tank.
- The gage pointer may move while cornering, braking or speeding up.
- The gage may not indicate the tank is empty when the ignition is turned off.
- The gage reading may change slightly within the first several minutes after starting the vehicle.

See *DIC Operation and Displays on page 4-46* for more information.

Boost Gage (ZR1 Only)

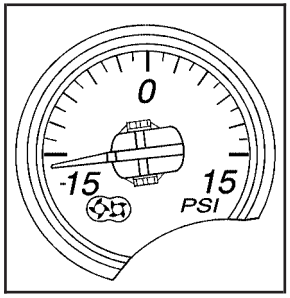

United States

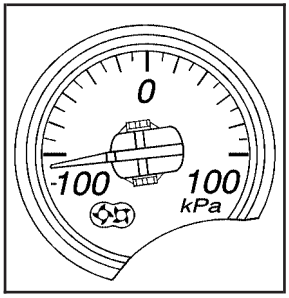

Canada

For vehicles that have this gage, it is located near the driver side of the instrument panel cluster.

This gage indicates vacuum during light to moderate throttle and boost under heavier throttle.

It displays the air pressure level in the intake manifold before it enters the engine's combustion chamber.

The gage is automatically centered at zero every time the engine is started. Actual vacuum or boost is displayed from this zero point. Changes in ambient pressure, such as driving in mountains and changing weather, will slightly change the zero reading.

Driver Information Center (DIC)

The Driver Information Center (DIC) display is located on the instrument panel cluster and shows driver personalization features and warning/status messages. The DIC buttons are located on the instrument panel, to the right of the cluster.

The DIC comes on when the ignition is turned on. After displaying CORVETTE BY CHEVROLET, the DIC shows the information that was last displayed before the engine was turned off.

If a problem is detected, a warning message appears on the DIC display. See *DIC Warnings and Messages on page 4-51* for more information.

DIC Operation and Displays

Depending on the features on the vehicle, the drive gear may display on the DIC. See "Manual Paddle Shift" under *Automatic Transmission Operation on page 3-26* and "Head-Up Display (HUD)" in the index of the Navigation system manual for more information.

The Driver Information Center (DIC) has different modes which can be accessed by pressing the following buttons located on the instrument panel, to the right of the instrument panel cluster.

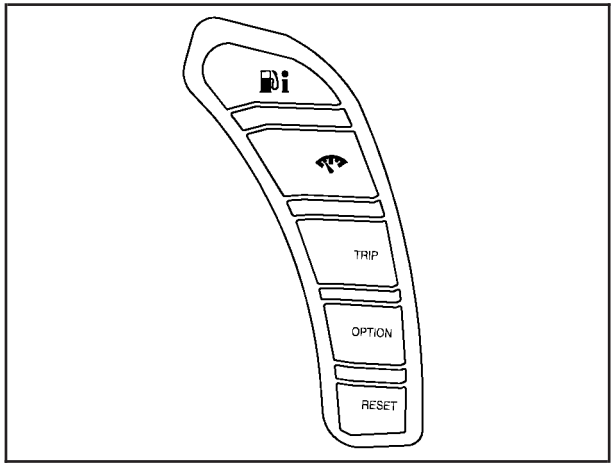

(Fuel): Press this button to display fuel information such as fuel economy and range.

(Gages): Press this button to display gage information like oil pressure and temperature, coolant temperature, automatic transmission fluid temperature, if equipped, battery voltage, and front/rear tire pressures.

TRIP: Press this button to display your total and trip distance driven, the elapsed time function, your average speed, and the engine oil life.

OPTION: Press this button to choose personal options that are available on your vehicle, depending on the options your vehicle is equipped with, such as door locks, easy entry seats, and language.

RESET: Press this button, used along with the other buttons, to reset system functions, select personal options, and turn off or acknowledge messages on the DIC.

FUEL Button

The fuel button displays average fuel economy and instantaneous fuel economy, calculated for your specific driving conditions, and range information.

Average Fuel Economy: The average fuel economy is viewed as a long-term approximation of your overall driving conditions. You should reset the average fuel economy display every time you refuel. If you press the RESET button in this mode while you are driving, the system will reset this display and begin figuring fuel economy from that point in time.

Press the fuel button to display average fuel economy, such as:

- AVERAGE FUEL ECONOMY 11.7 L/100 km or
- AVERAGE FUEL ECONOMY 20.1 MPG

Instantaneous Fuel Economy: Instantaneous fuel economy reflects only the fuel economy that the vehicle has right now and will change frequently as driving conditions change. Unlike average fuel economy, this menu item cannot be reset.

Press the fuel button again to display instantaneous fuel economy, such as:

- INSTANT FUEL ECONOMY 11.7 L/100 km or
- INSTANT FUEL ECONOMY 20.1 MPG

Fuel Range: The range calculates the remaining distance you can drive without refueling. It is based on fuel economy and the fuel remaining in the tank.

Press the fuel button again to display the range, such as:

- RANGE 48 km or
- RANGE 30 MI

If the LOW FUEL warning is displayed or if RANGE is less than 64 km (40 miles), the display will read RANGE LOW.

The fuel economy data used to determine fuel range is an average of recent driving conditions. As your driving conditions change, this data is gradually updated automatically.

If the vehicle has been idling for a long time, the range displayed on the DIC could be abnormally low. The vehicle must be driven 8–16 km (5–10 miles) to get an accurate reading.

GAGES Button

The gages button displays oil pressure, oil temperature, coolant temperature, transmission fluid temperature for automatic transmission vehicles only, battery voltage, and tire pressure information.

Oil Pressure: This display shows the oil pressure.

Press the gages button to display the oil pressure, such as:

- OIL PRESSURE 276 kPa or
- OIL PRESSURE 40 PSI

Oil Temperature: This display shows the oil temperature.

Press the gages button again to display the oil temperature, such as:

- OIL TEMPERATURE 112°C or
- OIL TEMPERATURE 234°F

If the oil temperature is low, the display will show OIL TEMPERATURE LOW. If the oil temperature is high, the display will show OIL TEMPERATURE HIGH.

Coolant Temperature: This display shows the engine coolant temperature.

Press the gages button again to display the coolant temperature, such as:

- COOLANT TEMPERATURE 51°C or
- COOLANT TEMPERATURE 123°F

If the coolant temperature is low, the display will show COOLANT TEMPERATURE LOW. If the coolant temperature is high, the display will show COOLANT TEMPERATURE HIGH.

Transmission Fluid Temperature: If you have an automatic transmission vehicle, this display shows the automatic transmission fluid temperature.

Press the gages button again to display the automatic transmission fluid temperature, such as:

- TRANS FLUID TEMP 51°C or
- TRANS FLUID TEMP 123°F

If the transmission fluid temperature is low, the display will show TRANS FLUID TEMP LOW. If the transmission fluid temperature is high, the display will show TRANS FLUID TEMP HIGH.

Battery Voltage: This display shows the current battery voltage.

Press the gages button again to display the battery voltage, such as:

- BATTERY VOLTAGE 13.5 VOLTS

Tire Pressure: This display shows the tire pressure for each tire.

Press the gages button again to display the tire pressure for the front tires, such as:

- FRONT TIRE PRESSURES L 234 kPa R 228 kPa or
- FRONT TIRE PRESSURES L 34 PSI R 33 PSI

Press the gages button again to display the tire pressure for the rear tires, such as:

- REAR TIRE PRESSURES L 234 kPa R 228 kPa or
- REAR TIRE PRESSURES L 34 PSI R 33 PSI

TRIP Button

The TRIP button displays the odometer, trip distance, elapsed time, average speed, and oil life remaining information.

Odometer: The odometer shows how far your vehicle has been driven in either kilometers or miles. Press the TRIP button to display odometer readings, such as:

- ODOMETER 20008 km or
- ODOMETER 12345 MI

You can also display the odometer by turning on the parking lamps.

Trip Odometers: There are two trip odometers. Press the TRIP button to display TRIP ODOMETER A readings and press the button again to display TRIP ODOMETER B readings, such as:

- TRIP ODOMETER A 209.9 km or
- TRIP ODOMETER A 130.5 MI
- TRIP ODOMETER B 483.5 km or
- TRIP ODOMETER B 300.5 MI

Both of the trip odometers can be used simultaneously. The trip odometers can be reset by pressing the RESET button on the DIC.

There is also a miles since last ignition feature that displays the number of kilometers (miles) driven since you last started the vehicle. Press and hold the RESET button for three seconds, then release it. The kilometers (miles) since the last ignition cycle will be set into the trip odometer.

Elapsed Timer: Press the TRIP button until ELAPSED TIMER is displayed, such as ELAPSED TIMER .00.

When the ignition is in on, the DIC can be used as a stopwatch. The display can show hours, minutes and seconds. The elapsed time indicator will record up to 23 hours, 59 minutes and 59 seconds, then it will reset to zero and continue counting. The display appears as ELAPSED TIMER .00 in the elapsed time function.

You can start or stop the elapsed time by pressing the RESET button. To reset the elapsed time to zero, press the RESET button for three seconds while the timer is displayed.

Pressing and holding the RESET button for at least 10 seconds will reset the timer display to the time since last ignition cycle.

Average Speed: Press the TRIP button until the average speed is displayed, such as:

- AVERAGE SPEED 100 km/h or
- AVERAGE SPEED 62 MPH

Press and hold the RESET button to reset to 0.0 km/h (mph).

Engine Oil Life: Press the TRIP button until the engine oil life is displayed, such as OIL LIFE REMAINING 89%.

This is an estimate of the engine oil's remaining useful life. It will show 100% when the system is reset after an oil change. It will alert you to change the oil on a schedule consistent with your driving conditions.

When the remaining oil life is low, the system will alert you with the message CHANGE ENGINE OIL.

Remember, you must reset the engine oil life system yourself after each oil change. It will not reset itself. To reset the system, see *Engine Oil Life System on page 6-27*. Be careful not to reset the engine oil life system accidentally at any time other than when the oil has just been changed. It cannot be reset accurately until the next oil change.

See *Scheduled Maintenance on page 7-3* and *Engine Oil on page 6-20* for more information.

OPTION Button

The OPTION button allows you to access the PERSONAL OPTIONS menu and customize the personalization settings on your vehicle. See *DIC Vehicle Personalization on page 4-69* for more information.

RESET Button

The RESET button, used along with other buttons, will reset system functions and turn off or acknowledge messages on the DIC.

DIC Warnings and Messages

Messages are displayed on the DIC to notify the driver that the status of the vehicle has changed and that some action may be needed by the driver to correct the condition. Multiple messages may appear one after another. You can scroll through the messages that may have been sent at the same time. The DIC is continuously updated with the vehicle performance status.

Some messages may not require immediate action, but you can press the RESET button to acknowledge that you received the messages and to clear them from the display.

Some messages cannot be cleared from the DIC display because they are more urgent. These messages require action before they can be cleared. You should take any messages that appear on the display seriously and remember that clearing the messages will only make the messages disappear, not correct the problem.

The following are the possible messages that can be displayed and some information about them.

ABS (Antilock Brake System) ACTIVE

This message displays when the Antilock Brake System (ABS) is adjusting brake pressure to help avoid a braking skid.

Slippery road conditions may exist if this message is displayed, so adjust your driving accordingly. The message stays on for a few seconds after the system stops adjusting brake pressure. See *Antilock Brake System (ABS) on page 5-5* for more information.

ACTIVE HANDLING

This message displays when the Active Handling System is operating. The Active Handling System is a computer controlled system that assists the driver in controlling the vehicle in difficult driving conditions. You may feel or hear the system working and see the ACTIVE HANDLING message displayed in the DIC. This message stays on for a few seconds following the active handling event. This is normal when the system is operating. See *Active Handling System on page 5-8* and *Braking on page 5-3*.

ACTIVE HANDLING READY

This message displays when the functional check of the Active Handling System has been completed. See *Active Handling System on page 5-8* for more information.

ATTACH TRUNK PARTITION

If the vehicle has a power convertible top, this message displays and a sound will be heard if the trunk partition is not in place. Open the hatch/trunk and make sure the trunk partition is secure and no objects are on the trunk partition. See *Rear Storage Area on page 3-49* for more information.

BATTERY SAVER ACTIVE

This message displays when the vehicle has detected that the battery voltage is dropping beyond a reasonable point. The battery saver system starts reducing certain features of the vehicle that you may be able to notice. At the point that features are disabled, this message is displayed. It means that the vehicle is trying to save the charge in the battery. Turn off unnecessary accessories to allow the battery to recharge.

BUCKLE PASSENGER

This message reminds you to buckle the passenger's safety belt.

This message displays and a sound will be heard when the ignition is on, the driver's safety belt is buckled, the passenger's safety belt is unbuckled with the passenger airbag enabled, and the vehicle is in motion. You should have the passenger buckle their safety belt.

The reminder will be repeated if the ignition is on, the vehicle is in motion, the driver is buckled and the passenger is still unbuckled, and the passenger airbag is enabled. If the passenger's safety belt is already buckled, this message will not come on.

BUCKLE SEATBELT

This message reminds you to buckle the driver's safety belt.

This message displays and a sound will be heard when the ignition is on, the driver's safety belt is unbuckled, and the vehicle is in motion. You should buckle your safety belt.

If the driver remains unbuckled when the ignition is on and the vehicle is in motion, the reminder will be repeated. If the driver's safety belt is already buckled, this message will not come on.

This message is an additional reminder to the safety belt reminder light in the instrument panel cluster. See *Safety Belt Reminders on page 4-31* for more information.

CHANGE BRAKE PADS

On vehicles with electronic brake pad wear sensors, this message will be displayed when the pads are worn. See your dealer/retailer for service.

CHANGE ENGINE OIL

This message displays when the life of the engine oil has expired. See *Scheduled Maintenance on page 7-3*. After an oil change, the engine oil life system must be reset. See "Engine Oil Life" under *DIC Operation and Displays on page 4-46*. Also, see *Engine Oil on page 6-20* and *Engine Oil Life System on page 6-27* for more information.

CHECK BRAKE FLUID

This message displays, a sound will be heard, and the brake system warning light on the instrument panel cluster turns on if the ignition is on to inform the driver that the brake fluid level is low. See *Brake System Warning Light on page 4-35*. Have the brake system serviced by your dealer/retailer as soon as possible. See *Brakes on page 6-46*.

CHECK COOLANT LEVEL

This message displays when the engine coolant level is low. Have the cooling system serviced by your dealer/retailer as soon as possible. See *Engine Coolant on page 6-36*.

CHECK GAS CAP

This message displays if the fuel cap has not been fully tightened. Check the fuel cap to make sure that it is on properly. Once tightened, it takes at least one overnight park to reset or clear this message. If both the CHECK GAS CAP message and the malfunction indicator lamp in the instrument panel cluster are on, you may need to see your dealer/retailer for service. See *Malfunction Indicator Lamp on page 4-40* for more information.

CHECK OIL LEVEL

On some vehicles, this message displays and two chimes sound if the oil level in the vehicle is low. Once the vehicle senses a change in the engine oil level, the light remains off.

If this message appears after starting the engine, the engine oil level may be too low. You may need to add oil. See *Engine Overheating on page 6-41*.

To acknowledge the message, press the RESET button. The message reappears every 10 minutes until this condition changes.

CLOSE TRUNK TO MOVE TOP

This message displays and a sound will be heard if the trunk is open while you are trying to operate the convertible top. Make sure the trunk is closed before operating the convertible top. See *Convertible Top (Manual) on page 3-56* or *Convertible Top (Power) on page 3-63*.

COMPETITIVE DRIVING MODE

This message displays and a sound will be heard when the Competitive Driving mode is selected. The instrument panel cluster light will be on when the Competitive Driving mode is selected. If your vehicle is equipped with a manual transmission, Launch Control is available when this mode selected. The Traction Control System (TCS) will not be operating while in the Competitive Driving mode. Adjust your driving accordingly. This system is available on all models except ZR1. See *Competitive Driving Mode on page 5-9*, including the “Launch Control” information, and *Racing or Other Competitive Driving on page 5-19* for more information.

COOLANT OVER TEMPERATURE

This message displays and a sound will be heard if the engine coolant exceeds 124°C (255°F). If you have been operating the vehicle under normal driving conditions, pull off the road, stop the vehicle, and turn off the engine as soon as possible.

You can monitor the coolant temperature with the gages button on the DIC or the engine coolant temperature gage on the instrument panel cluster. See *Engine Overheating on page 6-41*, *DIC Operation and Displays on page 4-46*, and *Engine Coolant Temperature Gage on page 4-39*.

To acknowledge the message, press the RESET button. The message and sound will come back on until this condition changes. If you do not press the RESET button, the message remains on until the condition changes.

CRUISE DISENGAGED

This message displays briefly when you disengage the cruise control system by stepping on the brake on an automatic transmission vehicle or the clutch on a manual transmission vehicle, or by turning off the cruise control switch. See *Cruise Control on page 4-7* for more information.

ENGINE DRAG CONTROL ACTIVE

This message displays when engine drag control is active. When driving in a lower gear in rainy, snowy, or icy conditions and then letting up on the accelerator or downshifting, the rear wheels may begin to slip and this message displays. This message stays on for a few seconds following the engine drag control event.

ENGINE OVERHEATED – STOP ENGINE

This message displays and a sound will be heard when the engine has overheated. Stop and turn the engine off immediately to avoid severe engine damage. See *Engine Overheating on page 6-41*.

ENGINE PROTECTION REDUCE ENGINE RPM

This message displays if the engine oil temperature exceeds 160°C (320°F). Check the engine coolant temperature and engine oil level. If the engine is too hot, see *Engine Overheating on page 6-41*. The vehicle may need service, so see your dealer/retailer.

You can monitor the oil temperature with the gages button on the DIC. See *DIC Operation and Displays on page 4-46*.

Multiple chimes sound when this message is displayed. This message remains displayed and active until the issue is resolved.

HEADLAMPS SUGGESTED

This message displays if it is dark enough outside and the headlamps and the Twilight Sentinel® controls are off. This message informs the driver that turning on the exterior lamps is recommended. It has become dark enough outside to require the headlamps and/or other exterior lamps.

HIGH TIRE PRESSURE

This message may be displayed when one or more of the tires is over-inflated. This message also displays LEFT FRONT, RIGHT FRONT, LEFT REAR, or RIGHT REAR to indicate which tire is affected. You can receive more than one tire pressure message at a time. To read other messages that may have been sent at the same time, press the RESET button. If a tire pressure message appears on the DIC, stop as soon as you can. Have the tire pressures checked and set to those shown on the Tire Loading Information label. See *Run-Flat Tires on page 6-71*, *Loading the Vehicle on page 5-28*, *Inflation - Tire Pressure on page 6-72*, and *Tire Pressure Monitor System on page 6-74*. The DIC also shows the tire pressure values. See *DIC Operation and Displays on page 4-46*.

To acknowledge the message, press the RESET button. A message reappears every 10 minutes until the condition is corrected.

HOT ENGINE AIR CONDITIONING OFF

This message displays when the engine coolant becomes hotter than the normal operating temperature. To avoid added strain on a hot engine, the air conditioning compressor is automatically turned off. When the coolant temperature returns to normal, the A/C operation automatically resumes. You can continue to drive the vehicle. If this message continues to appear, have the system repaired by your dealer/retailer as soon as possible to avoid compressor damage.

ICE POSSIBLE

This message displays when the outside air temperature is cold enough to create icy road conditions. Adjust your driving accordingly.

LOW FUEL

This message displays when the fuel tank is less than 10 percent full and the display is turned off. A sound will be heard when this message is displayed. Refill the fuel tank as soon as possible. See *Fuel Gage on page 4-45*.

LOW OIL PRESSURE

This message displays if low oil pressure levels occur. If this message appears while the engine is running, stop the engine and do not operate it until the cause of low oil pressure is corrected. Severe damage to the engine can result. A sound will be heard when this message is displayed. See *Engine Oil on page 6-20*.

LOW TIRE PRESSURE or TIRE LOW ADD AIR TO TIRE

⚠ WARNING:

When the LOW TIRE PRESSURE or TIRE FLAT message is displayed on the Driver Information Center, your vehicle's handling capabilities will be reduced during severe maneuvers. The active handling system will be affected. See *Active Handling System on page 5-8*. If you drive too fast, you could lose control of your vehicle. You or others could be injured. Do not drive over 55 mph (90 km/h) when the LOW TIRE PRESSURE or TIRE FLAT message is displayed. Drive cautiously and check your tire pressures as soon as you can.

This message displays when one or more of the tires is under-inflated. This message also displays LEFT FRONT, RIGHT FRONT, LEFT REAR, or RIGHT REAR to indicate which tire is affected. Multiple chimes sound and the tire pressure light on the instrument panel cluster turns on when this message is displayed. See *Tire Pressure Light on page 4-39*. You can receive more than one tire pressure message at a time. To read other messages that may have been sent at the same time, press the RESET button. If a tire pressure message appears on the DIC, stop as soon as you can. Have the tire pressures checked and set to those shown on the Tire Loading Information label. See *Run-Flat Tires on page 6-71*, *Loading the Vehicle on page 5-28*, *Inflation - Tire Pressure on page 6-72*, and *Tire Pressure Monitor System on page 6-74*. The DIC also shows the tire pressure values. See *DIC Operation and Displays on page 4-46*.

To acknowledge the message, press the RESET button. A message reappears every 10 minutes until the condition is corrected.

MAXIMUM SPEED 129 km/h (80 MPH)

This message displays when a malfunction is present in the Selective Ride Control system. The vehicle speed will be limited to a value determined by the vehicle when the shock absorber system has failed and the shocks are in their full soft mode. Have the vehicle serviced by your dealer/retailer as soon as possible.

To acknowledge the message, press the RESET button. The message reappears every 10 minutes until this condition changes.

NO FOBS DETECTED

This message displays if the vehicle does not detect the presence of a keyless access transmitter when you have attempted to start the vehicle or a vehicle door has just closed. The following conditions may cause this message to appear:

- Driver-added equipment plugged into the accessory power outlet on the center console is causing interference. Examples of these devices are cell phones and cell phone chargers, two-way radios, power inverters, or similar items. Try moving the keyless access transmitter away from these devices when starting the vehicle. In addition, PDA devices and remote garage and gate openers may also generate Electromagnetic Interference (EMI) that may interfere with the keyless access transmitter. Do not carry the keyless access transmitter in the same pocket or bag as these devices.
- The vehicle is experiencing Electromagnetic Interference (EMI). Some locations, such as airports, automatic toll booths, and some gas stations have EMI fields which may interfere with the keyless access transmitter.

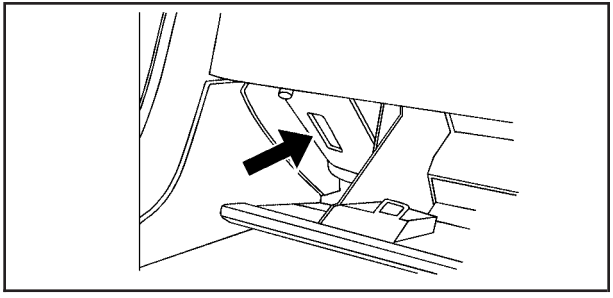

If moving the transmitter to different locations within the vehicle does not help, place the transmitter in the glove box transmitter pocket with the buttons facing to the right and then press the START button.

- The vehicle’s battery voltage is low. The battery voltage must be above 10 volts for the keyless access transmitter to be detected properly.

NO FOB - OFF OR RUN?

This message displays when the keyless access transmitter is not detected inside the vehicle while you are trying to turn the ignition off. The vehicle may be near a strong radio antenna signal causing the keyless access system to be jammed. The vehicle will remain in ACCESSORY until the vehicle is turned off or is restarted, or five minutes has expired. If you turn the ignition off and you cannot find the keyless access transmitter, you will not be able to restart the vehicle. The keyless access transmitter needs to be inside of the vehicle in order for the vehicle to start. See *Starting the Engine on page 3-24* for more information.

OPTIONS UNAVAILABLE

This message displays for a few seconds if a keyless access transmitter that is not labelled 1 or 2 is used and you try to personalize the features on the vehicle by pressing the OPTION button. The personalization system will not recognize the transmitter and the DIC will not display the current driver number or the menus used to set personalizations. The personalization features will then be set to the default states. See *DIC Vehicle Personalization on page 4-69* for more information.

PERF TRAC 1 – WET ACTIVE HANDLING ON

This message displays and a sound will be heard when this Performance Traction Management mode is selected. The instrument panel cluster light will also be on when this mode is selected. Launch Control is available when this mode selected. In this mode the Traction Control and Active Handling System are available but intended for use on wet race track conditions. Adjust your driving accordingly. This system is available only on ZR1 models. See “Performance Traction Management” and “Launch Control” under *Competitive Driving Mode on page 5-9* and *Racing or Other Competitive Driving on page 5-19* for more information about the use of this mode.

PERF TRAC 2 – DRY ACTIVE HANDLING ON

This message displays and a sound will be heard when this Performance Traction Management mode is selected. The instrument panel cluster light will also be on when this mode is selected. Launch Control is available when this mode selected. In this mode the Traction Control and Active Handling System are available but intended for use on dry race track conditions. Adjust your driving accordingly.

This system is available only on ZR1 models. See “Performance Traction Management” and “Launch Control” under *Competitive Driving Mode on page 5-9* and *Racing or Other Competitive Driving on page 5-19* for more information about the use of this mode.

PERF TRAC 3 – SPORT ACTIVE HANDLING ON

This message displays and a sound will be heard when this Performance Traction Management mode is selected. The instrument panel cluster light will also be on when this mode is selected. Launch Control is available when this mode selected. In this mode the Traction Control and Active Handling System are available but intended for use on dry race track conditions. Adjust your driving accordingly. This system is available only on ZR1 models. See “Performance Traction Management” and “Launch Control” under *Competitive Driving Mode on page 5-9* and *Racing or Other Competitive Driving on page 5-19* for more information about the use of this mode.

PERF TRAC 4 – SPORT ACTIVE HANDLING OFF

This message displays and a sound will be heard when this Performance Traction Management mode is selected. The instrument panel cluster light will also be on when this mode is selected. Launch Control is available when this mode selected. In this mode the Traction Control is available but intended for use on dry race track conditions. The Active Handling System is disabled when this mode is selected. This mode will require more driver skill than modes 1-3. Adjust your driving accordingly. This system is available only on ZR1 models. See “Performance Traction Management” and “Launch Control” under *Competitive Driving Mode on page 5-9* and *Racing or Other Competitive Driving on page 5-19* for more information about the use of this mode.

PERF TRAC 5 – RACE ACTIVE HANDLING OFF

This message displays and a sound will be heard when this Performance Traction Management mode is selected. The instrument panel cluster light will also be on when this mode is selected. Launch Control is available when this mode selected. In this mode the Traction Control is available but intended for use on dry race track conditions. The Active Handling System is disabled when this mode is selected. This mode will require more driver skill than modes 1-4. Adjust your driving accordingly.

This system is available only on ZR1 models. See “Performance Traction Management” and “Launch Control” under *Competitive Driving Mode on page 5-9* and *Racing or Other Competitive Driving on page 5-19* for more information about the use of this mode.

PRESS BRAKE TO START ENGINE (Automatic Transmission Only)

This message displays if you try to start the engine by pressing the keyless ignition start button without having the brake pressed. The brake needs to be pressed when starting the engine. See *Ignition Positions on page 3-22* for more information.

REDUCED ENGINE POWER

If this message displays and the check engine light comes on, a noticeable reduction in the vehicle’s performance may occur. If the REDUCED ENGINE POWER message is displayed, but there is no reduction in performance, proceed to your destination. The performance may be reduced the next time the vehicle is driven.

The vehicle may be driven at a reduced speed while the REDUCED ENGINE POWER message is displayed, but acceleration and speed may be reduced.

Anytime the check engine light stays on, the vehicle should be taken to your dealer/retailer as soon as possible for diagnosis and repair. See *Malfunction Indicator Lamp on page 4-40* for more information.

Multiple chimes sound when this message is displayed.

To acknowledge the message, press the RESET button. The message reappears every five minutes until this condition changes.

If the REDUCED ENGINE POWER message is displayed in combination with the COOLANT OVER TEMPERATURE message, see *Engine Overheating on page 6-41*.

SERVICE ACTIVE HANDLING SYSTEM

This message displays if there is a problem with the Active Handling System and the vehicle needs service. The active handling system light on the instrument panel cluster also turns on and a sound will be heard. See your dealer/retailer. When this message is displayed, the system is not working. Adjust your driving accordingly. See *Active Handling System on page 5-8* for more information.

SERVICE AIR CONDITIONING

This message displays when the electronic sensors that control the air conditioning and heating systems are no longer working. Have the climate control system serviced by your dealer/retailer if you notice a drop in heating and air conditioning efficiency.

SERVICE ANTILOCK BRAKES

If this message displays while you are driving, stop as soon as possible and turn the ignition off. Then start the engine again to reset the system. If the message stays on, or comes back on again while you are driving, the vehicle is in need of service. See your dealer/retailer. If the antilock brake system (ABS) warning light is on and the regular brake system warning light is not on, you still have brakes, but do not have ABS. If the regular brake system warning light is also on, you do not have ABS and there is a problem with the brakes. See *Antilock Brake System (ABS) Warning Light on page 4-36* and *Brake System Warning Light on page 4-35*.

If this message is displayed, the Traction Control System (TCS) and the Active Handling System will also be disabled. The DIC will scroll three messages: SERVICE ANTILOCK BRAKES, SERVICE TRACTION SYSTEM, and SERVICE ACTIVE HANDLING, and the instrument panel cluster lights will come on along with a sound. When the service message is displayed, the computer controlled systems will not assist the driver. Have the system repaired by your dealer/retailer as soon as possible. Adjust your driving accordingly.

To acknowledge these messages, press the RESET button.

SERVICE CHARGING SYSTEM

If this message displays while you are driving, there may be a problem with the electrical charging system. It could mean that there is a loose or broken drive belt or that there is another electrical problem. Have the vehicle checked right away by your dealer/retailer. Driving while this message is on could drain the battery.

If you must drive a short distance with the message on, be certain to turn off the vehicle's accessories, such as the radio and air conditioner.

Multiple chimes sound when this message is displayed.

To acknowledge the message, press the RESET button. The message reappears every 10 minutes until this condition changes.

SERVICE ELECTRICAL SYSTEM

This message displays if an electrical problem has occurred within the Powertrain Control Module (PCM). Have the vehicle serviced by your dealer/retailer.

SERVICE FUEL SYSTEM

This message displays if the Powertrain Control Module (PCM) has detected a problem within the fuel system. Have the vehicle serviced by your dealer/retailer. This message also displays when the cluster is not getting fuel information from the PCM.

SERVICE RIDE CONTROL

This message displays when the Selective Ride Control system has detected a malfunction and the system must be serviced. See your dealer/retailer. If a fault is present in the Selective Ride Control system which causes the shocks to be in their full soft condition, the messages SERVICE RIDE CONTROL, SHOCKS INOPERATIVE, and MAXIMUM SPEED 129 km/h (80 MPH) will display together. See *Selective Ride Control on page 5-14* for more information.

SERVICE TIRE MONITOR

This message displays if a part on the Tire Pressure Monitor System (TPMS) is not working properly. The tire pressure light also flashes and then remains on during the same ignition cycle. See *Tire Pressure Light on page 4-39*. Several conditions may cause this message to appear. See *Tire Pressure Monitor Operation on page 6-76* for more information. If the warning comes on and stays on, there may be a problem with the TPMS. See your dealer/retailer.

SERVICE TRACTION SYSTEM

If this message displays when you are driving, there is a problem with the Traction Control System (TCS) and the vehicle is in need of service. See your dealer/retailer. When this message is displayed, the system will not limit wheel spin. Adjust your driving accordingly.

The traction control system (TCS) warning light on the instrument panel cluster will also turn on and a sound will be heard.

When this message is displayed, the computer controlled systems will not assist the driver in controlling the vehicle. Have the system repaired by your dealer/retailer as soon as possible. Adjust your driving accordingly. See *Traction Control System (TCS) on page 5-6* for more information.

To acknowledge the message, press the RESET button.

SERVICE TRANSMISSION

This message displays when there is a problem with the transmission. See your dealer/retailer for service.

SERVICE VEHICLE SOON

This message displays and a sound will be heard when there may be an electrical or another system problem with the vehicle. Have your vehicle checked by your dealer/retailer if this message keeps appearing.

SET PARK BRAKE FOR SEAT RECALL

If the vehicle has a manual transmission, this message displays if you try to recall the memory positions when the ignition is on and the parking brake is not set. If the vehicle is on, you must set the parking brake in order for the memory positions to recall. See *Memory Seat, Mirrors and Steering Wheel on page 2-4* for more information.

SET PARK BRAKE TO MOVE TOP

If the vehicle has a manual transmission, this message displays and a sound will be heard if you try to operate the power convertible top without first setting the parking brake. Set the parking brake before trying to operate the power convertible top. See *Convertible Top (Manual) on page 3-56* or *Convertible Top (Power) on page 3-63* for more information.

SHIFT TO PARK

If the vehicle has an automatic transmission, this message displays if the vehicle is not in P (Park) when the engine is being turned off. The vehicle will be in ACCESSORY Once the shift lever is moved to P (Park), the vehicle will turn off.

The vehicle will remain in ACCESSORY, without the 20 minute time-out period, until the shift lever is moved to P (Park) or until the driver presses the pushbutton to restart the vehicle. See *Ignition Positions on page 3-22* for more information.

SHIFT TO PARK OR SET PARK BRAKE FOR TOP

If the vehicle has an automatic transmission, this message displays and a sound will be heard if you try to operate the power convertible top without first shifting into P (Park) or setting the parking brake. Either shift the vehicle into P (Park) or set the parking brake before trying to operate the power convertible top. See *Convertible Top (Manual) on page 3-56* or *Convertible Top (Power) on page 3-63* for more information.

SHOCKS INOPERATIVE

This message displays when a malfunction is present in the Selective Ride Control system which is causing the shocks to be in their full soft mode. This is a warning to the driver that the vehicle handling may be affected. Have the vehicle serviced by your dealer/retailer as soon as possible.

To acknowledge the message, press the RESET button. The message reappears every 10 minutes until this condition changes.

TIRE FLAT

⚠ WARNING:

When the LOW TIRE PRESSURE or TIRE FLAT message is displayed on the Driver Information Center, your vehicle's handling capabilities will be reduced during severe maneuvers. If you drive too fast, you could lose control of your vehicle. You or others could be injured. Do not drive over 55 mph (90 km/h) when the LOW TIRE PRESSURE or TIRE FLAT message is displayed. Drive cautiously and check your tire pressures as soon as you can.

This message displays when one or more of the tires is flat. This message also displays LEFT FRONT, RIGHT FRONT, LEFT REAR, or RIGHT REAR to indicate which tire is affected. Multiple chimes sound and the tire pressure light on the instrument panel cluster comes on when this message is displayed. See *Tire Pressure Light on page 4-39*.

This message is followed by the MAXIMUM SPEED 90 km/h (55 MPH) message, and then by the REDUCED HANDLING message. The Active Handling System will intervene more quickly when a flat tire has been detected. Adjust your driving accordingly.

You can receive more than one tire pressure message at a time. To read other messages that may have been sent at the same time, press the RESET button. If a tire pressure message appears on the DIC, stop as soon as you can. Have the tire pressures checked and set to those shown on the Tire Loading Information label. See *Run-Flat Tires on page 6-71*, *Loading the Vehicle on page 5-28*, *Inflation - Tire Pressure on page 6-72*, and *Tire Pressure Monitor System on page 6-74*. The DIC also shows the tire pressure values. See *DIC Operation and Displays on page 4-46*.

To acknowledge the message, press the RESET button. A message reappears every 10 minutes until the condition is corrected.

TOO COLD TO MOVE TOP

This message displays and a sound will be heard when the power convertible top button is pressed and the power convertible top pump motor temperature is below –20°C (–4°F). Wait for the power convertible top pump motor to warm up before using the power convertible top.

TOP MOTOR OVER TEMPERATURE

This message displays and a sound will be heard when the power convertible top button is pressed and the power convertible top pump motor temperature is over 105°C (221°F). Wait for the power convertible top pump motor to cool down before using the power convertible top.

TOP NOT SECURE

This message displays and a sound will be heard when the power convertible top button is released before the top open or close operation is complete or if the top is closed without the header latch engaged. Press and hold the convertible top button to fully open or close the top, and make sure that the header latch is engaged after the top is closed.

TRACTION SYSTEM ACTIVE

This message displays when the Traction Control System (TCS) is limiting wheel spin. Slippery road conditions may exist if this message is displayed, so adjust your driving accordingly. The message stays on for a few seconds after the TCS stops limiting wheel spin. See *Traction Control System (TCS) on page 5-6* for more information.

TRACTION SYSTEM AND ACTIVE HANDLING – OFF

This message displays, the instrument panel cluster light turns on, and a sound will be heard when the Traction Control System (TCS) and Active Handling System are turned off by pressing the Active Handling System button on the console for five seconds. The Antilock Brake System (ABS) remains on with the TCS and Active Handling System off. Adjust your driving accordingly. See *Traction Control System (TCS) on page 5-6* and *Active Handling System on page 5-8* for more information.

To acknowledge this message, press the RESET button.

TRACTION SYSTEM AND ACTIVE HANDLING – ON

If the Traction Control System (TCS) and Active Handling System are off, this message displays briefly, the instrument panel cluster light turns off, and a sound will be heard when the TCS and Active Handling System are turned on by briefly pressing the Active Handling System button on the console. See *Traction Control System (TCS) on page 5-6* and *Active Handling System on page 5-8* for more information.

TRACTION SYSTEM – OFF

This message displays and stays on, a sound will be heard, and the traction control system (TCS) warning light on the instrument panel cluster turns on when the TCS is turned off by pressing the Active Handling System button on the console. See *Traction Control System (TCS) Warning Light on page 4-37*. See *Traction Control System (TCS) on page 5-6* for more information.

To acknowledge the message, press the RESET button.

TRACTION SYSTEM – ON

This message displays and a sound will be heard when the Traction Control System (TCS) is turned on by pressing the Active Handling System button on the console. This message automatically clears from the DIC display on its own. See *Traction Control System (TCS) on page 5-6* for more information.

TRANSMISSION HOT IDLE ENGINE

This message displays and four chimes sound if the transmission fluid temperature rises above 132°C (270°F) or rises rapidly. The transmission may shift gears or apply the torque converter clutch to reduce the fluid temperature. Driving aggressively or driving on long hills can cause the transmission fluid temperature to be higher than normal. If this message appears, you may continue to drive at a slower speed.

Monitor the transmission fluid temperature and allow it to cool to at least 110°C (230°F). The transmission fluid temperature can be monitored with the gages button on the DIC. See *DIC Operation and Displays on page 4-46* and *Automatic Transmission Fluid on page 6-32*. Also check the engine coolant temperature. If it is also hot, see *Engine Overheating on page 6-41*.

If this message is displayed during normal vehicle operation on flat roads, the vehicle may need service. See your dealer/retailer for an inspection.

If driving in a performance or competitive manner, the use of (S) Sport Automatic Mode or (S) Sport Manual Paddle Shift gear selection is recommended. See *Automatic Transmission Operation on page 3-26* for more information.

To acknowledge the message, press the RESET button. The message reappears every 10 minutes until this condition changes. If you do not press the RESET button, the message remains on the display until the condition changes.

TURN SIGNAL ON

This message displays and a sound will be heard if a turn signal is left on for 1.2 km (three-quarters of a mile). Move the turn signal/multifunction lever to the off position.

To acknowledge this message, press the RESET button.

UNLATCH HEADER TO MOVE TOP

This message displays and a sound will be heard if you try to lower the convertible top without first unlocking the top. Move the latch handle to unlock the convertible top. See *Convertible Top (Manual) on page 3-56* or *Convertible Top (Power) on page 3-63*.

Other Messages

Here are more messages that you can receive on your Driver Information Center (DIC). To acknowledge a message and read another message that may have come on at the same time, press the RESET button.

- ACCESSORY MODE ON
- BATTERY VOLTAGE HIGH

  See *Voltmeter Gage on page 4-34*.
- BATTERY VOLTAGE LOW

  See *Voltmeter Gage on page 4-34*.
- CHECK WASHER FLUID

  See *Windshield Washer Fluid on page 6-45*.
- CRUISE SET TO XXX MPH (XXX km/h)

  See *Cruise Control on page 4-7*.
- DRIVER DOOR AJAR
- FOB AUTOLEARN WAIT XX MINUTES

  See “Matching Transmitter(s) to Your Vehicle” under *Keyless Access System Operation on page 3-5*.
- FOB BATTERY LOW

  See “Battery Replacement” under *Keyless Access System Operation on page 3-5*.
- HATCH AJAR (Coupe)
- INTRUSION SENSOR OFF, if your vehicle has this feature
- INTRUSION SENSOR ON, if your vehicle has this feature
- KNOWN FOB

  See “Matching Transmitter(s) to Your Vehicle” under *Keyless Access System Operation on page 3-5*.
- MAXIMUM NUMBER OF FOBS LEARNED

  See “Matching Transmitter(s) to Your Vehicle” under *Keyless Access System Operation on page 3-5*.
- OFF–ACCESSORY TO LEARN

  See “Matching Transmitter(s) to Your Vehicle” under *Keyless Access System Operation on page 3-5*.
- PASSENGER DOOR AJAR

- READY FOR FOB #X

  See “Matching Transmitter(s) to Your Vehicle” under *Keyless Access System Operation on page 3-5*.
- TONNEAU AJAR (Convertible)
- TRUNK AJAR (Convertible)
- UPSHIFT NOW

  See *Manual Transmission Operation on page 3-31*.

DIC Vehicle Personalization

Many features on your vehicle can be personalized. This means that the operation of these features can be set to operate differently depending on who is driving the vehicle. See “Personal Options” later in this section for the features that you can personalize.

The personalization settings for other features are automatically updated and saved as the driver adjusts them. These include the following settings and presets:

- The radio presets, tone, volume, fade, balance, equalization (EQ) settings and source (radio or CD)
- The last climate control setting
- The Head-Up Display (HUD) position and dimming level, if your vehicle has this feature
- The instrument panel cluster dimming level and last selected DIC display

Separate personalization settings are saved for two different drivers. One of the keyless access transmitters is assigned to driver 1. The other is assigned to driver 2. The back of the keyless access transmitters are labelled 1 or 2 to correspond to each driver.

The current driver’s preferences are recalled when one of the following occurs:

- The lock or unlock button on the keyless access transmitter, labelled 1 or 2, is pressed.
- The appropriate memory button, 1 or 2, located on the driver’s door is pressed. See *Memory Seat, Mirrors and Steering Wheel on page 2-4* for more information.
- A valid keyless access transmitter is detected upon opening the driver’s door.

If more than one valid keyless access transmitter is detected upon opening the driver’s door, the driver preferences for the lowest driver number will be recalled.

If a keyless access transmitter that is not labelled 1 or 2 is used, the personalization system will not recognize the transmitter. The Driver Information Center (DIC) will not display a current driver number and the features that are normally programmed through the DIC will be set to the default states. Also, if the OPTION button is pressed, the DIC does not display the menus used to set personalizations, but instead displays OPTIONS UNAVAILABLE for a few seconds.

Entering the Personal Options Menu

To enter the personal options menu, use the following steps:

1. If you have an automatic transmission vehicle, turn the vehicle on with the shift lever in P (Park).

   If you have a manual transmission vehicle, turn the vehicle on with the parking brake set.

   To avoid excessive drain on the battery, it is recommended that the headlamps are turned off.

2. Press the OPTION button and you will enter the PERSONAL OPTIONS menu.

   The DIC will display the current driver number (1 or 2) for a few seconds and then will display instructions on which buttons to use for setting the personalizations. The RESET button is used to select a setting for a particular feature. The OPTION button is used to move to the next feature.

3. Press the OPTION button while the instruction screen is displayed to enter the first personalization menu item.

4. Once you have cycled through all of the personal options, pressing the OPTION button a final time exits the personal options menu. In addition, if no button is pressed within 45 seconds, the DIC will exit the personal options menu.

Personal Options

The following options are available for programming:

Display Units: This option allows you to choose the measurement units.

Press the OPTION button until DISPLAY UNITS appears on the display, then press the RESET button to scroll through the following modes:

- ENGLISH (default)
- METRIC

If you choose ENGLISH, all information will be displayed in English units.

If you choose METRIC, all information will be displayed in metric units.

When the mode you want is selected, press the OPTION button to set your choice and advance to the next personal option.

Auto Memory Recall (Automatic Transmission only): If your automatic transmission vehicle has the memory package, you may have this option. This option allows the driver's seat, the telescopic steering column, if your vehicle has this feature, and the outside rearview mirrors to automatically move to the current driver's set position when the engine starts.

Press the OPTION button until AUTO MEMORY RECALL appears on the display, then press the RESET button to scroll through the following modes:

- YES
- NO (default)

If you choose YES, the driver's seat, the outside rearview mirrors and the telescopic steering column, if your vehicle has this feature, positions are recalled when you turn the ignition on.

If you choose NO, this option will turn off.

When the mode you want is selected, press the OPTION button to set your choice and advance to the next personal option.

Auto Exit Recall: If your vehicle has the memory package, you may have this option. This option allows the driver's seat and telescopic steering column, if your vehicle has this feature, to automatically move to the current driver's exit position when one of the following occurs:

- The vehicle is turned off or in Retained Accessory Power (RAP) or accessory mode and the driver's door is opened.
- The vehicle is turned off or in RAP and the unlock button on the keyless access transmitter is pressed.

In order for the Auto Exit Recall feature to work on an automatic transmission vehicle, the vehicle must be in P (Park). On a manual transmission vehicle, the parking brake must be set.

Press the OPTION button until AUTO EXIT RECALL appears on the display, then press the RESET button to scroll through the following modes:

- YES
- NO (default)

If you choose YES, when you turn the ignition off and open the driver's door or press the unlock button on the keyless access transmitter, the seat and the telescopic steering wheel, if your vehicle has this feature, will return to their stored exit positions for an easy exit or an easy entrance when returning to the vehicle.

The seat and steering wheel will only return to the stored driving position if you press the appropriate memory button or activate the auto memory recall feature.

If you choose NO, this option will turn off.

When the mode you want is selected, press the OPTION button to set your choice and advance to the next personal option.

Approach Lights: This option briefly turns on the parking lamps, the high-beam headlamps and the back-up lamps during low light periods when the keyless access transmitter is used to unlock the vehicle.

Press the OPTION button until APPROACH LIGHTS appears on the display, then press the RESET button to scroll through the following modes:

- OFF
- ON (default)

If you choose OFF, this option will turn off.

If you choose ON, the parking lamps, the high-beam headlamps, and the back-up lamps will come on for 20 seconds during low light periods when all of the following occurs:

- You press the unlock button on the keyless access transmitter.
- Both of the doors are closed.
- The vehicle is off or in RAP.

The lamps remain on for 20 seconds or until a door is opened, the lock button on the keyless access transmitter is pressed or the vehicle is no longer off or in RAP.

See *Keyless Access System on page 3-5* for more information.

When the mode you want is selected, press the OPTION button to set your choice and advance to the next personal option.

Twilight Delay: This option allows you to set the amount of time you want the parking lamps and high-beam headlamps to remain on after you exit the vehicle. This will occur when the vehicle is off or in RAP and the headlamps are on due to the automatic headlamp system. The parking lamps and high-beam headlamps will remain on until the driver selected time expires, the exterior lamp control is activated or the vehicle is no longer off or in RAP.

Press the OPTION button until TWILIGHT DELAY appears on the display, then press the RESET button to scroll through the following modes:

- OFF
- 15 S
- 30 S (default)
- 90 S

If you choose OFF, this option will turn off.

If you choose 15 S, the twilight delay time will be set to 15 seconds.

If you choose 30 S, the twilight delay time will be set to 30 seconds.

If you choose 90 S, the twilight delay time will be set to 90 seconds.

When the mode you want is selected, press the OPTION button to set your choice and advance to the next personal option.

Flash at Unlock: This option activates the front and rear turn signals for two short flashes when the unlock or hatch/trunk button on the keyless access transmitter is pressed. This will only occur when the vehicle is off.

Press the OPTION button until FLASH AT UNLOCK appears on the display, then press the RESET button to scroll through the following modes:

- YES (default)
- NO

If you choose YES, the front and rear turn signals will flash twice when you press the unlock button or the hatch/trunk button on the keyless access transmitter.

If you choose NO, this option will turn off.

When the mode you want is selected, press the OPTION button to set your choice and advance to the next personal option.

Flash at Lock: This option activates the front and rear turn signals for one long flash when the lock button on the keyless access transmitter is pressed. This will only occur when the vehicle is off. If the lock button on the keyless access transmitter is pressed again within five seconds, the horn will sound regardless of which setting you have selected.

Press the OPTION button until FLASH AT LOCK appears on the display, then press the RESET button to scroll through the following modes:

- YES (default)
- NO

If you choose YES, the front and rear turn signals will flash once when you press the lock button on the keyless access transmitter.

If you choose NO, this option will turn off.

When the mode you want is selected, press the OPTION button to set your choice and advance to the next personal option.

FOB Reminder: This option sounds the horn three times when the driver's door is closed and there is a keyless access transmitter inside the interior of the vehicle. This will only occur when the vehicle is off.

Press the OPTION button until FOB REMINDER appears on the display, then press the RESET button to scroll through the following modes:

- YES
- NO (default)

If you choose YES, the horn will sound three times when a keyless access transmitter is inside of the vehicle while the ignition is turned off and the driver's door is closed.

If you choose NO, this option will turn off.

When the mode you want is selected, press the OPTION button to set your choice and advance to the next personal option.

Passive Door Locking: This option allows you to select whether the doors automatically lock during normal vehicle exit. When the ignition is turned off and all doors become closed, the vehicle will determine how many keyless access transmitters remain in the vehicle interior. If at least one keyless access transmitter has been removed from the interior of the vehicle, the doors will lock after a short delay.

For example, if there are two keyless access transmitters in the vehicle and one is removed, the other will be locked in. The keyless access transmitter locked in the vehicle can still be used to start the vehicle or unlock the doors, if needed. A person approaching the outside of the locked vehicle without an authorized keyless access transmitter, however, will not be able to open the door, even with a transmitter in the vehicle.

You may temporarily disable the passive door locking feature by pressing the door unlock switch for three seconds on an open door. Passive door locking will then remain disabled until a door lock switch is pressed or until the power mode transitions from the off power mode.

Press the OPTION button until PASSIVE DOOR LOCKING appears on the display, then press the RESET button to scroll through the following modes:

- OFF (default)
- SILENT
- HORN

If you choose OFF, this option will turn off.

If you choose SILENT, the doors will automatically lock a short time after you remove a keyless access transmitter from the interior of the vehicle and close both doors.

If you choose HORN, the doors will automatically lock and the horn will sound a short time after you remove a keyless access transmitter from the interior of the vehicle and close both doors.

If you are parking in a quiet area and do not want the horn to sound when the doors lock, press the lock button on the keyless access transmitter immediately after removing it from the interior and closing the doors. This will lock the doors and cancel the passive locking for this ignition cycle.

When the mode you want is selected, press the OPTION button to set your choice and advance to the next personal option.

Passive Door Unlock: This option allows you to select which doors will automatically unlock when you approach and open the driver's door with the keyless access transmitter. See *Door Locks on page 3-10* for more information.

Press the OPTION button until PASSIVE DOOR UNLOCK appears on the display, then press the RESET button to scroll through the following modes:

- DRIVER
- BOTH (default)

If you choose DRIVER, only the driver's door will automatically unlock when you approach and open the driver's door with the keyless access transmitter.

If you choose BOTH, both doors will automatically unlock when you approach and open the driver's door with the keyless access transmitter.

Auto Unlock: This option allows you to select whether the driver's door, both doors or neither door automatically unlocks when the shift lever is moved into P (Park) for automatic transmission vehicles or when the ignition is turned off or is in RAP for manual transmission vehicles.

Press the OPTION button until AUTO UNLOCK appears on the display, then press the RESET button to scroll through the following modes:

- OFF
- DRIVER
- BOTH (default)

If you choose OFF, this option will turn off.

If you choose DRIVER, on automatic transmission vehicles, the driver's door will automatically unlock when the shift lever is moved into P (Park). On manual transmission vehicles, the driver's door will automatically unlock when the ignition is turned off or is in RAP.

If you choose BOTH, on automatic transmission vehicles, both doors will automatically unlock when the shift lever is moved into P (Park). On manual transmission vehicles, both doors will automatically unlock when the ignition is turned off or is in RAP.

When the mode you want is selected, press the OPTION button to set your choice and advance to the next personal option.

Language: This option allows you to select the language the DIC, the Head-Up Display (HUD), if your vehicle has this feature, and the radio uses to display messages. Each language mode will be displayed in its own language. For example, English will be displayed as ENGLISH, Spanish as ESPANOL, etc. If your vehicle has the navigation system, you will not have the Japanese language mode.

Press the OPTION button until LANGUAGE appears on the display, then press the RESET button to scroll through the following modes:

- ENGLISH (default)
- DEUTSCH (German)
- FRANCAIS (French)
- ITALIANO (Italian)
- ESPANOL (Spanish)

If you choose a language that you do not understand, press the OPTION and RESET buttons for five seconds. The DIC will begin displaying all of the various languages one by one for as long as the buttons are pressed. When the desired language is displayed, release the buttons and the DIC will set to this language.

When the mode you want is selected, press the OPTION button to set your choice and advance to the next personal option.

Personalize Name: This option allows you to type in a name or greeting that will appear on the DIC display whenever the corresponding keyless access transmitter (1 or 2) is used or one of the memory buttons (1 or 2) located on the driver's door is pressed.

Press the OPTION button until PERSONALIZE NAME appears on the display, then press the RESET button to scroll through the following modes:

- YES
- NO (default)

If you choose YES, you can type in a name that will appear on the DIC display.

To program a name, use the following procedure:

1. Enter the PERSONAL OPTIONS menu and select the driver number (1 or 2) that you would like to program by following the instructions listed previously under "Entering the Personal Options Menu".
2. Press the OPTION button until the PERSONALIZE NAME option appears on the display.
3. Select YES under PERSONALIZE NAME by pressing the RESET button.

4. Press the OPTION button and a cursor will display where you can insert a letter.
5. Press the OPTION button again until the letter you want is displayed. To scroll through the letters faster and without a beeping noise, keep the OPTIONS button depressed. There are alpha/numeric characters and a blank space available.
6. Then press the RESET button to select the letter of your choice and proceed on to the next space to the right.

   If you make a mistake and would like to clear or replace a letter, perform the following steps:

   6.1. Press the RESET button to reach the letter you would like to change.

   6.2. Press the OPTION button to scroll through the letter choices.

   6.3. Press the RESET button to select the letter and proceed on to the next space to the right.

7. Repeat Steps 5 and 6 until the name or greeting you want is complete. After the name or greeting is complete, keep pressing the RESET button until the display turns blank and exits out of this option. You can program up to 20 characters.

If you choose NO, this option will turn off.

If a customized name or greeting is not programmed, the DIC display will show Driver 1 or Driver 2 to correspond with either the number on the back of the keyless access transmitter (1 or 2) that is being used or to the memory button (1 or 2) that is pressed.

PERSONALIZE NAME is the last option available to program in the PERSONAL OPTIONS menu. Pressing the OPTION button after this setting will exit you from the PERSONAL OPTIONS menu. The last item you were in prior to entering PERSONAL OPTIONS will then display on the DIC.

Audio System(s)

Determine which radio the vehicle has and read the following pages to become familiar with its features.

⚠ WARNING:

Taking your eyes off the road for extended periods could cause a crash resulting in injury or death to you or others. Do not give extended attention to entertainment tasks while driving.

This system provides access to many audio and non audio listings.

To minimize taking your eyes off the road while driving, do the following while the vehicle is parked:

- Become familiar with the operation and controls of the audio system.
- Set up the tone, speaker adjustments, and preset radio stations.

For more information, see *Defensive Driving on page 5-2*.

Notice: **Contact your dealer/retailer before adding any equipment.**

Adding audio or communication equipment could interfere with the operation of the vehicle's engine, radio, or other systems, and could damage them. Follow federal rules covering mobile radio and telephone equipment.

The vehicle has Retained Accessory Power (RAP). With RAP, the audio system can be played even after the ignition is turned off. See *Retained Accessory Power (RAP) on page 3-23* for more information.

Setting the Clock

To set the clock:

1. Press and hold H until the correct hour displays.
2. Press and hold M until the correct minute displays.

The clock mode automatically times out with the changed display format set as the current default setting.

Radio(s)

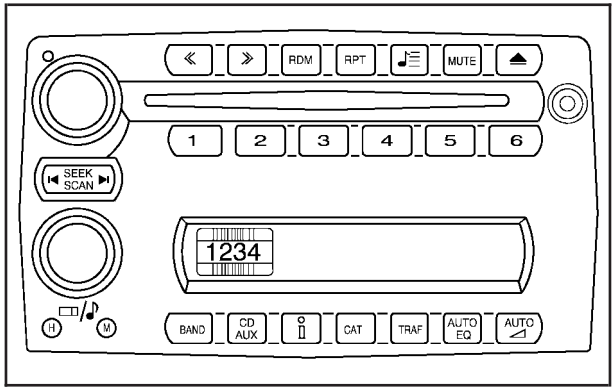

Single CD Radio shown, Six-Disc CD Radio similar

The vehicle has one of these radios as its audio system.

An indicator light on the upper left side of the radio flashes when the ignition is off, to indicate the theft deterrent feature is set. For more information, see *Theft-Deterrent Feature on page 4-103*.

Playing the Radio

Top Knob (Power/Volume): Press to turn the system on and off. Turn to increase or decrease the volume.

MUTE: Press to silence the system. Press again to turn the sound on.

This button is not available on the Six-Disc CD Radio.

i (Information): Press until the desired display is shown, then hold for two seconds until radio beeps once to change the default display. The selected display is now the default.

For RDS:

Press **i** to change the display. The display options are station name, RDS station frequency, PTY, and the name of the program (if available).

For XM™:

Press **i** to retrieve four different categories of information related to the current song or channel: Artist, Song Title, Category or PTY, Channel Number/ Channel Name.

Audio Settings

Press and hold ▭ ♪ when no tone or speaker control is displayed to adjust all tone and speaker controls to the middle position. AUDIO SETTINGS CENTERED displays.

Adjusting the Tone (Bass/Treble)

▭ ♪ **(Bass/Treble):** To adjust the Bass or Treble:

Press and release ▭ ♪ until BASS or TREBLE displays.

- Turn the ▭ ♪ knob to increase or to decrease the level.
- Press and hold the ▭ ♪ knob until the level changes to the middle position.

Adjusting the Speakers (Balance/Fade)

▭ ♪ **(Balance/Fade):** To adjust the Balance:

Press and release ▭ ♪ until BALANCE displays.

- Turn the ▭ ♪ knob to move the sound toward the right or the left speakers.
- Press and hold the ▭ ♪ knob until the level changes to the middle position.

To adjust the Fade:

Press and release ▭ ♪ until FADE displays

- Turn the ▭ ♪ knob to move the sound toward the front or the rear speakers.
- Press and hold the ▭ ♪ knob until the level changes to the middle position.

AUTO EQ (Automatic Equalization): The radio saves separate AUTO EQ settings for each preset and source.

For vehicles without the Bose® sound system:

- Press AUTO EQ to select equalization settings designed for CLASSICAL, POP, ROCK, JAZZ, TALK, and COUNTRY.
- Selecting CUSTOM or changing bass or treble, returns the EQ to the manual bass and treble settings.

For vehicles with the Bose® sound system:

- Press AUTO EQ to select equalization settings from EQ1 through EQ6.
- Selecting CUSTOM or changing bass or treble, returns the EQ to the manual bass and treble settings.

AUTO ◢ (Automatic Volume): Automatic volume automatically adjusts the audio system to make up for road and wind noise, by increasing the volume as vehicle speed increases.

For vehicles without the Bose® sound system:

1. Set the volume at the desired level.
2. Press AUTO ◢ to select AUTO VOLUME MIN (minimum), AUTO VOLUME MED (medium), or AUTO VOLUME MAX (maximum). Each higher setting provides more volume compensation at faster vehicle speeds.
3. Press AUTO ◢ until AUTO VOLUME OFF displays to turn automatic volume off.

For vehicles with the Bose® sound system:

Vehicles with the Bose® sound system include Bose® AudioPilot® noise compensation technology. AudioPilot® continuously adjusts the audio system equalization to compensate for background noise. This feature is most effective at lower radio volume settings where background noise can affect how well the audio is heard. At higher volume settings, there may be little or no adjustments by AudioPilot®. For additional information on AudioPilot®, visit bose.com/audiopilot.

To use AudioPilot®:

1. Set the volume at the desired level.
2. Press AUTO ◢ until AUTO VOLUME ON displays.
3. Press AUTO ◢ until AUTO VOLUME OFF displays to turn off AudioPilot®.

Using the Radio

Radio Data System (RDS)

RDS features are available for use only on FM stations that broadcast RDS information. The station name or call letters display while the radio is tuned to an RDS station.

This system relies upon receiving specific information from these stations and works only when the information is available. In rare cases, a radio station can broadcast incorrect information that causes the radio features to work improperly. If this happens, contact the radio station.

With RDS, the radio can:

- Seek to stations broadcasting the selected type of programming.
- Receive announcements concerning local and national emergencies.
- Display messages from radio stations.
- Seek to stations with traffic announcements.

- Provide the time of day.
- Provide a program type (PTY) for current programming.
- Provide the name of the program being broadcast.

XM™ Satellite Radio Service

XM is a satellite radio service that is based in the 48 contiguous United States and 10 Canadian provinces. XM Satellite Radio has a wide variety of programming and commercial-free music, coast-to-coast, and in digital-quality sound. A service fee is required to receive the XM service. For more information, contact XM at xmradio.com or call 1-800-929-2100 in the U.S. and xmradio.ca or call 1-877-438-9677 in Canada.

Finding an FM/AM/XM Station

BAND: Press to switch between FM1, FM2, AM, XM1 or XM2.

(Tune): Turn to select radio stations.

SEEK: Press to go to the previous or to the next station and stay there.

The radio only stops at stations with a strong signal.

SCAN: Press and hold or for two seconds until FREQUENCY SCAN displays. The radio goes to a station, plays for a few seconds, then goes on to the next station. Press or again to stop scanning.

To scan preset stations:

Press and hold or for four seconds until PRESET SCAN displays. The radio goes to the next preset station, plays for a few seconds, then goes to the next preset station. Press or again or one of the pushbuttons to stop scanning presets.

The radio only scans stations with a strong signal.

1-6 (Preset Pushbuttons): Press to play stations that are programmed to the radio preset pushbuttons.

Setting Preset Stations

Up to 30 stations (six FM1, six FM2, and six AM, six XM1 and six XM2), and equalization settings for each station can be programmed on the six numbered pushbuttons.

To set presets:

1. Turn the radio on.
2. Press BAND to select FM1, FM2, AM, or XM1 or XM2.
3. Tune in the desired station.

4. Press AUTO EQ to select the equalization.
5. Press and hold one of the six numbered pushbuttons until the radio beeps once.
6. Repeat the steps for each pushbutton.

Finding a Category (CAT) Station (XM Satellite Radio Service Only)

To select an XM station by category:

1. Press CAT. The last selected category displays.
2. Turn the ♪ knob to select a category.
3. Press |◀ or ▶| to go to a category's station. SEEKING CATEGORY displays.
4. To go to another station within that category, press the CAT button to display the category, then press |◀ or ▶| to go to another station.

If the radio cannot find the desired category, NONE displays and the radio returns to the last station tuned.

SCAN: To scan the stations within a category:

1. Press CAT. The last selected category displays.
2. Turn the ♪ knob to select a category.
3. Press and hold |◀ or ▶| until a beep sounds and SCAN CATEGORY displays. The radio begins scanning the stations in the category.
4. Press |◀ or ▶| to stop scanning.

Radio Messages

CAL ERR (Calibration Error): Displays if the radio is no longer configured properly for the vehicle. The vehicle must be returned to your dealer/retailer for service.

LOC (Locked): Displays when the THEFTLOCK® system has locked up. The vehicle must be returned to your dealer/retailer for service.

If any error occurs repeatedly or cannot be corrected, contact your dealer/retailer.

RDS Messages

ALERT!: Alert warns of local or national emergencies. When an alert announcement comes on the current radio station, ALERT! displays. The announcement is heard, even if the volume is low or a CD is playing. If a CD is playing, play stops during the announcement. Alert announcements cannot be turned off.

ALERT! is not affected by tests of the emergency broadcast system. This feature is not supported by all RDS stations.

i (Information): If the current station has a message, INFO (information) displays. Press i to see the message. The message can display the artist, song title, call in phone numbers, etc.

If the entire message is not displayed, parts of the message appears every three seconds. To scroll through the message, press and release i . A new group of words display after every press of the button. Once the complete message has displayed, INFO disappears from the display until another new message is received. The last message can be displayed by pressing this button. The last message until a new message is received or the radio is tuned to a different station.

NO INFO displays when a message is not available from a station.

TRAF (Traffic): TA (traffic) displays when the station broadcasts traffic announcements, the announcement will be played.

Press TRAF and the radio seeks to a station that broadcasts traffic announcements. When a station is found, the radio stops seeking and TA displays. NO TRAFFIC INFO displays if a station that broadcasts traffic announcements can not be found.

Press TRAF to turn off the traffic announcements if TA is on the display.

The radio plays the traffic announcement even if the volume is low. The radio interrupts the play of a CD if the last tuned station broadcasts traffic announcements.

This function does not apply to XM Satellite Radio Service.

Radio Messages for XM Only

See *XM Radio Messages on page 4-92* XM Radio Messages later in this section for further detail.

Using the CD Player

The CD player can play smaller 3 inch (8 cm) single CDs with an adapter ring.

A CD in the player it stays in the player when the ignition is turned off. When the ignition or radio is turned on, the CD starts to play where it stopped, if it was the last selected audio source.

Loading a CD

Single CD Radio:

Insert the CD partway into the slot, label side up, until the player pulls the CD in. The CD begins playing automatically.

The CD symbol displays when a CD is inserted, and the track number displays when each new track starts to play.

Six-Disc CD Radio:

If more than one CD has been loaded, a number for each CD displays.

(Load): Press to load CDs into the CD player.

To insert one CD:

1. Press .
2. Load a CD and insert the CD partway into the slot, label side up when INSERT CD # displays. The player pulls the CD in.

To insert multiple CDs:

1. Press and hold for two seconds. Two beeps sound and LOAD ALL DISCS displays.
2. Load a CD and insert the CD partway into the slot, label side up when INSERT CD # displays. The player pulls the CD in.
3. Wait for INSERT CD # to display after the previous CD is loaded, then load the next CD. The CD player takes up to six CDs.

To load more than one CD but less than six, complete Steps 1 through 3. When finished loading CDs, press the button to cancel the loading function. The radio begins to play the last CD loaded.

Playing a CD

(Tune): Turn to go to the next or previous track.

(Reverse): Press and hold to reverse within the current track.

(Fast Forward): Press and hold to fast forward through the current track.

SEEK: Press the left arrow to go to the start of the current track if more than eight seconds have played. Press the right arrow to go to the start of the next track. If either arrow is held or pressed more than once, the player continues moving backward or forward through the CD.

SCAN: To scan one CD, press and hold either arrow for more than two seconds until SCAN displays and a beep sounds. The radio goes to the next track, plays for 10 seconds, then goes to the next track. Press either arrow again, to stop scanning.

To scan all loaded CDs, press and hold either arrow for more than four seconds until SCAN displays and a beep sounds. Use this feature to listen to 10 seconds of the first track of each loaded CD. Press either arrow again, to stop scanning.

AUTO EQ (Automatic Equalization): Press to select the equalization setting while playing a CD. The equalization is stored when a CD is played. For more information on AUTO EQ, see “AUTO EQ” listed previously in this section.

BAND: Press to listen to the radio when a CD is playing. The inactive CD(s) remains inside the radio for future listening.

CD AUX (Auxiliary): Press to play a CD when listening to the radio. CD displays when a CD is in the player. If your system has a remote playback device, pressing this button a second time allows the remote device to play.

⏏ (Eject): Press to eject a CD from the Single CD Radio and the Six-Disc CD Radio.

Single CD Radio: Press ⏏ to eject a CD.

Six-Disc CD Radio:

Press ⏏ to eject the CD that is currently playing.

To eject multiple CDs:

1. Press and hold ⏏ for two seconds. A beep sounds and EJECT ALL displays.
2. The ejected CD can be removed when REMOVE DISC displays.

   To stop ejecting the CDs, press the ⊜ or ⏏ .

The CD is automatically pulled back into the player if the CD is not removed after 25 seconds. Pushing a CD back into the player, before the 25 second time period is complete causes the player to sense an error and the CD player tries to eject the CD several times before stopping.

Wait for the timer to expire before pressing ⏏ again. Pressing ⏏ repeatedly after trying to push a CD in manually causes the CD players 25-second eject timer to reset.

RPT (Repeat): Press to hear a track or an entire CD over again.

Single CD Radio:

Press RPT to hear a track over again, REPEAT displays. Press again to turn off repeat, REPEAT OFF displays.

Six-Disc CD Radio:

- Press RPT until REPEAT displays to repeat a track.
- Press RPT until REPEAT ONE DISC displays to repeat an entire CD
- Press RPT until REPEAT OFF displays to turn off repeat.

RDM (Random): Press to hear the tracks in random, rather than sequential order, on one CD or all of the loaded CDs.

Single CD Radio:

Press and release RDM, until RANDOM DISC PLAY displays. Press and release the RDM until RANDOM OFF displays to turn off random play.

Six-Disc CD Radio:

- Press and release RDM until RANDOM DISC PLAY displays to play the tracks on one CD in random order. Once all tracks on this disc have played, RANDOM DISC PLAY will repeat.
- Press and release RDM until RANDOM ALL DISCS displays to play the tracks on all of the CDs that are loaded in random order.
- Press and release RDM until RANDOM OFF displays to turn off random play.

(Song List): The Song List feature can save 20 track selections.

To save tracks:

1. If S-LIST is displayed, press to turn it off.
2. Select the desired CD by pressing the numbered pushbutton and then use or knob to select the track to be saved.
3. Press and hold until a beep sounds and ADDED SONG displays.
4. Repeat Steps 2 and 3 to save other selections.

SONGLIST FULL displays if more than 20 selections are stored.

To play tracks:

1. Press . One beep sounds and S-LIST displays. The recorded tracks begin to play in the order they were saved
2. Press or to go back or forward within the saved tracks.

To delete tracks:

1. Press ♩☰ to turn song list on. S-LIST displays.
2. Press ⏮ or ⏭ , use the ▭ ♪ knob to select the desired track to be deleted.
3. Press and hold ♩☰ until SONG REMOVED displays.

After a track has been deleted, the remaining tracks are moved up the list. When another track is added to the song list, the track is added to the end of the list.

To delete the entire song list:

1. Press ♩☰ to turn song list on. S-LIST displays.
2. Press and hold ♩☰ for more than four seconds. One beep sounds and SONGLIST EMPTY displays to confirm that the song list has been deleted.

If a CD is ejected, and the song list contains saved tracks from that CD, those tracks are automatically deleted from the song list. Any tracks saved to the song list again are added to the bottom of the list.

To end song list mode, press ♩☰ . One beep sounds and S-LIST is removed from the display.

Care of CDs and the CD Player

Care of CDs

Store CD(s) in their original cases or other protective cases and away from direct sunlight and dust. The CD player scans the bottom of the disc. If the bottom of a CD is damaged it may not play properly or at all. Do not touch the bottom of a CD while handling it. Pick up CDs by grasping the outer edges or the edge of the hole and the outer edge.

If the surface of a CD is dirty, take a soft, lint free cloth or dampen a clean, soft cloth in a mild, neutral detergent solution mixed with water, and clean it. Make sure the wiping process starts from the center to the edge.

Care of the CD Player

Do not add labels to a CD, it could get caught in the CD player. Use a marking pen to write on the top of the CD if a description is needed.

Do not use CD lens cleaners, they could damage the CD player.

Notice: **If a label is added to a CD, or more than one CD is inserted into the slot at a time, or an attempt is made to play scratched or damaged CDs, the CD player could be damaged. While using the CD player, use only CDs in good condition without any label, load one CD at a time, and keep the CD player and the loading slot free of foreign materials, liquids, and debris.**

If an error displays, see “CD Messages” later in this section.

Using the Auxiliary Input Jack

The radio system has an auxiliary input jack located on the right side of the faceplate. This is not an audio output; do not plug the headphone set into the front auxiliary input jack. An external audio device can be connected to the auxiliary input jack for use as another source for audio listening.

Drivers are encouraged to set up any auxiliary device while the vehicle is in P (Park). See *Defensive Driving on page 5-2*.

Connect a 3.5 mm (1/8 in.) cable to the radio’s front auxiliary input jack to use a portable audio player. The radio displays AUX INPUT DEVICE when a device is connected and begins playing audio from that device.

Top Knob (Power/Volume): Turn to increase or decrease the volume of the portable player. Additional volume adjustments can be made from the portable device.

BAND: Press to listen to the radio while a portable audio device is playing. The portable audio device continues playing.

CD/AUX (CD/Auxiliary): Press to play a CD while a portable audio device is playing. Press again and the system begins playing audio from the connected portable audio player. If a portable audio player is connected, AUX INPUT DEVICE displays. If a portable audio player is not connected, AUX INPUT DEVICE does not display.

Using an MP3

MP3 Format

Radios with the MP3 feature can only play CD-R discs. Do not mix standard audio and MP3 files on the same disc.

Supported File Structure

Radios with the MP3 feature support up to:

- 50 folders.
- 11 folders in depth.
- 50 playlists.
- 255 files.
- 10 sessions.

Root Directory:

The root directory is treated as a folder. Files are stored in the root directory when the disc or storage device does not contain folders. Files accessed from the root directory display as F1 ROOT.

Empty Folder:

Folders that do not contain files are skipped, and the player advances to the next folder that contains files.

Supported Bit Rates

The following bit rates are supported: 32 kbps, 40 kbps, 56 kbps, 64 kbps, 80 kbps, 96 kbps, 112 kbps, 128 kbps, 160 kbps, 192 kbps, 224 kbps, 256 kbps, and 320 kbps or a variable bit rate.

File Naming

ID3v1 and ID3v2 tags are supported. The track name contained in the ID3 tag is shown on the display. The display only shows up to 32 characters for track and file names.

If the track name is not contained in the ID3 tag, the display shows the file name without the file extension.

Playlists

Playlists that do not have a .mp3 or .wpl extension may not work.

Preprogrammed playlists created by WinAmp™, MusicMatch™, or Real Jukebox™ software are supported and they cannot be edited using the radio.

Playing an MP3

Insert a CD partway into the slot, label side up. The player pulls it in, and READING displays. The CD should begin playing and the CD symbol displays.

If the ignition or radio is turned off with a CD-R in the player, it stays in the player. When the ignition or radio is turned on, the CD-R starts to play where it stopped, if it was the last selected audio source.

As each new track starts to play, the track number displays.

Order of Play

Tracks are played sequentially in the following order:

1. Playlists.
2. Files contained in the root directory.
3. Files contained in folders.

/ ♪ (Tune): Turn to go to the next or previous track.

≪ (Previous Folder): Press to go to the first track in the previous folder. Press and hold to reverse through the current track.

≫ (Next Folder): Press to go to the first track in the next folder. Press and hold to fast forward the current track.

RDM (Random): Press to hear the tracks in random, rather than sequential order, on one CD, one folder, or all of the loaded CDs.

Press and release RDM until:

- RANDOM DISC PLAY displays to play the tracks on the CD in random order.
- RANDOM FOLDER displays to play the tracks in the folder in random order.
- RANDOM ALL DISCS displays to play the tracks on all of the CDs that are loaded in random order.
- RANDOM OFF displays to turn off random play.

RPT (Repeat): Press to hear a track, CD, or a folder over again.

Press and release RPT until:

- REPEAT displays to repeat a track.
- REPEAT ONE DISC displays to repeat a CD.
- REPEAT FOLDER displays to repeat a folder.
- REPEAT OFF displays to turn off repeated play.

|◀ SEEK ▶|: Press |◀ to go to the start of the current track, if more than eight seconds have played. Press ▶| to go to the next track. Press |◀ or ▶| more than once to continue moving backward or forward through the CD.

i (Information): Press to display the artist name and album contained in the ID3 tag.

BAND: Press to listen to the radio when a CD is playing. The inactive CD remains inside the radio for future listening.

CD AUX (Auxiliary): Press to play a CD when listening to the radio. The CD symbol displays when a CD is loaded.

XM Radio Messages

XL (Explicit Language Channels): These channels, or any others, can be blocked by calling 1-800-852-XMXM (9696).

Updating: The encryption code in the receiver is being updated, and no action is required. This process should take no longer than 30 seconds.

No Signal: The system is functioning correctly, but the vehicle is in a location that is blocking the XM signal. When the vehicle is moved into an open area, the signal should return.

Loading XM: The audio system is acquiring and processing audio and text data. No action is needed. This message should disappear shortly.

CH Off Air: This channel is not currently in service. Tune in to another channel.

CH Unauth: This channel is blocked or cannot be received with your XM Subscription package.

CH Unavail: This previously assigned channel is no longer assigned. Tune to another station. If this station was one of the presets, choose another station for that preset button.

No Info: No artist, song title, category, or text information is available at this time on this channel. The system is working properly.

Not Found: There are no channels available for the selected category. The system is working properly.

XM Locked: The XM receiver in the vehicle may have previously been in another vehicle. For security purposes, XM receivers cannot be swapped between vehicles. If this message is received after having the vehicle serviced, check with your dealer/retailer.

Radio ID: If tuned to channel 0, this message will alternate with the XM Radio 8 digit radio ID label. This label is needed to activate the service.

Unknown: If this message is received when tuned to channel 0, there may be a receiver fault. Consult with your dealer/retailer.

Chk XMRcvr: If this message does not clear within a short period of time, the receiver may have a fault. Consult with your dealer/retailer.

Navigation/Radio System

For vehicles with a navigation radio system, see the separate Navigation System manual.

Bluetooth®

Vehicles with a Bluetooth system can use a Bluetooth capable cell phone with a Hands Free Profile to make and receive phone calls. The system can be used while the key is in ON/RUN or ACC/ACCESSORY position. The range of the Bluetooth system can be up to 9.1 m (30 ft). Not all phones support all functions, and not all phones are guaranteed to work with the in-vehicle Bluetooth system. See www.gm.com/bluetooth for more information on compatible phones.

Voice Recognition

The Bluetooth system uses voice recognition to interpret voice commands to dial phone numbers and name tags.

Noise: Keep interior noise levels to a minimum. The system may not recognize voice commands if there is too much background noise.

When to Speak: A short tone sounds after the system responds indicating when it is waiting for a voice command. Wait until the tone and then speak.

How to Speak: Speak clearly in a calm and natural voice.

Audio System

When using the in-vehicle Bluetooth system, sound comes through the vehicle's front audio system speakers and over-rides the audio system. Use the audio system volume knob, during a call, to change the volume level. The adjusted volume level remains in memory for later calls. To prevent missed calls, a minimum volume level is used if the volume is turned down too low.

Bluetooth Controls

Use the buttons located on the steering wheel to operate the in-vehicle Bluetooth system. See *Audio Steering Wheel Controls on page 4-104* for more information.

(Push To Talk): Press to answer incoming calls, to confirm system information, and to start speech recognition.

(Phone On Hook): Press to end a call, reject a call, or to cancel an operation.

Pairing

A Bluetooth enabled cell phone must be paired to the in-vehicle Bluetooth system first and then connected to the vehicle before it can be used. See the cell phone manufacturers user guide for Bluetooth functions before pairing the cell phone. If a Bluetooth phone is not connected, calls will be made using OnStar® Hands-Free Calling, if available. Refer to the OnStar owner's guide for more information.

Pairing Information:

- Up to five cell phones can be paired to the in-vehicle Bluetooth system.
- The pairing process is disabled when the vehicle is moving.
- The in-vehicle Bluetooth system automatically links with the first available paired cell phone in the order the phone was paired.
- Only one paired cell phone can be connected to the in-vehicle Bluetooth system at a time.
- Pairing should only need to be completed once, unless changes to the pairing information have been made or the phone is deleted.

To link to a different paired phone, see Linking to a Different Phone later in this section.

Pairing a Phone

1. Press and hold for two seconds. The system responds with "Ready" followed by a tone.
2. Say "Bluetooth". The system responds with "Bluetooth ready" followed by a tone.
3. Say "Pair". The system responds with instructions and a four digit PIN number. The PIN number will be used in Step 4.
4. Start the Pairing process on the cell phone that will be paired to the vehicle. Reference the cell phone manufacturers user guide for information on this process.

   Locate the device named "General Motors" in the list on the cellular phone and follow the instructions on the cell phone to enter the four digit PIN number that was provided in Step 3.
5. The system prompts for a name for the phone. Use a name that best describes the phone. This name will be used to indicate which phone is connected. The system then confirms the name provided.
6. The system responds with "<Phone name> has been successfully paired" after the pairing process is complete.
7. Repeat Steps 1 through 7 for additional phones to be paired.

Listing All Paired and Connected Phones

1. Press and hold ✆ for two seconds. The system responds with “Ready” followed by a tone.
2. Say “Bluetooth”. The system responds with “Bluetooth ready” followed by a tone.
3. Say “List”. The system lists all the paired Bluetooth devices. If a phone is connected to the vehicle, the system will say “Is connected” after the connected phone.

Deleting a Paired Phone

1. Press and hold ✆ for two seconds. The system responds with “Ready” followed by a tone.
2. Say “Bluetooth”. The system responds with “Bluetooth ready” followed by a tone.
3. Say “Delete”. The system asks which phone to delete followed by a tone.
4. Say the name of the phone to be deleted. If the phone name is unknown, use the “List” command for a list of all paired phones. The system responds with “Would you like to delete <phone name>? Yes or No” followed by a tone
5. Say “Yes” to delete the phone. The system responds with “OK, deleting <phone name>”.

Linking to a Different Phone

1. Press and hold ✆ for two seconds. The system responds with “Ready” followed by a tone.
2. Say “Bluetooth”. The system responds with “Bluetooth ready” followed by a tone.
3. Say “Change phone”. The system responds with “Please wait while I search for other phones”.
   - If another phone is found, the response will be “<Phone name> is now connected”.
   - If another phone is not found, the original phone remains connected.

Storing Name Tags

The system can store up to thirty phone numbers as name tags that are shared between the Bluetooth and OnStar systems.

The system uses the following commands to store and retrieve phone numbers:

- Store
- Digit Store
- Directory

Using the Store Command

The store command allows a phone number to be stored without entering the digits individually.

1. Press and hold ✆ for two seconds. The system responds with “Ready” followed by a tone.
2. Say “Store”. The system responds with “Store, number please” followed by a tone.
3. Say the complete phone number to be stored at once with no pauses.
   - If the system recognizes the number it responds with “OK, Storing” and repeats the phone number.
   - If the system is unsure it recognizes the phone number, it responds with “Store” and repeats the number followed by “Please say yes or no”. If the number is correct, say “Yes”. If the number is not correct, say “No”. The system will ask for the number to be re-entered.
4. After the system stores the phone number, it responds with “Please say the name tag” followed by a tone.
5. Say a name tag for the phone number. The name tag is recorded and the system responds with “About to store <name tag>. Does that sound OK?”.
   - If the name tag does not sound correct, say “No” and repeat Step 5.
   - If the name tag sounds correct, say “Yes” and the name tag is stored. After the number is stored the system returns to the main menu.

Using the Digit Store Command

The digit store command allows a phone number to be stored by entering the digits individually.

1. Press and hold ✆ for two seconds. The system responds with “Ready” followed by a tone.
2. Say “Digit Store”. The system responds with “Please say the first digit to store” followed by a tone.

3. Say the first digit to be stored. The system will repeat back the digit it heard followed by a tone. Continue entering digits until the number to be stored is complete.
   - If an unwanted number is recognized by the system, say “Clear” at any time to clear the last number.
   - To hear all of the numbers recognized by the system, say “Verify” at any time and the system will repeat them.
4. After the complete number has been entered, say “Store”. The system responds with “Please say the name tag” followed by a tone.
5. Say a name tag for the phone number. The name tag is recorded and the system responds with “About to store <name tag>. Does that sound OK?”.
   - If the name tag does not sound correct, say “No” and repeat Step 5.
   - If the name tag sounds correct, say “Yes” and the name tag is stored. After the number is stored the system returns to the main menu.

Using the Directory Command

The directory command lists all of the name tags stored by the system. To use the directory command:

1. Press and hold for two seconds. The system responds with “Ready” followed by a tone.
2. Say “Directory”. The system responds with “Directory” and then plays back all of the stored name tags. When the list is complete, the system returns to the main menu.

Deleting Name Tags

The system uses the following commands to delete name tags:

- Delete
- Delete all name tags

Using the Delete Command

The delete command allows specific name tags to be deleted.

To use the delete command:

1. Press and hold for two seconds. The system responds with “Ready” followed by a tone.
2. Say “Delete”. The system responds with “Delete, please say the name tag” followed by a tone.

3. Say the name tag to be deleted. The system responds with “Would you like to delete, <name tag>? Please say yes or no”.
   - If the name tag is correct, say “Yes” to delete the name tag. The system responds with “OK, deleting <name tag>, returning to the main menu.”
   - If the name tag is incorrect, say “No”. The system responds with “No. OK, let’s try again, please say the name tag.”

Using the Delete All Name Tags Command

The delete all name tags command deletes all stored phone book name tags and route name tags for OnStar (if present).

To use the delete all name tags command:

1. Press and hold for two seconds. The system responds with “Ready” followed by a tone.
2. Say “Delete all name tags”. The system responds with “You are about to delete all name tags stored in your phone directory and your route destination directory. Are you sure you want to do this? Please say yes or no.”
   - Say “Yes” to delete all name tags.
   - Say “No” to cancel the function and return to the main menu.

Making a Call

Calls can be made using the following commands:

- Dial
- Digit Dial
- Call
- Re-dial

Using the Dial Command

1. Press and hold for two seconds. The system responds with “Ready” followed by a tone.
2. Say “Dial”. The system responds with “Dial using <phone name>. “Number please” followed by a tone.
3. Say the entire number without pausing.
   - If the system recognizes the number, it responds with “OK, Dialing” and dials the number.
   - If the system does not recognize the number, it confirms the numbers followed by a tone. If the number is correct, say “Yes”. The system responds with “OK, Dialing” and dials the number. If the number is not correct, say “No”. The system will ask for the number to be re-entered.

Using the Digit Dial Command

1. Press and hold ✆ for two seconds. The system responds with “Ready” followed by a tone.
2. Say “Digit Dial”. The system responds with “Digit dial using <phone name>, please say the first digit to dial” followed by a tone.
3. Say the digit to be dialed one at a time. Following each digit, the system will repeat back the digit it heard followed by a tone.
4. Continue entering digits until the number to be dialed is complete. After the whole number has been entered, say “Dial”. The system responds with “OK, Dialing” and dials the number.
   - If an unwanted number is recognized by the system, say “Clear” at any time to clear the last number.
   - To hear all of the numbers recognized by the system, say “Verify” at any time and the system will repeat them.

Using the Call Command

1. Press and hold ✆ for two seconds. The system responds with “Ready” followed by a tone.
2. Say “Call”. The system responds with “Call using <phone name>. Please say the name tag” followed by a tone.
3. Say the name tag of the person to call.
   - If the system clearly recognizes the name tag it responds with “OK, calling, <name tag>” and dials the number.
   - If the system is unsure it recognizes the right name tag, it confirms the name tag followed by a tone. If the name tag is correct, say “Yes”. The system responds with “OK, calling, <name tag>” and dials the number. If the name tag is not correct, say “No”. The system will ask for the name tag to be re-entered.

Once connected, the person called will be heard through the audio speakers.

Using the Re-dial Command

1. Press and hold ✆ for two seconds. The system responds with “Ready” followed by a tone.
2. After the tone, say “Re-dial”. The system responds with “Re-dial using <phone name>” and dials the last number called from the connected Bluetooth phone.

Once connected, the person called will be heard through the audio speakers.

Receiving a Call

When an incoming call is received, the audio system mutes and a ring tone is heard in the vehicle.

- Press ✆ and begin speaking to answer the call.
- Press ☎ to ignore a call.

Call Waiting

Call waiting must be supported on the Bluetooth phone and enabled by the wireless service carrier to work.

- Press ✆ to answer an incoming call when another call is active. The original call is placed on hold.
- Press ✆ again to return to the original call.
- To ignore the incoming call, continue with the original call with no action.
- Press ☎ to disconnect the current call and switch to the call on hold.

Three-Way Calling

Three-Way Calling must be supported on the Bluetooth phone and enabled by the wireless service carrier to work.

1. While on a call press ✆ . The system responds with “Ready” followed by a tone.
2. Say “Three-way call”. The system responds with “Three-way call, please say dial or call”.
3. Use the dial or call command to dial the number of the third party to be called.
4. Once the call is connected, press ✆ to link all the callers together.

Ending a Call

Press ☎ to end a call.

Muting a Call

During a call, all sounds from inside the vehicle can be muted so that the person on the other end of the call cannot hear them.

To Mute a call

1. Press . The system responds with “Ready” followed by a tone.
2. Say “Mute Call”. The system responds with “Call muted”.

To Cancel Mute

1. Press . The system responds with “Ready” followed by a tone.
2. After the tone, say “Mute Call”. The system responds with “Resuming call”.

Transferring a Call

Audio can be transferred between the in-vehicle Bluetooth system and the cell phone.

To Transfer Audio to the Cell Phone

During a call with the audio in the vehicle:

1. Press . The system responds with “Ready” followed by a tone.
2. Say “Transfer Call.” The system responds with “Transferring call” and the audio will switch from the vehicle to the cell phone.

To Transfer Audio to the In-Vehicle Bluetooth System

The cellular phone must be paired and connected with the Bluetooth system before a call can be transferred. The connection process can take up to two minutes after the key is turned to the ON/RUN or ACC/ACCESSORY position.

During a call with the audio on the cell phone, press for more than two seconds. The audio switches from the cell phone to the vehicle.

Voice Pass-Thru

Voice Pass-Thru allows access to the voice recognition commands on the cell phone. See the cell phone manufacturers user guide to see if the cell phone supports this feature. This feature can be used to verbally access contacts stored in the cell phone.

1. Press and hold ✆ for two seconds. The system responds with “Ready” followed by a tone.
2. Say “Bluetooth”. The system responds with “Bluetooth ready” followed by a tone.
3. Say “Voice”. The system responds with “OK, accessing <phone name>”.
   - The cell phone’s normal prompt messages will go through its cycle according to the phone’s operating instructions.

Dual Tone Multi-Frequency (DTMF) Tones

The in-vehicle Bluetooth system can send numbers and numbers stored as name tags during a call. This is used when calling a menu driven phone system. Account numbers can be programmed into the phonebook for retrieval during menu driven calls.

Sending a Number During a Call

1. Press ✆ . The system responds with “Ready” followed by a tone.
2. Say “Dial”. The system responds with “Say a number to send tones” followed by a tone.
3. Say the number to send.
   - If the system clearly recognizes the number it responds with “OK, Sending Number” and the dial tones are sent and the call continues.
   - If the system is not sure it recognized the number properly, it responds “Dial Number, Please say yes or no?” followed by a tone. If the number is correct, say “Yes”. The system responds with “OK, Sending Number” and the dial tones are sent and the call continues.

Sending a Stored Name Tag During a Call

1. Press . The system responds with “Ready” followed by a tone.
2. Say “Send name tag.” The system responds with “Say a name tag to send tones” followed by a tone.
3. Say the name tag to send.
   - If the system clearly recognizes the name tag it responds with “OK, Sending <name tag>” and the dial tones are sent and the call continues.
   - If the system is not sure it recognized the name tag properly, it responds “Dial <name tag>, Please say yes or no?” followed by a tone. If the name tag is correct, say “Yes”. The system responds with “OK, Sending <name tag>” and the dial tones are sent and the call continues.

Clearing the System

Unless information is deleted out of the in-vehicle Bluetooth system, it will be retained indefinitely. This includes all saved name tags in the phonebook and phone pairing information. For information on how to delete this information, see the above sections on Deleting a Paired Phone and Deleting Name Tags.

Other Information

The Bluetooth® word mark and logos are owned by the Bluetooth® SIG, Inc. and any use of such marks by General Motors is under license. Other trademarks and trade names are those of their respective owners.

See *Bluetooth® on page 4-93* for FCC information.

Theft-Deterrent Feature

THEFTLOCK® is designed to discourage theft of the vehicle’s radio by learning a portion of the Vehicle Identification Number (VIN). The radio does not operate and LOCKED displays if the radio is stolen or moved to a different vehicle.

When the when the ignition is in the off position, a blinking red light on the upper left side of the radio indicates that THEFTLOCK® is armed.

Audio Steering Wheel Controls

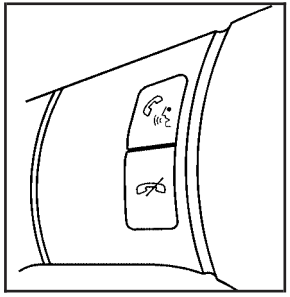

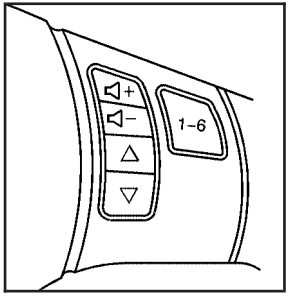

For vehicles with steering wheel controls, some audio controls can be adjusted at the steering wheel.

(Mute/Push to Talk): Press to silence the vehicle speakers only. Press again to turn the sound on.

For vehicles with Bluetooth or OnStar® systems press and hold for longer than two seconds to interact with those systems. See *Bluetooth® on page 4-93* and the OnStar Owner's Guide for more information.

(Phone On Hook): Press to reject an incoming call, or end a current call.

(Next/Previous): Press to change radio stations or select tracks on a CD.

To change radio stations:

- Press or to go to the next or to the previous radio station and stay there. The radio only seeks stations with a strong signal that are in the selected band.
- Press and hold or for two seconds until SCAN displays and a beep sounds to scan stations. The radio goes to a station, plays for a few seconds, then goes to the next station. Press again to stop scanning.
- Press and hold or for four seconds until PRESET SCAN displays and a beep sounds to scan presets. The radio goes to a station, plays for a few seconds, then goes to the next station. Press again to stop scanning.

To select tracks on a CD:

- Press △ or ▽ to go to the next or to the previous track when a CD is playing.
- Press and hold △ or ▽ for more than two seconds to scan the current CD. The CD goes to the next track, plays the first 10 seconds, then goes to the next track. Press again to stop scanning.
- Press and hold △ or ▽ for more than four seconds to scan all of the CDs loaded. The CD goes to the next CD, plays the first 10 seconds of each track, then goes to the next CD. Press again to stop scanning.

+ ◁ – ◁ (Volume): Press to increase or to decrease the radio volume.

1 to 6 (Preset Pushbuttons): Press to play stations that are programmed on the radio preset pushbuttons.

Radio Reception

Frequency interference and static can occur during normal radio reception if items such as cell phone chargers, vehicle convenience accessories, and external electronic devices are plugged into the accessory power outlet. If there is interference or static, unplug the item from the accessory power outlet.

AM

The range for most AM stations is greater than for FM, especially at night. The longer range can cause station frequencies to interfere with each other. For better radio reception, most AM radio stations boost the power levels during the day, and then reduce these levels during the night. Static can also occur when things like storms and power lines interfere with radio reception. When this happens, try reducing the treble on the radio.

FM Stereo

FM signals only reach about 10 to 40 miles (16 to 65 km). Although the radio has a built-in electronic circuit that automatically works to reduce interference, some static can occur, especially around tall buildings or hills, causing the sound to fade in and out.

XM™ Satellite Radio Service

XM Satellite Radio Service gives digital radio reception from coast-to-coast in the 48 contiguous United States, and in Canada. Just as with FM, tall buildings or hills can interfere with satellite radio signals, causing the sound to fade in and out. In addition, traveling or standing under heavy foliage, bridges, garages, or tunnels may cause loss of the XM signal for a period of time.

Cellular Phone Usage

Cellular phone usage may cause interference with the vehicle's radio. This interference may occur when making or receiving phone calls, charging the phone's battery, or simply having the phone on. This interference causes an increased level of static while listening to the radio. If static is received while listening to the radio, unplug the cellular phone and turn it off.

Diversity Antenna System

The AM-FM antenna is a hidden self tuning system. It optimizes the AM and FM signals relative to the vehicle's position and radio station source. No maintenance or adjustments are needed.

XM™ Satellite Radio Antenna System

For vehicles with XM Satellite Radio Service, the antenna is located on the roof or on the trunk lid of the vehicle. Keep the antenna clear of obstructions for clear radio reception.

Section 5 Driving Your Vehicle

Your Driving, the Road, and the Vehicle 5-2
Defensive Driving 5-2
Drunk Driving 5-2
Control of a Vehicle 5-3
Braking 5-3
Antilock Brake System (ABS) 5-5
Braking in Emergencies 5-6
Traction Control System (TCS) 5-6
Active Handling System 5-8
Competitive Driving Mode 5-9
Limited-Slip Rear Axle 5-14
Selective Ride Control 5-14
Steering 5-16
Off-Road Recovery 5-17
Passing 5-18
Loss of Control 5-18
Racing or Other Competitive Driving 5-19
Driving at Night 5-22
Driving in Rain and on Wet Roads 5-22
Before Leaving on a Long Trip 5-23
Highway Hypnosis 5-24
Hill and Mountain Roads 5-24
Winter Driving 5-25
If Your Vehicle is Stuck in Sand, Mud, Ice, or Snow 5-27
Rocking Your Vehicle to Get It Out 5-28
Loading the Vehicle 5-28
Towing 5-33
Towing Your Vehicle 5-33
Recreational Vehicle Towing 5-33
Towing a Trailer 5-33

Your Driving, the Road, and the Vehicle

Defensive Driving

Defensive driving means “always expect the unexpected.” The first step in driving defensively is to wear your safety belt — See *Safety Belts: They Are for Everyone on page 2-9*.

⚠ WARNING:

Assume that other road users (pedestrians, bicyclists, and other drivers) are going to be careless and make mistakes. Anticipate what they might do and be ready. In addition:

- Allow enough following distance between you and the driver in front of you.
- Focus on the task of driving.

Driver distraction can cause collisions resulting in injury or possible death. These simple defensive driving techniques could save your life.

Drunk Driving

⚠ WARNING:

Drinking and then driving is very dangerous. Your reflexes, perceptions, attentiveness, and judgment can be affected by even a small amount of alcohol. You can have a serious — or even fatal — collision if you drive after drinking. Do not drink and drive or ride with a driver who has been drinking. Ride home in a cab; or if you are with a group, designate a driver who will not drink.

Death and injury associated with drinking and driving is a global tragedy.

Alcohol affects four things that anyone needs to drive a vehicle: judgment, muscular coordination, vision, and attentiveness.

Police records show that almost 40 percent of all motor vehicle-related deaths involve alcohol. In most cases, these deaths are the result of someone who was drinking and driving. In recent years, more than 17,000 annual motor vehicle-related deaths have been associated with the use of alcohol, with about 250,000 people injured.

For persons under 21, it is against the law in every U.S. state to drink alcohol. There are good medical, psychological, and developmental reasons for these laws.

The obvious way to eliminate the leading highway safety problem is for people never to drink alcohol and then drive.

Medical research shows that alcohol in a person's system can make crash injuries worse, especially injuries to the brain, spinal cord, or heart. This means that when anyone who has been drinking — driver or passenger — is in a crash, that person's chance of being killed or permanently disabled is higher than if the person had not been drinking.

Control of a Vehicle

The following three systems help to control the vehicle while driving — brakes, steering, and accelerator. At times, as when driving on snow or ice, it is easy to ask more of those control systems than the tires and road can provide. Meaning, you can lose control of the vehicle. See *Traction Control System (TCS) on page 5-6* and *Active Handling System on page 5-8*.

Adding non-dealer/non-retailer accessories can affect vehicle performance. See *Accessories and Modifications on page 6-3*.

Braking

See *Brake System Warning Light on page 4-35*.

Braking action involves perception time and reaction time. Deciding to push the brake pedal is perception time. Actually doing it is reaction time.

Average reaction time is about three-fourths of a second. But that is only an average. It might be less with one driver and as long as two or three seconds or more with another. Age, physical condition, alertness, coordination, and eyesight all play a part. So do alcohol, drugs, and frustration.

But even in three-fourths of a second, a vehicle moving at 100 km/h (60 mph) travels 20 m (66 feet). That could be a lot of distance in an emergency, so keeping enough space between the vehicle and others is important.

And, of course, actual stopping distances vary greatly with the surface of the road, whether it is pavement or gravel; the condition of the road, whether it is wet, dry, or icy; tire tread; the condition of the brakes; the weight of the vehicle; and the amount of brake force applied.

Avoid needless heavy braking. Some people drive in spurts, heavy acceleration followed by heavy braking, rather than keeping pace with traffic. This is a mistake. The brakes might not have time to cool between hard stops. The brakes will wear out much faster with a lot of heavy braking. Keeping pace with the traffic and allowing realistic following distances eliminates a lot of unnecessary braking. That means better braking and longer brake life.

If the engine ever stops while the vehicle is being driven, brake normally but do not pump the brakes. If the brakes are pumped, the pedal could get harder to push down. If the engine stops, there will still be some power brake assist but it will be used when the brake is applied. Once the power assist is used up, it can take longer to stop and the brake pedal will be harder to push.

Under certain weather or operating conditions, occasional brake squeak, squeal, or other noise might be heard with the vehicle's performance braking system. This brake system is designed for superior fade resistance and consistent operation using high performance brake pads. Brake noise and brake dust are normal and do not affect system performance.

Adding non-dealer/non-retailer accessories can affect vehicle performance. See *Accessories and Modifications on page 6-3*.

Antilock Brake System (ABS)

This vehicle has the Antilock Brake System (ABS), an advanced electronic braking system that helps prevent a braking skid.

When the engine is started and the vehicle begins to drive away, ABS checks itself. A momentary motor or clicking noise might be heard while this test is going on, and it might even be noticed that the brake pedal moves a little. This is normal.

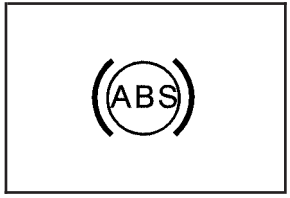

If there is a problem with ABS, this warning light stays on. See *Antilock Brake System (ABS) Warning Light on page 4-36*.

Let us say the road is wet and you are driving safely. Suddenly, an animal jumps out in front of you. You slam on the brakes and continue braking. Here is what happens with ABS:

A computer senses that the wheels are slowing down. If one of the wheels is about to stop rolling, the computer will separately work the brakes at each wheel.

ABS can change the brake pressure to each wheel, as required, faster than any driver could. This can help the driver steer around the obstacle while braking hard.

As the brakes are applied, the computer keeps receiving updates on wheel speed and controls braking pressure accordingly.

Remember: ABS does not change the time needed to get a foot up to the brake pedal or always decrease stopping distance. If you get too close to the vehicle in front of you, there will not be enough time to apply the brakes if that vehicle suddenly slows or stops. Always leave enough room up ahead to stop, even with ABS.

Using ABS

Do not pump the brakes. Just hold the brake pedal down firmly and let antilock work. A motor or clicking noise might be heard and the brake pedal might be felt to move a little during a stop, but this is normal.

Braking in Emergencies

ABS allows the driver to steer and brake at the same time. In many emergencies, steering can help more than even the very best braking.

Brake Assist

This vehicle has a brake assist feature that responds to emergency braking by generating additional pressure and engaging the ABS. When this happens, the brake pedal will feel easier to push. Just hold the brake pedal down firmly and let the system work for you. You might feel the brakes vibrate or notice some noise, but this is normal. The brakes will return to normal operation after the brake pedal is released.

Brake assist cannot compensate for unsafe driving practices and braking effectiveness, itself, depends on the condition of the road, tires, and brakes and vehicle mass.

Traction Control System (TCS)

The vehicle has a Traction Control System (TCS) that limits wheel spin. This is especially useful in slippery road conditions. The system operates only if it senses that the rear wheels are spinning too much or are beginning to lose traction. When this happens, the system works the rear brakes and reduces engine power (by closing the throttle and managing engine spark) to limit wheel spin.

The TRACTION SYSTEM ACTIVE message displays on the Driver Information Center (DIC) when TCS is limiting wheel spin. See *DIC Warnings and Messages on page 4-51*. The system may be heard or felt while it is working, but this is normal.

If cruise control is being used when TCS begins to limit wheel spin, the cruise control will automatically disengage. Cruise control may be reengaged when road conditions allow. See *Cruise Control on page 4-7*.

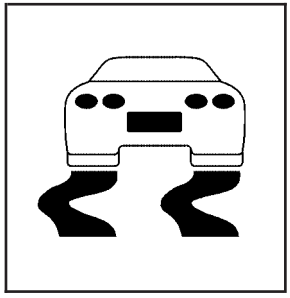

The SERVICE TRACTION SYSTEM message and the TCS warning light will come on if there is a problem with TCS. See *DIC Warnings and Messages on page 4-51*.

When this light and the SERVICE TRACTION SYSTEM message are on, the system will not limit wheel spin. Adjust your driving accordingly.

TCS automatically comes on whenever the vehicle is started. To limit wheel spin, especially in slippery road conditions, the system should always be left on. TCS can be turned off if needed.

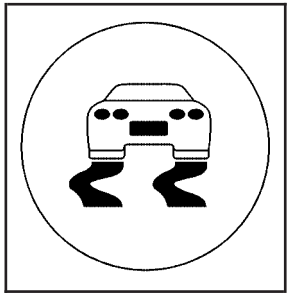

To turn the system off, press the button located on the console.

The system can be turned on or off at any time by pressing the ACTIVE HANDLING button. The DIC will display the appropriate message when the button is pushed.

Notice: **When traction control is turned off, or Competitive Driving Mode is active, it is possible to lose traction. If you attempt to shift with the drive wheels spinning with a loss of traction, it is possible to cause damage to the transmission. Do not attempt to shift when the drive wheels do not have traction. Damage caused by misuse of the vehicle is not covered. See the warranty book for additional information.**

Adding non-dealer/non-retailer accessories can affect the vehicle's performance. See *Accessories and Modifications on page 6-3* for more information.

Active Handling System

The Active Handling System is a computer controlled system that helps the driver maintain directional control of the vehicle in difficult driving conditions. This is accomplished by selectively applying any one of the vehicle's brakes.

The ACTIVE HANDLING message will come on when the system is operating. See *DIC Warnings and Messages on page 4-51* for more information.
The system may be heard or felt while it is working. This is normal.

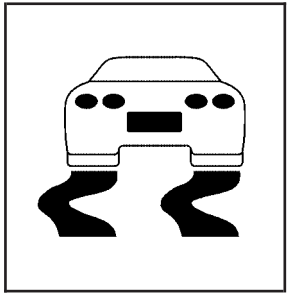

The SERVICE ACTIVE HANDLING SYSTEM message is displayed, the instrument cluster light comes on, and a sound is heard if there is a problem with the system.

See *DIC Warnings and Messages on page 4-51* for more information.

When this light and the SERVICE ACTIVE HANDLING SYSTEM message are on, the system is not operational. Adjust your driving accordingly.

The Active Handling System comes on automatically whenever the vehicle is started. To help maintain directional control of the vehicle, the system should always be left on. The system can be turned off needed. If the Active Handling System is turned off, the Traction Control System will also be turned off. Adjust your driving accordingly.

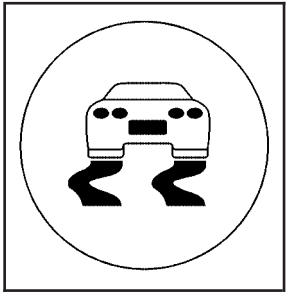

To turn the system off, press the Active Handling button on the console until TRACTION SYSTEM AND ACTIVE HANDLING SYSTEM — OFF is displayed.

The system can be turned back on at any time by pressing the button. The DIC will display the appropriate message when the button is pushed.

If the Tire Pressure Monitor (TPM) system detects a flat tire and the Driver Information Center (DIC) displays TIRE FLAT, or if the TPM system is malfunctioning and the DIC displays SERVICE TIRE MONITOR, the Active Handling System will be affected as follows:

- The Active Handling System cannot be turned off by the driver.
- If the Active Handling System is off, it will be turned on automatically.
- Competitive Driving Mode or Performance Traction Management is unavailable.
- The Active Handling System will feel different in aiding and maintaining directional control.

Competitive Driving Mode

Competitive Driving Mode, Performance Traction Management, and Launch Control are systems designed to allow increased performance while accelerating and/or cornering. This is accomplished by regulating and optimizing the engine, brakes, and suspension performance. These modes are for use at a closed course race track and are not intended for use on public roads. They will not compensate for a driver's inexperience or lack of familiarity with the race track. Drivers who prefer to allow the system to have more control of the engine, brake, and suspension are advised to turn the normal traction control and active handling systems on. See *Racing or Other Competitive Driving on page 5-19* for more information.

Notice: **Do not attempt to shift when the drive wheels are spinning and do not have traction. This may cause damage to the transmission. Damage caused by misuse of the vehicle is not covered by the vehicle warranty. See the warranty book for additional information.**

Competitive Driving Mode (Except ZR1)

Competitive Driving Mode allows full engine power while the Active Handling System helps maintain directional control of the vehicle by selective brake application. In this mode, TCS is off and Launch Control is available. Adjust your driving style to account for the available engine power. See Launch Control later in this section.

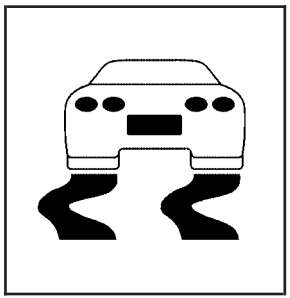

This light is on when the vehicle is in the Competitive Driving Mode.

This optional handling mode can be selected by pressing the ACTIVE HANDLING button on the console quickly two times. COMPETITIVE DRIVING MODE displays in the Driver Information Center (DIC). See *DIC Warnings and Messages on page 4-51* for more information.

When the ACTIVE HANDLING button is pressed again, the Active Handling and TCS systems are on. The TRACTION SYSTEM AND ACTIVE HANDLING-ON message displays briefly in the DIC and a chime is heard.

Performance Traction Management (ZR1)

Performance Traction Management integrates the Traction Control, Active Handling and Selective Ride Control systems to provide improved and consistent performance when cornering. The amount of available engine power is based on the mode selected, track conditions, driver skill, and the radius of each corner.

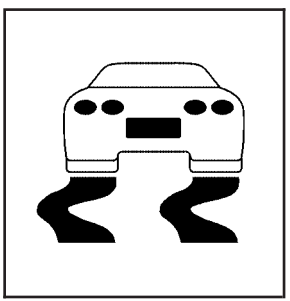

This light is on when the vehicle is in the Performance Traction Management Mode.

This optional handling mode can be selected by pressing the ACTIVE HANDLING button on the console quickly two times. PERF TRAC 1 - WET ACTIVE HANDLING ON displays in the DIC.

To experience the performance benefit of this system, after entering a curve and at the point where the driver would normally start to increase acceleration, the accelerator pedal can be fully pressed. The Performance Traction Management system will modify the level of engine power for a smooth and consistent corner exit.

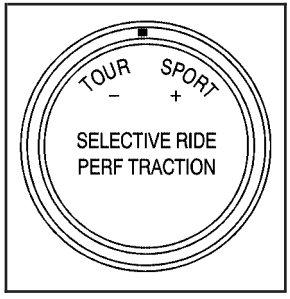

To select a mode while in Performance Traction Management, turn the knob located on the console.

The Performance Traction Management system contains five modes. These modes are selected by turning the Selective Ride Control/Performance Traction Management knob on the center console. The driver scrolls up or down through modes 1-5 by rotating the knob to the right or left.

The following is a DIC display description and the recommended usage of each mode:

PERF TRAC 1 – WET ACTIVE HANDLING ON

- Intended for all driver skill levels
- Wet or damp conditions only — not intended for use in heavy rain or standing water
- Active Handling is on and engine power is reduced based on conditions

PERF TRAC 2 – DRY ACTIVE HANDLING ON

- For use by less experienced drivers or while learning a new track
- Dry conditions only
- Active Handling is on and engine power is slightly reduced

PERF TRAC 3 – SPORT ACTIVE HANDLING ON

- For use by drivers who are familiar with the track
- Dry conditions only
- Requires more driving skill than mode 2
- Active Handling is on and more engine power is available than in mode 2

PERF TRAC 4 – SPORT ACTIVE HANDLING OFF

- For use by drivers who are familiar with the track
- Dry conditions only
- Requires more driving skill than modes 2 or 3
- Active Handling is off and available engine power is the same as mode 3

PERF TRAC 5 – RACE ACTIVE HANDLING OFF

- For use by experienced drivers who are familiar with the track
- Dry conditions only
- Requires more driving skill than in other modes
- Active Handling is off and engine power is available for maximum cornering speed

Press and release the ACTIVE HANDLING button to turn off Performance Traction Management and return to the Active Handling and Traction Control Systems. The TRACTION SYSTEM AND ACTIVE HANDLING-ON message displays briefly in the DIC and a chime is heard.

Launch Control

A Launch Control feature is available, within Competitive Driving Mode (except ZR1) or Performance Traction Management (ZR1), on vehicles with a manual transmission to allow the driver to achieve high levels of vehicle acceleration in a straight line. Launch Control is a form of traction control that manages tire spin while launching the vehicle. This feature is intended for use during closed course race events where consistent zero to sixty and quarter mile times are desirable.

Launch Control is only available when the following criteria are met:

- Competitive Driving Mode is selected (except ZR1) or any of the Performance Traction Management modes are selected (ZR1). The TCS light comes on the instrument panel and the appropriate DIC message displays.
- The vehicle is not moving.
- The steering wheel is pointing straight.
- The clutch is pressed and the vehicle is in first gear.
- The accelerator pedal is rapidly applied to wide open throttle.

The Launch Control feature will initially limit engine speed as the driver rapidly applies the accelerator pedal to wide open throttle. A smooth, quick release of the clutch, while maintaining the fully pressed accelerator pedal, will manage wheel slip. Complete shifts as described in *Manual Transmission Operation on page 3-31*.

After the vehicle is launched, the system continues in Competitive Mode (except ZR1) or Performance Traction Management (ZR1).

Competitive Driving Mode, Performance Traction Management, and Launch Control are systems designed for a closed course race track and not intended for use on public roads. The systems are not intended to compensate for lack of driver experience or familiarity with the race track.

Limited-Slip Rear Axle

Vehicles with a limited-slip rear axle can give more traction on snow, mud, ice, sand or gravel. It works like a standard axle most of the time, but when traction is low, this feature allows the drive wheel with the most traction to move the vehicle.

Selective Ride Control

The vehicle may have a ride control system called Magnetic Selective Ride Control. The system provides the following performance benefits:

- Reduced Impact Harshness
- Improved Road Isolation
- Improved High-Speed Stability
- Improved Handling Response
- Better Control of Body Ride Motions

Except ZR1

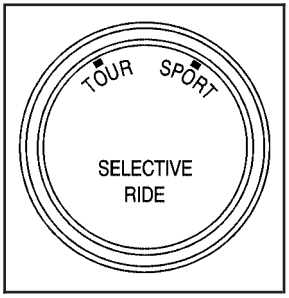

This knob is located on the center console. Turn it to select the suspension of your choice.

TOUR: Use for normal city and highway driving. This setting provides a smooth, soft ride.

SPORT: Use where road conditions or personal preference demand more control. This setting provides more “feel”, or response to the road conditions.

The setting can be changed at any time. Based on road conditions, steering wheel angle and the vehicle speed, the system automatically adjusts to provide the best handling while providing a smooth ride. The Tour and Sport modes will feel similar on a smooth road. Select a new setting whenever driving conditions change.

Three Driver Information Center (DIC) messages (SERVICE RIDE CONTROL, SHOCKS INOPERATIVE and MAXIMUM SPEED 80 MPH (129 KM/H) display when a malfunction occurs with the Selective Ride Control system. Refer to *DIC Warnings and Messages on page 4-51* for more information.

ZR1

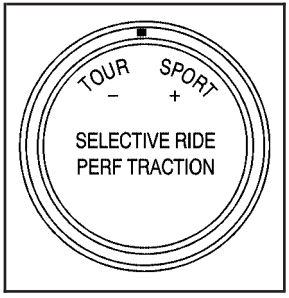

This knob is located on the center console. Turn it to select the suspension of your choice. The knob will return to the center position when released. The switch will illuminate the current suspension setting.

TOUR: Use for normal city and highway driving. This setting provides a smooth, soft ride.

SPORT: Use where road conditions or personal preference demand more control. This setting provides more “feel”, or response to the road conditions.

The setting can be changed at any time. Based on road conditions, steering wheel angle and the vehicle speed, the system automatically adjusts to provide the best handling while providing a smooth ride. The Tour and Sport modes will feel similar on a smooth road. Select a new setting whenever driving conditions change.

The Selective Ride knob will not display the Tour or Sport setting when the Performance Traction Management mode is selected. When this mode is selected, turning the Selective Ride knob will change the Performance Traction Management mode and the suspension setting will be determined automatically. See *Competitive Driving Mode on page 5-9* for more information.

Three Driver Information Center (DIC) messages (SERVICE RIDE CONTROL, SHOCKS INOPERATIVE and MAXIMUM SPEED 80 MPH (129 KM/H) display when a malfunction occurs with the Selective Ride Control system. Refer to *DIC Warnings and Messages on page 4-51* for more information.

Steering

Power Steering

If power steering assist is lost because the engine stops or the system is not functioning, the vehicle can be steered but it will take more effort.

Magnetic Speed Variable Assist Steering System

This system continuously adjusts the effort felt when steering at all vehicle speeds. It provides ease when parking, yet a firm, solid feel at highway speeds.

Steering Tips

It is important to take curves at a reasonable speed.

Traction in a curve depends on the condition of the tires and the road surface, the angle at which the curve is banked, and vehicle speed. While in a curve, speed is the one factor that can be controlled.

If there is a need to reduce speed, do it before entering the curve, while the front wheels are straight.

Try to adjust the speed so you can drive through the curve. Maintain a reasonable, steady speed. Wait to accelerate until out of the curve, and then accelerate gently into the straightaway.

Steering in Emergencies

There are times when steering can be more effective than braking. For example, you come over a hill and find a truck stopped in your lane, or a car suddenly pulls out from nowhere, or a child darts out from between parked cars and stops right in front of you. These problems can be avoided by braking — if you can stop in time. But sometimes you cannot stop in time because there is no room. That is the time for evasive action — steering around the problem.

The vehicle can perform very well in emergencies like these. First apply the brakes. See *Braking on page 5-3*. It is better to remove as much speed as possible from a collision. Then steer around the problem, to the left or right depending on the space available.

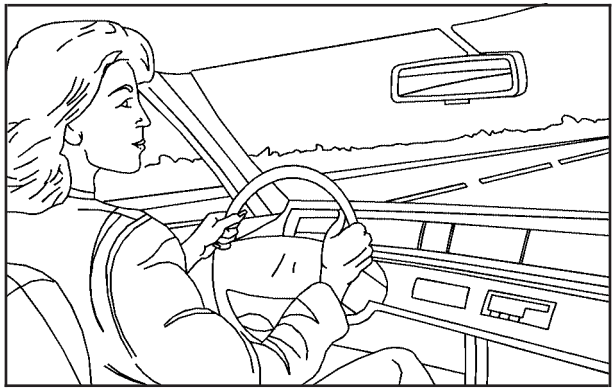

An emergency like this requires close attention and a quick decision. If holding the steering wheel at the recommended 9 and 3 o'clock positions, it can be turned a full 180 degrees very quickly without removing either hand. But you have to act fast, steer quickly, and just as quickly straighten the wheel once you have avoided the object.

The fact that such emergency situations are always possible is a good reason to practice defensive driving at all times and wear safety belts properly.

Off-Road Recovery

The vehicle's right wheels can drop off the edge of a road onto the shoulder while driving.

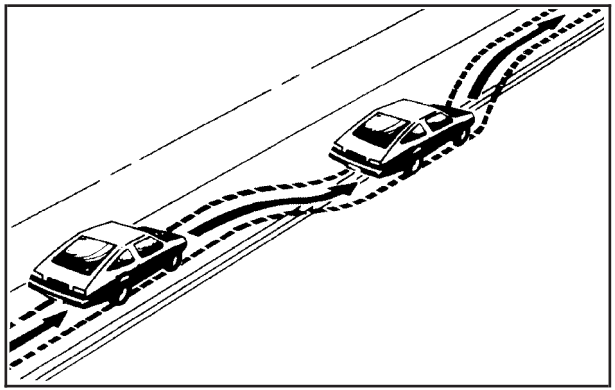

If the level of the shoulder is only slightly below the pavement, recovery should be fairly easy. Ease off the accelerator and then, if there is nothing in the way, steer so that the vehicle straddles the edge of the pavement. Turn the steering wheel 8 to 13 cm (3 to 5 inches), about one-eighth turn, until the right front tire contacts the pavement edge. Then turn the steering wheel to go straight down the roadway.

Passing

Passing another vehicle on a two-lane road can be dangerous. To reduce the risk of danger while passing:

- Look down the road, to the sides, and to crossroads for situations that might affect a successful pass. If in doubt, wait.
- Watch for traffic signs, pavement markings, and lines that could indicate a turn or an intersection. Never cross a solid or double-solid line on your side of the lane.
- Do not get too close to the vehicle you want to pass. Doing so can reduce your visibility.
- Wait your turn to pass a slow vehicle.
- When you are being passed, ease to the right.

Loss of Control

Let us review what driving experts say about what happens when the three control systems — brakes, steering, and acceleration — do not have enough friction where the tires meet the road to do what the driver has asked.

In any emergency, do not give up. Keep trying to steer and constantly seek an escape route or area of less danger.

Skidding

In a skid, a driver can lose control of the vehicle. Defensive drivers avoid most skids by taking reasonable care suited to existing conditions, and by not overdriving those conditions. But skids are always possible.

The three types of skids correspond to the vehicle's three control systems. In the braking skid, the wheels are not rolling. In the steering or cornering skid, too much speed or steering in a curve causes tires to slip and lose cornering force. And in the acceleration skid, too much throttle causes the driving wheels to spin.

Remember: Any traction control system helps avoid only the acceleration skid. If the traction control system is off, then an acceleration skid is best handled by easing your foot off the accelerator pedal.

If the vehicle starts to slide, ease your foot off the accelerator pedal and quickly steer the way you want the vehicle to go. If you start steering quickly enough, the vehicle may straighten out. Always be ready for a second skid if it occurs.

Of course, traction is reduced when water, snow, ice, gravel, or other material is on the road. For safety, slow down and adjust your driving to these conditions. It is important to slow down on slippery surfaces because stopping distance will be longer and vehicle control more limited.

While driving on a surface with reduced traction, try your best to avoid sudden steering, acceleration, or braking, including reducing vehicle speed by shifting to a lower gear. Any sudden changes could cause the tires to slide. You may not realize the surface is slippery until the vehicle is skidding. Learn to recognize warning clues — such as enough water, ice, or packed snow on the road to make a mirrored surface — and slow down when you have any doubt.

Remember: Any Antilock Brake System (ABS) helps avoid only the braking skid.

Racing or Other Competitive Driving

Racing or competitive driving may affect the vehicle warranty. See the warranty book before using the vehicle for racing or other competitive driving.

Notice: **If you use the vehicle for racing or other competitive driving, the engine may use more oil than it would with normal use. Low oil levels can damage the engine. For information on how to add oil, see *Engine Oil on page 6-20*.**

Z06, ZR1, and Grand Sport Only: Be sure to check the oil level often during racing or other competitive driving and keep the level at or near the upper mark that shows the proper operating range on the engine oil dipstick.

Except Z06, ZR1, and Grand Sport: Be sure to check the oil level often during racing or other competitive driving and keep the level at or near 1 L (1 quart) above the upper mark that shows the proper operating range on the engine oil dipstick. After the competitive driving, remove excess oil so that the level on the dipstick is not above the upper mark that shows the proper operating range.

Z06, ZR1, and Grand Sport Only: For racing or competitive driving, it is recommended that the brake fluid be replaced with a high performance brake fluid that has a dry boiling point greater than 279°C (534°F).

After conversion to the high performance brake fluid, follow the brake fluid service recommendations outlined by the fluid manufacturer. Do not use silicone or DOT-5 brake fluids.

If the vehicle is a Z06, ZR1, or Grand Sport model, it has greaseable outer ends on both of the rear toe-links. Under normal use, lubrication should be performed as described in the maintenance schedule. See *Scheduled Maintenance on page 7-3* and *Recommended Fluids and Lubricants on page 7-9*. If using the vehicle for racing, lubrication should be performed at the end of each racing day. See your dealer/retailer for lubrication and make sure any needed repairs are made at once. Proper procedures for performing these services can be found in the service manual. See *Service Publications Ordering Information on page 8-17*.

If the vehicle is used for racing or other competitive driving, the rear axle fluid temperatures may be higher than would occur in normal driving. We recommend that the rear axle fluid be drained and refilled with new fluid after every 24 hours of racing or competitive driving. See *Recommended Fluids and Lubricants on page 7-9* for what fluid to use.

ZR1 Brake Burnish Procedure

Notice: **These procedures are specific to the ZR1 with ceramic brake rotors. These procedures should not be run on other Corvette models as damage may result.**

Notice: **The new vehicle break-in period should be completed before performing the brake burnish procedure or damage may occur to the powertrain/engine. See *New Vehicle Break-In on page 3-21*.**

When performed as instructed, these procedures will not damage the brakes. During the burnishing procedure, the brake pads will smoke and produce an odor. The braking force and pedal travel may increase. After the procedure is complete, the brake pads may appear white at the rotor contact.

Street High Performance Brake Burnishing Procedure

Run this procedure in a safe manner and in compliance with all local and state ordinances/laws regarding motor vehicle operation. Run this procedure only on dry pavement.

1. From a stop, accelerate as rapidly as possible without activating traction control to a speed of 97 kph (60 mph).
2. Use enough pedal force to completely stop the vehicle in 4 to 5 seconds. If ABS activates, braking is too hard.
3. Repeat steps 1 and 2, 50 times. This should take about 10 minutes.
4. After completing the 50 stops, cool the brakes by driving for 8 km (5 miles) at 97 kph (60 mph).

As with all high performance brake systems, some amount of brake squeal is normal.

Racing/Track Brake Burnish Procedure

To prepare the ZR1 brake system for track events and racing, the Street High Performance Brake Burnish as described previously should be completed.

In addition to completing the Street High Performance Brake Burnishing Procedure, the following additional procedure needs to be completed to make the ZR1 brake system ready for track events and racing.

This procedure should only be run on a track and only on dry pavement.

Notice: **Brake pedal fade will occur during this track burnish procedure and can cause brake pedal travel and force to increase. This could extend stopping distance until the brakes are fully burnished.**

1. Drive a normal first lap and not too aggressive.
2. Laps 2 and 3 should be gradually driven faster and more aggressive, while allowing for reduced brake output and increased stopping distance due to brake fade.
3. Lap 4 as near to full speed, while allowing for reduced brake output and increased stopping distance due to brake fade.
4. Laps 5 and 6 should be cool down laps
5. Lap 7 should be normal driving or an easy out lap.

Driving at Night

Night driving is more dangerous than day driving because some drivers are likely to be impaired — by alcohol or drugs, with night vision problems, or by fatigue.

Night driving tips include:

- Drive defensively.
- Do not drink and drive.
- Reduce headlamp glare by adjusting the inside rearview mirror.
- Slow down and keep more space between you and other vehicles because headlamps can only light up so much road ahead.
- Watch for animals.
- When tired, pull off the road.
- Do not wear sunglasses.
- Avoid staring directly into approaching headlamps.
- Keep the windshield and all glass on your vehicle clean — inside and out.
- Keep your eyes moving, especially during turns or curves.

No one can see as well at night as in the daytime. But, as we get older, these differences increase. A 50-year-old driver might need at least twice as much light to see the same thing at night as a 20-year-old.

Driving in Rain and on Wet Roads

Rain and wet roads can reduce vehicle traction and affect your ability to stop and accelerate. Always drive slower in these types of driving conditions and avoid driving through large puddles and deep-standing or flowing water.

⚠ WARNING:

Wet brakes can cause crashes. They might not work as well in a quick stop and could cause pulling to one side. You could lose control of the vehicle.

After driving through a large puddle of water or a car/vehicle wash, lightly apply the brake pedal until the brakes work normally.

Flowing or rushing water creates strong forces. Driving through flowing water could cause your vehicle to be carried away. If this happens, you and other vehicle occupants could drown. Do not ignore police warnings and be very cautious about trying to drive through flowing water.

Hydroplaning

Hydroplaning is dangerous. Water can build up under your vehicle's tires so they actually ride on the water. This can happen if the road is wet enough and you are going fast enough. When your vehicle is hydroplaning, it has little or no contact with the road.

There is no hard and fast rule about hydroplaning. The best advice is to slow down when the road is wet.

Other Rainy Weather Tips

Besides slowing down, other wet weather driving tips include:

- Allow extra following distance.
- Pass with caution.
- Keep windshield wiping equipment in good shape.
- Keep the windshield washer fluid reservoir filled.
- Have good tires with proper tread depth. See *Tires on page 6-64*.
- Turn off cruise control.

Before Leaving on a Long Trip

To prepare your vehicle for a long trip, consider having it serviced by your dealer/retailer before departing.

Things to check on your own include:

- *Windshield Washer Fluid:* Reservoir full? Windows clean — inside and outside?
- *Wiper Blades:* In good shape?
- *Fuel, Engine Oil, Other Fluids:* All levels checked?
- *Lamps:* Do they all work and are lenses clean?
- *Tires:* Are treads good? Are tires inflated to recommended pressure?
- *Weather and Maps:* Safe to travel? Have up-to-date maps?

Highway Hypnosis

Always be alert and pay attention to your surroundings while driving. If you become tired or sleepy, find a safe place to park your vehicle and rest.

Other driving tips include:

- Keep the vehicle well ventilated.
- Keep interior temperature cool.
- Keep your eyes moving — scan the road ahead and to the sides.
- Check the rearview mirror and vehicle instruments often.

Hill and Mountain Roads

Driving on steep hills or through mountains is different than driving on flat or rolling terrain. Tips for driving in these conditions include:

- Keep the vehicle serviced and in good shape.
- Check all fluid levels and brakes, tires, cooling system, and transmission.
- Going down steep or long hills, shift to a lower gear.

⚠ WARNING:

If you do not shift down, the brakes could get so hot that they would not work well. You would then have poor braking or even none going down a hill. You could crash. Shift down to let the engine assist the brakes on a steep downhill slope.

⚠ WARNING:

Coasting downhill in N (Neutral) or with the ignition off is dangerous. The brakes will have to do all the work of slowing down and they could get so hot that they would not work well. You would then have poor braking or even none going down a hill. You could crash. Always have the engine running and the vehicle in gear when going downhill.

- Stay in your own lane. Do not swing wide or cut across the center of the road. Drive at speeds that let you stay in your own lane.
- Top of hills: Be alert — something could be in your lane (stalled car, accident).
- Pay attention to special road signs (falling rocks area, winding roads, long grades, passing or no-passing zones) and take appropriate action.

Winter Driving

Driving on Snow or Ice

Drive carefully when there is snow or ice between the tires and the road, creating less traction or grip. Wet ice can occur at about 0°C (32°F) when freezing rain begins to fall, resulting in even less traction. Avoid driving on wet ice or in freezing rain until roads can be treated with salt or sand.

Drive with caution, whatever the condition. Accelerate gently so traction is not lost. Accelerating too quickly causes the wheels to spin and makes the surface under the tires slick, so there is even less traction.

Try not to break the fragile traction. If you accelerate too fast, the drive wheels will spin and polish the surface under the tires even more.

The *Traction Control System (TCS) on page 5-6* improves the ability to accelerate on slippery roads, but slow down and adjust your driving to the road conditions. The *Active Handling System on page 5-8* might also activate. When driving through deep snow, turn off the traction control system to help maintain vehicle motion at lower speeds.

The *Antilock Brake System (ABS) on page 5-5* improves vehicle stability during hard stops on a slippery roads, but apply the brakes sooner than when on dry pavement.

Allow greater following distance on any slippery road and watch for slippery spots. Icy patches can occur on otherwise clear roads in shaded areas. The surface of a curve or an overpass can remain icy when the surrounding roads are clear. Avoid sudden steering maneuvers and braking while on ice.

Turn off cruise control, if equipped, on slippery surfaces.

Blizzard Conditions

Being stuck in snow can be in a serious situation. Stay with the vehicle unless there is help nearby. If possible, use the *Roadside Assistance Program on page 8-7*. To get help and keep everyone in the vehicle safe:

- Turn on the *Hazard Warning Flashers on page 4-3*.
- Tie a red cloth to an outside mirror.

⚠ WARNING:

Snow can trap engine exhaust under the vehicle. This may cause exhaust gases to get inside. Engine exhaust contains carbon monoxide (CO) which cannot be seen or smelled. It can cause unconsciousness and even death.

If the vehicle is stuck in the snow:

- Clear away snow from around the base of your vehicle, especially any that is blocking the exhaust pipe.
- Check again from time to time to be sure snow does not collect there.
- Open a window about 5 cm (two inches) on the side of the vehicle that is away from the wind to bring in fresh air.
- Fully open the air outlets on or under the instrument panel.
- Adjust the Climate Control system to a setting that circulates the air inside the vehicle and set the fan speed to the highest setting. See Climate Control System in the Index.

WARNING: (Continued)

WARNING: (Continued)

For more information about carbon monoxide, see *Engine Exhaust on page 3-36*.

Snow can trap exhaust gases under your vehicle. This can cause deadly CO (carbon monoxide) gas to get inside. CO could overcome you and kill you. You cannot see it or smell it, so you might not know it is in your vehicle. Clear away snow from around the base of your vehicle, especially any that is blocking the exhaust.

Run the engine for short periods only as needed to keep warm, but be careful.

To save fuel, run the engine for only short periods as needed to warm the vehicle and then shut the engine off and close the window most of the way to save heat. Repeat this until help arrives but only when you feel really uncomfortable from the cold. Moving about to keep warm also helps.

If it takes some time for help to arrive, now and then when you run the engine, push the accelerator pedal slightly so the engine runs faster than the idle speed. This keeps the battery charged to restart the vehicle and to signal for help with the headlamps. Do this as little as possible to save fuel.

If Your Vehicle is Stuck in Sand, Mud, Ice, or Snow

Slowly and cautiously spin the wheels to free the vehicle when stuck in sand, mud, ice, or snow. See *Rocking Your Vehicle to Get It Out on page 5-28*.

If the vehicle has a traction system, it can often help to free a stuck vehicle. Refer to the vehicle's traction system in the Index. If stuck too severely for the traction system to free the vehicle, turn the traction system off and use the rocking method.

⚠ WARNING:

If the vehicle's tires spin at high speed, they can explode, and you or others could be injured. The vehicle can overheat, causing an engine compartment fire or other damage. Spin the wheels as little as possible and avoid going above 55 km/h (35 mph) as shown on the speedometer.

For information about using tire chains on the vehicle, see *Tire Chains on page 6-86*.

Rocking Your Vehicle to Get It Out

Turn the steering wheel left and right to clear the area around the front wheels. Turn the traction control system off. Shift back and forth between R (Reverse) and a forward gear, spinning the wheels as little as possible. For a manual transmission, shift slowly between either 1 (First) or 2 (Second) and R (Reverse), allowing the wheels to stop before shifting into gear. To prevent transmission wear, wait until the wheels stop spinning before shifting gears. Release the accelerator pedal while shifting, and press lightly on the accelerator pedal when the transmission is in gear. Slowly spinning the wheels in the forward and reverse directions causes a rocking motion that could free the vehicle. If that does not get the vehicle out after a few tries, it might need to be towed out. If the vehicle does need to be towed out, see *Towing Your Vehicle on page 5-33*.

Loading the Vehicle

It is very important to know how much weight your vehicle can carry. This weight is called the vehicle capacity weight and includes the weight of all occupants, cargo and all nonfactory-installed options. Two labels on your vehicle show how much weight it may properly carry, the Tire and Loading Information label and the Certification label.

⚠ WARNING:

Do not load the vehicle any heavier than the Gross Vehicle Weight Rating (GVWR), or either the maximum front or rear Gross Axle Weight Rating (GAWR). If you do, parts on the vehicle can break, and it can change the way your vehicle handles. These could cause you to lose control and crash. Also, overloading can shorten the life of the vehicle.

Tire and Loading Information Label

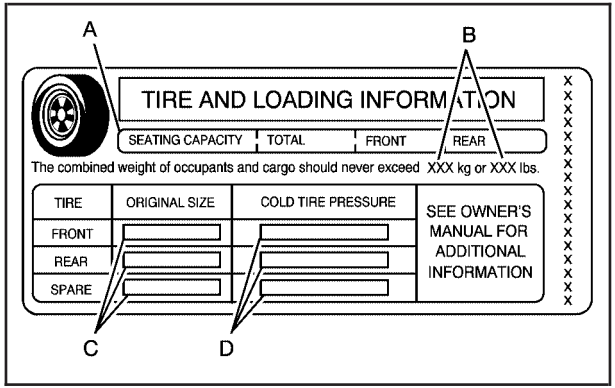

Label Example

A vehicle specific Tire and Loading Information label is attached to the center pillar (B-pillar) of your vehicle. With the driver's door open, you will find the label attached below the door latch. This label shows the number of occupant seating positions (A), and the maximum vehicle capacity weight (B) in kilograms and pounds.

The Tire and Loading Information label also shows the size of the original equipment tires (C) and the recommended cold tire inflation pressures (D). For more information on tires and inflation see *Tires on page 6-64* and *Inflation - Tire Pressure on page 6-72*.

There is also important loading information on the vehicle Certification label. It tells you the Gross Vehicle Weight Rating (GVWR) and the Gross Axle Weight Rating (GAWR) for the front and rear axle. See "Certification Label" later in this section.

Steps for Determining Correct Load Limit

1. Locate the statement "The combined weight of occupants and cargo should never exceed XXX kg or XXX lbs" on your vehicle's placard.
2. Determine the combined weight of the driver and passengers that will be riding in your vehicle.
3. Subtract the combined weight of the driver and passengers from XXX kg or XXX lbs.

4. The resulting figure equals the available amount of cargo and luggage load capacity. For example, if the “XXX” amount equals 1400 lbs and there will be five 150 lb passengers in your vehicle, the amount of available cargo and luggage load capacity is 650 lbs (1400 – 750 (5 x 150) = 650 lbs).
5. Determine the combined weight of luggage and cargo being loaded on the vehicle. That weight may not safely exceed the available cargo and luggage load capacity calculated in Step 4.
6. If your vehicle will be towing a trailer, the load from your trailer will be transferred to your vehicle. Consult this manual to determine how this reduces the available cargo and luggage load capacity of your vehicle.

   Your vehicle is neither designed nor intended to tow a trailer.

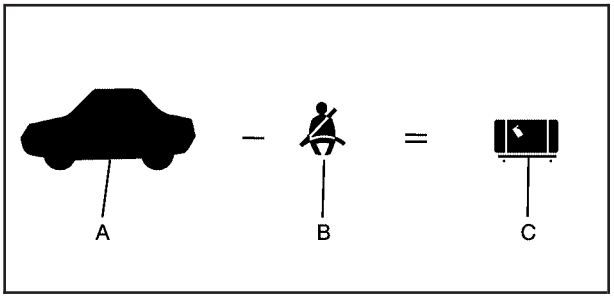

Example 1

Item	Description	Total
A	Vehicle Capacity Weight for Example 1 =	400 lbs (181 kg)
B	Subtract Occupant Weight @ 150 lbs (68 kg) x 1 =	150 lbs (68 kg)
C	Available Occupant and Cargo Weight =	250 lbs (113 kg)

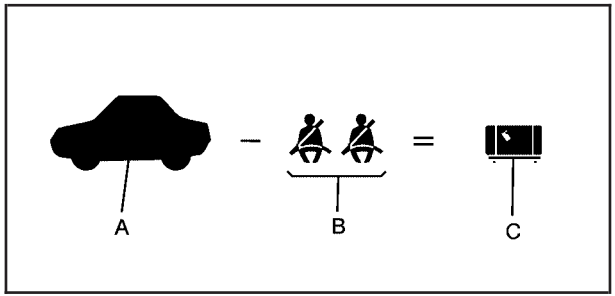

Example 2

Item	Description	Total
A	Vehicle Capacity Weight for Example 2 =	400 lbs (181 kg)
B	Subtract Occupant Weight @ 150 lbs (68 kg) x 2 =	300 lbs (136 kg)
C	Available Cargo Weight =	100 lbs (45 kg)

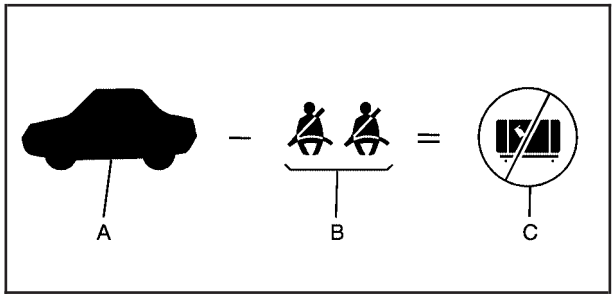

Example 3

Item	Description	Total
A	Vehicle Capacity Weight for Example 3 =	400 lbs (181 kg)
B	Subtract Occupant Weight @ 200 lbs (91 kg) x 2 =	400 lbs (181 kg)
C	Available Cargo Weight =	0 lbs (0 kg)

Refer to your vehicle's Tire and Loading Information label for specific information about your vehicle's capacity weight and seating positions. The combined weight of the driver, passengers and cargo should never exceed your vehicle's capacity weight.

Certification Label

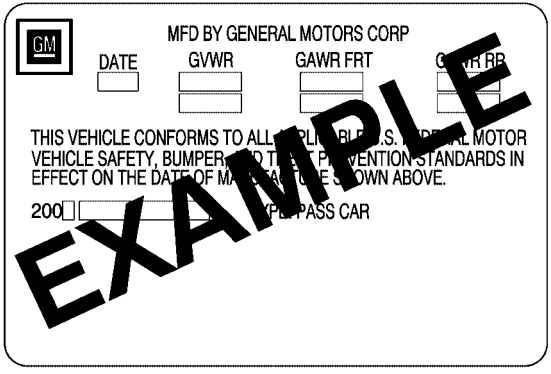

A vehicle specific Certification label is attached to the rear edge of the driver's door. It tells you the gross weight capacity of your vehicle, called the Gross Vehicle Weight Rating (GVWR).

The GVWR includes the weight of the vehicle, all occupants, fuel and cargo. Never exceed the GVWR for your vehicle, or the Gross Axle Weight Rating (GAWR) for either the front or rear axle.

Do not load your vehicle with more weight than it was designed to carry. See "Steps for Determining Correct Load Limit" earlier in this section.

⚠ WARNING:

Do not load the vehicle any heavier than the Gross Vehicle Weight Rating (GVWR), or either the maximum front or rear Gross Axle Weight Rating (GAWR). If you do, parts on the vehicle can break, and it can change the way your vehicle handles. These could cause you to lose control and crash. Also, overloading can shorten the life of the vehicle.

Notice: **Overloading the vehicle may cause damage. Repairs would not be covered by the vehicle warranty. Do not overload the vehicle.**

If you put things inside your vehicle — like suitcases, tools, packages or anything else — they will go as fast as the vehicle goes. If you have to stop or turn quickly, or if there is a crash, they will keep going.

⚠ WARNING:

Things you put inside your vehicle can strike and injure people in a sudden stop or turn, or in a crash.

- Put things in the rear area of your vehicle. Try to spread the weight evenly.
- Never stack heavier things, like suitcases, inside the vehicle so that some of them are above the tops of the seats.
- Do not leave an unsecured child restraint in your vehicle.
- When you carry something inside the vehicle, secure it whenever you can.

Towing

Towing Your Vehicle

To avoid damage, the disabled vehicle should be towed with all four wheels off the ground. Consult your dealer/retailer or a professional towing service if the disabled vehicle must be towed. See *Roadside Assistance Program on page 8-7*.

Recreational Vehicle Towing

Notice: **Dolly towing or dinghy towing the vehicle may cause damage because of reduced ground clearance. Always put the vehicle on a flatbed truck or trailer.**

The vehicle was neither designed nor intended to be towed with any of its wheels on the ground. If the vehicle must be towed, see “Towing Your Vehicle” earlier in this section.

Towing a Trailer

The vehicle is neither designed nor intended to tow a trailer.

✍ NOTES

Section 6 Service and Appearance Care

Service 6-3
Accessories and Modifications 6-3
California Proposition 65 Warning 6-4
California Perchlorate Materials Requirements 6-4
Doing Your Own Service Work 6-4
Adding Equipment to the Outside of the Vehicle 6-5

Fuel 6-5
Gasoline Octane 6-6
Gasoline Specifications 6-6
California Fuel 6-7
Additives 6-7
Fuels in Foreign Countries 6-8
Filling the Tank 6-9
Filling a Portable Fuel Container 6-12

Checking Things Under the Hood 6-12
Hood Release 6-13
Engine Compartment Overview 6-14
Engine Oil 6-20
Engine Oil Life System 6-27
Engine Air Cleaner/Filter 6-28
Automatic Transmission Fluid 6-32
Manual Transmission Fluid 6-33
Hydraulic Clutch 6-33
Cooling System (Engine) 6-34
Cooling System (Intercooler) 6-35
Engine Coolant 6-36
Engine Overheating 6-41
Overheated Engine Protection Operating Mode 6-43
Power Steering Fluid 6-44
Windshield Washer Fluid 6-45
Brakes 6-46
Battery 6-52
Jump Starting 6-53

Rear Axle 6-58

Headlamp Aiming 6-58

Bulb Replacement 6-59
High Intensity Discharge (HID) Lighting 6-59
Halogen Bulbs 6-59
Headlamps, Front Turn Signal, and Parking Lamps 6-59
Taillamps, Turn Signal, and Stoplamps 6-61
Replacement Bulbs 6-61

Windshield Replacement 6-62

Windshield Wiper Blade Replacement 6-62

Tires 6-64
Winter Tires 6-65
Tire Sidewall Labeling 6-66
Tire Terminology and Definitions 6-68
Run-Flat Tires 6-71
Inflation - Tire Pressure 6-72

Section 6 Service and Appearance Care

High-Speed Operation 6-74
Tire Pressure Monitor System 6-74
Tire Pressure Monitor Operation 6-76
Tire Inspection and Rotation 6-78
When It Is Time for New Tires 6-78
Buying New Tires 6-79
Different Size Tires and Wheels 6-81
Uniform Tire Quality Grading 6-82
Wheel Alignment and Tire Balance 6-83
Wheel Replacement 6-83
Tire Chains 6-86
Lifting the Vehicle 6-86
If a Tire Goes Flat 6-91

Appearance Care 6-92
Interior Cleaning 6-92
Fabric/Carpet 6-93
Coated Moldings 6-94
Leather 6-94
Instrument Panel, Vinyl, and Other Plastic Surfaces 6-94
Cargo Cover and Convenience Net 6-94
Care of Safety Belts 6-95
Weatherstrips 6-95
Washing Your Vehicle 6-95
Cleaning Exterior Lamps/Lenses 6-96
Finish Care 6-96
Windshield and Wiper Blades 6-97
Removable Roof Panel 6-98
Convertible Top 6-98
Aluminum or Chrome-Plated Wheels and Trim 6-99
Tires 6-99
Finish Damage 6-100
Underbody Maintenance 6-100
Fiberglass Springs (Composite Springs) 6-100
Chemical Paint Spotting 6-100

Vehicle Identification 6-101
Vehicle Identification Number (VIN) 6-101
Service Parts Identification Label 6-101

Electrical System 6-102
Add-On Electrical Equipment 6-102
Headlamp Wiring 6-102
Windshield Wiper Fuses 6-102
Power Windows and Other Power Options 6-102
Fuses and Circuit Breakers 6-103
Instrument Panel Fuse Block 6-103
Engine Compartment Fuse Block 6-107

Capacities and Specifications 6-112

Service

For service and parts needs, visit your dealer/retailer. You will receive genuine GM parts and GM-trained and supported service people.

Genuine GM parts have one of these marks:

Accessories and Modifications

When non-dealer/non-retailer accessories are added to the vehicle, they can affect vehicle performance and safety, including such things as airbags, braking, stability, ride and handling, emissions systems, aerodynamics, durability, and electronic systems like antilock brakes, traction control, and stability control. Some of these accessories could even cause malfunction or damage not covered by the vehicle warranty.

Damage to vehicle components resulting from the installation or use of non-GM certified parts, including control module modifications, is not covered under the terms of the vehicle warranty and may affect remaining warranty coverage for affected parts.

GM Accessories are designed to complement and function with other systems on the vehicle. Your GM dealer/retailer can accessorize the vehicle using genuine GM Accessories. When you go to your GM dealer/retailer and ask for GM Accessories, you will know that GM-trained and supported service technicians will perform the work using genuine GM Accessories.

Also, see *Adding Equipment to Your Airbag-Equipped Vehicle on page 2-58*.

California Proposition 65 Warning

Most motor vehicles, including this one, contain and/or emit chemicals known to the State of California to cause cancer and birth defects or other reproductive harm. Engine exhaust, many parts and systems, many fluids, and some component wear by-products contain and/or emit these chemicals.

California Perchlorate Materials Requirements

Certain types of automotive applications, such as airbag initiators, seat belt pretensioners, and lithium batteries contained in remote keyless transmitters, may contain perchlorate materials. Special handling may be necessary. For additional information, see www.dtsc.ca.gov/hazardouswaste/perchlorate.

Doing Your Own Service Work

⚠ WARNING:

You can be injured and the vehicle could be damaged if you try to do service work on a vehicle without knowing enough about it.

- Be sure you have sufficient knowledge, experience, the proper replacement parts, and tools before attempting any vehicle maintenance task.
- Be sure to use the proper nuts, bolts, and other fasteners. English and metric fasteners can be easily confused. If the wrong fasteners are used, parts can later break or fall off. You could be hurt.

If doing some of your own service work, use the proper service manual. It tells you much more about how to service the vehicle than this manual can. To order the proper service manual, see *Service Publications Ordering Information on page 8-17*.

This vehicle has an airbag system. Before attempting to do your own service work, see *Servicing Your Airbag-Equipped Vehicle on page 2-58*.

Keep a record with all parts receipts and list the mileage and the date of any service work performed. See *Maintenance Record on page 7-13*.

Adding Equipment to the Outside of the Vehicle

Things added to the outside of the vehicle can affect the airflow around it. This can cause wind noise and can affect fuel economy and windshield washer performance. Check with your dealer/retailer before adding equipment to the outside of the vehicle.

Fuel

Use of the recommended fuel is an important part of the proper maintenance of this vehicle. To help keep the engine clean and maintain optimum vehicle performance, we recommend the use of gasoline advertised as TOP TIER Detergent Gasoline.

Look for the TOP TIER label on the fuel pump to ensure gasoline meets enhanced detergency standards developed by auto companies. A list of marketers providing TOP TIER Detergent Gasoline can be found at www.toptiergas.com.

TOP TIER™
Detergent Gasoline

CATEGORIE SUPERIÉURE™
Essences Détergentes

The 8th digit of the Vehicle Identification Number (VIN) shows the code letter or number that identifies the vehicle's engine. The VIN is at the top left of the instrument panel. See *Vehicle Identification Number (VIN) on page 6-101*.

Gasoline Octane

If the vehicle has the 6.2L V8 engine (VIN Code W), use premium unleaded gasoline with a posted octane rating of 91 or higher. You can also use regular unleaded gasoline rated at 87 octane or higher, but the vehicle's acceleration could be slightly reduced, and a slight audible knocking noise, commonly referred to as spark knock, might be heard. If the octane is less than 87, a heavy knocking noise might be heard when driving. If this occurs, use a gasoline rated at 87 octane or higher as soon as possible. Otherwise, you could damage the engine. If heavy knocking is heard when using gasoline rated at 87 octane or higher, the engine needs service.

If the vehicle has the 6.2L V8 engine (VIN Code T) or the 7.0L V8 engine (VIN Code E), use premium unleaded gasoline with a posted octane rating of 91 or higher. For best performance, use premium unleaded gasoline with a posted octane rating of 93. In an emergency, you can use regular unleaded gasoline with an octane rating of 87 or higher. If 87 octane fuel is used, do not perform any aggressive driving maneuvers such as wide open throttle applications. You might also hear audible spark knock during acceleration. Refill the tank with premium fuel as soon as possible to avoid damaging the engine. If heavy knocking is heard when using gasoline rated at 91 octane or higher, the engine needs service.

Gasoline Specifications

At a minimum, gasoline should meet ASTM specification D 4814 in the United States or CAN/CGSB-3.5 or 3.511 in Canada. Some gasolines contain an octane-enhancing additive called methylcyclopentadienyl manganese tricarbonyl (MMT). We recommend against the use of gasolines containing MMT. See *Additives on page 6-7* for additional information.

California Fuel

If the vehicle is certified to meet California Emissions Standards, it is designed to operate on fuels that meet California specifications. See the underhood emission control label. If this fuel is not available in states adopting California emissions standards, the vehicle will operate satisfactorily on fuels meeting federal specifications, but emission control system performance might be affected. The malfunction indicator lamp could turn on and the vehicle might fail a smog-check test. See *Malfunction Indicator Lamp on page 4-40*. If this occurs, return to your authorized dealer/retailer for diagnosis. If it is determined that the condition is caused by the type of fuel used, repairs might not be covered by the vehicle warranty.

Additives

To provide cleaner air, all gasolines in the United States are now required to contain additives that help prevent engine and fuel system deposits from forming, allowing the emission control system to work properly. In most cases, nothing should have to be added to the fuel. However, some gasolines contain only the minimum amount of additive required to meet U.S. Environmental Protection Agency regulations. To help keep fuel injectors and intake valves clean, or if the vehicle experiences problems due to dirty injectors or valves, look for gasoline that is advertised as TOP TIER Detergent Gasoline.

For customers who do not use TOP TIER Detergent Gasoline regularly, one bottle of GM Fuel System Treatment PLUS, added to the fuel tank at every engine oil change, can help clean deposits from fuel injectors and intake valves. GM Fuel System Treatment PLUS is the only gasoline additive recommended by General Motors.

Also, your dealer/retailer has additives that will help correct and prevent most deposit-related problems.

Gasolines containing oxygenates, such as ethers and ethanol, and reformulated gasolines might be available in your area. We recommend that you use these gasolines, if they comply with the specifications described earlier. However, E85 (85% ethanol) and other fuels containing more than 10% ethanol must not be used in vehicles that were not designed for those fuels.

Notice: **This vehicle was not designed for fuel that contains methanol. Do not use fuel containing methanol. It can corrode metal parts in the fuel system and also damage plastic and rubber parts. That damage would not be covered under the vehicle warranty.**

Some gasolines that are not reformulated for low emissions can contain an octane-enhancing additive called methylcyclopentadienyl manganese tricarbonyl (MMT); ask the attendant where you buy gasoline whether the fuel contains MMT. We recommend against the use of such gasolines. Fuels containing MMT can reduce the life of spark plugs and the performance of the emission control system could be affected.
The malfunction indicator lamp might turn on. If this occurs, return to your dealer/retailer for service.

Fuels in Foreign Countries

If you plan on driving in another country outside the United States or Canada, the proper fuel might be hard to find. Never use leaded gasoline or any other fuel not recommended in the previous text on fuel. Costly repairs caused by use of improper fuel would not be covered by the vehicle warranty.

To check the fuel availability, ask an auto club, or contact a major oil company that does business in the country where you will be driving.

Filling the Tank

⚠ WARNING:

Fuel vapor burns violently and a fuel fire can cause bad injuries. To help avoid injuries to you and others, read and follow all the instructions on the fuel pump island. Turn off the engine when refueling. Do not smoke near fuel or when refueling the vehicle. Do not use cellular phones. Keep sparks, flames, and smoking materials away from fuel. Do not leave the fuel pump unattended when refueling the vehicle. This is against the law in some places. Do not re-enter the vehicle while pumping fuel. Keep children away from the fuel pump; never let children pump fuel.

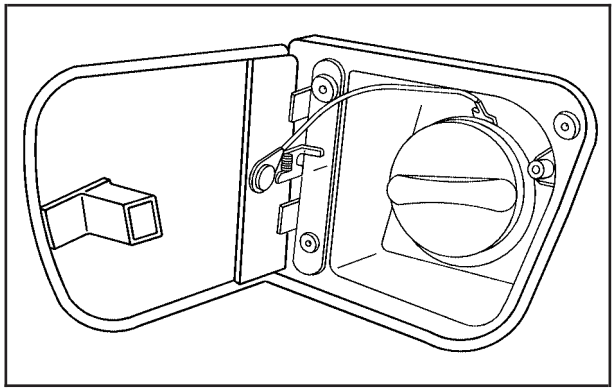

The tethered fuel cap is located behind a hinged fuel door on the driver side of the vehicle.

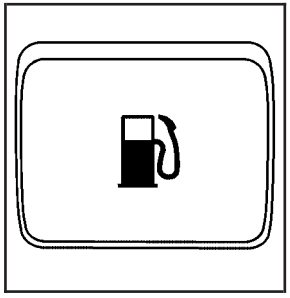

The fuel door release button is located on the instrument panel to the left of the steering wheel. Push the button to release the fuel door.

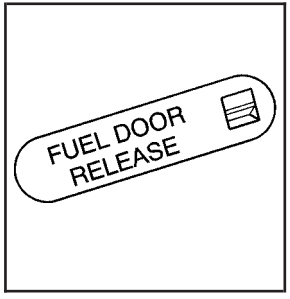

There is also a manual fuel door release tab. It is located against the upper trim in the rear compartment on the driver side of the vehicle. Pull the tab to release the fuel door.

To remove the fuel cap, turn it slowly counterclockwise.

While refueling, let the cap hang by the tether below the fuel fill opening.

⚠ WARNING:

Fuel can spray out on you if you open the fuel cap too quickly. If you spill fuel and then something ignites it, you could be badly burned. This spray can happen if the tank is nearly full, and is more likely in hot weather. Open the fuel cap slowly and wait for any hiss noise to stop. Then unscrew the cap all the way.

Be careful not to spill fuel. Do not top off or overfill the tank and wait a few seconds after you have finished pumping before removing the nozzle. Clean fuel from painted surfaces as soon as possible. See *Washing Your Vehicle on page 6-95*.

When replacing the fuel cap, turn it clockwise until it clicks. Make sure the cap is fully installed. The diagnostic system can determine if the fuel cap has been left off or improperly installed. This would allow fuel to evaporate into the atmosphere. See *Malfunction Indicator Lamp on page 4-40*.

The CHECK GAS CAP message displays on the Driver Information Center (DIC) if the fuel cap is not properly installed. See *DIC Warnings and Messages on page 4-51* for more information.

⚠ WARNING:

If a fire starts while you are refueling, do not remove the nozzle. Shut off the flow of fuel by shutting off the pump or by notifying the station attendant. Leave the area immediately.

Notice: **If you need a new fuel cap, be sure to get the right type. Your dealer/retailer can get one for you. If you get the wrong type, it may not fit properly. This may cause the malfunction indicator lamp to light and may damage the fuel tank and emissions system. See *Malfunction Indicator Lamp on page 4-40*.**

Filling a Portable Fuel Container

⚠ WARNING:

Never fill a portable fuel container while it is in the vehicle. Static electricity discharge from the container can ignite the fuel vapor. You can be badly burned and the vehicle damaged if this occurs. To help avoid injury to you and others:

- Dispense fuel only into approved containers.
- Do not fill a container while it is inside a vehicle, in a vehicle's trunk, pickup bed, or on any surface other than the ground.
- Bring the fill nozzle in contact with the inside of the fill opening before operating the nozzle. Contact should be maintained until the filling is complete.
- Do not smoke while pumping fuel.
- Do not use a cellular phone while pumping fuel.

Checking Things Under the Hood

⚠ WARNING:

An electric fan under the hood can start up and injure you even when the engine is not running. Keep hands, clothing, and tools away from any underhood electric fan.

⚠ WARNING:

Things that burn can get on hot engine parts and start a fire. These include liquids like fuel, oil, coolant, brake fluid, windshield washer and other fluids, and plastic or rubber. You or others could be burned. Be careful not to drop or spill things that will burn onto a hot engine.

Hood Release

To open the hood:

1. Pull the hood release lever with this symbol on it. It is located inside the vehicle below the instrument panel on the driver side.

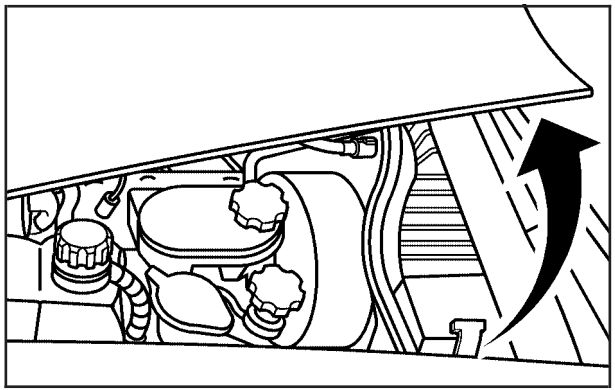

2. Go to the side of the vehicle and pull up on the rear edge of the hood, near the windshield.

Before closing the hood, be sure all the filler caps are on properly. Then, just pull the hood down and close it firmly.

Engine Compartment Overview

If the vehicle has the 6.2 L LS3 V8 engine (without the dry sump engine oil tank) and you are facing the front of the vehicle, when the hood is opened:

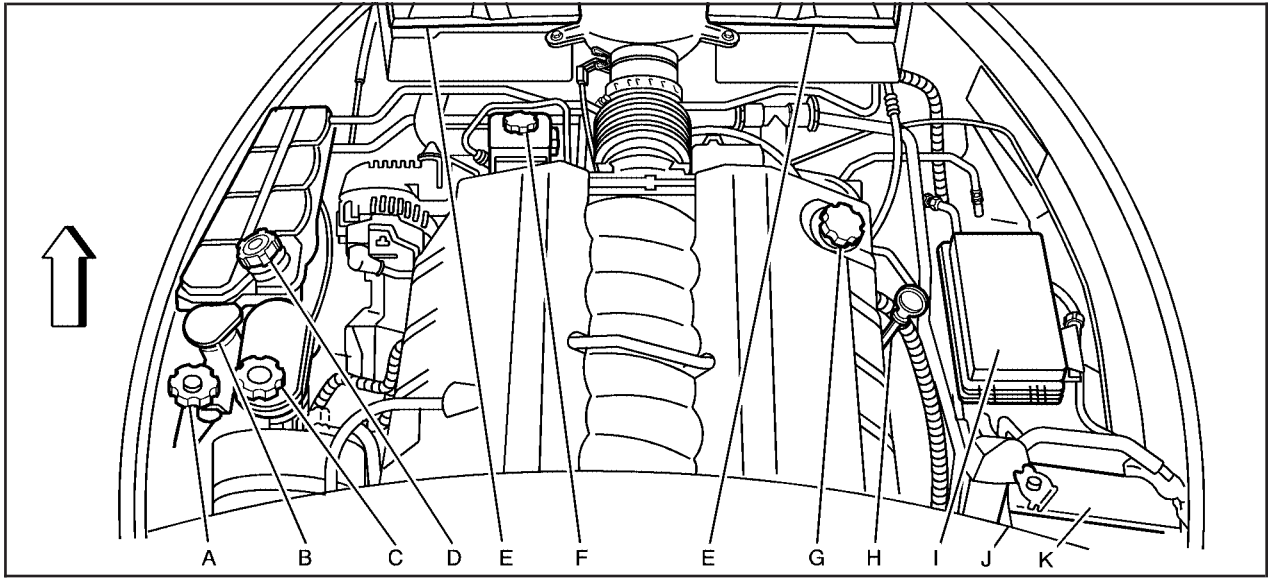

A. Clutch Master Cylinder Reservoir (If Equipped). See *Hydraulic Clutch on page 6-33*.

B. Windshield Washer Fluid Reservoir. See “Adding Washer Fluid” under *Windshield Washer Fluid on page 6-45*.

C. Brake Fluid Reservoir. See “Brake Fluid” under *Brakes on page 6-46*.

D. Coolant Surge Tank and Pressure Cap. See *Engine Coolant on page 6-36*.

E. *Engine Air Cleaner/Filter on page 6-28*.

F. Power Steering Fluid Reservoir. See *Power Steering Fluid on page 6-44*.

G. Engine Oil Fill Cap. See “When to Add Engine Oil” under *Engine Oil on page 6-20*.

H. Engine Oil Dipstick. See “Checking Engine Oil” under *Engine Oil on page 6-20*.

I. *Engine Compartment Fuse Block on page 6-107*.

J. Passenger Compartment Air Filter (Out of View). See *Passenger Compartment Air Filter on page 4-27*.

K. *Battery on page 6-52*.

If the vehicle has the 6.2 L LS9 Supercharged V8 engine and you are facing the front of the vehicle, when the hood is opened:

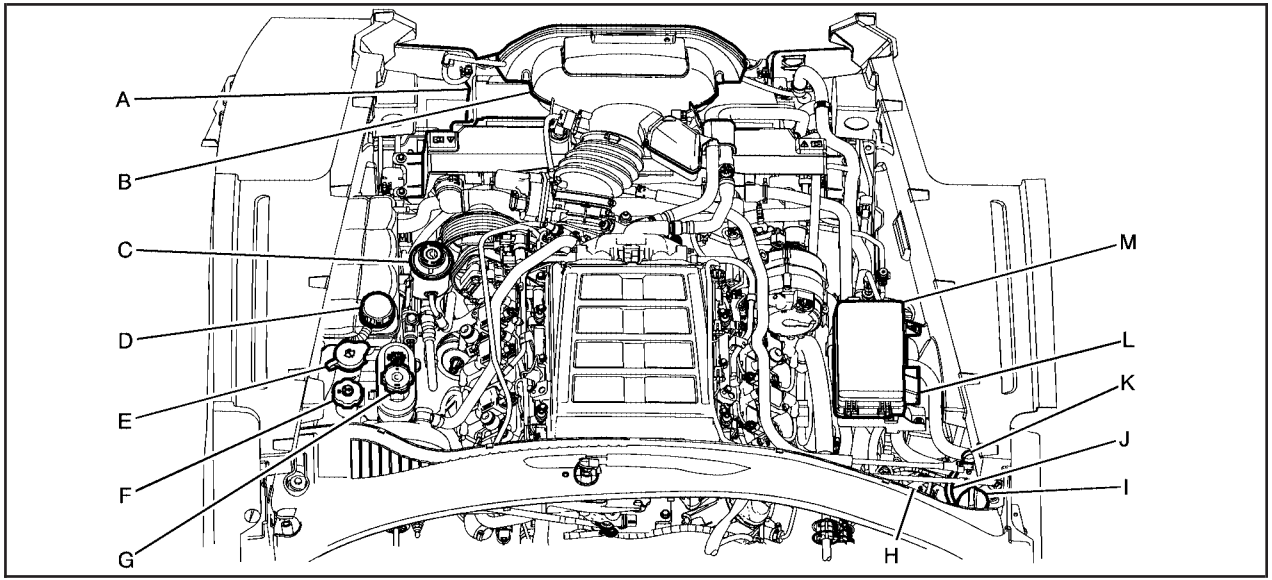

A. Intercooler. See *Cooling System (Engine) on page 6-34* or *Cooling System (Intercooler) on page 6-35*.

B. *Engine Air Cleaner/Filter on page 6-28*.

C. Power Steering Fluid Reservoir and Cap. See *Power Steering Fluid on page 6-44*.

D. Coolant Surge Tank and Pressure Cap. See *Engine Coolant on page 6-36*.

E. Windshield Washer Fluid Reservoir. See “Adding Washer Fluid” under *Windshield Washer Fluid on page 6-45*.

F. Clutch Master Cylinder Reservoir (If Equipped). See *Hydraulic Clutch on page 6-33*.

G. Brake Fluid Reservoir. See “Brake Fluid” under *Brakes on page 6-46*.

H. Passenger Compartment Air Filter (Out of View). See *Passenger Compartment Air Filter on page 4-27*.

I. Engine Oil Fill Cap. See “When to Add Engine Oil” under *Engine Oil on page 6-20*.

J. Dry Sump Engine Oil Tank. See “Changing Engine Oil and Filter” *Engine Oil on page 6-20*.

K. Engine Oil Dipstick. See “Checking Engine Oil” under *Engine Oil on page 6-20*.

L. Remote Positive (+) Terminal (Out of View). See *Jump Starting on page 6-53*.

M. *Engine Compartment Fuse Block on page 6-107*.

If the vehicle has the 6.2 L LS3 V8 engine with the manual transmission (with the dry sump engine oil tank) or the 7.0 L LS7 V8 engine and you are facing the driver side of the vehicle, when the hood is opened:

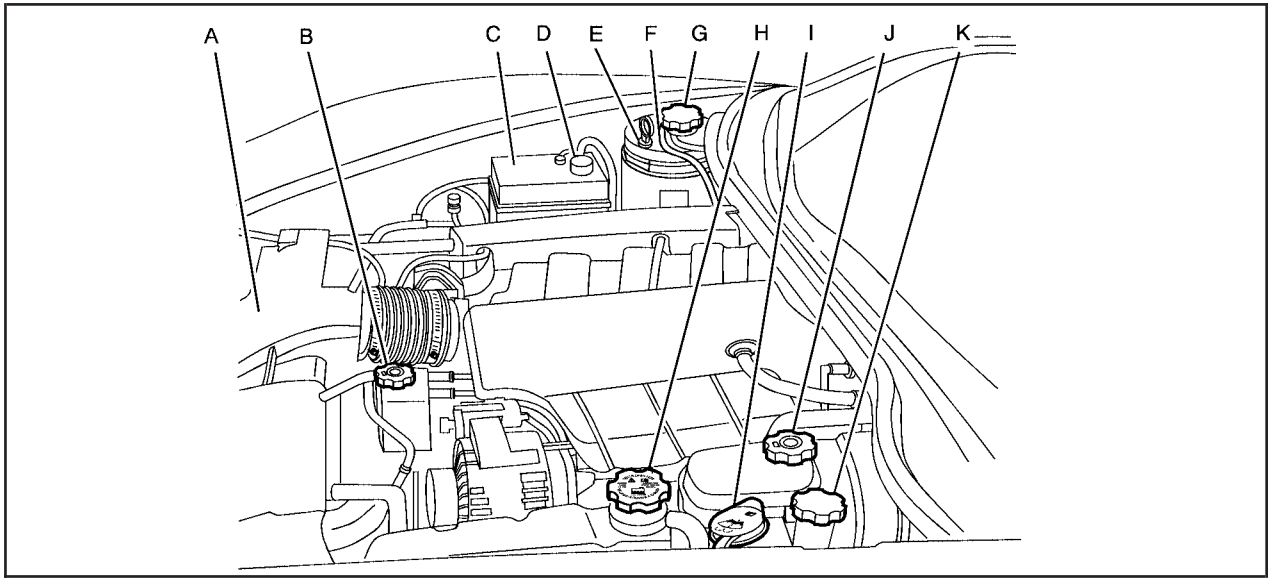

A. *Engine Air Cleaner/Filter on page 6-28*.

B. Power Steering Fluid Reservoir. See *Power Steering Fluid on page 6-44*.

C. *Engine Compartment Fuse Block on page 6-107*.

D. Remote Positive (+) Terminal (Out of View). See *Jump Starting on page 6-53*.

E. Engine Oil Dipstick. See “Checking Engine Oil” under *Engine Oil on page 6-20*.

F. Dry Sump Engine Oil Tank. See “Changing Engine Oil and Filter” *Engine Oil on page 6-20*.

G. Engine Oil Fill Cap. See “When to Add Engine Oil” under *Engine Oil on page 6-20*.

H. Coolant Surge Tank and Pressure Cap. See *Engine Coolant on page 6-36*.

I. Windshield Washer Fluid Reservoir. See “Adding Washer Fluid” under *Windshield Washer Fluid on page 6-45*.

J. Brake Fluid Reservoir. See “Brake Fluid” under *Brakes on page 6-46*.

K. Clutch Master Cylinder Reservoir. See *Hydraulic Clutch on page 6-33*.

Engine Oil

Checking Engine Oil (Except ZO6, ZR1, and Grand Sport)

If the CHECK OIL LEVEL message displays on the Driver Information Center (DIC), check the engine oil level right away. For more information, see *Driver Information Center (DIC) on page 4-46*. Check the engine oil level regularly; this is an added reminder.

It is a good idea to check the engine oil level at each fuel fill. In order to get an accurate reading, the oil must be warm and the vehicle must be on level ground.

The engine oil dipstick handle is a yellow loop. See *Engine Compartment Overview on page 6-14* for the location of the engine oil dipstick.

1. Turn off the engine and give the oil a few minutes to drain back into the oil pan. If this is not done, the oil dipstick might not show the actual level.
2. Pull out the dipstick and clean it with a lint-free paper towel or a cloth, then push it back in all the way.
3. Remove the dipstick again, keeping the tip down and read the level on the cross-hatched area. Oil levels that fall in the cross-hatched area are normal.
4. Push the dipstick back in all the way.

When to Add Engine Oil (Except ZO6, ZR1, and Grand Sport)

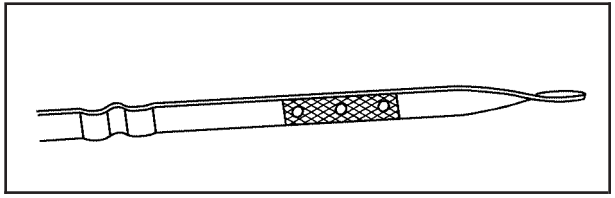

If the oil is below the cross-hatched area at the tip of the dipstick, add at least one liter/quart of the recommended oil. This section explains what kind of oil to use. For engine oil crankcase capacity, see *Capacities and Specifications on page 6-112*.

See *Racing or Other Competitive Driving on page 5-19* for additional information on engine oil.

Notice: **Do not add too much oil. If the engine has so much oil that the oil level gets above the cross-hatched area that shows the proper operating range, the engine could be damaged.**

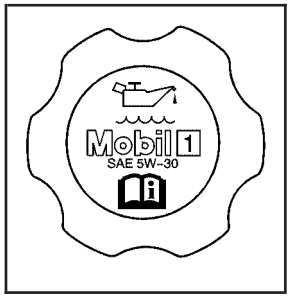

See *Engine Compartment Overview on page 6-14* for the location of the engine oil fill cap.

Add enough oil to put the level somewhere in the proper operating range. Push the dipstick all the way back in when through.

Checking Engine Oil (ZO6, ZR1, and Grand Sport)

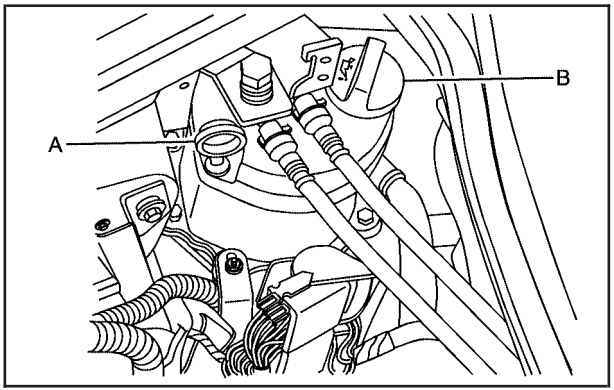

A. Engine Oil Dipstick

B. Engine Oil Fill Cap

It is a good idea to check the engine oil level at each fuel fill. In order to get an accurate reading, the oil must be warm and the vehicle must be on level ground.

The engine oil dipstick handle is a yellow loop. The dipstick is located on the dry sump engine oil tank. See *Engine Compartment Overview on page 6-14* for the location of the dry sump engine oil tank.

These vehicles have a racetrack-ready dry sump engine lubrication system. This high-performance system operates differently than a standard engine lubrication system and requires a special procedure when checking the engine oil level. Follow this procedure closely when checking the engine oil level.

The engine oil level must be checked when the engine is warm. Cold oil level in the dry sump tank may not indicate the actual amount of oil in the system. With this system, engine oil is contained in an external tank, separate from the engine. Under normal operating conditions, the oil pan under the engine does not store any oil. If the vehicle has been parked for an extended period without the engine being started, some oil will seep back into the oil pan, reducing the amount of oil held in the dry sump tank and there could be no engine oil at all showing on the dipstick. This is normal since the dipstick is designed to read engine oil level only after the engine has run long enough to reach normal operating temperature.

Do not add engine oil based on cold engine dipstick readings. The engine oil level on the dipstick will also be inaccurate if checked while the engine is running.

1. To obtain an accurate engine oil level reading, warm up the engine to at least 80°C (175°F). Cold oil will not give a correct oil level reading.
2. Once the engine is warm, turn off the engine. Checking the oil while the engine is running will result in an incorrect oil level reading.
3. Wait at least five minutes (but not more than 20 minutes) to allow oil to drain and settle in the engine.
4. Remove the dipstick from the external engine oil tank and clean it with a lint-free paper towel or a cloth. Re-insert the dipstick into the external oil tank, pushing it all the way in until it stops.
5. Remove the dipstick from the oil tank and read the level on the cross-hatched area. Oil levels that fall in the cross-hatched area are normal.

When to Add Engine Oil (ZO6, ZR1, and Grand Sport)

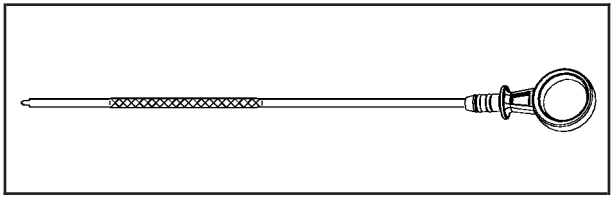

If the oil is below the cross-hatched area at the tip of the dipstick, add at least one liter/quart of the recommended oil through the oil fill cap opening in the oil tank. This section explains what kind of oil to use. For engine oil crankcase capacity, see *Capacities and Specifications on page 6-112*.

See *Racing or Other Competitive Driving on page 5-19* for additional information on engine oil.

Notice: **Do not add too much oil. If the engine has so much oil that the oil level gets above the cross-hatched area that shows the proper operating range, the engine could be damaged.**

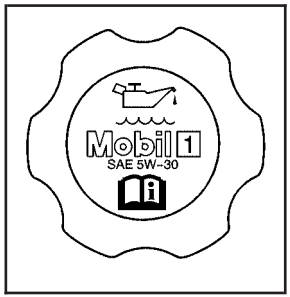

See *Engine Compartment Overview on page 6-14* for the location of the external engine oil tank and fill cap.

Add enough oil to put the level somewhere in the proper operating range. Push the dipstick all the way back into the oil tank when through.

Changing Engine Oil and Filter (ZO6, ZR1, and Grand Sport)

These vehicles have a racetrack-ready dry sump engine lubrication system. This high-performance system operates differently than a standard engine lubrication system and requires a special procedure when changing the engine oil and filter. Follow this procedure closely when changing the engine oil and filter.

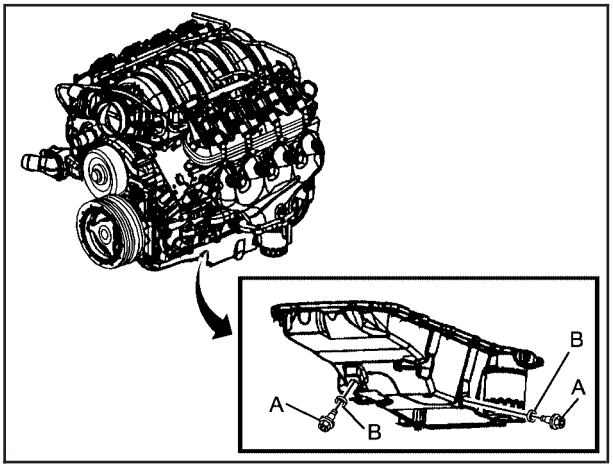

ZO6 Shown, ZR1 and Grand Sport Similar

A. Engine Oil Drain Plugs
B. Seals

1. Remove the two engine oil drain plugs from the bottom of the engine oil pan. One drain plug drains the external oil tank via the oil transfer supply line. The other drain plug drains residual oil from the crankcase sump. Allow the oil to drain.
2. Once the oil has been drained from the engine, remove the engine oil filter and allow the oil to drain.
3. Re-install both drain plugs and tighten them to 25 N•m (18 lb ft).
4. Replace the oil filter and tighten it to 30 N•m (22 lb ft). See *Maintenance Replacement Parts on page 7-11* for the correct filter.
5. Oil is filled through the opening in the top of the external engine oil tank. Remove the oil fill cap.
6. Add 9.9 L (10.5 quarts) of oil to the oil tank. See *Capacities and Specifications on page 6-112*.
7. Install the oil fill cap and insert the dipstick, if removed.
8. Start the engine and let it run at idle for at least 15 seconds. This will circulate the fresh engine oil through the lubrication system.
9. Shut off the engine and check the oil level as described under “Checking Engine Oil (ZO6, ZR1, and Grand Sport).”

What Kind of Engine Oil to Use

Look for three things:

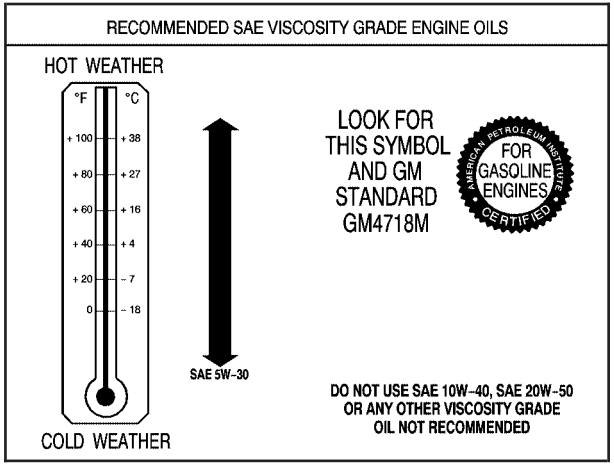

- GM4718M

  This vehicle's engine requires a special oil meeting GM Standard GM4718M. Oils meeting this standard may be identified as synthetic. However, not all synthetic oils will meet this GM standard. Use only an oil that meets GM Standard GM4718M.

Notice: **Using oils that do not have the GM4718M Standard designation can cause engine damage not covered by the vehicle warranty.**

- SAE 5W-30

  SAE 5W-30 is best for the vehicle. These numbers on an oil container show its viscosity, or thickness. Do not use other viscosity oils such as SAE 20W-50.

- American Petroleum Institute (API) starburst symbol

Oils meeting these requirements should have the starburst symbol on the container. This symbol indicates that the oil has been certified by the American Petroleum Institute (API).

This vehicle's engine was filled at the factory with a Mobil 1® synthetic oil meeting all requirements for this vehicle.

Substitute Engine Oil: When adding oil to maintain engine oil level, oil meeting GM Standard GM4718M might not be available. You can add substitute oil designated SAE 5W-30 with the starburst symbol at all temperatures. Substitute oil not meeting GM Standard GM4718M should not be used for an oil change.

Engine Oil Additives / Engine Oil Flushes

Do not add anything to the oil. The recommended oils with the starburst symbol that meet GM Standard GM4718M are all that is needed for good performance and engine protection.

Engine oil system flushes are not recommended and could cause engine damage not covered by the vehicle warranty.

Engine Oil Life System

When to Change Engine Oil

This vehicle has a computer that indicates when to change the engine oil and filter. This is based on engine revolutions and engine temperature, and not on mileage. Based on driving conditions, the mileage at which an oil change is indicated can vary considerably. For the oil life system to work properly, the system must be reset every time the oil is changed.

Z06, ZR1, and Grand Sport models have a racetrack-ready dry sump engine lubrication system. This high-performance system operates differently than a standard engine lubrication system and requires a special procedure when changing the engine oil and filter. See *Engine Oil on page 6-20*.

When the system has calculated that oil life has been diminished, it indicates that an oil change is necessary. A CHANGE ENGINE OIL message comes on. Change the oil as soon as possible within the next 1 000 km (600 miles). It is possible that, if driving under the best conditions, the oil life system might not indicate that an oil change is necessary for over a year. However, the engine oil and filter must be changed at least once a year and at this time the system must be reset. Your dealer/retailer has trained service people who will perform this work using genuine parts and reset the system. It is also important to check the oil regularly and keep it at the proper level.

If the system is ever reset accidentally, the oil must be changed at 5 000 km (3,000 miles) since the last oil change. Remember to reset the oil life system whenever the oil is changed.

How to Reset the Engine Oil Life System

The Engine Oil Life System calculates when to change the engine oil and filter based on vehicle use. Whenever the oil is changed, reset the system so it can calculate when the next oil change is required. If a situation occurs where the oil is changed prior to a CHANGE ENGINE OIL message being turned on, reset the system.

To reset the CHANGE ENGINE OIL message after an oil change:

1. Press the TRIP button so the OIL LIFE percentage is displayed.
2. Press RESET and hold for two seconds. OIL LIFE REMAINING 100% will appear.

If the CHANGE ENGINE OIL message comes back on when the vehicle is started, the engine oil life system has not reset. Repeat the procedure.

What to Do with Used Oil

Used engine oil contains certain elements that can be unhealthy for your skin and could even cause cancer. Do not let used oil stay on your skin for very long. Clean your skin and nails with soap and water, or a good hand cleaner. Wash or properly dispose of clothing or rags containing used engine oil. See the manufacturer's warnings about the use and disposal of oil products.

Used oil can be a threat to the environment. If you change your own oil, be sure to drain all the oil from the filter before disposal. Never dispose of oil by putting it in the trash, pouring it on the ground, into sewers, or into streams or bodies of water. Recycle it by taking it to a place that collects used oil.

Engine Air Cleaner/Filter

See *Engine Compartment Overview on page 6-14* for the location of the engine air cleaner/filter.

Notice: **If you spray water into the engine air cleaner/filter intake and water enters the engine air cleaner/filter housing, you could damage your vehicle's engine. The repairs would not be covered by your warranty. Do not spray water into the engine air cleaner/filter intake and/or housing.**

If you are cleaning the vehicle with the hood open, take care not to spray water directly near the filter opening of the air cleaner, as shown in the illustration, as this could damage the vehicle's engine.

When to Inspect the Engine Air Cleaner/Filter

Inspect the air cleaner/filter at the Maintenance II intervals and replace them at the first oil change after each 80 000 km (50,000 mile) interval. See *Scheduled Maintenance on page 7-3* for more information.
If you are driving in dusty/dirty conditions, inspect the filter at each engine oil change.

How to Inspect the Engine Air Cleaner/Filter

To inspect the air cleaner/filter, remove the filter from the vehicle and lightly shake the filter to release loose dust and dirt. If the filter remains caked with dirt, a new filter is required.

To inspect or replace the engine air cleaner/filter:

1. Open the hood. See *Hood Release on page 6-13*.

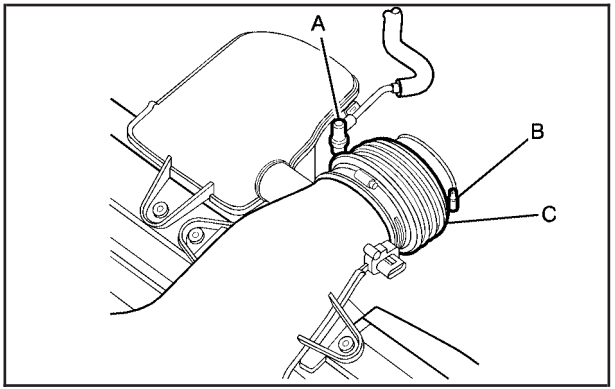

6.2 L V8 Engine LS3 shown, 6.2 L V8 Engine LS9 and 7.0 L V8 Engine LS7 similar

A. Tube
B. Clamp
C. Duct

2. Remove the tube (A) from the air cleaner assembly.
3. Loosen the clamp (B) at the throttle body and remove the duct (C).

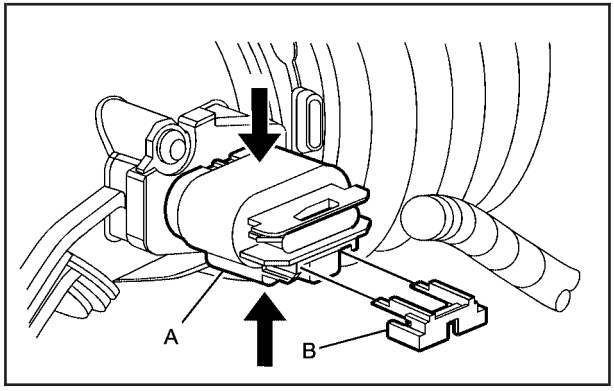

6.2 L V8 Engine LS3 shown, 6.2 L V8 Engine LS9 and 7.0 L V8 Engine LS7 similar

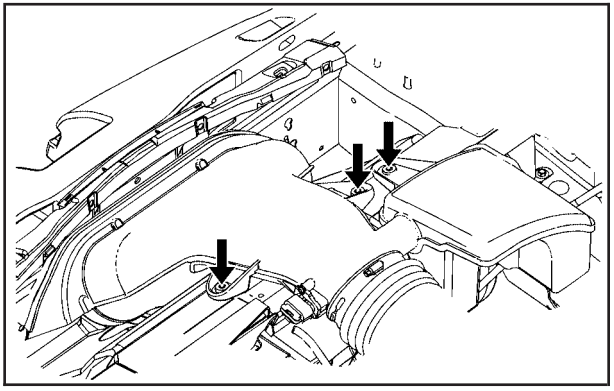

6.2 L V8 Engine LS3

A. Mass Air Flow Sensor Connector
B. Connector Lock

4. Remove the connector lock (B) located at the bottom of the mass air flow sensor connector (A).
5. Press on the top and bottom of the mass air flow sensor connector (A) and remove.

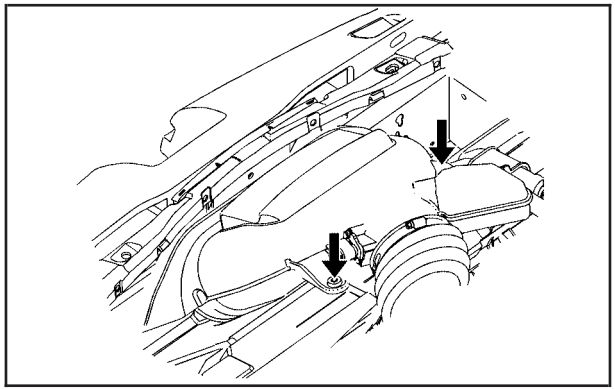

6.2 L V8 Engine LS9 shown, 7.0 L V8 Engine LS7 similar

6. To access the air filter element, gently pull the air cleaner assembly upward until the fasteners are released from the retainer pins in the upper radiator support.

   The LS3 engine has three retainer pins and the LS7 and LS9 engines have two.

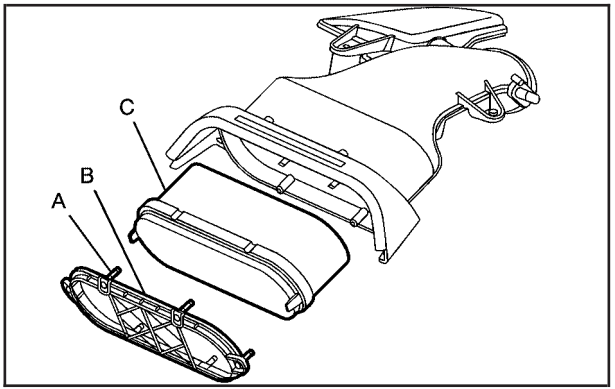

6.2 L V8 Engine LS3 shown, 6.2 L V8 Engine LS9 and 7.0 L V8 Engine LS7 similar

A. Screw
B. Filter Cover
C. Filter

7. To remove the filter from the LS3 and LS7 engines, remove the six screws (A) securing the filter cover (B) then pull away from to gain access to the air filter (C).

   To remove the filter assembly from the LS9 engine, remove the six screws securing the filter cover. The filter cover and the air filter are one piece.

8. Inspect or replace the filter or filter cover assembly. See *Maintenance Replacement Parts on page 7-11*.
9. Reverse Steps 2 through 7 to replace the air cleaner/filter cover.

⚠ WARNING:

Operating the engine with the air cleaner/filter off can cause you or others to be burned. The air cleaner not only cleans the air; it helps to stop flames if the engine backfires. If it is not there and the engine backfires, you could be burned. Do not drive with it off, and be careful working on the engine with the air cleaner/filter off.

Notice: **If the air cleaner/filter is off, a backfire can cause a damaging engine fire. And, dirt can easily get into the engine, which will damage it. Always have the air cleaner/filter in place when you are driving.**

Automatic Transmission Fluid

How to Check Automatic Transmission Fluid

It is not necessary to check the transmission fluid level. A transmission fluid leak is the only reason for fluid loss. If a leak occurs, take the vehicle to your dealer/retailer service department and have it repaired as soon as possible.

There is a special procedure for checking and changing the transmission fluid. Because this procedure is difficult, you should have this done at your dealer/retailer service department. Contact your dealer/retailer for additional information or the procedure can be found in the service manual. To purchase a service manual, see *Service Publications Ordering Information on page 8-17*.

Notice: **Use of the incorrect automatic transmission fluid may damage the vehicle, and the damages may not be covered by the vehicle's warranty. Always use the automatic transmission fluid listed in *Recommended Fluids and Lubricants on page 7-9*.**

Change the fluid and filter at the intervals listed in *Scheduled Maintenance on page 7-3*, and be sure to use the fluid listed in *Recommended Fluids and Lubricants on page 7-9*.

Manual Transmission Fluid

It is not necessary to check the manual transmission fluid level. A transmission fluid leak is the only reason for fluid loss. If a leak occurs, take the vehicle to your dealer/retailer service department and have it repaired as soon as possible. See *Recommended Fluids and Lubricants on page 7-9* for the proper fluid to use.

Hydraulic Clutch

It is not necessary to regularly check clutch fluid unless you suspect there is a leak in the system. Adding fluid will not correct a leak. A fluid loss in this system could indicate a problem. Have the system inspected and repaired.

When to Check and What to Use

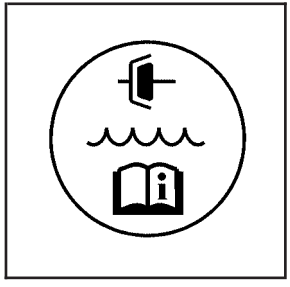

The hydraulic clutch fluid reservoir cap has this symbol on it. See *Engine Compartment Overview on page 6-14* for reservoir location.

Refer to the Maintenance Schedule for the proper fluid to use. See *Recommended Fluids and Lubricants on page 7-9*. The fluid requires changing every two years. See *Scheduled Maintenance on page 7-3*.

How to Check and Add Fluid

Visually check the clutch fluid reservoir to make sure the fluid level is at the MIN (minimum) line on the side of the reservoir. The hydraulic clutch fluid system should be closed and sealed.

Do not remove the cap to check the fluid level or to top-off the fluid level. Remove the cap only when necessary to add the proper fluid until the level reaches the MIN line.

Cooling System (Engine)

The cooling system allows the engine to maintain the correct working temperature.

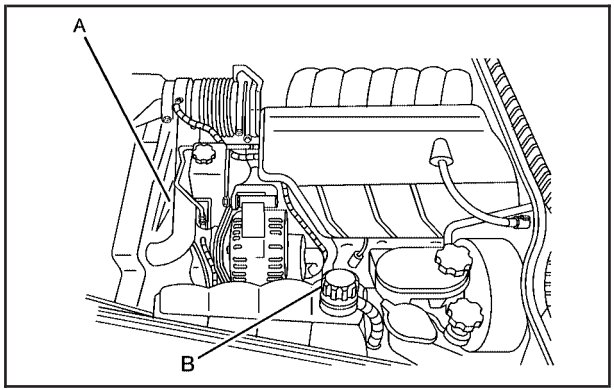

7.0L Engine shown, 6.2L Engine similar

A. Electric Engine Cooling Fan

B. Coolant Surge Tank with Pressure Cap

⚠ WARNING:

An electric engine cooling fan under the hood can start up even when the engine is not running and can cause injury. Keep hands, clothing, and tools away from any underhood electric fan.

⚠ WARNING:

Heater and radiator hoses, and other engine parts, can be very hot. Do not touch them. If you do, you can be burned.

Do not run the engine if there is a leak. If you run the engine, it could lose all coolant. That could cause an engine fire, and you could be burned. Get any leak fixed before you drive the vehicle.

Notice: **Using coolant other than DEX-COOL® can cause premature engine, heater core, or radiator corrosion. In addition, the engine coolant could require changing sooner, at 50 000 km (30,000 miles) or 24 months, whichever occurs first. Any repairs would not be covered by the vehicle warranty. Always use DEX-COOL® (silicate-free) coolant in the vehicle.**

Cooling System (Intercooler)

The 6.2L LS9 supercharged V8 engine has an intercooler cooling system. See *Engine Compartment Overview on page 6-14* for location of the intercooler.

The intercooler cooling system has a special procedure for draining and adding coolant. Because this procedure is difficult, see your dealer/retailer for service if the intercooler is low on coolant. The procedure can also be found in the service manual. To purchase a service manual, see *Service Publications Ordering Information on page 8-17*.

Checking Coolant

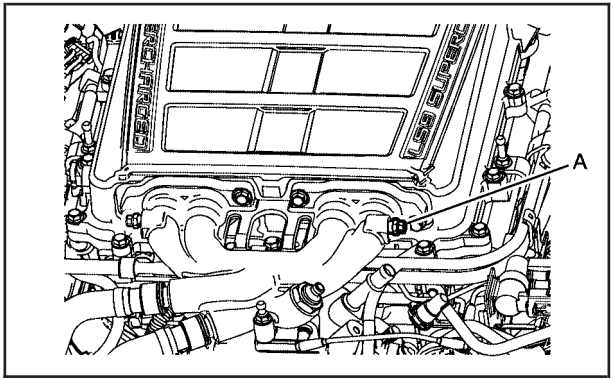

1. Verify that the engine and intercooler are no longer hot.
2. Place a cloth to absorb possible coolant loss under the driver's side bleeder valve (A).
3. Loosen, but do not completely unscrew the bleeder valve to check for coolant in the system.
4. Tighten the bleeder valve if there is coolant flowing out of the bleeder valve.
5. If there is no coolant flowing out of the bleeder valve, there could be a leak in the system. Tighten the bleeder valve and contact your dealer/retailer for service.

Engine Coolant

The cooling system in the vehicle is filled with DEX-COOL® engine coolant. This coolant is designed to remain in the vehicle for five years or 240 000 km (150,000 miles), whichever occurs first.

The following explains the cooling system and how to check and add coolant when it is low. If there is a problem with engine overheating, see *Engine Overheating on page 6-41*.

What to Use

⚠ WARNING:

Adding only plain water to the cooling system can be dangerous. Plain water, or some other liquid such as alcohol, can boil before the proper coolant mixture will. The vehicle's coolant warning system is set for the proper coolant mixture. With plain

WARNING: (Continued)

WARNING: (Continued)

water or the wrong mixture, the engine could get too hot but would not get the overheat warning. The engine could catch fire and you or others could be burned. Use a 50/50 mixture of clean, drinkable water and DEX-COOL® coolant.

Use a 50/50 mixture of clean, drinkable water and DEX-COOL® coolant. If using this mixture, nothing else needs to be added. This mixture:

- Gives freezing protection down to –37°C (–34°F), outside temperature.
- Gives boiling protection up to 129°C (265°F), engine temperature.
- Protects against rust and corrosion.
- Will not damage aluminum parts.
- Helps keep the proper engine temperature.

Notice: **If an improper coolant mixture is used, the engine could overheat and be badly damaged. The repair cost would not be covered by the vehicle warranty. Too much water in the mixture can freeze and crack the engine, radiator, heater core, and other parts.**

Notice: **If extra inhibitors and/or additives are used in the vehicle's cooling system, the vehicle could be damaged. Use only the proper mixture of the engine coolant listed in this manual for the cooling system. See *Recommended Fluids and Lubricants on page 7-9* for more information.**

Checking Coolant

The vehicle must be on a level surface when checking the coolant level.

Check to see if coolant is visible in the coolant surge tank. If the coolant inside the coolant surge tank is boiling, do not do anything else until it cools down. If coolant is visible but the coolant level is not at or above the FULL COLD mark, add a 50/50 mixture of clean, drinkable water and DEX-COOL coolant at the coolant recovery tank, but be sure the cooling system is cool before this is done. See *Engine Coolant on page 6-36* for more information.

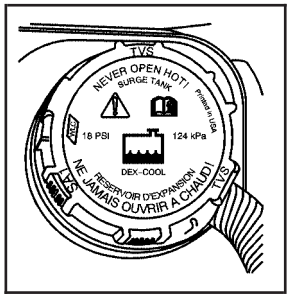

The engine coolant surge tank is located toward the rear of the engine compartment on the driver side of the vehicle. See *Engine Compartment Overview on page 6-14* for more information on location.

When the engine is cold, the coolant level should be at the FULL COLD mark on the coolant surge tank.

When the engine is hot, the level could be higher than the FULL COLD line. If the coolant is below the FULL COLD line when the engine is hot, there could be a leak in the cooling system.

If the coolant is low, add the coolant or take the vehicle to a dealer/retailer for service.

How to Add Coolant to the Coolant Surge Tank

⚠ WARNING:

You can be burned if you spill coolant on hot engine parts. Coolant contains ethylene glycol and it will burn if the engine parts are hot enough. Do not spill coolant on a hot engine.

⚠ WARNING:

Steam and scalding liquids from a hot cooling system can blow out and burn you badly. They are under pressure, and if you turn the coolant surge tank pressure cap — even a little — they can come out at high speed. Never turn the cap when the cooling system, including the coolant surge tank pressure cap, is hot. Wait for the cooling system and coolant surge tank pressure cap to cool if you ever have to turn the pressure cap.

If coolant is needed, add the proper DEX-COOL® coolant mixture directly to the surge tank, but be sure the cooling system is cool before this is done.

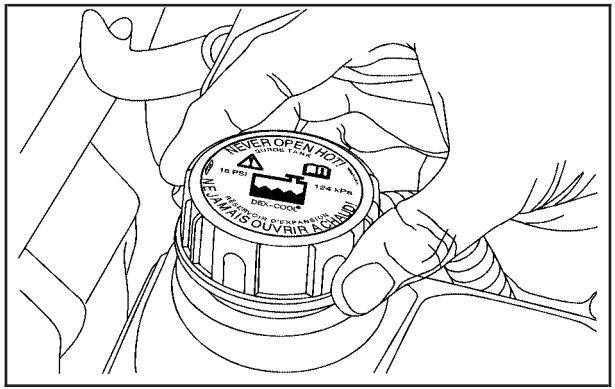

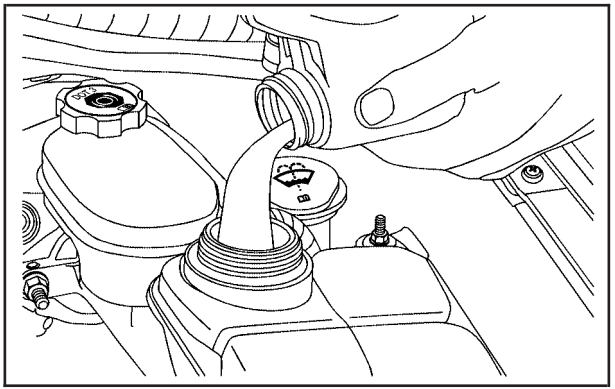

1. When the cooling system, including the coolant surge tank pressure cap and upper radiator hose, is no longer hot, remove the pressure cap.

   Turn the pressure cap slowly counterclockwise about one-quarter turn and then stop.

   If you hear a hiss, wait for that to stop. A hiss means there is still some pressure left.

2. Keep turning the pressure cap slowly, and remove it.

3. Fill the coolant surge tank with the proper DEX-COOL coolant mixture until the level inside stabilizes at the FULL COLD mark on the front of the surge tank.

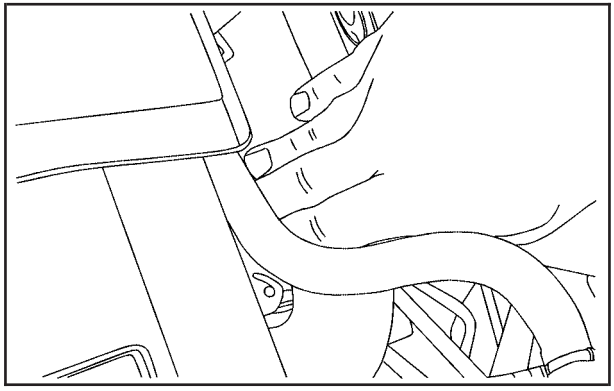

4. With the coolant surge tank pressure cap off, start the engine and let it run until you can feel the upper radiator hose getting hot. Any time during this procedure, watch out for the engine cooling fan.

   By this time, the coolant level inside the coolant surge tank may be lower. If the level is lower, add more of the proper mixture to the coolant surge tank until the level stabilizes at the FULL COLD mark on the coolant surge tank.

5. Replace the pressure cap. Be sure the pressure cap is hand-tight and fully seated.

   Check the level in the surge tank when the system has cooled down. If the coolant is not at the proper level, repeat Steps 1 through 4, then reinstall the pressure cap. If the coolant is not at the proper level when the system cools down again, see your dealer/retailer.

Notice: **If the pressure cap is not tightly installed, coolant loss and possible engine damage may occur. Be sure the cap is properly and tightly secured.**

Engine Overheating

The vehicle has several indicators to warn of engine overheating.

There is an engine coolant temperature gage on the instrument panel cluster. See *Engine Coolant Temperature Gage on page 4-39*. The vehicle may also display a COOLANT OVER TEMPERATURE message on the Driver Information Center (DIC). See *DIC Warnings and Messages on page 4-51* for more information.

You may decide not to lift the hood but to get service help right away. See *Roadside Assistance Program on page 8-7*.

If you do decide to lift the hood, make sure the vehicle is parked on a level surface.

Then check to see if the engine cooling fan is running. If the engine is overheating, the fan should be running. If it is not, do not continue to run the engine and have the vehicle serviced.

Notice: **Engine damage from running your engine without coolant is not covered by your warranty. See *Overheated Engine Protection Operating Mode on page 6-43* for information on driving to a safe place in an emergency.**

Notice: **If the engine catches fire while driving with no coolant, the vehicle can be badly damaged. The costly repairs would not be covered by the vehicle warranty. See *Overheated Engine Protection Operating Mode on page 6-43* for information on driving to a safe place in an emergency.**

If Steam Is Coming From Your Engine

⚠ WARNING:

Steam from an overheated engine can burn you badly, even if you just open the hood. Stay away from the engine if you see or hear steam coming from it. Turn it off and get everyone away from the vehicle until it cools down. Wait until there is no sign of steam or coolant before you open the hood.

If you keep driving when the vehicles engine is overheated, the liquids in it can catch fire. You or others could be badly burned. Stop the engine if it overheats, and get out of the vehicle until the engine is cool.

See *Overheated Engine Protection Operating Mode on page 6-43* for information on driving to a safe place in an emergency.

If No Steam Is Coming From Your Engine

If an engine overheat warning is displayed but no steam can be seen or heard, the problem may not be too serious. Sometimes the engine can get a little too hot when the vehicle:

- Climbs a long hill on a hot day.
- Stops after high-speed driving.
- Idles for long periods in traffic.

If the overheat warning is displayed with no sign of steam:

1. Turn the air conditioning off.
2. Turn the heater on to the highest temperature and to the highest fan speed. Open the windows as necessary.
3. If in a traffic jam, shift to N (Neutral) while stopped. If it is safe to do so, pull off the road, shift to P (Park) or N (Neutral) and let the engine idle.

If the temperature overheat gage is no longer in the overheat zone or an overheat warning no longer displays, the vehicle can be driven. Continue to drive the vehicle slow for about 10 minutes. Keep a safe vehicle distance from the car in front of you. If the warning does not come back on, continue to drive normally.

If the warning continues, pull over, stop, and park the vehicle right away.

If there is no sign of steam, idle the engine for three minutes while parked. If the warning is still displayed, turn off the engine until it cools down. Also, see “Overheated Engine Protection Operating Mode” next in this section.

Overheated Engine Protection Operating Mode

This emergency operating mode lets the vehicle be driven to a safe place, up to 50 miles (80 km), in an emergency situation. If an overheated engine condition exists and the messages COOLANT OVER TEMPERATURE and REDUCED ENGINE POWER are displayed, along with the check engine light, an overheat protection mode which alternates firing groups of cylinders helps prevent engine damage. In this mode, there is a significant loss in power and engine performance.

Driving extended distances in the overheat protection mode should be avoided.

Notice: **After driving in the overheated engine protection operating mode, to avoid engine damage, allow the engine to cool before attempting any repair. The engine oil will be severely degraded. Repair the cause of coolant loss, change the oil and reset the oil life system. See *Engine Oil on page 6-20*.**

Power Steering Fluid

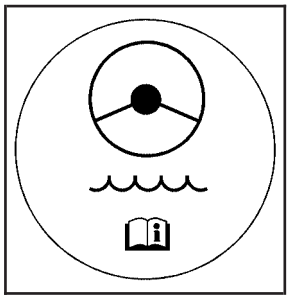

See *Engine Compartment Overview on page 6-14* for reservoir location.

When to Check Power Steering Fluid

It is not necessary to regularly check power steering fluid unless you suspect there is a leak in the system or you hear an unusual noise. A fluid loss in this system could indicate a problem. Have the system inspected and repaired.

How to Check Power Steering Fluid

To check the power steering fluid:

1. Turn the ignition off and let the engine compartment cool down.
2. Wipe the cap and the top of the reservoir clean.
3. Unscrew the cap and wipe the dipstick with a clean rag.
4. Replace the cap and completely tighten it.
5. Remove the cap again and look at the fluid level on the dipstick. There are markings on both sides of the dipstick.

The level should be at the FULL COLD mark. If necessary, add only enough fluid to bring the level up to the mark.

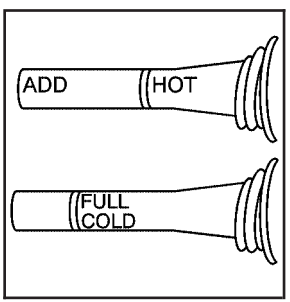

When the engine compartment is hot, the level should be at the HOT mark. When the engine compartment is cool, the level should be at the FULL COLD mark.

What to Use

To determine what kind of fluid to use, see *Recommended Fluids and Lubricants on page 7-9*. Always use the proper fluid.

Notice: **Use of the incorrect fluid may damage the vehicle and the damages may not be covered by the vehicle's warranty. Always use the correct fluid listed in *Recommended Fluids and Lubricants on page 7-9*.**

Windshield Washer Fluid

What to Use

When the vehicle needs windshield washer fluid, be sure to read the manufacturer's instructions before use. If the vehicle will be operating in an area where the temperature may fall below freezing, use a fluid that has sufficient protection against freezing.

Adding Washer Fluid

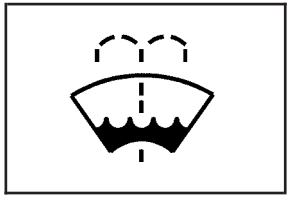

Open the cap with the washer symbol on it. Add washer fluid until the tank is full. See *Engine Compartment Overview on page 6-14* for reservoir location.

Notice:

- **When using concentrated washer fluid, follow the manufacturer's instructions for adding water.**
- **Do not mix water with ready-to-use washer fluid. Water can cause the solution to freeze and damage your washer fluid tank and other parts of the washer system. Also, water does not clean as well as washer fluid.**
- **Fill the washer fluid tank only three-quarters full when it is very cold. This allows for fluid expansion if freezing occurs, which could damage the tank if it is completely full.**
- **Do not use engine coolant (antifreeze) in your windshield washer. It can damage the vehicle's windshield washer system and paint.**

Brakes

Brake Fluid

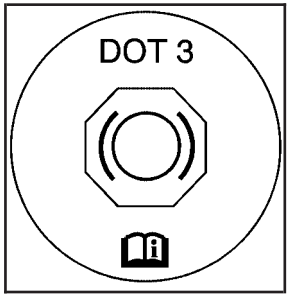

The brake master cylinder reservoir is filled with DOT 3 brake fluid. See *Engine Compartment Overview on page 6-14* for the location of the reservoir.

There are only two reasons why the brake fluid level in the reservoir might go down:

- The brake fluid level goes down because of normal brake lining wear. When new linings are installed, the fluid level goes back up.
- A fluid leak in the brake hydraulic system can also cause a low fluid level. Have the brake hydraulic system fixed, since a leak means that sooner or later the brakes will not work well.

Do not top off the brake fluid. Adding fluid does not correct a leak. If fluid is added when the linings are worn, there will be too much fluid when new brake linings are installed. Add or remove brake fluid, as necessary, only when work is done on the brake hydraulic system.

⚠ WARNING:

If too much brake fluid is added, it can spill on the engine and burn, if the engine is hot enough. You or others could be burned, and the vehicle could be damaged. Add brake fluid only when work is done on the brake hydraulic system. See “Checking Brake Fluid” in this section.

Refer to the Maintenance Schedule to determine when to check the brake fluid. See *Scheduled Maintenance on page 7-3*.

Checking Brake Fluid

Check brake fluid by looking at the brake fluid reservoir. See *Engine Compartment Overview on page 6-14*.

The fluid level should be above the MIN mark on the reservoir. If it is not, have the brake hydraulic system checked to see if there is a leak.

After work is done on the brake hydraulic system, make sure the level is between the MIN and MAX marks.

What to Add

Use only new DOT 3 brake fluid from a sealed container. See *Recommended Fluids and Lubricants on page 7-9*.

Always clean the brake fluid reservoir cap and the area around the cap before removing it. This helps keep dirt from entering the reservoir.

⚠ WARNING:

With the wrong kind of fluid in the brake hydraulic system, the brakes might not work well. This could cause a crash. Always use the proper brake fluid.

Notice:

- **Using the wrong fluid can badly damage brake hydraulic system parts. For example, just a few drops of mineral-based oil, such as engine oil, in the brake hydraulic system can damage brake hydraulic system parts so badly that they will have to be replaced. Do not let someone put in the wrong kind of fluid.**
- **If brake fluid is spilled on the vehicle's painted surfaces, the paint finish can be damaged. Be careful not to spill brake fluid on the vehicle. If you do, wash it off immediately. See *Washing Your Vehicle on page 6-95*.**

Brake Wear (Except ZR1)

This vehicle has disc brakes. Disc brake pads have built-in wear indicators that make a high-pitched warning sound when the brake pads are worn and new pads are needed. The sound can come and go or be heard all the time the vehicle is moving, except when applying the brake pedal firmly.

⚠ WARNING:

The brake wear warning sound means that soon the brakes will not work well. That could lead to an accident. When the brake wear warning sound is heard, have the vehicle serviced.

Notice: **Continuing to drive with worn-out brake pads could result in costly brake repair.**

Some driving conditions or climates can cause a brake squeal when the brakes are first applied or lightly applied. This does not mean something is wrong with the brakes.

Brake linings should always be replaced as complete axle sets.

Brake Wear (ZR1 Only)

The ZR1 model does not have built-in brake pad wear indicators and periodic visual inspection of the brake pads is required to determine when to replace the brake pads.

Notice: **Continuing to drive with worn-out brake pads could result in costly brake repair.**

- Make sure that the brakes have been given sufficient time to cool and then set the park brake.

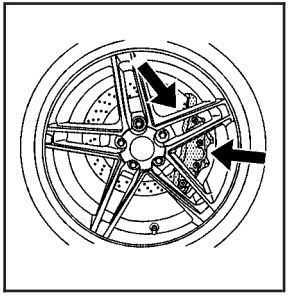

Rear

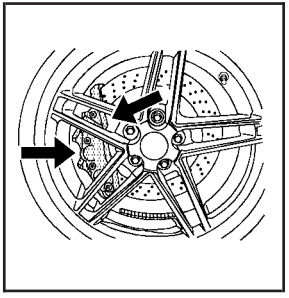

Front

- Brake pads can be visually inspected through the wheel by inspecting the outer brake pads at each wheel.

- Brake pads should be replaced when worn to two mm of pad thickness. New pads are 10 mm thick.
- In addition, brake pad inspection is required any time the tires are removed.

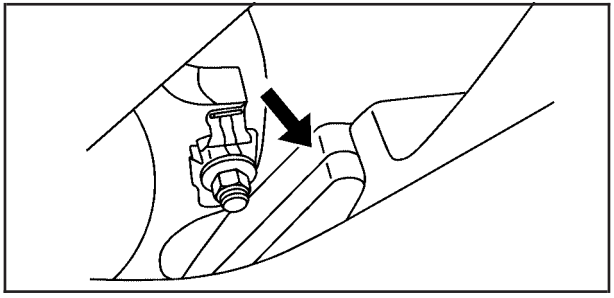

The ZR1 also has an electronic brake pad wear sensor system. When pads are worn, the CHANGE BRAKE PADS message displays in the Driver Information Center. See *DIC Warnings and Messages on page 4-51*.

Some driving conditions or climates can cause a brake squeal when the brakes are first applied or lightly applied. This does not mean something is wrong with the brakes.

Brake linings should always be replaced as complete axle sets.

Brake Rotor Wear

ZR1 models have ceramic brake rotors. Rotors should be visually inspected whenever the brake pads are replaced. Rotors also need to be weighed before brake pads are replaced to confirm that the rotor mass is greater than the wear-out mass printed on the rotor. The rotor can be reused if the weight of the rotor is above the mass limit. Rotor inspection and weighing methods can be found in the service manual. See *Service Publications Ordering Information on page 8-17*.

Brake Rotor Protector

⚠ WARNING:

Ceramic rotors will be very hot after operation and touching them may cause burns. Be sure brake system is completely cool prior to installation of protector, or coming in contact with them.

Notice: **Rotors may be chipped if hard contact is made with the wheel during wheel installation or removal. Always use the rotor protectors. Be sure to carefully follow wheel removal and installation instructions.**

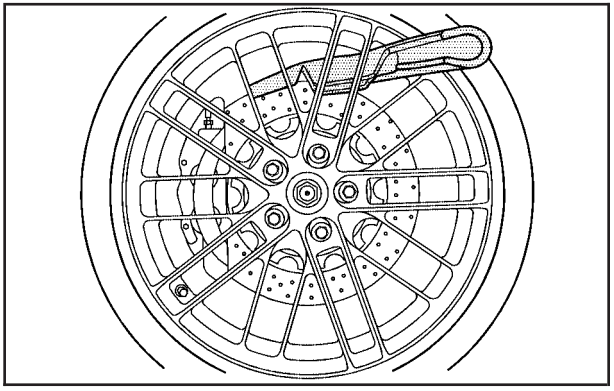

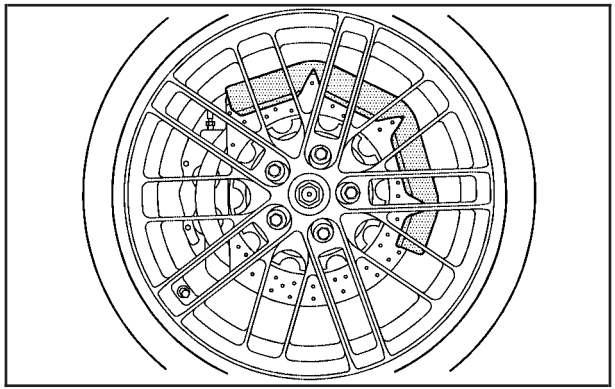

A rotor protector should always be installed before any wheel removal. The protector can be installed by feeding it through the wheel spokes and slipping it over the outer edge of the rotor. Leave the protector in place, over the rotor edge, until the wheel is re-installed. Rotor protectors are available through your dealer/retailer.

Brake Pedal Travel

See your dealer/retailer if the brake pedal does not return to normal height, or if there is a rapid increase in pedal travel. This could be a sign that brake service might be required.

Brake Adjustment

Every brake stop, the disc brakes automatically adjust for wear.

Replacing Brake System Parts

The braking system on a vehicle is complex. Its many parts have to be of top quality and work well together if the vehicle is to have really good braking. The vehicle was designed and tested with top-quality brake parts. When parts of the braking system are replaced — for example, when the brake linings wear down and new ones are installed — be sure to get new approved replacement parts. If this is not done, the brakes might not work properly. For example, if someone puts in brake linings that are wrong for the vehicle, the balance between the front and rear brakes can change — for the worse. The braking performance expected can change in many other ways if the wrong replacement brake parts are installed.

Battery

Refer to the replacement number on the original battery label when a new battery is needed.

For battery replacement, see your dealer/retailer or the service manual. To purchase a service manual, see *Service Publications Ordering Information on page 8-17*.

⚠ DANGER:

Battery posts, terminals, and related accessories contain lead and lead compounds, chemicals known to the State of California to cause cancer and reproductive harm. Wash hands after handling.

Vehicle Storage

⚠ WARNING:

Batteries have acid that can burn you and gas that can explode. You can be badly hurt if you are not careful. See *Jump Starting on page 6-53* for tips on working around a battery without getting hurt.

Infrequent Usage: Remove the black, negative (–) cable from the battery to keep the battery from running down.

See “Power Window Initialization” in *Power Windows on page 3-17*.

Extended Storage: Remove the black, negative (–) cable from the battery or use a battery trickle charger.

Jump Starting

If your battery has run down, you may want to use another vehicle and some jumper cables to start your vehicle. Be sure to use the following steps to do it safely.

> **⚠ WARNING:**
>
> Batteries can hurt you. They can be dangerous because:
>
> - They contain acid that can burn you.
> - They contain gas that can explode or ignite.
> - They contain enough electricity to burn you.
>
> If you do not follow these steps exactly, some or all of these things can hurt you.

Notice: **If you try to start your vehicle by pushing or pulling it, you could damage your vehicle. Do not push or pull your vehicle to start it; instead, use the jump starting procedure in this manual to start your vehicle when the battery has run down.**

1. Check the other vehicle. It must have a 12-volt battery with a negative ground system.

Notice: **If the other vehicle's system is not a 12-volt system with a negative ground, both vehicles can be damaged. Only use vehicles with 12-volt systems with negative grounds to jump start your vehicle.**

2. Get the vehicles close enough so the jumper cables can reach, but be sure the vehicles are not touching each other. If they are, it could cause a ground connection you do not want. You would not be able to start your vehicle, and the bad grounding could damage the electrical systems.

   To avoid the possibility of the vehicles rolling, set the parking brake firmly on both vehicles involved in the jump start procedure. Put an automatic transmission in P (Park) or a manual transmission in Neutral before setting the parking brakes.

Notice: **If you leave the radio or other accessories on during the jump starting procedure, they could be damaged. The repairs would not be covered by the warranty. Always turn off the radio and other accessories when jump starting the vehicle.**

3. Turn off the ignition on both vehicles. Unplug unnecessary accessories plugged into the cigarette lighter or the accessory power outlet. Turn off the radio and all lamps that are not needed. This will avoid sparks and help save both batteries. And it could save the radio!

4. Open the hoods and locate the positive (+) and negative (–) terminal locations on each vehicle.

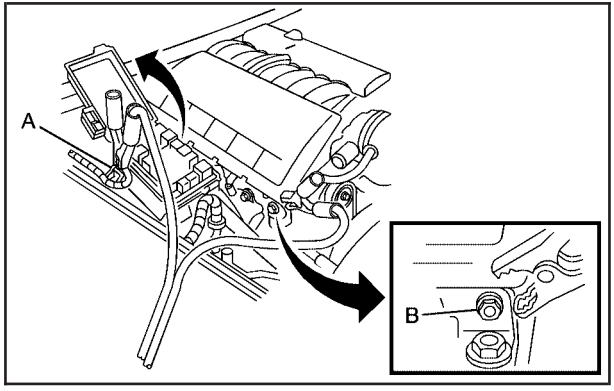

6.2 L LS3 shown, 7.0 L LS7 and 6.2 L LS9 similar

Your vehicle has a remote positive (+) terminal (A) and a remote negative (–) terminal (B), as shown in the illustration, which should be used to jump start your vehicle.

The remote positive (+) terminal (A) can be accessed by opening the cover of the engine compartment fuse block.

The remote negative (–) terminal (B) is located underneath the engine cover, below the engine oil fill cap.

See *Engine Compartment Overview on page 6-14* for the location of the engine compartment fuse block and engine oil fill cap.

You will not need to access the battery for jump starting. The remote terminals are for that purpose.

⚠ WARNING:

An electric fan can start up even when the engine is not running and can injure you. Keep hands, clothing and tools away from any underhood electric fan.

⚠ WARNING:

Using an open flame near a battery can cause battery gas to explode. People have been hurt doing this, and some have been blinded. Use a flashlight if you need more light.

Be sure the battery has enough water. You do not need to add water to the battery installed in your new vehicle. But if a battery has filler caps, be sure the right amount of fluid is there. If it is low, add water to take care of that first. If you do not, explosive gas could be present.

Battery fluid contains acid that can burn you. Do not get it on you. If you accidentally get it in your eyes or on your skin, flush the place with water and get medical help immediately.

⚠ WARNING:

Fans or other moving engine parts can injure you badly. Keep your hands away from moving parts once the engine is running.

5. Check that the jumper cables do not have loose or missing insulation. If they do, you could get a shock. The vehicles could be damaged too.

   Before you connect the cables, here are some basic things you should know. Positive (+) will go to positive (+) or to a remote positive (+) terminal if the vehicle has one. Negative (–) will go to a heavy, unpainted metal engine part or to a remote negative (–) terminal if the vehicle has one.

   Do not connect positive (+) to negative (–) or you will get a short that would damage the battery and maybe other parts too. And do not connect the negative (–) cable to the negative (–) terminal on the dead battery because this can cause sparks.

6. Connect the red positive (+) cable to the positive (+) terminal of the dead battery. Use a remote positive (+) terminal if the vehicle has one.
7. Do not let the other end touch metal. Connect it to the positive (+) terminal of the good battery. Use a remote positive (+) terminal if the vehicle has one.
8. Now connect the black negative (–) cable to the negative (–) terminal of the good battery. Use a remote negative (–) terminal if the vehicle has one.

   Do not let the other end touch anything until the next step. The other end of the negative (–) cable does not go to the dead battery. It goes to a heavy, unpainted metal engine part or to a remote negative (–) terminal on the vehicle with the dead battery.
9. Connect the other end of the negative (–) cable at least 18 inches (45 cm) away from the dead battery, but not near engine parts that move. The electrical connection is just as good there, and the chance of sparks getting back to the battery is much less.

   Your vehicle has a remote negative (–) terminal for this purpose.
10. Now start the vehicle with the good battery and run the engine for a while.
11. Try to start the vehicle that had the dead battery. If it will not start after a few tries, it probably needs service.

Notice: **If the jumper cables are connected or removed in the wrong order, electrical shorting may occur and damage the vehicle. The repairs would not be covered by the vehicle warranty. Always connect and remove the jumper cables in the correct order, making sure that the cables do not touch each other or other metal.**

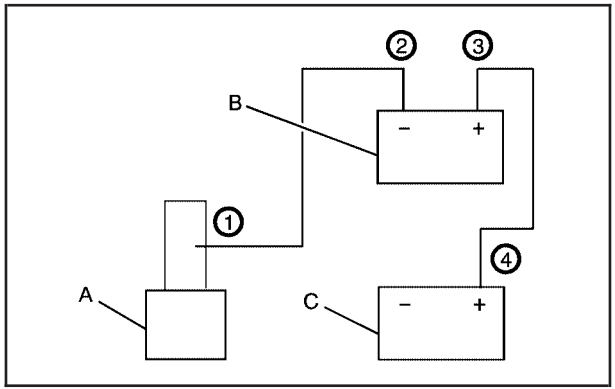

Jumper Cable Removal

A. Heavy, Unpainted Metal Engine Part or Remote Negative (–) Terminal

B. Good Battery or Remote Positive (+) and Negative (–) Terminals

C. Dead Battery or Remote Positive (+) Terminal

To disconnect the jumper cables from both vehicles, do the following:

1. Disconnect the black negative (–) cable from the vehicle that had the dead battery.
2. Disconnect the black negative (–) cable from the vehicle with the good battery.
3. Disconnect the red positive (+) cable from the vehicle with the good battery.
4. Disconnect the red positive (+) cable from the other vehicle.
5. Return the engine fuse block cover to its original position.
6. You may also need to initialize the power windows. See “Power Window Initialize” under *Power Windows on page 3-17* for more information.

Rear Axle

When to Check Lubricant

It is not necessary to regularly check rear axle fluid unless you suspect there is a leak or you hear an unusual noise. A fluid loss could indicate a problem. Have it inspected and repaired.

How to Check Lubricant

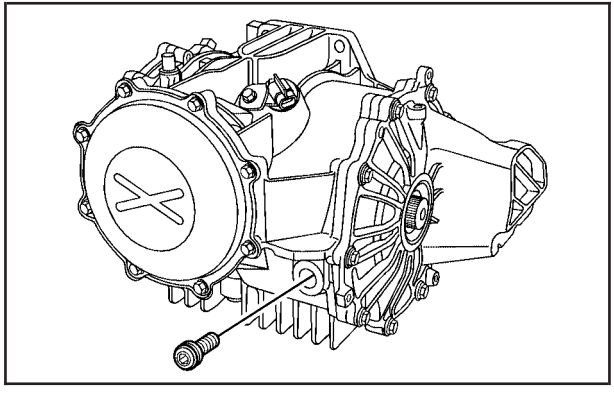

To get an accurate reading, the vehicle should be on a level surface.

If the level is below the bottom of the filler plug hole, you will need to add some lubricant. Add enough lubricant to raise the level to the bottom of the filler plug hole.

What to Use

To add lubricant when the level is low, use Dexron LS Gear Oil 75W-90 (GM Part No. US. 88862624, in Canada 88862625) meeting GM Specification 9986290. To completely refill after draining, see *Recommended Fluids and Lubricants on page 7-9*. Then fill to the bottom of the filler plug hole with the Synthetic Gear Lubricant.

Headlamp Aiming

Headlamp aim has been preset at the factory and should need no further adjustment.

However, if your vehicle is damaged in a crash, the headlamp aim may be affected. Aim adjustment to the low-beam headlamps may be necessary if oncoming drivers flash their high-beam headlamps at you (for vertical aim).

If the headlamps need to be re-aimed, it is recommended that you take the vehicle to your dealer/retailer for service.

Bulb Replacement

For the proper type of replacement bulbs, see *Replacement Bulbs on page 6-61*.

For any bulb changing procedure not listed in this section, contact your dealer/retailer.

High Intensity Discharge (HID) Lighting

⚠ WARNING:

The low beam high intensity discharge lighting system operates at a very high voltage. If you try to service any of the system components, you could be seriously injured. Have your dealer/retailer or a qualified technician service them.

The vehicle may have HID headlamps. After an HID headlamp bulb has been replaced, you may notice that the beam is a slightly different shade than it was originally. This is normal.

Halogen Bulbs

⚠ WARNING:

Halogen bulbs have pressurized gas inside and can burst if you drop or scratch the bulb. You or others could be injured. Be sure to read and follow the instructions on the bulb package.

Headlamps, Front Turn Signal, and Parking Lamps

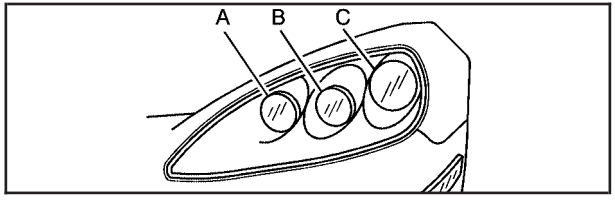

A. High-beam Headlamp

B. Low-beam Headlamp

C. Front Parking/Turn Signal/Daytime Running Lamp (DRL)

If the low-beam headlamp needs to be replaced, see your dealer/retailer. See *High Intensity Discharge (HID) Lighting on page 6-59* for more information.

To replace a high-beam or front parking/turn signal/DRL bulb:

1. Turn the wheel to allow access to the wheel well.

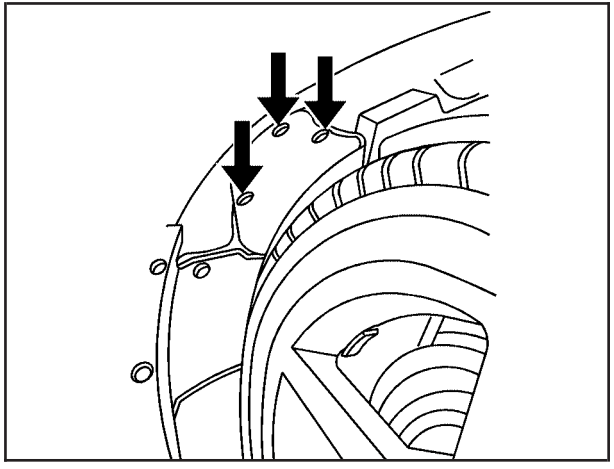

2. Remove the three outer fasteners to move the access panel back.

3. Remove the outer cover to expose the high-beam headlamp bulb socket.

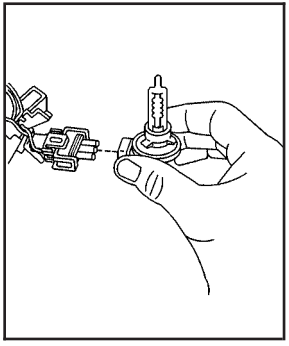

4. Remove the headlamp bulb by releasing the outer tabs from the socket.

5. Remove the front parking/turn signal bulb by turning the bulb socket counterclockwise.

6. Replace the high-beam headlamp bulb with a new bulb and reattach to the bulb socket.

   Replace the front parking/turn signal bulb by turning the bulb socket clockwise.

7. Reverse the Steps 2 through 4 to reinstall.

Taillamps, Turn Signal, and Stoplamps

To replace a stoplamp, taillamp/turn signal bulb:

1. Remove the screw from the top of the lamp assembly.

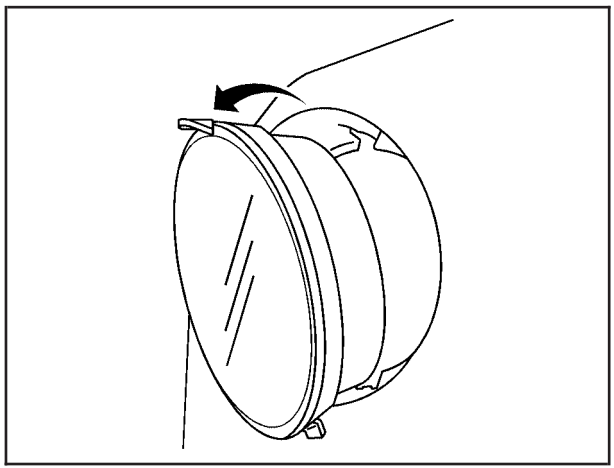

2. Tilt the lamp assembly toward you.
3. Turn the bulb socket one-quarter turn counterclockwise and pull it out.
4. Pull the bulb straight out to remove it from the socket.
5. Push the new bulb in the bulb socket until it snaps into place.
6. Reinstall the lamp assembly by first lining up the tabs on the bottom of the lamp assembly with the tabs in the vehicle, then slide it in.
7. Replace the screw at the top of the lamp assembly.

Replacement Bulbs

Exterior Lamp	Bulb Number
Front Parking/Turn Signal/Daytime Running Lamp (DRL)	5702KA
Headlamp, High-Beam Lamp	H9
Sidemarker Lamp	W3W
Stoplamp/Taillamp/Turn Signal Lamp	3057KX

For replacement bulbs not listed here, contact your dealer/retailer.

Windshield Replacement

The windshield is part of the Head-Up Display (HUD) system. If you ever have to get the windshield replaced, get one that is designed for HUD or the HUD image may look out of focus.

Windshield Wiper Blade Replacement

Windshield wiper blades should be inspected for wear and cracking. See *Scheduled Maintenance on page 7-3* for more information.

Replacement blades come in different types and are removed in different ways. For the proper type and length, see *Maintenance Replacement Parts on page 7-11*.

It is a good idea to clean or replace the wiper blade assembly every six months. Allowing the wiper blade arm to touch the windshield when no wiper blade is installed could damage the windshield. Any damage that occurs would not be covered by the vehicle's warranty. Do not allow the wiper blade arm to touch the windshield.

To remove the wiper blade assembly:

1. Open the hood to gain access to the windshield wipers.
2. Lift the wiper arm away from the windshield.

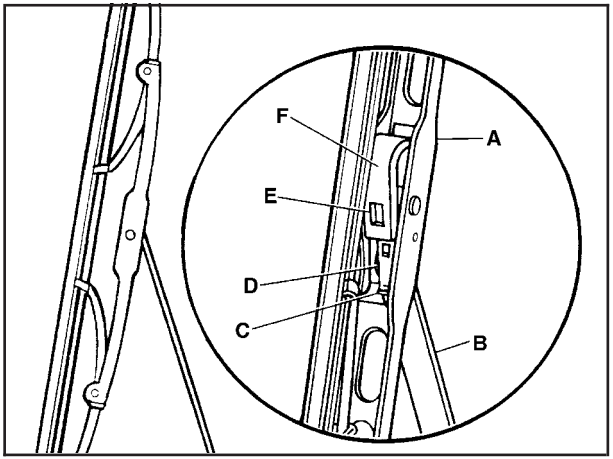

A. Blade Assembly
B. Arm Assembly
C. Locking Tab
D. Blade Pivot
E. Hook Slot
F. Arm Hook

3. Press down on the blade assembly pivot locking tab (C). Pull down on the blade assembly (A) to release it from the wiper arm hook (F).
4. Remove the insert from the blade assembly (A). The insert has two notches at one end that are locked by the bottom claws of the blade assembly. At the notch end, pull the insert from the blade assembly.

To install the new wiper insert:

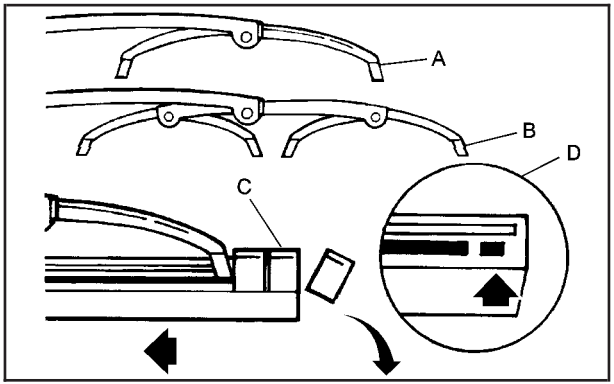

1. Slide the insert (D), notched end last, into the end with the two blade claws (A). Slide the insert all the way through the blade claws at the opposite end (B). The plastic caps (C) will be forced off as the insert is fully installed.
2. Be sure the notches are locked by the bottom claws. Make sure that all other claws are properly locked on both sides of the insert slots.
3. Put the blade assembly pivot in the wiper arm hook. Pull up until the pivot locking tab locks in the hook slot.
4. Carefully lower the wiper arm and blade assembly onto the windshield.

Installation guide:

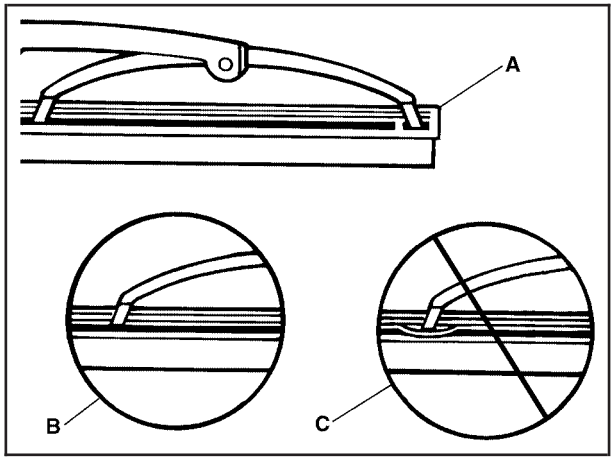

A. Claw in Notch
B. Correct Installation
C. Incorrect Installation

Tires

Your new vehicle comes with high-quality tires made by a leading tire manufacturer. If you ever have questions about your tire warranty and where to obtain service, see your vehicle Warranty booklet for details. For additional information refer to the tire manufacturer.

⚠ WARNING:

- Poorly maintained and improperly used tires are dangerous.
- Overloading your tires can cause overheating as a result of too much flexing. You could have an air-out and a serious accident. See *Loading the Vehicle on page 5-28*.

WARNING: (Continued)

WARNING: (Continued)

- Underinflated tires pose the same danger as overloaded tires. The resulting accident could cause serious injury. Check all tires frequently to maintain the recommended pressure. Tire pressure should be checked when your tires are cold. See *Inflation - Tire Pressure on page 6-72*.
- Overinflated tires are more likely to be cut, punctured, or broken by a sudden impact — such as when you hit a pothole. Keep tires at the recommended pressure.
- Worn, old tires can cause accidents. If your tread is badly worn, or if your tires have been damaged, replace them.

See *High-Speed Operation on page 6-74* for inflation pressure adjustment for high speed driving.

Low-Profile Performance Tire

The original equipment tires on your vehicle are classified as low-profile performance tires. These tires are designed for very responsive driving on wet or dry pavement. You may also notice more road noise with low-profile tires and that they tend to wear faster.

Notice: **If the vehicle has low-profile tires, they are more susceptible to damage from road hazards or curb impact than standard profile tires. Tire and/or wheel assembly damage can occur when coming into contact with road hazards like, potholes, or sharp edged objects, or when sliding into a curb. The vehicle warranty does not cover this type of damage. Keep tires set to the correct inflation pressure and, when possible avoid contact with curbs, potholes, and other road hazards.**

Winter Tires

If you expect to drive on snow or ice covered roads often, you may want to get winter tires for your vehicle. All season tires provide good overall performance on most surfaces but they may not offer the traction you would like or the same level of performance as winter tires on snow or ice covered roads.

Winter tires, in general, are designed for increased traction on snow and ice covered roads. With winter tires, there may be decreased dry road traction, increased road noise, and shorter tread life. After switching to winter tires, be alert for changes in vehicle handling and braking.

See your dealer/retailer for details regarding winter tire availability and proper tire selection. Also, see *Buying New Tires on page 6-79*.

If you choose to use winter tires:

- Use tires of the same brand and tread type on all four wheel positions.
- Use only radial ply tires of the same size, load range, and speed rating as the original equipment tires.

Winter tires with the same speed rating as your original equipment tires may not be available for H, V, W, Y, and ZR speed rated tires. If you choose winter tires with a lower speed rating, never exceed the tire's maximum speed capability.

Tire Sidewall Labeling

Useful information about a tire is molded into its sidewall. The example below shows a typical passenger (p-metric) tire sidewall.

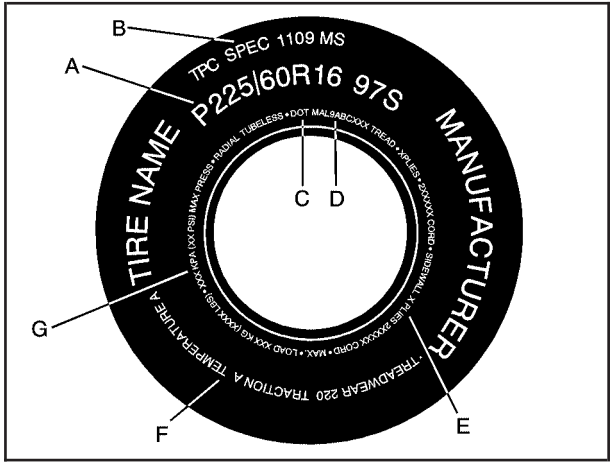

Passenger (P-Metric) Tire Example

(A) Tire Size: The tire size is a combination of letters and numbers used to define a particular tire's width, height, aspect ratio, construction type, and service description. See the "Tire Size" illustration later in this section for more detail.

(B) TPC Spec (Tire Performance Criteria Specification): Original equipment tires designed to GM's specific tire performance criteria have a TPC specification code molded onto the sidewall. GM's TPC specifications meet or exceed all federal safety guidelines.

(C) DOT (Department of Transportation): The Department of Transportation (DOT) code indicates that the tire is in compliance with the U.S. Department of Transportation Motor Vehicle Safety Standards.

(D) Tire Identification Number (TIN): The letters and numbers following DOT code are the Tire Identification Number (TIN). The TIN shows the manufacturer and plant code, tire size, and date the tire was manufactured. The TIN is molded onto both sides of the tire, although only one side may have the date of manufacture.

(E) Tire Ply Material: The type of cord and number of plies in the sidewall and under the tread.

(F) Uniform Tire Quality Grading (UTQG): Tire manufacturers are required to grade tires based on three performance factors: treadwear, traction and temperature resistance. For more information see *Uniform Tire Quality Grading on page 6-82*.

(G) Maximum Cold Inflation Load Limit: Maximum load that can be carried and the maximum pressure needed to support that load.

Tire Size

The following illustration shows an example of a typical passenger (p-metric) vehicle tire size.

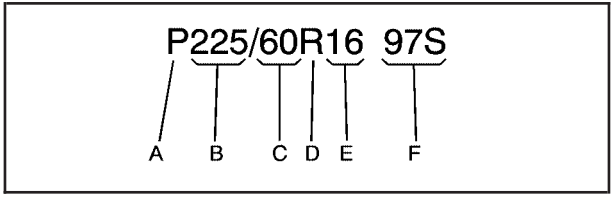

(A) Passenger (P-Metric) Tire: The United States version of a metric tire sizing system. The letter P as the first character in the tire size means a passenger vehicle tire engineered to standards set by the U. S. Tire and Rim Association.

(B) Tire Width: The three-digit number indicates the tire section width in millimeters from sidewall to sidewall.

(C) Aspect Ratio: A two-digit number that indicates the tire height-to-width measurements. For example, if the tire size aspect ratio is 60, as shown in item C of the illustration, it would mean that the tire's sidewall is 60 percent as high as it is wide.

(D) Construction Code: A letter code is used to indicate the type of ply construction in the tire. The letter R means radial ply construction; the letter D means diagonal or bias ply construction; and the letter B means belted-bias ply construction.

(E) Rim Diameter: Diameter of the wheel in inches.

(F) Service Description: These characters represent the load index and speed rating of the tire. The load index represents the load carry capacity a tire is certified to carry. The speed rating is the maximum speed a tire is certified to carry a load.

Tire Terminology and Definitions

Air Pressure: The amount of air inside the tire pressing outward on each square inch of the tire. Air pressure is expressed in pounds per square inch (psi) or kilopascal (kPa).

Accessory Weight: This means the combined weight of optional accessories. Some examples of optional accessories are, automatic transmission, power steering, power brakes, power windows, power seats, and air conditioning.

Aspect Ratio: The relationship of a tire's height to its width.

Belt: A rubber coated layer of cords that is located between the plies and the tread. Cords may be made from steel or other reinforcing materials.

Bead: The tire bead contains steel wires wrapped by steel cords that hold the tire onto the rim.

Bias Ply Tire: A pneumatic tire in which the plies are laid at alternate angles less than 90 degrees to the centerline of the tread.

Cold Tire Pressure: The amount of air pressure in a tire, measured in pounds per square inch (psi) or kilopascals (kPa) before a tire has built up heat from driving. See *Inflation - Tire Pressure on page 6-72*.

Curb Weight: The weight of a motor vehicle with standard and optional equipment including the maximum capacity of fuel, oil, and coolant, but without passengers and cargo.

DOT Markings: A code molded into the sidewall of a tire signifying that the tire is in compliance with the U.S. Department of Transportation (DOT) motor vehicle safety standards. The DOT code includes the Tire Identification Number (TIN), an alphanumeric designator which can also identify the tire manufacturer, production plant, brand, and date of production.

GVWR: Gross Vehicle Weight Rating. See *Loading the Vehicle on page 5-28*.

GAWR FRT: Gross Axle Weight Rating for the front axle. See *Loading the Vehicle on page 5-28*.

GAWR RR: Gross Axle Weight Rating for the rear axle. See *Loading the Vehicle on page 5-28*.

Intended Outboard Sidewall: The side of an asymmetrical tire, that must always face outward when mounted on a vehicle.

Kilopascal (kPa): The metric unit for air pressure.

Light Truck (LT-Metric) Tire: A tire used on light duty trucks and some multipurpose passenger vehicles.

Load Index: An assigned number ranging from 1 to 279 that corresponds to the load carrying capacity of a tire.

Maximum Inflation Pressure: The maximum air pressure to which a cold tire can be inflated. The maximum air pressure is molded onto the sidewall.

Maximum Load Rating: The load rating for a tire at the maximum permissible inflation pressure for that tire.

Maximum Loaded Vehicle Weight: The sum of curb weight, accessory weight, vehicle capacity weight, and production options weight.

Normal Occupant Weight: The number of occupants a vehicle is designed to seat multiplied by 150 lbs (68 kg). See *Loading the Vehicle on page 5-28*.

Occupant Distribution: Designated seating positions.

Outward Facing Sidewall: The side of an asymmetrical tire that has a particular side that faces outward when mounted on a vehicle. The side of the tire that contains a whitewall, bears white lettering, or bears manufacturer, brand, and/or model name molding that is higher or deeper than the same moldings on the other sidewall of the tire.

Passenger (P-Metric) Tire: A tire used on passenger cars and some light duty trucks and multipurpose vehicles.

Recommended Inflation Pressure: Vehicle manufacturer's recommended tire inflation pressure as shown on the tire placard. See *Inflation - Tire Pressure on page 6-72* and *Loading the Vehicle on page 5-28*.

Radial Ply Tire: A pneumatic tire in which the ply cords that extend to the beads are laid at 90 degrees to the centerline of the tread.

Rim: A metal support for a tire and upon which the tire beads are seated.

Sidewall: The portion of a tire between the tread and the bead.

Speed Rating: An alphanumeric code assigned to a tire indicating the maximum speed at which a tire can operate.

Traction: The friction between the tire and the road surface. The amount of grip provided.

Tread: The portion of a tire that comes into contact with the road.

Treadwear Indicators: Narrow bands, sometimes called wear bars, that show across the tread of a tire when only 1/16 inch (1.6 mm) of tread remains. See *When It Is Time for New Tires on page 6-78*.

UTQGS (Uniform Tire Quality Grading Standards): A tire information system that provides consumers with ratings for a tire's traction, temperature, and treadwear. Ratings are determined by tire manufacturers using government testing procedures. The ratings are molded into the sidewall of the tire. See *Uniform Tire Quality Grading on page 6-82*.

Vehicle Capacity Weight: The number of designated seating positions multiplied by 150 lbs (68 kg) plus the rated cargo load. See *Loading the Vehicle on page 5-28*.

Vehicle Maximum Load on the Tire: Load on an individual tire due to curb weight, accessory weight, occupant weight, and cargo weight.

Vehicle Placard: A label permanently attached to a vehicle showing the vehicle's capacity weight and the original equipment tire size and recommended inflation pressure. See "Tire and Loading Information Label" under *Loading the Vehicle on page 5-28*.

Run-Flat Tires

This vehicle, when new, had run-flat tires. There is no spare tire, no tire changing equipment, and no place to store a tire in the vehicle. Run-flat tires perform so well without any air that a Tire Pressure Monitor System (TPMS) is used to alert you if a tire has lost pressure.

⚠ WARNING:

When the low tire warning light is displayed on the instrument panel cluster, your vehicle's handling capabilities will be reduced during severe maneuvers. If you drive too fast, you could lose control of your vehicle. You or others could be injured. Do not drive over 55 mph (90 km/h) when the low tire warning light is displayed. Drive cautiously and check your tire pressures as soon as you can.

If a tire goes flat, you will not need to stop on the side of the road to change the tire. You can just keep on driving. The shorter the distance you drive and the slower the speed, the greater the chance that the tire will not have to be replaced. If you drive on a deflated run-flat tire for 25 miles (40 km) or less and at speeds of 55 mph (90 km/h) or less, there is a good chance that the tire can be repaired. The tires on coupe, convertible and Z06 models can operate effectively with no air pressure for up to 100 miles (160 km) at speeds up to 55 mph (90 km/h), but the tire would then have to be replaced. The tires on ZR1 models can operate effectively with no air pressure for up to 50 miles (80 km) at speeds up to 55 mph (90 km/h), but the tire would then have to be replaced. When a tire is filled with air, it provides a cushion between the road and the wheel. Because you will not have this cushion when driving on a deflated tire, try to avoid potholes that could damage your wheel and require replacement of it.

Some road hazards can damage a tire beyond repair. This damage could occur even before you have driven on the tire in a deflated condition. When a tire has been damaged, or if you have driven any distance on a run-flat tire, check with an authorized run-flat tire service center to determine whether the tire can be repaired or should be replaced. To maintain your vehicle's run-flat feature, all replacement tires must be self-supporting tires. As soon as possible, contact the nearest authorized GM or run-flat servicing facility for inspection and repair or replacement. To locate the nearest GM or run-flat servicing facility, call Roadside Assistance. For phone numbers and Roadside Service details see *Roadside Assistance Program on page 8-7*.

⚠ WARNING:

Run-flat tires are constructed differently than other tires and could explode during improper service. You or others could be injured or killed if you attempt to repair, replace, dismount, or mount a run-flat tire. Let only an authorized run-flat service center repair, replace, dismount, and mount run-flat tires.

The valve stems on your run-flat tires have sensors that are part of the Tire Pressure Monitor System (TPMS). See *Tire Pressure Monitor System on page 6-74*. These sensors contain batteries which are designed to last for 10 years under normal driving conditions. See your dealer/retailer if you ever need to have a wheel replaced, or if the sensors ever need replacement.

Notice: **Using liquid sealants can damage the tire valves and tire pressure monitor sensors in the vehicle's run-flat tires. This damage would not be covered by warranty. Do not use liquid sealants in the vehicle's run-flat tires.**

Inflation - Tire Pressure

Tires need the correct amount of air pressure to operate effectively.

Notice: **Do not let anyone tell you that under-inflation or over-inflation is all right. It is not. If your tires do not have enough air (under-inflation), you can get the following:**

- **Too much flexing**
- **Too much heat**
- **Tire overloading**
- **Premature or irregular wear**
- **Poor handling**
- **Reduced fuel economy**

If your tires have too much air (over-inflation), you can get the following:

- **Unusual wear**
- **Poor handling**
- **Rough ride**
- **Needless damage from road hazards**

A vehicle specific Tire and Loading Information label is attached to your vehicle. This label shows your vehicle's original equipment tires and the correct inflation pressures for your tires when they are cold. The recommended cold tire inflation pressure, shown on the label, is the minimum amount of air pressure needed to support your vehicle's maximum load carrying capacity.

For additional information regarding how much weight your vehicle can carry, and an example of the Tire and Loading Information label, see *Loading the Vehicle on page 5-28*. How you load your vehicle affects vehicle handling and ride comfort. Never load your vehicle with more weight than it was designed to carry.

When to Check

Check your tires once a month or more.

How to Check

Use a good quality pocket-type gage to check tire pressure. You cannot tell if your tires are properly inflated simply by looking at them.

Radial tires may look properly inflated even when they are under-inflated. Check the tire's inflation pressure when the tires are cold. Cold means your vehicle has been sitting for at least three hours or driven no more than 1 mile (1.6 km).

Remove the valve cap from the tire valve stem. Press the tire gage firmly onto the valve to get a pressure measurement. If the cold tire inflation pressure matches the recommended pressure on the Tire and Loading Information label, no further adjustment is necessary. If the inflation pressure is low, add air until you reach the recommended amount.

If you overfill the tire, release air by pushing on the metal stem in the center of the tire valve. Re-check the tire pressure with the tire gage.

Be sure to put the valve caps back on the valve stems. They help prevent leaks by keeping out dirt and moisture.

High-Speed Operation

⚠ WARNING:

Driving at high speeds, 160 km/h (100 mph) or higher, puts an additional strain on tires. Sustained high-speed driving causes excessive heat build up and can cause sudden tire failure. You could have a crash and you or others could be killed. Some high-speed rated tires require inflation pressure adjustment for high speed operation. When speed limits and road conditions are such that a vehicle can be driven at high speeds, make sure the tires are rated for high speed operation, in excellent condition, and set to the correct cold tire inflation pressure for the vehicle load.

If you will be driving your vehicle at speeds of 175 mph (282 km/h) or higher, where it is legal, set the cold inflation pressure to the maximum inflation pressure shown on the tire sidewall, or 38 psi (265 kPa), whichever is lower. See the example following. When you end this high-speed driving, return the tires to the cold inflation pressure shown on the Tire and Loading Information label. See *Loading the Vehicle on page 5-28*.

Example:

You will find the maximum load and inflation pressure molded on the tire's sidewall, in small letters, near the rim flange. It will read something like this: Maximum load 690 kg (1521 lbs) 300 kPa (44 psi) Max. Press.

For this example, you would set the inflation pressure for high-speed driving at 38 psi (265 kPa).

Racing or other competitive driving may affect the warranty coverage of your vehicle. See your warranty booklet for more information.

Tire Pressure Monitor System

The Tire Pressure Monitor System (TPMS) uses radio and sensor technology to check tire pressure levels. The TPMS sensors monitor the air pressure in your vehicle's tires and transmit tire pressure readings to a receiver located in the vehicle.

Each tire, including the spare (if provided), should be checked monthly when cold and inflated to the inflation pressure recommended by the vehicle manufacturer on the vehicle placard or tire inflation pressure label. (If your vehicle has tires of a different size than the size indicated on the vehicle placard or tire inflation pressure label, you should determine the proper tire inflation pressure for those tires.)

As an added safety feature, your vehicle has been equipped with a tire pressure monitoring system (TPMS) that illuminates a low tire pressure telltale when one or more of your tires is significantly under-inflated.

Accordingly, when the low tire pressure telltale illuminates, you should stop and check your tires as soon as possible, and inflate them to the proper pressure. Driving on a significantly under-inflated tire causes the tire to overheat and can lead to tire failure. Under-inflation also reduces fuel efficiency and tire tread life, and may affect the vehicle's handling and stopping ability.

Please note that the TPMS is not a substitute for proper tire maintenance, and it is the driver's responsibility to maintain correct tire pressure, even if under-inflation has not reached the level to trigger illumination of the TPMS low tire pressure telltale.

Your vehicle has also been equipped with a TPMS malfunction indicator to indicate when the system is not operating properly. The TPMS malfunction indicator is combined with the low tire pressure telltale. When the system detects a malfunction, the telltale will flash for approximately one minute and then remain continuously illuminated. This sequence will continue upon subsequent vehicle start-ups as long as the malfunction exists.

When the malfunction indicator is illuminated, the system may not be able to detect or signal low tire pressure as intended. TPMS malfunctions may occur for a variety of reasons, including the installation of replacement or alternate tires or wheels on the vehicle that prevent the TPMS from functioning properly. Always check the TPMS malfunction telltale after replacing one or more tires or wheels on your vehicle to ensure that the replacement or alternate tires and wheels allow the TPMS to continue to function properly.

See *Tire Pressure Monitor Operation on page 6-76* for additional information.

Federal Communications Commission (FCC) and Industry and Science Canada

See *Radio Frequency Statement on page 8-20* for information regarding Part 15 of the Federal Communications Commission (FCC) Rules and RSS-210/211 of Industry and Science Canada.

Tire Pressure Monitor Operation

This vehicle may have a Tire Pressure Monitor System (TPMS). The TPMS is designed to warn the driver when a low tire pressure condition exists. TPMS sensors are mounted onto each tire and wheel assembly on your vehicle. The TPMS sensors monitor the air pressure in the vehicle's tires and transmits the tire pressure readings to a receiver located in the vehicle.

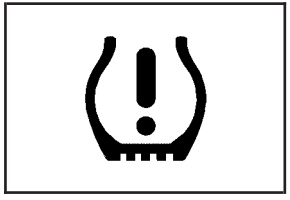

When a low tire pressure condition is detected, the TPMS illuminates the low tire pressure warning light, located in the instrument panel cluster.

At the same time a message to check the pressure in a specific tire appears on the Driver Information Center (DIC) display. The low tire pressure warning light and the DIC warning message appear at each ignition cycle until the tires are inflated to the correct inflation pressure. Using the DIC, tire pressure levels can be viewed by the driver. For additional information and details about the DIC operation and displays see *DIC Operation and Displays on page 4-46* and *DIC Warnings and Messages on page 4-51*.

The low tire pressure warning light may come on in cool weather when the vehicle is first started, and then turn off as you start to drive. This could be an early indicator that the air pressure in the tire(s) are getting low and need to be inflated to the proper pressure.

A Tire and Loading Information label, attached to your vehicle, shows the size of your vehicle's original equipment tires and the correct inflation pressure for your vehicle's tires when they are cold. See *Loading the Vehicle on page 5-28*, for an example of the Tire and Loading Information label and its location on your vehicle. Also see *Inflation - Tire Pressure on page 6-72* for additional information.

Your vehicle's TPMS can warn you about a low tire pressure condition but it does not replace normal tire maintenance. See *Tire Inspection and Rotation on page 6-78*, *When It Is Time for New Tires on page 6-78*, and *Tires on page 6-64*.

Notice: **Liquid tire sealants could damage the Tire Pressure Monitor System (TPMS) sensors. Sensor damage caused by using a tire sealant is not covered by your warranty. Do not use liquid tire sealants.**

TPMS Malfunction Light and Message

The TPMS will not function properly if one or more of the TPMS sensors are missing or inoperable. When the system detects a malfunction, the low tire warning light flashes for about one minute and then stays on for the remainder of the ignition cycle. A DIC warning message is also displayed. The low tire warning light and DIC warning message come on at each ignition cycle until the problem is corrected. Some of the conditions that can cause the malfunction light and DIC message to come on are:

- The TPMS sensor matching process was not done or not completed successfully. The DIC message should go off after successfully completing the sensor matching process.
- One or more TPMS sensors are missing or damaged. Under these conditions the TPMS malfunction light (low tire warning light) comes on, and at the same time the DIC message is displayed. The DIC message and TPMS malfunction light should go off once the TPMS sensors are installed and the sensor matching process is performed successfully.
- Replacement tires or wheels do not match your vehicle's original equipment tires or wheels. Tires and wheels other than those recommended for your vehicle could prevent the TPMS from functioning properly. See *Buying New Tires on page 6-79*.
- Operating electronic devices or being near facilities using radio wave frequencies similar to the TPMS could cause the TPMS sensors to malfunction.

If the TPMS is not functioning it cannot detect or signal a low tire condition. See your dealer/retailer for service if the TPMS malfunction light and DIC message comes on and stays on.

TPMS Sensor Matching Process

Each TPMS sensor has a unique identification code. Any time you replace one or more of the TPMS sensors or rotate your vehicle's tires, the identification codes will need to be matched to the new tire/wheel position. The sensors are matched to the tire/wheel positions in the following order: driver side front tire, passenger side front tire, passenger side rear tire, and driver side rear tire using a TPMS diagnostic tool. See your dealer/retailer for service.

Tire Inspection and Rotation

We recommend that you regularly inspect your vehicle's tires for signs of wear or damage Also check for damaged wheels. See *When It Is Time for New Tires on page 6-78* and *Wheel Replacement on page 6-83*.

The tires on your vehicle are different sizes front to rear. Due to this, the tires should not be rotated. Each tire and wheel should be used only in the position it is in.

When It Is Time for New Tires

Various factors, such as maintenance, temperatures, driving speeds, vehicle loading, and road conditions, influence when you need new tires.

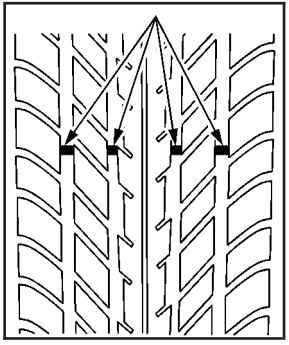

One way to tell when it is time for new tires is to check the treadwear indicators, which will appear when your tires have only 1/16 inch (1.6 mm) or less of tread remaining.

You need a new tire if any of the following statements are true:

- You can see the indicators at three or more places around the tire.
- You can see cord or fabric showing through the tire's rubber.

- The tread or sidewall is cracked, cut or snagged deep enough to show cord or fabric.
- The tire has a bump, bulge or split.
- The tire has a puncture, cut or other damage that cannot be repaired well because of the size or location of the damage.

The rubber in tires degrades over time, even if they are not being used. This is also true for the spare tire, if your vehicle has one. Multiple conditions affect how fast this aging takes place, including temperatures, loading conditions, and inflation pressure maintenance. With proper care and maintenance tires will typically wear out before they degrade due to age. If you are unsure about the need to replace your tires as they get older, consult the tire manufacturer for more information.

Buying New Tires

GM has developed and matched specific tires for your vehicle. The original equipment tires installed on your vehicle, when it was new, were designed to meet General Motors Tire Performance Criteria Specification (TPC Spec) system rating. If you need replacement tires, GM strongly recommends that you get tires with the same TPC Spec rating. This way, your vehicle will continue to have tires that are designed to give the same performance and vehicle safety, during normal use, as the original tires.

GM's exclusive TPC Spec system considers over a dozen critical specifications that impact the overall performance of your vehicle, including brake system performance, ride and handling, traction control, and tire pressure monitoring performance. GM's TPC Spec number is molded onto the tire's sidewall near the tire size. If the tires have an all-season tread design, the TPC Spec number will be followed by an MS for mud and snow. See *Tire Sidewall Labeling on page 6-66*, for additional information.

GM recommends replacing tires in sets of four. This is because uniform tread depth on all tires will help keep your vehicle performing most like it did when the tires were new. Replacing less than a full set of tires can affect the braking and handling performance of your vehicle. See *Tire Inspection and Rotation on page 6-78*.

Winter tires with the same speed rating as your original equipment tires may not be available for H, V, W, Y and ZR speed rated tires. If you choose snow tires with a lower speed rating, never exceed the tire's maximum speed capability.

⚠ WARNING:

Mixing tires could cause you to lose control while driving. If you mix tires of different sizes (other than those originally installed on your vehicle), brands, or types (radial and bias-belted tires), the vehicle may not handle properly, and you could have a crash. Using tires of different sizes

WARNING: (Continued)

WARNING: (Continued)

(other than those originally installed on your vehicle), brands or types, may also cause damage to your vehicle. Be sure to use the correct size, brand, and type tires on all four wheels.

⚠ WARNING:

If you use bias-ply tires on the vehicle, the wheel rim flanges could develop cracks after many miles of driving. A tire and/or wheel could fail suddenly, causing a crash. Use only radial-ply tires with the wheels on the vehicle.

If you must replace your vehicle's tires with those that do not have a TPC Spec number, make sure they are the same size, load range, speed rating, and construction type (radial and bias-belted tires) as your vehicle's original tires.

Vehicles that have a tire pressure monitoring system could give an inaccurate low-pressure warning if non-TPC Spec rated tires are installed on it. Non-TPC Spec rated tires may give a low-pressure warning that is higher or lower than the proper warning level you would get with TPC Spec rated tires. See *Tire Pressure Monitor System on page 6-74*.

Your vehicle's original equipment tires are listed on the Tire and Loading Information label. See *Loading the Vehicle on page 5-28*, for more information about the Tire and Loading Information label and its location on your vehicle.

Different Size Tires and Wheels

If you add wheels or tires that are a different size than your original equipment wheels and tires, this may affect the way your vehicle performs, including its braking, ride and handling characteristics, stability, and resistance to rollover. Additionally, if your vehicle has electronic systems such as, antilock brakes, traction control, and electronic stability control, the performance of these systems can be affected.

⚠ WARNING:

If you add different sized wheels, your vehicle may not provide an acceptable level of performance and safety if tires not recommended for those wheels are selected. You may increase the chance that you will crash and suffer serious injury. Only use GM specific wheel and tire systems developed for your vehicle, and have them properly installed by a GM certified technician.

See *Buying New Tires on page 6-79* and *Accessories and Modifications on page 6-3* for additional information.

Uniform Tire Quality Grading

Quality grades can be found where applicable on the tire sidewall between tread shoulder and maximum section width. For example:

Treadwear 200 Traction AA Temperature A

The following information relates to the system developed by the United States National Highway Traffic Safety Administration (NHTSA), which grades tires by treadwear, traction, and temperature performance. This applies only to vehicles sold in the United States. The grades are molded on the sidewalls of most passenger car tires. The Uniform Tire Quality Grading (UTQG) system does not apply to deep tread, winter-type snow tires, space-saver, or temporary use spare tires, tires with nominal rim diameters of 10 to 12 inches (25 to 30 cm), or to some limited-production tires.

While the tires available on General Motors passenger cars and light trucks may vary with respect to these grades, they must also conform to federal safety requirements and additional General Motors Tire Performance Criteria (TPC) standards.

Treadwear

The treadwear grade is a comparative rating based on the wear rate of the tire when tested under controlled conditions on a specified government test course. For example, a tire graded 150 would wear one and a half (1.5) times as well on the government course as a tire graded 100. The relative performance of tires depends upon the actual conditions of their use, however, and may depart significantly from the norm due to variations in driving habits, service practices, and differences in road characteristics and climate.

Traction – AA, A, B, C

The traction grades, from highest to lowest, are AA, A, B, and C. Those grades represent the tire's ability to stop on wet pavement as measured under controlled conditions on specified government test surfaces of asphalt and concrete. A tire marked C may have poor traction performance.

Temperature – A, B, C

The temperature grades are A (the highest), B, and C, representing the tire's resistance to the generation of heat and its ability to dissipate heat when tested under controlled conditions on a specified indoor laboratory test wheel. Sustained high temperature can cause the material of the tire to degenerate and reduce tire life, and excessive temperature can lead to sudden tire failure.
The grade C corresponds to a level of performance which all passenger car tires must meet under the Federal Motor Vehicle Safety Standard No. 109. Grades B and A represent higher levels of performance on the laboratory test wheel than the minimum required by law. It should be noted that the temperature grade for this tire is established for a tire that is properly inflated and not overloaded. Excessive speed, underinflation, or excessive loading, either separately or in combination, can cause heat buildup and possible tire failure.

Wheel Alignment and Tire Balance

The tires and wheels on your vehicle were aligned and balanced carefully at the factory to give you the longest tire life and best overall performance. Adjustments to wheel alignment and tire balancing will not be necessary on a regular basis. However, if you notice unusual tire wear or your vehicle pulling to one side or the other, the alignment might need to be checked. If you notice your vehicle vibrating when driving on a smooth road, the tires and wheels might need to be rebalanced. See your dealer/retailer for proper diagnosis.

Wheel Replacement

Replace any wheel that is bent, cracked, or badly rusted or corroded. If wheel nuts keep coming loose, the wheel, wheel bolts, and wheel nuts should be replaced. If the wheel leaks air, replace it (except some aluminum wheels, which can sometimes be repaired). See your dealer/retailer if any of these conditions exist.

Your dealer/retailer will know the kind of wheel you need.

Each new wheel should have the same load-carrying capacity, diameter, width, offset, and be mounted the same way as the one it replaces.

If you need to replace any of your wheels, wheel bolts or wheel nuts, replace them only with new GM original equipment parts. This way, you will be sure to have the right wheel, wheel bolts, and wheel nuts for your vehicle.

⚠ WARNING:

Using the wrong replacement wheels, wheel bolts, or wheel nuts on your vehicle can be dangerous. It could affect the braking and handling of your vehicle, make your tires lose air and make you lose control. You could have a collision in which you or others could be injured. Always use the correct wheel, wheel bolts, and wheel nuts for replacement.

⚠ WARNING:

Putting a used wheel on the vehicle is dangerous. You cannot know how it has been used or how far it has been driven. It could fail suddenly and cause a crash. If you have to replace a wheel, use a new GM original equipment wheel.

Notice: **The wrong wheel can also cause problems with bearing life, brake cooling, speedometer or odometer calibration, headlamp aim, bumper height, vehicle ground clearance, and tire clearance to the body and chassis.**

⚠ WARNING:

Rust or dirt on a wheel, or on the parts to which it is fastened, can make wheel nuts become loose after a time. The wheel could come off and cause a crash. When you change a wheel, remove any rust or dirt from places where the wheel attaches to the vehicle. In an emergency, you can use a cloth or a paper towel to do this; but be sure to use a scraper or wire brush later, if you need to, to get all the rust or dirt off.

Tightening Wheel Lug Nuts

⚠ WARNING:

Never use oil or grease on studs or the threads of the wheel nuts. If you do, the wheel nuts might come loose and the wheel could fall off, causing a crash.

⚠ WARNING:

Incorrect wheel nuts or improperly tightened wheel nuts can cause the wheel to become loose and even come off. This could lead to a crash. Be sure to use the correct wheel nuts. If you have to replace them, be sure to get new GM original equipment wheel nuts.

Notice: **Improperly tightened wheel nuts can lead to brake pulsation and rotor damage. To avoid expensive brake repairs, evenly tighten the wheel nuts in the proper sequence and to the proper torque specification.**

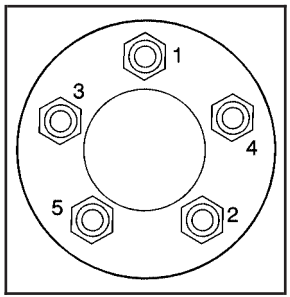

Tighten the wheel lug nuts firmly in a crisscross sequence as shown.

Tire Chains

⚠ WARNING:

Do not use tire chains. There is not enough clearance. Tire chains used on a vehicle without the proper amount of clearance can cause damage to the brakes, suspension, or other vehicle parts. The area damaged by the tire chains could cause you to lose control of the vehicle and you or others may be injured in a crash. Use another type of traction device only if its manufacturer recommends it for use on the vehicle and tire size combination and road conditions. Follow that manufacturer's instructions. To help avoid damage to the vehicle, drive slowly, re-adjust or remove the device if it is contacting the vehicle, and do not spin the wheels. If you do find traction devices that will fit, install them on the rear tires.

Lifting the Vehicle

⚠ WARNING:

Lifting a vehicle can cause an injury. The vehicle can slip off the jack and roll over you or other people. You and they could be badly injured. Find a level place to lift your vehicle. To help prevent the vehicle from moving:

1. Set the parking brake firmly.
2. Put an automatic transmission shift lever in P (Park), or shift a manual transmission to 1 (First) or R (Reverse).
3. Turn off the engine.

To be even more certain the vehicle won't move, you can put blocks in front of and behind the wheels.

⚠ WARNING:

Getting under a vehicle when it is jacked up is dangerous. If the vehicle slips off the jack, you could be badly injured or killed. Never get under a vehicle when it is supported only by a jack.

⚠ WARNING:

Raising the vehicle with the jack improperly positioned can damage the vehicle or the vehicle may fall and cause your or others injury.

If you ever use a jack to lift your vehicle, follow the instructions that came with the jack, and be sure to use the correct lifting points to avoid damaging your vehicle.

Notice: **Lifting your vehicle improperly can damage your vehicle and result in costly repairs not covered by your warranty. To lift your vehicle properly, follow the advice in this part.**

To help prevent vehicle damage:

- **Be sure to place a block or pad between the jack and the vehicle.**
- **Make sure the jack you are using spans at least two crossmember ribs.**
- **Lift only in the areas shown in the following pictures.**

For additional information, see your dealer/retailer and the Chevrolet Corvette service manual.

Lifting From the Front

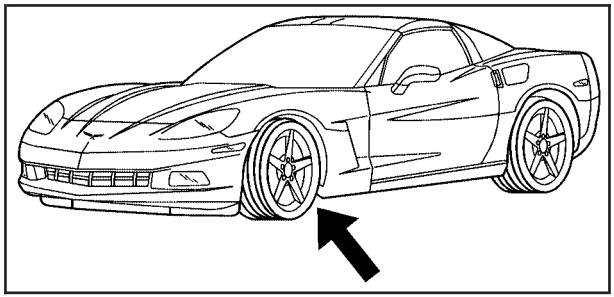

The front lifting points can be accessed from either side of your vehicle, behind the front tires.

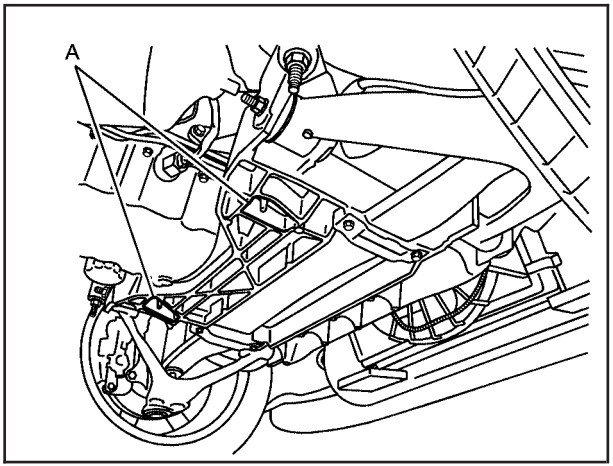

1. Locate the front lifting points (A), according to the illustration shown.
2. Be sure to place a block or pad between the jack and the vehicle.

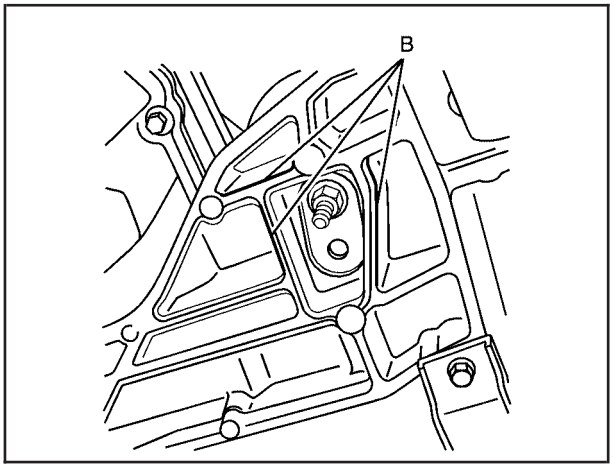

3. Lift the vehicle with the jack, making sure the jack spans at least two of the crossmember ribs (B).

Lifting From the Rear

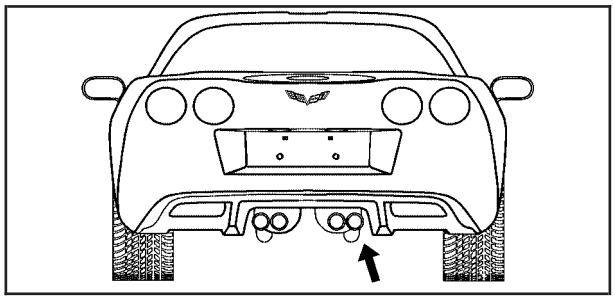

The rear lifting points can be accessed from the rear of the vehicle, on either the driver's or passenger's side.

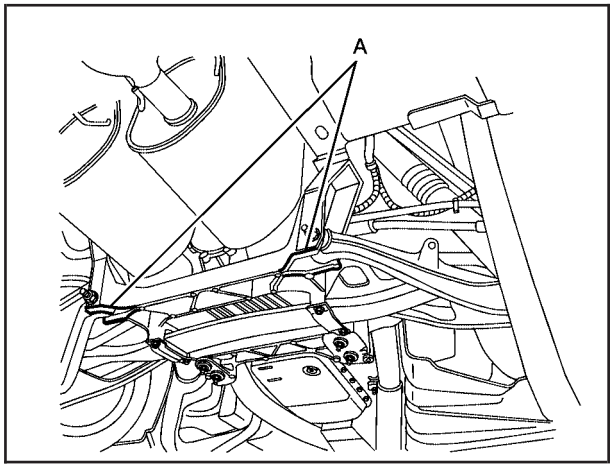

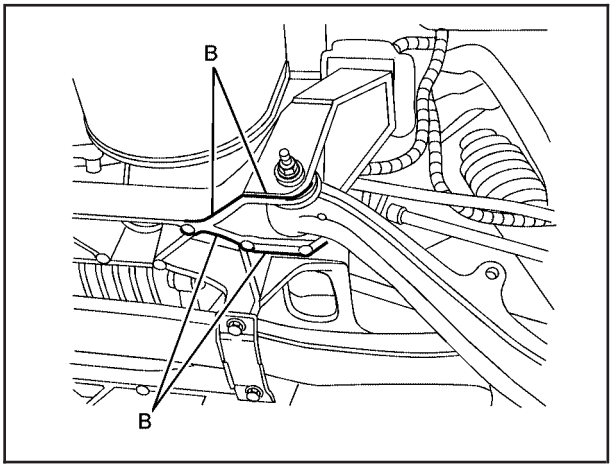

1. Locate the rear lifting points (A), according to the illustration shown.
2. Be sure to place a block or pad between the jack and the vehicle.
3. Lift the vehicle with the jack, making sure the jack spans at least two of the crossmember ribs (B).

For more information, see *Doing Your Own Service Work on page 6-4*.

If a Tire Goes Flat

It is unusual for a tire to blow out while you are driving, especially if you maintain the tires properly. If air goes out of a tire, it is much more likely to leak out slowly. See *Tires on page 6-64* for additional information. But if you should ever have a blowout, here are a few tips about what to expect and what to do:

If a front tire fails, the flat tire creates a drag that pulls the vehicle toward that side. Take your foot off the accelerator pedal and grip the steering wheel firmly. Steer to maintain lane position, and then gently brake to a stop well out of the traffic lane.

A rear blowout, particularly on a curve, acts much like a skid and may require the same correction you would use in a skid. In any rear blowout remove your foot from the accelerator pedal. Get the vehicle under control by steering the way you want the vehicle to go. It may be very bumpy and noisy, but you can still steer. Gently brake to a stop, well off the road if possible.

The vehicle has no spare tire, no tire changing equipment, and no place to store a tire.

The vehicle, when new, had run-flat tires. This type of tire can operate effectively with no air pressure, so you will not need to stop on the side of the road to change a flat tire. You can just keep on driving. The shorter the distance you drive and the slower the speed, the greater the chance that the run-flat tire will not have to be replaced. Run-flat tires perform so well without any air that a Tire Pressure Monitor System (TPMS) is used to alert you if a tire has lost pressure. See *Run-Flat Tires on page 6-71* and *Tire Pressure Monitor System on page 6-74*.

⚠ WARNING:

Special tools and procedures are required to service a run-flat tire. If these special tools and procedures are not used you or others could be injured and the vehicle could be damaged. Always be sure the proper tools and procedures, as described in the service manual, are used.

To order a service manual, see *Service Publications Ordering Information on page 8-17*.

Appearance Care

Interior Cleaning

The vehicle's interior will continue to look its best if it is cleaned often. Although not always visible, dust and dirt can accumulate on the upholstery. Dirt can damage carpet, fabric, leather, and plastic surfaces. Regular vacuuming is recommended to remove particles from the upholstery. It is important to keep the upholstery from becoming and remaining heavily soiled. Soils should be removed as quickly as possible. The vehicle's interior may experience extremes of heat that could cause stains to set rapidly.

Lighter colored interiors may require more frequent cleaning. Use care because newspapers and garments that transfer color to home furnishings may also transfer color to the vehicle's interior.

When cleaning the vehicle's interior, only use cleaners specifically designed for the surfaces being cleaned. Permanent damage may result from using cleaners on surfaces for which they were not intended. Use glass cleaner only on glass. Remove any accidental over-spray from other surfaces immediately. To prevent over-spray, apply cleaner directly to the cleaning cloth.

Notice: **Using abrasive cleaners when cleaning glass surfaces on the vehicle, could scratch the glass and/or cause damage to the rear window defogger. When cleaning the glass on the vehicle, use only a soft cloth and glass cleaner.**

Many cleaners contain solvents that may become concentrated in the vehicle's breathing space. Before using cleaners, read and adhere to all safety instructions on the label. While cleaning the vehicle's interior, maintain adequate ventilation by opening the vehicle's doors and windows.

Dust may be removed from small buttons and knobs using a small brush with soft bristles.

Products that remove odors from the vehicle's upholstery and clean the vehicle's glass can be obtained from your dealer/retailer.

Do not clean the vehicle using:

- A knife or any other sharp object to remove a soil from any interior surface.
- A stiff brush. It can cause damage to the vehicle's interior surfaces.
- Heavy pressure or aggressive rubbing with a cleaning cloth. Use of heavy pressure can damage the interior and does not improve the effectiveness of soil removal.

- Laundry detergents or dishwashing soaps with degreasers can leave residue that streaks and attracts dirt. For liquid cleaners, about 20 drops per gallon (3.78 L) of water is a good guide. Use only mild, neutral-pH soaps.
- Too much cleaner that saturates the upholstery.
- Organic solvents such as naptha, alcohol, etc. that can damage the vehicle's interior.

Fabric/Carpet

Use a vacuum cleaner with a soft brush attachment frequently to remove dust and loose dirt. A canister vacuum with a beater bar in the nozzle may only be used on floor carpet and carpeted floor mats.
For any soil, always try to remove it first with plain water or club soda. Before cleaning, gently remove as much of the soil as possible using one of the following techniques:

- For liquids: gently blot the remaining soil with a paper towel. Allow the soil to absorb into the paper towel until no more can be removed.
- For solid dry soils: remove as much as possible and then vacuum.

To clean:

1. Saturate a lint-free, clean white cloth with water or club soda.
2. Wring the cloth to remove excess moisture.
3. Start on the outside edge of the soil and gently rub toward the center. Continue cleaning, using a clean area of the cloth each time it becomes soiled.
4. Continue to gently rub the soiled area until the cleaning cloth remains clean.
5. If the soil is not completely removed, use a mild soap solution and repeat the cleaning process that was used with plain water.

If any of the soil remains, a commercial fabric cleaner or spot lifter may be necessary. When a commercial upholstery cleaner or spot lifter is to be used, test a small hidden area for colorfastness first. If the locally cleaned area gives any impression that a ring formation may result, clean the entire surface.

After the cleaning process has been completed, a paper towel can be used to blot excess moisture from the fabric or carpet.

Coated Moldings

These moldings are around the hatch opening in the rear area.

- When lightly soiled, wipe with a sponge or soft lint-free cloth dampened with water.
- When heavily soiled, use warm soapy water.

Leather

A soft cloth dampened with water can be used to remove dust. If a more thorough cleaning is necessary, a soft cloth dampened with a mild soap solution can be used. Allow the leather to dry naturally. Do not use heat to dry. Never use steam to clean leather. Never use spot lifters or spot removers on leather. Many commercial leather cleaners and coatings that are sold to preserve and protect leather may permanently change the appearance and feel of the leather and are not recommended. Do not use silicone or wax-based products, or those containing organic solvents to clean the vehicle's interior because they can alter the appearance by increasing the gloss in a non-uniform manner. Never use shoe polish on leather.

Instrument Panel, Vinyl, and Other Plastic Surfaces

A soft cloth dampened with water may be used to remove dust. If a more thorough cleaning is necessary, a clean soft cloth dampened with a mild soap solution can be used to gently remove dust and dirt. Never use spot lifters or removers on plastic surfaces. Many commercial cleaners and coatings that are sold to preserve and protect soft plastic surfaces may permanently change the appearance and feel of the interior and are not recommended. Do not use silicone or wax-based products, or those containing organic solvents to clean the vehicle's interior because they can alter the appearance by increasing the gloss in a non-uniform manner.

Some commercial products may increase gloss on the instrument panel. The increase in gloss may cause annoying reflections in the windshield and even make it difficult to see through the windshield under certain conditions.

Cargo Cover and Convenience Net

Wash with warm water and mild detergent, rinse with cold water and tumble dry on low. Do not use chlorine bleach.

Care of Safety Belts

Keep belts clean and dry.

> **⚠ WARNING:**
>
> Do not bleach or dye safety belts. It may severely weaken them. In a crash, they might not be able to provide adequate protection. Clean safety belts only with mild soap and lukewarm water.

Weatherstrips

Silicone grease on weatherstrips will make them last longer, seal better, and not stick or squeak. Apply silicone grease with a clean cloth. During very cold, damp weather frequent application may be required. See *Recommended Fluids and Lubricants on page 7-9*.

Washing Your Vehicle

The best way to preserve your vehicle's finish is to keep it clean by washing it often.

Notice: **Certain cleaners contain chemicals that can damage the emblems or nameplates on the vehicle. Check the cleaning product label. If it states that it should not be used on plastic parts, do not use it on the vehicle or damage may occur and it would not be covered by the warranty.**

Do not wash the vehicle in direct sunlight. Use a car washing soap. Do not use cleaning agents that are petroleum based or that contain acid or abrasives, as they can damage the paint, metal or plastic on your vehicle. Approved cleaning products can be obtained from your dealer/retailer. Follow all manufacturers' directions regarding correct product usage, necessary safety precautions and appropriate disposal of any vehicle care product.

Rinse the vehicle well, before washing and after to remove all cleaning agents completely. If they are allowed to dry on the surface, they could stain.

Dry the finish with a soft, clean chamois or an all-cotton towel to avoid surface scratches and water spotting.

Notice: **If you drive the vehicle through an automatic car wash that does not have enough clearance for the wide rear tires and wheels, you could damage the vehicle. Verify with the manager of the car wash that the vehicle will fit before entering the car wash or use a touchless car wash.**

High pressure car washes may cause water to enter the vehicle. Avoid using high pressure washes closer than 12 inches (30 cm) to the surface of the vehicle. Use of power washers exceeding 1,200 psi (8 274 kPa) can result in damage or removal of paint and decals.

Cleaning Exterior Lamps/Lenses

Use only lukewarm or cold water, a soft cloth and a car washing soap to clean exterior lamps and lenses. Follow instructions under *Washing Your Vehicle on page 6-95*.

Finish Care

Occasional waxing or mild polishing of the vehicle by hand may be necessary to remove residue from the paint finish. Approved cleaning products can be obtained from your dealer/retailer.

If the vehicle has a basecoat/clearcoat paint finish, the clearcoat gives more depth and gloss to the colored basecoat. Always use waxes and polishes that are non-abrasive and made for a basecoat/clearcoat paint finish.

Notice: **Machine compounding or aggressive polishing on a basecoat/clearcoat paint finish may damage it. Use only non-abrasive waxes and polishes that are made for a basecoat/clearcoat paint finish on the vehicle.**

Foreign materials such as calcium chloride and other salts, ice melting agents, road oil and tar, tree sap, bird droppings, chemicals from industrial chimneys, etc., can damage the vehicle's finish if they remain on painted surfaces. Wash the vehicle as soon as possible. If necessary, use non-abrasive cleaners that are marked safe for painted surfaces to remove foreign matter.

Exterior painted surfaces are subject to aging, weather and chemical fallout that can take their toll over a period of years. To help keep the paint finish looking new, keep the vehicle garaged or covered whenever possible.

Protecting Exterior Bright Metal Parts

Bright metal parts should be cleaned regularly to keep their luster. Washing with water is all that is usually needed. However, chrome polish may be used on chrome or stainless steel trim, if necessary.

Use special care with aluminum trim. To avoid damaging protective trim, never use auto or chrome polish, steam or caustic soap to clean aluminum. A coating of wax, rubbed to high polish, is recommended for all bright metal parts.

ZR1 Carbon Fiber Panels

Carbon fiber panels can be washed and waxed like any other panels.

Use a clear or black pigmented wax on the inner hood carbon fiber panel.

ZR1 Hood Window

The hood window on the ZR1 can be cleaned in the same manner as the headlamp lenses. See *Cleaning Exterior Lamps/Lenses on page 6-96* for more information.

Windshield and Wiper Blades

Clean the outside of the windshield with glass cleaner.

Clean the rubber blades using a lint free cloth or paper towel soaked with windshield washer fluid or a mild detergent. Wash the windshield thoroughly when cleaning the blades. Bugs, road grime, sap, and a buildup of vehicle wash/wax treatments may cause wiper streaking. Replace the wiper blades if they are worn or damaged.

Wipers can be damaged by:

- Extreme dusty conditions
- Sand and salt
- Heat and sun
- Snow and ice, without proper removal

Removable Roof Panel

Notice: **If you use a glass treatment and/or conditioner that contains ethyl alcohol or ethyl sulfate on the roof panel, you could damage the panel. The repairs would not be covered by your warranty. Only use a GM-approved glass cleaner on the roof panel.**

Special care is necessary when cleaning, removing, and/or storing the roof panel.

- Flush with water to remove dust and dirt, then dry the panel.
- Clean a transparent roof panel with GM Glass Cleaner. Leave the cleaner on the panel for one minute, then wipe the panel with a soft, lint-free cloth. Do not use glass cleaner on a painted roof panel.
- Do not use abrasive cleaning materials on either type of panel.

If water drops are frequently allowed to dry on the roof panel, impurities in the water will adhere to the top. These impurities may etch or mar the finish. When the panel gets wet, dry it off.

Convertible Top

The vehicle's convertible top should be cleaned often. However, high pressure car washes may cause water to enter your vehicle.

When you hand wash the top, do it in partial shade. Use a mild soap, lukewarm water and a soft sponge. A chamois or cloth may leave lint on the top, and a brush can chafe the threads in the top fabric. Do not use detergents, harsh cleaners, solvents or bleaching agents.

Wet the entire vehicle and wash the top evenly to avoid spots or rings. Let the soap remain on the fabric for a few minutes. When the top is really dirty, use a mild foam-type cleaner. Thoroughly rinse the entire vehicle, then let the top dry in direct sunlight.

To protect the convertible top:

- After you wash the vehicle, make sure the top is completely dry before you lower it.
- Do not get any cleaner on the vehicle's painted finish; it could leave streaks.
- If you decide to go through an automatic car wash, ask the manager if the equipment could damage your top.

Aluminum or Chrome-Plated Wheels and Trim

The vehicle may have either aluminum or chrome-plated wheels.

Keep the wheels clean using a soft clean cloth with mild soap and water. Rinse with clean water. After rinsing thoroughly, dry with a soft clean towel. A wax may then be applied.

Notice: **Chrome wheels and other chrome trim may be damaged if the vehicle is not washed after driving on roads that have been sprayed with magnesium, calcium or sodium chloride. These chlorides are used on roads for conditions such as ice and dust. Always wash the vehicle's chrome with soap and water after exposure.**

Notice: **Using strong soaps, chemicals, abrasive polishes, cleaners, brushes, or cleaners that contain acid on aluminum or chrome-plated wheels, could damage the surface of the wheel(s). The repairs would not be covered by the vehicle warranty. Use only approved cleaners on aluminum or chrome-plated wheels.**

The surface of these wheels is similar to the painted surface of the vehicle. Do not use strong soaps, chemicals, abrasive polishes, abrasive cleaners, cleaners with acid, or abrasive cleaning brushes on them because they could damage the surface. Do not use chrome polish on aluminum wheels.

Notice: **Using chrome polish on aluminum wheels could damage the wheels. The repairs would not be covered by the vehicle warranty. Use chrome polish on chrome wheels only.**

Use chrome polish only on chrome-plated wheels, but avoid any painted surface of the wheel, and buff off immediately after application.

Notice: **Driving the vehicle through an automatic car wash that has silicone carbide tire cleaning brushes, could damage the aluminum or chrome-plated wheels. The repairs would not be covered by the vehicle warranty. Never drive a vehicle that has aluminum or chrome-plated wheels through an automatic car wash that uses silicone carbide tire cleaning brushes.**

Tires

To clean the tires, use a stiff brush with tire cleaner.

Notice: **Using petroleum-based tire dressing products on the vehicle may damage the paint finish and/or tires. When applying a tire dressing, always wipe off any overspray from all painted surfaces on the vehicle.**

Finish Damage

Any stone chips, fractures or deep scratches in the finish should be repaired right away. Bare metal will corrode quickly and may develop into major repair expense.

Minor chips and scratches can be repaired with touch-up materials available from your dealer/retailer. Larger areas of finish damage can be corrected in your dealer's/retailer's body and paint shop.

Underbody Maintenance

Chemicals used for ice and snow removal and dust control can collect on the underbody. If these are not removed, corrosion and rust can develop on the underbody parts such as fuel lines, frame, floor pan, and exhaust system even though they have corrosion protection.

At least every spring, flush these materials from the underbody with plain water. Clean any areas where mud and debris can collect. Dirt packed in close areas of the frame should be loosened before being flushed. Your dealer/retailer or an underbody car washing system can do this.

Fiberglass Springs (Composite Springs)

Notice: **If you use acidic or corrosive cleaning products, engine degreasers or aluminum cleaning agents on fiberglass springs, you may damage the springs. The repairs would not be covered by your warranty. Use only approved cleaners when cleaning your vehicle's fiberglass springs.**

Chemical Paint Spotting

Some weather and atmospheric conditions can create a chemical fallout. Airborne pollutants can fall upon and attack painted surfaces on the vehicle. This damage can take two forms: blotchy, ring-shaped discolorations, and small, irregular dark spots etched into the paint surface.

Although no defect in the paint job causes this, we will repair, at no charge to the owner, the surfaces of new vehicles damaged by this fallout condition within 12 months or 12,000 miles (20 000 km) of purchase, whichever occurs first.

Vehicle Identification

Vehicle Identification Number (VIN)

This legal identifier is in the front corner of the instrument panel, on the driver side. It can be seen through the windshield from outside. The VIN also appears on the Vehicle Certification and Service Parts labels and certificates of title and registration.

Engine Identification

The eighth character in the VIN is the engine code. This code identifies the vehicle's engine, specifications, and replacement parts. See "Engine Specifications" under *Capacities and Specifications on page 6-112* for the vehicle's engine code.

Service Parts Identification Label

This label, on the inside of the glove box, has the following information:

- Vehicle Identification Number (VIN)
- Model designation
- Paint information
- Production options and special equipment

Do not remove this label from the vehicle.

Electrical System

Add-On Electrical Equipment

Notice: **Do not add anything electrical to the vehicle unless you check with your dealer/retailer first. Some electrical equipment can damage the vehicle and the damage would not be covered by the vehicle's warranty. Some add-on electrical equipment can keep other components from working as they should.**

Add-on equipment can drain the vehicle battery, even if the vehicle is not operating.

The vehicle has an airbag system. Before attempting to add anything electrical to the vehicle, see *Servicing Your Airbag-Equipped Vehicle on page 2-58* and *Adding Equipment to Your Airbag-Equipped Vehicle on page 2-58*.

Headlamp Wiring

The headlamp wiring is protected by fuses in the fuse block. An electrical overload will cause the lamps to turn off. If this happens, have the headlamp wiring checked right away.

Windshield Wiper Fuses

The windshield wiper motor is protected by a circuit breaker and a fuse. If the motor overheats due to heavy snow, etc., the wiper will stop until the motor cools. If the overload is caused by some electrical problem, have it fixed.

Power Windows and Other Power Options

Circuit breakers protect the power seats, power windows, and other power accessories. When the current load is too heavy, the circuit breaker opens and closes, protecting the circuit until the problem is fixed or goes away.

Fuses and Circuit Breakers

The wiring circuits in the vehicle are protected from short circuits by a combination of J-Case fuses, mini-fuses and circuit breakers. This greatly reduces the chance of fires caused by electrical problems.

Look at the silver-colored band inside the fuse. If the band is broken or melted, replace the fuse. Be sure you replace a bad fuse with a new one of the identical size and rating.

If you ever have a problem on the road and do not have a spare fuse, you can borrow one that has the same amperage. Just pick some feature of the vehicle that you can get along without – like the radio or cigarette lighter – and use its fuse, if it is the correct amperage. Replace it as soon as you can.

Vehicles with the ZR–1 package have an intercooler relay located on the fan shroud. See your dealer/retailer.

Vehicles with the ZR–1 package also have a fuel system mini-fuse. It is located near the battery in the battery storage compartment in the rear of the vehicle.

Instrument Panel Fuse Block

The instrument panel fuse block is located on the passenger side of the vehicle, under the instrument panel and under the toe-board.

Remove the carpet and toe-board covering to access the fuse block by pulling at the top of each corner of the panel. Open the fuse block cover to access the fuses.

You can remove fuses using the fuse puller.

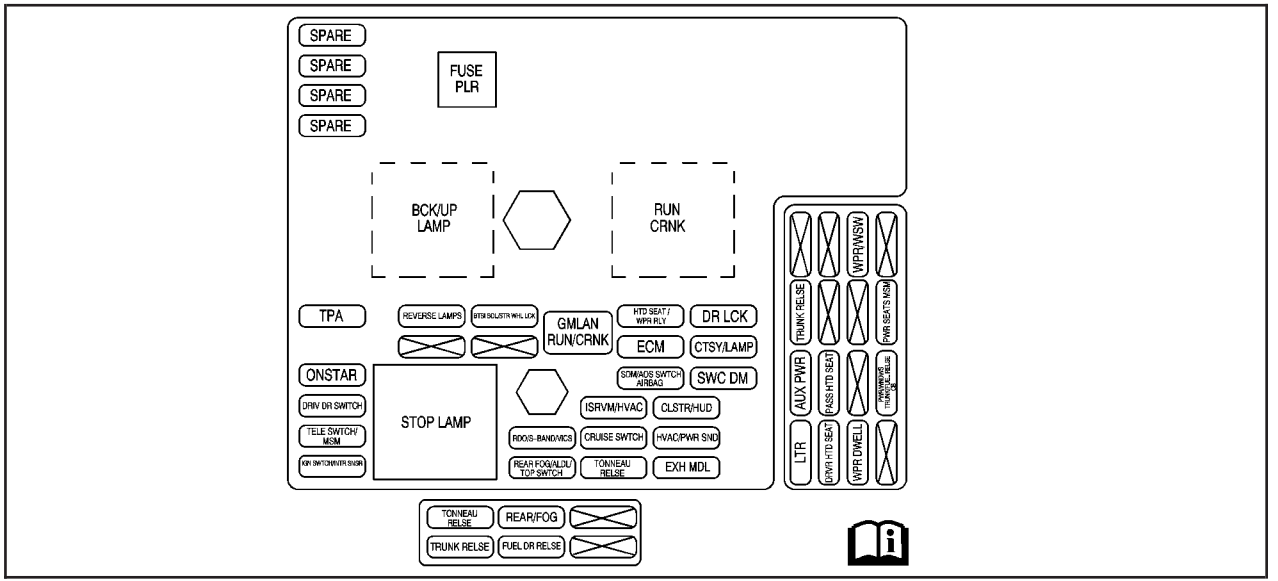
SPARE
SPARE
SPARE
SPARE
FUSE PLR
BCK/UP LAMP
RUN CRNK
WPR/WSW
TRUNK RELSE
PWR SEATS MSM
AUX PWR
PASS HTD SEAT
LTR
DRVR HTD SEAT
WPR DWELL
TPA
REVERSE LAMPS
BTSR SOLSTR WHL LCK
GMLAN RUN/CRNK
HTD SEAT / WPR RLY
DR LCK
ECM
CTSY/LAMP
ONSTAR
SOM/AOS SWTCH AIRBAG
SWC DM
DRIV DR SWITCH
STOP LAMP
ISRVM/HVAC
CLSTR/HUD
TELE SWTCH/ MSM
RDO/S-BAND/VICS
CRUISE SWTCH
HVAC/PWR SND
IGN SWTCH/WTR SNSR
REAR FOG/ALDL/ TOP SWTCH
TONNEAU RELSE
EXH MDL
TONNEAU RELSE
REAR/FOG
TRUNK RELSE
FUEL DR RELSE

Fuses	Usage
BCK/UP LAMP	Reverse Lamps
BLANK	Not Used
BLANK	Not Used
BTSI SOL/STR WHL LCK	Brake Transmission Shift Interlock, Steering Wheel Column Lock
CLSTR/HUD	Cluster, Heads-Up Display
CRUISE SWITCH	Cruise Control Switch
CTSY/LAMP	Courtesy Lamp
DR LCK	Door Locks
DRIV DR SWITCH	Driver Door Switch
ECM	Engine Control Module (ECM)
EXH MDL	Exhaust Module (Z06 & ZR1), Spare (Coupe and Convertible)

Fuses	Usage
GM LAN RUN/CRNK	GM LAN Devices
HTD SEAT/ WPR RLY	Heated Seat, Wiper Relays
HVAC/PWR SND	Heating. Ventilation/Air Conditioning, Power Sounder
IGN SWTCH/ INTR SNSR	Ignition Switch, Intrusion Sensor
ISRVM/HVAC	Electric Inside Rearview Mirror, Heating, Ventilation, Air Conditioning
ONSTAR	OnStar®
RDO/S-BAND	Radio, S-Band
REAR FOG/ ALDL/TOP SWTCH	Rear Fog Lamp, Assembly Line Diagnostic Link Connector, Convertible Top Switch
REVERSE LAMPS	Reverse Lamps

Fuses	Usage
RUN CRNK	Run/Crank Relay
SDM/AOS SWTCH AIRBAG	Sensing and Diagnostic Module, Automatic Occupant Sensing Module, Airbag
SPARE	Spare
SPARE	Spare
SPARE	Spare
SPARE	Spare
STOP LAMP	Stop Lamp
SWC DM	Steering Wheel Dimming
TELE SWTCH/MSM	Telescope Switch, Memory Seat Module
TONNEAU RELSE	Tonneau Release
TPA	Tonneau Pulldown Actuator

Fuses	Usage
BLANK	Blank
BLANK	Blank
FUEL DR RELSE	Fuel Door Release
REAR/FOG	Rear Fog Lamps
TONNEAU RELSE	Tonneau Release
TRUNK RELSE	Trunk Release

Fuses	Usage
AUX PWR	Auxiliary Power
BLANK	Not Used
BLANK	Not Used
BLANK	Not Used

Fuses	Usage
BLANK	Not Used
BLANK	Not Used
BLANK	Not Used
BLANK	Not Used
DRVR HTD SEAT	Driver Heated Seat
LTR	Cigarette Lighter
PASS HTD SEAT	Passenger Heated Seat
PWR SEATS MSM	Power Seats, Memory Seat Module
PWR/ WNDWS/ TRUNK/FUEL RELSE	Power Windows, Trunk, Fuel Door Release

Fuses	Usage
TRUNK RELSE	Trunk Release
WPR DWELL	Wiper Dwell
WPR/WSW	Windshield Wiper/Washer

Engine Compartment Fuse Block

There is one fuse block in the engine compartment located on the passenger side of the vehicle. See *Engine Compartment Overview on page 6-14* for more information on location.

Notice: **Spilling liquid on any electrical components on the vehicle may damage it. Always keep the covers on any electrical component.**

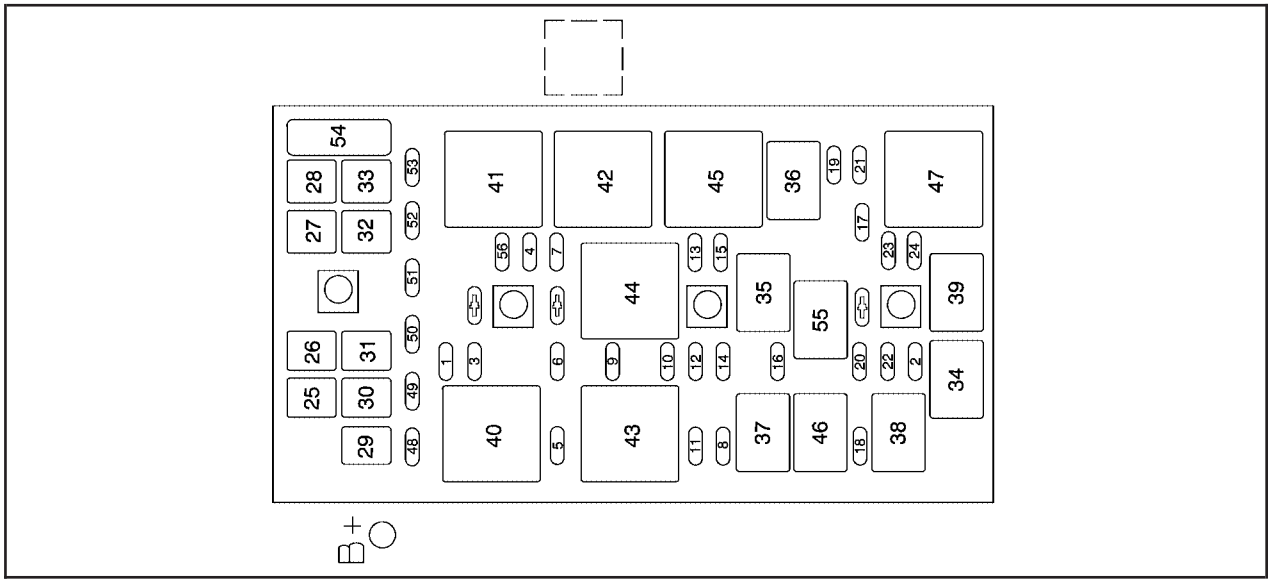
54
28
33
27
32
26
31
25
30
29
53
52
51
50
49
48
41
42
45
36
47
56
4
7
13
15
19
21
17
23
24
44
35
55
39
1
3
6
9
10
12
14
16
20
22
2
34
40
43
37
46
38
5
11
8
18
B+

For ZR1 models, the Fuel System fuse is located at the battery.

Fuse	Usage
1	Transmission Control Module/Transmission
2	Horn, Alternator Sense
3	Antilock Braking System (ABS)/Real Time Damping
4	Wiper
5	Stoplamps/Back-Up Lamps
6	Oxygen Sensor
7	Battery Main 5
8	Parking Lamps
9	Powertrain Relay Input/Electronic Throttle Control
10	Manual Transmission Solenoids

Fuse	Usage
11	Antilock Braking System
12	Odd Numbered Fuel Injectors
13	Electronic Suspension Control (Option)
14	Canister Purge Solenoid, Mass Air Flow Sensor
15	Air Conditioner Compressor
16	Even Numbered Fuel Injectors
17	Windshield Washer
18	Headlamp Washer
19	Passenger Side Low-Beam Headlamp
20	Fuel Pump (except ZR1)
21	Driver Side Low-Beam Headlamp
22	Front Fog Lamp

Fuse	Usage
23	Passenger Side High-Beam Headlamp
24	Driver Side High-Beam Headlamp
56	Engine Control Module (ECM)/ Transmission Control Module (TCM)/Easy Key Module

J-Style Fuses	Usage
25	Cooling Fan
26	Battery Main 3
27	Antilock Brake System
28	Heating/Ventilation/Air Conditioning Blower
29	Battery Main 2
30	Starter

J-Style Fuses	Usage
31	Audio Amplifier
32	Intercooler Pump
33	Battery Main 1

Micro-Relays	Usage
34	Horn
35	Air Conditioning Compressor
36	Windshield Washer
37	Parking Lamps, Foglamps
38	Front Fog Lamp
39	High-Beam Headlamp
46	Headlamp Washer
55	Fuel Pump (except ZR1)

Mini-Relays	Usage
40	Rear Defog
41	Windshield Wiper High/Low
42	Windshield Wiper Run/Accessory
43	Crank
44	Powertrain Ignition 1
45	Windshield Wiper On/Off
47	Low-Beam Headlamp

Spare Fuses	Usage
48	Spare
49	Spare
50	Spare

Spare Fuses	Usage
51	Spare
52	Spare
53	Spare
54	Fuse Puller

Diodes	Usage
	Diode 1
	Wiper
	Diode 2

Capacities and Specifications

The following approximate capacities are given in English and metric conversions.

See *Recommended Fluids and Lubricants on page 7-9* for more information.

Application	Capacities	
	Metric	English
Air Conditioning Refrigerant R134a	For the air conditioning system refrigerant charge amount, see the refrigerant caution label located under the hood. See your dealer/retailer for more information.	
Cooling System		
6.2L LS3 V8 Engine	11.3 L	11.9 qt
6.2L LS9 V8 Supercharged Engine – Cooling System	12.0 L	12.7 qt
6.2L LS9 V8 Supercharged Engine – Supercharger Intercooler Cooling System	4.9 L	5.2 qt
7.0L LS7 V8 Engine	11.3 L	11.9 qt
Engine Oil with Filter		
6.2L LS3 V8	5.7 L	6.0 qt
6.2L LS3 V8 with Z52 Dry Sump Oil System	9.9 L	10.5 qt
6.2L LS9 V8 Supercharged Engine	9.9 L	10.5 qt
7.0L LS7 V8 Engine	9.9 L	10.5 qt

Application	Capacities	
	Metric	English
Fuel Tank	68.0 L	18.0 gal
Transmission Fluid		
Automatic Transmission (Pan Removal and Filter Replacement)	6.2 L	6.5 qt
Manual Transmission – Base	3.5 L	3.6 qt
Manual Transmission – Z16	4.0 L	4.2 qt
Manual Transmission – Z06	4.3 L	4.5 qt
Manual Transmission – ZR1	4.3 L	4.5 qt
Wheel Nut Torque	140 N•m	100 lb ft
All capacities are approximate. When adding, be sure to fill to the approximate level, as recommended in this manual. Recheck fluid level after filling		

Engine Specifications

Engine	VIN Code	Transmission	Spark Plug Gap	Firing Order
6.2L LS3 V8	W	Automatic Manual	1.016 mm (0.040 in)	1–8–7–2–6–5–4–3
6.2L LS9 V8	T	Manual	1.016 mm (0.040 in)	1–8–7–2–6–5–4–3
7.0L LS7 V8	E	Manual	1.016 mm (0.040 in)	1–8–7–2–6–5–4–3

Engine Data

Engine	Horsepower	Torque	Displacement	Compression Ratio
6.2L LS3 V8 without option NPP	430 @ 5900 rpm	424 lb ft @ 4600 rpm	6.2L	10.69:1
6.2L LS3 V8 with option NPP	436 @ 5900 rpm	428 lb ft @ 4600 rpm	6.2L	10.69:1
6.2L LS9 V8 Supercharged	638 @ 6500 rpm	604 lb ft @ 3800 rpm	6.2L	9.10:1
7.0L LS7 V8	505 @ 6300 rpm	470 lb ft @ 4800 rpm	7.0L	11.00:1

Section 7 Maintenance Schedule

Maintenance Schedule 7-2
Introduction 7-2
Scheduled Maintenance 7-3
Owner Checks and Services 7-8
Recommended Fluids and Lubricants 7-9
Maintenance Replacement Parts 7-11
Engine Drive Belt Routing 7-12
Maintenance Record 7-13

Maintenance Schedule

Introduction

Notice: **Maintenance intervals, checks, inspections, recommended fluids, and lubricants are necessary to keep this vehicle in good working condition. Damage caused by failure to follow scheduled maintenance might not be covered by the vehicle warranty.**

Proper vehicle maintenance helps to keep the vehicle in good working condition, improves fuel economy, and reduces vehicle emissions for better air quality.

Because of all the different ways people use vehicles, maintenance needs vary. The vehicle might need more frequent checks and services. Please read the information under Scheduled Maintenance. To keep the vehicle in good condition, see your dealer/retailer.

The maintenance schedule is for vehicles that:

- carry passengers and cargo within recommended limits on the Tire and Loading Information label. See *Loading the Vehicle on page 5-28*.
- are driven on reasonable road surfaces within legal driving limits.
- use the recommended fuel. See *Gasoline Octane on page 6-6*.

⚠ WARNING:

Performing maintenance work on a vehicle can be dangerous. In trying to do some jobs, you can be seriously injured. Do your own maintenance work only if you have the required know-how and the proper tools and equipment for the job. If you have any doubt, see your dealer/retailer to have a qualified technician do the work. See *Doing Your Own Service Work on page 6-4*.

At your General Motors dealer/retailer, you can be certain that you will receive the highest level of service available. Your dealer /retailer has specially trained service technicians, uses genuine GM replacement parts, as well as, up to date tools and equipment to ensure fast and accurate diagnostics.

The proper replacement parts, fluids, and lubricants to use are listed in *Recommended Fluids and Lubricants on page 7-9* and *Maintenance Replacement Parts on page 7-11*. We recommend the use of genuine parts from your dealer/retailer.

Scheduled Maintenance

When the Change Engine Oil Message Displays

Change engine oil and filter. See *Engine Oil on page 6-20*. *An Emission Control Service.*

When the Change Engine Oil message displays, service is required for the vehicle as soon as possible, within the next 1 000 km/600 miles. If driving under the best conditions, the engine oil life system might not indicate the need for vehicle service for more than a year. The engine oil and filter must be changed at least once a year and the oil life system must be reset. Your dealer/retailer has trained service technicians who will perform this work and reset the system. If the engine oil life system is reset accidentally, service the vehicle within 5 000 km/ 3,000 miles since the last service. Reset the oil life system whenever the oil is changed. See *Engine Oil Life System on page 6-27*.

When the Change Engine Oil message displays, certain services, checks, and inspections are required. The services described for Maintenance I should be performed at every engine oil change. The services described for Maintenance II should be performed when:

- Maintenance I was performed the last time the engine oil was changed.
- It has been 10 months or more since the Change Engine Oil message has displayed or since the last service.

Maintenance I

- Change engine oil and filter. See *Engine Oil on page 6-20*. *An Emission Control Service.*
- Engine coolant level check. See *Engine Coolant on page 6-36*.
- Windshield washer fluid level check. See *Windshield Washer Fluid on page 6-45*.
- Tire inflation check. See *Inflation - Tire Pressure on page 6-72*.
- Tire wear inspection. See *Tire Inspection and Rotation on page 6-78*.
- Fluids visual leak check (or every 12 months, whichever occurs first). A leak in any system must be repaired and the fluid level checked.

- Engine air cleaner filter inspection (vehicles driven in dusty conditions only). See *Engine Air Cleaner/ Filter on page 6-28*.
- Brake system inspection (or every 12 months, whichever occurs first).

Maintenance II

- Perform all services described in Maintenance I.
- Steering and suspension inspection. Visual inspection for damaged, loose, or missing parts or signs of wear.
- Engine cooling system inspection. Visual inspection of hoses, pipes, fittings, and clamps and replacement, if needed.
- Windshield wiper blade inspection for wear, cracking, or contamination and windshield and wiper blade cleaning, if contaminated. See *Windshield and Wiper Blades on page 6-97*. Worn or damaged wiper blade replacement. See *Windshield Wiper Blade Replacement on page 6-62*.
- Body hinges and latches, key lock cylinders, any folding seat hardware, and rear compartment, hood, and console door hinges and latches lubrication. See *Recommended Fluids and Lubricants on page 7-9*. More frequent lubrication may be required when vehicle is exposed to a corrosive environment. Applying silicone grease on weatherstrips with a clean cloth makes them last longer, seal better, and not stick or squeak.
- Restraint system component check. See *Checking the Restraint Systems on page 2-60*.
- Engine air cleaner filter inspection. See *Engine Air Cleaner/Filter on page 6-28*.
- Passenger compartment air filter replacement (or every 12 months, whichever occurs first). More frequent replacement may be required if vehicle is driven regularly under dusty conditions.

Additional Required Services

At Each Fuel Stop

- Engine oil level check. See *Engine Oil on page 6-20*.
- Engine coolant level check. See *Engine Coolant on page 6-36*.
- Windshield washer fluid level check. See *Windshield Washer Fluid on page 6-45*.

Once a Month

- Tire inflation check. See *Inflation - Tire Pressure on page 6-72*.
- Tire wear inspection. See *Tire Inspection and Rotation on page 6-78*.

Once a Year

- Starter switch check. See *Owner Checks and Services on page 7-8*.
- Parking brake and automatic transmission P (Park) mechanism check. See *Owner Checks and Services on page 7-8*.
- Automatic transmission shiftlock control system check. See *Owner Checks and Services on page 7-8*.
- Engine cooling system and pressure cap pressure check. Radiator and air conditioning condenser outside cleaning. See *Cooling System (Engine) on page 6-34* or *Cooling System (Intercooler) on page 6-35*.
- Exhaust system and nearby heat shields inspection for loose or damaged components.
- Accelerator pedal check for damage, high effort, or binding. Replace if needed.

Once Every Two Years

- Clutch hydraulic system drain, flush, and refill. Service at a regular service interval (I or II) every two years. This service can be complex; have your dealer/retailer perform this service. See *Hydraulic Clutch on page 6-33*.

First Engine Oil Change After Every 40 000 km/25,000 Miles

- Fuel system inspection for damage or leaks.
- ZR1 Only: Engine air cleaner filter replacement. See *Engine Air Cleaner/Filter on page 6-28*.

First Engine Oil Change After Every 80 000 km/50,000 Miles

- Engine air cleaner filter replacement. See *Engine Air Cleaner/Filter on page 6-28*.
- Automatic transmission fluid change (severe service) for vehicles mainly driven in heavy city traffic in hot weather, in hilly or mountainous terrain, when frequently towing a trailer, or used for taxi, police, or delivery service. See *Automatic Transmission Fluid on page 6-32*.

First Engine Oil Change After Every 160 000 km/100,000 Miles

- Automatic transmission fluid change (normal service). See *Automatic Transmission Fluid on page 6-32*.
- Spark plug replacement and spark plug wires inspection. *An Emission Control Service.*

First Engine Oil Change After Every 240 000 km/150,000 Miles

- Engine cooling system drain, flush, and refill, cooling system and cap pressure check, and cleaning of outside of radiator and air conditioning condenser (or every 5 years, whichever occurs first). See *Engine Coolant on page 6-36*. *An Emission Control Service.*
- ZR1 Only: Intercooler system drain, flush, and refill (or every 5 years, whichever occurs first). See *Engine Coolant on page 6-36*.
- Engine accessory drive belt inspection for fraying, excessive cracks, or obvious damage and replacement, if needed. *An Emission Control Service.*

Scheduled Maintenance

Service	Maintenance I	Maintenance II
Change engine oil and filter. Reset oil life system.	•	•
Engine coolant level check.	•	•
Windshield washer fluid level check.	•	•
Tire inflation pressures check.	•	•
Tire wear inspection.	•	•
Fluids visual leak check.	•	•
Engine air cleaner filter inspection (vehicles driven in dusty conditions only).	•	•
Brake system inspection.	•	•
Steering and suspension inspection.		•
Engine cooling system inspection.		•
Windshield wiper blades inspection.		•
Body components lubrication.		•
Restraint system components check.		•
Engine air cleaner filter inspection (vehicles not driven in dusty conditions).		•
Passenger compartment air filter replacement.		•

Owner Checks and Services

Starter Switch Check

⚠ WARNING:

When you are doing this inspection, the vehicle could move suddenly. If the vehicle moves, you or others could be injured.

1. Before starting this check, be sure there is enough room around the vehicle.
2. Firmly apply both the parking brake and the regular brake. See *Parking Brake on page 3-33*.

   Do not use the accelerator pedal, and be ready to turn off the engine immediately if it starts.
3. For automatic transmission vehicles, try to start the engine in each gear. The vehicle should start only in P (Park) or N (Neutral). If the vehicle starts in any other position, contact your dealer/retailer for service.

   For manual transmission vehicles, put the shift lever in Neutral, push the clutch pedal down halfway, and try to start the engine. The vehicle should start only when the clutch pedal is pushed down all the way to the floor. If the vehicle starts when the clutch pedal is not pushed all the way down, contact your dealer/retailer for service.

Automatic Transmission Shift Lock Control System Check

⚠ WARNING:

When you are doing this inspection, the vehicle could move suddenly. If the vehicle moves, you or others could be injured.

1. Before starting this check, be sure there is enough room around the vehicle. It should be parked on a level surface.
2. Firmly apply the parking brake. See *Parking Brake on page 3-33*.

   Be ready to apply the regular brake immediately if the vehicle begins to move.
3. With the engine off and without applying the regular brake, try to move the shift lever out of P (Park) with normal effort. If the shift lever moves out of P (Park), contact your dealer/retailer for service.

Parking Brake and Automatic Transmission P (Park) Mechanism Check

⚠ WARNING:

When you are doing this check, the vehicle could begin to move. You or others could be injured and property could be damaged. Make sure there is room in front of the vehicle in case it begins to roll. Be ready to apply the regular brake at once should the vehicle begin to move.

Park on a fairly steep hill, with the vehicle facing downhill. Keeping your foot on the regular brake, set the parking brake.

- To check the parking brake's holding ability: With the engine running and the transmission in N (Neutral), slowly remove foot pressure from the regular brake pedal. Do this until the vehicle is held by the parking brake only.
- To check the P (Park) mechanism's holding ability: With the engine running, shift to P (Park). Then release the parking brake followed by the regular brake.

Contact your dealer/retailer if service is required.

Recommended Fluids and Lubricants

Fluids and lubricants identified below by name, part number, or specification can be obtained from your dealer/retailer.

Usage	Fluid/Lubricant
Engine Oil	The engine requires a special engine oil meeting GM Standard GM4718M. Oils meeting this standard can be identified as synthetic, and should also be identified with the American Petroleum Institute (API) Certified for Gasoline Engines starburst symbol. However, not all synthetic API oils with the starburst symbol will meet this GM standard. Look for and use only an oil that meets GM Standard GM4718M. For the proper viscosity, see *Engine Oil on page 6-20*.
Engine Coolant	50/50 mixture of clean, drinkable water and use only DEX-COOL® Coolant. See *Engine Coolant on page 6-36*.
ZR1 Only: Intercooler System	50/50 mixture of clean, drinkable water and use only DEX-COOL® Coolant. See *Engine Coolant on page 6-36*.

Usage	Fluid/Lubricant
Hydraulic Brake System	DOT 3 Hydraulic Brake Fluid (GM Part No. U.S. 88862806, in Canada 88862807).
Windshield Washer	Optikleen® Washer Solvent.
Hydraulic Clutch System	Hydraulic Clutch Fluid. Use only GM Part No. U.S. 88958860, in Canada 88901244, Super DOT-4 brake fluid.
Power Steering System	GM Power Steering Fluid (GM Part No. U.S. 89021184, in Canada 89021186).
Chassis Lubrication (Rear Toe-Link Outer Ends with ZO6, ZR1, or Z51 Option)	Chassis Lubricant (GM Part No. U.S. 12377985, in Canada 88901242) or lubricant meeting requirements of NLGI #2, Category LB or GC-LB.
Manual Transmission	Manual Transmission Fluid (GM Part No. U.S. 88861800, in Canada 88861801).
Automatic Transmission	DEXRON®-VI Automatic Transmission Fluid.

Usage	Fluid/Lubricant
Key Lock Cylinders	Multi-Purpose Lubricant, Superlube (GM Part No. U.S. 12346241, in Canada 10953474).
Rear Axle (Limited-Slip Differential)	DEXRON® LS Gear Oil. See *Rear Axle on page 6-58*.
Hood Latch Assembly, Secondary Latch, Pivots, Spring Anchor, and Release Pawl	Lubriplate Lubricant Aerosol (GM Part No. U.S. 12346293, in Canada 992723) or lubricant meeting requirements of NLGI #2, Category LB or GC-LB.
Hood and Door Hinges	Multi-Purpose Lubricant, Superlube (GM Part No. U.S. 12346241, in Canada 10953474).
Weatherstrip Conditioning	Weatherstrip Lubricant (GM Part No. U.S. 3634770, in Canada 10953518) or Dielectric Silicone Grease (GM Part No. U.S. 12345579, in Canada 992887).

Maintenance Replacement Parts

Replacement parts identified below by name, part number, or specification can be obtained from your dealer/retailer.

Part	GM Part Number	ACDelco Part Number
Engine Air Cleaner/Filter		
6.2L LS3 V8 and 7.0L LS7 V8 Engines	15776148	A3077C
6.2L LS9 V8 Supercharged Engine	25940997	A3107C
Engine Oil Filter		
6.2L LS3 V8 Engine	89017524	PF48
6.2L LS3 V8 Engine with Z52 Dry Sump Oil System	12626224	UPF-48R
6.2L LS9 V8 Supercharged Engine	12626224	UPF-48R
7.0L LS7 V8 Engine	12626224	UPF-48R
Passenger Compartment Air Filter Element	15848592	CF139
Spark Plug		
6.2L LS3 V8 Engine	12621258	41-110
6.2L LS9 V8 Supercharged Engine	12571165	41-104
7.0L LS7 V8 Engine	12571165	41-104
Wiper Blades — 52.5 cm (20.7 in)		
Driver Side	12335960	—
Passenger Side	12335961	—

Engine Drive Belt Routing

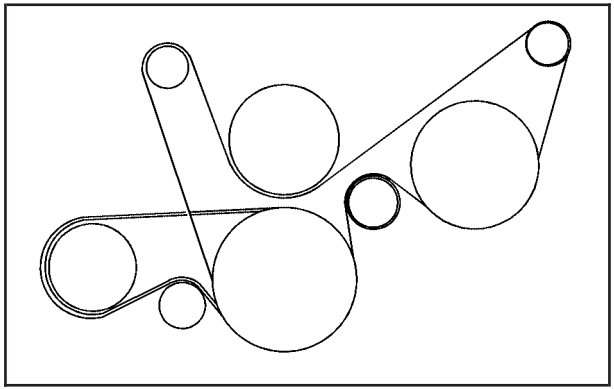

6.2L LS3 V8, 7.0L LS7 V8 Engines

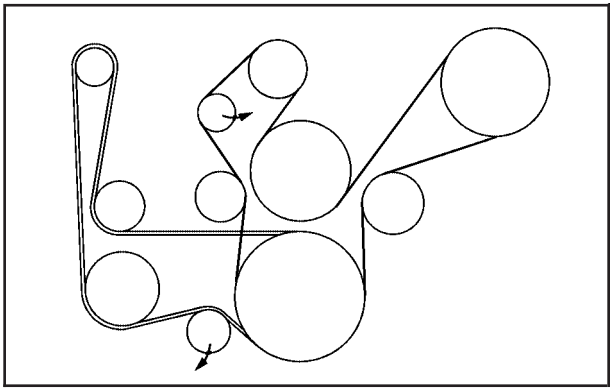

6.2L LS9 V8 Engine

Maintenance Record

After the scheduled services are performed, record the date, odometer reading, who performed the service, and the type of services performed in the boxes provided. Retain all maintenance receipts.

Maintenance Record

Date	Odometer Reading	Serviced By	Services Performed

Maintenance Record (cont'd)

Date	Odometer Reading	Serviced By	Services Performed

Maintenance Record (cont'd)

Date	Odometer Reading	Serviced By	Services Performed

Maintenance Record (cont'd)

Date	Odometer Reading	Serviced By	Services Performed

Section 8 Customer Assistance Information

Customer Assistance and Information 8-2
Customer Satisfaction Procedure 8-2
Online Owner Center 8-5
Customer Assistance for Text Telephone (TTY) Users 8-6
Customer Assistance Offices 8-6
GM Mobility Reimbursement Program 8-7
Roadside Assistance Program 8-7
Scheduling Service Appointments 8-11
Courtesy Transportation Program 8-11
Collision Damage Repair 8-13

Reporting Safety Defects 8-16
Reporting Safety Defects to the United States Government 8-16
Reporting Safety Defects to the Canadian Government 8-16
Reporting Safety Defects to General Motors 8-16
Service Publications Ordering Information 8-17

Vehicle Data Recording and Privacy 8-18
Event Data Recorders 8-19
OnStar® 8-20
Navigation System 8-20
Radio Frequency Identification (RFID) 8-20
Radio Frequency Statement 8-20

Customer Assistance and Information

Customer Satisfaction Procedure

Your satisfaction and goodwill are important to your dealer and to Chevrolet. Normally, any concerns with the sales transaction or the operation of the vehicle will be resolved by the dealer's sales or service departments. Sometimes, however, despite the best intentions of all concerned, misunderstandings can occur. If your concern has not been resolved to your satisfaction, the following steps should be taken:

STEP ONE: Discuss your concern with a member of dealership management. Normally, concerns can be quickly resolved at that level. If the matter has already been reviewed with the sales, service, or parts manager, contact the owner of the dealership or the general manager.

STEP TWO: If after contacting a member of dealership management, it appears your concern cannot be resolved by the dealership without further help, in the U.S., call the Chevrolet Customer Assistance Center at 1-800-222-1020. In Canada, call General Motors of Canada Customer Communication Centre at 1-800-263-3777 (English), or 1-800-263-7854 (French).

We encourage you to call the toll-free number in order to give your inquiry prompt attention. Have the following information available to give the Customer Assistance Representative:

- Vehicle Identification Number (VIN). This is available from the vehicle registration or title, or the plate at the top left of the instrument panel and visible through the windshield.
- Dealership name and location.
- Vehicle delivery date and present mileage.

When contacting Chevrolet, remember that your concern will likely be resolved at a dealer's facility. That is why we suggest following Step One first.

STEP THREE — U.S. Owners: Both General Motors and your dealer are committed to making sure you are completely satisfied with your new vehicle. However, if you continue to remain unsatisfied after following the procedure outlined in Steps One and Two, you can file with the Better Business Bureau (BBB) Auto Line Program to enforce your rights.

The BBB Auto Line Program is an out of court program administered by the Council of Better Business Bureaus to settle automotive disputes regarding vehicle repairs or the interpretation of the New Vehicle Limited Warranty. Although you may be required to resort to this informal dispute resolution program prior to filing a court action, use of the program is free of charge and your case will generally be heard within 40 days. If you do not agree with the decision given in your case, you may reject it and proceed with any other venue for relief available to you.

You may contact the BBB Auto Line Program using the toll-free telephone number or write them at the following address:

BBB Auto Line Program
Council of Better Business Bureaus, Inc.
4200 Wilson Boulevard
Suite 800
Arlington, VA 22203-1838

Telephone: 1-800-955-5100
dr.bbb.org/goauto

This program is available in all 50 states and the District of Columbia. Eligibility is limited by vehicle age, mileage, and other factors. General Motors reserves the right to change eligibility limitations and/or discontinue its participation in this program.

STEP THREE — Canadian Owners: In the event that you do not feel your concerns have been addressed after following the procedure outlined in Steps 1 and 2, General Motors of Canada Limited wants you to be aware of its participation in a no-charge Mediation/Arbitration Program. General Motors of Canada Limited has committed to binding arbitration of owner disputes involving factory-related vehicle service claims. The program provides for the review of the facts involved by an impartial third party arbiter, and may include an informal hearing before the arbiter. The program is designed so that the entire dispute settlement process, from the time you file your complaint to the final decision, should be completed in about 70 days. We believe our impartial program offers advantages over courts in most jurisdictions because it is informal, quick, and free of charge.

For further information concerning eligibility in the Canadian Motor Vehicle Arbitration Plan (CAMVAP), call toll-free 1-800-207-0685, or call the General Motors Customer Communication Centre, 1-800-263-3777 (English), 1-800-263-7854 (French), or write to:

The Mediation/Arbitration Program
c/o Customer Communication Centre
General Motors of Canada Limited
Mail Code: CA1-163-005
1908 Colonel Sam Drive
Oshawa, Ontario L1H 8P7

Your inquiry should be accompanied by the Vehicle Identification Number (VIN).

Online Owner Center

Online Owner Center (U.S.) — www.gmownercenter.com/chevrolet

Information and services customized for your specific vehicle — all in one convenient place.

- Digital owner manual, warranty information, and more
- Online service and maintenance records
- Find Chevrolet dealers for service nationwide
- Exclusive privileges and offers
- Recall notices for your specific vehicle
- OnStar® and GM Cardmember Services Earnings summaries

Other Helpful Links:

Chevrolet — www.chevrolet.com

Chevrolet Merchandise — www.chevymall.com

Help Center — www.chevrolet.com/helpcenter

- FAQ
- Contact Us

My GM Canada (Canada) — www.gm.ca

My GM Canada is a password-protected section of www.gm.ca where you can save information on GM vehicles, get personalized offers, and use handy tools and forms with greater ease.

Here are a few of the valuable tools and services you will have access to:

- My Showroom: Find and save information on vehicles and current offers in your area.
- My Dealers/Retailers: Save details such as address and phone number for each of your preferred GM dealers/retailers.
- My Driveway: Access quick links to parts and service estimates, check trade-in values, or schedule a service appointment by adding the vehicles you own to your driveway profile.
- My Preferences: Manage your profile and use tools and forms with greater ease.

To sign up, visit the My GM Canada section within www.gm.ca.

Customer Assistance for Text Telephone (TTY) Users

To assist customers who are deaf, hard of hearing, or speech-impaired and who use Text Telephones (TTYs), Chevrolet has TTY equipment available at its Customer Assistance Center. Any TTY user in the U.S. can communicate with Chevrolet by dialing: 1-800-833-CHEV (2438). (TTY users in Canada can dial 1-800-263-3830.)

Customer Assistance Offices

Chevrolet encourages customers to call the toll-free number for assistance. However, if a customer wishes to write or e-mail Chevrolet, the letter should be addressed to:

United States — Customer Assistance

Chevrolet Motor Division
Chevrolet Customer Assistance Center
P.O. Box 33170
Detroit, MI 48232-5170

Chevrolet.com
1-800-222-1020
1-800-833-2438 (For Text Telephone devices (TTYs))
Roadside Assistance: 1-800-CHEV-USA (243-8872)

From Puerto Rico:
1-800-496-9992 (English)
1-800-496-9993 (Spanish)

From U.S. Virgin Islands:
1-800-496-9994

Canada — Customer Assistance

General Motors of Canada Limited
Customer Communication Centre, CA1-163-005
1908 Colonel Sam Drive
Oshawa, Ontario L1H 8P7

gmcanada.com
1-800-263-3777 (English)
1-800-263-7854 (French)
1-800-263-3830 (For Text Telephone devices (TTYs))
Roadside Assistance: 1-800-268-6800

Overseas — Customer Assistance

Please contact the local General Motors Business Unit.

Mexico, Central America and Caribbean Islands/Countries (Except Puerto Rico and U.S. Virgin Islands) — Customer Assistance

General Motors de Mexico, S. de R.L. de C.V.
Customer Assistance Center
Paseo de la Reforma # 2740
Col. Lomas de Bezares
C.P. 11910, Mexico, D.F.
01-800-508-0000
Long Distance: 011-52-53 29 0 800

GM Mobility Reimbursement Program

GM MOBILITY SM

This program, available to qualified applicants, can reimburse you up to $1,000 of the cost of eligible aftermarket adaptive equipment required for your vehicle, such as hand controls or a wheelchair/scooter lift.

The offer is available for a very limited period of time from the date of vehicle purchase/lease. For more details, or to determine your vehicle's eligibility, visit gmmobility.com or call the GM Mobility Assistance Center at 1-800-323-9935. Text telephone (TTY) users, call 1-800-833-9935.

General Motors of Canada also has a Mobility Program. Call 1-800-GM-DRIVE (463-7483) for details. TTY users call 1-800-263-3830.

Roadside Assistance Program

For U.S. purchased vehicles, call **1-800-CHEV-USA (1-800-243-8872); (Text telephone (TTY): 1-888-889-2438)**.

For Canadian purchased vehicles, call **1-800-268-6800**.

Service is available 24 hours a day, 365 days a year.

Calling for Assistance

When calling Roadside Assistance, have the following information ready:

- Your name, home address, and home telephone number
- Telephone number of your location
- Location of the vehicle
- Model, year, color, and license plate number of the vehicle
- Odometer reading, Vehicle Identification Number (VIN), and delivery date of the vehicle
- Description of the problem

Coverage

Services are provided up to 5 years/100,000 miles (160 000 km), whichever comes first.

In the U.S., anyone driving the vehicle is covered. In Canada, a person driving the vehicle without permission from the owner is not covered.

Roadside Assistance is not a part of the New Vehicle Limited Warranty. Chevrolet and General Motors of Canada Limited reserve the right to make any changes or discontinue the Roadside Assistance program at any time without notification.

Chevrolet and General Motors of Canada Limited reserve the right to limit services or payment to an owner or driver if they decide the claims are made too often, or the same type of claim is made many times.

Services Provided

- **Emergency Fuel Delivery:** Delivery of enough fuel for the vehicle to get to the nearest service station.
- **Lock-Out Service:** Service is provided to unlock the vehicle if you are locked out. A remote unlock may be available if you have OnStar®. For security reasons, the driver must present identification before this service is given.
- **Emergency Tow From a Public Road or Highway:** Tow to the nearest Chevrolet dealer for warranty service, or if the vehicle was in a crash and cannot be driven. Assistance is also given when the vehicle is stuck in the sand, mud, or snow.
- **Flat Tire Change:** Service is provided to change a flat tire with the spare tire. The spare tire, if equipped, must be in good condition and properly inflated. It is the owner's responsibility for the repair or replacement of the tire if it is not covered by the warranty.
- **Battery Jump Start:** Service is provided to jump start a dead battery.

Services Not Included in Roadside Assistance

- Impound towing caused by violation of any laws.
- Legal fines.
- Mounting, dismounting or changing of snow tires, chains, or other traction devices.
- Towing or services for vehicles driven on a non-public road or highway.

Services Specific to Canadian Purchased Vehicles

- **Fuel delivery:** Reimbursement is approximately $5 Canadian. Diesel fuel delivery may be restricted. Propane and other fuels are not provided through this service.
- **Lock-Out Service:** Vehicle registration is required.
- **Trip Routing Service:** Detailed maps of North America are provided when requested either with the most direct route or the most scenic route. There is a limit of six requests per year. Additional travel information is also available. Allow three weeks for delivery.
- **Trip Interruption Benefits and Assistance:** Must be over 250 kilometres from where your trip was started to qualify. General Motors of Canada Limited requires pre-authorization, original detailed receipts, and a copy of the repair orders. Once authorization has been received, the Roadside Assistance advisor will help you make arrangements and explain how to receive payment.
- **Alternative Service:** If assistance cannot be provided right away, the Roadside Assistance advisor may give you permission to get local emergency road service. You will receive payment, up to $100, after sending the original receipt to Roadside Assistance. Mechanical failures may be covered, however any cost for parts and labor for repairs not covered by the warranty are the owner responsibility.

Scheduling Service Appointments

When your vehicle requires warranty service, contact your dealer/retailer and request an appointment. By scheduling a service appointment and advising your service consultant of your transportation needs, your dealer/retailer can help minimize your inconvenience.

If your vehicle cannot be scheduled into the service department immediately, keep driving it until it can be scheduled for service, unless, of course, the problem is safety-related. If it is, please call your dealership/retailer, let them know this, and ask for instructions.

If the dealer/retailer requests you to bring the vehicle for service, you are urged to do so as early in the work day as possible to allow for the same day repair.

Courtesy Transportation Program

To enhance your ownership experience, we and our participating dealers are proud to offer Courtesy Transportation, a customer support program for vehicles with the New Vehicle Limited Warranty (Base Warranty Coverage period in Canada) and extended powertrain, and hybrid specific warranty in both the U.S. and Canada.

Several courtesy transportation options are available to assist in reducing your inconvenience when warranty repairs are required.

Courtesy Transportation is not a part of the New Vehicle Limited Warranty. A separate booklet entitled “Warranty and Owner Assistance Information” furnished with each new vehicle provides detailed warranty coverage information.

Transportation Options

Warranty service can generally be completed while you wait. However, if you are unable to wait, GM helps to minimize your inconvenience by providing several transportation options. Depending on the circumstances, your dealer can offer you one of the following:

Shuttle Service

Shuttle service is the preferred means of offering Courtesy Transportation. Dealers may provide you with shuttle service to get you to your destination with minimal interruption of your daily schedule. This includes one-way or round trip shuttle service within reasonable time and distance parameters of the dealer's area.

Public Transportation or Fuel Reimbursement

If your vehicle requires overnight warranty repairs, and public transportation is used instead of the dealer's shuttle service, the expense must be supported by original receipts and can only be up to the maximum amount allowed by GM for shuttle service. In addition, for U.S. customers, should you arrange transportation through a friend or relative, limited reimbursement for reasonable fuel expenses may be available. Claim amounts should reflect actual costs and be supported by original receipts. See your dealer for information regarding the allowance amounts for reimbursement of fuel or other transportation costs.

Courtesy Rental Vehicle

Your dealer may arrange to provide you with a courtesy rental vehicle or reimburse you for a rental vehicle that you obtain if your vehicle is kept for an overnight warranty repair. Rental reimbursement will be limited and must be supported by original receipts. This requires that you sign and complete a rental agreement and meet state/provincial, local, and rental vehicle provider requirements. Requirements vary and may include minimum age requirements, insurance coverage, credit card, etc. You are responsible for fuel usage charges and may also be responsible for taxes, levies, usage fees, excessive mileage, or rental usage beyond the completion of the repair.

It may not be possible to provide a like-vehicle as a courtesy rental.

Additional Program Information

All program options, such as shuttle service, may not be available at every dealer. Please contact your dealer for specific information about availability. All Courtesy Transportation arrangements will be administered by appropriate dealer personnel.

General Motors reserves the right to unilaterally modify, change or discontinue Courtesy Transportation at any time and to resolve all questions of claim eligibility pursuant to the terms and conditions described herein at its sole discretion.

Collision Damage Repair

If your vehicle is involved in a collision and it is damaged, have the damage repaired by a qualified technician using the proper equipment and quality replacement parts. Poorly performed collision repairs diminish your vehicle's resale value, and safety performance can be compromised in subsequent collisions.

Collision Parts

Genuine GM Collision parts are new parts made with the same materials and construction methods as the parts with which your vehicle was originally built. Genuine GM Collision parts are your best choice to ensure that your vehicle's designed appearance, durability, and safety are preserved. The use of Genuine GM parts can help maintain your GM New Vehicle Warranty.

Recycled original equipment parts may also be used for repair. These parts are typically removed from vehicles that were total losses in prior crashes. In most cases, the parts being recycled are from undamaged sections of the vehicle. A recycled original equipment GM part, may be an acceptable choice to maintain your vehicle's originally designed appearance and safety performance, however, the history of these parts is not known. Such parts are not covered by your GM New Vehicle Limited Warranty, and any related failures are not covered by that warranty.

Aftermarket collision parts are also available. These are made by companies other than GM and may not have been tested for your vehicle. As a result, these parts may fit poorly, exhibit premature durability/corrosion problems, and may not perform properly in subsequent collisions. Aftermarket parts are not covered by your GM New Vehicle Limited Warranty, and any vehicle failure related to such parts are not covered by that warranty.

Repair Facility

We recommend that you choose a collision repair facility that meets your needs before you ever need collision repairs. Your dealer/retailer may have a collision repair center with GM-trained technicians and state of the art equipment, or be able to recommend a collision repair center that has GM-trained technicians and comparable equipment.

Insuring Your Vehicle

Protect your investment in your GM vehicle with comprehensive and collision insurance coverage. There are significant differences in the quality of coverage afforded by various insurance policy terms. Many insurance policies provide reduced protection to your GM vehicle by limiting compensation for damage repairs by using aftermarket collision parts. Some insurance companies will not specify aftermarket collision parts. When purchasing insurance, we recommend that you assure your vehicle will be repaired with GM original equipment collision parts. If such insurance coverage is not available from your current insurance carrier, consider switching to another insurance carrier.

If your vehicle is leased, the leasing company may require you to have insurance that assures repairs with Genuine GM Original Equipment Manufacturer (OEM) parts or Genuine Manufacturer replacement parts. Read your lease carefully, as you may be charged at the end of your lease for poor quality repairs.

If a Crash Occurs

Here is what to do if you are involved in a crash.

- Check to make sure that you are all right. If you are uninjured, make sure that no one else in your vehicle, or the other vehicle, is injured.
- If there has been an injury, call emergency services for help. Do not leave the scene of a crash until all matters have been taken care of. Move your vehicle only if its position puts you in danger or you are instructed to move it by a police officer.
- Give only the necessary and requested information to police and other parties involved in the crash. Do not discuss your personal condition, mental frame of mind, or anything unrelated to the crash. This will help guard against post-crash legal action.
- If you need roadside assistance, call GM Roadside Assistance. See *Roadside Assistance Program on page 8-7* for more information.
- If your vehicle cannot be driven, know where the towing service will be taking it. Get a card from the tow truck operator or write down the driver's name, the service's name, and the phone number.
- Remove any valuables from your vehicle before it is towed away. Make sure this includes your insurance information and registration if you keep these items in your vehicle.

- Gather the important information you will need from the other driver. Things like name, address, phone number, driver's license number, vehicle license plate, vehicle make, model and model year, Vehicle Identification Number (VIN), insurance company and policy number, and a general description of the damage to the other vehicle.
- If possible, call your insurance company from the scene of the crash. They will walk you through the information they will need. If they ask for a police report, phone or go to the police department headquarters the next day and you can get a copy of the report for a nominal fee. In some states/provinces with "no fault" insurance laws, a report may not be necessary. This is especially true if there are no injuries and both vehicles are driveable.
- Choose a reputable collision repair facility for your vehicle. Whether you select a dealer/retailer or a private collision repair facility to fix the damage, make sure you are comfortable with them. Remember, you will have to feel comfortable with their work for a long time.
- Once you have an estimate, read it carefully and make sure you understand what work will be performed on your vehicle. If you have a question, ask for an explanation. Reputable shops welcome this opportunity.

Managing the Vehicle Damage Repair Process

In the event that your vehicle requires damage repairs, GM recommends that you take an active role in its repair. If you have a pre-determined repair facility of choice, take your vehicle there, or have it towed there. Specify to the facility that any required replacement collision parts be original equipment parts, either new Genuine GM parts or recycled original GM parts. Remember, recycled parts will not be covered by your GM vehicle warranty.

Insurance pays the bill for the repair, but you must live with the repair. Depending on your policy limits, your insurance company may initially value the repair using aftermarket parts. Discuss this with your repair professional, and insist on Genuine GM parts. Remember if your vehicle is leased you may be obligated to have the vehicle repaired with Genuine GM parts, even if your insurance coverage does not pay the full cost.

If another party's insurance company is paying for the repairs, you are not obligated to accept a repair valuation based on that insurance company's collision policy repair limits, as you have no contractual limits with that company. In such cases, you can have control of the repair and parts choices as long as cost stays within reasonable limits.

Reporting Safety Defects

Reporting Safety Defects to the United States Government

If you believe that your vehicle has a defect which could cause a crash or could cause injury or death, you should immediately inform the National Highway Traffic Safety Administration (NHTSA) in addition to notifying General Motors.

If NHTSA receives similar complaints, it may open an investigation, and if it finds that a safety defect exists in a group of vehicles, it may order a recall and remedy campaign. However, NHTSA cannot become involved in individual problems between you, your dealer, or General Motors.

To contact NHTSA, you may call the Vehicle Safety Hotline toll-free at 1-888-327-4236 (TTY: 1-800-424-9153); go to *http://www.safercar.gov;* or write to:

Administrator, NHTSA
1200 New Jersey Avenue, S.E.
Washington, D.C. 20590

You can also obtain other information about motor vehicle safety from *http://www.safercar.gov.*

Reporting Safety Defects to the Canadian Government

If you live in Canada, and you believe that your vehicle has a safety defect, notify Transport Canada immediately, in addition to notifying General Motors of Canada Limited. Call them at 1-800-333-0510 or write to:

Transport Canada
Road Safety Branch
2780 Sheffield Road
Ottawa, Ontario K1B 3V9

Reporting Safety Defects to General Motors

In addition to notifying NHTSA (or Transport Canada) in a situation like this, please notify General Motors.

Call 1-800-222-1020, or write:

Chevrolet Motor Division
Chevrolet Customer Assistance Center
P.O. Box 33170
Detroit, MI 48232-5170

In Canada, call 1-800-263-3777 (English) or 1-800-263-7854 (French), or write:

General Motors of Canada Limited
Customer Communication Centre, CA1-163-005
1908 Colonel Sam Drive
Oshawa, Ontario L1H 8P7

Service Publications Ordering Information

Service Manuals

Service Manuals have the diagnosis and repair information on engines, transmission, axle suspension, brakes, electrical, steering, body, etc.

Service Bulletins

Service Bulletins give additional technical service information needed to knowledgeably service General Motors cars and trucks. Each bulletin contains instructions to assist in the diagnosis and service of your vehicle.

Owner Information

Owner publications are written specifically for owners and intended to provide basic operational information about the vehicle. The owner manual includes the Maintenance Schedule for all models.

In-Portfolio: Includes a Portfolio, Owner Manual, and Warranty Booklet.

RETAIL SELL PRICE: $35.00 (U.S.) plus processing fee

Without Portfolio: Owner Manual only.

RETAIL SELL PRICE: $25.00 (U.S.) plus processing fee

Current and Past Model Order Forms

Technical Service Bulletins and Manuals are available for current and past model GM vehicles. To request an order form, specify year and model name of the vehicle.

ORDER TOLL FREE: 1-800-551-4123
Monday-Friday 8:00 AM - 6:00 PM
Eastern Time

For Credit Card Orders Only
(VISA-MasterCard-Discover), visit Helm, Inc.
on the World Wide Web at: helminc.com

Or you can write to:

Helm, Incorporated
P.O. Box 07130
Detroit, MI 48207

Prices are subject to change without notice and without incurring obligation. Allow ample time for delivery.

Note to Canadian Customers: All listed prices are quoted in U.S. funds. Canadian residents are to make checks payable in U.S. funds.

Vehicle Data Recording and Privacy

Your GM vehicle has a number of sophisticated computers that record information about the vehicle's performance and how it is driven. For example, your vehicle uses computer modules to monitor and control engine and transmission performance, to monitor the conditions for airbag deployment and deploy airbags in a crash and, if so equipped, to provide antilock braking to help the driver control the vehicle. These modules may store data to help your dealer/retailer technician service your vehicle. Some modules may also store data about how you operate the vehicle, such as rate of fuel consumption or average speed. These modules may also retain the owner's personal preferences, such as radio pre-sets, seat positions, and temperature settings.

Event Data Recorders

This vehicle has an Event Data Recorder (EDR). The main purpose of an EDR is to record, in certain crash or near crash-like situations, such as an airbag deployment or hitting a road obstacle, data that will assist in understanding how a vehicle's systems performed. The EDR is designed to record data related to vehicle dynamics and safety systems for a short period of time, typically 30 seconds or less. The EDR in this vehicle is designed to record such data as:

- How various systems in your vehicle were operating
- Whether or not the driver and passenger safety belts were buckled/fastened
- How far, if at all, the driver was pressing the accelerator and/or brake pedal
- How fast the vehicle was traveling

This data can help provide a better understanding of the circumstances in which crashes and injuries occur.

Important: EDR data is recorded by your vehicle only if a non-trivial crash situation occurs; no data is recorded by the EDR under normal driving conditions and no personal data (e.g., name, gender, age, and crash location) is recorded. However, other parties, such as law enforcement, could combine the EDR data with the type of personally identifying data routinely acquired during a crash investigation.

To read data recorded by an EDR, special equipment is required, and access to the vehicle or the EDR is needed. In addition to the vehicle manufacturer, other parties, such as law enforcement, that have the special equipment, can read the information if they have access to the vehicle or the EDR.

GM will not access this data or share it with others except: with the consent of the vehicle owner or, if the vehicle is leased, with the consent of the lessee; in response to an official request of police or similar government office; as part of GM's defense of litigation through the discovery process; or, as required by law. Data that GM collects or receives may also be used for GM research needs or may be made available to others for research purposes, where a need is shown and the data is not tied to a specific vehicle or vehicle owner.

OnStar®

If the vehicle has OnStar and you subscribe to the OnStar services, please refer to the OnStar Terms and Conditions for information on data collection and use.

Navigation System

If your vehicle has a navigation system, use of the system may result in the storage of destinations, addresses, telephone numbers, and other trip information. Refer to the navigation system operating manual for information on stored data and for deletion instructions.

Radio Frequency Identification (RFID)

RFID technology is used in some vehicles for functions such as tire pressure monitoring and ignition system security, as well as in connection with conveniences such as key fobs for remote door locking/unlocking and starting, and in-vehicle transmitters for garage door openers. RFID technology in GM vehicles does not use or record personal information or link with any other GM system containing personal information.

Radio Frequency Statement

This vehicle has systems that operate on a radio frequency that comply with Part 15 of the Federal Communications Commission (FCC) Rules and with RSS-210/211 of Industry and Science Canada.

Operation is subject to the following two conditions:

1. The device may not cause interference.
2. The device must accept any interference received, including interference that may cause undesired operation of the device.

Changes or modifications to any of these systems by other than an authorized service facility could void authorization to use this equipment.

A

Accessories and Modifications 6-3
Accessory Power 3-23
Accessory Power Outlets 4-20
Active Handling System 5-8
Active Handling System Light 4-38
Additives, Fuel 6-7
Add-On Electrical Equipment 6-102
Air Cleaner/Filter, Engine 6-28
Air Dam, Front 3-22
Air Filter, Passenger Compartment 4-27
Airbag
  Adding Equipment to Your Airbag-Equipped Vehicle 2-58
Airbag System
  How Does an Airbag Restrain? 2-49
  Passenger Sensing System 2-52
  Servicing Your Airbag-Equipped Vehicle 2-58
  What Makes an Airbag Inflate? 2-49
  What Will You See After an Airbag Inflates? 2-50
  When Should an Airbag Inflate? 2-48
  Where Are the Airbags? 2-46
Airbags
  Passenger Status Indicator 4-33
  Readiness Light 4-32
  System Check 2-44
Antenna
  Diversity 4-106
Antenna, XM™ Satellite Radio Antenna System 4-106
Antilock Brake System (ABS) 5-5
  Warning Light 4-36
Appearance Care
  Aluminum or Chrome-Plated Wheels 6-99
  Care of Safety Belts 6-95
  Cargo Cover and Convenience Net 6-94
  Chemical Paint Spotting 6-100
  Cleaning Exterior Lamps/Lenses 6-96
  Coated Moldings 6-94
  Convertible Top 6-98
  Fabric/Carpet 6-93
  Fiberglass Springs 6-100
  Finish Care 6-96
  Finish Damage 6-100
  Instrument Panel, Vinyl, and Other Plastic Surfaces 6-94
  Interior Cleaning 6-92
  Leather 6-94
  Removable Roof Panel 6-98
  Tires 6-99
  Underbody Maintenance 6-100
  Washing Your Vehicle 6-95
  Weatherstrips 6-95
  Windshield and Wiper Blades 6-97

Ashtray 4-21
Assistance Program, Roadside 8-7
Audio System 4-78
Audio Steering Wheel Controls 4-104
Navigation/Radio System, see Navigation Manual 4-93
Radio Reception 4-105
Setting the Clock 4-78
Theft-Deterrent Feature 4-103
XM™ Satellite Radio Antenna System 4-106
Audio System(s) 4-79
Automatic Door Lock 3-13
Automatic Transmission
Fluid 6-32
Operation 3-26
Axle, Rear 6-58

B

Battery 6-52
Exterior Lighting Battery Saver 4-15
Run-Down Protection 4-16
Belt Routing, Engine 7-12
Bluetooth® 4-93
Boost Gage 4-46
Brake
Emergencies 5-6
Brakes 6-46
Antilock 5-5
Parking 3-33
System Warning Light 4-35
Braking 5-3
Braking in Emergencies 5-6
Break-In, New Vehicle 3-21
Bulb Replacement 6-61
Fog Lamps 4-13
Halogen Bulbs 6-59
Headlamp Aiming 6-58
Headlamps 6-59
Headlamps, Front Turn Signal, and Parking Lamps 6-59
High Intensity Discharge (HID) Lighting 6-59
Taillamps, Turn Signal and Stoplamps 6-61
Buying New Tires 6-79

C

Calibration 3-38
California
Perchlorate Materials Requirements 6-4
Warning 6-4
California Fuel 6-7
Canadian Owners iii
Capacities and Specifications 6-112

Carbon Monoxide 3-14
Engine Exhaust 3-36
Winter Driving 5-25
Care of
Safety Belts 6-95
Cargo Cover 3-51
CD, MP3 4-90
Center Console Storage 3-48
Chains, Tire 6-86
Check
Engine Lamp 4-40
Checking Things Under the Hood 6-12
Chemical Paint Spotting 6-100
Child Restraints
Infants and Young Children 2-29
Lower Anchors and Tethers for Children . 2-35, 2-36
Older Children 2-26
Securing a Child Restraint in the
Right Front Seat Position 2-40
Systems 2-33
Cigarette Lighter 4-21
Circuit Breakers 6-103
Cleaning
Aluminum or Chrome-Plated Wheels 6-99
Cargo Cover and Convenience Net 6-94
Coated Moldings 6-94
Convertible Top 6-98
Cleaning (cont.)
Exterior Lamps/Lenses 6-96
Fabric/Carpet 6-93
Fiberglass Springs 6-100
Finish Care 6-96
Instrument Panel, Vinyl, and Other Plastic
Surfaces 6-94
Interior 6-92
Leather 6-94
Removable Roof Panel 6-98
Tires 6-99
Underbody Maintenance 6-100
Washing Your Vehicle 6-95
Weatherstrips 6-95
Windshield and Wiper Blades 6-97
Climate Control System
Outlet Adjustment 4-26
Climate Control Systems
Dual Automatic 4-21
Climate Controls 1-14
Clock, Setting 4-78
Clutch, Hydraulic 6-33
Collision Damage Repair 8-13
Compass 3-38
Competitive Driving Mode 5-9
Competitive Driving, Racing or Other 5-19
Control of a Vehicle 5-3
Convenience Net 3-50

Convertible Top 3-56, 3-63
Coolant
  Engine 6-36
  Engine Temperature Gage 4-39
Cooling System 6-34, 6-35
Courtesy Lamps 4-15
Courtesy Transportation Program 8-11
Cruise Control 4-7
Cupholders 3-48
Customer Assistance 8-6
  Offices 8-6
  Text Telephone (TTY) Users 8-6
Customer Information
  Service Publications Ordering Information 8-17
Customer Satisfaction Procedure 8-2

D

Damage Repair, Collision 8-13
Data Recorders, Event 8-19
Daytime Running Lamps (DRL) 4-12
Defensive Driving 5-2
Disc, MP3 4-90
Displays
  Head-Up 4-16
Diversity Antenna System 4-106
Doing Your Own Service Work 6-4
Door
  Automatic Door Lock 3-13
  Locks 3-10
  Power Locks 3-12
  Programmable Automatic Door Unlock 3-13
Driver Information Center (DIC) 4-46
  DIC Operation and Displays 4-46
  DIC Vehicle Personalization 4-69
  DIC Warnings and Messages 4-51
  Other Messages 4-68
Driving
  At Night 5-22
  Before a Long Trip 5-23
  Competitive 5-9
  Defensive 5-2
  Drunk 5-2
  Highway Hypnosis 5-24
  Hill and Mountain Roads 5-24
  In Rain and on Wet Roads 5-22
  Loss of Control 5-18
  Off-Road Recovery 5-17
  Rocking Your Vehicle to Get it Out 5-28
  Winter 5-25
Driving for Better Fuel Economy 1-23
Dual Automatic Climate Control System 4-21

E

EDR 8-18
Electrical Equipment, Add-On 6-102
Electrical System
  Engine Compartment Fuse Block 6-107
  Fuses and Circuit Breakers 6-103
  Headlamp Wiring 6-102
  Instrument Panel Fuse Block 6-103
  Power Windows and Other Power Options 6-102
  Windshield Wiper Fuses 6-102
Engine
  Air Cleaner/Filter 6-28
  Check and Service Engine Soon Lamp 4-40
  Compartment Overview 6-14
  Coolant 6-36
  Coolant Temperature Gage 4-39
  Cooling System 6-34, 6-35
  Drive Belt Routing 7-12
  Exhaust 3-36
  Oil 6-20
  Oil Pressure Gage 4-43
  Overheated Protection Operating Mode 6-43
  Overheating 6-41
  Starting 3-24
Engine Oil
  Life System 6-27
Entry/Exit Lighting 4-15
Event Data Recorders 8-19
Extender, Safety Belt 2-26
Exterior Lamps 4-11
Exterior Lighting Battery Saver 4-15

F

Filter
  Engine Air Cleaner 6-28
Finish Damage 6-100
Flashers, Hazard Warning 4-3
Flash-to-Pass 4-5
Flat Tire 6-91
Floor Mats 3-48
Fluid
  Automatic Transmission 6-32
  Power Steering 6-44
  Windshield Washer 6-45
Fog Lamps
  Bulb Replacement 4-13
  Light 4-44
Front Air Dam 3-22
Fuel 6-5
  Additives 6-7
  California Fuel 6-7
  Filling a Portable Fuel Container 6-12
  Filling the Tank 6-9
  Fuels in Foreign Countries 6-8

Fuel (cont.)
Gage 4-45
Gasoline Octane 6-6
Gasoline Specifications 6-6
Fuel Economy
Driving for Better 1-23
Fuses
Engine Compartment Fuse Block 6-107
Fuses and Circuit Breakers 6-103
Instrument Panel Fuse Block 6-103
Windshield Wiper 6-102

G

Gages
Boost 4-46
Engine Coolant Temperature 4-39
Engine Oil Pressure 4-43
Fuel 4-45
Speedometer 4-31
Tachometer 4-31
Voltmeter Gage 4-34
Garage Door Opener 3-41
Gasoline
Octane 6-6
Specifications 6-6
Glove Box 3-48
GM Mobility Reimbursement Program 8-7

H

Halogen Bulbs 6-59
Hatch/Trunk 3-14
Hazard Warning Flashers 4-3
Headlamp Wiring 6-102
Headlamps
Aiming 6-58
Bulb Replacement 6-59
Daytime Running Lamps (DRL) 4-12
Exterior Lamps 4-11
Flash-to-Pass 4-5
Headlamps, Front Turn Signal, and
Parking Lamps 6-59
High Intensity Discharge (HID) Lighting 6-59
High/Low Beam Changer 4-5
On Reminder 4-12
Wiper Activated 4-12
Head-Up Display (HUD) 4-16
Heated Seats 2-4
Highbeam On Light 4-44
High-Speed Operation, Tires 6-74
Highway Hypnosis 5-24
Hill and Mountain Roads 5-24
Hood
Checking Things Under 6-12
Release 6-13

Horn 4-3
How to Wear Safety Belts Properly 2-14
Hydraulic Clutch 6-33

I

Ignition Positions 3-22
Immobilizer 3-20
Infants and Young Children, Restraints 2-29
Inflation - Tire Pressure 6-72
Installing the Roof Panel 3-55
Instrument Panel
  Brightness 4-15
  Cluster 4-29
Introduction 7-2

J

Jump Starting 6-53

K

Keyless Access System 3-5
Keyless Access System, Operation 3-5
Keys 3-3

L

Labeling, Tire Sidewall 6-66
Lamps
  Courtesy 4-15
  Daytime Running (DRL) 4-12
  Exterior Lighting Battery Saver 4-15
  Malfunction Indicator 4-40
  Reading 4-15
  Twilight Sentinel® 4-14
Lap-Shoulder Belt 2-23
LATCH System for Child Restraints 2-35, 2-36
Latches, Seatback 2-8
Lifting the Vehicle, Tires 6-86
Lighting
  Entry/Exit 4-15
Lights
  Active Handling System 4-38
  Airbag Readiness 4-32
  Antilock Brake System (ABS) Warning 4-36
  Brake System Warning 4-35
  Exterior Lamps 4-11
  Flash-to-Pass 4-5
  Fog Lamps 4-44
  Highbeam On 4-44
  High/Low Beam Changer 4-5
  Lights On Reminder 4-44

Lights (cont.)
On Reminder 4-12
One-to-Four Shift 4-35
Passenger Airbag Status Indicator 4-33
Safety Belt Reminders 4-31
Security 4-44
Tire Pressure 4-39
Traction Control System (TCS) Warning 4-37
Limited-Slip Rear Axle 5-14
Loading Your Vehicle 5-28
Locks
Automatic Door Lock 3-13
Door 3-10
Lockout Protection 3-13
Power Door 3-12
Programmable Automatic Door Unlock 3-13
Loss of Control 5-18
Lower Anchors and Tethers for Children 2-35, 2-36
Lumbar
Power and Side Bolsters 2-3

M

Maintenance Schedule
Maintenance Record 7-13
Maintenance Replacement Parts 7-11
Owner Checks and Services 7-8
Recommended Fluids and Lubricants 7-9
Scheduled Maintenance 7-3
Malfunction Indicator Lamp 4-40
Manual Seats 2-2
Manual Transmission
Fluid 6-33
Operation 3-31
Memory Seat, Mirrors, Steering Wheel Controls 2-4
Message
DIC Warnings and Messages 4-51
Mirrors
Automatic Dimming Rearview 3-38
Outside Automatic Dimming Mirror 3-40
Outside Convex Mirror 3-40
Outside Heated Mirrors 3-41
Outside Power Mirrors 3-40
MP3 4-90

N

Navigation System, Privacy 8-20
Navigation/Radio System,
see Navigation Manual 4-93
Net, Convenience 3-50
New Vehicle Break-In 3-21

O

Odometer 4-31
Off-Road
Recovery 5-17

Oil
Engine 6-20
Engine Oil Life System 6-27
Engine Oil Pressure Gage 4-43
Older Children, Restraints 2-26
One-to-Four Shift Light 4-35
Online Owner Center 8-5
OnStar, Privacy 8-20
OnStar® System 1-24
Operation, Universal Home Remote System 3-41
Outlet Adjustment 4-26
Outlets
Accessory Power 4-20
Outside
Automatic Dimming Mirror 3-40
Convex Mirror 3-40
Heated Mirrors 3-41
Power Mirrors 3-40
Overheated Engine Protection Operating Mode 6-43
Owner Checks and Services 7-8
Owners, Canadian iii

P

Paint, Damage 6-100
Panel, Roof 3-52
Park
Shifting Into 3-33
Shifting Out of 3-35
Parking
Brake 3-33
Over Things That Burn 3-35
Parking Your Vehicle 3-35
Passenger Airbag Status Indicator 4-33
Passenger Compartment Air Filter 4-27
Passenger Sensing System 2-52
Passing 5-18
Perchlorate Materials Requirements,
California 6-4
Phone
Bluetooth® 4-93
Power
Door Locks 3-12
Electrical System 6-102
Lumbar and Side Bolsters 2-3
Retained Accessory (RAP) 3-23
Seat 2-3
Steering Fluid 6-44
Windows 3-17
Pregnancy, Using Safety Belts 2-25
Privacy 8-18
Navigation System 8-20
OnStar 8-20
Radio Frequency Identification (RFID) 8-20
Program
Courtesy Transportation 8-11
Programmable Automatic Door Unlock 3-13
Proposition 65 Warning, California 6-4

R

Racing or Other Competitive Driving 5-19
Radio Frequency
  Identification (RFID) 8-20
  Statement 8-20
Radio(s) 4-79
Radios
  Navigation/Radio System, see Navigation
    Manual 4-93
  Reception 4-105
  Setting the Clock 4-78
  Theft-Deterrent 4-103
Reading Lamps 4-15
Rear Axle 6-58
  Limited-Slip 5-14
Rear Storage 3-49
Rearview Mirrors
  Automatic Dimming 3-38
Reclining Seatbacks 2-6
Recommended Fluids and Lubricants 7-9
Recreational Vehicle Towing 5-33
Reimbursement Program, GM Mobility 8-7
Remote, Keyless Access System 3-5
Removing the Roof Panel 3-52
Replacement Bulbs 6-61
Replacement Parts
  Maintenance 7-11
Reporting Safety Defects
  Canadian Government 8-16
  General Motors 8-16
  U.S. Government 8-16
Restraint System Check
  Checking the Restraint Systems 2-60
  Replacing Restraint System Parts
    After a Crash 2-61
Retained Accessory Power (RAP) 3-23
Ride Control Systems
  Active Handling 5-8
  Limited Slip Rear Axle 5-14
  Selective 5-14
Roadside Assistance Program 8-7
Rocking Your Vehicle to Get it Out 5-28
Roof Panel 3-52
  Installing the Roof Panel 3-55
  Removing the Roof Panel 3-52
  Storing the Roof Panel 3-54
Run-Flat Tires 6-71
Running the Vehicle While Parked 3-37

S

Safety Belts
- Care of 6-95
- Extender 2-26
- How to Wear Safety Belts Properly 2-14
- Lap-Shoulder Belt 2-23
- Reminders 4-31
- Safety Belts Are for Everyone 2-9
- Use During Pregnancy 2-25

Safety Defects Reporting
- Canadian Government 8-16
- General Motors 8-16
- U.S. Government 8-16

Safety Warnings and Symbols iv
Scheduled Maintenance 7-3
Scheduling Appointments 8-11
Seatback Latches 2-8
Seats
- Heated Seats 2-4
- Memory, Mirrors 2-4
- Power Lumbar and Side Bolsters 2-3
- Power Seats 2-3
- Reclining Seatbacks 2-6

Securing a Child Restraint
- Right Front Seat Position 2-40

Security
- Light 4-44

Selective Ride Control 5-14
Service 6-3
- Accessories and Modifications 6-3
- Adding Equipment to the Outside of the Vehicle 6-5
- Doing Your Own Work 6-4
- Engine Soon Lamp 4-40
- Parts Identification Label 6-101
- Publications Ordering Information 8-17
- Scheduling Appointments 8-11

Servicing Your Airbag-Equipped Vehicle 2-58
Setting the Clock 4-78
Shifting
- Out of Park 3-35

Shifting Into Park 3-33
Signals, Turn and Lane-Change 4-5
Specifications and Capacities 6-112
Speedometer 4-31
Starting the Engine 3-24
Steering 5-16
Steering Wheel Controls, Audio 4-104
Steering Wheel Controls, Memory 2-4
Steering Wheel, Tilt Wheel 4-3

Storage Areas
Center Console 3-48
Convenience Net 3-50
Cupholders 3-48
Glove Box 3-48
Rear 3-49
Storing the Roof Panel 3-54
Stuck in Sand, Mud, Ice, or Snow 5-27
Sun Visors 3-18

T

Tachometer 4-31
Taillamps
Turn Signal, and Stoplamps 6-61
Text Telephone (TTY) Users 8-6
Theft - Deterrent System 3-18
Theft-Deterrent Feature 4-103
Theft-Deterrent Systems 3-18, 3-20
Immobilizer 3-20
Tilt Wheel 4-3
Time, Setting 4-78
Tires 6-64
Aluminum or Chrome-Plated Wheels,
Cleaning 6-99
Buying New Tires 6-79
Chains 6-86
Cleaning 6-99
Tires (cont.)
Different Size 6-81
High-Speed Operation 6-74
If a Tire Goes Flat 6-91
Inflation - Tire Pressure 6-72
Inspection and Rotation 6-78
Lifting the Vehicle 6-86
Pressure Light 4-39
Pressure Monitor Operation 6-76
Pressure Monitor System 6-74
Run-Flat 6-71
Sidewall Labeling 6-66
Terminology and Definitions 6-68
Uniform Tire Quality Grading 6-82
Wheel Alignment and Tire Balance 6-83
Wheel Replacement 6-83
When It Is Time for New Tires 6-78
Winter 6-65
Towing
Recreational Vehicle 5-33
Towing a Trailer 5-33
Your Vehicle 5-33
Traction
Active Handling System 5-8
Control System (TCS) 5-6
Control System Warning Light 4-37
Limited-Slip Rear Axle 5-14
Selective Ride Control 5-14

Transmission
Fluid, Automatic 6-32
Fluid, Manual 6-33
One-to-Four Shift Light 4-35
Transmission Operation, Automatic 3-26
Transmission Operation, Manual 3-31
Transportation Program, Courtesy 8-11
Trunk/Hatch 3-14
Turn and Lane-Change Signals 4-5
Turn Signal/Multifunction Lever 4-4
Twilight Sentinel® 4-14

U

Uniform Tire Quality Grading 6-82
Universal Home Remote System 3-41
Operation 3-41

V

Vehicle
Control 5-3
Loading 5-28
Parking Your 3-35
Running While Parked 3-37
Symbols iv
Vehicle Data Recording and Privacy 8-18
Vehicle Identification
Number (VIN) 6-101
Service Parts Identification Label 6-101
Vehicle Personalization
DIC 4-69
Ventilation Adjustment 4-26
Visors 3-18
Voltmeter Gage 4-34

W

Warning Lights, Gages, and Indicators 4-28
Warnings
DIC Warnings and Messages 4-51
Hazard Flashers 4-3
Safety and Symbols iv
Wheels
Alignment and Tire Balance 6-83
Different Size 6-81
Replacement 6-83
When It Is Time for New Tires 6-78
Windows 3-16
Power 3-17
Windshield
Replacement 6-62
Washer 4-6
Washer Fluid 6-45

Windshield (cont.)
Wiper Blade Replacement 6-62
Wiper Blades, Cleaning 6-97
Wiper Fuses 6-102
Wipers 4-6
Winter Driving 5-25
Winter Tires 6-65
Wiper Activated Headlamps 4-12

X

XM Radio Messages 4-92
XM™ Satellite Radio
Antenna 4-106