tC

2012

QUICK REFERENCE GUIDE

GET INFORMED.
ROLL.

what moves you

2012
Scion tC

This *Quick Reference Guide* is a summary of basic vehicle operations. It contains brief descriptions of fundamental operations so you can locate and use the vehicle's main equipment quickly and easily.

The *Quick Reference Guide* is not intended as a substitute for the *Owner's Manual* located in the vehicle's glove box. We strongly encourage you to review the *Owner's Manual* and supplementary manuals so you will have a better understanding of the vehicle's capabilities and limitations.

Your dealership and the entire staff of Scion, a marque of Toyota Motor Sales, U.S.A., Inc., wish you many years of satisfied driving in your new SCION tC.

! A word about safe vehicle operations

This *Quick Reference Guide* is not a full description of SCION tC operations. Every SCION tC owner should review the *Owner's Manual* that accompanies this vehicle.

Pay special attention to the boxed information highlighted in color throughout the *Owner's Manual*. Each box contains safe operating instructions to help you avoid injury or equipment malfunction.

All information in this *Quick Reference Guide* is current at the time of printing. Toyota reserves the right to make changes at any time without notice.

INDEX

OVERVIEW	Auto lock/unlock	8
	Engine maintenance	8
	Fuel tank door opener and cap	6
	Hood release	8
	Indicator symbols	4-5
	Instrument cluster	4
	Instrument panel	2-3
	Keyless entry	6
	Smart Key system	7
FEATURES/OPERATIONS	Air Conditioning/Heating	14
	Automatic Transmission	9
	AUX port/USB port	14
	Bottle holders	15
	Clock	13
	Cruise control	11
	Cup holders	15
	Light control-Instrument panel	13
	Lights & turn signals	11
	Moonroof	12
	Parking brake	9
	Power outlet	15
	Seat adjustments-Front	10
	Seat adjustments-Rear	10
	Seats-Head restraints	10
	Steering wheel switches	15
	Tilt steering wheel	9
	Windows	13
	Windshield wipers & washers	12
SAFETY AND EMERGENCY FEATURES	Brake override	19
	Door locks	16
	Floor mat installation	19
	Seat belts	16
	Spare tire & tools	17
	Star Safety System™	18
	Tire Pressure Monitoring (warning) System	16

OVERVIEW

Instrument panel

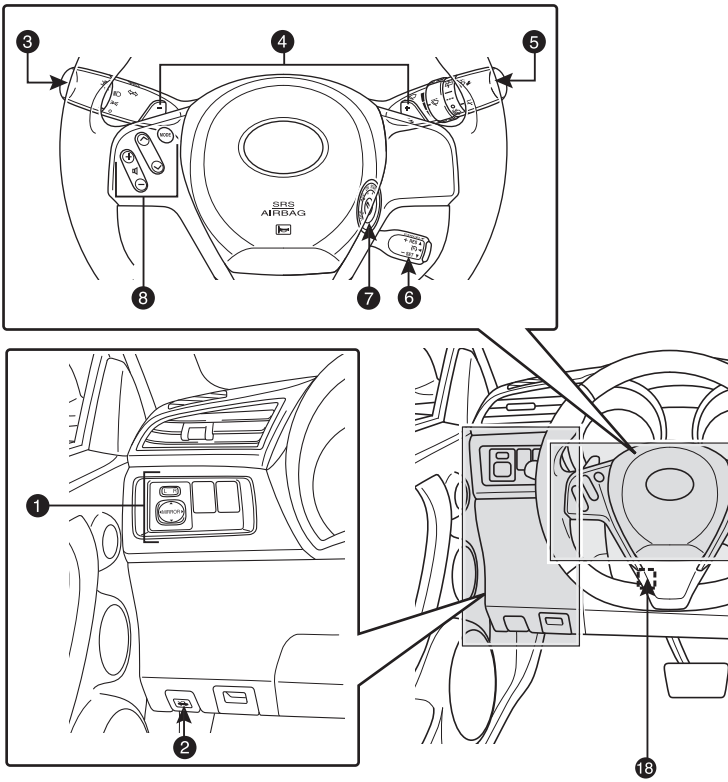

1. Power outside rearview mirror controls
2. Hood release
3. Headlight and turn signal controls
4. Paddle shift switches[1]
5. Wiper and washer controls
6. Cruise control[1]
7. Ignition switch (standard key)[1]
8. Steering wheel audio controls[2]
9. Air Conditioning controls

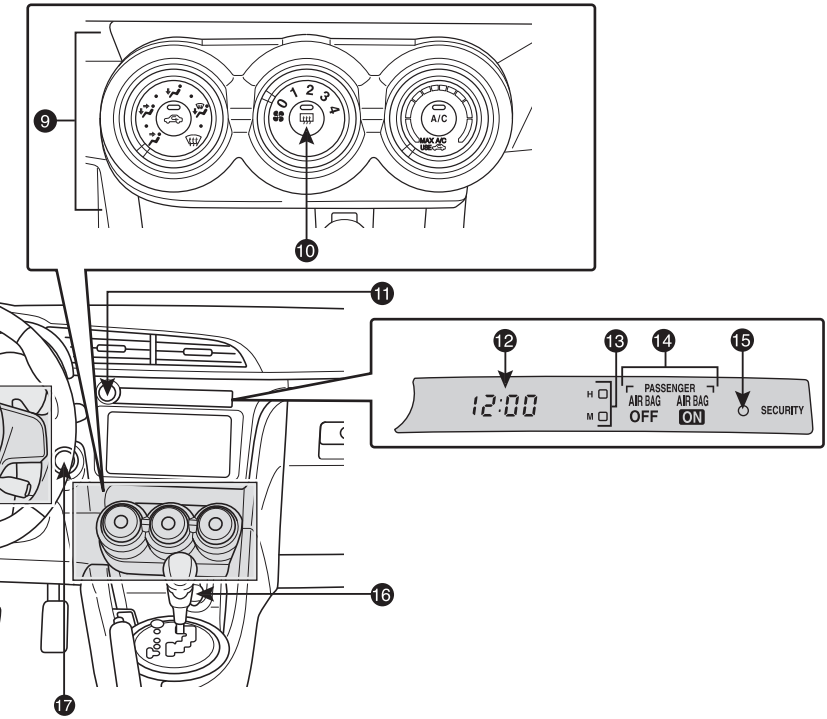

⑩ Rear window defogger switch
⑪ Emergency flasher switch
⑫ Clock
⑬ Clock adjustment buttons
⑭ Front passenger occupant classification indicator
⑮ Engine immobilizer system indicator[1]
⑯ Power outlet
⑰ “ENGINE START STOP” button (Smart Key)[1]
⑱ Tilt and telescopic steering lock release

[1] If equipped
[2] For details, refer to the *“SCION Audio System Owner’s Manual” or “SCION Navigation System Owner’s Manual.”*

Instrument cluster

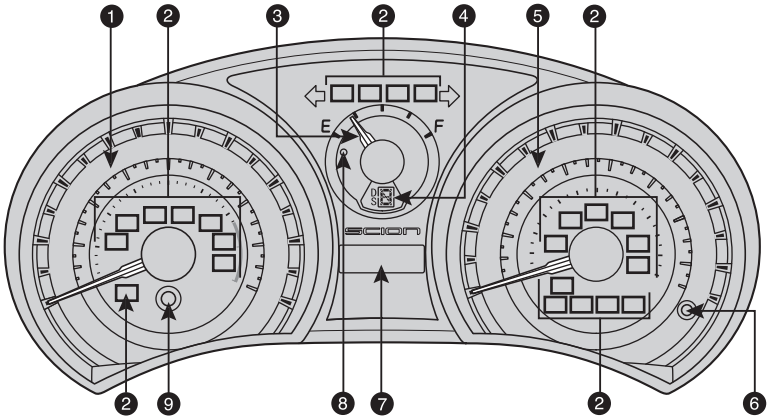

1. Tachometer
2. Service indicator and reminder
3. Fuel gauge
4. Automatic Transmission shift position indicator (if equipped)
5. Speedometer
6. Odometer/trip meter display change button
7. Odometer/trip meter display
8. Low fuel level warning
9. Instrument panel light control knob

Indicator symbols

For details, refer to "Indicators and warning lights," Section 2-2, *2012 Owner's Manual*.

BRAKE	Brake system warning[1]
	Seat belt reminder (alarm will sound if speed is over 12 mph)
	Charging system warning[1]
CHECK	Malfunction/Check Engine indicator[1]
	Low engine oil pressure warning[1]
	Open door warning
PASSENGER AIR BAG OFF / AIR BAG ON	AIR BAG ON and AIR BAG OFF indicator

[1] *If indicator does not turn off within a few seconds of starting engine, there may be a malfunction. Have vehicle inspected by your Toyota dealer.*

Airbag SRS warning[1]

Low Tire Pressure Warning[1]

MAINT REQD Engine oil replacement reminder[1]

Turn signal indicators

Headlight low/high beam indicator

Cruise control indicator[2]

ABS Anti-lock Brake System warning[1]

High coolant temperature warning[1]

Electric power steering system warning[1]

Slip indicator

E Low fuel level warning

A/T OIL TEMP Automatic Transmission fluid temperature warning[1]

OFF Vehicle Stability Control OFF indicator[1]

ECO ECO driving indicator[1]

SECURITY Engine immobilizer system indicator

Low engine coolant temperature indicator

TRAC OFF Traction Control OFF indicator[1]

Smart Key system warning

[2] *If this light flashes, refer to "Cruise control" Section 2-4, 2012 Owner's Manual.*

Keyless entry

Locking operation

Without Smart Key system

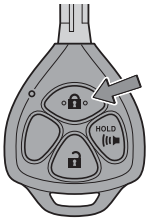

With Smart Key system

Push

Unlocking operation

Without Smart Key system

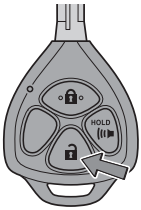

With Smart Key system

Push ONCE: Driver door
TWICE: All doors

NOTE: If a door is not opened within 60 seconds of unlocking, all doors will relock for safety.

Panic button

Push and hold

Fuel tank door opener and cap

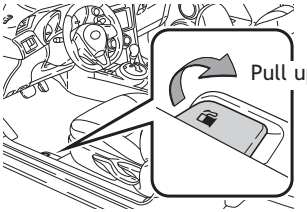

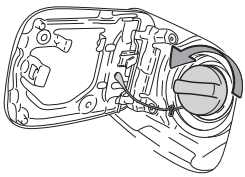

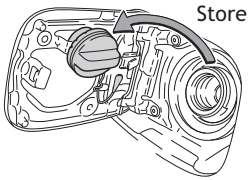

NOTE: Tighten cap until one click is heard. If the cap is not tightened enough, Check Engine “ CHECK ” indicator may illuminate.

Smart Key system (if equipped)

Start function

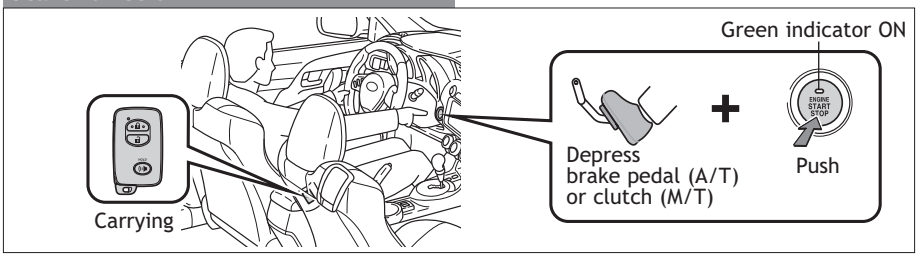

NOTE: Automatic Transmission (A/T) - Gear shift lever must be in Park and brake pedal depressed.
Manual Transmission (M/T) - Clutch must be pressed. Ensure the parking brake is set and the vehicle is in Neutral.

Power (without starting engine)

Without depressing the brake pedal (A/T) or clutch (M/T), pressing the "ENGINE START STOP" switch will change the operation mode in succession from:

ACC	Accessories such as the radio will operate.
↓	
ON	Power ON; the engine not running.
↓	
OFF	All systems OFF.

Locking operation

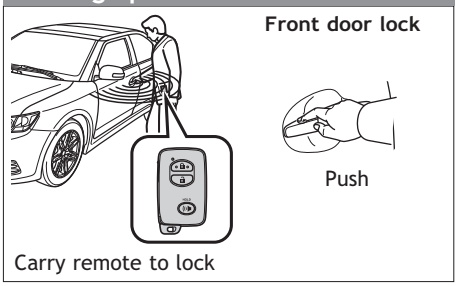

Unlocking operation

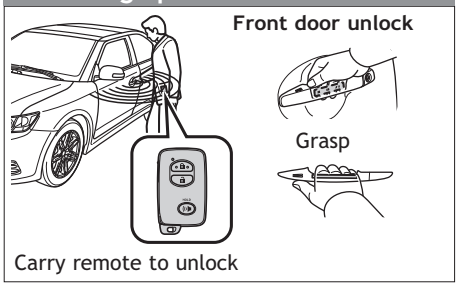

Back door lock/unlock

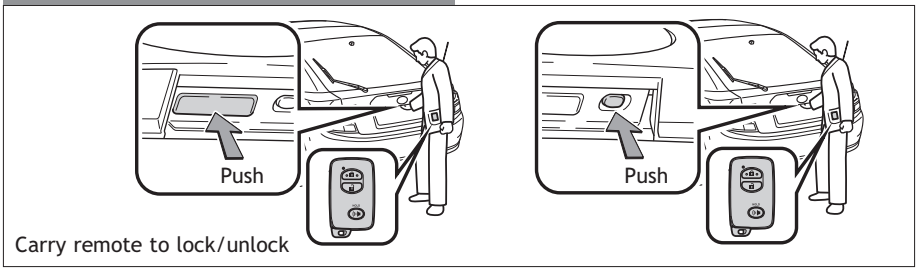

NOTE: Doors may also be locked/unlocked using remote.

Hood release

Engine maintenance

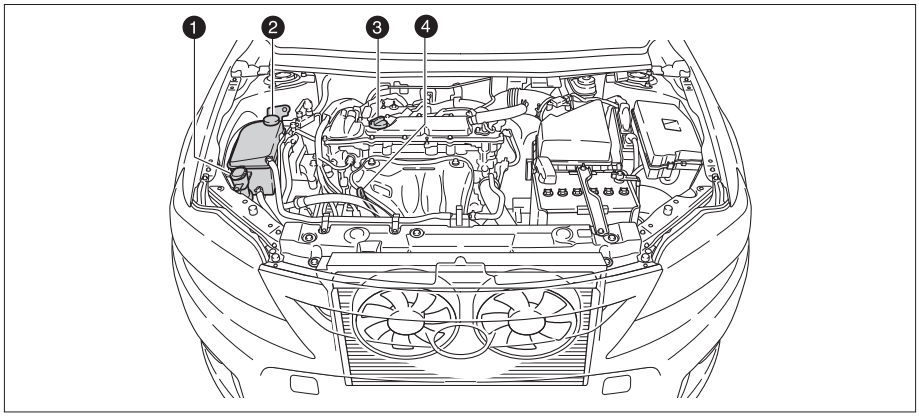

1. Windshield washer fluid tank
2. Engine coolant reservoir
3. Engine oil filler cap
4. Engine oil level dipstick

NOTE: Regularly scheduled maintenance, including oil changes, will help extend the life of your vehicle and maintain performance. Please refer to the "Warranty Maintenance Guide."

Auto lock/unlock

Automatic door locks can be programmed to operate in four different modes, or turned OFF.

-Doors lock when shifting from Park (Automatic Transmission only.)
-Doors lock when the vehicle speed goes above approximately 12 mph.
-Doors unlock when shifting into Park (Automatic Transmission only.)

Vehicles without Smart Key system

-Doors unlock when the ignition switch is set from "ON" to "ACC" or "LOCK" and driver's door is opened.

Vehicles with Smart Key system

-Doors unlock when the "ENGINE START STOP" switch is set to OFF and driver's door is opened.

Refer to the *Owner's Manual* for more details.

Automatic Transmission (if equipped)

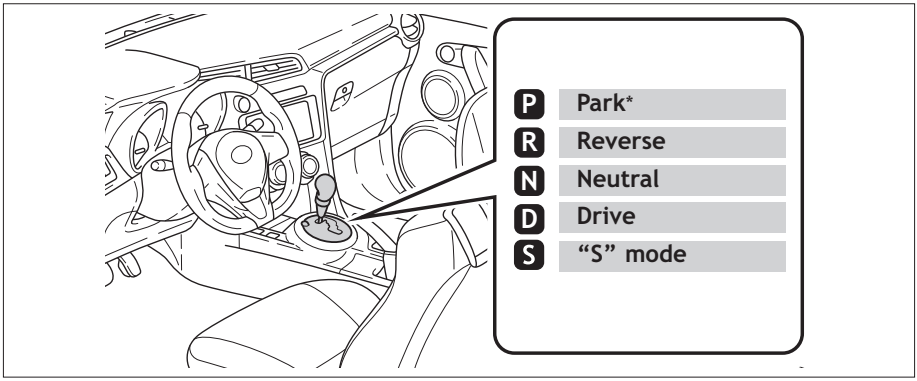

* The "ENGINE START STOP"/ignition switch must be "ON" and the brake pedal depressed to shift from Park.

Downshifting increases power going uphill, or provides engine braking downhill. For best fuel economy during normal driving conditions, always drive with the shift lever in the "D" position.

Tilt steering wheel

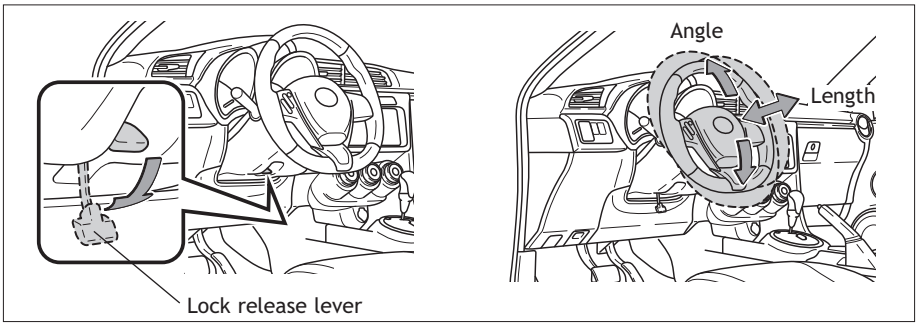

Hold wheel, push lever down, set angle and length, and return lever.
NOTE: Do not attempt to adjust while the vehicle is in motion.

Parking brake

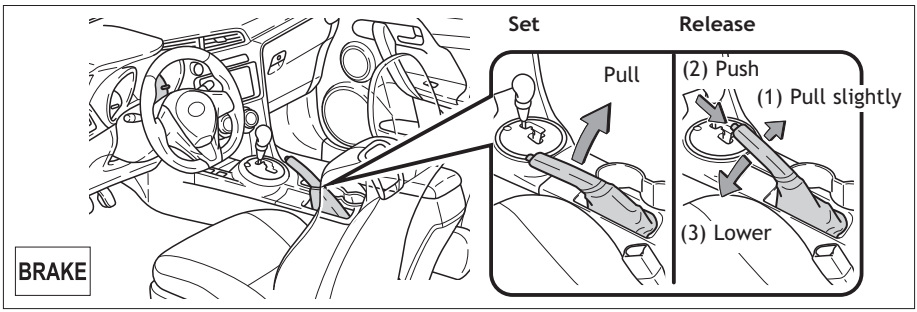

Seat adjustments-Front

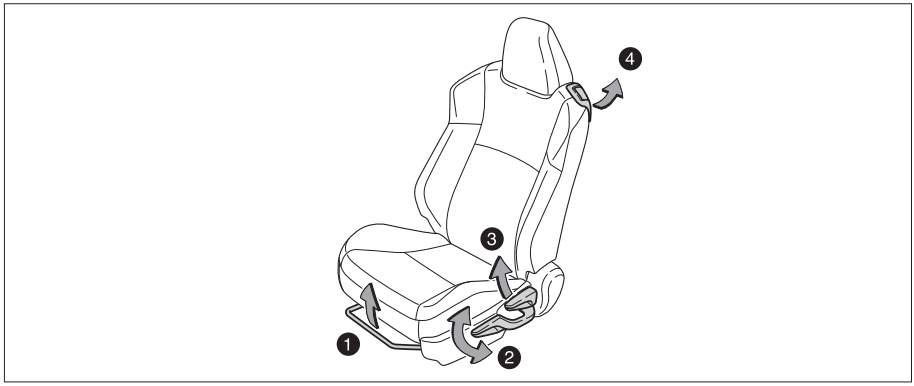

1. Seat position (forward/backward)
2. Height crank (driver side only)
3. Seatback angle
4. Seatback lock release

Seat adjustments-Rear

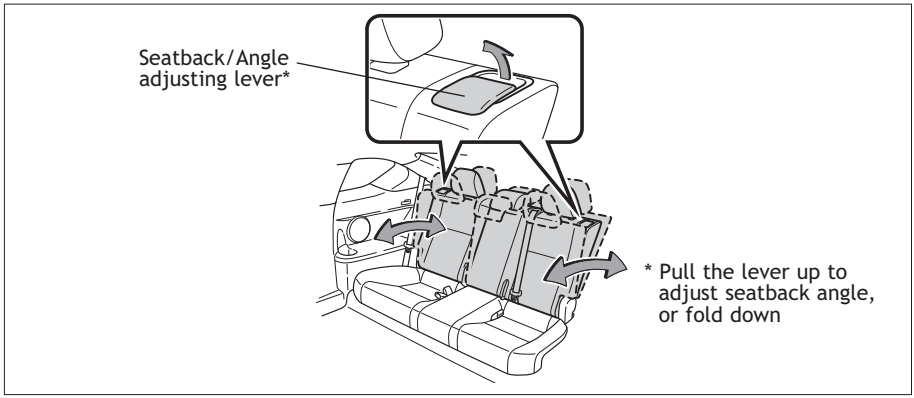

Seats-Head restraints

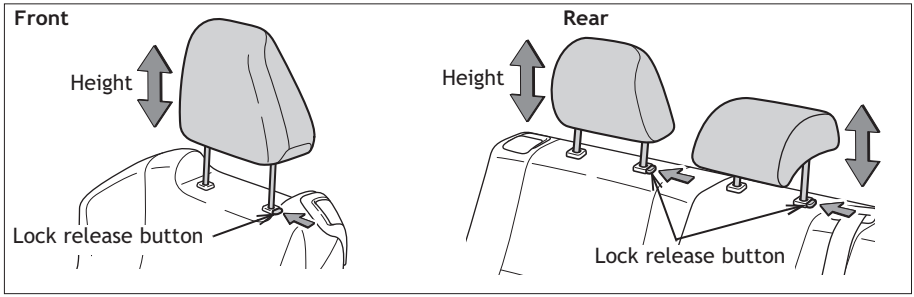

Cruise control (if equipped)

Turning system ON/OFF

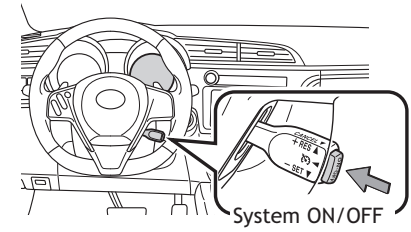

Functions

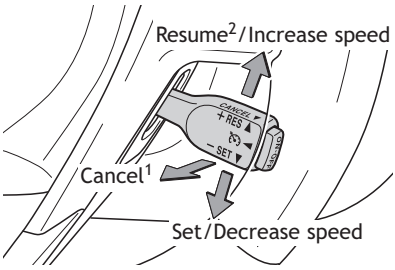

[1] The set speed may also be cancelled by depressing the brake pedal.
[2] The set speed may be resumed once vehicle speed reaches 25 mph.

Lights & turn signals

Headlights

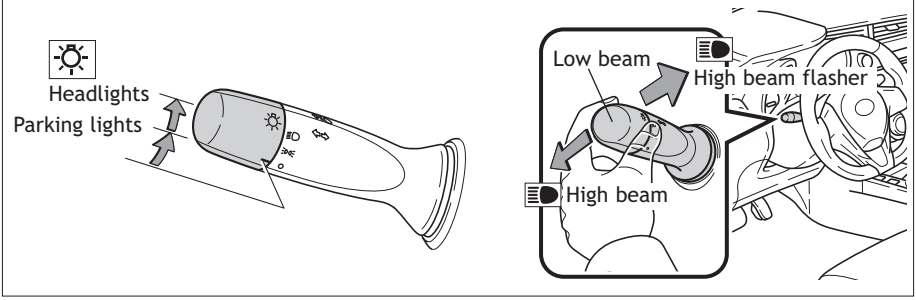

Turn signals

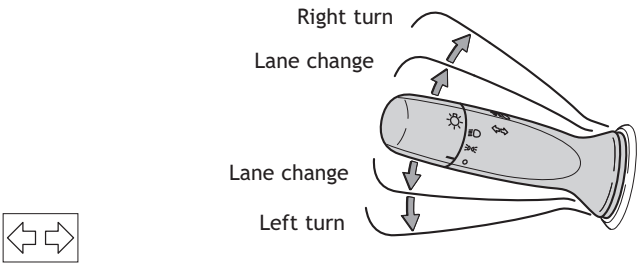

Windshield wipers & washers

Front

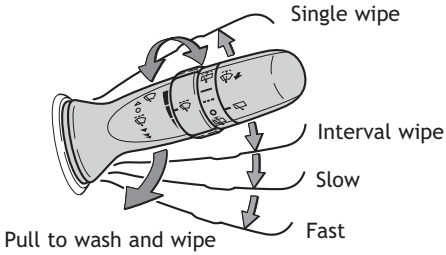

Intermittent windshield wiper frequency adjustment

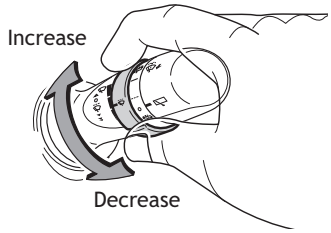

Rear (if equipped)

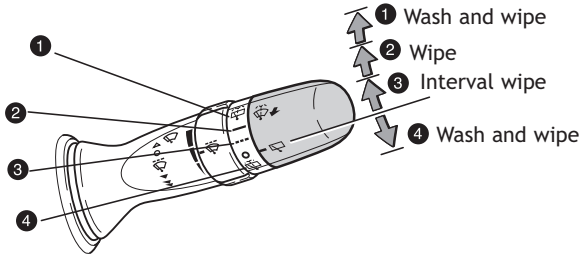

Moonroof (if equipped)

Opening operation

Push once to tilt up; again to open

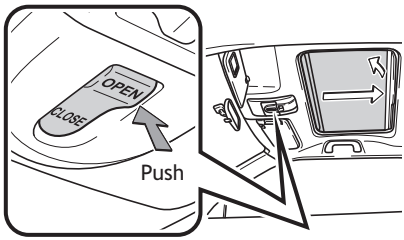

Closing operation

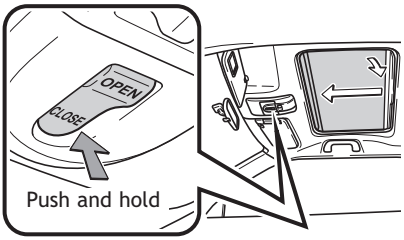

Windows

Driver door window controls

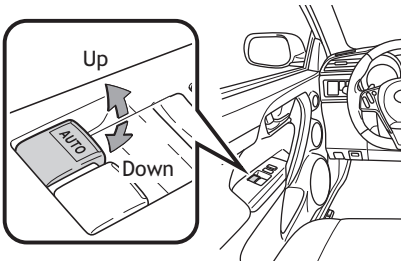

Window lock switch

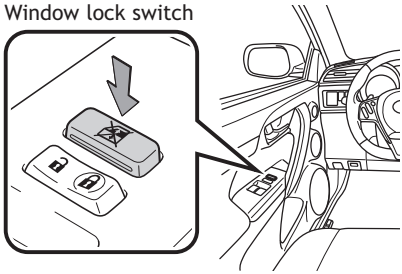

Automatic operation (driver's window) Push the switch completely down and release to fully open. To stop window midway, lightly push the switch in the opposite direction.

Window lock switch Deactivates all passenger windows. Driver's window remains operable.

Light control-Instrument panel

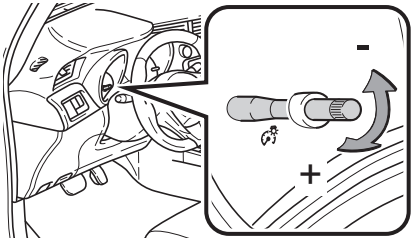

Brightness control

Clock

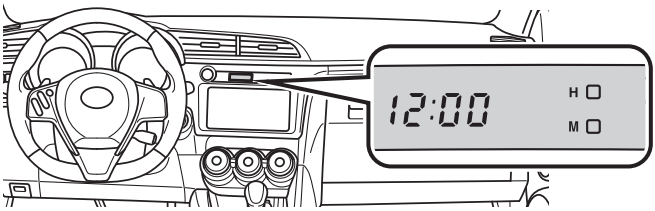

H-Hour set
M-Minute set

Air Conditioning/Heating

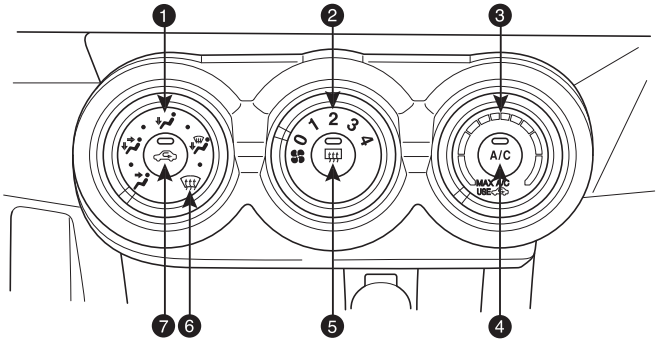

1. Airflow vent
   "" mode uses fresh air ("" indicator OFF) to reduce window fogging.
2. Fan speed
3. Temperature selector
4. Air Conditioning ON/OFF
5. Rear window defogger
6. Windshield airflow
7. Recirculate cabin air (fresh air when OFF)

AUX port/USB port

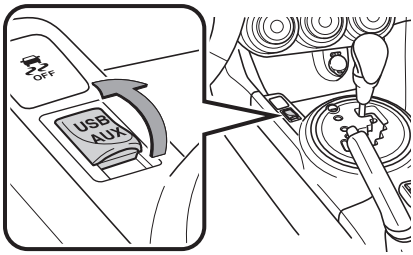

AUX port
By inserting a mini plug (not included) into the AUX port, you can listen to music from a portable audio device through the vehicle's speaker system while in AUX mode.

USB port
By connecting a USB memory or USB-compatible portable audio device to the USB port, you can listen to music from the portable audio device or USB memory through the vehicle's speaker system.

Refer to the *SCION Audio System Owner's Manual* or the *SCION Navigation System Owner's Manual* for more details.

Steering wheel switches

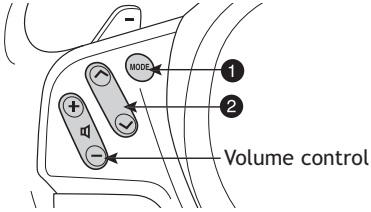

❶ **“MODE”**
Push to turn audio ON and select an audio mode. Push and hold to turn audio system OFF.

❷ **“ ∨ ∧ ”**
Use to search within the selected audio medium (radio, CD, iPod®, etc.).

Refer to the *SCION Audio System Owner’s Manual* or the *SCION Navigation System Owner’s Manual* for more details.

Power outlet

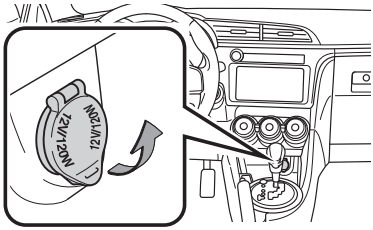

Designed for car accessories. Ignition switch/“ENGINE START STOP” switch must be in the “ACC” or “ON” position to be used.

Cup holders

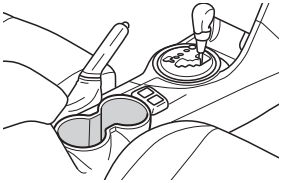

Bottle holders

Front

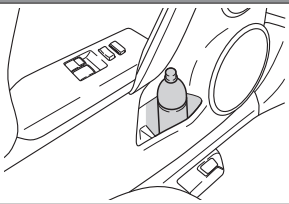

Rear

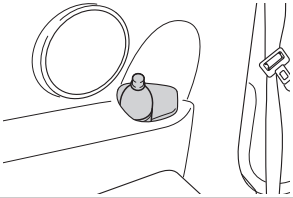

SAFETY AND EMERGENCY FEATURES

Door locks

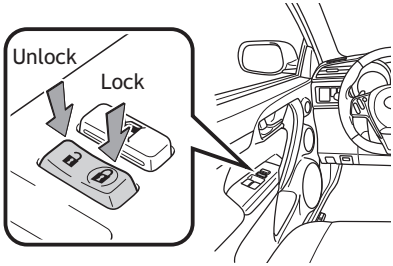

Seat belts

If belt is fully extended, then retracted even slightly, it cannot be re-extended beyond that point, unless fully retracted again. This feature is used to help hold child restraint systems securely.

To find more information about seat belts, and how to install a child restraint system, refer to the *Owner's Manual*.

Tire Pressure Monitoring (warning) System

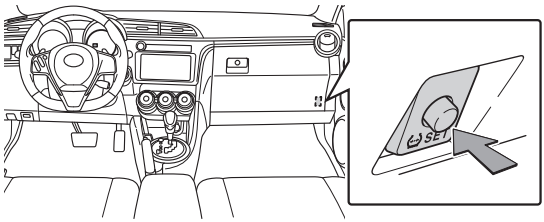

If tire pressure indicator light is on, check/adjust each tire.

After adjusting tire pressures, or after tires have been rotated or replaced, turn the ignition switch to "ON" and press and hold the " SET" button until indicator blinks three times. Then allow the vehicle to sit for a few minutes to allow initialization to complete.

Refer to the load label on the door jamb or the *Owner's Manual* for tire inflation specifications.

If the tire pressure indicator flashes for more than 60 seconds and then remains on, take the vehicle to your local Toyota dealer.

Spare tire & tools

Tool location

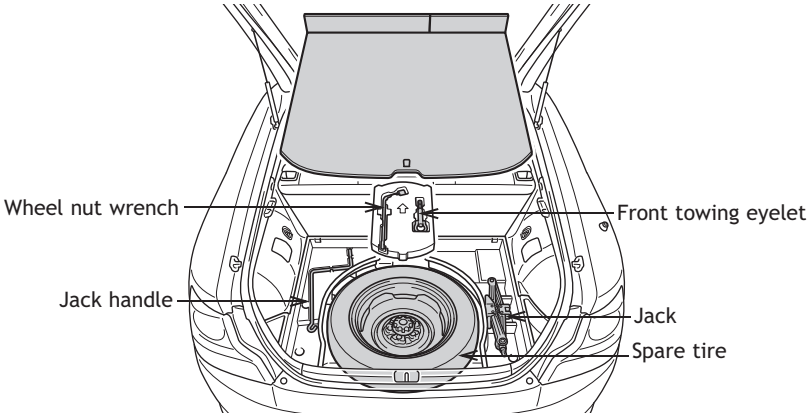

Removing the spare tire

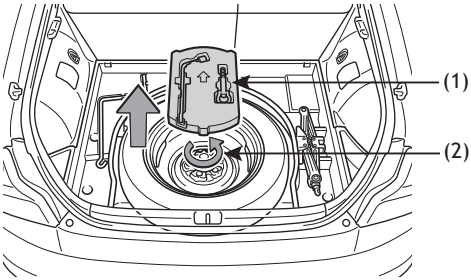

(1) Remove the spare tire cover.
(2) Loosen and remove the bolt.

Refer to the *Owner's Manual* for jack positioning and tire changing procedures.

Star Safety System™

All new Toyota vehicles come standard with the Star Safety System™, which combines Traction Control (TRAC), Electronic Brake-force Distribution (EBD), Vehicle Stability Control (VSC), Brake Assist (BA) and an Anti-lock Braking System (ABS).

Vehicle Stability Control (VSC)

VSC helps prevent loss of traction during cornering by reducing engine power and applying brake force to selected wheels.

Toyota's VSC monitors steering angle and the direction your vehicle is traveling. When it senses that the front or rear wheels begin to lose traction, VSC reduces engine power and applies braking to selected wheels. This helps restore traction and vehicle control.

Traction Control (TRAC)

VSC helps prevent loss of traction during cornering by reducing engine power, and Traction Control helps maintain traction on loose gravel and wet, icy, or uneven surfaces by applying brake force to the spinning wheel(s).

Toyota's TRAC sensors are activated when one of the drive wheels starts to slip. TRAC limits engine output and applies the brakes to the spinning wheel. This transfers power to the wheels that still have traction to help you drive safely.

Brake Assist (BA)

Brake Assist is designed to detect sudden or "panic" braking, and then add braking pressure to decrease the vehicle's stopping distance. When there's only a split second to react, Brake Assist can add additional brake pressure more quickly than just the driver alone can.

Electronic Brake Force Distribution (EBD)

Toyota's ABS technology has Electronic Brake-force Distribution (EBD) to help maintain stability and balance when braking. Abrupt stops cause the vehicle to tilt forward, reducing the braking power of the rear wheels. EBD responds to sudden stops by redistributing brake force to maximize the braking effectiveness of all four wheels.

Anti-Lock Brake System (ABS)

ABS helps prevent brakes from locking up by "pulsing" brake pressure to each wheel. This limits brake lockup and provides the maximum brake effectiveness for the current road conditions.

Toyota's ABS sensors detect which wheels are locking up and limits wheel lockup by "pulsing" each wheel's brakes independently. Pulsing releases brake pressure repeatedly for fractions of a second. This helps the tires attain the maximum traction that the current road conditions will allow, helping you stay in control.

Brake override

Smart Stop Technology automatically reduces engine power when the accelerator and brake pedals are pressed simultaneously under certain conditions.

Brake Override engages when the accelerator is depressed first and the brakes are applied firmly for longer than one-half second at speeds greater than five miles per hour.

Brake Override doesn't engage if the brake pedal is depressed before the accelerator pedal, allowing vehicles to start on a steep hill and safely accelerate without rolling backward.

Floor mat installation

There are two types of Toyota floor mats: carpeted and all-weather. Each vehicle has model-specific floor mats. Installation is easy.

For safety, follow these steps:

- Only use floor mats designed for your specific model.
- Use only one floor mat at a time, using the retaining hooks to keep the mat in place.
- Install floor mats right side up.

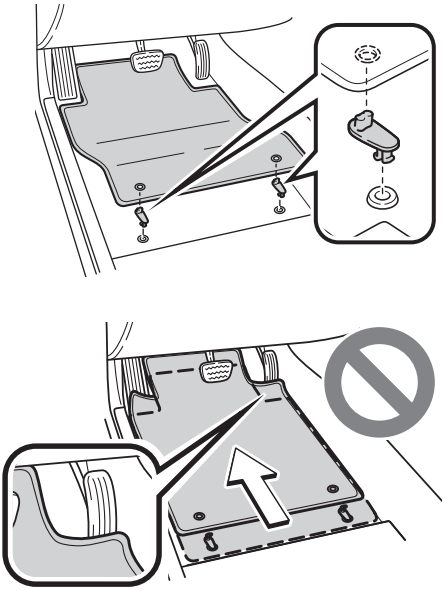

NOTES

EMAIL
www.scion.com
→ Contact

-

CHAT
www.scion.com
→ Have a Question?
→ Contact

-

PHONE
1.866.70.SCION

-

MAIL
SCION
19001 S. Western Ave.
D102, P.O. Box 2742
Torrance, CA 90509-2742
USA

-

WEB
www.scion.com

-

MIX
Paper from responsible sources
FSC® C102835
FSC
www.fsc.org

©2011 Scion, a marque of Toyota Motor Sales, U.S.A., Inc.
Printed in U.S.A. 5/11
11-TCS-05091

00505-QRG12-TC