SECTION HA

HEATER & AIR CONDITIONING SYSTEM

CONTENTS

BASIC INSPECTION 3

DIAGNOSIS AND REPAIR WORKFLOW 3
Work Flow 3

SYSTEM DESCRIPTION 5

REFRIGERATION SYSTEM 5
System Diagram 5
System Description 5
Component Parts Location 6
Component Description 6

SYMPTOM DIAGNOSIS 8

REFRIGERATION SYSTEM SYMPTOMS 8
Trouble Diagnosis For Unusual Pressure 8
Symptom Table 8

NOISE 10
Symptom Table 10

PRECAUTION 11

PRECAUTIONS 11
Precaution for Supplemental Restraint System (SRS) "AIR BAG" and "SEAT BELT PRE-TENSIONER" 11
Precautions for Removing of Battery Terminal 11
Precaution for Procedure without Cowl Top Cover...12
Precautions For Refrigerant System Service 12

PREPARATION 16

PREPARATION 16
Special Service Tool 16
Commercial Service Tool 19
Sealant or/and Lubricant 19

PERIODIC MAINTENANCE 20

DESCRIPTION 20
Service Equipment 20

REFRIGERANT 22
Description 22
Leak Test 22
Recycle Refrigerant 24
Charge Refrigerant 24

LUBRICANT 26
Description 26
Inspection 26
Perform Lubricant Return Operation 26
Lubricant Adjusting Procedure for Components Replacement Except Compressor 26
Lubricant Adjusting Procedure for Compressor Replacement 27

PERFORMANCE TEST 29
Inspection 29

REMOVAL AND INSTALLATION 31

COMPRESSOR 31
Exploded View 31

COMPRESSOR 32
COMPRESSOR : Removal and Installation 32

MAGNET CLUTCH 33
MAGNET CLUTCH : Removal and Installation 33
Inspection 34

COOLER PIPE AND HOSE 35
Exploded View 35

HIGH-PRESSURE FLEXIBLE HOSE 35
HIGH-PRESSURE FLEXIBLE HOSE : Removal and Installation 35

LOW-PRESSURE FLEXIBLE HOSE 36
LOW-PRESSURE FLEXIBLE HOSE : Removal and Installation 36

HIGH-PRESSURE PIPE 37

HIGH-PRESSURE PIPE : Removal and Installation 37

CONDENSER 39
Exploded View 39

CONDENSER 39
CONDENSER : Removal and Installation 39

LIQUID TANK 40
LIQUID TANK : Removal and Installation 40

REFRIGERANT PRESSURE SENSOR 41
REFRIGERANT PRESSURE SENSOR : Removal and Installation 41

A/C UNIT ASSEMBLY 42
Exploded View (Automatic Air Conditioner) 42
Exploded View (Manual Air Conditioner) 44

A/C UNIT ASSEMBLY 46
A/C UNIT ASSEMBLY : Removal and Installation.. 46

EVAPORATOR 48
EVAPORATOR : Removal and Installation 48

HEATER CORE 48
HEATER CORE : Removal and Installation 48

EXPANSION VALVE 49
Exploded View 49
Removal and Installation 49

SERVICE DATA AND SPECIFICATIONS (SDS) 51

SERVICE DATA AND SPECIFICATIONS (SDS) 51
Compressor 51
Lubricant 51
Refrigerant 51
Engine Idling Speed 51
Belt Tension 51

BASIC INSPECTION

DIAGNOSIS AND REPAIR WORKFLOW

Work Flow

INFOID:0000000009950322

OVERALL SEQUENCE

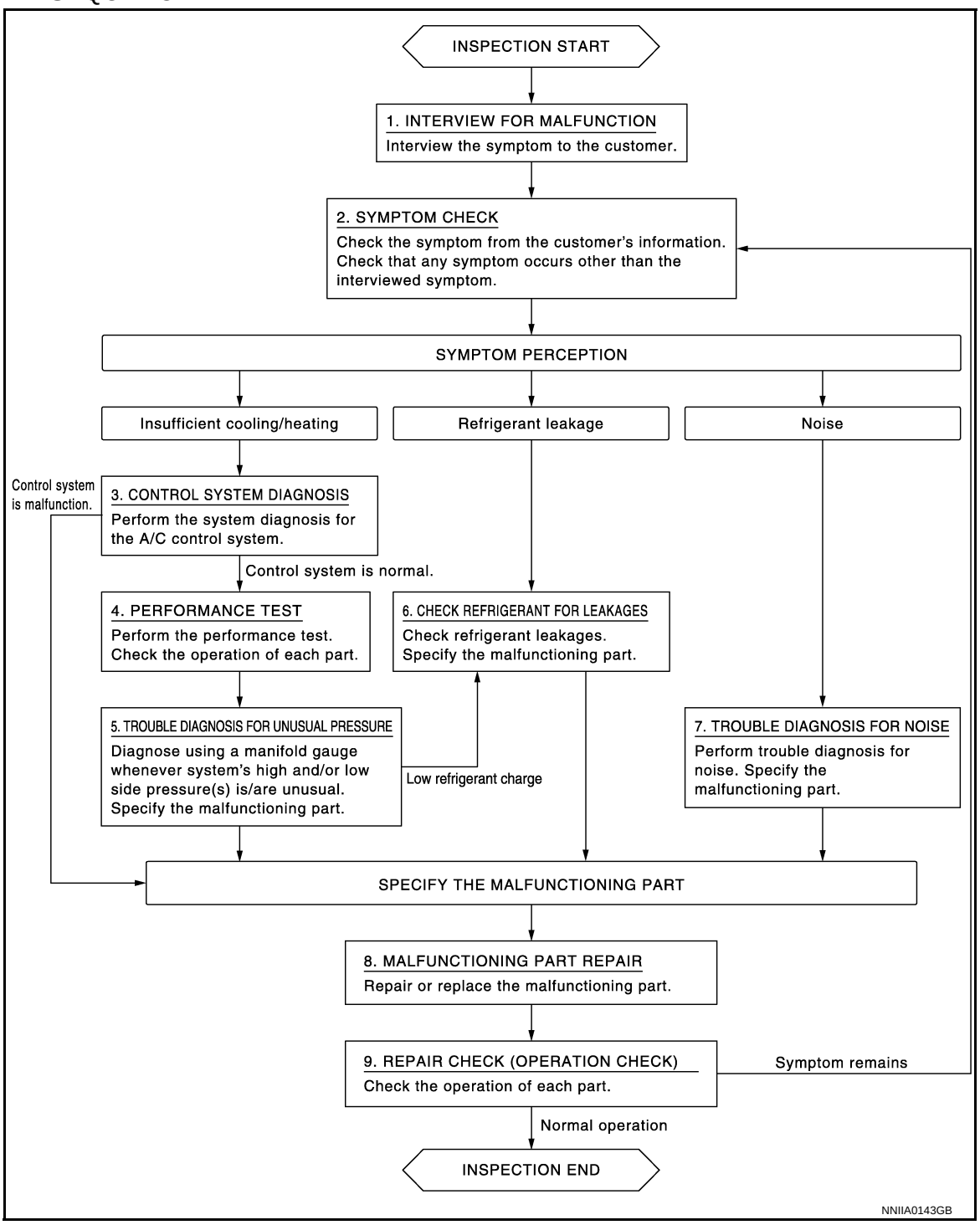

DETAILED FLOW

1. INTERVIEW FOR MALFUNCTION

Interview the symptom to the customer.

>> GO TO 2.

2. SYMPTOM CHECK

Check the symptom from the customer's information. Check that any symptom occurs other than the interviewed symptom.

Insufficient cooling/heating>>GO TO 3.
Refrigerant leakage>>GO TO 6.
Noise >> GO TO 7.

3. CONTROL SYSTEM DIAGNOSIS

Perform the system diagnosis for the A/C control system. Refer to HAC-5, "Work Flow" (AUTOMATIC AIR CONDITIONER) or HAC-133, "Work Flow" (MANUAL AIR CONDITIONER).

Is A/C control system normal?

YES >> GO TO 4.
NO >> GO TO 8.

4. PERFORMANCE TEST

Perform the performance test. Check the operation of each part. Refer to HA-29, "Inspection".

>> GO TO 5.

5. TROUBLE DIAGNOSIS FOR UNUSUAL PRESSURE

Diagnose using a manifold gauge whenever system's high and/or low side pressure(s) is/are unusual. Specify the malfunctioning part. Refer to HA-8, "Symptom Table".

Low refrigerant charge>>GO TO 6.
Except above>>GO TO 8.

6. CHECK REFRIGERANT FOR LEAKAGES

Check refrigerant for leakages. Specify the malfunctioning part. Refer to HA-22, "Leak Test".

>> GO TO 8.

7. TROUBLE DIAGNOSIS FOR NOISE

Perform trouble diagnosis for noise. Specify the malfunctioning part. Refer to HA-10, "Symptom Table".

>> GO TO 8.

8. MALFUNCTION PART REPAIR

Repair or replace the malfunctioning part.

>> GO TO 9.

9. REPAIR CHECK (OPERATION CHECK)

Check the operation of each part.

Does it operate normally?

YES >> INSPECTION END
NO >> GO TO 2.

SYSTEM DESCRIPTION

REFRIGERATION SYSTEM

System Diagram

INFOID:0000000009950323

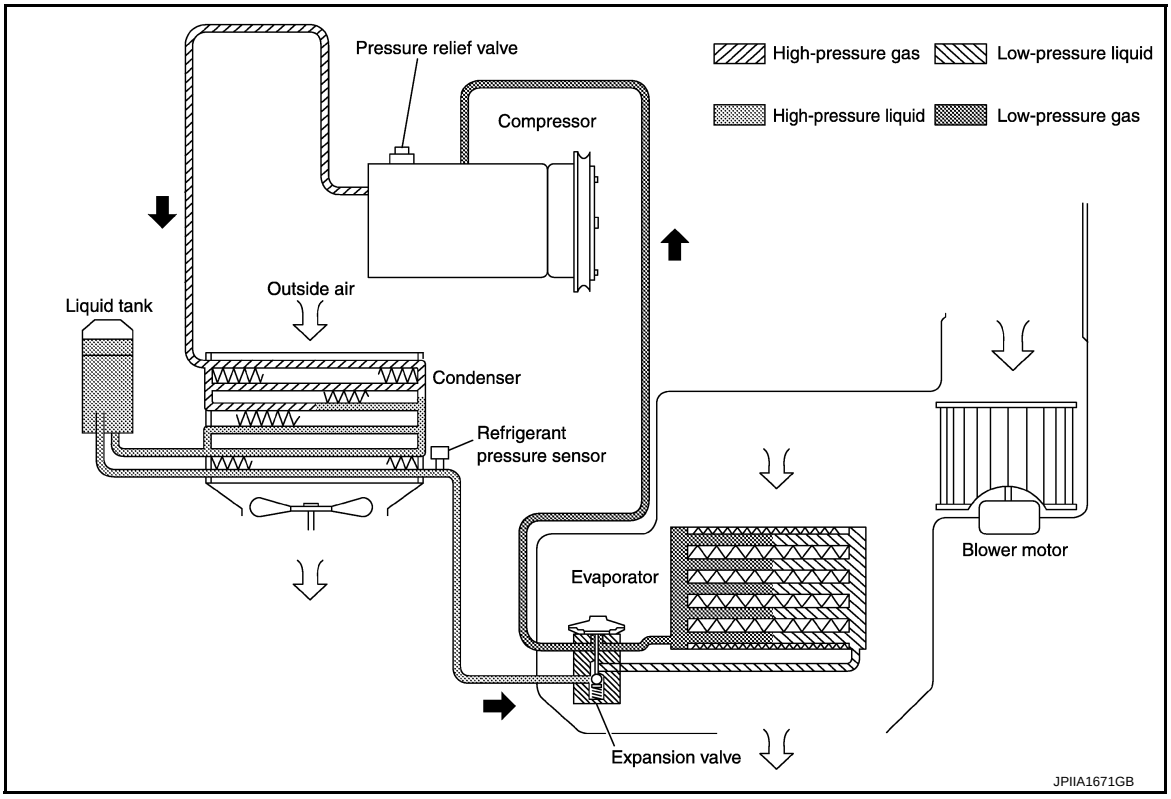

System Description

INFOID:0000000009950324

REFRIGERANT CYCLE

Refrigerant Flow

The refrigerant flows from the compressor, through the condenser with liquid tank, through the evaporator, and back to the compressor. The refrigerant evaporation in the evaporator is controlled by an externally equalized expansion valve, located inside the evaporator case.

Freeze Protection

Automatic air conditioner

- When intake sensor detects that evaporator surface temperature is 2°C (36°F) or less, A/C auto amp. requests BCM to turn the compressor OFF.
- BCM requests ECM to turn the compressor to OFF by the signal from A/C auto amp., and ECM makes A/C relay to OFF, and stops the compressor.

Manual air conditioner

- When thermo control amp. detects that evaporator surface temperature becomes 2°C (36°F) or less, BCM requests ECM to turn the compressor OFF, and stops the compressor.

REFRIGERANT SYSTEM PROTECTION

Refrigerant Pressure Sensor

- The refrigerant system is protected against excessively high- or low-pressures by the refrigerant pressure sensor, installed at the condenser exit. The refrigerant pressure sensor detects the pressure inside the refrigerant line and sends the voltage signal to the ECM if the system pressure rises above, or falls below the specifications.
- ECM turns the A/C relay to OFF and stops the compressor when the high-pressure side detected by refrigerant pressure sensor is following conditions;

- Approximately 3,120 kPa (31.8 kg/cm^2, 452 psi) or more (Engine speed is less than 1,500 rpm.)
- Approximately 2,740 kPa (27.9 kg/cm^2, 397 psi) or more (Engine speed is 1,500 rpm or more.)
- Approximately 120 kPa (1.2 kg/cm^2, 17 psi) or less

Pressure Relief Valve
The refrigerant system is also protected by a pressure relief valve, located in the rear head of the compressor. The release port on the pressure relief valve automatically opens and releases refrigerant into the atmosphere when the pressure of refrigerant in the system increases to an unusual level [more than 3,800 kPa (38.8 kg/cm^2, 551 psi)].

Component Parts Location

INFOID:0000000009950325

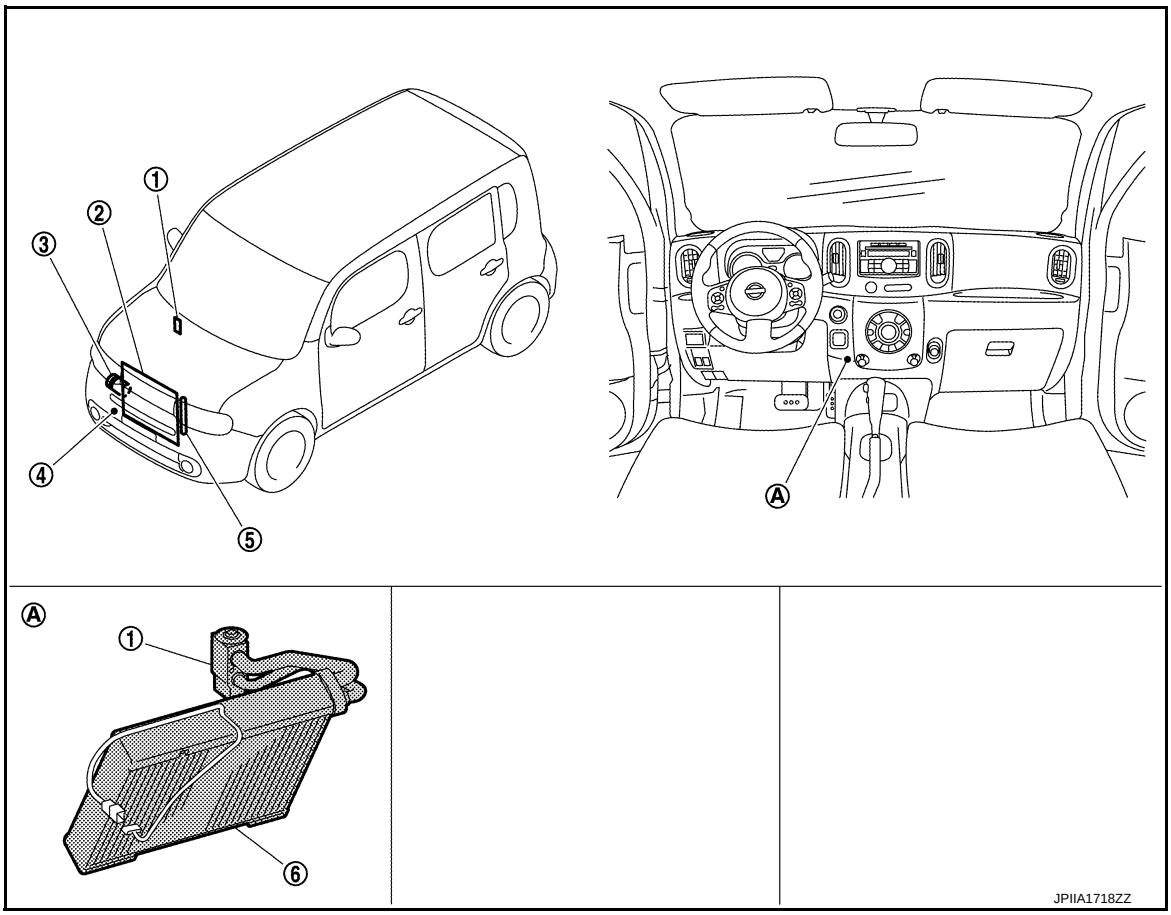

1. Expansion valve
2. Condenser
3. Compressor
4. Refrigerant pressure sensor
5. Liquid tank
6. Evaporator

A. Built-in heater & cooling unit assembly

Component Description

INFOID:0000000009950326

Component	Description
Evaporator	The mist form liquid refrigerant transforms to gas by evaporation by the air conveyed from blower motor. The air is cooled by the heat by evaporation.
Condenser	Cools refrigerant discharged from compressor, and transforms it to liquid refrigerant.
Compressor	Intakes, compresses, and discharges refrigerant, to circulate refrigerant inside the refrigerant cycle.
Refrigerant pressure sensor	Refer to EC-425, "Description".

Component	Description
Liquid tank	Eliminates foreign matter in refrigerant, and stores temporarily liquid refrigerant.
Expansion valve	Transforms high-pressure liquid refrigerant to mist form low-pressure liquid refrigerant by drawing function.

SYMPTOM DIAGNOSIS

REFRIGERATION SYSTEM SYMPTOMS

Trouble Diagnosis For Unusual Pressure

INFOID:0000000009950327

Diagnose using a manifold gauge whenever system's high and/or low side pressure(s) is/are unusual. The marker above the gauge scale in the following tables indicates the standard (usual) pressure range. Refer to above table (Ambient air temperature-to-operating pressure table) since the standard (usual) pressure, however, differs from vehicle to vehicle.

Symptom Table

INFOID:0000000009950328

Gauge indication	Refrigerant cycle	Probable cause	Corrective action
Both high- and low-pressure sides are too high. 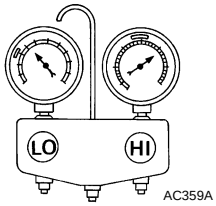	The pressure returns to normal soon after sprinkling water on condenser.	Overfilled refrigerant.	Collect all refrigerant, evacuate refrigerant cycle again, and then refill it with the specified amount of refrigerant.
	Air flow to condenser is insufficient.	Insufficient condenser cooling performance. • Poor fan rotation of radiator and condenser. • Improper installation of air guide. • Clogged or dirty condenser fins.	• Repair or replace malfunctioning parts. • Clean and repair condenser fins.
	When compressor is stopped, a high-pressure reading quickly drops by approximately 196 kPa (2 kg/cm^2, 28 psi). It then gradually decreases.	Air mixed in refrigerant cycle.	Collect all refrigerant, evacuate refrigerant cycle again, and then refill it with the specified amount of refrigerant.
	• Low-pressure pipe is cooler than the outlet of evaporator. • Low-pressure pipe is frosted.	Expansion valve opened too much (excessive flow of refrigerant).	Replace expansion valve.
High-pressure side is excessively high and low-pressure side is too low. 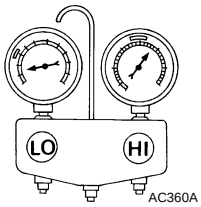	High-pressure pipe and upper side of condenser become hot, however, liquid tank does not become so hot.	Clogged or crushed high-pressure pipe located between compressor and condenser.	Repair or replace the malfunctioning parts.
High-pressure side is too low and low-pressure side is too high. 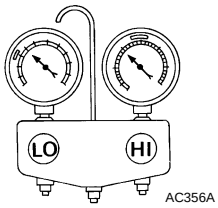	• The readings of both sides become equal soon after compressor operation stops. • There is no temperature difference between high- and low-pressure sides.	Malfunction in compressor system (insufficient compressor pressure operation). • Damage or breakage of valve. • Malfunctioning gaskets.	Replace compressor.

Gauge indication	Refrigerant cycle	Probable cause	Corrective action
Both high- and low-pressure sides are too low. 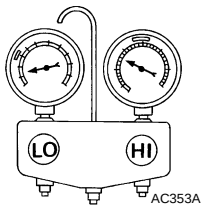	• The area around evaporator outlet does not become cold. • The area around evaporator inlet becomes frosted.	Clogged expansion valve. • Breakage of temperature sensor. • Clogging by foreign material.	Eliminate foreign material from expansion valve, or replace it.
	• There is a temperature difference between the areas around outlet and inlet pipes of liquid tank. • Liquid tank becomes frosted.	Malfunction in inner liquid tank (clogged strainer).	Replace liquid tank.
	Evaporator becomes frosted.	Clogged or crushed low-pressure pipe.	Repair or replace malfunctioning parts.
		Malfunction in intake sensor (AUTOMATIC AIR CONDITIONER) or thermo control amp. (MANUAL AIR CONDITIONER).	• Check intake sensor system. Refer to HAC-39, "Diagnosis Procedure" (AUTOMATIC AIR CONDITIONER). • Check thermo control amp. system. Refer to HAC-151, "Diagnosis Procedure" (MANUAL AIR CONDITIONER).
	There is a small temperature difference between the high and low pressure pipes for refrigerant cycle.	• Shortage of refrigerant. • Leakage of refrigerant.	• Check for leakage. • Collect all refrigerant, evacuate refrigerant cycle again, and then refill it with the specified amount of refrigerant.
Low-pressure side sometimes becomes negative. 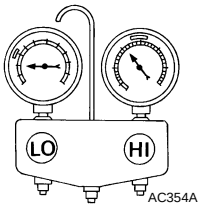	• Sometimes the area around evaporator outlet does not become cold. • Sometimes the area around evaporator inlet is frosted.	• Icing caused by the mixing of water in cooler cycle. • Deteriorated dryer in liquid tank.	• Collect all refrigerant. • Evacuate refrigerant cycle completely, and then refill it with the specified amount of refrigerant. At this time, always replace liquid tank.

NOISE

Symptom Table

INFOID:0000000009950329

Symptom	Noise source	Probable cause	Corrective action
Unusual noise from compressor when A/C is ON.	Inside of compressor	Wear, breakage, or clogging of foreign material in inner parts.	Check compressor oil. Refer to HA-26, "Inspection".
	Magnet clutch	Contact of clutch disc with pulley.	Check clearance between clutch disc and pulley. Refer to HA-34, "Inspection".
	Compressor body	Loosened compressor mounting bolts.	Check bolts for tightness. Refer to HA-31, "Exploded View".
Unusual noise from cooler piping.	Cooler piping (pipe and flexible hose)	Improper installation of clip and bracket.	Check the installation condition of the cooler piping. Refer to HA-35, "Exploded View".
Unusual noise from expansion valve when A/C is ON.	Expansion valve	Shortage of refrigerant.	• Check for leakage. • Collect all refrigerant, evacuate refrigerant cycle again, and then refill it with the specified amount of refrigerant.
		Wear, breakage, or clogging of foreign material in inner parts.	Eliminate foreign material from expansion valve, or replace it.
Unusual noise from belt.	—	Loosened belt	Check belt tension. Refer to EM-13, "Checking".
		Internal compressor parts get locked	Replace compressor.

PRECAUTION

PRECAUTIONS

Precaution for Supplemental Restraint System (SRS) "AIR BAG" and "SEAT BELT PRE-TENSIONER"

INFOID:0000000009950330

The Supplemental Restraint System such as “AIR BAG” and “SEAT BELT PRE-TENSIONER”, used along with a front seat belt, helps to reduce the risk or severity of injury to the driver and front passenger for certain types of collision. This system includes seat belt switch inputs and dual stage front air bag modules. The SRS system uses the seat belt switches to determine the front air bag deployment, and may only deploy one front air bag, depending on the severity of a collision and whether the front occupants are belted or unbelted.
Information necessary to service the system safely is included in the “SRS AIR BAG” and “SEAT BELT” of this Service Manual.

WARNING:
Always observe the following items for preventing accidental activation.
- **To avoid rendering the SRS inoperative, which could increase the risk of personal injury or death in the event of a collision that would result in air bag inflation, all maintenance must be performed by an authorized NISSAN/INFINITI dealer.**
- **Improper maintenance, including incorrect removal and installation of the SRS, can lead to personal injury caused by unintentional activation of the system. For removal of Spiral Cable and Air Bag Module, see “SRS AIR BAG”.**
- **Never use electrical test equipment on any circuit related to the SRS unless instructed to in this Service Manual. SRS wiring harnesses can be identified by yellow and/or orange harnesses or harness connectors.**

PRECAUTIONS WHEN USING POWER TOOLS (AIR OR ELECTRIC) AND HAMMERS

WARNING:
Always observe the following items for preventing accidental activation.
- **When working near the Air Bag Diagnosis Sensor Unit or other Air Bag System sensors with the ignition ON or engine running, never use air or electric power tools or strike near the sensor(s) with a hammer. Heavy vibration could activate the sensor(s) and deploy the air bag(s), possibly causing serious injury.**
- **When using air or electric power tools or hammers, always switch the ignition OFF, disconnect the battery, and wait at least 3 minutes before performing any service.**

Precautions for Removing of Battery Terminal

INFOID:0000000010138386

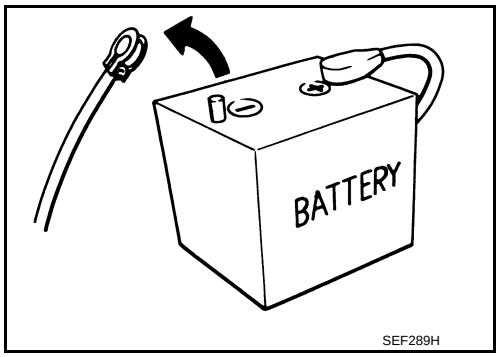

- When removing the 12V battery terminal, turn OFF the ignition switch and wait at least 30 seconds.
  NOTE:
  ECU may be active for several tens of seconds after the ignition switch is turned OFF. If the battery terminal is removed before ECU stops, then a DTC detection error or ECU data corruption may occur.
- For vehicles with the 2-batteries, be sure to connect the main battery and the sub battery before turning ON the ignition switch.
  NOTE:
  If the ignition switch is turned ON with any one of the terminals of main battery and sub battery disconnected, then DTC may be detected.
- After installing the 12V battery, always check "Self Diagnosis Result" of all ECUs and erase DTC.
  NOTE:
  The removal of 12V battery may cause a DTC detection error.

Precaution for Procedure without Cowl Top Cover

INFOID:0000000009950332

When performing the procedure after removing cowl top cover, cover the lower end of windshield with urethane, etc to prevent damage to windshield.

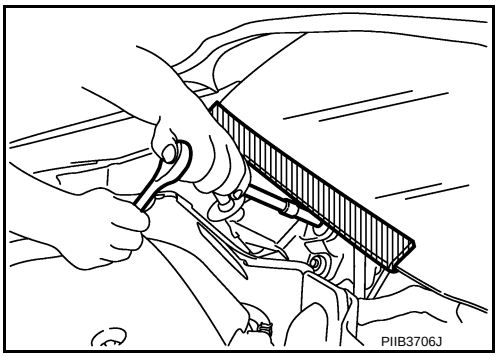

Precautions For Refrigerant System Service

INFOID:0000000009950333

GENERAL REFRIGERANT PRECAUTION

WARNING:

- **Never breathe A/C refrigerant and lubricant vapor or mist. Exposure may irritate eyes, nose and throat. Remove HFC-134a (R-134a) from the A/C system, using certified service equipment meeting requirements of SAE J-2210 [HFC-134a (R-134a) recycling equipment], or J-2209 [HFC-134a (R-134a) recovery equipment]. Ventilate work area before resuming service if accidental system discharge occurs. Additional health and safety information may be obtained from refrigerant and lubricant manufacturers.**
- **Never release refrigerant into the air. Use approved recovery/recycling recharging equipment to capture the refrigerant each time an air conditioning system is discharged.**
- **Wear always eye and hand protection (goggles and gloves) when working with any refrigerant or air conditioning system.**
- **Never store or heat refrigerant containers above 52°C (126°F).**
- **Never heat a refrigerant container with an open flame; Place the bottom of the container in a warm pail of water if container warming is required.**
- **Never intentionally drop, puncture, or incinerate refrigerant containers.**
- **Keep refrigerant away from open flames: poisonous gas is produced if refrigerant burns.**
- **Refrigerant displaces oxygen, therefore be certain to work in well ventilated areas to prevent suffocation.**
- **Never pressure test or leakage test HFC-134a (R-134a) service equipment and/or vehicle air conditioning systems with compressed air during repair. Some mixtures of air and HFC-134a (R-134a) have been shown to be combustible at elevated pressures. These mixtures, if ignited, may cause injury or property damage. Additional health and safety information may be obtained from refrigerant manufacturers.**

WORKING WITH HFC-134a (R-134a)

CAUTION:

- **CFC-12 (R-12) refrigerant and HFC-134a (R-134a) refrigerant are not compatible. Compressor malfunction is likely to occur if the refrigerants are mixed, refer to “CONTAMINATED REFRIGERANT” below. To determine the purity of HFC-134a (R-134a) in the vehicle and recovery tank, use Refrigerant recovery/recycling recharging equipment and Refrigerant Identifier.**
- **Use only specified lubricant for the HFC-134a (R-134a) A/C system and HFC-134a (R-134a) components. Compressor malfunction is likely to occur if lubricant other than that specified is used.**
- **The specified HFC-134a (R-134a) lubricant rapidly absorbs moisture from the atmosphere. The following handling precautions must be observed:**
- **Cap (seal) immediately the component to minimize the entry of moisture from the atmosphere when removing refrigerant components from a vehicle.**
- **Never remove the caps (unseal) until just before connecting the components when installing refrigerant components to a vehicle. Connect all refrigerant loop components as quickly as possible to minimize the entry of moisture into system.**
- **Use only the specified lubricant from a sealed container. Reseal immediately containers of lubricant. Lubricant becomes moisture saturated and should not be used without proper sealing.**
- **Never allow lubricant (A/C System Oil Type R) to come in contact with styrene foam parts. Damage may result.**

CONTAMINATED REFRIGERANT

Take appropriate steps shown below if a refrigerant other than pure HFC-134a (R-134a) is identified in a vehicle:

- Explain to the customer that environmental regulations prohibit the release of contaminated refrigerant into the atmosphere.
- Explain that recovery of the contaminated refrigerant could damage service equipment and refrigerant supply.
- Suggest the customer return the vehicle to the location of previous service where the contamination may have occurred.
- In case of repairing, recover the refrigerant using only **dedicated equipment and containers. Never recover contaminated refrigerant into the existing service equipment.** Contact a local refrigerant product retailer for available service if the facility does not have dedicated recovery equipment. This refrigerant must be disposed of in accordance with all federal and local regulations. In addition, replacement of all refrigerant system components on the vehicle is recommended.
- The air conditioner warranty is void if the vehicle is within the warranty period. Please contact Nissan Customer Affairs for further assistance.

REFRIGERANT CONNECTION

A new type refrigerant connection has been introduced to all refrigerant lines except the following location.

- Expansion valve to evaporator
- Refrigerant pressure sensor to liquid tank

WARNING:

Check that all refrigerant is discharged into the recycling equipment and the pressure in the system is less than atmospheric pressure. Then gradually loosen the discharge side hose fitting and remove it.

CAUTION:

Observe the following when replacing or cleaning refrigerant cycle components.

- **Store it in the same way at it is when mounted on the car when the compressor is removed. Failure to do so will cause lubricant to enter the low-pressure chamber.**
- **Use always a torque wrench and a back-up wrench when connecting tubes.**
- **Plug immediately all openings to prevent entry of dust and moisture after disconnecting tubes.**
- **Connect the pipes at the final stage of the operation when installing an air conditioner in the vehicle. Never remove the seal caps of pipes and other components until just before required for connection.**
- **Allow components stored in cool areas to warm to working area temperature before removing seal caps. This prevents condensation from forming inside A/C components.**
- **Remove thoroughly moisture from the refrigeration system before charging the refrigerant.**
- **Replace always used O-rings.**
- **Apply lubricant to circle of the O-rings shown in illustration when connecting tube. Be careful not to apply lubricant to threaded portion.**

Name : A/C System Oil Type R

- **O-ring must be closely attached to the groove portion of tube.**
- **Be careful not to damage O-ring and tube when replacing the O-ring.**
- **Connect tube until a click can be heard. Then tighten the nut or bolt by hand. Check that the O-ring is installed to tube correctly.**

- **Perform leakage test and make sure that there is no leakage from connections after connecting line. Disconnect that line and replace the O-ring when the refrigerant leaking point is found. Then tighten connections of seal seat to the specified torque.**

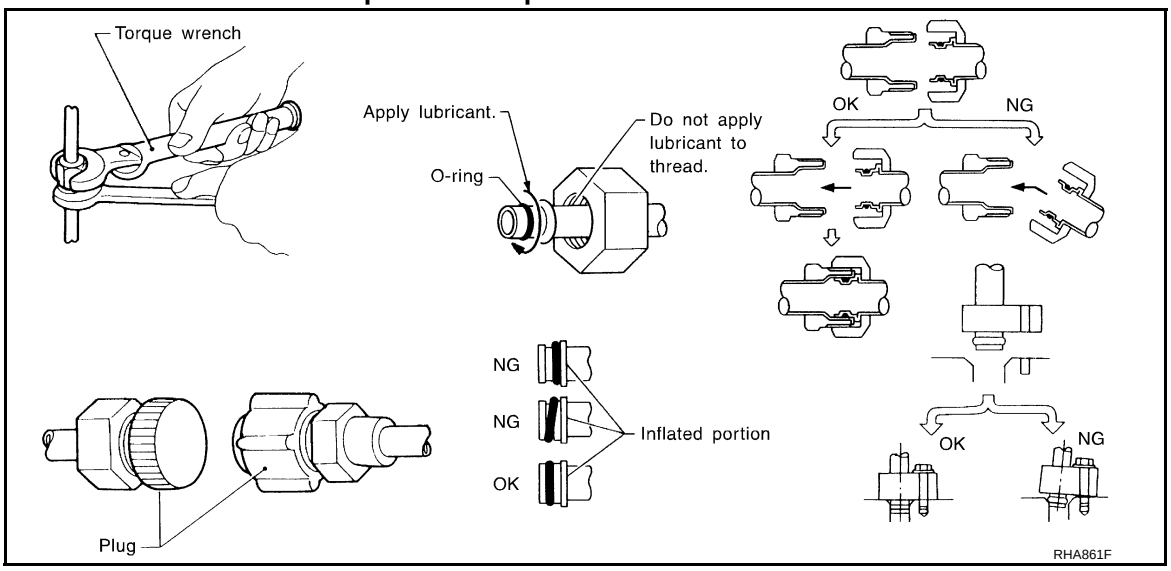

COMPRESSOR

CAUTION:

- **Plug all openings to prevent moisture and foreign matter from entering.**
- **Store it in the same way at it is when mounted on the car when the compressor is removed.**
- **Follow “MAINTENANCE OF LUBRICANT LEVEL IN COMPRESSOR” exactly when replacing or repairing compressor. Refer to HA-26, "Description".**
- **Keep friction surfaces between clutch and pulley clean. Wipe it off by using a clean waste cloth moistened with thinner if the surface is contaminated with lubricant.**
- **Turn the compressor shaft by hand more than five turns in both directions after compressor service operation. This distributes equally lubricant inside the compressor. Let the engine idle and operate the compressor for one hour after the compressor is installed.**
- **Apply voltage to the new one and check for normal operation after replacing the compressor magnet clutch.**

LEAK DETECTION DYE

CAUTION:

- **The A/C system contains a fluorescent leak detection dye used for locating refrigerant leakages. An ultraviolet (UV) lamp is required to illuminate the dye when inspecting for leakages.**
- **Wear always fluorescence enhancing UV safety goggles to protect eyes and enhance the visibility of the fluorescent dye.**
- **The fluorescent dye leak detector is not a replacement for an electrical leak detector (SST: J-41995). The fluorescent dye leak detector should be used in conjunction with an electrical leak detector (SST: J-41995) to pin-point refrigerant leakages.**
- **Read and follow all manufacture’s operating instructions and precautions prior to performing the work for the purpose of safety and customer’s satisfaction.**
- **A compressor shaft seal should not necessarily be repaired because of dye seepage. The compressor shaft seal should only be repaired after confirming the leakage with an electrical leak detector (SST: J-41995).**
- **Remove always any remaining dye from the leakage area after repairs are completed to avoid a misdiagnosis during a future service.**
- **Never allow dye to come into contact with painted body panels or interior components. Clean immediately with the approved dye cleaner if dye is spilled. Fluorescent dye left on a surface for an extended period of time cannot be removed.**
- **Never spray the fluorescent dye cleaning agent on hot surfaces (engine exhaust manifold, etc.).**
- **Never use more than one refrigerant dye bottle [1/4 ounce (7.4 cc)] per A/C system.**
- **Leak detection dyes for HFC-134a (R-134a) and CFC-12 (R-12) A/C systems are different. Never use HFC-134a (R-134a) leak detection dye in CFC-12 (R-12) A/C system, or CFC-12 (R-12) leak detection dye in HFC-134a (R-134a) A/C system, or A/C system damage may result.**
- **The fluorescent properties of the dye remains for three or more years unless a compressor malfunction occurs.**

NOTE:

Identification

- Vehicles with factory installed fluorescent dye have a green label.
- Vehicles without factory installed fluorescent dye have a blue label.

PREPARATION

PREPARATION

Special Service Tool

INFOID:0000000009950334

The actual shapes of Kent-Moore tools may differ from those of special service tools illustrated here.

HFC-134a (R-134a) Service Tool and Equipment

- Never mix HFC-134a (R-134a) refrigerant and/or its specified lubricant with CFC-12 (R-12) refrigerant and/or its lubricant.
- Separate and non-interchangeable service equipment must be used for handling each type of refrigerant/lubricant.
- Refrigerant container fittings, service hose fittings and service equipment fittings (equipment that handles refrigerant and/or lubricant) are different between CFC-12 (R-12) and HFC-134a (R-134a). This is to avoid mixed use of the refrigerants/lubricant.
- Never use adapters that convert one size fitting to another. Refrigerant/lubricant contamination occurs and compressor malfunction may result.

Tool number (Kent-Moore No.) Tool name		Description
KV99106100 (J-41260) Pulley installer	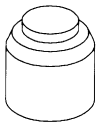 S-NT235	Installing pulley
(ACR2005-NI) ACR5 A/C Service Center	 WJIA0293E	Function: Refrigerant recovery, recycling and recharging
(J-41995) Electrical leak detector	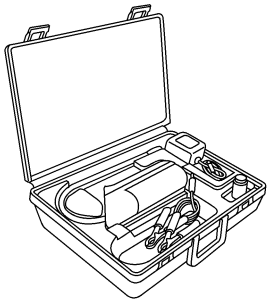 AHA281A	Power supply: DC 12 V (Battery terminal)

Tool number (Kent-Moore No.) Tool name		Description
(J-43926) Refrigerant dye leak detection kit Kit includes: (J-42220) UV lamp and UV safety goggles (J-41459) HFC-134a (R-134a) dye injector Use with J-41447, 1/4 ounce bottle (J-41447) HFC-134a (R-134a) fluorescent leak detection dye (Box of 24, 1/4 ounce bottles) (J-43872) Refrigerant dye cleaner	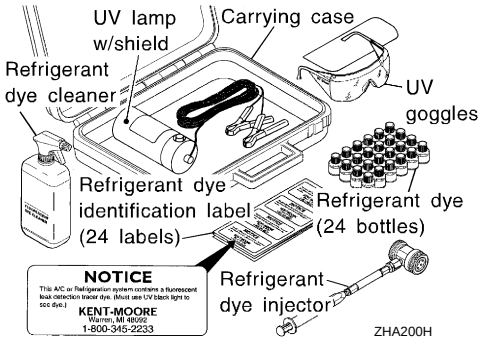	Power supply: DC 12 V (Battery terminal)
(J-42220) UV lamp and UV safety goggles	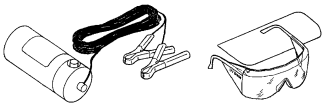	Power supply: DC 12 V (Battery terminal) For checking refrigerant leakage when fluorescent dye is equipped in A/C system Includes: UV lamp and UV safety goggles
(J-41447) HFC-134a (R-134a) fluorescent leak detection dye (Box of 24, 1/4 ounce bottles)	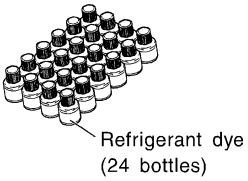	Application: For HFC-134a (R-134a) PAG oil Container: 1/4 ounce (7.4 cc) bottle (Includes self-adhesive dye identification labels for affixing to vehicle after charging system with dye.)
(J-41459) HFC-134a (R-134a) dye injector Use with J-41447, 1/4 ounce bottle	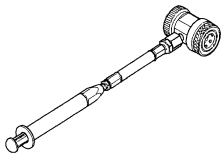	For injecting 1/4 ounce of fluorescent leak detection dye into A/C system
(J-43872) Refrigerant dye cleaner		For cleaning dye spills

Tool number (Kent-Moore No.) Tool name		Description
(J-39183) Manifold gauge set (with hoses and couplers)	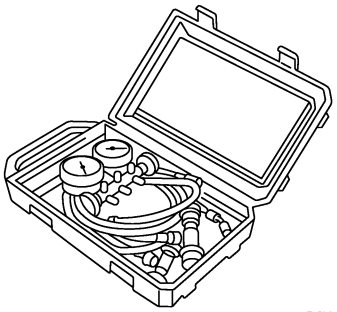 RJIA0196E	Identification: • The gauge face indicates HFC-134a (R-134a). Fitting size: Thread size • 1/2″-16 ACME
Service hoses • High-pressure side hose (J-39501-72) • Low-pressure side hose (J-39502-72) • Utility hose (J-39476-72)	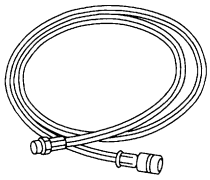 S-NT201	Hose color: • Low-pressure side hose: Blue with black stripe • High-pressure side hose: Red with black stripe • Utility hose: Yellow with black stripe or green with black stripe Hose fitting to gauge: • 1/2″-16 ACME
Service couplers • High-pressure side coupler (J-39500-20) • Low-pressure side coupler (J-39500-24)	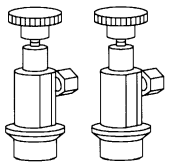 S-NT202	Hose fitting to service hose: M14 x 1.5 fitting is optional or permanently attached.
(J-39650) Refrigerant weight scale	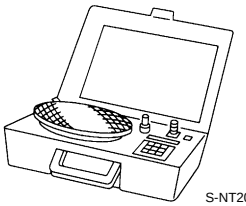 S-NT200	For measuring of refrigerant Fitting size: Thread size 1/2″-16 ACME
(J-39649) Vacuum pump (Including the isolator valve)	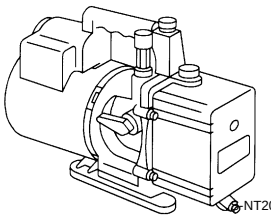 S-NT203	Capacity: • Air displacement: 4 CFM • Micron rating: 20 microns • Oil capacity: 482 g (17 oz.) Fitting size: Thread size • 1/2″-16 ACME

Commercial Service Tool

INFOID:0000000009950335

Tool name		Description
Refrigerant identifier equipment	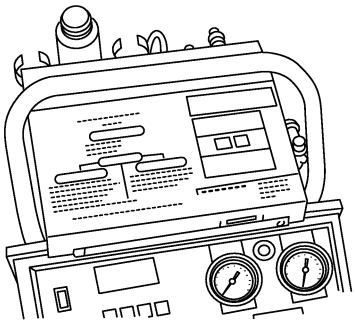 RJIA0197E	Checking for refrigerant purity and system contamination
Power tools	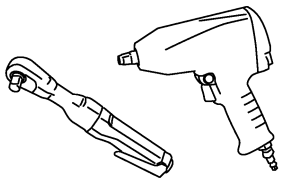 PBIC0190E	For loosening bolts and nuts

Sealant or/and Lubricant

INFOID:0000000009950336

HFC-134a (R-134a) Service Tool and Equipment

- Never mix HFC-134a (R-134a) refrigerant and/or its specified lubricant with CFC-12 (R-12) refrigerant and/or its lubricant.
- Separate and non-interchangeable service equipment must be used for handling each type of refrigerant/lubricant.
- Refrigerant container fittings, service hose fittings and service equipment fittings (equipment that handles refrigerant and/or lubricant) are different between CFC-12 (R-12) and HFC-134a (R-134a). This is to avoid mixed use of the refrigerants/lubricant.
- Never use adapters that convert one size fitting to another. Refrigerant/lubricant contamination occurs and compressor malfunction may result.

Tool name		Description
HFC-134a (R-134a) refrigerant	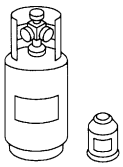 S-NT196	Container color: Light blue Container marking: HFC-134a (R-134a) Fitting size: Thread size • Large container 1/2″-16 ACME
A/C System Oil Type R (DH-PR)	S-NT197	Type: Polyalkylene glycol oil (PAG), type S (DH-PR) Application: HFC-134a (R-134a) swash plate compressors Capacity: 40 m ℓ (1.4 US fl oz., 1.4 Imp fl oz.)

PERIODIC MAINTENANCE

DESCRIPTION

Service Equipment

INFOID:0000000009950337

RECOVERY/RECYCLING RECHARGING EQUIPMENT

Be certain to follow the manufacturer's instructions for machine operation and machine maintenance. Never introduce any refrigerant other than that specified into the machine.

ELECTRICAL LEAK DETECTOR

Be certain to follow the manufacturer's instructions for tester operation and tester maintenance.

VACUUM PUMP

The lubricant contained inside the vacuum pump is not compatible with the specified lubricant for HFC-134a (R-134a) A/C systems. The vent side of the vacuum pump is exposed to atmospheric pressure. So the vacuum pump lubricant may migrate out of the pump into the service hose. This is possible when the pump is switched OFF after evacuation (vacuuming) and hose is connected to it.
To prevent this migration, use a manual valve placed near the hose-to-pump connection, as per the following.

- Vacuum pumps usually have a manual isolator valve as part of the pump. Close this valve to isolate the service hose from the pump.
- Use a hose equipped with a manual shut-off valve near the pump end for pumps without an isolator. Close the valve to isolate the hose from the pump.
- Disconnect the hose from the pump if the hose has an automatic shut-off valve. As long as the hose is connected, the valve is open and lubricating oil may migrate.

Some one-way valves open when vacuum is applied and close under no vacuum condition. Such valves may restrict the pump's ability to pull a deep vacuum and are not recommended.

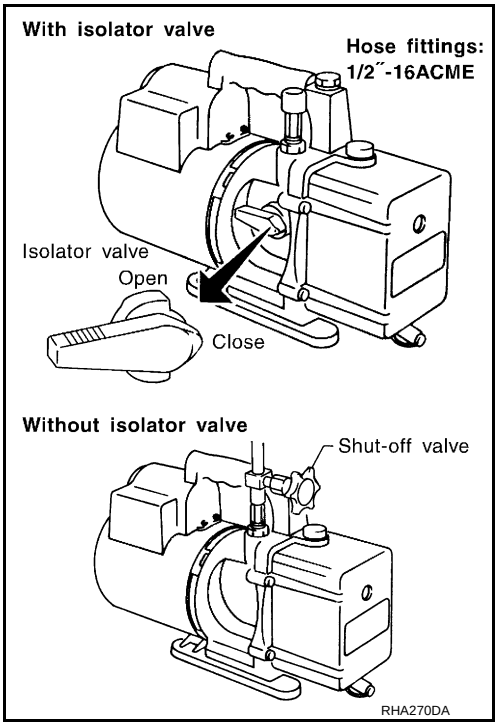

MANIFOLD GAUGE SET

Be certain that the gauge face indicates HFC-134a or R-134a. Be sure the gauge set has 1/2″-16 ACME threaded connections for service hoses. Confirm the set has been used only with refrigerant HFC-134a (R-134a) and specified lubricants.

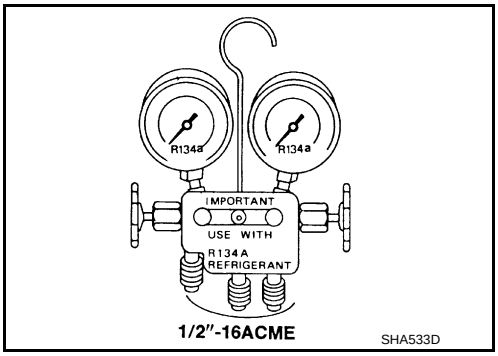

SERVICE HOSES

Be certain that the service hoses display the markings described (colored hose with black stripe). All hoses must equip positive shut-off devices (either manual or automatic) near the end of the hoses opposite to the manifold gauge.

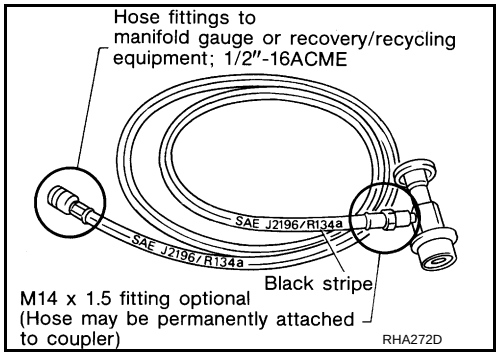

SERVICE COUPLERS

Never attempt to connect HFC-134a (R-134a) service couplers to the CFC-12 (R-12) A/C system. The HFC-134a (R-134a) couplers do not properly connect to the CFC-12 (R-12) system. However, if an improper connection is attempted, discharging and contamination may occur.

Shut-off valve rotation	A/C service valve
Clockwise	Open
Counterclockwise	Close

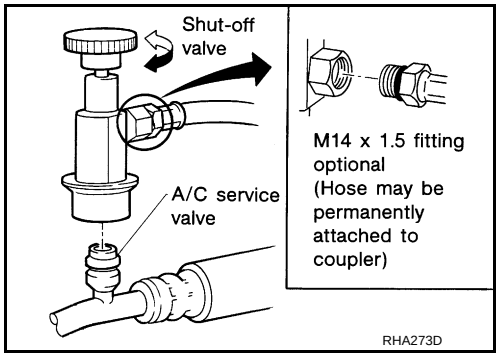

REFRIGERANT WEIGHT SCALE

Verify that no refrigerant other than HFC-134a (R-134a) and specified lubricants have been used with the scale. The hose fitting must be 1/2″-16 ACME if the scale controls refrigerant flow electronically.

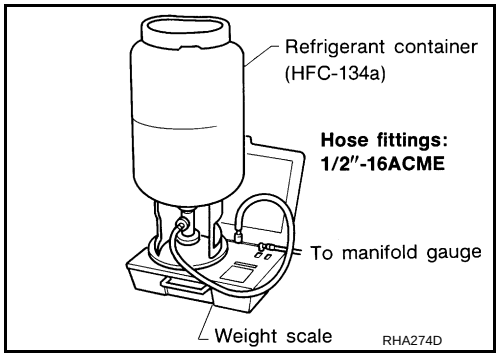

CHARGING CYLINDER

Using a charging cylinder is not recommended. Refrigerant may be vented into air from cylinder's top valve when filling the cylinder with refrigerant. Also, the accuracy of the cylinder is generally less than that of an electronic scale or of quality recycle/recharge equipment.

REFRIGERANT

Description

INFOID:0000000009950338

CONNECTION OF SERVICE TOOLS AND EQUIPMENT

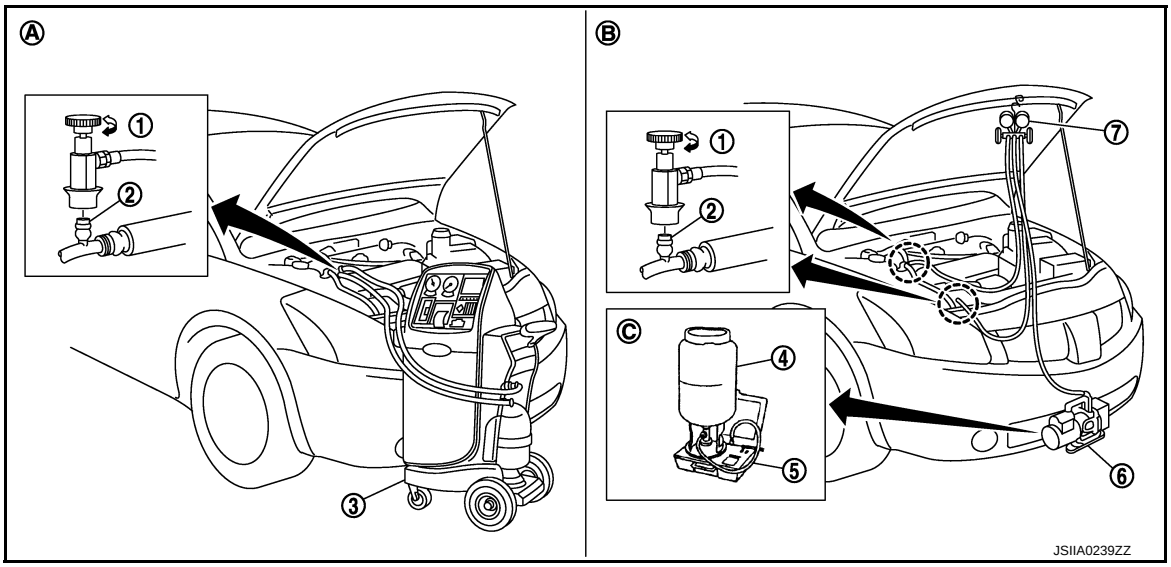

1.	Shut-off valve	2.	A/C service valve	3.	Recovery/recycling/recharging equipment
4.	Refrigerant container (HFC-134a)	5.	Weight scale (J-39650)	6.	Vacuum pump (J-39649)
7.	Manifold gauge set (J-39183)				
A.	Preferred (best) method	B.	Alternative method	C.	For charging

Leak Test

INFOID:0000000009950339

CHECK REFRIGERANT LEAKAGE USING FLUORESCENT LEAK DETECTION DYE

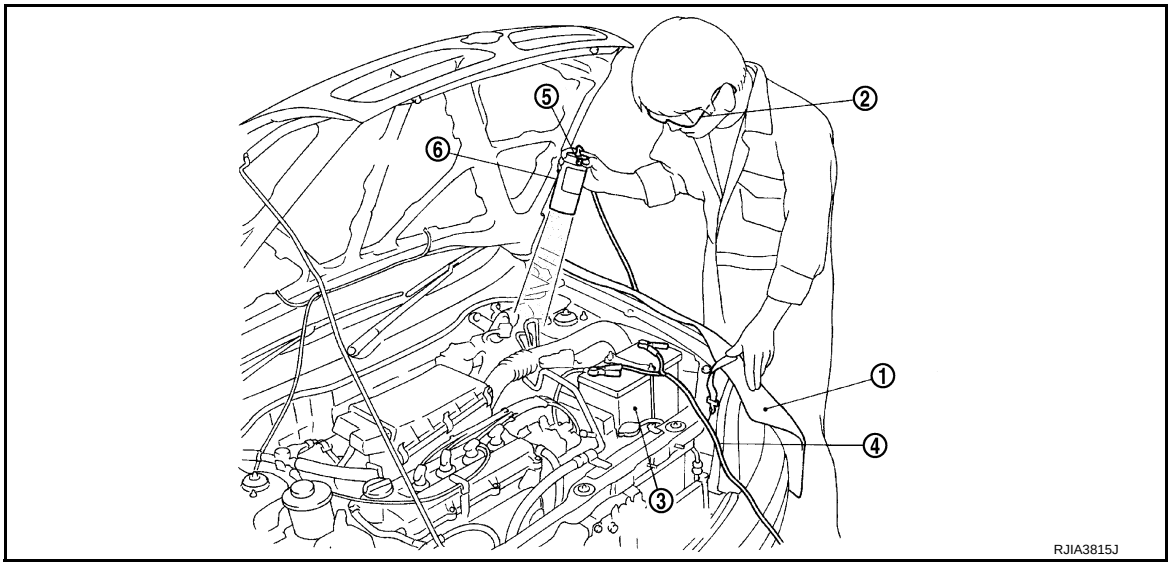

1. Install a fender cover (1).
2. Wear UV safety goggles (2) provided with refrigerant dye leak detection kit (J-43926).
3. Connect power cable (4) of UV lamp (6) to positive and negative terminals of the battery (3).
4. Press UV lamp switch (5) and check A/C system for refrigerant leakage. (Where refrigerant leakage occurs, fluorescent leak detection dye appears in green color.)

   WARNING:

Never look directly into UV lamp light source.
NOTE:
- For continuous operating time of UV lamp, follow the manufacturer operating instructions.
- Illuminate piping joints from different angles using UV lamp and check that there is no leakage.
- Use a mirror in area that is difficult to see to check refrigerant leakage.
- Refrigerant leakage from evaporator can be detected by soaking cotton swab or a similar material with drain hose water and illuminating it using UV lamp.
- Dust, dirt, and packing materials adhesive used for condenser, evaporator, and other locations may fluoresce. Be careful not to misidentify leakage.

5. Repair or replace parts where refrigerant leakage occurs and wipe off fluorescent leak detection dye.
   NOTE:
   Completely wipe off fluorescent leak detection dye from gaps between parts, screw threads, and others using a cotton swab or similar materials.
6. Use a UV lamp to check that no fluorescent leak detection dye remains after finishing work.
   WARNING:
   Never look directly into UV lamp light source.
   NOTE:
   - For continuous operating time of UV lamp, follow the manufacturer operating instructions.
   - Dust, dirt, and packing materials adhesive used for condenser, evaporator, and other locations may fluoresce. Be careful not to misidentify leakage.

CHECK REFRIGERANT LEAKAGE USING ELECTRICAL LEAK DETECTOR

WARNING:
Never check refrigerant leakage while the engine is running.
CAUTION:
Be careful of the following items so that inaccurate checks or misidentifications are avoided.
- **Never allow refrigerant vapor, shop chemical vapors, cigarette smoke, or others around the vehicle.**
- **Always check refrigerant leakage in a low air flow environment so that refrigerant may not disperse when leakage occurs.**

1. Stop the engine.
2. Connect recovery/recycling/recharging equipment or manifold gauge set (J-39183) to A/C service valve.
3. Check that A/C refrigerant pressure is 345 kPa (3.52 kg/cm^2, 50 psi) or more when temperature is 16°C (61°F) or more. When pressure is lower than the specified value, recycle refrigerant completely and fill refrigerant to the specified level.
   NOTE:
   Leakages may not be detected if A/C refrigerant pressure is 345 kPa (3.52 kg/cm^2, 50 psi) or less when temperature is less than 16°C (61°F).
4. Clean area where refrigerant leakage check is performed, and check refrigerant leakage along all surfaces of pipe connections and A/C system components using electrical leak detector (J-41995) probe.
   CAUTION:
   - **Continue checking when a leakage is found. Always continue and complete checking along all pipe connections and A/C system components for additional leakage.**
   - **When a leakage is detected, clean leakage area using compressed air and check again.**
   - **When checking leakage of cooling unit inside, always clean inside of drain hose so that the probe surface may not be exposed to water or dirt.**

   NOTE:
   - Always check leakage starting from high-pressure side and continue to low-pressure side.
   - When checking leakage of cooling unit inside, operate blower fan motor for 15 minutes or more at the maximum fan speed while the engine is stopped, and then insert electrical leak detector probe into drain hose and hold for 10 minutes or more.
   - When disconnecting shut-off valve that is connected to A/C service valve, always evacuate remaining refrigerant so that misidentification can be avoided.
5. Repair or replace parts where refrigerant leakage is detected. (Leakage is detected but leakage area is unknown. GO TO 6.)
6. Start the engine and set A/C control in the following conditions.
   - A/C switch ON
   - Air flow: VENT (ventilation)
   - Intake door position: Recirculation

- Temperature setting: Full cold
- Fan speed: Maximum speed set

7. Run the engine at approximately 1,500 rpm for 2 minutes or more.
8. Stop the engine. Check again for refrigerant leakage. GO TO 4.

WARNING:
Be careful not to get burned when the engine is hot.
NOTE:
- Start refrigerant leakage check immediately after the engine is stopped.
- When refrigerant circulation is stopped, pressure on the low-pressure side rises gradually, and after this, pressure on the high-pressure side falls gradually.
- The higher the pressure is, the easier it is to find the refrigerant leakage.

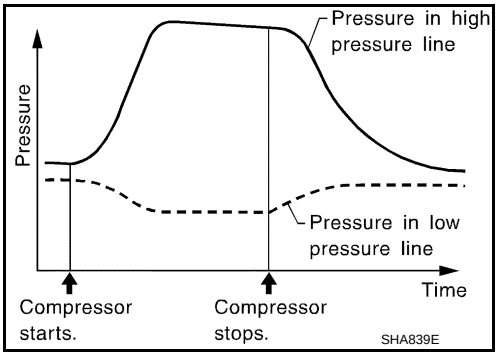

Recycle Refrigerant

INFOID:0000000009950340

WARNING:
- **Always use HFC-134a for A/C refrigerant. If CFC-12 is accidentally charged, compressor is damaged due to insufficient lubrication.**
- **Always observe and follow precautions described on refrigerant container. Incorrect handling may result in an explosion of refrigerant container, frostbite, or the loss of eyesight.**
- **Never breathe A/C refrigerant and lubricant vapor or mist. Exposure may irritate eyes, nose, or throat.**
- **Never allow HFC-134a to be exposed to an open flame or others because it generates poisonous gas when in contact with high temperature objects. Keep workshop well ventilated.**

1. Perform lubricant return operation. Refer to HA-26, "Perform Lubricant Return Operation". (If refrigerant or lubricant leakage is detected in a large amount, omit this step, and then GO TO 2.)
   CAUTION:
   Never perform lubricant return operation if a large amount of refrigerant or lubricant leakage is detected.
2. Check gauge pressure readings of recovery/recycling/recharging equipment. When remaining pressure exists, recycle refrigerant from high-pressure hose and low-pressure hose.
   NOTE:
   Follow manufacturer instructions for the handling or maintenance of the equipment. Never fill the equipment with non-specified refrigerant.
3. Remove A/C service valve cap from the vehicle.
4. Connect recovery/recycling/recharging equipment to A/C service valve.
5. Operate recovery/recycling/recharging equipment, and recycle refrigerant from the vehicle.
6. Evacuate air for 10 minutes or more to remove any remaining refrigerant integrated to compressor lubricant, etc.
7. Refrigerant recycle operation is complete.

Charge Refrigerant

INFOID:0000000009950341

WARNING:
- **Always use HFC-134a for A/C refrigerant. If CFC-12 is accidentally charged, compressor is damaged due to insufficient lubrication.**
- **Always observe and follow precautions described on refrigerant container. Incorrect handling may result in an explosion of refrigerant container, frostbite, or the loss of eyesight.**
- **Never breathe A/C refrigerant and lubricant vapor or mist. Exposure my irritate eyes, nose, or throat.**
- **Never allow HFC-134a to be exposed to an open flame or others because it generates poisonous gas when in contact with high temperature objects. Keep workshop well ventilated.**

1. Connect recovery/recycling/recharging equipment to the A/C service valve.

2. Operate recovery/recycling/recharging equipment, and evacuate air from A/C system for 25 minutes or more.
   CAUTION:
   Evacuate air for 15 minutes or more if the parts are replaced.
3. Check the airtightness of A/C system for 25 minutes or more. If pressure rises more than the specified level, charge A/C system with approximately 200 g (0.4 lb) refrigerant and check that there is no refrigerant leakage. Refer to HA-22, "Leak Test".
   CAUTION:
   Check the airtightness for 15 minutes or more if the parts are replaced.
4. If parts other than compressor are replaced, fill compressor lubricant according to parts that are replaced.
5. Charge the specified amount of refrigerant to A/C system.
6. Check that A/C system operates normally.
7. Disconnect recovery/recycling/recharging equipment. (Collect the refrigerant from the high-pressure hose and low-pressure hose of recovery/recycling/recharging equipment.)
8. Install A/C service valve cap.
9. Refrigerant charge is complete.

LUBRICANT

Description

INFOID:0000000009950342

MAINTENANCE OF LUBRICANT LEVEL

The compressor lubricant is circulating in the system together with the refrigerant. It is necessary to fill compressor with lubricant when replacing A/C system parts or when a large amount of refrigerant leakage is detected. It is important to always maintain lubricant level within the specified level. Otherwise, the following conditions may occur.

- Insufficient lubricant amount: Stuck compressor
- Excessive lubricant amount: Insufficient cooling (caused by insufficient heat exchange)

Name : A/C System Oil Type R

Inspection

INFOID:0000000009950343

If a compressor is malfunctioning (internal noise, insufficient cooling), check the compressor oil.

1. COMPRESSOR OIL JUDGMENT

1. Remove the compressor. Refer to HA-31, "Exploded View".
2. Sample a compressor oil and judge on the figure.

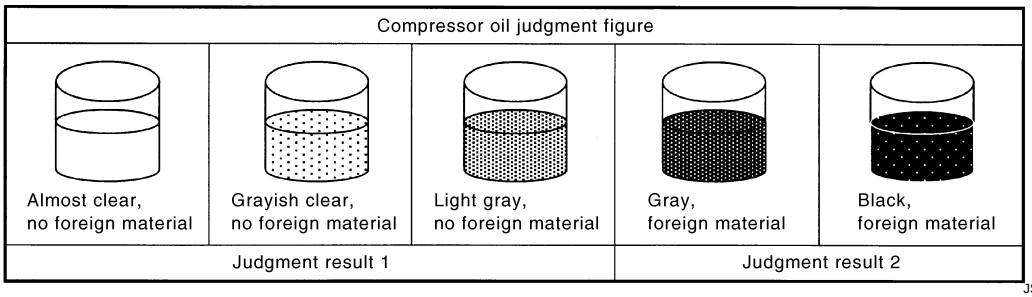

JSIIA0927GB

Judgement result 1>>Replace compressor only.
Judgement result 2>>Replace compressor and liquid tank.

Perform Lubricant Return Operation

INFOID:0000000009950344

CAUTION:
If a large amount of refrigerant or lubricant leakage is detected, never perform lubricant return operation.

1. Start the engine and set to the following conditions.
   - Engine speed: Idling to 1,200 rpm
   - A/C switch: ON
   - Fan speed: Maximum speed set
   - Intake door position: Recirculation
   - Temperature setting: Full cold
2. Perform lubricant return operation for approximately 10 minutes.
3. Stop the engine.
4. Lubricant return operation is complete.

Lubricant Adjusting Procedure for Components Replacement Except Compressor

INFOID:0000000009950345

Fill with lubricant for the amount that is calculated according to the following conditions.
Example: Lubricant amount to be added when replacing evaporator and liquid tank [mℓ (US fl oz., Imp fl oz.)] = 35 (1.2, 1.2) + 5 (0.2, 0.2) + α

Conditions		Lubricant amount to be added to A/C system m ℓ (US fl oz., Imp fl oz.)
Replace evaporator		35 (1.2, 1.2)
Replace condenser		15 (0.5, 0.5)
Replace liquid tank		5 (0.2, 0.2)
Refrigerant leakage is detected	Large amount leakage	30 (1.0, 1.1)
	Small amount leakage	—
Lubricant amount that is recycled together with refrigerant during recycle operation		α

Lubricant Adjusting Procedure for Compressor Replacement

INFOID:0000000009950346

1. Drain lubricant from removed compressor and measure lubricant amount.
   1. Drain lubricant from high-pressure port (A) and low-pressure port (B) while rotating magnet clutch.
   2. Measure total amount of lubricant that is drained from removed compressor.

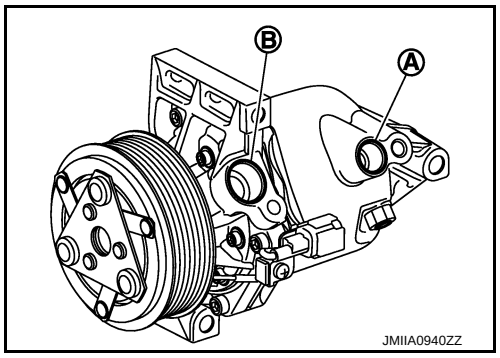

2. Drain lubricant from a new compressor that is calculated according to the following conditions.

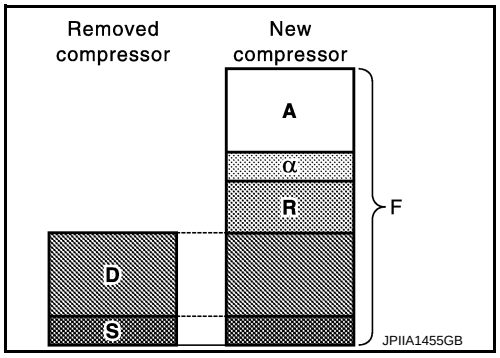

Amount to be drained (A) [m ℓ (US fl oz., Imp fl oz.)] = F – (D + S + R + α)

F : Lubricant amount that a new compressor contains [120 (4.1, 4.2)]

D : Lubricant amount that is drained from removed compressor

S : Lubricant amount that remains inside of removed compressor [20 (0.7, 0.7)]

R : Lubricant amount to be added according to components that are removed except compressor

α : Lubricant amount that is recycled together with refrigerant during recycle operation

CAUTION:
If lubricant amount that is drained from removed compressor is less than 60 m ℓ (2.0 US fl oz., 2.1 Imp fl oz.), perform calculation by setting "D" as 40 m ℓ (1.4 US fl oz., 1.4 Imp fl oz.).

Conditions	Lubricant amount to be added to A/C system m ℓ (US fl oz., Imp fl oz.)
Replace evaporator	35 (1.2, 1.2)
Replace condenser	15 (0.5, 0.5)
Replace liquid tank	5 (0.2, 0.2)

Example: Lubricant amount to be drained from a new compressor when replacing compressor and liquid tank [m ℓ (US fl oz., Imp fl oz.)] [D = 60 (2.0, 2.1), α = 5 (0.2, 0.2)]
120 (4.1, 4.2) – [60 (1.5, 1.6) + 20 (0.7, 0.7) + 5 (0.2, 0.2) + 5 (0.2, 0.2)] = 30 (1.0, 1.0)

3. Install compressor and check the operation.

PERFORMANCE TEST

Inspection

INFOID:0000000009950347

INSPECTION PROCEDURE

1. Connect recovery/recycling/recharging equipment (for HFC-134a) or manifold gauge.
2. Start the engine, and set to the following condition.

Test condition

Surrounding condition		Indoors or in the shade (in a well-ventilated place)
Vehicle condition	Door	Closed
	Door glass	Full open
	Hood	Open
	Engine speed	Idle speed
A/C condition	Temperature control switch or dial	Full cold
	A/C switch	ON
	Air outlet	VENT (ventilation)
	Intake door position	Recirculation
	Fan speed	Maximum speed set

3. Maintain test condition until A/C system becomes stable. (Approximately 10 minutes)
4. Check that test results of “recirculating-to-discharge air temperature” and “ambient air temperature-to-operating pressure” are within the specified value.
5. When test results are within the specified value, inspection is complete.
   If any of test result is out of the specified value, perform diagnosis by gauge pressure. Refer to HA-8, "Symptom Table".

RECIRCULATING-TO-DISCHARGE AIR TEMPERATURE TABLE

Inside air (Recirculating air) at blower assembly inlet		Discharge air temperature from center ventilator °C (°F)
Relative humidity %	Air temperature °C (°F)	
50 – 60	20 (68)	10.2 – 12.1 (50 – 54)
	25 (77)	13.2 – 15.3 (56 – 60)
	30 (86)	17.7 – 20.1 (64 – 68)
	35 (95)	22.2 – 25.8 (72 – 78)
60 – 70	20 (68)	12.1 – 13.9 (54 – 57)
	25 (77)	15.3 – 17.5 (60 – 64)
	30 (86)	20.1 – 23.0 (68 – 73)
	35 (95)	25.8 – 29.2 (78 – 85)

AMBIENT AIR TEMPERATURE-TO-OPERATING PRESSURE TABLE

Fresh air		High-pressure (Discharge side) kPa (kg/cm^2, psi)	Low-pressure (Suction side) kPa (kg/cm^2, psi)
Relative humidity %	Air temperature °C (°F)		
50 – 70	25 (77)	1,000 – 1,230 (10.2 – 12.5, 145.0 – 178.4)	270 – 330 (2.8 – 3.4, 39.2 – 47.9)
	30 (86)	1,290 -– 1,580 (13.2 – 16.1, 187.1 – 229.1)	275 – 340 (2.8 – 3.5, 39.9 – 49.3)
	35 (95)	1,460 – 1,790 (14.9 – 18.3, 211.7 – 259.6)	300 – 360 (3.1 – 3.7, 43.5 – 52.2)
	40 (104)	1,610 – 1,980 (16.4 – 20.2, 233.5 – 287.1)	320 – 395 (3.3 – 4.0, 46.4 – 57.2)

REMOVAL AND INSTALLATION

COMPRESSOR

Exploded View

INFOID:0000000009950348

REMOVAL

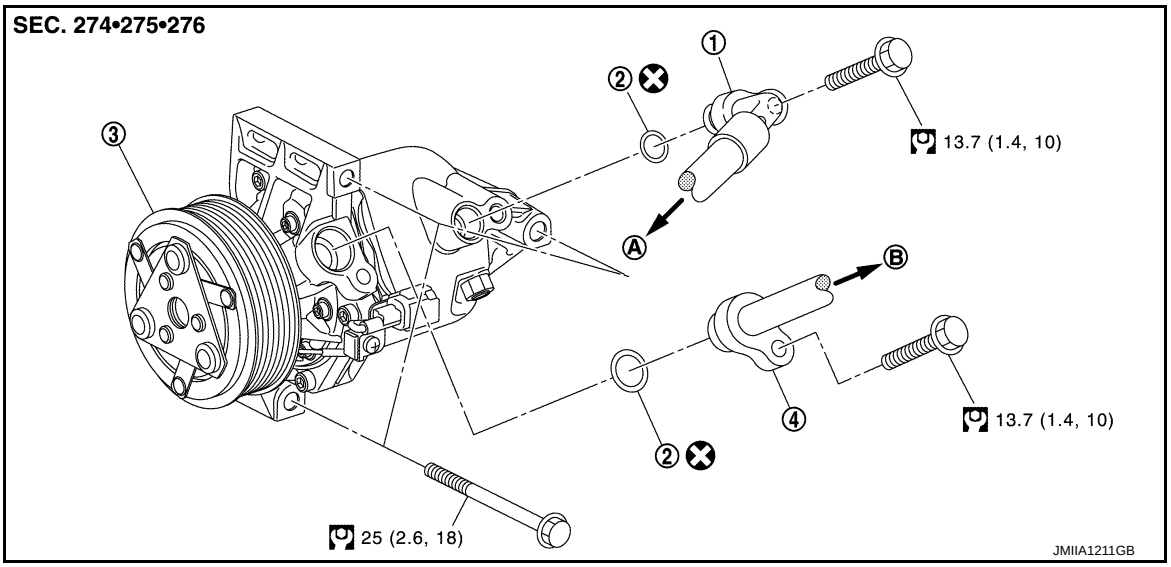

1. High-pressure flexible hose
2. O-ring
3. Compressor
4. Low-pressure flexible hose

A. To condenser
B. To evaporator

⊗ : Always replace after every disassembly.

: N·m (kg-m, ft-lb)

DISASSEMBLY

Type of bolt with flange

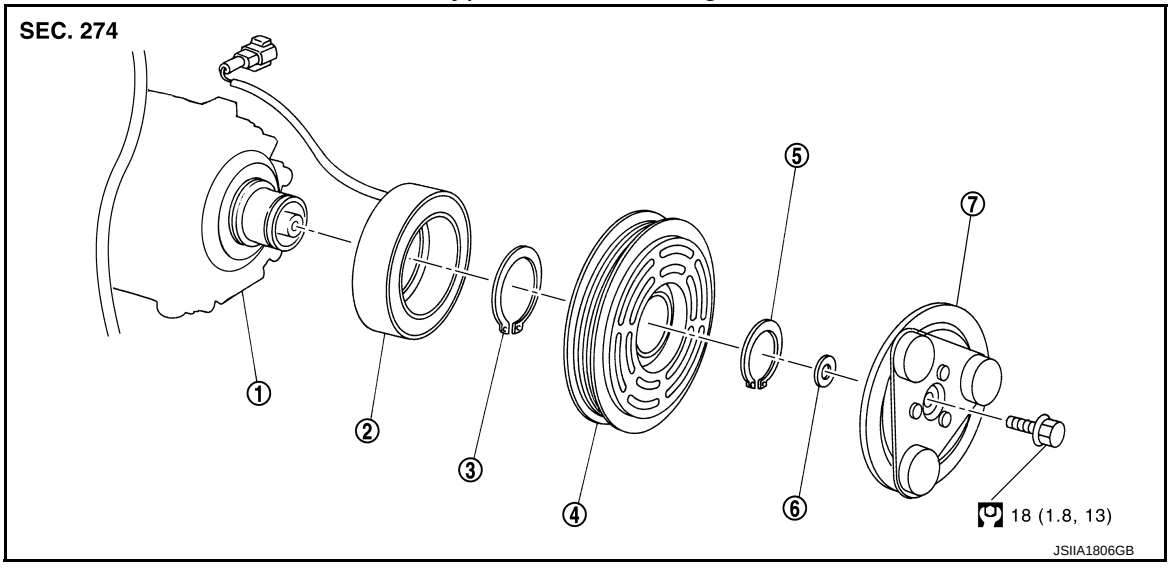

1. Compressor unit
2. Field coil
3. Snap ring
4. Pulley assembly
5. Snap ring
6. Shim

7. Clutch disc

: N·m (kg-m, ft-lb)

Type of bolt without flange

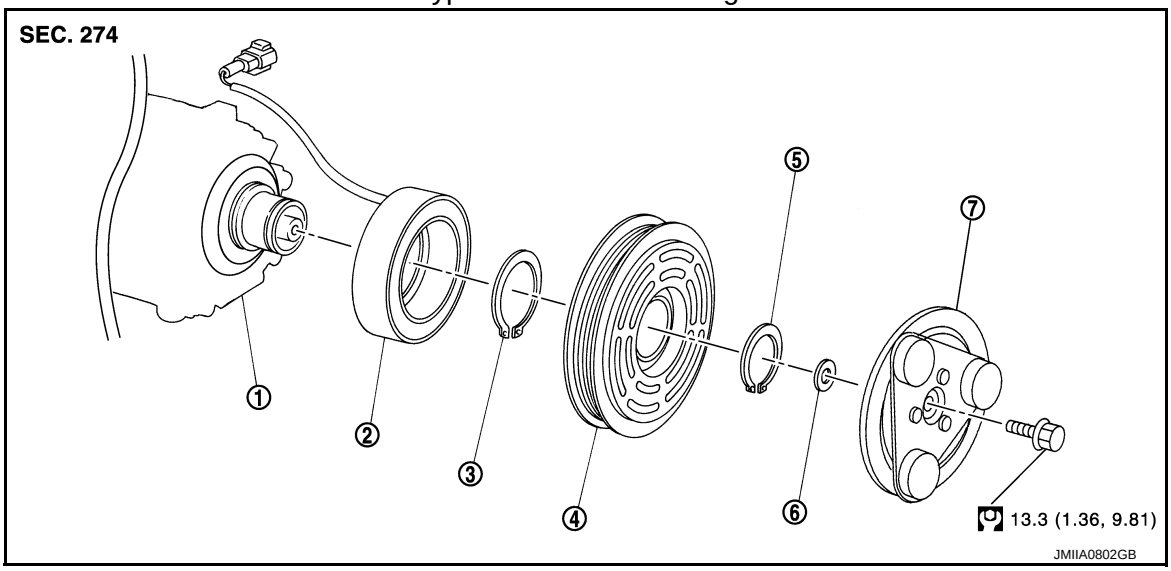

1. Compressor unit
2. Field coil
3. Snap ring
4. Pulley assembly
5. Snap ring
6. Shim
7. Clutch disc

: N·m (kg-m, ft-lb)

COMPRESSOR

COMPRESSOR : Removal and Installation

INFOID:0000000009950349

CAUTION:
Perform lubricant return operation before each refrigeration system disassembly. However, if a large amount of refrigerant or lubricant is detected, never perform lubricant return operation. Refer to HA-26, "Perform Lubricant Return Operation".

REMOVAL

1. Use a refrigerant collecting equipment (for HFC-134a) to discharge the refrigerant. Refer to HA-24, "Recycle Refrigerant".
2. Remove mounting bolts (A), and then disconnect low-pressure flexible hose (1) and high-pressure flexible hose (2) from the compressor.
   CAUTION:
   Cap or wrap the joint of the A/C piping and compressor with suitable material such as vinyl tape to avoid the entry of air.

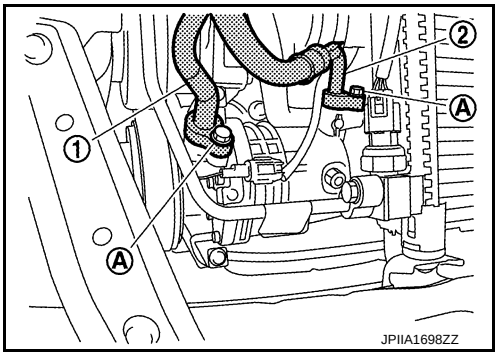

3. Remove front under cover. Refer to EXT-22, "Exploded View".
4. Remove drive belt. Refer to EM-13, "Removal and Installation".

5. Disconnect compressor (magnet clutch) connector (A).
6. Remove mounting bolts (B), and then remove compressor (1) form the vehicle.

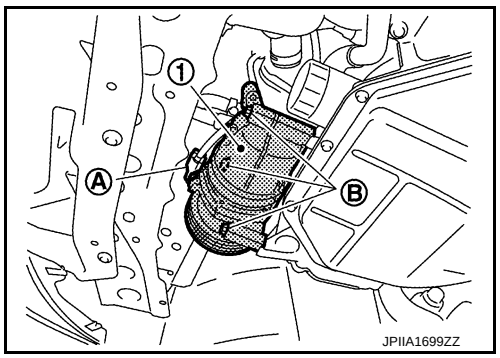

INSTALLATION

Installation is basically the reverse order of removal.

CAUTION:

- **Replace O-rings with new ones. Then apply compressor oil to them when installing.**
- **Perform lubricant adjusting procedure before installing new compressor. Refer to HA-27, "Lubricant Adjusting Procedure for Compressor Replacement".**
- **Check for leakages when recharging refrigerant. Refer to HA-22, "Leak Test".**
- **Check tension of the drive belt after installing compressor. Refer to EM-13, "Checking".**

MAGNET CLUTCH

MAGNET CLUTCH : Removal and Installation

INFOID:0000000009950350

REMOVAL

Overhaul

1. Fix clutch disc.
2. Remove center bolt, and then remove clutch disc.
3. Remove snap ring using external snap ring pliers.
4. Position center pulley puller on the end of the drive shaft, and remove pulley assembly using any commercially available pulley puller.
   To prevent pulley groove from being deformed, puller claws should be positioned into the edge of the pulley assembly.
5. Disconnect field coil harness connector from compressor unit.
6. Remove snap ring using external snap ring pliers, and then remove field coil.

INSTALLATION

1. Install field coil (1).
   Be sure to align the coil's pin (2) with the hole in the compressor's front head.
2. Connect field coil harness connector to compressor unit.

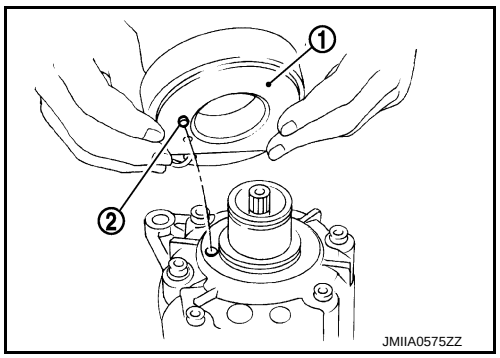

3. Install pulley assembly (1) using pulley installer (SST:KV99106200) (A) and a hand press, and then install snap ring (2) using snap ring pliers.

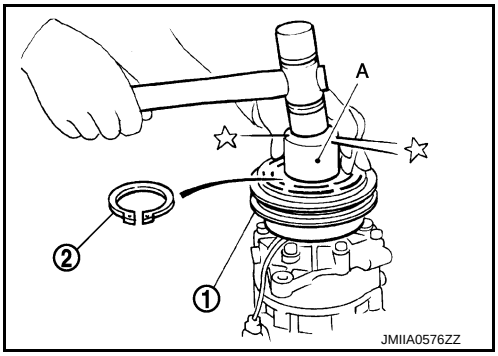

4. Install clutch disc on drive shaft, together with original shim(s). Press clutch disc down by hand.
5. Tighten center bolt to the specified torque while fixing clutch disc not to rotate.
   After tightening the bolt, check that the pulley rotates smoothly.

Break-in Operation

When replacing compressor clutch assembly, always perform the break-in operation, by engaging and disengaging the clutch approximately 30-times. Break-in operation increases the level of transmitted torque.

Inspection

INFOID:0000000009950351

CHECK DISC TO PULLEY CLEARANCE

Check the clearance (B) between pulley assembly (1) and clutch disc (2) along the entire periphery with a feeler gauge (A).

Clearance : Refer to HA-51, "Compressor".

Replace compressor if specified clearance is not obtained.

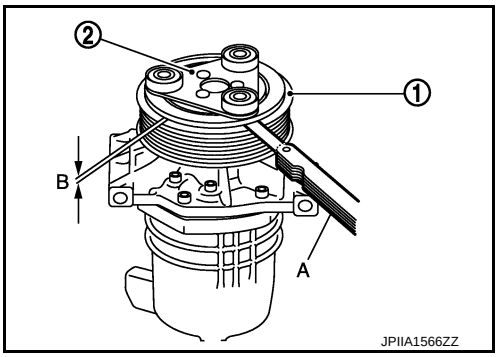

COOLER PIPE AND HOSE

Exploded View

INFOID:0000000009950352

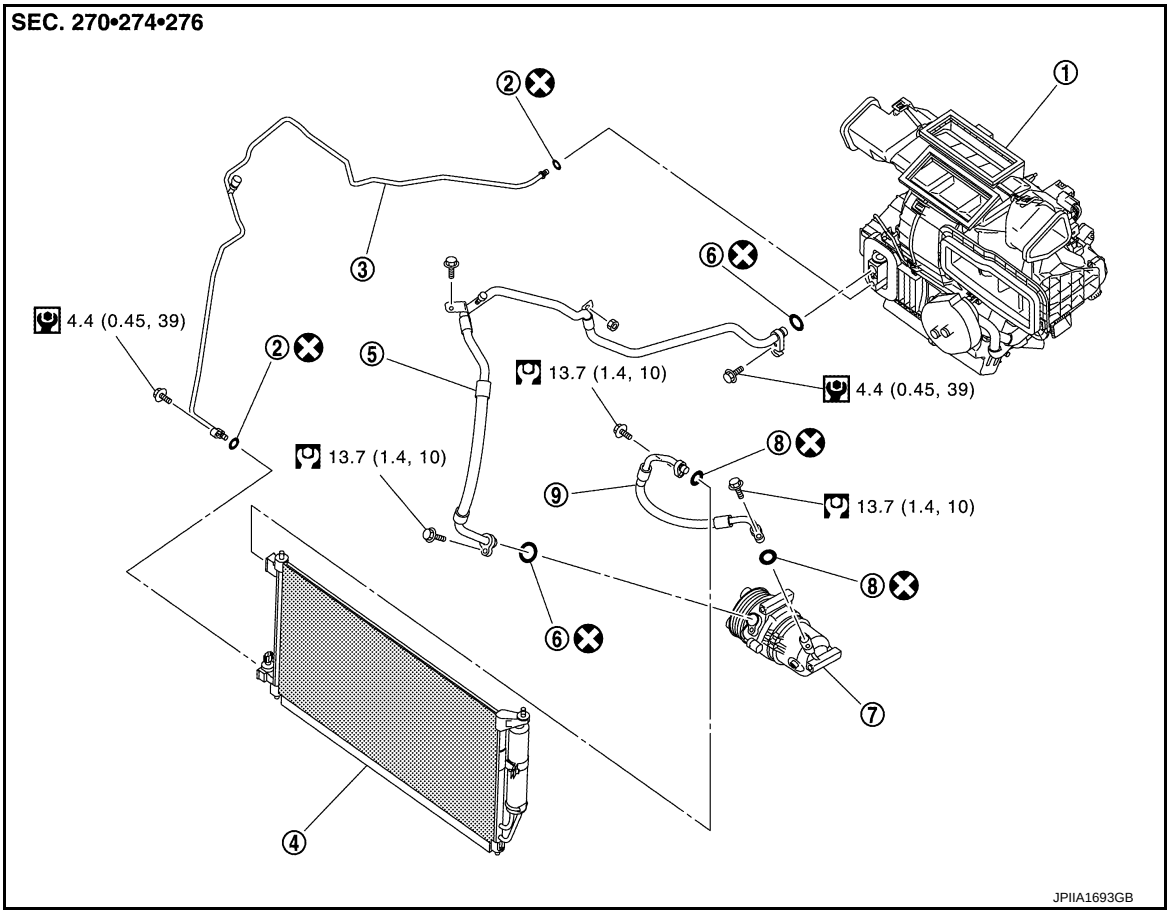

1.	A/C unit assembly	2.	O-ring	3.	High-pressure pipe
4.	Condenser	5.	Low-pressure flexible hose	6.	O-ring
7.	Compressor	8.	O-ring	9.	High-pressure flexible hose

⊗ : Always replace after every disassembly.

: N·m (kg-m, ft-lb)

: N·m (kg-m, in-lb)

HIGH-PRESSURE FLEXIBLE HOSE

HIGH-PRESSURE FLEXIBLE HOSE : Removal and Installation

INFOID:0000000009950353

CAUTION:
Perform lubricant return operation before each refrigeration system disassembly. However, if a large amount of refrigerant or lubricant is detected, never perform lubricant return operation. Refer to HA-26, "Perform Lubricant Return Operation".

REMOVAL

1. Use a refrigerant collecting equipment (for HFC-134a) to discharge the refrigerant. Refer to HA-24, "Recycle Refrigerant".

2. Remove mounting bolt (A), and then disconnect high-pressure flexible hose (1) from the condenser.
   CAUTION:
   Cap or wrap the joint of the A/C piping and condenser with suitable material such as vinyl tape to avoid the entry of air.

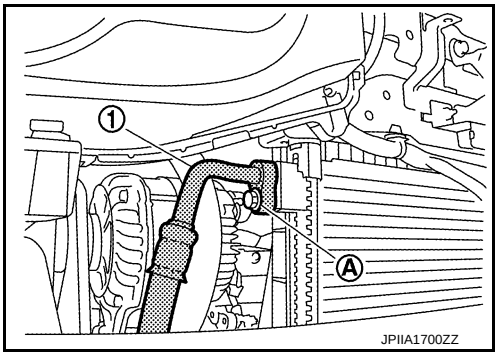

3. Remove mounting bolt (A), and then disconnect high-pressure flexible hose (1) from the compressor.
   CAUTION:
   Cap or wrap the joint of the A/C piping and compressor with suitable material such as vinyl tape to avoid the entry of air.
4. Remove high-pressure flexible hose from the vehicle.

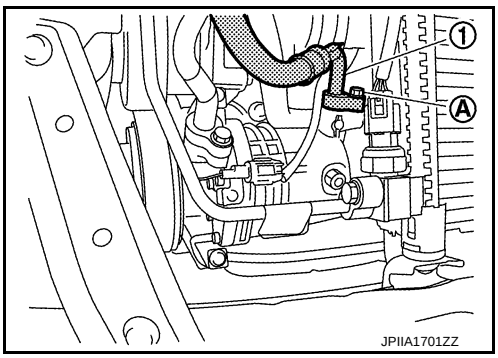

INSTALLATION

Installation is basically the reverse order of removal.

CAUTION:
- **Replace O-rings with new ones. Then apply compressor oil to them when installing.**
- **Check for leakages when recharging refrigerant. Refer to HA-22, "Leak Test".**

LOW-PRESSURE FLEXIBLE HOSE

LOW-PRESSURE FLEXIBLE HOSE : Removal and Installation

INFOID:0000000009950354

CAUTION:
Perform lubricant return operation before each refrigeration system disassembly. However, if a large amount of refrigerant or lubricant is detected, never perform lubricant return operation. Refer to HA-26, "Perform Lubricant Return Operation".

REMOVAL

1. Use a refrigerant collecting equipment (for HFC-134a) to discharge the refrigerant. Refer to HA-24, "Recycle Refrigerant".
2. Remove upper torque rod RH. Refer to EM-74, "Exploded View".
3. Remove mounting nut (A), and lower dash insulator (1) a position without the hindrance for work.

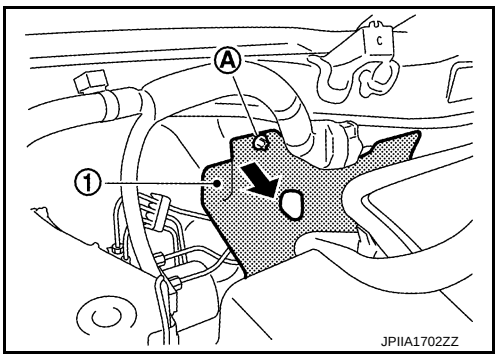

4. Remove the mounting bolt and nut installed in low-pressure flexible hose from the vehicle.

5. Remove mounting bolt (A), and then disconnect low-pressure flexible hose (1) from expansion valve.
   CAUTION:
   Cap or wrap the joint of the A/C piping and expansion valve with suitable material such as vinyl tape to avoid the entry of air.

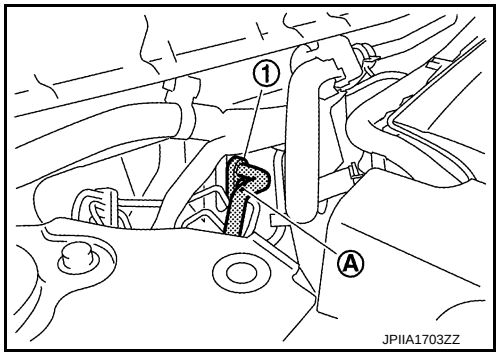

6. Remove mounting bolt (A), and then disconnect low-pressure flexible hose (1) from the compressor.
   CAUTION:
   Cap or wrap the joint of the A/C piping and compressor with suitable material such as vinyl tape to avoid the entry of air.
7. Remove low-pressure flexible hose from the vehicle.

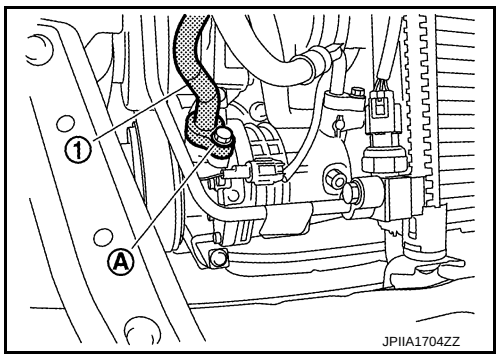

INSTALLATION

Installation is basically the reverse order of removal.

CAUTION:

- **Replace O-rings with new ones. Then apply compressor oil to them when installing.**
- **Check for leakages when recharging refrigerant. Refer to HA-22, "Leak Test".**

HIGH-PRESSURE PIPE

HIGH-PRESSURE PIPE : Removal and Installation

INFOID:0000000009950355

CAUTION:

Perform lubricant return operation before each refrigeration system disassembly. However, if a large amount of refrigerant or lubricant is detected, never perform lubricant return operation. Refer to HA-26, "Perform Lubricant Return Operation".

REMOVAL

1. Remove low-pressure flexible hose. Refer to HA-35, "Exploded View".
2. Remove ground cable form the engine assembly.
3. Disconnect high-pressure pipe (1) from expansion valve.
   CAUTION:
   Cap or wrap the joint of the A/C piping and expansion valve with suitable material such as vinyl tape to avoid the entry of air.

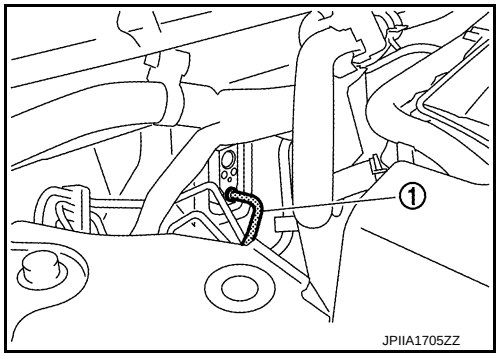

4. Remove mounting bolt (A), and then disconnect high-pressure pipe (1) from the condenser.
   CAUTION:
   Cap or wrap the joint of the A/C piping and condenser with suitable material such as vinyl tape to avoid the entry of air.
5. Remove high-pressure pipe from the vehicle.

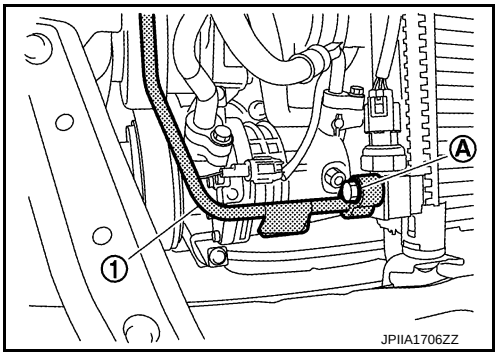

INSTALLATION

Installation is basically the reverse order of removal.

CAUTION:

- **Replace O-rings with new ones. Then apply compressor oil to them when installing.**
- **Check for leakages when recharging refrigerant. Refer to HA-22, "Leak Test".**

CONDENSER

Exploded View

INFOID:0000000009950356

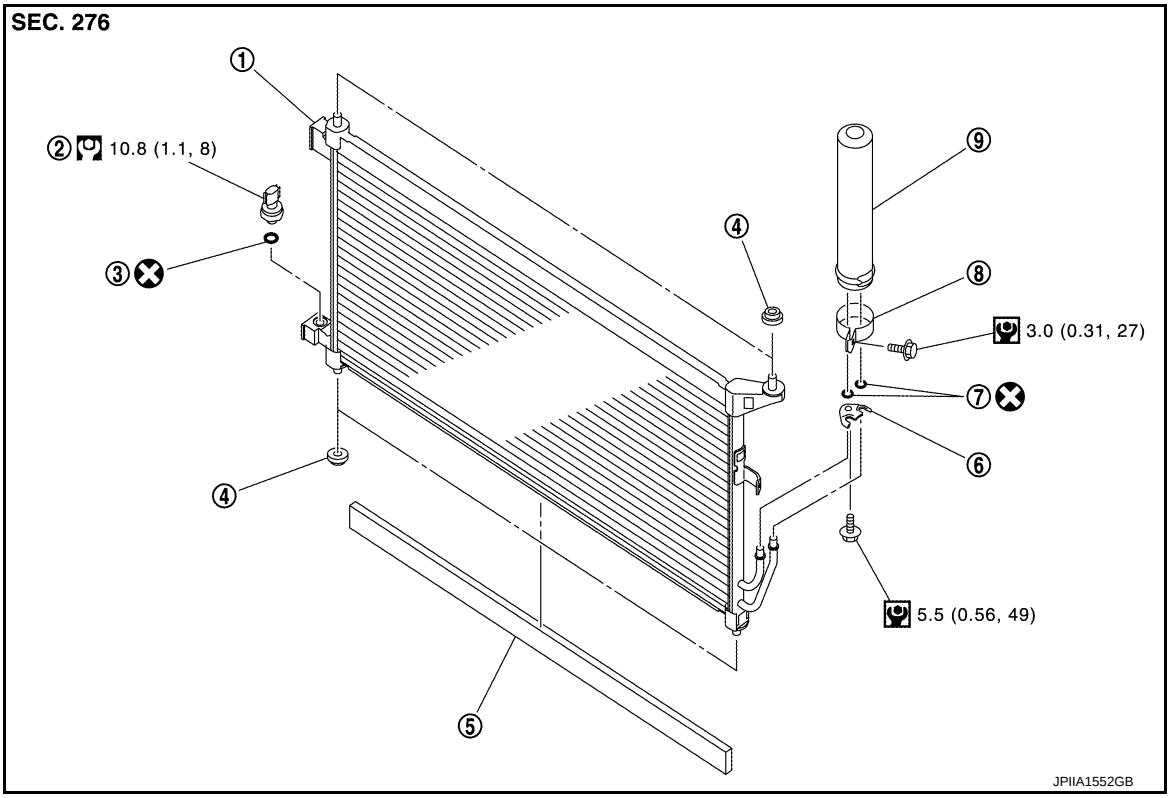

1.	Condenser	2.	Refrigerant pressure sensor	3.	O-ring
4.	Grommet	5.	Condenser seal	6.	Bracket
7.	O-ring	8.	Liquid tank bracket	9.	Liquid tank

: Always replace after every disassembly.

: N·m (kg-m, ft-lb)

: N·m (kg-m, in-lb)

CONDENSER

CONDENSER : Removal and Installation

INFOID:0000000009950357

CAUTION:
Perform lubricant return operation before each refrigeration system disassembly. However, if a large amount of refrigerant or lubricant is detected, never perform lubricant return operation. Refer to HA-26, "Perform Lubricant Return Operation".

REMOVAL

1. Use a refrigerant collecting equipment (for HFC-134a) to discharge the refrigerant. Refer to HA-24, "Recycle Refrigerant".
2. Remove the radiator core support upper. Refer to DLK-186, "Exploded View" (WITH I-KEY) or DLK-339, "Exploded View" (WITHOUT I-KEY).

3. Remove mounting bolt (A), and then disconnect high-pressure flexible hose (1) from the condenser.
   CAUTION:
   Cap or wrap the joint of the A/C piping and condenser with suitable material such as vinyl tape to avoid the entry of air.

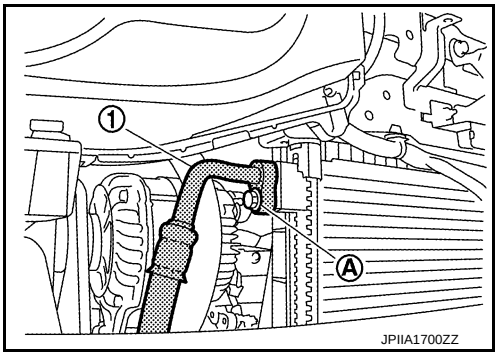

4. Remove mounting bolt (A), and then disconnect high-pressure pipe (1) from the condenser.
   CAUTION:
   Cap or wrap the joint of the A/C piping and condenser with suitable material such as vinyl tape to avoid the entry of air.
5. Remove the condenser from the vehicle.
   CAUTION:
   Be careful not to damage core surface of condenser.

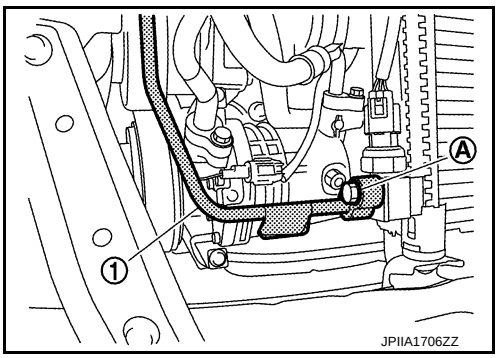

INSTALLATION

Installation is basically the reverse order of removal.

CAUTION:

- **Replace O-rings with new ones. Then apply compressor oil to them when installing.**
- **Perform lubricant adjusting procedure before installing new condenser. Refer to HA-26, "Lubricant Adjusting Procedure for Components Replacement Except Compressor".**
- **Check for leakages when recharging refrigerant. Refer to HA-22, "Leak Test".**

LIQUID TANK

LIQUID TANK : Removal and Installation

INFOID:0000000009950358

CAUTION:

Perform lubricant return operation before each refrigeration system disassembly. However, if a large amount of refrigerant or lubricant is detected, never perform lubricant return operation. Refer to HA-26, "Perform Lubricant Return Operation".

REMOVAL

1. Use a refrigerant collecting equipment (for HFC-134a) to discharge the refrigerant. Refer to HA-24, "Recycle Refrigerant".
2. Clean liquid tank and its surrounding area, and then remove dust and rust from liquid tank.
   CAUTION:
   Be sure to clean carefully.
3. Remove mounting bolts (A), and then remove liquid tank (1) from the condenser.
   CAUTION:
   Cap or wrap the joint of the A/C piping and liquid tank with suitable material such as vinyl tape to avoid the entry of air.

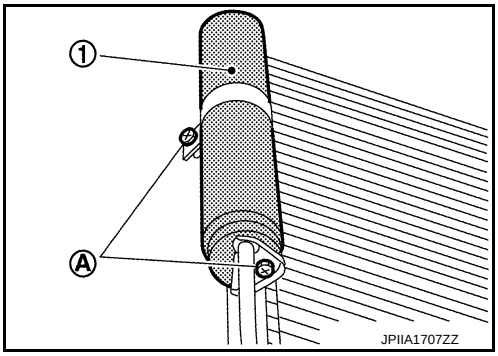

INSTALLATION

Install liquid tank, and then install liquid tank bracket on condenser.

CAUTION:
- **Check that liquid tank bracket is securely installed at protrusion of condenser. (Check that liquid tank bracket does not move to a position below center of liquid tank.)**
- **Replace O-rings of the A/C piping with new ones. Then apply compressor oil to them when installing.**
- **Perform lubricant adjusting procedure before installing new liquid tank. Refer to HA-26, "Lubricant Adjusting Procedure for Components Replacement Except Compressor".**
- **Check for leakages when recharging refrigerant. Refer to HA-22, "Leak Test".**

REFRIGERANT PRESSURE SENSOR

REFRIGERANT PRESSURE SENSOR : Removal and Installation

INFOID:0000000009950359

CAUTION:
Perform lubricant return operation before each refrigeration system disassembly. However, if a large amount of refrigerant or lubricant is detected, never perform lubricant return operation. Refer to HA-26, "Perform Lubricant Return Operation".

REMOVAL

1. Use a refrigerant collecting equipment (for HFC-134a) to discharge the refrigerant. Refer to HA-24, "Recycle Refrigerant".
2. Clean refrigerant pressure sensor and its surrounding area, and then remove dust and rust from refrigerant pressure sensor.
   CAUTION:
   Be sure to clean carefully.
3. Disconnect refrigerant pressure sensor connector.
4. Use a adjustable wrench (A) or other tool to hold the refrigerant pressure sensor mounting block, and then remove the refrigerant pressure sensor (2) from the condenser (1).
   CAUTION:
   - **Be careful not to damage liquid tank.**
   - **Be careful not to damage core surface of condenser.**
   - **Cap or wrap the joint of the condenser and liquid tank with suitable material such as vinyl tape to avoid the entry of air.**

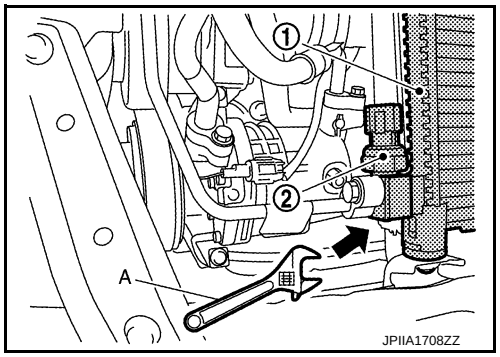

INSTALLATION

Installation is basically the reverse order of removal.

CAUTION:
- **Replace O-ring with new one. Then apply compressor oil to them when installing.**
- **Check for leakages when recharging refrigerant. Refer to HA-22, "Leak Test".**

A/C UNIT ASSEMBLY

Exploded View (Automatic Air Conditioner)

INFOID:0000000009950360

REMOVAL

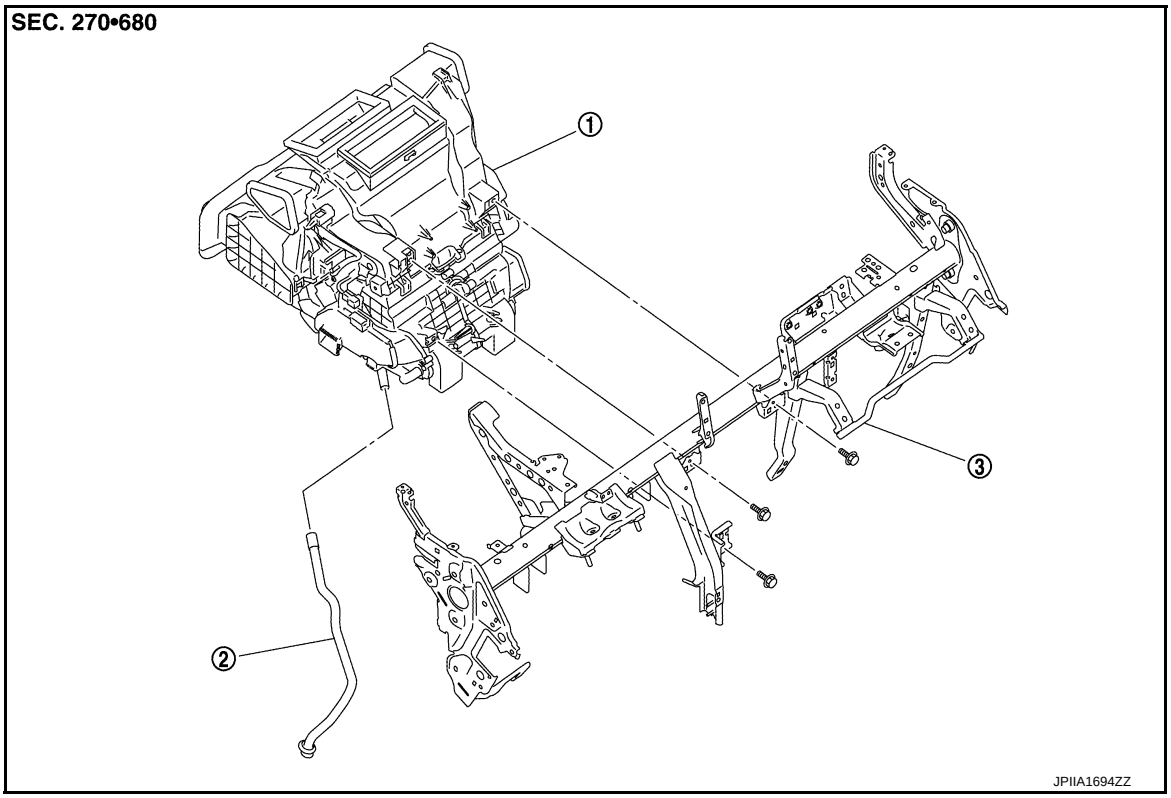

1. A/C unit assembly
2. Drain hose
3. Steering member

DISASSEMBLY

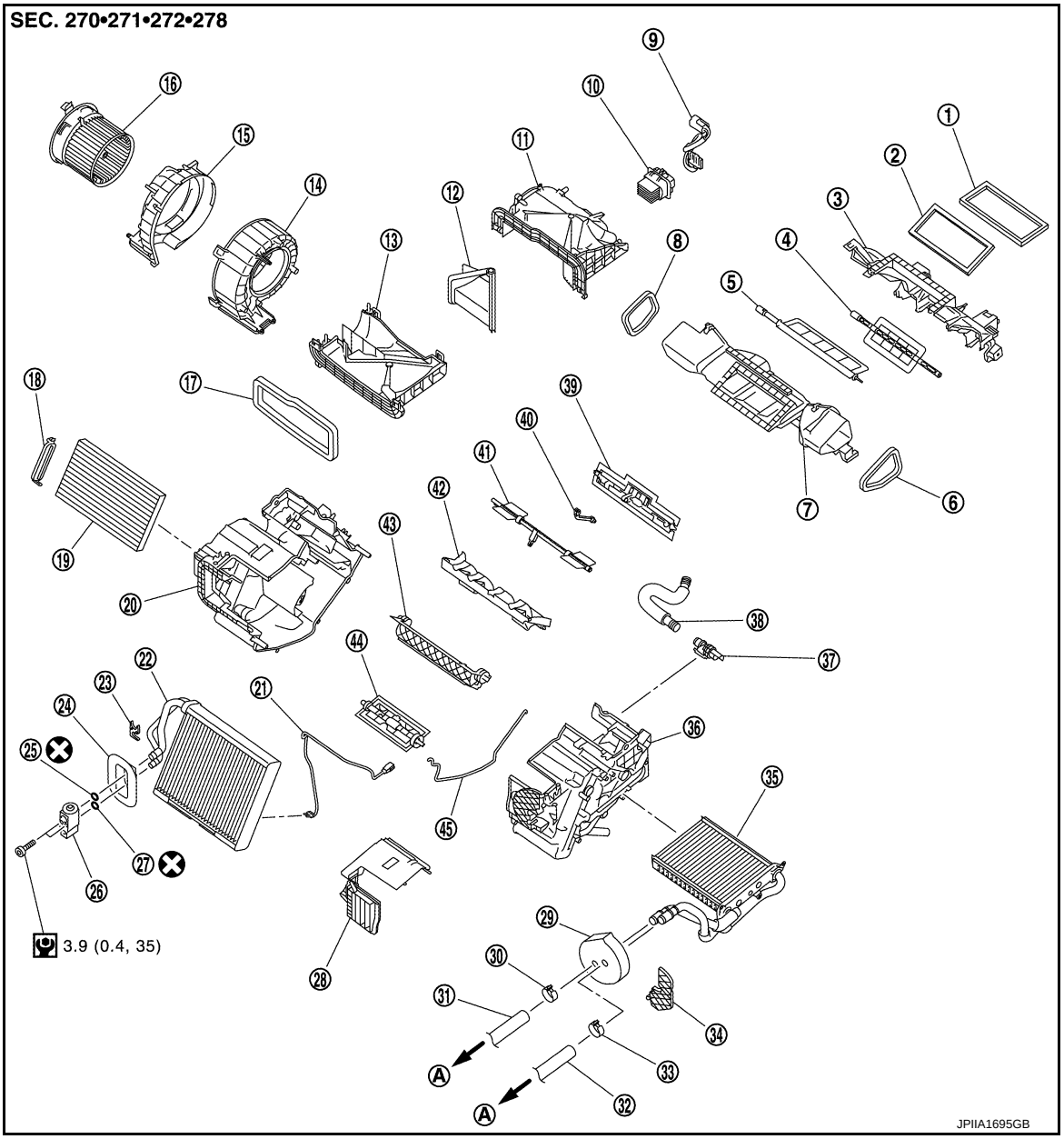

1.	Ventilator seal	2.	Defroster seal	3.	Upper attachment case
4.	Sub defroster door	5.	Center ventilator and defroster door	6.	Side ventilator seal LH
7.	Lower attachment case	8.	Side ventilator seal RH	9.	Sub harness
10.	Power transistor	11.	Upper intake case	12.	Intake door
13.	Lower intake case	14.	Blower case LH	15.	Blower case RH
16.	Blower motor	17.	Intake seal	18.	Filter cover
19.	In-cabin microfilter	20.	A/C unit case RH	21.	Intake sensor
22.	Evaporator	23.	Plate	24.	Expansion valve grommet
25.	O-ring	26.	Expansion valve	27.	O-ring
28.	Evaporator cover	29.	Heater pipe grommet	30.	Clamp
31.	Heater hose	32.	Heater hose	33.	Clamp
34.	Heater pipe support	35.	Heater core	36.	A/C unit case LH
37.	Aspirator	38.	Aspirator hose	39.	Foot door
40.	Foot door rod	41.	Side ventilator door	42.	Air mix door guide
43.	Upper air mix door	44.	Lower air mix door	45.	Case packing
A.	To water outlet				

: Always replace after every disassembly.

: N·m (kg-m, in-lb)

Exploded View (Manual Air Conditioner)

INFOID:0000000009950361

REMOVAL

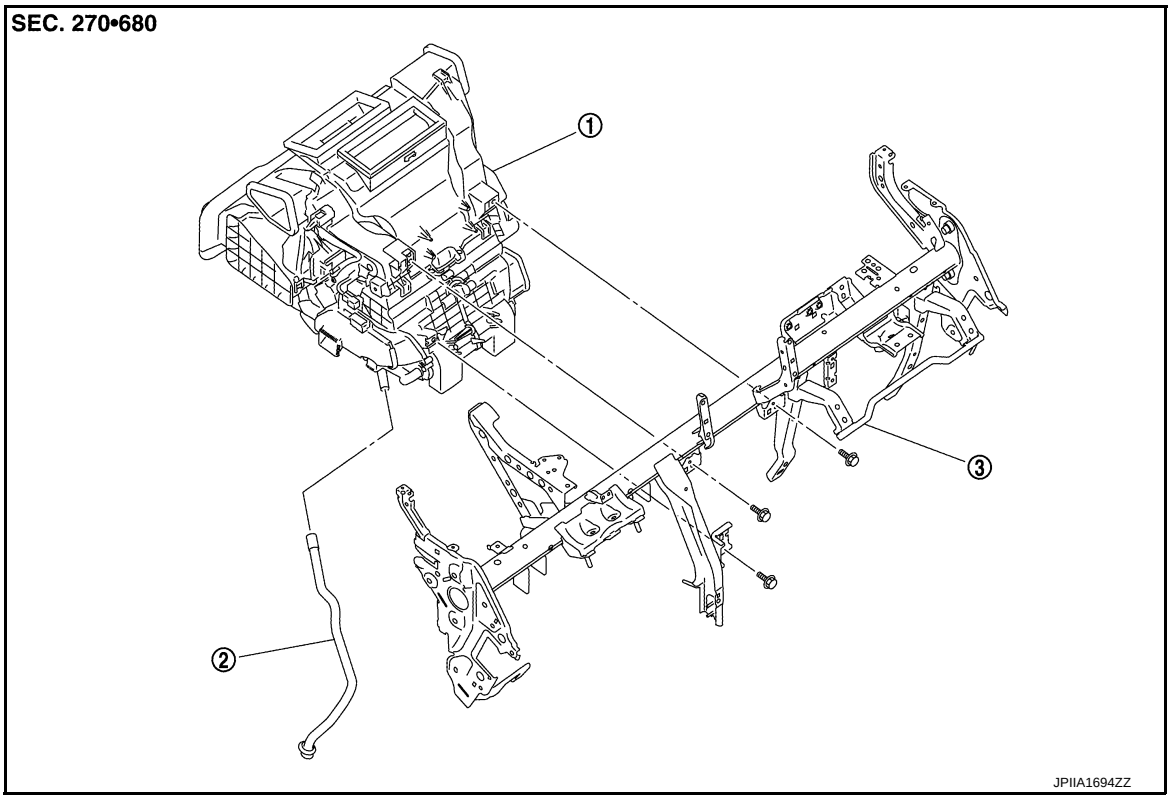

1. A/C unit assembly
2. Drain hose
3. Steering member

DISASSEMBLY

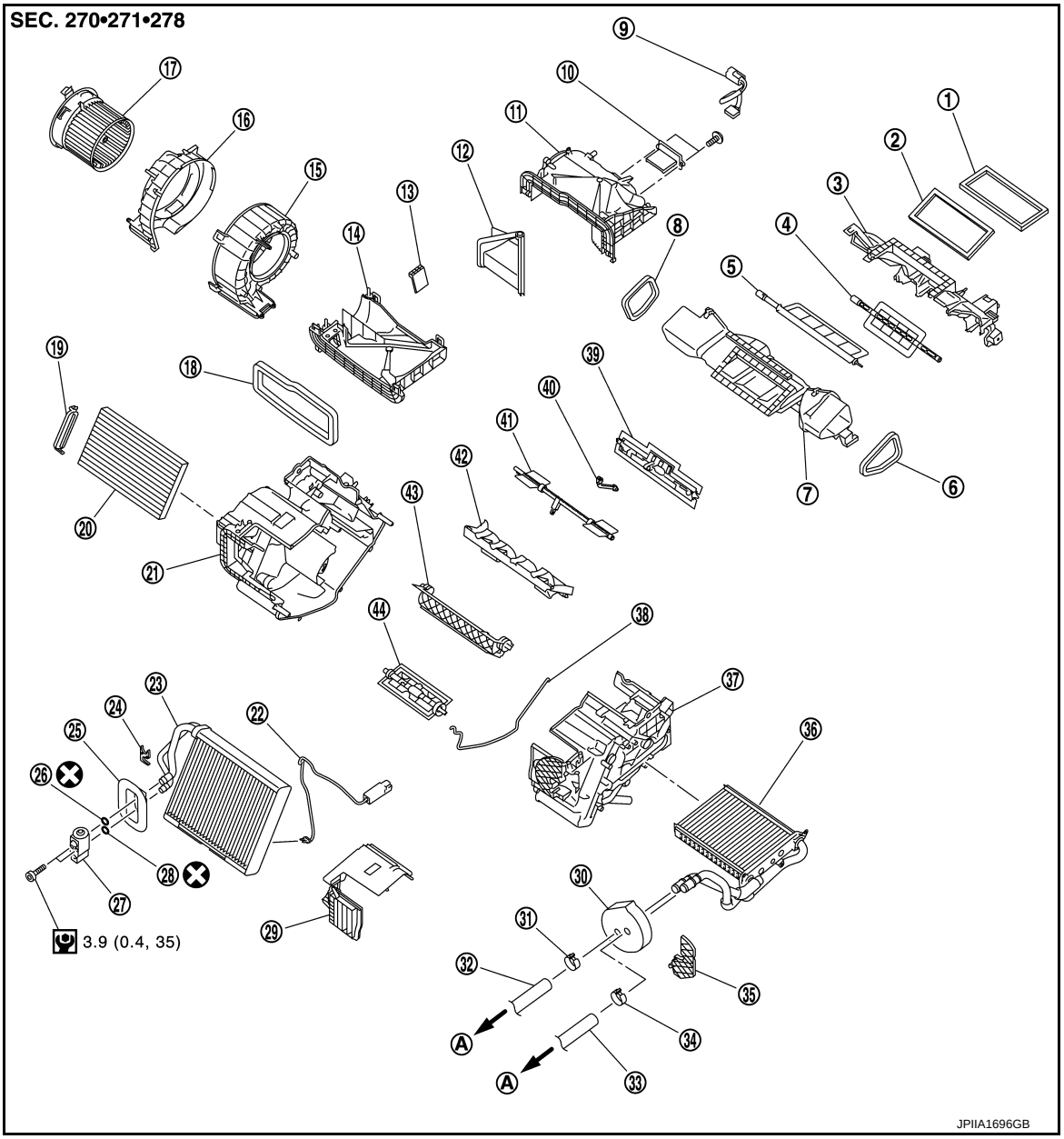

1.	Ventilator seal	2.	Defroster seal	3.	Upper attachment case
4.	Sub defroster door	5.	Center ventilator and defroster door	6.	Side ventilator seal LH
7.	Lower attachment case	8.	Side ventilator seal RH	9.	Sub harness
10.	Blower fan resistor	11.	Upper intake case	12.	Intake door
13.	Sub intake door	14.	Lower intake case	15.	Blower case LH
16.	Blower case RH	17.	Blower motor	18.	Intake seal
19.	Filter cover	20.	In-cabin microfilter	21.	A/C unit case RH
22.	Thermo control amp.	23.	Evaporator	24.	Plate
25.	Expansion valve grommet	26.	O-ring	27.	Expansion valve
28.	O-ring	29.	Evaporator cover	30.	Heater pipe grommet
31.	Clamp	32.	Heater hose	33.	Heater hose
34.	Clamp	35.	Heater pipe support	36.	Heater core
37.	A/C unit case LH	38.	Case packing	39.	Foot door
40.	Foot door rod	41.	Side ventilator door	42.	Air mix door guide
43.	Upper air mix door	44.	Lower air mix door		
A.	To water outlet				

: Always replace after every disassembly.

: N·m (kg-m, in-lb)

A/C UNIT ASSEMBLY

A/C UNIT ASSEMBLY : Removal and Installation

INFOID:0000000009950362

CAUTION:
Perform lubricant return operation before each refrigeration system disassembly. However, if a large amount of refrigerant or lubricant is detected, never perform lubricant return operation. Refer to HA-26, "Perform Lubricant Return Operation".

REMOVAL

1. Use a refrigerant collecting equipment (for HFC-134a) to discharge the refrigerant. Refer to HA-24, "Recycle Refrigerant". (If equipped)
2. Drain engine coolant from cooling system. Refer to CO-8, "Draining".
3. Remove cowl top extension. Refer to EXT-19, "Exploded View".
4. Remove mounting nut (A), and lower dash insulator (1) a position without the hindrance for work. (If equipped)

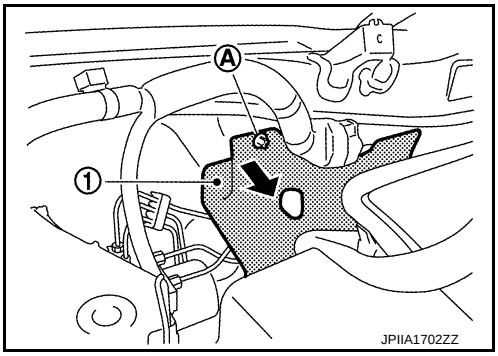

5. Remove mounting bolt (A), and then disconnect low-pressure flexible hose (1) and high-pressure pipe (2) from expansion valve. (If equipped)
   CAUTION:
   Cap or wrap the joint of the A/C piping and expansion valve with suitable material such as vinyl tape to avoid the entry of air.

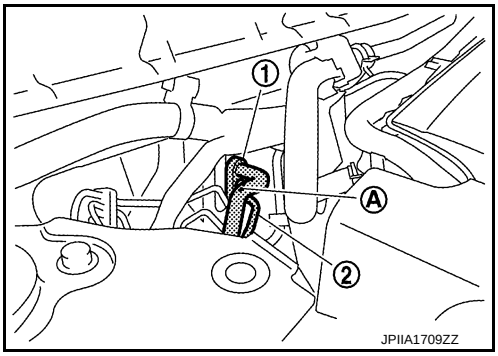

6. Remove clamps (A), and then disconnect heater hoses (1) from A/C unit assembly.
   CAUTION:
   - **Some coolant may spill when heater hoses are disconnected.**
   - **Close off the coolant inlet and outlet on the heater core (2 locations) with shop cloths.**

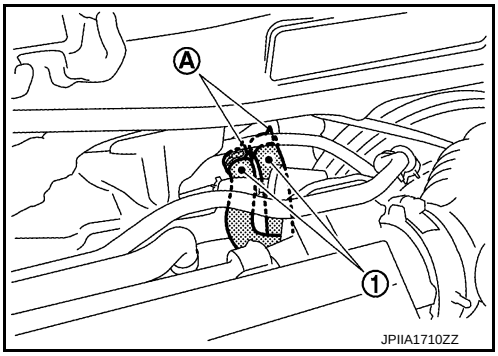

7. Remove side ventilator duct. Refer to VTL-7, "Exploded View".
8. Move steering column assembly to a position where it dose not inhibit work. Refer to ST-11, "Exploded View".
9. Remove instrument stay.
10. Disconnect drain hose from A/C unit assembly.

11. Disconnect the harness connectors and clips required to remove the steering member (1), and then move the vehicle harness to the position without hindrance for work.

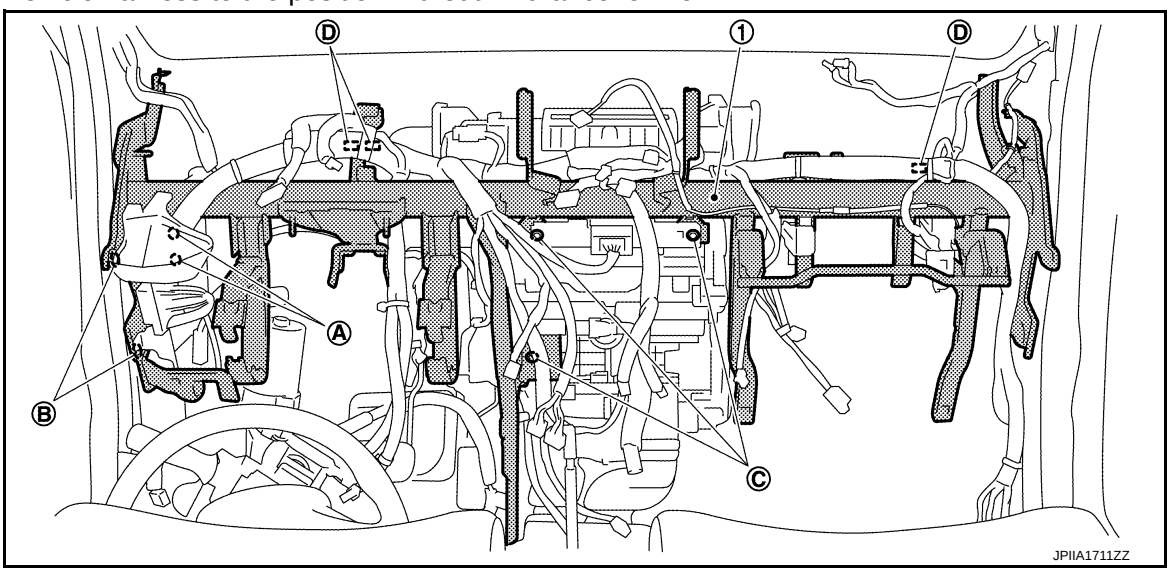

12. Remove the BCM mounting screws (A).
13. Remove the J/B mounting screws (B).
14. Remove the A/C unit assembly mounting bolts (C).
15. Remove ground bolts (D).
16. Remove mounting bolts (A), and then remove steering member (1) from the vehicle.

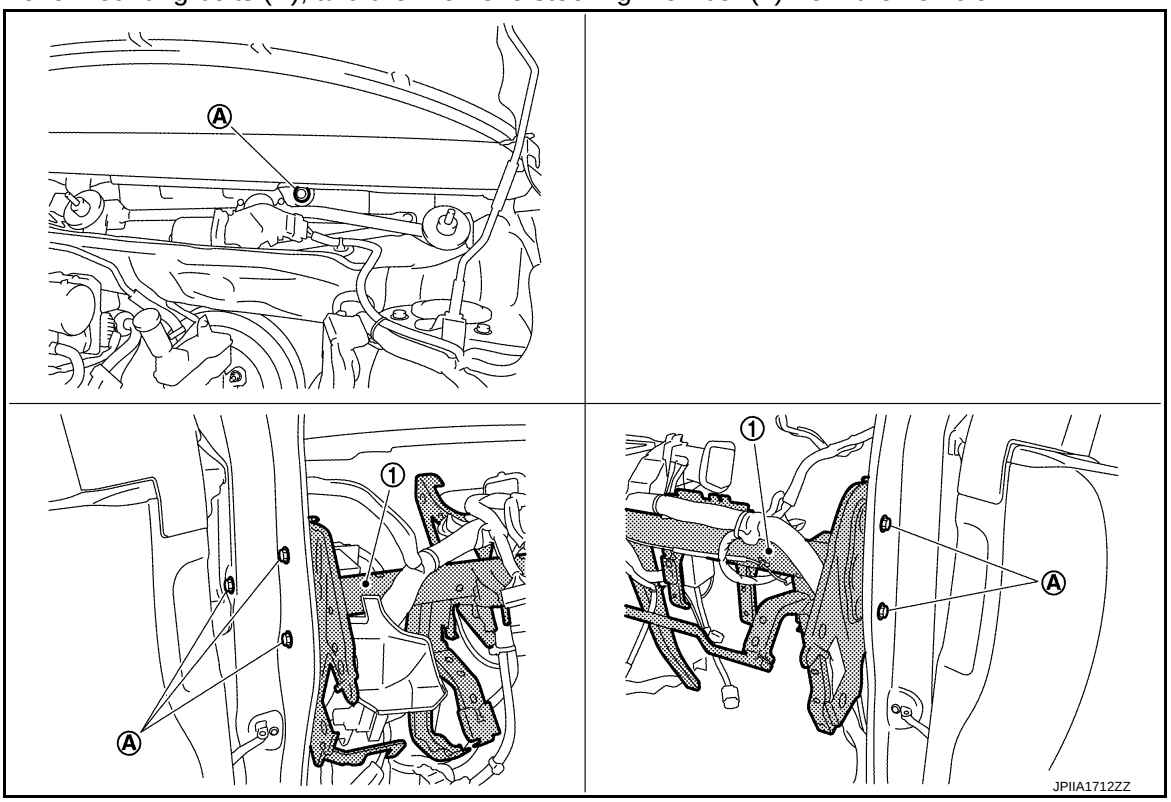

17. Remove A/C unit assembly from the vehicle.

INSTALLATION

Installation is basically the reverse order of removal.

CAUTION:

- **Replace O-rings with new ones. Then apply compressor oil to them when installing.**
- **Check for leakages when recharging refrigerant. Refer to HA-22, "Leak Test".**

NOTE:

Refer to CO-9, "Refilling" when filling radiator with engine coolant.

EVAPORATOR

EVAPORATOR : Removal and Installation

INFOID:0000000009950363

REMOVAL

1. Remove A/C unit assembly. Refer to HA-42, "Exploded View (Automatic Air Conditioner)" (automatic air conditioner) or HA-44, "Exploded View (Manual Air Conditioner)" (manual air conditioner).
2. Disassemble A/C unit assembly, and then remove evaporator assembly.
3. Remove intake sensor from evaporator assembly. (automatic air conditioner)
4. Remove thermo control amp. from evaporator assembly. (manual air conditioner)
5. Remove expansion valve.

INSTALLATION

Installation is basically the reverse order of removal.

CAUTION:

- **Replace O-rings with new ones. Then apply compressor oil to them when installing.**
- **When install the intake sensor (automatic air conditioner) or the thermo control amp. (manual air conditioner), set the same position before replacement.**
- **Never rotate the bracket insertion part when removing and installing the intake sensor (automatic air conditioner) or the thermo control amp. (manual air conditioner).**
- **Perform lubricant adjusting procedure after installing new evaporator. Refer to HA-26, "Lubricant Adjusting Procedure for Components Replacement Except Compressor".**

HEATER CORE

HEATER CORE : Removal and Installation

INFOID:0000000009950364

REMOVAL

1. Remove A/C unit assembly. Refer to HA-42, "Exploded View (Automatic Air Conditioner)" (automatic air conditioner), HA-44, "Exploded View (Manual Air Conditioner)" (manual air conditioner).
2. Remove heater pipe grommet and heater pipe support from A/C unit assembly.
3. Remove foot duct LH. Refer to VTL-7, "Exploded View".
4. Remove mounting screw, and then slide heater core to leftward.
5. Remove heater core from A/C unit assembly.

INSTALLATION

Installation is basically the reverse order of removal.

NOTE:

Refer to CO-9, "Refilling" when filling radiator with engine coolant.

EXPANSION VALVE

Exploded View

INFOID:0000000009950365

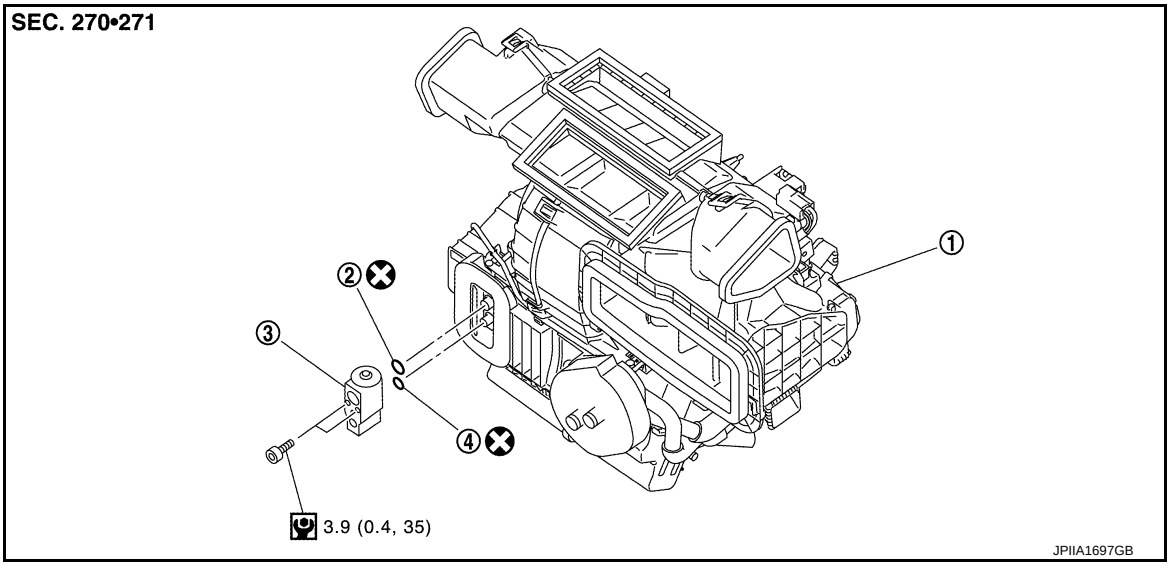

1. A/C unit assembly
2. O-ring
3. Expansion valve
4. O-ring

: Always replace after every disassembly.

: N·m (kg-m, in-lb)

Removal and Installation

INFOID:0000000009950366

CAUTION:
Perform lubricant return operation before each refrigeration system disassembly. However, if a large amount of refrigerant or lubricant is detected, never perform lubricant return operation. Refer to HA-26, "Perform Lubricant Return Operation".

REMOVAL

1. Use a refrigerant collecting equipment (for HFC-134a) to discharge the refrigerant. Refer to HA-24, "Recycle Refrigerant".
2. Remove mounting nut (A), and lower dash insulator (1) to a position without the hindrance for work.

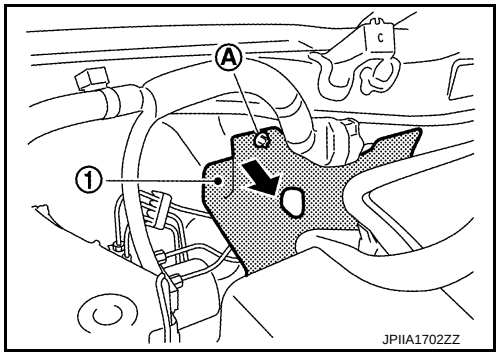

3. Remove the mounting bolt and nut installed in low-pressure flexible hose from the vehicle.

4. Remove mounting bolt (A), and then disconnect low-pressure flexible hose (1) and high-pressure pipe (2) from expansion valve.
   CAUTION:
   Cap or wrap the joint of the A/C piping and expansion valve with suitable material such as vinyl tape to avoid the entry of air.

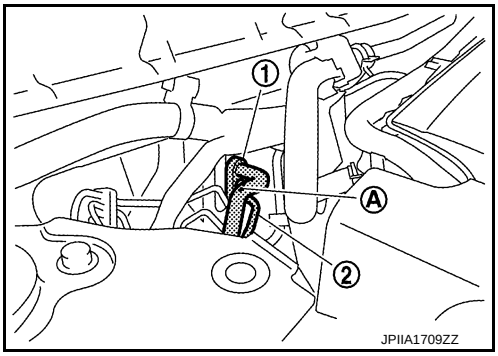

5. Remove mounting bolts (A), and then remove expansion valve (1).
   CAUTION:
   Cap or wrap the joint of the evaporator and expansion valve with suitable material such as vinyl tape to avoid the entry of air.

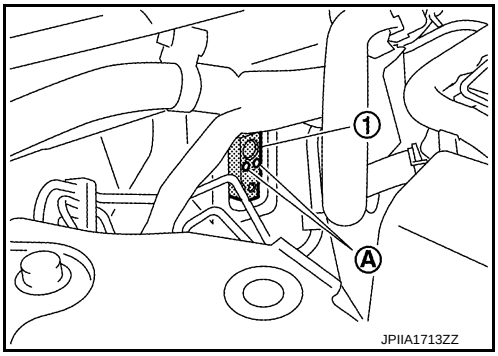

INSTALLATION

Installation is basically the reverse order of removal.

CAUTION:

- **Replace O-rings with new ones. Then apply compressor oil to them when installing.**
- **Check for leakages when recharging refrigerant. Refer to HA-22, "Leak Test".**

SERVICE DATA AND SPECIFICATIONS (SDS)

SERVICE DATA AND SPECIFICATIONS (SDS)

Compressor

INFOID:0000000009950367

Model		CALSONIC KANSEI make CR-08b
Type		Vane rotary
Displacement cm^3 (cu in)/rev	Maximum	83 (5.1)
Direction of rotation		Clockwise (viewed from clutch)
Drive belt		Poly V
Disc to pulley clearance mm (in)	Standard	0.3 – 0.6 (0.012 – 0.024)

Lubricant

INFOID:0000000009950368

Name		A/C System Oil Type R (DH-PR)
Capacity m ℓ (US fl oz, Imp fl oz)	Total in system	120 (4.1, 4.2)
	Compressor (service part) charging amount	120 (4.1, 4.2)

Refrigerant

INFOID:0000000009950369

Type	HFC-134a (R-134a)
Capacity kg (lb)	0.45 (1.0)

Engine Idling Speed

INFOID:0000000009950370

Refer to EC-482, "Idle Speed".

Belt Tension

INFOID:0000000009950371

Refer to EM-113, "Drive Belt".